Dist	COUNTY	ROUTE	KILOMETER POST TOTAL PROJECT	SHEET No.	TOTAL SHEETS
06	Tul	137	R24.8	1	51

INDEX OF SHEETS

SHEET No.	DESCRIPTION
1	TITLE AND LOCATION MAP
2	TYPICAL CROSS SECTIONS
3	LAYOUTS
4-6	CONSTRUCTION DETAILS
7	TEMPORARY WATER POLLUTION CONTROL DETAILS
8-11	DRAINAGE PLANS, PROFILES, DETAILS AND QUANTITIES
12	UTILITY PLAN
13	CONSTRUCTION AREA SIGNS
14	PAVEMENT DELINEATION AND SIGN PLAN
15	PAVEMENT DELINEATION AND SIGN QUANTITIES
16	SUMMARY OF QUANTITIES
17-19	ELECTRICAL PLANS
20-51	REVISED STANDARD PLANS

THE STANDARD PLANS LIST APPLICABLE TO THIS CONTRACT IS INCLUDED IN THE NOTICE TO BIDDERS AND SPECIAL PROVISIONS BOOK.

STATE OF CALIFORNIA

DEPARTMENT OF TRANSPORTATION

PROJECT PLANS FOR CONSTRUCTION ON

STATE HIGHWAY

IN TULARE COUNTY
IN TULARE
AT SOUTH J STREET

TO BE SUPPLEMENTED BY STANDARD PLANS DATED JULY 2004

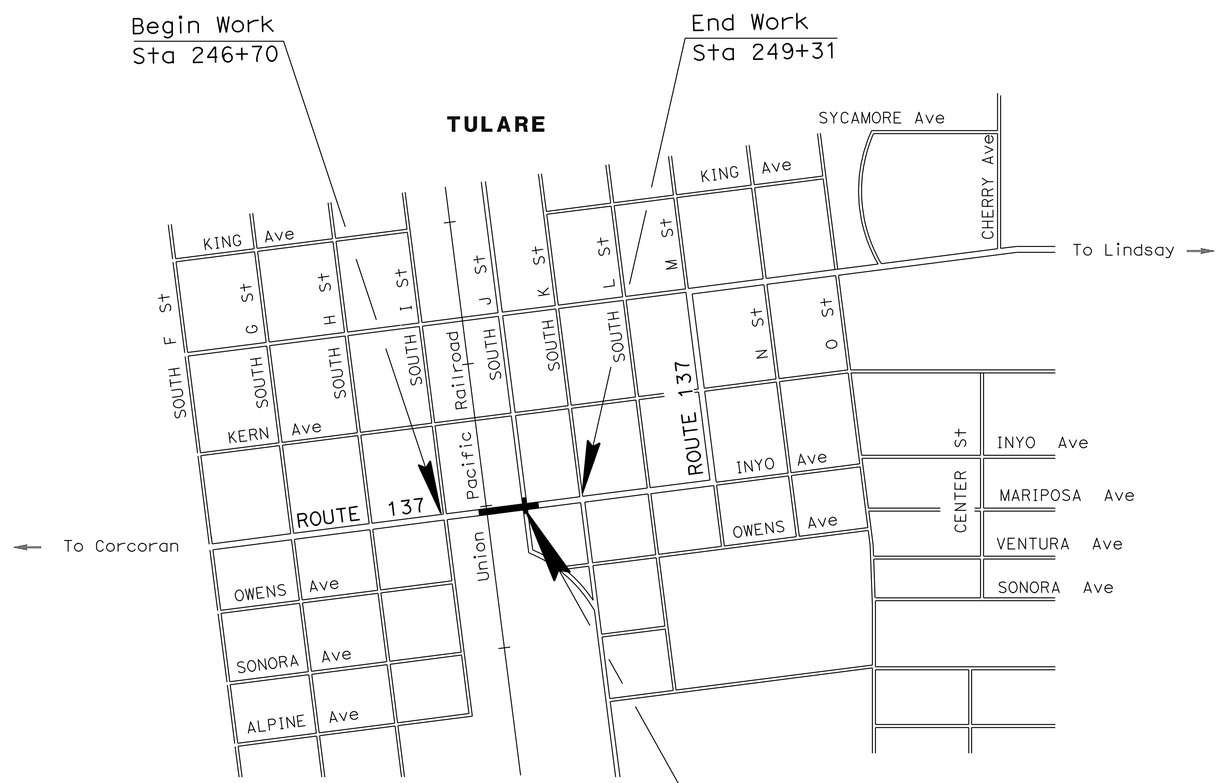

LOCATION OF CONSTRUCTION
KP R24.8
PM R15.4

LOCATION MAP

Caltrans

Caltrans Metric

PROJECT MANAGER: A EL-DAHABI

DESIGN ENGINEER: D SANGHA

THE CONTRACTOR SHALL POSSESS THE CLASS (OR CLASSES) OF LICENSE AS SPECIFIED IN THE ''NOTICE TO BIDDERS.''

NO SCALE

01/05/09
PROJECT ENGINEER REGISTERED CIVIL ENGINEER — DATE

REGISTERED PROFESSIONAL ENGINEER
D S SANGHA
No. 59652
Exp. 12/31/09
CIVIL
STATE OF CALIFORNIA

February 17, 2009
PLANS APPROVAL DATE

THE STATE OF CALIFORNIA OR ITS OFFICERS OR AGENTS SHALL NOT BE RESPONSIBLE FOR THE ACCURACY OR COMPLETENESS OF ELECTRONIC COPIES OF THIS PLAN SHEET.

LAST REVISION 01-05-09 DATE PLOTTED => 17-NOV-2009 TIME PLOTTED => 13:30

CONTRACT No. **06-0A5704**

Dist	COUNTY	ROUTE	KILOMETER POST TOTAL PROJECT	SHEET No.	TOTAL SHEETS
06	Tul	137	R24.8	2	51

REGISTERED CIVIL ENGINEER 01/05/09 DATE

2-17-09
PLANS APPROVAL DATE

REGISTERED PROFESSIONAL ENGINEER D S SANGHA No. 59652 Exp. 12/31/09 CIVIL STATE OF CALIFORNIA

THE STATE OF CALIFORNIA OR ITS OFFICERS OR AGENTS SHALL NOT BE RESPONSIBLE FOR THE ACCURACY OR COMPLETENESS OF ELECTRONIC COPIES OF THIS PLAN SHEET.

Caltrans Metric

NOTES:

1. DIMENSIONS OF THE STRUCTURAL SECTIONS ARE SUBJECT TO TOLERANCES SPECIFIED IN THE STANDARD SPECIFICATIONS.
2. SUPERELEVATIONS AS SHOWN OR AS DIRECTED BY THE ENGINEER.
3. SEE SHEET L-1 FOR CONCRETE CURB TYPE.
4. SHOULDER WIDENING BEGINS AT STA 247+47.14.

ABBREVIATION

HMA - HOT MIX ASPHALT

DESIGN DESIGNATION (ROUTE 137)

2004 ADT = 6,400 D=67%
2024 ADT = 9,000 T=7%
DHV = 1,950 V=30 MPH

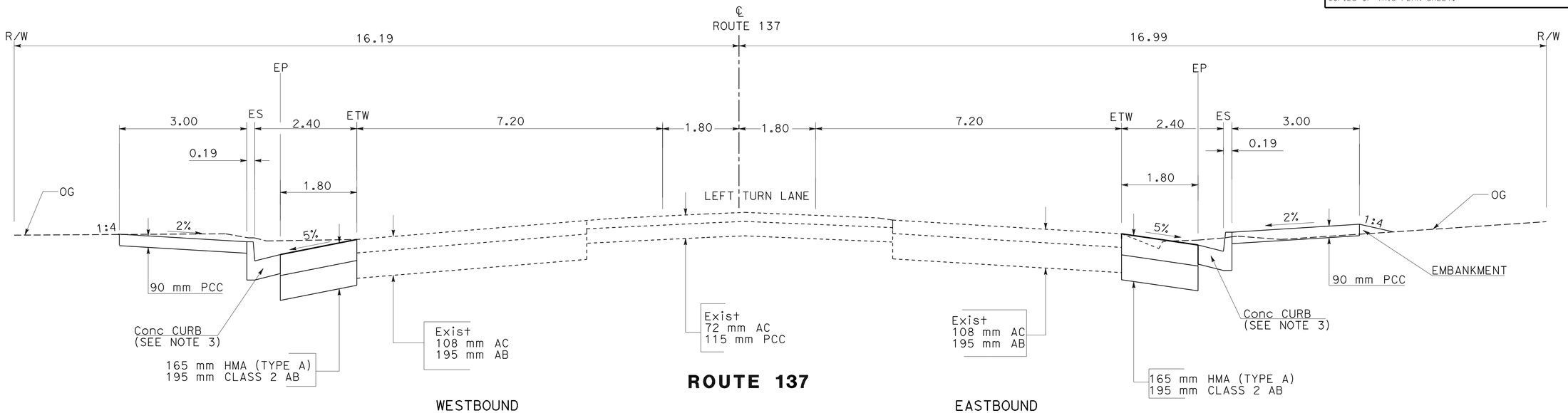

WESTBOUND

STA 247+75.96 TO STA 248+15.00

ROUTE 137

EASTBOUND

STA 247+95.00 TO STA 248+15.00

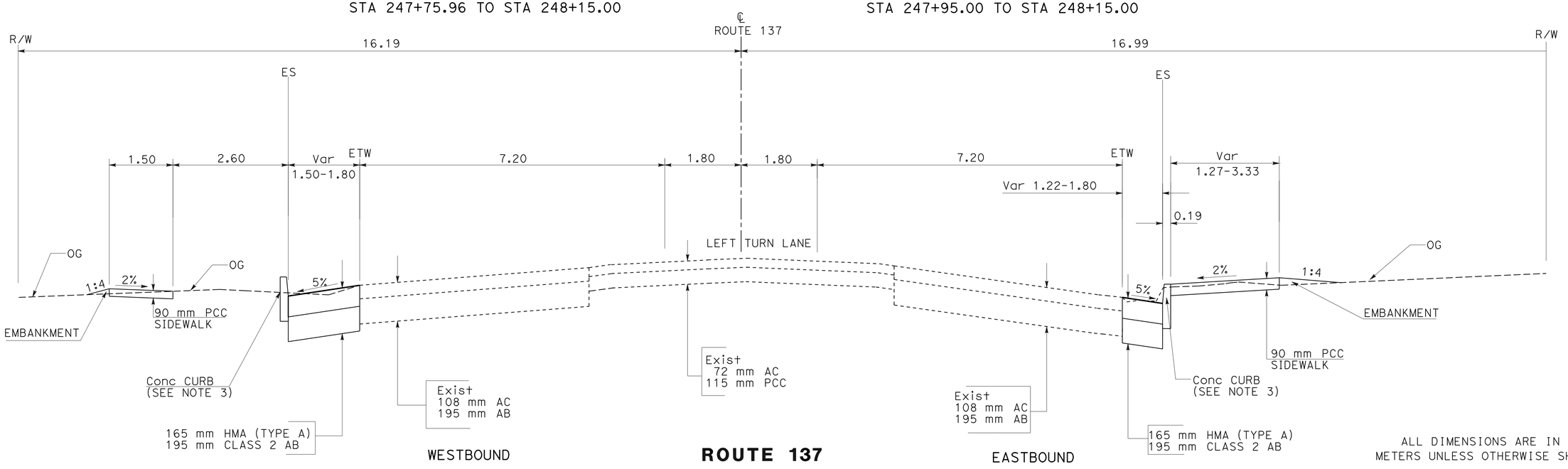

WESTBOUND

STA 247+43.50 TO STA 247+75.96

ROUTE 137

EASTBOUND

STA 247+43.50 TO STA 247+95.00

ALL DIMENSIONS ARE IN METERS UNLESS OTHERWISE SHOWN

TYPICAL CROSS SECTIONS

NO SCALE

X-1

STATE OF CALIFORNIA - DEPARTMENT OF TRANSPORTATION
Caltrans DESIGN

FUNCTIONAL SUPERVISOR: DAVID SANGHA
CALCULATED-DESIGNED BY: GASHU ENQUANHONE
CHECKED BY: CARMELITA BELLE
REVISED BY / DATE REVISED

LAST REVISION 01-05-09 DATE PLOTTED => 17-NOV-2009 TIME PLOTTED => 13:31

Dist	COUNTY	LOCATION CODE	KILOMETER POST TOTAL PROJECT	SHEET No.	TOTAL SHEETS
06	Tul	137	R24.8	3	51

REGISTERED CIVIL ENGINEER 01/05/09 DATE

2-17-09
PLANS APPROVAL DATE

REGISTERED PROFESSIONAL ENGINEER D S SANGHA No. 59652 Exp. 12/31/09 CIVIL STATE OF CALIFORNIA

THE STATE OF CALIFORNIA OR ITS OFFICERS OR AGENTS SHALL NOT BE RESPONSIBLE FOR THE ACCURACY OR COMPLETENESS OF ELECTRONIC COPIES OF THIS PLAN SHEET.

Caltrans Metric

NOTES:

1. FOR COMPLETE RIGHT OF WAY DATA, SEE RIGHT OF WAY RECORD MAPS AT DISTRICT OFFICE.
2. FOR UTILITY WORK SEE SHEET U-1.
3. REFER TO STANDARD PLANS FOR DETECTABLE WARNING SURFACE.
4. DETECTABLE WARNING SURFACE ON SIDEWALK PLACED ADJACENT TO RAILROAD MAST ARM. OFFSET DETECTABLE WARNING SURFACE 4.72 m FROM CENTER OF NEAREST RAILROAD TRACK.

ABBREVIATION

DWS - DETECTABLE WARNING SURFACE

CURVE DATA

No.	R	Δ	T	L
1	15.04	89°49'2"	14.99	23.58
2	15.04	80°6'46"	12.65	21.03
3	4.80	90°12'30"	4.82	7.52
4	152.40	53°11'17"	76.30	141.47

LEGEND

DECOMPOSED GRANITE

DRIVEWAYS

DETECTABLE WARNING SURFACE

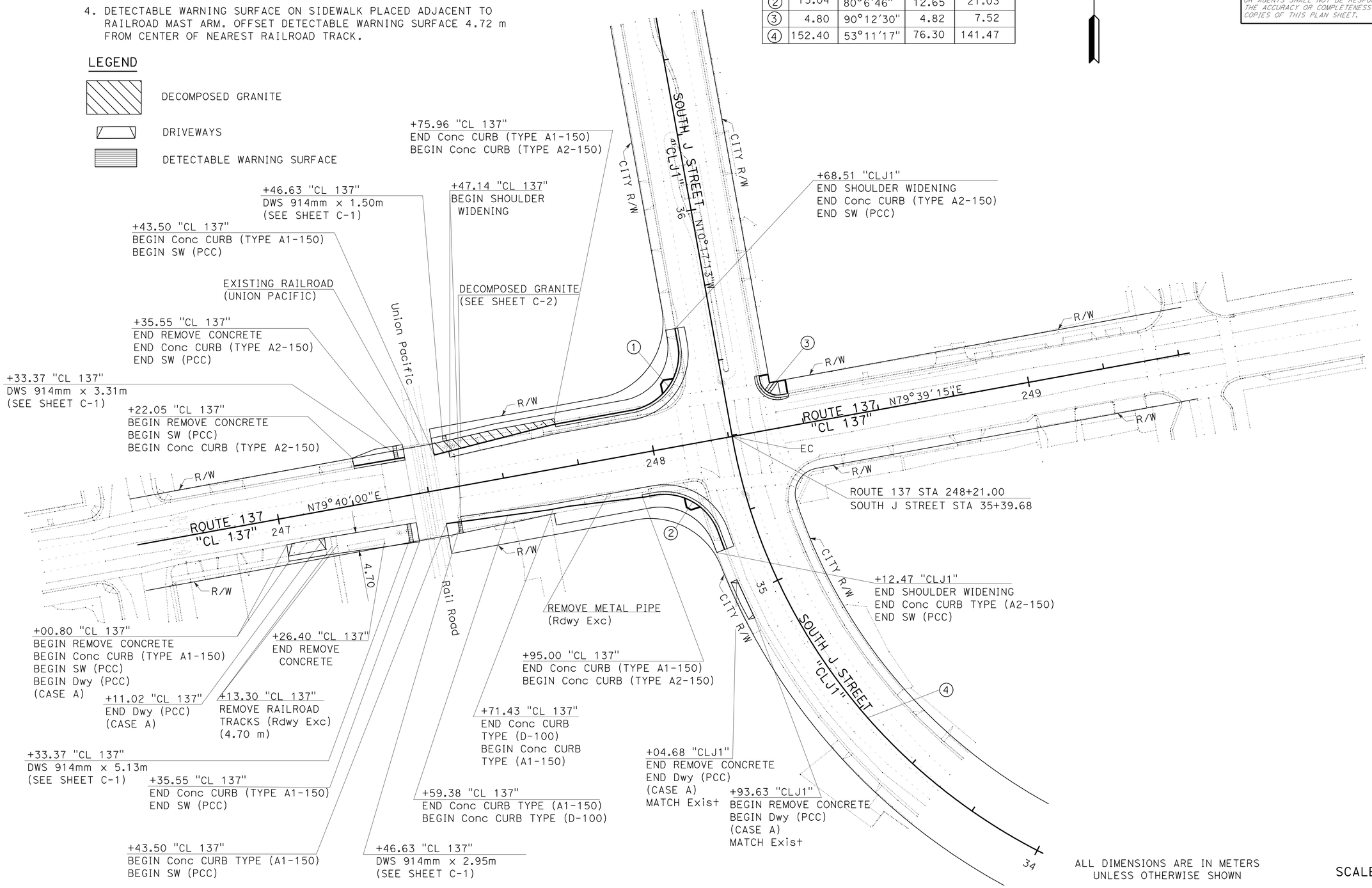

ALL DIMENSIONS ARE IN METERS UNLESS OTHERWISE SHOWN

SCALE: 1:500

LAYOUT

L-1

STATE OF CALIFORNIA - DEPARTMENT OF TRANSPORTATION
Caltrans DESIGN

FUNCTIONAL SUPERVISOR: DAVID SANGHA
CALCULATED-DESIGNED BY: GASHU ENQUANHONE
CHECKED BY: CARMELITA BELLE
REVISED BY
DATE REVISED

LAST REVISION 01-05-09
DATE PLOTTED => 17-NOV-2009
TIME PLOTTED => 13:31

Dist	COUNTY	LOCATION CODE	KILOMETER POST TOTAL PROJECT	SHEET No.	TOTAL SHEETS
06	Tul	137	R24.8	4	51

REGISTERED CIVIL ENGINEER 01/05/09 DATE

2-17-09
PLANS APPROVAL DATE

REGISTERED PROFESSIONAL ENGINEER D S SANGHA No. 59652 Exp. 12/31/09 CIVIL STATE OF CALIFORNIA

THE STATE OF CALIFORNIA OR ITS OFFICERS OR AGENTS SHALL NOT BE RESPONSIBLE FOR THE ACCURACY OR COMPLETENESS OF ELECTRONIC COPIES OF THIS PLAN SHEET.

Caltrans Metric

NOTES:

1. FOR COMPLETE RIGHT OF WAY DATA, SEE RIGHT OF WAY RECORD MAPS AT DISTRICT OFFICE.
2. REFER TO STANDARD PLANS FOR DETECTABLE WARNING SURFACE.
3. DETECTABLE WARNING SURFACE ON SIDEWALK PLACED ADJACENT TO RAILROAD MAST ARM. OFFSET DETECTABLE WARNING SURFACE 4.72 m FROM CENTER OF NEAREST RAILROAD TRACK.
4. SEE SHEET C-2 FOR DRIVEWAY AND SIDEWALK DETAILS

LEGEND

SIDEWALK (PCC)

DETECTABLE WARNING SURFACE

DECOMPOSED GRANITE

CURVE DATA

No.	R	Δ	T	L
1	15.04	89°49'2"	14.99	23.58
2	15.04	80°6'46"	12.65	21.03
3	3.65	89°50'31"	3.64	5.72
4	152.40	53°11'17"	76.30	141.47

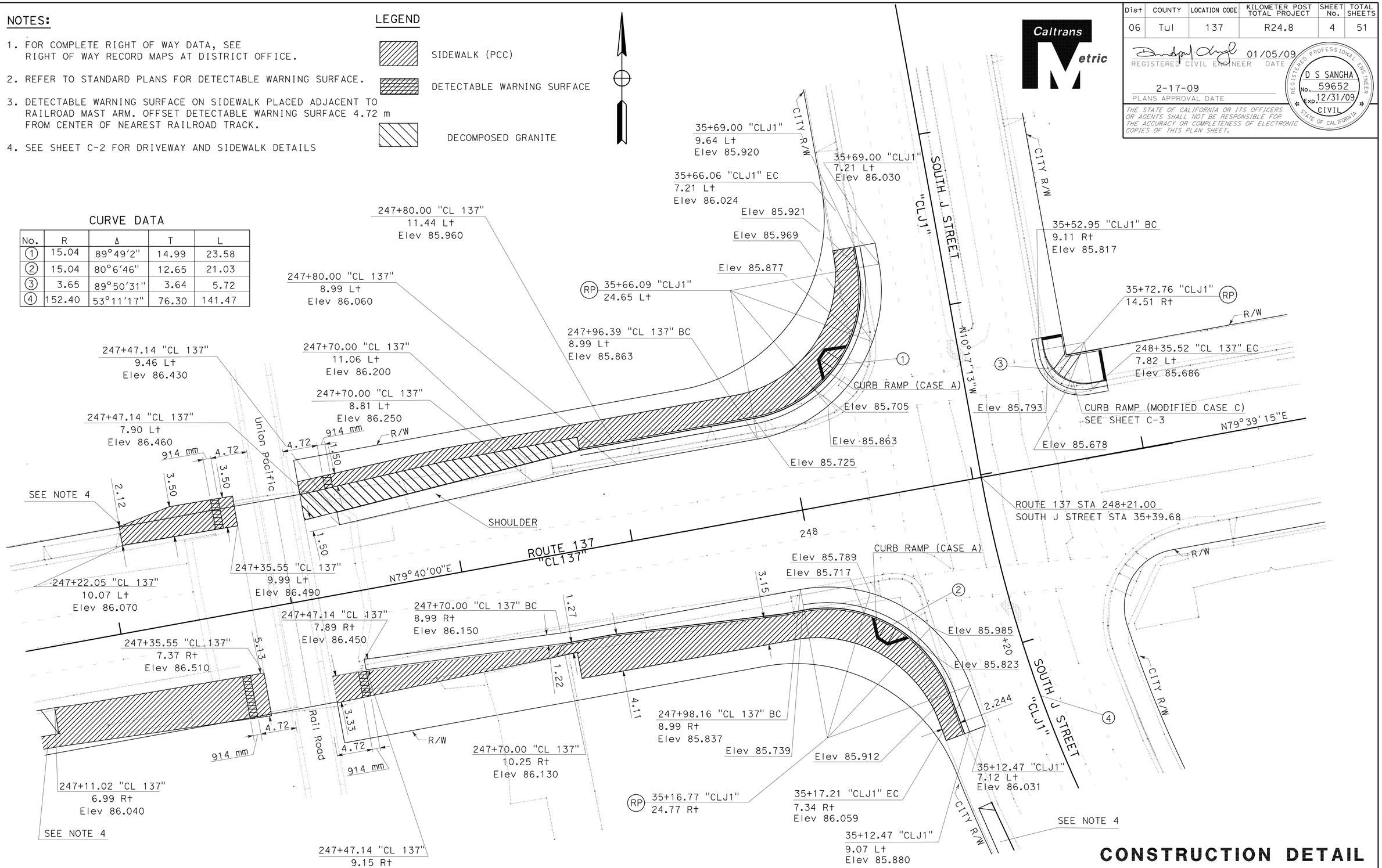

ALL DIMENSIONS ARE IN METERS UNLESS OTHERWISE SHOWN

CONSTRUCTION DETAIL

SCALE: 1:200

C-1

REVISED BY	DATE REVISED

GASHU ENQUANHONE
CARMELITA BELLE

CALCULATED-DESIGNED BY
CHECKED BY

FUNCTIONAL SUPERVISOR
DAVID SANGHA

STATE OF CALIFORNIA - DEPARTMENT OF TRANSPORTATION
Caltrans DESIGN

LAST REVISION 01-05-09
DATE PLOTTED => 17-NOV-2009
TIME PLOTTED => 13:31

Dist	COUNTY	LOCATION CODE	KILOMETER POST TOTAL PROJECT	SHEET No.	TOTAL SHEETS
06	Tul	137	R24.8	5	51

REGISTERED CIVIL ENGINEER 01/05/09 DATE

2-17-09
PLANS APPROVAL DATE

REGISTERED PROFESSIONAL ENGINEER D S SANGHA No. 59652 Exp 12/31/09 CIVIL STATE OF CALIFORNIA

THE STATE OF CALIFORNIA OR ITS OFFICERS OR AGENTS SHALL NOT BE RESPONSIBLE FOR THE ACCURACY OR COMPLETENESS OF ELECTRONIC COPIES OF THIS PLAN SHEET.

Caltrans Metric

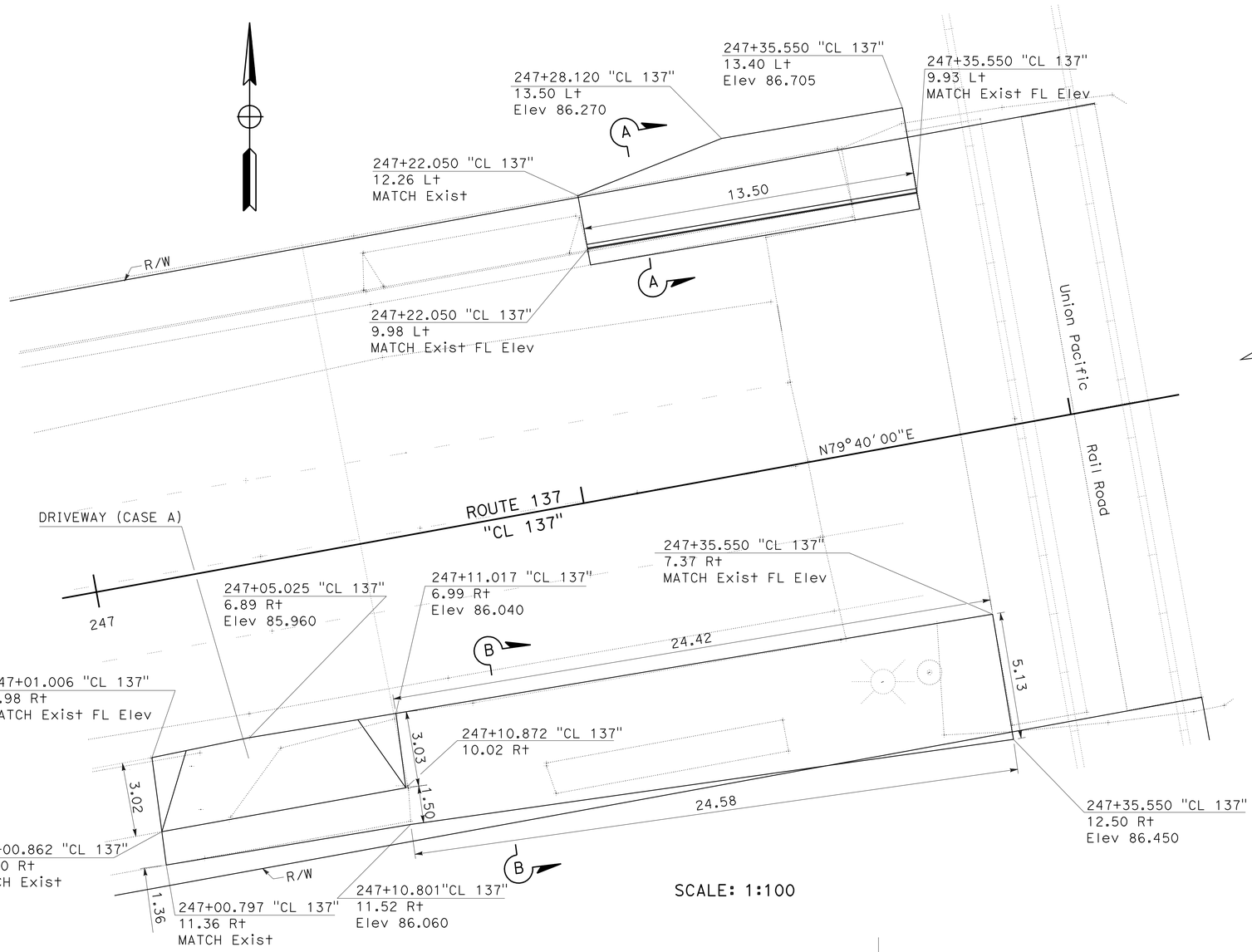

SCALE: 1:100

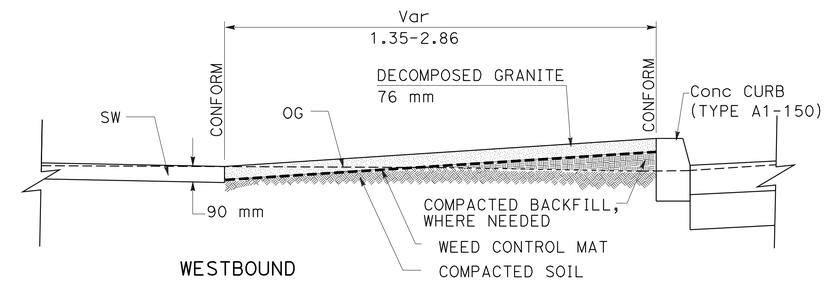

WESTBOUND
STA 247+43.5 TO STA 247+75.96

DECOMPOSED GRANITE DETAIL

NO SCALE

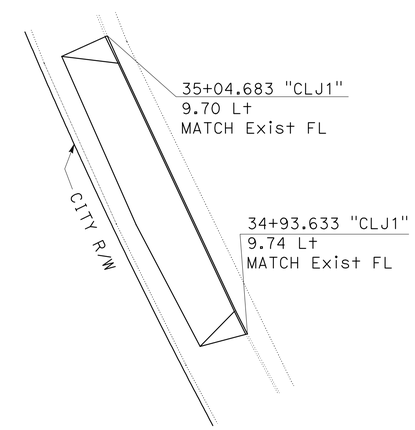

DRIVEWAY ON J STREET (CASE A)

NO SCALE

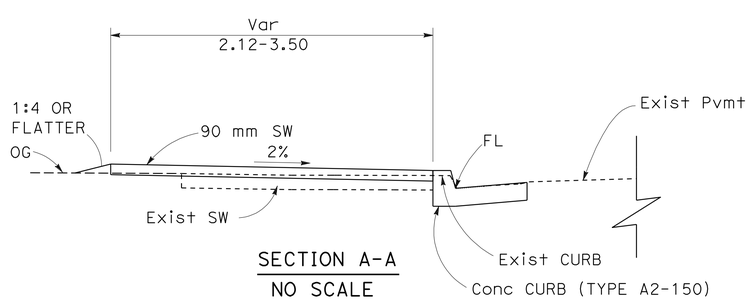

SECTION A-A
NO SCALE

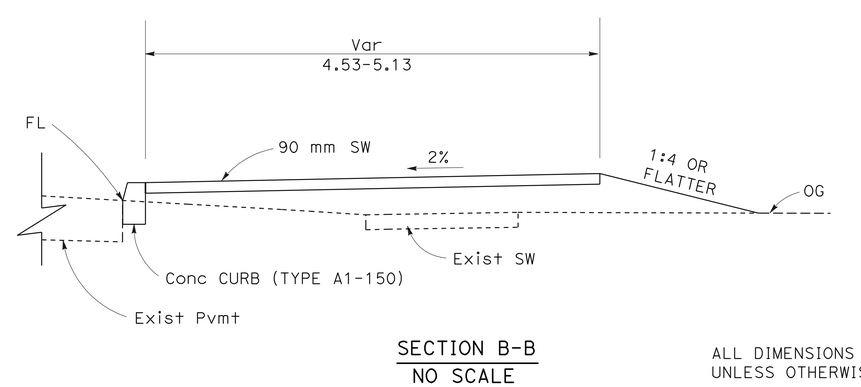

SECTION B-B
NO SCALE

CONSTRUCTION DETAILS

C-2

ALL DIMENSIONS ARE IN METERS
UNLESS OTHERWISE SHOWN

SCALE AS SHOWN

REVISED BY	
DATE REVISED	
CALCULATED-DESIGNED BY	GASHU ENQUANHONE
CHECKED BY	CARMELITA BELLE
FUNCTIONAL SUPERVISOR	DAVID SANGHA

STATE OF CALIFORNIA - DEPARTMENT OF TRANSPORTATION
Caltrans DESIGN

LAST REVISION 01-05-09 | DATE PLOTTED => 17-NOV-2009 | TIME PLOTTED => 13:31

Dist	COUNTY	LOCATION CODE	KILOMETER POST TOTAL PROJECT	SHEET No.	TOTAL SHEETS
06	Tul	137	R24.8	6	51

REGISTERED CIVIL ENGINEER 01/05/09 DATE

2-17-09
PLANS APPROVAL DATE

REGISTERED PROFESSIONAL ENGINEER D S SANGHA No. 59652 Exp. 12/31/09 CIVIL STATE OF CALIFORNIA

THE STATE OF CALIFORNIA OR ITS OFFICERS OR AGENTS SHALL NOT BE RESPONSIBLE FOR THE ACCURACY OR COMPLETENESS OF ELECTRONIC COPIES OF THIS PLAN SHEET.

Caltrans Metric

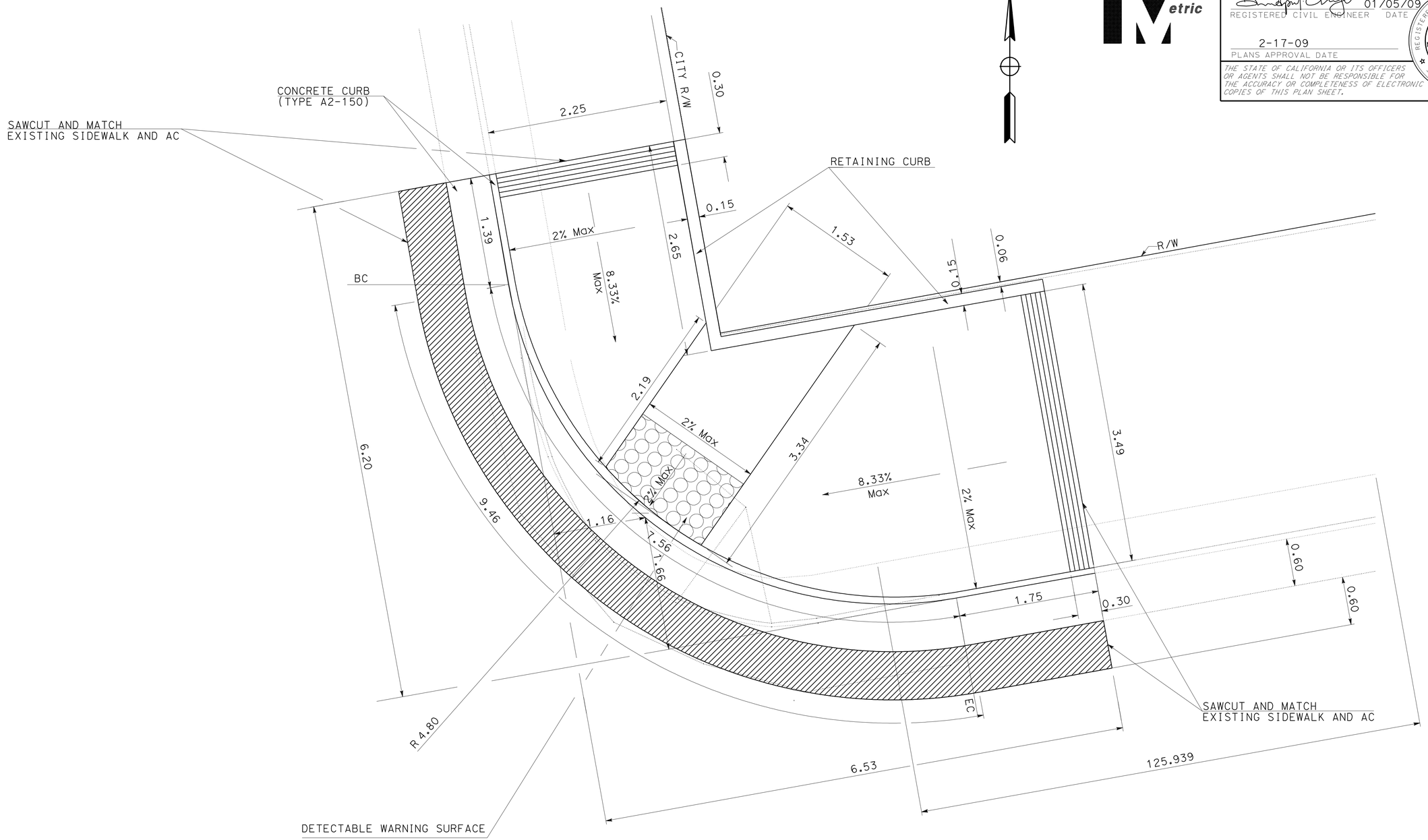

CURB RAMP DETAIL

ROUTE 137 / SOUTH J STREET
NE CORNER
(MODIFIED CASE C)

ALL DIMENSIONS ARE IN
METERS UNLESS OTHERWISE SHOWN

CONSTRUCTION DETAIL

SCALE: 1:20

C-3

STATE OF CALIFORNIA - DEPARTMENT OF TRANSPORTATION
Caltrans
DESIGN

FUNCTIONAL SUPERVISOR: DAVID SANGHA
CALCULATED-DESIGNED BY: GASHU ENQUANHONE
CHECKED BY: CARMELITA BELLE
REVISED BY
DATE REVISED

LAST REVISION 01-05-09 | DATE PLOTTED => 17-NOV-2009 | TIME PLOTTED => 13:31

BORDER LAST REVISED 3/1/2007 | RELATIVE BORDER SCALE IS IN MILLIMETERS 0 20 40 60 80 | USERNAME => trmikesl | DGN FILE => 60a570ga003.dgn | CU 06257 | EA 0A5701

Dist	COUNTY	ROUTE	KILOMETER POST TOTAL PROJECT	SHEET No.	TOTAL SHEETS
06	Tul	137	R24.8	7	51

REGISTERED CIVIL ENGINEER 01/05/09 DATE

2-17-09
PLANS APPROVAL DATE

REGISTERED PROFESSIONAL ENGINEER D S SANGHA No. 59652 Exp. 12/31/09 CIVIL STATE OF CALIFORNIA

THE STATE OF CALIFORNIA OR ITS OFFICERS OR AGENTS SHALL NOT BE RESPONSIBLE FOR THE ACCURACY OR COMPLETENESS OF ELECTRONIC COPIES OF THIS PLAN SHEET.

Caltrans Metric

NOTES:

1. INSTALL TEMPORARY SILT FENCE BY FIRST DIGGING TRENCH, DRIVING POSTS, PLACING AND SECURING FABRIC. THEN BACKFILL AND TAMP.
2. DIMENSIONS MAY VARY TO FIT FIELD CONDITIONS.

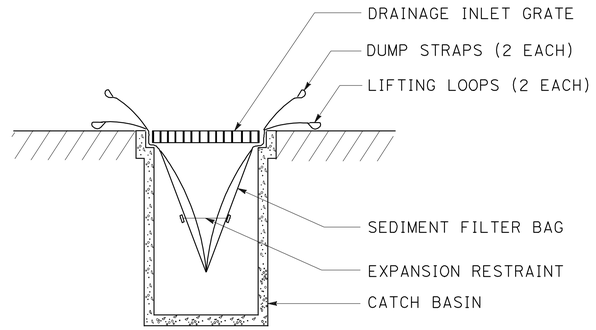

SECTION B-B

SEDIMENT FILTER BAG DETAIL

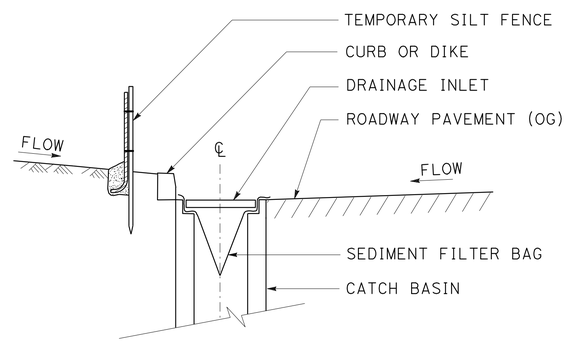

SECTION A-A

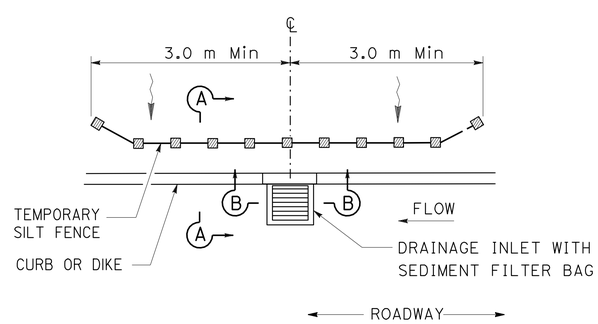

PLAN

TEMPORARY DRAINAGE INLET PROTECTION (TYPE 5) (SEDIMENT FILTER BAG)

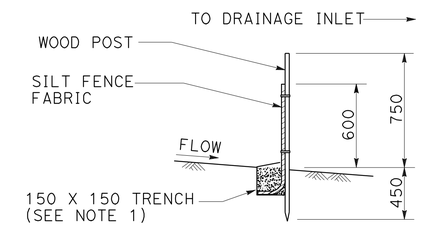

SECTION
TEMPORARY SILT FENCE DETAIL

TEMPORARY WATER POLLUTION CONTROL DETAILS
(TEMPORARY DRAINAGE INLET PROTECTION)

NO SCALE

ALL DIMENSIONS ARE IN MILLIMETERS UNLESS OTHERWISE SHOWN

WPCD-1

STATE OF CALIFORNIA - DEPARTMENT OF TRANSPORTATION
Caltrans DESIGN

FUNCTIONAL SUPERVISOR: DAVID SANGHA
CALCULATED-DESIGNED BY: GASHU ENQUANHONE
CHECKED BY: CARMELITA BELLE
REVISED BY
DATE REVISED

LAST REVISION 01-05-09 | DATE PLOTTED => 17-NOV-2009 | TIME PLOTTED => 13:32

Dist	COUNTY	LOCATION CODE	KILOMETER POST TOTAL PROJECT	SHEET No.	TOTAL SHEETS
06	Tul	137	R24.8	8	51

REGISTERED CIVIL ENGINEER 01/05/09 DATE

2-17-09
PLANS APPROVAL DATE

REGISTERED PROFESSIONAL ENGINEER D S SANGHA No. 59652 Exp. 12/31/09 CIVIL STATE OF CALIFORNIA

THE STATE OF CALIFORNIA OR ITS OFFICERS OR AGENTS SHALL NOT BE RESPONSIBLE FOR THE ACCURACY OR COMPLETENESS OF ELECTRONIC COPIES OF THIS PLAN SHEET.

Caltrans Metric

LEGEND

X DRAINAGE SYSTEM No.

X DRAINAGE UNIT

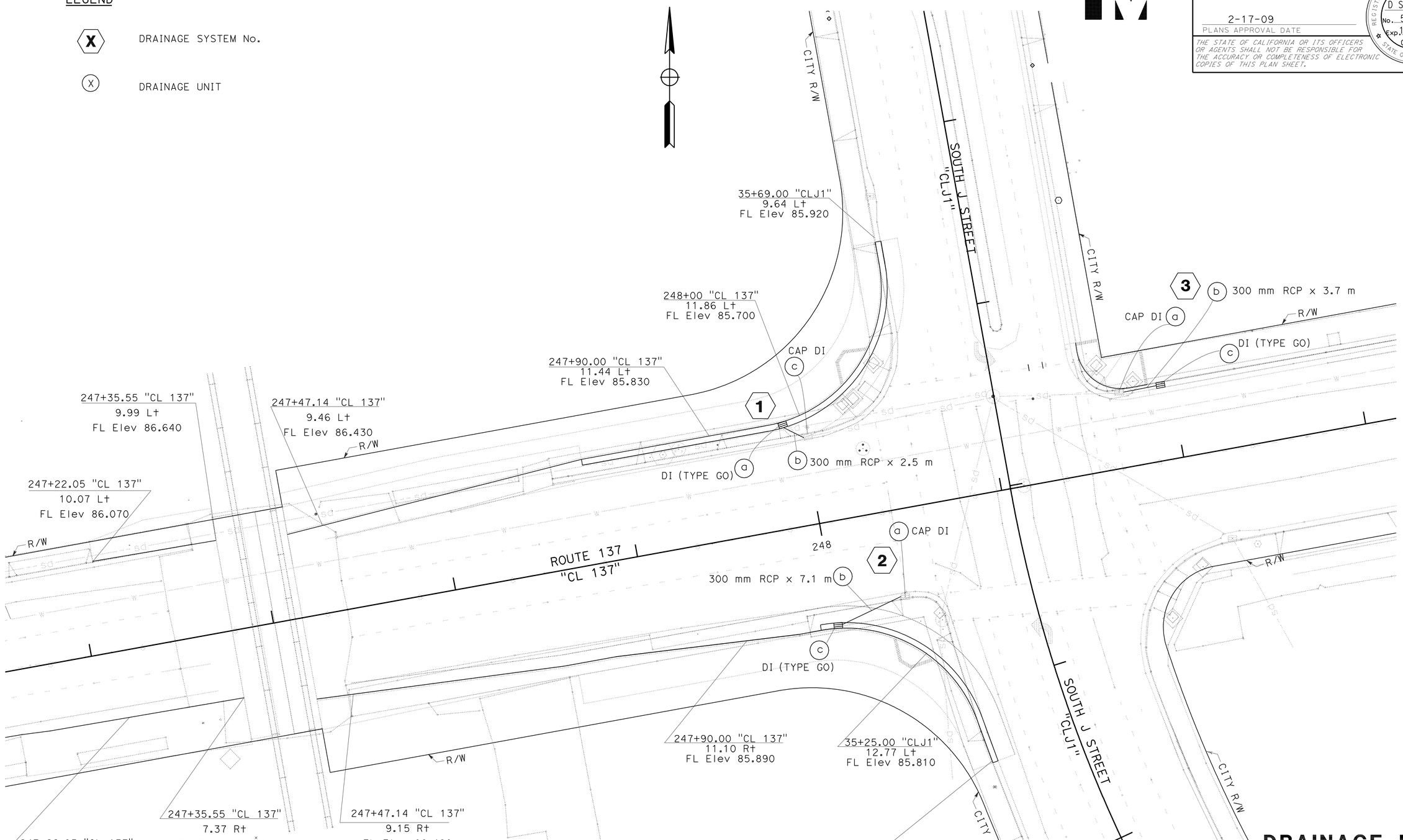

THIS PLAN ACCURATE FOR DRAINAGE WORK ONLY

ALL DIMENSIONS ARE IN METERS UNLESS OTHERWISE SHOWN

DRAINAGE PLAN

D-1

SCALE: 1:200

STATE OF CALIFORNIA - DEPARTMENT OF TRANSPORTATION
Caltrans DESIGN

FUNCTIONAL SUPERVISOR: DAVID SANGHA
CALCULATED-DESIGNED BY: GASHU ENQUANHONE
CHECKED BY: CARMELITA BELLE
REVISED BY / DATE REVISED

LAST REVISION 01-05-09 | DATE PLOTTED => 17-NOV-2009 | TIME PLOTTED => 13:32

Dist	COUNTY	LOCATION CODE	KILOMETER POST TOTAL PROJECT	SHEET No.	TOTAL SHEETS
06	Tul	137	R24.8	9	51

Caltrans Metric

REGISTERED CIVIL ENGINEER 01/05/09 DATE

2-17-09
PLANS APPROVAL DATE

REGISTERED PROFESSIONAL ENGINEER D S SANGHA No. 59652 Exp. 12/31/09 CIVIL STATE OF CALIFORNIA

THE STATE OF CALIFORNIA OR ITS OFFICERS OR AGENTS SHALL NOT BE RESPONSIBLE FOR THE ACCURACY OR COMPLETENESS OF ELECTRONIC COPIES OF THIS PLAN SHEET.

REVISED BY | DATE REVISED

GASHU ENQUANHONE | CARMELITA BELLE

CALCULATED-DESIGNED BY | CHECKED BY

FUNCTIONAL SUPERVISOR: DAVID SANGHA

STATE OF CALIFORNIA - DEPARTMENT OF TRANSPORTATION

Caltrans DESIGN

DRAINAGE SYSTEM No. 1

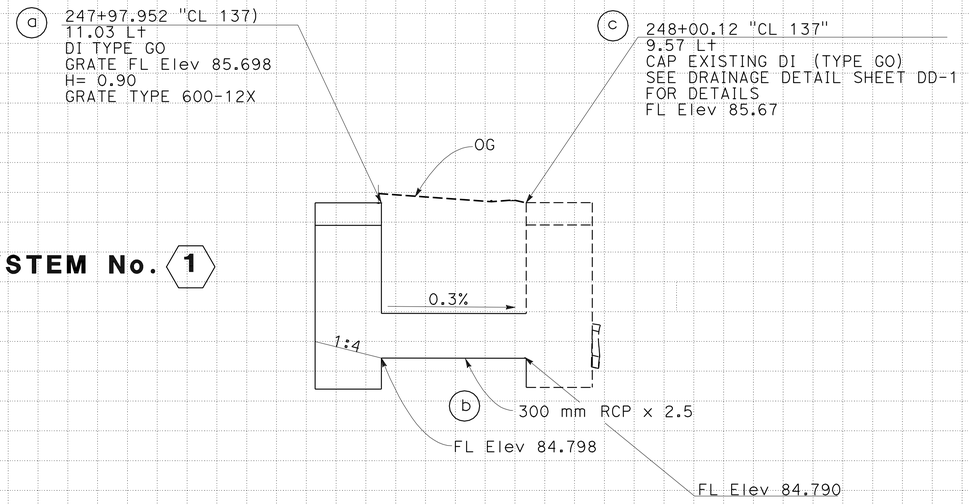

DRAINAGE SYSTEM No. 2

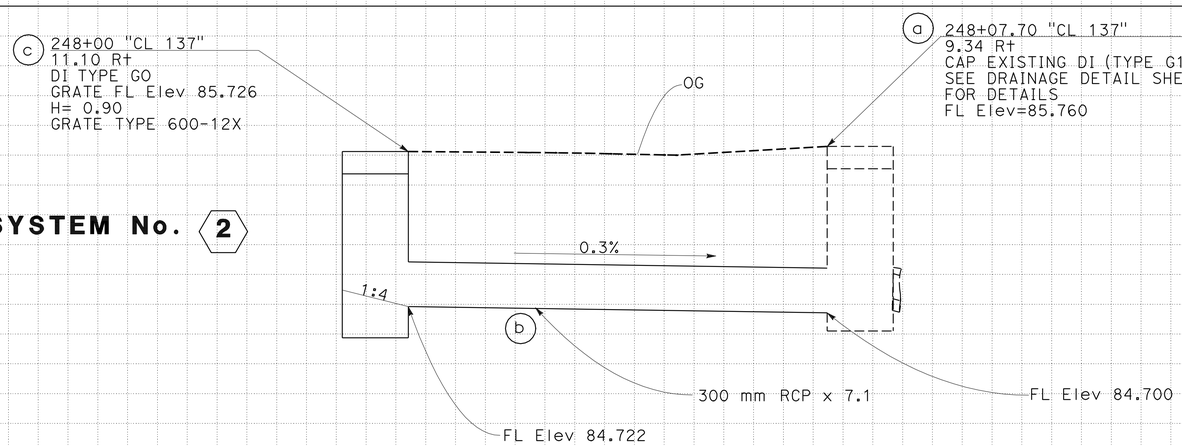

DRAINAGE SYSTEM No. 3

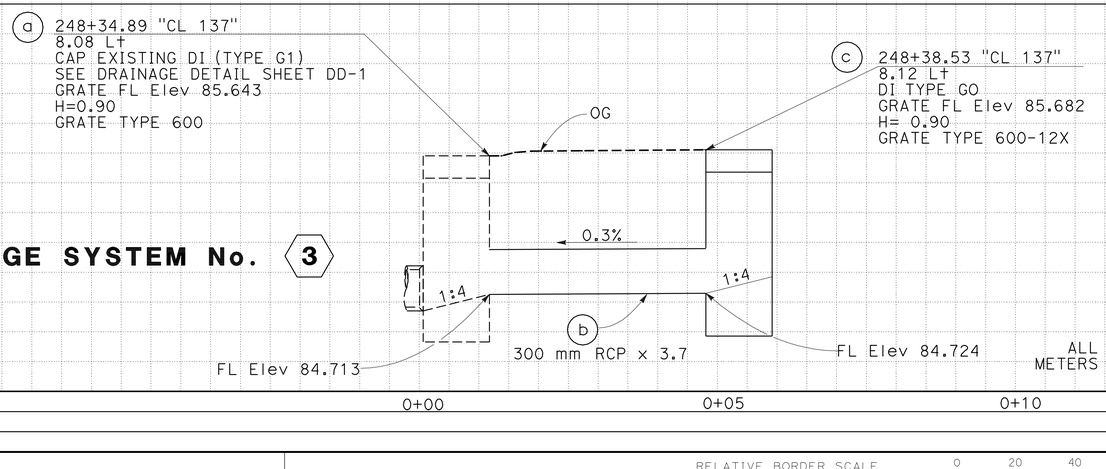

ALL DIMENSIONS ARE IN METERS UNLESS OTHERWISE SHOWN

DRAINAGE PROFILES

SCALE: Horiz 1:50
Vert 1:20

DP-1

Station	0+00	0+05	0+10	0+15	0+20
m^3 Exc					
m^3 Emb					

LAST REVISION 01-05-09 | DATE PLOTTED => 17-NOV-2009 | TIME PLOTTED => 13:32

Dist	COUNTY	LOCATION CODE	KILOMETER POST TOTAL PROJECT	SHEET No.	TOTAL SHEETS
06	Tul	137	R24.8	10	51

Caltrans Metric

REGISTERED CIVIL ENGINEER 01/05/09 DATE

2-17-09
PLANS APPROVAL DATE

REGISTERED PROFESSIONAL ENGINEER D S SANGHA No. 59652 Exp. 12/31/09 CIVIL STATE OF CALIFORNIA

THE STATE OF CALIFORNIA OR ITS OFFICERS OR AGENTS SHALL NOT BE RESPONSIBLE FOR THE ACCURACY OR COMPLETENESS OF ELECTRONIC COPIES OF THIS PLAN SHEET.

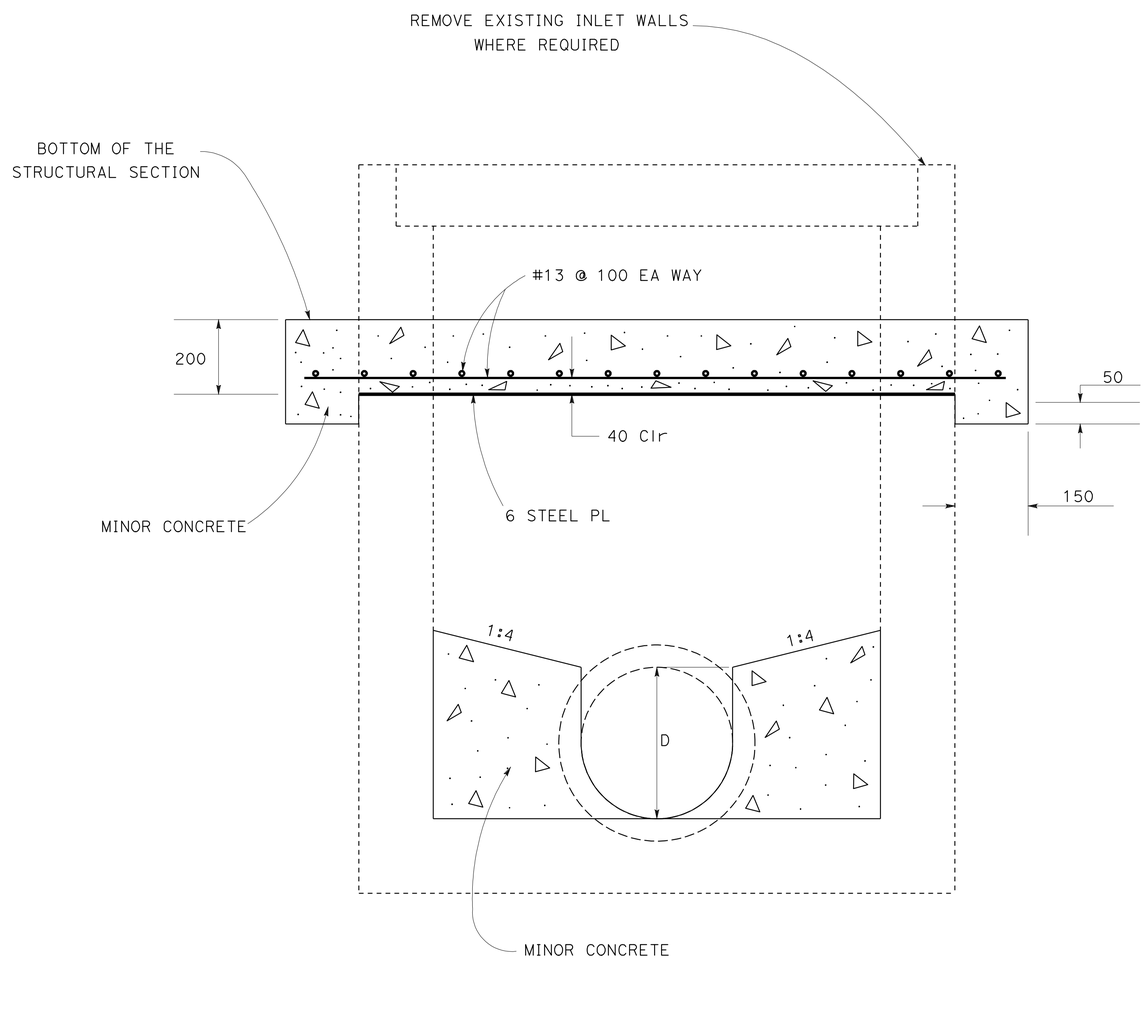

CAP INLET

ALL DIMENSIONS ARE IN
MILLIMETERS UNLESS OTHERWISE SHOWN

DRAINAGE DETAILS

NO SCALE **DD-1**

STATE OF CALIFORNIA - DEPARTMENT OF TRANSPORTATION
Caltrans **DESIGN**

FUNCTIONAL SUPERVISOR: DAVID SANGHA
CALCULATED-DESIGNED BY: GASHU ENQUANHONE
CHECKED BY: CARMELITA BELLE
REVISED BY
DATE REVISED

LAST REVISION 01-05-09 | DATE PLOTTED => 17-NOV-2009 | TIME PLOTTED => 13:32

Dist	COUNTY	LOCATION CODE	KILOMETER POST TOTAL PROJECT	SHEET No.	TOTAL SHEETS
06	Tul	137	R24.8	11	51

Caltrans Metric

REGISTERED CIVIL ENGINEER 01/05/09 DATE

2-17-09
PLANS APPROVAL DATE

REGISTERED PROFESSIONAL ENGINEER D S SANGHA No. 59652 Exp. 12/31/09 CIVIL STATE OF CALIFORNIA

THE STATE OF CALIFORNIA OR ITS OFFICERS OR AGENTS SHALL NOT BE RESPONSIBLE FOR THE ACCURACY OR COMPLETENESS OF ELECTRONIC COPIES OF THIS PLAN SHEET.

DRAINAGE QUANTITIES

PLAN SHEET No.	DRAINAGE SYSTEM No. ⬡	DRAINAGE UNIT ○	Misc IRON AND STEEL (kg)	MINOR CONCRETE (MINOR STRUCTURE) (m^3)	300 mm RCP (m)	(N) FRAME & GRATE (EA)	CAP INLET (EA)	(N) HEIGHT OF INLET "H" (m)	DESCRIPTION	STATION	PLAN SHEET No.	DRAINAGE SYSTEM No. ⬡	DRAINAGE UNIT ○
D-1	1	a	108	0.91		1		0.9	DI TYPE GO, GRATE TYPE 600-12X	"CL 137" 247+97.952	D-1	1	a
	1	b			2.5				300 mm RCP	"CL 137" 247+97.952 TO "CL 137" 248+00.120		1	b
	1	c					1		CAP DI TYPE GO	"CL 137" 248+00.120		1	c
D-1	2	a					1		CAP DI TYPE G1	"CL 137" 248+07.700	D-1	2	a
	2	b			7.1				300 mm RCP	"CL 137" 248+00.000 TO "CL 137" 248+07.700		2	b
	2	c	108	0.91		1		0.9	DI TYPE GO, GRATE TYPE 600-12X	"CL 137" 248+00.000		2	c
D-1	3	a					1		CAP DI TYPE G1	"CL 137" 248+34.890	D-1	3	a
	3	b			3.7				300 mm RCP	"CL 137" 248+34.890 TO "CL 137" 248+38.530		3	b
	3	c	108	0.91		1		0.9	DI TYPE GO, GRATE TYPE 600-12X	"CL 137" 248+38.530		3	c
TOTAL			324	2.73	13.30		3						

(N) = NOT A SEPARATE PAY ITEM, FOR INFORMATION ONLY.

DRAINAGE QUANTITIES
DQ-1

CALCULATED-DESIGNED BY GASHU ENQUANHONE
CHECKED BY CARMELITA BELLE
REVISED BY
DATE REVISED
FUNCTIONAL SUPERVISOR DAVID SANGHA

STATE OF CALIFORNIA - DEPARTMENT OF TRANSPORTATION
Caltrans DESIGN

LAST REVISION 01-05-09 DATE PLOTTED => 17-NOV-2009 TIME PLOTTED => 13:32

Dist	COUNTY	LOCATION CODE	KILOMETER POST TOTAL PROJECT	SHEET No.	TOTAL SHEETS
06	Tul	137	R24.8	12	51

REGISTERED CIVIL ENGINEER 01/05/09 DATE

2-17-09
PLANS APPROVAL DATE

REGISTERED PROFESSIONAL ENGINEER D S SANGHA No. 59652 Exp. 12/31/09 CIVIL STATE OF CALIFORNIA

THE STATE OF CALIFORNIA OR ITS OFFICERS OR AGENTS SHALL NOT BE RESPONSIBLE FOR THE ACCURACY OR COMPLETENESS OF ELECTRONIC COPIES OF THIS PLAN SHEET.

Caltrans Metric

NOTE: LOCATION OF UTILITY FACILITIES ON THESE PLANS ARE APPROXIMATE AND SHALL BE VERIFIED BY THE CONTRACTOR PRIOR TO CONSTRUCTION.

LEGEND

—— sd ——	EXISTING STORM DRAIN-CITY OF TULARE
—— w ——	EXISTING WATER MAIN-CITY OF TULARE
—— s ——	EXISTING SEWER-CITY OF TULARE
—— t ——	EXISTING TELEPHONE CONDUIT UNDERGROUND-SOUTH WESTERN BELL CORPORATION
—— e ——	EXISTING ELECTRIC CONDUIT UNDERGROUND-SOUTHERN CALIFORNIA EDISON
(X)	POTHOLE LOCATION AND NUMBER

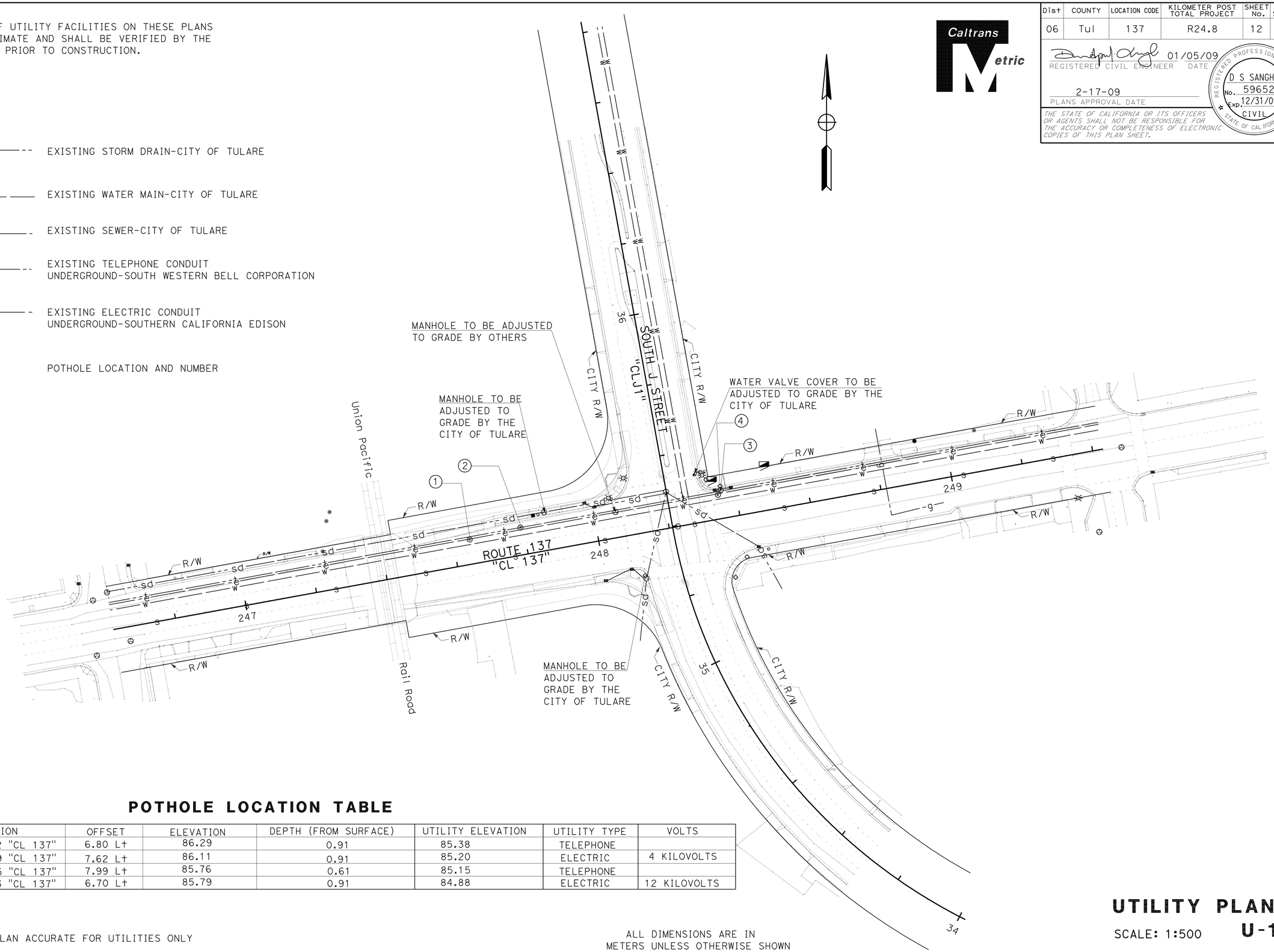

POTHOLE LOCATION TABLE

(X)	STATION	OFFSET	ELEVATION	DEPTH (FROM SURFACE)	UTILITY ELEVATION	UTILITY TYPE	VOLTS
(1)	247+64.82 "CL 137"	6.80 Lt	86.29	0.91	85.38	TELEPHONE	
(2)	247+79.39 "CL 137"	7.62 Lt	86.11	0.91	85.20	ELECTRIC	4 KILOVOLTS
(3)	248+36.25 "CL 137"	7.99 Lt	85.76	0.61	85.15	TELEPHONE	
(4)	248+35.13 "CL 137"	6.70 Lt	85.79	0.91	84.88	ELECTRIC	12 KILOVOLTS

THIS PLAN ACCURATE FOR UTILITIES ONLY

ALL DIMENSIONS ARE IN METERS UNLESS OTHERWISE SHOWN

UTILITY PLAN

SCALE: 1:500 **U-1**

STATE OF CALIFORNIA - DEPARTMENT OF TRANSPORTATION
Caltrans **DESIGN**

FUNCTIONAL SUPERVISOR: DAVID SANGHA
CALCULATED-DESIGNED BY: GASHU ENQUANHONE
CHECKED BY: CARMELITA BELLE
REVISED BY / DATE REVISED

LAST REVISION 01-05-09 | DATE PLOTTED => 17-NOV-2009 | TIME PLOTTED => 13:32

DIST	COUNTY	ROUTE	KILOMETER POST TOTAL PROJECT	SHEET No.	TOTAL SHEETS
06	Tul	137	R24.8	13	51

Hassan Taha 01/02/09
REGISTERED CIVIL ENGINEER DATE

2-17-09
PLANS APPROVAL DATE

REGISTERED PROFESSIONAL ENGINEER HASSAN M. TAHA No. 60130 Exp. 06/30/10 CIVIL STATE OF CALIFORNIA

THE STATE OF CALIFORNIA OR ITS OFFICERS OR AGENTS SHALL NOT BE RESPONSIBLE FOR THE ACCURACY OR COMPLETENESS OF ELECTRONIC COPIES OF THIS PLAN SHEET.

Caltrans Metric

STATIONARY MOUNTED CONSTRUCTION AREA SIGNS

SIGN No.	SIGN CODE	PANEL SIZE mm x mm	SIGN MESSAGE	No. OF POSTS	POST SIZE mm x mm	No. OF SIGNS
A	W20-1	1200 x 1200	ROAD WORK AHEAD	1	89 x 140	4
B	G20-2	900 x 450	END ROAD WORK	1	89 x 89	4

NOTES: SIGN LOCATION SHOWN ARE APPROXIMATE.
EXACT LOCATIONS TO BE DETERMINED BY THE ENGINEER.

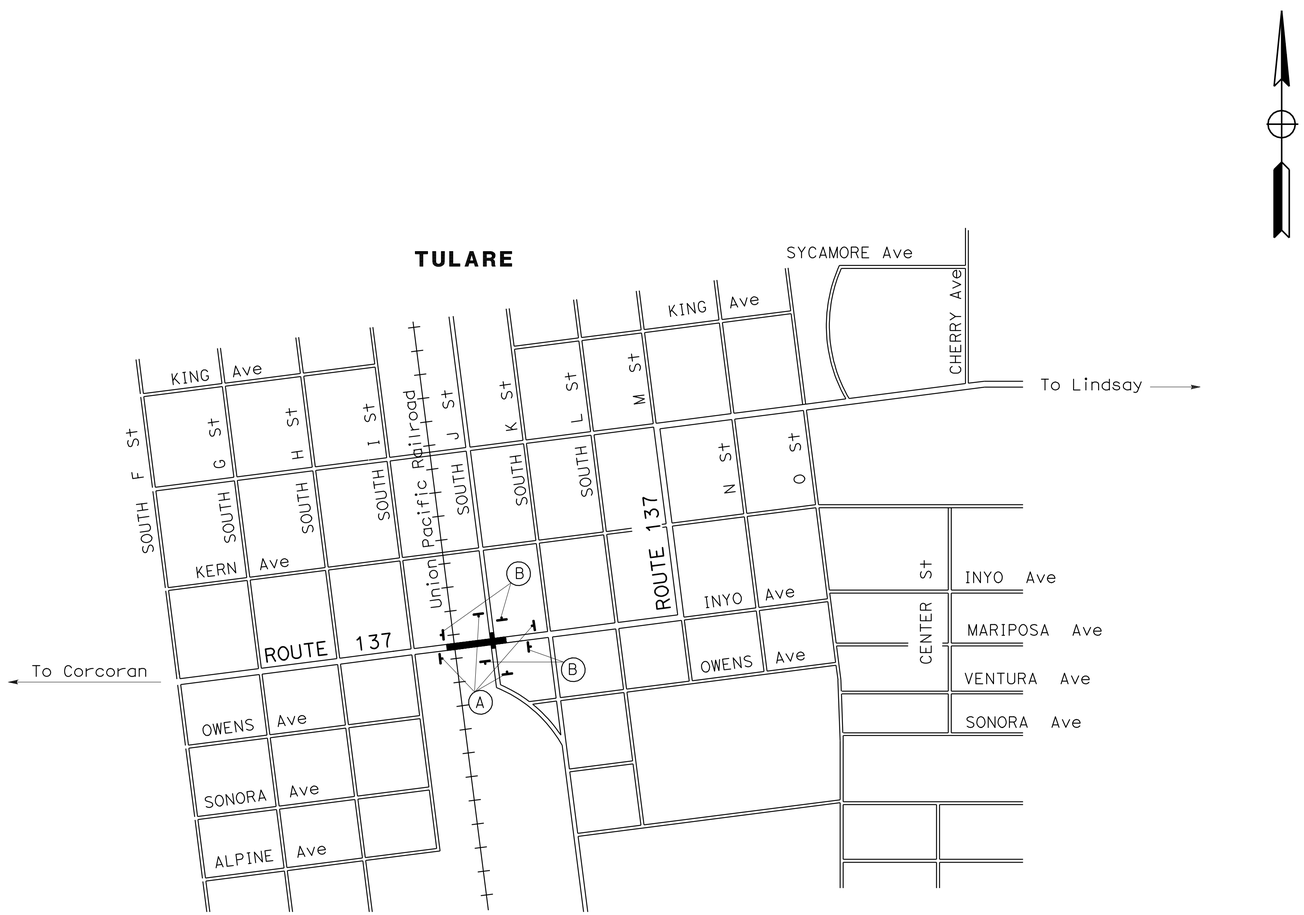

THIS PLAN ACCURATE FOR CONSTRUCTION AREA SIGN WORK ONLY.

ALL DIMENSIONS ARE IN METERS UNLESS OTHERWISE SHOWN

CONSTRUCTION AREA SIGNS

NO SCALE

CS-1

STATE OF CALIFORNIA - DEPARTMENT OF TRANSPORTATION
Caltrans **TRAFFIC DESIGN**

FUNCTIONAL SUPERVISOR: M. QATAMI
CALCULATED-DESIGNED BY: SANDLY LE
CHECKED BY: HASSAN TAHA
REVISED BY / DATE REVISED

LAST REVISION 01-02-09 | DATE PLOTTED => 17-NOV-2009 | TIME PLOTTED => 13:33

DIST	COUNTY	ROUTE	KILOMETER POST TOTAL PROJECT	SHEET No.	TOTAL SHEETS
06	Tul	137	R24.8	14	51

Hassan Taha 01/02/09
REGISTERED CIVIL ENGINEER DATE

2-17-09
PLANS APPROVAL DATE

REGISTERED PROFESSIONAL ENGINEER HASSAN M. TAHA No. 60130 Exp. 06/30/10 CIVIL STATE OF CALIFORNIA

THE STATE OF CALIFORNIA OR ITS OFFICERS OR AGENTS SHALL NOT BE RESPONSIBLE FOR THE ACCURACY OR COMPLETENESS OF ELECTRONIC COPIES OF THIS PLAN SHEET.

Caltrans Metric

LEGEND

- XX — TRAFFIC STRIPE DETAIL No.
- PAVEMENT MARKING TYPE III (L+) ARROW
- PAVEMENT MARKING TYPE VI ARROW
- RAILROAD CROSSING SYMBOL PAVEMENT MARKING
- REMOVE ROADSIDE SIGN
- LIMITS OF DESIGNATED TRAFFIC STRIPING DETAIL
- (x) — ROADSIDE SIGN No.
- ROADSIDE SIGN ONE POST
- RELOCATE ROADSIDE SIGN — From / To

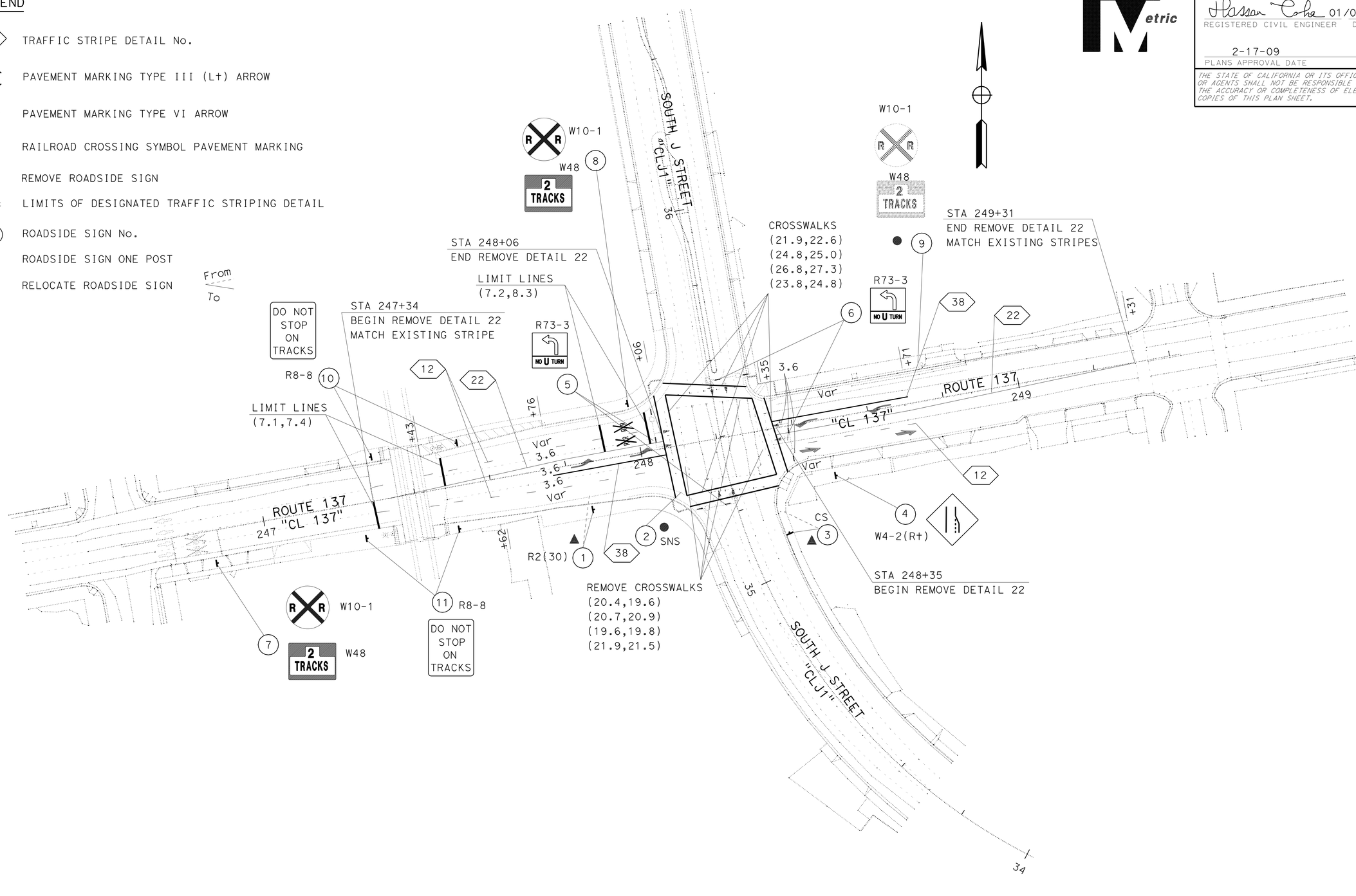

THIS PLAN ACCURATE FOR PAVEMENT DELINEATION AND SIGN PLAN WORK ONLY

ALL DIMENSIONS ARE IN METERS UNLESS OTHERWISE SHOWN

PAVEMENT DELINEATION AND SIGN PLAN

SCALE 1:500

PD-1

STATE OF CALIFORNIA - DEPARTMENT OF TRANSPORTATION
Caltrans **TRAFFIC DESIGN**

FUNCTIONAL SUPERVISOR: M. QATAMI
CALCULATED-DESIGNED BY: SANDLY LE
CHECKED BY: HASSAN TAHA
REVISED BY / DATE REVISED

LAST REVISION 01-02-09 DATE PLOTTED => 17-NOV-2009 TIME PLOTTED => 13:33

DIST	COUNTY	ROUTE	KILOMETER POST TOTAL PROJECT	SHEET No.	TOTAL SHEETS
06	Tul	137	R24.8	15	51

Hassan Taha 12/15/08
REGISTERED CIVIL ENGINEER DATE

2-17-09
PLANS APPROVAL DATE

REGISTERED PROFESSIONAL ENGINEER HASSAN M.TAHA No. 60130 Exp. 06/30/10 CIVIL STATE OF CALIFORNIA

THE STATE OF CALIFORNIA OR ITS OFFICERS OR AGENTS SHALL NOT BE RESPONSIBLE FOR THE ACCURACY OR COMPLETENESS OF ELECTRONIC COPIES OF THIS PLAN SHEET.

Caltrans Metric

ROADSIDE SIGNS QUANTITIES

SHEET No.	SIGN No.	SIGN CODE	PANEL SIZE (mm x mm)	(N) NUMBER OF PANELS	SIGN MESSAGE	REMOVE ROADSIDE SIGN	REMOVE ROADSIDE SIGN (STRAP & SADDLE BRACKET METHOD)	RELOCATE ROADSIDE SIGN	ROADSIDE SIGN- ONE POST	SINGLE FACED	DOUBLE FACED	SIGN MATERIAL: BACKGROUND SHEETING COLOR	SIGN MATERIAL: BACKGROUND Retroreflectivity ASTM TYPE	SIGN MATERIAL: LEGEND SHEETING COLOR	SIGN MATERIAL: LEGEND Retroreflectivity ASTM TYPE	SIGN MATERIAL: GRAFFITTI FLOW STANDARD	SIGN MATERIAL: GRAFFITTI FLOW PREMIUM	FURNISH SINGLE SHEET ALUMINUM SIGN UNFRAMED 1.6 mm	REMARK
						EA	EA	EA	EA									m2	
PD-1	1	R2(30)			SPEED LIMIT (30)			1											
	2	SNS			STREET NAME SIGN	1													
	3	CS			CITY SIGN			1											
	4	W4-2(R†)	900 x 900		"MERGE SYMBOL"				1	X		GREEN	III	WHITE	IV	X		0.81	
	5	R73-3	600 x 600	2	NO U TURN (SYMBOL)														SEE ELECTRICAL PLANS
	6	R73-3	600 x 600	2	NO U TURN (SYMBOL)														SEE ELECTRICAL PLANS
	7	W10-1	750 Dia		RAILROAD SYMBOL				1	X		MULTI	III	BLACK	IV	X		0.44	
		W48	750 x 600		2 TRACKS SYMBOL					X		MULTI	III	YELLOW	IV	X		0.45	
	8	W10-1	750 Dia		RAILROAD SYMBOL				1	X		MULTI	III	BLACK	IV	X		0.44	
		W48	750 x 600		2 TRACKS SYMBOL					X		MULTI	III	YELLOW	IV	X		0.45	
	9	W10-1,W48			RAILROAD SYMBOL,2 TRACKS SYMBOL		1												
	10	R8-8	600 x 750		DO NOT STOP ON TRACKS				2	X		WHITE	III	BLACK	IV	X		0.90	
	11	R8-8	600 x 750		DO NOT STOP ON TRACKS				2	X		WHITE	III	BLACK	IV	X		0.90	
TOTAL						1	1	2	7									4.39	

NOTE:
(N) NOT A SEPARATE PAY ITEM, FOR INFORMATION ONLY.

PAVEMENT DELINEATION QUANTITIES

SHEET No.	STATIONING	DETAIL No.	PAVEMENT MARKER (RETROREFLECTIVE) TYPE D Yellow (Two-Way)	PAVEMENT MARKER (RETROREFLECTIVE) TYPE G Clear (One-Way)	100 mm THERMOPLASTIC TRAFFIC STRIPE (BROKEN 10.98 m -3.66 m) WHITE	100 mm THERMOPLASTIC TRAFFIC STRIPE SOLID YELLOW	200 mm THERMOPLASTIC TRAFFIC STRIPE SOLID WHITE	REMOVE PAINTED TRAFFIC STRIPE YELLOW	REMOVE PAVEMENT MARKER	THERMOPLASTIC PAVEMENT MARKING DESCRIPTION	THERMOPLASTIC PAVEMENT MARKING m^2 White	REMOVE PAINTED PAVEMENT MARKING DESCRIPTION	REMOVE PAINTED PAVEMENT MARKING m^2 White
			EA	EA	m	m	m	m	EA				
PD-1	247+34 TO 248+06	22	22			144				4-CROSSWALKS	59.1	4-CROSSWALKS	49.32
	248+35 TO 249+31	22	30			192				2-LIMIT LINES	8.7		
	247+34 TO 248+06	12		12	144					4-TYPE III(L†) ARROWS	15.6		
	248+35 TO 248+71	12		4	36					2-TYPE IV ARROWS	7.8		
	247+76 TO 248+06	38		5			30			2-LIMIT LINES	9.3		
	248+35 TO 248+71	38		6			36			2-RAILROAD SYMBOL	13.0		
	247+34 TO 248+06	22						144	22				
	248+35 TO 249+31	22						192	30				
SUBTOTAL			52	27	180	336	66	336	52		113.5		49.32
TOTAL			79		180	336	66	336	52		113.5		49.32

PAVEMENT DELINEATION AND SIGN QUANTITIES
PDQ-1

STATE OF CALIFORNIA - DEPARTMENT OF TRANSPORTATION
Caltrans TRAFFIC DESIGN

FUNCTIONAL SUPERVISOR: M. QATAMI
CALCULATED-DESIGNED BY: SANDLY LE
CHECKED BY: HASSAN TAHA
REVISED BY
DATE REVISED

LAST REVISION 12-15-08
DATE PLOTTED => 17-NOV-2009
TIME PLOTTED => 13:33

Dist	COUNTY	LOCATION CODE	KILOMETER POST TOTAL PROJECT	SHEET No.	TOTAL SHEETS
06	Tul	137	R24.8	16	51

REGISTERED CIVIL ENGINEER 01/05/09 DATE

2-17-09
PLANS APPROVAL DATE

REGISTERED PROFESSIONAL ENGINEER D S SANGHA No. 59652 Exp. 12/31/09 CIVIL STATE OF CALIFORNIA

THE STATE OF CALIFORNIA OR ITS OFFICERS OR AGENTS SHALL NOT BE RESPONSIBLE FOR THE ACCURACY OR COMPLETENESS OF ELECTRONIC COPIES OF THIS PLAN SHEET.

Caltrans Metric

ROADWAY QUANTITIES

ROUTE 137	ROADWAY EXCAVATION	HOT MIX ASPHALT (TYPE A)	CLASS 2 AGGREGATE BASE	(N) TACK COAT	(N) REMOVE METAL PIPES	(N) REMOVE RAIL ROAD TRACKS	DECOMPOSED GRANITE	(N) EMBANKMENT
	m^3	Tonn	m^3	Tonn	EA	EA	m^2	m^3
247+11 TO 248+15 "CL 137"	220			2		2		28
247+43.5 TO 248+15 "CL 137"		150	70		2		50	
TOTAL	220	150	70				50	28

(N) = NOT A SEPARATE PAY ITEM, FOR INFORMATION ONLY.

EROSION CONTROL (TYPE D)

LOCATION STATION TO STATION	EROSION CONTROL (TYPE D)	GYPSUM (N)	COMPOST (N)	PURE LIVE SEED (N)
	m^2	KG	m^3	KG
247+11 TO 248+15 "CL 137"	150	15	0.9	0.2
TOTAL	150			

MINOR CONCRETE

LOCATION	MINOR CONCRETE (MISCELLANEOUS CONSTRUCTION)				REMOVE CONCRETE
	CURB RAMP	DRIVEWAY	SIDEWALK	CURB	
	m^3	m^3	m^3	m^3	m^3
247+11 TO 248+15 "CL 137"			57	28	9
248+00 TO 248+05.50 "CL 137"	1				
248+07.00 TO 248+12.71 "CL 137"	1				
248+26.47 TO 248+35.00 "CL 137"	4				
247+01.01 TO 247+11.02 "CL 137"		5			
34+93.63 TO 35+04.68 "CLJ1"		5			
SUBTOTAL	6	10	57	28	9
TOTAL	101				9

TEMPORARY WATER POLLUTION CONTROL QUANTITIES

LOCATION STATION TO STATION	TEMPORARY DRAINAGE INLET PROTECTION
	EA
247+97.952 "CL 137"	1
248+00.000 "CL 137"	1
248+38.530 "CL 137"	1
TOTAL	3

SUMMARY OF QUANTITIES
Q-1

STATE OF CALIFORNIA - DEPARTMENT OF TRANSPORTATION
Caltrans DESIGN

FUNCTIONAL SUPERVISOR: DAVID SANGHA
CALCULATED-DESIGNED BY: GASHU ENQUANHONE
CHECKED BY: CARMELITA BELLE
REVISED BY
DATE REVISED

LAST REVISION 01-05-09
DATE PLOTTED => 17-NOV-2009
TIME PLOTTED => 13:33

Dist	COUNTY	ROUTE	KILOMETER POST TOTAL PROJECT	SHEET No.	TOTAL SHEETS
06	Tul	137	R24.8	17	51

Rajpreet Singh 10-01-08
REGISTERED ELECTRICAL ENGINEER DATE

2-17-09
PLANS APPROVAL DATE

REGISTERED PROFESSIONAL ENGINEER RAJPREET SINGH No. 17496 Exp. 6/30/09 ELECTRICAL STATE OF CALIFORNIA

THE STATE OF CALIFORNIA OR ITS OFFICERS OR AGENTS SHALL NOT BE RESPONSIBLE FOR THE ACCURACY OR COMPLETENESS OF ELECTRONIC COPIES OF THIS PLAN SHEET.

Caltrans Metric

NOTES:

1. REFER TO SHEET E-2 FOR NOTES.
2. REFER TO SHEET E-3 FOR SCHEDULES AND EXISTING SIGNAL.
3. FOR COMPLETE RIGHT OF WAY DATA, SEE RIGHT OF WAY RECORD MAPS AT DISTRICT OFFICE.

ABBREVIATIONS:

AT&T = AMERICAN TELEPHONE AND TELEGRAPH
SCE = SOUTHERN CALIFORNIA EDISON COMPANY
ODC = OPTICAL DETECTOR CABLE
CTID = CALTRANS IDENTIFICATION

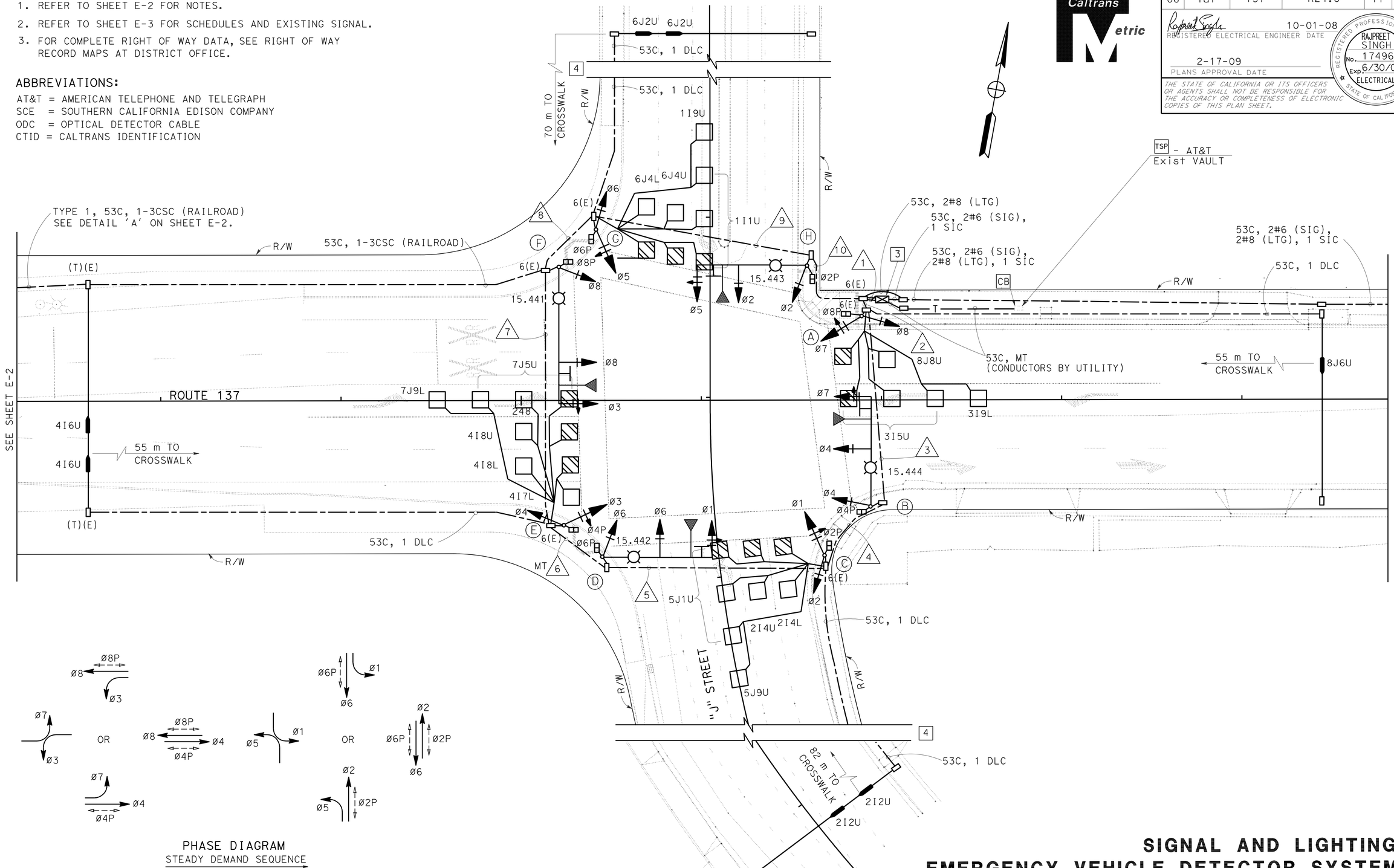

PHASE DIAGRAM
STEADY DEMAND SEQUENCE

SIGNAL AND LIGHTING
EMERGENCY VEHICLE DETECTOR SYSTEM
E-1

ALL DIMENSIONS ARE IN METERS UNLESS OTHERWISE SHOWN

SCALE 1:200

THIS PLAN IS ACCURATE FOR ELECTRICAL WORK ONLY.

REVISED BY | DATE REVISED
KARIM ABDOLLAHIAN | RAJPREET SINGH
CALCULATED-DESIGNED BY | CHECKED BY
FUNCTIONAL SUPERVISOR
ALI BAKHDOUD

STATE OF CALIFORNIA - DEPARTMENT OF TRANSPORTATION
Caltrans ELECTRICAL DESIGN

LAST REVISION 12-22-08 | DATE PLOTTED => 17-NOV-2009 | TIME PLOTTED => 13:33

Dist	COUNTY	ROUTE	KILOMETER POST TOTAL PROJECT	SHEET No.	TOTAL SHEETS
06	Tul	137	R24.8	18	51

Rajpreet Singh 10-01-08
REGISTERED ELECTRICAL ENGINEER DATE

2-17-09
PLANS APPROVAL DATE

REGISTERED PROFESSIONAL ENGINEER RAJPREET SINGH No. 17496 Exp. 6/30/09 ELECTRICAL STATE OF CALIFORNIA

THE STATE OF CALIFORNIA OR ITS OFFICERS OR AGENTS SHALL NOT BE RESPONSIBLE FOR THE ACCURACY OR COMPLETENESS OF ELECTRONIC COPIES OF THIS PLAN SHEET.

Caltrans Metric

NOTES: (FOR SHEETS E-1, E-2, AND E-3)

1. 120/240 V, 1ø, 3-WIRE, TYPE III-BF SERVICE EQUIPMENT ENCLOSURE WITH THE FOLLOWING CIRCUIT BREAKERS:

CTID No. 06461370015451

AMPERES	VOLTS	POLES	LOAD	METER	PHOTOELECTRIC CONTROL TYPE
100	240	2	MAIN BREAKER	YES	———
50	120	1	SIGNAL 'J' St	YES	———
50	120	1	SIGNAL 'K' St	YES	———
30	240	2	LIGHTING 'J' St	NO	IV
30	240	2	SPARE	NO	———

2. RC EXISTING TYPE II-A SERVICE EQUIPMENT ENCLOSURE MOUNTED ON THE SIDE OF THE CONTROLLER CABINET.
3. STATE-FURNISHED MODEL 2070 CONTROLLER ASSEMBLY AND BATTERY BACKUP SYSTEM.
4. No. 5(E) PULL BOXES TO MAINTAIN 60 m MAXIMUM SPACING.
5. ALL PULL BOXES SHALL BE No. 5(E) UNLESS OTHERWISE NOTED.
6. REFER TO SHEET E-3 FOR SCHEDULES AND Exist SIGNAL.
7. FOR COMPLETE RIGHT OF WAY DATA, SEE RIGHT OF WAY RECORD MAPS AT DISTRICT OFFICE.

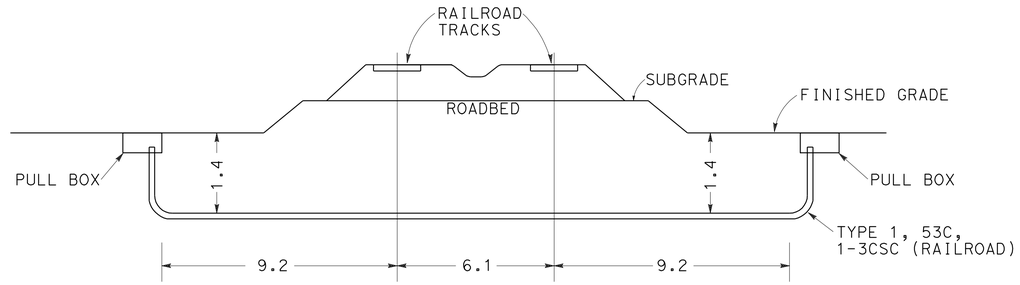

DETAIL 'A'

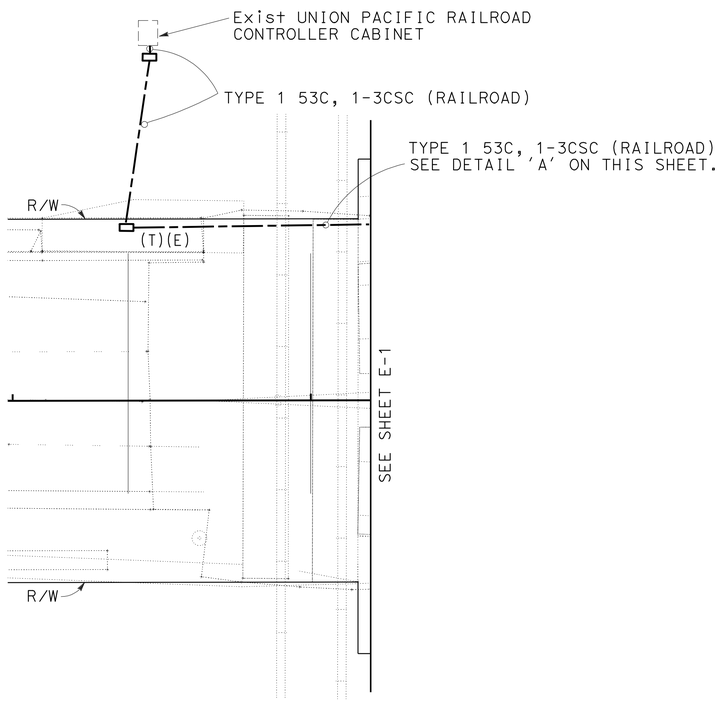

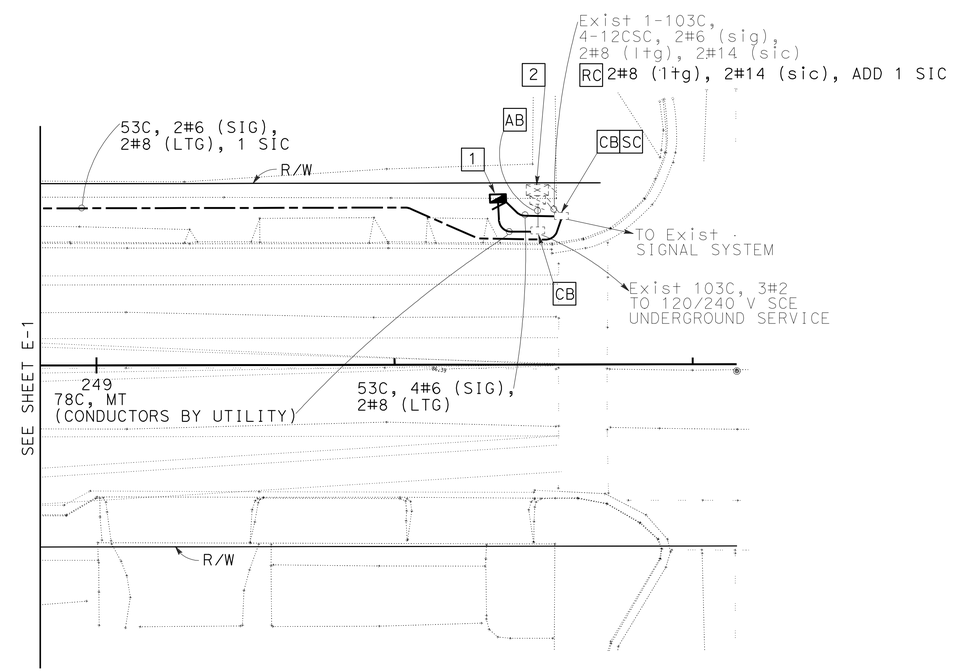

SIGNAL AND LIGHTING
EMERGENCY VEHICLE DETECTOR SYSTEM
E-2

ALL DIMENSIONS ARE IN METERS UNLESS OTHERWISE SHOWN

SCALE 1:200

THIS PLAN IS ACCURATE FOR ELECTRICAL WORK ONLY.

STATE OF CALIFORNIA - DEPARTMENT OF TRANSPORTATION
Caltrans ELECTRICAL DESIGN

FUNCTIONAL SUPERVISOR: ALI BAKHDOUD
CALCULATED-DESIGNED BY: KARIM ABDOLLAHIAN
CHECKED BY: RAJPREET SINGH
REVISED BY
DATE REVISED

LAST REVISION 12-22-08
DATE PLOTTED => 17-NOV-2009
TIME PLOTTED => 13:34

Dist	COUNTY	ROUTE	KILOMETER POST TOTAL PROJECT	SHEET No.	TOTAL SHEETS
06	Tul	137	R24.8	19	51

Caltrans Metric

Rajpreet Singh 10-01-08
REGISTERED ELECTRICAL ENGINEER DATE

2-17-09
PLANS APPROVAL DATE

REGISTERED PROFESSIONAL ENGINEER RAJPREET SINGH No. 17496 Exp. 6/30/09 ELECTRICAL STATE OF CALIFORNIA

THE STATE OF CALIFORNIA OR ITS OFFICERS OR AGENTS SHALL NOT BE RESPONSIBLE FOR THE ACCURACY OR COMPLETENESS OF ELECTRONIC COPIES OF THIS PLAN SHEET.

NOTES:

1. REFER TO SHEET E-1 FOR PROPOSED SIGNAL.
2. REFER TO SHEET E-2 FOR NOTES.
3. FOR COMPLETE RIGHT OF WAY DATA, SEE RIGHT OF WAY RECORD MAPS AT DISTRICT OFFICE.

EXISTING POLE AND EQUIPMENT SCHEDULE

No.	STANDARD TYPE	STANDARD SMA	STANDARD LMA	VEH SIG MTG MAST ARM	VEH SIG MTG POLE	PED SIG MTG	PPB Ø	PPB ARROW	HPS LUM	SPECIAL REQUIREMENTS
a	17-1-113	4.6	3.7	MAS	SV-2-T	SP-2-T			150 W	RS
b	26-3-129	7.6	3.7	MAS	SV-1-T	SP-1-T			150 W	RS
c	1-A				TV-2-T	SP-1-T				RS
d	17-1-113	4.6	3.7	MAS	SV-2-T	SP-2-T			150 W	RS
e	17B-2-113	7.6	3.7	MAS	SV-1-T	SP-1-T			150 W	RS
f	1-A				TV-1-T	SP-1-T				RS

POLE AND EQUIPMENT SCHEDULE

No.	STANDARD TYPE	STANDARD SMA	STANDARD LMA	VEH SIG MTG MAST ARM	VEH SIG MTG POLE	PED SIG MTG	PPB Ø	PPB ARROW	HPS LUM	SPECIAL REQUIREMENTS
A	1-A				TV-2-T	SP-1-T	2	→		
B	26-4-161	12.2	3.7	MAS MAS	SV-1-T	SP-1-T	2	←	200 W	F=5.8, RR sns FROM POLE b, INSTALL sns ON POLE. INSTALL R73-3(CA) SIGN ON SMA.
C	1-A				TV-2-T	SP-1-T	4	→		
D	26-4-161	12.2	3.7	MAS MAS	SV-1-T	SP-1-T	4	←	200 W	F=5.8, RR sns FROM POLE d, INSTALL sns ON POLE. INSTALL R73-3(CA) SIGN ON SMA.
E	1-A				TV-2-T	SP-1-T	6	→		
F	29-5-161	15.2	3.7	MAS MAS	SV-1-T	SP-1-T	6	←	200 W	F=4.6, RR sns FROM POLE e, INSTALL sns ON POLE. INSTALL R73-3(CA) SIGN ON SMA.
G	1-A				TV-2-T	SP-1-T	8	→		
H	26-4-161	12.2	3.7	MAS MAS	SV-1-T	SP-1-T	8	←	200 W	F=4.6, RR sns FROM POLE a, INSTALL sns ON POLE. INSTALL R73-3(CA) SIGN ON SMA.

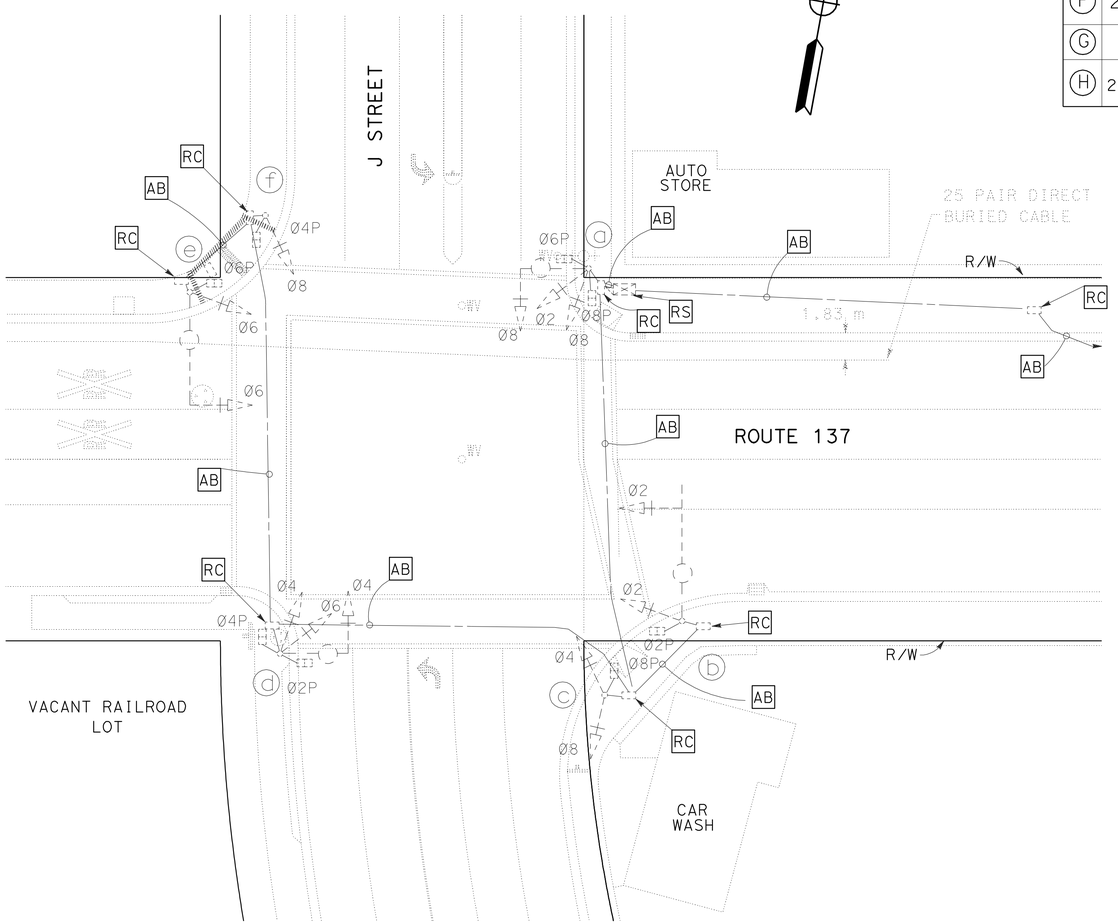

Exist SIGNAL AND LIGHTING

THIS PLAN IS ACCURATE FOR ELECTRICAL WORK ONLY.

ALL DIMENSIONS ARE IN METERS UNLESS OTHERWISE SHOWN

CABLE SCHEDULE

CABLE TYPE	POLE	PHASE	CONDUIT RUN NUMBER AND SIZE 1	2	3	4	5	6	7	8	9	10
			2-103	103	103	103	103	103	103	103	103	103
VEH-PED 12CSC	A	7,8,8P / 2	1 / 1	1 / 1								
	B	4,7,4P / 2	1 / 1	1 / 1	1 / 1							
	C	1,2,2P / 4	1 / 1	1 / 1	1 / 1	1 / 1						
	D	1,6,6P / 4	1 / 1	1 / 1	1 / 1	1 / 1	1 / 1					
	E	3,4,4P / 6	1 / 1						1 / 1	1 / 1	1 / 1	1 / 1
	F	3,8,8P / 6	1 / 1							1 / 1	1 / 1	1 / 1
PPB 3CSC	G	5,6,6P / 8	1 / 1								1 / 1	1 / 1
	H	2,5,2P / 8	1 / 1									1 / 1
		TOTAL	8 / 8	4 / 4	3 / 3	2 / 2	1 / 1		1 / 1	2 / 2	3 / 3	4 / 4
AWG		CIRCUIT										
#8		LIGHTING		2	2	2	2			2	2	2
		ODC	4	2	2	1	1			1	1	2
3CSC		RAILROAD PREEMPTION	1							1	1	1
DETECTORS-TYPE B DLC												
PHASE												
Ø1			2								2	2
Ø2			2	2	2	2						
Ø2ADV			1	1	1	1						
Ø3			2	2								
Ø4			3						3	3	3	3
Ø4ADV			1						1	1	1	1
Ø5			2	2	2	2						
Ø6			2								2	2
Ø6ADV			1								1	1
Ø7			2						2	2	2	2
Ø8			1	1								
Ø8ADV			1	1								
TOTAL DLC'S			20	9	5	5			6	6	11	11

SIGNAL AND LIGHTING
EMERGENCY VEHICLE DETECTOR SYSTEM

SCALE 1:200

E-3

STATE OF CALIFORNIA - DEPARTMENT OF TRANSPORTATION
Caltrans ELECTRICAL DESIGN

FUNCTIONAL SUPERVISOR: ALI BAKHDOUD
CALCULATED-DESIGNED BY: KARIM ABDOLLAHIAN
CHECKED BY: RAJPREET SINGH
REVISED BY / DATE REVISED

LAST REVISION 12-22-08 DATE PLOTTED => 17-NOV-2009 TIME PLOTTED => 13:34

DIST	COUNTY	ROUTE	KILOMETER POST TOTAL PROJECT	SHEET NO.	TOTAL SHEETS
06	Tul	137	R24.8	20	51

Caltrans Metric

Donald E Howe
REGISTERED CIVIL ENGINEER

June 6, 2008
PLANS APPROVAL DATE

REGISTERED PROFESSIONAL ENGINEER Donald E. Howe No. C46402 Exp. 3-31-09 CIVIL STATE OF CALIFORNIA

The State of California or its officers or agents shall not be responsible for the accuracy or completeness of electronic copies of this plan sheet.

To get to the Caltrans web site, go to: http://www.dot.ca.gov

To accompany plans dated 2-17-09

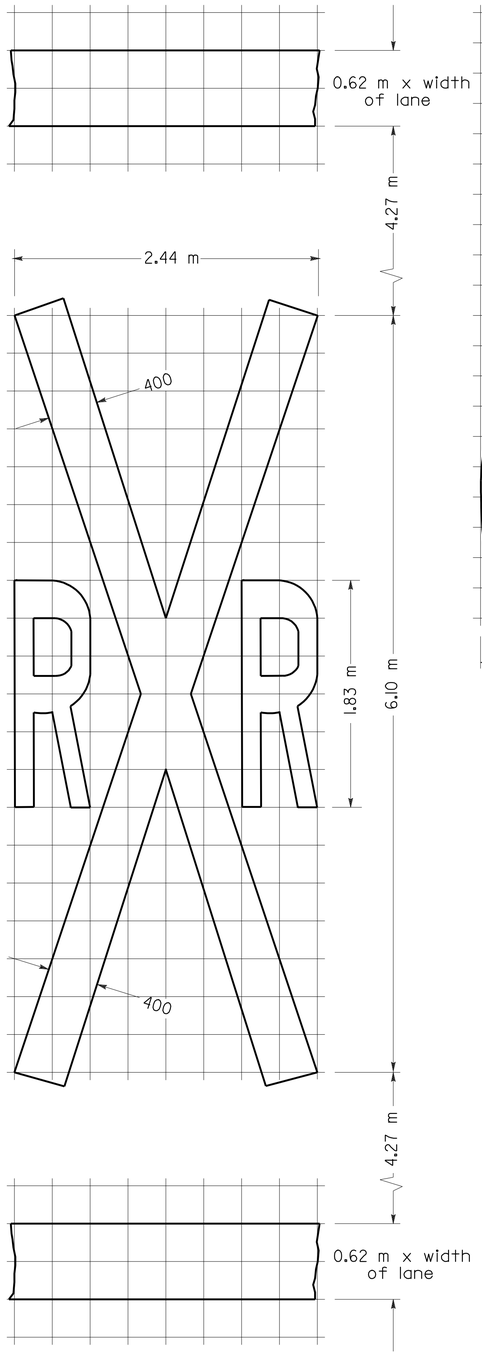

RAILROAD CROSSING SYMBOL

✳6.5 m^2 DOES NOT INCLUDE THE 0.6 m x VARIABLE WIDTH TRANSVERSE LINES.

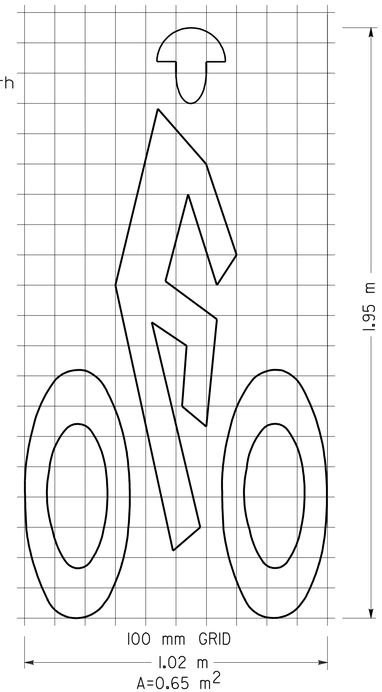

BIKE LANE SYMBOL

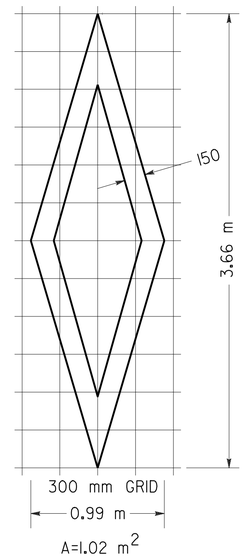

DIAMOND SYMBOL

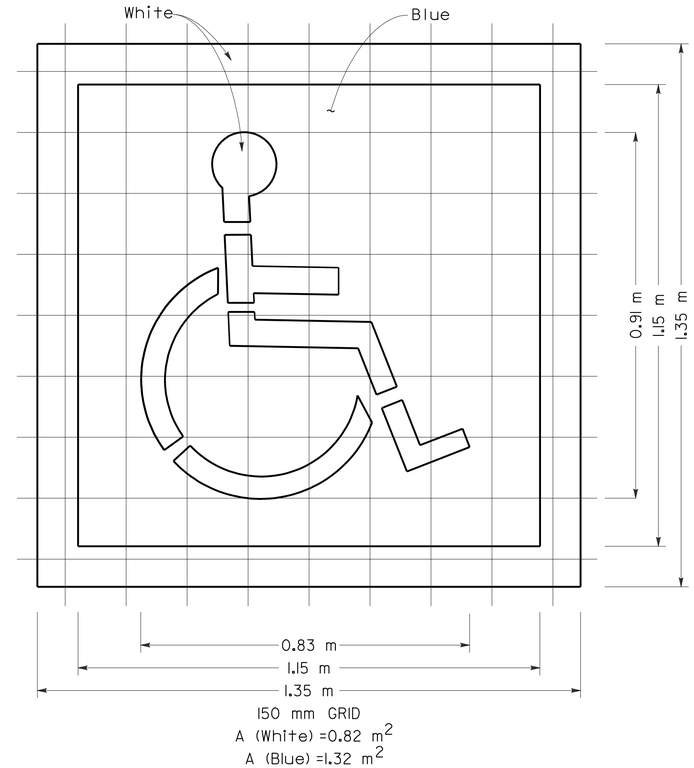

INTERNATIONAL SYMBOL OF ACCESSIBILITY MARKING

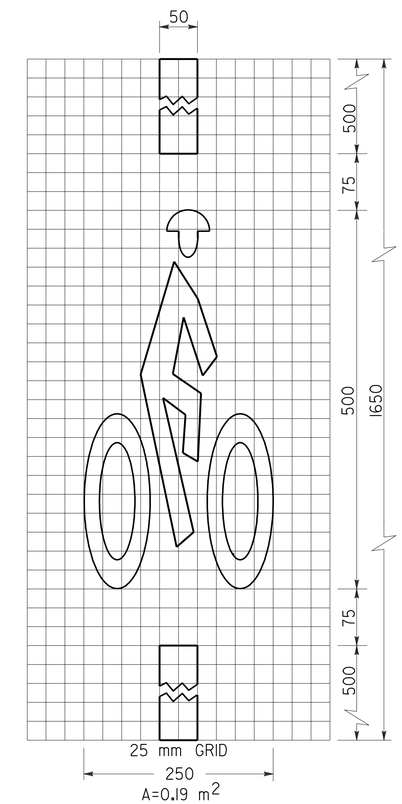

BICYCLE LOOP DETECTOR SYMBOL

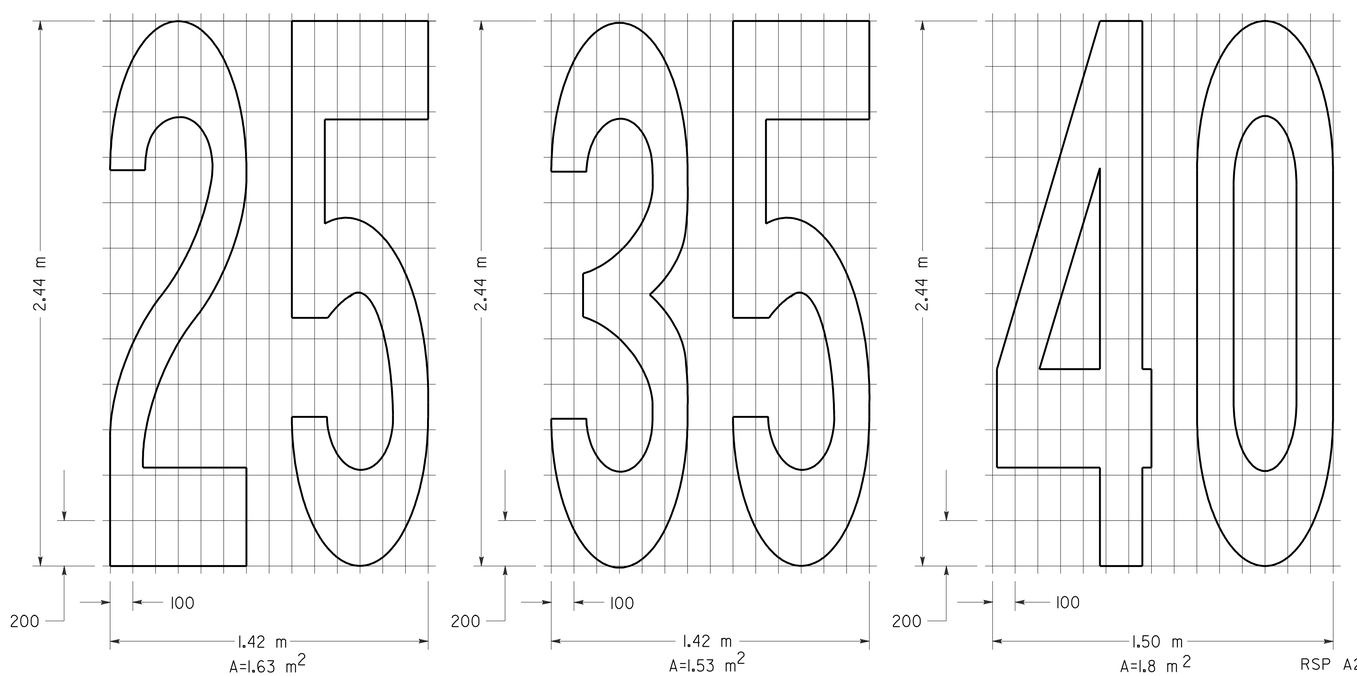

NUMERALS

NOTE:

1. Minor variations in dimensions may be accepted by the Engineer.

STATE OF CALIFORNIA
DEPARTMENT OF TRANSPORTATION

PAVEMENT MARKINGS SYMBOLS AND NUMERALS

NO SCALE

ALL DIMENSIONS ARE IN MILLIMETERS UNLESS OTHERWISE SHOWN

RSP A24C DATED JUNE 6, 2008 SUPERSEDES STANDARD PLAN A24C DATED July 1, 2004 - PAGE 11 OF THE STANDARD PLANS BOOK DATED July 2004.

REVISED STANDARD PLAN RSP A24C

2004 REVISED Std PLAN RSP A24C

5-27-08

DIST	COUNTY	ROUTE	KILOMETER POST TOTAL PROJECT	SHEET NO.	TOTAL SHEETS
06	Tul	137	R24.8	21	51

Caltrans Metric

REGISTERED CIVIL ENGINEER

November 17, 2006
PLANS APPROVAL DATE

REGISTERED PROFESSIONAL ENGINEER Michael Janzen No. 44788 Exp. 03-31-08 CIVIL STATE OF CALIFORNIA

The State of California or its officers or agents shall not be responsible for the accuracy or completeness of electronic copies of this plan sheet.

To get to the Caltrans web site, go to: http://www.dot.ca.gov

To accompany plans dated 2-17-09

2004 REVISED Std PLAN RSP A87A

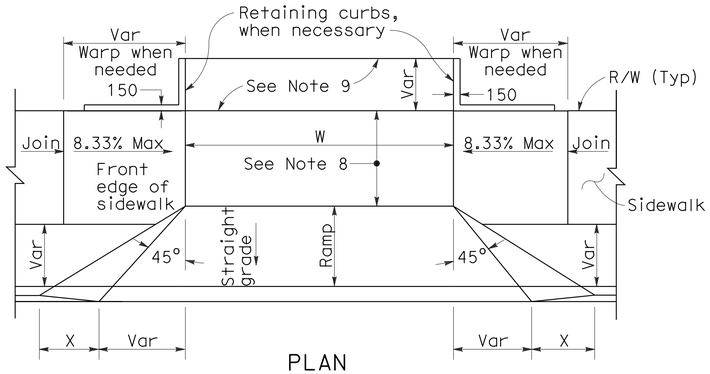

PLAN

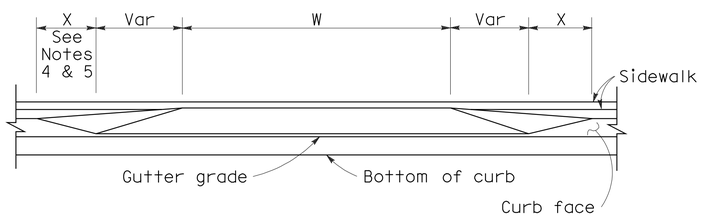

ELEVATION

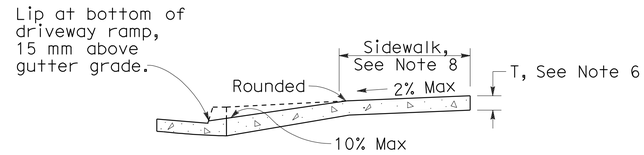

CASE A

Typical driveway, sidewalk not depressed

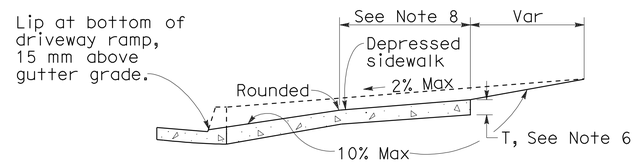

CASE B

Driveway with depressed sidewalk

SECTIONS

DRIVEWAYS

CURB QUANTITIES

TYPE	CUBIC METERS PER METER
A1-150	0.064
A1-200	0.075
A2-150	0.144
A2-200	0.155
A3-150	0.025
A3-200	0.035
B1-100	0.056
B1-150	0.073
B2-100	0.137
B2-150	0.152
B3-100	0.017
B3-150	0.027
B4	0.142
D-100	0.100
D-150	0.162
E	0.161

TABLE A

CURB TYPE	DIMENSIONS "H1"	"H2"	"W1"	"W2"
A1-150	350	150	190	40
A1-200	400	200	200	50
A2-150	300	150	790	40
A2-200	350	200	800	50
A3-150	150	130	185	35
A3-200	200	180	198	48
B1-100	300	100	200	70
B1-150	350	150	230	100
B2-100	250	100	800	70
B2-150	300	150	830	100
B3-100	100	80	185	55
B3-150	150	130	217	87
D-100	250	100	452	322
D-150	300	150	652	522

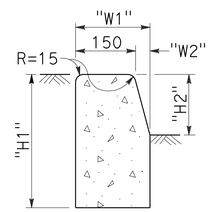

TYPE A1 CURBS

See Table A

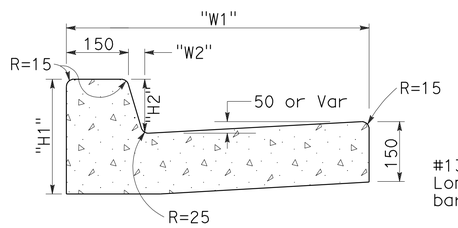

TYPE A2 CURBS

See Table A

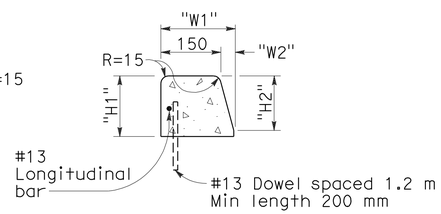

TYPE A3 CURBS

Superimposed on existing pavement
See Table A

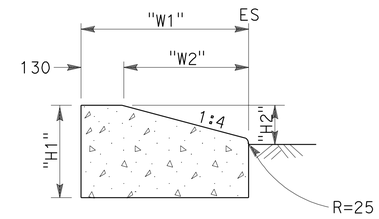

TYPE D CURBS

See Table A

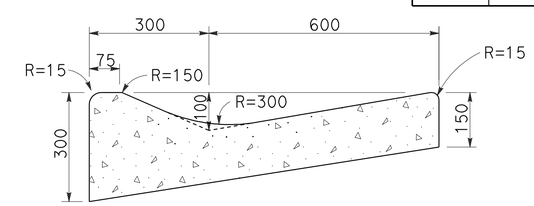

TYPE E CURB

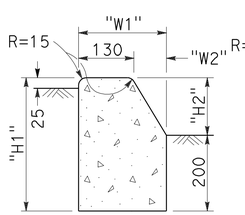

TYPE B1 CURBS

See Table A

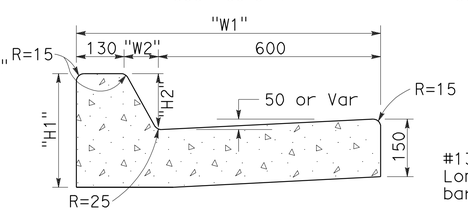

TYPE B2 CURBS

See Table A

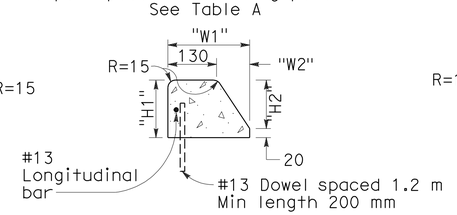

TYPE B3 CURBS

Superimposed on existing pavement
See Table A

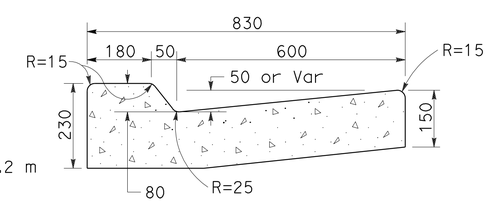

TYPE B4 CURBS

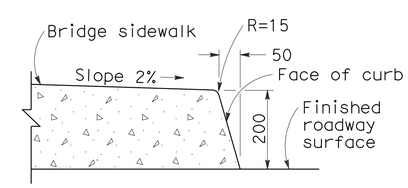

TYPE H CURB

On Bridges

CURBS

NOTES

1. Case A driveway section typically applies.
2. Use Case B driveway section when ramp slopes would exceed 10% in Case A.
3. Use Case B driveway section when sidewalk cross slope would exceed 2% in Case A.
4. X=900 mm except for curb heights over 250 mm where 1:4 slopes shall be used on curb slope.
5. X is a variable when sidewalk is located where wheelchairs may traverse the surface. Slopes shall not exceed 8.33%.
6. Sidewalk and ramp thickness ``T'' at driveway shall be 100 mm for residental and 150 mm for commercial.
7. Difference in slope of the driveway ramp and the slope of a line between the gutter and a point on the roadway 1.5 meters from gutter line shall not exceed 15%. Reduce driveway ramp slope, not gutter slope, where required.
8. Minimum width of clear passageway for sidewalk shall be 1.22 meters.
9. Retaining curbs and acquisition of construction easement may be necessary for narrow sidewalks or curb heights in excess of 150 mm.
10. Across the pedestrian route at curb ramp locations, the gutter pan slope shall not exceed 25 mm of depth for each 600 mm of width.

STATE OF CALIFORNIA
DEPARTMENT OF TRANSPORTATION

CURBS AND DRIVEWAYS

NO SCALE

ALL DIMENSIONS ARE IN MILLIMETERS UNLESS OTHERWISE SHOWN

RSP A87A DATED NOVEMBER 17, 2006 SUPERSEDES STANDARD PLAN A87A DATED JULY 1, 2004-PAGE 115 OF THE STANDARD PLANS BOOK DATED JULY 2004.

REVISED STANDARD PLAN RSP A87A

10-25-06

DIST	COUNTY	ROUTE	KILOMETER POST TOTAL PROJECT	SHEET NO.	TOTAL SHEETS
06	Tul	137	R24.8	22	51

REGISTERED CIVIL ENGINEER

December 16, 2005
PLANS APPROVAL DATE

REGISTERED PROFESSIONAL ENGINEER Hector David Cordova No. C41957 Exp. 3-31-06 CIVIL STATE OF CALIFORNIA

The State of California or its officers or agents shall not be responsible for the accuracy or completeness of electronic copies of this plan sheet.

To get to the Caltrans web site, go to: http://www.dot.ca.gov

To accompany plans dated 2-17-09

Caltrans Metric

2004 REVISED Std PLAN RSP A88A

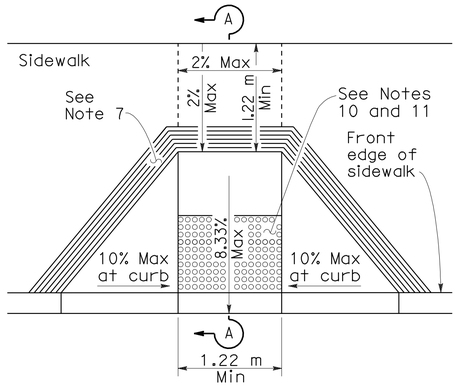

CASE A

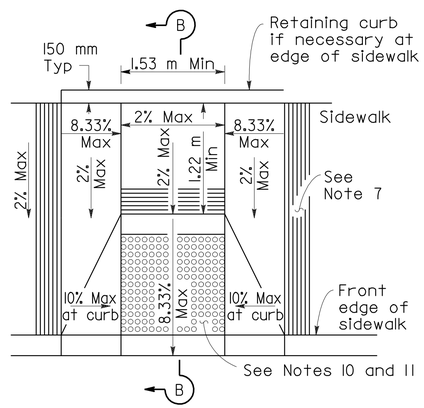

CASE B

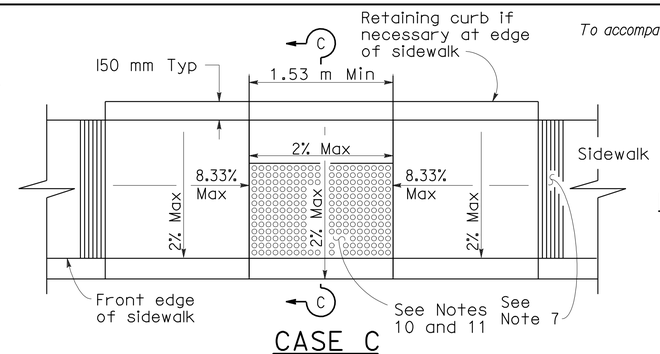

CASE C

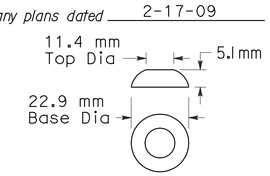

RAISED TRUNCATED DOME

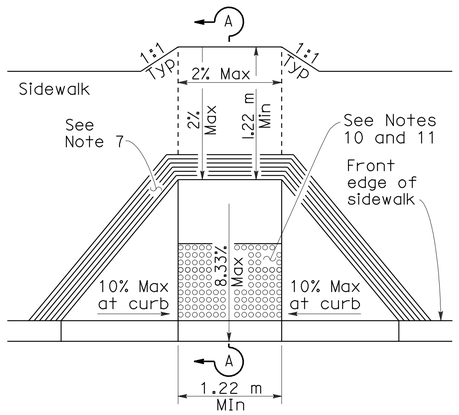

CASE D

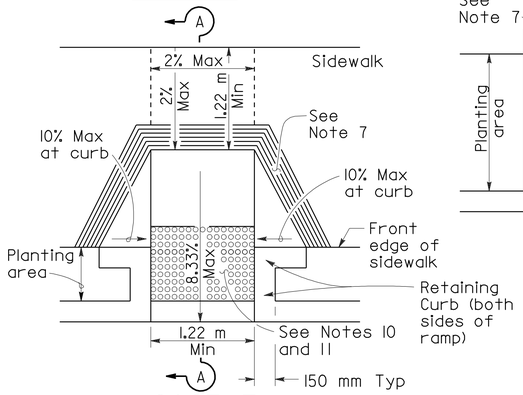

CASE E

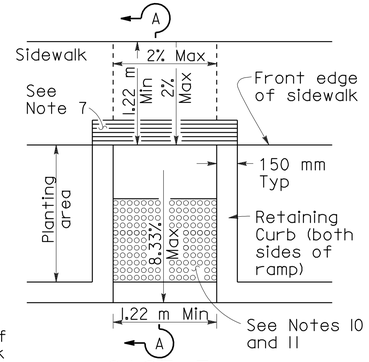

CASE F

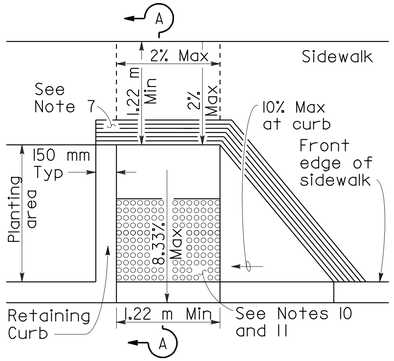

CASE G

See Note 4

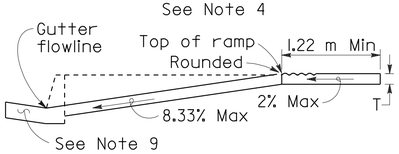

SECTION A-A

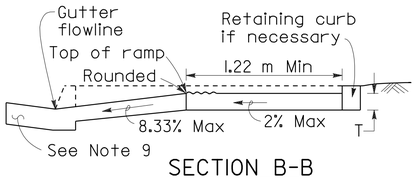

SECTION B-B

Depress entire sidewalk as required

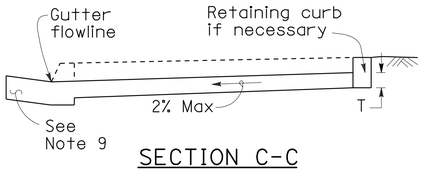

SECTION C-C

NOTES

1. As site conditions dictate, Case A through Case G curb ramps may be used for corner installations similar to those shown in Detail A and Detail B. The case of curb ramps used in Detail A do not have to be the same. Case A through Case G curb ramps also may be used at mid block locations, as site conditions dictate. For Cases B and C, the side of the curb ramp should always be perpendicular to curb face.
2. If distance from curb to back of sidewalk is too short to accommodate ramp and 1.22 m platform (landing) as shown in Case A, the sidewalk may be depressed longitudinally as in Case B, or C or may be widened as in Case D.
3. When ramp is located in center of curb return, crosswalk configuration must be similar to that shown for Detail B.
4. As site conditions dictate, the retaining curb side and the flared side of the Case G ramp shall be constructed in reversed position.
5. If located on a curve, the sides of the ramp need not be parallel, but the minimum width of the ramp shall be 1.22 m.
6. Side slope of ramp flares vary uniformly from a maximum of 10% at curb to conform with longitudinal sidewalk slope adjacent to top of the ramp, except in Case C and Case F.
7. The curb ramp shall be outlined, as shown, with a 305 mm wide border with 6 mm grooves approximately 19 mm on center. See grooving detail.
8. Transitions from ramps and landings to walks, gutters or streets shall be flush and free of abrupt changes.
9. Maximum slopes of adjoining gutters, the road surface immediately adjacent to the curb ramp, or accessible route shall not exceed 5 percent within 1.22 m of the top and bottom of the curb ramp.
10. Curb ramps shall have a detectable warning surface that extends the full width and 914 mm depth of the ramp. Detectable Warning Surfaces shall conform to the details on this plan and the requirements in the Special Provisions.
11. The edge of the detectable warning surface nearest the street shall be between 150 mm and 205 mm from the gutter flowline.
12. Sidewalk and ramp thickness, "T", shall be 90 mm minimum.
13. Utility pull boxes, manholes, vaults and all other utility facilities within the boundaries of the curb ramp will be relocated or adjusted to grade by the owner prior to, or in conjunction with, curb ramp construction.
14. For retrofit conditions, removal and replacement of curb apron will be at the Contractor's option, unless otherwise shown on project plans.

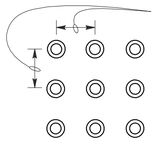

RAISED TRUNCATED DOME PATTERN (IN-LINE)
DETECTABLE WARNING SURFACE

See Note 10

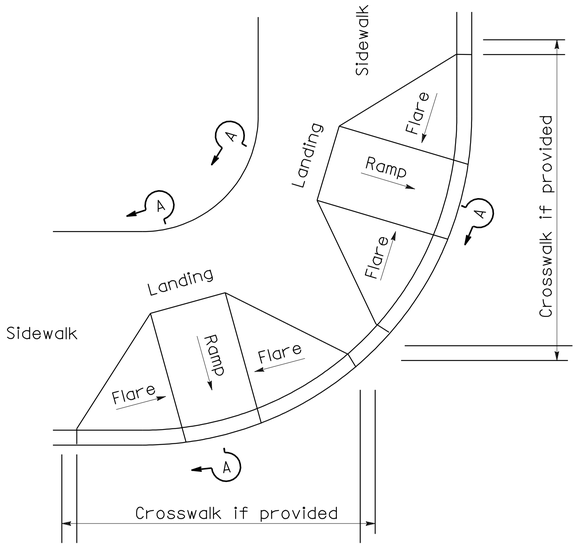

DETAIL A

TYPICAL TWO-RAMP CORNER INSTALLATION

See Note 1

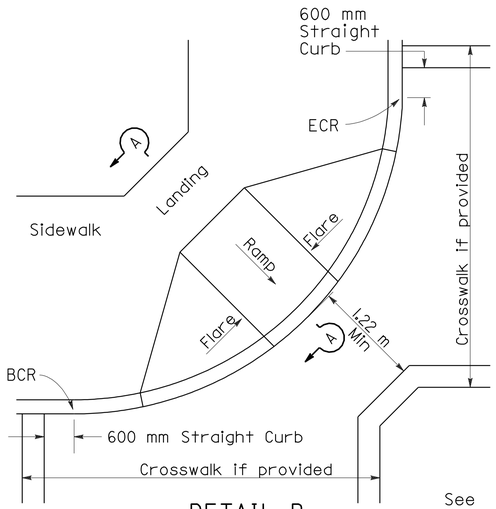

DETAIL B

TYPICAL ONE-RAMP CORNER INSTALLATION

See Notes 1 and 3

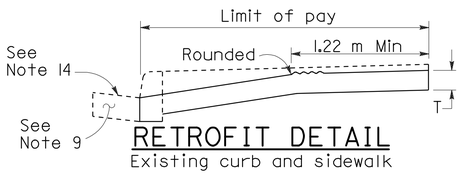

RETROFIT DETAIL

Existing curb and sidewalk

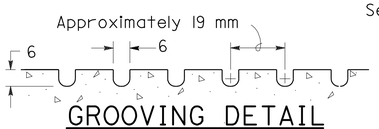

GROOVING DETAIL

STATE OF CALIFORNIA
DEPARTMENT OF TRANSPORTATION

CURB RAMP DETAILS

NO SCALE

ALL DIMENSIONS ARE IN MILLIMETERS UNLESS OTHERWISE SHOWN

RSP A88A DATED DECEMBER 16, 2005 SUPERSEDES STANDARD PLAN A88A DATED JULY 1, 2004-PAGE 117 OF THE STANDARD PLANS BOOK DATED JULY 2004.

REVISED STANDARD PLAN RSP A88A

12-16-05

DIST	COUNTY	ROUTE	KILOMETER POST TOTAL PROJECT	SHEET NO.	TOTAL SHEETS
06	Tul	137	R24.8	23	51

Caltrans Metric

H. David Cordova
REGISTERED CIVIL ENGINEER

December 16, 2005
PLANS APPROVAL DATE

REGISTERED PROFESSIONAL ENGINEER
Hector David Cordova
No. C41957
Exp. 3-31-06
CIVIL
STATE OF CALIFORNIA

The State of California or its officers or agents shall not be responsible for the accuracy or completeness of electronic copies of this plan sheet.

To get to the Caltrans web site, go to: http://www.dot.ca.gov

To accompany plans dated 2-17-09

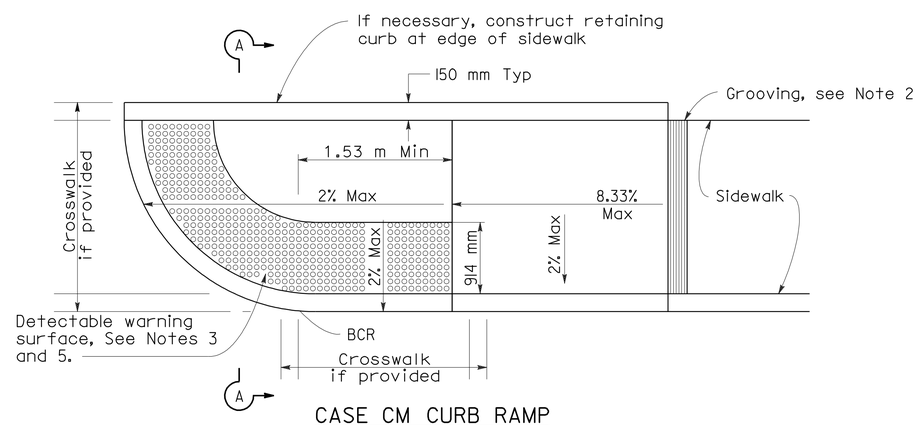

CASE CM CURB RAMP

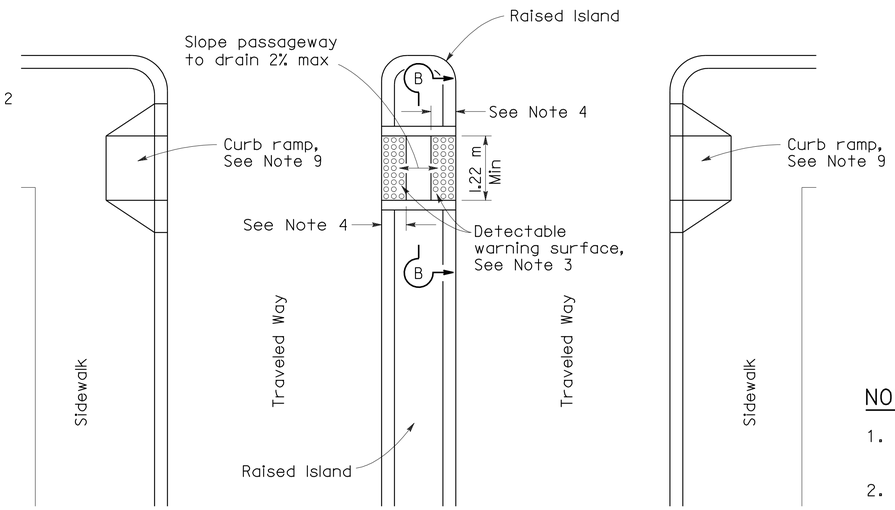

TYPE A PASSAGEWAY

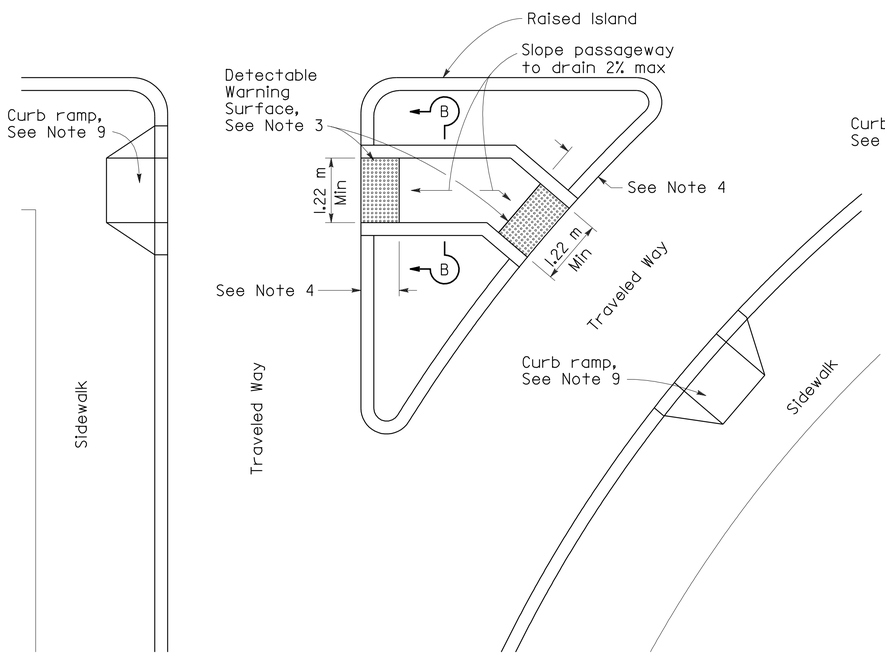

TYPE B PASSAGEWAY

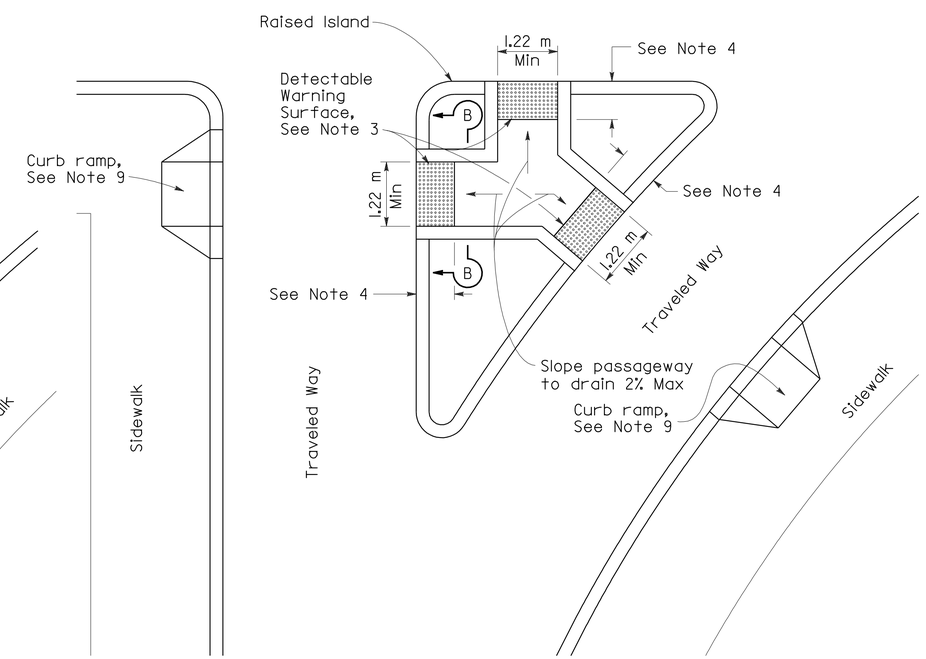

TYPE C PASSAGEWAY

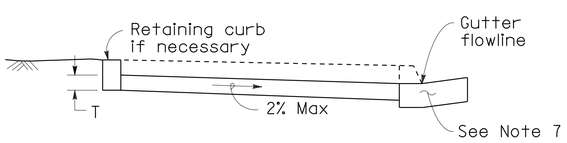

SECTION A-A

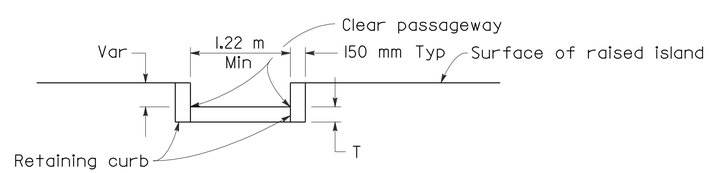

SECTION B-B

NOTES

1. Sidewalk, ramp and passageway thickness, ``T'', shall be 90 mm minimum.
2. For details of grooving used with Case CM curb ramp, see Revised Standard Plan RSP A88A.
3. For details of detectable warning surfaces, see Revised Standard Plan RSP A88A.
4. Where an island passage way length is less than 1.8 m, the detectable warning surface shall extend the full width and full depth of the passage way length. Where an island passage way length is greater than or equal to 1.8 m, but less than 2.44 m, each detectable warning surface shall extend the full width and 600 mm depth of the passage way length. Where an island passage way length is greater than or equal to 2.44 m, each detectable warning surface shall extend the full width and 914 mm depth of the passage way length.
5. For Case CM curb ramp, the edge of the detectable warning surface nearest the street shall be between 150 mm and 205 mm from the gutter flowline.
6. Transitions from ramps to walks, gutters or streets shall be flush and free of abrupt changes.
7. Maximum slopes of adjoining gutters, the road surface immediately adjacent to the curb ramp, or accessible route shall not exceed 5 percent within 1.22 m of the top and bottom of the curb ramp.
8. Utility pull boxes, manholes, vaults and all other utility facilities within the boundaries of the curb ramp will be relocated or adjusted to grade by the owner prior to, or in conjunction with, curb ramp construction.
9. For additional curb ramp details, see Revised Standard Plan RSP A88A.

STATE OF CALIFORNIA
DEPARTMENT OF TRANSPORTATION

CURB RAMP AND ISLAND PASSAGEWAY DETAILS

NO SCALE

ALL DIMENSIONS ARE IN MILLIMETERS UNLESS OTHERWISE SHOWN

RSP A88B DATED DECEMBER 16, 2005 SUPERSEDES STANDARD PLAN A88B DATED JULY 1, 2004-PAGE 118 OF THE STANDARD PLANS BOOK DATED JULY 2004.

REVISED STANDARD PLAN RSP A88B

2004 REVISED Std PLAN RSP A88B

12-16-05

DIST	COUNTY	ROUTE	KILOMETER POST TOTAL PROJECT	SHEET NO.	TOTAL SHEETS
06	Tul	137	R24.8	24	51

Caltrans Metric

Randell D. Hiatt
REGISTERED CIVIL ENGINEER

June 6, 2008
PLANS APPROVAL DATE

REGISTERED PROFESSIONAL ENGINEER
Randell D. Hiatt
No. C50200
Exp. 6-30-09
CIVIL
STATE OF CALIFORNIA

The State of California or its officers or agents shall not be responsible for the accuracy or completeness of electronic copies of this plan sheet.

To get to the Caltrans web site, go to: http://www.dot.ca.gov

To accompany plans dated 2-17-09

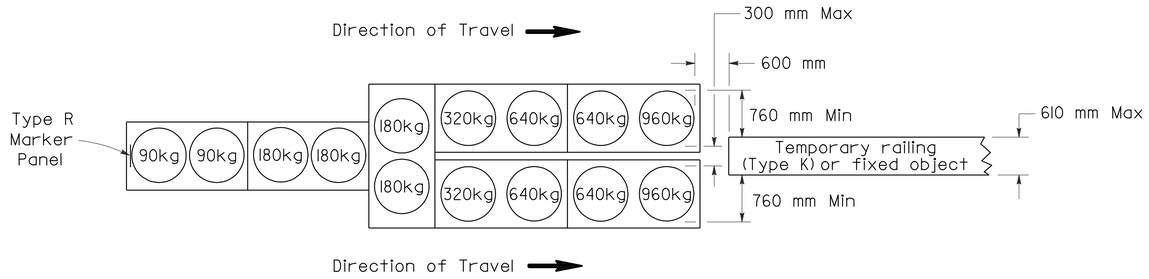

ARRAY 'TUI4'

Approach speed 70 km/h or more

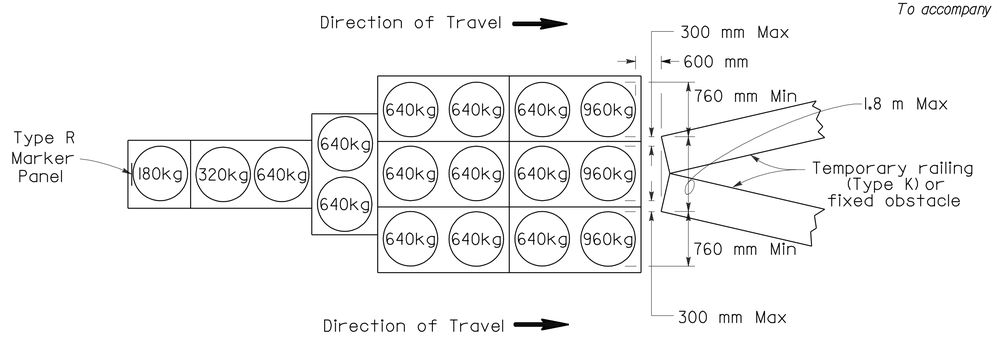

ARRAY 'TUI7'

Approach speed less than 70 km/h

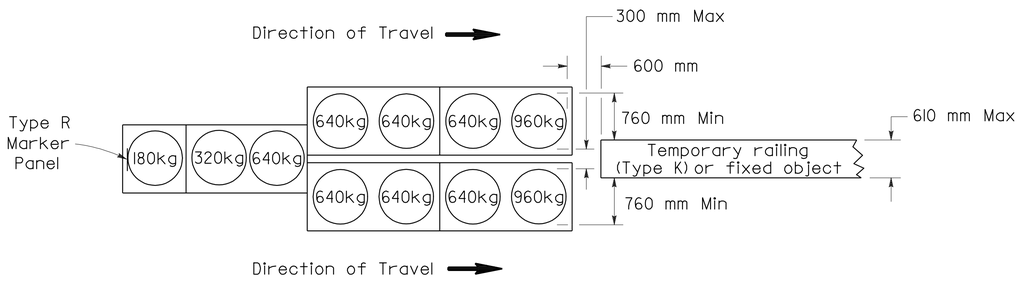

ARRAY 'TUII'

Approach speed less than 70 km/h

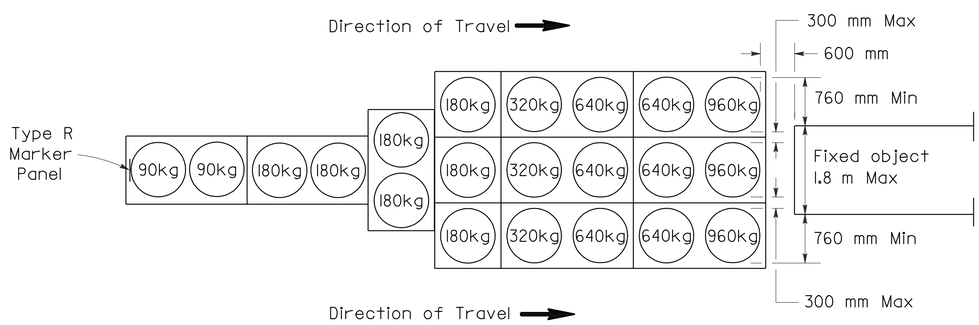

ARRAY 'TU2I'

Approach speed 70 km/h or more

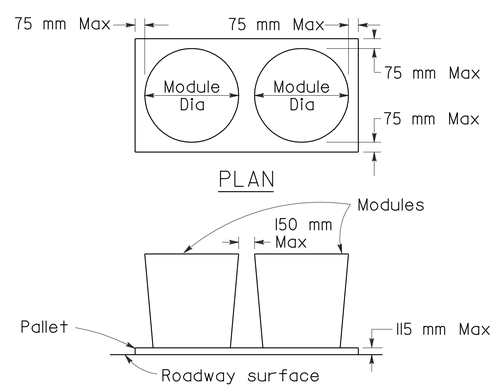

CRASH CUSHION PALLET DETAIL

See Note 7

NOTES

1. (XXX) Indicates sand filled module location and mass of sand in kilograms for each module. Module spacing is based on the greater diameter of the module.
2. All sand masses are nominal.
3. Temporary crash cushion arrays shall not encroach on the traveled way.
4. Place the top of Type R marker panel 25 mm below the module lid.
5. Refer to Standard Plan A73B for marker details.
6. Approach speeds indicated conform to NCHRP 350 Report criteria.
7. Use of Pallets is optional.

STATE OF CALIFORNIA
DEPARTMENT OF TRANSPORTATION

TEMPORARY CRASH CUSHION, SAND FILLED (UNIDIRECTIONAL)

NO SCALE

ALL DIMENSIONS ARE IN MILLIMETERS UNLESS OTHERWISE SHOWN

RSP T1A DATED JUNE 6, 2008 SUPERSEDES STANDARD PLAN T1A
DATED July 1, 2004 - PAGE 211 OF THE STANDARD PLANS BOOK DATED July 2004.

REVISED STANDARD PLAN RSP T1A

2004 REVISED Std PLAN RSP T1A

5-16-08

DIST	COUNTY	ROUTE	KILOMETER POST TOTAL PROJECT	SHEET NO.	TOTAL SHEETS
06	Tul	137	R24.8	25	51

Caltrans Metric

Randell D. Hiatt
REGISTERED CIVIL ENGINEER

June 6, 2008
PLANS APPROVAL DATE

REGISTERED PROFESSIONAL ENGINEER
Randell D. Hiatt
No. C50200
Exp. 6-30-09
CIVIL
STATE OF CALIFORNIA

The State of California or its officers or agents shall not be responsible for the accuracy or completeness of electronic copies of this plan sheet.

To get to the Caltrans web site, go to: http://www.dot.ca.gov

To accompany plans dated 2-17-09

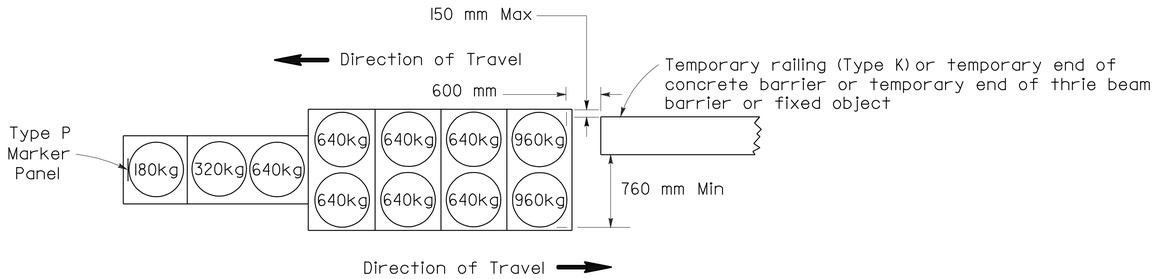

ARRAY 'TB11'

Approach speed less than 70 km/h

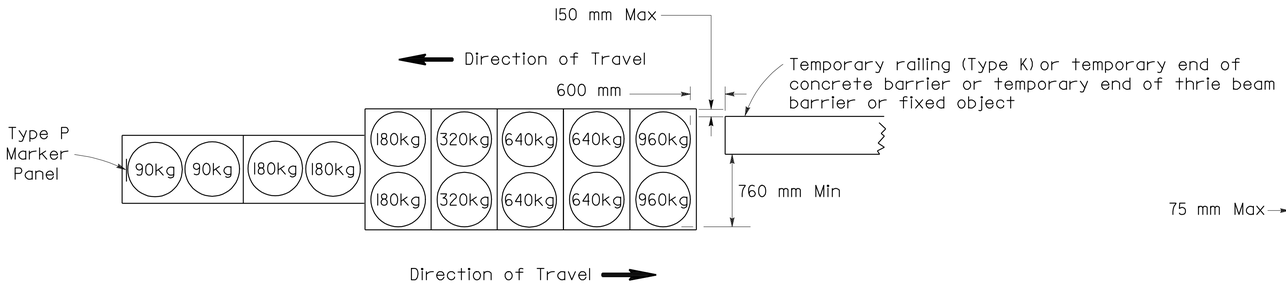

ARRAY 'TB14'

Approach speed 70 km/h or more

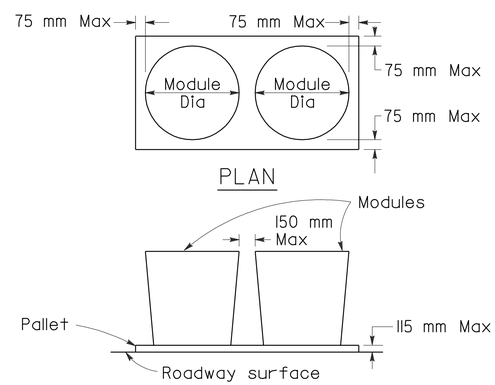

CRASH CUSHION PALLET DETAIL

See Note 7

NOTES

1. (XXX) Indicates sand filled module location and mass of sand in kilograms for each module. Module spacing is based on the greater diameter of the module.
2. All sand masses are nominal.
3. Temporary crash cushion arrays shall not encroach on the traveled way.
4. Place the Type P marker panel so that the bottom of the panel rests upon the pallet.
5. Refer to Standard Plan A73B for marker details.
6. Approach speeds indicated conform to NCHRP 350 Report criteria.
7. Use of Pallets is optional.

STATE OF CALIFORNIA
DEPARTMENT OF TRANSPORTATION

TEMPORARY CRASH CUSHION, SAND FILLED (BIDIRECTIONAL)

NO SCALE

ALL DIMENSIONS ARE IN MILLIMETERS UNLESS OTHERWISE SHOWN

RSP T1B DATED JUNE 6, 2008 SUPERSEDES STANDARD PLAN T1B DATED July 1, 2004 - PAGE 212 OF THE STANDARD PLANS BOOK DATED July 2004.

REVISED STANDARD PLAN RSP T1B

2004 REVISED Std PLAN RSP T1B

5-16-08

DIST	COUNTY	ROUTE	KILOMETER POST TOTAL PROJECT	SHEET NO.	TOTAL SHEETS
06	Tul	137	R24.8	26	51

Caltrans Metric

Randell D. Hiatt
REGISTERED CIVIL ENGINEER

June 6, 2008
PLANS APPROVAL DATE

REGISTERED PROFESSIONAL ENGINEER
Randell D. Hiatt
No. C50200
Exp. 6-30-09
CIVIL
STATE OF CALIFORNIA

The State of California or its officers or agents shall not be responsible for the accuracy or completeness of electronic copies of this plan sheet.

To get to the Caltrans web site, go to: http://www.dot.ca.gov

To accompany plans dated 2-17-09

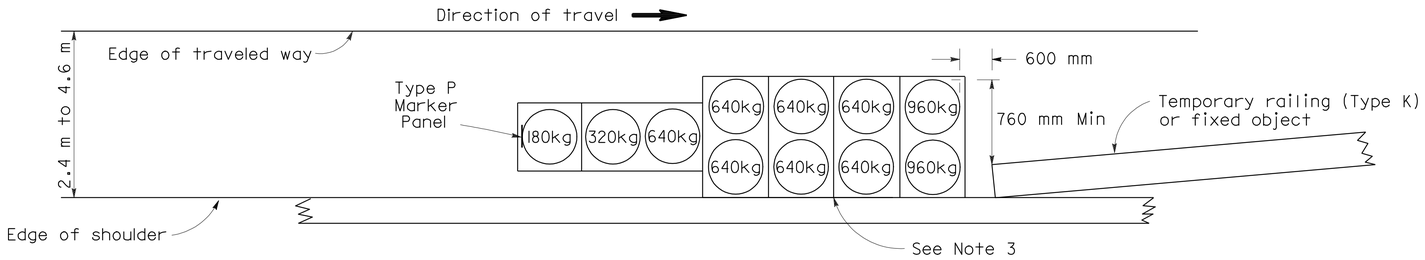

ARRAY 'TSI1'

Approach speed less than 70 km/h
See Note 9

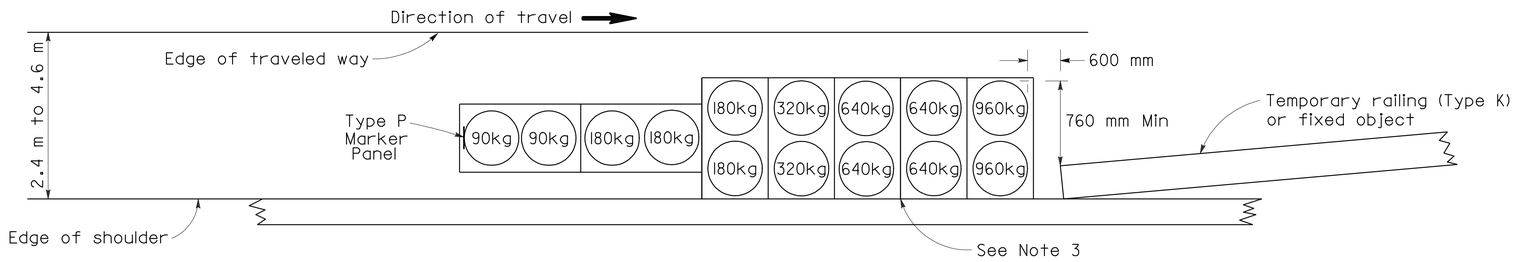

ARRAY 'TSI4'

Approach speed 70 km/h or more
See Note 9

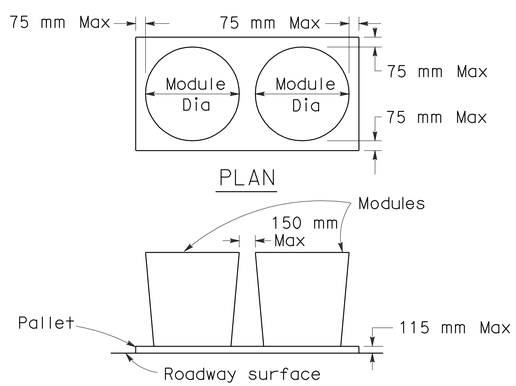

CRASH CUSHION PALLET DETAIL

See Note 11

NOTES

1. (XXX) Indicates sand filled module location and mass of sand in kilograms for each module. Module spacing is based on the greater diameter of the module.
2. All sand masses are nominal.
3. The temporary crash cushion arrays shown on this plan shall be used only in locations where there will be traffic on one side of the temporary crash cushion array.
4. If the fixed object or approach end of the temporary railing is less than 4.60 meters from the edge of traveled way, a temporary crash cushion is required.
5. Temporary crash cushion arrays shall not encroach on the traveled way.
6. Arrays for median shoulders shall conform to details shown on this plan for outside shoulders.
7. Place the Type P marker panel so that the bottom of the panel rest upon the pallet and faces traffic.
8. Refer to Standard Plan A73B for marker details.
9. For shoulder widths less than 2.4 m, appropriate approved crash cushion protection, other than sand filled modules, shall be provided at fixed objects and at approach ends of temporary railing. The specific type of crash cushion shall be as shown on the project plans or as specified in the Special Provisions, or if not shown on the project plans or specified in the Special Provisions, shall be as approved by the Engineer.
10. Approach speeds indicated conform to NCHRP 350 Report criteria.
11. Use of Pallets is optional.

STATE OF CALIFORNIA
DEPARTMENT OF TRANSPORTATION

TEMPORARY CRASH CUSHION, SAND FILLED (SHOULDER INSTALLATIONS)

NO SCALE

ALL DIMENSIONS ARE IN MILLIMETERS UNLESS OTHERWISE SHOWN

RSP T2 DATED JUNE 6, 2008 SUPERSEDES STANDARD PLAN T2
DATED July 1, 2004 - PAGE 213 OF THE STANDARD PLANS BOOK DATED July 2004.

REVISED STANDARD PLAN RSP T2

2004 REVISED Std PLAN RSP T2

5-16-08

To accompany plans dated 2-17-09

Caltrans Metric

DIST	COUNTY	ROUTE	KILOMETER POST TOTAL PROJECT	SHEET NO.	TOTAL SHEETS
06	Tul	137	R24.8	27	51

REGISTERED CIVIL ENGINEER

November 17, 2006
PLANS APPROVAL DATE

REGISTERED PROFESSIONAL ENGINEER Greg W. Edwards No. C36386 Exp. 6-30-08 CIVIL STATE OF CALIFORNIA

The State of California or its officers or agents shall not be responsible for the accuracy or completeness of electronic copies of this plan sheet.

To get to the Caltrans web site, go to: http://www.dot.ca.gov

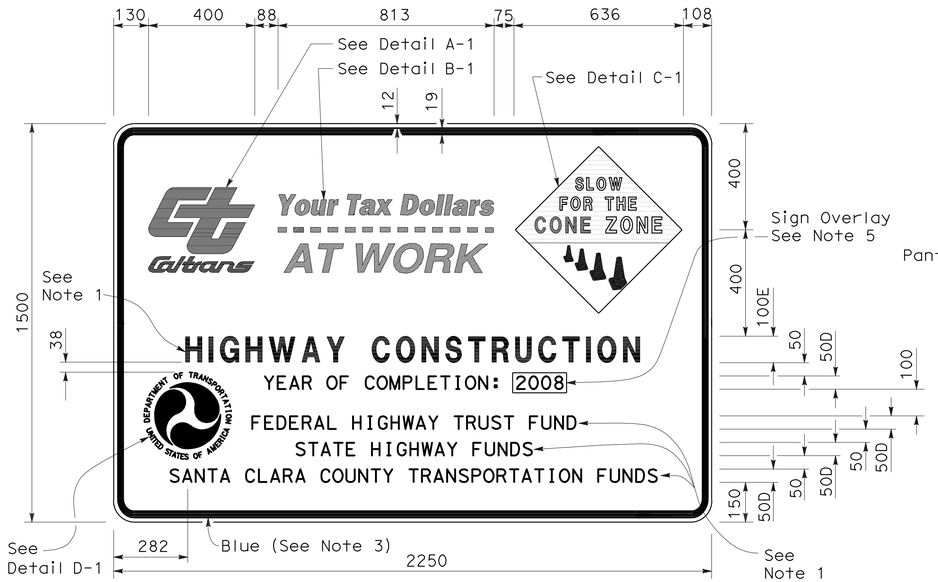

TYPE 1

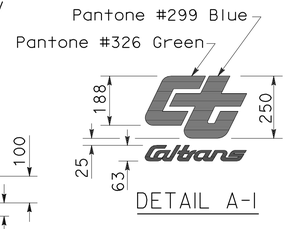

DETAIL A-1

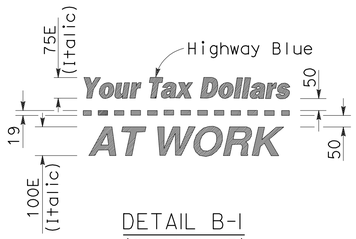

DETAIL B-1
(See Note 3)

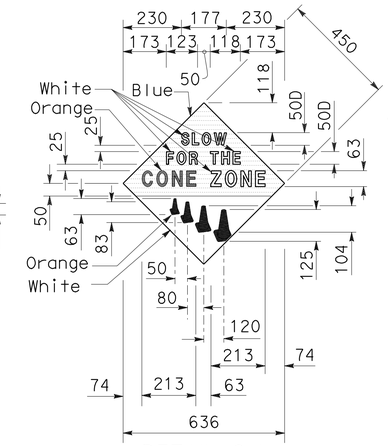

DETAIL C-1
(See Note 4)

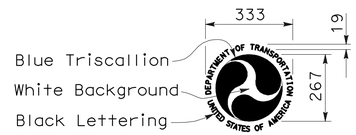

DETAIL D-1
(See Note 6)

NOTES:

1. The sign messages shown for type of project and fund types are examples only. See the Special Provisions for the applicable type of project and fund type messages to be used.
2. Except as otherwise shown, the legend of sign shall be black on a white background (non-reflective).
3. The border of the signs and details "B-1" and "B-2" shall be blue (non-reflective).
4. The diamond in details "C-1" and "C-2" shall be blue for the background of message, " SLOW FOR THE CONE ZONE", and white background for the orange cones. The color and type of font for the "SLOW FOR THE CONE ZONE" message shall be: "SLOW" white D; "FOR THE" white D; "CONE" orange Arial font; "ZONE" white Arial font.
5. Year of completion of project construction shown on the overlay is an example only. See the Special Provisions.
6. Use when the Project involves Federal Highway Trust Fund.

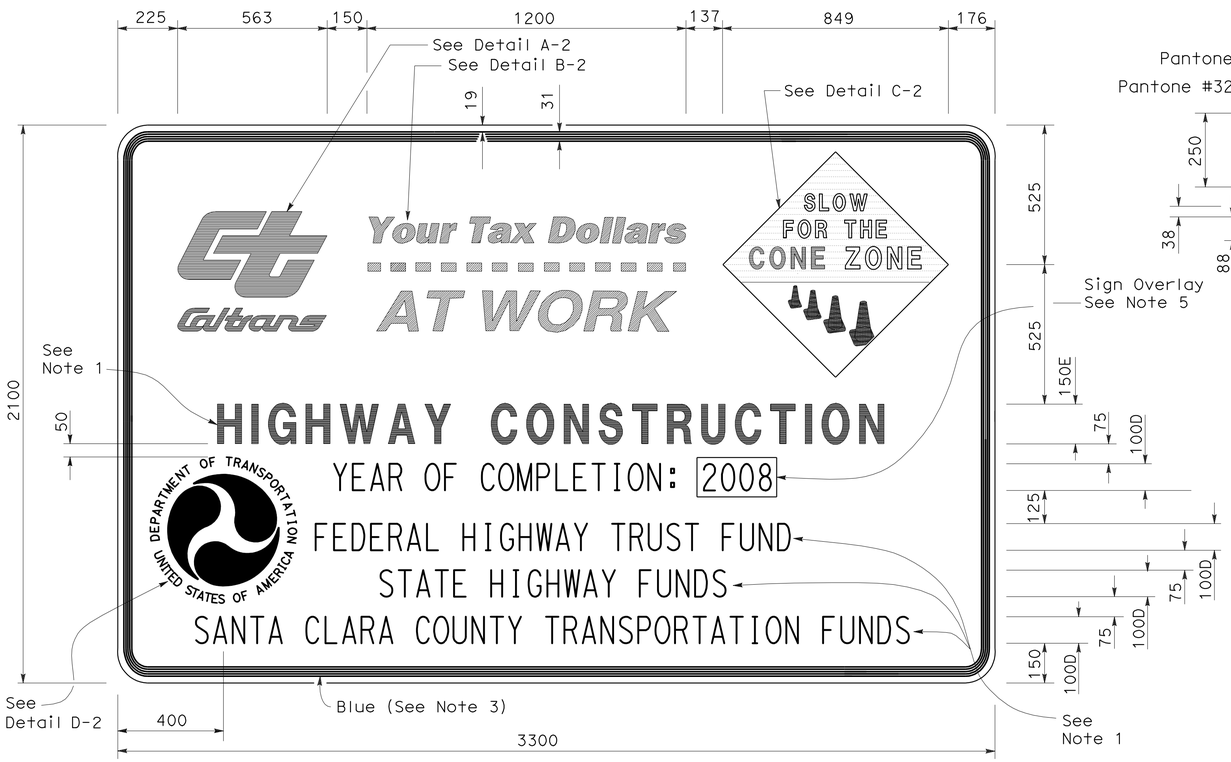

TYPE 2

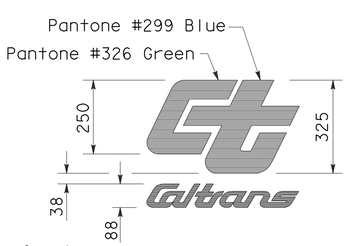

DETAIL A-2

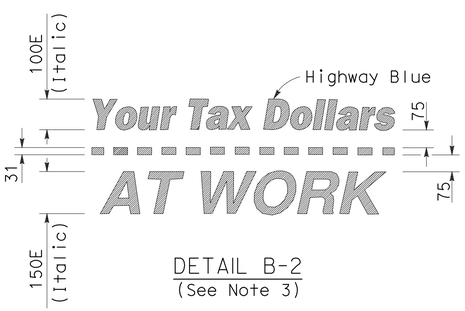

DETAIL B-2
(See Note 3)

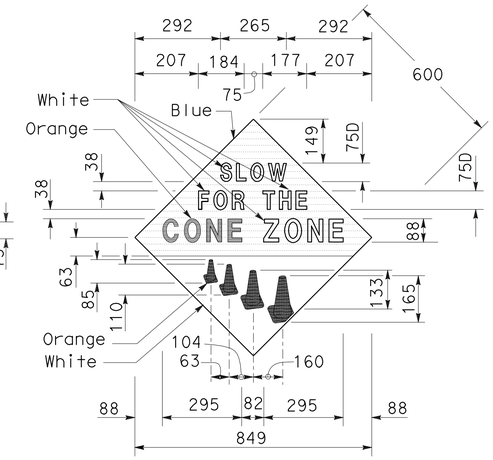

DETAIL C-2
(See Note 4)

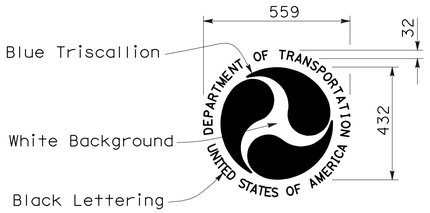

DETAIL D-2
(See Note 6)

STATE OF CALIFORNIA
DEPARTMENT OF TRANSPORTATION

CONSTRUCTION PROJECT FUNDING IDENTIFICATION SIGNS

NO SCALE

ALL DIMENSIONS ARE IN MILLIMETERS UNLESS OTHERWISE SHOWN

RSP T7 DATED NOVEMBER 17, 2006 SUPERSEDES RSP T7 DATED APRIL 28, 2005 AND STANDARD PLAN T7 DATED JULY 1, 2004-PAGE 217 OF THE STANDARD PLANS BOOK DATED JULY 2004.

REVISED STANDARD PLAN RSP T7

2004 REVISED Std PLAN RSP T7

9-7-06

DIST	COUNTY	ROUTE	KILOMETER POST TOTAL PROJECT	SHEET NO.	TOTAL SHEETS
06	Tul	137	R24.8	28	51

Caltrans Metric

REGISTERED CIVIL ENGINEER

April 28, 2005
PLANS APPROVAL DATE

REGISTERED PROFESSIONAL ENGINEER Greg W. Edwards No. C36386 Exp. 6-30-06 CIVIL STATE OF CALIFORNIA

The State of California or its officers or agents shall not be responsible for the accuracy or completeness of electronic copies of this plan sheet.

To get to the Caltrans web site, go to: http://www.dot.ca.gov

To accompany plans dated 2-17-09

TYPICAL LANE CLOSURE

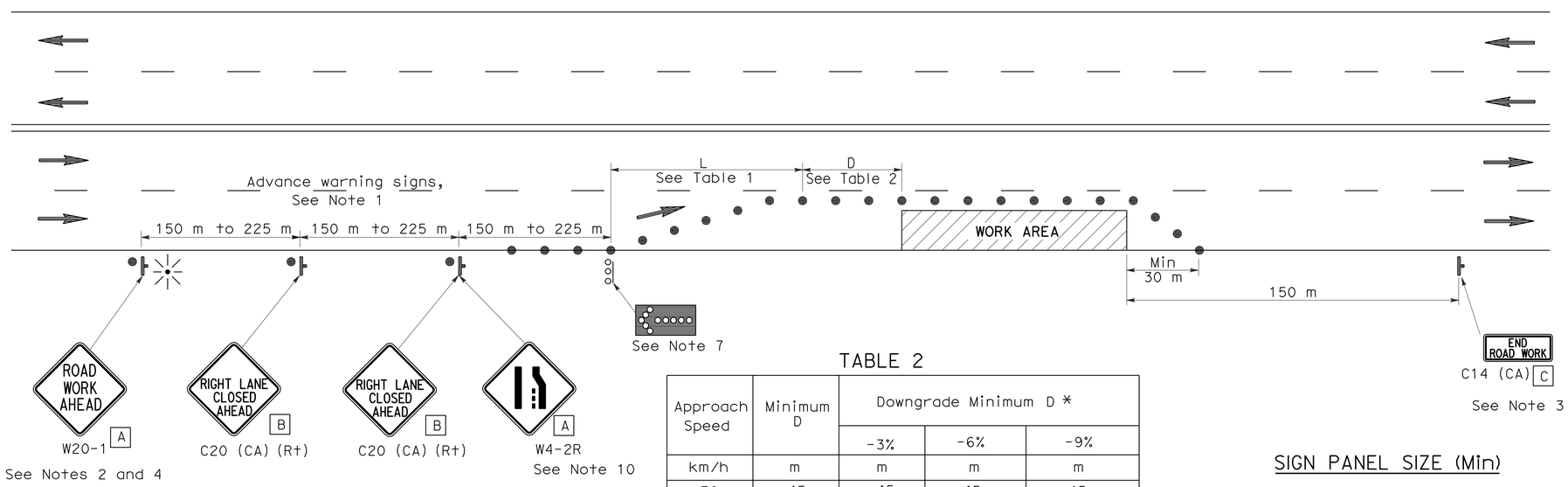

TABLE 2

Approach Speed	Minimum D	Downgrade Minimum D *		
		-3%	-6%	-9%
km/h	m	m	m	m
30	45	45	45	45
40	45	50	50	53
50	45	66	70	74
60	45	87	92	97
70	65	1 10	1 16	124
80	85	136	144	154

* Use on sustained downgrade steeper than or equal to grades shown and longer than 1.6 km.

SIGN PANEL SIZE (Min)

- A 900 mm x 900 mm
- B 914 mm x 914 mm
- C 914 mm x 457 mm

LEGEND

- Traffic Cone
- Temporary Sign
- Direction of Travel
- Flashing Arrow Sign (FAS)
- FAS Support or Trailer
- Portable Flashing Beacon

NOTES

Unless otherwise specified in the special provisions, all temporary warning signs shall have black legend on orange background.

California code are designated by (CA). Otherwise, Federal codes are shown.

NOTES

1. Where approach speeds are low, advance warning signs may be placed at 90 m spacing and placed closer in urban areas.
2. Each advance warning sign shall be equipped with at least two flags for daytime closure. Each flag shall be at least 400 mm x 400 mm in size and shall be orange or fluorescent red-orange in color. Flashing beacons shall be placed at the locations indicated for lane closure during hours of darkness.
3. A C14 (CA) "END ROAD WORK" sign, as appropriate, shall be placed at the end of the lane closure unless the end of work area is obvious, or ends within a larger project's limits.
4. If the W20-1 sign would follow within 600 m of a stationary W20-1 or C11 (CA) "ROAD WORK NEXT _____ MILES", use a C20 (CA) sign for the first advance warning sign.
5. All cones used for lane closures during the hours of darkness shall be fitted with retroreflective bands (or sleeves) as specified in the specifications.
6. Portable delineators, placed at one-half the spacing indicated for traffic cones, may be used instead of cones for daytime closures only.
7. Flashing arrow sign shall be either Type I or Type II.
8. The maximum spacing between cones along a tangent shall be 15 m and along a taper shall be approximately as shown in Table 1.
9. For approach speeds over 80 km/h, use the "Traffic Control System for Lane Closure On Freeways And Expressways" plan for lane closure details and requirements.
10. When specified in the special provisions, a W4-2 "LANE ENDS" symbol sign is to be used in place of the C20 (CA) "RIGHT LANE CLOSED AHEAD" sign.

TABLE 1

Approach Speed	* Minimum L	** Max spacing of cones along taper
km/h	m	m
30	38	6
40	38	8
50	98	10
60	98	12
70	183	14
80	183	15
Over 80	See Note 9	

* Use L for lane widths less than or equal to 3.6 m.

** See Note 8

STATE OF CALIFORNIA
DEPARTMENT OF TRANSPORTATION

TRAFFIC CONTROL SYSTEM FOR LANE CLOSURE ON MULTILANE CONVENTIONAL HIGHWAYS

NO SCALE

ALL DIMENSIONS ARE IN MILLIMETERS UNLESS OTHERWISE SHOWN

RSP T11 DATED APRIL 28, 2005 SUPERSEDES STANDARD PLAN T11 DATED JULY 1, 2004-PAGE 220 OF THE STANDARD PLANS BOOK DATED JULY 2004.

REVISED STANDARD PLAN RSP T11

2004 REVISED Std PLAN RSP T11

DIST	COUNTY	ROUTE	KILOMETER POST TOTAL PROJECT	SHEET NO.	TOTAL SHEETS
06	Tul	137	R24.8	29	51

Greg W. Edwards
REGISTERED CIVIL ENGINEER

April 28, 2005
PLANS APPROVAL DATE

REGISTERED PROFESSIONAL ENGINEER Greg W. Edwards No. C36386 Exp. 6-30-06 CIVIL STATE OF CALIFORNIA

The State of California or its officers or agents shall not be responsible for the accuracy or completeness of electronic copies of this plan sheet.

To get to the Caltrans web site, go to: http://www.dot.ca.gov

Caltrans Metric

To accompany plans dated 2-17-09

LEGEND

- Traffic Cone
- Temporary Sign
- Direction of Travel
- Flashing Arrow Sign (FAS)
- FAS Support or Trailer
- Portable Flashing Beacon

TABLE 1

Approach Speed	*Minimum L	** Max spacing of cones along taper
km/h	m	m
30	38	6
40	38	8
50	98	10
60	98	12
70	183	14
80	183	15
Over 80	See Note 11	

* Use L for lane widths less than or equal to 3.6 m.

** See Note 10

TABLE 2

Approach Speed	Minimum D	Downgrade Minimum D *		
		-3%	-6%	-9%
km/h	m	m	m	m
30	45	45	45	45
40	45	50	50	53
50	45	66	70	74
60	45	87	92	97
70	65	110	116	124
80	85	136	144	154

* Use on sustained downgrade steeper than or equal to grades shown and longer than 1.6 km.

TYPICAL CLOSING OF HALF ROADWAY

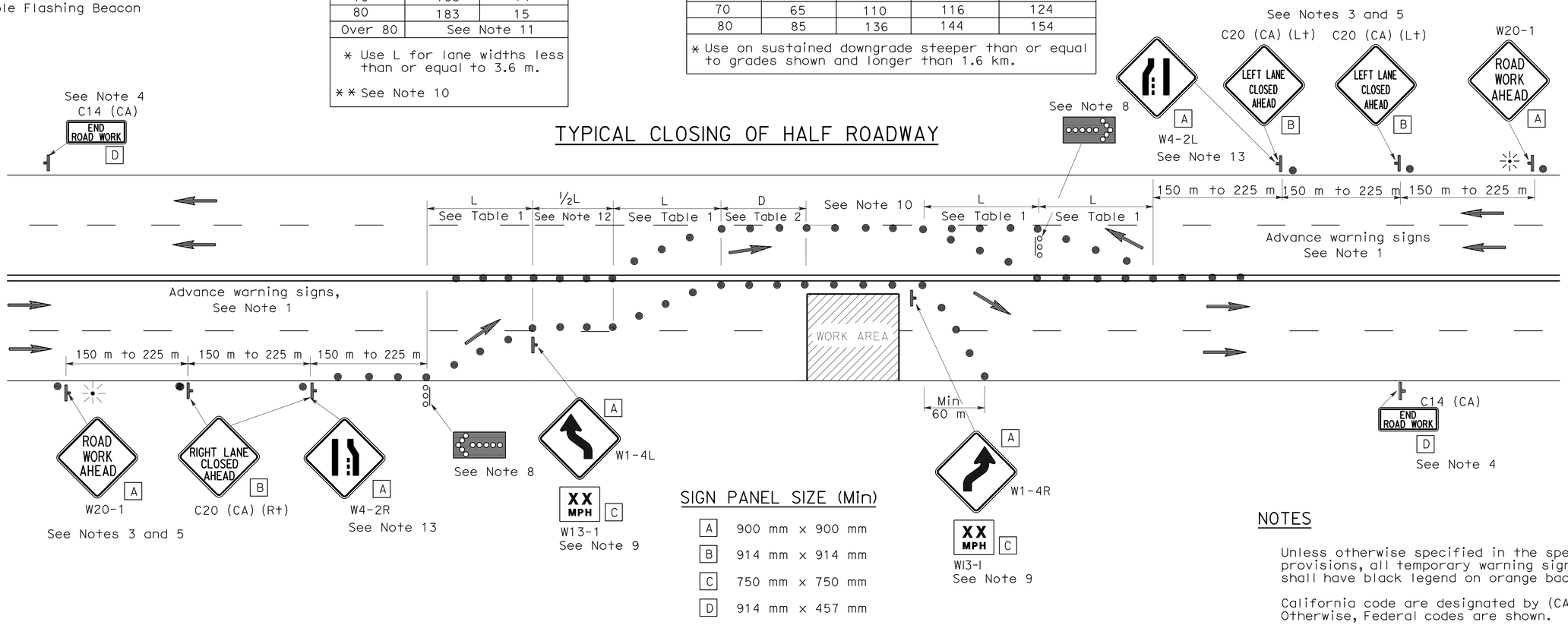

SIGN PANEL SIZE (Min)

A	900 mm x 900 mm
B	914 mm x 914 mm
C	750 mm x 750 mm
D	914 mm x 457 mm

NOTES

Unless otherwise specified in the special provisions, all temporary warning signs shall have black legend on orange background.

California code are designated by (CA). Otherwise, Federal codes are shown.

NOTES

1. Where Approach speeds are low, advance warning signs may be placed at 90 m spacing and placed closer in urban areas.
2. At least one person shall be assigned to provide full time maintenance of traffic control devices for lane closure unless, otherwise directed by the Engineer.
3. Each advance warning sign in each direction of travel shall be equipped with at least two flags for daytime closure. Each flag shall be at least 400 mm x 400 mm in size and shall be orange or fluorescent red-orange in color. Flashing beacons shall be placed at the locations indicated for lane closure during hours of darkness.
4. A C14 (CA) "END ROAD WORK" sign, as appropriate, shall be placed at the end of the lane closure unless the end of work area is obvious, or ends within a larger project's limits.
5. If the W20-1 sign would follow within 600 m of a stationary W20-1 or C11 (CA) "ROAD WORK NEXT _____ MILES", use a C20 (CA) sign for the first advance warning sign.
6. All cones used for lane closures during the hours of darkness shall be fitted with retroreflective bands (or sleeves) as specified in the specifications.
7. Portable delineators, placed at one-half the spacing indicated for traffic cones, may be used instead of cones for daytime closures only.
8. Flashing arrow signs shall be either Type I or Type II.
9. Advisory speed will be determined by the Engineer. The W13-1 Sign will not be required when advisory speed is more than the posted or maximum speed limit.
10. The maximum spacing between cones along a tangent shall be 15 m and along a taper shall be approximately as shown in Table 1.
11. For approach speeds over 80 km/h, use the "Traffic Control System For Lane Closure On Freeways And Expressways" plan for lane closure details and requirements.
12. Unless otherwise specified in the special provisions, the (½ L) shown between the two (L) lane closure tapers shall be used.
13. When specified in the special provisions, a W4-2 "Lane Ends" symbol sign is to be used in place of the C20 (CA) "RIGHT (LEFT) LANE CLOSED AHEAD" sign.

STATE OF CALIFORNIA
DEPARTMENT OF TRANSPORTATION

TRAFFIC CONTROL SYSTEM FOR LANE CLOSURE ON MULTILANE CONVENTIONAL HIGHWAYS

NO SCALE

ALL DIMENSIONS ARE IN MILLIMETERS UNLESS OTHERWISE SHOWN

RSP T12 DATED APRIL 28, 2005 SUPERSEDES STANDARD PLAN T12 DATED JULY 1, 2004-PAGE 221 OF THE STANDARD PLANS BOOK DATED JULY 2004.

REVISED STANDARD PLAN RSP T12

2004 REVISED Std PLAN RSP T12

DIST	COUNTY	ROUTE	KILOMETER POST TOTAL PROJECT	SHEET No.	TOTAL SHEETS
06	Tul	137	R24.8	30	51

Caltrans Metric

REGISTERED CIVIL ENGINEER

April 28, 2005
PLANS APPROVAL DATE

REGISTERED PROFESSIONAL ENGINEER G.W. Edwards No. C36386 Exp. 6-30-06 CIVIL STATE OF CALIFORNIA

The State of California or its officers or agents shall not be responsible for the accuracy or completeness of electronic copies of this plan sheet.

To get to the Caltrans web site, go to: http://www.dot.ca.gov

To accompany plans dated 2-17-09

2004 REVISED Std PLAN RSP T13

NOTES

Unless otherwise specified in the special provisions, all temporary warning signs shall have black legend on orange background.

California code are designated by (CA). Otherwise, Federal codes are shown.

TYPICAL LANE CLOSURE WITH REVERSIBLE CONTROL

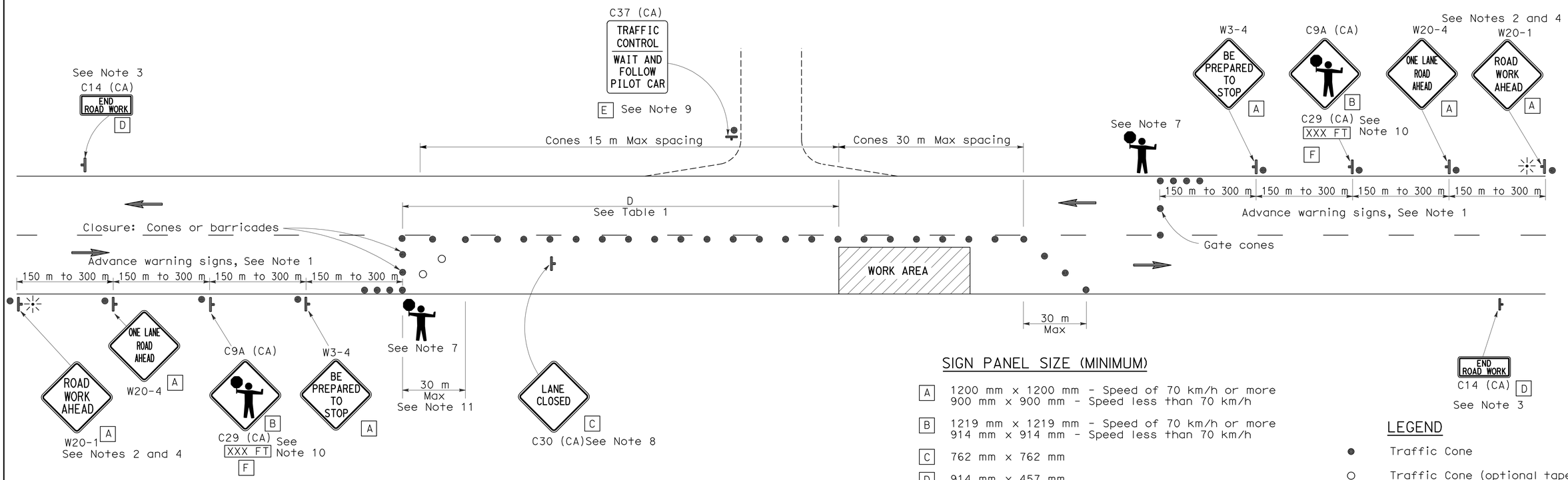

SIGN PANEL SIZE (MINIMUM)

- A — 1200 mm x 1200 mm - Speed of 70 km/h or more; 900 mm x 900 mm - Speed less than 70 km/h
- B — 1219 mm x 1219 mm - Speed of 70 km/h or more; 914 mm x 914 mm - Speed less than 70 km/h
- C — 762 mm x 762 mm
- D — 914 mm x 457 mm
- E — 914 mm x 1067 mm
- F — 914 mm x 229 mm

LEGEND

- Traffic Cone
- Traffic Cone (optional taper)
- Temporary Sign
- Direction of Travel
- Portable Flashing Beacon
- Flagger

NOTES

1. Where approach speeds are low, advance warning signs may be placed at 90 m spacing, and closer in urban areas.
2. Each advance warning sign in each direction of travel shall be equipped with at least two flags for daytime closure. Each flag shall be at least 400 mm x 400 mm in size and shall be orange or fluorescent red-orange in color. Flashing beacons shall be placed at the locations indicated for lane closure during hours of darkness.
3. A C14 (CA) "END ROAD WORK" sign, as appropriate, shall be placed at the end of the lane control unless the end of work area is obvious, or ends within a larger project's limits.
4. If the W20-1 sign would follow within 600 m of a stationary W20-1 or C11 (CA) "ROAD WORK NEXT _____ MILES", use a C16 (CA) sign for the first advance warning sign.
5. All cones used for lane closures during the hours of darkness shall be fitted with retroreflective bands (or sleeves) as specified in the specifications.
6. Portable delineators, placed at one-half the spacing indicated for traffic cones, may be used instead of cones for daytime closures only.
7. Additional advance flaggers may be required. Flagger should stand in a conspicuous place, be visible to approaching traffic as well as approaching vehicles after the first vehicle has stopped. During the hours of darkness, the flagging-station and flagger shall be illuminated and clearly visible to approaching traffic. The illumination footprint of the lighting on the ground shall be at least 6 m in diameter. Place a minimum of four cones at 15 m intervals in advance of flagger station as shown.
8. Place C30 (CA) "LANE CLOSED" sign at 150 to 300 m intervals throughout extended work areas. They are optional if the work area is visible from the flagger station.
9. When a pilot car is used, place a C37 (CA) "TRAFFIC CONTROL-WAIT AND FOLLOW PILOT CAR" sign at all intersections within traffic control area. Signs shall be clean and visible at all times.
10. An optional C29 (CA) sign may be placed below the C9A (CA) sign.
11. Traffic cones or barricades may be placed on the optional taper as shown, barricades shall be Type I, II, or III.

TABLE I

Approach Speed	Minimum D	Downgrade Minimum D *
km/h	m	m
30	60	72
40	60	72
50	60	72
60	90	108
70	90	108
80	150	180
90	150	180
100	150	180
110	170	204

* Use on substained downgrade steeper than -3 percent and longer than 1.6 km.

STATE OF CALIFORNIA
DEPARTMENT OF TRANSPORTATION

TRAFFIC CONTROL SYSTEM FOR LANE CLOSURE ON TWO LANE CONVENTIONAL HIGHWAYS

NO SCALE

ALL DIMENSIONS ARE IN MILLIMETERS UNLESS OTHERWISE SHOWN

RSP T13 DATED APRIL 28, 2005 SUPERSEDES STANDARD PLAN T13 DATED JULY 1, 2004-PAGE 222 OF THE STANDARD PLANS BOOK DATED JULY 2004.

REVISED STANDARD PLAN RSP T13

DIST	COUNTY	ROUTE	KILOMETER POST TOTAL PROJECT	SHEET NO.	TOTAL SHEETS
06	Tul	137	R24.8	31	51

Caltrans Metric

REGISTERED ELECTRICAL ENGINEER

October 5, 2007
PLANS APPROVAL DATE

REGISTERED PROFESSIONAL ENGINEER Jeffery G. McRae No. E14512 Exp. 6-30-08 ELECTRICAL STATE OF CALIFORNIA

The State of California or its officers or agents shall not be responsible for the accuracy or completeness of electronic copies of this plan sheet.

To get to the Caltrans web site, go to: http://www.dot.ca.gov

To accompany plans dated 2-17-09

ELECTROLIERS

STANDARD TYPES
15, 15D
15 STRUCTURE
21, 21D STRUCTURE
30
31
32
35
36-20A

High mast lighting standard

Double arm lighting standard

Existing electrolier

Electrolier foundation (Future installation)

NOTES

1. Luminaires shall be 310 W HPS when installed on Type 21, 21D, 30, 31, 32, 35 and 36-20A Standards, unless otherwise specified. Luminaires shall be 200 W HPS when installed on other type standards or poles, unless otherwise specified.
2. Luminaires shall be the cutoff type, ANSI Type III medium cutoff lighting distribution, unless otherwise specified.
3. Variations noted adjacent to symbol on project plans.

Electrolier (see project notes or project plans)

Luminaire on wood pole

STANDARD NOTES

- AB — Abandon. If applied to conduit, remove conductors.
- BC — Install pull box in existing conduit run.
- BP — Pedestrian barricade, type as indicated on plan.
- CB — Install conduit into existing pull box.
- CC — Connect new and existing conduit. Remove existing conductors and install conductors as indicated.
- CF — Conduit to remain for future use. Remove conductors. Install pull wire or rope.
- DH — Detector handhole.
- FA — Foundation to be abandoned.
- IS — Install sign on signal mast arm.
- NS — No slip base on standard.
- PEC — Photoelectric control.
- PEU — Photoelectric unit.
- RC — Equipment or material to be removed and become the property of the Contractor.
- RE — Remove electrolier, fuses and ballast. Tape ends of conductors.
- RL — Relocate equipment.
- RR — Remove and reuse equipment.
- RS — Remove and salvage equipment.
- SC — Splice new to existing conductors.
- SD — Service disconnect.
- SF — Standard to remain for future use. Remove luminaire, pole conductors, fuses and ballast. Tape disconnects.
- TSP — Telephone service point.

ABBREVIATIONS AND EQUIPMENT DESIGNATIONS

PROPOSED	EXISTING	
BBS	bbs	Battery backup system
BC	bc	Bolt circle
C	C	Conduit
CCTV	cctv	Closed circuit television
CKT	ckt	Circuit
CMS	cms	Changeable message sign
DLC	dlc	Loop detector lead-in cable
EMS	ems	Extinguishable message sign
EVC	evc	Emergency vehicle cable
EVD	evd	Emergency vehicle detector
FB	fb	Flashing beacon
FBCA	fbca	Flashing beacon control assembly
FBS	fbs	Flashing beacon with slip base
FO	fo	Fiber optic
G	G	Ground (Equipment Grounding Conductor)
GFCI	GFCI	Ground fault circuit interrupt
HAR	har	Highway advisory radio
HEX	hex	Hexagonal
HPS	hps	High pressure sodium
IISNS	iisns	Internally illuminated street name sign
ISL	isl	Induction sign lighting
LED	led	Light emitting diode
LMA	lma	Luminaire mast arm
LPS	lps	Low pressure sodium
LTG	ltg	Lighting
LUM	lum	Luminaire
MAT	mat	Mast arm mounted vehicle signal faces, top attachment
MAS	mas	Mast arm mounted vehicle signal faces, side attachment
MAS-4A	mas-4A	Mast arm mounted vehicle signal faces, side attachment - 4 signal section
MAS-4B	mas-4B	
MAS-4C	mas-4C	
MAS-5A	mas-5A	Mast arm mounted vehicle signal faces, side attachment - 5 signal section
MAS-5B	mas-5B	
MC	mc	Mercury contactor
M/M	m/m	Multiple to multiple transformer
MT	mt	Conduit with pull wire or rope only
MTG	mtg	Mounting
	mv	Mercury vapor lighting fixture
N	N	Neutral (Grounded Conductor)
NC	NC	Normally closed
NO	NO	Normally open
PB	pb	Pull box
PEC	pec	Photoelectric control (Type I, II, III, IV or V as shown)
PED	ped	Pedestrian
PEU	peu	Photoelectric unit
PPB	ppb	Pedestrian push button
RL	RL	Relocated equipment
RM	rm	Ramp metering
SB	sb	Slip base
SIC	sic	Signal interconnect cable
SIG	sig	Signal
SMA	sma	Signal mast arm
SNS	sns	Street name sign
SP	sp	Service point
TDC	tdc	Telephone demarcation cabinet
TMS	tms	Traffic monitoring station
TOS	tos	Traffic Operations System
VEH	veh	Vehicle
XFMR	xfmr	Transformer
COMM	comm	Communication
RWIS	rwis	Roadway weather information system

SOFFIT AND WALL MOUNTED LUMINAIRES

Pendant, 70 W HPS unless otherwise specified.

Flush, 70 W HPS unless otherwise specified.

Wall surface, 70 W HPS unless otherwise specified.

Existing soffit or wall luminaire to remain unmodified.

Existing soffit or wall luminaire to be modified as specified.

NOTE

Arrow indicates "street side" of luminaire.

STATE OF CALIFORNIA
DEPARTMENT OF TRANSPORTATION

ELECTRICAL SYSTEMS (SYMBOLS AND ABBREVIATIONS)

NO SCALE

ALL DIMENSIONS ARE IN MILLIMETERS UNLESS OTHERWISE SHOWN

RSP ES-1A DATED OCTOBER 5, 2007 SUPERSEDES STANDARD PLAN ES-1A DATED JULY 1, 2004-PAGE 413 OF THE STANDARD PLANS BOOK DATED JULY 2004.

REVISED STANDARD PLAN RSP ES-1A

2004 REVISED Std PLAN RSP ES-1A

6-27-07

DIST	COUNTY	ROUTE	KILOMETER POST TOTAL PROJECT	SHEET NO.	TOTAL SHEETS
06	Tul	137	R24.8	32	51

REGISTERED ELECTRICAL ENGINEER

October 5, 2007
PLANS APPROVAL DATE

REGISTERED PROFESSIONAL ENGINEER Jeffery G. McRae No. E14512 Exp. 6-30-08 ELECTRICAL STATE OF CALIFORNIA

The State of California or its officers or agents shall not be responsible for the accuracy or completeness of electronic copies of this plan sheet.

To get to the Caltrans web site, go to: http://www.dot.ca.gov

To accompany plans dated 2-17-09

CONDUIT

PROPOSED	EXISTING	
		Lighting conduit, unless otherwise indicated or noted
		Traffic signal conduit
C	c	Communication conduit
T	t	Telephone conduit
F	f	Fire alarm conduit
FO	fo	Fiber optic conduit
		Conduit termination (RSP ES-9A C)
R	r	Conduit riser in/on structure or Service pole

SERVICE EQUIPMENT

PROPOSED	EXISTING	
OH	oh	Overhead lines
U	u	Wood pole "U" indicates utility owned
		Pole guy-with anchor
		Utility transformer-ground mounted
III		Service equipment enclosure type
		Service equipment enclosure door indicates front of enclosure
T	t	Telephone demarcation cabinet

POLE-MOUNTED SERVICE DESIGNATION

Type of installation

TYPE H SERVICE - 8.8 m ← Pole height above grade

ILLUMINATED OVERHEAD SIGN

PROPOSED	EXISTING	
		Overhead sign - Single post
		Overhead sign - Two post
		Overhead sign - Mounted on structure
		Overhead sign with electrolier

SIGNAL EQUIPMENT

PROPOSED	EXISTING	
		Pedestrian signal face
		Pedestrian push button post
		Pedestrian barricade
		Vehicle signal face (with backplate, 3-Section: red, yellow and green)
		Vehicle signal face with angle visors
PV	PV	Modifications of basic symbols: "L" Indicates all non-arrow sections louvered "LG" indicates louvered green section only "PV" indicates 300 mm programmed visibility sections "200" indicates all 200 mm sections (only when specified)
		Type 15TS and Vehicle signal face
		Vehicle signal face with red, yellow and green left arrow sections
		Vehicle signal face with red and yellow sections and up green arrow
		Vehicle signal face (5 Section) with red, yellow and green sections and yellow and green right arrows
		Type 1 Standard and attached vehicle signal faces
		Standard with signal mast arm only and attached vehicle signal faces and internally illuminated street name sign
		Type 33 Standard, Left-turn vehicle signal face and sign
		Standard with luminaire and signal mast arms and attached vehicle signal faces
		Cantilever flashing beacon Type 9 Frame, with a sign unless otherwise specified or indicated
Y Y	Y Y	Type 15-FBS Standard with two vehicle signal face sections with lens, backplate and visor with a sign
R	Y	Flashing beacon. One vehicle signal face section with lens, backplate and visor. "R" indicates red indication, "Y" indicates yellow indication
		Controller assembly. Door indicates front of cabinet
		Guard post
		Type 1 Standard with "Meter On" sign
		Emergency vehicle detector

NOTES

1. All signal sections shall be 300 mm unless shown otherwise.
2. Signal heads shall be provided with backplates unless shown otherwise.
3. Signal indication shall be LED.

STATE OF CALIFORNIA
DEPARTMENT OF TRANSPORTATION

ELECTRICAL SYSTEMS (SYMBOLS AND ABBREVIATIONS)

NO SCALE

ALL DIMENSIONS ARE IN MILLIMETERS UNLESS OTHERWISE SHOWN

RSP ES-1B DATED OCTOBER 5, 2007 SUPERSEDES STANDARD PLAN ES-1B DATED JULY 1, 2004-PAGE 414 OF THE STANDARD PLANS BOOK DATED JULY 2004.

REVISED STANDARD PLAN RSP ES-1B

2004 REVISED Std PLAN RSP ES-1B

8-9-07

DIST	COUNTY	ROUTE	KILOMETER POST TOTAL PROJECT	SHEET NO.	TOTAL SHEETS
06	Tul	137	R24.8	33	51

Caltrans Metric

Jeffery G. McRae
REGISTERED ELECTRICAL ENGINEER

October 5, 2007
PLANS APPROVAL DATE

REGISTERED PROFESSIONAL ENGINEER
Jeffery G. McRae
No. E14512
Exp. 6-30-08
ELECTRICAL
STATE OF CALIFORNIA

The State of California or its officers or agents shall not be responsible for the accuracy or completeness of electronic copies of this plan sheet.

To get to the Caltrans web site, go to: http://www.dot.ca.gov

To accompany plans dated 2-17-09

EQUIPMENT IDENTIFICATION

ILLUMINATED SIGN IDENTIFICATION NUMBER:

Sign No. 12345 — Sign number - Place on post or structure

10 ISL SCI 1.0
- Transformer rating (kVA)
- Lighting control type
- Number and type of fixtures

} Do NOT place on standard or structure

ELECTROLIER OR EQUIPMENT IDENTIFICATION NUMBER:

12345 - 4.6
- 4.6: Mast arm length in meters, if shown. Do not place on standard or structure.
- 12345: Equipment number - Place on standard or structure. Existing equipment numbers are shown in parenthesis

CONDUIT AND CONDUCTOR IDENTIFICATION:

41C, 2#10, 15#14, 2 DLC
- 2#10, 15#14, 2 DLC: Number and size of conductors and cables
- 41C: Size of conduit in millimeters

Ø1, Ø2, Ø2P, etc.	Traffic phase identification for signal faces, detectors and phase diagrams
1 2 3	Project note numbers
A B C	Equipment description, installation or item numbers
1 2 3	Conduit run numbers

SIGNAL AND LIGHTING STANDARD (TYPICAL DESIGNATION):

19A - 3 - 161
- 161: Wind velocity=161 km/h
- 3: Case 3 arm loading
- 19A: Standard type

Standard Plan sheet number
Detail number or letter

WIRING DIAGRAM LEGEND

P	Pole
CB	Circuit breaker
A	Ampere
V	Volt
M	Metered
UM	Unmetered
NB	Neutral bus
GB	Ground bus
G	Equipment grounding conductor
N	Grounded conductor (Neutral)

- External conductor
- Conductor or bus
- Tie point
- Contactor coil
- Contactor, Contact NO
- Terminal blocks
- Contactor, Contact NC
- Enclosure bond
- Grounding electrode
- Circuit breaker
- Receptacle

PULL BOXES

PROPOSED | EXISTING

Pull box-No. 5 unless otherwise indicated or noted.

3 | 9A(21)

Pull box-Additional designations or descriptions

3 = No. 3½ pull box
5 = No. 5 pull box
6 = No. 6 pull box
7 = No. 7 (Ceiling pull box)
8 = No. 8 (Pendant soffit pull box)
9 = No. 9 pull box
9A = No. 9A pull box

(C) = Communications pull box
(E) = Pull box with extension
(S) = Sprinkler control pull box
(21) = Anchor bolts and conduit for future installation of Type 21 Standard
(T) = Traffic pull box

MISCELLANEOUS EQUIPMENT

PROPOSED	EXISTING	
CMS	cms	Changeable message sign
		Closed circuit television camera
		Highway advisory radio pole and antenna
EMS	ems	Extinguishable message sign
M V	m v	Detection device M = Microwave sensor V = Video image sensor

VEHICLE DETECTORS

5 J 9 U
- U = Upper, L = Lower
- Slot number in input file
- Input file (I or J)
- Phase

Vehicle detector designation

PROPOSED	EXISTING	
		Type A detector loop. Outline of sawcut shown.
		Type B detector loop. Outline of sawcut shown.
		Type C detector loop. Outline of sawcut shown.
		Type D detector loop. Outline of sawcut shown.
		Type E detector loop. Outline of sawcut shown.
		Type Q detector loop. Outline of sawcut shown.
		Magnetic detector
DH	dh	Detector handhole
		Microwave or video detection zone

STATE OF CALIFORNIA
DEPARTMENT OF TRANSPORTATION

ELECTRICAL SYSTEMS (SYMBOLS AND ABBREVIATIONS)

NO SCALE

ALL DIMENSIONS ARE IN MILLIMETERS UNLESS OTHERWISE SHOWN

RSP ES-1C DATED OCTOBER 5, 2007 SUPERSEDES STANDARD PLAN ES-1C DATED JULY 1, 2004-PAGE 415 OF THE STANDARD PLANS BOOK DATED JULY 2004.

REVISED STANDARD PLAN RSP ES-1C

2004 REVISED Std PLAN RSP ES-1C

10-1-07

DIST	COUNTY	ROUTE	KILOMETER POST TOTAL PROJECT	SHEET NO.	TOTAL SHEETS
06	Tul	137	R24.8	34	51

Caltrans Metric

REGISTERED ELECTRICAL ENGINEER

October 5, 2007
PLANS APPROVAL DATE

REGISTERED PROFESSIONAL ENGINEER
Jeffery G. McRae
No. E14512
Exp. 6-30-08
ELECTRICAL
STATE OF CALIFORNIA

The State of California or its officers or agents shall not be responsible for the accuracy or completeness of electronic copies of this plan sheet.

To get to the Caltrans web site, go to: http://www.dot.ca.gov

To accompany plans dated 2-17-09

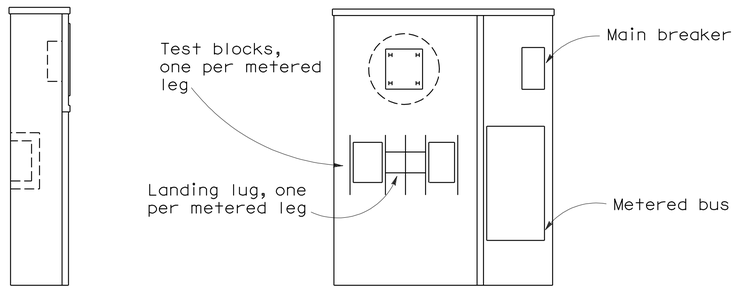

SIDE VIEW ELEVATION

TYPE II-A SERVICE EQUIPMENT ENCLOSURE

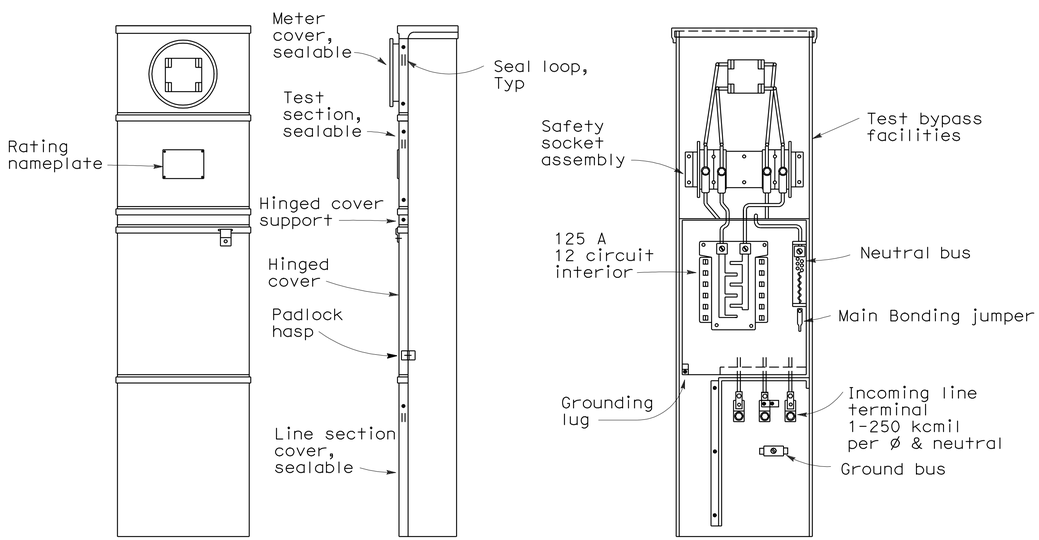

FRONT VIEW SIDE VIEW FRONT VIEW

(Less covers and dead front panel)
For metered circuits only

TYPE II-B SERVICE EQUIPMENT ENCLOSURE

NOTES-TYPE II SERVICE EQUIPMENT ENCLOSURES:

1. Service equipment enclosures and metering equipment shall meet the requirements of the service utility.
2. Service equipment enclosures shall be factory wired NEMA 3R construction and shall be provided with dead front panel and provisions for padlocking.
3. Control wiring shall be 600 V, No. 14 AWG stranded (THHN) machine tool wire. Where subject to flexing, 19 strand wire shall be used.
4. Main bus shall be rated for 125 A and shall be tin-plated copper.
5. An engraved phenolic nameplate on the dead front panel indicating the function of each circuit or device shall be installed with stainless steel rivets or stainless steel screws:
   a) Adjacent to the breaker or device with character size a minimum of 3 mm.
   b) At the top of the exterior door panel indicating system number, voltage level and number of phases with character size a minimum of 5 mm.
6. A plastic laminated wiring diagram shall be provided and attached to the inside of the front door.
7. In unpaved areas, a raised portland cement concrete pad of 600 mm x 100 mm x width of service equipment enclosure foundation or controller cabinet foundation shall be constructed in front of Type II service equipment enclosure.
8. Internal bus, where shown, is typical only. Alternative designs of proposed service equipment enclosure shall be submitted to the Engineer for approval.
9. Circuit breakers may be mounted in the vertical or horizontal position.
10. Dimensions of service equipment enclosures shall meet the requirements of the service utility.
11. Minimum clearance shall be required for front and back of service equipment enclosures per National Electrical Code, Article 110.26, "Spaces About Electrical Equipment (600 Volts, Nominal, or Less)".

STATE OF CALIFORNIA
DEPARTMENT OF TRANSPORTATION

ELECTRICAL SYSTEMS (SERVICE EQUIPMENT TYPE II SERIES)

NO SCALE

ALL DIMENSIONS ARE IN MILLIMETERS UNLESS OTHERWISE SHOWN

RSP ES-2B DATED OCTOBER 5, 2007 SUPERSEDES STANDARD PLAN ES-2B DATED JULY 1, 2004-PAGE 417 OF THE STANDARD PLANS BOOK DATED JULY 2004.

REVISED STANDARD PLAN RSP ES-2B

2004 REVISED Std PLAN RSP ES-2B

6-27-07

DIST	COUNTY	ROUTE	KILOMETER POST TOTAL PROJECT	SHEET NO.	TOTAL SHEETS
06	Tul	137	R24.8	35	51

Caltrans Metric

REGISTERED ELECTRICAL ENGINEER

October 5, 2007
PLANS APPROVAL DATE

REGISTERED PROFESSIONAL ENGINEER
Jeffery G. McRae
No. E14512
Exp. 6-30-08
ELECTRICAL
STATE OF CALIFORNIA

The State of California or its officers or agents shall not be responsible for the accuracy or completeness of electronic copies of this plan sheet.

To get to the Caltrans web site, go to: http://www.dot.ca.gov

To accompany plans dated 2-17-09

2004 REVISED Std PLAN RSP ES-2C

NOTES-TYPE III SERVICE EQUIPMENT ENCLOSURES:

1. Service equipment enclosure and metering equipment shall meet the requirements of the service utility. The meter area shall have a sealable, lockable, weathertight cover that can be removed without the use of tools.

2. Service equipment enclosures shall be factory wired and conform to NEMA standards.

3. Dimensions of service equipment enclosures shall meet the requirements of the service utility.

4. The dead front panels on Type III-A service equipment enclosures shall have a continuous stainless steel or aluminum piano hinge. The panel in front of the breakers shall be secured with a latch or captive screws. No live parts shall be mounted on the dead front panel.

5. The exterior door shall have provisions for padlocking. The padlock hole shall be a minimum diameter of 11 mm.

6. Enclosures housing transformers of more than one kVA shall have effective screened ventilation louvers of not less than 32 000 mm^2. Screen shall be stainless steel No. 304, with a No. 10 size mesh. Framed screen shall be secured with at least four bolts.

7. Fasteners on the exterior of the enclosure shall be vandal-resistant and shall not be removable from the exterior. Screws, nuts, bolts and washers shall be stainless steel.

8. Landing lugs for incoming service conductors shall be compatible with either copper or aluminum conductors sized to suit the conductors shown on the plan. Landing lugs shall be copper or tin-plated aluminum. Neutral bus shall be rated for 125 A and be suitable for copper or aluminum conductors unless otherwise specified. The terminal shall include but not be limited to:

   a) Incoming terminals (landing lugs)
   b) Neutral lugs
   c) Solid neutral terminal strip

9. At least 6 standard single pole circuit breaker spaces, 20 mm nominal, shall be provided for branch circuits. Circuit breaker interiors shall be copper. Interiors of enclosure shall accept plug-in or cable-in/cable-out circuit breakers.

10. Control wiring shall be 600 V, 14 stranded machine tool wire. Where subject to flexing, 19 strand wire shall be used.

11. Main bus shall be rated for 125 A and shall be tin-plated copper.

12. A plastic laminated wiring diagram shall be provided with brass mounting eyelets and attached to the inside of the enclosure and the wiring diagram shall affixed to the interior with a UL or ETL approved method.

13. An engraved phenolic nameplate on the dead front panel indicating the function of each circuit or device shall be installed with stainless steel rivets or stainless steel screws:

    a) Adjacent to the breaker or device with character size a minimum of 3 mm.

    b) At the top of the exterior door panel indicating system number, voltage level and number of phases with character size a minimum of 5 mm.

14. The plan shows the approximate location of devices within the enclosure. Components may be rearranged, however, the "working" clearances within the service equipment enclosure shall be maintained.

15. In unpaved areas a raised portland cement concrete pad 600 mm x 100 mm x width of foundation shall be constructed in front of new service equipment enclosure installation. Pad shall be set to elevation of foundation.

16. Foundation shall extend 50 mm minimum beyond edge of service equipment enclosure.

17. Internal bus, where shown, is typical only. Alternative design of proposed service equipment enclosure shall be submitted to the Engineer for approval.

18. Plug-in circuit breakers may be mounted in the vertical or horizontal position. Cable-in/cable-out circuit breakers shall be mounted in the vertical position.

19. Type III-AF and Type III-BF service equipment enclosures shall have the meter viewing windows located on the front side of the service equipment enclosures.

20. Type III-AR and Type III-BR service equipment enclosures shall be similarly constructed as Type III-AF and Type III-BF respectively, except the meter viewing windows shall be located on the back side of the service equipment enclosures.

21. Minimum clearance shall be required for front and back of service equipment enclosure per National Electrical Code, Article 110.26, "Spaces About Electric Equipment (600 Volts, Nominal, or Less)".

STATE OF CALIFORNIA
DEPARTMENT OF TRANSPORTATION

ELECTRICAL SYSTEMS (SERVICE EQUIPMENT NOTES TYPE III SERIES)

NO SCALE

ALL DIMENSIONS ARE IN MILLIMETERS UNLESS OTHERWISE SHOWN

RSP ES-2C DATED OCTOBER 5, 2007 SUPERSEDES STANDARD PLAN ES-2C DATED JULY 1, 2004-PAGE 418 OF THE STANDARD PLANS BOOK DATED JULY 2004.

REVISED STANDARD PLAN RSP ES-2C

DIST	COUNTY	ROUTE	KILOMETER POST TOTAL PROJECT	SHEET NO.	TOTAL SHEETS
06	Tul	137	R24.8	36	51

Caltrans Metric

REGISTERED ELECTRICAL ENGINEER

October 5, 2007
PLANS APPROVAL DATE

REGISTERED PROFESSIONAL ENGINEER Jeffery G. McRae No. E14512 Exp. 6-30-08 ELECTRICAL STATE OF CALIFORNIA

The State of California or its officers or agents shall not be responsible for the accuracy or completeness of electronic copies of this plan sheet.

To get to the Caltrans web site, go to: http://www.dot.ca.gov

To accompany plans dated 2-17-09

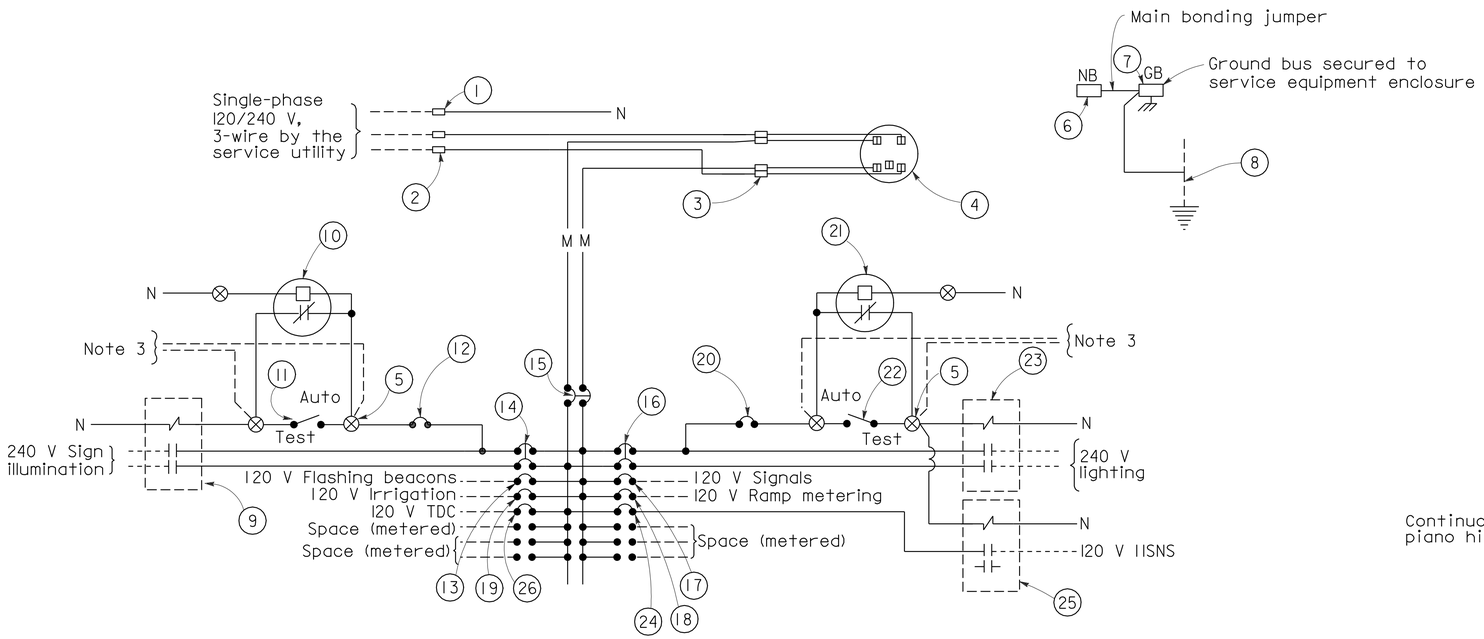

120/240 V SERVICE WIRING DIAGRAM (TYPICAL)

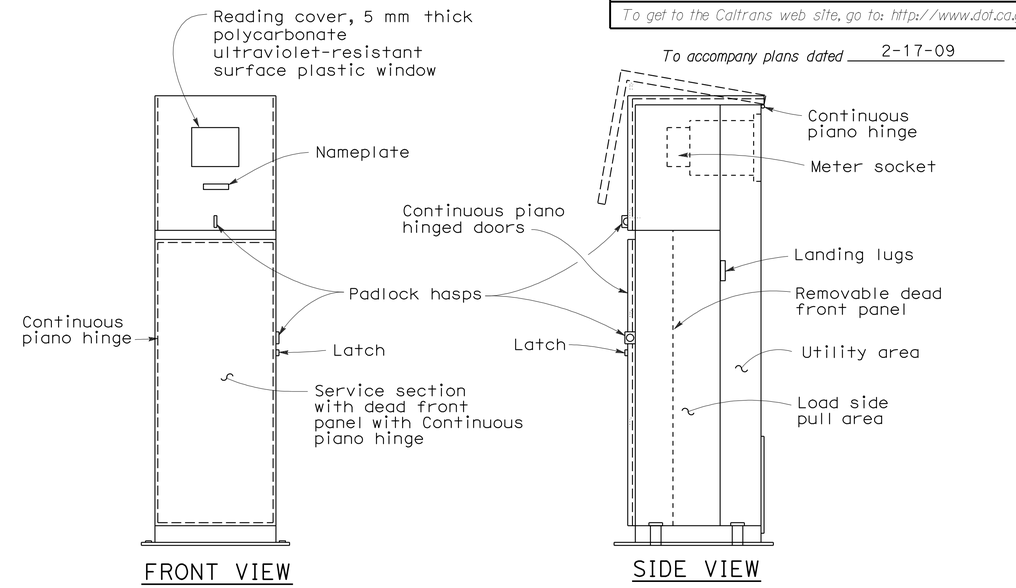

FRONT VIEW

SIDE VIEW

TYPE III-BF SERVICE EQUIPMENT ENCLOSURE WITH PROVISIONS FOR ONE 100 A METER (TYPICAL)

TYPE III-B SERVICE (120/240 V) EQUIPMENT LEGEND		
ITEM No.	COMPONENT	NAME PLATE DESCRIPTION
1	Neutral lug	
2	Landing lug (Note 6)	
3	Test bypass facility	
4	Meter socket and support	
5	Terminal blocks	
6	Neutral bus	
7	Ground bus	
8	Grounding electrode	
9	30 A, 2PNO Contactor	Sign Illumination
10	Photoelectric unit (Note 7)	
11	15 A, IP, Test switch	Sign Illumination Test Switch
12	15 A, 120 V, IP, CB	Sign Illumination Control
13	15 A, 120 V, IP, CB	Flashing Beacon
14	30 A, 240 V, 2P, CB	Sign Illumination
15	100 A, 240 V, 2P, CB	Main Breaker
16	30 A, 240 V, 2P, CB	Lighting
17	50 A, 120 V, IP, CB	Signals
18	30 A, 120 V, IP, CB	Ramp Metering
19	20 A, 120 V, IP, CB	Irrigation
20	15 A, 120 V, IP, CB	Lighting Control
21	Photoelectric unit (Note 7)	
22	15 A, IP, Test switch	Lighting Test Switch
23	60 A, 2PNO Contactor	Lighting
24	15 A, 120 V, IP, CB	IISNS
25	30 A, 2PNO Contactor	IISNS
26	20 A, 120 V, IP, CB	Telephone Demarcation Cabinet

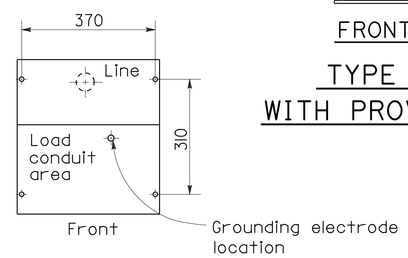

BASE FOR TYPE III-B SERVICE EQUIPMENT ENCLOSURE

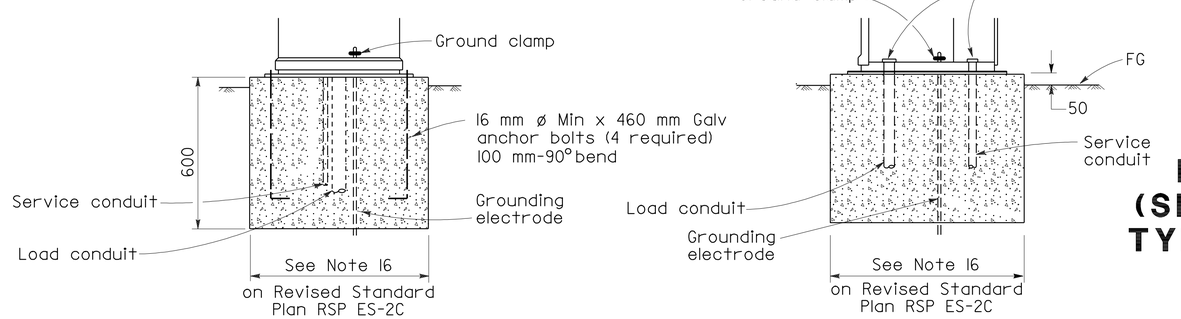

FRONT VIEW

SIDE VIEW

TYPE III-B SERVICE EQUIPMENT ENCLOSURE FOUNDATION DETAILS

NOTES (FOR SERVICE EQUIPMENT ENCLOSURE)

1. Voltage ratings of service equipment shall conform to the service voltages indicated on the plans.
2. Unless otherwise indicated on the plans, service equipment items shall be provided for each service equipment enclosure as shown.
3. Connect to remote test switch mounted on lighting standards, sign post or structure when required.
4. Items No. 1 and 6 shall be isolated from the service equipment enclosure.
5. Meter sockets shall be 5 clip type.
6. The landing lug shall be suitable for multiple conductors.
7. Type V photoelectric control shall be used unless otherwise indicated on the plans.

STATE OF CALIFORNIA
DEPARTMENT OF TRANSPORTATION

ELECTRICAL SYSTEMS (SERVICE EQUIPMENT AND TYPICAL WIRING DIAGRAM, TYPE III -B SERIES)

NO SCALE

ALL DIMENSIONS ARE IN MILLIMETERS UNLESS OTHERWISE SHOWN

RSP ES-2E DATED OCTOBER 5, 2007 SUPERSEDES STANDARD PLAN ES-2E DATED JULY 1, 2004-PAGE 420 OF THE STANDARD PLANS BOOK DATED JULY 2004.

REVISED STANDARD PLAN RSP ES-2E

2004 REVISED Std PLAN RSP ES-2E

8-9-07

DIST	COUNTY	ROUTE	KILOMETER POST TOTAL PROJECT	SHEET NO.	TOTAL SHEETS
06	Tul	137	R24.8	37	51

Caltrans Metric

Jeffery G. McRae
REGISTERED ELECTRICAL ENGINEER

October 5, 2007
PLANS APPROVAL DATE

REGISTERED PROFESSIONAL ENGINEER Jeffery G. McRae No. E14512 Exp. 6-30-08 ELECTRICAL STATE OF CALIFORNIA

The State of California or its officers or agents shall not be responsible for the accuracy or completeness of electronic copies of this plan sheet.

To get to the Caltrans web site, go to: http://www.dot.ca.gov

To accompany plans dated 2-17-09

NOTES - CONTROLLER CABINETS

1. Cabinet dimensions are nominal.
2. Foundations shall be located to provide 600 mm minimum clearance between face of curb and any portion of cabinet.
3. Type G, M, P, R, S and Model 336 cabinets shall be installed with the back toward the nearest lane of traffic.
4. The controller cabinet ground bus shall be bonded to the controller equipment enclosure.
5. In unpaved areas, a raised portland cement concrete pad shall be constructed in front of each controller cabinet. Pad shall be 900 mm x 900 mm x 100 mm for Type G cabinets and shall be 900 mm x 100 mm thick x width of foundation for Types M, P, R, S and Model 336 cabinets.
6. In unpaved areas, the top of foundation for Type G, P, R and S cabinets shall be 150 mm above surrounding grade. Top of foundation for Type M or Model 336 cabinet shall be 460 mm above surrounding grade.
7. In sidewalks and other paved areas, top of foundation for Type G cabinet shall be level with surrounding grade. Top of foundation for Type P, R and S cabinets shall be 90 mm above surrounding grade.
8. The steel pedestal, base plate, bolt circle and foundation for Type G cabinet shall be the same as that shown for a Type 1-C Standard. Pedestal shall be 640 mm - 760 mm in length. Anchor bolts shall be 19 mm ø x 460 mm with a 50 mm - 90° bend. Four bolts required per cabinet.
9. Type G cabinet shall be provided with a slipfitter to permit mounting an 114 mm outside diameter pedestal. Slipfitter shall be bolted to bottom of the cabinet.
10. Type G cabinet shall be provided with 8 screened, raintight holes, 13 mm diameter or larger, in the bottom of the cabinet.
11. A 25 mm drain shall be provided through the foundation of a Type M or Model 336 cabinet. Drain pipe shall be screened.
12. See Table for cabinet and foundation dimensions; "D" = Depth, "H" = Height and "W" = Width.
13. Cabinet shelves shall be adjustable for vertical spacing and shall be removable. Type M, P, R and S cabinets shall be provided with a minimum of two shelves.
14. Anchor bolts for Type M, P, R, S and Model 336 cabinets shall be 19 mm ø x 460 mm with a 50 mm - 90° bend.
15. An approved mastic or caulking compound shall be placed on the foundation prior to placing the cabinet to seal openings between bottom of cabinet and foundation.
16. Controller units, plug-mounted equipment, shelf-mounted equipment and wall-mounted equipment shall be located to permit safe and easy removal or replacement without removing any other piece of equipment.
17. Cabinet fan may be installed at an alternate location near the top of the cabinet when approved by the Engineer.
18. Where telephone interconnect is required, a minimum of 130 mm clear vertical space shall be provided inside the cabinet for the equipment.
19. Telephone interconnect conductors shall be enclosed in a 21C or larger conduit through the foundation. Type 4 metal conduit shall be used to separate telephone and power conductors in cabinets and pedestals.
20. For Model 332, 334 and 336 cabinet details, see "Traffic signal controller equipment specifications".

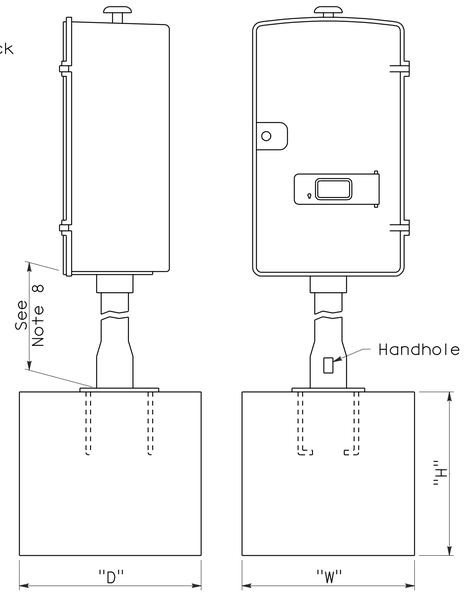

FOUNDATION FOR TYPE G CABINET

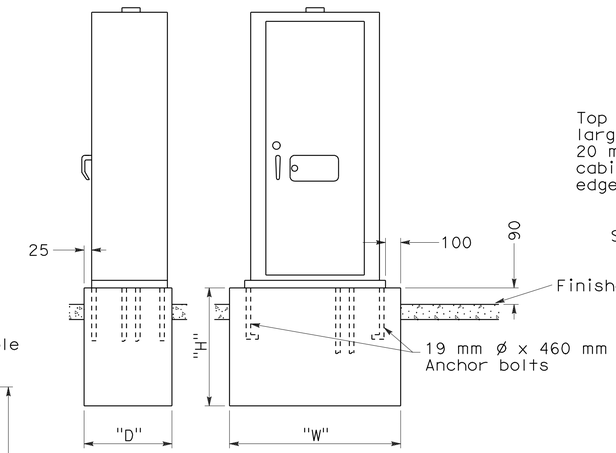

FOUNDATION FOR TYPE P, R AND S CABINETS

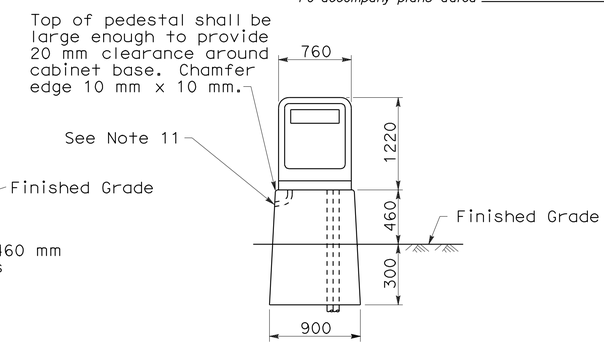

PEDESTAL FOUNDATION FOR TYPE M OR MODEL 336 CABINET

CABINET	FOUNDATION		
TYPE/ MODEL	H (mm)	W (mm)	D (mm)
G	900	600	600
M 336	760	900	560
P	460	1330	710
R	460	1330	710
S	460	1820	710

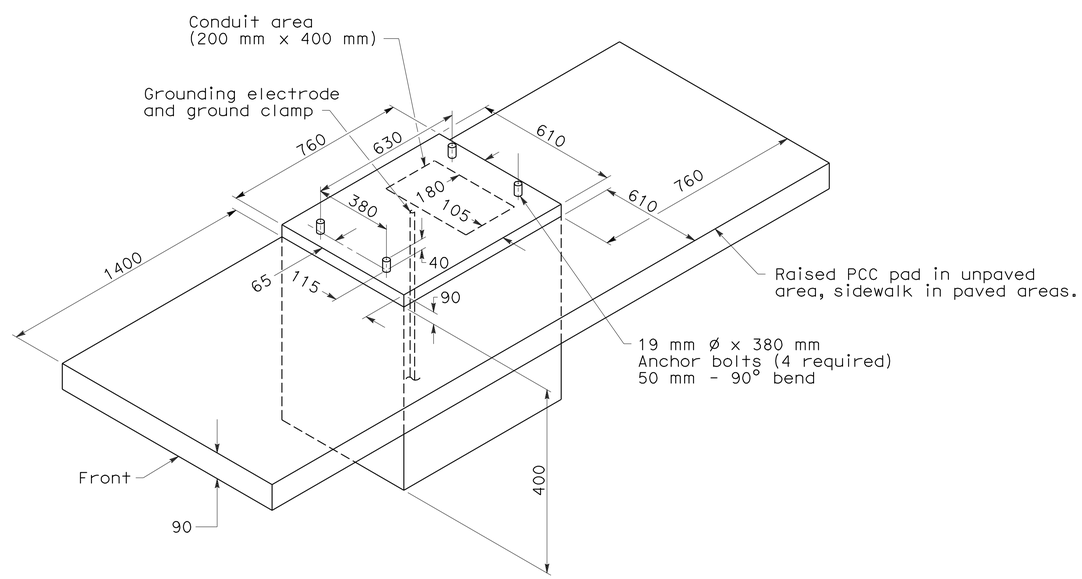

FOUNDATION DETAILS
For Model 332 and 334 cabinets

STATE OF CALIFORNIA
DEPARTMENT OF TRANSPORTATION

ELECTRICAL SYSTEMS (CONTROLLER CABINET DETAILS)

NO SCALE

ALL DIMENSIONS ARE IN MILLIMETERS UNLESS OTHERWISE SHOWN

RSP ES-3C DATED OCTOBER 5, 2007 SUPERSEDES STANDARD PLAN ES-3C DATED JULY 1, 2004-PAGE 425 OF THE STANDARD PLANS BOOK DATED JULY 2004.

REVISED STANDARD PLAN RSP ES-3C

2004 REVISED Std PLAN RSP ES-3C

6-27-07

DIST	COUNTY	ROUTE	KILOMETER POST TOTAL PROJECT	SHEET NO.	TOTAL SHEETS
06	Tul	137	R24.8	38	51

Caltrans Metric

Jeffery G. McRae
REGISTERED ELECTRICAL ENGINEER

June 6, 2008
PLANS APPROVAL DATE

REGISTERED PROFESSIONAL ENGINEER Jeffery G. McRae No. E14512 Exp. 6-30-10 ELECTRICAL STATE OF CALIFORNIA

The State of California or its officers or agents shall not be responsible for the accuracy or completeness of electronic copies of this plan sheet.

To get to the Caltrans web site, go to: http://www.dot.ca.gov

To accompany plans dated 2-17-09

VISORS

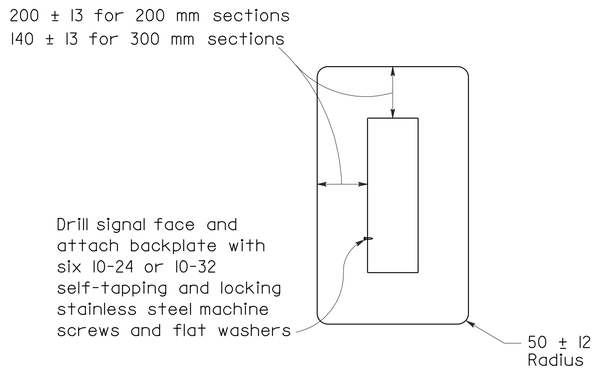

200 mm AND 300 mm SECTIONS

BACKPLATE

1.5 mm minimum thickness 3001-14 aluminum, or plastic when specified

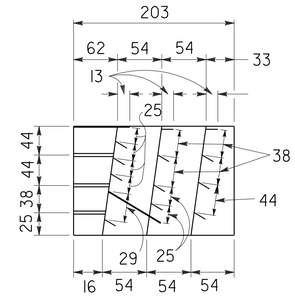

SECTION A-A

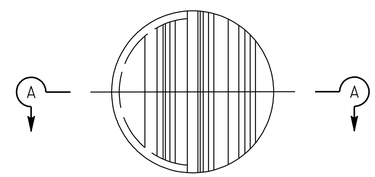

FRONT VIEW

DIRECTIONAL LOUVER

Directional louvers shall be oriented as directed by the Engineer and secured in place with one plated brass machine screw and nut.

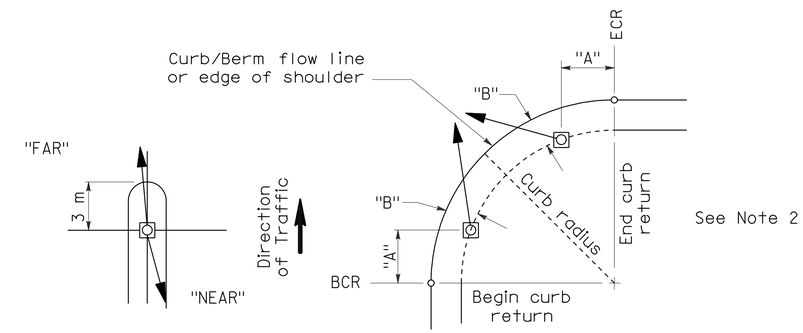

NOTES:

1. Typical signal pole placement unless dimensioned on plans.
2. For "A" and "B" dimensions, see Pole Schedule, or as directed by the Engineer.

SIGNAL STANDARD PLACEMENT DIMENSIONS AND EQUIPMENT LOCATIONS

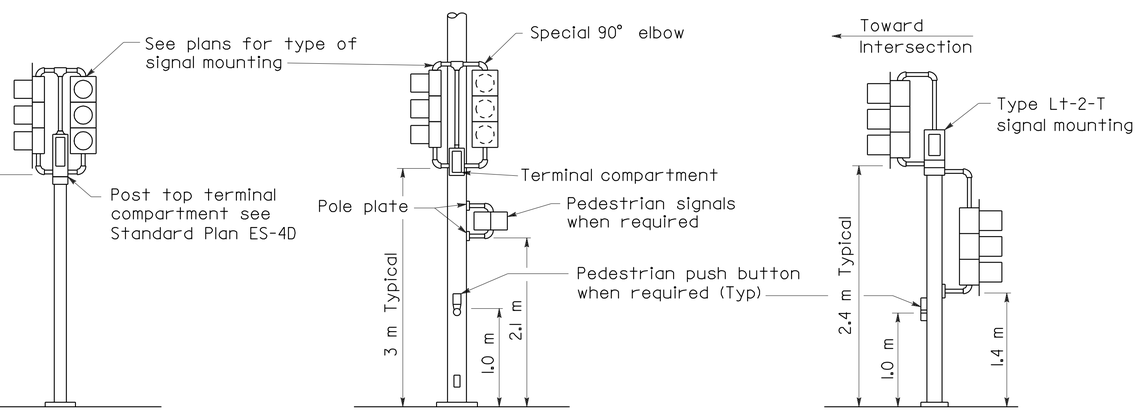

TOP MOUNTED SIGNALS (TV)

Type I-A, I-B, I-C and I-D standard as indicated on the plans

SIDE MOUNTED SIGNALS (SV AND SP)

Normally used on standards with luminaire or signal mast arm

LEFT TURN LANE SIGNAL

Type I-A, I-B, I-C and I-D standard as indicated on plans

TYPICAL SIGNAL INSTALLATIONS

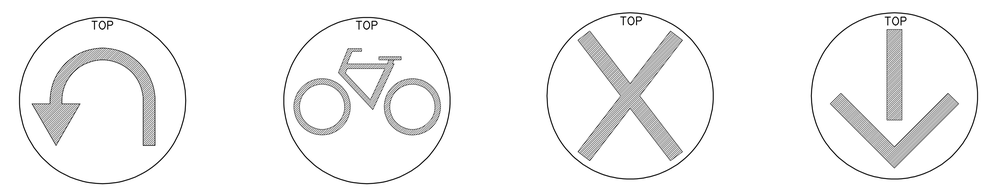

U-TURN SIGNAL FACE

BICYCLE SIGNAL FACE

LANE CONTROL SIGNAL FACE

LANE CONTROL SIGNAL FACE

STATE OF CALIFORNIA
DEPARTMENT OF TRANSPORTATION

ELECTRICAL SYSTEMS (SIGNAL HEADS AND MOUNTINGS)

NO SCALE

ALL DIMENSIONS ARE IN MILLIMETERS UNLESS OTHERWISE SHOWN

RSP ES-4C DATED JUNE 6, 2008 SUPERSEDES STANDARD PLAN ES-4C DATED July 1, 2004 - PAGE 433 OF THE STANDARD PLANS BOOK DATED July 2004.

REVISED STANDARD PLAN RSP ES-4C

2004 REVISED Std PLAN RSP ES-4C

5-19-08

DIST	COUNTY	ROUTE	KILOMETER POST TOTAL PROJECT	SHEET NO.	TOTAL SHEETS
06	Tul	137	R24.8	39	51

Caltrans Metric

Jeffery G. McRae
REGISTERED ELECTRICAL ENGINEER

June 6, 2008
PLANS APPROVAL DATE

REGISTERED PROFESSIONAL ENGINEER Jeffery G. McRae No. E14512 Exp. 6-30-10 ELECTRICAL STATE OF CALIFORNIA

The State of California or its officers or agents shall not be responsible for the accuracy or completeness of electronic copies of this plan sheet.

To get to the Caltrans web site, go to: http://www.dot.ca.gov

To accompany plans dated 2-17-09

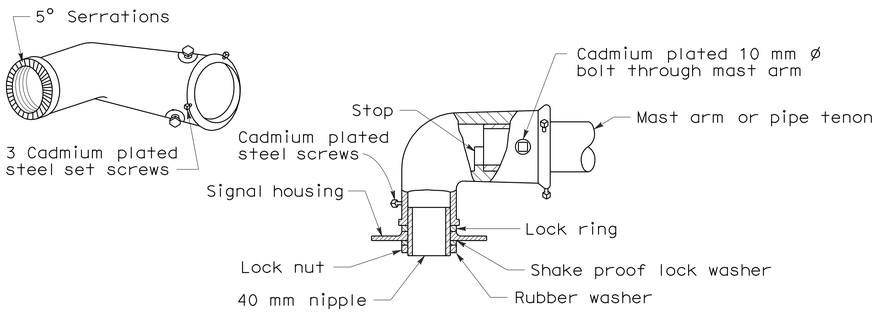

MAST ARM MOUNTING - TYPE "MAT"

For 2 NPS pipe, see Note 1.

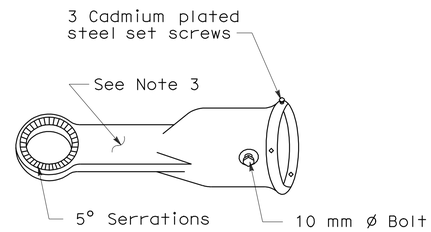

MAST ARM MOUNTING - TYPE "MAS"

For 2 NPS pipe. See Note 1.

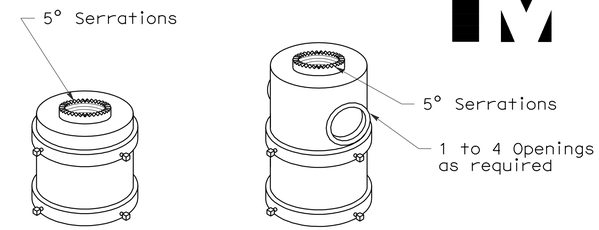

For one mounting For mulitiple mountings

TOP MOUNTINGS

For 4 NPS pipe, see Note 2.

SIGNAL SLIP FITTERS

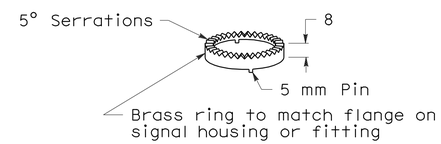

LOCK RING

Use where locking ring is not integral with signal housing or fitting.

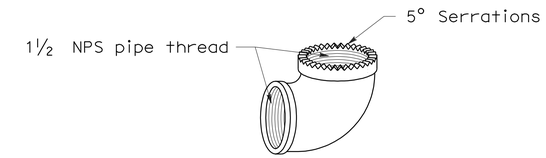

SPECIAL 90° ELBOW

One for each signal head, except those with special slip fitter mounting

MISCELLANEOUS MOUNTING HARDWARE

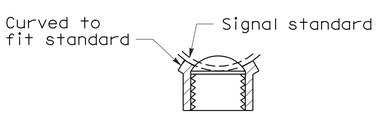

SECTION A-A

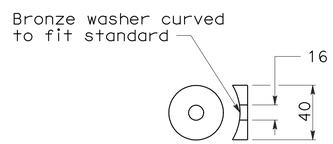

WASHER DETAIL "C"

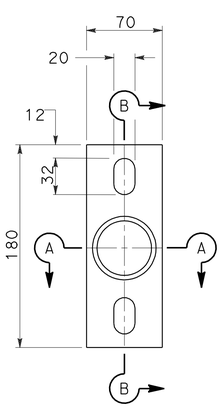

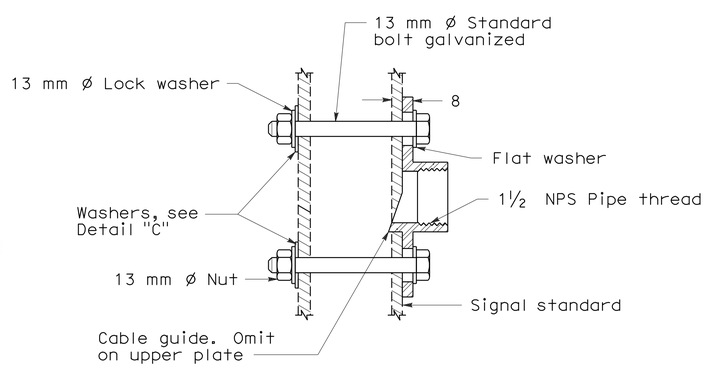

SECTION B-B

POLE PLATE

For side mountings

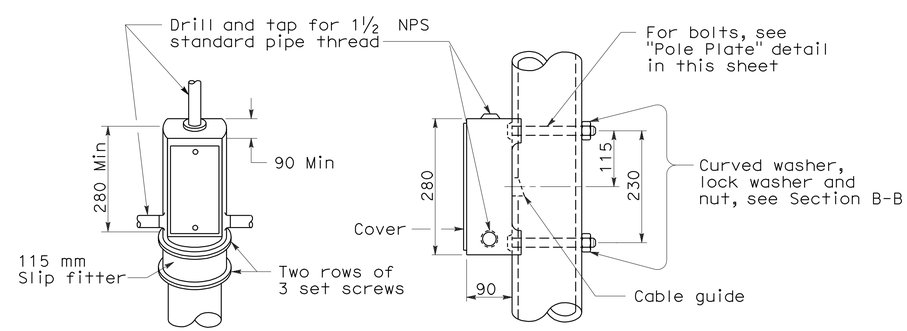

TOP MOUNTING SIDE MOUNTING

TERMINAL COMPARTMENTS

NOTES

1. After mast arm signal has been plumbed and secured, drill 11 mm hole through mast arm tenon in line with slip fitter hole. Place a cadmium plated 10 mm ø galvanized bolt with washer under bolt head through hole and secure with washer, nut, and locknut. Seal openings between mast arm mountings and mast arm with mastic.
2. (a) Threaded top mounted slip fitter openings shall be 1½ NPS.
   (b) Serrations in fittings shall match those on bottom of signal heads or in lock ring.
   (c) Top opening shall be offset when backplate is used.
3. Wireway shall have a cross section area of 600 mm^2 minimum. Minimum width of 13 mm.

STATE OF CALIFORNIA
DEPARTMENT OF TRANSPORTATION

ELECTRICAL SYSTEMS (SIGNAL HEADS AND MOUNTINGS)

NO SCALE

ALL DIMENSIONS ARE IN MILLIMETERS UNLESS OTHERWISE SHOWN

RSP ES-4D DATED JUNE 6, 2008 SUPERSEDES STANDARD PLAN ES-4D DATED July 1, 2004 - PAGE 434 OF THE STANDARD PLANS BOOK DATED July 2004.

REVISED STANDARD PLAN RSP ES-4D

2004 REVISED Std PLAN RSP ES-4D

5-20-08

DIST	COUNTY	ROUTE	KILOMETER POST TOTAL PROJECT	SHEET NO.	TOTAL SHEETS
06	Tul	137	R24.8	40	51

Jeffery G. McRae
REGISTERED ELECTRICAL ENGINEER

October 5, 2007
PLANS APPROVAL DATE

REGISTERED PROFESSIONAL ENGINEER
Jeffery G. McRae
No. E14512
Exp. 6-30-08
ELECTRICAL
STATE OF CALIFORNIA

The State of California or its officers or agents shall not be responsible for the accuracy or completeness of electronic copies of this plan sheet.

To get to the Caltrans web site, go to: http://www.dot.ca.gov

To accompany plans dated 2-17-09

Caltrans Metric

LOOP INSTALLATION PROCEDURE

1. Loops shall be centered in lanes.
2. Saw slots in pavement for loop conductors as shown in details.
3. Distance between side of loop and a lead-in saw cut from adjacent detectors shall be 600 mm minimum. Distance between lead-in saw cuts shall be 150 mm minimum.
4. Bottom of saw slot shall be smooth with no sharp edges.
5. Slots shall be washed until clean, blown out and thoroughly dried before installing loop conductors.
6. Adjacent loops on the same sensor unit channel shall be wound in opposite directions.
7. Identify and tag loop circuit pairs in the pull box with loop number, start (S) and finish (F) of conductor. Identify and tag lead-in-cable with sensor number and phase.
8. Install loop conductor in slot using a 5 mm to 6 mm thick wood paddle. Hold loop conductors with wood paddles (at the bottom of the sawed slot) during sealant placement.
9. No more than 2 twisted pairs shall be installed in one sawed slot.
10. Allow additional 1.5 m of slack length of conductor for the lead-in run to pull box.
11. The additional length of each conductor for each loop shall be twisted together into a pair (6 turns per meter minimum) before being placed in the slot and conduit leading to pull box.
12. Test each loop circuit for continuity, circuit resistance and insulation resistance at the pull box before filling slots.
13. Fill slots as shown in details.
14. Splice loop conductors to lead-in cable. Splices shall be soldered.
15. End of lead-in-cable and Type 2 loop conductor shall be waterproofed prior to installing in conduit to prevent moisture from entering the cable.
16. Lead-in-cable shall not be spliced between the pull box and the controller cabinet terminals.
17. Test each loop circuit for continuity, circuit resistance and insulation resistance at the controller cabinet location.
18. Where loop conductors are not to be spliced to a lead-in-cable, the ends of the conductors shall be taped and waterproofed with electrical insulating coating.

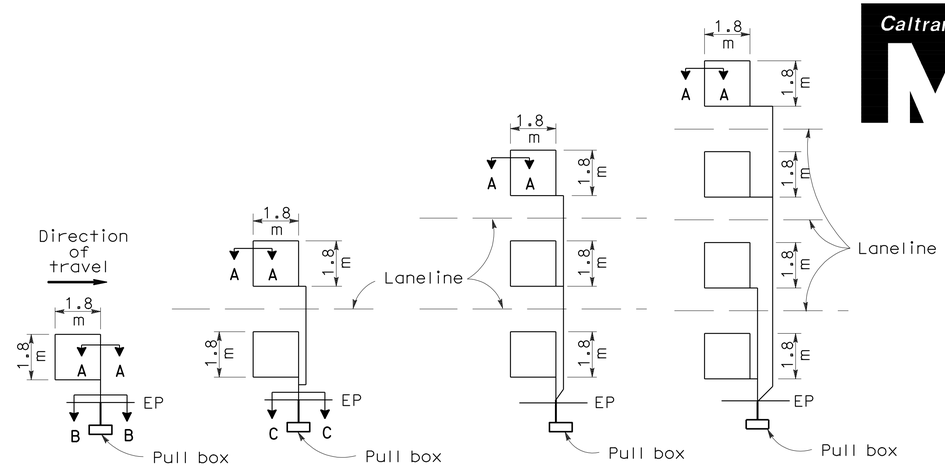

TYPE 1A INSTALLATION | TYPE 2A INSTALLATION | TYPE 3A INSTALLATION | TYPE 4A INSTALLATION

SAWCUT DETAILS

(Type A loop detector configurations illustrated)

1. 1A thru 4A = 1 Type A loop configuration in each lane.
2. 1B thru 4B = 1 Type B loop configuration in each lane.
3. 1C = 1 Type C loop configuration entering lanes as required.
4. 1D thru 4D = 1 Type D loop configuration in each lane.
5. 1E thru 4E = 1 Type E loop configuration in each lane.
6. 1Q thru 4Q = 1 Type Q loop configuration in each lane.
   (Use Type A, B, C, D, E or Q loop detector configurations only when specified or shown on plans)

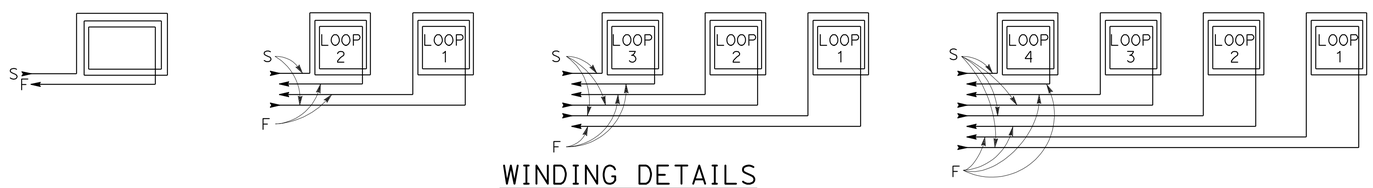

WINDING DETAILS

See Notes 6 and 7

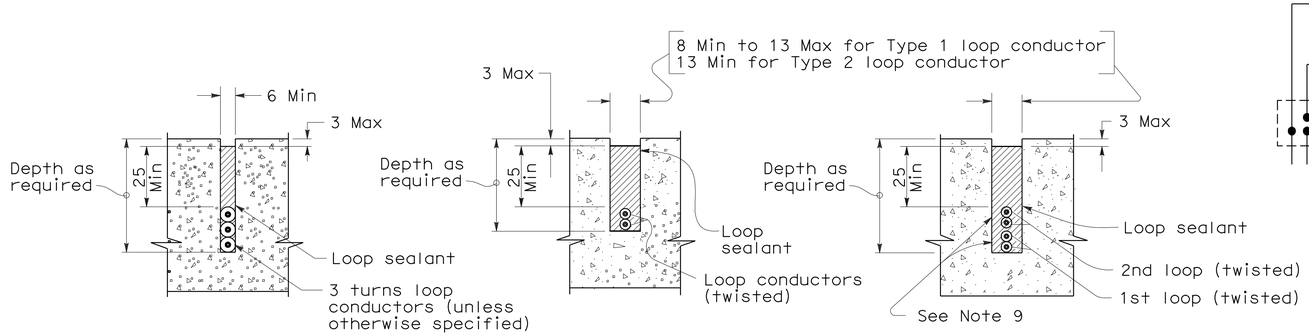

SECTION A-A | SECTION B-B | SECTION C-C

SLOT DETAILS - TYPE 1 AND TYPE 2 LOOP CONDUCTOR

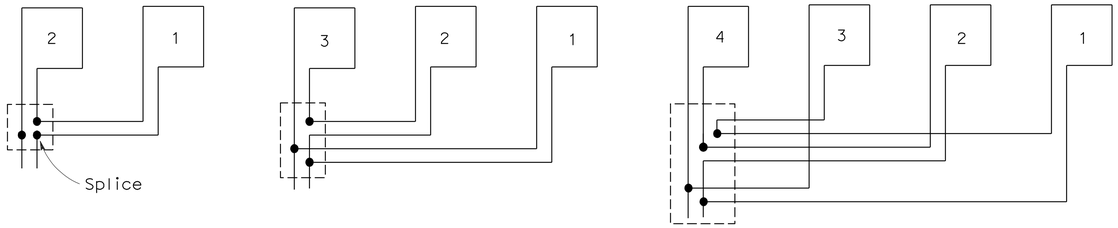

TYPICAL LOOP CONNECTIONS

(Dashed lines represent the pull box)

STATE OF CALIFORNIA
DEPARTMENT OF TRANSPORTATION

ELECTRICAL SYSTEMS (DETECTORS)

NO SCALE

ALL DIMENSIONS ARE IN MILLIMETERS UNLESS OTHERWISE SHOWN

RSP ES-5A DATED OCTOBER 5, 2007 SUPERSEDES STANDARD PLAN ES-5A DATED JULY 1, 2004-PAGE 436 OF THE STANDARD PLANS BOOK DATED JULY 2004.

REVISED STANDARD PLAN RSP ES-5A

2004 REVISED Std PLAN RSP ES-5A

8-9-07

DIST	COUNTY	ROUTE	KILOMETER POST TOTAL PROJECT	SHEET NO.	TOTAL SHEETS
06	Tul	137	R24.8	41	51

Caltrans Metric

Jeffery G. McRae
REGISTERED ELECTRICAL ENGINEER

October 5, 2007
PLANS APPROVAL DATE

REGISTERED PROFESSIONAL ENGINEER Jeffery G. McRae No. E14512 Exp. 6-30-08 ELECTRICAL STATE OF CALIFORNIA

The State of California or its officers or agents shall not be responsible for the accuracy or completeness of electronic copies of this plan sheet.

To get to the Caltrans web site, go to: http://www.dot.ca.gov

To accompany plans dated 2-17-09

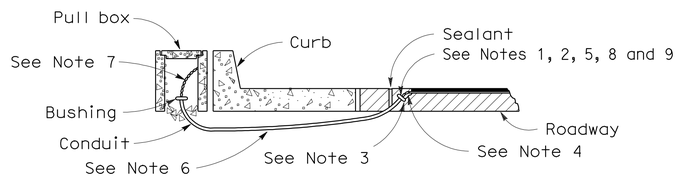

TYPE A
CURB TERMINATION DETAIL

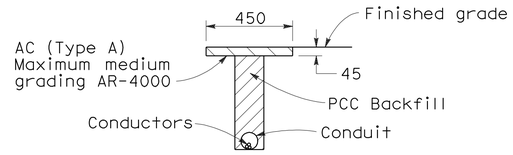

"T" TRENCH DETAIL

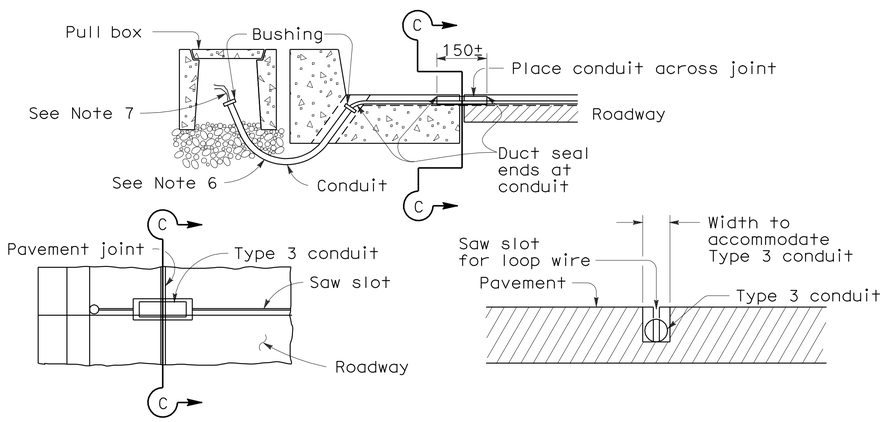

PLAN VIEW

SECTION C-C

TYPE B
CURB TERMINATION DETAILS

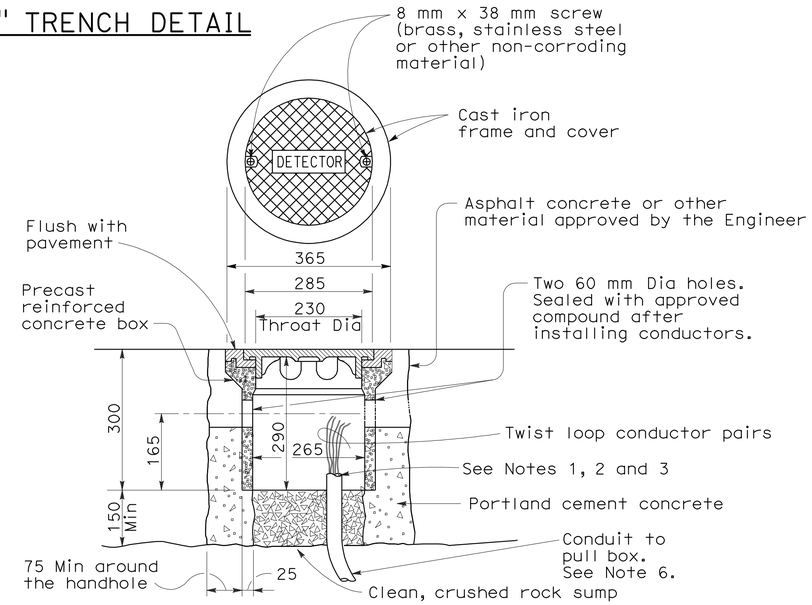

DETECTOR HANDHOLE DETAILS

NOTES (This sheet only):

1. Bushing shall be used at end of conduit.
2. Tape detector conductors or cables 75 mm each side of bushings.
3. Install duct seal compound to each end of termination conduit before installing sealant.
4. Round all sharp edges where detector conductors or cables have to pass.
5. End of conduit shall be 80 mm below roadway surface.
6. Conduit size / Loop Conductors
   - 27C Minimum — 1 to 2 pairs
   - 41C Minimum — 3 to 4 pairs
   - 53C Minimum — 5 or more pairs
7. Splice detector conductors or cables to lead-in-cable run to controller cabinet.
8. Location of detector handhole when shown on plans.
9. When the shoulder and traveled way are paved with the same material and there is no joint between them, the conduit shall extend only 600 mm into the shoulder pavement.

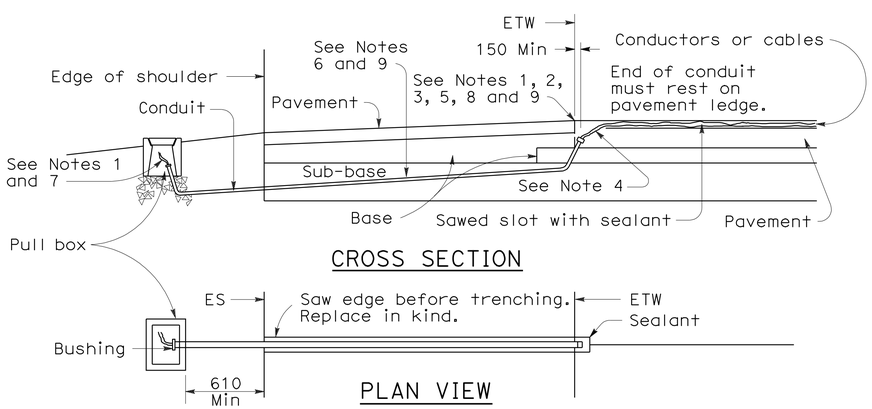

CROSS SECTION

PLAN VIEW

SHOULDER TERMINATION DETAILS

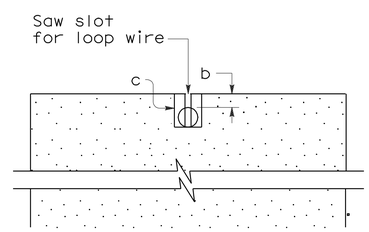

SECTION A-A

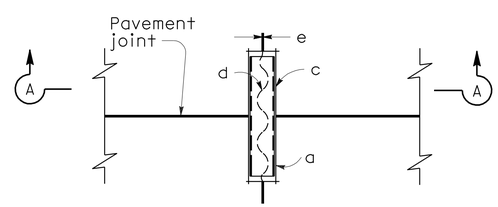

PLAN VIEW

TYPICAL LOOP LEAD-IN DETAILS
AT PAVEMENT JOINT

NOTES:

a. 21C, Type 3 conduit 150 mm long minimum, plug both ends with caulking compound to keep out sealant.
b. 13 mm minimum between top of conduit and pavement surface.
c. Saw cut shall not exceed 25 mm in width and 3 mm longer than conduit to be installed.
d. Conductors with 13 mm minimum slack inside conduit.
e. Inductive loop detector saw slot.

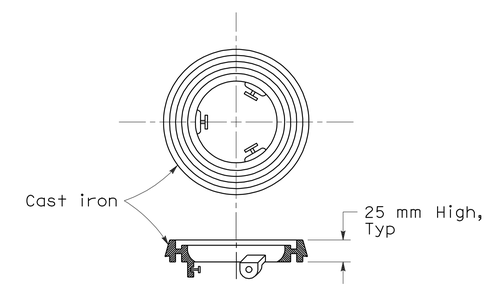

NOTE:
Use for Type A detector handhole on pavement resurfacing only.

LOCKING GRADE RING

STATE OF CALIFORNIA
DEPARTMENT OF TRANSPORTATION

ELECTRICAL SYSTEMS (DETECTORS)

NO SCALE

ALL DIMENSIONS ARE IN
MILLIMETERS UNLESS OTHERWISE SHOWN

RSP ES-5D DATED OCTOBER 5, 2007 SUPERSEDES STANDARD PLAN ES-5D
DATED JULY 1, 2004-PAGE 439 OF THE STANDARD PLANS BOOK DATED JULY 2004.

REVISED STANDARD PLAN RSP ES-5D

2004 REVISED Std PLAN RSP ES-5D

10-1-07

DIST	COUNTY	ROUTE	KILOMETER POST TOTAL PROJECT	SHEET NO.	TOTAL SHEETS
06	Tul	137	R24.8	42	51

REGISTERED CIVIL ENGINEER

October 5, 2007
PLANS APPROVAL DATE

REGISTERED PROFESSIONAL ENGINEER Stanley P. Johnson No. C57793 Exp. 03-31-08 CIVIL STATE OF CALIFORNIA

The State of California or its officers or agents shall not be responsible for the accuracy or completeness of electronic copies of this plan sheet.

To get to the Caltrans web site, go to: http://www.dot.ca.gov

To accompany plans dated 2-17-09

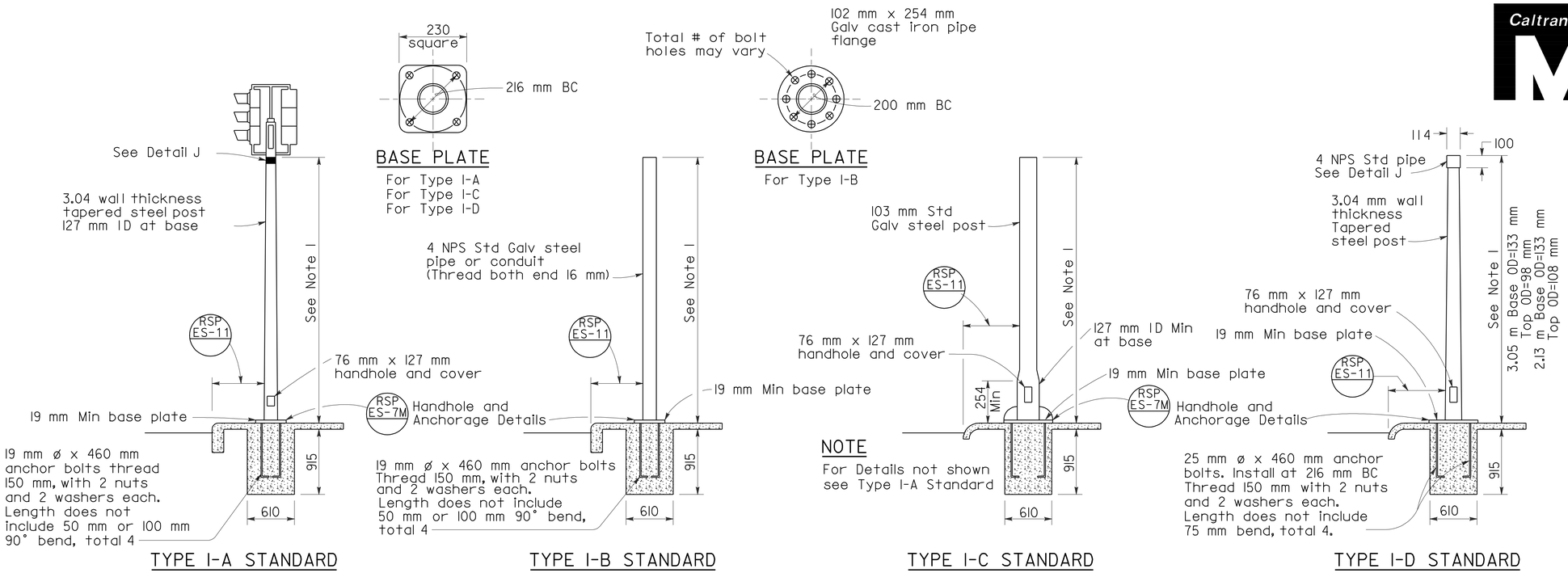

TYPE I SIGNAL STANDARDS

NOTES:

1. Standards shall be 3.05 m± 50 mm for vehicle signals and 2.13 m± 50 mm for pedestrian signals unless otherwise noted on plans.
2. Top of standards shall be 114 mm OD.
3. Conduits shall extend 50 mm maximum above finished surface of foundation and for Types I-A, I-C and I-D shall be sloped toward handhole.
4. Anchor bolts shall be bonded to conduit or grounding conductor.
5. Conduit between standard and adjacent pull box shall be Size 53 minimum.
6. Paint numbers on roadway side facing traffic when electrolier or post is left of direction of traffic.

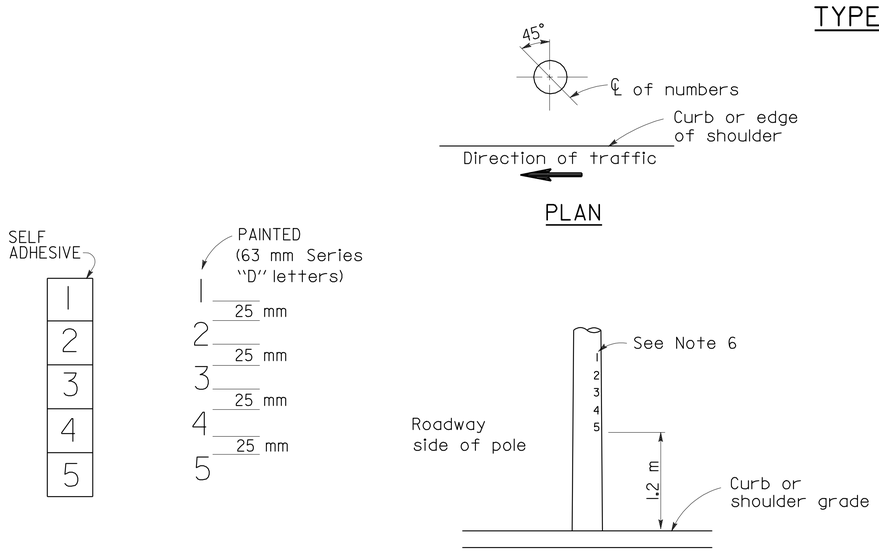

LOCATION OF EQUIPMENT NUMBERS ON STANDARDS AND POSTS

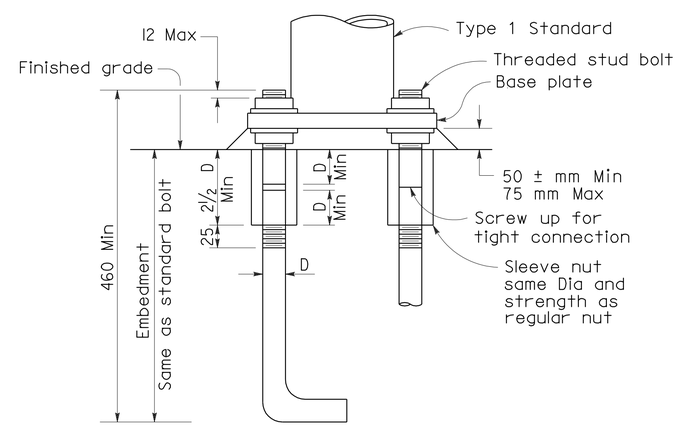

ANCHOR BOLTS WITH SLEEVE NUTS

Sleeve nuts to be used only when shown or specified on Project Plans
D = Diameter of anchor bolt

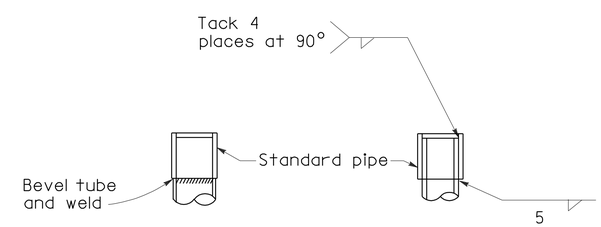

DETAIL J

Tube may be inserted into pipe or butted as required

STATE OF CALIFORNIA
DEPARTMENT OF TRANSPORTATION

ELECTRICAL SYSTEM (SIGNAL AND LIGHTING STANDARD TYPE 1 STANDARDS AND EQUIPMENT NUMBERING)

NO SCALE

ALL DIMENSIONS ARE IN MILLIMETERS UNLESS OTHERWISE SHOWN

RSP ES-7B DATED OCTOBER 5, 2007 SUPERSEDES STANDARD PLAN ES-7B DATED JULY 1, 2004-PAGE 452 OF THE STANDARD PLANS BOOK DATED JULY 2004.

REVISED STANDARD PLAN RSP ES-7B

2004 REVISED Std PLAN RSP ES-7B

10-1-07

DIST	COUNTY	ROUTE	KILOMETER POST TOTAL PROJECT	SHEET NO.	TOTAL SHEETS
06	Tul	137	R24.8	43	51

REGISTERED CIVIL ENGINEER

October 5, 2007
PLANS APPROVAL DATE

Stanley P. Johnson No. C57793 Exp. 03-31-08 CIVIL — REGISTERED PROFESSIONAL ENGINEER — STATE OF CALIFORNIA

The State of California or its officers or agents shall not be responsible for the accuracy or completeness of electronic copies of this plan sheet.

To get to the Caltrans web site, go to: http://www.dot.ca.gov

To accompany plans dated 2-17-09

Caltrans Metric

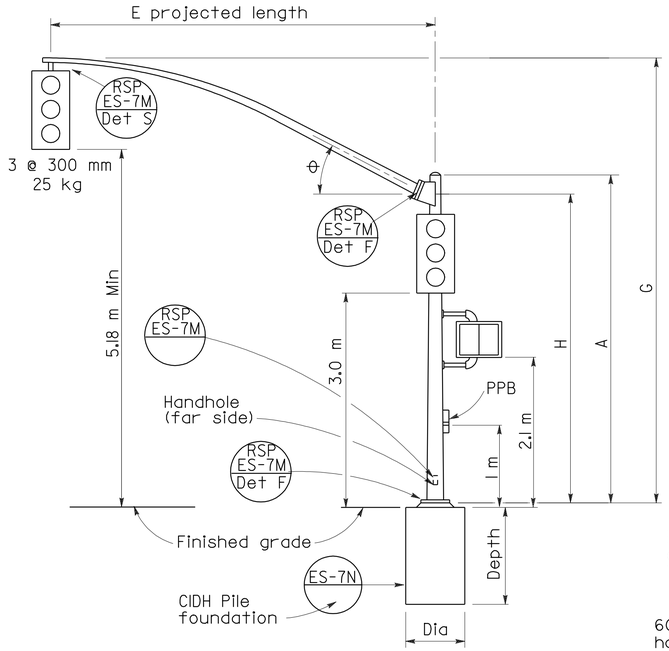

ELEVATION

TYPE 16-1-161, 18-1-161

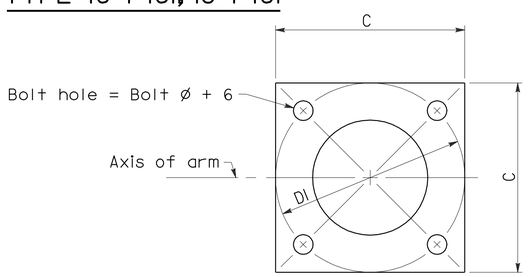

BASE PLATE

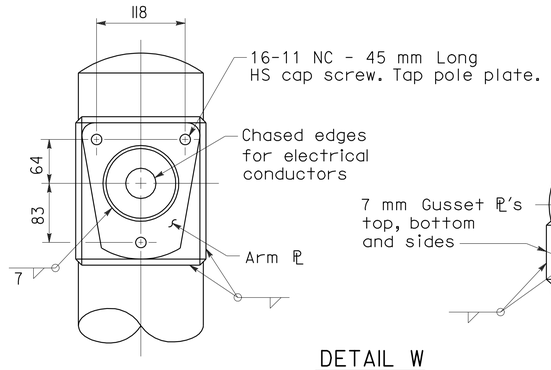

DETAIL W

LUMINAIRE ARM CONNECTION

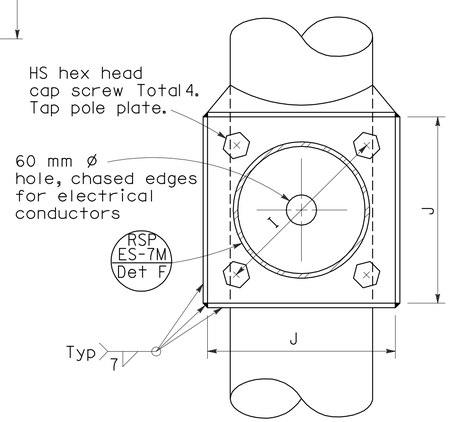

SECTION A-A

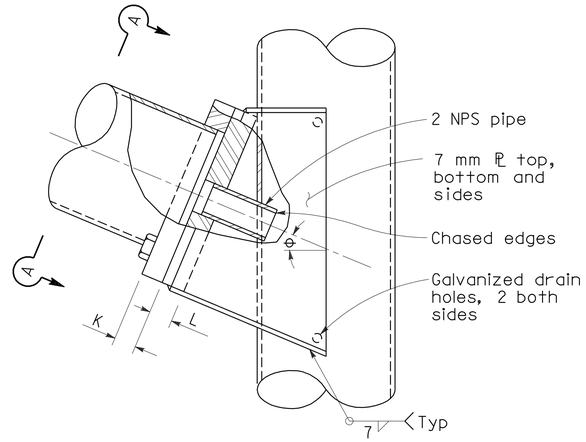

ELEVATION

SIGNAL ARM CONNECTION DETAILS

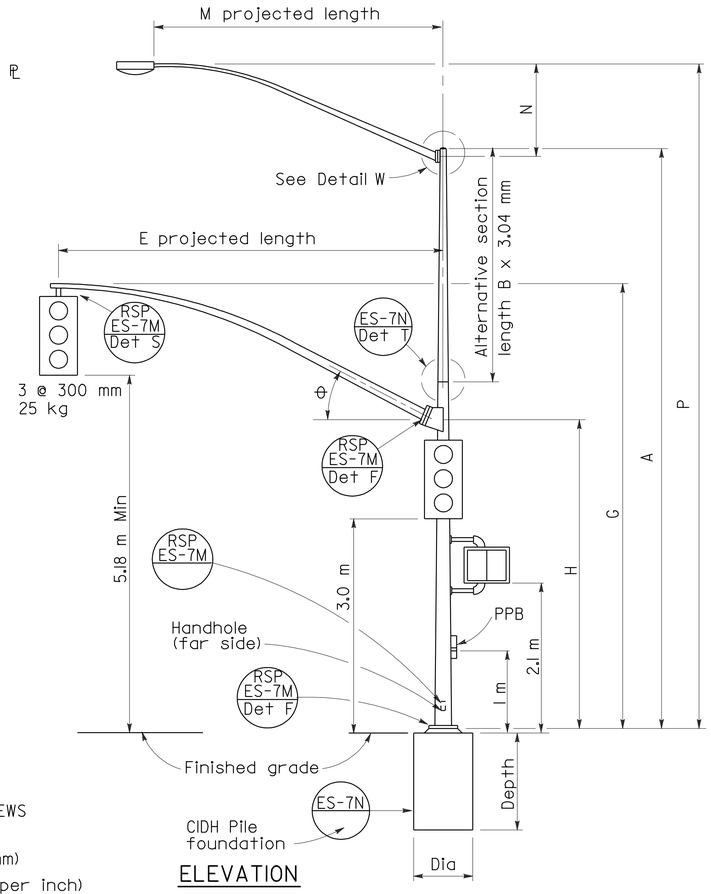

ELEVATION

TYPE 19-1-161, 19A-1-161

HIGH STRENGTH CAP SCREWS

16 - 11NC - 45
- Length (mm)
- Threads (per inch)
- Size (mm)

SIGNAL ARM DATA										
E Projected Length	G Mounting Height	H	Min OD At Pole	Thickness	I Bolt Circle	HS Cap Screws	J Plate Size	K Arm ℙ Thickness	L Pole ℙ Thickness	θ
m			mm							
4.6	6.6 ±	5.3	178	3.04	305	32-7NC-76	305	32	38	23°
6.1	6.6 ±		181							
7.6	6.9 ±	4.9	186							
9.1	7.0 ±		203							

LUMINAIRE ARM DATA					
M Projected Length	N Rise	Min OD at Pole	Thickness	P Mounting Height 9.1 Pole	P Mounting Height 10.7 Pole
m	mm			m	
1.8	610 ±	83	3.04	9.5 ±	11.1 ±
2.4	760 ±	89		9.7 ±	11.3 ±
3.1	990 ±	98		9.9 ±	11.5 ±
3.7	1290 ±			10.2 ±	11.8 ±
4.6	1450 ±	108		10.4 ±	12.0 ±

Pole Type	Load Case	Wind Velocity km/h	POLE DATA: A Height	Min OD Base	Min OD Top	Thickness	Alternative Section B Length	Alternative Section Bottom	Alternative Section Top	BASE PLATE DATA: C	DI Bolt Circle	Thickness	Anchor Bolts Size	Luminaire Arm	Signal Arm	CIDH PILE FOUNDATION: Diameter	Depth	Reinforced
			m	mm			m	mm		mm				m		mm	m	
16-1-161	1	161	5.6	273	210	4.55	None	203	168	457	445	32	38 ø x 925 x 152	None	4.6, 6.1	760	2.2	Yes
18-1-161			5.2		214		None							None				
19-1-161			9.1		168		3.0							1.8-4.6 [3.7]	7.6, 9.1			
19A-1-161			10.7		151		4.6		151					1.8-4.6 [4.6]				

☐ Indicates arm length to be used unless otherwise noted on plans.

STATE OF CALIFORNIA
DEPARTMENT OF TRANSPORTATION

ELECTRICAL SYSTEMS (SIGNAL AND LIGHTING STANDARD CASE 1 ARM LOADING WIND VELOCITY=161 km/h ARM LENGTHS 4.6 m TO 9.1 m)

NO SCALE

ALL DIMENSIONS ARE IN MILLIMETERS UNLESS OTHERWISE SHOWN

RSP ES-7C DATED OCTOBER 5, 2007 SUPERSEDES
RSP ES-7C DATED JANUARY 24, 2005 AND STANDARD PLAN ES-7C
DATED JULY 1, 2004-PAGE 453 OF THE STANDARD PLANS BOOK DATED JULY 2004.

REVISED STANDARD PLAN RSP ES-7C

2004 REVISED Std PLAN RSP ES-7C

6-19-07

DIST	COUNTY	ROUTE	KILOMETER POST TOTAL PROJECT	SHEET NO.	TOTAL SHEETS
06	Tul	137	R24.8	44	51

REGISTERED CIVIL ENGINEER

October 5, 2007
PLANS APPROVAL DATE

Registered Professional Engineer — Stanley P. Johnson — No. C57793 — Exp. 3-31-08 — CIVIL — State of California

The State of California or its officers or agents shall not be responsible for the accuracy or completeness of electronic copies of this plan sheet.

To get to the Caltrans web site, go to: http://www.dot.ca.gov

To accompany plans dated 2-17-09

Caltrans Metric

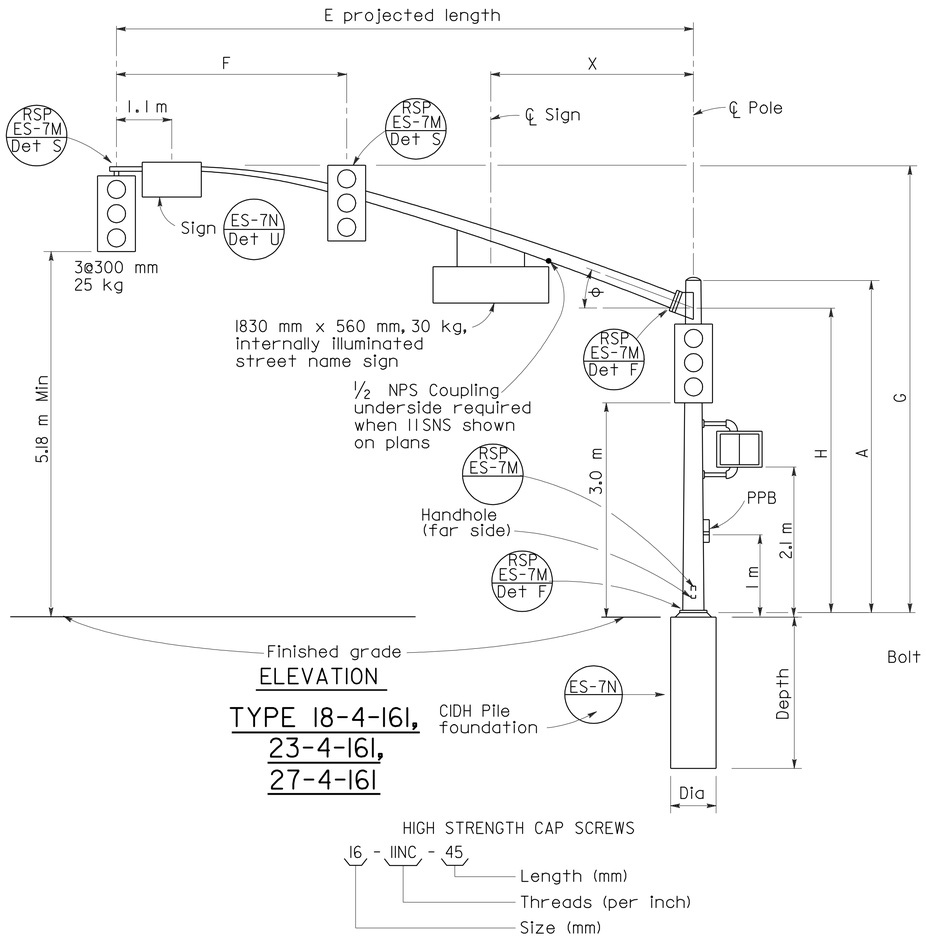

ELEVATION

TYPE 18-4-161, 23-4-161, 27-4-161

HIGH STRENGTH CAP SCREWS

16 - 11NC - 45
- Length (mm)
- Threads (per inch)
- Size (mm)

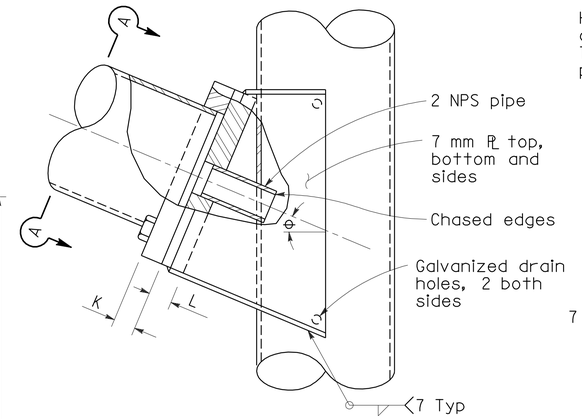

ELEVATION

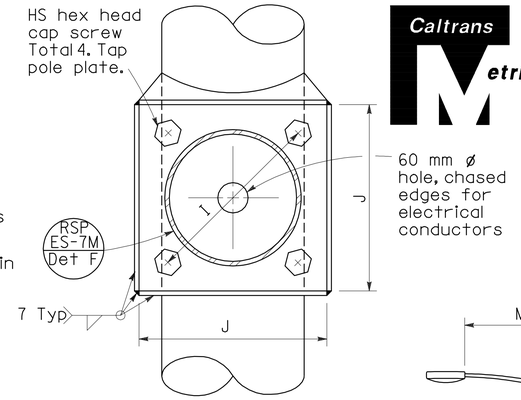

SECTION A-A

SIGNAL ARM CONNECTION DETAILS

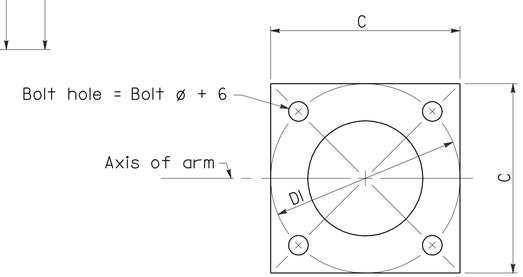

BASE PLATE

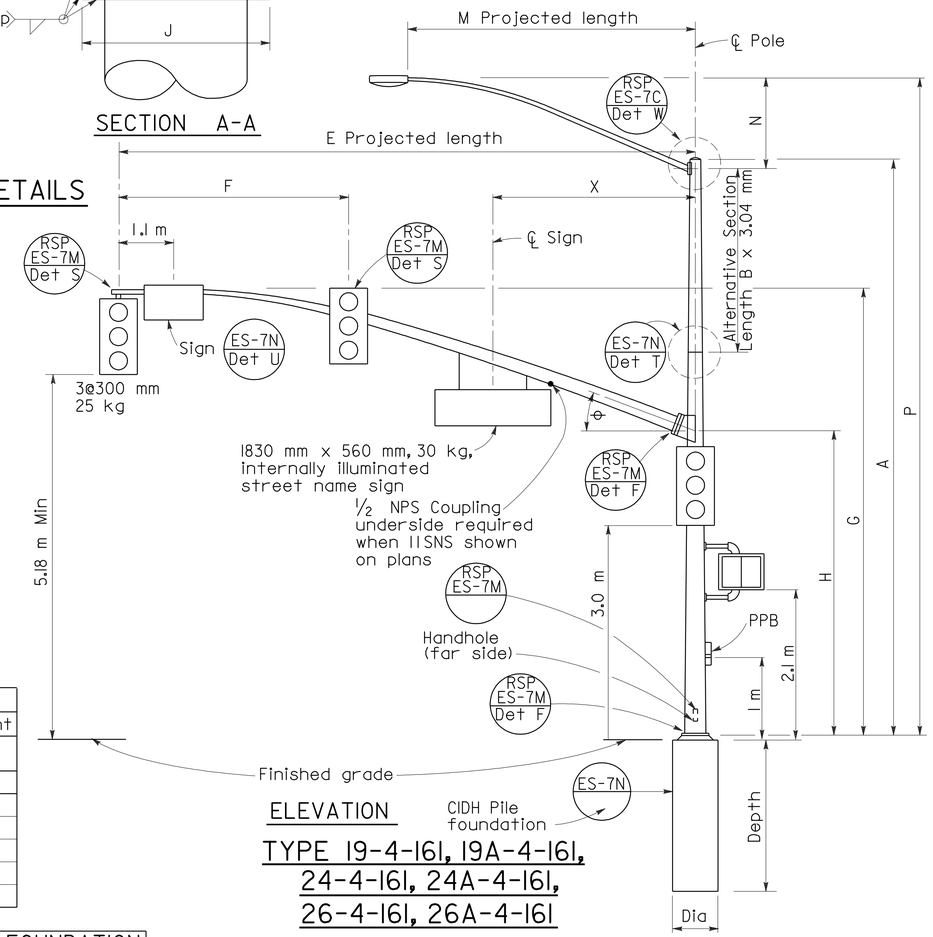

ELEVATION

TYPE 19-4-161, 19A-4-161, 24-4-161, 24A-4-161, 26-4-161, 26A-4-161

SIGNAL ARM DATA

E Projected Length	F Min Spacing	G Mounting Height	H	Min OD At Pole	Thickness	I Bolt Circle	HS Cap Screws	J Plate Size	K Arm PL Thickness	L Pole PL Thickness	θ	X Max
m				mm								m
7.6	3.1	6.9 ±	4.9	186	6.07	305	32-7NC-76	305	32	38	23°	3.2
9.1	3.7	7.0 ±		203								
10.7	4.3			221		343		343	38	45	21°	
12.2	4.6			238							15°	4.0
13.7		7.2 ±		260								

LUMINAIRE ARM DATA

M Projected Length	N Rise	Min OD at Pole	Thickness	P Mounting Height: 9.1 Pole	P Mounting Height: 10.7 Pole
m	mm			m	
1.8	610 ±	83	3.04	9.5 ±	11.1 ±
2.4	760 ±	89		9.7 ±	11.3 ±
3.1	990 ±	98		9.9 ±	11.5 ±
3.7	1290 ±			10.2 ±	11.8 ±
4.6	1450 ±	108		10.4 ±	12.0 ±

Pole Type	Load Case	Wind Velocity km/h	POLE DATA: A Height	Min OD Base	Min OD Top	Thickness	Alternative Section B Length	Alternative Section Bottom	Alternative Section Top	BASE PLATE DATA: C	DI Bolt Circle	Thickness	Anchor Bolts Size	Luminaire Arm	Signal Arm	CIDH PILE FOUNDATION: Diameter	Depth	Reinforced
			m	mm			m	mm		mm				m		mm	m	
18-4-161	4	161	5.2	305	229	6.07	None	238	203	457	457	38	51ø x 1067 x 152	None	7.6, 9.1	914	2.7	Yes
19-4-161			9.1		203		3.1							1.8-4.6 3.7				
19A-4-161			10.7		186		4.6		186					1.8-4.6 4.6				
23-4-161			5.2		229		None							None	10.7			
24-4-161			9.1		203		3.1	238	203					1.8-4.6 3.7				
24A-4-161			10.7		186		4.6		186					1.8-4.6 4.6				
26-4-161			9.1	318	203	7.94	3.1	248	213					1.8-4.6 3.7	12.2, 13.7			
26A-4-161			10.7		186		4.6		196					1.8-4.6 4.6				
27-4-161			5.2		248		None							None				

☐ Indicates arm length to be used unless otherwise noted on plans.

STATE OF CALIFORNIA
DEPARTMENT OF TRANSPORTATION

ELECTRICAL SYSTEMS (SIGNAL AND LIGHTING STANDARD CASE 4 ARM LOADING WIND VELOCITY=161 km/h ARM LENGTHS 7.6 m TO 13.7 m)

NO SCALE

ALL DIMENSIONS ARE IN MILLIMETERS UNLESS OTHERWISE SHOWN

RSP ES-7F DATED OCTOBER 5, 2007 SUPERSEDES RSP ES-7F DATED JANUARY 24, 2005 AND STANDARD PLAN ES-7F DATED JULY 1, 2004-PAGE 456 OF THE STANDARD PLANS BOOK DATED JULY 2004.

REVISED STANDARD PLAN RSP ES-7F

2004 REVISED Std PLAN RSP ES-7F

6-19-07

DIST	COUNTY	ROUTE	KILOMETER POST TOTAL PROJECT	SHEET NO.	TOTAL SHEETS
06	Tul	137	R24.8	45	51

REGISTERED CIVIL ENGINEER

October 5, 2007
PLANS APPROVAL DATE

REGISTERED PROFESSIONAL ENGINEER Stanley P. Johnson No. C57793 Exp. 3-31-08 CIVIL STATE OF CALIFORNIA

The State of California or its officers or agents shall not be responsible for the accuracy or completeness of electronic copies of this plan sheet.

To get to the Caltrans web site, go to: http://www.dot.ca.gov

To accompany plans dated 2-17-09

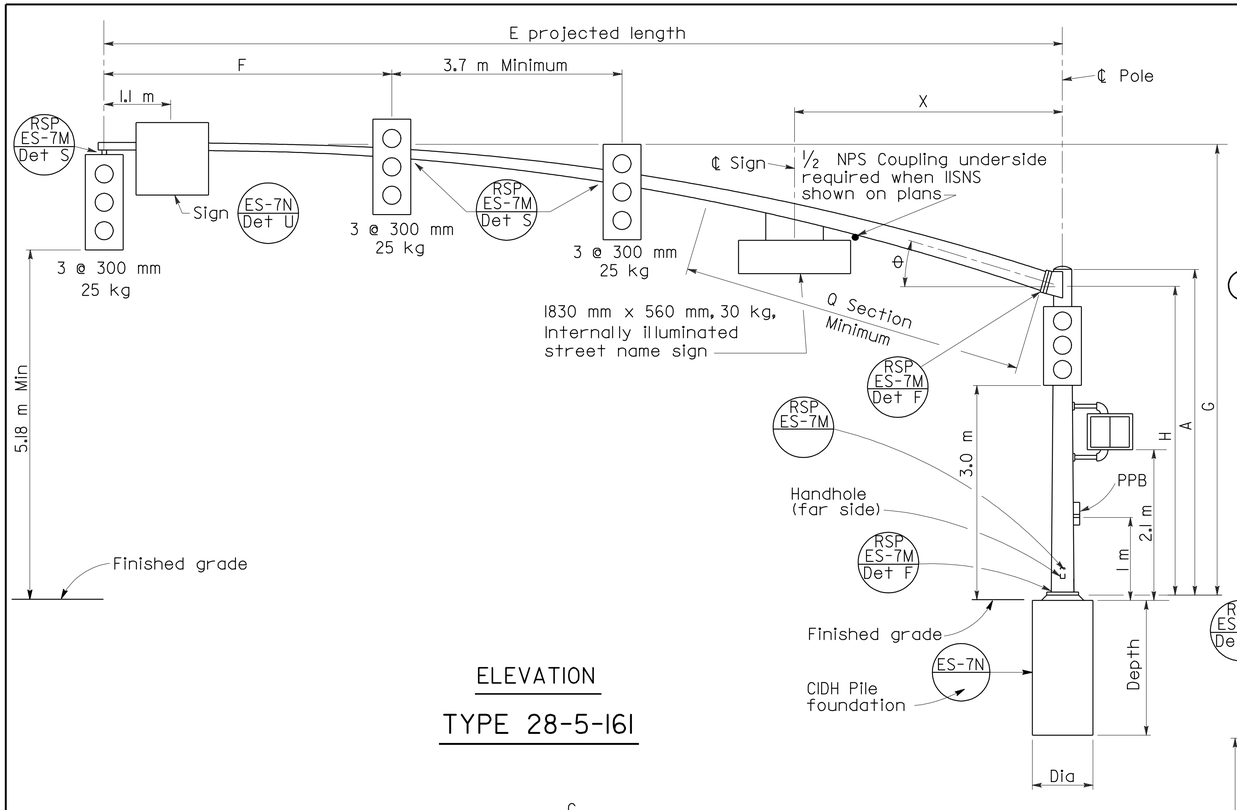

ELEVATION

TYPE 28-5-161

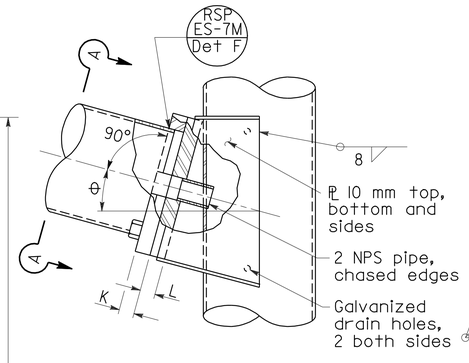

ELEVATION

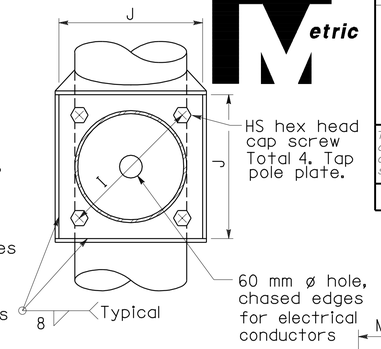

SECTION A-A

SIGNAL ARM CONNECTION DETAILS

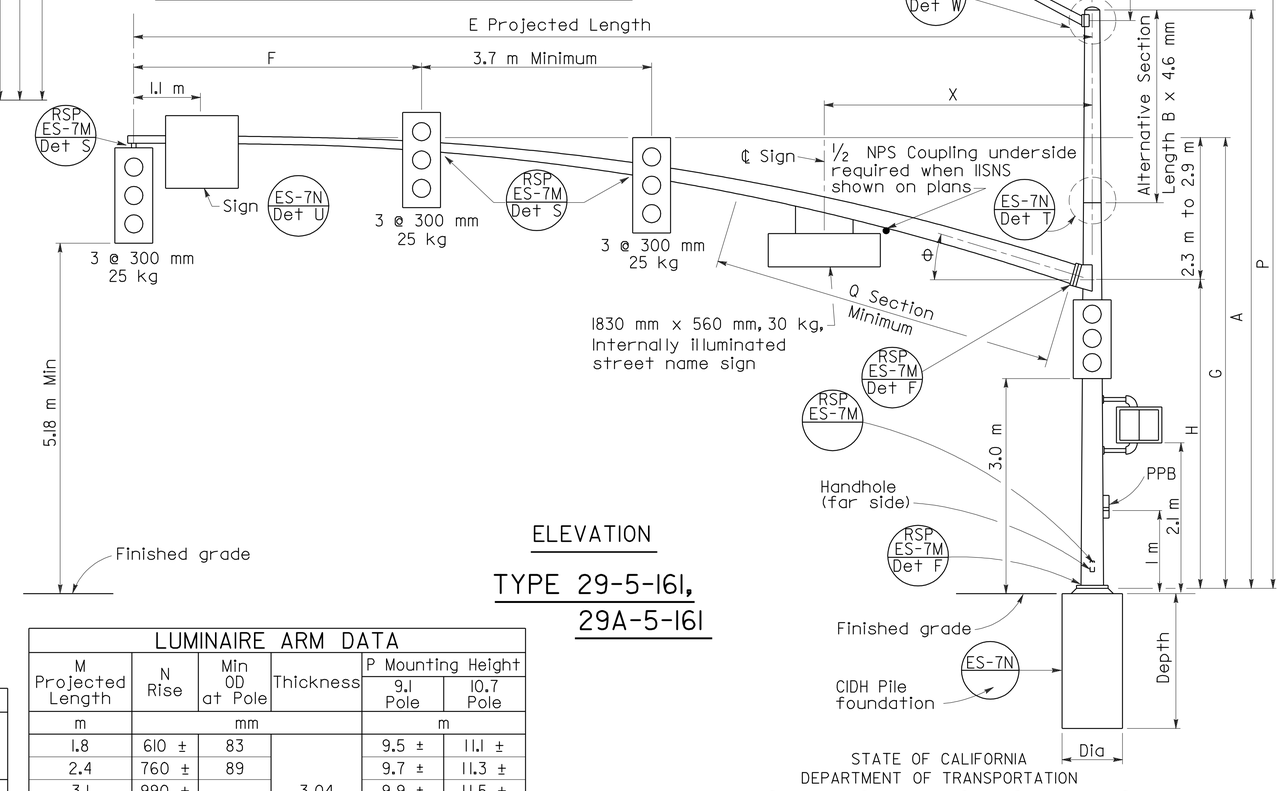

ELEVATION

TYPE 29-5-161, 29A-5-161

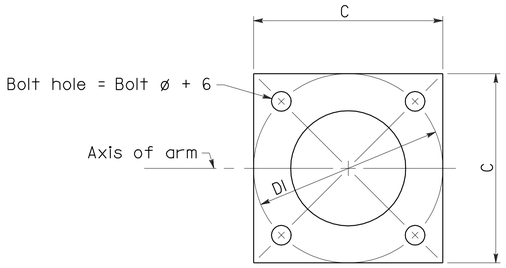

BASE PLATE

HIGH STRENGTH CAP SCREWS

16 - 11NC - 45

- Length (mm)
- Threads (per inch)
- Size (mm)

SIGNAL ARM DATA														
E Projected Length	F Min Spacing	G Mounting Height	H	Min OD At Pole	Thickness	I Bolt Circle	HS Cap Screws	J Plate Size	K Arm ℄ Thickness	L Pole ℄ Thickness	θ	Q SECTION Length	Q SECTION Thickness	X Max
m				mm								m	mm	m
15.2	4.6	7.2 to 7.8	4.9	291	4.6	406	38-6NC-83	406	45	45	15°	5.5	6.1	4.3
16.8				311								7.0		

LUMINAIRE ARM DATA					
M Projected Length	N Rise	Min OD at Pole	Thickness	P Mounting Height 9.1 Pole	P Mounting Height 10.7 Pole
m	mm			m	
1.8	610 ±	83	3.04	9.5 ±	11.1 ±
2.4	760 ±	89		9.7 ±	11.3 ±
3.1	990 ±	98		9.9 ±	11.5 ±
3.7	1290 ±			10.2 ±	11.8 ±
4.6	1450 ±	108		10.4 ±	12.0 ±

Pole Type	Load Case	Wind Velocity km/h	POLE DATA A Height	Min OD Base	Min OD Top	Thickness	Alternative Section B Length	Alternative Section Bottom	Alternative Section Top	BASE PLATE DATA C	DI Bolt Circle	Thickness	Anchor Bolts Size	Luminaire Arm	Signal Arm	CIDH PILE FOUNDATION Diameter	Depth	Reinforced
			m	mm			m	mm		mm				m		mm	m	
28-5-161	5	161	5.2	356	297	7.94	None	286	251	533	533	45	51ø x 1067 x 152	None	15.2, 16.8	914	2.8	Yes
29-5-161			9.1		251		3.1							1.8 - 4.6 [4.6]				
29A-5-161			10.7		233		4.6		233	584	584							

☐ Indicates arm length to be used unless otherwise noted on plans.

STATE OF CALIFORNIA
DEPARTMENT OF TRANSPORTATION

ELECTRICAL SYSTEMS (SIGNAL AND LIGHTING STANDARD CASE 5 ARM LOADING WIND VELOCITY=161 km/h ARM LENGTHS 15.2 m TO 16.8 m)

NO SCALE

ALL DIMENSIONS ARE IN MILLIMETERS UNLESS OTHERWISE SHOWN

RSP ES-7G DATED OCTOBER 5, 2007 SUPERSEDES RSP ES-7G DATED JANUARY 24, 2005 AND STANDARD PLAN ES-7G DATED JULY 1, 2004-PAGE 457 OF THE STANDARD PLANS BOOK DATED JULY 2004.

REVISED STANDARD PLAN RSP ES-7G

2004 REVISED Std PLAN RSP ES-7G

6-19-07

DIST	COUNTY	ROUTE	KILOMETER POST TOTAL PROJECT	SHEET NO.	TOTAL SHEETS
06	Tul	137	R24.8	46	51

REGISTERED CIVIL ENGINEER

April 28, 2005
PLANS APPROVAL DATE

REGISTERED PROFESSIONAL ENGINEER — Tillat Sattar — No. C42892 — Exp. 03-31-2006 — CIVIL — STATE OF CALIFORNIA

The State of California or its officers or agents shall not be responsible for the accuracy or completeness of electronic copies of this plan sheet.

To get to the Caltrans web site, go to: http://www.dot.ca.gov

To accompany plans dated 2-17-09

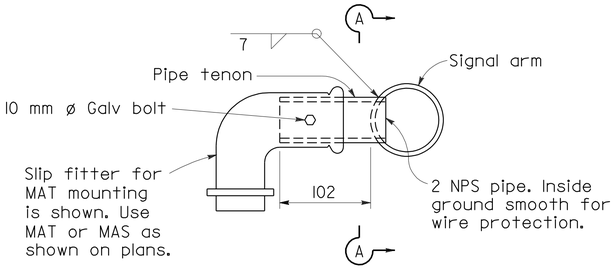

ES-4D

DETAIL S-SIDE TENON

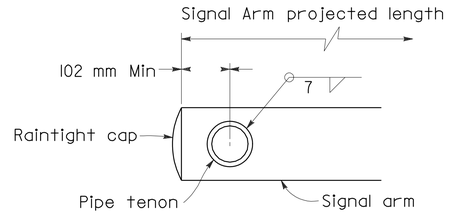

SECTION A-A

PIPE TENONS

IDENTIFICATION NUMBER

Attach a stamped metal tag with each pole's indentification number to shaft above handhole. 7 mm high number minimum.

A similar tag shall be attached to the top of the signal mast arm near the pole plate.

Sample Identification Number

Type — Load case — Design wind velocity (km/h) — Signal arm length maximum (m) — Standard plan year — Only for poles with fatigue resistant welds

19A - 3 - 161 - 9.1 - 04 - F

Use SL for special load case

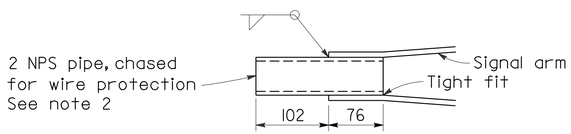

DETAIL TS-TIP TENON

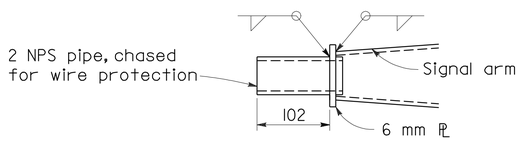

DETAIL TL-TIP TENON

This detail supersedes Detail S when so designated

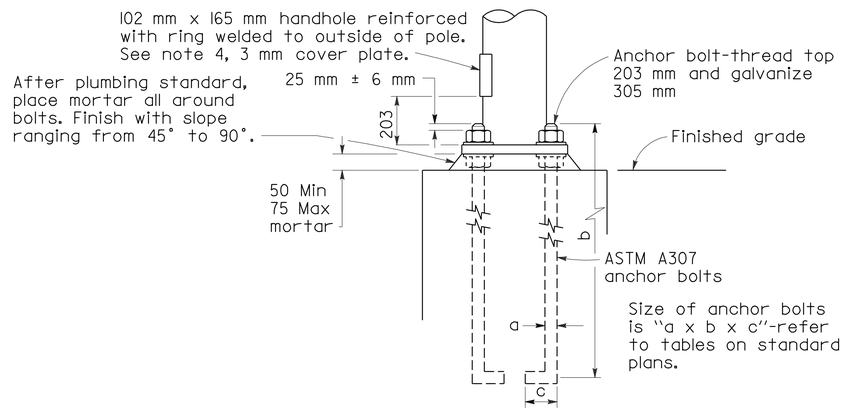

HANDHOLE AND ANCHORAGE DETAILS

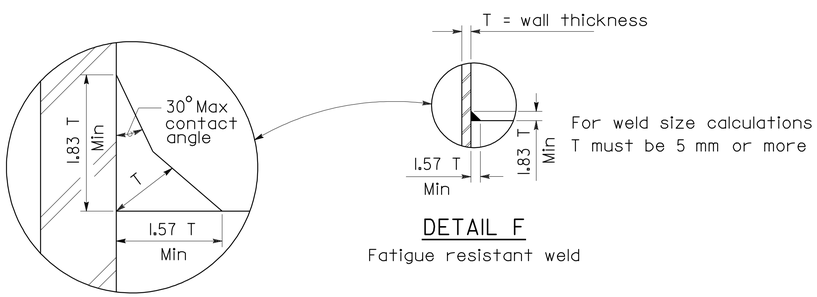

DETAIL F

Fatigue resistant weld

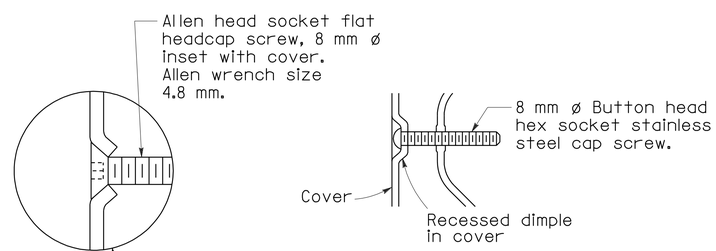

ALTERNATIVE DETAIL

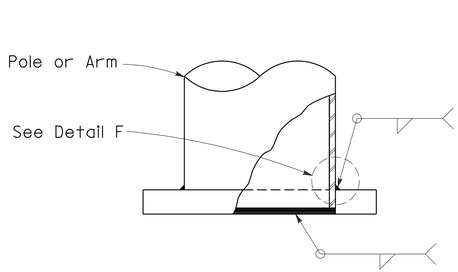

Weld Size	Wall Thickness
7	3.04
8	4.55
10	6.07
11	7.94
4	3.04
5	4.55
7	6.07
8	7.94

ELEVATION A

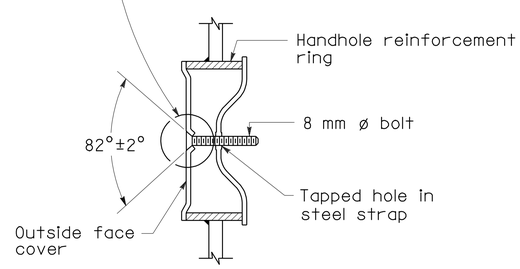

TAMPER RESISTANT HANDHOLE COVER

GENERAL NOTES

SPECIFICATIONS

DESIGN : AASHTO Standard specifications for structural supports for highway signs, luminaires and traffic signals dated 2001.

Loading

WIND LOADINGS : 161 km/h

Unit Stresses

STRUCTURAL STEEL : fy = 330 MPa tapered steel tube
fy = 250 MPa unless otherwise noted

CONSTRUCTION : Standard Specifications and the Special Provisions

NOTES

1. ASTM A307 anchor bolts are required for each pole. Provide a hex nut, leveling nut and 2 washers for each bolt.
2. Luminaire arms shall be round, tapered steel tubes, taper of 11.45 mm/m to 11.66 mm/m with an end section 60 mm OD for mounting hardware. Extensions of 2 NPS Standard pipe and 178 mm long may be used at the option of the manufacturer. When low pressure sodium luminaires are required, the extension shall be 381 mm.
3. Signal arms shall be round, tapered steel tubes, maximum taper 11.66 mm/m.
4. Handhole reinforcement ring shall be 6 mm x 51 mm for 3.04 mm to 6.07 mm poles, 10 mm x 51mm for 7.94 mm.
5. Handholes for lighting standards shall be located on the downstream side of the pole unless otherwise noted on the plans.
6. Detail F, fatigue resistant weld, is required at signal arm plate and pole base plate.
7. Cap screws shall be tightened by the turn-of-nut method 1/3 turn to form a snug tight condition. No washer will be required.
8. During pole erection, the post shall be raked as necessary with the use of leveling nuts to provide a plumb pole axis.
9. When Project Plans show a lesser number of signs and signals, the Project Plans shall prevail.
10. Outside diameter, wall thickness, and corresponding section properties at the base of traffic signal poles and arms as shown in the Standard Plans are minimums. Unless otherwise specified, alternative sections require approval by the Engineer.

STATE OF CALIFORNIA
DEPARTMENT OF TRANSPORTATION

ELECTRICAL SYSTEMS (SIGNAL AND LIGHTING STANDARDS DETAILS No. 1)

NO SCALE

ALL DIMENSIONS ARE IN MILLIMETERS UNLESS OTHERWISE SHOWN

RSP ES-7M DATED APRIL 28, 2005 SUPERSEDES RSP ES-7M DATED JANUARY 24,2005 AND STANDARD PLAN ES-7M DATED JULY 1, 2004-PAGE 463 OF THE STANDARD PLANS BOOK DATED JULY 2004.

REVISED STANDARD PLAN RSP ES-7M

2004 REVISED Std PLAN RSP ES-7M

DIST	COUNTY	ROUTE	KILOMETER POST TOTAL PROJECT	SHEET NO.	TOTAL SHEETS
06	Tul	137	R24.8	47	51

Caltrans Metric

REGISTERED ELECTRICAL ENGINEER

October 5, 2007
PLANS APPROVAL DATE

REGISTERED PROFESSIONAL ENGINEER Jeffery G. McRae No. E14512 Exp. 6-30-08 ELECTRICAL STATE OF CALIFORNIA

The State of California or its officers or agents shall not be responsible for the accuracy or completeness of electronic copies of this plan sheet.

To get to the Caltrans web site, go to: http://www.dot.ca.gov

To accompany plans dated 2-17-09

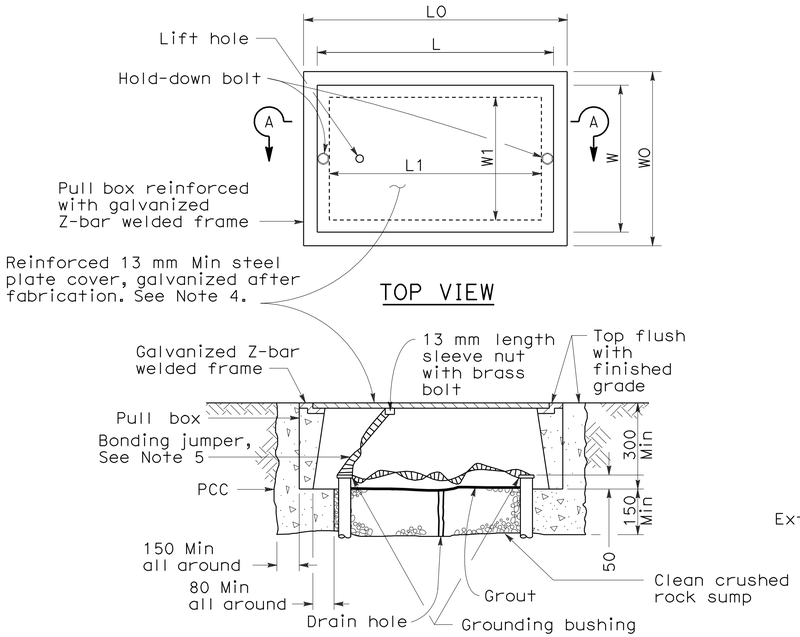

SECTION A-A

No. 3½(T), No. 5(T) AND No. 6(T) TRAFFIC PULL BOX

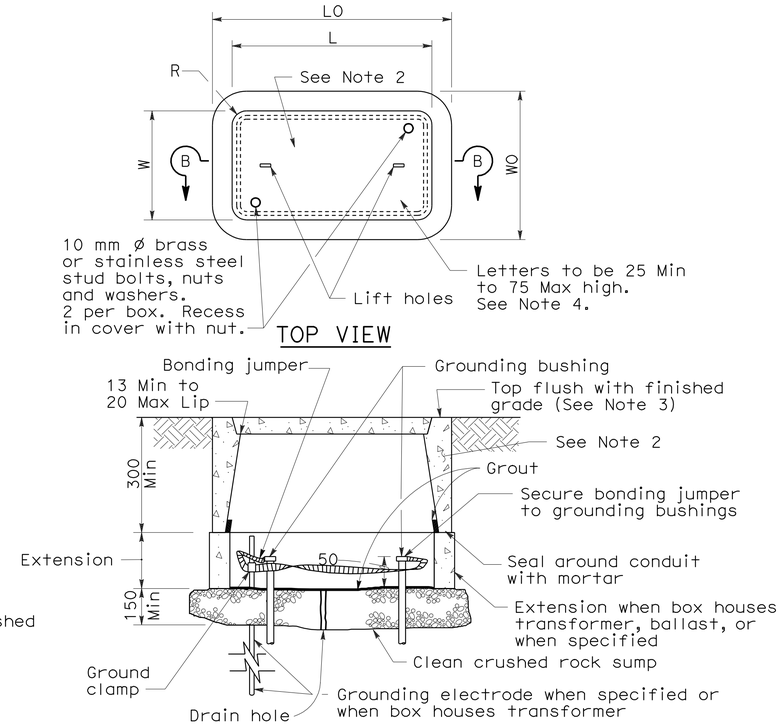

SECTION B-B

INSTALLATION DETAILS

DIMENSION TABLE

PULL BOX	CONCRETE BOX				NON-PCC BOX		CONCRETE OR NON-PCC COVERS				
	Minimum * Thickness	Minimum Depth Box and Extension	LO (mm)	WO (mm)	Minimum ** Thickness	Minimum Depth Box and Extension	L ** (mm)	W ** (mm)	R (mm)	Edge Thickness	Edge Taper
No. 3½	25 mm	No Extension	457	330	8 mm	No Extension	390	260	27	45 mm	3 mm
No. 5	25 mm	560 mm	666	425	8 mm	510 mm	590	350	32	50 mm	3 mm
No. 6	40 mm	610 mm	854	524	10 mm	510 mm	775	444	32	50 mm	3 mm

* Excluding conduit web ** Top dimension

DIMENSION TABLE

PULL BOX	CONCRETE BOX						NON-PCC BOX		CONCRETE OR NON-PCC COVERS				
	Minimum * Thickness	Minimum Depth Box and Extension	LO (mm)	WO (mm)	L1 (mm)	W1 (mm)	Minimum ** Thickness	Minimum Depth Box and Extension	L ** (mm)	W ** (mm)	R (mm)	Edge Thickness	Edge Taper
No. 3½(T)	40 mm	305 mm	530 ±	430 ± 25	370 ±	270 ± 25	Does Not Apply		510 ±	350 ±	0	13 mm	None
No. 5(T)	45 mm	305 mm	750 ±	600 ± 25	480 ±	330 ± 25	Does Not Apply		690 ±	410 ±	0	13 mm	None
No. 6(T)	50 mm	305 mm	900 ±	760 ± 25	600 ±	430 ± 25	Does Not Apply		840 ±	510 ±	0	13 mm	None

* Excluding conduit web ** Top dimension

NOTES ON PULL BOXES:

1. Traffic pull box shall be provided with steel cover and special concrete footing. Steel cover shall have embossed non-skid pattern.
2. Steel reinforcing shall be as regularly used in the standard products of the respective manufacturer.
3. Top of pull boxes shall be flush with surrounding grade or top of adjacent curb, except that in unpaved areas where pull box is not immediately adjacent to and protected by a concrete foundation, pole or other protective construction, the box shall be placed with its top 30 mm above surrounding grade. Where practicable, pull boxes shown in the vicinity of curbs shall be placed adjacent to the back of curb, and pull boxes shown adjacent to standards shall be placed on side of foundation facing away from traffic, unless otherwise noted. When pull box is installed in sidewalk area, the depth of the pull box shall be adjusted so that the top of the pull box is flush with the sidewalk.
4. Pull box covers shall be marked as follows: "SERVICE" Service circuits between service point and service disconnect; "SPRINKLER-CONTROL" Sprinkler control circuits, 50 V or less; "CALTRANS" On all pull boxes, except pull boxes marked "SPRINKLER-CONTROL"; and "TELEPHONE" Telephone service.

   a) No. 3½ pull box.

      1) "SIGNAL" Traffic signal circuits with or without street or sign lighting circuits.

      2) "ST LIGHTING" Street or sign lighting circuits where voltage is under 600 V.

   b) No. 5, 6, 9 or 9A pull box.

      1) "TRAFFIC SIGNAL" Traffic signal circuits with or without street or sign lighting circuits.

      2) "STREET LIGHTING" Street or sign lighting circuits where voltage is under 600 V.

      3) "STREET LIGHTING-HIGH VOLTAGE" Street or sign lighting circuits where voltage is above 600 V.

      4) "IRRIGATION" Circuits to irrigation controller 120 V or more.

      5) "RAMP METER" Ramp meter circuits.

      6) "COUNT STATION" Count or speed monitor circuits.

      7) "COMMUNICATION" Communication circuits.

      8) "TOS COMMUNICATIONS" TOS communications line.

      9) "TOS POWER" TOS power.

      10) "TDC POWER" Telephone demarcation cabinet power.

      11) "CCTV" Closed circuit television circuits.

      12) "TMS" Traffic monitoring station circuits.

      13) "CMS" Changeable message sign circuits.

      14) "HAR" Highway advisory radio circuits.
5. Bonding jumper for metal covers shall be 1 m long, minimum.
6. The nominal dimensions of the opening in which the cover sets shall be the same as the cover dimensions except the length and width dimensions shall be 3 mm greater.
7. Covers and boxes shall be interchangeable with California standard male and female gages. When interchanged with a standard male or female gage, the top surfaces shall be flush within 3 mm. Top outside edge of concrete covers and pull boxes shall have a 6 mm minimum radius.
8. Pull box shall not be installed within the boundaries of new or existing curb ramps.
9. Pull boxes for electroliers, post and signal standards shall be located ± 1.5 m from the station of the adjacent electrolier, post or signal standard. Pull boxes shall be placed adjacent to back of curb or edge of shoulder except where this is impractical, a box may be placed in another suitable protected and accessible location.

STATE OF CALIFORNIA
DEPARTMENT OF TRANSPORTATION

ELECTRICAL SYSTEMS (PULL BOX DETAILS)

NO SCALE

ALL DIMENSIONS ARE IN MILLIMETERS UNLESS OTHERWISE SHOWN

RSP ES-8 DATED OCTOBER 5, 2007 SUPERSEDES STANDARD PLAN ES-8 DATED JULY 1, 2004-PAGE 467 OF THE STANDARD PLANS BOOK DATED JULY 2004.

REVISED STANDARD PLAN RSP ES-8

2004 REVISED Std PLAN RSP ES-8

7-3-07

DIST	COUNTY	ROUTE	KILOMETER POST TOTAL PROJECT	SHEET NO.	TOTAL SHEETS
06	Tul	137	R24.8	48	51

Caltrans Metric

Jeffery G. McRae
REGISTERED ELECTRICAL ENGINEER

October 5, 2007
PLANS APPROVAL DATE

REGISTERED PROFESSIONAL ENGINEER Jeffery G. McRae No. E14512 Exp. 6-30-08 ELECTRICAL STATE OF CALIFORNIA

The State of California or its officers or agents shall not be responsible for the accuracy or completeness of electronic copies of this plan sheet.

To get to the Caltrans web site, go to: http://www.dot.ca.gov

To accompany plans dated 2-17-09

ISOLUX CURVE - MINIMUM

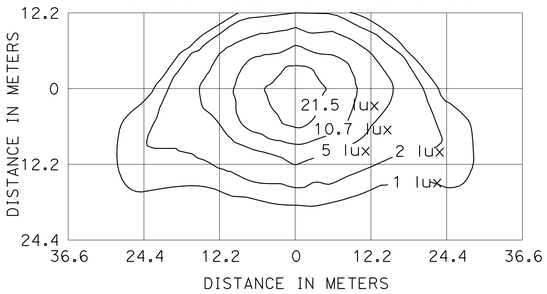

TYPE III MEDIUM CUTOFF

Cutoff Luminaire
10.4 m Mounting Height
LAMP OPERATED AT 22 000 lm
200 W HIGH PRESSURE SODIUM LAMP
ANSI DESIGNATION S66

ISOLUX CURVE - MINIMUM

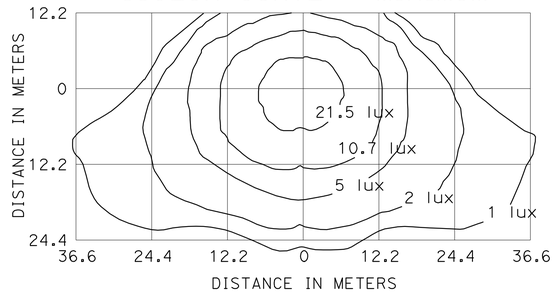

TYPE III MEDIUM CUTOFF

Cutoff Luminaire
12.2 m Mounting Height
LAMP OPERATED AT 37 000 lm
310 W HIGH PRESSURE SODIUM LAMP
ANSI DESIGNATION S67

ISOLUX CURVE - MINIMUM

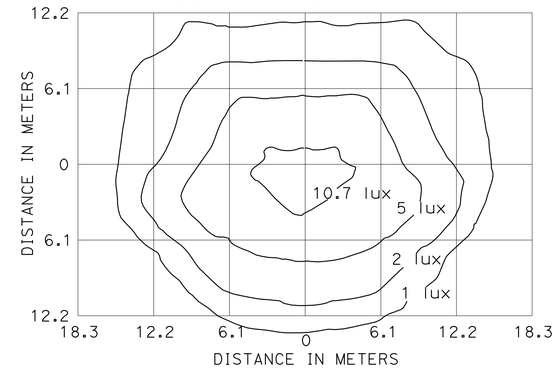

FLUSH SOFFIT LUMINAIRE

5.2 m Mounting Height
LAMP OPERATED AT 5800 lm
70 W HIGH PRESSURE SODIUM LAMP
ANSI DESIGNATION S62

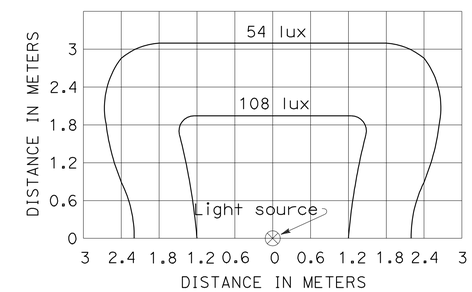

SIGN LIGHTING FIXTURE ISOLUX DIAGRAM

1. Curves represent the minimum lux of initial illumination on a 3 m x 6 m panel.
2. The lux shown are with the fixture attached to the light fixture mounting channel which places the center of the source 1420 mm in front of panel and 300 mm below the bottom edge.
3. Applicable lamp: 85-W fluorescent phosphor coated induction lamp.

ISOLUX CURVE - MINIMUM

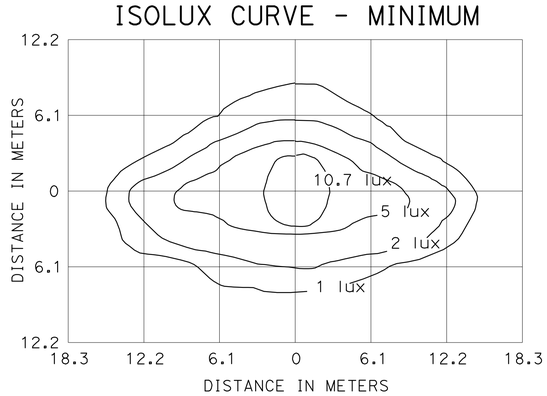

PENDANT SOFFIT LUMINAIRE
TYPE III SHORT

5.2 m Mounting Height
LAMP OPERATED AT 5800 lm
70 W HIGH PRESSURE SODIUM LAMP
ANSI DESIGNATION S62

ISOLUX CURVE - MINIMUM

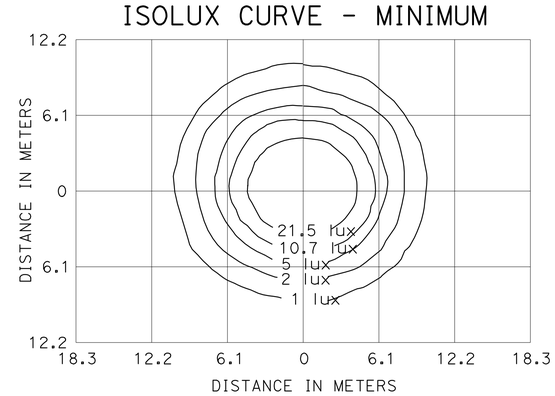

PENDANT SOFFIT LUMINAIRE

5.2 m Mounting Height
LAMP OPERATED AT 5800 lm
70 W HIGH PRESSURE SODIUM LAMP
ANSI DESIGNATION S62

ISOLUX CURVE - MINIMUM

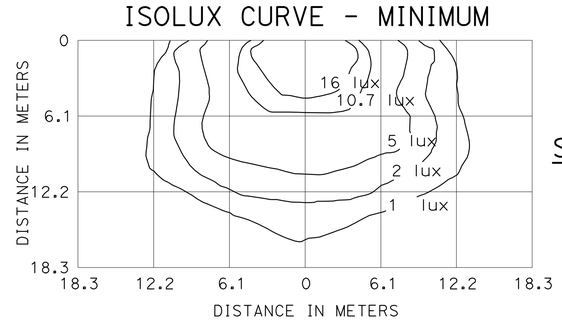

DETAIL ``W'' WALL LUMINAIRE

4.6 m Mounting Height
LAMP OPERATED AT 9500 lm
100 W HIGH PRESSURE SODIUM LAMP
ANSI DESIGNATION S54

NOTE

Isolux diagrams show the minimum horizontal lux required.

ISOLUX CURVE - MINIMUM

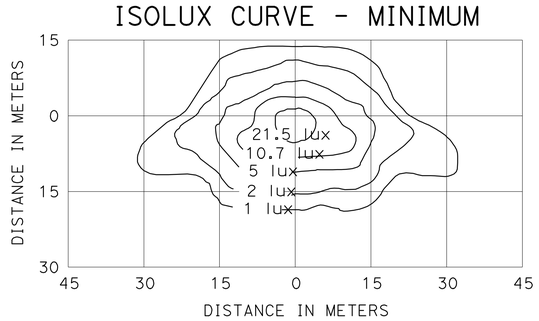

TYPE III MEDIUM CUTOFF

Cutoff Luminaire
9.1 m Mounting Height
LAMP OPERATED AT 16 000 lm
150 W HIGH PRESSURE SODIUM LAMP
ANSI DESIGNATION S55

ISOLUX CURVE - MINIMUM

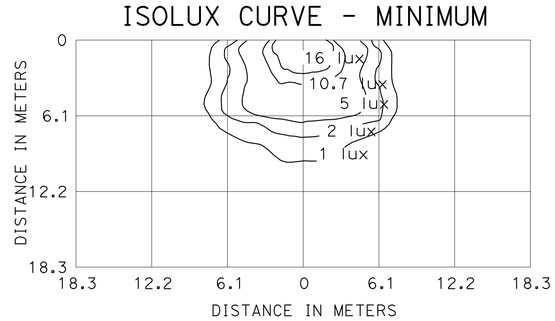

WALL LUMINAIRE

4.6 m Mounting Height
LAMP OPERATED AT 5800 lm
70 W HIGH PRESSURE SODIUM LAMP
ANSI DESIGNATION S62

ISOLUX CURVE - MINIMUM

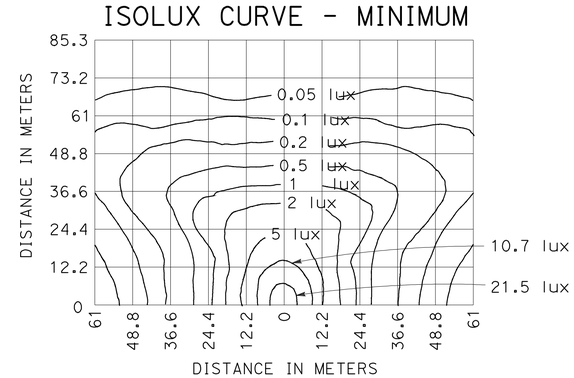

LOW PRESSURE SODIUM LUMINAIRE

12.2 m Mounting Height
LAMP OPERATED AT 33 000 lm
180 W LOW PRESSURE SODIUM LAMP

STATE OF CALIFORNIA
DEPARTMENT OF TRANSPORTATION

ELECTRICAL SYSTEMS (ISOLUX DIAGRAMS)

NO SCALE

ALL DIMENSIONS ARE IN MILLIMETERS UNLESS OTHERWISE SHOWN

RSP ES-10 DATED OCTOBER 5, 2007 SUPERSEDES STANDARD PLAN ES-10 DATED JULY 1, 2004-PAGE 474 OF THE STANDARD PLANS BOOK DATED JULY 2004.

REVISED STANDARD PLAN RSP ES-10

2004 REVISED Std PLAN RSP ES-10

6-27-07

DIST	COUNTY	ROUTE	KILOMETER POST TOTAL PROJECT	SHEET NO.	TOTAL SHEETS
06	Tul	137	R24.8	49	51

Caltrans Metric

REGISTERED CIVIL ENGINEER

October 5, 2007
PLANS APPROVAL DATE

REGISTERED PROFESSIONAL ENGINEER
Stanley P. Johnson
No. C57793
Exp. 03-31-08
CIVIL
STATE OF CALIFORNIA

The State of California or its officers or agents shall not be responsible for the accuracy or completeness of electronic copies of this plan sheet.

To get to the Caltrans web site, go to: http://www.dot.ca.gov

To accompany plans dated 2-17-09

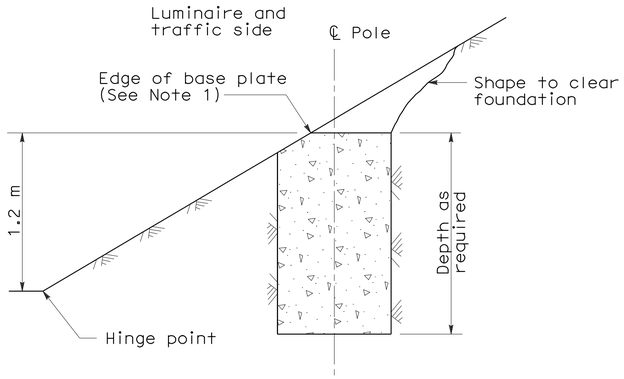

CUT SLOPES
STEEPER THAN 1:4
See Note 2

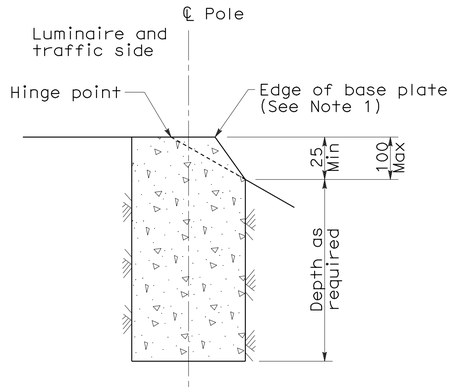

FILL SLOPES
STEEPER THAN 1:4
See Note 2

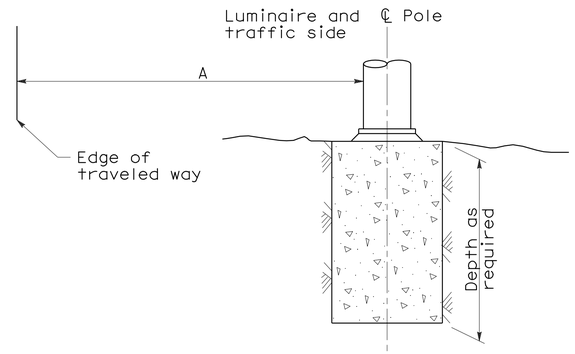

FLAT SECTIONS, CUT OR FILL SLOPES
1:4 OR FLATTER

STANDARD TYPE	SETBACK (DIMENSION A)
32	9 m Min
31, 36-20A	6 m Min
15, 15D, 15-SB, 21, 21D, 30	Mast Arm Length (Min)

FOUNDATIONS ADJACENT TO ALL ROADWAYS EXCEPT IN SIDEWALK, MEDIAN AND ISLAND AREAS

NOTES:

1. Where a portion of the foundation is above grade, the top edges shall have a 25 mm chamfer.
2. Horizontal setbacks on cut and fill slopes steeper than 1:4 shall not exceed the distance shown for flat sections.

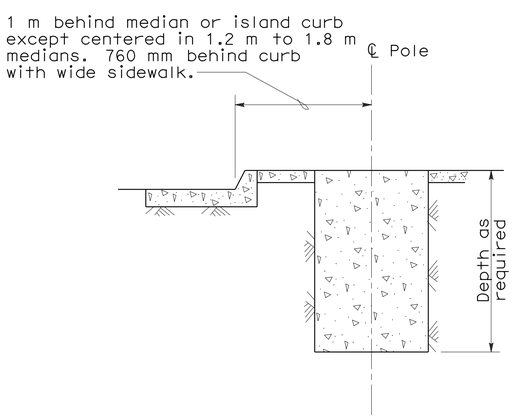

MEDIAN, ISLAND
OR WIDE SIDEWALK
(2 m wide and wider)

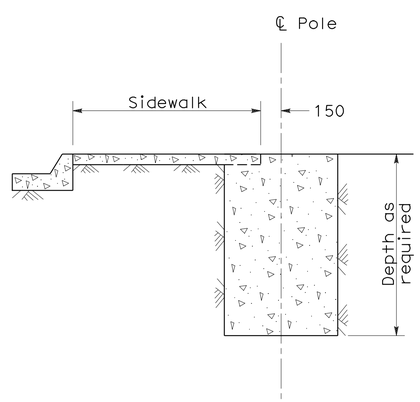

NARROW SIDEWALK
(Less than 2 m wide)

FOUNDATIONS IN SIDEWALK, MEDIAN AND ISLAND AREAS

STATE OF CALIFORNIA
DEPARTMENT OF TRANSPORTATION

ELECTRICAL SYSTEMS (FOUNDATION INSTALLATIONS)

NO SCALE

ALL DIMENSIONS ARE IN MILLIMETERS UNLESS OTHERWISE SHOWN

RSP ES-11 DATED OCTOBER 5, 2007 SUPERSEDES STANDARD PLAN ES-11 DATED JULY 1, 2004-PAGE 475 OF THE STANDARD PLANS BOOK DATED JULY 2004.

REVISED STANDARD PLAN RSP ES-11

2004 REVISED Std PLAN RSP ES-11

10-1-07

DIST	COUNTY	ROUTE	KILOMETER POST TOTAL PROJECT	SHEET NO.	TOTAL SHEETS
06	Tul	137	R24.8	50	51

Caltrans Metric

REGISTERED ELECTRICAL ENGINEER

October 5, 2007
PLANS APPROVAL DATE

REGISTERED PROFESSIONAL ENGINEER
Jeffery G. McRae
No. E14512
Exp. 6-30-08
ELECTRICAL
STATE OF CALIFORNIA

The State of California or its officers or agents shall not be responsible for the accuracy or completeness of electronic copies of this plan sheet.

To get to the Caltrans web site, go to: http://www.dot.ca.gov

To accompany plans dated 2-17-09

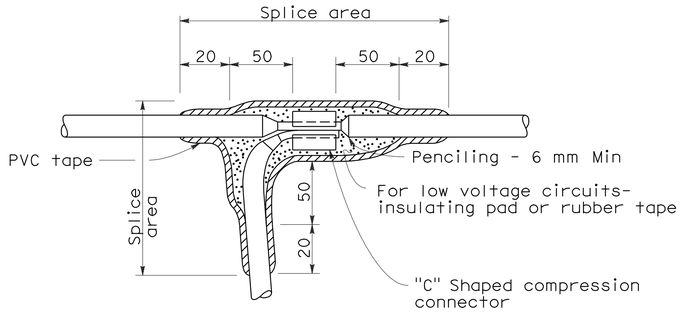

TYPE "C" SPLICE

Between 1 free-end and 1 through conductor

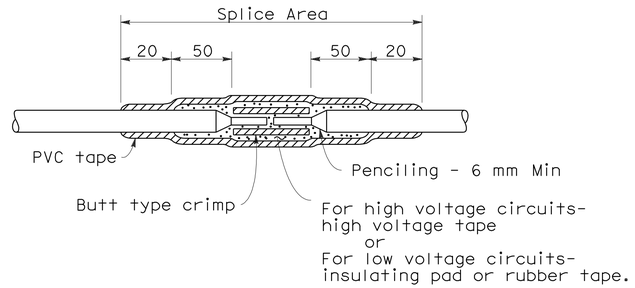

TYPE "S" SPLICE

Between 2 free-ends

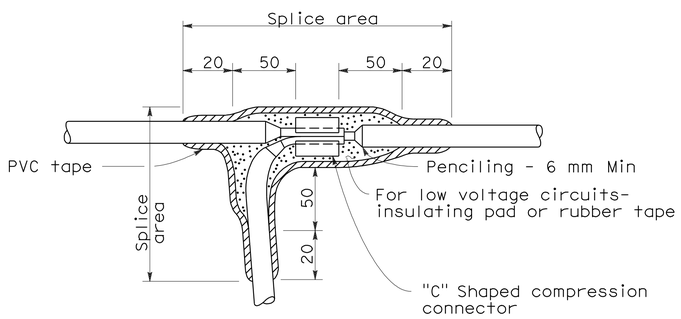

TYPE "T" SPLICE

For 3 free-ends

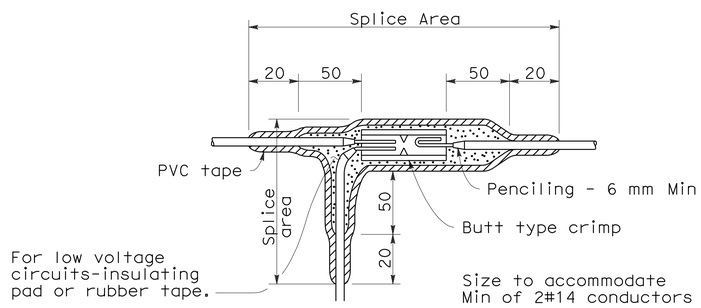

TYPE "ST" SPLICE

NOTES:

1. Dimensions are minimum.
2. Rubber tapes shall be rolled after application.

INSULATION METHODS

Low Voltage Circuits (0-600 V)

METHOD "B"

1. Completely cover the splice area with electrical insulating coating and allow to dry.
2. Apply 2 layers of electrical insulating pad with minimum thickness of 4 mm each layer or 2 layers, half lapped, synthetic oil resistant, self fusing rubber tape.
3. Apply 3 layers half lapped polyvinyl chloride tape.
4. Cover entire splice with electrical insulating coating and allow to dry.

High Voltage Circuits (Over 600 V)

1. Completely cover the splice area with electrical insulating coating and allow to dry.
2. Apply high voltage tape to a minimum thickness equal to original insulation.
3. Apply 3 layers half lapped polyvinyl chloride tape.
4. Cover entire splice with electrical insulating coating and allow to dry.

STATE OF CALIFORNIA
DEPARTMENT OF TRANSPORTATION

ELECTRICAL SYSTEMS (SPLICING DETAILS)

NO SCALE

ALL DIMENSIONS ARE IN MILLIMETERS UNLESS OTHERWISE SHOWN

RSP ES-13A DATED OCTOBER 5, 2007 SUPERSEDES STANDARD PLAN ES-13A DATED JULY 1, 2004-PAGE 478 OF THE STANDARD PLANS BOOK DATED JULY 2004.

REVISED STANDARD PLAN RSP ES-13A

2004 REVISED Std PLAN RSP ES-13A

6-27-07

DIST	COUNTY	ROUTE	KILOMETER POST TOTAL PROJECT	SHEET NO.	TOTAL SHEETS
06	Tul	137	R24.8	51	51

Caltrans Metric

REGISTERED ELECTRICAL ENGINEER

October 5, 2007
PLANS APPROVAL DATE

REGISTERED PROFESSIONAL ENGINEER Jeffery G. McRae No. E14512 Exp. 6-30-08 ELECTRICAL STATE OF CALIFORNIA

The State of California or its officers or agents shall not be responsible for the accuracy or completeness of electronic copies of this plan sheet.

To get to the Caltrans web site, go to: http://www.dot.ca.gov

To accompany plans dated 2-17-09

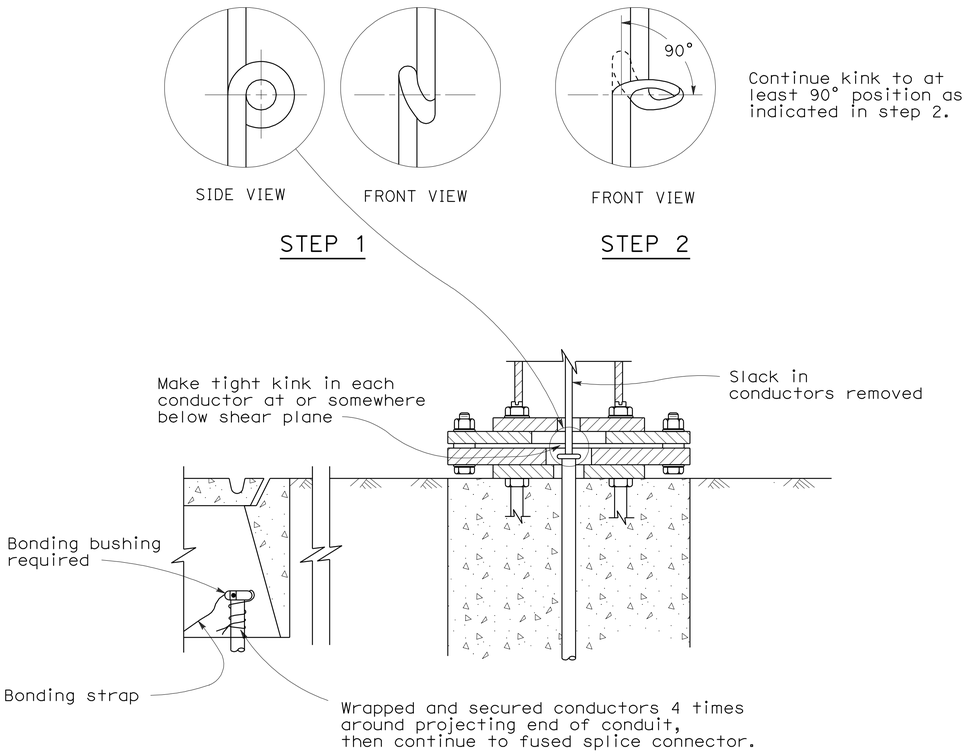

KINKING DETAIL FOR SLIP BASE STANDARDS

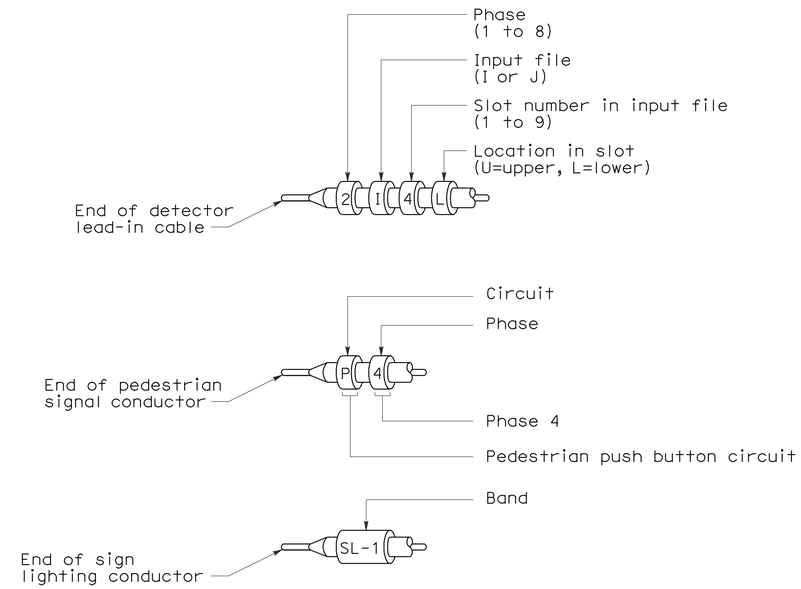

TYPICAL BANDING OF CONDUCTOR ENDS

Primary lines of multiple ballasts shall be provided with fused connectors.
Fuse ratings shall be as noted below.

CIRCUIT VOLTAGE	FUSE VOLTAGE RATING	FUSE CURRENT RATING																
		HPS LAMP BALLAST								LOW PRESSURE SODIUM BALLAST					INDUCTION SIGN LIGHTING	SINGLE PHASE (TWO WIRE) TRANSFORMERS (PRIMARY SIDE)		
		70 W	100 W	150 W	200 W	250 W	310 W	400 W	1000 W	35 W	55 W	90 W	135 W	180 W	85 W	1 kVA	2 kVA	3 kVA
120 V	250 V	5	5	5	5	5	5	5	-	5	5	5	5	5	5	10	20	30
240 V	250 V	5	5	5	5	5	5	5	5	3	3	3	5	5	5	6	10	20
480 V	500-600 V	5	5	5	5	5	5	5	5	2	2	2	3	3	1*	3	6	10

* See Revised Standard Plan RSP ES-15D, Type SC3 Control.

FUSE RATINGS FOR FUSED CONNECTORS

LUMINAIRE BALLAST FUSING

STATE OF CALIFORNIA
DEPARTMENT OF TRANSPORTATION

ELECTRICAL SYSTEMS (WIRING DETAILS AND FUSE RATINGS)

NO SCALE

ALL DIMENSIONS ARE IN MILLIMETERS UNLESS OTHERWISE SHOWN

RSP ES-13B DATED OCTOBER 5, 2007 SUPERSEDES STANDARD PLAN ES-13B DATED JULY 1, 2004-PAGE 479 OF THE STANDARD PLANS BOOK DATED JULY 2004.

REVISED STANDARD PLAN RSP ES-13B

2004 REVISED Std PLAN RSP ES-13B

10-1-07