DIST	COUNTY	ROUTE	POST MILES TOTAL PROJECT	SHEET No.	TOTAL SHEETS
05	SLO	1	64.0/R66.9	201	265

REGISTERED CIVIL ENGINEER 10-27-14 DATE

10-27-14
PLANS APPROVAL DATE

REGISTERED PROFESSIONAL ENGINEER MICHAEL R POPE No. C54503 Exp. 12/31/15 CIVIL STATE OF CALIFORNIA

The State of California or its officers or agents shall not be responsible for the accuracy or completeness of scanned copies of this plan sheet.

PRESTRESSING NOTES

270 KSI Low Relaxation Strand:

P_{jack} = 9,300 kips

Anchor Set = 3/8 in

Total Number of Girders = 5

Maximum final force variation between girders shall not exceed 50 kips

Concrete: f'_c = 4,000 psi @ 28 days

f'_{ci} = 3,500 psi @ time of stressing

Contractor shall submit elongation calculations based on initial stress at ⊠ = 0.893

Stressing shall be performed from Abut 3

NOTES:

1. Drain pipe shall be galvanized welded steel shedule 10.
2. The lateral pipe runs shall be NPS 6.
3. All drainage pipe bends shall be smooth at the following minimum radius:
   NPS 6: R = 1'-6"
   NPS 8: R = 2'-0"
4. Drain pipe shall be installed at the maximum slope conditions will allow, but not less than 1%.

	DECK DRAINS	
LOCATION	℄ RTE 1 STATION	QUANTITIES
1	328+50.00	2
2	328+90.00	2

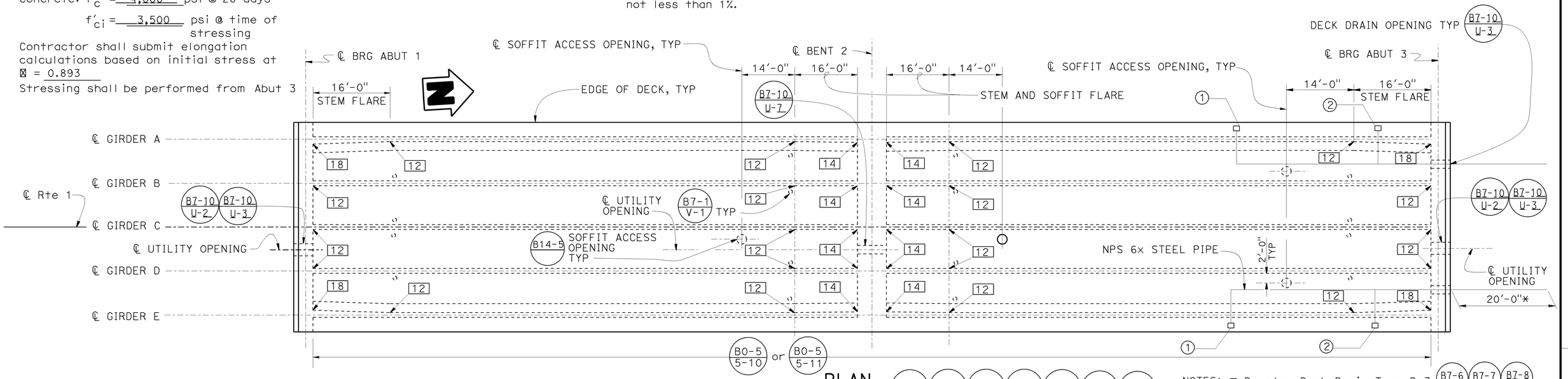

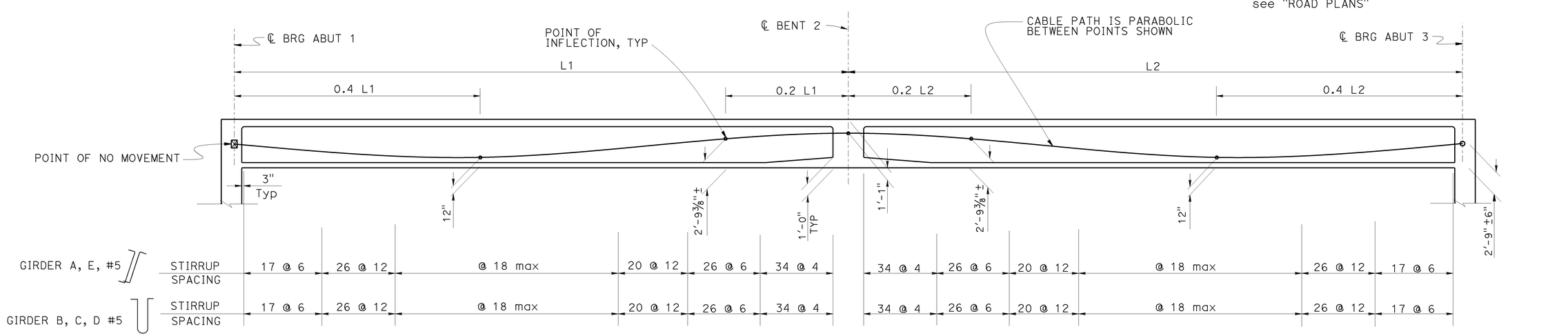

LONGITUDINAL SECTION
No Scale

BZ-1 B8-5

DESIGN	BY ZIHAN YAN	CHECKED MATT GIOVANNONI	
DETAILS	BY JINLI GUO	CHECKED MATT GIOVANNONI	
QUANTITIES	BY ZIHAN YAN	CHECKED MATT GIOVANNONI	

STATE OF CALIFORNIA
DEPARTMENT OF TRANSPORTATION

DIVISION OF ENGINEERING SERVICES
STRUCTURE DESIGN
DESIGN BRANCH 18

BRIDGE NO. 49-0258
POST MILE R 64.62

ARROYO DE LOS PLAYANOS BRIDGE
GIRDER LAYOUT

STRUCTURES DESIGN DETAIL SHEET (ENGLISH) (REV. 09-01-10)

ORIGINAL SCALE IN INCHES FOR REDUCED PLANS 0 1 2 3

UNIT: 3603
PROJECT NUMBER & PHASE: 05000005761
CONTRACT NO.: 05-492801

DISREGARD PRINTS BEARING EARLIER REVISION DATES

REVISION DATES 6/26/12 10/22/12 01/11/13

SHEET 12 OF 24

FILE => 49-0258-1-girdly.dgn

USERNAME => s113755 DATE PLOTTED => 16-DEC-2014 TIME PLOTTED => 14:09

DIST	COUNTY	ROUTE	POST MILES TOTAL PROJECT	SHEET No.	TOTAL SHEETS
05	SLO	1	64.0/R66.9	202	265

REGISTERED CIVIL ENGINEER 10-27-14 DATE

10-27-14
PLANS APPROVAL DATE

REGISTERED PROFESSIONAL ENGINEER MICHAEL R POPE No. C54503 Exp. 12/31/15 CIVIL STATE OF CALIFORNIA

The State of California or its officers or agents shall not be responsible for the accuracy or completeness of scanned copies of this plan sheet.

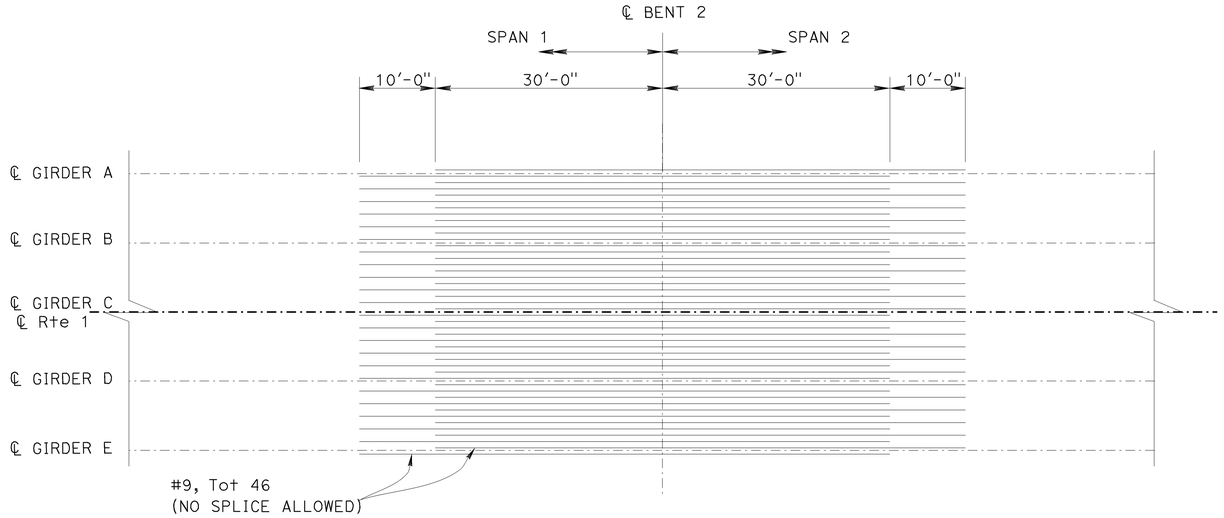

TOP GIRDER REINFORCEMENT

No Scale

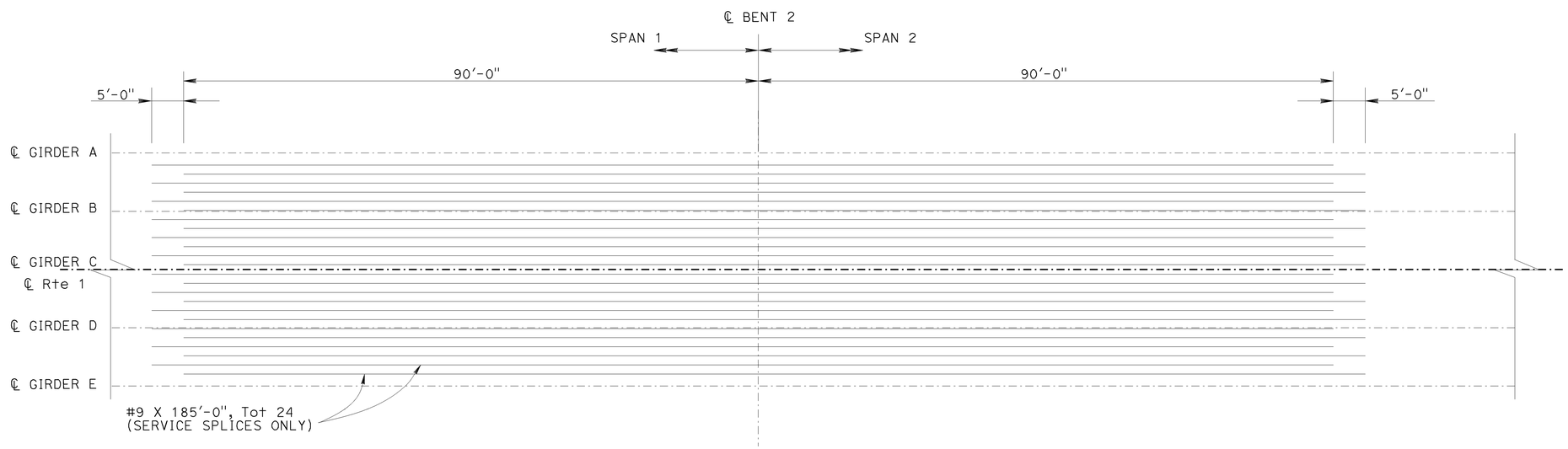

BOTTOM GIRDER REINFORCEMENT

No Scale

DESIGN	BY ZIHAN YAN	CHECKED MATT GIOVANNONI	
DETAILS	BY JINLI GUO	CHECKED MATT GIOVANNONI	
QUANTITIES	BY ZIHAN YAN	CHECKED MATT GIOVANNONI	

STATE OF CALIFORNIA
DEPARTMENT OF TRANSPORTATION

DIVISION OF ENGINEERING SERVICES
STRUCTURE DESIGN
DESIGN BRANCH 18

BRIDGE NO. 49-0258
POST MILE R 64.62

ARROYO DE LOS PLAYANOS BRIDGE
ADDITIONAL GIRDER REINFORCEMENT

STRUCTURES DESIGN DETAIL SHEET (ENGLISH) (REV. 09-01-10)

ORIGINAL SCALE IN INCHES FOR REDUCED PLANS 0 1 2 3

UNIT: 3603
PROJECT NUMBER & PHASE: 0500000576 1
CONTRACT NO.: 05-492801

DISREGARD PRINTS BEARING EARLIER REVISION DATES

REVISION DATES 08/07/12 01/24/13 04/22/13

SHEET 13 OF 24

FILE => 49-0258-l-girdreinf.dgn

USERNAME => s115755 DATE PLOTTED => 16-DEC-2014 TIME PLOTTED => 14:09

DIST	COUNTY	ROUTE	POST MILES TOTAL PROJECT	SHEET No.	TOTAL SHEETS
05	SLO	1	64.0/R66.9	203	265

REGISTERED CIVIL ENGINEER 10-27-14 DATE

10-27-14
PLANS APPROVAL DATE

REGISTERED PROFESSIONAL ENGINEER MICHAEL R POPE No. C54503 Exp. 12/31/15 CIVIL STATE OF CALIFORNIA

The State of California or its officers or agents shall not be responsible for the accuracy or completeness of scanned copies of this plan sheet.

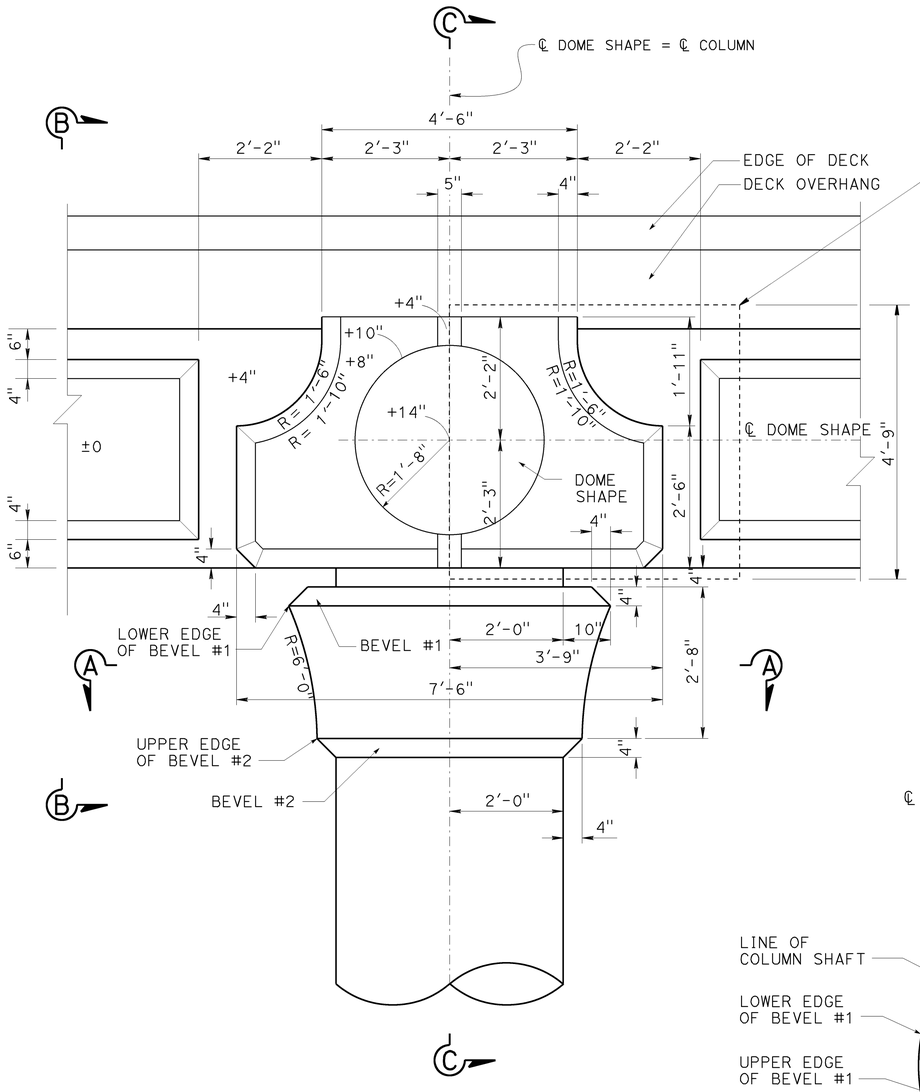

ELEVATION

NO SCALE

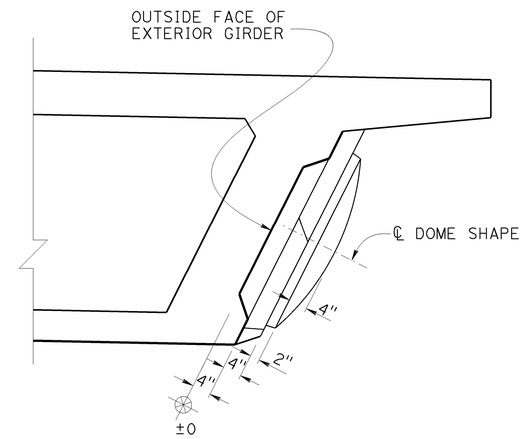

SECTION B-B

NO SCALE

NOTE:
SEE "TYPICAL SECTION" SHEET FOR GIRDER REINF. NOT SHOWN

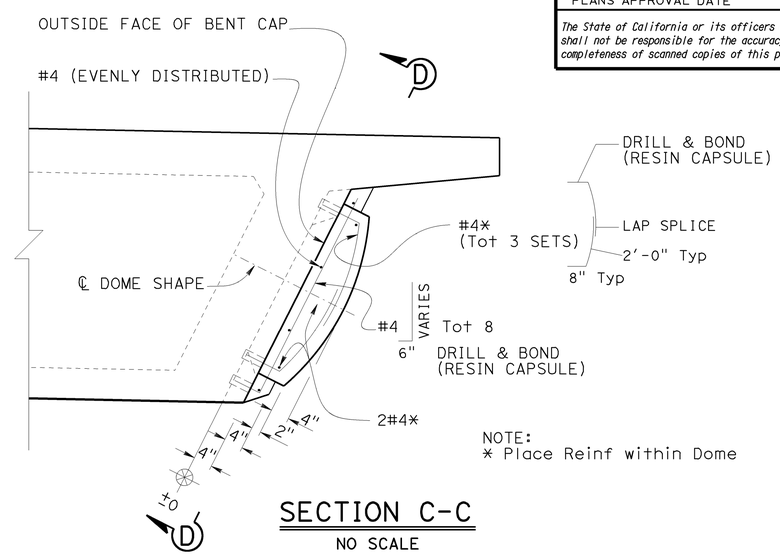

NOTE:
* Place Reinf within Dome

SECTION C-C

NO SCALE

NOTE:
SEE "BENT DETAILS NO. 1" SHEET FOR BENT CAP DETAILS NOT SHOWN

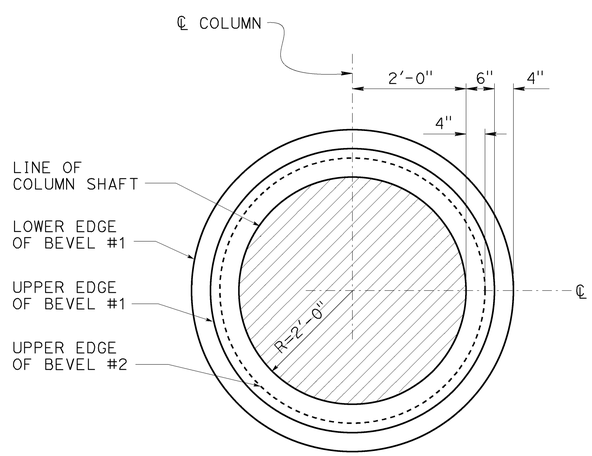

SECTION A-A

NO SCALE

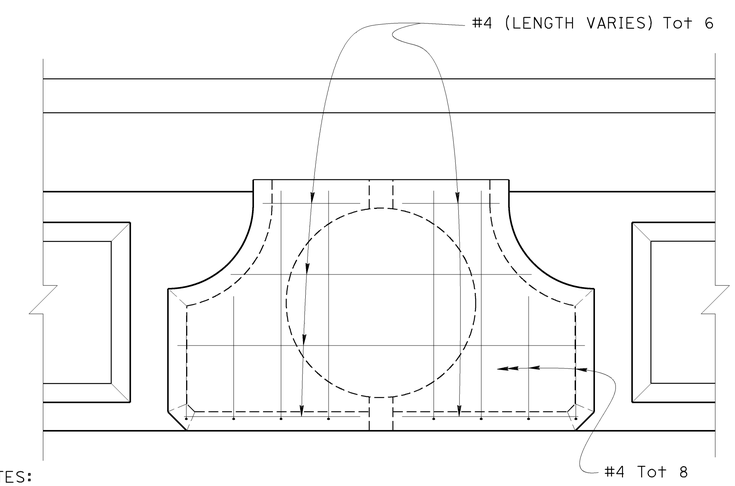

NOTES:

1. Dome Reinf not shown
2. See "ELEVATION" for dimensions not shown

SECTION D-D

NO SCALE

DESIGN	BY ZIHAN YAN	CHECKED PREM RIMAL	
DETAILS	BY MINH TRAN	CHECKED PREM RIMAL	
QUANTITIES	BY ZIHAN YAN	CHECKED PREM RIMAL	

STATE OF CALIFORNIA
DEPARTMENT OF TRANSPORTATION

DIVISION OF ENGINEERING SERVICES
STRUCTURE DESIGN
DESIGN BRANCH 18

BRIDGE NO. 49-0258
POST MILE R 64.62

ARROYO DE LOS PLAYANOS BRIDGE
ARCHITECTURAL TREATMENT DETAILS NO. 1

STRUCTURES DESIGN DETAIL SHEET (ENGLISH) (REV. 09-01-10)

ORIGINAL SCALE IN INCHES FOR REDUCED PLANS 0 1 2 3

UNIT: 3603
PROJECT NUMBER & PHASE: 0500000576 1
CONTRACT NO.: 05-492801

DISREGARD PRINTS BEARING EARLIER REVISION DATES

REVISION DATES 01/24/13 04/23/13 04/30/13

SHEET 14 OF 24

FILE => 49-0258-q-archdet-01.dgn

USERNAME => s115755 DATE PLOTTED => 16-DEC-2014 TIME PLOTTED => 14:09

DIST	COUNTY	ROUTE	POST MILES TOTAL PROJECT	SHEET No.	TOTAL SHEETS
05	SLO	1	64.0/R66.9	204	265

REGISTERED CIVIL ENGINEER 10-27-14 DATE

10-27-14
PLANS APPROVAL DATE

REGISTERED PROFESSIONAL ENGINEER
MICHAEL R POPE
No. C54503
Exp. 12/31/15
CIVIL
STATE OF CALIFORNIA

The State of California or its officers or agents shall not be responsible for the accuracy or completeness of scanned copies of this plan sheet.

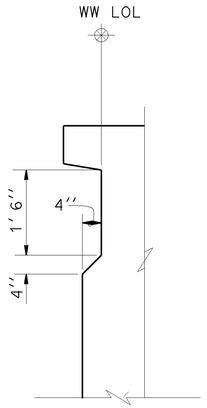

SECTION B-B
3/4" = 1'-0"

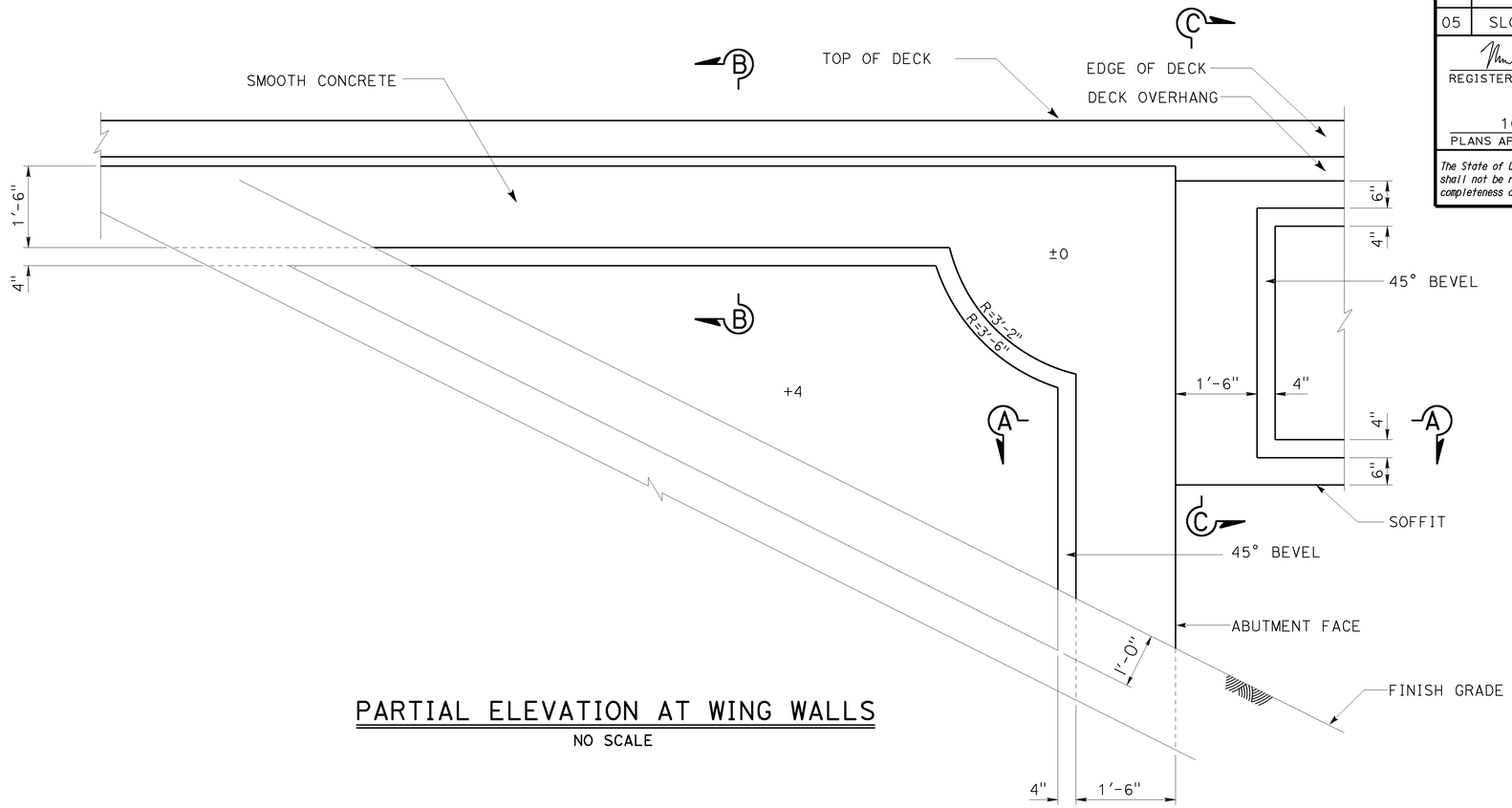

PARTIAL ELEVATION AT WING WALLS
NO SCALE

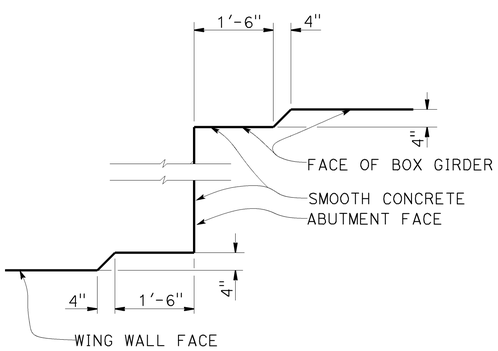

SECTION A-A
NO SCALE

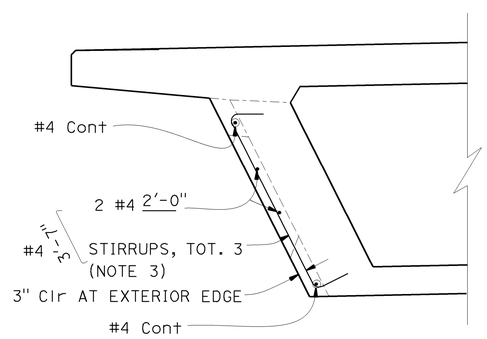

NOTES:
1. For Girder, deck & soffit reinf not shown see "TYPICAL SECTION" sheet.
2. Barrier not shown for clarity.
3. Avoid tail end conflict with PS ducts.

SECTION C-C
NO SCALE

	BY	CHECKED
DESIGN	ZIHAN YAN	PREM RIMAL
DETAILS	JINLI GUO	PREM RIMAL
QUANTITIES	ZIHAN YAN	PREM RIMAL

STATE OF CALIFORNIA
DEPARTMENT OF TRANSPORTATION

DIVISION OF ENGINEERING SERVICES
STRUCTURE DESIGN
DESIGN BRANCH 18

BRIDGE NO. 49-0258
POST MILE R 64.62

ARROYO DE LOS PLAYANOS BRIDGE
ARCHITECTURAL TREATMENT DETAILS NO. 2

STRUCTURES DESIGN DETAIL SHEET (ENGLISH) (REV. 09-01-10)

ORIGINAL SCALE IN INCHES FOR REDUCED PLANS 0 1 2 3

UNIT: 3603
PROJECT NUMBER & PHASE: 0500000576 1
CONTRACT NO.: 05-492801

DISREGARD PRINTS BEARING EARLIER REVISION DATES
REVISION DATES 1/13/13 1/13/13 1/14/13

SHEET 15 OF 24

FILE => 49-0258-q-archdet-02.dgn

USERNAME => s115755 DATE PLOTTED => 16-DEC-2014 TIME PLOTTED => 14:09

DIST	COUNTY	ROUTE	POST MILES TOTAL PROJECT	SHEET No.	TOTAL SHEETS
05	SLO	1	64.0/R66.9	205	265

REGISTERED CIVIL ENGINEER 10-27-14 DATE

10-27-14
PLANS APPROVAL DATE

REGISTERED PROFESSIONAL ENGINEER MICHAEL R POPE No. C54503 Exp. 12/31/15 CIVIL STATE OF CALIFORNIA

The State of California or its officers or agents shall not be responsible for the accuracy or completeness of scanned copies of this plan sheet.

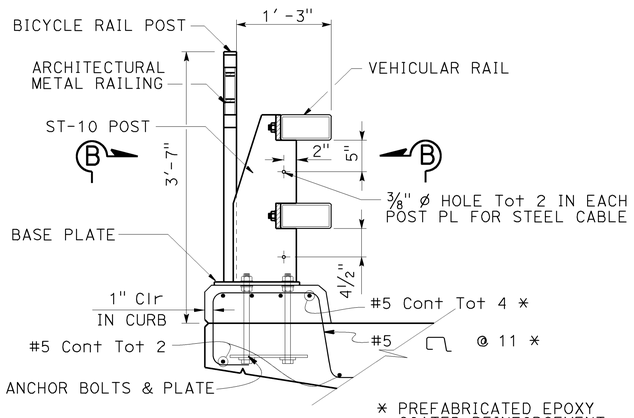

* PREFABRICATED EPOXY COATED REINFORCEMENT SHALL BE USED IN CURB

TYPICAL SECTION

1 " = 1'-0"

FOR CA ST-10 RAILING DETAILS NOT SHOWN SEE: B11-68 B11-69 B11-70

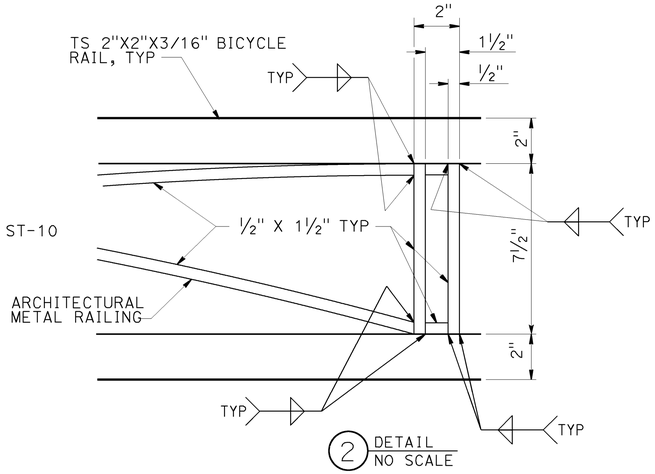

DETAIL

NO SCALE

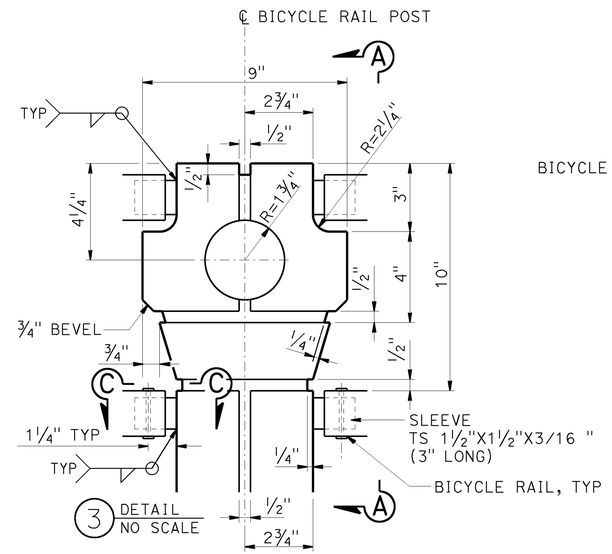

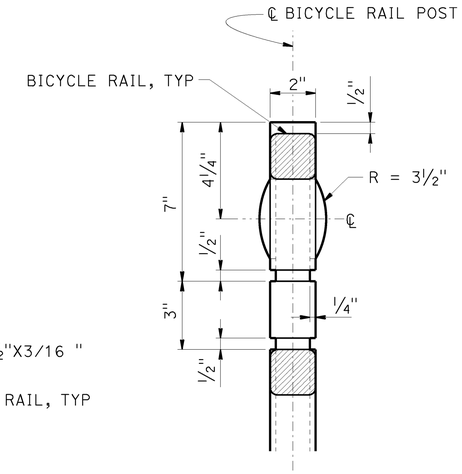

SECTION A - A

NO SCALE

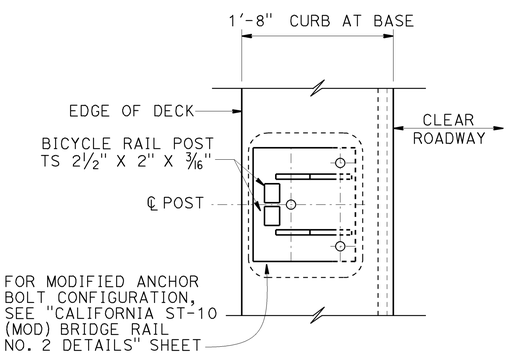

SECTION B - B

NO SCALE

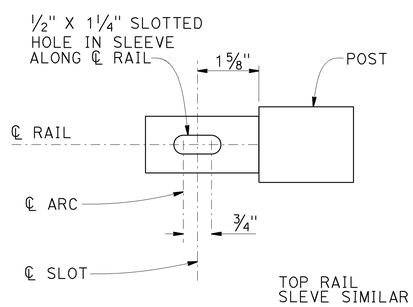

SECTION C - C

NO SCALE

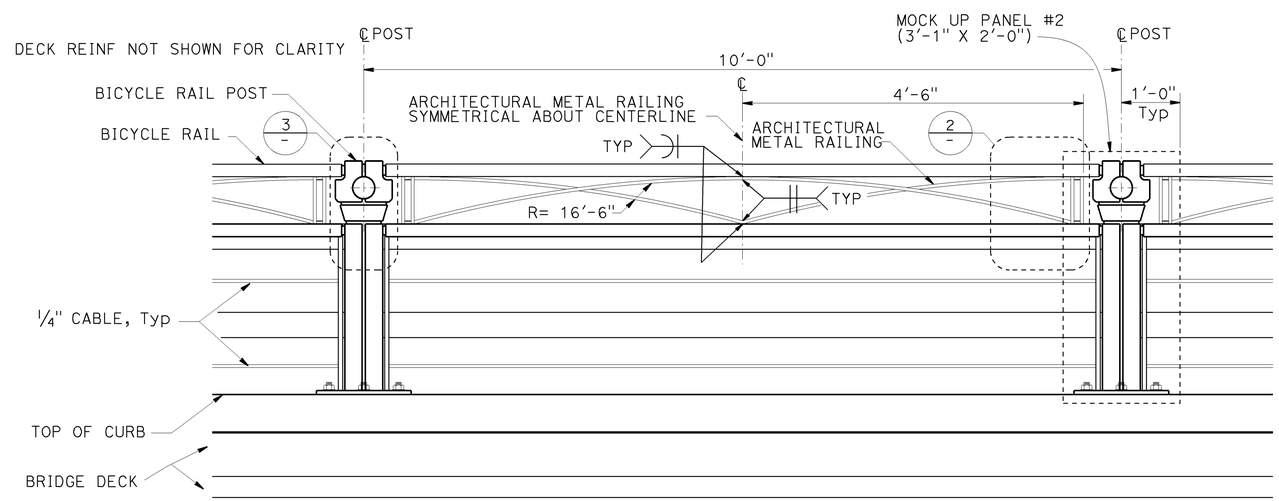

ELEVATION VIEW - CALIFORNIA ST-10(MODIFIED)

1 " = 1'-0"

DESIGN	BY ZIHAN YAN	CHECKED PREM RIMAL	
DETAILS	BY JINLI GUO	CHECKED PREM RIMAL	
QUANTITIES	BY ZIHAN YAN	CHECKED PREM RIMAL	

STATE OF CALIFORNIA DEPARTMENT OF TRANSPORTATION

DIVISION OF ENGINEERING SERVICES STRUCTURE DESIGN DESIGN BRANCH 18

BRIDGE NO. 49-0258 POST MILE R 64.62

ARROYO DE LOS PLAYANOS BRIDGE

CALIFORNIA ST-10 BRIDGE RAIL(MOD) DETAILS NO. 1

STRUCTURES DESIGN DETAIL SHEET (ENGLISH) (REV. 09-01-10)

ORIGINAL SCALE IN INCHES FOR REDUCED PLANS 0 1 2 3

UNIT:3603
PROJECT NUMBER & PHASE:0500000576 1 CONTRACT NO.: 05-492801

DISREGARD PRINTS BEARING EARLIER REVISION DATES

REVISION DATES 08/07/12 04/05/13 04/18/13 12/19/13

SHEET 16 OF 24

FILE => 49-0258-r-railing01.dgn

USERNAME => s115755 DATE PLOTTED => 16-DEC-2014 TIME PLOTTED => 14:09

DIST	COUNTY	ROUTE	POST MILES TOTAL PROJECT	SHEET No.	TOTAL SHEETS
05	SLO	1	64.0/R66.9	206	265

REGISTERED CIVIL ENGINEER 10-27-14 DATE

10-27-14
PLANS APPROVAL DATE

REGISTERED PROFESSIONAL ENGINEER MICHAEL R POPE No. C54503 Exp. 12/31/15 CIVIL STATE OF CALIFORNIA

The State of California or its officers or agents shall not be responsible for the accuracy or completeness of scanned copies of this plan sheet.

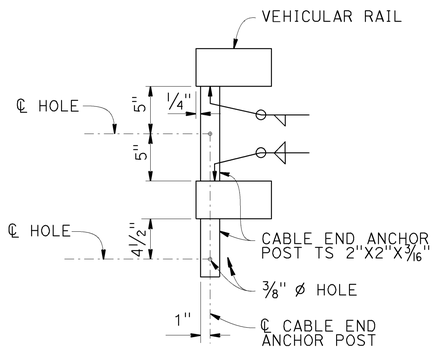

SECTION F - F

1 1/2" = 1'-0"

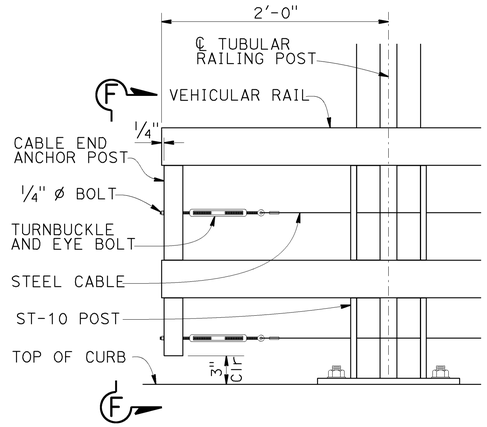

CABLE END ANCHORAGE

1 1/2" = 1'-0"

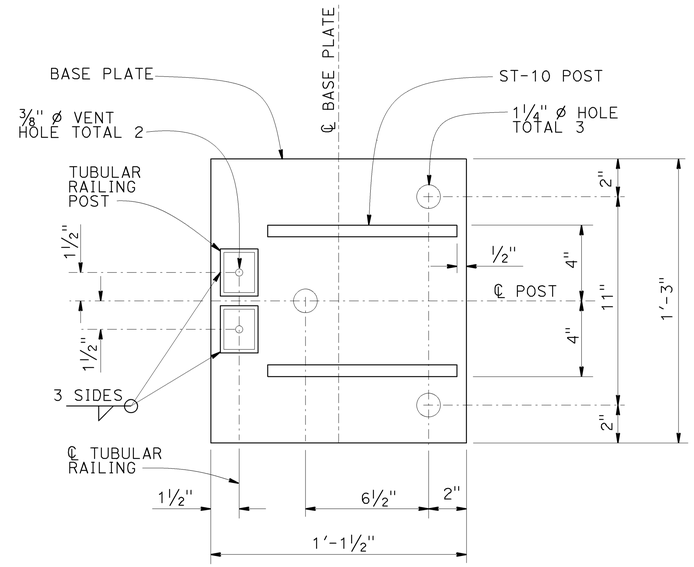

BASE PLATE

3 " = 1'-0"

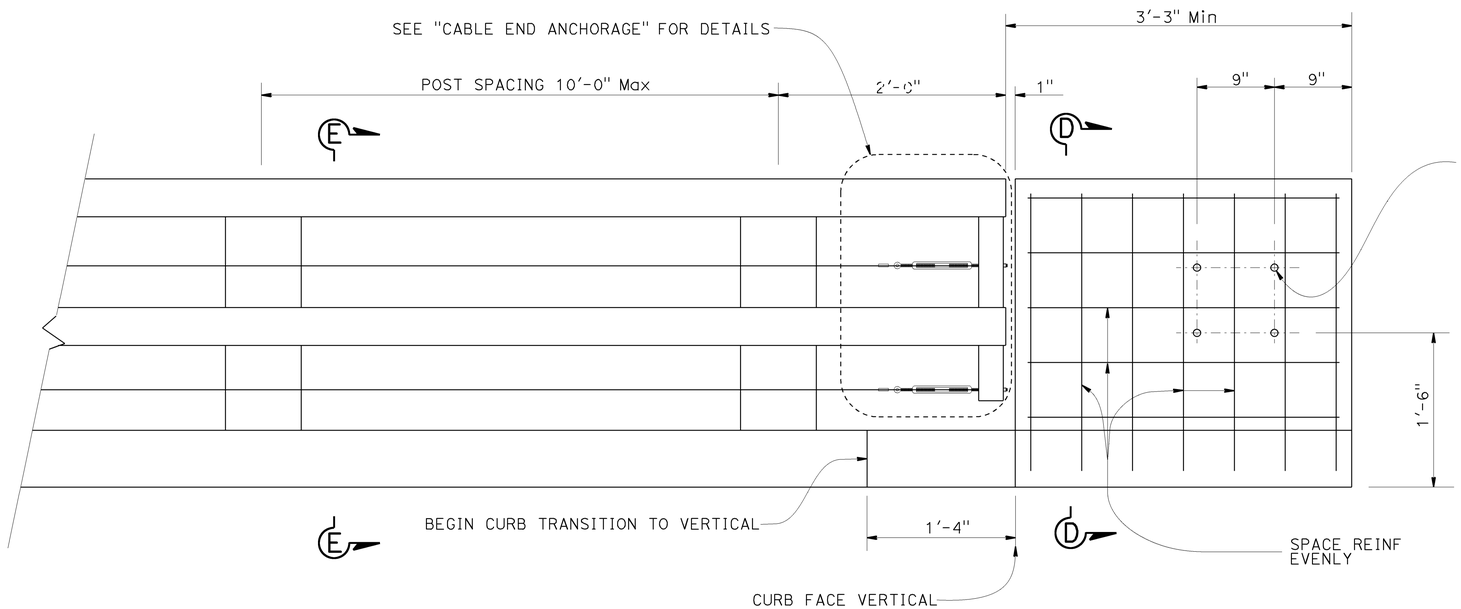

END OF RAILING ELEVATION

1 1/2" = 1'-0"

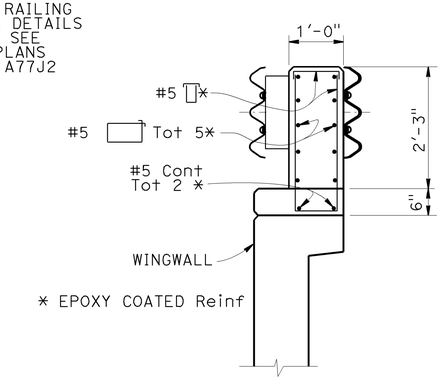

SECTION D-D

NOTE: WINGWALL & CURB REINF NOT SHOWN FOR CLARITY

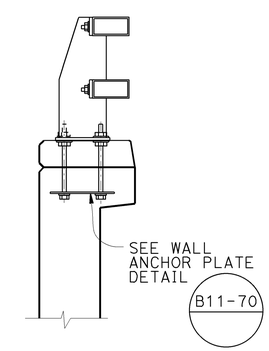

SECTION E-E

NOTE: REINF SAME AS FOR SECTION D-D EXCEPT AS NOTED

DESIGN	BY ZIHAN YAN	CHECKED PREM RIMAL	
DETAILS	BY JINLI GUO	CHECKED PREM RIMAL	
QUANTITIES	BY ZIHAN YAN	CHECKED PREM RIMAL	

STATE OF CALIFORNIA
DEPARTMENT OF TRANSPORTATION

DIVISION OF ENGINEERING SERVICES
STRUCTURE DESIGN
DESIGN BRANCH 18

BRIDGE NO. 49-0258
POST MILE R 64.62

ARROYO DE LOS PLAYANOS BRIDGE
CALIFORNIA ST-10 BRIDGE RAIL(MOD) DETAILS NO. 2

STRUCTURES DESIGN DETAIL SHEET (ENGLISH) (REV. 09-01-10)

ORIGINAL SCALE IN INCHES FOR REDUCED PLANS 0 1 2 3

UNIT: 3603
PROJECT NUMBER & PHASE: 0500000576 1
CONTRACT NO.: 05-492801

DISREGARD PRINTS BEARING EARLIER REVISION DATES

REVISION DATES 4/8/13 4/23/13

SHEET 17 OF 24

FILE => 49-0258-r-railing02.dgn

USERNAME => s115755 DATE PLOTTED => 16-DEC-2014 TIME PLOTTED => 14:09

DIST	COUNTY	ROUTE	POST MILES TOTAL PROJECT	SHEET No.	TOTAL SHEETS
05	SLO	1	64.0/R66.9	207	265

REGISTERED CIVIL ENGINEER 10-27-14 DATE

10-27-14
PLANS APPROVAL DATE

REGISTERED PROFESSIONAL ENGINEER MICHAEL POPE No. C54503 Exp. 12/31/15 CIVIL STATE OF CALIFORNIA

The State of California or its officers or agents shall not be responsible for the accuracy or completeness of electronic copies of this plan sheet.

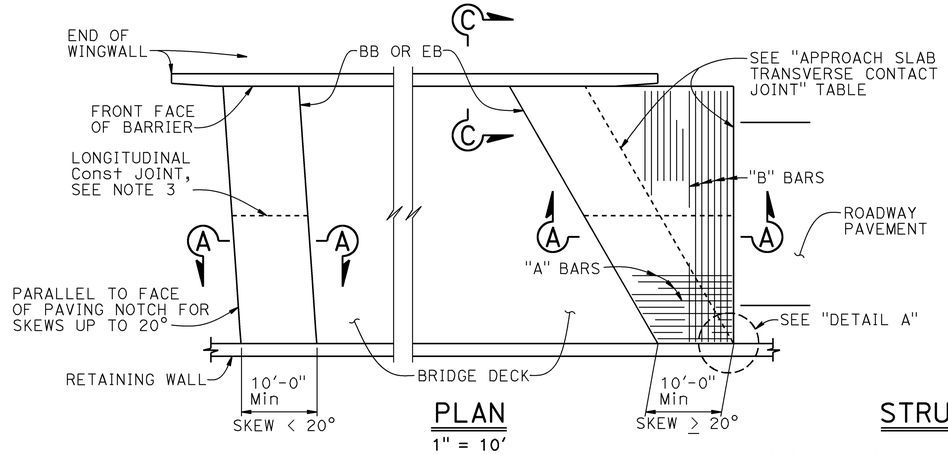

PLAN
1" = 10'

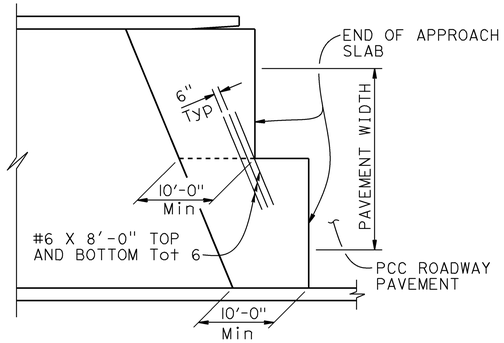

STRUCTURE APPROACH - END STAGGER DETAIL
NO SCALE

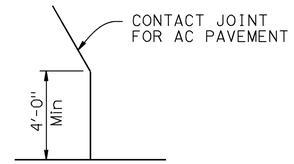

DETAIL A
No Scale

APPROACH SLAB TRANSVERSE CONTACT JOINT		
APPROACH SKEW	AC ROADWAY PAVEMENT	WITH PCC ROADWAY PAVEMENT
< 20°	PARALLEL TO FACE OF PN	PARALLEL TO FACE OF PN
20° - 45°	PARALLEL TO FACE OF PN USE "DETAIL A"	STAGGER LINES 24' TO 36' APART
> 45°	PARALLEL TO FACE OF PN USE "DETAIL A"	STAGGER AT EACH LANE LINE

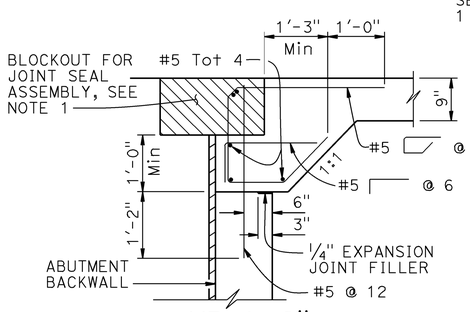

MR > 2"

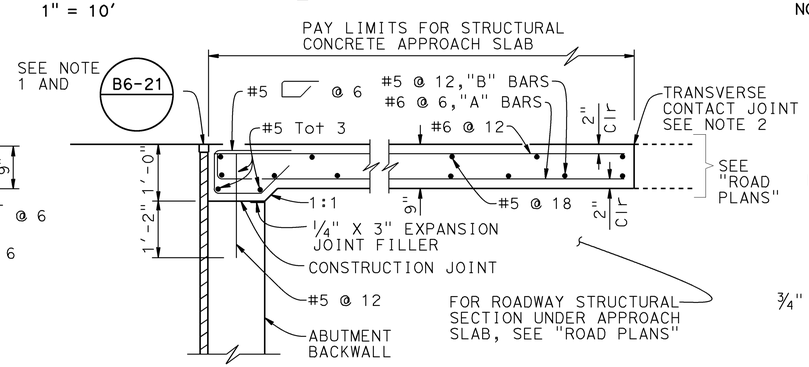

MR ≤ 2"

SEAT TYPE ABUTMENT
SECTION A-A
3/4" = 1'-0"

NOTE: Seat type abutment shown, for diaphragm type abutment, see "ABUTMENT TIE DETAILS"

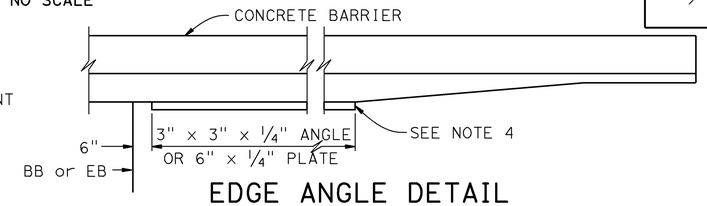

EDGE ANGLE DETAIL
1/2" = 1'-0"

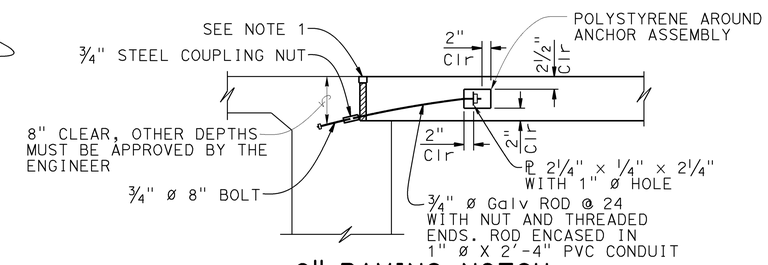

9" PAVING NOTCH

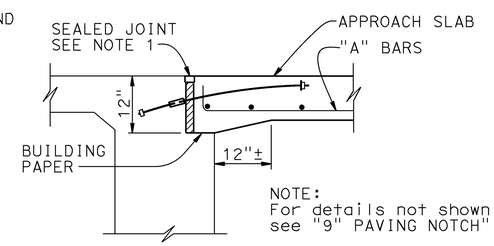

NOTE:
For details not shown, see "9" PAVING NOTCH"

12" PAVING NOTCH

DIAPHRAGM TYPE ABUTMENT
ABUTMENT TIE DETAILS
3/4" = 1'-0"

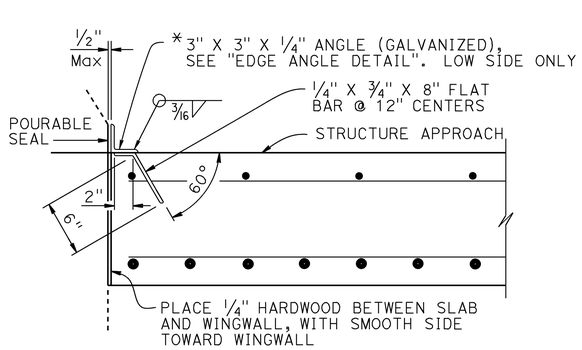

*(TO BE USED WITH CONCRETE BARRIER WITH VERTICAL FACE)

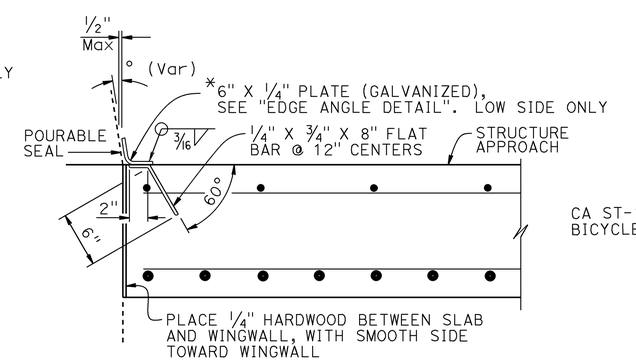

*(TO BE USED WITH CONCRETE BARRIER WITH SLOPING FACE)

DETAIL B
1 1/2" = 1'-0"

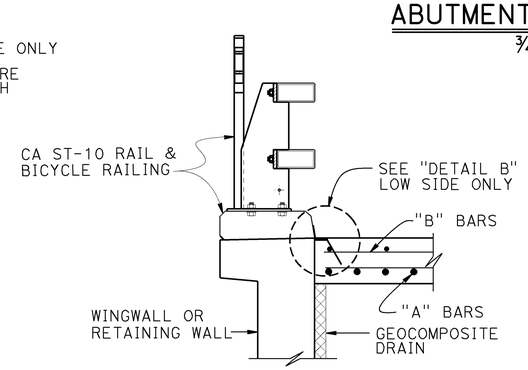

SECTION C-C
(1)
3/4" = 1'-0"

NOTES:

1. For details not noted or shown, see Structure Plans. Adjust bar reinforcement to clear a sawcut for sealed joint, when required
2. For transverse contact joint with new PCC paving, refer to Standard Plan P10
3. Longitudinal construction joints, when permitted by the Engineer, shall be located on lane lines
4. End angle or plate at beginning of barrier transition, end of wingwall or end of structure approach as applicable
5. At the Contractor's option, approach slab transverse reinforcement may be placed parallel to paving notch. Spacing of transverse reinforcement is measured along ℄ roadway
6. For drainage details, see Structure Plans.

REVISED STANDARD DRAWING

FILE NO. xs3-160

APPROVAL DATE July 2011

(1) Modified detail

STATE OF CALIFORNIA
DEPARTMENT OF TRANSPORTATION

DIVISION OF ENGINEERING SERVICES

BRIDGE NO. 49-0258
POST MILE R 64.62

ARROYO DE LOS PLAYANOS BRIDGE
STRUCTURE APPROACH TYPE EQ(10)

DS OSD 2147A (ENGLISH STANDARD DRAWING "XS" BORDER REV. (02-02-11)

ORIGINAL SCALE IN INCHES FOR REDUCED PLANS 0 1 2 3

UNIT: 3603
PROJECT NUMBER & PHASE: 0500000576 1
CONTRACT NO.: 05-492801

DISREGARD PRINTS BEARING EARLIER REVISION DATES

REVISION DATES

SHEET 18 OF 24

FILE => 49-0258-s-aprch-10.dgn

USERNAME => s115755 DATE PLOTTED => 16-DEC-2014 TIME PLOTTED => 14:09

DIST	COUNTY	ROUTE	POST MILES TOTAL PROJECT	SHEET No.	TOTAL SHEETS
05	SLO	1	64.0/R66.9	208	265

REGISTERED CIVIL ENGINEER 10-27-14 DATE

10-27-14
PLANS APPROVAL DATE

REGISTERED PROFESSIONAL ENGINEER MICHAEL R POPE No. C54503 Exp. 12/31/15 CIVIL STATE OF CALIFORNIA

The State of California or its officers or agents shall not be responsible for the accuracy or completeness of electronic copies of this plan sheet.

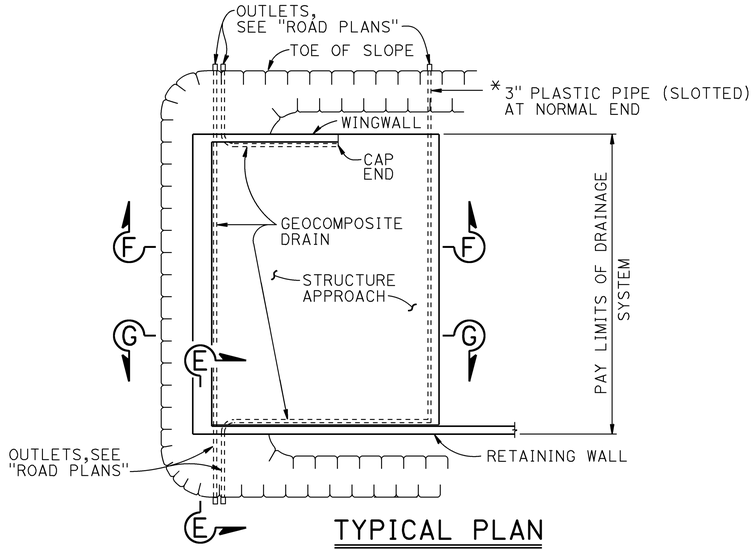

TYPICAL PLAN

1" = 10'

* FOR PIPE LAYOUT AT STAGGERED END, SEE "DETAIL B"

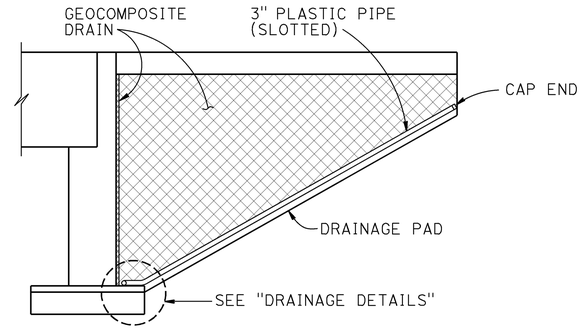

CANTILEVER WINGWALL

SECTION F-F

1/4" = 1'-0"

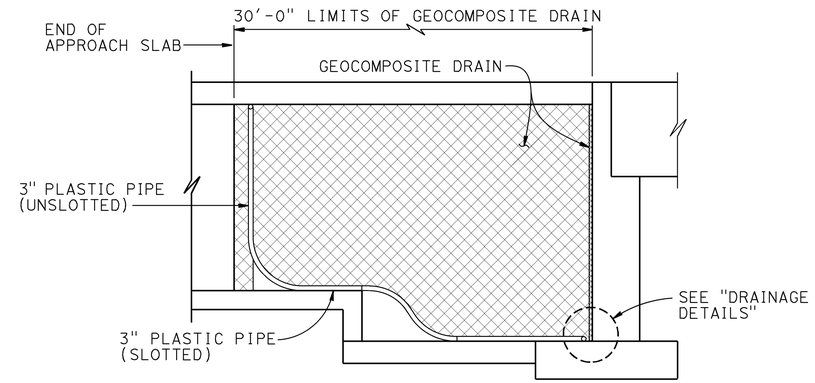

RETAINING WALL WINGWALL DRAINAGE DETAILS

SECTION G-G

1/4" = 1'-0"

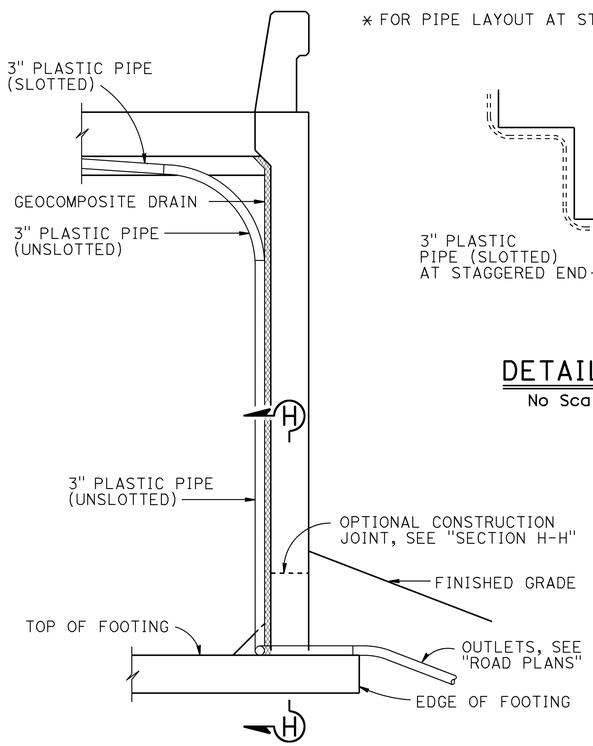

SECTION E-E

1/2" = 1'-0"

NOTE: Bends and junctions in 3" plastic pipe are 30" radius Min

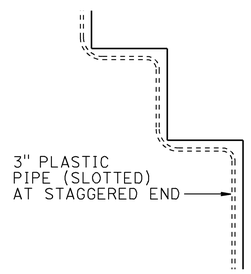

DETAIL B

No Scale

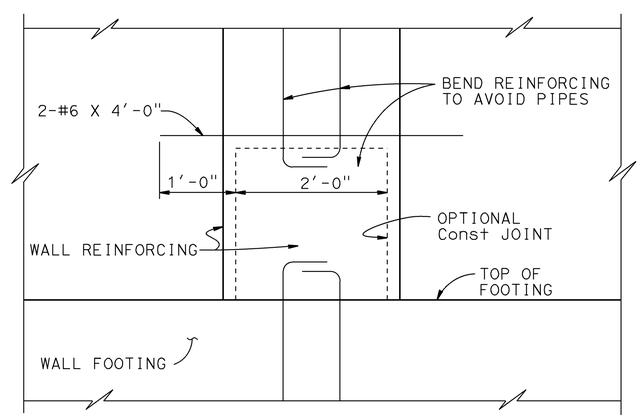

SECTION H-H

1" = 1'-0"

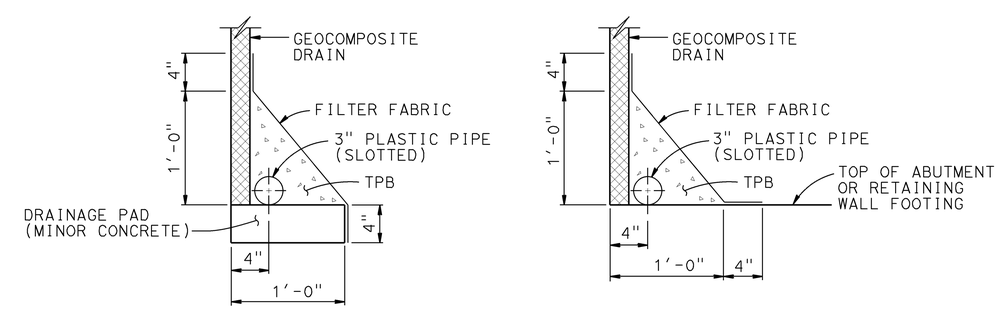

WITHOUT FOOTING

WITH FOOTING

DRAINAGE DETAILS

1 1/2" = 1'-0"

STANDARD DRAWING

FILE NO. xs3-110

APPROVAL DATE July 2011

DS OSD 2147A (ENGLISH STANDARD DRAWING "XS" BORDER REV. (02-02-11)

ORIGINAL SCALE IN INCHES FOR REDUCED PLANS 0 1 2 3

STATE OF CALIFORNIA DEPARTMENT OF TRANSPORTATION

DIVISION OF ENGINEERING SERVICES

BRIDGE NO. 49-0258

POST MILE 64.42

ARROYO DE LOS PLAYANOS BRIDGE

STRUCTURE APPROACH DRAINAGE DETAILS

UNIT: 3603
PROJECT NUMBER & PHASE: 0500000576 CONTRACT NO.: 05-492801

DISREGARD PRINTS BEARING EARLIER REVISION DATES

REVISION DATES 4/23/13

SHEET 19 OF 24

FILE => 49-0258-s-aprch-drain.dgn

USERNAME => s115755 DATE PLOTTED => 16-DEC-2014 TIME PLOTTED => 14:09

DIST	COUNTY	ROUTE	POST MILES TOTAL PROJECT	SHEET No.	TOTAL SHEETS
05	SLO	001	64.0/R66.9	209	265

REGISTERED CIVIL ENGINEER 10-27-14 DATE

10-27-14
PLANS APPROVAL DATE

REGISTERED PROFESSIONAL ENGINEER
Zeke Dellamas
No. C67457
Exp. 6-30-15
CIVIL
STATE OF CALIFORNIA

The State of California or its officers or agents shall not be responsible for the accuracy or completeness of electronic copies of this plan sheet.

This LOTB sheet was prepared in accordance with the Caltrans Soil & Rock Logging, Classification, & Presentation Manual (2010 Edition).

See 2010 Standard Plans A10F and A10G for Soil Legend, and A10H for Rock Legend.

BENCH MARK

SLO-1-PM 64.64
Fnd 1 " ip w/Caltrans control pp w/nail,
252.06' Lt "A1" Line
Sta 324+99.15
N 2,450,097.42
E 5,585,905.86
Elev = 31.079' (NAVD88)

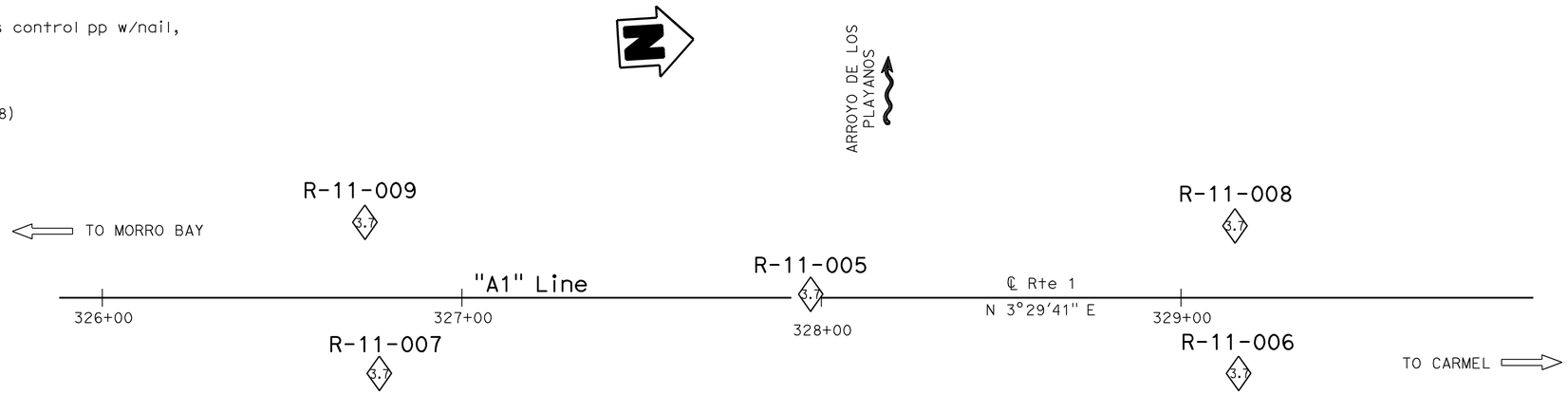

PLAN
1" = 20'

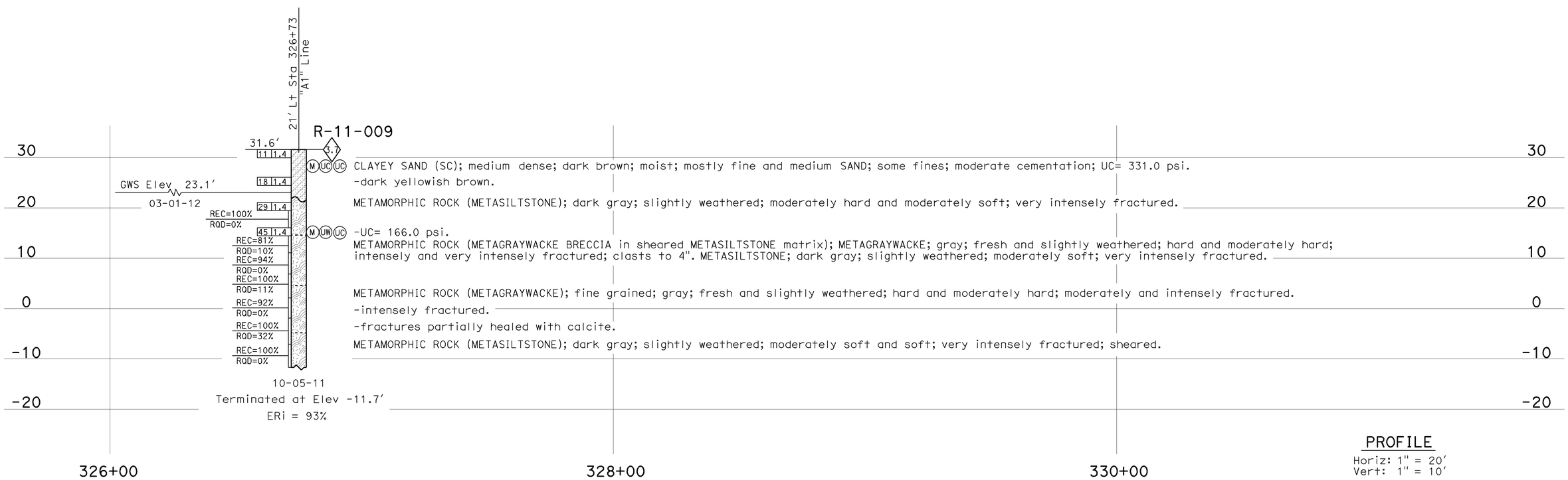

PROFILE
Horiz: 1" = 20'
Vert: 1" = 10'

ENGINEERING SERVICES	MATERIALS AND GEOTECHNICAL SERVICES	STATE OF CALIFORNIA DEPARTMENT OF TRANSPORTATION	DIVISION OF ENGINEERING SERVICES STRUCTURE DESIGN DESIGN BRANCH 18	BRIDGE NO. 49-0258 POST MILE R64.62	ARROYO DE LOS PLAYANOS BRIDGE LOG OF TEST BORINGS 1 OF 5
FUNCTIONAL SUPERVISOR NAME: M. Finegan	DRAWN BY: F. Nguyen CHECKED BY: D. Appelbaum	FIELD INVESTIGATION BY: Z. Dellamas			

OGS CIVIL LOG OF TEST BORINGS SHEET

ORIGINAL SCALE IN INCHES FOR REDUCED PLANS 0 1 2 3

UNIT: 3643
PROJECT NUMBER & PHASE: 05000005761 CONTRACT NO.: 05-492801

DISREGARD PRINTS BEARING EARLIER REVISION DATES

REVISION DATES 10-05-12 11-14-12 11-28-12

SHEET 20 OF 24

FILE => 49-0258-z-lg1of5.dgn

USERNAME => s115755 DATE PLOTTED => 16-DEC-2014 TIME PLOTTED => 14:09

DIST	COUNTY	ROUTE	POST MILES TOTAL PROJECT	SHEET No.	TOTAL SHEETS
05	SLO	001	64.0/R66.9	210	265

REGISTERED CIVIL ENGINEER — DATE 10-27-14

PLANS APPROVAL DATE 10-27-14

REGISTERED PROFESSIONAL ENGINEER — Zeke Dellamas — No. C67457 — Exp. 6-30-15 — CIVIL — STATE OF CALIFORNIA

The State of California or its officers or agents shall not be responsible for the accuracy or completeness of electronic copies of this plan sheet.

This LOTB sheet was prepared in accordance with the Caltrans Soil & Rock Logging, Classification, & Presentation Manual (2010 Edition).

See 2010 Standard Plans A10F and A10G for Soil Legend, and A10H for Rock Legend.

FOR PLAN VIEW, SEE
"LOG OF TEST BORINGS 1 OF 5"

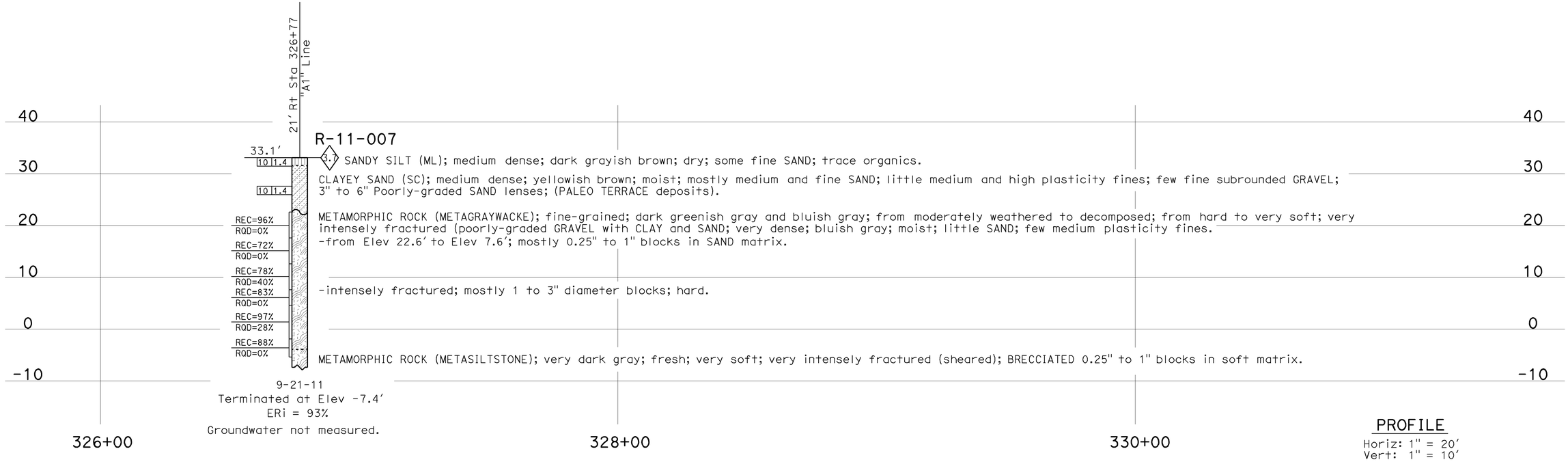

ENGINEERING SERVICES	MATERIALS AND GEOTECHNICAL SERVICES	STATE OF CALIFORNIA DEPARTMENT OF TRANSPORTATION	DIVISION OF ENGINEERING SERVICES STRUCTURE DESIGN DESIGN BRANCH 18	BRIDGE NO. 49-0258 POST MILE R64.62	ARROYO DE LOS PLAYANOS BRIDGE LOG OF TEST BORINGS 2 OF 5
FUNCTIONAL SUPERVISOR NAME: M. Finegan	DRAWN BY: F. Nguyen CHECKED BY: D. Appelbaum	FIELD INVESTIGATION BY: M. Jurasius			

OGS CIVIL LOG OF TEST BORINGS SHEET — ORIGINAL SCALE IN INCHES FOR REDUCED PLANS 0 1 2 3 — UNIT: 3643 — PROJECT NUMBER & PHASE: 05000005761 — CONTRACT NO.: 05-492801 — DISREGARD PRINTS BEARING EARLIER REVISION DATES — REVISION DATES 10-05-12 11-14-12 11-28-12 — SHEET 21 OF 24

FILE => 49-0258-z-lg2of5.dgn

USERNAME => s115755 DATE PLOTTED => 16-DEC-2014 TIME PLOTTED => 14:09

DIST	COUNTY	ROUTE	POST MILES TOTAL PROJECT	SHEET No.	TOTAL SHEETS
05	SLO	001	64.0/R66.9	211	265

REGISTERED CIVIL ENGINEER — DATE 11-30-12

10-27-2014
PLANS APPROVAL DATE

REGISTERED PROFESSIONAL ENGINEER — Zeke Dellamas — No. C67457 — Exp. 6-30-13 — CIVIL — STATE OF CALIFORNIA

The State of California or its officers or agents shall not be responsible for the accuracy or completeness of electronic copies of this plan sheet.

This LOTB sheet was prepared in accordance with the Caltrans Soil & Rock Logging, Classification, & Presentation Manual (2010 Edition).

See 2010 Standard Plans A10F and A10G for Soil Legend, and A10H for Rock Legend.

FOR PLAN VIEW, SEE
"LOG OF TEST BORINGS 1 OF 5"

PROFILE
Horiz: 1" = 20'
Vert: 1" = 10'

ENGINEERING SERVICES	MATERIALS AND GEOTECHNICAL SERVICES	STATE OF CALIFORNIA DEPARTMENT OF TRANSPORTATION	DIVISION OF ENGINEERING SERVICES STRUCTURE DESIGN DESIGN BRANCH 18	BRIDGE NO. 49-0258 POST MILE R64.62	ARROYO DE LOS PLAYANOS BRIDGE LOG OF TEST BORINGS 3 OF 5
FUNCTIONAL SUPERVISOR NAME: M. Finegan	DRAWN BY: F. Nguyen CHECKED BY: D. Appelbaum	FIELD INVESTIGATION BY: Z. Dellamas			

OGS CIVIL LOG OF TEST BORINGS SHEET — ORIGINAL SCALE IN INCHES FOR REDUCED PLANS 0 1 2 3

UNIT: 3643
PROJECT NUMBER & PHASE: 05000005761 — CONTRACT NO.: 05-492801

DISREGARD PRINTS BEARING EARLIER REVISION DATES → REVISION DATES 10-05-12 11-14-12 11-28-12 — SHEET 22 OF 24

FILE => 49-0258-z-lg3of5.dgn

USERNAME => s115755 DATE PLOTTED => 16-DEC-2014 TIME PLOTTED => 14:09

DIST	COUNTY	ROUTE	POST MILES TOTAL PROJECT	SHEET No.	TOTAL SHEETS
05	SLO	001	64.0/R66.9	212	265

REGISTERED CIVIL ENGINEER 10-27-14 DATE

10-27-14
PLANS APPROVAL DATE

REGISTERED PROFESSIONAL ENGINEER
Zeke Dellamas
No. C67457
Exp. 6-30-13
CIVIL
STATE OF CALIFORNIA

The State of California or its officers or agents shall not be responsible for the accuracy or completeness of electronic copies of this plan sheet.

This LOTB sheet was prepared in accordance with the Caltrans Soil & Rock Logging, Classification, & Presentation Manual (2010 Edition).

See 2010 Standard Plans A10F and A10G for Soil Legend, and A10H for Rock Legend.

FOR PLAN VIEW, SEE
"LOG OF TEST BORINGS 1 OF 5"

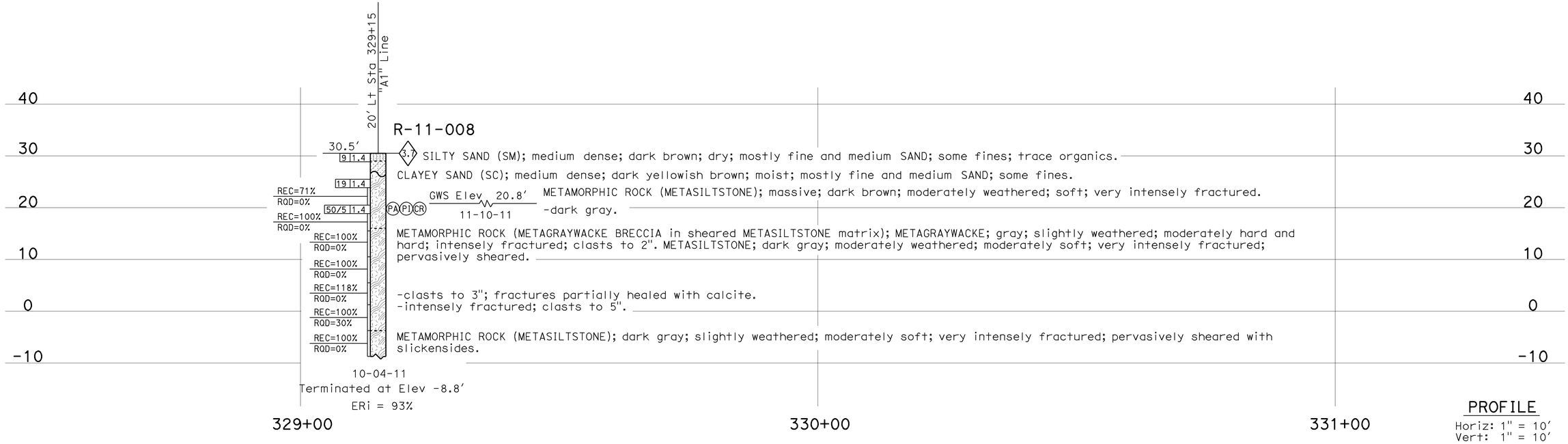

PROFILE
Horiz: 1" = 10'
Vert: 1" = 10'

ENGINEERING SERVICES	MATERIALS AND GEOTECHNICAL SERVICES	STATE OF CALIFORNIA DEPARTMENT OF TRANSPORTATION	DIVISION OF ENGINEERING SERVICES STRUCTURE DESIGN DESIGN BRANCH 18	BRIDGE NO. 49-0258 POST MILE R64.62	ARROYO DE LOS PLAYANOS BRIDGE
FUNCTIONAL SUPERVISOR NAME: M. Finegan	DRAWN BY: F. Nguyen CHECKED BY: D. Appelbaum	FIELD INVESTIGATION BY: Z. Dellamas			LOG OF TEST BORINGS 4 OF 5

OGS CIVIL LOG OF TEST BORINGS SHEET

ORIGINAL SCALE IN INCHES FOR REDUCED PLANS 0 1 2 3

UNIT: 3643
PROJECT NUMBER & PHASE: 05000005761 CONTRACT NO.: 05-492801

DISREGARD PRINTS BEARING EARLIER REVISION DATES

REVISION DATES: 10-05-12 11-14-12 11-28-12

SHEET 23 OF 24

FILE => 49-0258-z-lg4of5.dgn

USERNAME => s115755 DATE PLOTTED => 16-DEC-2014 TIME PLOTTED => 14:25

DIST	COUNTY	ROUTE	POST MILES TOTAL PROJECT	SHEET No.	TOTAL SHEETS
05	SLO	1	64.0/R66.9	213	265

REGISTERED CIVIL ENGINEER 10-27-14 DATE

10-27-14
PLANS APPROVAL DATE

REGISTERED PROFESSIONAL ENGINEER
Zeke Dellamas
No. C67457
Exp. 6-30-15
CIVIL
STATE OF CALIFORNIA

The State of California or its officers or agents shall not be responsible for the accuracy or completeness of electronic copies of this plan sheet.

This LOTB sheet was prepared in accordance with the Caltrans Soil & Rock Logging, Classification, & Presentation Manual (2010 Edition).

See 2010 Standard Plans A10F and A10G for Soil Legend, and A10H for Rock Legend.

FOR PLAN VIEW, SEE
"LOG OF TEST BORINGS 1 OF 5"

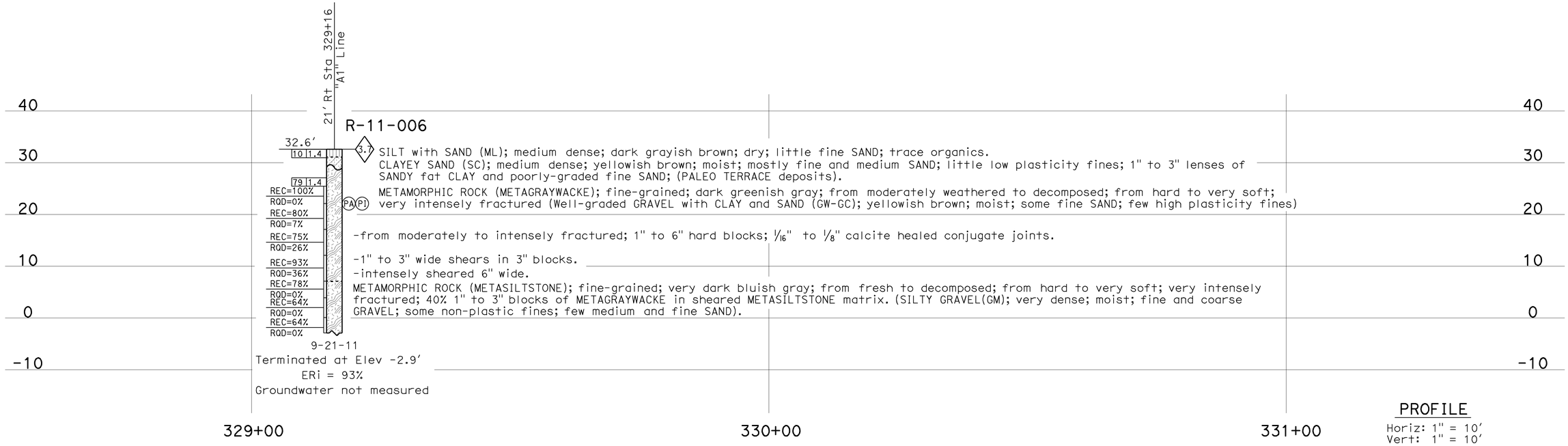

SILT with SAND (ML); medium dense; dark grayish brown; dry; little fine SAND; trace organics.
CLAYEY SAND (SC); medium dense; yellowish brown; moist; mostly fine and medium SAND; little low plasticity fines; 1" to 3" lenses of SANDY fat CLAY and poorly-graded fine SAND; (PALEO TERRACE deposits).
METAMORPHIC ROCK (METAGRAYWACKE); fine-grained; dark greenish gray; from moderately weathered to decomposed; from hard to very soft; very intensely fractured (Well-graded GRAVEL with CLAY and SAND (GW-GC); yellowish brown; moist; some fine SAND; few high plasticity fines)

-from moderately to intensely fractured; 1" to 6" hard blocks; 1/16" to 1/8" calcite healed conjugate joints.

-1" to 3" wide shears in 3" blocks.
-intensely sheared 6" wide.
METAMORPHIC ROCK (METASILTSTONE); fine-grained; very dark bluish gray; from fresh to decomposed; from hard to very soft; very intensely fractured; 40% 1" to 3" blocks of METAGRAYWACKE in sheared METASILTSTONE matrix. (SILTY GRAVEL(GM); very dense; moist; fine and coarse GRAVEL; some non-plastic fines; few medium and fine SAND).

PROFILE
Horiz: 1" = 10'
Vert: 1" = 10'

ENGINEERING SERVICES	MATERIALS AND GEOTECHNICAL SERVICES	STATE OF CALIFORNIA DEPARTMENT OF TRANSPORTATION	DIVISION OF ENGINEERING SERVICES STRUCTURE DESIGN DESIGN BRANCH 18	BRIDGE NO. 49-0258 POST MILE R64.62	ARROYO DE LOS PLAYANOS BRIDGE LOG OF TEST BORINGS 5 OF 5
FUNCTIONAL SUPERVISOR NAME: M. Finegan	DRAWN BY: F. Nguyen CHECKED BY: D. Appelbaum	FIELD INVESTIGATION BY: M. Jurasius			

OGS CIVIL LOG OF TEST BORINGS SHEET

ORIGINAL SCALE IN INCHES FOR REDUCED PLANS 0 1 2 3

UNIT: 3643
PROJECT NUMBER & PHASE: 05000005761
CONTRACT NO.: 05-492801

DISREGARD PRINTS BEARING EARLIER REVISION DATES

REVISION DATES: 10-05-12 11-14-12 11-28-12

SHEET 24 OF 24

FILE => 49-0258-z-lg5of5.dgn

USERNAME => s115755 DATE PLOTTED => 16-DEC-2014 TIME PLOTTED => 15:10

DIST	COUNTY	ROUTE	POST MILES TOTAL PROJECT	SHEET No.	TOTAL SHEETS
05	SLO	1	64.0/R66.9	214	265

REGISTERED CIVIL ENGINEER — DATE 10-27-14

PLANS APPROVAL DATE 10-27-14

REGISTERED PROFESSIONAL ENGINEER — MICHAEL R POPE — No. C054503 — Exp. 12/31/15 — CIVIL — STATE OF CALIFORNIA

The State of California or its officers or agents shall not be responsible for the accuracy or completeness of electronic copies of this plan sheet.

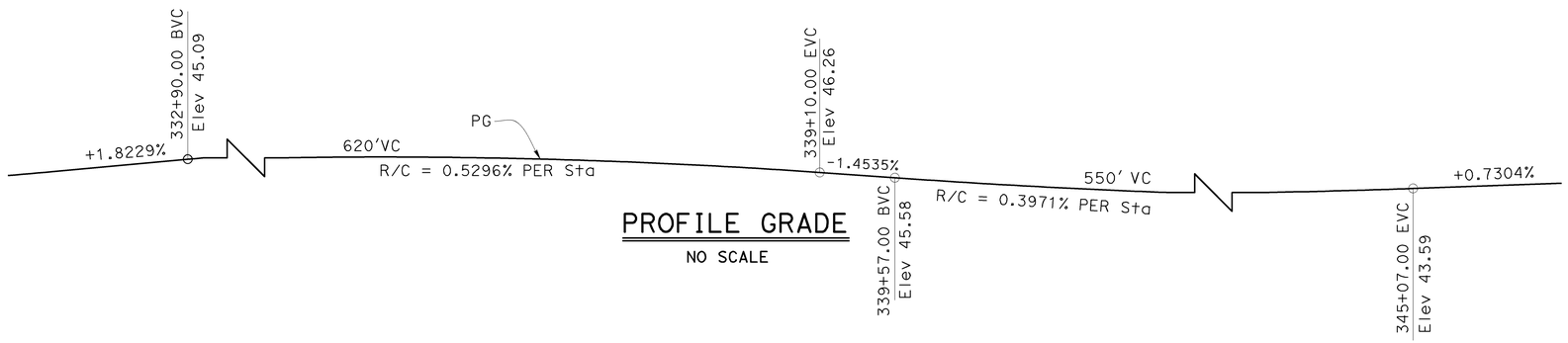

PROFILE GRADE

NO SCALE

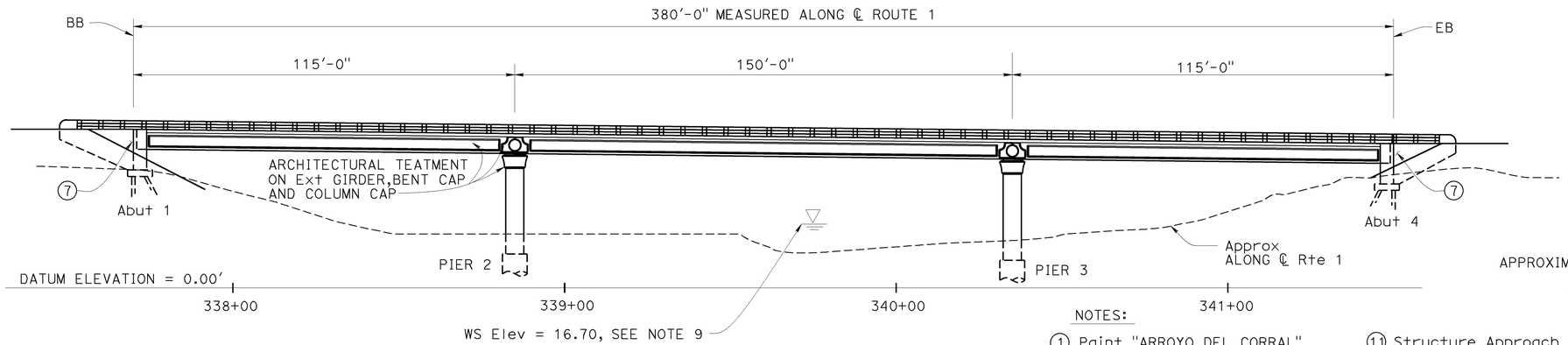

DEVELOPED ELEVATION

1" = 20'

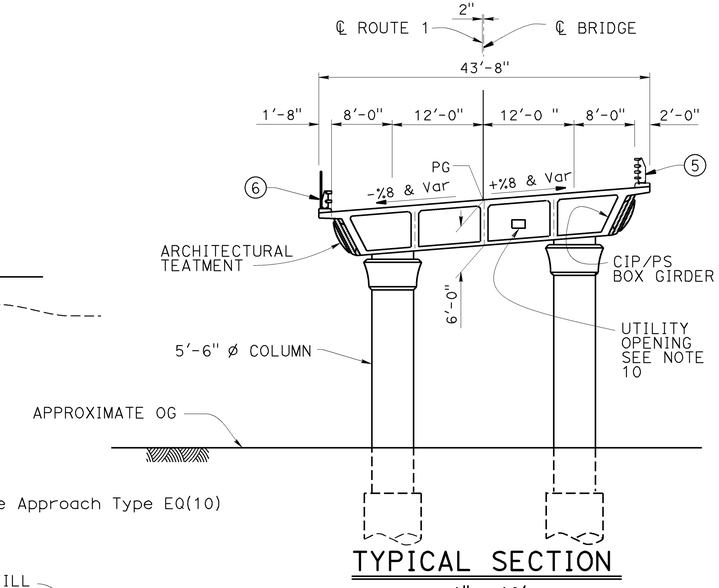

TYPICAL SECTION

1" = 10'

NOTES:

1. Paint "ARROYO DEL CORRAL"
2. Paint "BRIDGE NO. 49-0259"
3. Midewest Guardrail, see "ROAD PLANS"
4. Deck Drain Type D3
5. California ST-70 Bridge Rail (MOD)
6. California ST-10 Bridge Rail(MOD) & Bicycle Railing
7. Architectural treatment on Abutment and Wingwall Faces
8. For Index to Plans, General Notes, see "INDEX TO PLANS" Sheet
9. For Hydraulic Summary, see "FOUNDATION PLAN" sheet
10. For Utilities, see "TYPICAL SECTION" sheet
11. Structure Approach Type EQ(10)

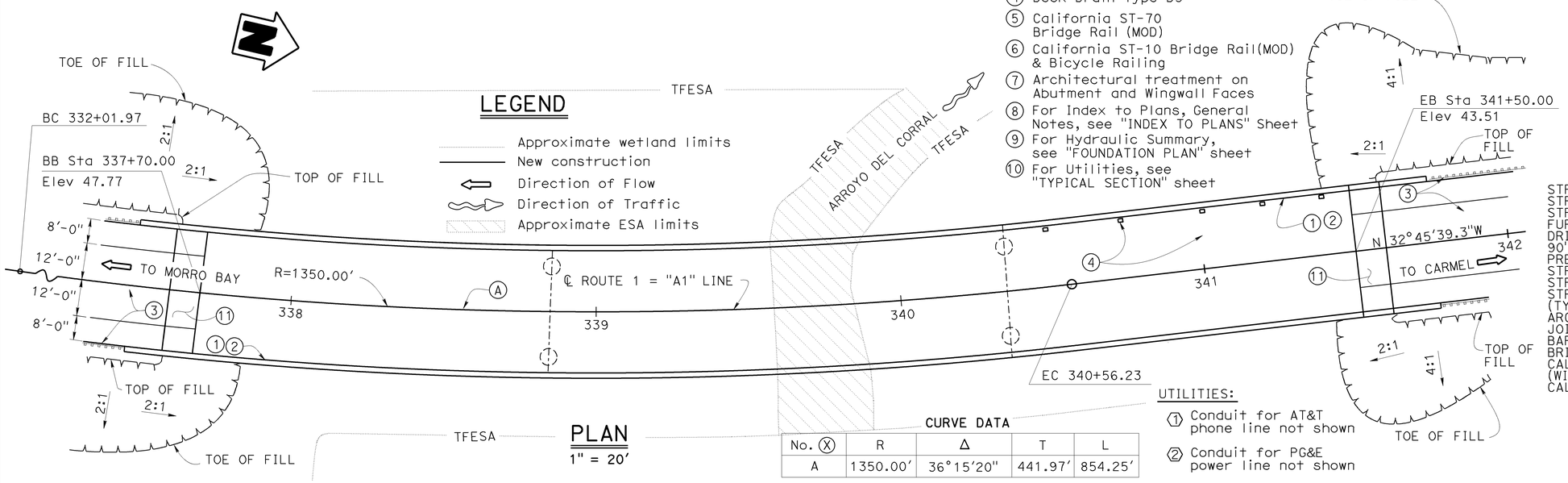

LEGEND

- Approximate wetland limits
- New construction
- Direction of Flow
- Direction of Traffic
- Approximate ESA limits

PLAN

1" = 20'

CURVE DATA

No. (X)	R	Δ	T	L
A	1350.00'	36°15'20"	441.97'	854.25'

UTILITIES:

1. Conduit for AT&T phone line not shown
2. Conduit for PG&E power line not shown

QUANTITIES

STRUCTURE EXCAVATION (BRIDGE)	312 CY
STRUCTURE EXCAVATION (TYPE D)	36 CY
STRUCTURE BACKFILL (BRIDGE)	210 CY
FURNISH STEEL PILING (HP 14X89)	304 LF
DRIVE STEEL PILE (HP 14X89)	22 EA
90" CAST-IN-DRILLED-HOLE CONCRETE PILING	340 LF
PRESTRESSING CAST-IN-PLACE CONCRETE	LUMP SUM
STRUCTURAL CONCRETE, BRIDGE FOOTING	58 CY
STRUCTURAL CONCRETE, BRIDGE	1,449 CY
STRUCTURAL CONCRETE, APPROACH SLAB (TYPE EQ)	24 CY
ARCHITECTURAL TREATMENT	2,580 SQFT
JOINT SEAL (MR 2")	87 LF
BAR REINFORCING STEEL (BRIDGE)	487,400 LB
BRIDGE DECK DRAINAGE SYSTEM	3,430 LB
CALIFORNIA ST-10 BRIDGE RAIL (MODIFIED) (WITH BICYCLE RAILING)	420 LF
CALIFORNIA ST-70 BRIDGE RAIL (MODIFIED)	429 LF

MIKE POPE
DESIGN ENGINEER

	BY	CHECKED
DESIGN	CORY COWDEN/ MS	MATT GIOVANNONI
DETAILS	S. DUTTA/F. RASHEDI	JE/ MATT SCHOTT
QUANTITIES	MATT GIOVANNONI	MIKE POPE

LOAD & RESISTANCE FACTOR DESIGN — LIVE LOADING: HL93 W/"LOW-BOY"; PERMIT DESIGN VEHICLE

	BY	CHECKED
LAYOUT	CORY COWDEN/MS	MATT GIOVANNONI
SPECIFICATIONS	TODD GEERTS	PLANS AND SPECS COMPARED TODD GEERTS

ORIGINAL SCALE IN INCHES FOR REDUCED PLANS 0 1 2 3

STATE OF CALIFORNIA
DEPARTMENT OF TRANSPORTATION

DIVISION OF ENGINEERING SERVICES
STRUCTURE DESIGN
DESIGN BRANCH 18

BRIDGE NO. 49-0259
POST MILE R 64.86

ARROYO DEL CORRAL BRIDGE
GENERAL PLAN

UNIT: 3603
PROJECT NUMBER & PHASE: 0500000576
CONTRACT NO.: 05-492801

DISREGARD PRINTS BEARING EARLIER REVISION DATES — REVISION DATES 11-16-11 6-28-12 12-10-13

SHEET 1 OF 29

USERNAME => s115755 DATE PLOTTED => 16-DEC-2014 TIME PLOTTED => 14:09

STRUCTURES DESIGN GENERAL PLAN SHEET (ENGLISH) (REV.09-01-10)

FILE => 49-0259-a-gp.dgn

DIST	COUNTY	ROUTE	POST MILES TOTAL PROJECT	SHEET No.	TOTAL SHEETS
05	SLO	1	64.0/R66.9	215	265

REGISTERED CIVIL ENGINEER 10-27-14 DATE

10-27-14
PLANS APPROVAL DATE

REGISTERED PROFESSIONAL ENGINEER MICHAEL R POPE No. C054503 Exp 12/31/15 CIVIL STATE OF CALIFORNIA

The State of California or its officers or agents shall not be responsible for the accuracy or completeness of scanned copies of this plan sheet.

GENERAL NOTES
LOAD AND RESISTANCE FACTOR DESIGN

DESIGN:
AASHTO LRFD Bridge Design Specifications, 4th edition and the Caltrans Amendments, preface dated November 2011

SEISMIC DESIGN:
Caltrans Seismic Design Criteria (SDC), Version 1.6, November 2010

DEAD LOAD:
Includes 35 psf for future wearing surface

LIVE LOADING:
HL93 and permit design load

SEISMIC LOADING:
See "ACCELERATION RESPONSE SPECTRA CURVE"
Soil Profile: Vs30 = 1500 ft/sec for the top 100 ft of soil
Moment Magnitude: Mmax = 7.5
Peak Ground Acceleration = 0.50 g

CONCRETE:
f_y = 60 ksi
f'_c = See "CONCRETE STRENGTH AND TYPE LIMITS".

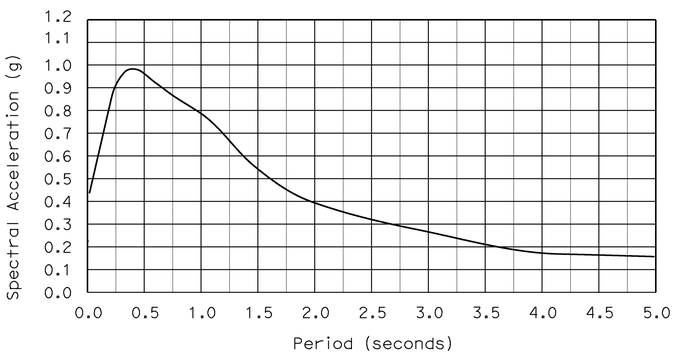

ACCELERATION RESPONSE SPECTRA CURVE

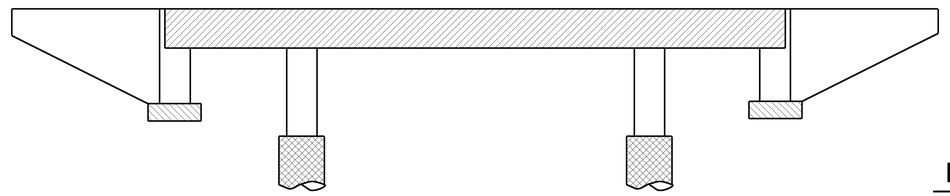

STRUCTURAL CONCRETE, BRIDGE (3600 psi at 28 DAYS)
STRUCTURAL CONCRETE, BRIDGE (4000 psi at 28 DAYS)
STRUCTURAL CONCRETE, BRIDGE FOOTING (3600 psi at 28 DAYS)
CIDH CONCRETE PILE (3600 psi at 28 DAYS)

CONCRETE STRENGTH AND TYPE LIMITS

No Scale

PILE DATA TABLE

LOCATION	PILE TYPE	NOMINAL RESISTANCE (kips) COMPRESSION	NOMINAL RESISTANCE (kips) TENSION	CUT-OFF ELEVATION (ft)	DESIGN TIP ELEVATIONS (ft)	SPECIFIED TIP ELEVATION (ft)
ABUTMENT 1	HP 14X89	360	—	30.9	17.0 (c)	17.0
PIER 2	90"ϕ CIDH	3560	—	9.7 (a) 10.1 (b)	-90.0 (c), -35.0 (d)	-90.0
PIER 3	90"ϕ CIDH	3560	—	8.0 (a) 10.6 (b)	-61.0 (c), -12.0 (d)	-61.0
ABUTMENT 4	HP 14X89	320	—	27.9	15.0 (c)	15.0

1. Cut off elevations:
   (a) left column, (b) right column
2. Design tip elevations are controlled by:
   (c) Compression, (d) lateral load
3. There are no design tip elevations for settlements because the abutment piles are driven to rock and the CIDH piles at pier are embedded into rock.

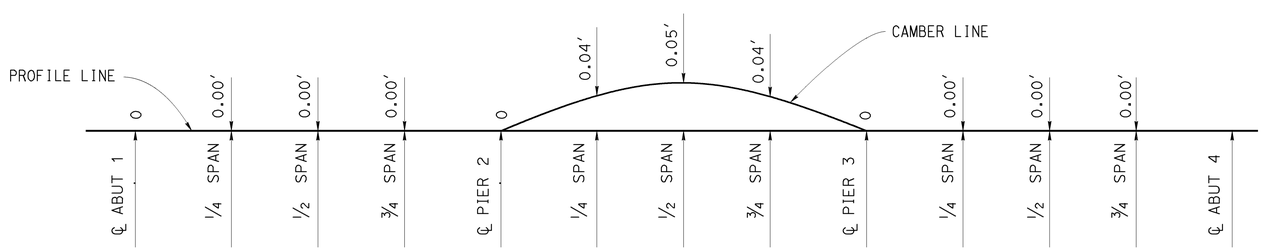

CAMBER DIAGRAM

NO SCALE

(Camber value shown do not include allowance for falsework settlement)

INDEX TO PLANS

Sheet No.	Title
1.	GENERAL PLAN
2.	INDEX TO PLANS
3.	DECK CONTOURS
4.	FOUNDATION PLAN
5.	ABUTMENT LAYOUT
6.	ABUTMENT DETAILS NO. 1
7.	ABUTMENT DETAILS NO. 2
8.	PIER LAYOUT
9.	PIER DETAILS NO. 1
10.	TYPICAL SECTION
11.	GIRDER LAYOUT NO.1
12.	GIRDER LAYOUT NO.2
13.	ADDITIONAL GIRDER REINFORCEMENT
14.	CALIFORNIA ST-10 BRIDGE RAIL(MOD) DETAILS NO. 1
15.	CALIFORNIA ST-10 BRIDGE RAIL(MOD) DETAILS NO. 2
16.	CALIFORNIA ST-70 BRIDGE RAIL(MOD) DETAILS NO. 1
17.	CALIFORNIA ST-70 BRIDGE RAIL(MOD) DETAILS NO. 2
18.	CALIFORNIA ST-70 BRIDGE RAIL(MOD) DETAILS NO. 3
19.	CALIFORNIA ST-70 BRIDGE RAIL(MOD) DETAILS NO. 4
20.	CALIFORNIA ST-70 BRIDGE RAIL(MOD) DETAILS NO. 5
21.	ARCHITECTURAL TREATMENT DETAILS NO. 1
22.	ARCHITECTURAL TREATMENT DETAILS NO. 2
23.	STRUCTURE APPROACH TYPE EQ (10)
24.	STRUCTURE APPROACH DRAINAGE DETAILS
25.	LOG OF TEST BORINGS NO. 1
26.	LOG OF TEST BORINGS NO. 2
27.	LOG OF TEST BORINGS NO. 3
28.	LOG OF TEST BORINGS NO. 4
29.	LOG OF TEST BORINGS NO. 5

STANDARD PLANS DATED 2010

A10A	ABBREVIATIONS
RSP A10B	ABBREVIATIONS
A10C-A10E	LINES & SYMBOLS
A10F-A10G	LEGEND SOIL
A10H	LEGEND ROCK
A62B	LIMITS OF PAYMENT FOR EXCAVATION AND BACKFILL BRIDGE SURCHARGE AND WALL
A62C	LIMITS OF PAYMENT FOR EXCAVATION AND BACKFILL BRIDGE
B0-1	BRIDGE DETAILS
B0-3	BRIDGE DETAILS
B0-5	BRIDGE DETAILS
B0-13	BRIDGE DETAILS
B6-21	JOINT SEALS (MAXIMUM MOVEMENT RATING = 2")
B7-1	BOX GIRDER DETAILS
B7-6	DECK DRAIN TYPES D-1 AND D-2
B7-7	DECK DRAIN - TYPE D-3
B7-8	DECK DRAINAGE DETAILS
B7-10	UTILITY OPENING-BOX GIRDER
B7-11	UTILITY DETAILS
RSP B8-5	CAST-IN-PLACE POST-TENSIONED GIRDER DETAILS
B11-68	CALIFORNIA ST-10 BRIDGE RAIL (SHEET 1 OF 3)
RSP B11-69	CALIFORNIA ST-10 BRIDGE RAIL (SHEET 2 OF 3)
B11-70	CALIFORNIA ST-10 BRIDGE RAIL (SHEET 3 OF 3)
B14-3	COMMUNICATION AND SPRINKLER CONTROL CONDUITS (CONDUITS LESS THAN 4")
B14-5	WATER SUPPLY LINE (DETAILS) (PIPE SIZES LESS THAN 4")

STANDARD PLAN SHEET NO.
DETAIL NO.

	BY	CHECKED
DESIGN	M. SCHOTT/ M. GIOVANNONI	MATT GIOVANNONI
DETAILS	JINLI GUO	MATT GIOVANNONI
QUANTITIES	MATT GIOVANNONI	MICHAEL POPE

STATE OF CALIFORNIA
DEPARTMENT OF TRANSPORTATION

DIVISION OF ENGINEERING SERVICES
STRUCTURE DESIGN
DESIGN BRANCH 18

BRIDGE NO. 49-0259
POST MILE R64.86

ARROYO DEL CORRAL BRIDGE
INDEX TO PLANS

STRUCTURES DESIGN DETAIL SHEET (ENGLISH) (REV. 09-01-10)

ORIGINAL SCALE IN INCHES FOR REDUCED PLANS 0 1 2 3

UNIT: 3603
PROJECT NUMBER & PHASE: 0500000576
CONTRACT NO.: 05-492801

DISREGARD PRINTS BEARING EARLIER REVISION DATES
REVISION DATES 10/29/12 11/16/12

SHEET 2 OF 29

FILE => 49-0259-a-itp.dgn

USERNAME => s115755 DATE PLOTTED => 16-DEC-2014 TIME PLOTTED => 14:09

DIST	COUNTY	ROUTE	POST MILES TOTAL PROJECT	SHEET No.	TOTAL SHEETS
05	SLO	1	64.0/R66.9	216	265

REGISTERED CIVIL ENGINEER 10-27-14 DATE

10-27-14
PLANS APPROVAL DATE

REGISTERED PROFESSIONAL ENGINEER
MICHAEL R POPE
No. C054503
Exp. 12/31/15
CIVIL
STATE OF CALIFORNIA

The State of California or its officers or agents shall not be responsible for the accuracy or completeness of electronic copies of this plan sheet.

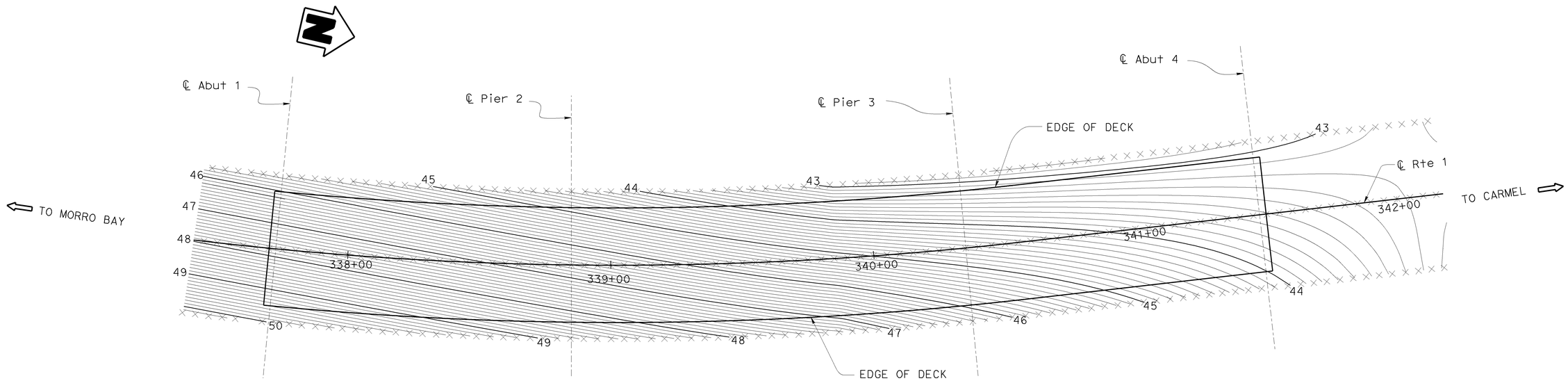

DECK CONTOURS

1" = 20'

NOTES:

× = 5.0' intervals along LOL

1. Contour interval = 0.1'
2. Contours do not include camber

DESIGN	BY CC/ MAT SCHOTT	CHECKED MATT GIOVANNONI	
DETAILS	BY MINH TRAN	CHECKED MATT GIOVANNONI	
QUANTITIES	BY MATT GIOVANNONI	CHECKED MIKE POPE	

STATE OF CALIFORNIA
DEPARTMENT OF TRANSPORTATION

DIVISION OF ENGINEERING SERVICES
STRUCTURE DESIGN
DESIGN BRANCH 18

BRIDGE NO. 49-0259
POST MILE R 64.86

ARROYO DEL CORRAL BRIDGE
DECK CONTOURS

STRUCTURES DESIGN DETAIL SHEET (ENGLISH) (REV. 09-01-10)

ORIGINAL SCALE IN INCHES FOR REDUCED PLANS 0 1 2 3

UNIT: 3603
PROJECT NUMBER & PHASE: 0500000576 1
CONTRACT NO.: 05-492801

DISREGARD PRINTS BEARING EARLIER REVISION DATES

REVISION DATES 6-22-12 11-16-12

SHEET 3 OF 29

FILE => 49-0259-d-dc.dgn

USERNAME => s115755 DATE PLOTTED => 16-DEC-2014 TIME PLOTTED => 14:09

DIST	COUNTY	ROUTE	POST MILES TOTAL PROJECT	SHEET No.	TOTAL SHEETS
05	SLO	1	64.0/R66.9	217	265

REGISTERED CIVIL ENGINEER 10-27-14 DATE

10-27-14
PLANS APPROVAL DATE

REGISTERED PROFESSIONAL ENGINEER MICHAEL R POPE No. C054503 Exp 12/31/15 CIVIL STATE OF CALIFORNIA

The State of California or its officers or agents shall not be responsible for the accuracy or completeness of electronic copies of this plan sheet.

CURVE DATA

No.	R	Δ	T	L
Ⓐ	1350.00	36°15'20"	441.97	854.25

HYDROLOGIC SUMMARY

DRAINAGE AREA:1.26 SQUARE MILFS

	DESIGN FLOOD	BASE FLOOD	OVERTOPPING FLOOD
FREQUENCY (YEARS)	N/A	N/A	N/A
DISCHARGE (CUBIC METERS PER SECOND)	3060	N/A	N/A
WATER SURFACE ELEV. AT BRIDGE (METERS)	16.70	N/A	N/A

FLOOD PLAIN DATA ARE BASED UPON INFORMATION AVAILABLE WHEN THE PLANS WERE PREPARED AND ARE SHOWN TO MEET FEDERAL REQUIREMENTS. THE ACCURACY OF SAID INFORMATION IS NOT WARRANTED BY THE STATE AND INTERESTED OR AFFECTED PARTIES SHOULD MAKE THEIR OWN INVESTIGATIONS.

NOTES: XXXX

DENOTES BOTTTOM OF FOOTING ELEVATION

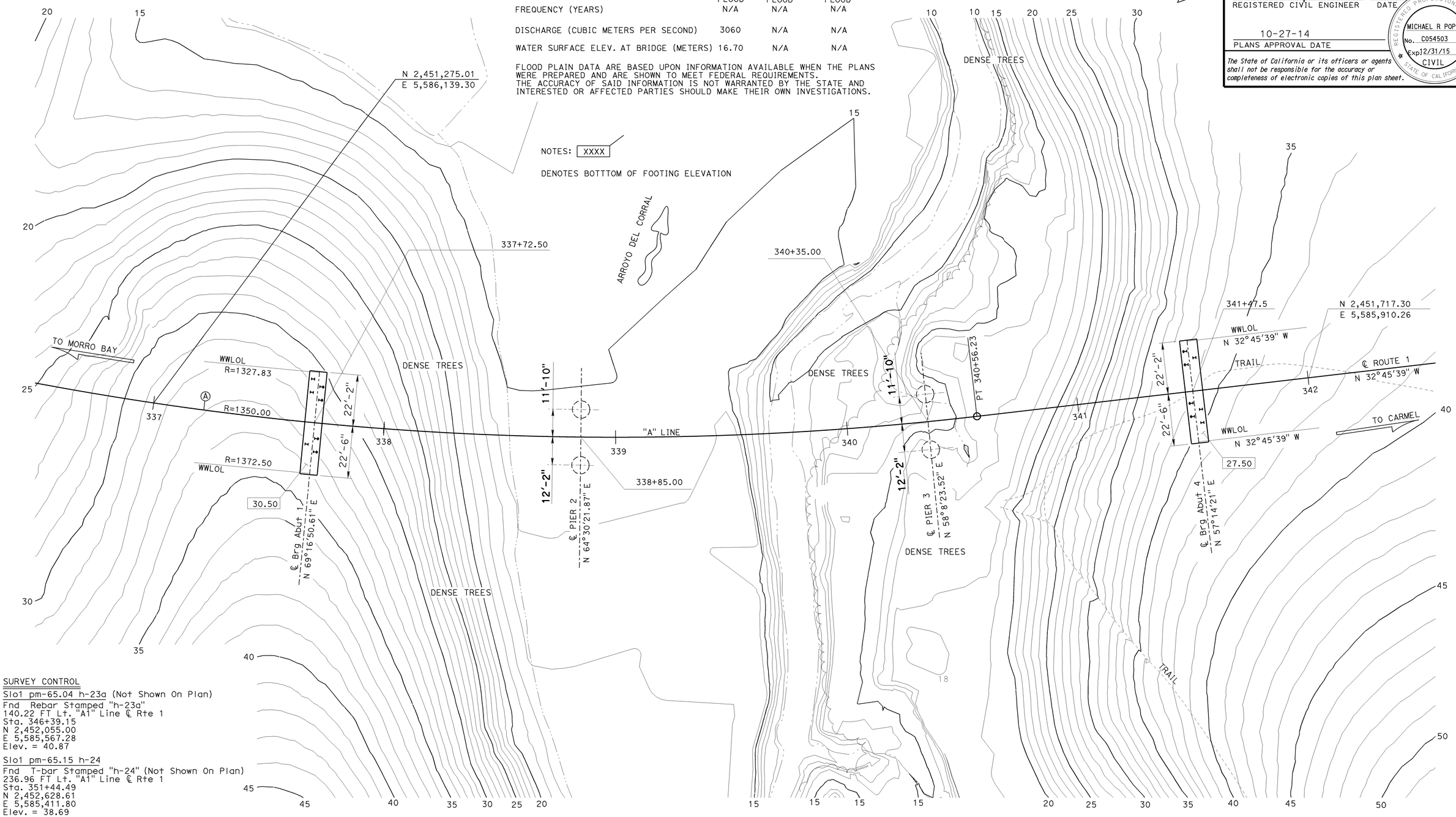

SURVEY CONTROL

Slo1 pm-65.04 h-23a (Not Shown On Plan)
Fnd Rebar Stamped "h-23a"
140.22 FT Lt. "A1" Line ℄ Rte 1
Sta. 346+39.15
N 2,452,055.00
E 5,585,567.28
Elev. = 40.87

Slo1 pm-65.15 h-24
Fnd T-bar Stamped "h-24" (Not Shown On Plan)
236.96 FT Lt. "A1" Line ℄ Rte 1
Sta. 351+44.49
N 2,452,628.61
E 5,585,411.80
Elev. = 38.69

PRELIMINARY INVESTIGATION SECTION

SCALE	VERT.DATUM NAVD88	PHOTOGRAMMETRY AS OF: X			
1"=20'	HORZ.DATUM NAD83(92) (1991.35)	SURVEYED	BY District	CHECKED	BY J.Borden 06/2011
ALIGNMENT TIES Dist. Traverse Sheet		DRAFTED	BY T.Zolnikov 06/2011	CHECKED	BY L.Lew 06/2011

	BY	CHECKED
DESIGN	MATT SCHOTT	MATT GIOVANNONI
DETAILS	FARIDEH RASHEDI	ZIHAN YAN
QUANTITIES	MATT GIOVANNONI	MICHAEL POPE

STATE OF CALIFORNIA
DEPARTMENT OF TRANSPORTATION

DIVISION OF ENGINEERING SERVICES
STRUCTURE DESIGN
DESIGN BRANCH 18

BRIDGE NO. 49-0259
POST MILE R 64.86

ARROYO DEL CORRAL BRIDGE
FOUNDATION PLAN

STRUCTURES FOUNDATION PLAN SHEET (ENGLISH) (REV. 09-01-10)

ORIGINAL SCALE IN INCHES FOR REDUCED PLANS 0 1 2 3

UNIT: 3646
PROJECT NUMBER & PHASE: 0500000576 1
CONTRACT NO.: 07-49-0259

DISREGARD PRINTS BEARING EARLIER REVISION DATES

REVISION DATES 06/22/11 6-18-12 9-14-12 11-16-12

SHEET 4 OF 29

FILE => 49-0259-e-fdpl.dgn

DIST	COUNTY	ROUTE	POST MILES TOTAL PROJECT	SHEET No.	TOTAL SHEETS
05	SLO	1	64.0/R66.9	218	265

REGISTERED CIVIL ENGINEER 10-27-14 DATE

10-27-14
PLANS APPROVAL DATE

REGISTERED PROFESSIONAL ENGINEER MICHAEL R POPE No. C054503 Exp. 12/31/15 CIVIL STATE OF CALIFORNIA

The State of California or its officers or agents shall not be responsible for the accuracy or completeness of electronic copies of this plan sheet.

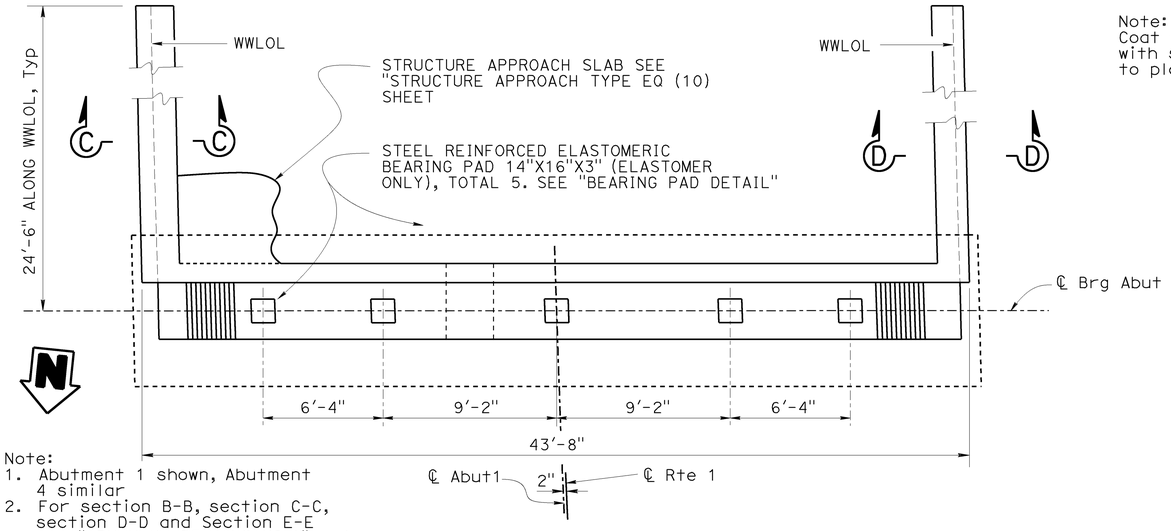

Note:
1. Abutment 1 shown, Abutment 4 similar
2. For section B-B, section C-C, section D-D and Section E-E see "ABUTMENT DETAILS NO.1" and "ABUTMENT DETAILS NO.2" sheet

PLAN
1/4" = 1'-0"

Note:
Coat top of Bearing Pad with silicone grease prior to placing sheet metal.

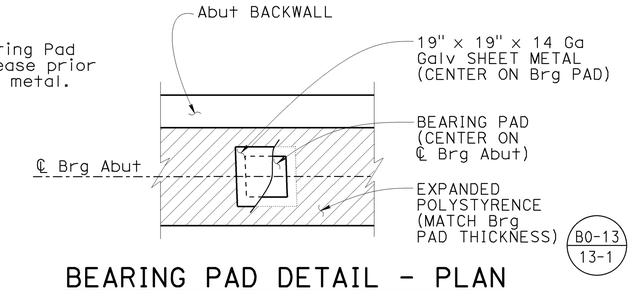

BEARING PAD DETAIL - PLAN
No Scale

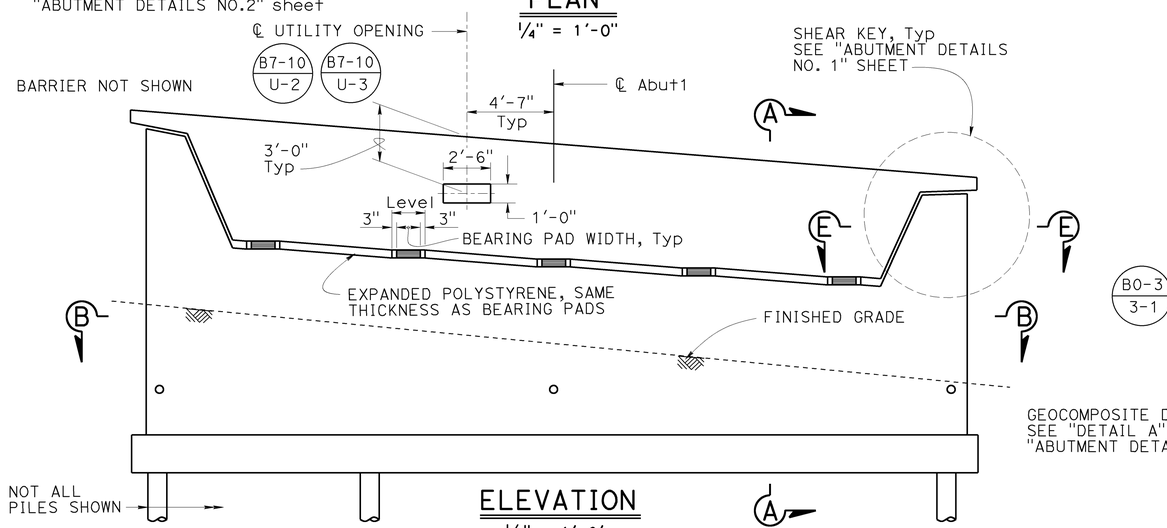

ELEVATION
1/4" = 1'-0'

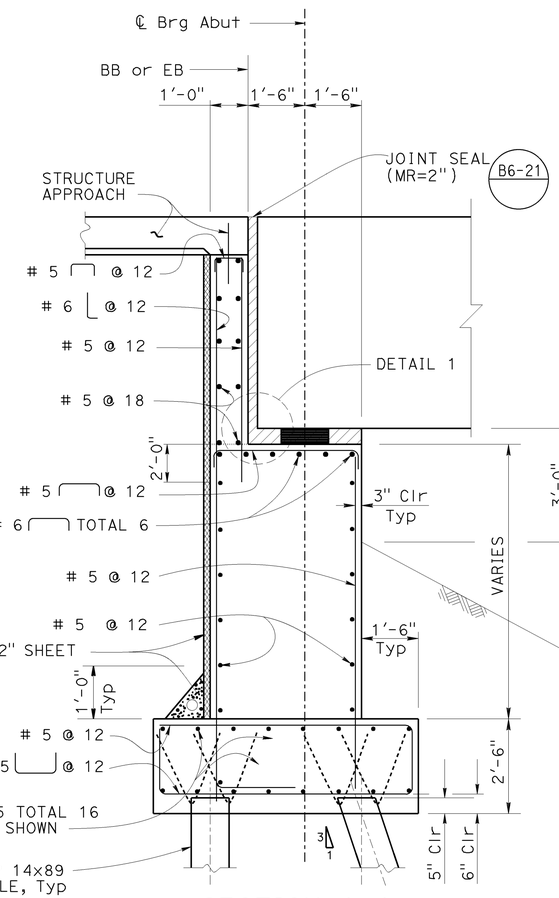

SECTION A-A
1/2" = 1'-0"

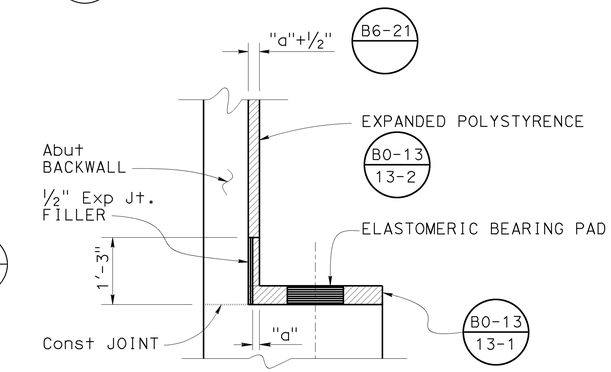

DETAIL 1
NO SCALE

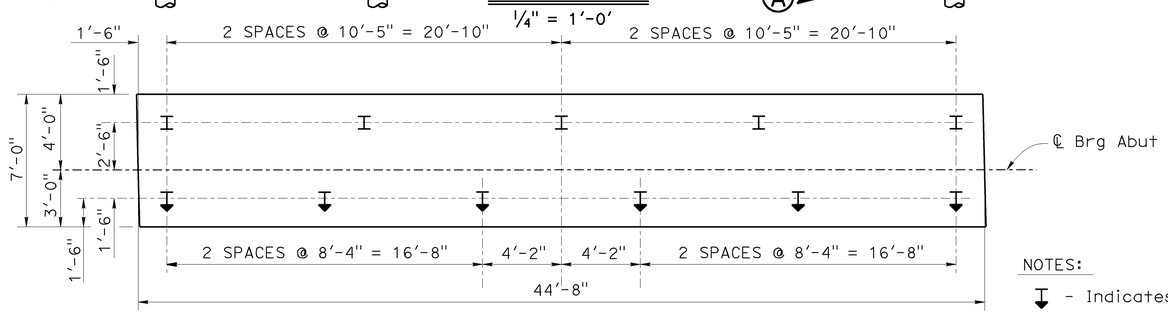

FOOTING PLAN
1/4" = 1'-0'

NOTES:
- Indicates battered piles

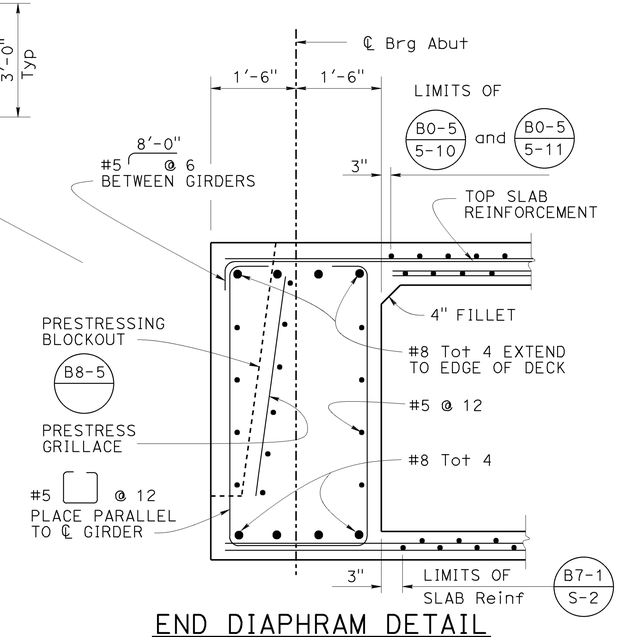

END DIAPHRAM DETAIL
1/2" = 1'-0"

DESIGN	BY M. SCHOTT/ M. GIOVANNONI	CHECKED PREM RIMAL	
DETAILS	BY MINH TRAN	CHECKED PREM RIMAL	
QUANTITIES	BY MATT GIOVANNONI	CHECKED MICHAEL POPE	

STATE OF CALIFORNIA
DEPARTMENT OF TRANSPORTATION

DIVISION OF ENGINEERING SERVICES
STRUCTURE DESIGN
DESIGN BRANCH 18

BRIDGE NO. 49-0259
POST MILE R 64.86

ARROYO DEL CORRAL BRIDGE
ABUTMENT LAYOUT

STRUCTURES DESIGN DETAIL SHEET (ENGLISH) (REV. 09-01-10)

ORIGINAL SCALE IN INCHES FOR REDUCED PLANS 0 1 2 3

UNIT: 3603
PROJECT NUMBER & PHASE: 0500000576
CONTRACT NO.: 07-49-0259

DISREGARD PRINTS BEARING EARLIER REVISION DATES

REVISION DATES 6-25-12 11/16/12

SHEET 5 OF 29

FILE => 49-0259-f-abutlay.dgn

USERNAME => s115755 DATE PLOTTED => 16-DEC-2014 TIME PLOTTED => 14:09

DIST	COUNTY	ROUTE	POST MILES TOTAL PROJECT	SHEET No.	TOTAL SHEETS
05	SLO	1	64.0/R66.9	219	265

REGISTERED CIVIL ENGINEER 10-27-14 DATE

10-27-14
PLANS APPROVAL DATE

REGISTERED PROFESSIONAL ENGINEER MICHAEL R POPE No. C054503 Exp 12/31/15 CIVIL STATE OF CALIFORNIA

The State of California or its officers or agents shall not be responsible for the accuracy or completeness of electronic copies of this plan sheet.

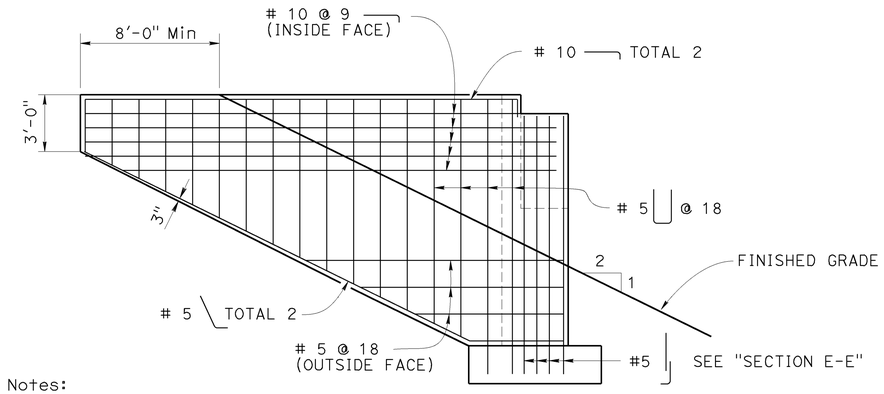

Notes:

1. Abut 1 east wingwall shown, others similar.
2. Bridge rail not shown.

WINGWALL ELEVATION

1/4" = 1'-0"

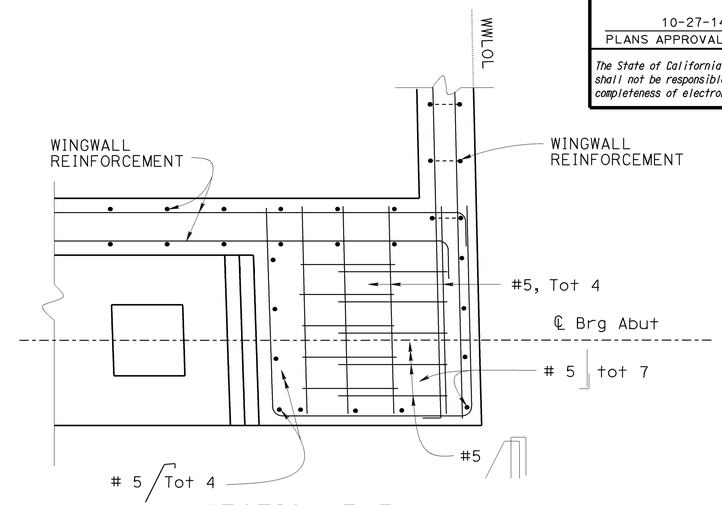

SECTION E-E

3/4" = 1'-0"

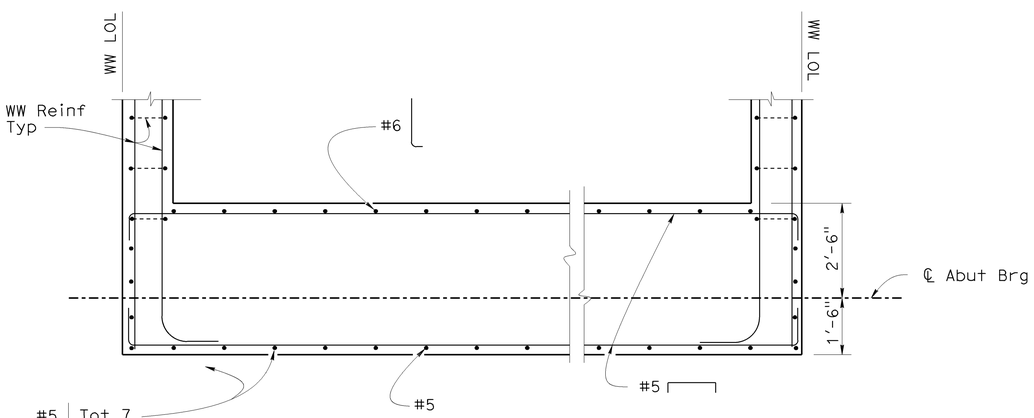

SECTION B-B

1/2" = 1'-0"

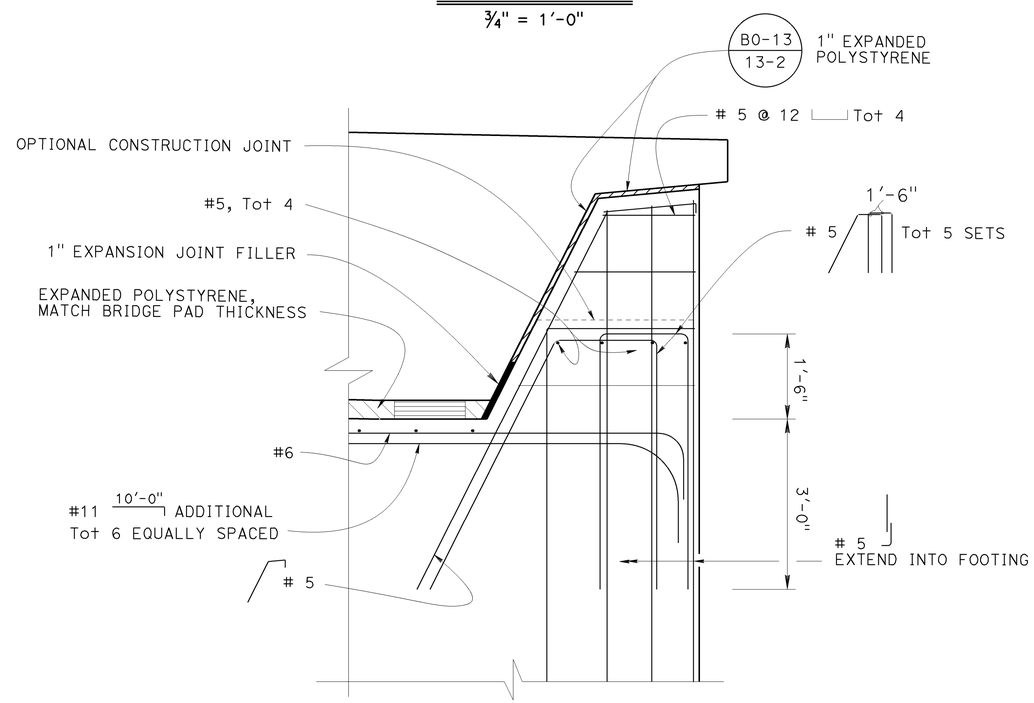

SHEAR KEY DETAIL

3/4" = 1'-0"

DESIGN	BY CORY COWDEN/ MS	CHECKED MATT GIOVANNONI	
DETAILS	BY MINH TRAN	CHECKED MATT GIOVANNONI	
QUANTITIES	BY MATT GIOVANNONI	CHECKED MICHAEL POPE	

STATE OF CALIFORNIA
DEPARTMENT OF TRANSPORTATION

DIVISION OF ENGINEERING SERVICES
STRUCTURE DESIGN
DESIGN BRANCH 18

BRIDGE NO. 49-0259
POST MILE R 64.86

ARROYO DEL CORRAL BRIDGE
ABUTMENT DETAILS NO.1

STRUCTURES DESIGN DETAIL SHEET (ENGLISH) (REV. 09-01-10)

ORIGINAL SCALE IN INCHES FOR REDUCED PLANS 0 1 2 3

UNIT: 3603
PROJECT NUMBER & PHASE: 0500000576
CONTRACT NO.: 07-49-0259

DISREGARD PRINTS BEARING EARLIER REVISION DATES

REVISION DATES 8-23-12 11/16/12

SHEET 6 OF 29

FILE => 49-0259-f-b_abutdet01.dgn

USERNAME => s115755 DATE PLOTTED => 16-DEC-2014 TIME PLOTTED => 14:09

DIST	COUNTY	ROUTE	POST MILES TOTAL PROJECT	SHEET No.	TOTAL SHEETS
05	SLO	1	64.0/R66.9	220	265

REGISTERED CIVIL ENGINEER 10-27-14 DATE

10-27-14
PLANS APPROVAL DATE

REGISTERED PROFESSIONAL ENGINEER MICHAEL R POPE No. C054503 Exp 12/31/15 CIVIL STATE OF CALIFORNIA

The State of California or its officers or agents shall not be responsible for the accuracy or completeness of electronic copies of this plan sheet.

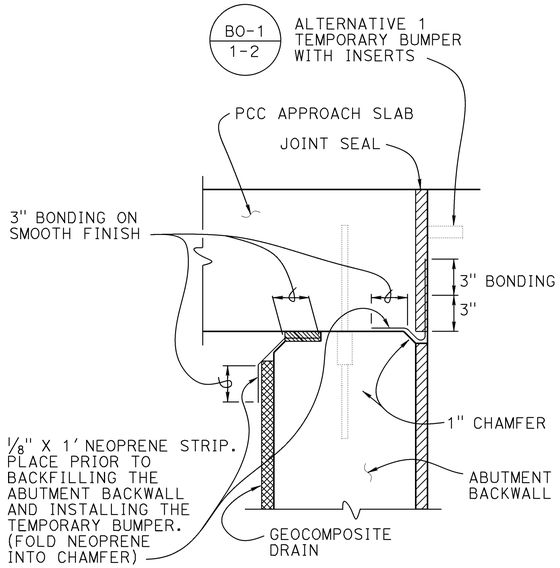

JOINT PROTECTION DETAIL

No Scale

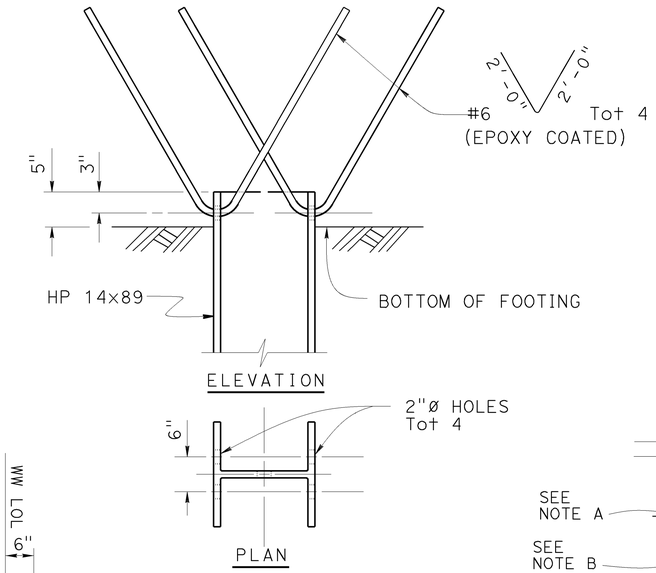

STEEL PILE ANCHOR

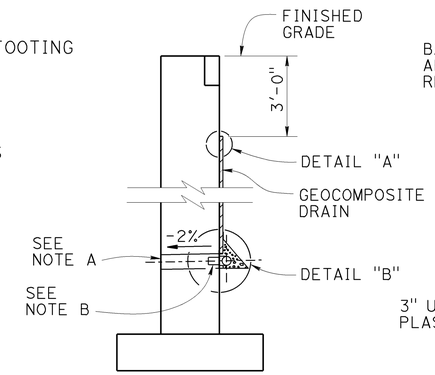

WALL SECTION

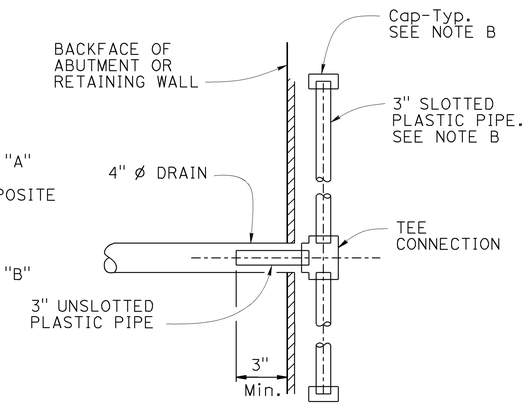

SECTION A-A

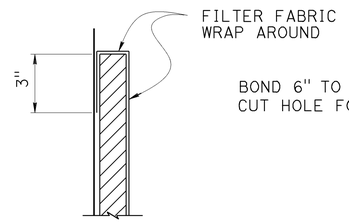

DETAIL "A"

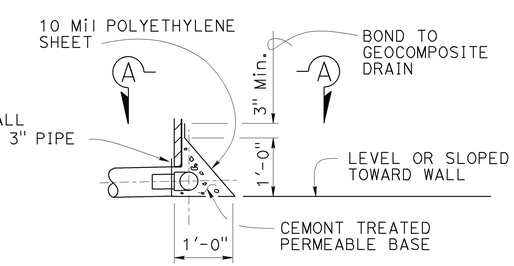

DETAIL "B"

WEEP HOLE AND GEOCOMPOSITE DRAIN

ALTERNATIVE TO BRIDGE DETAIL BO-3 / 3-1

Notes:

A. 4" ø drains at intermediate sag points and at 25' max center to center (9' c-c for Type 3 and 9'-3" c-c for Type 4 retaining walls).
For walls adjacent to sidewalks or curbs, provide 4" cast iron or asbestos cement pipe under the sidewalk to discharge through curb face.
Exposed wall drains shall be located 3"± above finished grade.

B. Geocomposite drain, cement treated permeable base, and 3"ø slotted plastic pipe continuous behind retaining wall or abutment. Cap ends of pipe. Provide "Tee" connection at each 4" ø drain.

C. Connect the low end of plastic pipe to the main outlet pipe as apprlicable.

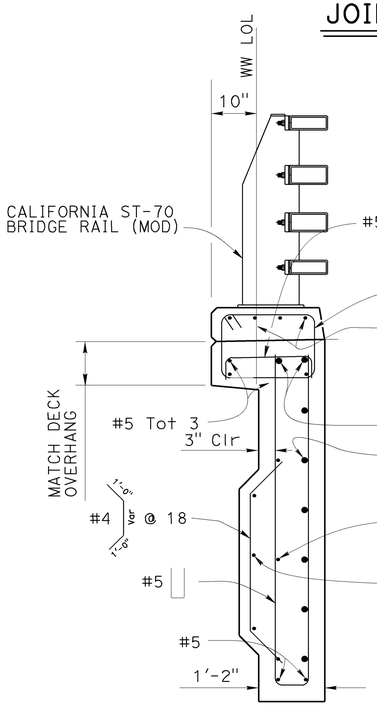

* EPOXY - COATED Reinf. (PRE-ABRICATED)

SECTION C-C

3/4" = 1'-0"

NOTE:
Abut 1 east wingwall Shown,
Abut 4 east wingwall similar

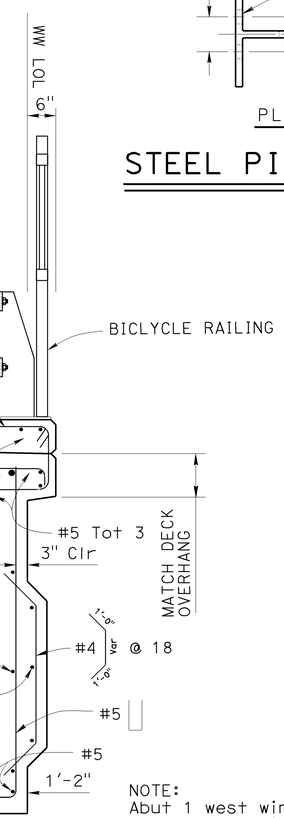

SECTION D-D

3/4" = 1'-0"

NOTE:
Abut 1 west wingwall shown,
Abut 4 west wingwall similar

DESIGN	BY COERY COWDEN/ MS	CHECKED MATT GIOVANNONI	
DETAILS	BY MINH TRAN	CHECKED MATT GIOVANNONI	
QUANTITIES	BY MATT GIOVANNONI	CHECKED MICHAEL POPE	

STATE OF CALIFORNIA
DEPARTMENT OF TRANSPORTATION

DIVISION OF ENGINEERING SERVICES
STRUCTURE DESIGN
DESIGN BRANCH 18

BRIDGE NO. 49-0259
POST MILE R 64.86

ARROYO DEL CORRAL BRIDGE
ABUTMENT DETAILS NO.2

STRUCTURES DESIGN DETAIL SHEET (ENGLISH) (REV. 09-01-10)

ORIGINAL SCALE IN INCHES FOR REDUCED PLANS 0 1 2 3

UNIT: 3603
PROJECT NUMBER & PHASE: 0500000576
CONTRACT NO.: 07-49-0259

DISREGARD PRINTS BEARING EARLIER REVISION DATES

REVISION DATES 6-29-12 11/16/12

SHEET 7 OF 29

FILE => 49-0259-f-c_abtdet02.dgn

USERNAME => s115755 DATE PLOTTED => 16-DEC-2014 TIME PLOTTED => 14:10

DIST	COUNTY	ROUTE	POST MILES TOTAL PROJECT	SHEET No.	TOTAL SHEETS
05	SLO	1	64.0/R66.9	221	265

REGISTERED CIVIL ENGINEER 10-27-14 DATE

10-27-14
PLANS APPROVAL DATE

REGISTERED PROFESSIONAL ENGINEER MICHAL R POPE No. C054503 Exp 12/31/15 CIVIL STATE OF CALIFORNIA

The State of California or its officers or agents shall not be responsible for the accuracy or completeness of electronic copies of this plan sheet.

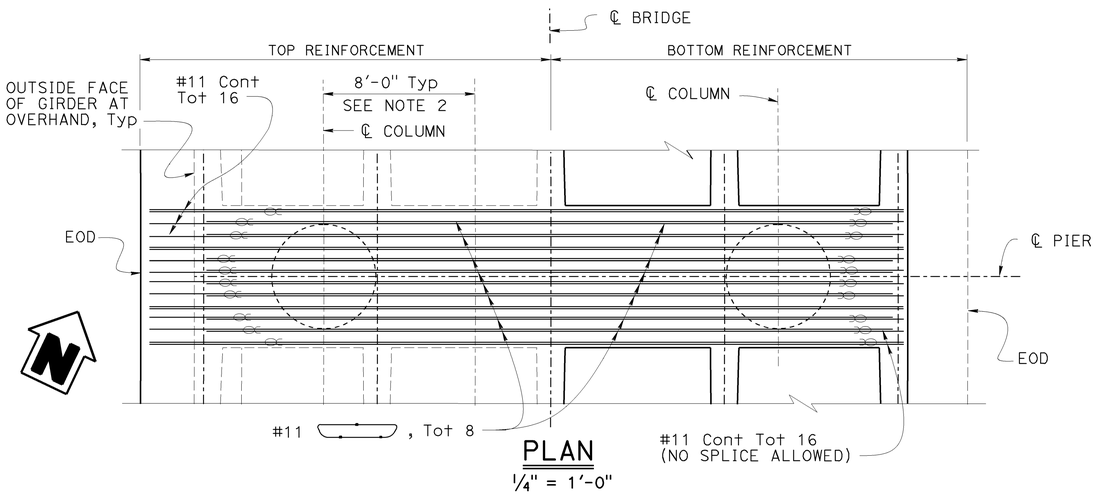

PLAN

1/4" = 1'-0"

Note:
1. Pier 2 shown, Pier 3 similar

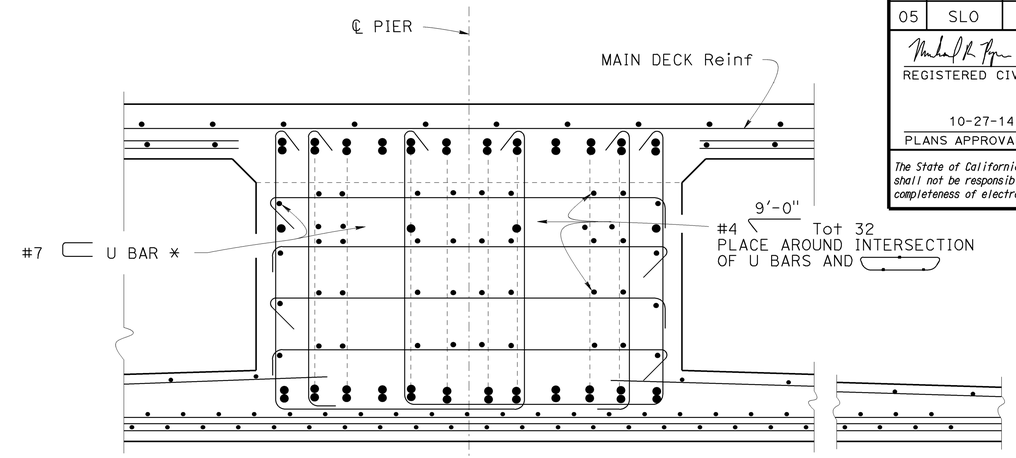

SECTION B-B

3/4" = 1'-0"

* SEE "ELEVATION" FOR U BAR DETAILS
NOTE: For Details not shown, see SECTION A-A

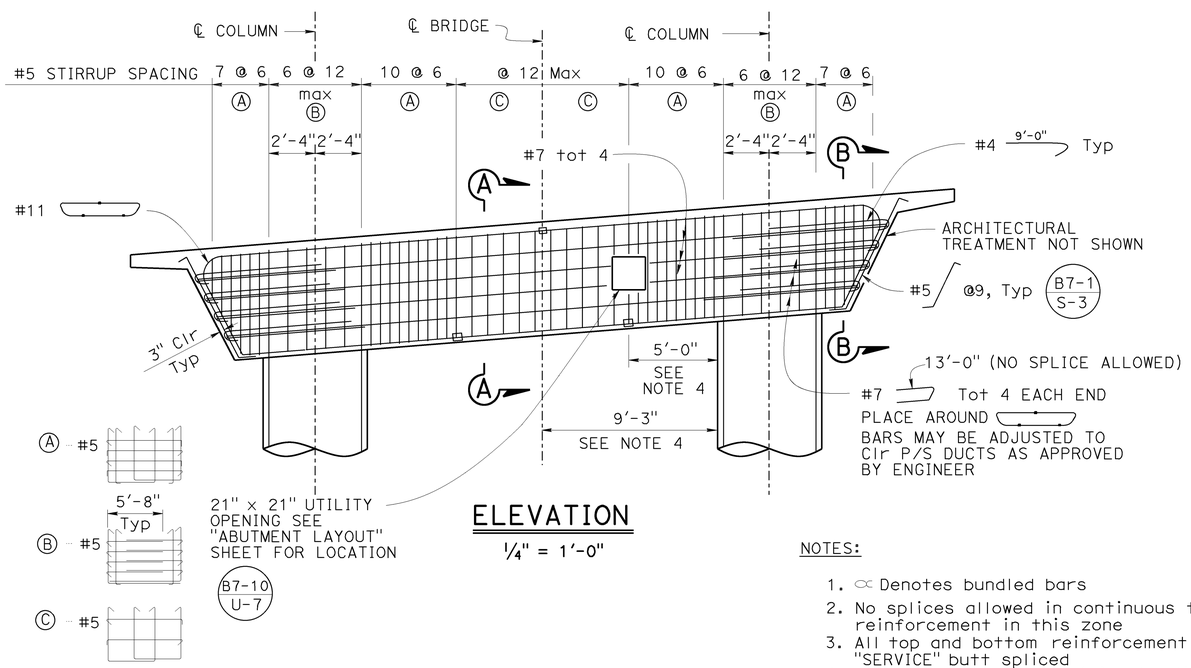

ELEVATION

1/4" = 1'-0"

PIERCAP STIRRUP LEGEND

NOTES:

1. ∝ Denotes bundled bars
2. No splices allowed in continuous top reinforcement in this zone
3. All top and bottom reinforcement is "SERVICE" butt spliced
4. Splice location. No additional splices allowed in #11

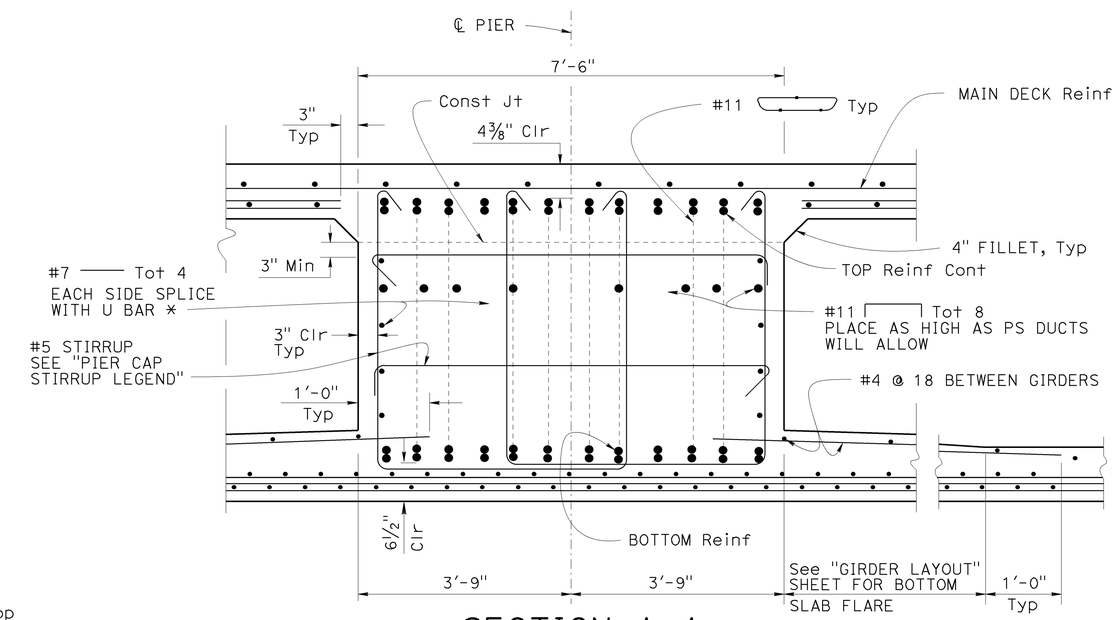

SECTION A-A

3/4" = 1'-0"

* SEE "ELEVATION" FOR U BAR DETAILS

	BY	CHECKED
DESIGN	CC/MS/ M. GIOVANNONI	PREM RIMAL
DETAILS	MINH TRAN	PREM RIMAL
QUANTITIES	MATT GIOVANNONI	MICHAEL POPE

STATE OF CALIFORNIA
DEPARTMENT OF TRANSPORTATION

DIVISION OF ENGINEERING SERVICES
STRUCTURE DESIGN
DESIGN BRANCH 18

BRIDGE NO. 49-0259
POST MILE R 64.86

ARROYO DEL CORRAL BRIDGE
PIER LAYOUT

STRUCTURES DESIGN DETAIL SHEET (ENGLISH) (REV. 09-01-10)

ORIGINAL SCALE IN INCHES FOR REDUCED PLANS 0 1 2 3

UNIT: 3603
PROJECT NUMBER & PHASE: 0500000576 1
CONTRACT NO.: 07-49-0259

DISREGARD PRINTS BEARING EARLIER REVISION DATES

REVISION DATES 7-09-12 12/24/12

SHEET 8 OF 29

FILE => 49-0259-h-a_bentlay.dgn

USERNAME => s115755 DATE PLOTTED => 16-DEC-2014 TIME PLOTTED => 14:10

DIST	COUNTY	ROUTE	POST MILES TOTAL PROJECT	SHEET No.	TOTAL SHEETS
05	SLO	1	64.0/R66.9	222	265

REGISTERED CIVIL ENGINEER 10-27-14 DATE

PLANS APPROVAL DATE 10-27-14

REGISTERED PROFESSIONAL ENGINEER MICHAEL R POPE No. C054503 Exp 12/31/15 CIVIL STATE OF CALIFORNIA

The State of California or its officers or agents shall not be responsible for the accuracy or completeness of electronic copies of this plan sheet.

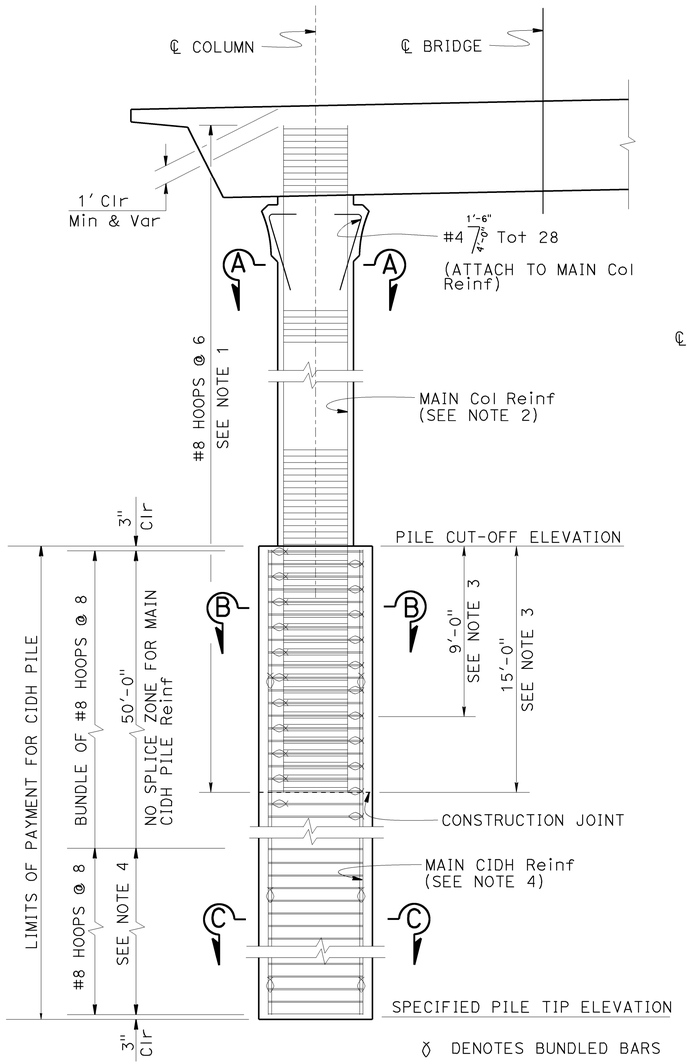

BENT ELEVATION

1/4" = 1'-0"

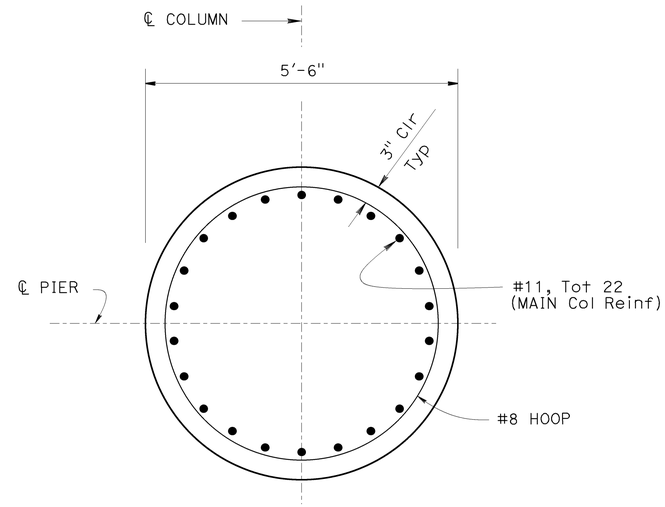

SECTION A-A

3/4" = 1'

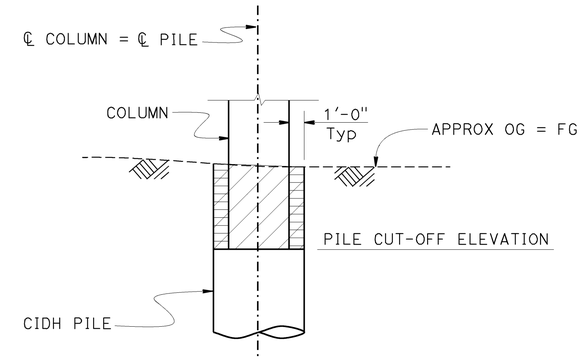

LIMITS FOR STRUCTURE EXCAVATION AND BACKFILL

NO SCALE

LEGEND

DENOTES STRUCTURE EXCAVATION (TYPE D)

DENOTES STRUCTURE BACKFILL

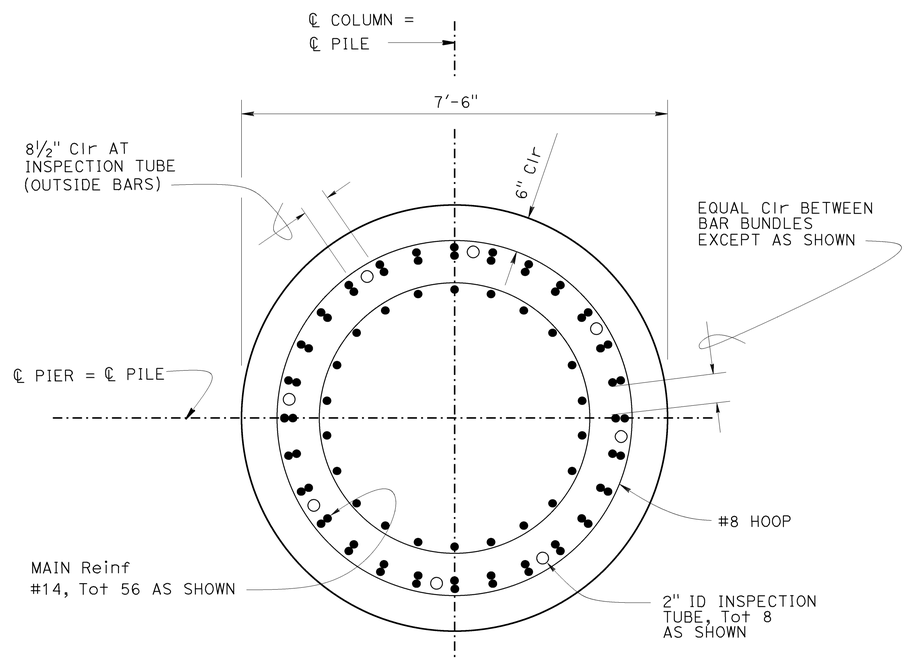

SECTION B-B

3/4" = 1'

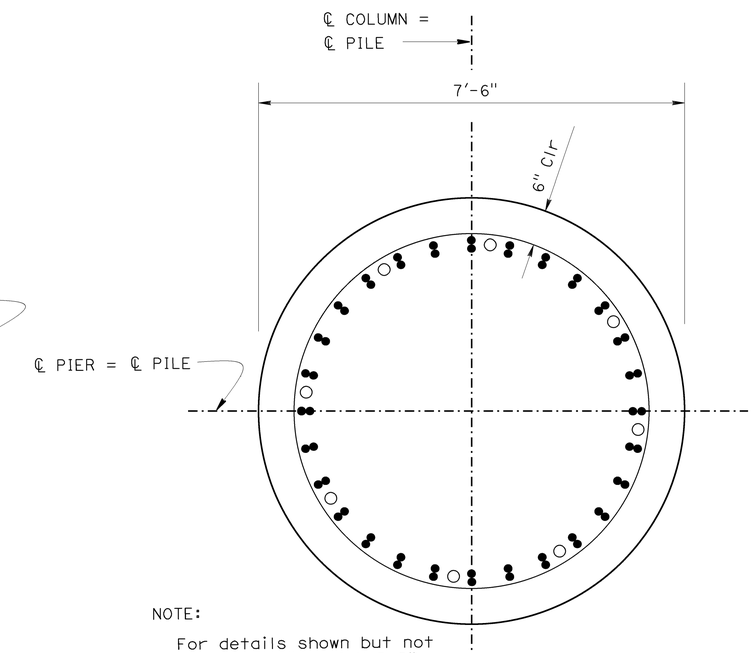

NOTE:

For details shown but not noted, see "SECTION B-B"

SECTION C-C

3/4" = 1'

NOTES:

1. All hoops shall be "ULTIMATE" butt splice continuous.
2. No splices allowed in main Col Reinf.
3. Alternate cut off lengths of main Col Reinf
4. Only staggered "ULTIMATE" butt splices are allowed in main CIDH pile Reinf in designated zone.
5. Pier 2 & 3 left support shown, Right similar

	BY	CHECKED
DESIGN	M SCHOTT/ M GIOVANNONI	PREM RIMAL
DETAILS	JINLI GUO	PREM RIMAL
QUANTITIES	MATT GIOVANNONI	MICHAEL POPE

STATE OF CALIFORNIA DEPARTMENT OF TRANSPORTATION

DIVISION OF ENGINEERING SERVICES STRUCTURE DESIGN DESIGN BRANCH 18

BRIDGE NO. 49-0259 POST MILE R64.86

ARROYO DEL CORRAL BRIDGE
PIER DETAILS NO. 1

STRUCTURES DESIGN DETAIL SHEET (ENGLISH) (REV. 09-01-10)

ORIGINAL SCALE IN INCHES FOR REDUCED PLANS 0 1 2 3

UNIT: 3603
PROJECT NUMBER & PHASE: 0500000576 1 CONTRACT NO.: 05-492801

DISREGARD PRINTS BEARING EARLIER REVISION DATES

REVISION DATES 7/30/12 12/24/12 12/10/13

SHEET 9 OF 29

FILE => 49-0259-n-b_bentdet01.dgn

USERNAME => s115755 DATE PLOTTED => 16-DEC-2014 TIME PLOTTED => 14:10

DIST	COUNTY	ROUTE	POST MILES TOTAL PROJECT	SHEET No.	TOTAL SHEETS
05	SLO	1	64.0/R66.9	223	265

REGISTERED CIVIL ENGINEER 10-27-14 DATE

PLANS APPROVAL DATE 10-27-14

REGISTERED PROFESSIONAL ENGINEER MICHAEL R POPE No. C054503 Exp 12/31/15 CIVIL STATE OF CALIFORNIA

The State of California or its officers or agents shall not be responsible for the accuracy or completeness of scanned copies of this plan sheet.

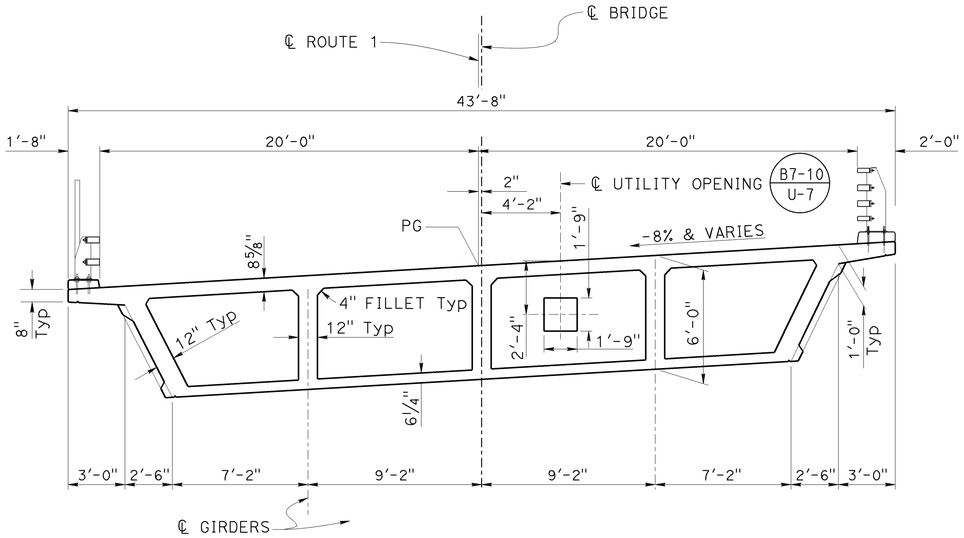

TYPICAL SECTION

B7-1 | B7-10 / U-7 | 14-3

1/4" = 1'-0"

NOTES:

1. For stirrup layout, see "GIRDER LAYOUT" sheets.
2. See "CALIFORNIA ST-70 BRIDGE RAIL(MOD) DETAILS NO. 1" sheet for barrier reinf details.
3. See "CALIFORNIA ST-10 BRIDGE RAIL(MOD) DETAIL NO. 2" sheet for barrier reinf details.

TABLE OF UTILITY CONDUITS

OWNER/TYPE	SIZE	QUANTITY	NOTES
AT&T TELECOMMUNICATION	4Ø	2	
PG & E	6Ø	1	
PG & E	4Ø	2	

NOTE:
For concrete cradle, refer Std Plan B14-3

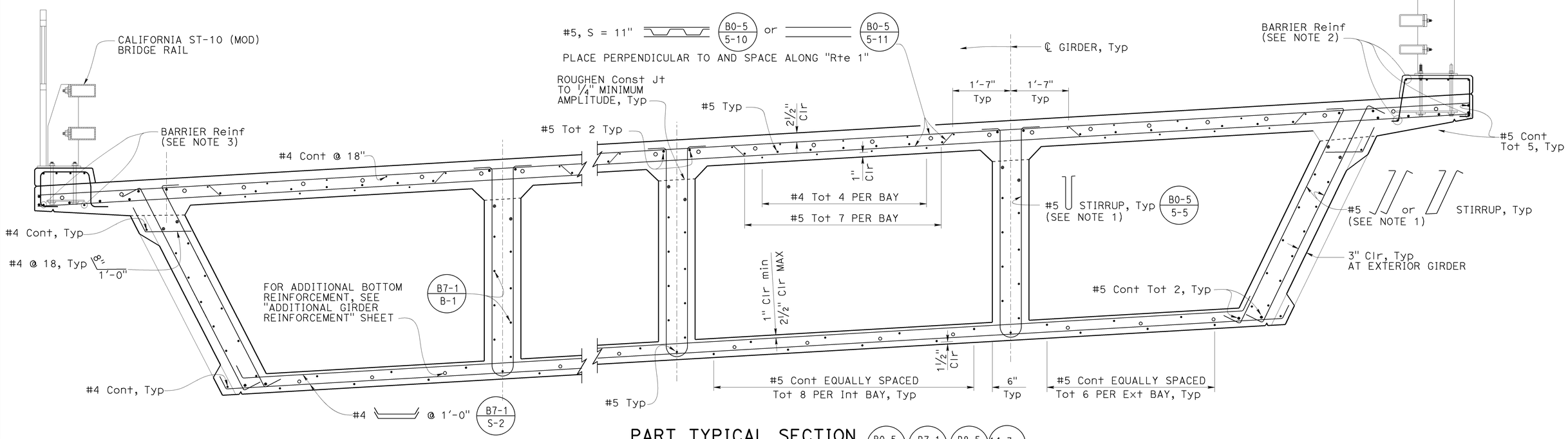

PART TYPICAL SECTION

B0-5 | B7-1 | B8-5 | 14-3

3/4" = 1'-0"

NOTE:
THE CONTRACTOR SHALL VERIFY ALL CONTROLLING FIELD DIMENSIONS BEFORE ORDERING OR FABRICATING ANY MATERIAL.

DESIGN	BY M. SCHOTT/ M. GIOVANNONI	CHECKED MATT GIOVANNONI	
DETAILS	BY JINLI GUO	CHECKED MATT GIOVANNONI	
QUANTITIES	BY MATT GIOVANNONI	CHECKED MICHAEL POPE	

STATE OF CALIFORNIA
DEPARTMENT OF TRANSPORTATION

DIVISION OF ENGINEERING SERVICES
STRUCTURE DESIGN
DESIGN BRANCH 18

BRIDGE NO. 49-0259
POST MILE R64.86

ARROYO DEL CORRAL BRIDGE
TYPICAL SECTION

STRUCTURES DESIGN DETAIL SHEET (ENGLISH) (REV. 09-01-10)

ORIGINAL SCALE IN INCHES FOR REDUCED PLANS 0 1 2 3

UNIT: 3603
PROJECT NUMBER & PHASE: 0500000576
CONTRACT NO.: 05-492801

DISREGARD PRINTS BEARING EARLIER REVISION DATES

REVISION DATES 10/29/12 11/16/12

SHEET 10 OF 29

FILE => 49-0259-k-ts.dgn

USERNAME => s115755 DATE PLOTTED => 16-DEC-2014 TIME PLOTTED => 14:10

DIST	COUNTY	ROUTE	POST MILES TOTAL PROJECT	SHEET No.	TOTAL SHEETS
05	SLO	1	64.0/R66.9	224	265

REGISTERED CIVIL ENGINEER — DATE 10-27-14

PLANS APPROVAL DATE 10-27-14

REGISTERED PROFESSIONAL ENGINEER — MICHAEL R POPE — No. C054503 — Exp 12/31/15 — CIVIL — STATE OF CALIFORNIA

The State of California or its officers or agents shall not be responsible for the accuracy or completeness of electronic copies of this plan sheet.

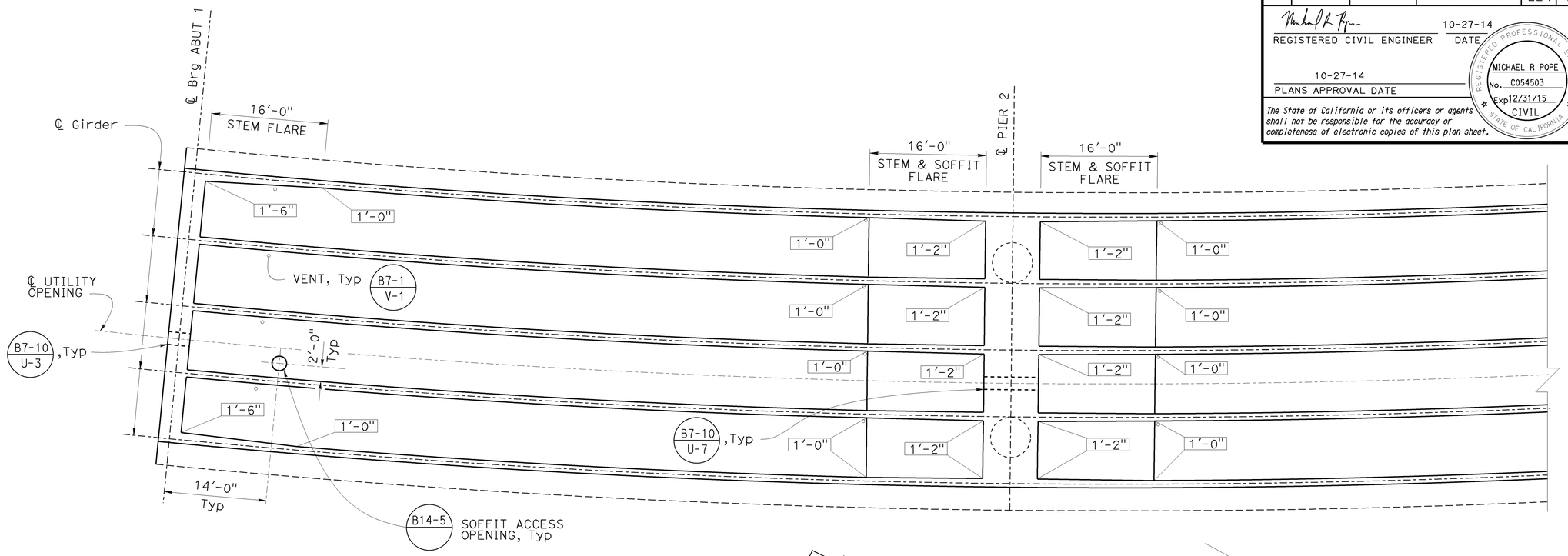

PLAN 1/8" = 1' B0-5 5-10 B0-5 5-11 B7-1 B8-5

Indicates Girder width

PRESTRESSING NOTES

270 KSI Low Relaxation Strand:

P_{jack} = 7500 kips

Anchor Set = 3/8 in

Total Number of Girders = 5

Distribution of prestress force (Pjack) between girders shall not exceed the ratio of 10:9.

Concrete: f'_c = 4,000 psi @ 28 days

f'_{ci} = 3,500 psi @ time of stressing

Contractor shall submit elongation calculations based on initial stress at

⊠ = 0.898 times jacking stress.

Two end stressing.

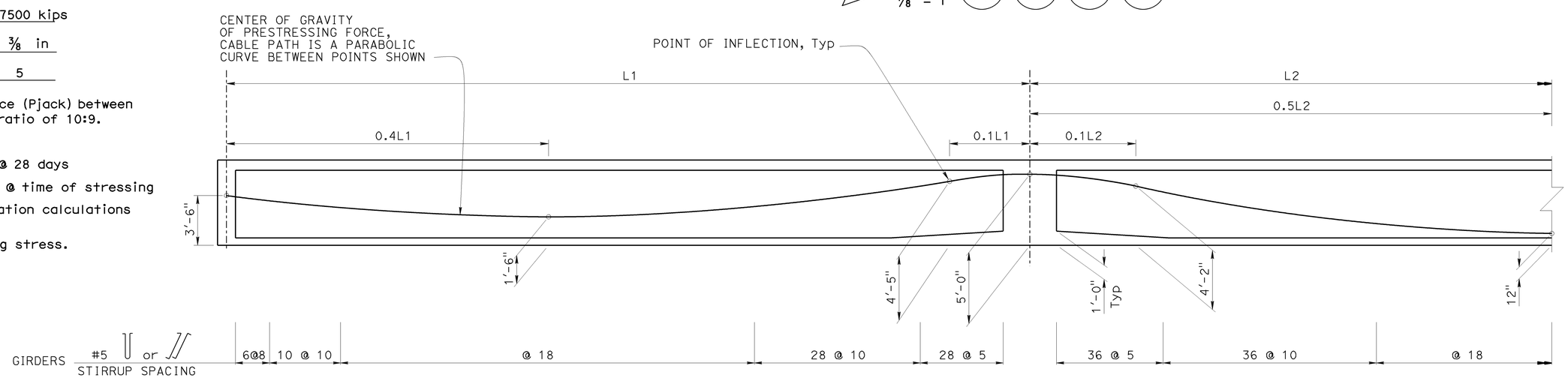

LONGITUDINAL SECTION B0-5 B7-1 B8-5
No Scale

DESIGN	BY CORY COWDEN	CHECKED MATT GIOVANNONI	
DETAILS	BY MINH TRAN	CHECKED MATT GIOVANNONI	
QUANTITIES	BY MATT GIOVANNONI	CHECKED MICHAEL POPE	

STATE OF CALIFORNIA DEPARTMENT OF TRANSPORTATION

DIVISION OF ENGINEERING SERVICES STRUCTURE DESIGN DESIGN BRANCH 18

BRIDGE NO. 49-0259 POST MILE R64.86

ARROYO DEL CORRAL BRIDGE GIRDER LAYOUT NO. 1

STRUCTURES DESIGN DETAIL SHEET (ENGLISH) (REV. 09-01-10)

ORIGINAL SCALE IN INCHES FOR REDUCED PLANS 0 1 2 3

UNIT: 3603
PROJECT NUMBER & PHASE: 0500000576 1 CONTRACT NO.: 05-492801

DISREGARD PRINTS BEARING EARLIER REVISION DATES — REVISION DATES 04/12/12 09/26/12 12/24/12

SHEET 11 OF 29

FILE => 49-0259-1-girlay01.dgn

USERNAME => s115755 DATE PLOTTED => 16-DEC-2014 TIME PLOTTED => 14:10

DIST	COUNTY	ROUTE	POST MILES TOTAL PROJECT	SHEET No.	TOTAL SHEETS
05	SLO	1	64.0/R66.9	225	265

REGISTERED CIVIL ENGINEER 10-27-14 DATE

10-27-14
PLANS APPROVAL DATE

REGISTERED PROFESSIONAL ENGINEER MICHAEL R POPE No. C054503 Exp 12/31/15 CIVIL STATE OF CALIFORNIA

The State of California or its officers or agents shall not be responsible for the accuracy or completeness of electronic copies of this plan sheet.

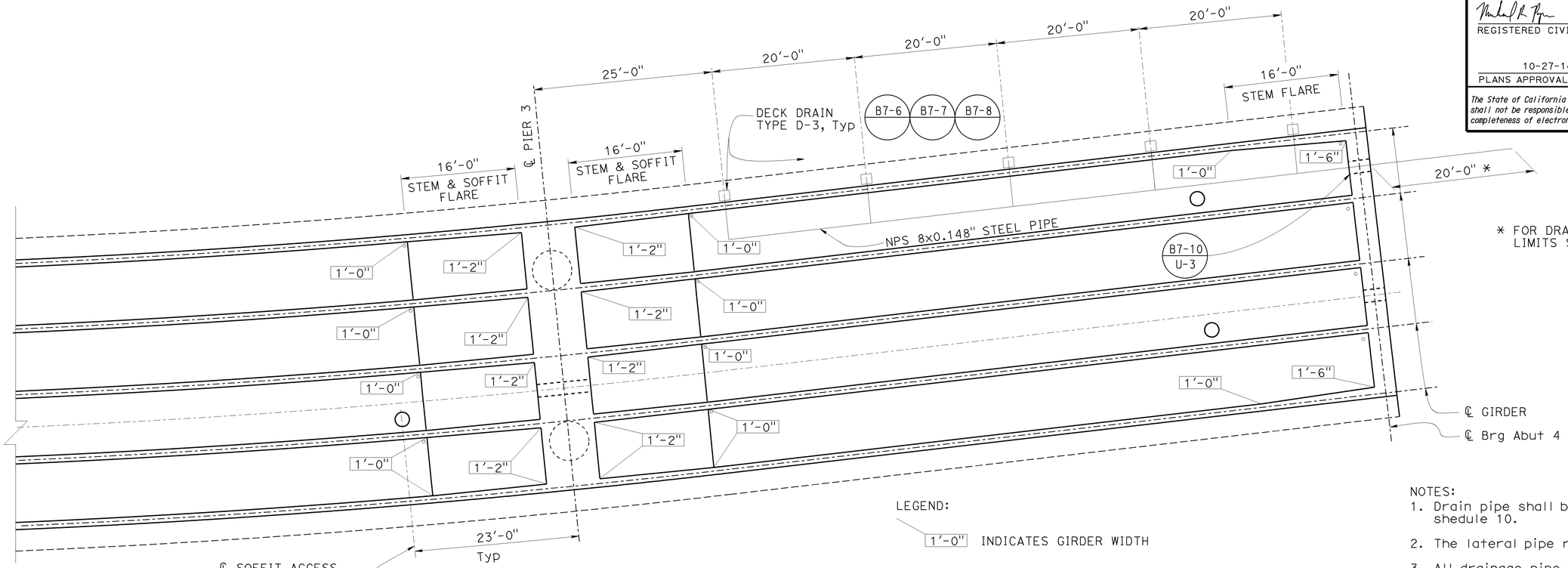

* FOR DRAINAGE DETAILS BEYOND LIMITS SHOWN, SEE "ROAD PLANS"

LEGEND:

1'-0" INDICATES GIRDER WIDTH

NOTES:

1. Drain pipe shall be galvanized welded steel shedule 10.
2. The lateral pipe runs shall be NPS 6.
3. All drainage pipe bends shall be smooth at the following minimum radius:
   NPS 6: R = 1'-6"
   NPS 8: R = 2'-0"
4. Drain pipe shall be installed at the maximum slope conditions will allow, but not less than 1%.

PLAN

1/8" = 1'

B0-5 5-10 | B0-5 5-11 | B7-1 | B8-5

CENTER OF GRAVITY OF PRESTRESSING FORCE, CABLE PATH IS A PARABOLIC CURVE BETWEEN POINTS SHOWN

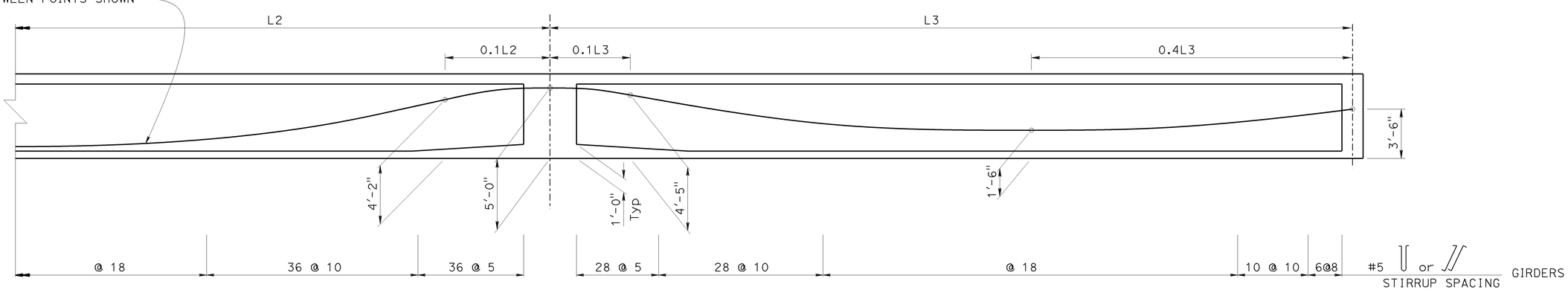

LONGITUDINAL SECTION

No Scale

B0-5 | B7-1 | B8-5

DESIGN	BY CORY COWDEN	CHECKED MATT GIOVANNONI	
DETAILS	BY MINH TRAN	CHECKED MATT GIOVANNONI	
QUANTITIES	BY MATT GIOVANNONI	CHECKED MICHAEL POPE	

STATE OF CALIFORNIA
DEPARTMENT OF TRANSPORTATION

DIVISION OF ENGINEERING SERVICES
STRUCTURE DESIGN
DESIGN BRANCH 18

BRIDGE NO. 49-0259
POST MILE R64.86

ARROYO DEL CORRAL BRIDGE
GIRDER LAYOUT NO. 2

STRUCTURES DESIGN DETAIL SHEET (ENGLISH) (REV. 09-01-10)

ORIGINAL SCALE IN INCHES FOR REDUCED PLANS 0 1 2 3

UNIT: 3603
PROJECT NUMBER & PHASE: 0500000576 1
CONTRACT NO.: 05-492801

DISREGARD PRINTS BEARING EARLIER REVISION DATES

REVISION DATES 04/12/13 09/26/12 12/10/13

SHEET 12 OF 29

FILE => 49-0259-1-girlay02.dgn

USERNAME => s115755 DATE PLOTTED => 16-DEC-2014 TIME PLOTTED => 14:10

DIST	COUNTY	ROUTE	POST MILES TOTAL PROJECT	SHEET No.	TOTAL SHEETS
05	SLO	1	64.0/R66.9	226	265

REGISTERED CIVIL ENGINEER 10-27-14 DATE

10-27-14
PLANS APPROVAL DATE

REGISTERED PROFESSIONAL ENGINEER MICHAEL R POPE No. C054503 Exp 12/31/15 CIVIL STATE OF CALIFORNIA

The State of California or its officers or agents shall not be responsible for the accuracy or completeness of electronic copies of this plan sheet.

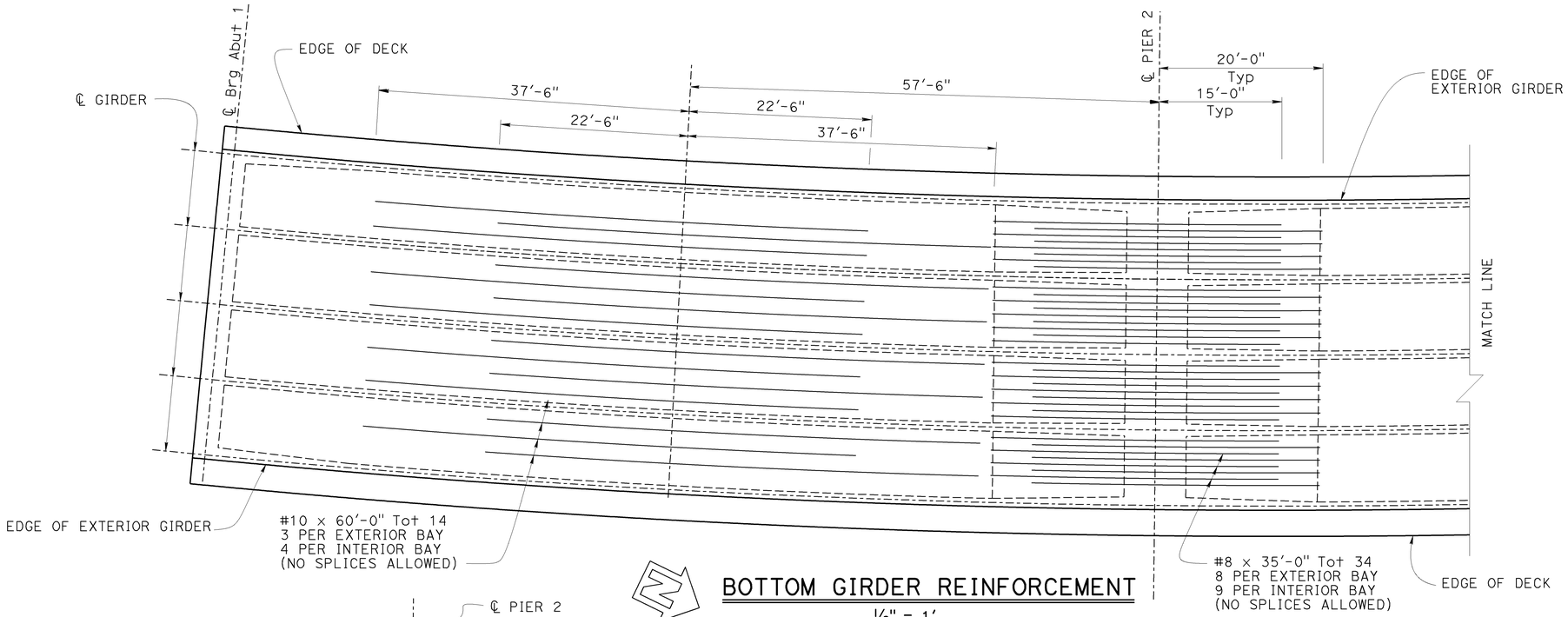

BOTTOM GIRDER REINFORCEMENT

1/8" = 1'

Note:
No additional bottom Girder reinforcement in Span 2.

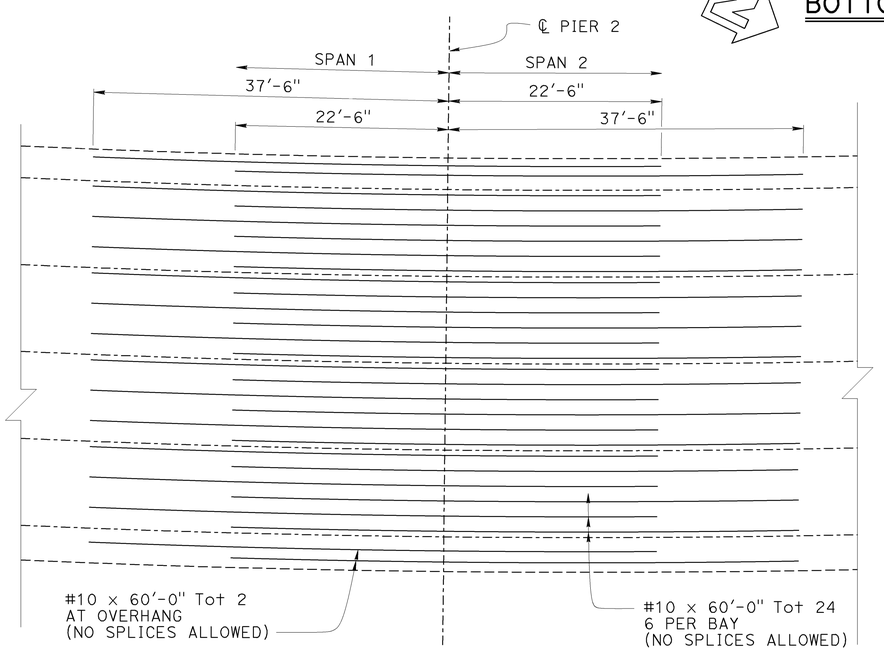

Note: Bent 2 shown, Bent 3 similar.

TOP GIRDER REINFORCEMENT

1/8" = 1'

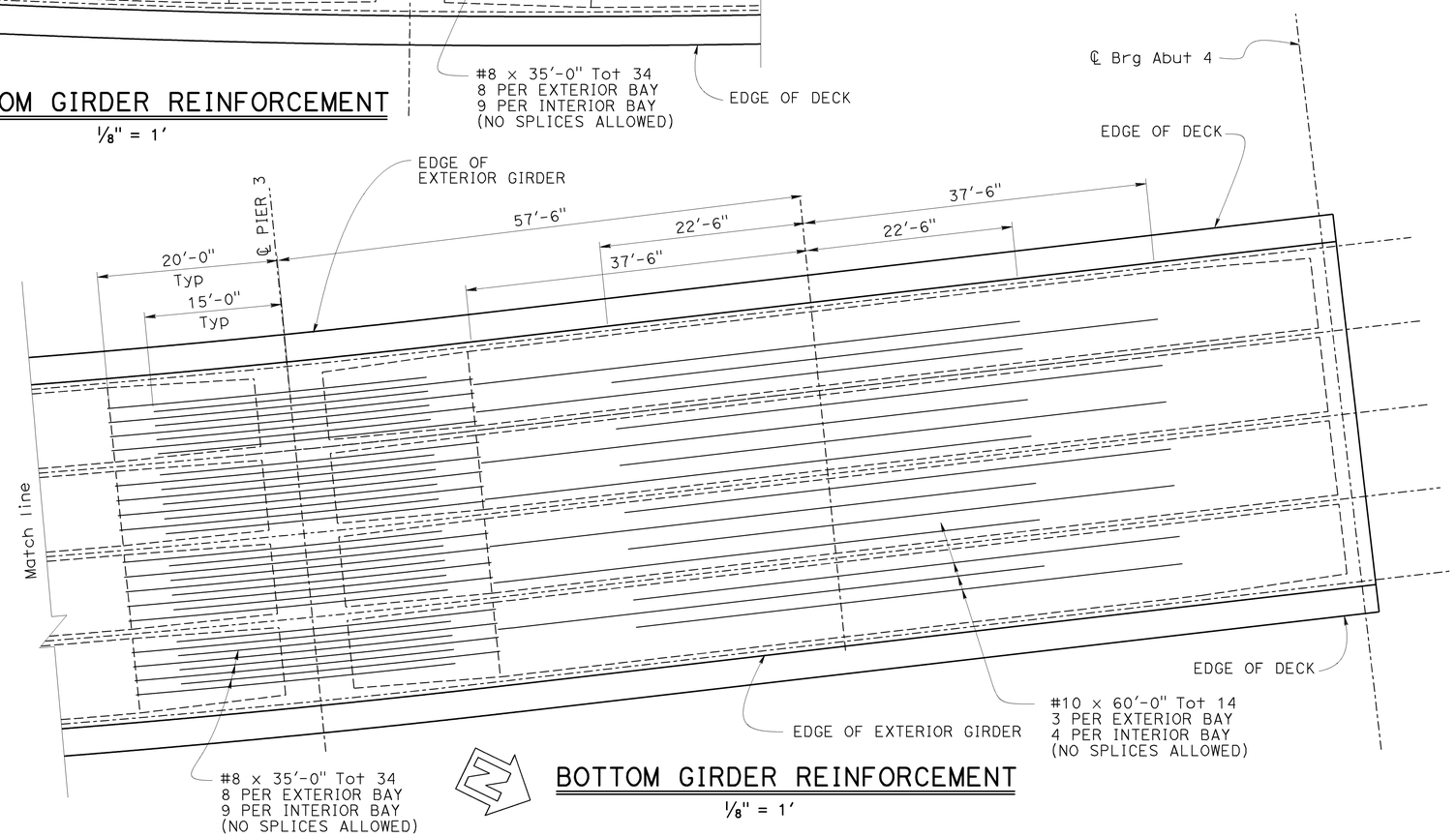

BOTTOM GIRDER REINFORCEMENT

1/8" = 1'

	BY	CHECKED
DESIGN	CC/ MATT SCHOTT	MATT GIOVANNONI
DETAILS	MINH TRAN	MATT GIOVANNONI
QUANTITIES	MATT GIOVANNONI	MICHAEL POPE

STATE OF CALIFORNIA
DEPARTMENT OF TRANSPORTATION

DIVISION OF ENGINEERING SERVICES
STRUCTURE DESIGN
DESIGN BRANCH 18

BRIDGE NO. 49-0259
POST MILE R 64.86

ARROYO DEL CORRAL BRIDGE
ADDITIONAL GIRDER REINFORCEMENT

STRUCTURES DESIGN DETAIL SHEET (ENGLISH) (REV. 09-01-10)

ORIGINAL SCALE IN INCHES FOR REDUCED PLANS 0 1 2 3

UNIT: 3603
PROJECT NUMBER & PHASE: 0500000576 1
CONTRACT NO.: 07-49-0259

DISREGARD PRINTS BEARING EARLIER REVISION DATES

REVISION DATES: 04/12/12 12/24/12

SHEET 13 OF 29

FILE => 49-0259-o-girref.dgn

USERNAME => s115755 DATE PLOTTED => 16-DEC-2014 TIME PLOTTED => 14:10

DIST	COUNTY	ROUTE	POST MILES TOTAL PROJECT	SHEET No.	TOTAL SHEETS
05	SLO	1	64.0/R66.9	227	265

REGISTERED CIVIL ENGINEER 10-27-14 DATE

10-27-14
PLANS APPROVAL DATE

REGISTERED PROFESSIONAL ENGINEER MICHAEL R POPE No. C54503 Exp. 12/31/15 CIVIL STATE OF CALIFORNIA

The State of California or its officers or agents shall not be responsible for the accuracy or completeness of scanned copies of this plan sheet.

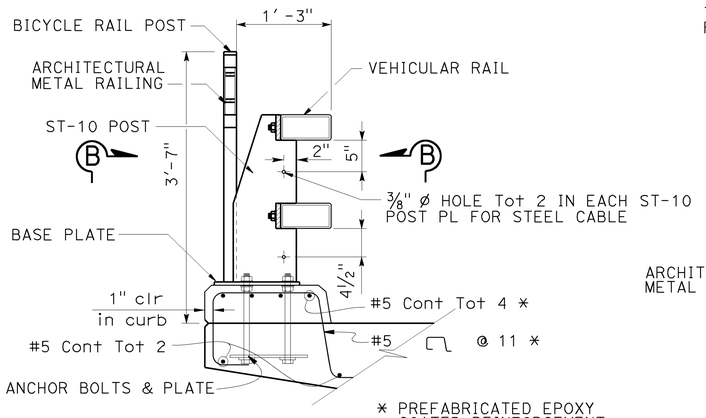

* PREFABRICATED EPOXY COATED REINFORCEMENT SHALL BE USED IN CURB

TYPICAL SECTION

1 " = 1'-0"

FOR CA ST-10 RAILING DETAILS NOT SHOWN SEE: B11-68 B11-69 B11-70

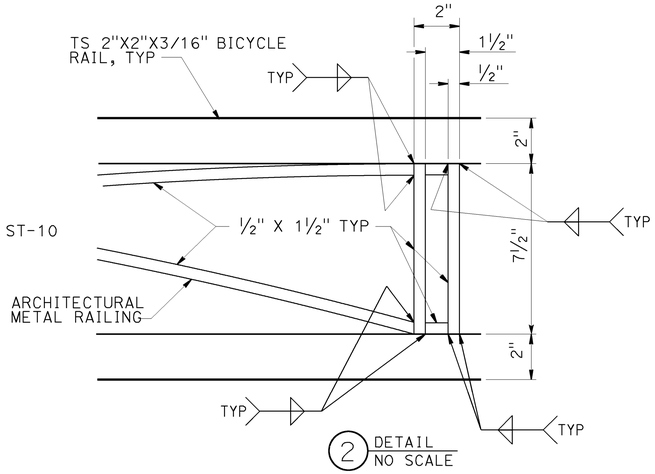

DETAIL

NO SCALE

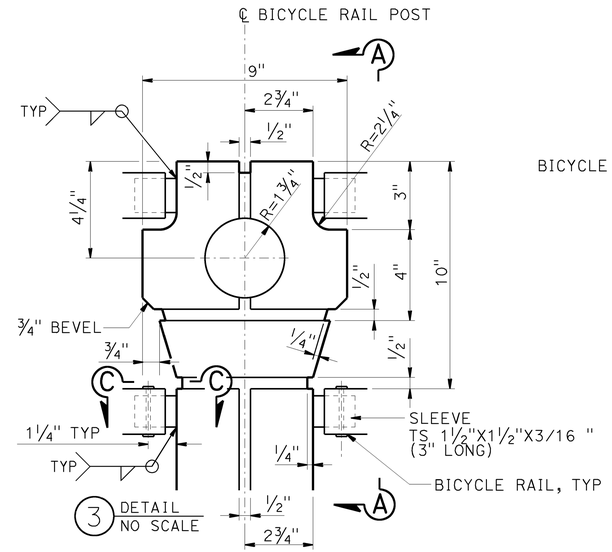

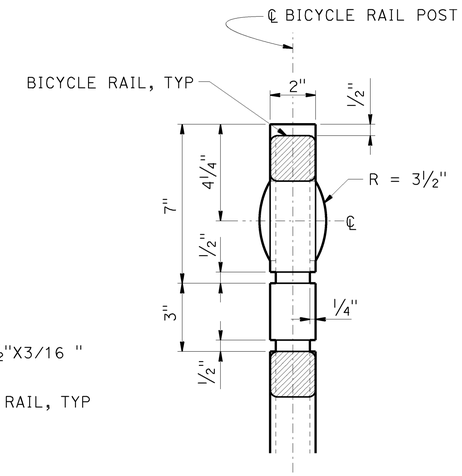

SECTION A - A

NO SCALE

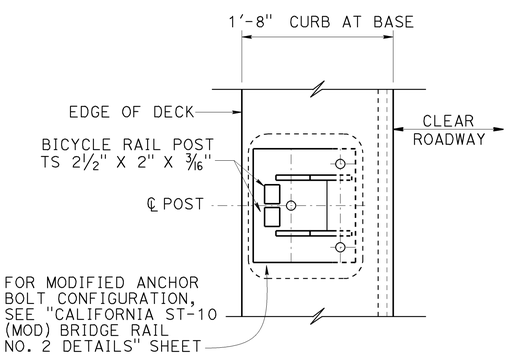

SECTION B - B

NO SCALE

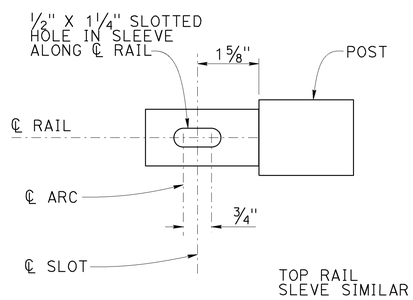

SECTION C - C

NO SCALE

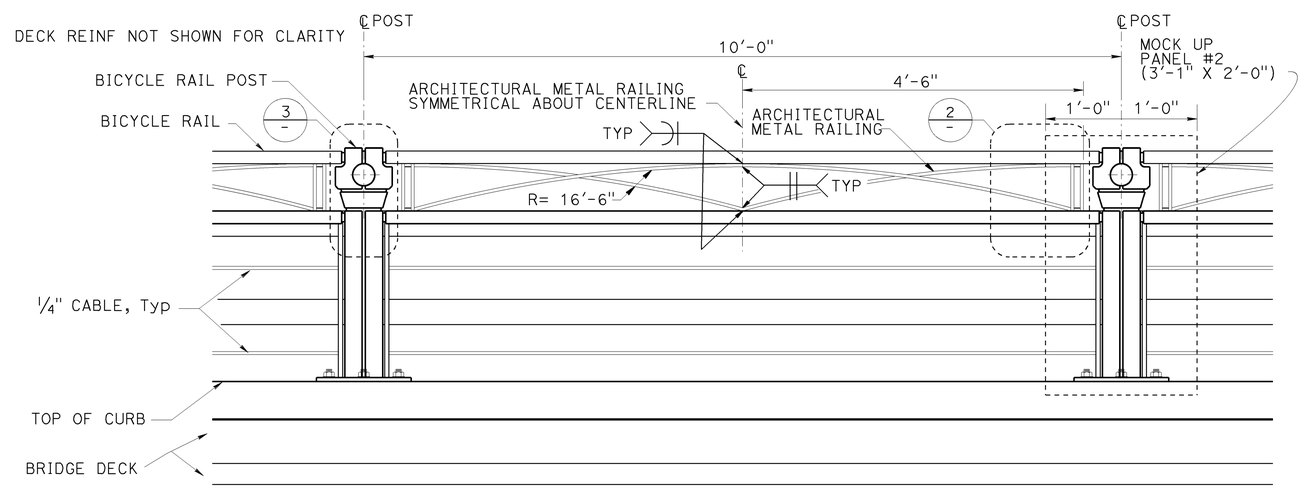

ELEVATION VIEW - CALIFORNIA ST-10

1 " = 1'-0"

DESIGN	BY ZIHAN YAN	CHECKED PREM RIMAL	
DETAILS	BY JINLI GUO	CHECKED PREM RIMAL	
QUANTITIES	BY ZIHAN YAN	CHECKED PREM RIMAL	

STATE OF CALIFORNIA DEPARTMENT OF TRANSPORTATION

DIVISION OF ENGINEERING SERVICES STRUCTURE DESIGN DESIGN BRANCH 18

BRIDGE NO. 49-0259 POST MILE R 64.86

ARROYO DEL CORREL BRIDGE

CALIFORNIA ST-10 BRIDGE RAIL(MOD) DETAILS NO. 1

STRUCTURES DESIGN DETAIL SHEET (ENGLISH) (REV. 09-01-10)

ORIGINAL SCALE IN INCHES FOR REDUCED PLANS 0 1 2 3

UNIT:3603
PROJECT NUMBER & PHASE:0500000576 1 CONTRACT NO.: 05-492801

DISREGARD PRINTS BEARING EARLIER REVISION DATES

REVISION DATES 08/07/12 04/15/13 04/18/13

SHEET 14 OF 29

FILE => 49-0259-q-st10brdet-01.dgn

USERNAME => s115755 DATE PLOTTED => 16-DEC-2014 TIME PLOTTED => 14:10

DIST	COUNTY	ROUTE	POST MILES TOTAL PROJECT	SHEET No.	TOTAL SHEETS
05	SLO	1	64.0/R66.9	228	265

REGISTERED CIVIL ENGINEER 10-27-14 DATE

10-27-14
PLANS APPROVAL DATE

REGISTERED PROFESSIONAL ENGINEER MICHAEL R POPE No. C54503 Exp. 12/31/15 CIVIL STATE OF CALIFORNIA

The State of California or its officers or agents shall not be responsible for the accuracy or completeness of scanned copies of this plan sheet.

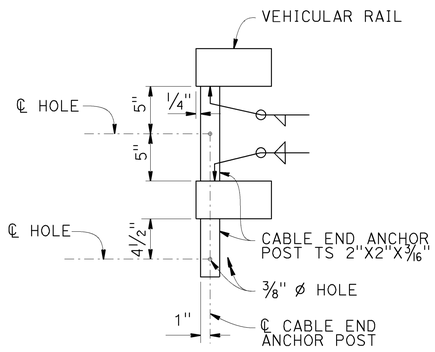

SECTION F - F

1 1/2" = 1'-0"

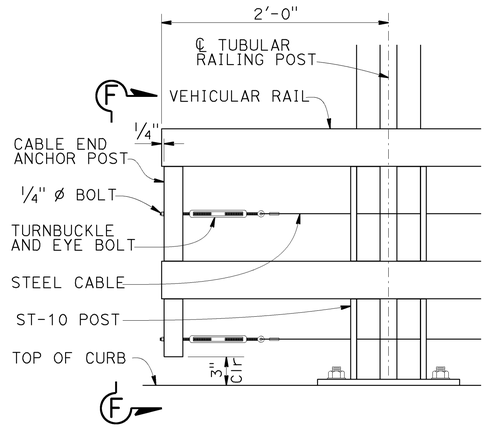

CABLE END ANCHORAGE

1 1/2" = 1'-0"

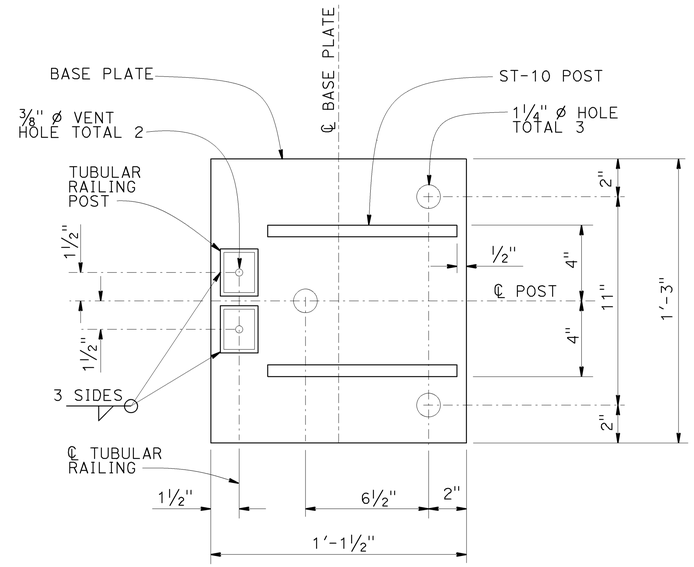

BASE PLATE

3 " = 1'-0"

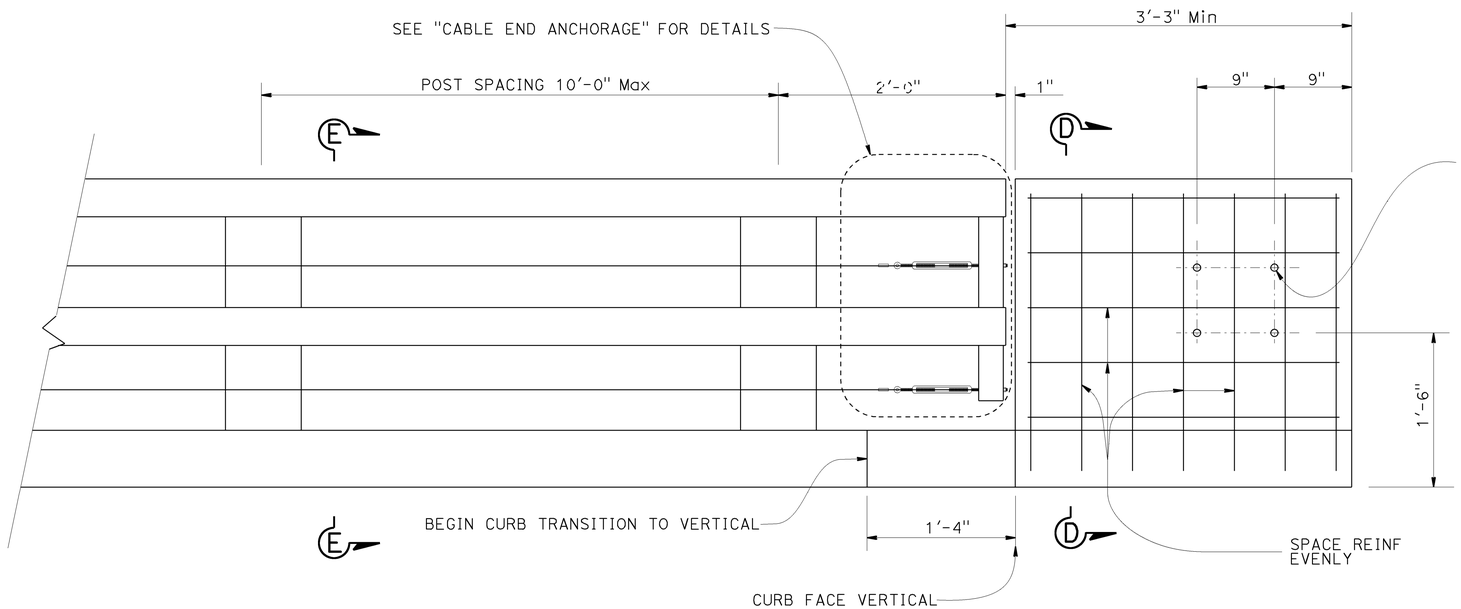

END OF RAILING ELEVATION

1 1/2" = 1'-0"

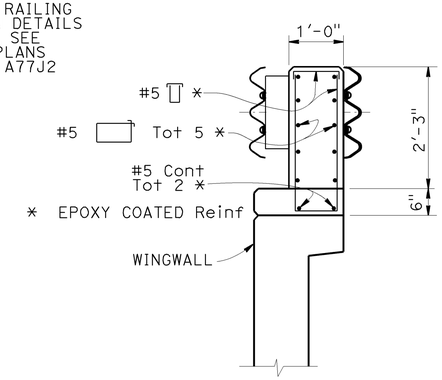

SECTION D-D

NOTE: WINGWALL & CURB REINF NOT SHOWN FOR CLARITY

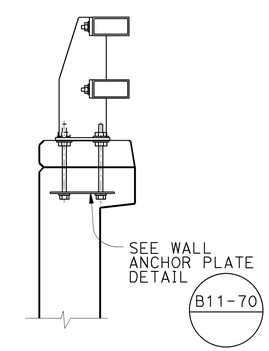

SECTION E-E

NOTE: REINF SAME AS FOR SECTION D-D EXCEPT AS NOTED

DESIGN	BY ZIHAN YAN	CHECKED PREM RIMAL	
DETAILS	BY JINLI GUO	CHECKED PREM RIMAL	
QUANTITIES	BY ZIHAN YAN	CHECKED PREM RIMAL	

STATE OF CALIFORNIA
DEPARTMENT OF TRANSPORTATION

DIVISION OF ENGINEERING SERVICES
STRUCTURE DESIGN
DESIGN BRANCH 18

BRIDGE NO. 49-0259
POST MILE R 64.86

ARROYO DEL CORREL BRIDGE

CALIFORNIA ST-10 BRIDGE RAIL(MOD) DETAILS NO. 2

STRUCTURES DESIGN DETAIL SHEET (ENGLISH) (REV. 09-01-10)

ORIGINAL SCALE IN INCHES FOR REDUCED PLANS 0 1 2 3

UNIT: 3603
PROJECT NUMBER & PHASE: 0500000576 1
CONTRACT NO.: 05-492801

DISREGARD PRINTS BEARING EARLIER REVISION DATES

REVISION DATES 4/8/13 4/23/13

SHEET 15 OF 29

FILE => 49-0259-q-st10brdet-02.dgn

USERNAME => s115755 DATE PLOTTED => 16-DEC-2014 TIME PLOTTED => 14:10

DIST	COUNTY	ROUTE	POST MILES TOTAL PROJECT	SHEET No.	TOTAL SHEETS
05	SLO	1	64.0/R66.9	229	265

REGISTERED CIVIL ENGINEER 10-27-14 DATE

10-27-14
PLANS APPROVAL DATE

REGISTERED PROFESSIONAL ENGINEER MICHAEL R POPE No. C054503 Exp. 12/31/15 CIVIL STATE OF CALIFORNIA

The State of California or its officers or agents shall not be responsible for the accuracy or completeness of electronic copies of this plan sheet.

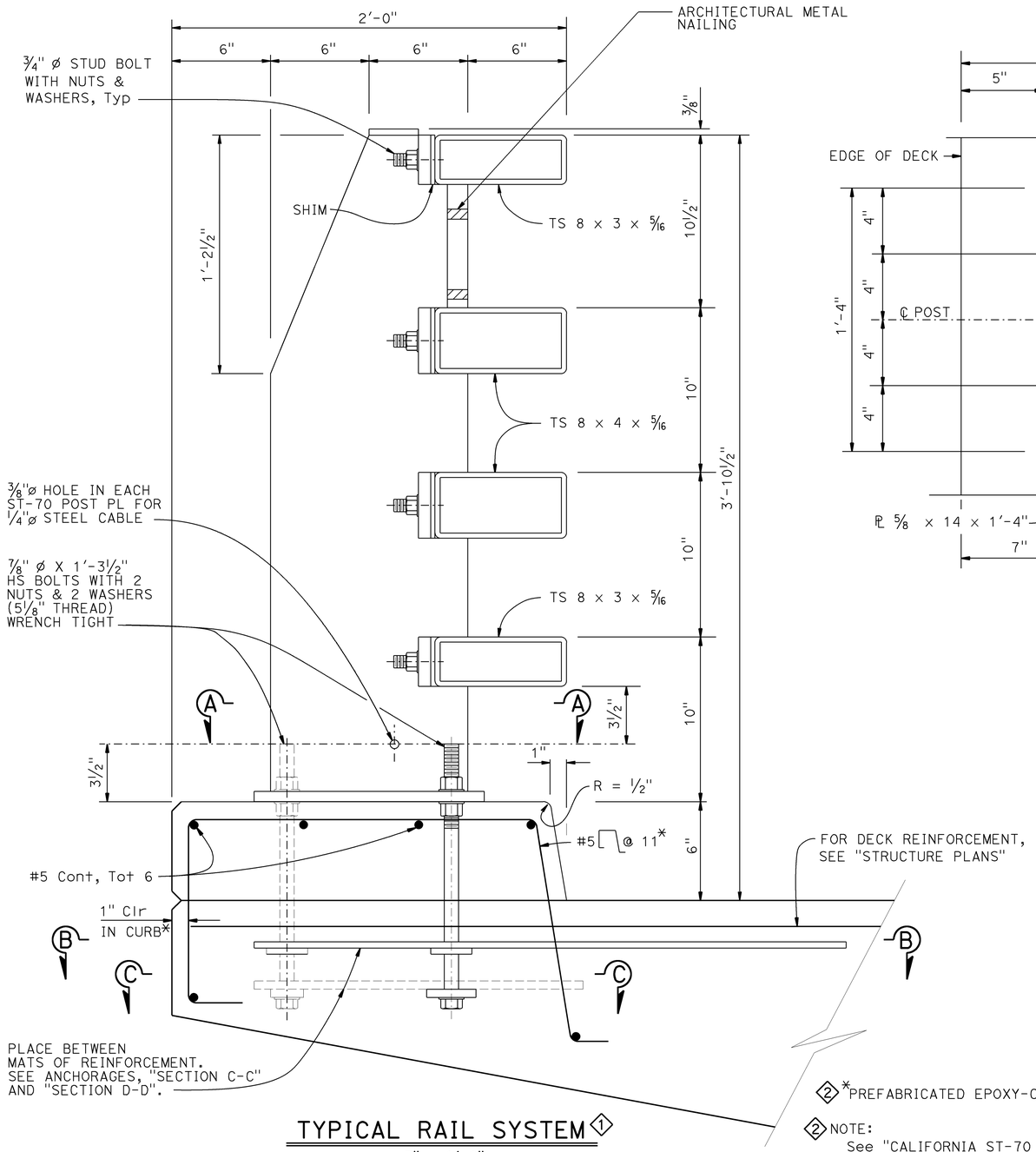

TYPICAL RAIL SYSTEM 1

3" = 1'-0"

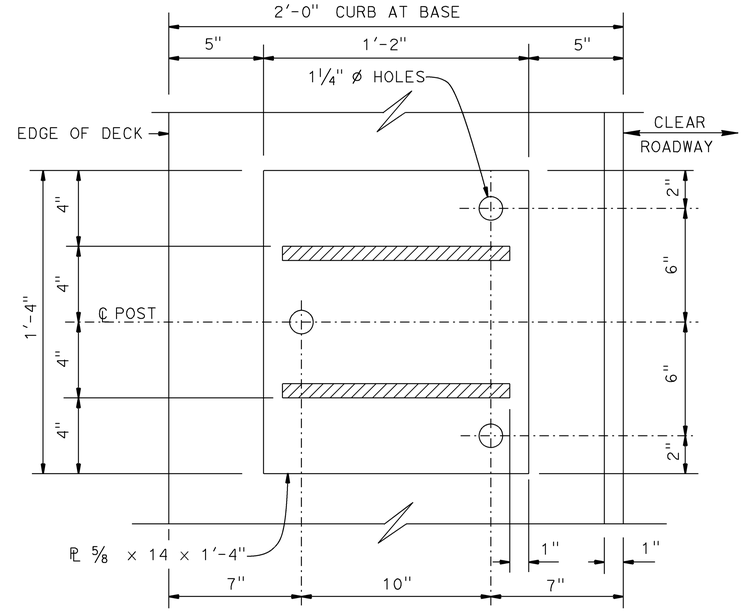

SECTION A-A

3' = 1'-0"

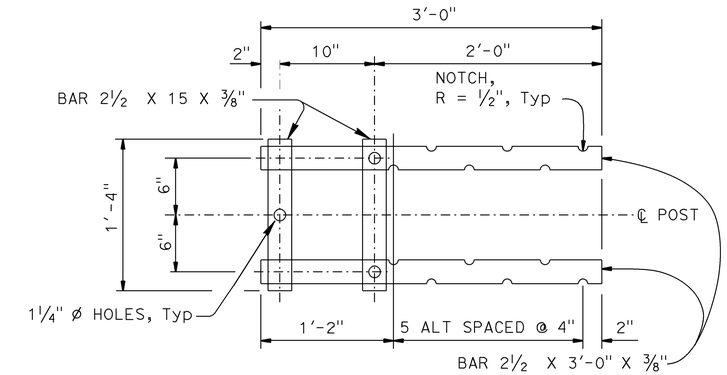

TOP ANCHORAGE

SECTION B-B

1 1/2" = 1'-0"

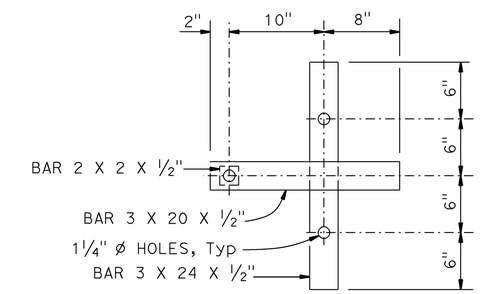

LOWER ANCHORAGE

SECTION C-C

1 1/2" = 1'-0"

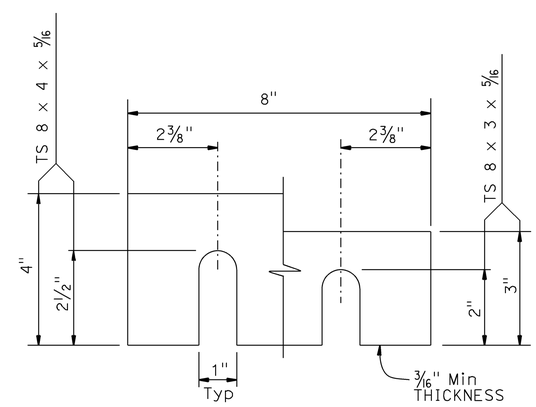

SHIMS REQUIRED FOR ALL RAILS

6" = 1'-0"

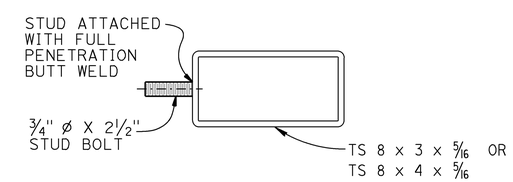

SECTION AT POST

3" = 1'-0"

2 *PREFABRICATED EPOXY-COATED Reinf

2 NOTE:
See "CALIFORNIA ST-70 (MOD) BRIDGE RAIL DETAILS NO.5" sheet for elvations view & Arch metal railing details.

STANDARD DRAWING

FILE NO. xs16-130-1

APPROVAL DATE July 2011

1 Modified details
2 Added notes

STATE OF CALIFORNIA DEPARTMENT OF TRANSPORTATION

DIVISION OF ENGINEERING SERVICES

BRIDGE NO. 49-0259
POST MILE R64.86

ARROYO DEL CORRAL BRIDGE
CALIFORNIA ST-70 BRIDGE RAIL(MOD)
DETAILS NO. 1

DS OSD 2147A (ENGLISH STANDARD DRAWING "XS" BORDER REV. (02-02-11)

ORIGINAL SCALE IN INCHES FOR REDUCED PLANS 0 1 2 3

UNIT: 3603
PROJECT NUMBER & PHASE: 0500000576 1
CONTRACT NO.: 05-492801

DISREGARD PRINTS BEARING EARLIER REVISION DATES

REVISION DATES

SHEET 16 OF 29

FILE => 49-0259-q-st70brdet-01.dgn

USERNAME => s115755 DATE PLOTTED => 16-DEC-2014 TIME PLOTTED => 14:10

DIST	COUNTY	ROUTE	POST MILES TOTAL PROJECT	SHEET No.	TOTAL SHEETS
05	SLO	1	64.0/R66.9	230	265

REGISTERED CIVIL ENGINEER 10-27-14 DATE

10-27-14
PLANS APPROVAL DATE

REGISTERED PROFESSIONAL ENGINEER MICHAEL R POPE No. C054503 Exp. 12/31/15 CIVIL STATE OF CALIFORNIA

The State of California or its officers or agents shall not be responsible for the accuracy or completeness of electronic copies of this plan sheet.

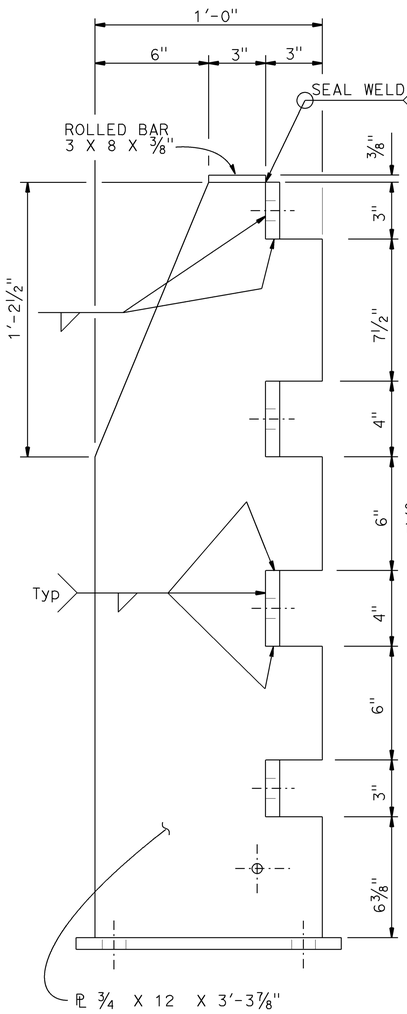

SECTION D-D (1)

3" = 1'-0"

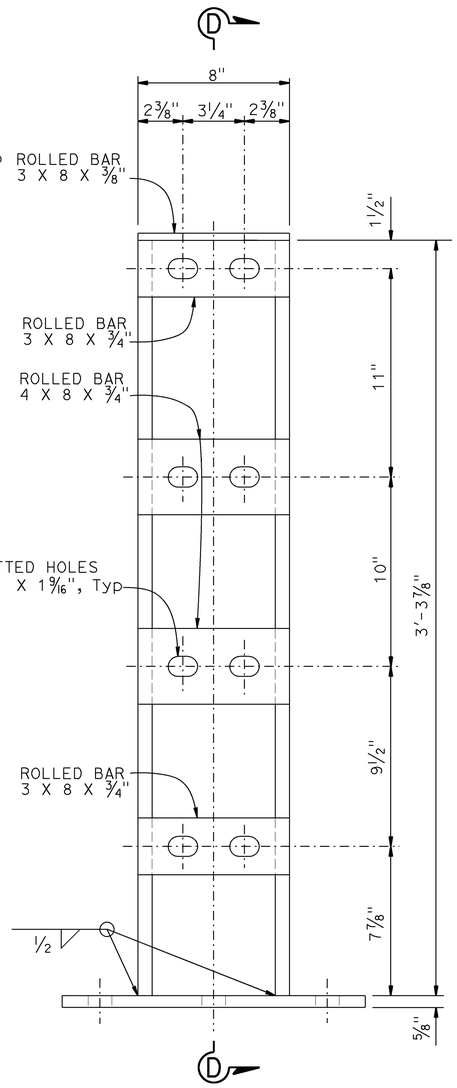

ELEVATION

3" = 1'-0"

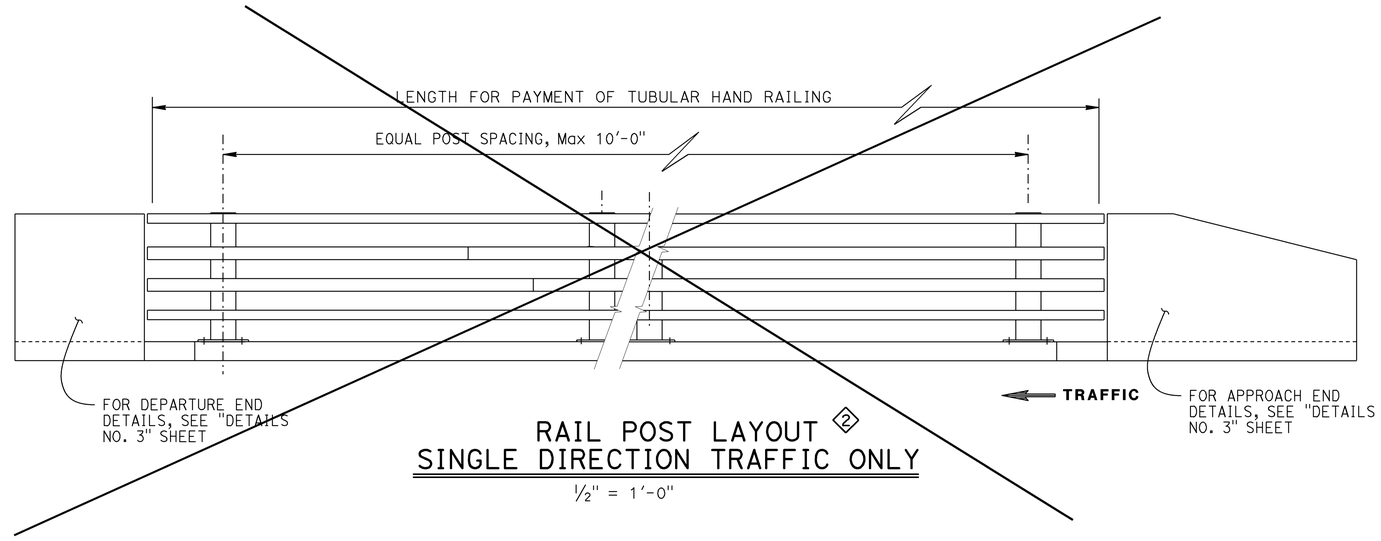

RAIL POST LAYOUT (2)
SINGLE DIRECTION TRAFFIC ONLY

1/2" = 1'-0"

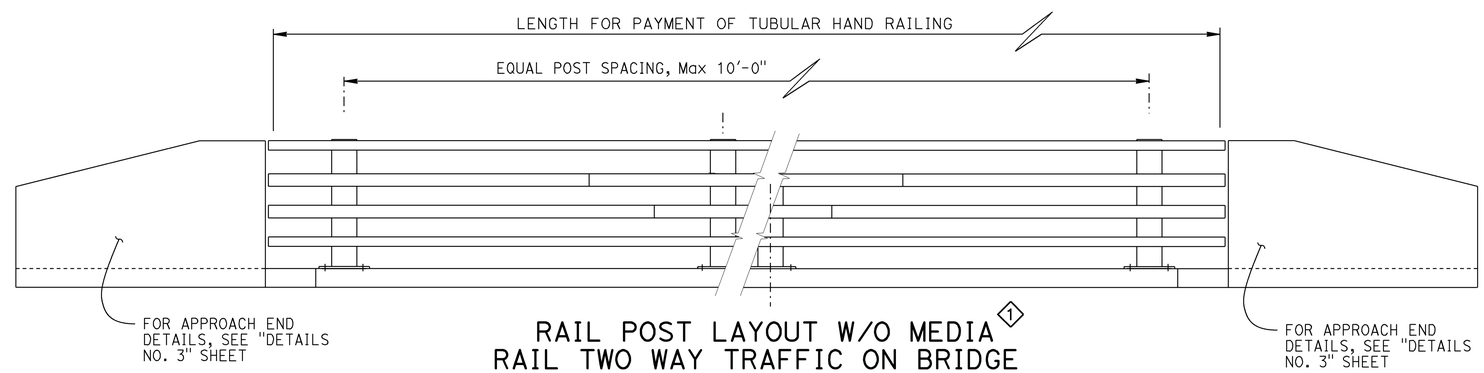

RAIL POST LAYOUT W/O MEDIA (1)
RAIL TWO WAY TRAFFIC ON BRIDGE

1/2" = 1'-0"

STANDARD DRAWING

FILE NO. xs16-130-2

APPROVAL DATE July 2011

(1) Modified detail
(2) Remove detail

STATE OF CALIFORNIA
DEPARTMENT OF TRANSPORTATION

DIVISION OF ENGINEERING SERVICES

BRIDGE NO. 49-0259
POST MILE R64.86

ARROYO DEL CORRAL BRIDGE
CALIFORNIA ST-70 BRIDGE RAIL(MOD)
DETAILS NO. 2

DS OSD 2147A (ENGLISH STANDARD DRAWING "XS" BORDER REV. (02-02-11))

ORIGINAL SCALE IN INCHES FOR REDUCED PLANS 0 1 2 3

UNIT: 3603
PROJECT NUMBER & PHASE: 0500000576 1
CONTRACT NO.: 05-492801

DISREGARD PRINTS BEARING EARLIER REVISION DATES

REVISION DATES

SHEET 17 OF 29

FILE => 49-0259-q-st70brdet-02.dgn

USERNAME => s115755 DATE PLOTTED => 16-DEC-2014 TIME PLOTTED => 14:10

DIST	COUNTY	ROUTE	POST MILES TOTAL PROJECT	SHEET No.	TOTAL SHEETS
05	SLO	1	64.0/R66.9	231	265

REGISTERED CIVIL ENGINEER 10-27-14 DATE

10-27-14
PLANS APPROVAL DATE

REGISTERED PROFESSIONAL ENGINEER MICHAEL R POPE No. C054503 Exp. 12/31/15 CIVIL STATE OF CALIFORNIA

The State of California or its officers or agents shall not be responsible for the accuracy or completeness of electronic copies of this plan sheet.

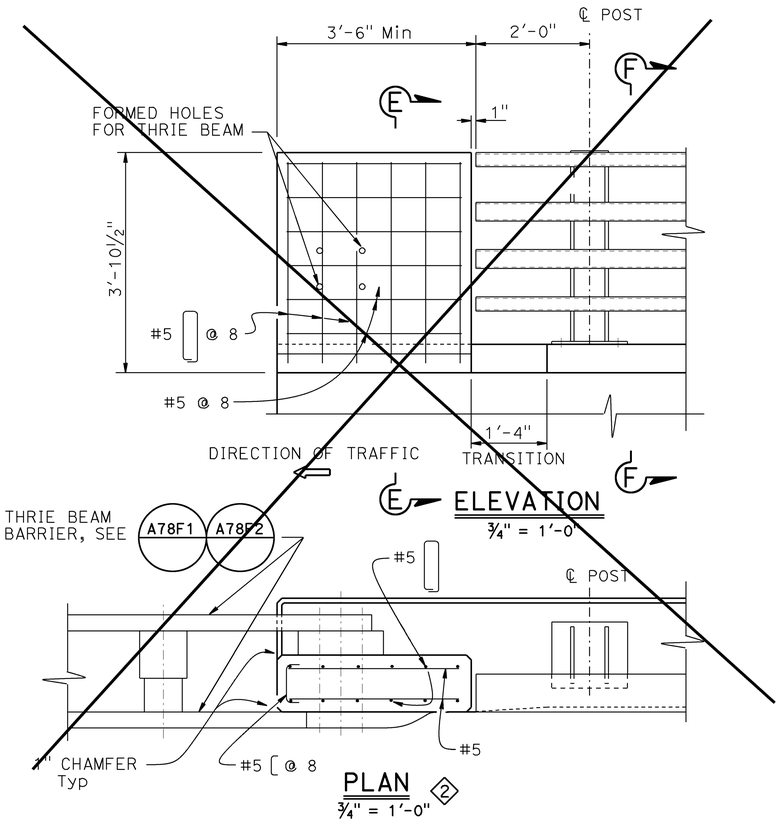

ELEVATION
¾" = 1'-0"

PLAN ②
¾" = 1'-0"

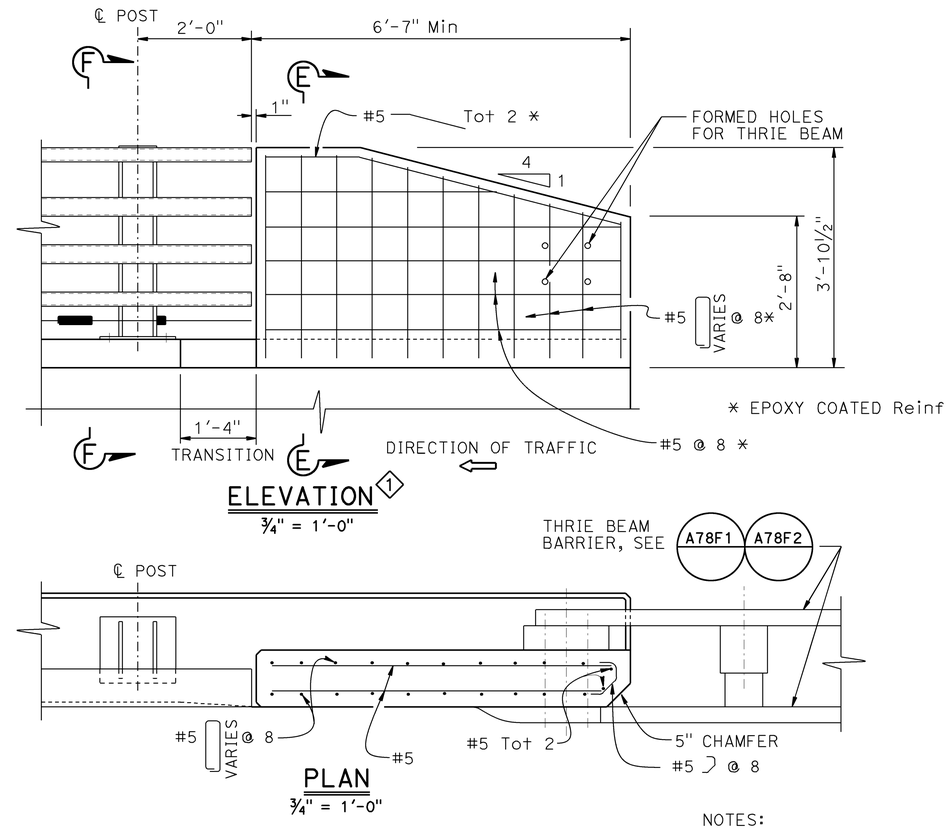

ELEVATION ①
¾" = 1'-0"

PLAN
¾" = 1'-0"

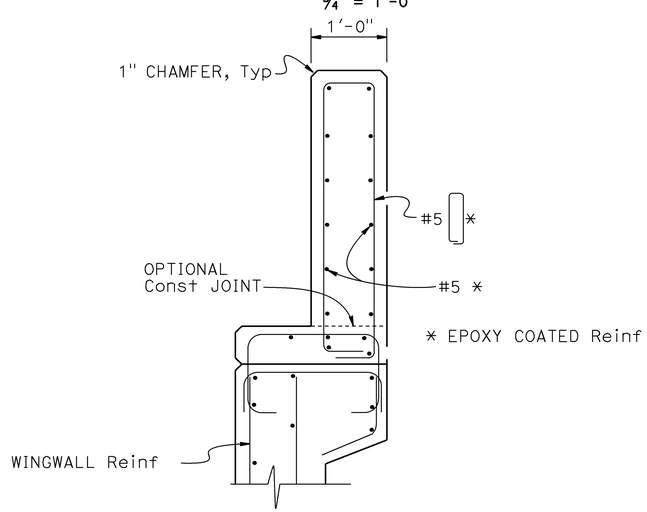

SECTION E-E ①
1" = 1'-0"

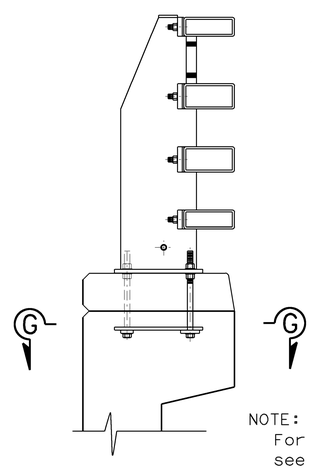

NOTE:
For details not shown, see "SECTION E-E"

SECTION F-F ①
1" = 1'-0"

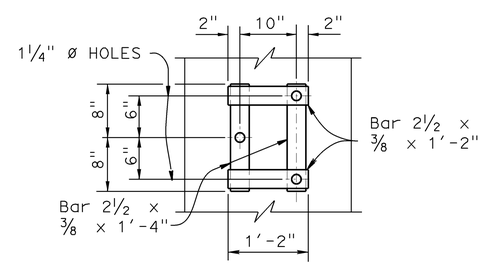

VIEW G-G
NO SCALE

NOTES:

1. Proposed railing layout shown is approximate. Final layout shall be reviewed by Engineer before fabrication
2. Venting and pick-up holes in rails and sleeves shall be shown on fabricator's shop plans
3. Anchor bolts may be tack welded (shop or field) to anchorage
4. Tubing shall be bent or fabricated to fit horizontal curve when curve is less than 900'-0" in radius
5. Each rail length shall be continuous over a minimum of two posts
6. The fabricator shall check that the tubular sleeves splices conform to the dimensions indicated to assure proper clearance
7. Except for expansion splices, not more than one splice shall be permitted per same side of post

STANDARD DRAWING
FILE NO. xs16-130-3
APPROVAL DATE July 2011

① Modified detail
② Removed detail

STATE OF CALIFORNIA
DEPARTMENT OF TRANSPORTATION

DIVISION OF ENGINEERING SERVICES

BRIDGE NO. 49-0259
POST MILE R64.86

ARROYO DEL CORRAL BRIDGE
CALIFORNIA ST-70 BRIDGE RAIL(MOD)
DETAILS NO. 3

DS OSD 2147A (ENGLISH STANDARD DRAWING "XS" BORDER REV. (02-02-11)

ORIGINAL SCALE IN INCHES FOR REDUCED PLANS 0 1 2 3

UNIT: 3603
PROJECT NUMBER & PHASE: 0500000576 1
CONTRACT NO.: 05-492801

DISREGARD PRINTS BEARING EARLIER REVISION DATES

REVISION DATES

SHEET 18 OF 29

FILE => 49-0259-q-st70brdet-03.dgn

USERNAME => s115755 DATE PLOTTED => 16-DEC-2014 TIME PLOTTED => 14:10

DIST	COUNTY	ROUTE	POST MILES TOTAL PROJECT	SHEET No.	TOTAL SHEETS
05	SLO	1	64.0/R66.9	232	265

REGISTERED CIVIL ENGINEER 10-27-14 DATE

10-27-14
PLANS APPROVAL DATE

REGISTERED PROFESSIONAL ENGINEER MICHAEL R POPE No. C054503 Exp. 12/31/15 CIVIL STATE OF CALIFORNIA

The State of California or its officers or agents shall not be responsible for the accuracy or completeness of electronic copies of this plan sheet.

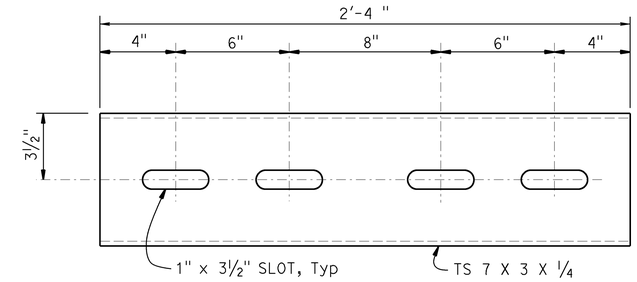

STANDARD SLEEVE DETAIL

3" = 1'-0"
(FOR TS 8 X 4 X 5/16 RAIL)

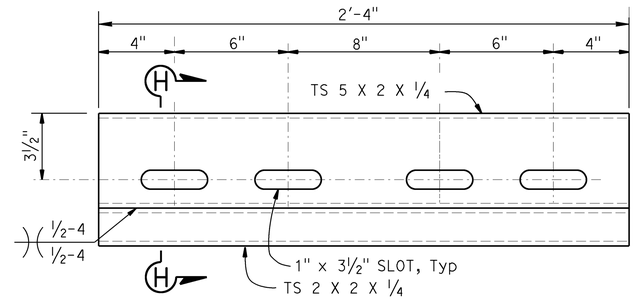

STANDARD SLEEVE DETAIL

3" = 1'-0"
(FOR TS 8 X 3 X 5/16 RAIL)

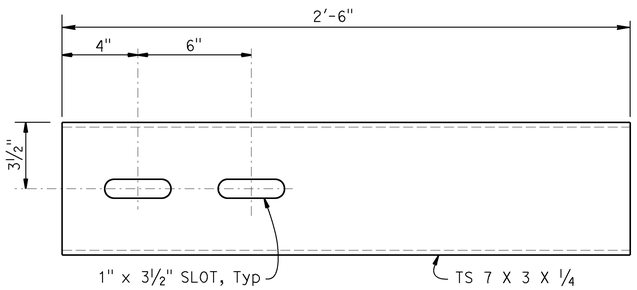

EXPANSION SLEEVE DETAIL

3" = 1'-0"
(FOR TS 8 X 4 X 5/16 RAIL)

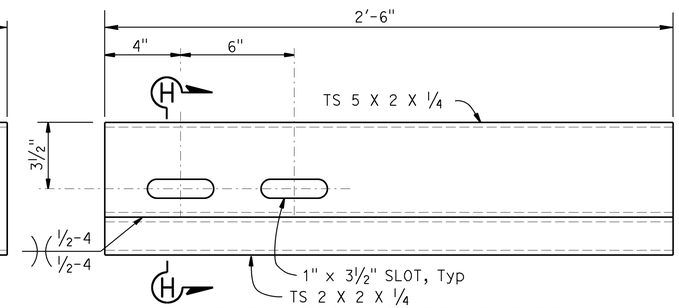

EXPANSION SLEEVE DETAIL

3" = 1'-0"
(FOR TS 8 X 3 X 5/16 RAIL)

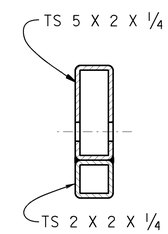

SECTION H-H

3" = 1'-0"

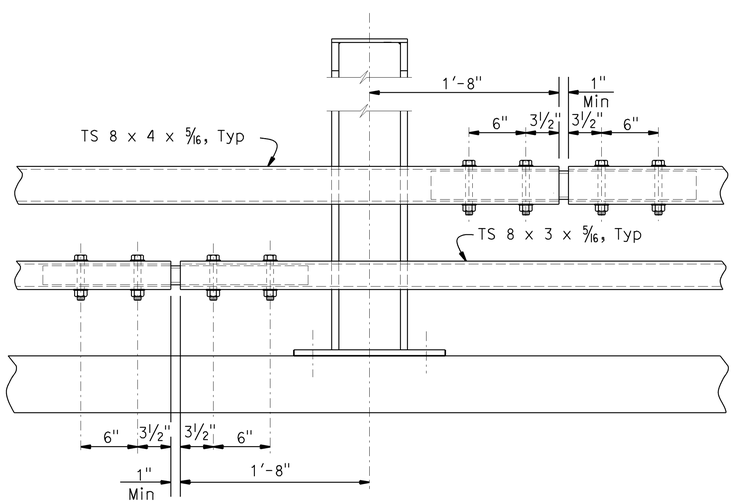

STANDARD SPLICE

1½"= 1'-0"

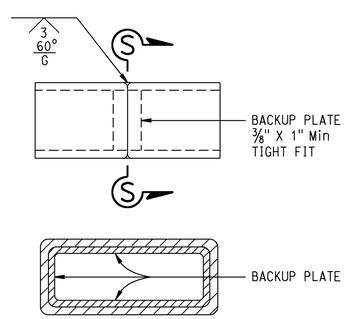

SECTION S-S

ALTERNATE TUBE WELDED SPLICE

3" = 1'-0"

NOTES:
HS bolts with washers, wrench tightened
Use ¾" ø X 5¼ (TS 8 X 4 X 5/16)
Use ¾" ø X 4¼ (TS 8 X 3 X 5/16)

2 rails are not shown for clarity

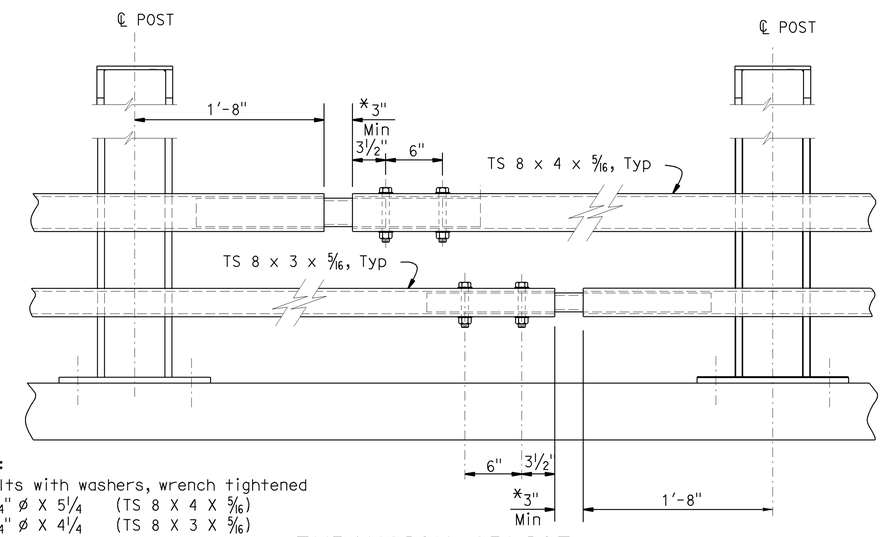

EXPANSION SPLICE

1½"= 1'-0"
* MATCH DECK OR WALL JOINT

STANDARD DRAWING

FILE NO. xs16-130-4

APPROVAL DATE July 2011

STATE OF CALIFORNIA
DEPARTMENT OF TRANSPORTATION

DIVISION OF ENGINEERING SERVICES

BRIDGE NO. 49-0259
POST MILE R64.86

ARROYO DEL CORRAL BRIDGE
CALIFORNIA ST-70 BRIDGE RAIL(MOD)
DETAILS NO. 4

DS OSD 2147A (ENGLISH STANDARD DRAWING "XS" BORDER REV. (02-02-11)

ORIGINAL SCALE IN INCHES FOR REDUCED PLANS 0 1 2 3

UNIT: 3603
PROJECT NUMBER & PHASE: 0500000576
CONTRACT NO.: 07-49-0259

DISREGARD PRINTS BEARING EARLIER REVISION DATES

REVISION DATES

SHEET 19 OF 29

FILE => 49-0259-q-st70brdet-04.dgn

USERNAME => s115755 DATE PLOTTED => 16-DEC-2014 TIME PLOTTED => 14:10

DIST	COUNTY	ROUTE	POST MILES TOTAL PROJECT	SHEET No.	TOTAL SHEETS
05	SLO	1	64.0/R66.9	233	265

REGISTERED CIVIL ENGINEER 10-27-14 DATE

PLANS APPROVAL DATE 10-27-14

REGISTERED PROFESSIONAL ENGINEER MICHAEL R POPE No. C 54503 Exp. 12-31-2015 CIVIL STATE OF CALIFORNIA

The State of California or its officers or agents shall not be responsible for the accuracy or completeness of electronic copies of this plan sheet.

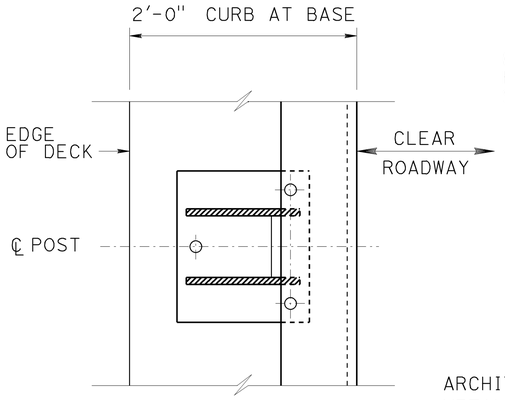

SECTION B-B

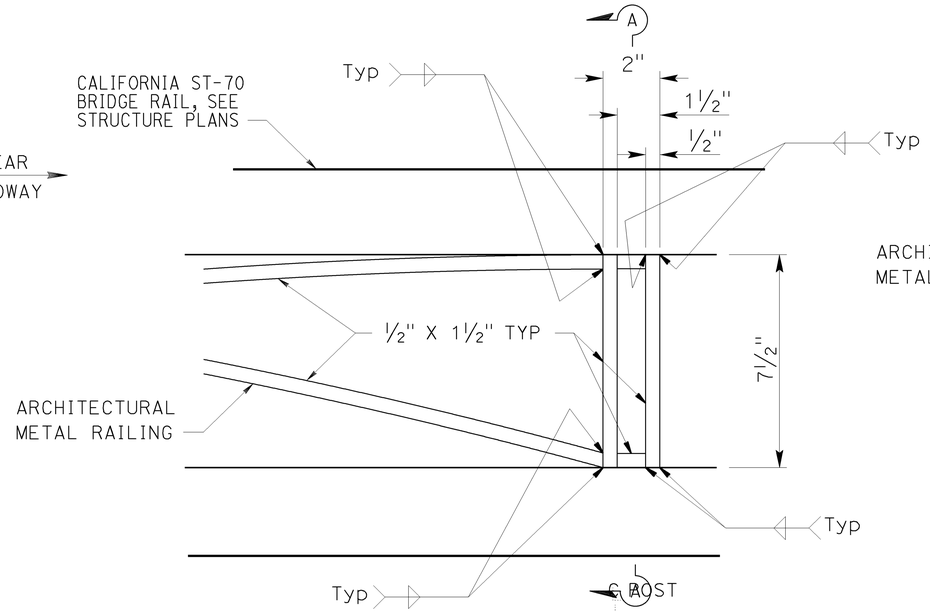

1 DETAIL
NO SCALE

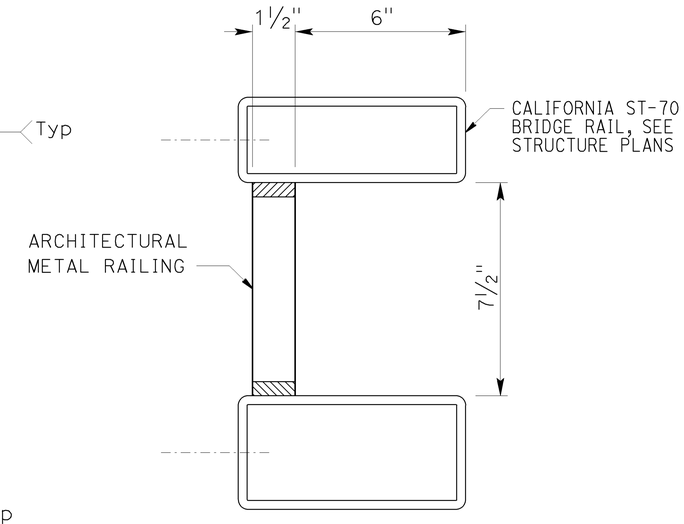

SECTION A-A

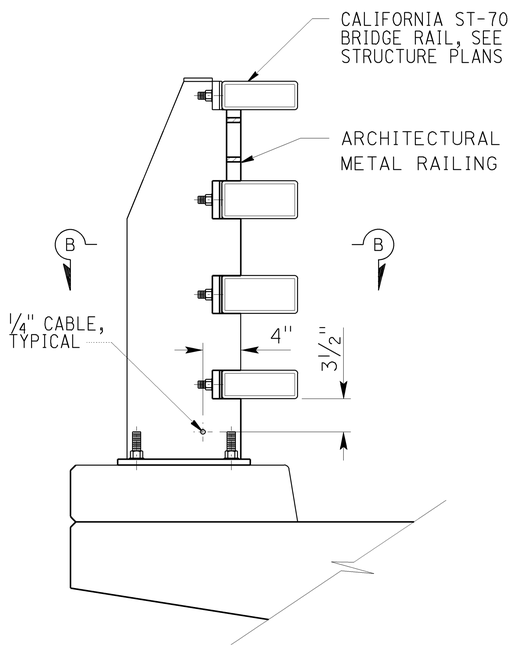

TYPICAL SECTION

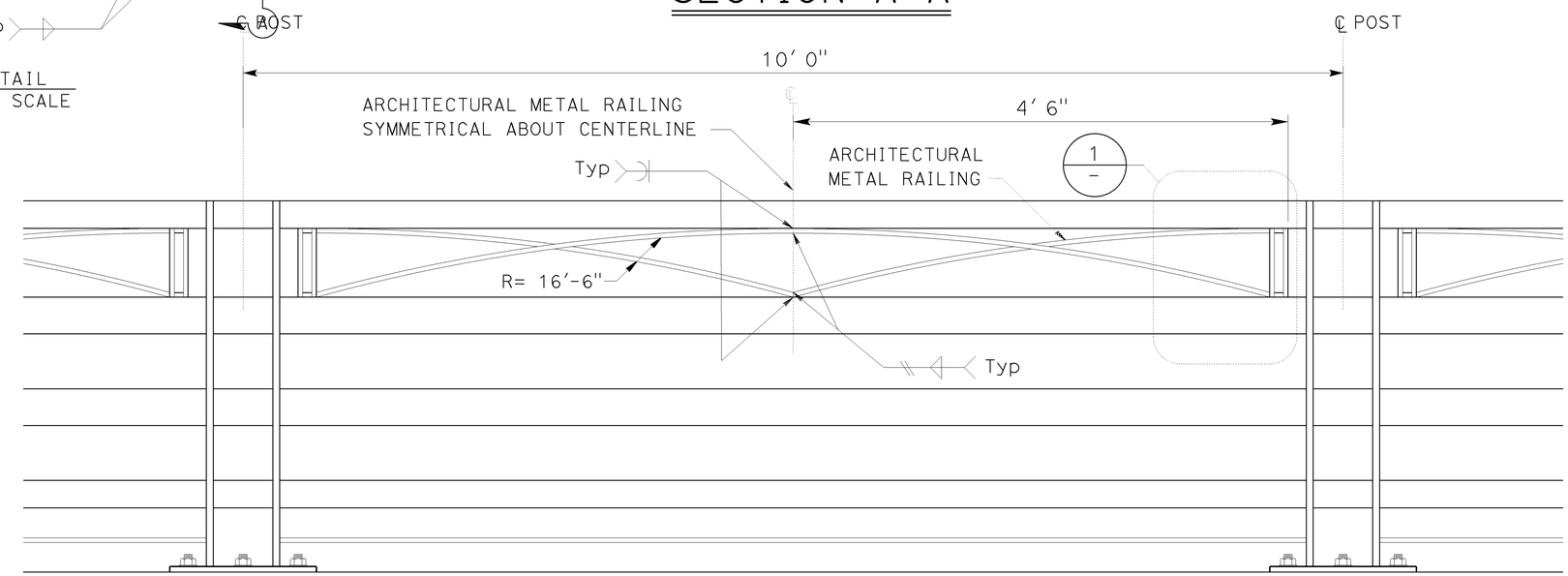

ELEVATION VIEW - CALIFORNIA ST-70 (FIELD WIELD)

	BY	CHECKED
DESIGN	PREM RIMAL	ZIHAN YAN
DETAILS	SURAJ DUTTA	ZIHAN YAN
QUANTITIES	PREM RIMAL	PHUONG VU

STATE OF CALIFORNIA
DEPARTMENT OF TRANSPORTATION

DIVISION OF ENGINEERING SERVICES
STRUCTURE DESIGN
DESIGN BRANCH 18

BRIDGE NO. 49-0259
POST MILE R 64.86

ARROYO DEL CORRAL BRIDGE
CALIFORNIA ST-70 BRIDGE RAIL(MOD
DEATIL NO. 5

STRUCTURES DESIGN DETAIL SHEET (ENGLISH) (REV. 09-01-10)

ORIGINAL SCALE IN INCHES FOR REDUCED PLANS 0 1 2 3

UNIT: 3603
PROJECT NUMBER & PHASE: 0500000576 1
CONTRACT NO.: 05-492801

DISREGARD PRINTS BEARING EARLIER REVISION DATES

REVISION DATES 09/22/12 10/05/12

SHEET 20 OF 29

FILE => 49-0259-q-st70brdet-05.dgn

USERNAME => S116755 DATE PLOTTED => 16-DEC-2014 TIME PLOTTED => 14:10

DIST	COUNTY	ROUTE	POST MILES TOTAL PROJECT	SHEET No.	TOTAL SHEETS
05	SLO	1	64.0/R66.9	234	265

REGISTERED CIVIL ENGINEER 10-27-14 DATE

10-27-14
PLANS APPROVAL DATE

REGISTERED PROFESSIONAL ENGINEER MICHAEL POPE No. C54503 Exp. 12/31/13 CIVIL STATE OF CALIFORNIA

The State of California or its officers or agents shall not be responsible for the accuracy or completeness of scanned copies of this plan sheet.

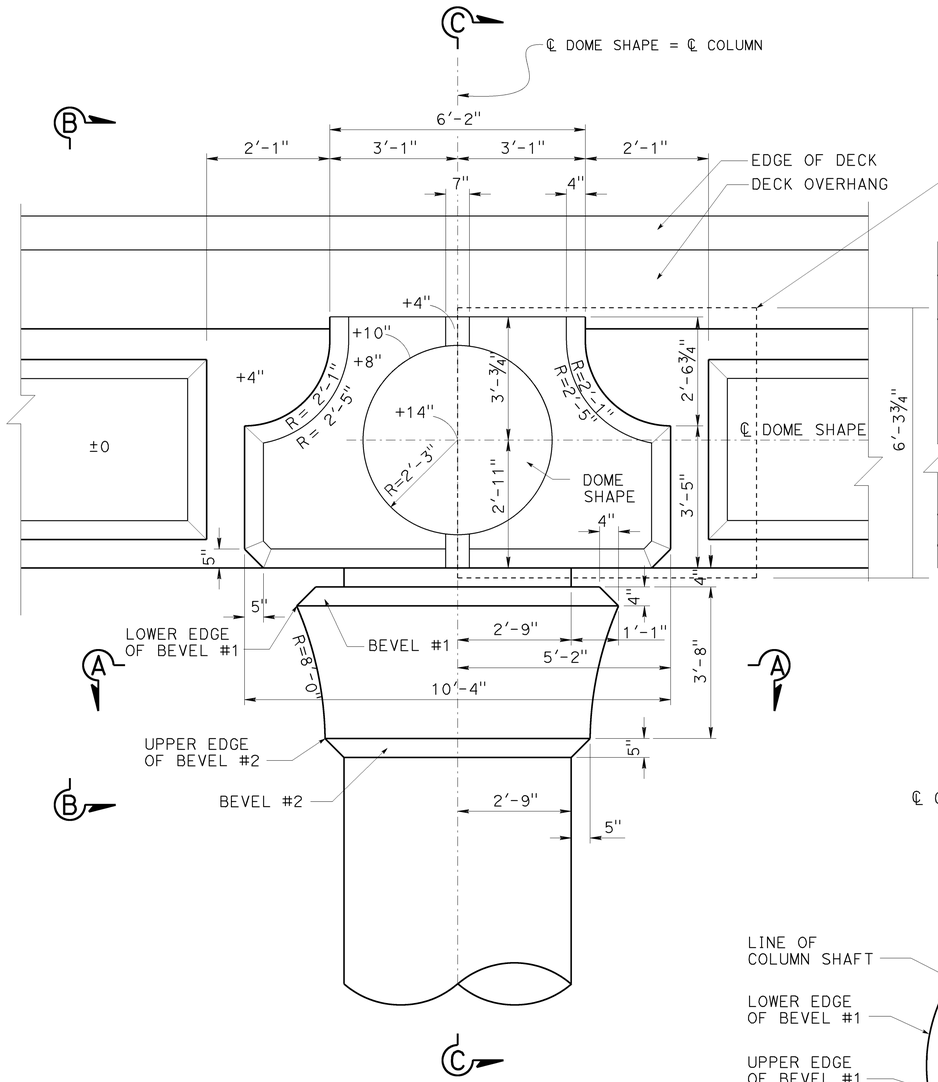

ELEVATION
NO SCALE

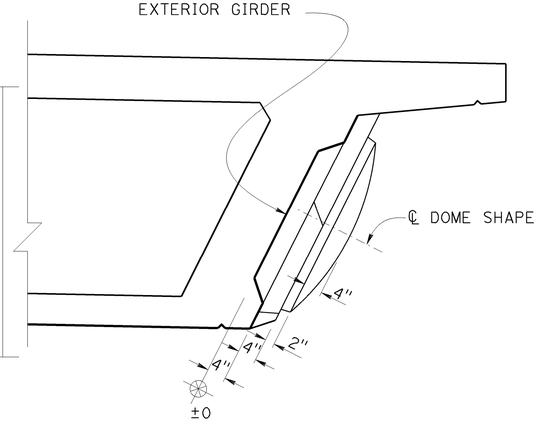

SECTION B-B
NO SCALE

NOTE:
SEE "TYPICAL SECTION" SHEET FOR GIRDER REINF. NOT SHOWN

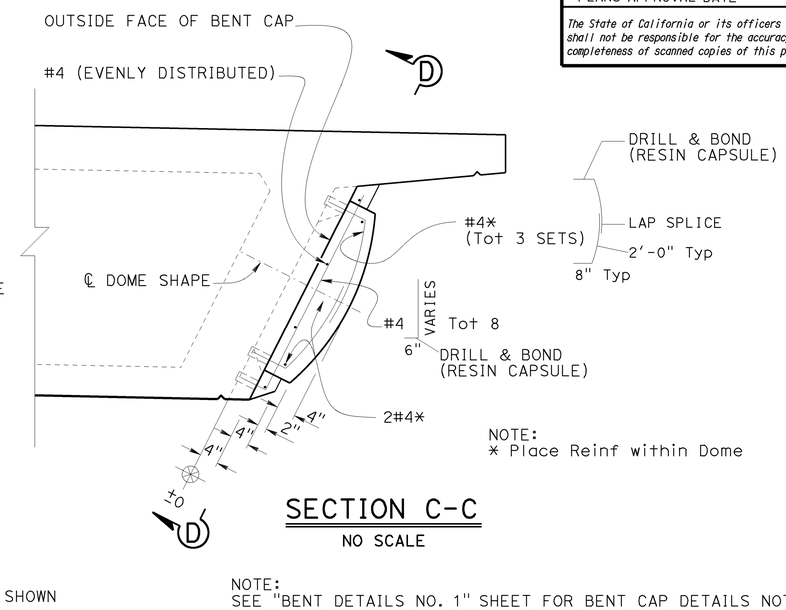

NOTE:
* Place Reinf within Dome

SECTION C-C
NO SCALE

NOTE:
SEE "BENT DETAILS NO. 1" SHEET FOR BENT CAP DETAILS NOT SHOWN

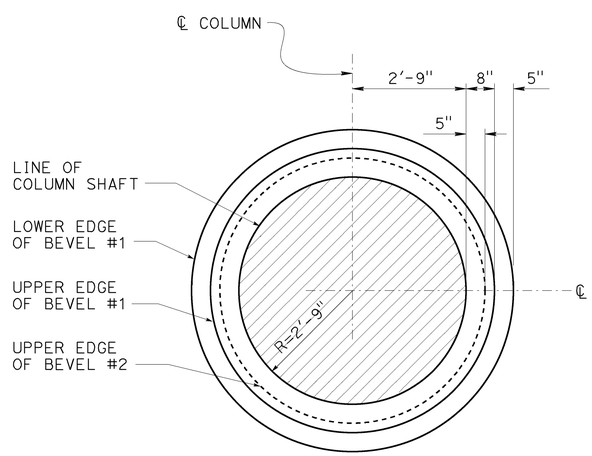

SECTION A-A
NO SCALE

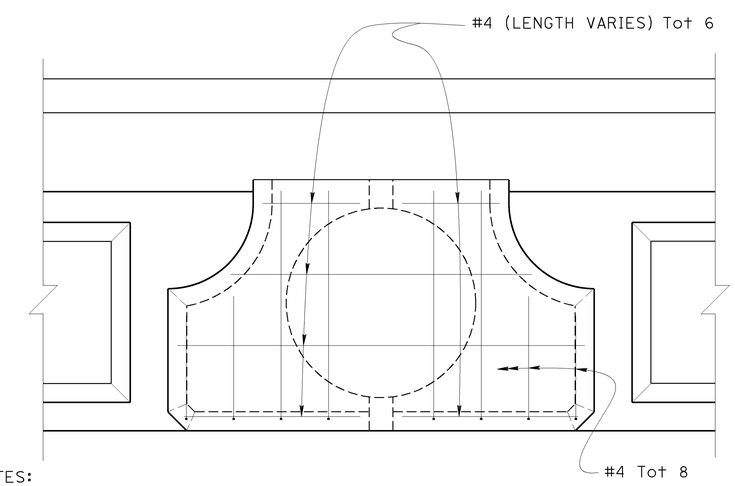

NOTES:

1. Dome Reinf not shown
2. See "ELEVATION" for dimensions not shown

SECTION D-D
NO SCALE

DESIGN	BY ZIHAN YAN	CHECKED PREM RIMAL	
DETAILS	BY MINH TRAN	CHECKED PREM RIMAL	
QUANTITIES	BY ZIHAN YAN	CHECKED PREM RIMAL	

STATE OF CALIFORNIA
DEPARTMENT OF TRANSPORTATION

DIVISION OF ENGINEERING SERVICES
STRUCTURE DESIGN
DESIGN BRANCH 18

BRIDGE NO. 49-0259
POST MILE R 64.86

ARROYO DE CORRAL BRIDGE
ARCHITECTURAL TREATMENT DETAILS NO. 1

STRUCTURES DESIGN DETAIL SHEET (ENGLISH) (REV. 09-01-10)

ORIGINAL SCALE IN INCHES FOR REDUCED PLANS 0 1 2 3

UNIT: 3603
PROJECT NUMBER & PHASE: 0500000576 1
CONTRACT NO.: 05-492801

DISREGARD PRINTS BEARING EARLIER REVISION DATES

REVISION DATES 01/31/13 04/23/13

SHEET 21 OF 29

FILE => 49-0259-r-archdet-01.dgn

USERNAME => s115755 DATE PLOTTED => 16-DEC-2014 TIME PLOTTED => 14:10

DIST	COUNTY	ROUTE	POST MILES TOTAL PROJECT	SHEET No.	TOTAL SHEETS
05	SLO	1	64.0/R66.9	235	265

REGISTERED CIVIL ENGINEER 10-27-14 DATE

10-27-14
PLANS APPROVAL DATE

REGISTERED PROFESSIONAL ENGINEER MICHAEL R POPE No. C 54503 Exp. 12-31-2015 CIVIL STATE OF CALIFORNIA

The State of California or its officers or agents shall not be responsible for the accuracy or completeness of electronic copies of this plan sheet.

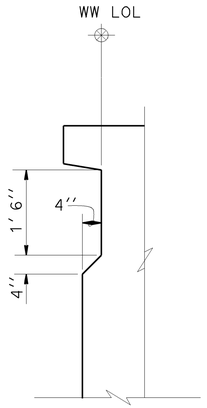

SECTION B-B
3/4" = 1'-0"

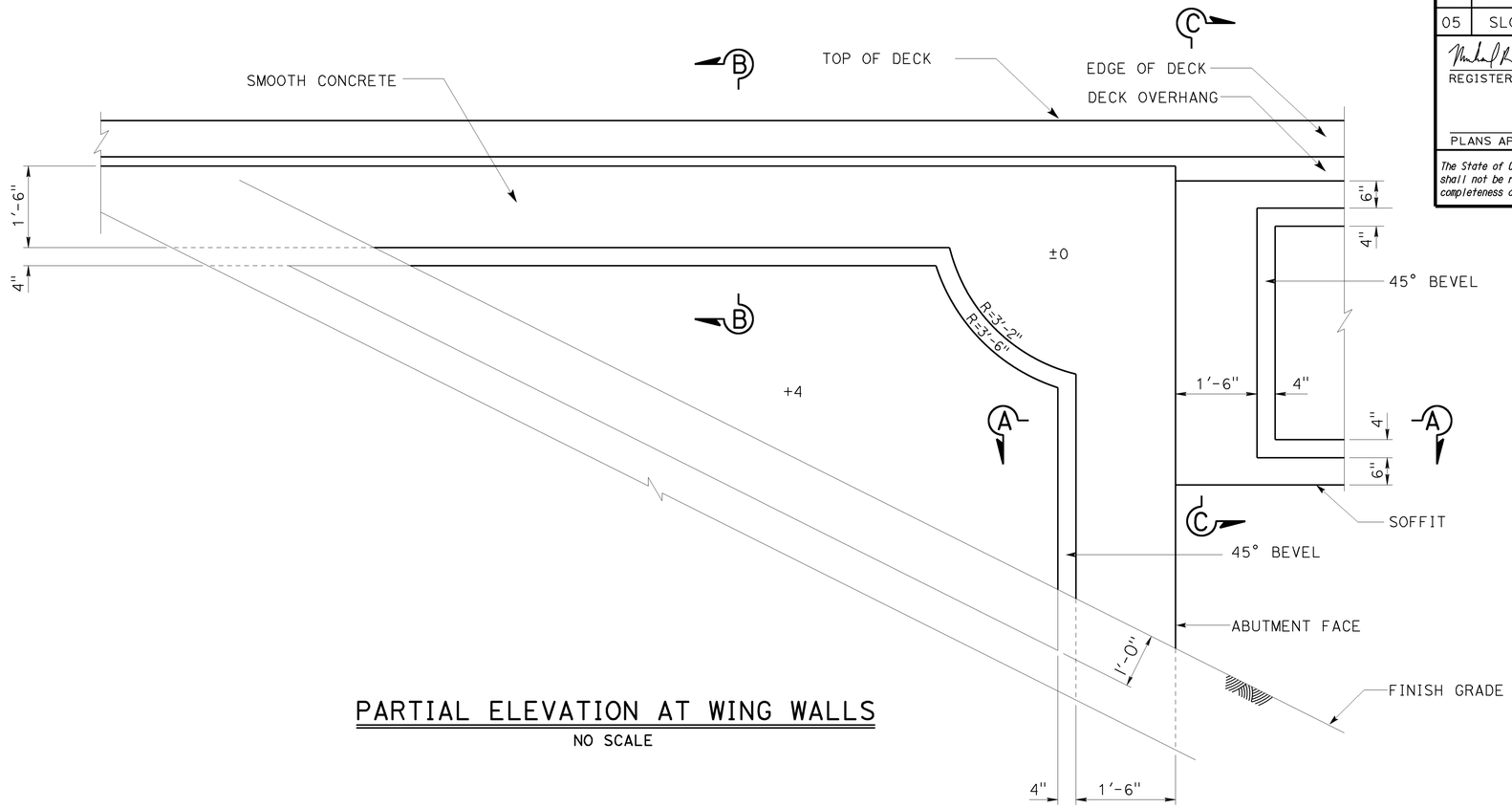

PARTIAL ELEVATION AT WING WALLS
NO SCALE

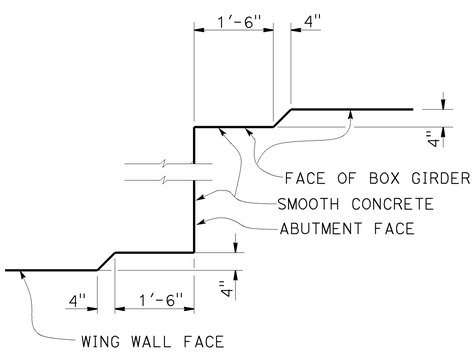

SECTION A-A
NO SCALE

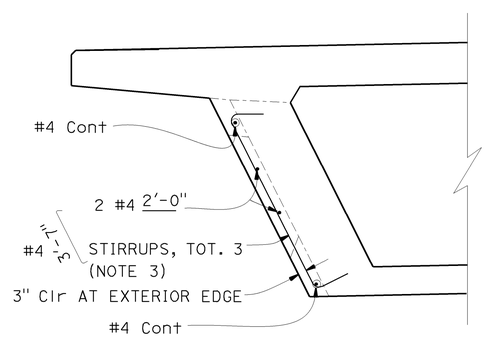

NOTES:
1. For Girder, deck & soffit reinf not shown see "TYPICAL SECTION" sheet.
2. Barrier not shown for clarity.
3. Avoid tail end conflict with PS ducts.

SECTION C-C
NO SCALE

	BY	CHECKED
DESIGN	PREM RIMAL	ZIHAN YAN
DETAILS	SURAJ DUTTA	ZIHAN YAN
QUANTITIES	PREM RIMAL	PHUONG VU

STATE OF CALIFORNIA
DEPARTMENT OF TRANSPORTATION

DIVISION OF ENGINEERING SERVICES
STRUCTURE DESIGN
DESIGN BRANCH 18

BRIDGE NO. 49-0259
POST MILE R 64.86

ARROYO DEL CORRAL BRIDGE
ARCHITECTURAL TREATMENT DETAILS NO. 2

STRUCTURES DESIGN DETAIL SHEET (ENGLISH) (REV. 09-01-10)

ORIGINAL SCALE IN INCHES FOR REDUCED PLANS 0 1 2 3

UNIT: 3603
PROJECT NUMBER & PHASE: 0500000576 1
CONTRACT NO.: 05-492801

DISREGARD PRINTS BEARING EARLIER REVISION DATES
REVISION DATES 09/22/12 10/05/12 01/04/14

SHEET 22 OF 30

FILE => 49-0259-r-archdet-02.dgn

USERNAME => s113755 DATE PLOTTED => 16-DEC-2014 TIME PLOTTED => 14:10

DIST	COUNTY	ROUTE	POST MILES TOTAL PROJECT	SHEET No.	TOTAL SHEETS
05	SLO	1	64.0/R66.9	236	265

REGISTERED CIVIL ENGINEER 10-27-14 DATE

10-27-14
PLANS APPROVAL DATE

REGISTERED PROFESSIONAL ENGINEER MICHAEL R POPE No. C 54503 Exp. 12-31-2015 CIVIL STATE OF CALIFORNIA

The State of California or its officers or agents shall not be responsible for the accuracy or completeness of electronic copies of this plan sheet.

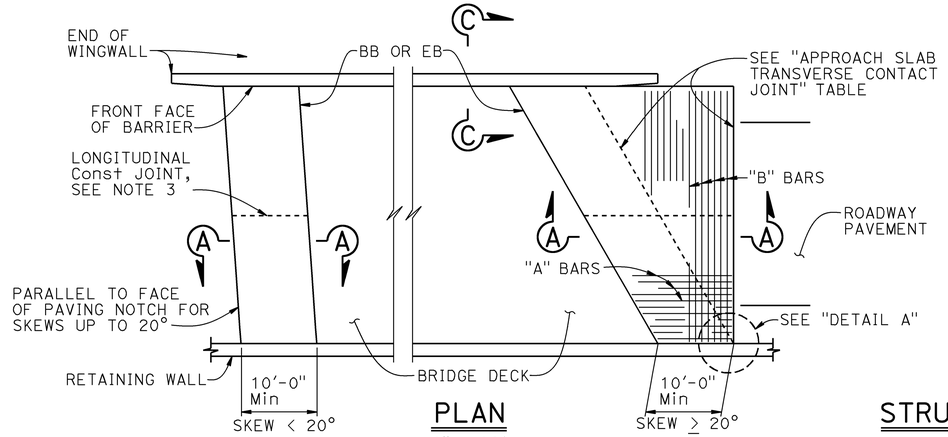

PLAN
1" = 10'

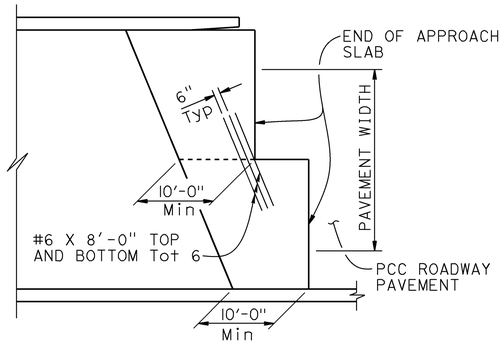

STRUCTURE APPROACH - END STAGGER DETAIL
NO SCALE

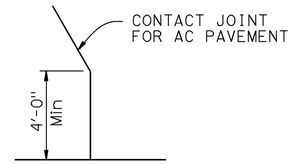

DETAIL A
No Scale

APPROACH SLAB TRANSVERSE CONTACT JOINT		
APPROACH SKEW	AC ROADWAY PAVEMENT	WITH PCC ROADWAY PAVEMENT
< 20°	PARALLEL TO FACE OF PN	PARALLEL TO FACE OF PN
20° - 45°	PARALLEL TO FACE OF PN USE "DETAIL A"	STAGGER LINES 24' TO 36' APART
> 45°	PARALLEL TO FACE OF PN USE "DETAIL A"	STAGGER AT EACH LANE LINE

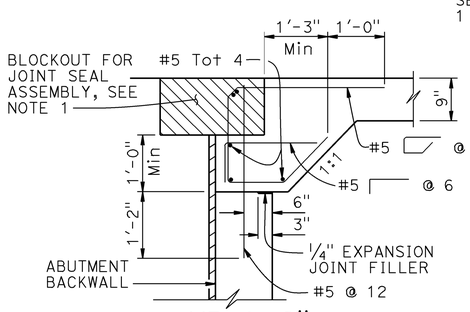

MR > 2"

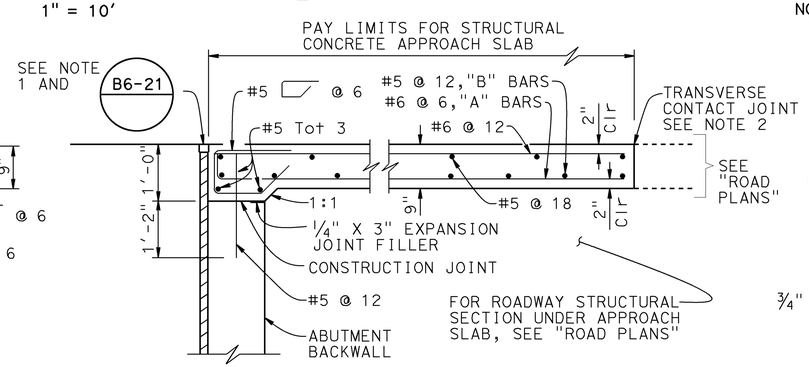

MR ≤ 2"

SEAT TYPE ABUTMENT
SECTION A-A
¾" = 1'-0"

NOTE: Seat type abutment shown, for diaphragm type abutment, see "ABUTMENT TIE DETAILS"

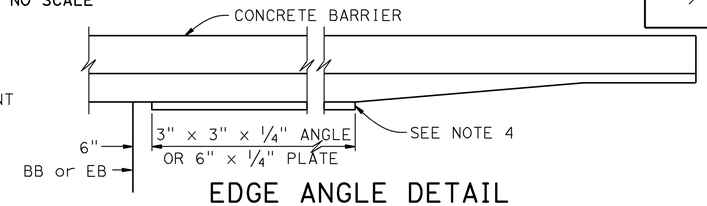

EDGE ANGLE DETAIL
½" = 1'-0"

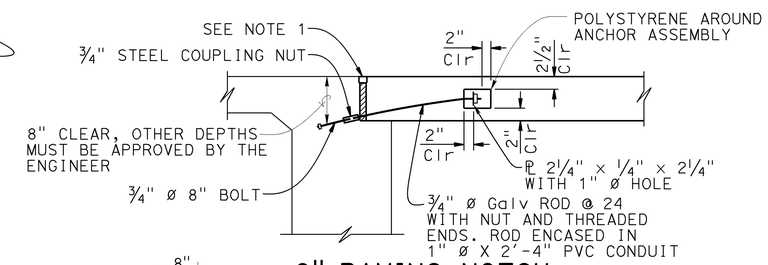

9" PAVING NOTCH

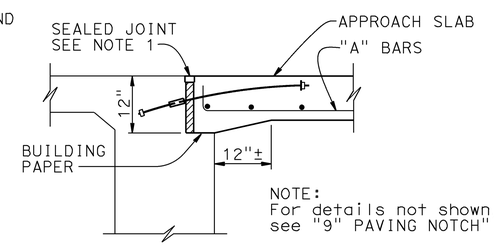

NOTE:
For details not shown, see "9" PAVING NOTCH"

12" PAVING NOTCH

DIAPHRAGM TYPE ABUTMENT
ABUTMENT TIE DETAILS
¾" = 1'-0"

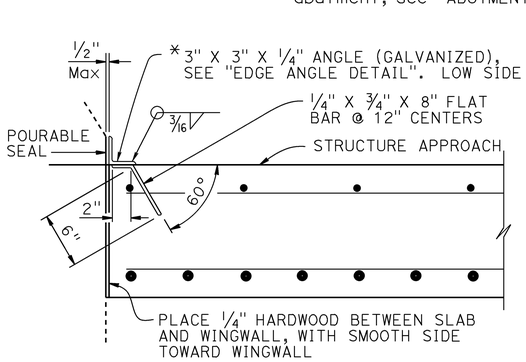

*(TO BE USED WITH CONCRETE BARRIER WITH VERTICAL FACE)

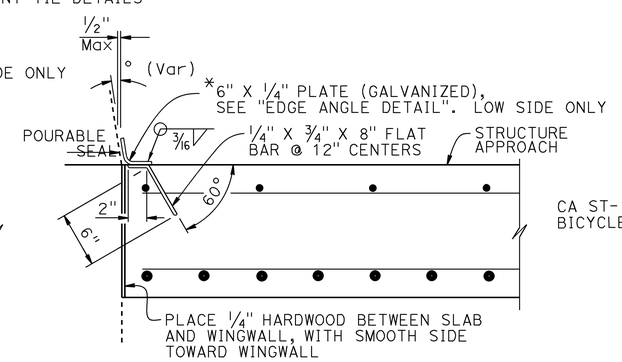

*(TO BE USED WITH CONCRETE BARRIER WITH SLOPING FACE)

DETAIL B
1½" = 1'-0"

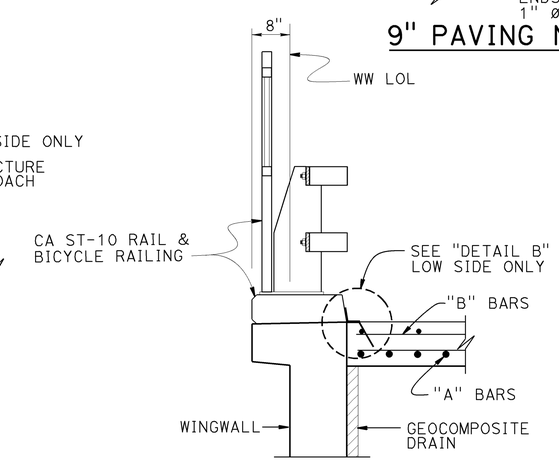

SECTION C-C
¾" = 1'-0"

NOTES:

1. For details not noted or shown, see Structure Plans. Adjust bar reinforcement to clear a sawcut for sealed joint, when required
2. For transverse contact joint with new PCC paving, refer to Standard Plan P10
3. Longitudinal construction joints, when permitted by the Engineer, shall be located on lane lines
4. End angle or plate at beginning of barrier transition, end of wingwall or end of structure approach as applicable
5. At the Contractor's option, approach slab transverse reinforcement may be placed parallel to paving notch. Spacing of transverse reinforcement is measured along ℄ roadway
6. For drainage details, see Structure Plans.

REVISED STANDARD DRAWING

FILE NO. xs3-160

APPROVAL DATE July 2011

STATE OF CALIFORNIA
DEPARTMENT OF TRANSPORTATION

DIVISION OF ENGINEERING SERVICES

BRIDGE NO. 49-0259
POST MILE R 64.86

ARROYO DEL CORRAL BRIDGE
STRUCTURE APPROACH TYPE EQ(10)

DS OSD 2147A (ENGLISH STANDARD DRAWING "XS" BORDER REV. (02-02-11)

ORIGINAL SCALE IN INCHES FOR REDUCED PLANS 0 1 2 3

UNIT: 3603
PROJECT NUMBER & PHASE: 0500000576 1
CONTRACT NO.: 05-492801

DISREGARD PRINTS BEARING EARLIER REVISION DATES

REVISION DATES

SHEET 23 OF 29

FILE => 49-0259-t-a_staappdet01.dgn

USERNAME => s115755 DATE PLOTTED => 16-DEC-2014 TIME PLOTTED => 14:10

DIST	COUNTY	ROUTE	POST MILES TOTAL PROJECT	SHEET No.	TOTAL SHEETS
05	SLO	1	64.0/R66.9	237	265

REGISTERED CIVIL ENGINEER 10-27-14 DATE

10-27-14
PLANS APPROVAL DATE

The State of California or its officers or agents shall not be responsible for the accuracy or completeness of electronic copies of this plan sheet.

REGISTERED PROFESSIONAL ENGINEER MICHAEL R POPE No. C 54503 Exp. 12-31-2015 CIVIL STATE OF CALIFORNIA

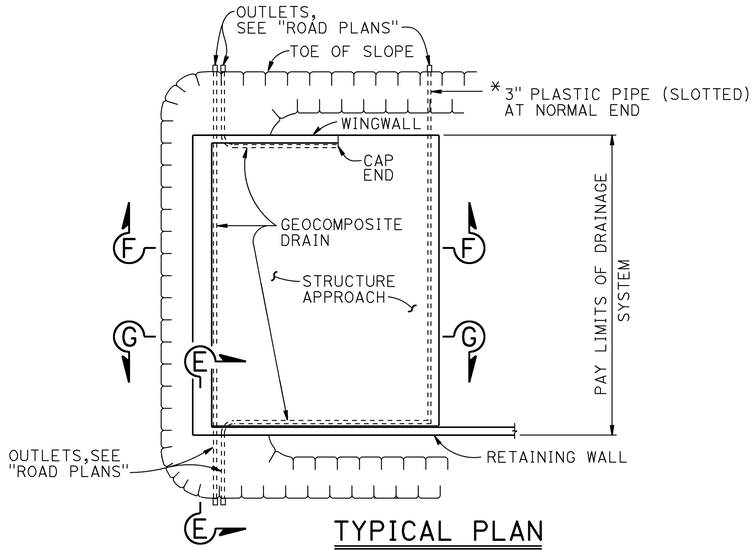

TYPICAL PLAN
1" = 10'

* FOR PIPE LAYOUT AT STAGGERED END, SEE "DETAIL B"

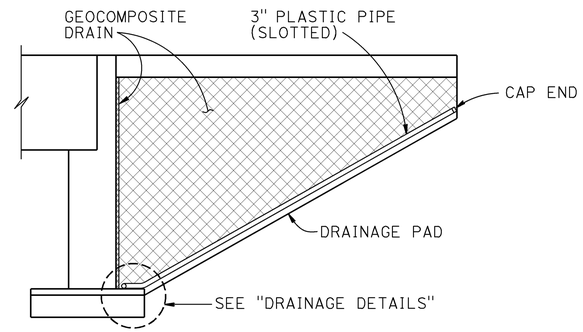

CANTILEVER WINGWALL

SECTION F-F
1/4" = 1'-0"

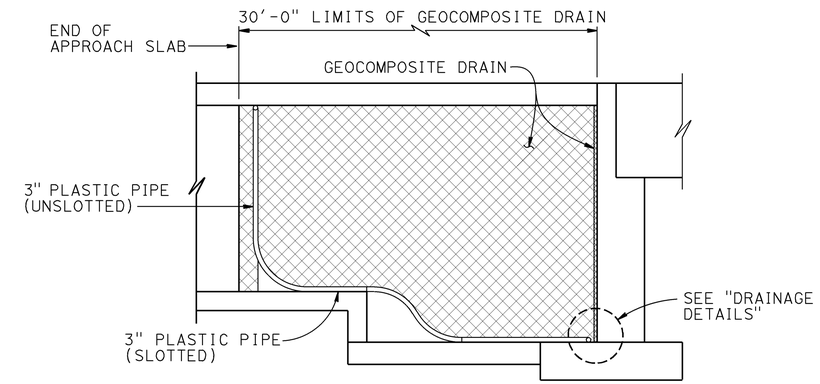

RETAINING WALL WINGWALL DRAINAGE DETAILS

SECTION G-G
1/4" = 1'-0"

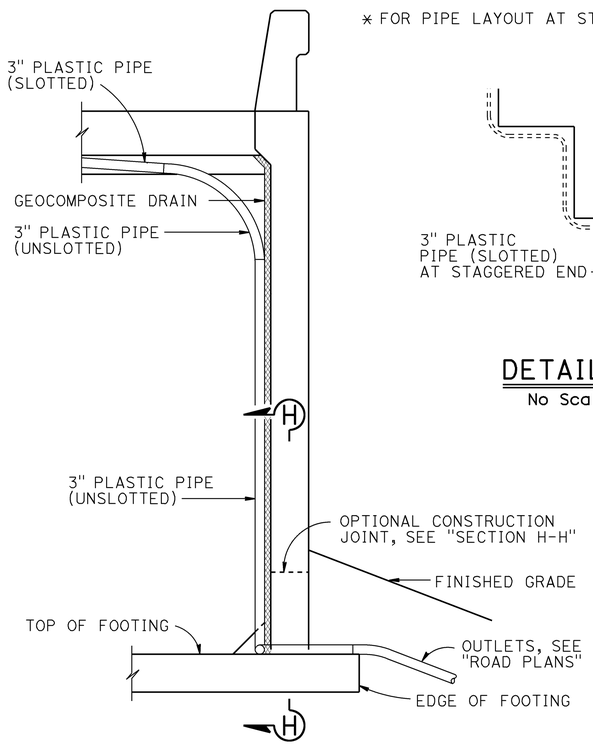

SECTION E-E
1/2" = 1'-0"

NOTE: Bends and junctions in 3" plastic pipe are 30" radius Min

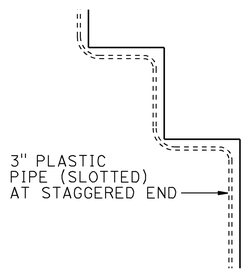

DETAIL B
No Scale

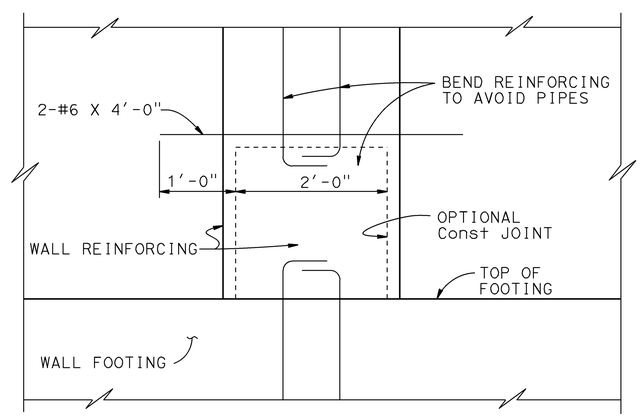

SECTION H-H
1" = 1'-0"

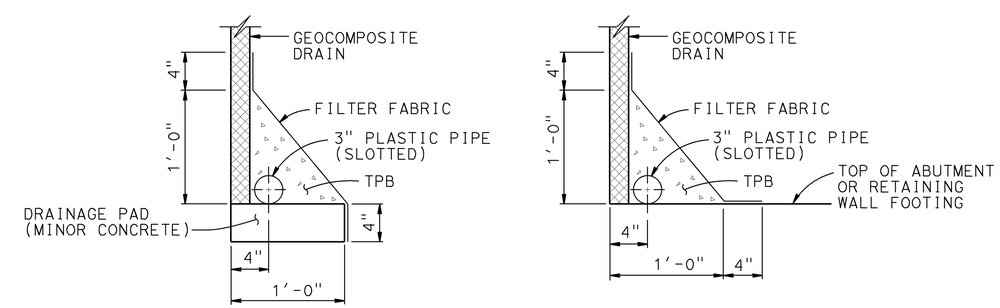

WITHOUT FOOTING

WITH FOOTING

DRAINAGE DETAILS
1 1/2" = 1'-0"

STANDARD DRAWING

FILE NO. xs3-110

APPROVAL DATE July 2011

STATE OF CALIFORNIA DEPARTMENT OF TRANSPORTATION

DIVISION OF ENGINEERING SERVICES

BRIDGE NO. 49-0259

POST MILE R 64.86

ARROYO DEL CORRAL BRIDGE
STRUCTURE APPROACH DRAINAGE DETAILS

DS OSD 2147A (ENGLISH STANDARD DRAWING "XS" BORDER REV. (02-02-11)

ORIGINAL SCALE IN INCHES FOR REDUCED PLANS 0 1 2 3

UNIT: 3603
PROJECT NUMBER & PHASE: 0500000576
CONTRACT NO.: 05-492801

DISREGARD PRINTS BEARING EARLIER REVISION DATES

REVISION DATES

SHEET 24 OF 29

FILE => 49-0259-t-b_staappdet02.dgn

USERNAME => s115755 DATE PLOTTED => 16-DEC-2014 TIME PLOTTED => 14:10

DIST	COUNTY	ROUTE	POST MILES TOTAL PROJECT	SHEET No.	TOTAL SHEETS
05	SLO		64.0/R66.9	238	265

REGISTERED CIVIL ENGINEER 10-27-14 DATE

10-27-14
PLANS APPROVAL DATE

REGISTERED PROFESSIONAL ENGINEER
Zeke Dellamas
No. C67457
Exp. 6-30-15
CIVIL
STATE OF CALIFORNIA

The State of California or its officers or agents shall not be responsible for the accuracy or completeness of electronic copies of this plan sheet.

This LOTB sheet was prepared in accordance with the Caltrans Soil & Rock Logging, Classification, & Presentation Manual (2010 Edition).

See 2010 Standard Plans A10F and A10G for Soil Legend, and A10H for Rock Legend.

BENCH MARK

SLO-1-PM 64.81

Fnd ¾" ip w/wood plug w/nail
273.14' Lt "A1" Line
Sta 333+39.84
N 2,450,910.14
E 5,585,928.75
Elev + 30.782' (NAVD88)

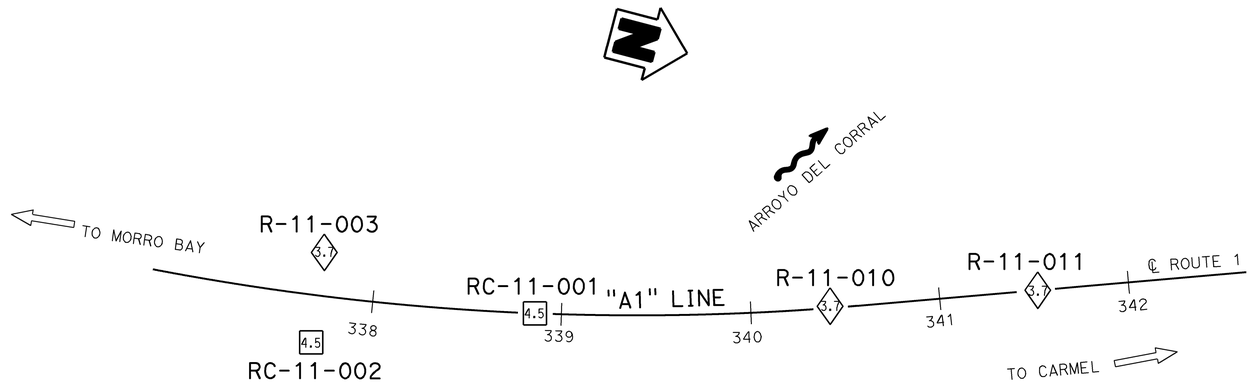

PLAN

1" = 40'

PROFILE

Horiz: 1" = 20'
Vert: 1" = 10'

ENGINEERING SERVICES	MATERIALS AND GEOTECHNICAL SERVICES	STATE OF CALIFORNIA DEPARTMENT OF TRANSPORTATION	DIVISION OF ENGINEERING SERVICES STRUCTURE DESIGN DESIGN BRANCH 18	BRIDGE NO. 49-0259 POST MILE R64.86	ARROYO DEL CORRAL BRIDGE
FUNCTIONAL SUPERVISOR NAME: M. Finegan	DRAWN BY: F. Nguyen CHECKED BY: D. Appelbaum	FIELD INVESTIGATION BY: Z. Dellamas			LOG OF TEST BORINGS 1 OF 5

OGS CIVIL LOG OF TEST BORINGS SHEET

ORIGINAL SCALE IN INCHES FOR REDUCED PLANS 0 1 2 3

UNIT: 3643
PROJECT NUMBER & PHASE: 05000005761 CONTRACT NO.: 05-492801

DISREGARD PRINTS BEARING EARLIER REVISION DATES → REVISION DATES 10-05-12 11-09-12 11-29-12

SHEET 25 OF 29

FILE => 49-0259-z-log 1 of 5.dgn

USERNAME => s115755 DATE PLOTTED => 16-DEC-2014 TIME PLOTTED => 14:10

DIST	COUNTY	ROUTE	POST MILES TOTAL PROJECT	SHEET No.	TOTAL SHEETS
05	SLO	1	64.0/R66.9	239	265

REGISTERED CIVIL ENGINEER 10-27-14 DATE

10-27-14
PLANS APPROVAL DATE

REGISTERED PROFESSIONAL ENGINEER
Zeke Dellamas
No. C67457
Exp. 6-30-15
CIVIL
STATE OF CALIFORNIA

The State of California or its officers or agents shall not be responsible for the accuracy or completeness of electronic copies of this plan sheet.

This LOTB sheet was prepared in accordance with the Caltrans Soil & Rock Logging, Classification, & Presentation Manual (2010 Edition).

See 2010 Standard Plans A10F and A10G for Soil Legend, and A10H for Rock Legend.

FOR PLAN VIEW, SEE
"LOG OF TEST BORINGS 1 OF 5"

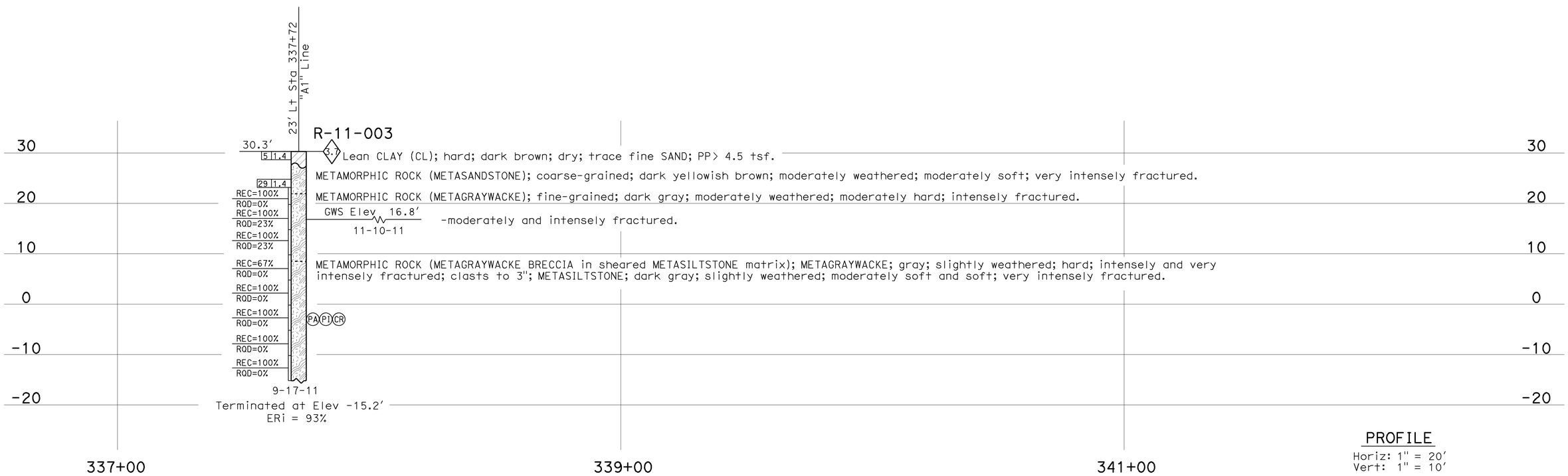

PROFILE
Horiz: 1" = 20'
Vert: 1" = 10'

ENGINEERING SERVICES	MATERIALS AND GEOTECHNICAL SERVICES	STATE OF CALIFORNIA DEPARTMENT OF TRANSPORTATION	DIVISION OF ENGINEERING SERVICES STRUCTURE DESIGN DESIGN BRANCH 18	BRIDGE NO. 49-0259 POST MILE R64.86	ARROYO DEL CORRAL BRIDGE LOG OF TEST BORINGS 2 OF 5
FUNCTIONAL SUPERVISOR NAME: M. Finegan	DRAWN BY: F. Nguyen CHECKED BY: D. Appelbaum	FIELD INVESTIGATION BY: Z. Dellamas			

OGS CIVIL LOG OF TEST BORINGS SHEET

ORIGINAL SCALE IN INCHES FOR REDUCED PLANS 0 1 2 3

UNIT: 3643
PROJECT NUMBER & PHASE: 05000005761 CONTRACT NO.: 05-492801

DISREGARD PRINTS BEARING EARLIER REVISION DATES

REVISION DATES: 10-03-12 11-29-12

SHEET 26 OF 29

FILE => 49-0259-z-log 2 of 5.dgn

USERNAME => s115755 DATE PLOTTED => 16-DEC-2014 TIME PLOTTED => 14:11

DIST	COUNTY	ROUTE	POST MILES TOTAL PROJECT	SHEET No.	TOTAL SHEETS
05	SLO	1	64.0/R66.9	240	265

REGISTERED CIVIL ENGINEER 10-27-14 DATE

10-27-14
PLANS APPROVAL DATE

REGISTERED PROFESSIONAL ENGINEER Zeke Dellamas No. C67457 Exp. 6-30-15 CIVIL STATE OF CALIFORNIA

The State of California or its officers or agents shall not be responsible for the accuracy or completeness of electronic copies of this plan sheet.

This LOTB sheet was prepared in accordance with the Caltrans Soil & Rock Logging, Classification, & Presentation Manual (2010 Edition).

See 2010 Standard Plans A10F and A10G for Soil Legend, and A10H for Rock Legend.

FOR PLAN VIEW, SEE
"LOG OF TEST BORINGS 1 OF 5"

On Centerline Sta 338+86.0 "A1" Line

RC-11-001

15.7′
GWS Elev 11.9′
02-28-12

4.5 Lean CLAY (CL); hard; yellowish brown; dry;few fine SAND; PP=4.5 tsf.

-stiff; black; moist; PP= 1.75 tsf.
-PP= 1.5 tsf.
-becomes dark gray; PP= 1.5 tsf.

(PA)(PI)(CR) CLAYEY SAND (SC); very loose; dark yellowish brown; moist; mostly fine SAND; some fines; trace fine GRAVEL.
Lean CLAY (CL); soft and medium stiff; light gray; moist; few fine SAND; PP= 0.3 to 0.8 tsf.
-dark gray; medium stiff and stiff; PP= 0.8 to 1.3 tsf.
(PA)(PI)(CR) -very soft; PP=0.0 tsf.
-medium stiff; trace organics; PP=0.75 tsf.
SANDY lean CLAY (CL); soft and very soft; dark gray; moist; some fine SAND; PP= 0.0 to 0.5 tsf.

CLAYEY SAND with GRAVEL (SC); medium dense; dark gray; moist; mostly fine SAND; some fines; little subangular and subrounded fine GRAVEL; trace organics.
-fine and coarse GRAVEL.

METAMORPHIC ROCK (METASILTSTONE); very dark gray; decomposed; soft and very soft; very intensely fractured (SILTY CLAY (CL-ML); moist; few fine SAND); (FRANCISCAN FORMATION).
-gray; moderately weathered; moderately soft; very intensely to intensely fractured; dry.

3.7

METAMORPHIC ROCK (METAGRAYWACKE); fine grained; gray; fresh and slightly weathered; hard; moderately and intensely fractured; fractures totally healed with calcite.
(UC) -UC= 11090 psi.
-slightly and moderately weathered; moderately hard; intensely and very intensely fractured.
-fresh and slightly weathered; from hard to moderately soft; intensely fractured.
-moderately weathered; moderately hard; very intensely fractured.

-slightly weathered; intensely fractured.

METAMORPHIC ROCK (METASILTSTONE); gray; slighty weathered; moderately soft; intensely and very intensely fractured; sheared with some slickensides.

METAMORPHIC ROCK (METAGRAYWACKE); fine grained; very dark gray; slightly to moderately weathered; hard to moderately hard; intensely fractured; some fractures healed with calcite.

METAMORPHIC ROCK (METAGRAYWACKE BRECCIA in sheared METASILTSTONE matrix); METAGRAYWACKE; gray; slightly weathered; moderately hard; intensely fractured; clasts range from 1" to 7". METASILTSTONE; gray; slightly weathered; moderately soft; pervasively sheared with some slickensides.

REC=52% RQD=0%
REC=31% RQD=0%
REC=52% RQD=0%
REC=0% RQD=0%
REC=0% RQD=0%
REC=0% RQD=0%
REC=100% RQD=39%
REC=93% RQD=7%
REC=82% RQD=0%
REC=95% RQD=0%
REC=73% RQD=0%
REC=100% RQD=0%
REC=100% RQD=17%
REC=88% RQD=0%
REC=100% RQD=8%
REC=100% RQD=0%
REC=100% RQD=0%
REC=92% RQD=0%
REC=100% RQD=0%
REC=100% RQD=0%
REC=100% RQD=0%
REC=100% RQD=0%

9-16-11
Terminated at Elev -104.3′
ERi = 93%

20 10 0 -10 -20 -30 -40 -50 -60 -70 -80 -90 -100 -110

338+00 340+00 342+00

PROFILE
Horiz: 1" = 20′
Vert: 1" = 10′

ENGINEERING SERVICES	MATERIALS AND GEOTECHNICAL SERVICES	STATE OF CALIFORNIA DEPARTMENT OF TRANSPORTATION	DIVISION OF ENGINEERING SERVICES STRUCTURE DESIGN DESIGN BRANCH 18	BRIDGE NO. 49-0259 POST MILE R64.86	ARROYO DEL CORRAL BRIDGE LOG OF TEST BORINGS 3 OF 5
FUNCTIONAL SUPERVISOR NAME: M. Finegan	DRAWN BY: F. Nguyen CHECKED BY: D. Appelbaum	FIELD INVESTIGATION BY: Z. Dellamas			

OGS CIVIL LOG OF TEST BORINGS SHEET

ORIGINAL SCALE IN INCHES FOR REDUCED PLANS 0 1 2 3

UNIT: 3643
PROJECT NUMBER & PHASE: 05000005761 CONTRACT NO.: 05-492801

DISREGARD PRINTS BEARING EARLIER REVISION DATES → REVISION DATES 10-03-12 11-08-12 11-29-12

SHEET 27 OF 29

FILE => 49-0259-z-log 3 of 5.dgn

USERNAME => s115755 DATE PLOTTED => 16-DEC-2014 TIME PLOTTED => 14:11

DIST	COUNTY	ROUTE	POST MILES TOTAL PROJECT	SHEET No.	TOTAL SHEETS
05	SLO	1	64.0/R66.9	241	265

REGISTERED CIVIL ENGINEER 10-27-14 DATE

10-27-14
PLANS APPROVAL DATE

REGISTERED PROFESSIONAL ENGINEER
Zeke Dellamas
No. C67457
Exp. 6-30-15
CIVIL
STATE OF CALIFORNIA

The State of California or its officers or agents shall not be responsible for the accuracy or completeness of electronic copies of this plan sheet.

This LOTB sheet was prepared in accordance with the Caltrans Soil & Rock Logging, Classification, & Presentation Manual (2010 Edition).

See 2010 Standard Plans A10F and A10G for Soil Legend, and A10H for Rock Legend.

FOR PLAN VIEW, SEE
"LOG OF TEST BORINGS 1 OF 5"

PROFILE
Horiz: 1" = 10'
Vert: 1" = 10'

ENGINEERING SERVICES	MATERIALS AND GEOTECHNICAL SERVICES	STATE OF CALIFORNIA DEPARTMENT OF TRANSPORTATION	DIVISION OF ENGINEERING SERVICES STRUCTURE DESIGN DESIGN BRANCH 18	BRIDGE NO. 49-0259 POST MILE R64.86	ARROYO DEL CORRAL BRIDGE LOG OF TEST BORINGS 4 OF 5
FUNCTIONAL SUPERVISOR NAME: M. Finegan	DRAWN BY: F. Nguyen CHECKED BY: D. Appelbaum	FIELD INVESTIGATION BY: Z. Dellamas			

OGS CIVIL LOG OF TEST BORINGS SHEET

ORIGINAL SCALE IN INCHES FOR REDUCED PLANS 0 1 2 3

UNIT: 3643
PROJECT NUMBER & PHASE: 05000005761 CONTRACT NO.: 05-492801

DISREGARD PRINTS BEARING EARLIER REVISION DATES

REVISION DATES 10-03-12 11-09-12 11-29-12

SHEET 28 OF 29

FILE => 49-0259-z-log 4 of 5.dgn

USERNAME => s115755 DATE PLOTTED => 16-DEC-2014 TIME PLOTTED => 14:11

DIST	COUNTY	ROUTE	POST MILES TOTAL PROJECT	SHEET No.	TOTAL SHEETS
05	SLO	1	64.0/R66.9	242	265

REGISTERED CIVIL ENGINEER 10-27-14 DATE

10-27-14
PLANS APPROVAL DATE

REGISTERED PROFESSIONAL ENGINEER
Zeke Dellamas
No. C67457
Exp. 6-30-15
CIVIL
STATE OF CALIFORNIA

The State of California or its officers or agents shall not be responsible for the accuracy or completeness of electronic copies of this plan sheet.

This LOTB sheet was prepared in accordance with the Caltrans Soil & Rock Logging, Classification, & Presentation Manual (2010 Edition).

See 2010 Standard Plans A10F and A10G for Soil Legend, and A10H for Rock Legend.

FOR PLAN VIEW, SEE
"LOG OF TEST BORINGS 1 OF 5"

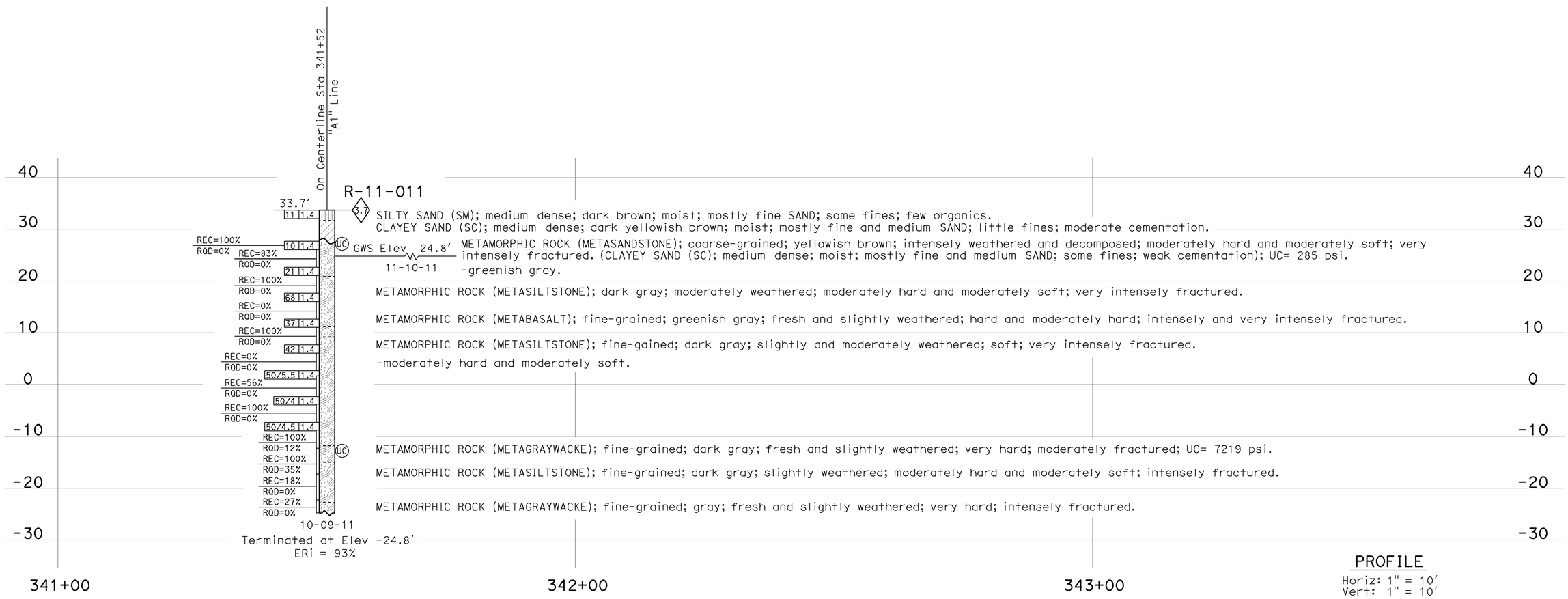

PROFILE
Horiz: 1" = 10'
Vert: 1" = 10'

ENGINEERING SERVICES	MATERIALS AND GEOTECHNICAL SERVICES	STATE OF CALIFORNIA DEPARTMENT OF TRANSPORTATION	DIVISION OF ENGINEERING SERVICES STRUCTURE DESIGN DESIGN BRANCH 18	BRIDGE NO. 49-0259 POST MILE R64.86	ARROYO DEL CORRAL BRIDGE
FUNCTIONAL SUPERVISOR NAME: M. Finegan	DRAWN BY: F. Nguyen CHECKED BY: D. Appelbaum	FIELD INVESTIGATION BY: Z. Dellamas			LOG OF TEST BORINGS 5 OF 5

OGS CIVIL LOG OF TEST BORINGS SHEET

ORIGINAL SCALE IN INCHES FOR REDUCED PLANS 0 1 2 3

UNIT: 3643
PROJECT NUMBER & PHASE: 05000005761 CONTRACT NO.: 05-492801

DISREGARD PRINTS BEARING EARLIER REVISION DATES → REVISION DATES 10-03-12 11-09-12 11-29-12

SHEET 29 OF 29

FILE => 49-0259-z-log 5 of 5.dgn

USERNAME => s115755 DATE PLOTTED => 16-DEC-2014 TIME PLOTTED => 14:11

DIST	COUNTY	ROUTE	POST MILES TOTAL PROJECT	SHEET No.	TOTAL SHEETS
05	SLO	1	64.0/R66.9	243	265

REGISTERED CIVIL ENGINEER 10-27-14 DATE

PLANS APPROVAL DATE 10-27-14

REGISTERED PROFESSIONAL ENGINEER MICHAEL R POPE No. C 54503 Exp. 12-31-2015 CIVIL STATE OF CALIFORNIA

The State of California or its officers or agents shall not be responsible for the accuracy or completeness of electronic copies of this plan sheet.

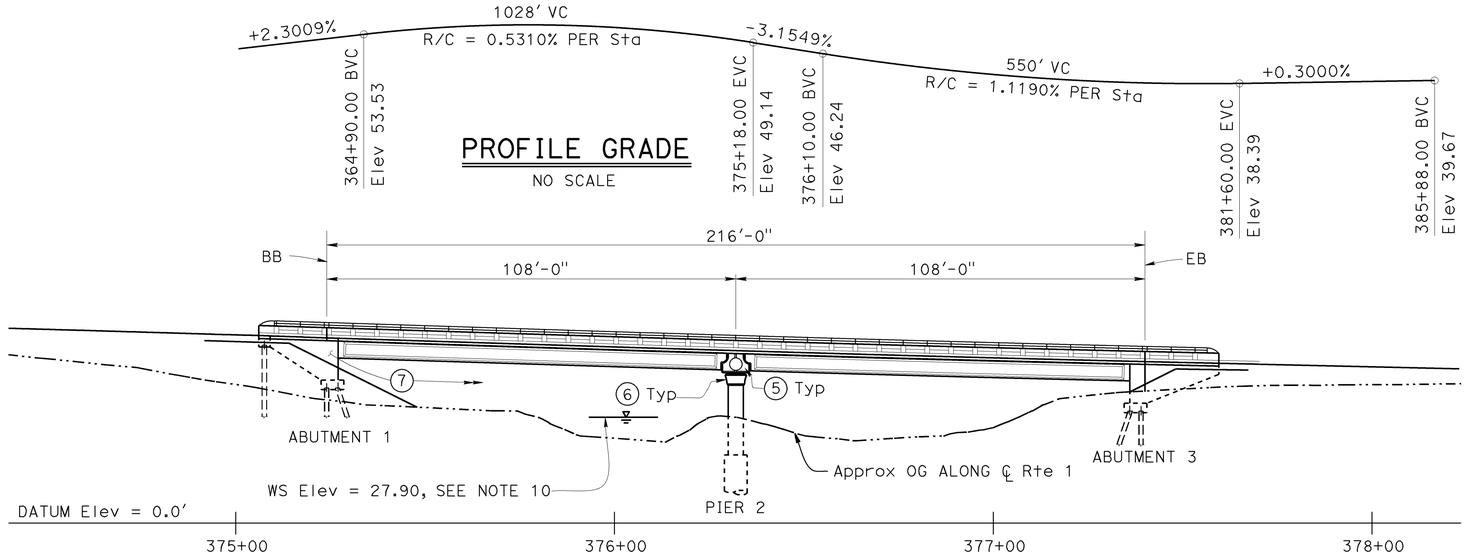

PROFILE GRADE

NO SCALE

ELEVATION

1" = 20'

QUANTITIES

STRUCTURE EXCAVATION (BRIDGE)	202 CY
STRUCTURE EXCAVATION (TYPE D)	17 CY
STRUCTURE BACKFILL (BRIDGE)	113 CY
FURNISH STEEL PILING (HP 14X89)	643 LF
DRIVE STEEL PILE (HP 14X89)	24 EA
72" CAST-IN-DRILLED-HOLE CONCRETE PILING	172 LF
STRUCTURAL CONCRETE, BRIDGE FOOTING	51 CY
STRUCTURAL CONCRETE, BRIDGE	482 CY
STRUCTURAL CONCRETE, APPROACH SLAB (TYPE EQ)	24 CY
ARCHITECTURAL TREATMENT	380 SQFT
FURNISH PRECAST PRESTRESSED CONCRETE GIRDER (100'-110')	12 EA
ERECT PRECAST PRESTRESSED CONCRETE GIRDER	12 EA
JOINT SEAL (MR 1")	87 LF
BAR REINFORCING STEEL (BRIDGE)	199,300 LB
MISCELLANEOUS METAL (BRIDGE)	3,590 LB
CALIFORNIA ST-10 BRIDGE RAIL (MODIFIED) (WITH BICYCLE RAILING)	510 LF

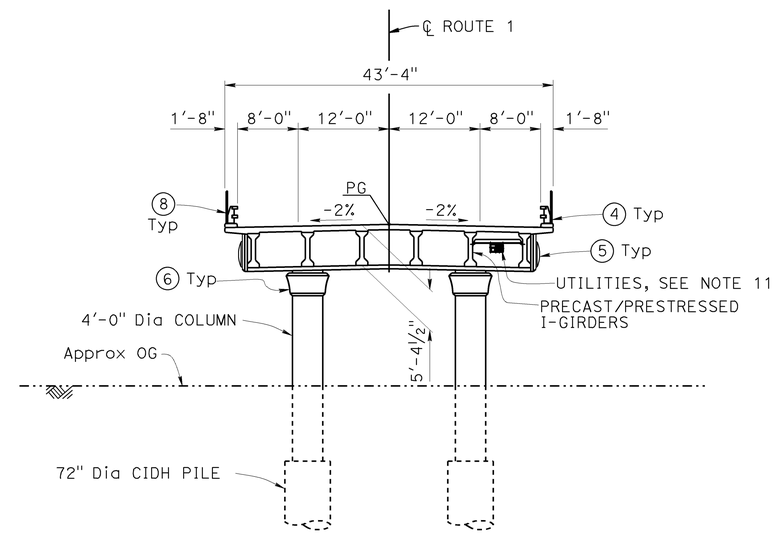

TYPICAL SECTION

1" = 10'

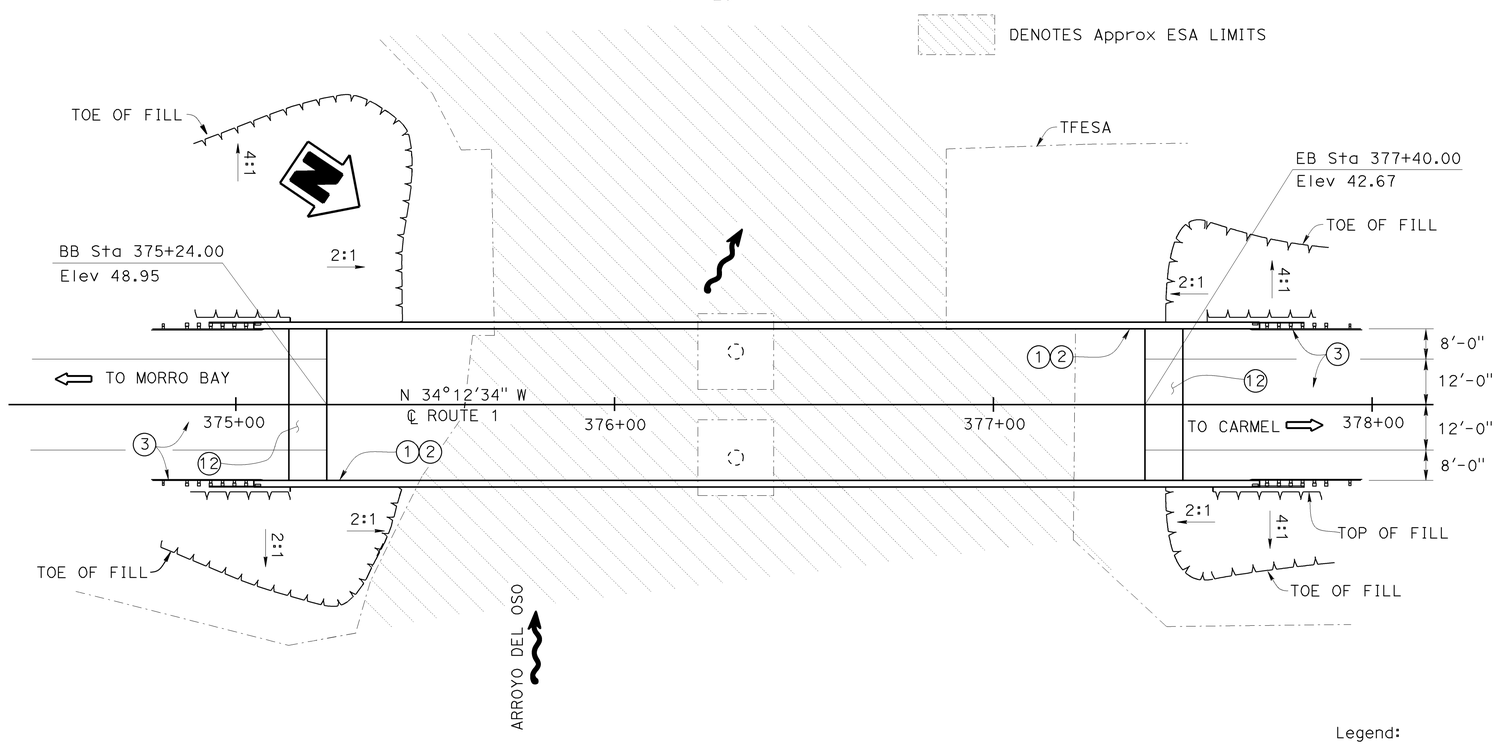

PLAN

1" = 20'

Legend:

Direction of Flow

Direction of Traffic

Notes:

1. Paint "BRIDGE NO. 49-0260"
2. Paint "ARROYO DEL OSO BRIDGE"
3. Midwest Guardrail, see "ROAD PLANS"
4. Architectural Treatment on Barrier
5. Architectural Treatment on Pier Cap
6. Architectural Treatment on Column Top
7. Architectural Treatment on Abutment and Wingwall faces
8. CALIFORNIA ST-10 BRIDGE RAIL (MOD) w/ Bicycle Railing
9. For Index to Plans, General Notes, see "INDEX TO PLANS" sheet.
10. For Hydraulic Summary, see "FOUNDATION PLAN" sheet.
11. For Utilities, see "TYPICAL SECTION" sheet.
12. Structure Approach Type EQ(10)

MIKE POPE
DESIGN ENGINEER

DESIGN	BY PREM RIMAL	CHECKED ZIHAN YAN	LOAD & RESISTANCE FACTOR DESIGN	LIVE LOADING: HL93 W/"LOW-BOY"; PERMIT DESIGN VEHICLE
DETAILS	BY FARIDEH RASHEDI	CHECKED ZIHAN YAN	LAYOUT BY PREM RIMAL	CHECKED ZIHAN YAN
QUANTITIES	BY PREM RIMAL	CHECKED PHUONG VU	SPECIFICATIONS BY TODD GEERTS	PLANS AND SPECS COMPARED TODD GEERTS

ORIGINAL SCALE IN INCHES FOR REDUCED PLANS 0 1 2 3

STATE OF CALIFORNIA
DEPARTMENT OF TRANSPORTATION

DIVISION OF ENGINEERING SERVICES
STRUCTURE DESIGN
DESIGN BRANCH 18

BRIDGE NO. 49-0260
POST MILE R 65.64

ARROYO DEL OSO BRIDGE
GENERAL PLAN

UNIT: 3603
PROJECT NUMBER & PHASE: 0500000576 1
CONTRACT NO.: 05-492801

DISREGARD PRINTS BEARING EARLIER REVISION DATES

REVISION DATES 09/24/12 10/05/12

SHEET 1 OF 23

STRUCTURES DESIGN GENERAL PLAN SHEET (ENGLISH) (REV.09-01-10)

FILE => 49-0260-a-gp.dgn

USERNAME => s115755 DATE PLOTTED => 16-DEC-2014 TIME PLOTTED => 14:11

DIST	COUNTY	ROUTE	POST MILES TOTAL PROJECT	SHEET No.	TOTAL SHEETS
05	SLO	1	64.0/R66.9	244	265

REGISTERED CIVIL ENGINEER 10-27-14 DATE

10-27-14
PLANS APPROVAL DATE

REGISTERED PROFESSIONAL ENGINEER MICHAEL R POPE No. C 54503 Exp. 12-31-2015 CIVIL STATE OF CALIFORNIA

The State of California or its officers or agents shall not be responsible for the accuracy or completeness of electronic copies of this plan sheet.

GENERAL NOTES
LOAD AND RESISTANCE FACTOR DESIGN

DESIGN:
AASHTO LRFD Bridge Design Specifications, 4th edition and the Caltrans Amendments, preface dated November 2011

SEISMIC DESIGN:
Caltrans Seismic Design Criteria (SDC), Version 1.6, November 2010

DEAD LOAD:
Includes 35 psf for future wearing surface

LIVE LOADING:
HL93 and permit design load

SEISMIC LOADING:
See "ACCELERATION RESPONSE SPECTRA CURVE"
Soil Profile: Vs30 = 1500 ft/sec for the top 100 ft of soil
Moment Magnitude: Mmax = 7.5
Peak Ground Acceleration = 0.50 g

CONCRETE:
f_y = 60 ksi
$f'c$ = See "CONCRETE STRENGTH AND TYPE LIMITS".

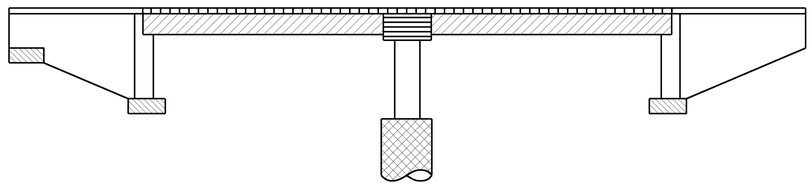

STRUCTURAL CONCRETE, BRIDGE
STRUCTURAL CONCRETE, BRIDGE FOOTING
STRUCTURAL CONCRETE, BRIDGE(f'c = 4000 psi @ 28 DAYS)
CIDH CONCRETE PILE
STRUCTURAL CONCRETE, BRIDGE, PIER CAP (f'c = 5000 psi @ 28 DAYS)
PC/PS I GIRDERS

CONCRETE STRENGTH AND TYPE LIMITS
No Scale

INDEX TO PLANS

Sheet No.	Title
1.	GENERAL PLAN
2.	INDEX TO PLANS
3.	DECK COUNTOURS
4.	FOUNDATION PLAN
5.	ABUTMENT LAYOUT
6.	ABUTMENT DETAILS NO. 1
7.	ABUTMENT DETAILS NO. 2
8.	ABUTMENT DETAILS NO. 3
9.	PIER DETAILS NO. 1
10.	PIER DETAILS NO. 2
11.	PIER DETAILS NO. 3
12.	TYPICAL SECTION
13.	GIRDER LAYOUT
14.	MISCELLANEOUS DETAILS
15.	PRECAST PRESTRESSED I GIRDER
16.	CALIFORNIA ST-10 BRIDGE RAIL(MOD) DETAILS NO. 1
17.	CALIFORNIA ST-10 BRIDGE RAIL(MOD) DETAILS NO. 2
18.	ARCHITECTURAL TREATMENT DETAILS NO. 1
19.	ARCHITECTURAL TREATMENT DETAILS NO. 2
20.	STRUCTURE APPROACH TYPE EQ(10)
21.	STRUCTURE APPROACH DRAINAGE DETAILS
22.	LOG OF TEST BORINGS 1 OF 2
23.	LOG OF TEST BORINGS 2 OF 2

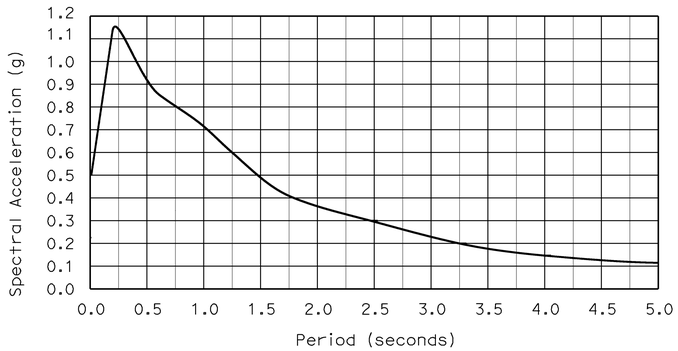

ACCELERATION RESPONSE SPECTRA CURVE

PILE DATA TABLE

LOCATION	PILE TYPE	NOMINAL RESISTANCE (kips)		CUT-OFF ELEVATION (ft)	DESIGN TIP ELEVATIONS (ft)	SPECIFIED TIP ELEVATION (ft)
		COMPRESSION	TENSION			
ABUTMENT 1	HP 14X89	360	0	35.42	6.0 (a)	6.0
ABUTMENT 1 (LEFT & RIGHT WINGWALL)	HP 14X89	360	0	46.11	6.0 (a), 10.0 (b)	6.0
PIER 2	72" CIDH	3650	0	17.00	-69.0 (a), -56.0 (b)	-69.0
ABUTMENT 3	HP 14X89	360	0	30.17	10.0 (a)	10.0

1. Design tip elevations are controlled by: (a) Compression, (b) Lateral load
2. There are no design tip elevations for settlements because the abutment piles are driven to rock and the CIDH piles at pier are embedded into rock.

STANDARD PLANS DATED 2010

A10A	ABBREVIATIONS
RSP A10B	ABBREVIATIONS
A10C-A10E	LINES & SYMBOLS
A10F-A10G	LEGEND SOIL
A10H	LEGEND ROCK
A62B	LIMITS OF PAYMENT FOR EXCAVATION AND BACKFILL BRIDGE SURCHARGE AND WALL
A62C	LIMITS OF PAYMENT FOR EXCAVATION AND BACKFILL BRIDGE
B0-1	BRIDGE DETAILS
B0-3	BRIDGE DETAILS
B0-5	BRIDGE DETAILS
B0-13	BRIDGE DETAILS
B6-10	UTILITY OPENING T-BEAM
B6-21	JOINT SEALS (MAXIMUM MOVEMENT RATING = 2")
RSP B11-68	CALIFORNIA ST-10 BRIDGE RAIL (SHEET 1 OF 3)
B11-69	CALIFORNIA ST-10 BRIDGE RAIL (SHEET 2 OF 3)
RSP B11-70	CALIFORNIA ST-10 BRIDGE RAIL (SHEET 3 OF 3)

STANDARD PLAN SHEET NO.
DETAIL NO.

	BY	CHECKED
DESIGN	PREM RIMAL	ZIHAN YAN
DETAILS	SURAJ DUTTA	ZIHAN YAN
QUANTITIES	PREM RIMAL	PHUONG VU

STATE OF CALIFORNIA
DEPARTMENT OF TRANSPORTATION

DIVISION OF ENGINEERING SERVICES
STRUCTURE DESIGN
DESIGN BRANCH 18

BRIDGE NO. 49-0260
POST MILE R65.64

ARROYO DEL OSO BRIDGE
INDEX TO PLANS

STRUCTURES DESIGN DETAIL SHEET (ENGLISH) (REV. 09-01-10)

ORIGINAL SCALE IN INCHES FOR REDUCED PLANS 0 1 2 3

UNIT: 3603
PROJECT NUMBER & PHASE: 05 0000 0576 1 CONTRACT NO.: 05-492801

DISREGARD PRINTS BEARING EARLIER REVISION DATES

REVISION DATES 09/22/12 10/05/12

SHEET 2 OF 23

FILE => 49-0260-b-itp.dgn

USERNAME => s115755 DATE PLOTTED => 16-DEC-2014 TIME PLOTTED => 14:11

DIST	COUNTY	ROUTE	POST MILES TOTAL PROJECT	SHEET No.	TOTAL SHEETS
05	SLO	1	64.0/R66.9	245	265

REGISTERED CIVIL ENGINEER 10-27-14 DATE

10-27-14
PLANS APPROVAL DATE

REGISTERED PROFESSIONAL ENGINEER
MICHAEL R POPE
No. C 54503
Exp. 12-31-2015
CIVIL
STATE OF CALIFORNIA

The State of California or its officers or agents shall not be responsible for the accuracy or completeness of scanned copies of this plan sheet.

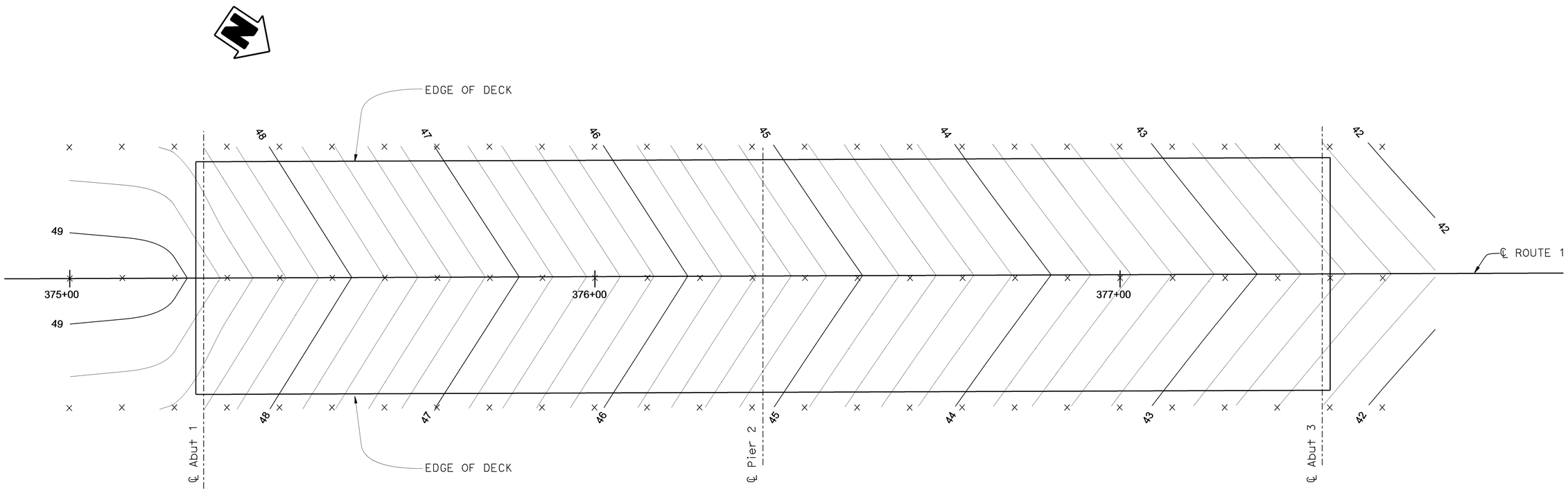

DECK CONTOURS

1 " = 10'"

NOTES:

× = 10.0' intervals along LOL

1. Contours do not include camber.
2. Contour interval = 0.2'

DESIGN	BY PREM RIMAL	CHECKED ZIHAN YAN	
DETAILS	BY PREM RIMAL	CHECKED ZIHAN YAN	
QUANTITIES	BY PREM RIMAL	CHECKED PHUONG VU	

STATE OF CALIFORNIA
DEPARTMENT OF TRANSPORTATION

DIVISION OF ENGINEERING SERVICES
STRUCTURE DESIGN
DESIGN BRANCH 18

BRIDGE NO. 49-0260
POST MILE R65.64

ARROYO DEL OSO BRIDGE
DECK CONTOURS

STRUCTURES DESIGN DETAIL SHEET (ENGLISH) (REV. 09-01-10)

ORIGINAL SCALE IN INCHES FOR REDUCED PLANS 0 1 2 3

UNIT: 3603
PROJECT NUMBER & PHASE: 05 0000 0576 1 CONTRACT NO.: 05-492801

DISREGARD PRINTS BEARING EARLIER REVISION DATES

REVISION DATES: 09/22/12 10/05/12

SHEET 3 OF 23

FILE => 49-0260-c-dc.dgn

USERNAME => s115755 DATE PLOTTED => 16-DEC-2014 TIME PLOTTED => 14:11

DIST	COUNTY	ROUTE	POST MILES TOTAL PROJECT	SHEET No.	TOTAL SHEETS
05	SLO	1	64.0/R66.9	246	265

REGISTERED CIVIL ENGINEER 10-27-14 DATE

10-27-14
PLANS APPROVAL DATE

REGISTERED PROFESSIONAL ENGINEER MICHAEL R POPE No. C 54503 Exp 12-31-2015 CIVIL STATE OF CALIFORNIA

The State of California or its officers or agents shall not be responsible for the accuracy or completeness of electronic copies of this plan sheet.

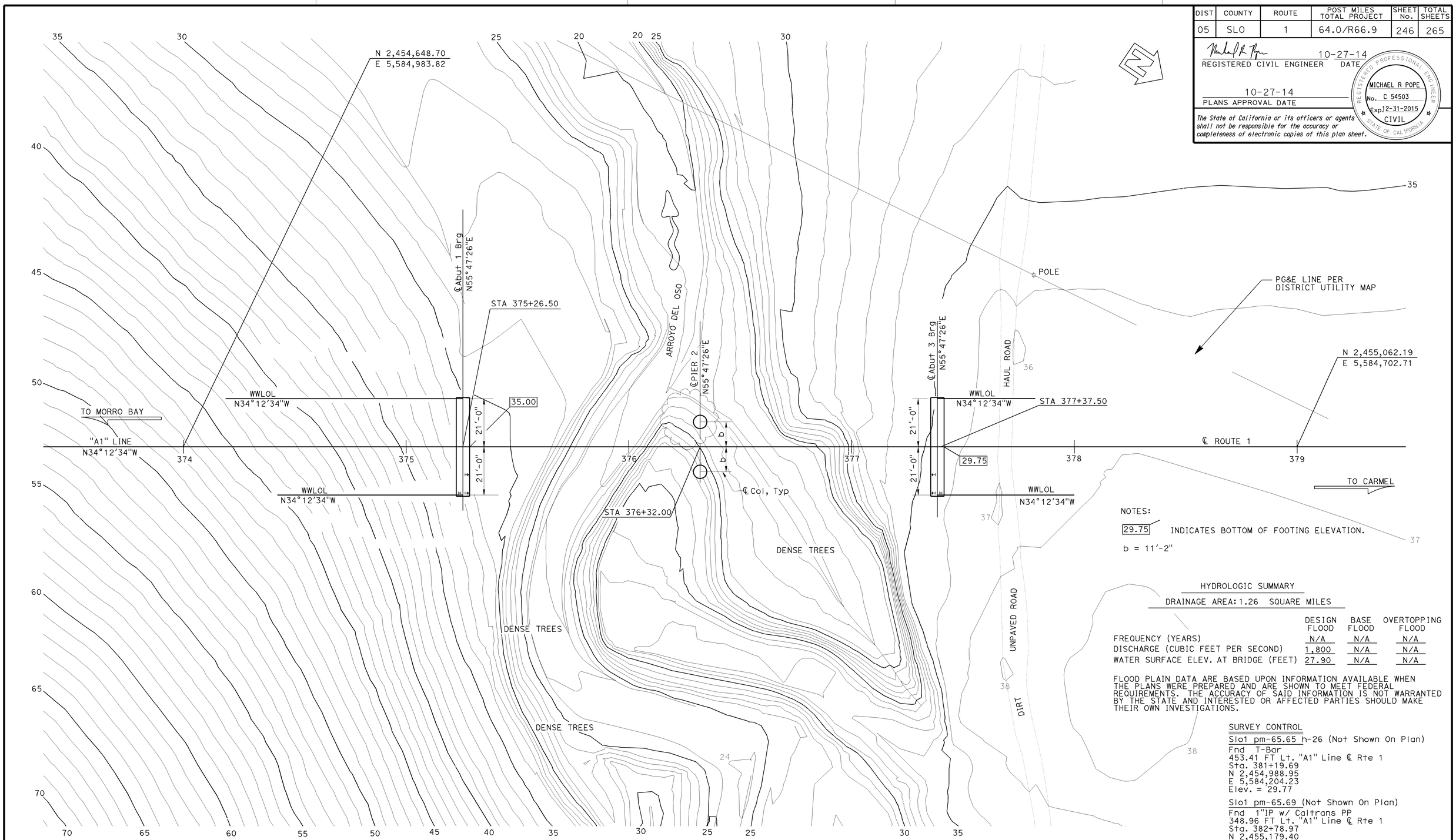

NOTES:

29.75 INDICATES BOTTOM OF FOOTING ELEVATION.

b = 11'-2"

HYDROLOGIC SUMMARY

DRAINAGE AREA: 1.26 SQUARE MILES

	DESIGN FLOOD	BASE FLOOD	OVERTOPPING FLOOD
FREQUENCY (YEARS)	N/A	N/A	N/A
DISCHARGE (CUBIC FEET PER SECOND)	1,800	N/A	N/A
WATER SURFACE ELEV. AT BRIDGE (FEET)	27.90	N/A	N/A

FLOOD PLAIN DATA ARE BASED UPON INFORMATION AVAILABLE WHEN THE PLANS WERE PREPARED AND ARE SHOWN TO MEET FEDERAL REQUIREMENTS. THE ACCURACY OF SAID INFORMATION IS NOT WARRANTED BY THE STATE AND INTERESTED OR AFFECTED PARTIES SHOULD MAKE THEIR OWN INVESTIGATIONS.

SURVEY CONTROL

Slo1 pm-65.65 h-26 (Not Shown On Plan)
Fnd T-Bar
453.41 FT Lt. "A1" Line ℄ Rte 1
Sta. 381+19.69
N 2,454,988.95
E 5,584,204.23
Elev. = 29.77

Slo1 pm-65.69 (Not Shown On Plan)
Fnd 1"IP w/ Caltrans PP
348.96 FT Lt. "A1" Line ℄ Rte 1
Sta. 382+78.97
N 2,455,179.40
E 5,584,201.06
Elev. = 31.22

PRELIMINARY INVESTIGATION SECTION

SCALE 1"=20'	VERT.DATUM NAVD88	PHOTOGRAMMETRY AS OF: X			
	HORZ.DATUM NAD83(92) (1991.35)	SURVEYED	BY District	CHECKED	BY J. Borden 06/2011
	ALIGNMENT TIES Dist. Traverse Sheet	DRAFTED	BY T.Zolnikov 06/2011	CHECKED	BY L. Lew 06/2011

DESIGN	BY PREM RIMAL	CHECKED ZIHAN YAN
DETAILS	BY PREM RIMAL	CHECKED ZIHAN YAN
QUANTITIES	BY PREM RIMAL	CHECKED PHUONG VU

STATE OF CALIFORNIA
DEPARTMENT OF TRANSPORTATION

DIVISION OF ENGINEERING SERVICES
STRUCTURE DESIGN
DESIGN BRANCH 18

BRIDGE NO. 49-0260
POST MILE R65.64

ARROYO DEL OSO BRIDGE
FOUNDATION PLAN

STRUCTURES FOUNDATION PLAN SHEET (ENGLISH) (REV. 09-01-10)

ORIGINAL SCALE IN INCHES FOR REDUCED PLANS 0 1 2 3

UNIT: 3646
PROJECT NUMBER & PHASE: 0500000576 1
CONTRACT NO.: 05-492801

DISREGARD PRINTS BEARING EARLIER REVISION DATES

REVISION DATES 09/22/12 10/05/12

SHEET 4 OF 23

FILE => 49-0260-e-fp01.dgn

DIST	COUNTY	ROUTE	POST MILES TOTAL PROJECT	SHEET No.	TOTAL SHEETS
05	SLO	1	64.0/R66.9	247	265

REGISTERED CIVIL ENGINEER 10-27-14 DATE

10-27-14
PLANS APPROVAL DATE

REGISTERED PROFESSIONAL ENGINEER MICHAEL R POPE No. C 54503 Exp. 12-31-2015 CIVIL STATE OF CALIFORNIA

The State of California or its officers or agents shall not be responsible for the accuracy or completeness of electronic copies of this plan sheet.

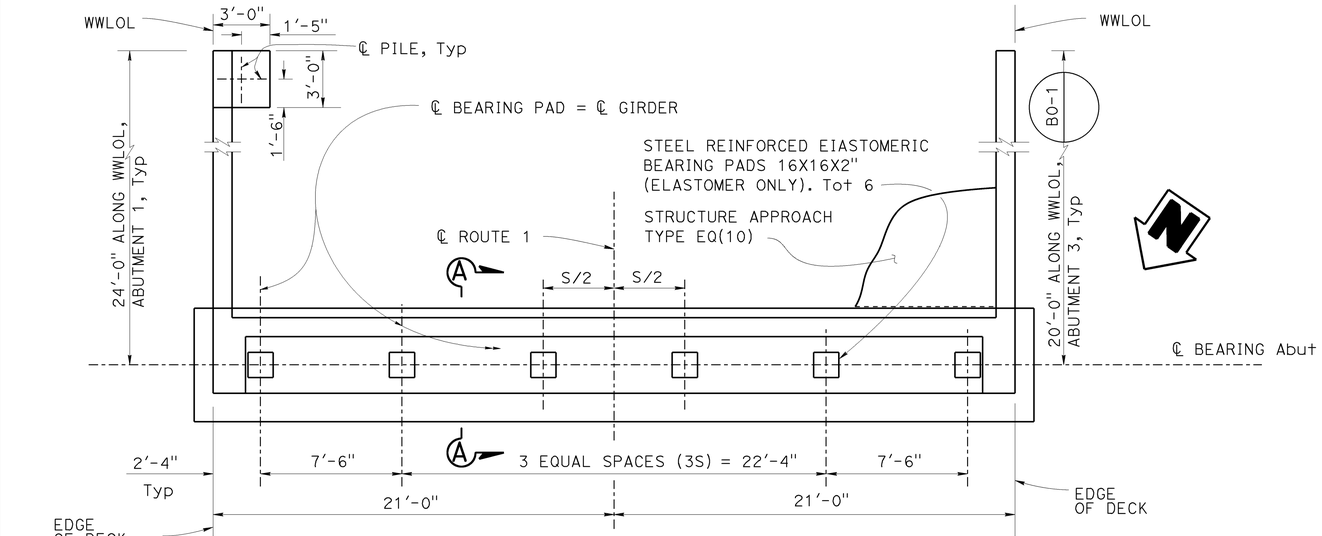

PLAN
1/4" = 1'

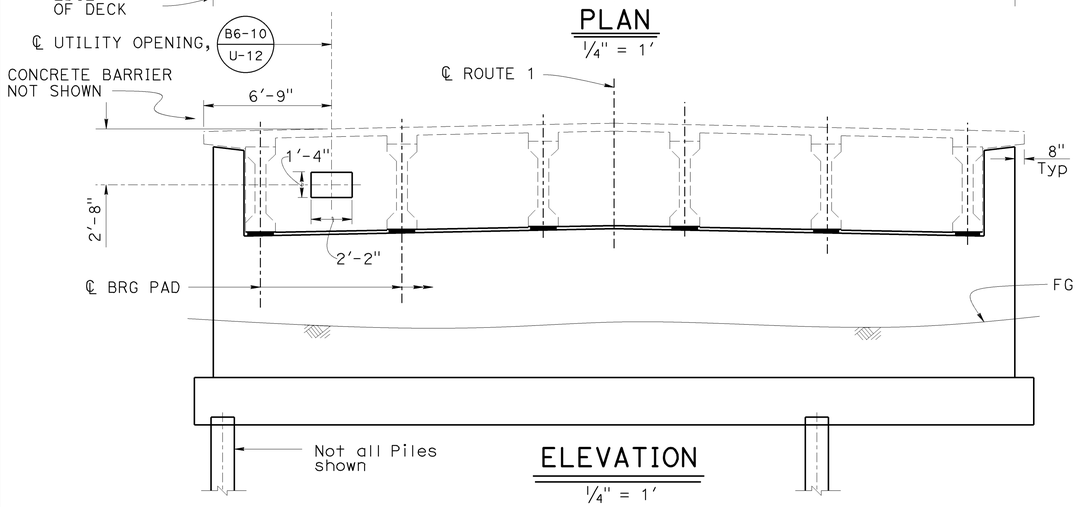

ELEVATION
1/4" = 1'

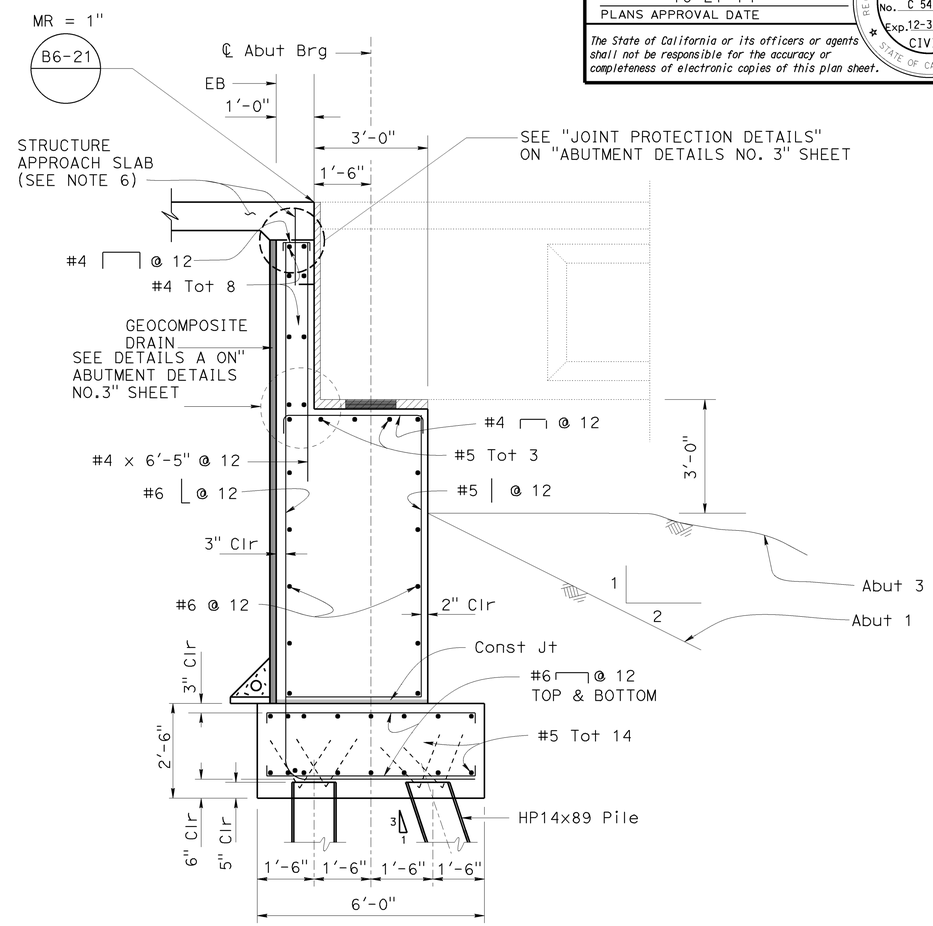

SECTION A-A
1/2" = 1'

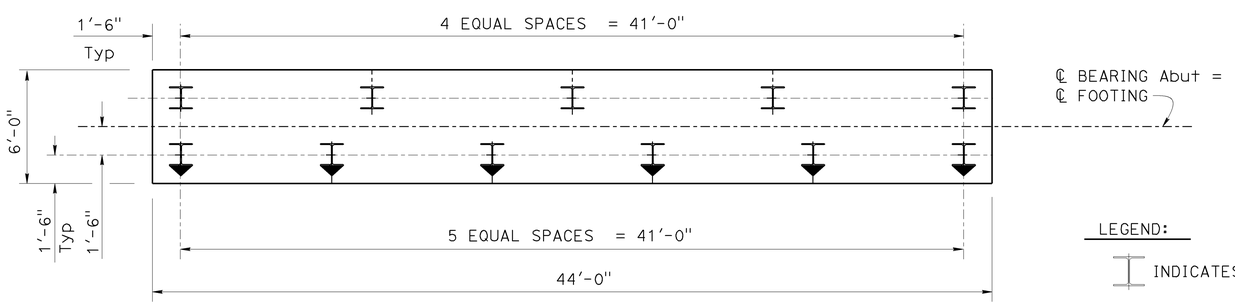

PILE LAYOUT
1/4" = 1'

LEGEND:

INDICATES HP-14x89 VERTICAL PILE

INDICATES HP-14x89 BATTERED PILE

NOTES:

1. Abutment 1 shown, Abutment 3 similar.
2. For Sections and Details not shown, See "ABUTMENT DETAILS NO. 1, 2 & 3" Sheet.
3. For Utility Size and Owner, See "TYPICAL SECTION" Sheet.
4. For Elastomeric Bearing Pad, See "ABUTMENT DETAILS NO. 2" Sheet.
5. For Steel Pile Anchor, See " ABUTMENT DETAILS NO.2" sheet.
6. For Structure Approach, see "STRUCTURE APPROCH TYPE EQ(10)" sheet

	BY	CHECKED
DESIGN	PREM RIMAL	ZIHAN YAN
DETAILS	SURAJ DUTTA	ZIHAN YAN
QUANTITIES	PREM RIMAL	PHUONG VU

STATE OF CALIFORNIA
DEPARTMENT OF TRANSPORTATION

DIVISION OF ENGINEERING SERVICES
STRUCTURE DESIGN
DESIGN BRANCH 18

BRIDGE NO. 49-0260
POST MILE R 65.64

ARROYO DEL OSO BRIDGE
ABUTMENT LAYOUT

STRUCTURES DESIGN DETAIL SHEET (ENGLISH) (REV. 09-01-10)

ORIGINAL SCALE IN INCHES FOR REDUCED PLANS 0 1 2 3

UNIT: 3603
PROJECT NUMBER & PHASE: 0500000576 1
CONTRACT NO.: 05-492801

DISREGARD PRINTS BEARING EARLIER REVISION DATES

REVISION DATES 09/28/12 10/05/12

SHEET 5 OF 23

FILE => 49-0260-f-abtlay.dgn

USERNAME => s115755 DATE PLOTTED => 16-DEC-2014 TIME PLOTTED => 14:11

DIST	COUNTY	ROUTE	POST MILES TOTAL PROJECT	SHEET No.	TOTAL SHEETS
05	SLO	1	64.0/R66.9	248	265

REGISTERED CIVIL ENGINEER 10-27-14 DATE

10-27-14
PLANS APPROVAL DATE

REGISTERED PROFESSIONAL ENGINEER MICHAEL R POPE No. C 54503 Exp. 12-31-2015 CIVIL STATE OF CALIFORNIA

The State of California or its officers or agents shall not be responsible for the accuracy or completeness of electronic copies of this plan sheet.

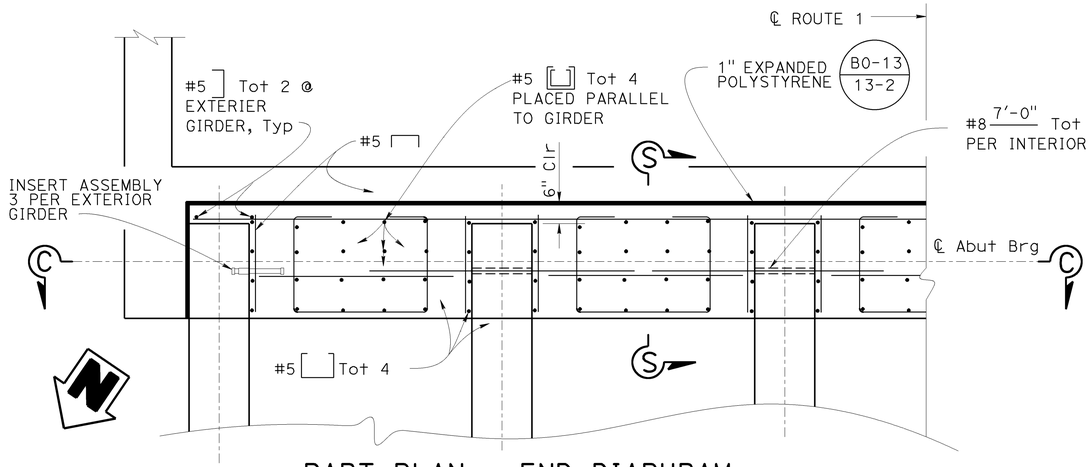

PART PLAN - END DIAPHRAM

½" = 1'

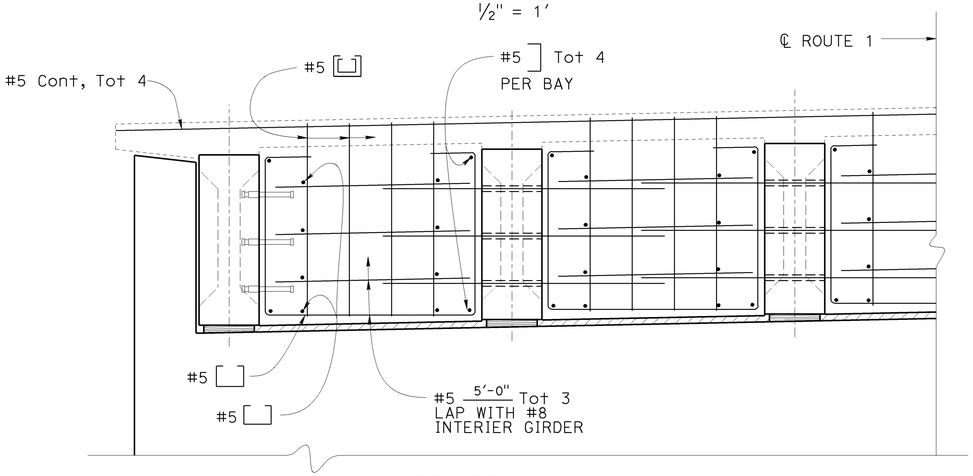

SECTION C-C

½" = 1'

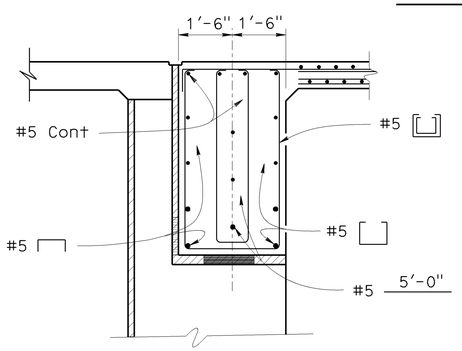

SECTION S-S

½" = 1'

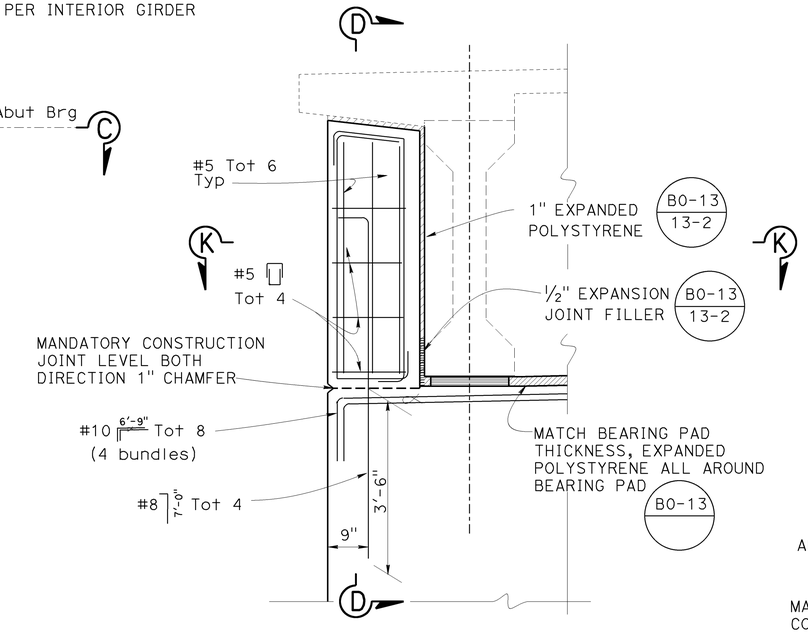

SHEAR KEY DETAIL

¾" = 1'

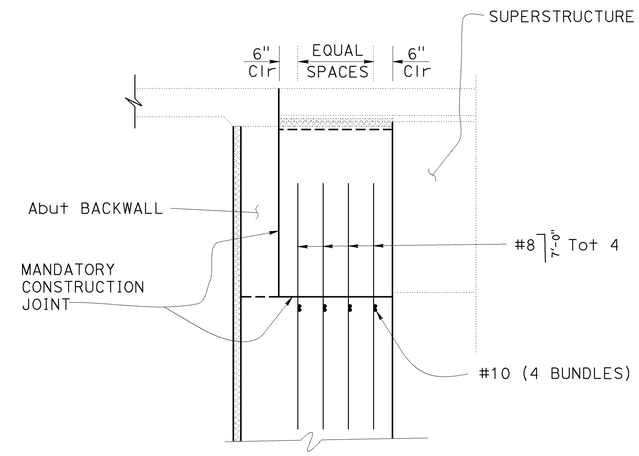

SECTION D-D

½" = 1'

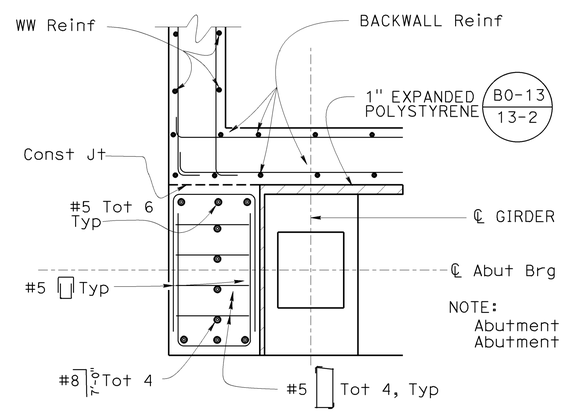

NOTE:
Abutment 1 shown
Abutment 3 similar

SECTION K-K

¾" = 1'

NOTES:
1. Mandatory construction joint surface to be smooth finished and lined with 15 lbs.
2. Shear Key and wingwall reinf to be discontinuous as shown.
3. Vertical Shear Key reinf (#8 bar) to be galvanized.
4. Abutment 1 Right Shear Key shown, the rest are similar.

	BY	CHECKED
DESIGN	PREM RIMAL	ZIHAN YAN
DETAILS	SURAJ DUTTA	ZIHAN YAN
QUANTITIES	PREM RIMAL	PHUONG VU

STATE OF CALIFORNIA
DEPARTMENT OF TRANSPORTATION

DIVISION OF ENGINEERING SERVICES
STRUCTURE DESIGN
DESIGN BRANCH 18

BRIDGE NO. 49-0260
POST MILE R 65.64

ARROYO DEL OSO BRIDGE
ABUTMENT DETAILS NO 1

STRUCTURES DESIGN DETAIL SHEET (ENGLISH) (REV. 09-01-10)

ORIGINAL SCALE IN INCHES FOR REDUCED PLANS 0 1 2 3

UNIT: 3603
PROJECT NUMBER & PHASE: 0500000576 1
CONTRACT NO.: 05-492801

DISREGARD PRINTS BEARING EARLIER REVISION DATES

REVISION DATES 09/28/12 10/05/12

SHEET 6 OF 23

FILE => 49-0260-g-abtdet01.dgn

USERNAME => s115755 DATE PLOTTED => 16-DEC-2014 TIME PLOTTED => 14:11

DIST	COUNTY	ROUTE	POST MILES TOTAL PROJECT	SHEET No.	TOTAL SHEETS
05	SLO	1	64.0/R66.9	249	265

REGISTERED CIVIL ENGINEER 10-27-14 DATE

10-27-14
PLANS APPROVAL DATE

REGISTERED PROFESSIONAL ENGINEER
MICHAEL R POPE
No. C 54503
Exp. 12-31-2015
CIVIL
STATE OF CALIFORNIA

The State of California or its officers or agents shall not be responsible for the accuracy or completeness of electronic copies of this plan sheet.

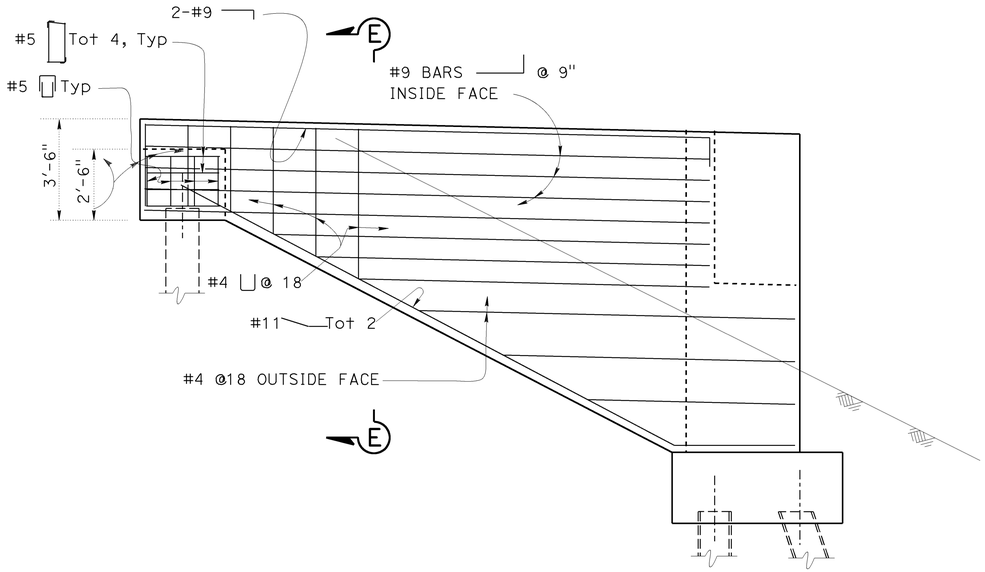

WINGWALL ELEVATION

3/8" = 1'
(ABUTMENT 1 LEFT AND RIGHT WINGWALLS)

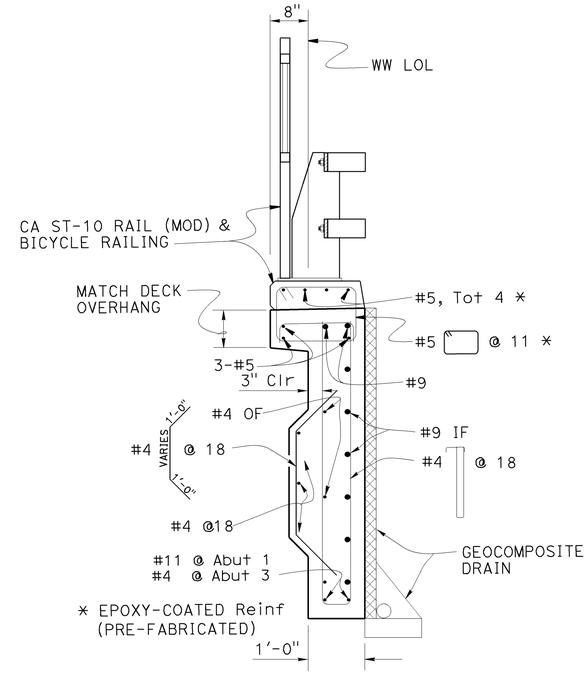

SECTION E-E

3/4" = 1'-0"

Note:
For limit of architectural treatment, see "ARCHITECTURAL TREATMENT DETAILS NO.1" Sheet.

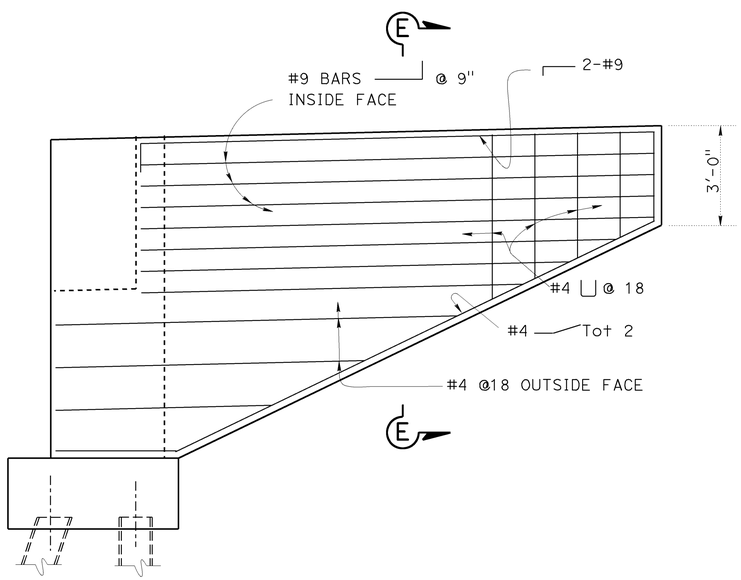

WINGWALL ELEVATION

3/8" = 1'
(ABUTMENT 3 LEFT AND RIGHT WINGWALLS)

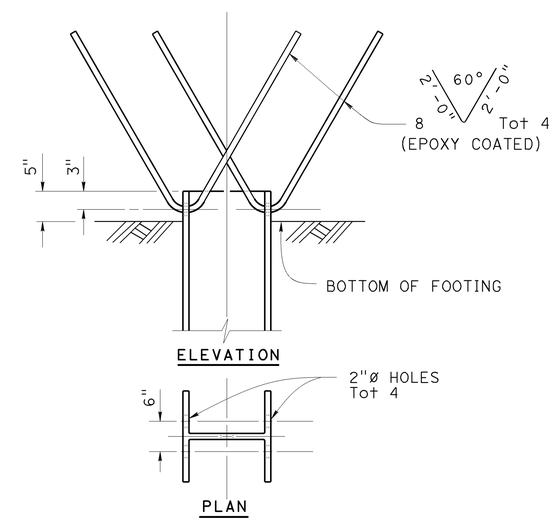

STEEL PILE ANCHOR

DESIGN	BY PREM RIMAL	CHECKED ZIHAN YAN	
DETAILS	BY SURAJ DUTTA	CHECKED ZIHAN YAN	
QUANTITIES	BY PREM RIMAL	CHECKED PHUONG VU	

STATE OF CALIFORNIA
DEPARTMENT OF TRANSPORTATION

DIVISION OF ENGINEERING SERVICES
STRUCTURE DESIGN
DESIGN BRANCH 18

BRIDGE NO. 49-0260
POST MILE R 65.64

ARROYO DEL OSO BRIDGE
ABUTMENT DETAILS NO 2

STRUCTURES DESIGN DETAIL SHEET (ENGLISH) (REV. 09-01-10)

ORIGINAL SCALE IN INCHES FOR REDUCED PLANS 0 1 2 3

UNIT: 3603
PROJECT NUMBER & PHASE: 0500000576 1
CONTRACT NO.: 05-492801

DISREGARD PRINTS BEARING EARLIER REVISION DATES

REVISION DATES 09/22/12 10/05/12

SHEET 7 OF 23

FILE => 49-0260-g-abtdet02.dgn

USERNAME => s115755 DATE PLOTTED => 16-DEC-2014 TIME PLOTTED => 14:11

DIST	COUNTY	ROUTE	POST MILES TOTAL PROJECT	SHEET No.	TOTAL SHEETS
05	SLO	1	64.0/R66.9	250	265

REGISTERED CIVIL ENGINEER 10-27-14 DATE

10-27-14
PLANS APPROVAL DATE

REGISTERED PROFESSIONAL ENGINEER MICHAEL R POPE No. C 54503 Exp. 12-31-2015 CIVIL STATE OF CALIFORNIA

The State of California or its officers or agents shall not be responsible for the accuracy or completeness of electronic copies of this plan sheet.

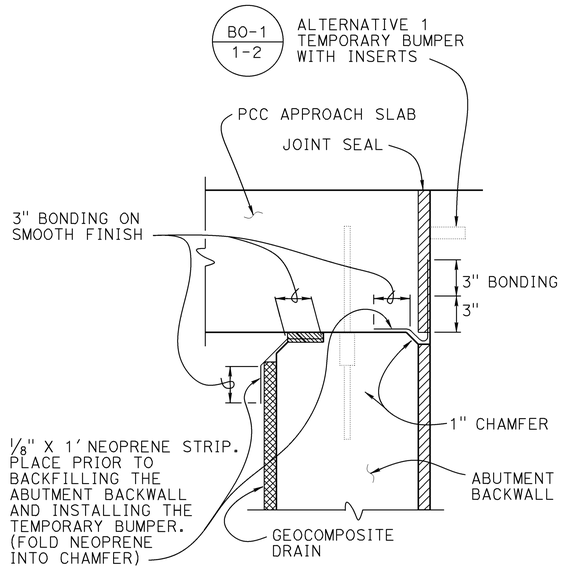

JOINT PROTECTION DETAIL

No Scale

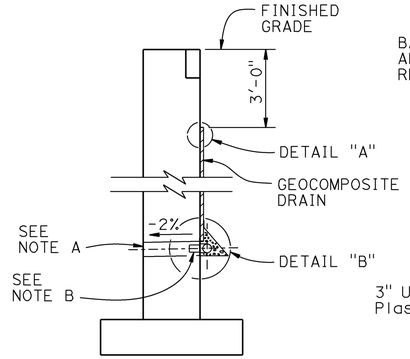

WALL SECTION

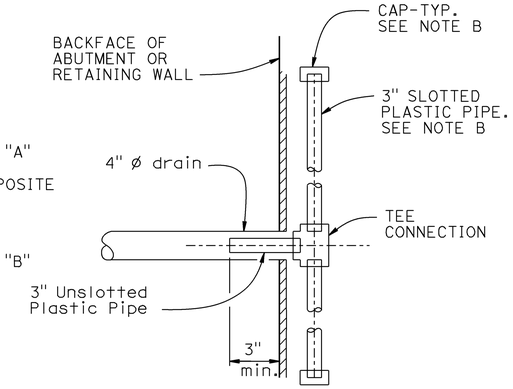

SECTION A-A

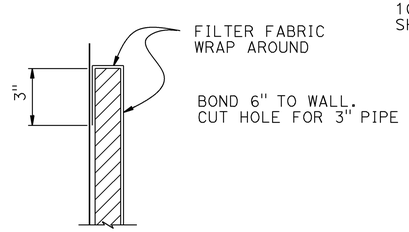

DETAIL "A"

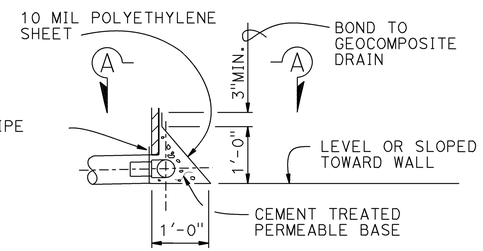

DETAIL "B"

WEEP HOLE AND GEOCOMPOSITE DRAIN

ALTERNATIVE TO BRIDGE DETAIL BO-3 / 3-1

Notes:

A. 4" ø drains at intermediate sag points and at 25' max center to center (9' c-c for Type 3 and 9'-3" c-c for Type 4 retaining walls).
For walls adjacent to sidewalks or curbs, provide 4" cast iron or asbestos cement pipe under the sidewalk to discharge through curb face.
Exposed wall drains shall be located 3"± above finished grade.

B. Geocomposite drain, cement treated permeable base, and 3"ø slotted plastic pipe continuous behind retaining wall or abutment. Cap ends of pipe. Provide "Tee" connection at each 4" ø drain.

C. Connect the low end of plastic pipe to the main outlet pipe as apprlicable.

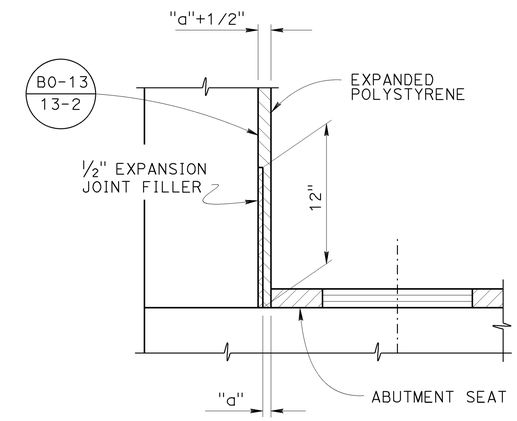

DETAIL A

1:10

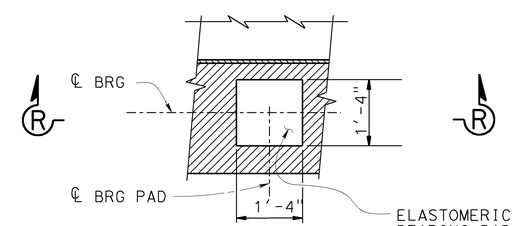

PLAN

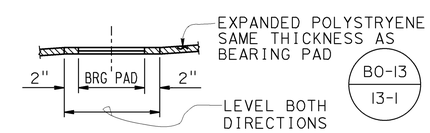

SECTION R-R

BEARING PAD DETAIL

NO SCALE

DETAILS TYPICAL AT ALL BEARING PADS

DESIGN	BY PREM RIMAL	CHECKED ZIHAN YAN	
DETAILS	BY SURAJ DUTTA	CHECKED ZIHAN YAN	
QUANTITIES	BY PREM RIMAL	CHECKED PHUONG VU	

STATE OF CALIFORNIA
DEPARTMENT OF TRANSPORTATION

DIVISION OF ENGINEERING SERVICES
STRUCTURE DESIGN
DESIGN BRANCH 18

BRIDGE NO. 49-0260
POST MILE R 65.64

ARROYO DEL OSO BRIDGE
ABUTMENT DETAILS NO 3

STRUCTURES DESIGN DETAIL SHEET (ENGLISH) (REV. 09-01-10)

ORIGINAL SCALE IN INCHES FOR REDUCED PLANS 0 1 2 3

UNIT: 3603
PROJECT NUMBER & PHASE: 0500000576 1
CONTRACT NO.: 05-492801

DISREGARD PRINTS BEARING EARLIER REVISION DATES

REVISION DATES 09/28/12 10/05/12

SHEET 8 OF 23

FILE => 49-0260-g-abtdet03.dgn

USERNAME => s115755 DATE PLOTTED => 16-DEC-2014 TIME PLOTTED => 14:11

DIST	COUNTY	ROUTE	POST MILES TOTAL PROJECT	SHEET No.	TOTAL SHEETS
05	SLO	1	64.0/R66.9	251	265

REGISTERED CIVIL ENGINEER 10-27-14 DATE

10-27-14
PLANS APPROVAL DATE

REGISTERED PROFESSIONAL ENGINEER MICHAEL R POPE No. C 54503 Exp. 12-31-2013 CIVIL STATE OF CALIFORNIA

The State of California or its officers or agents shall not be responsible for the accuracy or completeness of electronic copies of this plan sheet.

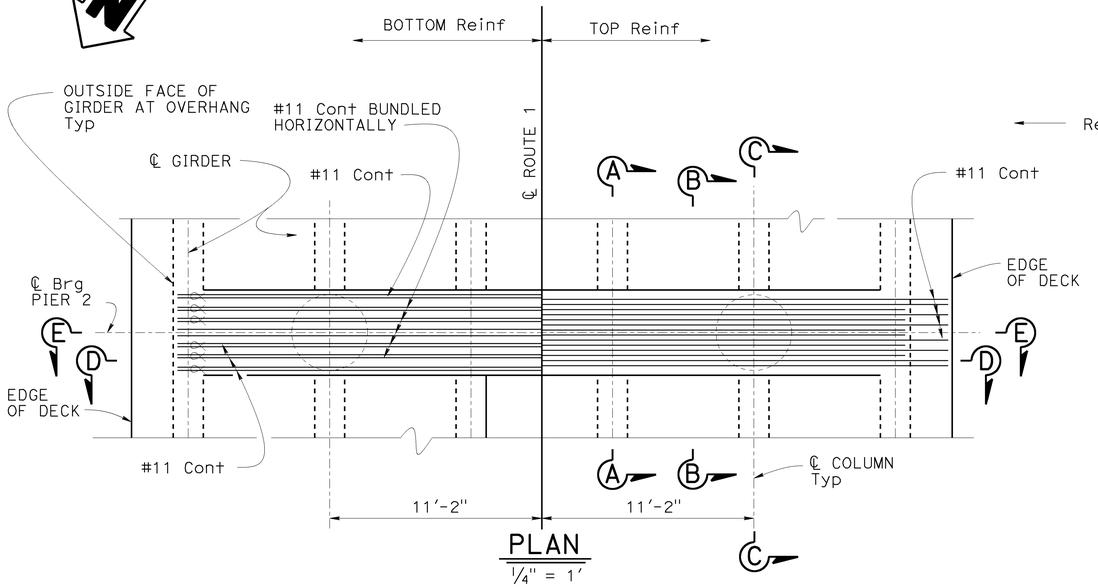

PLAN
1/4" = 1'

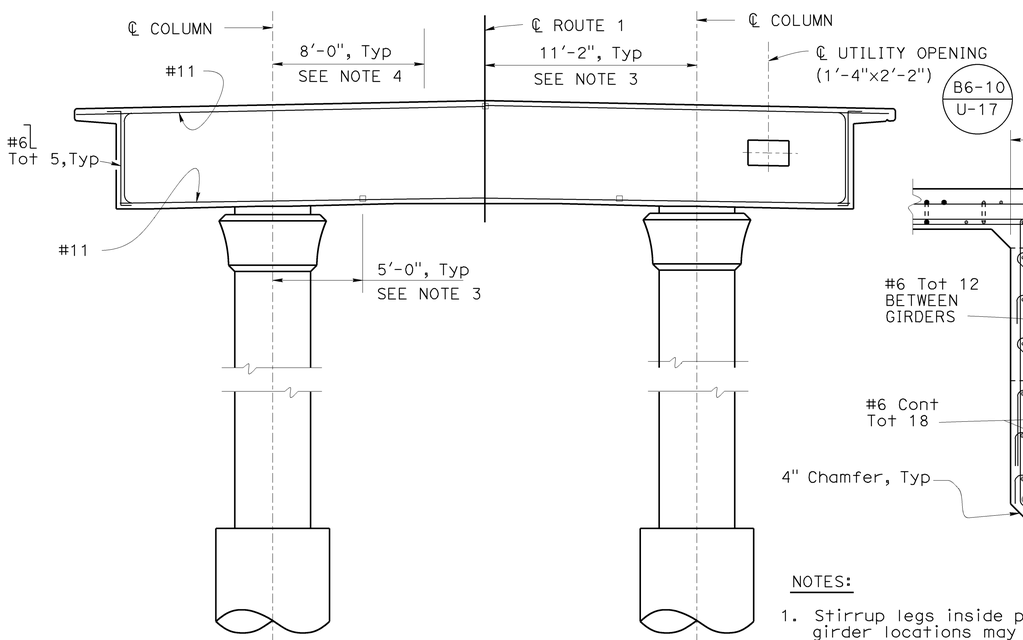

ELEVATION
1/4" = 1'

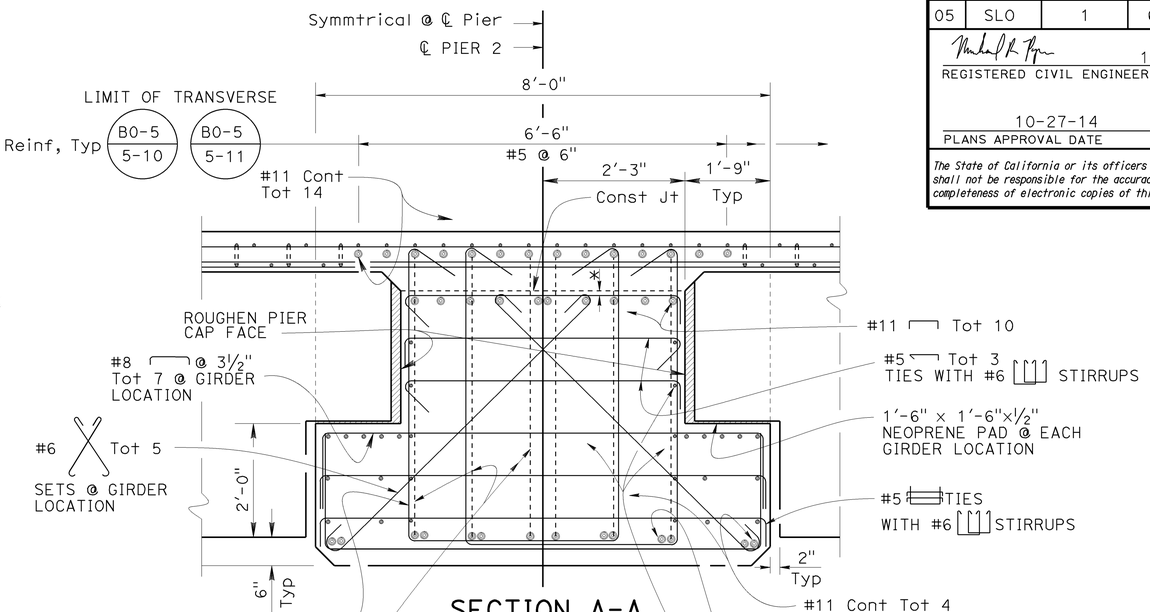

SECTION A-A
3/4" = 1'
(AT GIRDERS)

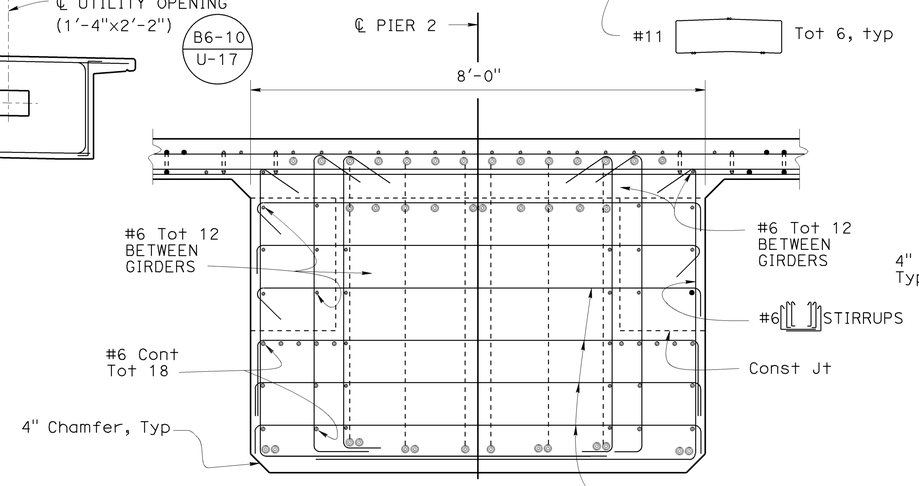

SECTION B-B
3/4" = 1'
(BETWEEN GIRDERS)

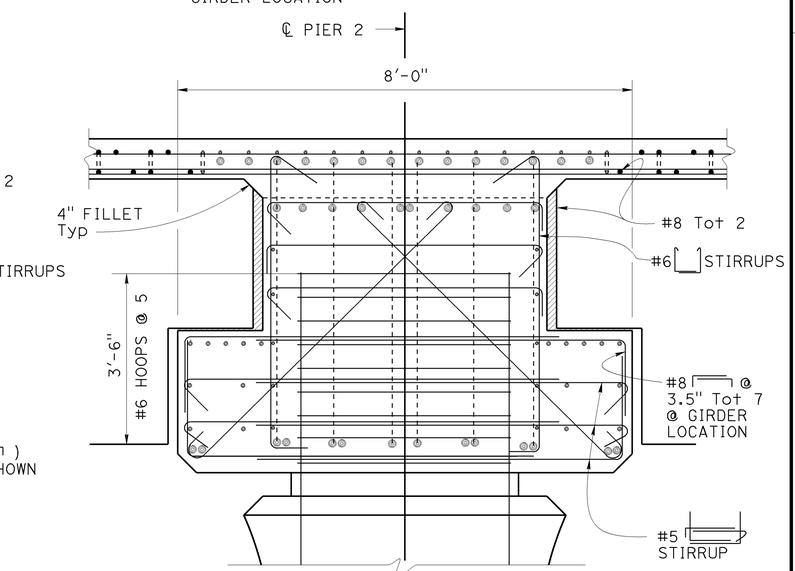

SECTION C-C
3/4" = 1'
(AT COLUMNS)

NOTES:

1. Stirrup legs inside pier @ girder locations may be adjusted to clear conflict with column reinforcement
2. For Section D-D & Section E-E see, "PIER DETAILS NO. 2" sheet
3. Splice location, no additional splices allowed in # 11
4. No splices allowed in continuous top reinforcement in this zone

LEGEND:

Indicates Non-Shrinking Grout

* = 2" Clr

∝ = BUNDLED BAR

DESIGN	BY PREM RIMAL	CHECKED ZIHAN YAN	
DETAILS	BY SURAJ DUTTA	CHECKED ZIHAN YAN	
QUANTITIES	BY PREM RIMAL	CHECKED PHUONG VU	

STATE OF CALIFORNIA
DEPARTMENT OF TRANSPORTATION

DIVISION OF ENGINEERING SERVICES
STRUCTURE DESIGN
DESIGN BRANCH 18

BRIDGE NO. 49-0260
POST MILE R 65.64

ARROYO DEL OSO BRIDGE
PIER DETAILS NO. 1

STRUCTURES DESIGN DETAIL SHEET (ENGLISH) (REV. 09-01-10)

ORIGINAL SCALE IN INCHES FOR REDUCED PLANS 0 1 2 3

UNIT: 3603
PROJECT NUMBER & PHASE: 0500000576 1
CONTRACT NO.: 05-492801

DISREGARD PRINTS BEARING EARLIER REVISION DATES

REVISION DATES 09/22/12 10/05/12

SHEET 9 OF 23

FILE => 49-0260-h-pier01.dgn

USERNAME => s116755 DATE PLOTTED => 16-DEC-2014 TIME PLOTTED => 14:11

DIST	COUNTY	ROUTE	POST MILES TOTAL PROJECT	SHEET No.	TOTAL SHEETS
05	SLO	1	64.0/R66.9	252	265

REGISTERED CIVIL ENGINEER 10-27-14 DATE

10-27-14
PLANS APPROVAL DATE

REGISTERED PROFESSIONAL ENGINEER MICHAEL R POPE No. C 54503 Exp. 12-31-2015 CIVIL STATE OF CALIFORNIA

The State of California or its officers or agents shall not be responsible for the accuracy or completeness of electronic copies of this plan sheet.

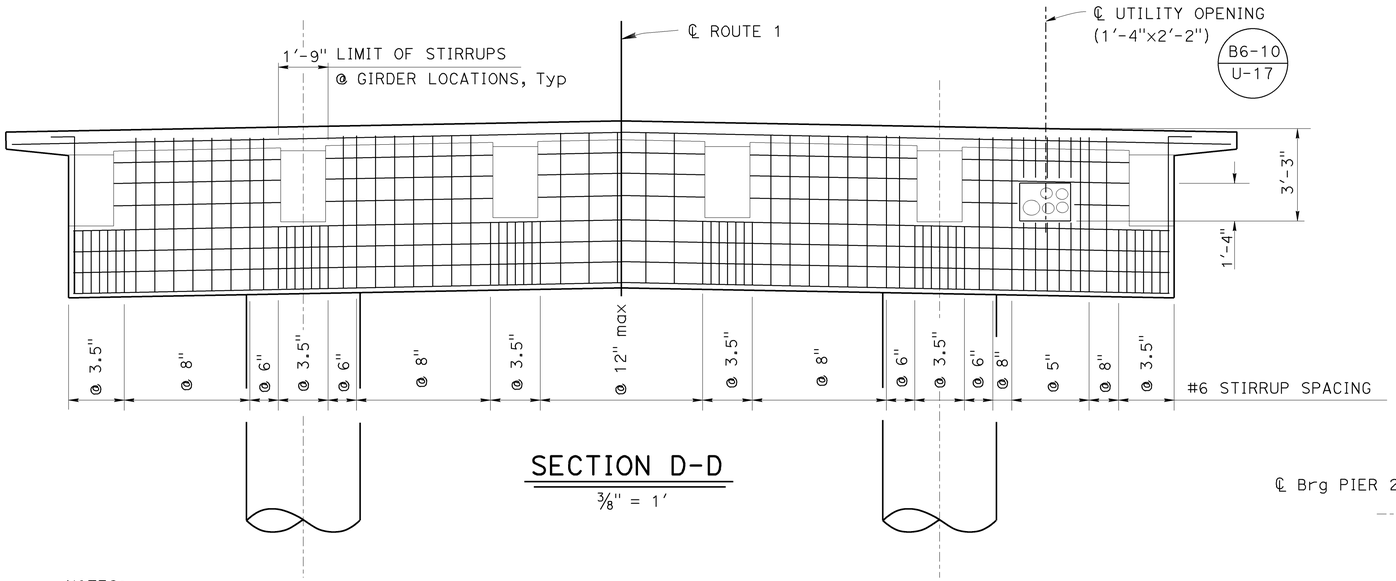

SECTION D-D

3/8" = 1'

NOTES:

FOR SIZE & OWNER OF UTILITIES, SEE "TYPICAL SECTION" SHEET

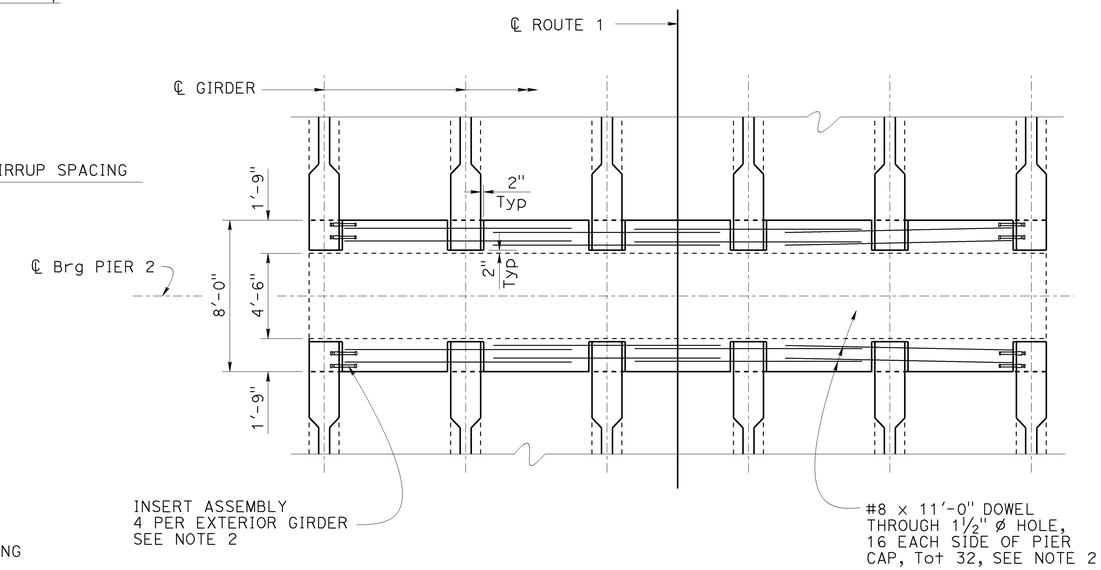

PIER END DIAPHRAGM DETAIL

1/4" = 1'

NOTE:

1. For reinforcement not shown, see "SECTION A-A", "SECTION B-B" and "SECTION C-C" on "PIER DETAILS NO.1" sheet
2. For location of dowels, see "PRECAST PRESTRESSED I GRRDER" sheet

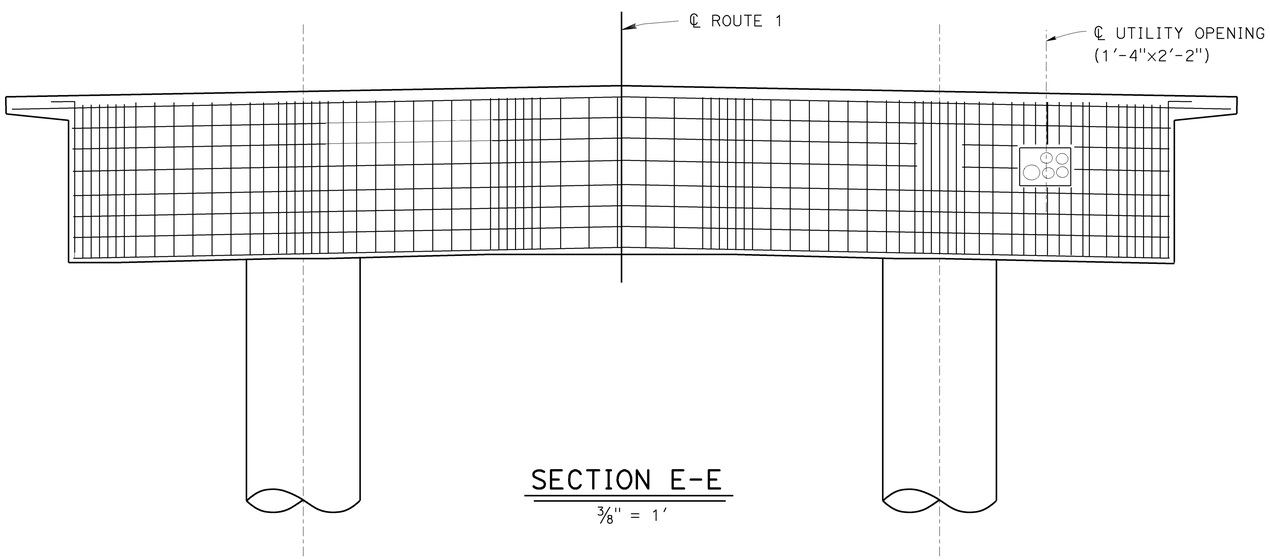

SECTION E-E

3/8" = 1'

DESIGN	BY PREM RIMAL	CHECKED ZIHAN YAN	
DETAILS	BY SURAJ DUTTA	CHECKED ZIHAN YAN	
QUANTITIES	BY PREM RIMAL	CHECKED PHUONG VU	

STATE OF CALIFORNIA
DEPARTMENT OF TRANSPORTATION

DIVISION OF ENGINEERING SERVICES
STRUCTURE DESIGN
DESIGN BRANCH 18

BRIDGE NO. 49-0260
POST MILE R 65.64

ARROYO DEL OSO BRIDGE
PIER DETAILS NO. 2

STRUCTURES DESIGN DETAIL SHEET (ENGLISH) (REV. 09-01-10)

ORIGINAL SCALE IN INCHES FOR REDUCED PLANS 0 1 2 3

UNIT: 3603
PROJECT NUMBER & PHASE: 0500000576 1
CONTRACT NO.: 05-492801

DISREGARD PRINTS BEARING EARLIER REVISION DATES

REVISION DATES: 09/22/12 10/05/12

SHEET 10 OF 23

FILE => 49-0260-h-pier02.dgn

USERNAME => s115755 DATE PLOTTED => 16-DEC-2014 TIME PLOTTED => 14:11

DIST	COUNTY	ROUTE	POST MILES TOTAL PROJECT	SHEET No.	TOTAL SHEETS
05	SLO	1	64.0/R66.9	253	265

REGISTERED CIVIL ENGINEER 10-27-14 DATE

10-27-14
PLANS APPROVAL DATE

REGISTERED PROFESSIONAL ENGINEER MICHAEL R POPE No. C 54503 Exp. 12-31-2015 CIVIL STATE OF CALIFORNIA

The State of California or its officers or agents shall not be responsible for the accuracy or completeness of scanned copies of this plan sheet.

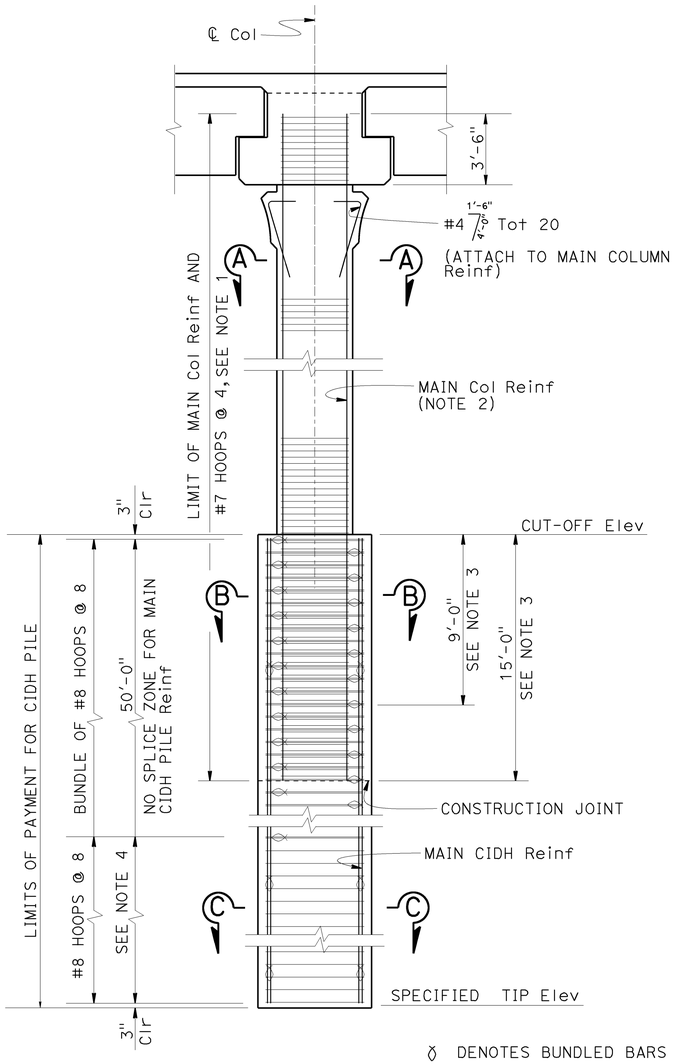

PIER ELEVATION

1/4" = 1'-0"

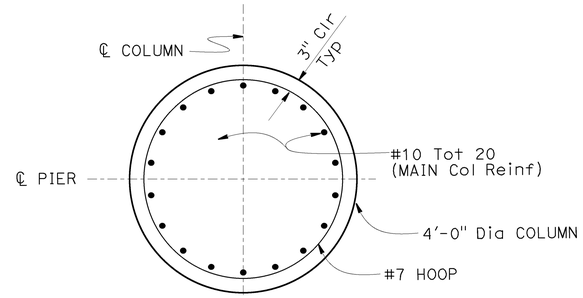

SECTION A-A

3/4" = 1'

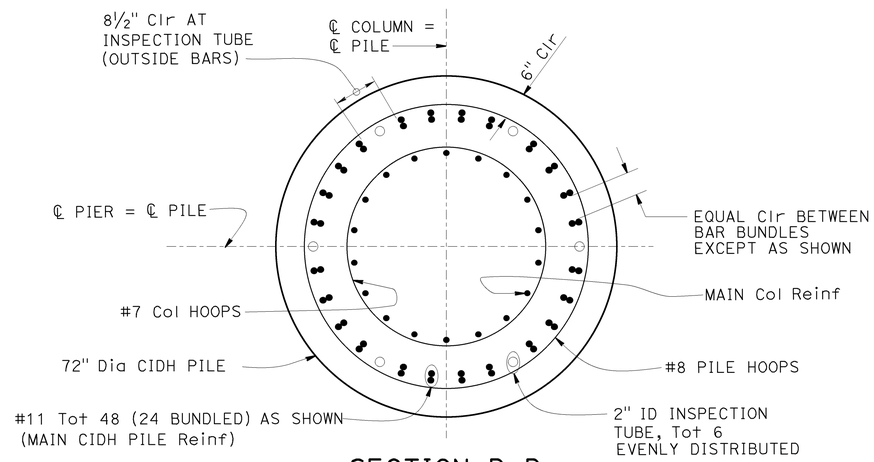

SECTION B-B

3/4" = 1'

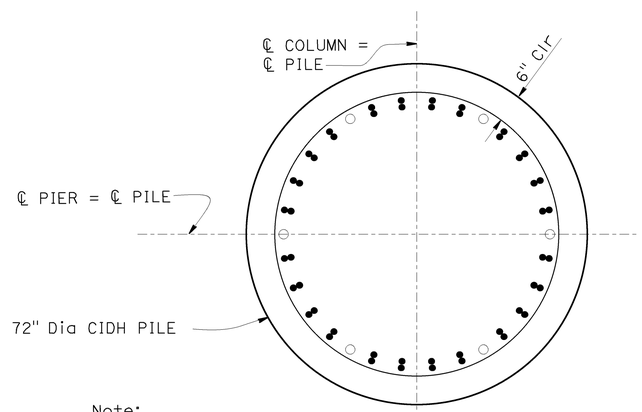

Note:
For details shown but not noted, see "SECTION B-B"

SECTION C-C

3/4" = 1'

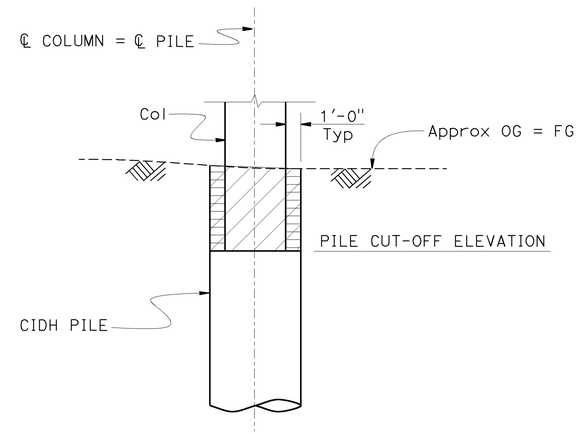

LIMITS FOR STRUCTURE EXCAVATION AND BACKFILL

NO SCALE

LEGEND

DENOTES STRUCTURE EXCAVATION (TYPE D)

DENOTES STRUCTURE BACKFILL

NOTES:

1. All hoops shall be "ULTIMATE" butt splice continuous.
2. No splices allowed in main Col Reinf.
3. Alternate cut off lengths of main Col Reinf
4. Only staggered "ULTIMATE" butt splices are allowed in main CIDH pile Reinf in designated zone.

	BY	CHECKED
DESIGN	PREM RIMAL	ZIHAN YAN
DETAILS	PREM RIMAL	ZIHAN YAN
QUANTITIES	PREM RIMAL	PHUONG VU

STATE OF CALIFORNIA
DEPARTMENT OF TRANSPORTATION

DIVISION OF ENGINEERING SERVICES
STRUCTURE DESIGN
DESIGN BRANCH 18

BRIDGE NO. 49-0260
POST MILE R65.64

ARROYO DEL OSO BRIDGE
PIER DETAILS NO. 3

STRUCTURES DESIGN DETAIL SHEET (ENGLISH) (REV. 09-01-10)

ORIGINAL SCALE IN INCHES FOR REDUCED PLANS 0 1 2 3

UNIT: 3603
PROJECT NUMBER & PHASE: 0500000576
CONTRACT NO.: 05-492801

DISREGARD PRINTS BEARING EARLIER REVISION DATES

REVISION DATES 09/28/12 10/05/12 12/10/13

SHEET 11 OF 23

FILE => 49-0260-h-pier03.dgn

USERNAME => s115755 DATE PLOTTED => 16-DEC-2014 TIME PLOTTED => 14:11

DIST	COUNTY	ROUTE	POST MILES TOTAL PROJECT	SHEET No.	TOTAL SHEETS
05	SLO	1	64.0/R66.9	254	265

REGISTERED CIVIL ENGINEER 10-27-14 DATE

10-27-14
PLANS APPROVAL DATE

REGISTERED PROFESSIONAL ENGINEER MICHAEL R POPE No. C 54503 Exp. 12-31-2015 CIVIL STATE OF CALIFORNIA

The State of California or its officers or agents shall not be responsible for the accuracy or completeness of electronic copies of this plan sheet.

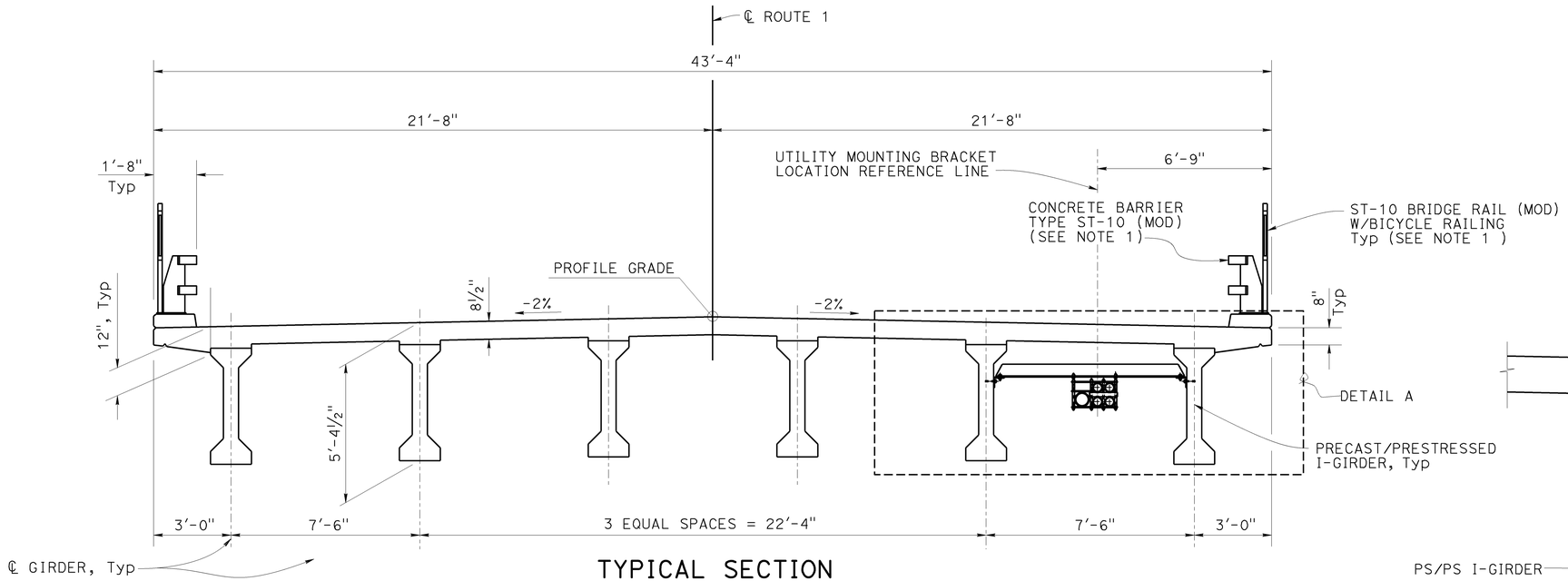

TYPICAL SECTION

3/8" = 1'

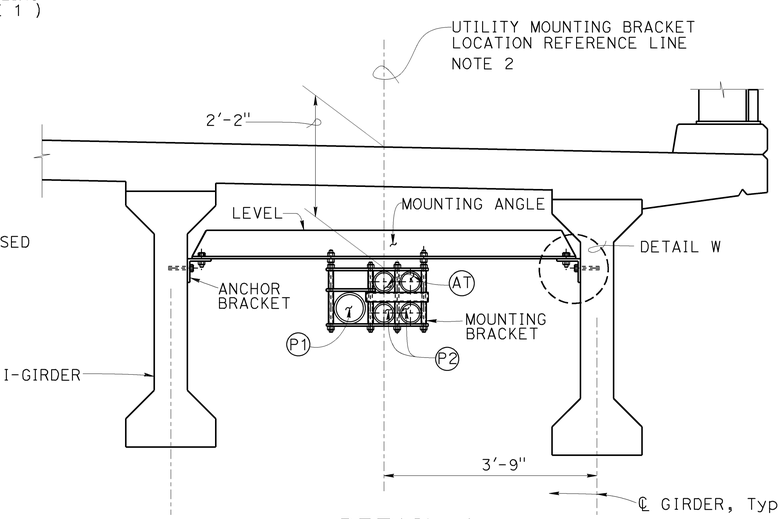

DETAIL A

3/4" = 1'-0"

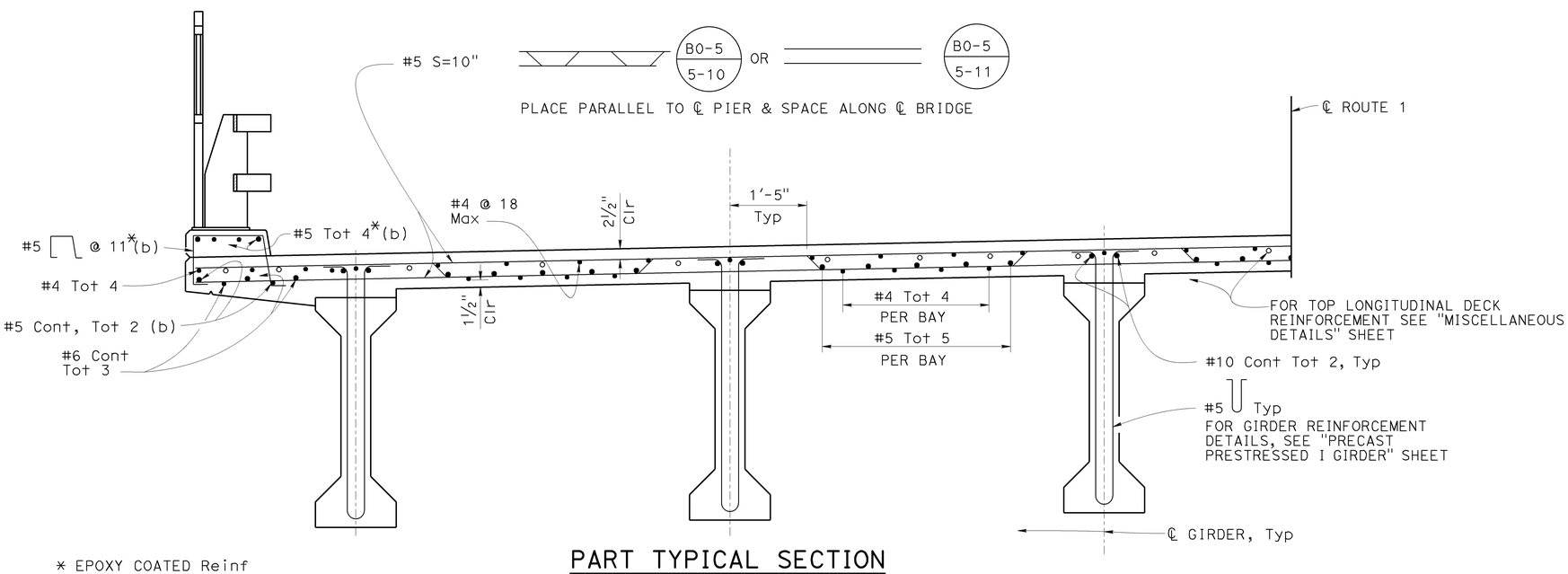

PART TYPICAL SECTION

3/4" = 1'

* EPOXY COATED Reinf (PRE-FABRICATED)
(b) BARRIER Reinf

NOTES

(AT) - 4" ø AT&T TELECOMMUNICATION CONDUITS Tot 2

(P1) - 6" ø PG&E CONDUIT

(P2) - 4" ø PG&E CONDUITS Tot 2

(1) - See "CALIFORNIA ST-10 (MOD) BRIDGE DETAILS NO 1 & 2" Sheet for more details

(2) For "MOUNTING BRACKET" and "ANCHOR BRACKET" details, see "MISCELLANEOUS DETAILS" sheet.

	BY	CHECKED
DESIGN	PREM RIMAL	ZIHAN YAN
DETAILS	SURAJ DUTTA	ZIHAN YAN
QUANTITIES	PREM RIMAL	PHUONG VU

STATE OF CALIFORNIA
DEPARTMENT OF TRANSPORTATION

DIVISION OF ENGINEERING SERVICES
STRUCTURE DESIGN
DESIGN BRANCH 18

BRIDGE NO. 49-0260
POST MILE R 65.64

ARROYO DEL OSO BRIDGE
TYPICAL SECTION

STRUCTURES DESIGN DETAIL SHEET (ENGLISH) (REV. 09-01-10)

ORIGINAL SCALE IN INCHES FOR REDUCED PLANS 0 1 2 3

UNIT: 3603
PROJECT NUMBER & PHASE: 0500000576 1
CONTRACT NO.: 05-492801

DISREGARD PRINTS BEARING EARLIER REVISION DATES

REVISION DATES 09/28/12 10/05/12

SHEET 12 OF 23

FILE => 49-0260-k-ts.dgn

USERNAME => s115755 DATE PLOTTED => 16-DEC-2014 TIME PLOTTED => 14:11

DIST	COUNTY	ROUTE	POST MILES TOTAL PROJECT	SHEET No.	TOTAL SHEETS
05	SLO	1	64.0/R66.9	255	265

REGISTERED CIVIL ENGINEER 10-27-14 DATE

10-27-14
PLANS APPROVAL DATE

REGISTERED PROFESSIONAL ENGINEER
MICHAEL R POPE
No. C 54503
Exp. 12-31-2015
CIVIL
STATE OF CALIFORNIA

The State of California or its officers or agents shall not be responsible for the accuracy or completeness of electronic copies of this plan sheet.

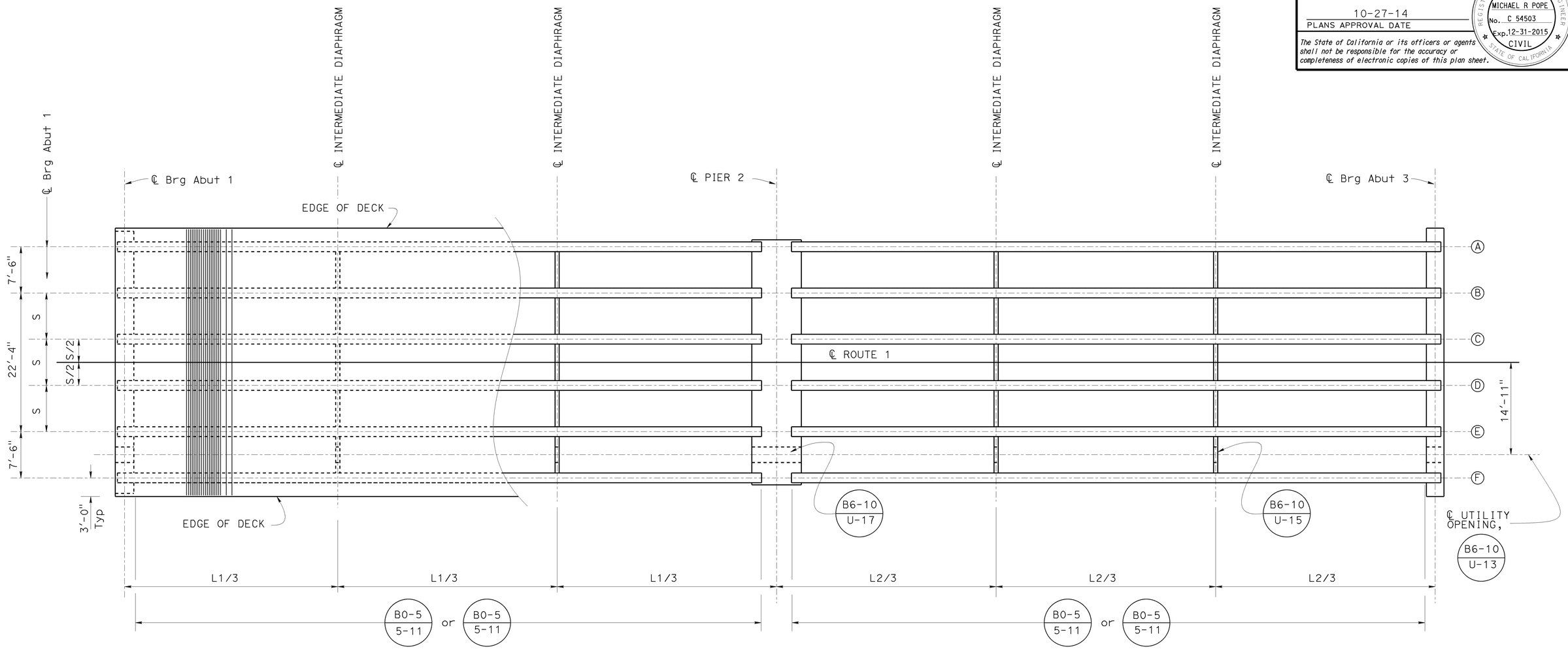

GIRDER LAYOUT

1/8" = 1'

B0-5 5-11 | B0-5 5-11 | B6-10 U-13 | B6-10 U-15 | B6-10 U-17

DESIGN	BY PREM RIMAL	CHECKED ZIHAN YAN	
DETAILS	BY SURAJ DUTTA	CHECKED ZIHAN YAN	
QUANTITIES	BY PREM RIMAL	CHECKED PHUONG VU	

STATE OF CALIFORNIA
DEPARTMENT OF TRANSPORTATION

DIVISION OF ENGINEERING SERVICES
STRUCTURE DESIGN
DESIGN BRANCH 18

BRIDGE NO. 49-0260
POST MILE R 65.64

ARROYO DEL OSO BRIDGE
GIRDER LAYOUT

STRUCTURES DESIGN DETAIL SHEET (ENGLISH) (REV. 09-01-10)

ORIGINAL SCALE IN INCHES FOR REDUCED PLANS 0 1 2 3

UNIT: 3603
PROJECT NUMBER & PHASE: 0500000576 1
CONTRACT NO.: 05-492801

DISREGARD PRINTS BEARING EARLIER REVISION DATES

REVISION DATES: 09/28/12 10/05/12

SHEET 13 OF 23

FILE => 49-0260-1-girlay.dgn

USERNAME => s115755 DATE PLOTTED => 16-DEC-2014 TIME PLOTTED => 14:11

DIST	COUNTY	ROUTE	POST MILES TOTAL PROJECT	SHEET No.	TOTAL SHEETS
05	SLO	1	64.0/R66.9	256	265

REGISTERED CIVIL ENGINEER 10-27-14 DATE

10-27-14
PLANS APPROVAL DATE

REGISTERED PROFESSIONAL ENGINEER MICHAEL R POPE No. C 54503 Exp. 12-31-2015 CIVIL STATE OF CALIFORNIA

The State of California or its officers or agents shall not be responsible for the accuracy or completeness of electronic copies of this plan sheet.

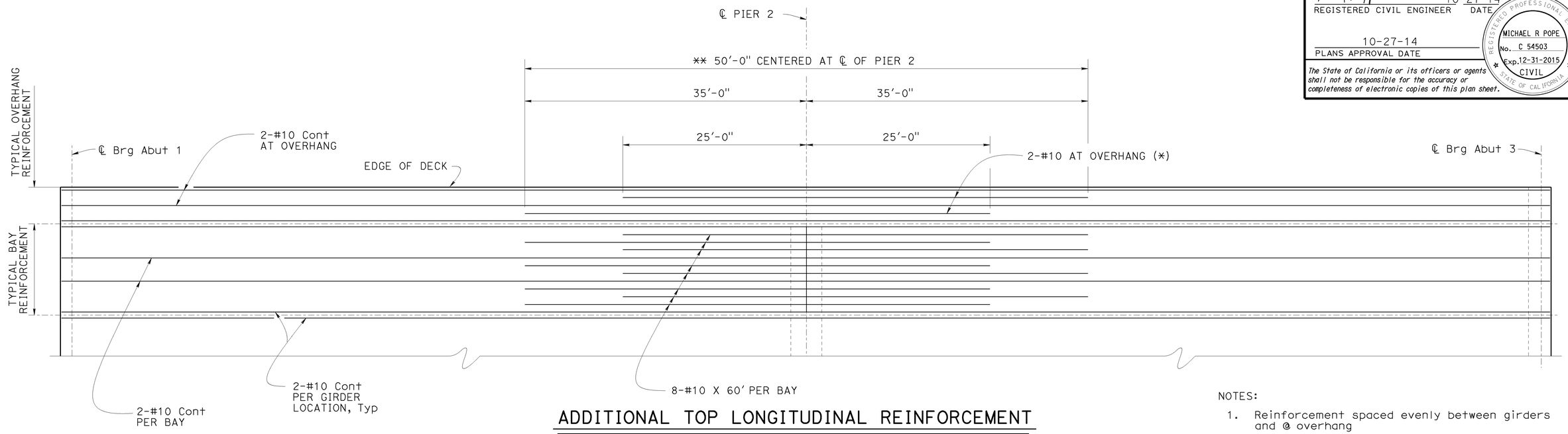

ADDITIONAL TOP LONGITUDINAL REINFORCEMENT

1/8" = 1'

NOTES:

1. Reinforcement spaced evenly between girders and @ overhang
2. No lap or mechanical splices allowed in main longitudinal reinforcement. Only service splice is allowed in #10 continuous bars.

* No slpice zone for all non-contintous bars

** No splice zone for all reinforcement

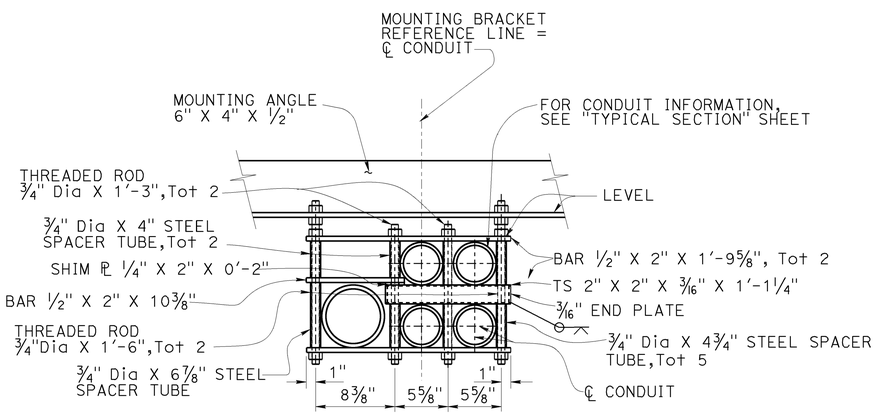

MOUNTING BRACKET DETAIL

1 1/2" = 1'-0"

ALL MOUNTING BRACKET COMPONENTS ARE TO BE GALVANIZED

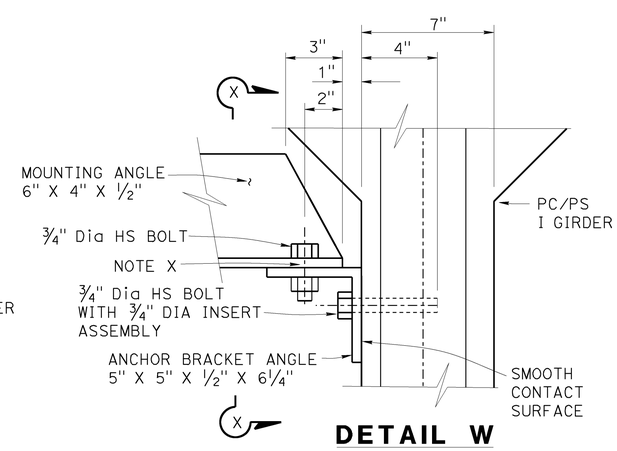

DETAIL W

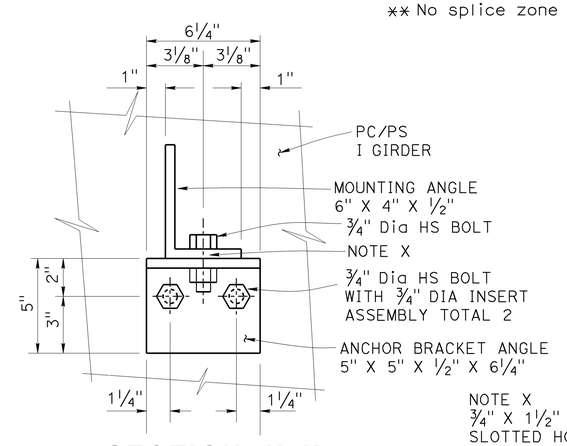

SECTION X-X

NOTE X
3/4" X 1 1/2"
SLOTTED HOLE
ORIENTED ALONG
MOUNTING ANGLE

ANCHOR BRACKET DETAILS

3" = 1'-0"

SPACING = 10'-0" Max
PLACE BRACKET 2'-0" FROM
FACE OF ABUTMENT DIAPHRAGM
OR BENT DIAPHRAGM

AT&T AND PG&E CONDUITS DETAILS

	BY	CHECKED
DESIGN	PREM RIMAL	ZIHAN YAN
DETAILS	SURAJ DUTTA	ZIHAN YAN
QUANTITIES	PREM RIMAL	PHUONG VU

STATE OF CALIFORNIA
DEPARTMENT OF TRANSPORTATION

DIVISION OF ENGINEERING SERVICES
STRUCTURE DESIGN
DESIGN BRANCH 18

BRIDGE NO. 49-0260
POST MILE R 65.64

ARROYO DEL OSO BRIDGE
MISCELLANEOUS DETAILS

STRUCTURES DESIGN DETAIL SHEET (ENGLISH) (REV. 09-01-10)

ORIGINAL SCALE IN INCHES FOR REDUCED PLANS 0 1 2 3

UNIT: 3603
PROJECT NUMBER & PHASE: 0500000576 1
CONTRACT NO.: 05-492801

DISREGARD PRINTS BEARING EARLIER REVISION DATES

REVISION DATES 09/24/12 10/05/12

SHEET 14 OF 23

FILE => 49-0260-m-miscdet.dgn

USERNAME => s113755 DATE PLOTTED => 16-DEC-2014 TIME PLOTTED => 14:11

DIST	COUNTY	ROUTE	POST MILES TOTAL PROJECT	SHEET No.	TOTAL SHEETS
05	SLO	1	64.0/R66.9	257	265

REGISTERED CIVIL ENGINEER 10-27-14 DATE

10-27-14
PLANS APPROVAL DATE

REGISTERED PROFESSIONAL ENGINEER MICHAEL R POPE No. C 54503 Exp. 12-31-2015 CIVIL STATE OF CALIFORNIA

The State of California or its officers or agents shall not be responsible for the accuracy or completeness of electronic copies of this plan sheet.

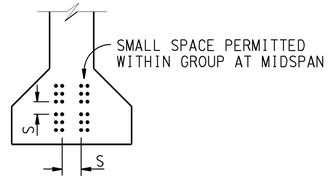

CLEARANCES FOR PRETENSIONED STRANDS

1. Strands may be bundled in groups consisting of 3 vertically, 2 horizontally and separated at the ends
2. The Min distance "S" between groups or individual strands is 1½" for ⅜" ø strands, 1¾" for ½" ø strands, 2" for 0.6" ø strands
3. "S" is measured between centers of adjacent strands
4. Approval by the Engineer is required for deviation

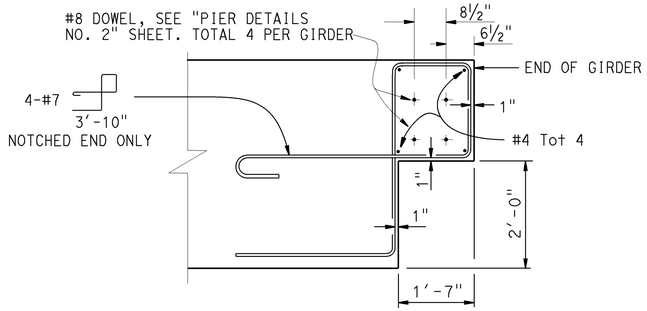

DETAIL B

FOR OPTIONAL NOTCHED END DETAIL ONLY

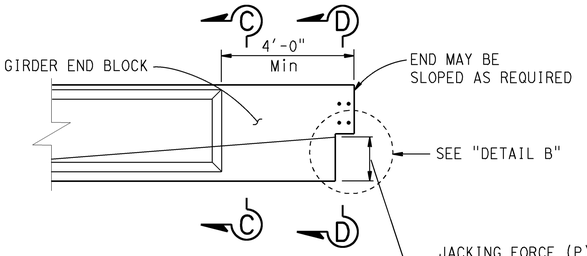

OPTIONAL NOTCHED END DETAIL

GENERAL NOTES

JACKING FORCE (P): The jacking force required at the point of control along the span. The jacking force does not include any fabrication specific losses.

The maximum tensile stress in the prestressing steel upon release shall not exceed 75% of the specified minimum ultimate tensile strength of the prestressing steel.

The maximum temporary tensile stress (jacking stress) in the prestressing steel shall not exceed 80% of the specified minimum ultimate tensile strength of the prestressing steel.

CONCRETE STRENGTH: f'ci is at time of initial stressing
f'c is at 28 days

DEFLECTION COMPONENTS: Informational - to be used in setting screed line elevations

Screed line elevations for deck concrete will be determined by the Engineer.

Contractor may interpolate "P" and "X" values between limits shown, as approved by the Engineer.

Use epoxy coated reinforcement in Environmental Area III

Girder location or designation and length	Jacking Force (P) (Kips) "X"		"Y" (in)	Concrete Strength (ksi) f'ci	Concrete Strength (ksi) f'c	Midspan Dead Load Deflection (inches) Deck	Midspan Dead Load Deflection (inches) Rail
Span 1/ 104'-1"	4.5"	1050	27	5.50	6.50	2.33	0.08
	6.5"	1110					
Span 2/ 104'-1"	4.5"	1050	27	5.50	6.50	2.33	0.08
	6.5"	1110					

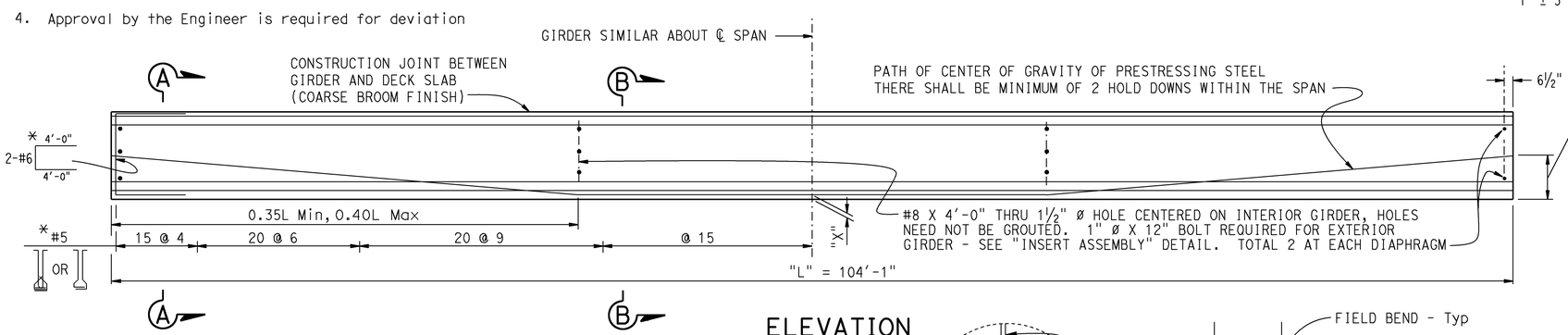

ELEVATION

* EPOXY COATED Reinf (PRE-FABRICATED)

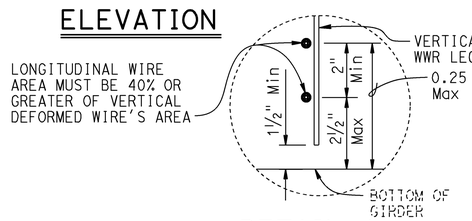

DETAIL A

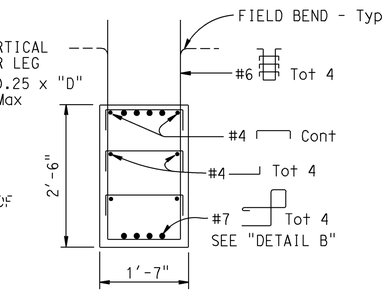

SECTION D-D

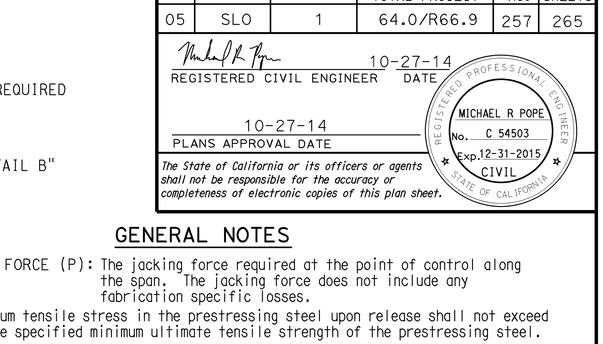

INTERMEDIATE DIAPHRAGM

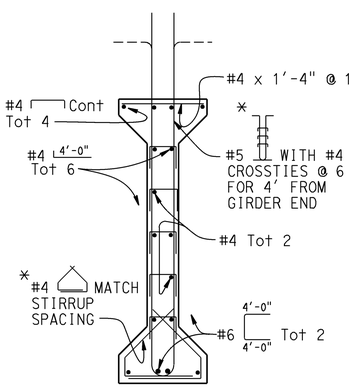

SECTION A-A

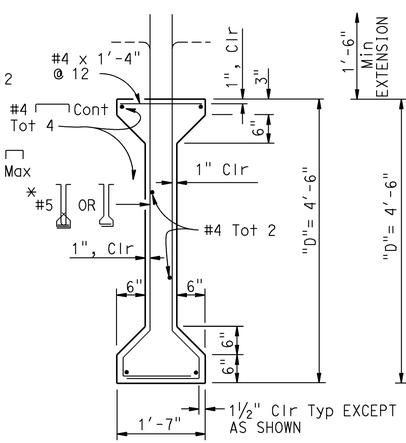

SECTION B-B

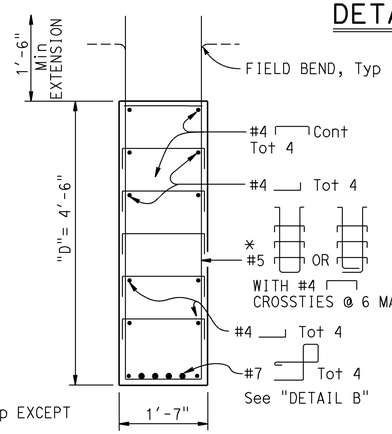

SECTION C-C

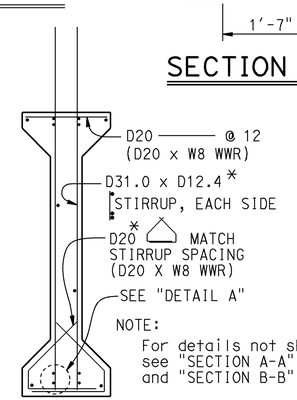

OPTIONAL WELDED WIRE REINFORCEMENT (WWR) DETAIL

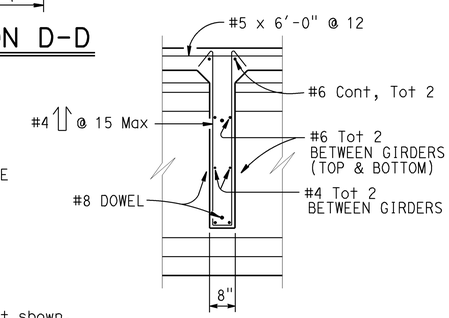

SECTION E-E

WWR NOTE: MANUFACTURER'S SHOP DRAWING SHALL CONFORM TO THE REINFORCEMENT SHOWN ON THIS SHEET AS NOTED AND THE SPECIAL PROVISIONS

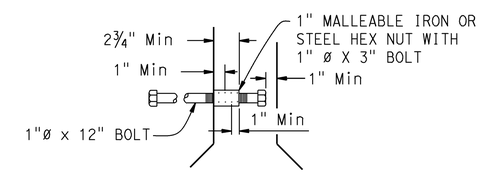

INSERT ASSEMBLY

NO SCALE

STANDARD DRAWING
FILE NO. XS1-120
APPROVAL DATE July 2011

STATE OF CALIFORNIA
DEPARTMENT OF TRANSPORTATION

DIVISION OF ENGINEERING SERVICES

BRIDGE NO. 49-0260
POST MILE R 65.64

ARROYO DEL OSO BRIDGE
PRECAST PRESTRESSED I GIRDER

DS OSD 2147A (ENGLISH STANDARD DRAWING "XS" BORDER REV. (02-02-11)

ORIGINAL SCALE IN INCHES FOR REDUCED PLANS 0 1 2 3

UNIT: 3603
PROJECT NUMBER & PHASE: 0500000576 1
CONTRACT NO.: 05-492801

DISREGARD PRINTS BEARING EARLIER REVISION DATES
REVISION DATES 09/22/12 10/05/12

SHEET 15 OF 23

FILE => 49-0260-o-igirdet.dgn

USERNAME => s115755 DATE PLOTTED => 16-DEC-2014 TIME PLOTTED => 14:11

DIST	COUNTY	ROUTE	POST MILES TOTAL PROJECT	SHEET No.	TOTAL SHEETS
05	SLO	1	64.0/R66.9	258	265

REGISTERED CIVIL ENGINEER 10-27-14 DATE

10-27-14
PLANS APPROVAL DATE

REGISTERED PROFESSIONAL ENGINEER MICHAEL R POPE No. C54503 Exp. 12/31/15 CIVIL STATE OF CALIFORNIA

The State of California or its officers or agents shall not be responsible for the accuracy or completeness of scanned copies of this plan sheet.

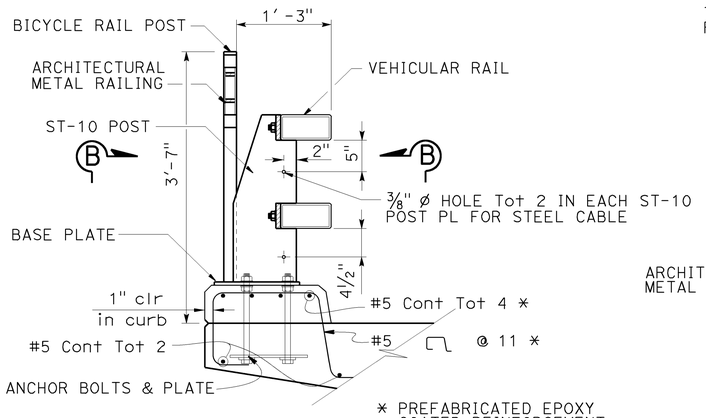

* PREFABRICATED EPOXY COATED REINFORCEMENT SHALL BE USED IN CURB

TYPICAL SECTION

1 " = 1'-0"

FOR CA ST-10 RAILING DETAILS NOT SHOWN SEE: B11-68 B11-69 B11-70

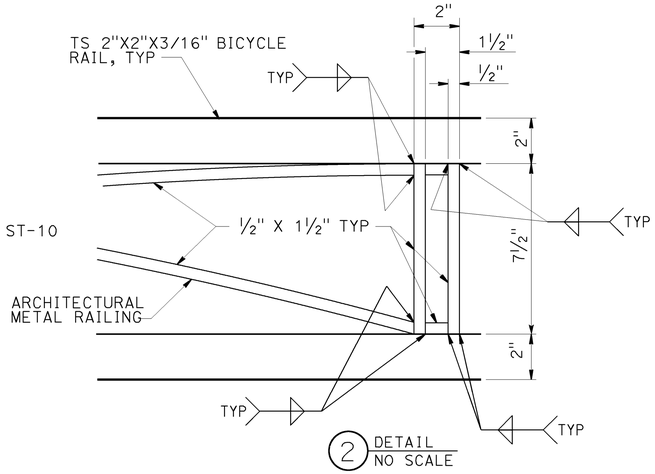

DETAIL

NO SCALE

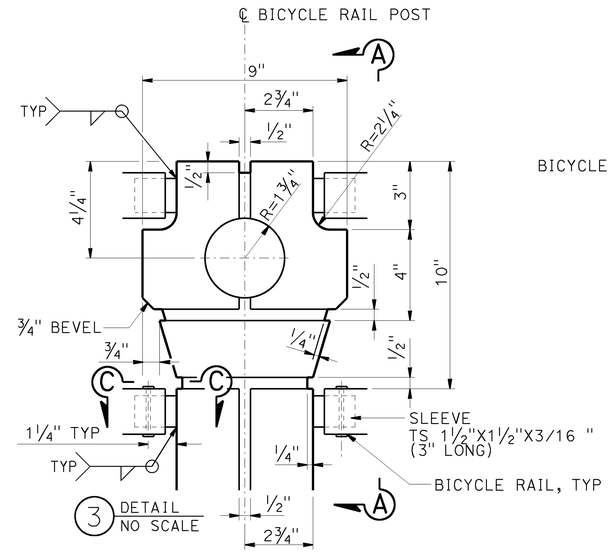

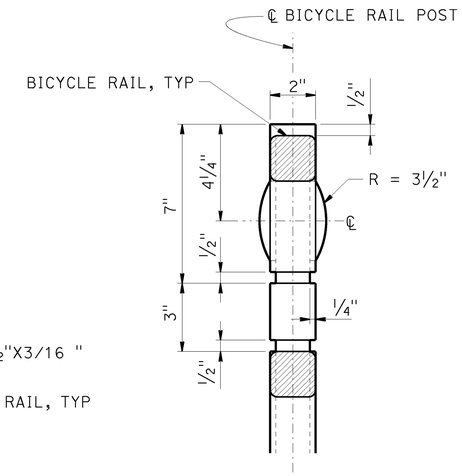

SECTION A - A

NO SCALE

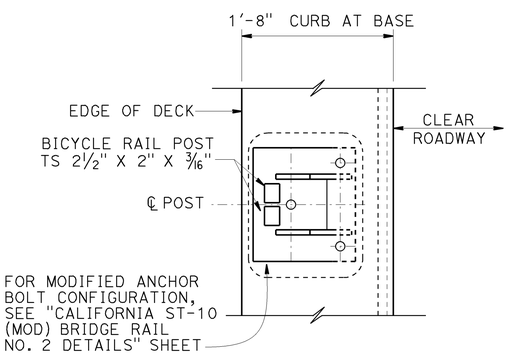

SECTION B - B

NO SCALE

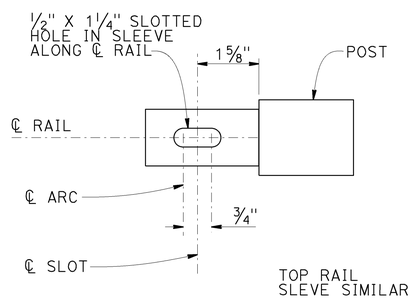

SECTION C - C

NO SCALE

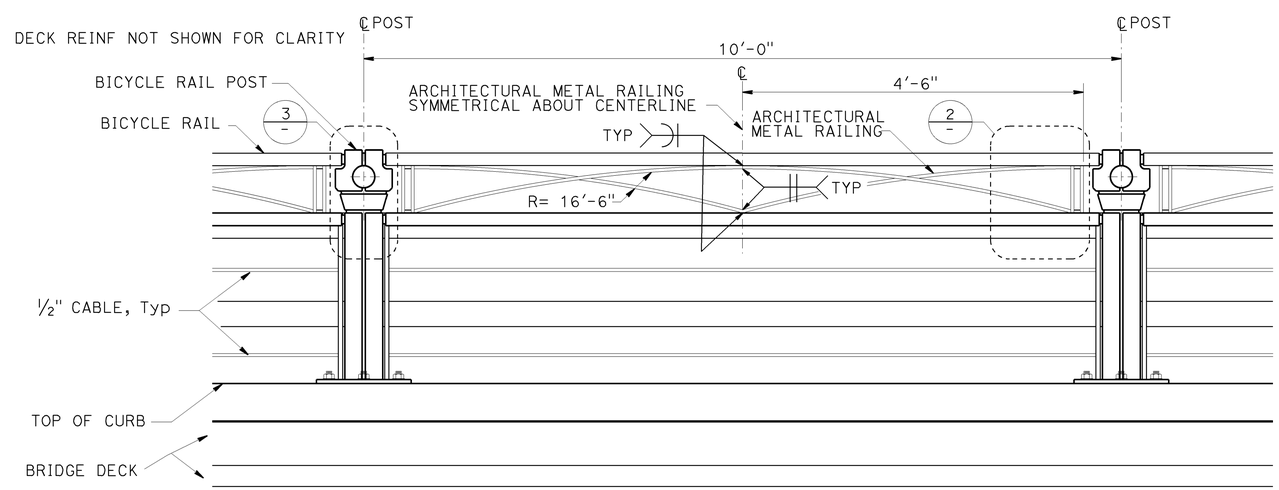

ELEVATION VIEW - CALIFORNIA ST-10

1 " = 1'-0"

DESIGN	BY ZIHAN YAN	CHECKED PREM RIMAL	
DETAILS	BY JINLI GUO	CHECKED PREM RIMAL	
QUANTITIES	BY ZIHAN YAN	CHECKED PREM RIMAL	

STATE OF CALIFORNIA DEPARTMENT OF TRANSPORTATION

DIVISION OF ENGINEERING SERVICES STRUCTURE DESIGN DESIGN BRANCH 18

BRIDGE NO. 49-0260 POST MILE R 65.64

ARROYO DE OSO BRIDGE

CALIFORNIA ST-10 BRIDGE RAIL (MOD) DETAILS NO. 1

STRUCTURES DESIGN DETAIL SHEET (ENGLISH) (REV. 09-01-10)

ORIGINAL SCALE IN INCHES FOR REDUCED PLANS 0 1 2 3

UNIT:3603
PROJECT NUMBER & PHASE:0500000576 1 CONTRACT NO.: 05-492801

DISREGARD PRINTS BEARING EARLIER REVISION DATES

REVISION DATES 08/07/12 04/05/13 04/18/13

SHEET 16 OF 23

FILE => 49-0260-p-st10-det01.dgn

USERNAME => s115755 DATE PLOTTED => 16-DEC-2014 TIME PLOTTED => 14:11

DIST	COUNTY	ROUTE	POST MILES TOTAL PROJECT	SHEET No.	TOTAL SHEETS
05	SLO	1	64.0/R66.9	259	265

REGISTERED CIVIL ENGINEER 10-27-14 DATE

10-27-14
PLANS APPROVAL DATE

REGISTERED PROFESSIONAL ENGINEER MICHAEL R POPE No. C54503 Exp. 12/31/15 CIVIL STATE OF CALIFORNIA

The State of California or its officers or agents shall not be responsible for the accuracy or completeness of scanned copies of this plan sheet.

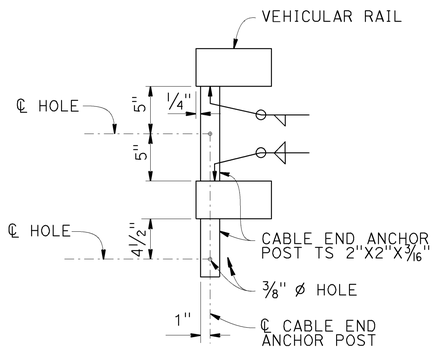

SECTION F - F

1 1/2" = 1'-0"

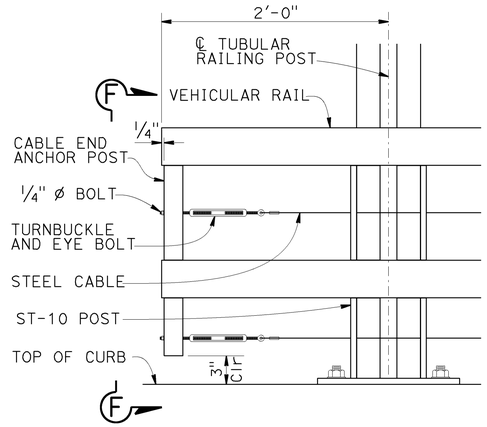

CABLE END ANCHORAGE

1 1/2" = 1'-0"

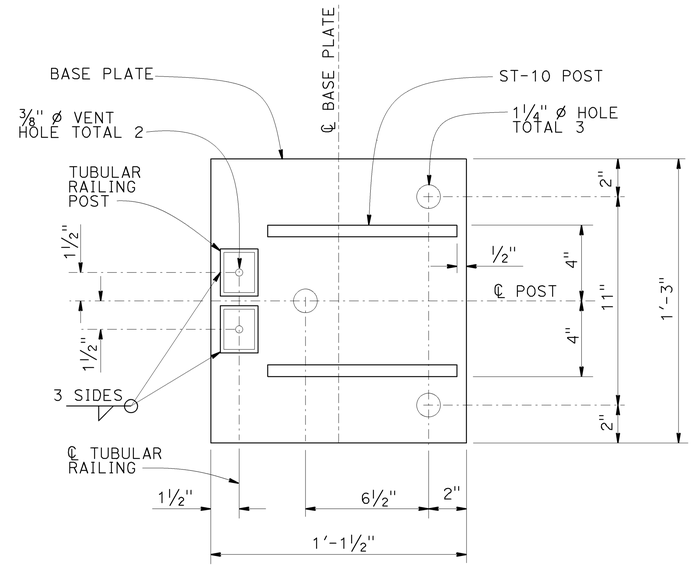

BASE PLATE

3 " = 1'-0"

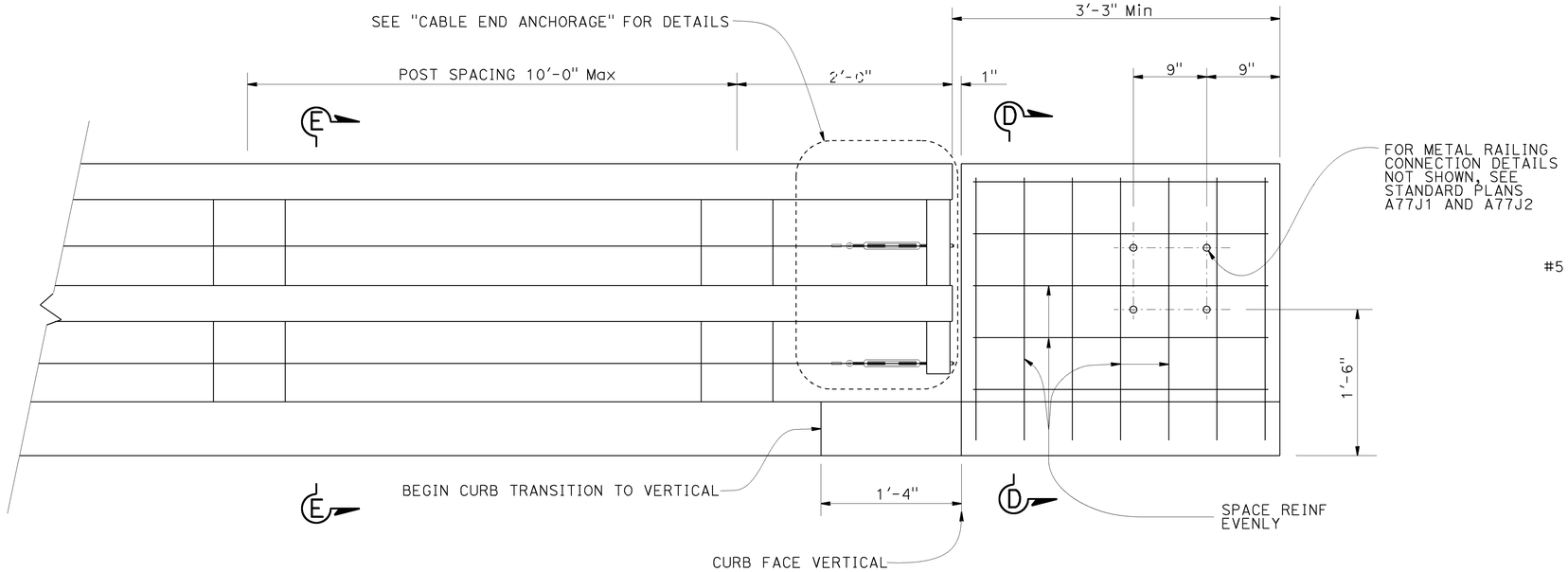

END OF RAILING ELEVATION

1 1/2" = 1'-0"

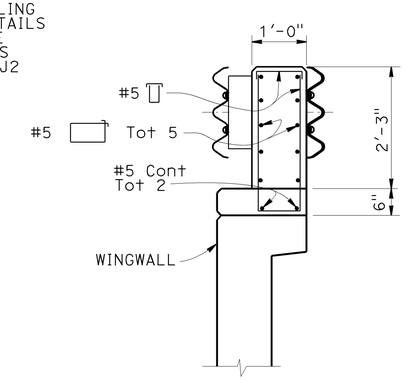

SECTION D-D

NOTE: WINGWALL & CURB REINF NOT SHOWN FOR CLARITY

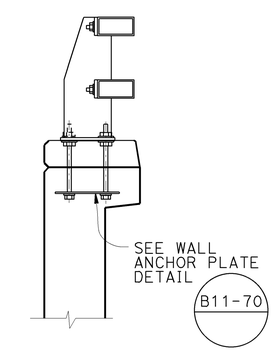

SECTION E-E

NOTE: REINF SAME AS FOR SECTION D-D EXCEPT AS NOTED

DESIGN	BY ZIHAN YAN	CHECKED PREM RIMAL	
DETAILS	BY JINLI GUO	CHECKED PREM RIMAL	
QUANTITIES	BY ZIHAN YAN	CHECKED PREM RIMAL	

STATE OF CALIFORNIA
DEPARTMENT OF TRANSPORTATION

DIVISION OF ENGINEERING SERVICES
STRUCTURE DESIGN
DESIGN BRANCH 18

BRIDGE NO. 49-0260
POST MILE R 65.64

ARROYO DE OSO BRIDGE

CALIFORNIA ST-10 BRIDGE RAIL(MOD) DETAILS NO. 2

STRUCTURES DESIGN DETAIL SHEET (ENGLISH) (REV. 09-01-10)

ORIGINAL SCALE IN INCHES FOR REDUCED PLANS 0 1 2 3

UNIT: 3603
PROJECT NUMBER & PHASE: 0500000576 1
CONTRACT NO.: 05-492801

DISREGARD PRINTS BEARING EARLIER REVISION DATES

REVISION DATES 4/8/13 4/23/13

SHEET 17 OF 23

FILE => 49-0260-p-st10-det02.dgn

USERNAME => s115755 DATE PLOTTED => 16-DEC-2014 TIME PLOTTED => 14:11

DIST	COUNTY	ROUTE	POST MILES TOTAL PROJECT	SHEET No.	TOTAL SHEETS
05	SLO	1	64.0/R66.9	260	265

REGISTERED CIVIL ENGINEER 10-27-14 DATE

10-27-14
PLANS APPROVAL DATE

REGISTERED PROFESSIONAL ENGINEER
MICHAEL R POPE
No. C 54503
Exp. 12-31-2015
CIVIL
STATE OF CALIFORNIA

The State of California or its officers or agents shall not be responsible for the accuracy or completeness of electronic copies of this plan sheet.

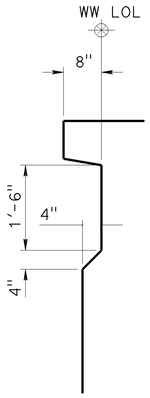

SECTION B-B
NO SCALE

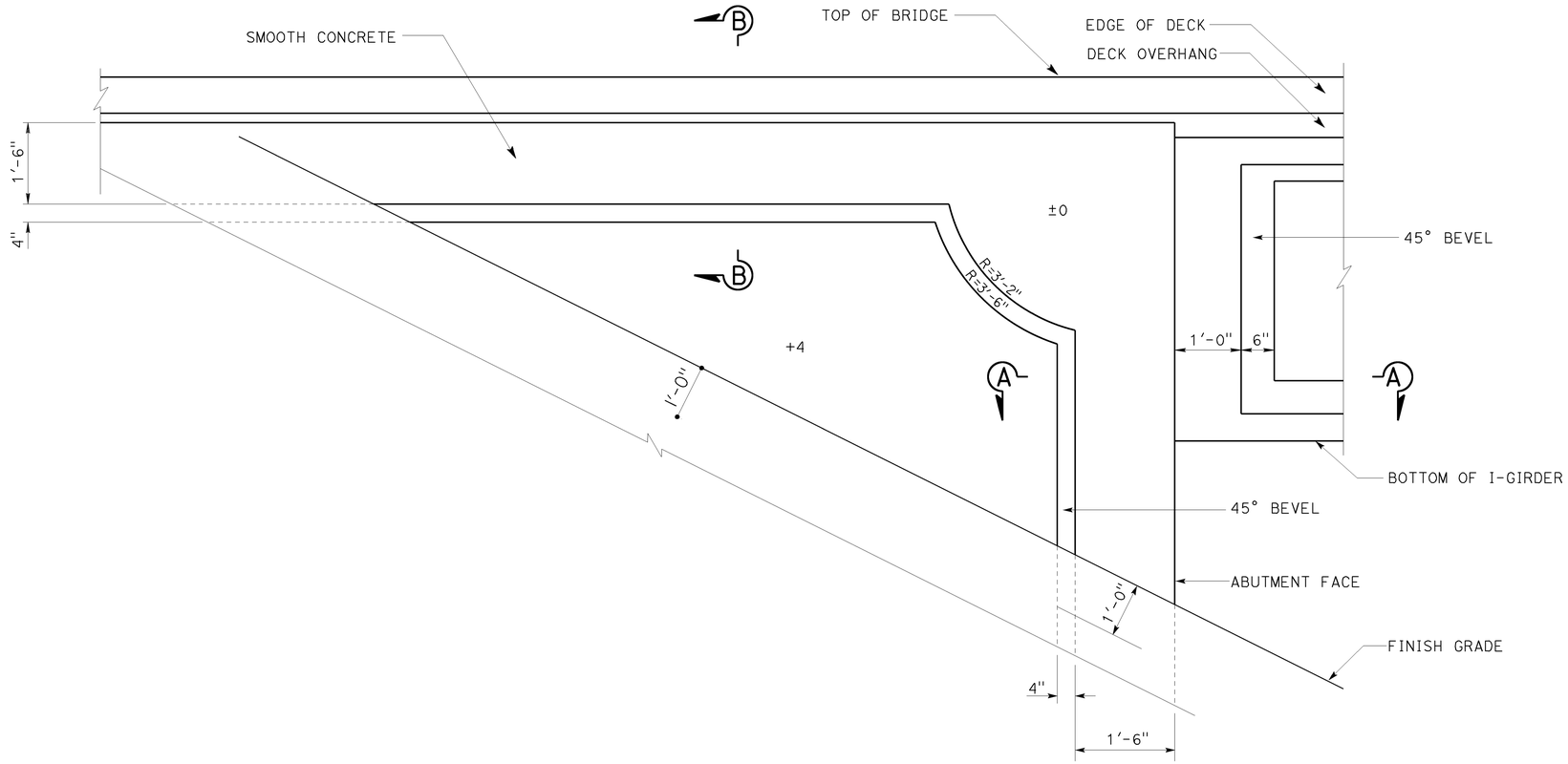

PARTIAL ELEVATION @ WING WALLS
NO SCALE

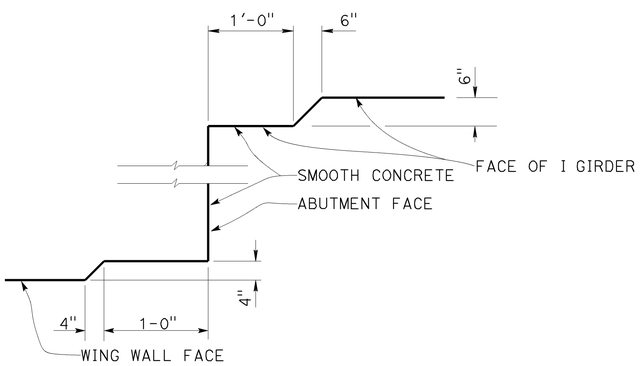

SECTION A-A
NO SCALE

DESIGN	BY PREM RIMAL	CHECKED ZIHAN YAN	
DETAILS	BY SURAJ DUTTA	CHECKED ZIHAN YAN	
QUANTITIES	BY PREM RIMAL	CHECKED PHUONG VU	

STATE OF CALIFORNIA
DEPARTMENT OF TRANSPORTATION

DIVISION OF ENGINEERING SERVICES
STRUCTURE DESIGN
DESIGN BRANCH 18

BRIDGE NO. 49-0260
POST MILE R 65.64

ARROYO DEL OSO BRIDGE
ARCHITECTURAL TREATMENT DETAILS NO. 1

STRUCTURES DESIGN DETAIL SHEET (ENGLISH) (REV. 09-01-10)

ORIGINAL SCALE IN INCHES FOR REDUCED PLANS 0 1 2 3

UNIT: 3603
PROJECT NUMBER & PHASE: 0500000576 1
CONTRACT NO.: 05-492801

DISREGARD PRINTS BEARING EARLIER REVISION DATES

REVISION DATES 09/22/12 10/05/12

SHEET 18 OF 23

FILE => 49-0260-r-archdet01.dgn

USERNAME => s115755 DATE PLOTTED => 16-DEC-2014 TIME PLOTTED => 14:11

DIST	COUNTY	ROUTE	POST MILES TOTAL PROJECT	SHEET No.	TOTAL SHEETS
05	SLO	1	64.0/R66.9	261	265

REGISTERED CIVIL ENGINEER 10-27-14 DATE

10-27-14
PLANS APPROVAL DATE

REGISTERED PROFESSIONAL ENGINEER MICHAEL R POPE No. C054503 Exp. 12/31/2015 CIVIL STATE OF CALIFORNIA

The State of California or its officers or agents shall not be responsible for the accuracy or completeness of electronic copies of this plan sheet.

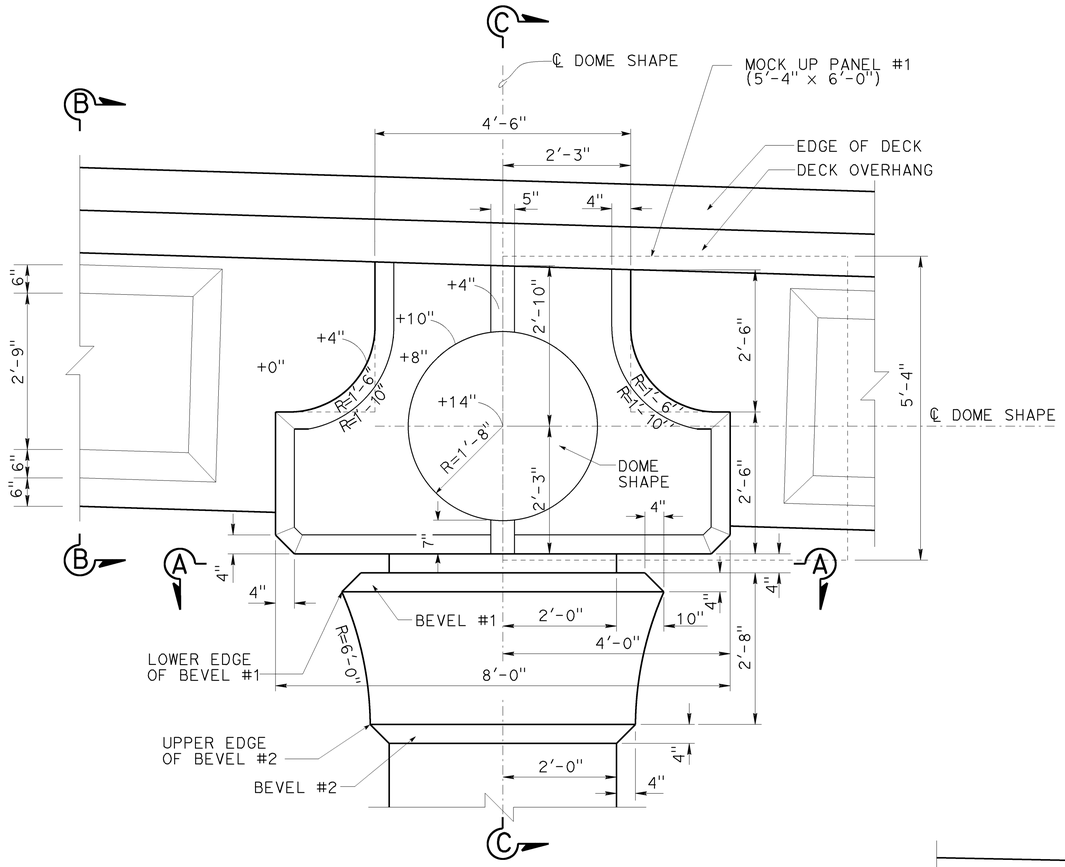

TRUE ELEVATION

3/4" = 1'-0"

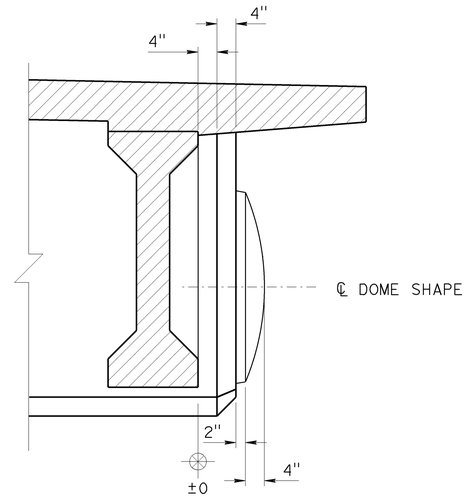

SECTION B-B

(ROTATED TO TRUE ELEVATION)
NO SCALE

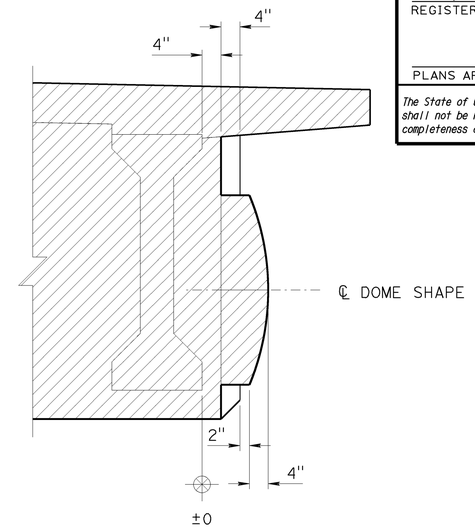

SECTION C-C

(ROTATED TO TRUE ELEVATION)
NO SCALE

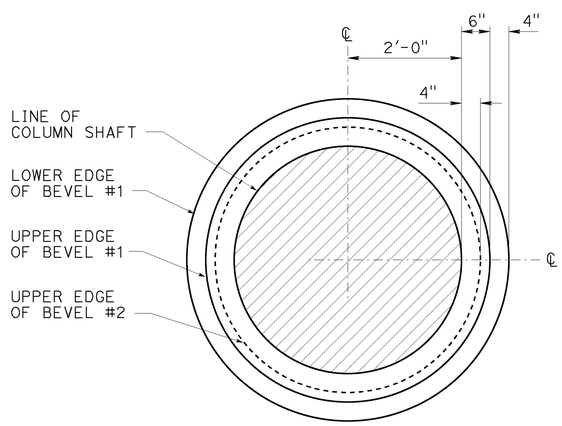

SECTION A-A

NO SCALE

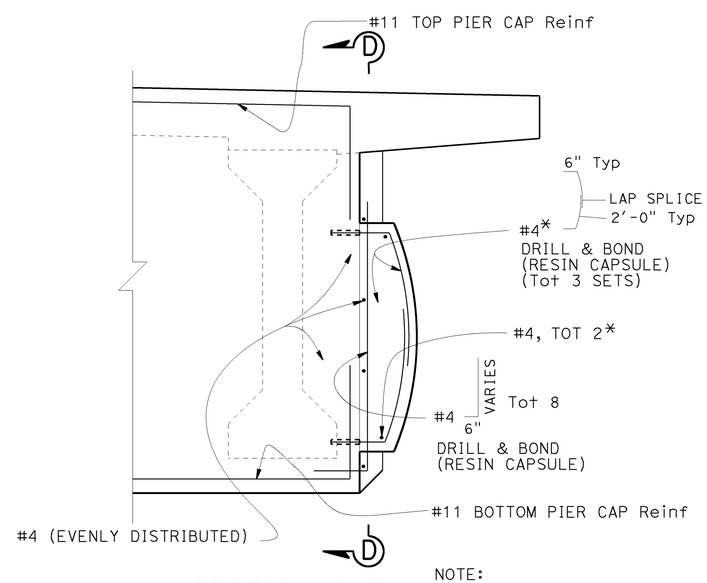

SECTION C-C

(ROTATED TO TRUE ELEVATION)
NO SCALE

NOTE:
* PLACE Reinf within Dome

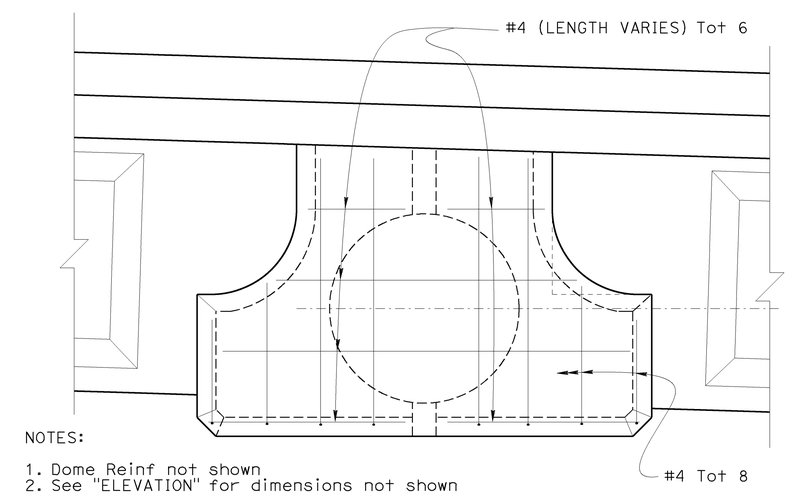

NOTES:

1. Dome Reinf not shown
2. See "ELEVATION" for dimensions not shown

SECTION D-D

NO SCALE

DESIGN	BY KUNJIAN LI	CHECKED ISAAC TASABIA	
DETAILS	BY KUNJIAN LI	CHECKED ISAAC TASABIA	
QUANTITIES	BY PREM RIMAL	CHECKED PHUONG VU	

STATE OF CALIFORNIA
DEPARTMENT OF TRANSPORTATION

DIVISION OF ENGINEERING SERVICES
STRUCTURE DESIGN
DESIGN BRANCH 18

BRIDGE NO. 49-0260
POST MILE R 65.64

ARROYO DEL OSO BRIDGE

ARCHITECTURAL TREATMENT DETAILS NO. 2

STRUCTURES DESIGN DETAIL SHEET (ENGLISH) (REV. 09-01-10)

ORIGINAL SCALE IN INCHES FOR REDUCED PLANS 0 1 2 3

UNIT: 3603
PROJECT NUMBER & PHASE: 0500000576 1
CONTRACT NO.: 05-492801

DISREGARD PRINTS BEARING EARLIER REVISION DATES

REVISION DATES

SHEET 19 OF 23

FILE => 49-0260-r-archdet02.dgn

USERNAME => s115755 DATE PLOTTED => 16-DEC-2014 TIME PLOTTED => 14:11

DIST	COUNTY	ROUTE	POST MILES TOTAL PROJECT	SHEET No.	TOTAL SHEETS
05	SLO	1	64.0/R66.9	262	265

REGISTERED CIVIL ENGINEER 10-27-14 DATE

10-27-14
PLANS APPROVAL DATE

The State of California or its officers or agents shall not be responsible for the accuracy or completeness of electronic copies of this plan sheet.

REGISTERED PROFESSIONAL ENGINEER MICHAEL R POPE No. C 54503 Exp. 12-31-2015 CIVIL STATE OF CALIFORNIA

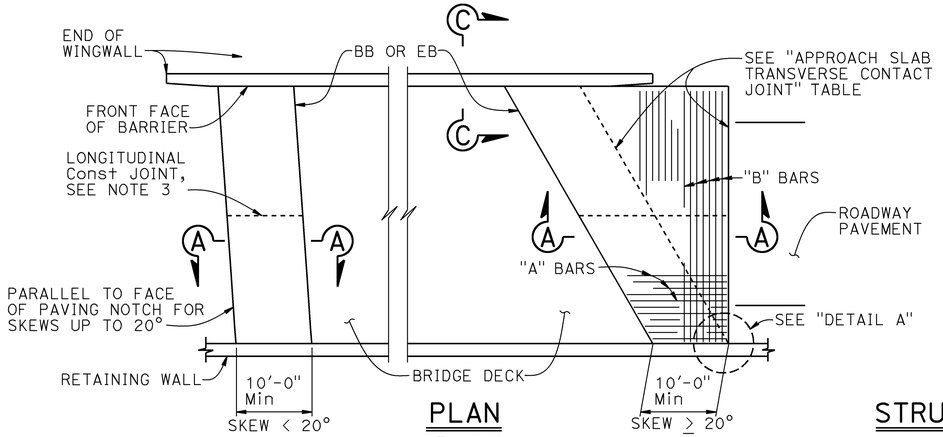

PLAN
1" = 10'

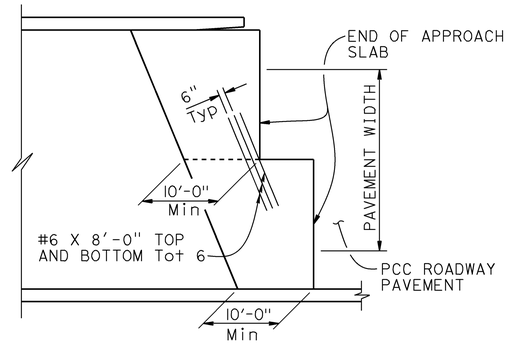

STRUCTURE APPROACH - END STAGGER DETAIL
NO SCALE

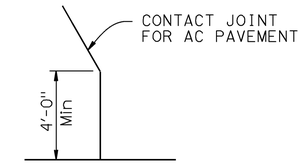

DETAIL A
No Scale

APPROACH SLAB TRANSVERSE CONTACT JOINT		
APPROACH SKEW	AC ROADWAY PAVEMENT	WITH PCC ROADWAY PAVEMENT
< 20°	PARALLEL TO FACE OF PN	PARALLEL TO FACE OF PN
20° - 45°	PARALLEL TO FACE OF PN USE "DETAIL A"	STAGGER LINES 24' TO 36' APART
> 45°	PARALLEL TO FACE OF PN USE "DETAIL A"	STAGGER AT EACH LANE LINE

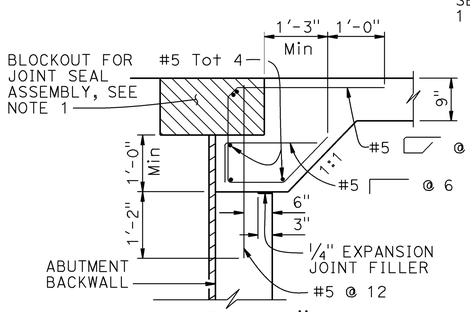

MR > 2"

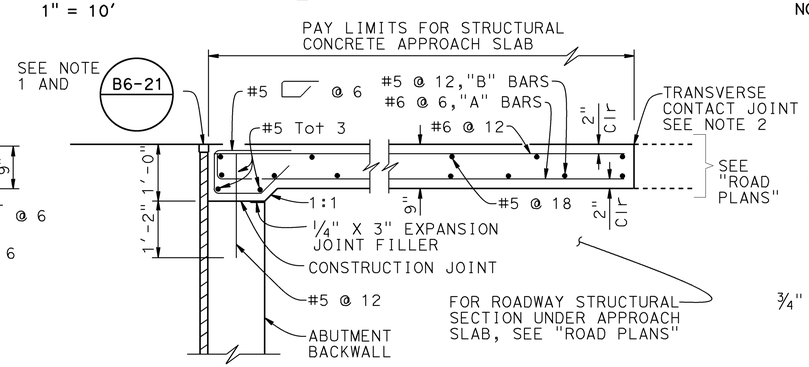

MR ≤ 2"

SEAT TYPE ABUTMENT SECTION A-A
3/4" = 1'-0"

NOTE: Seat type abutment shown, for diaphragm type abutment, see "ABUTMENT TIE DETAILS"

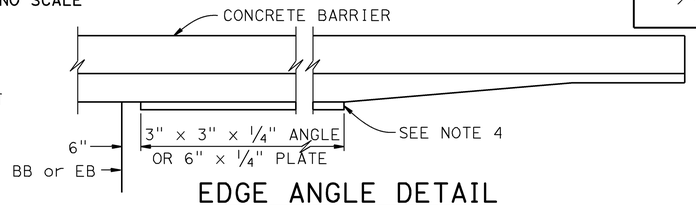

EDGE ANGLE DETAIL
1/2" = 1'-0"

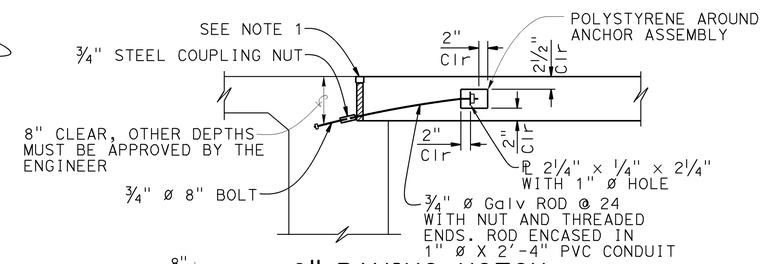

9" PAVING NOTCH

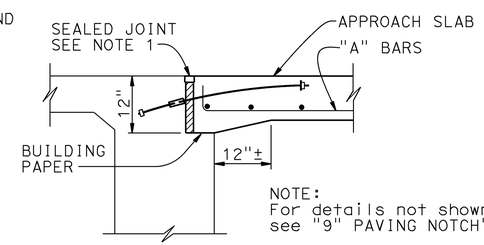

NOTE:
For details not shown, see "9" PAVING NOTCH"

12" PAVING NOTCH

DIAPHRAGM TYPE ABUTMENT ABUTMENT TIE DETAILS
3/4" = 1'-0"

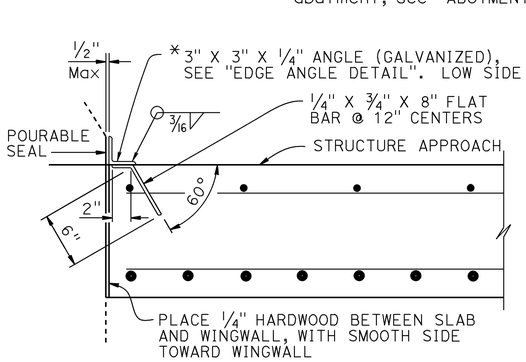

*(TO BE USED WITH CONCRETE BARRIER WITH VERTICAL FACE)

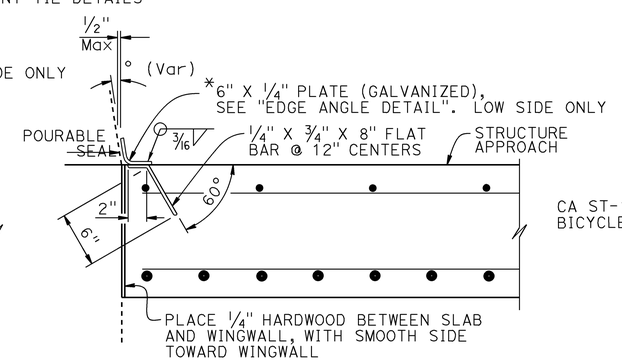

*(TO BE USED WITH CONCRETE BARRIER WITH SLOPING FACE)

DETAIL B
1 1/2" = 1'-0"

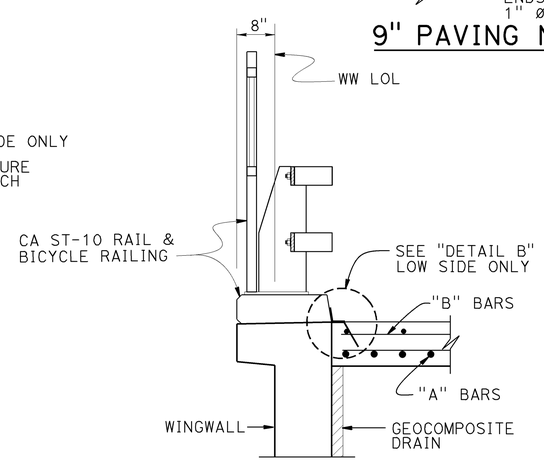

SECTION C-C
3/4" = 1'-0"

NOTES:

1. For details not noted or shown, see Structure Plans. Adjust bar reinforcement to clear a sawcut for sealed joint, when required
2. For transverse contact joint with new PCC paving, refer to Standard Plan P10
3. Longitudinal construction joints, when permitted by the Engineer, shall be located on lane lines
4. End angle or plate at beginning of barrier transition, end of wingwall or end of structure approach as applicable
5. At the Contractor's option, approach slab transverse reinforcement may be placed parallel to paving notch. Spacing of transverse reinforcement is measured along ℄ roadway
6. For drainage details, see Structure Plans.

REVISED STANDARD DRAWING

FILE NO. xs3-160

APPROVAL DATE July 2011

STATE OF CALIFORNIA
DEPARTMENT OF TRANSPORTATION

DIVISION OF ENGINEERING SERVICES

BRIDGE NO. 49-0260
POST MILE R 65.64

ARROYO DEL OSO BRIDGE
STRUCTURE APPROACH TYPE EQ(10)

DS OSD 2147A (ENGLISH STANDARD DRAWING "XS" BORDER REV. (02-02-11)

ORIGINAL SCALE IN INCHES FOR REDUCED PLANS 0 1 2 3

UNIT: 3603
PROJECT NUMBER & PHASE: 05 0000 0576 1 CONTRACT NO.: 05-492801

DISREGARD PRINTS BEARING EARLIER REVISION DATES

REVISION DATES

SHEET 20 OF 23

FILE => 49-0260-t-strapp(eq10).dgn

USERNAME => s115755 DATE PLOTTED => 16-DEC-2014 TIME PLOTTED => 14:11

DIST	COUNTY	ROUTE	POST MILES TOTAL PROJECT	SHEET No.	TOTAL SHEETS
05	SLO	1	64.0/R66.9	263	265

REGISTERED CIVIL ENGINEER 10-27-14 DATE

10-27-14
PLANS APPROVAL DATE

REGISTERED PROFESSIONAL ENGINEER MICHAEL R POPE No. C 54503 Exp. 12-31-2015 CIVIL STATE OF CALIFORNIA

The State of California or its officers or agents shall not be responsible for the accuracy or completeness of electronic copies of this plan sheet.

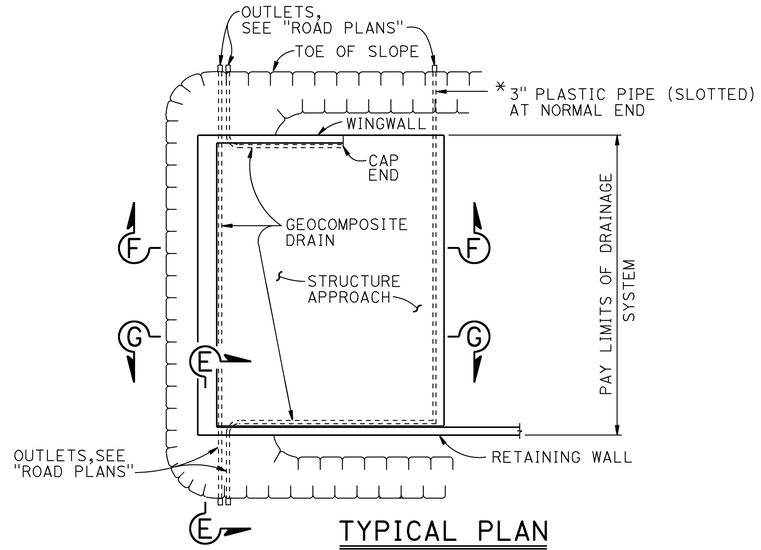

TYPICAL PLAN

1" = 10'

* FOR PIPE LAYOUT AT STAGGERED END, SEE "DETAIL B"

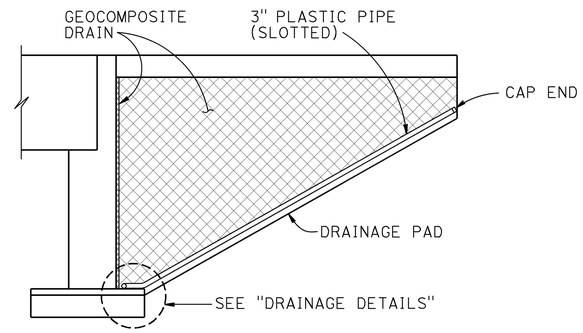

CANTILEVER WINGWALL

SECTION F-F

1/4" = 1'-0"

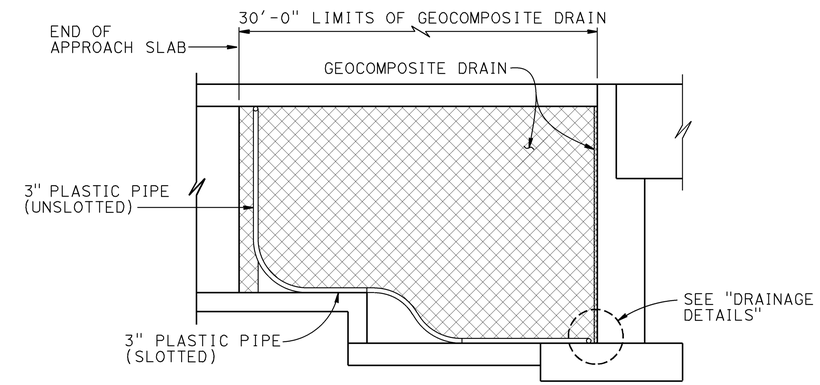

RETAINING WALL WINGWALL DRAINAGE DETAILS

SECTION G-G

1/4" = 1'-0"

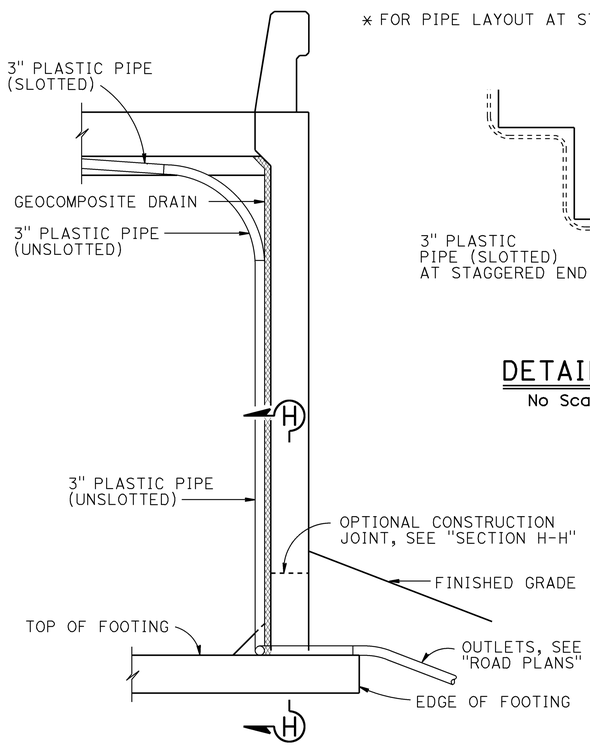

SECTION E-E

1/2" = 1'-0"

NOTE: Bends and junctions in 3" plastic pipe are 30" radius Min

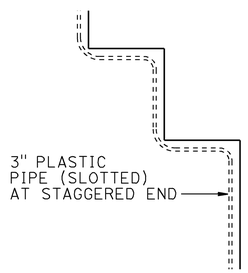

DETAIL B

No Scale

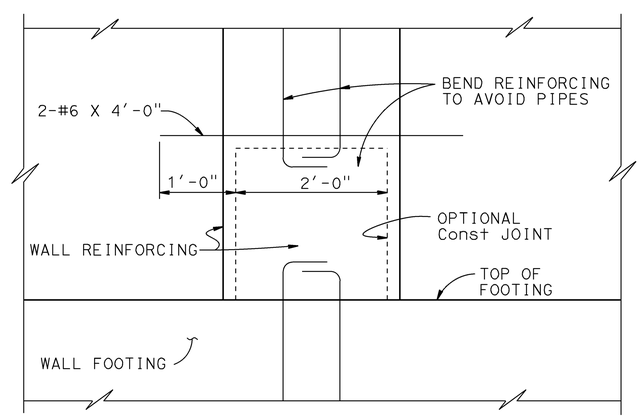

SECTION H-H

1" = 1'-0"

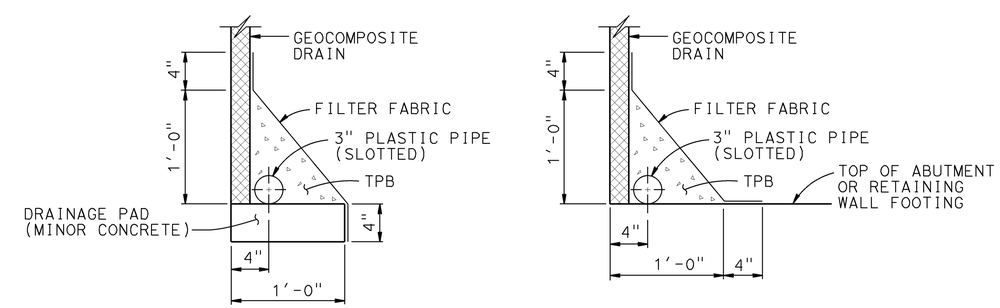

WITHOUT FOOTING

WITH FOOTING

DRAINAGE DETAILS

1 1/2" = 1'-0"

STANDARD DRAWING

FILE NO. xs3-110

APPROVAL DATE July 2011

STATE OF CALIFORNIA DEPARTMENT OF TRANSPORTATION

DIVISION OF ENGINEERING SERVICES

BRIDGE NO. 49-0260

POST MILE R 65.64

ARROYO DEL OSO BRIDGE

STRUCTURE APPROACH DRAINAGE DETAILS

DS OSD 2147A (ENGLISH STANDARD DRAWING "XS" BORDER REV. (02-02-11)

ORIGINAL SCALE IN INCHES FOR REDUCED PLANS 0 1 2 3

UNIT: 3603
PROJECT NUMBER & PHASE: 05 000 0576 1 CONTRACT NO.: 05-492801

DISREGARD PRINTS BEARING EARLIER REVISION DATES

REVISION DATES

SHEET 21 OF 23

FILE => 49-0260-t-strappdradet.dgn

USERNAME => s115755 DATE PLOTTED => 16-DEC-2014 TIME PLOTTED => 14:11

DIST	COUNTY	Rte	POST MILES TOTAL PROJECT	SHEET No.	TOTAL SHEETS
05	SLO	1	64.0/R66.9	264	265

REGISTERED CIVIL ENGINEER 10-27-14 DATE

10-27-14
PLANS APPROVAL DATE

REGISTERED PROFESSIONAL ENGINEER Zeke Dellamas No. C67475 Exp. 6-30-15 CIVIL STATE OF CALIFORNIA

The State of California or its officers or agents shall not be responsible for the accuracy or completeness of electronic copies of this plan sheet.

This LOTB sheet was prepared in accordance with the Caltrans Soil & Rock Logging, Classification, & Presentation Manual (2010 Edition). See 2010 Standard Plans A10F and A10G for Soil Legend, and A10H for Rock Legend.

BENCH MARK

SLO 1 PM 65.55

Fnd 1" ip w/Caltrans control pp
431.55′ Lt. "A1" Line
Sta 375+86.91
N 2,454,560.65
E 5,584,521.85
Elev=28.829′ (NAVD88)

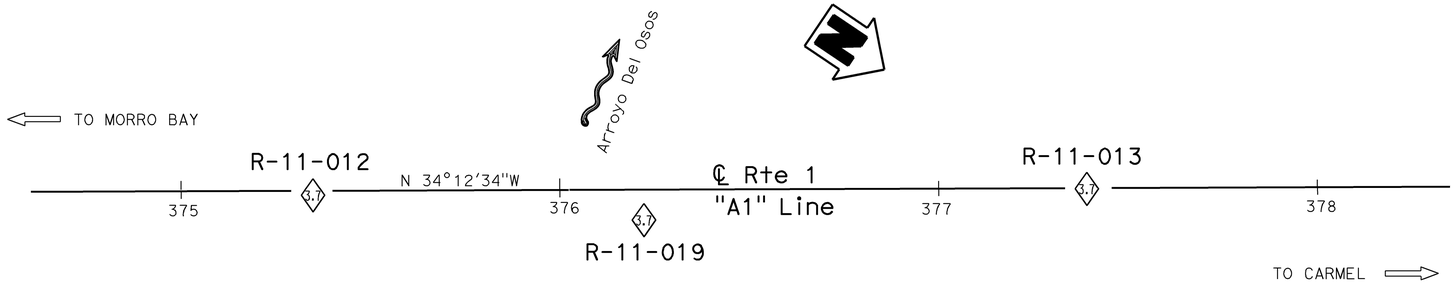

PLAN

1" = 20′

Note: Ground water not measured in Boring R-11-013.

PROFILE

Horiz: 1" = 10′
Vert: 1" = 10′

ENGINEERING SERVICES	MATERIALS AND GEOTECHNICAL SERVICES	STATE OF CALIFORNIA DEPARTMENT OF TRANSPORTATION	DIVISION OF ENGINEERING SERVICES STRUCTURE DESIGN DESIGN BRANCH 18	BRIDGE NO. 49-0260 POST MILE R65.64	ARROYO DEL OSO BRIDGE LOG OF TEST BORINGS 1 OF 2
FUNCTIONAL SUPERVISOR NAME: M. Finegan	DRAWN BY: W. Tang 09/12 CHECKED BY: D. Appelbaum	FIELD INVESTIGATION BY: Z. Dellamas			

OGS CIVIL LOG OF TEST BORINGS SHEET

ORIGINAL SCALE IN INCHES FOR REDUCED PLANS 0 1 2 3

UNIT: 3643
PROJECT NUMBER & PHASE: 0500000576
CONTRACT NO.: 05-492801

DISREGARD PRINTS BEARING EARLIER REVISION DATES

REVISION DATES 11-21-12 12-04-12 12-05-12

SHEET 22 OF 23

FILE => 49-0260-z-logtest1of2.dgn

USERNAME => s115755 DATE PLOTTED => 16-DEC-2014 TIME PLOTTED => 14:11

DIST	COUNTY	Rte	POST MILES TOTAL PROJECT	SHEET No.	TOTAL SHEETS
05	SLO	1	64.0/R66.9	265	265

REGISTERED CIVIL ENGINEER 10-27-14 DATE

10-27-14
PLANS APPROVAL DATE

REGISTERED PROFESSIONAL ENGINEER Zeke Dellamas No. C67475 Exp. 6-30-15 CIVIL STATE OF CALIFORNIA

The State of California or its officers or agents shall not be responsible for the accuracy or completeness of electronic copies of this plan sheet.

This LOTB sheet was prepared in accordance with the Caltrans Soil & Rock Logging, Classification, & Presentation Manual (2010 Edition).
See 2010 Standard Plans A10F and A10G for Soil Legend, and A10H for Rock Legend.

FOR PLAN VIEW, SEE
"LOG OF TEST BORINGS 1 OF 2"

Note: Ground water not measured in Boring R-11-013.

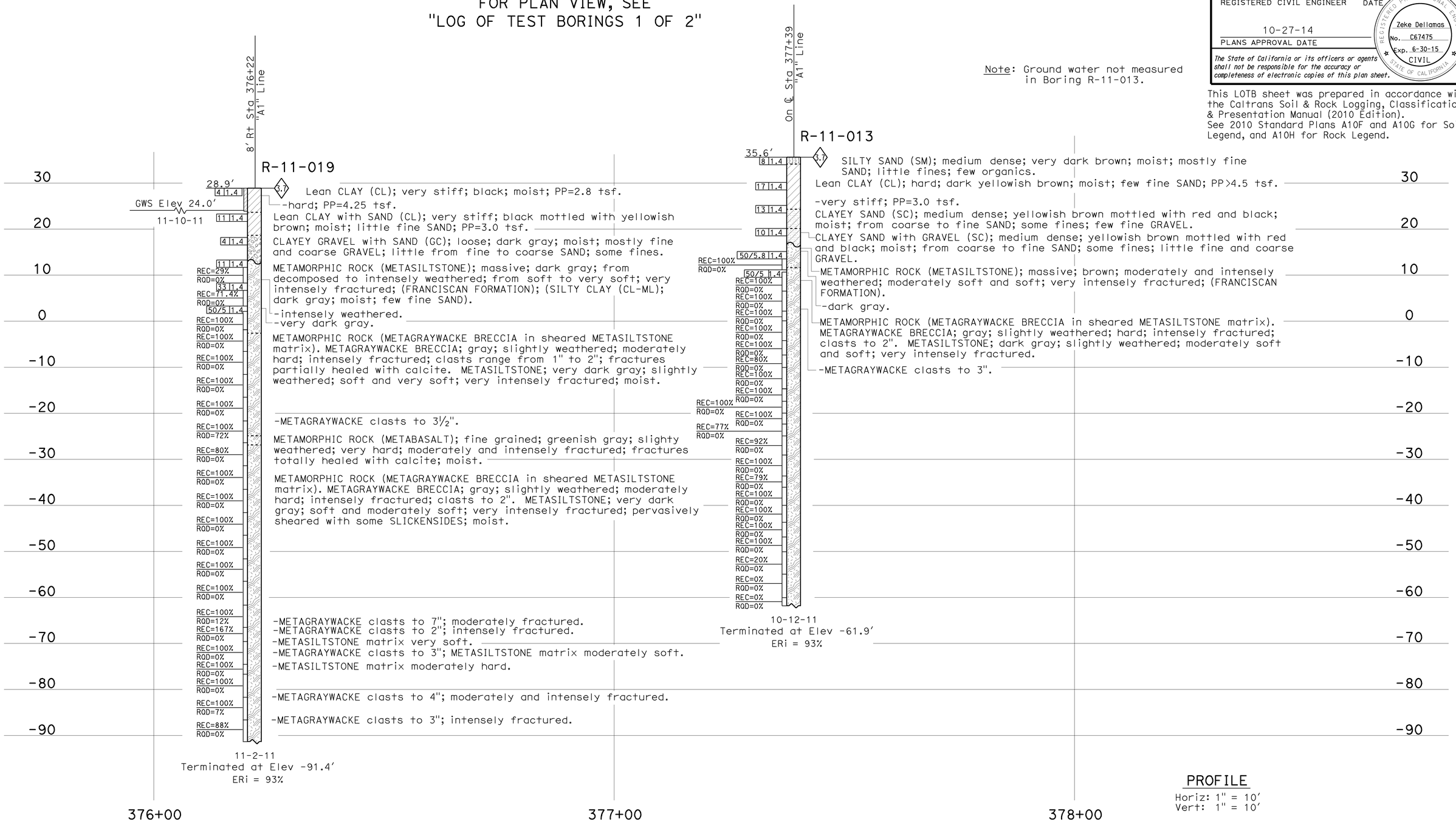

PROFILE
Horiz: 1" = 10'
Vert: 1" = 10'

ENGINEERING SERVICES	MATERIALS AND GEOTECHNICAL SERVICES	STATE OF CALIFORNIA DEPARTMENT OF TRANSPORTATION	DIVISION OF ENGINEERING SERVICES STRUCTURE DESIGN DESIGN BRANCH 18	BRIDGE NO. 49-0260 POST MILE R65.64	ARROYO DEL OSO BRIDGE LOG OF TEST BORINGS 2 OF 2
FUNCTIONAL SUPERVISOR NAME: M. Finegan	DRAWN BY: W. Tang 09/12 CHECKED BY: D. Appelbaum	FIELD INVESTIGATION BY: Z. Dellamas			

OGS CIVIL LOG OF TEST BORINGS SHEET

ORIGINAL SCALE IN INCHES FOR REDUCED PLANS 0 1 2 3

UNIT: 3643
PROJECT NUMBER & PHASE: 0500000576
CONTRACT NO.: 05-492801

DISREGARD PRINTS BEARING EARLIER REVISION DATES

REVISION DATES: 11-28-12 12-04-12 12-05-12

SHEET 23 OF 23

FILE => 49-0260-z-logtest2o2.dgn

USERNAME => s115755 DATE PLOTTED => 16-DEC-2014 TIME PLOTTED => 14:11