Dist	COUNTY	ROUTE	POST MILES TOTAL PROJECT	SHEET No.	TOTAL SHEETS
05	SLO	1	64.0/R66.9	101	265

Kyle Birch 10-27-14
REGISTERED CIVIL ENGINEER DATE

10-27-14
PLANS APPROVAL DATE

REGISTERED PROFESSIONAL ENGINEER
KYLE BIRCH
No. 74994
Exp. 12-31-15
CIVIL
STATE OF CALIFORNIA

THE STATE OF CALIFORNIA OR ITS OFFICERS OR AGENTS SHALL NOT BE RESPONSIBLE FOR THE ACCURACY OR COMPLETENESS OF SCANNED COPIES OF THIS PLAN SHEET.

DRAINAGE QUANTITIES

DRAINAGE SHEET No.	DRAINAGE SYSTEM No. (⬡)	DRAINAGE UNIT (○)	REMOVE HEADWALL	REMOVE FLARED END SECTION	REMOVE PIPE	REMOVE CONCRETE	ALTERNATIVE PIPE CULVERT 24"	ALTERNATIVE PIPE CULVERT 30"	ALTERNATIVE PIPE CULVERT 36"	CSP DOWNDRAIN 18" CORRUGATED STEEL PIPE DOWNDRAIN (0.109" THICK)	CSP DOWNDRAIN 24" CORRUGATED STEEL PIPE DOWNDRAIN (0.109" THICK)	AFES 18"	AFES 24"	AFES 30"	AFES 36"	RSP (No. 1, METHOD B)	RSP (LIGHT, METHOD B)	RSP (1T, METHOD A)	RSP FABRIC (CLASS 8)	6" WELDED STEEL PIPE (0.134" THICK)	MINOR CONCRETE (MINOR STRUCTURE)	STRUCTURAL CONCRETE BOX CULVERT	BAR REINFORCING STEEL (BOX CULVERT)	18" CORRUGATED STEEL PIPE ENERGY DISSIPATOR (0.109" THICK)	24" CORRUGATED STEEL PIPE ENERGY DISSIPATOR (0.109" THICK)	STRUCTURE BACKFILL (SLURRY CEMENT)	DESCRIPTION	STATION
			EA	EA	LF	CY	LF	LF	LF	LF	LF	EA	EA	EA	EA	CY	CY	CY	SQYD	LF	CY	CY	LB	EA	EA	CY		
D-5	10	a																				48.0	9,017				4′ x 6′ RCB CULVERT	"A1" 357+31.78
		b																			16.0						TYPE B WINGWALL (LENGTH = 10′)	
		c														0.8		2.0	9.6								RSP: (1T, METHOD A), (No. 1, METHOD B)	
		d																			16.0						TYPE B WINGWALL (LENGTH = 10′)	
		e														6.4	10.7	2.0	34.2								RSP: (1T, METHOD A), (LIGHT, METHOD B), (No. METHOD B)	
D-5	11	a																				47.9	8,994				4′ x 6′ RCB CULVERT	"A1" 357+66.90
		b																			16.0						TYPE B WINGWALL (L = 10′)	
		c														0.8		2.0	9.6								RSP: (1T, METHOD A), (No. 1, METHOD B)	
		d																			16.0						TYPE B WINGWALL (L = 10′)	
		e														6.4	10.7	2.0	34.2								RSP: (1T, METHOD A), (LIGHT, METHOD B), (No. METHOD B)	
D-5	12	a																				48.1	9,040				4′ x 6′ RCB CULVERT	"A1" 358+07.24
		b																			16.0						TYPE B WINGWALL (LENGTH = 10′)	
		c														0.8		2.0	9.6								RSP: (1T, METHOD A), (No. 1, METHOD B)	
		d																			16.0						TYPE B WINGWALL (L = 10′)	
		e														6.4	10.7	2.0	34.2								RSP: (1T, METHOD A), (LIGHT, METHOD B), (No. METHOD B)	
D-5	13	a					95.8																				Dbl 24" APC	"E1" 100+46.40
		b											2														24" AFES	
		c											2														24" AFES	
		d														11.3			18.5								RSP (No. 1, METHOD B)	
		e														4.5			33.9								RSP (No. 1, METHOD B)	
		f																			6.3					13.2	PCC COVER SLAB	
D-5	14	a	4		61																						REMOVE 90" CONCRETE PIPE (Approx 13′ DEEP) WITH 4 WW	"B1" 359+03.47
			4		61		95.8						4			37.4	32.1	12.0	183.8		102.3	144.0	27,051			13.2	SHEET TOTAL	

NOTE: DRAINAGE SYSTEM No. 15 HAS BEEN DELETED.

REVISED BY | DATE REVISED
ASHRAF RAHIM | KYLE BIRCH
CALCULATED-DESIGNED BY | CHECKED BY
FUNCTIONAL SUPERVISOR: JOHN FOUCHE

STATE OF CALIFORNIA - DEPARTMENT OF TRANSPORTATION
DESIGN
Caltrans

DRAINAGE QUANTITIES
DQ-2

LAST REVISION 10-27-14 | DATE PLOTTED => 04-DEC-2014 | TIME PLOTTED => 14:18

Dist	COUNTY	ROUTE	POST MILES TOTAL PROJECT	SHEET No.	TOTAL SHEETS
05	SLO	1	64.0/R66.9	102	265

Kyle Birch 10-27-14
REGISTERED CIVIL ENGINEER DATE

10-27-14
PLANS APPROVAL DATE

REGISTERED PROFESSIONAL ENGINEER
KYLE BIRCH
No. 74994
Exp. 12-31-15
CIVIL
STATE OF CALIFORNIA

THE STATE OF CALIFORNIA OR ITS OFFICERS OR AGENTS SHALL NOT BE RESPONSIBLE FOR THE ACCURACY OR COMPLETENESS OF SCANNED COPIES OF THIS PLAN SHEET.

DRAINAGE QUANTITIES

DRAINAGE SHEET No.	DRAINAGE SYSTEM No. (⬡)	DRAINAGE UNIT (○)	REMOVE HEADWALL (EA)	REMOVE FLARED END SECTION (EA)	REMOVE PIPE (LF)	REMOVE CONCRETE (CY)	ALTERNATIVE PIPE CULVERT 24" (LF)	ALTERNATIVE PIPE CULVERT 30" (LF)	ALTERNATIVE PIPE CULVERT 36" (LF)	CSP DOWNDRAIN 18" CCORRUGATED STEEL PIPE DOWNDRAIN (0.109" THICK) (LF)	CSP DOWNDRAIN 24" CCORRUGATED STEEL PIPE DOWNDRAIN (0.109" THICK) (LF)	AFES 18" (EA)	AFES 24" (EA)	AFES 30" (EA)	AFES 36" (EA)	RSP (No. 1, METHOD B) (CY)	RSP (LIGHT, METHOD B) (CY)	RSP (1T, METHOD A) (CY)	RSP FABRIC (CLASS 8) (SQYD)	6" WELDED STEEL PIPE (0.134" THICK) (LF)	MINOR CONCRETE (MINOR STRUCTURE) (CY)	STRUCTURAL CONCRETE BOX CULVERT (CY)	BAR REINFORCING STEEL (BOX CULVERT) (LB)	18" CORRUGATED STEEL PIPE ENERGY DISSIPATOR (0.109" THICK) (EA)	24" CORRUGATED STEEL PIPE ENERGY DISSIPATOR (0.109" THICK) (EA)	STRUCTURE BACKFILL (SLURRY CEMENT) (CY)	DESCRIPTION	STATION
D-6	16	a					148.1																					24" APC (SMOOTH)	"A1" 366+96.07
		b														5.1			12.5									RSP (No. 1, METHOD B)	
		c																			1.2							HEADWALL SKEW = 19°	
		d																			1.2							HEADWALL SKEW = 22°	
		e														9.6			25.4									RSP (No. 1, METHOD B)	
D-6	17	a					153.2																					Dbl 24" APC	"A1" 367+91.06
		b														6.5			24.9									RSP (No. 1, METHOD B)	
		c											2															24" AFES	
		d														19.5			63.8									RSP (No. 1, METHOD B)	
		e											2															24" AFES	
D-6	18	a		2	64																							REMOVE 24" CMP PIPE (Approx 5' DEEP) W/ 2 FES	"B1" 364+03.54
D-6	19	a	4		75																							108" CONCRETE PIPE (Approx 15' DEEP) WITH 4 WW	"B1" 370+52.65
D-7	20	a	2		41																							REMOVE 18" CMP PIPE (Approx 4' DEEP) WITH 2 HW	"B1" 376+53.17
D-7	21	a		2	50																							REMOVE 18" PLASTIC PIPE (Approx 3' DEEP) WITH 2 FES	"B1" 384+64.27
D-7	22	a					64.4																					24" APC	"A1" 386+68.00
		b														5.1			20.4									RSP (No. 1, METHOD B)	
		c											1															24" AFES	
		d											1															24" AFES	
		e														5.6			22.3									RSP (No. 1, METHOD B)	
D-8	23	a		2	51																							REMOVE 18" PLASTIC PIPE (Approx 5' DEEP) WITH 2 FES	"B1" 389+88.87
D-8	24	a	2		98																							REMOVE Dbl 18" PLASTIC PIPES (Approx 4' DEEP) W/ 2 HW	"B1" 392+31.62
D-8	25	a						117.6																				30" APC	"A1" 396+36.00
		b														6.9			26.4									RSP (No. 1, METHOD B)	
		c																			1.5							HEADWALL (LENGTH = 10')	
		d																			1.5							HEADWALL (LENGTH = 10')	
		e															19.4		44.0									RSP (LIGHT, METHOD B) (CY)	
			8	6	379		365.7	117.6					6			58.3	19.4		239.7		5.4							SHEET TOTAL	

DRAINAGE QUANTITIES
DQ-3

REVISED BY | DATE REVISED
ASHRAF RAHIM | KYLE BIRCH
CALCULATED-DESIGNED BY | CHECKED BY
FUNCTIONAL SUPERVISOR: JOHN FOUCHE
STATE OF CALIFORNIA - DEPARTMENT OF TRANSPORTATION
DESIGN
Caltrans

LAST REVISION | DATE PLOTTED => 04-DEC-2014
10-27-14 | TIME PLOTTED => 14:18

Dist	COUNTY	ROUTE	POST MILES TOTAL PROJECT	SHEET No.	TOTAL SHEETS
05	SLO	1	64.0/R66.9	103	265

Kyle Birch 10-27-14
REGISTERED CIVIL ENGINEER DATE

10-27-14
PLANS APPROVAL DATE

REGISTERED PROFESSIONAL ENGINEER
KYLE BIRCH
No. 74994
Exp. 12-31-15
CIVIL
STATE OF CALIFORNIA

THE STATE OF CALIFORNIA OR ITS OFFICERS OR AGENTS SHALL NOT BE RESPONSIBLE FOR THE ACCURACY OR COMPLETENESS OF SCANNED COPIES OF THIS PLAN SHEET.

DRAINAGE QUANTITIES

DRAINAGE SHEET No.	DRAINAGE SYSTEM No. (⬡)	DRAINAGE UNIT (○)	REMOVE HEADWALL	REMOVE FLARED END SECTION	REMOVE PIPE	REMOVE CONCRETE	ALTERNATIVE PIPE CULVERT 24"	ALTERNATIVE PIPE CULVERT 30"	ALTERNATIVE PIPE CULVERT 36"	CSP DOWNDRAIN 18" CCORRUGATED STEEL PIPE DOWNDRAIN (0.109" THICK)	CSP DOWNDRAIN 24" CCORRUGATED STEEL PIPE DOWNDRAIN (0.109" THICK)	AFES 18"	AFES 24"	AFES 30"	AFES 36"	RSP (No. 1, METHOD B)	RSP (LIGHT, METHOD B)	RSP (1T, METHOD A)	RSP FABRIC (CLASS 8)	6" WELDED STEEL PIPE (0.134" THICK)	MINOR CONCRETE (MINOR STRUCTURE)	STRUCTURAL CONCRETE BOX CULVERT	BAR REINFORCING STEEL (BOX CULVERT)	18" CORRUGATED STEEL PIPE ENERGY DISSIPATOR (0.109" THICK)	24" CORRUGATED STEEL PIPE ENERGY DISSIPATOR (0.109" THICK)	STRUCTURE BACKFILL (SLURRY CEMENT)	DESCRIPTION	STATION
			EA	EA	LF	CY	LF	LF	LF	LF	LF	EA	EA	EA	EA	CY	CY	CY	SQYD	LF	CY	CY	LB	EA	EA	CY		
D-8	26	a		2	57																						REMOVE 18" PLASTIC PIPE (Approx 6' DEEP) WITH 2 FES	"B1" 395+79.63
D-9	27	a		2	69																						REMOVE 18" PLASTIC PIPE (Approx 4' DEEP) WITH 2 FES	"B1" 409+05.30
D-9	28	a						191.2																			Dbl 30" APC	"A1" 415+05.00
		b														6.7			25.6								RSP (No. 1, METHOD B)	
		c												2													30" AFES	
		d												2													30" AFES	
		e															55.6		102.0								RSP (LIGHT, METHOD B) (CY)	
D-10	29	a	2		102																						REMOVE 18" HDPE PIPE (Approx 4' DEEP) W/ 2 HW	"B1" 417+05.50
D-10	30	a	2		45																						REMOVE 24" CONCRETE PIPE (Approx 6' DEEP) WITH 2 HW	"B1" 423+56.30
D-11	31	a						274.4																			Dbl 30" APC	"A1" 430+00.00
		b														7.6			28.6								RSP (No. 1, METHOD B)	
		c												2													2-30" AFES	
		d												2													2-30" AFES	
		e															56.5		100.0								RSP (LIGHT, METHOD B) (CY)	
D-11	32	a	2		83																						REMOVE 24" CONCRETE PIPE (Approx 6' DEEP) WITH 2 HW	"B1" 431+18.30
D-3	33	a																		52.8							6" WELDED STEEL PIPE (0.134 THICK)	"A1" 329+62.63
D-3	34	a																		81.5							6" WELDED STEEL PIPE (0.134 THICK)	"A1" 329+64.29
D-4	35	a																		64.4							6" WELDED STEEL PIPE (0.134 THICK)	"A1" 341+80.00
D-8	36	a	2		100																						REMOVE DOUBLE 18" CMP W/ 2 HW	"B1" 392+50.03
D-8	37	a		1	66																						REMOVE 18" CMP W/ FES	"B1" 395+91.03
			8	5	522			465.6						8		14.3	112.1		256.2	198.7							SHEET TOTAL	

REVISED BY | DATE REVISED
ASHRAF RAHIM | KYLE BIRCH
CALCULATED-DESIGNED BY | CHECKED BY
FUNCTIONAL SUPERVISOR: JOHN FOUCHE
STATE OF CALIFORNIA - DEPARTMENT OF TRANSPORTATION
DESIGN
Caltrans

DRAINAGE QUANTITIES
DQ-4

LAST REVISION 10-27-14 | DATE PLOTTED => 04-DEC-2014 | TIME PLOTTED => 14:18

Dist	COUNTY	ROUTE	POST MILES TOTAL PROJECT	SHEET No.	TOTAL SHEETS
05	SLO	1	64.0/R66.9	104	265

Kyle Birch 10-27-14
REGISTERED CIVIL ENGINEER DATE

10-27-14
PLANS APPROVAL DATE

REGISTERED PROFESSIONAL ENGINEER
KYLE BIRCH
No. 74994
Exp. 12-31-15
CIVIL
STATE OF CALIFORNIA

THE STATE OF CALIFORNIA OR ITS OFFICERS OR AGENTS SHALL NOT BE RESPONSIBLE FOR THE ACCURACY OR COMPLETENESS OF SCANNED COPIES OF THIS PLAN SHEET.

DRAINAGE QUANTITIES SUMMARY

SHEET No.	REMOVE HEADWALL	REMOVE FLARED END SECTION	REMOVE PIPE	REMOVE CONCRETE	ALTERNATIVE PIPE CULVERT 24"	ALTERNATIVE PIPE CULVERT 30"	ALTERNATIVE PIPE CULVERT 36"	CSP DOWNDRAIN 18" CCORRUGATED STEEL PIPE DOWNDRAIN (0.109" THICK)	CSP DOWNDRAIN 24" CCORRUGATED STEEL PIPE DOWNDRAIN (0.109" THICK)	AFES 18"	AFES 24"	AFES 30"	AFES 36"	RSP (No. 1, METHOD B) (CY)	RSP (LIGHT, METHOD B) (CY)	RSP (1T, METHOD A) (CY)	RSP FABRIC (CLASS 8)	6" WELDED STEEL PIPE (0.134" THICK)	MINOR CONCRETE (MINOR STRUCTURE)	STRUCTURAL CONCRETE BOX CULVERT	BAR REINFORCING STEEL (BOX CULVERT)	18" CORRUGATED STEEL PIPE ENERGY DISSIPATOR (0.109" THICK)	24" CORRUGATED STEEL PIPE ENERGY DISSIPATOR (0.109" THICK)	STRUCTURE BACKFILL (SLURRY CEMENT)
	EA	EA	LF	CY	LF	LF	LF	LF	LF	EA	EA	EA	EA	CY	CY	CY	SQYD	LF	CY	CY	LB	EA	EA	CY
DQ-1	10	2	228	123			294.9	85.7	177.7	1	2		3	27.1	10.7	4.0	108.4		137.8	104.6	20,020	1	2	13.2
DQ-2	4		61		95.8						4			37.4	32.1	12.0	183.8		102.3	144.0	27,051			
DQ-3	8	6	379		365.7	117.6					6			58.3	19.4		239.7		5.4					
DQ-4	8	5	522			465.6						8		14.3	112.1		256.2	198.7						
TOTAL	30	13	1,190	123	461.5	583.2	294.9	85.7	177.7	1	12	8	3	137.1*	174.6	16.0	788.1*	198.7	245.5	248.6	47,071	1	2	13.2

* QUANTITY INCLUDED IN RSP QUANTITIES SUMMARY TABLE ON SHEET Q-3

ALTERNATIVE PIPE ALLOWABLE MATERIAL

DRAINAGE SYSTEM No.	MATERIAL TYPE
1, 7, 10 11, 12, 13 16, 17	0.064" ALUMINIZED STEEL (TYPE 2)
	0.064" GALVANIZED STEEL WITH POLYMERIZED ASPHALT INVERT
	0.064" GALVANIZED STEEL WITH POLYMERIC SHEET COATING
	0.064" COMPOSITE SSRP
	0.075" ALUMINUM PIPE
	0.109" GALVANIZED STEEL WITH BITUMINOUS COATING AND PAVED INVERT
	0.138" GALVANIZED STEEL WITH BITUMINOUS COATING
	REINFORCED CONCRETE
22 AND 25	0.064" GALVANIZED STEEL WITH POLYMERIZED ASPHALT INVERT
	0.064" GALVANIZED STEEL WITH POLYMERIC SHEET COATING
	0.064" COMPOSITE SSRP
	REINFORCED CONCRETE
28 AND 31	0.064" ALUMINIZED STEEL (TYPE 2)
	0.064" GALVANIZED STEEL WITH POLYMERIZED ASPHALT INVERT
	0.064" GALVANIZED STEEL WITH POLYMERIC SHEET COATING
	0.064" COMPOSITE SSRP
	0.075" ALUMINUM PIPE
	0.109" GALVANIZED STEEL WITH BITUMINOUS COATING AND PAVED INVERT
	REINFORCED CONCRETE

DRAINAGE QUANTITIES
DQ-5

REVISED BY | DATE REVISED
ASHRAF RAHIM | KYLE BIRCH
CALCULATED-DESIGNED BY | CHECKED BY
FUNCTIONAL SUPERVISOR: JOHN FOUCHE
STATE OF CALIFORNIA - DEPARTMENT OF TRANSPORTATION
DESIGN
Caltrans

LAST REVISION 10-27-14 | DATE PLOTTED => 04-DEC-2014 | TIME PLOTTED => 14:18

Dist	COUNTY	ROUTE	POST MILES TOTAL PROJECT	SHEET No.	TOTAL SHEETS
05	SLO	1	64.0/R66.9	105	265

Kyle Birch 10-27-14
REGISTERED CIVIL ENGINEER DATE

10-27-14
PLANS APPROVAL DATE

REGISTERED PROFESSIONAL ENGINEER
KYLE BIRCH
No. 74994
Exp. 12-31-15
CIVIL
STATE OF CALIFORNIA

THE STATE OF CALIFORNIA OR ITS OFFICERS OR AGENTS SHALL NOT BE RESPONSIBLE FOR THE ACCURACY OR COMPLETENESS OF SCANNED COPIES OF THIS PLAN SHEET.

NOTES:

1. FOR ACCURATE RIGHT OF WAY DATA, CONTACT RIGHT OF WAY ENGINEERING AT THE DISTRICT OFFICE.
2. Temp RELOCATION OF PG&E OVERHEAD ELECTRIC CABLE TO OCCUR PRIOR TO CONSTRUCTION.

LEGEND:

-E ——— ——— -(OH)——— Temp RELOCATION OF PG&E OVERHEAD ELECTRIC CABLE

——— -E——— ——— -E— NEW ELECTRIC LINE (PG&E)

— — — — — — — — — — — — NEW 10' JOINT USE AGREEMENT (PG&E)

—--- JT —— —— ——--- JT· NEW JOINT TRENCH (AT&T AND PG&E)

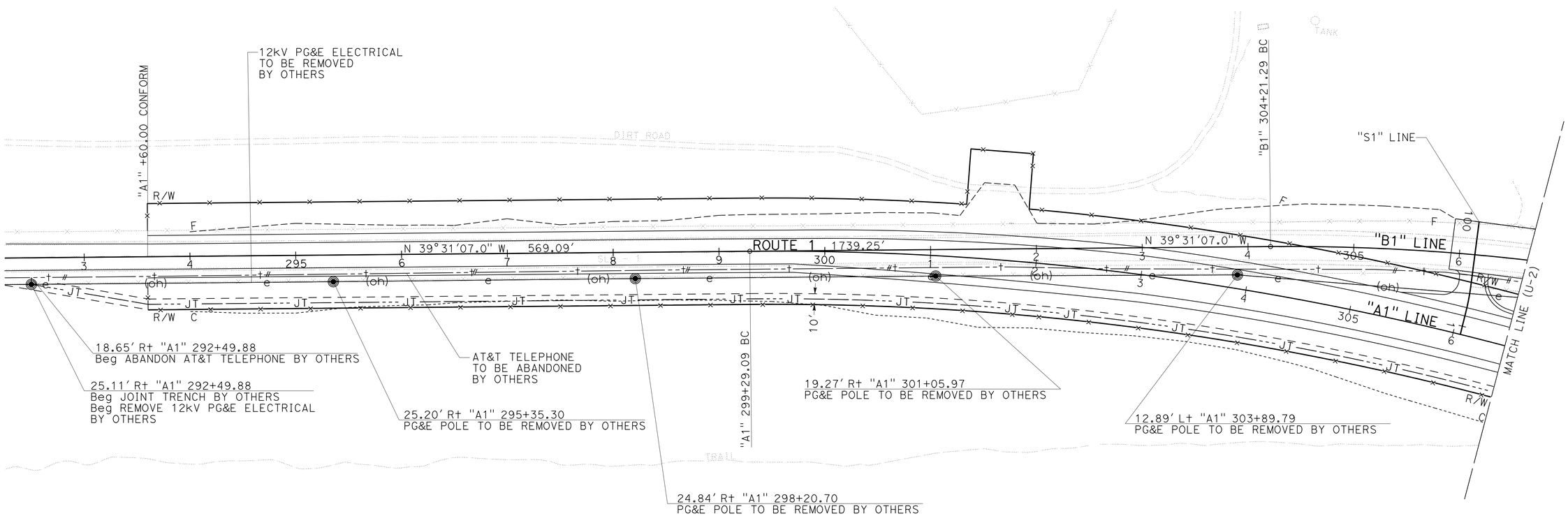

APPROVED FOR UTILITY INFORMATION ONLY

UTILITY PLAN
U-1

SCALE 1" = 50'

STATE OF CALIFORNIA - DEPARTMENT OF TRANSPORTATION
Caltrans®
DESIGN

FUNCTIONAL SUPERVISOR: JOHN FOUCHE

CALCULATED-DESIGNED BY: KYLE BIRCH
CHECKED BY: ASHRAF RAHIM

REVISED BY
DATE REVISED

LAST REVISION 10-27-14
DATE PLOTTED => 04-DEC-2014
TIME PLOTTED => 14:18

Dist	COUNTY	ROUTE	POST MILES TOTAL PROJECT	SHEET No.	TOTAL SHEETS
05	SLO	1	64.0/R66.9	106	265

Kyle Birch 10-27-14
REGISTERED CIVIL ENGINEER DATE

10-27-14
PLANS APPROVAL DATE

REGISTERED PROFESSIONAL ENGINEER
KYLE BIRCH
No. 74994
Exp. 12-31-15
CIVIL
STATE OF CALIFORNIA

THE STATE OF CALIFORNIA OR ITS OFFICERS OR AGENTS SHALL NOT BE RESPONSIBLE FOR THE ACCURACY OR COMPLETENESS OF SCANNED COPIES OF THIS PLAN SHEET.

NOTE:

FOR ACCURATE RIGHT OF WAY DATA, CONTACT
RIGHT OF WAY ENGINEERING AT THE DISTRICT OFFICE.

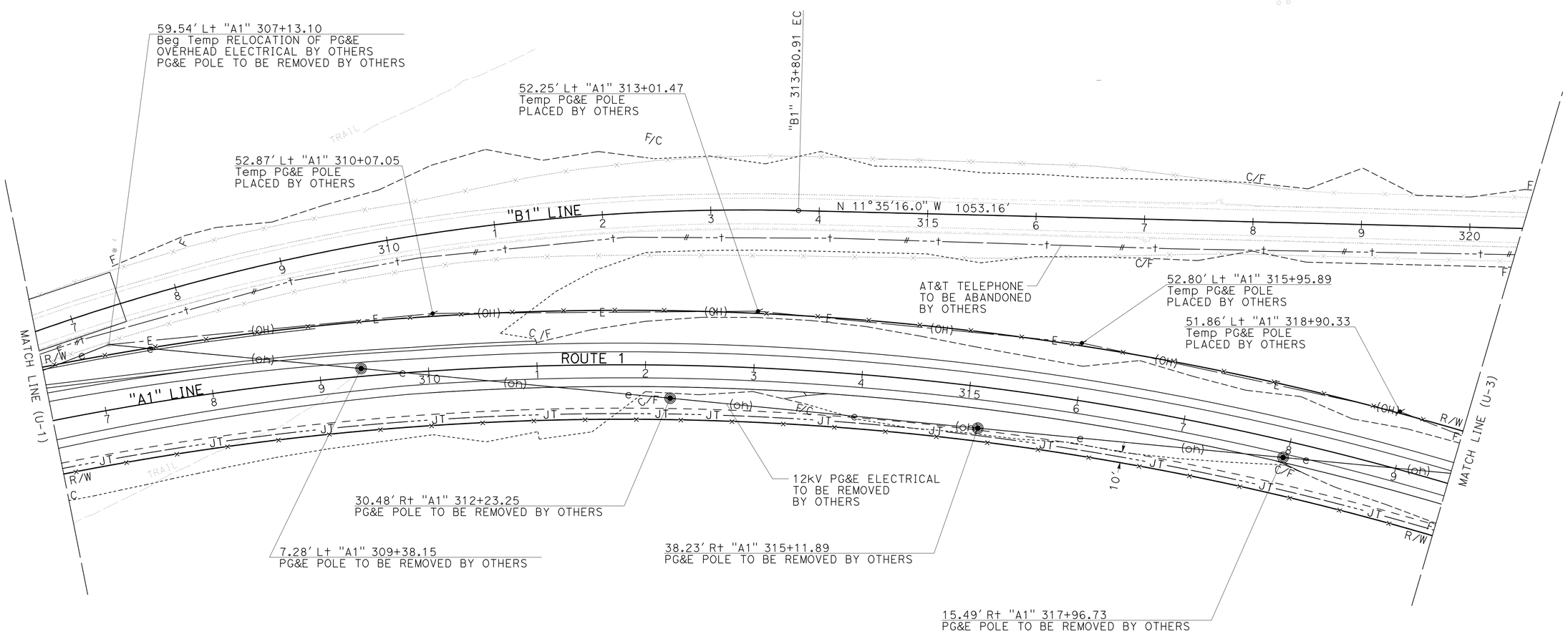

APPROVED FOR UTILITY INFORMATION ONLY

UTILITY PLAN
U-2

SCALE 1" = 50'

STATE OF CALIFORNIA - DEPARTMENT OF TRANSPORTATION
Caltrans
DESIGN

FUNCTIONAL SUPERVISOR: JOHN FOUCHE
CALCULATED-DESIGNED BY: KYLE BIRCH
CHECKED BY: ASHRAF RAHIM
REVISED BY
DATE REVISED

LAST REVISION 10-27-14
DATE PLOTTED => 04-DEC-2014
TIME PLOTTED => 14:18

Dist	COUNTY	ROUTE	POST MILES TOTAL PROJECT	SHEET No.	TOTAL SHEETS
05	SLO	1	64.0/R66.9	107	265

Kyle Birch 10-27-14
REGISTERED CIVIL ENGINEER DATE

10-27-14
PLANS APPROVAL DATE

REGISTERED PROFESSIONAL ENGINEER
KYLE BIRCH
No. 74994
Exp. 12-31-15
CIVIL
STATE OF CALIFORNIA

THE STATE OF CALIFORNIA OR ITS OFFICERS OR AGENTS SHALL NOT BE RESPONSIBLE FOR THE ACCURACY OR COMPLETENESS OF SCANNED COPIES OF THIS PLAN SHEET.

NOTE:

FOR ACCURATE RIGHT OF WAY DATA, CONTACT RIGHT OF WAY ENGINEERING AT THE DISTRICT OFFICE.

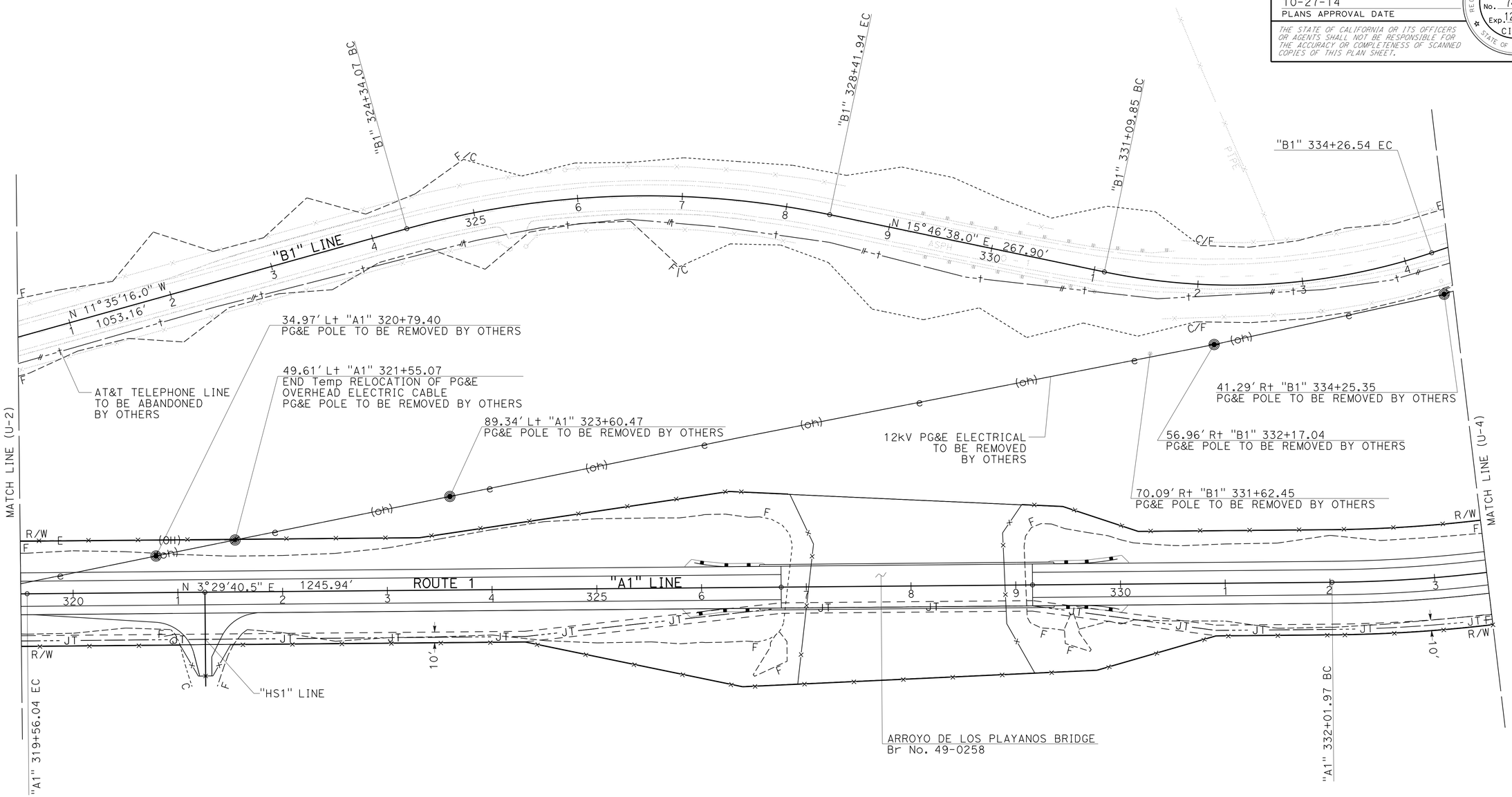

APPROVED FOR UTILITY INFORMATION ONLY

SCALE 1" = 50'

UTILITY PLAN
U-3

STATE OF CALIFORNIA - DEPARTMENT OF TRANSPORTATION
Caltrans
DESIGN

FUNCTIONAL SUPERVISOR: JOHN FOUCHE
CALCULATED-DESIGNED BY: KYLE BIRCH
CHECKED BY: ASHRAF RAHIM
REVISED BY
DATE REVISED

LAST REVISION 10-27-14
DATE PLOTTED => 04-DEC-2014
TIME PLOTTED => 14:18

Dist	COUNTY	ROUTE	POST MILES TOTAL PROJECT	SHEET No.	TOTAL SHEETS
05	SLO	1	64.0/R66.9	108	265

Kyle Birch 10-27-14
REGISTERED CIVIL ENGINEER DATE

10-27-14
PLANS APPROVAL DATE

REGISTERED PROFESSIONAL ENGINEER
KYLE BIRCH
No. 74994
Exp. 12-31-15
CIVIL
STATE OF CALIFORNIA

THE STATE OF CALIFORNIA OR ITS OFFICERS OR AGENTS SHALL NOT BE RESPONSIBLE FOR THE ACCURACY OR COMPLETENESS OF SCANNED COPIES OF THIS PLAN SHEET.

NOTE:

FOR ACCURATE RIGHT OF WAY DATA, CONTACT RIGHT OF WAY ENGINEERING AT THE DISTRICT OFFICE.

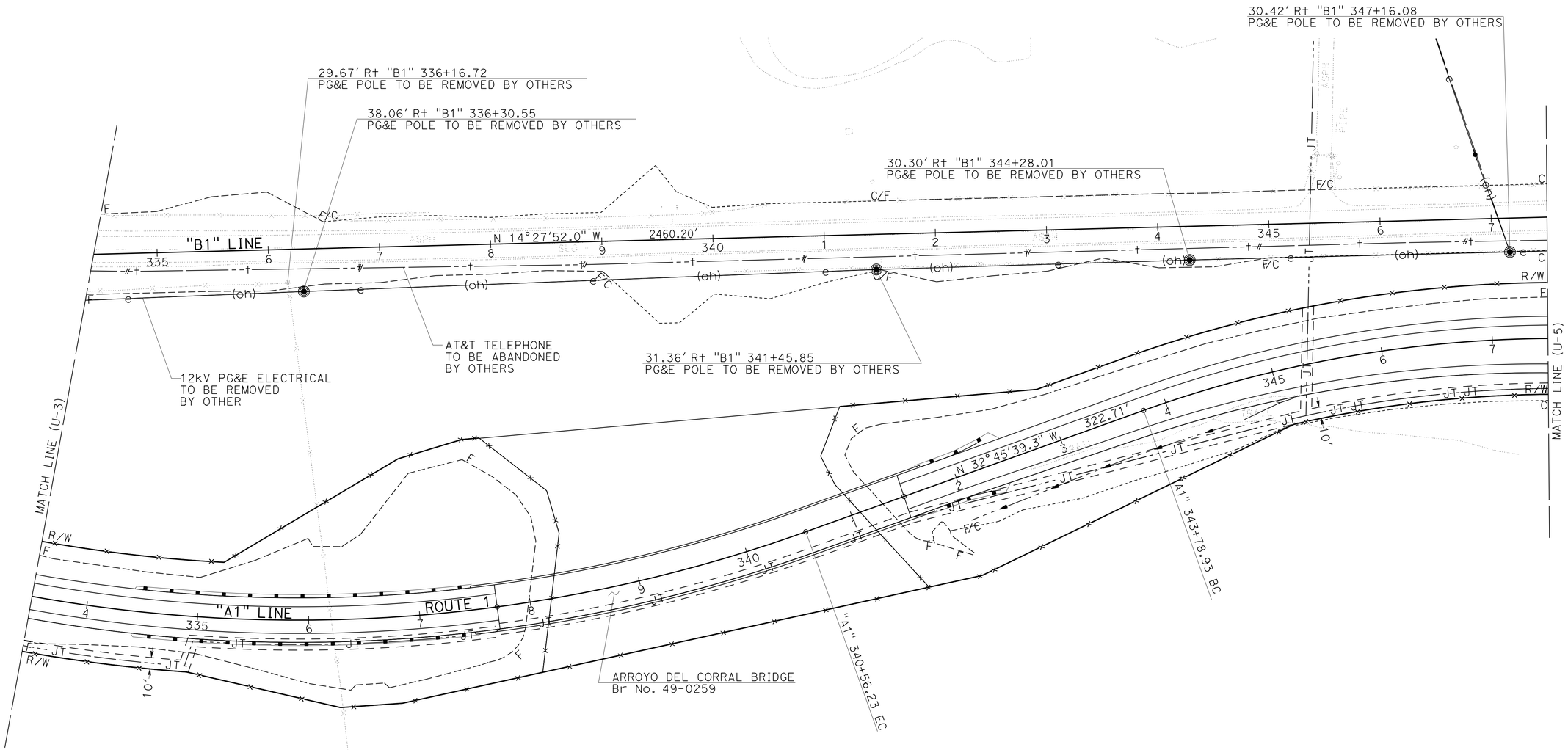

APPROVED FOR UTILITY INFORMATION ONLY

UTILITY PLAN
U-4

SCALE 1" = 50'

STATE OF CALIFORNIA - DEPARTMENT OF TRANSPORTATION
Caltrans
DESIGN

FUNCTIONAL SUPERVISOR: JOHN FOUCHE
CALCULATED-DESIGNED BY: KYLE BIRCH
CHECKED BY: ASHRAF RAHIM
REVISED BY
DATE REVISED

LAST REVISION 10-27-14
DATE PLOTTED => 04-DEC-2014
TIME PLOTTED => 14:18

Dist	COUNTY	ROUTE	POST MILES TOTAL PROJECT	SHEET No.	TOTAL SHEETS
05	SLO	1	64.0/R66.9	109	265

Kyle Birch 10-27-14
REGISTERED CIVIL ENGINEER DATE

10-27-14
PLANS APPROVAL DATE

REGISTERED PROFESSIONAL ENGINEER
KYLE BIRCH
No. 74994
Exp. 12-31-15
CIVIL
STATE OF CALIFORNIA

THE STATE OF CALIFORNIA OR ITS OFFICERS OR AGENTS SHALL NOT BE RESPONSIBLE FOR THE ACCURACY OR COMPLETENESS OF SCANNED COPIES OF THIS PLAN SHEET.

NOTE:

FOR ACCURATE RIGHT OF WAY DATA, CONTACT RIGHT OF WAY ENGINEERING AT THE DISTRICT OFFICE.

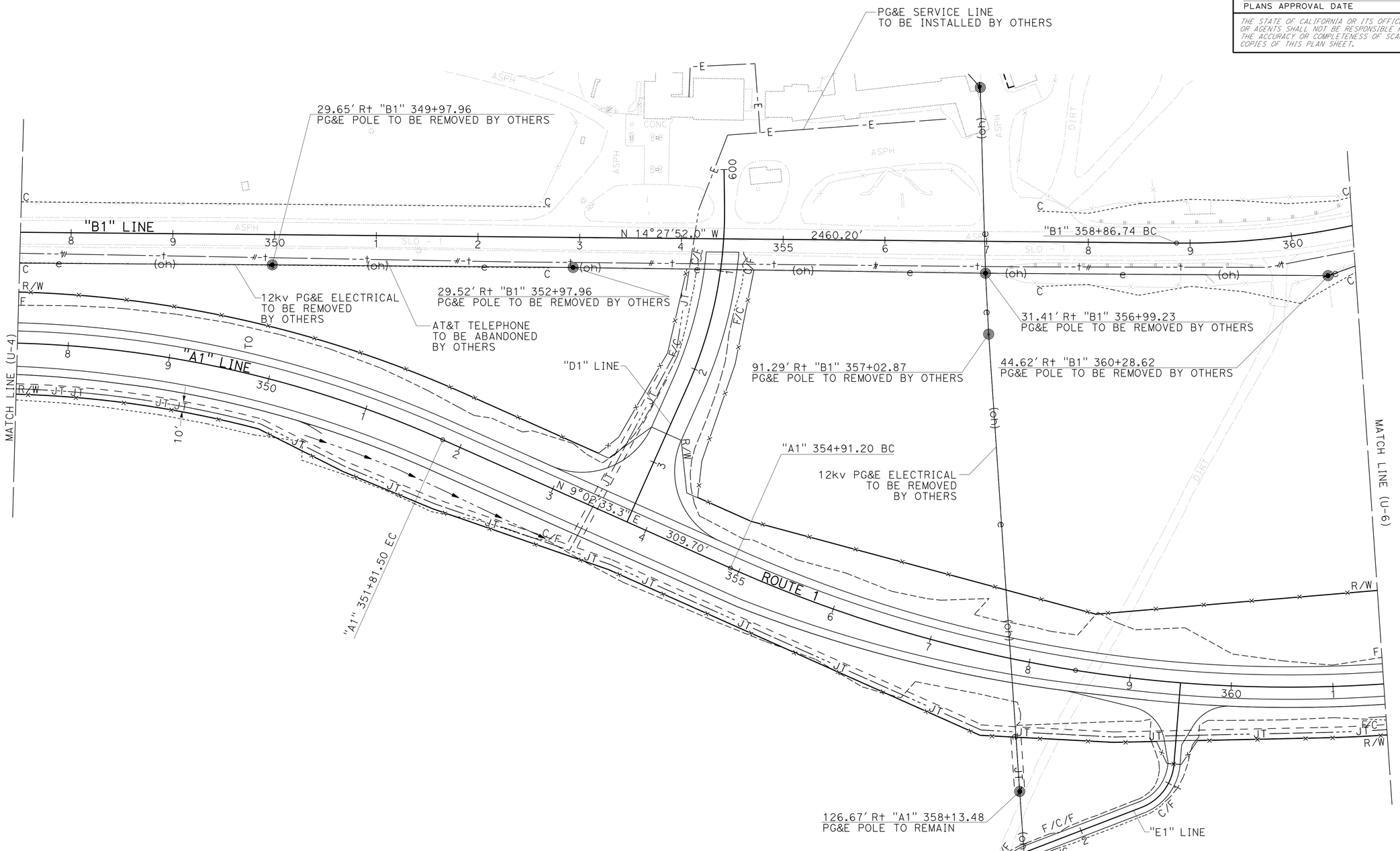

APPROVED FOR UTILITY INFORMATION ONLY

UTILITY PLAN
U-5

SCALE 1" = 50'

STATE OF CALIFORNIA - DEPARTMENT OF TRANSPORTATION
Caltrans
DESIGN

FUNCTIONAL SUPERVISOR: JOHN FOUCHE
CALCULATED-DESIGNED BY: KYLE BIRCH
CHECKED BY: ASHRAF RAHIM
REVISED BY
DATE REVISED

LAST REVISION 10-27-14
DATE PLOTTED => 04-DEC-2014
TIME PLOTTED => 14:18

Dist	COUNTY	ROUTE	POST MILES TOTAL PROJECT	SHEET No.	TOTAL SHEETS
05	SLO	1	64.0/R66.9	110	265

Kyle Birch 10-27-14
REGISTERED CIVIL ENGINEER DATE

10-27-14
PLANS APPROVAL DATE

REGISTERED PROFESSIONAL ENGINEER
KYLE BIRCH
No. 74994
Exp. 12-31-15
CIVIL
STATE OF CALIFORNIA

THE STATE OF CALIFORNIA OR ITS OFFICERS OR AGENTS SHALL NOT BE RESPONSIBLE FOR THE ACCURACY OR COMPLETENESS OF SCANNED COPIES OF THIS PLAN SHEET.

NOTE:

FOR ACCURATE RIGHT OF WAY DATA, CONTACT RIGHT OF WAY ENGINEERING AT THE DISTRICT OFFICE.

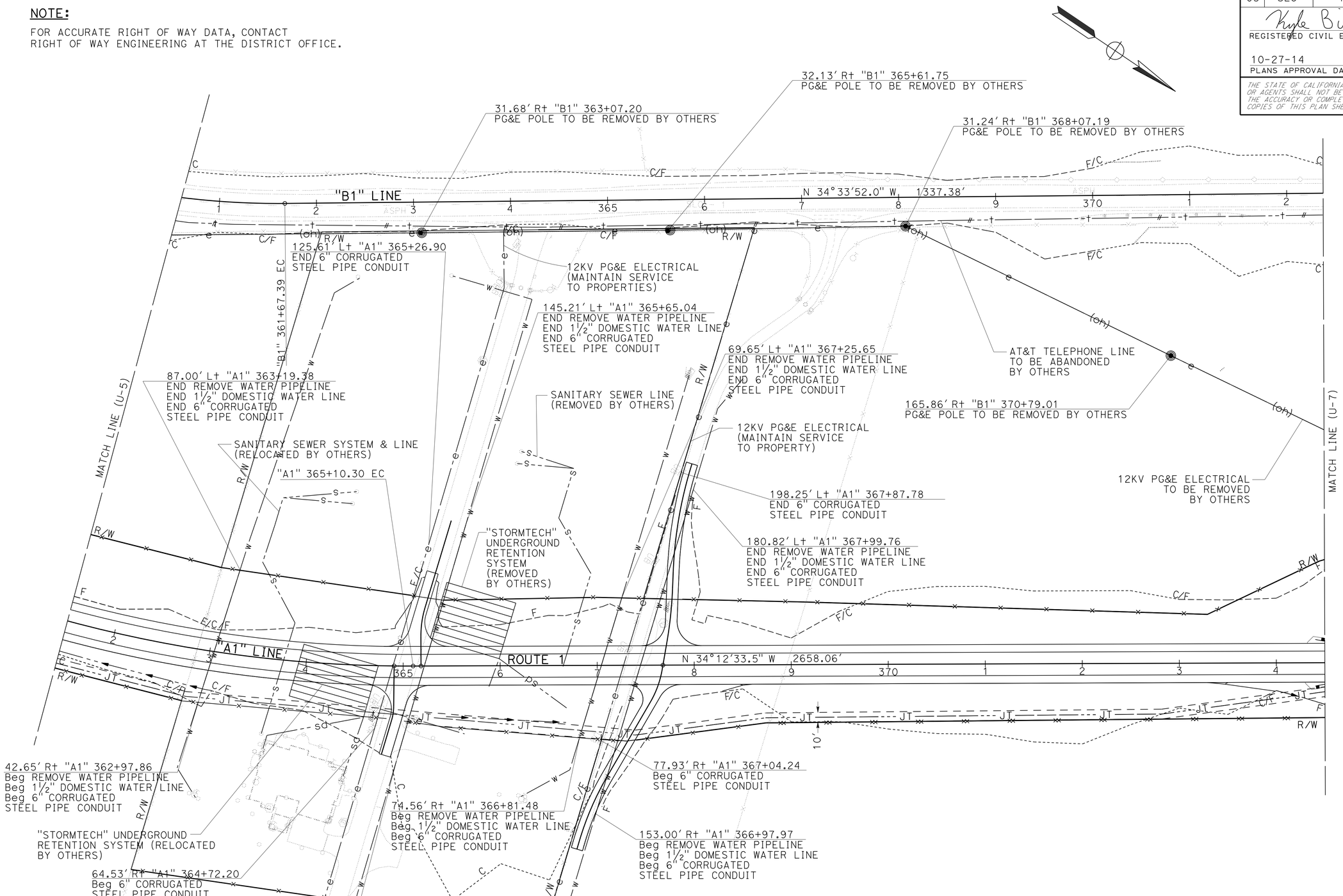

APPROVED FOR UTILITY INFORMATION ONLY

SCALE 1" = 50'

UTILITY PLAN
U-6

REVISED BY | DATE REVISED
KYLE BIRCH | ASHRAF RAHIM
CALCULATED-DESIGNED BY | CHECKED BY
FUNCTIONAL SUPERVISOR: JOHN FOUCHE

STATE OF CALIFORNIA - DEPARTMENT OF TRANSPORTATION
DESIGN
Caltrans

LAST REVISION 10-27-14 | DATE PLOTTED => 04-DEC-2014 | TIME PLOTTED => 14:18

Dist	COUNTY	ROUTE	POST MILES TOTAL PROJECT	SHEET No.	TOTAL SHEETS
05	SLO	1	64.0/R66.9	111	265

Kyle Birch 10-27-14
REGISTERED CIVIL ENGINEER DATE

10-27-14
PLANS APPROVAL DATE

REGISTERED PROFESSIONAL ENGINEER
KYLE BIRCH
No. 74994
Exp. 12-31-15
CIVIL
STATE OF CALIFORNIA

THE STATE OF CALIFORNIA OR ITS OFFICERS OR AGENTS SHALL NOT BE RESPONSIBLE FOR THE ACCURACY OR COMPLETENESS OF SCANNED COPIES OF THIS PLAN SHEET.

NOTE:

FOR ACCURATE RIGHT OF WAY DATA, CONTACT RIGHT OF WAY ENGINEERING AT THE DISTRICT OFFICE.

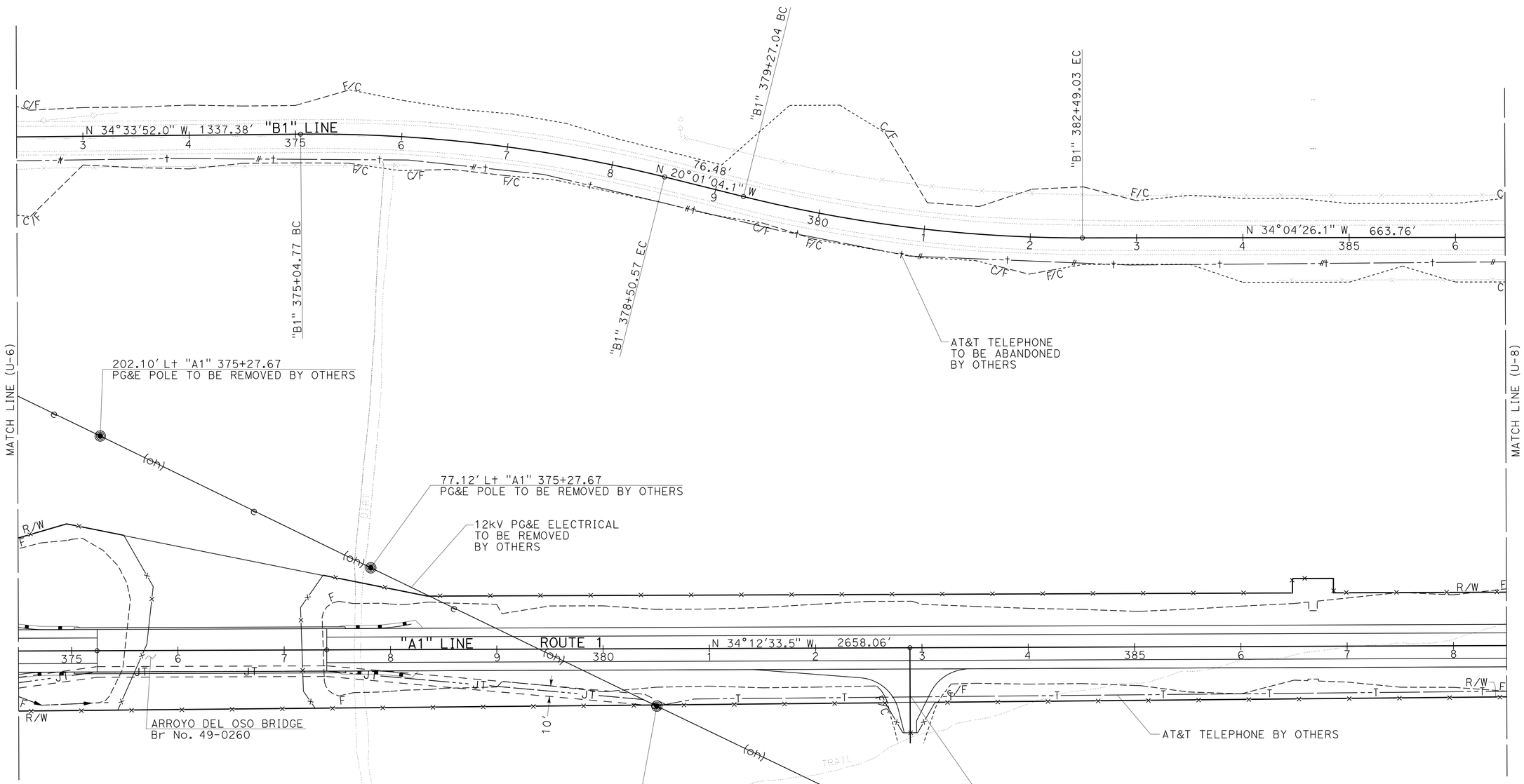

APPROVED FOR UTILITY INFORMATION ONLY

UTILITY PLAN
U-7

SCALE 1" = 50'

STATE OF CALIFORNIA - DEPARTMENT OF TRANSPORTATION
Caltrans
DESIGN

FUNCTIONAL SUPERVISOR: JOHN FOUCHE
CALCULATED-DESIGNED BY: KYLE BIRCH
CHECKED BY: ASHRAF RAHIM
REVISED BY
DATE REVISED

LAST REVISION 10-27-14
DATE PLOTTED => 04-DEC-2014
TIME PLOTTED => 14:18

Dist	COUNTY	ROUTE	POST MILES TOTAL PROJECT	SHEET No.	TOTAL SHEETS
05	SLO	1	64.0/R66.9	112	265

Kyle Birch 10-27-14
REGISTERED CIVIL ENGINEER DATE

10-27-14
PLANS APPROVAL DATE

REGISTERED PROFESSIONAL ENGINEER
KYLE BIRCH
No. 74994
Exp. 12-31-15
CIVIL
STATE OF CALIFORNIA

THE STATE OF CALIFORNIA OR ITS OFFICERS OR AGENTS SHALL NOT BE RESPONSIBLE FOR THE ACCURACY OR COMPLETENESS OF SCANNED COPIES OF THIS PLAN SHEET.

NOTE:

FOR ACCURATE RIGHT OF WAY DATA, CONTACT RIGHT OF WAY ENGINEERING AT THE DISTRICT OFFICE.

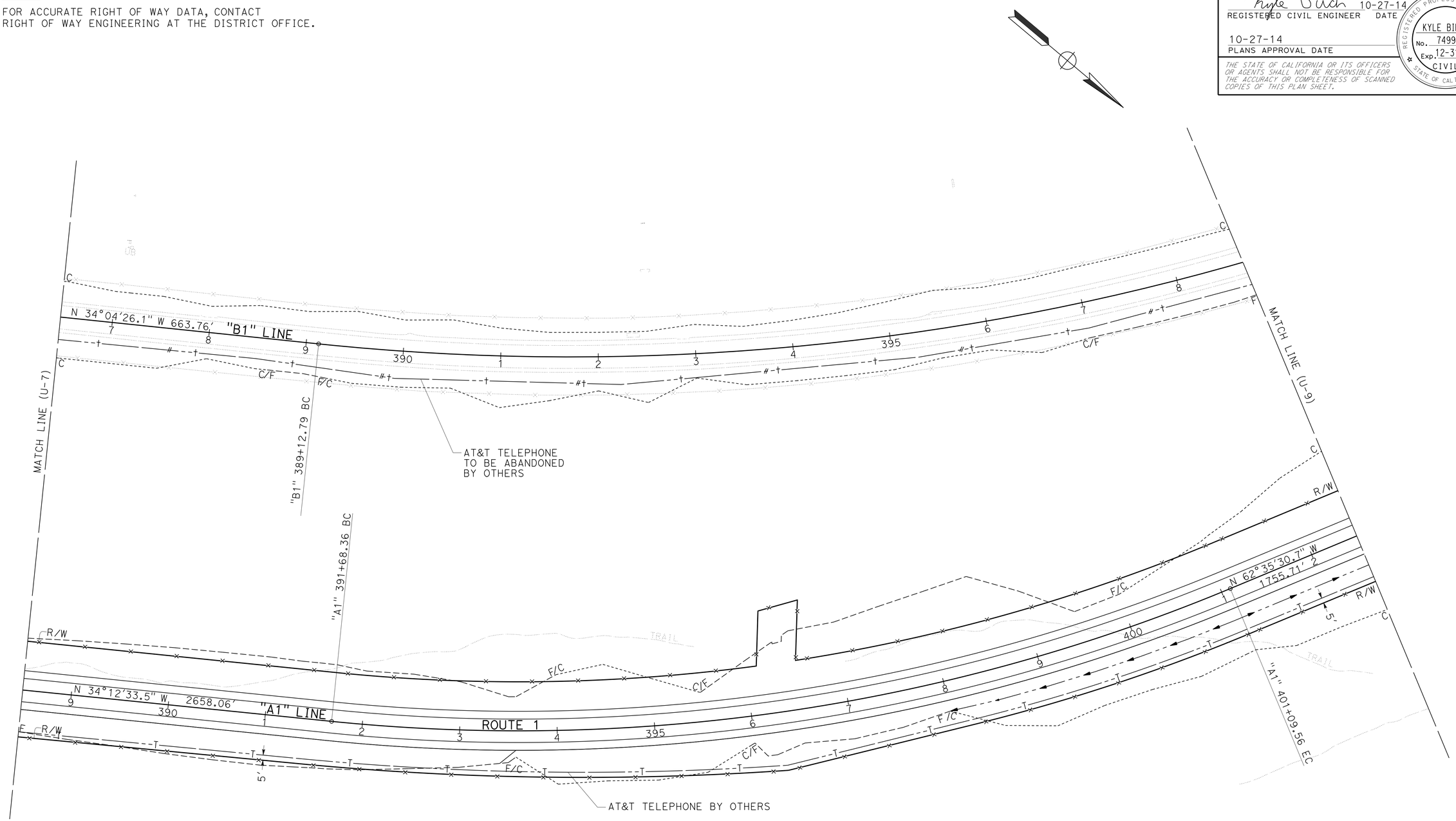

APPROVED FOR UTILITY INFORMATION ONLY

SCALE 1" = 50'

UTILITY PLAN
U-8

STATE OF CALIFORNIA - DEPARTMENT OF TRANSPORTATION
Caltrans
DESIGN

FUNCTIONAL SUPERVISOR: JOHN FOUCHE
CALCULATED-DESIGNED BY: KYLE BIRCH
CHECKED BY: ASHRAF RAHIM
REVISED BY
DATE REVISED

LAST REVISION 10-27-14
DATE PLOTTED => 04-DEC-2014
TIME PLOTTED => 14:18

Dist	COUNTY	ROUTE	POST MILES TOTAL PROJECT	SHEET No.	TOTAL SHEETS
05	SLO	1	64.0/R66.9	113	265

Kyle Birch 10-27-14
REGISTERED CIVIL ENGINEER DATE

10-27-14
PLANS APPROVAL DATE

REGISTERED PROFESSIONAL ENGINEER
KYLE BIRCH
No. 74994
Exp. 12-31-15
CIVIL
STATE OF CALIFORNIA

THE STATE OF CALIFORNIA OR ITS OFFICERS OR AGENTS SHALL NOT BE RESPONSIBLE FOR THE ACCURACY OR COMPLETENESS OF SCANNED COPIES OF THIS PLAN SHEET.

NOTE:

FOR ACCURATE RIGHT OF WAY DATA, CONTACT RIGHT OF WAY ENGINEERING AT THE DISTRICT OFFICE.

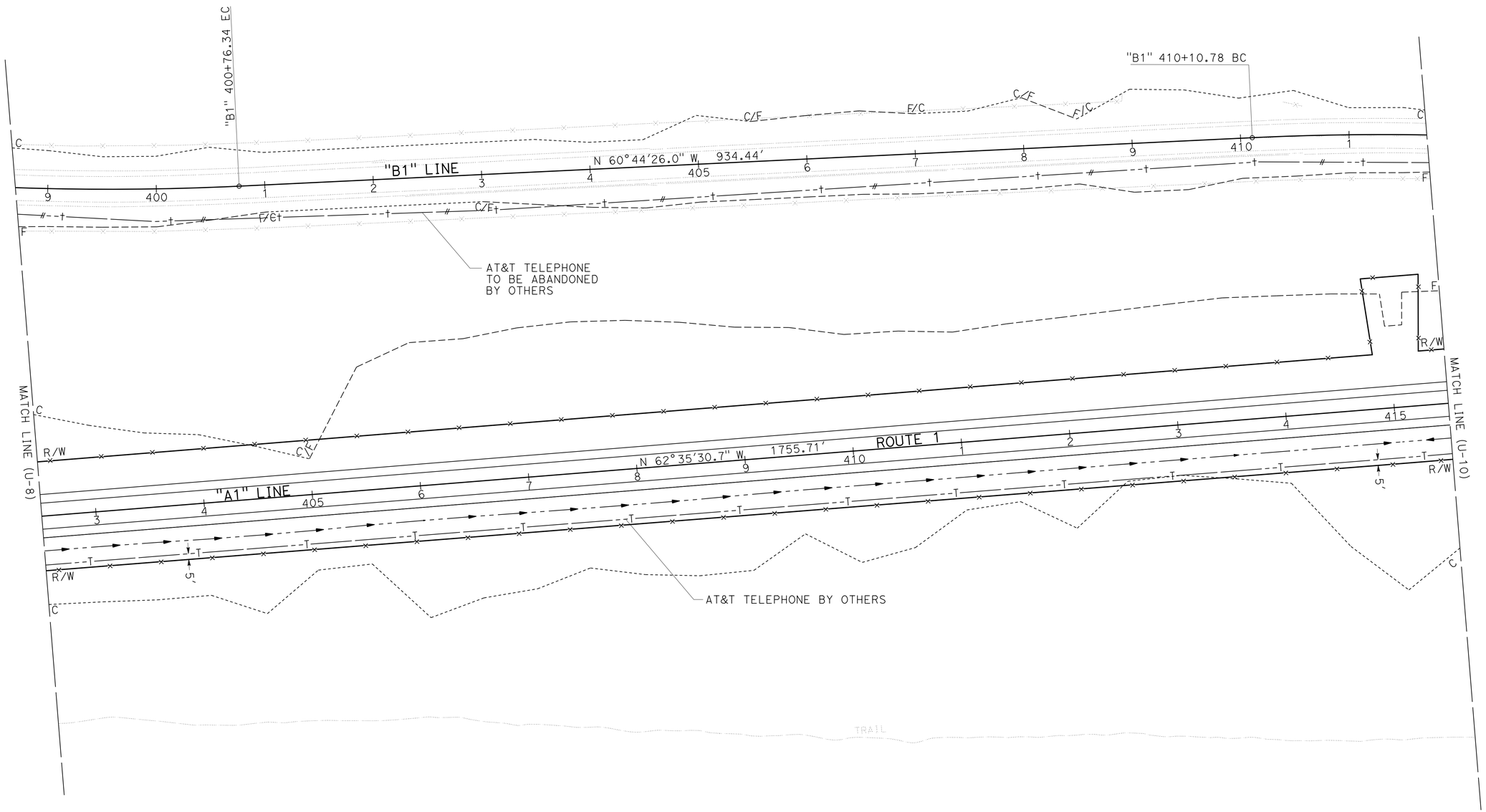

APPROVED FOR UTILITY INFORMATION ONLY

UTILITY PLAN
U-9

SCALE 1" = 50'

STATE OF CALIFORNIA - DEPARTMENT OF TRANSPORTATION
Caltrans®
DESIGN

FUNCTIONAL SUPERVISOR: JOHN FOUCHE
CALCULATED-DESIGNED BY: KYLE BIRCH
CHECKED BY: ASHRAF RAHIM
REVISED BY
DATE REVISED

LAST REVISION 10-27-14
DATE PLOTTED => 04-DEC-2014
TIME PLOTTED => 14:19

Dist	COUNTY	ROUTE	POST MILES TOTAL PROJECT	SHEET No.	TOTAL SHEETS
05	SLO	1	64.0/R66.9	114	265

Kyle Birch 10-27-14
REGISTERED CIVIL ENGINEER DATE

10-27-14
PLANS APPROVAL DATE

REGISTERED PROFESSIONAL ENGINEER
KYLE BIRCH
No. 74994
Exp. 12-31-15
CIVIL
STATE OF CALIFORNIA

THE STATE OF CALIFORNIA OR ITS OFFICERS OR AGENTS SHALL NOT BE RESPONSIBLE FOR THE ACCURACY OR COMPLETENESS OF SCANNED COPIES OF THIS PLAN SHEET.

NOTE:

FOR ACCURATE RIGHT OF WAY DATA, CONTACT RIGHT OF WAY ENGINEERING AT THE DISTRICT OFFICE.

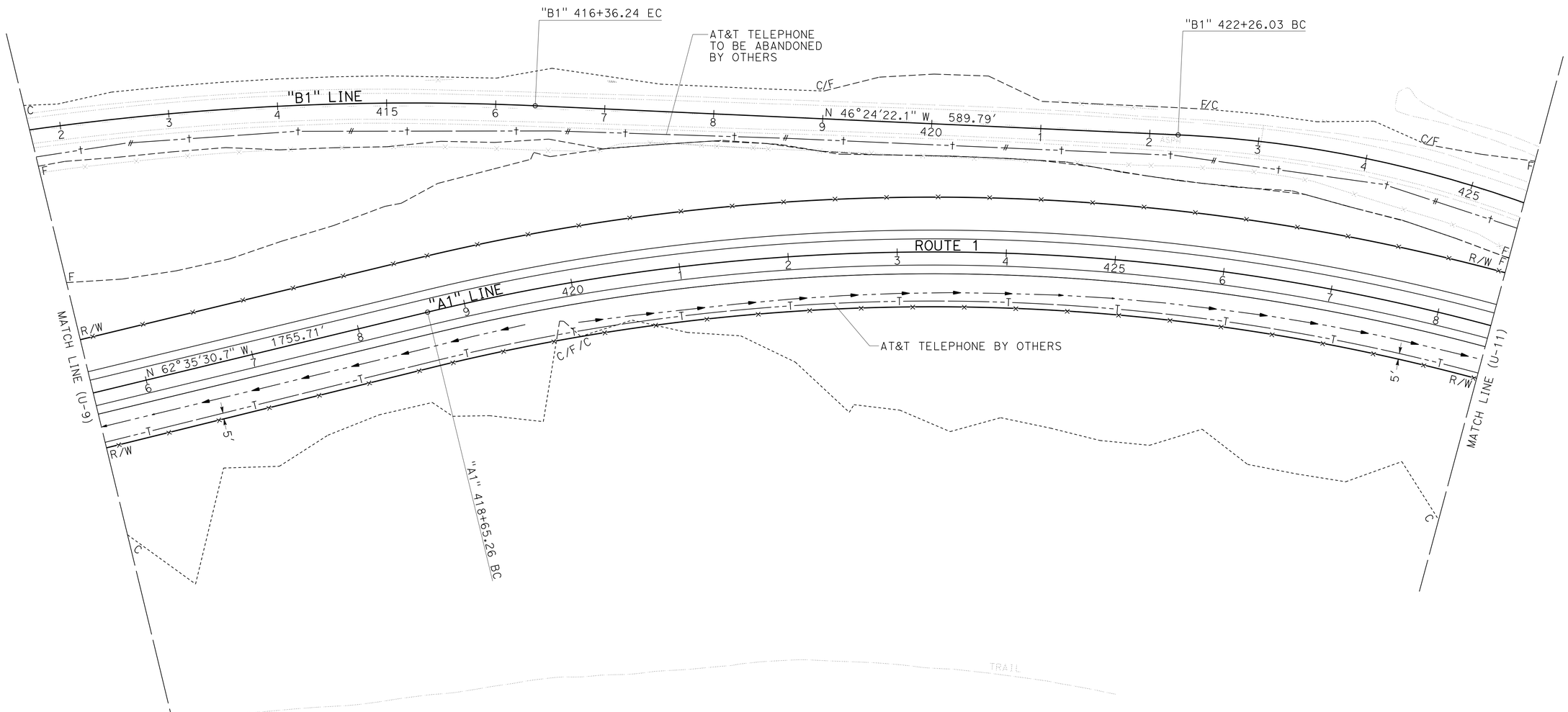

APPROVED FOR UTILITY INFORMATION ONLY

UTILITY PLAN
U-10

SCALE 1" = 50'

STATE OF CALIFORNIA - DEPARTMENT OF TRANSPORTATION
Caltrans
DESIGN

FUNCTIONAL SUPERVISOR: JOHN FOUCHE
CALCULATED-DESIGNED BY: KYLE BIRCH
CHECKED BY: ASHRAF RAHIM
REVISED BY
DATE REVISED

LAST REVISION 10-27-14
DATE PLOTTED => 04-DEC-2014
TIME PLOTTED => 14:19

Dist	COUNTY	ROUTE	POST MILES TOTAL PROJECT	SHEET No.	TOTAL SHEETS
05	SLO	1	64.0/R66.9	115	265

Kyle Birch 10-27-14
REGISTERED CIVIL ENGINEER DATE

10-27-14
PLANS APPROVAL DATE

REGISTERED PROFESSIONAL ENGINEER
KYLE BIRCH
No. 74994
Exp. 12-31-15
CIVIL
STATE OF CALIFORNIA

THE STATE OF CALIFORNIA OR ITS OFFICERS OR AGENTS SHALL NOT BE RESPONSIBLE FOR THE ACCURACY OR COMPLETENESS OF SCANNED COPIES OF THIS PLAN SHEET.

NOTE:

FOR ACCURATE RIGHT OF WAY DATA, CONTACT RIGHT OF WAY ENGINEERING AT THE DISTRICT OFFICE.

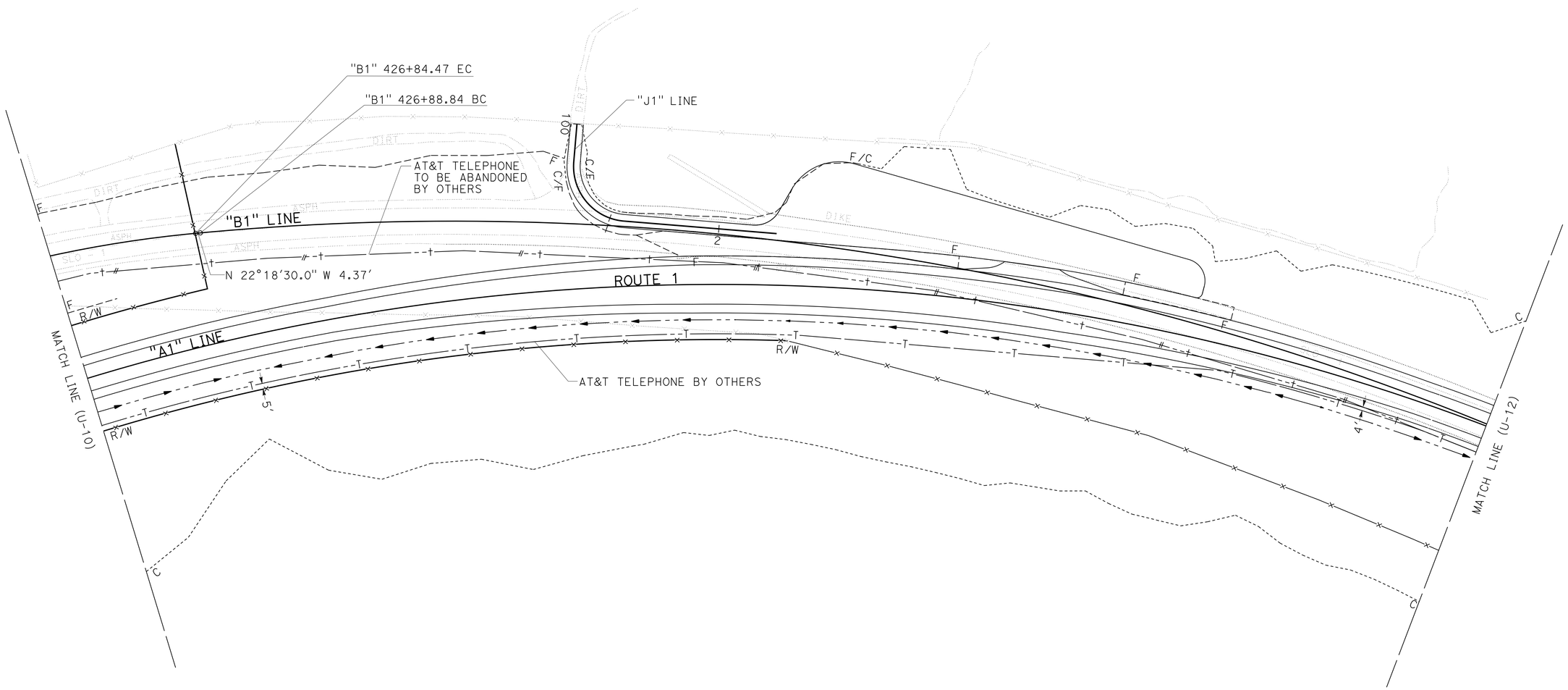

APPROVED FOR UTILITY INFORMATION ONLY

SCALE 1" = 50'

UTILITY PLAN
U-11

STATE OF CALIFORNIA - DEPARTMENT OF TRANSPORTATION
Caltrans®
DESIGN

FUNCTIONAL SUPERVISOR: JOHN FOUCHE
CALCULATED-DESIGNED BY: KYLE BIRCH
CHECKED BY: ASHRAF RAHIM
REVISED BY
DATE REVISED

LAST REVISION 10-27-14
DATE PLOTTED => 04-DEC-2014
TIME PLOTTED => 14:19

Dist	COUNTY	ROUTE	POST MILES TOTAL PROJECT	SHEET No.	TOTAL SHEETS
05	SLO	1	64.0/R66.9	116	265

Kyle Birch 10-27-14
REGISTERED CIVIL ENGINEER DATE

10-27-14
PLANS APPROVAL DATE

REGISTERED PROFESSIONAL ENGINEER
KYLE BIRCH
No. 74994
Exp. 12-31-15
CIVIL
STATE OF CALIFORNIA

THE STATE OF CALIFORNIA OR ITS OFFICERS OR AGENTS SHALL NOT BE RESPONSIBLE FOR THE ACCURACY OR COMPLETENESS OF SCANNED COPIES OF THIS PLAN SHEET.

NOTE:

FOR ACCURATE RIGHT OF WAY DATA, CONTACT
RIGHT OF WAY ENGINEERING AT THE DISTRICT OFFICE.

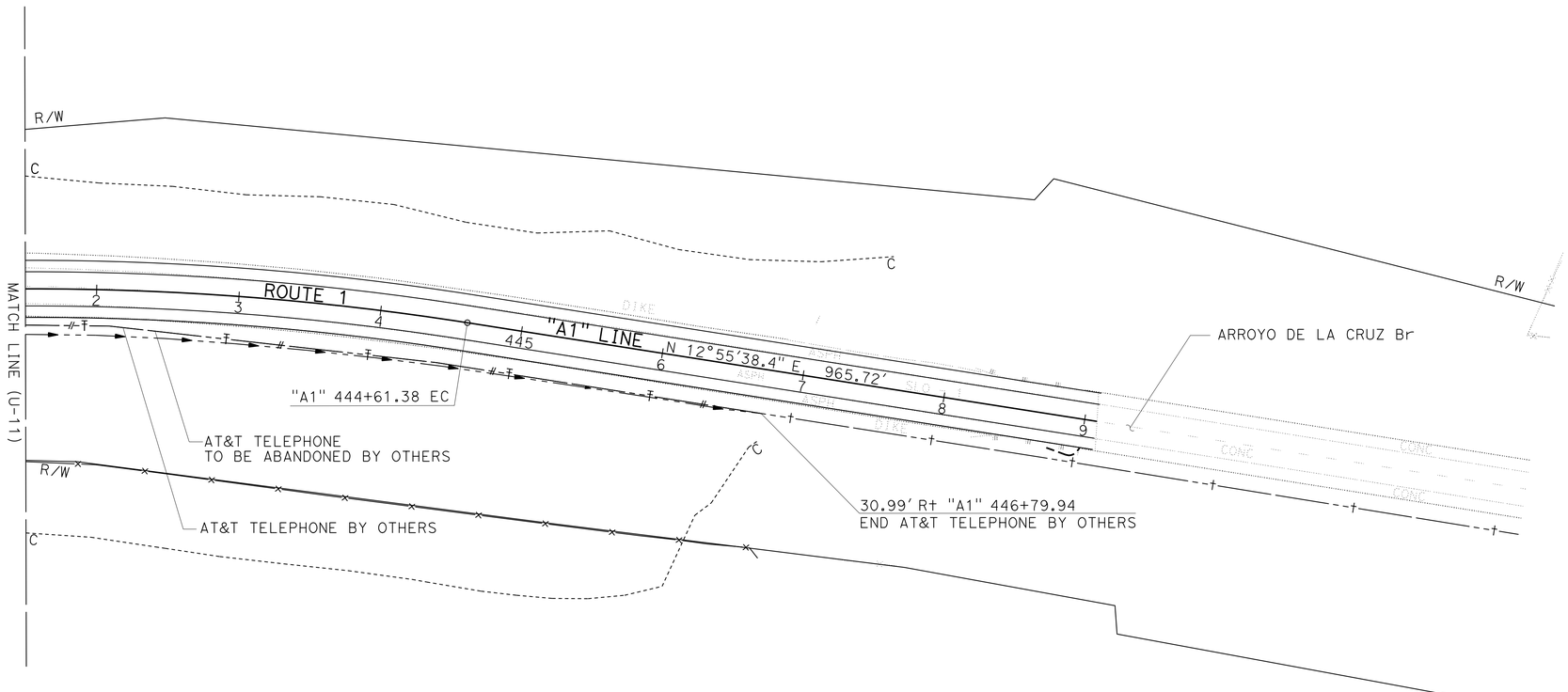

APPROVED FOR UTILITY INFORMATION ONLY

SCALE 1" = 50'

UTILITY PLAN
U-12

STATE OF CALIFORNIA - DEPARTMENT OF TRANSPORTATION
Caltrans
DESIGN

FUNCTIONAL SUPERVISOR: JOHN FOUCHE
CALCULATED-DESIGNED BY: KYLE BIRCH
CHECKED BY: ASHRAF RAHIM
REVISED BY
DATE REVISED

LAST REVISION 10-27-14
DATE PLOTTED => 04-DEC-2014
TIME PLOTTED => 14:19

Dist	COUNTY	ROUTE	POST MILES TOTAL PROJECT	SHEET No.	TOTAL SHEETS
05	SLO	1	64.0/R66.9	117	265

Kyle Birch 10-27-14
REGISTERED CIVIL ENGINEER DATE

10-27-14
PLANS APPROVAL DATE

REGISTERED PROFESSIONAL ENGINEER
KYLE BIRCH
No. 74994
Exp. 12-31-15
CIVIL
STATE OF CALIFORNIA

THE STATE OF CALIFORNIA OR ITS OFFICERS OR AGENTS SHALL NOT BE RESPONSIBLE FOR THE ACCURACY OR COMPLETENESS OF SCANNED COPIES OF THIS PLAN SHEET.

NOTES:

1. LOCATION OF CONSTRUCTION AREA SIGNS ARE APPROXIMATE. EXACT LOCATIONS WILL BE DETERMINED BY THE ENGINEER.
2. FOR ADDITIONAL CONSTRUCTION AREA SIGNS, SEE STAGE CONSTRUCTION AND TRAFFIC HANDLING PLANS.

STATIONARY MOUNTED CONSTRUCTION AREA SIGNS

SIGN No. (X)	SIGN CODE		PANEL SIZE	SIGN MESSAGE	NUMBER OF POSTS AND SIZE	NUMBER OF SIGNS
	FEDERAL	CALIFORNIA				
A	W20-1		48" x 48"	ROAD WORK AHEAD	1 - 6" x 6"	2
B	G20-1		36" x 18"	END ROAD WORK	1 - 4" x 4"	2
C		C40A(CA)	36" x 36"	TRAFFIC FINES DOUBLED IN WORK ZONE	1 - 4" x 4"	2

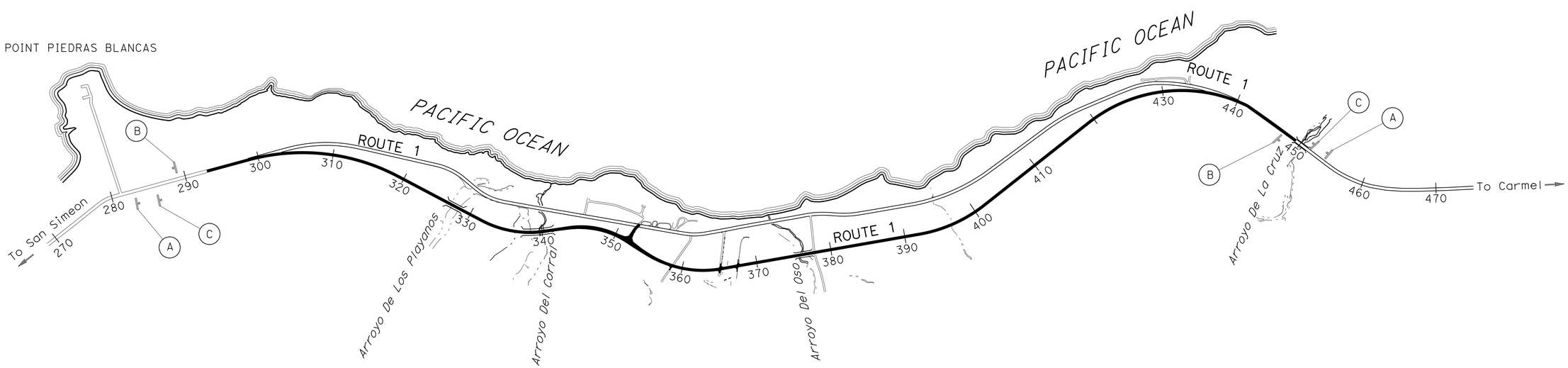

APPROVED FOR CONSTRUCTION AREA SIGN WORK ONLY

NO SCALE

CONSTRUCTION AREA SIGNS
CS-1

STATE OF CALIFORNIA - DEPARTMENT OF TRANSPORTATION
DESIGN
Caltrans

FUNCTIONAL SUPERVISOR: JOHN FOUCHE
CALCULATED-DESIGNED BY: AARON HENKEL
CHECKED BY: KYLE BIRCH
REVISED BY
DATE REVISED

LAST REVISION 10-27-14
DATE PLOTTED => 04-DEC-2014
TIME PLOTTED => 14:19

Dist	COUNTY	ROUTE	POST MILES TOTAL PROJECT	SHEET No.	TOTAL SHEETS
05	SLO	1	64.0/R66.9	118	265

Kyle Birch 10-27-14
REGISTERED CIVIL ENGINEER DATE

10-27-14
PLANS APPROVAL DATE

REGISTERED PROFESSIONAL ENGINEER
KYLE BIRCH
No. 74994
Exp. 12-31-15
CIVIL
STATE OF CALIFORNIA

THE STATE OF CALIFORNIA OR ITS OFFICERS OR AGENTS SHALL NOT BE RESPONSIBLE FOR THE ACCURACY OR COMPLETENESS OF SCANNED COPIES OF THIS PLAN SHEET.

NOTES:

FOR UTILITY RELOCATION, SEE UTILITY PLANS.

CONSTRUCTION SEQUENCE

STAGE 1:

1. Const "DETOUR1" AND "DETOUR2". SEE STD PLAN D88 FOR CULVERT CROSSINGS.
2. Const ARROYO DE LOS PLAYANOS, ARROYO DEL CORRAL, AND ARROYO DEL OSO BRIDGES.
3. Const "A1" FROM Sta 305+00 TO Sta 434+00.
4. Const "HS1", "D1", "E1", "F1", "F2", "G1", "G2", & "HN1".
5. TIE INTO Exist ROUTE 1 FROM "A1" Sta 293+60 TO Sta 305+00 AND FROM "A1" Sta 434+00 TO Sta 449+09

STAGE 2:

1. REMOVE ROCK SLOPE PROTECTION FROM "B1" Sta 365+14 TO "B1" Sta 374+52 AND FROM "B1" Sta 389+13 TO "B1" Sta 391+81.
2. Const "S1", "J1", & PULLOUT.
3. RESTORE "B1" ALIGNMENT FROM Sta 301+15 TO Sta 343+00 AND Sta 358+86 TO Sta 439+50 BY REMOVING BASE AND SURFACING, REGRADING, AND EROSION CONTROL. (SEE CONTOUR GRADING AND EROSION CONTROL SHEETS).
4. RESTORE HAUL ROADS BY REGRADING AND EROSION CONTROL.
5. PLACE FENCE (TYPE WS) ACROSS RESTORED HIGHWAY TO PROTECT WETLAND MITIGATION.

LEGEND:

- Const THIS STAGE
- Const HAUL ROADS
- Temp CRASH CUSHION ARRAY (TS14)
- CHANNELIZER (SURFACE MOUNTED)
- Temp RAILING (TYPE K)
- TYPE III BARRICADE
- SIGN NUMBER
- PLACE Temp TRAFFIC STRIPE (PAINT)
- REMOVE THERMOPLASTIC TRAFFIC STRIPE

TRAFFIC NOTES:

1. TRAFFIC TO USE Exist ROUTE 1, "DETOUR1", AND "DETOUR2".
2. STAGE 2 TRAFFIC TO USE "A1" LINE
3. EXACT SPACING OF CONSTRUCTION AREA SIGNS PER CALIFORNIA MUTCD.
4. FOR ADDITIONAL CONSTRUCTION AREA SIGNS, SEE CONSTRUCTION AREA SIGNS PLAN.
5. PROVIDE ACCESS AT ALL ACCESS OPENINGS OF ROUTE 1 AT ALL TIMES.

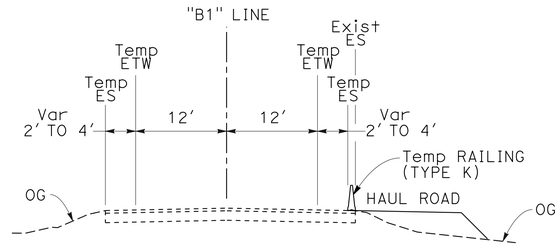

STAGE 1
STAGE CONSTRUCTION AND TRAFFIC HANDLING PLAN

APPROVED FOR STAGE CONSTRUCTION AND TRAFFIC HANDLING WORK ONLY

SCALE 1" = 50'

SC-1

STATE OF CALIFORNIA - DEPARTMENT OF TRANSPORTATION
Caltrans®
DESIGN

FUNCTIONAL SUPERVISOR: JOHN FOUCHE
CALCULATED-DESIGNED BY: WES THOMPSON
CHECKED BY: KYLE BIRCH
REVISED BY
DATE REVISED

LAST REVISION 10-27-14
DATE PLOTTED => 04-DEC-2014
TIME PLOTTED => 14:19

Dist	COUNTY	ROUTE	POST MILES TOTAL PROJECT	SHEET No.	TOTAL SHEETS
05	SLO	1	64.0/R66.9	119	265

Kyle Birch 10-27-14
REGISTERED CIVIL ENGINEER DATE

10-27-14
PLANS APPROVAL DATE

REGISTERED PROFESSIONAL ENGINEER
KYLE BIRCH
No. 74994
Exp. 12-31-15
CIVIL
STATE OF CALIFORNIA

THE STATE OF CALIFORNIA OR ITS OFFICERS OR AGENTS SHALL NOT BE RESPONSIBLE FOR THE ACCURACY OR COMPLETENESS OF SCANNED COPIES OF THIS PLAN SHEET.

"B1" Sta 320+00 = "DETOUR1" Sta 10+00
Beg "DETOUR1"
Beg REMOVE THERMOPLASTIC TRAFFIC STRIPE
Beg REMOVE PAVEMENT MARKER
Beg Temp TRAFFIC STRIPE (PAINT)
Beg Temp PAVEMENT MARKER

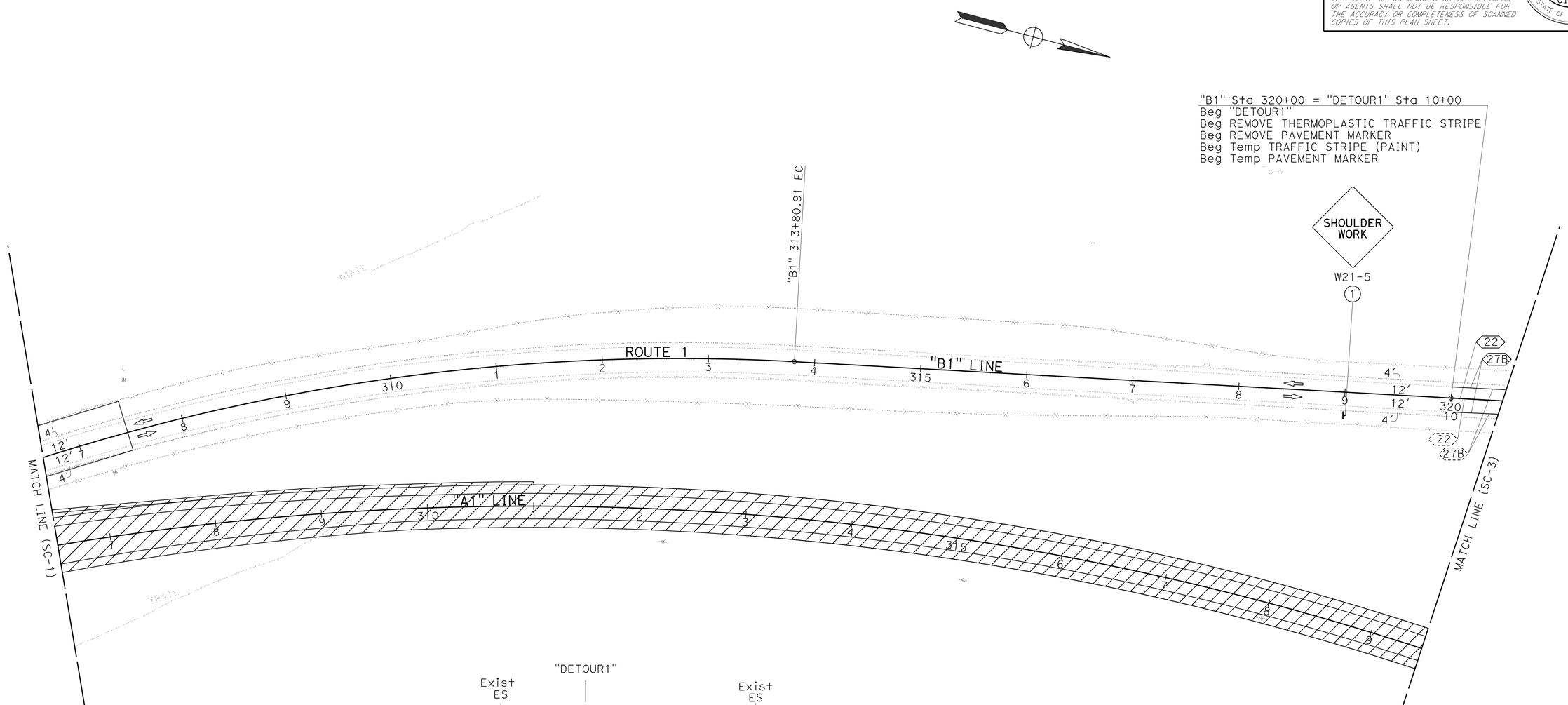

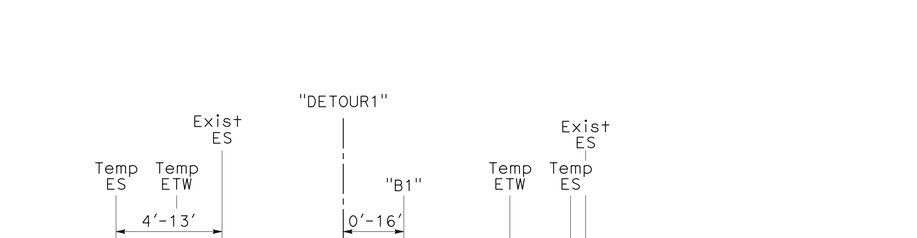

APPROVED FOR STAGE CONSTRUCTION AND TRAFFIC HANDLING WORK ONLY

STAGE 1
STAGE CONSTRUCTION AND TRAFFIC HANDLING PLAN

SCALE 1" = 50'

SC-2

STATE OF CALIFORNIA - DEPARTMENT OF TRANSPORTATION
Caltrans®
DESIGN

FUNCTIONAL SUPERVISOR: JOHN FOUCHE
CALCULATED-DESIGNED BY: WES THOMPSON
CHECKED BY: KYLE BIRCH
REVISED BY
DATE REVISED

LAST REVISION 10-27-14
DATE PLOTTED => 04-DEC-2014
TIME PLOTTED => 14:19

Dist	COUNTY	ROUTE	POST MILES TOTAL PROJECT	SHEET No.	TOTAL SHEETS
05	SLO	1	64.0/R66.9	120	265

Kyle Birch 10-27-14
REGISTERED CIVIL ENGINEER DATE

10-27-14
PLANS APPROVAL DATE

REGISTERED PROFESSIONAL ENGINEER
KYLE BIRCH
No. 74994
Exp. 12-31-15
CIVIL
STATE OF CALIFORNIA

THE STATE OF CALIFORNIA OR ITS OFFICERS OR AGENTS SHALL NOT BE RESPONSIBLE FOR THE ACCURACY OR COMPLETENESS OF SCANNED COPIES OF THIS PLAN SHEET.

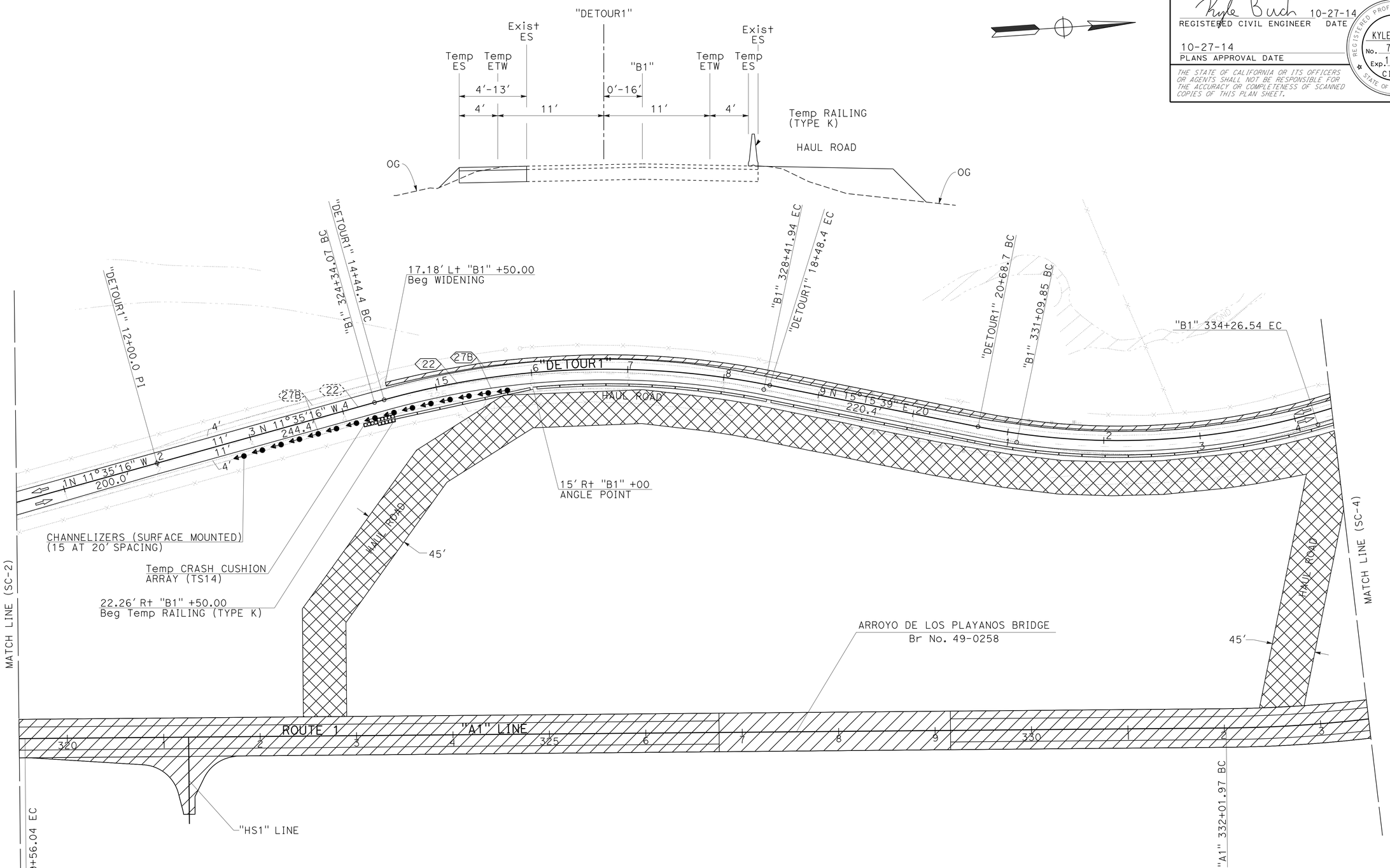

STAGE 1
STAGE CONSTRUCTION AND TRAFFIC HANDLING PLAN

APPROVED FOR STAGE CONSTRUCTION AND TRAFFIC HANDLING WORK ONLY

SCALE 1" = 50'

SC-3

STATE OF CALIFORNIA - DEPARTMENT OF TRANSPORTATION
DESIGN
Caltrans

FUNCTIONAL SUPERVISOR: JOHN FOUCHE
CALCULATED-DESIGNED BY: WES THOMPSON
CHECKED BY: KYLE BIRCH
REVISED BY
DATE REVISED

LAST REVISION 10-27-14
DATE PLOTTED => 04-DEC-2014
TIME PLOTTED => 14:19

Dist	COUNTY	ROUTE	POST MILES TOTAL PROJECT	SHEET No.	TOTAL SHEETS
05	SLO	1	64.0/R66.9	121	265

Kyle Birch 10-27-14
REGISTERED CIVIL ENGINEER DATE

10-27-14
PLANS APPROVAL DATE

REGISTERED PROFESSIONAL ENGINEER
KYLE BIRCH
No. 74994
Exp. 12-31-15
CIVIL
STATE OF CALIFORNIA

THE STATE OF CALIFORNIA OR ITS OFFICERS OR AGENTS SHALL NOT BE RESPONSIBLE FOR THE ACCURACY OR COMPLETENESS OF SCANNED COPIES OF THIS PLAN SHEET.

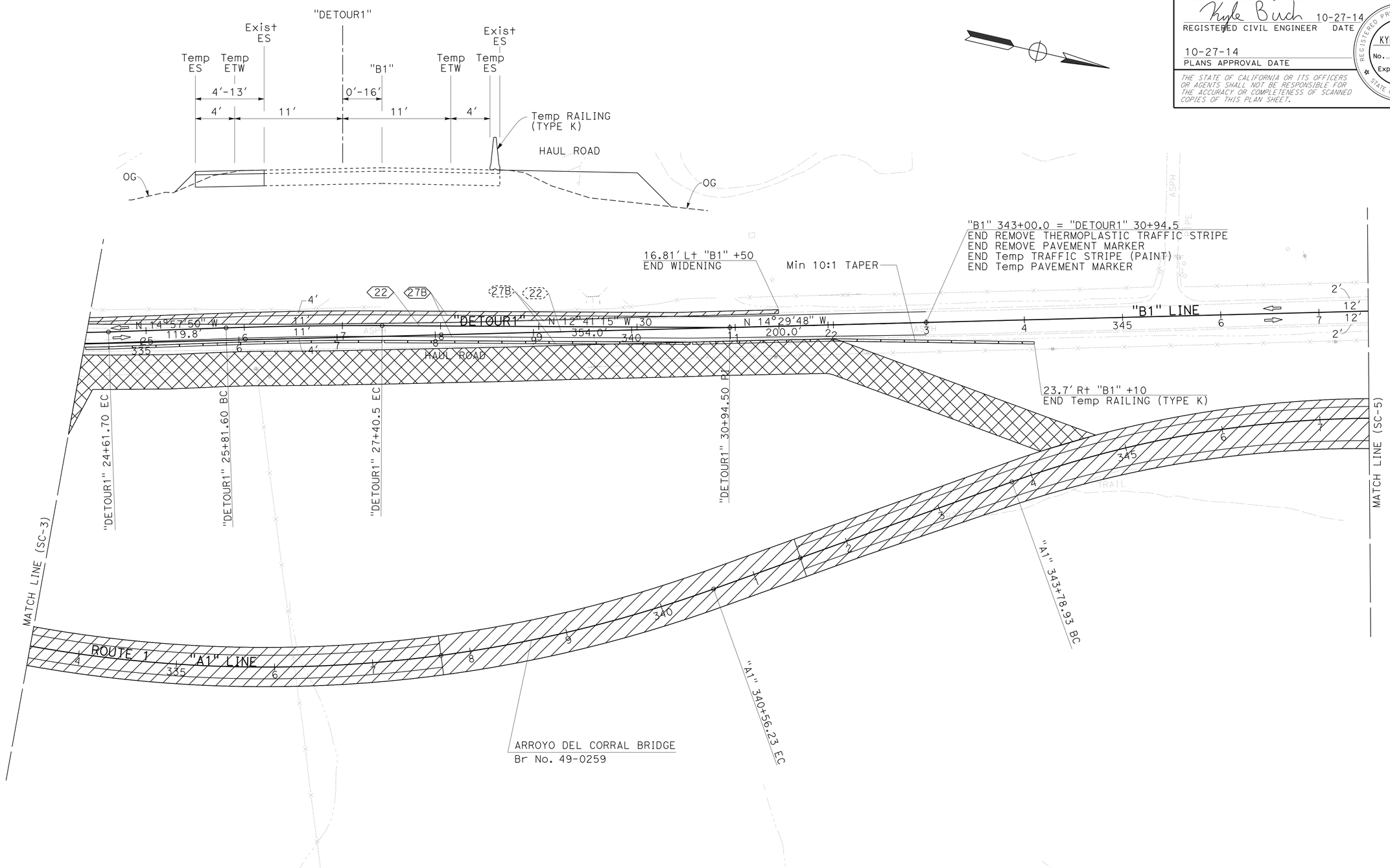

STAGE 1
STAGE CONSTRUCTION AND TRAFFIC HANDLING PLAN

SCALE 1" = 50'

SC-4

APPROVED FOR STAGE CONSTRUCTION AND TRAFFIC HANDLING WORK ONLY

STATE OF CALIFORNIA - DEPARTMENT OF TRANSPORTATION
Caltrans
DESIGN

FUNCTIONAL SUPERVISOR: JOHN FOUCHE
CALCULATED-DESIGNED BY: WES THOMPSON
CHECKED BY: KYLE BIRCH
REVISED BY
DATE REVISED

LAST REVISION 10-27-14
DATE PLOTTED => 04-DEC-2014
TIME PLOTTED => 14:19

Dist	COUNTY	ROUTE	POST MILES TOTAL PROJECT	SHEET No.	TOTAL SHEETS
05	SLO	1	64.0/R66.9	122	265

Kyle Birch 10-27-14
REGISTERED CIVIL ENGINEER DATE

10-27-14
PLANS APPROVAL DATE

REGISTERED PROFESSIONAL ENGINEER
KYLE BIRCH
No. 74994
Exp. 12-31-15
CIVIL
STATE OF CALIFORNIA

THE STATE OF CALIFORNIA OR ITS OFFICERS OR AGENTS SHALL NOT BE RESPONSIBLE FOR THE ACCURACY OR COMPLETENESS OF SCANNED COPIES OF THIS PLAN SHEET.

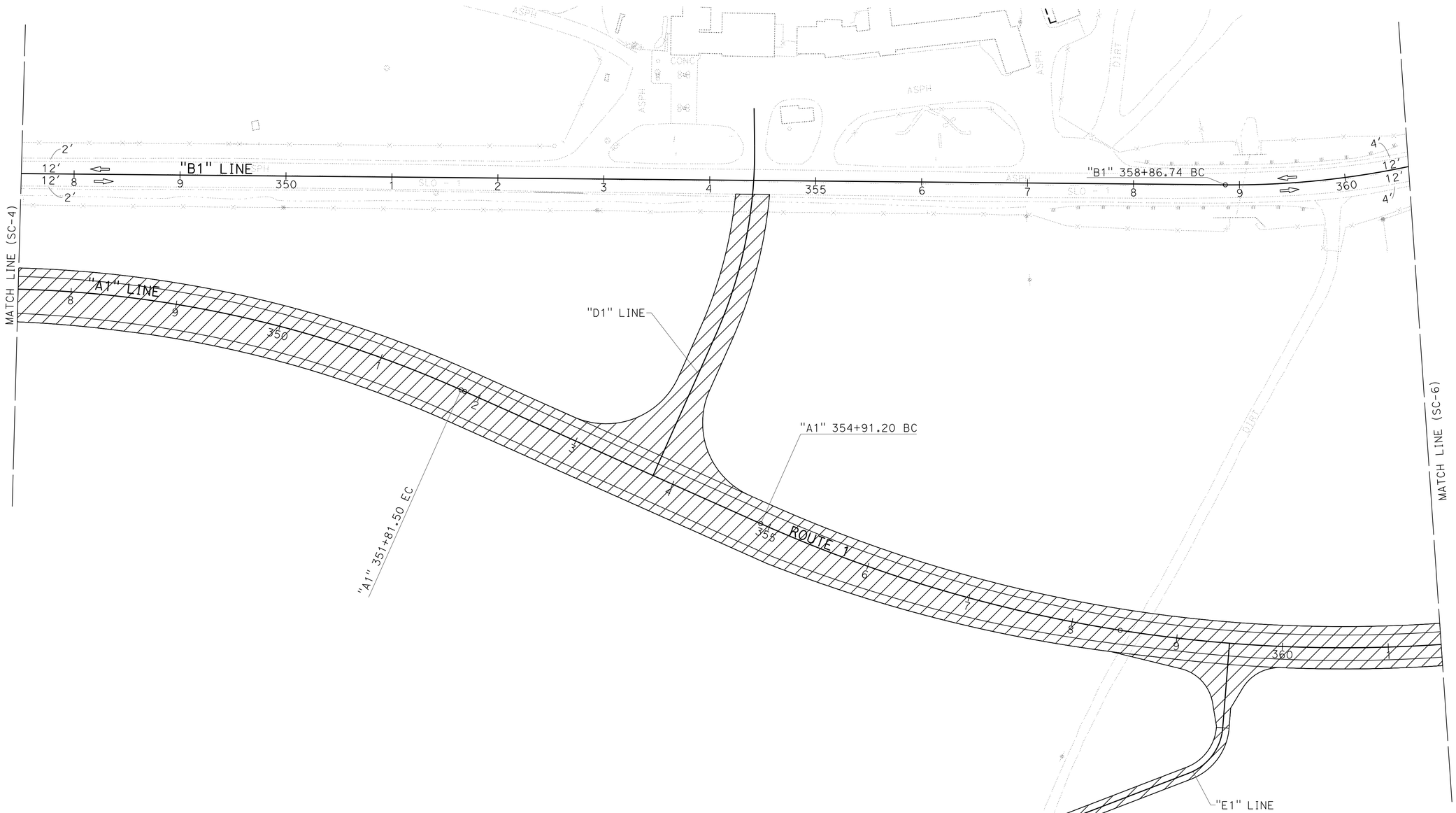

STAGE 1
STAGE CONSTRUCTION AND TRAFFIC HANDLING PLAN

APPROVED FOR STAGE CONSTRUCTION AND TRAFFIC HANDLING WORK ONLY

SCALE 1" = 50'

SC-5

STATE OF CALIFORNIA - DEPARTMENT OF TRANSPORTATION
Caltrans
DESIGN

FUNCTIONAL SUPERVISOR: JOHN FOUCHE
CALCULATED-DESIGNED BY: WES THOMPSON
CHECKED BY: KYLE BIRCH
REVISED BY
DATE REVISED

LAST REVISION 10-27-14
DATE PLOTTED => 04-DEC-2014
TIME PLOTTED => 14:19

Dist	COUNTY	ROUTE	POST MILES TOTAL PROJECT	SHEET No.	TOTAL SHEETS
05	SLO	1	64.0/R66.9	123	265

Kyle Birch 10-27-14
REGISTERED CIVIL ENGINEER DATE

10-27-14
PLANS APPROVAL DATE

REGISTERED PROFESSIONAL ENGINEER
KYLE BIRCH
No. 74994
Exp. 12-31-15
CIVIL
STATE OF CALIFORNIA

THE STATE OF CALIFORNIA OR ITS OFFICERS OR AGENTS SHALL NOT BE RESPONSIBLE FOR THE ACCURACY OR COMPLETENESS OF SCANNED COPIES OF THIS PLAN SHEET.

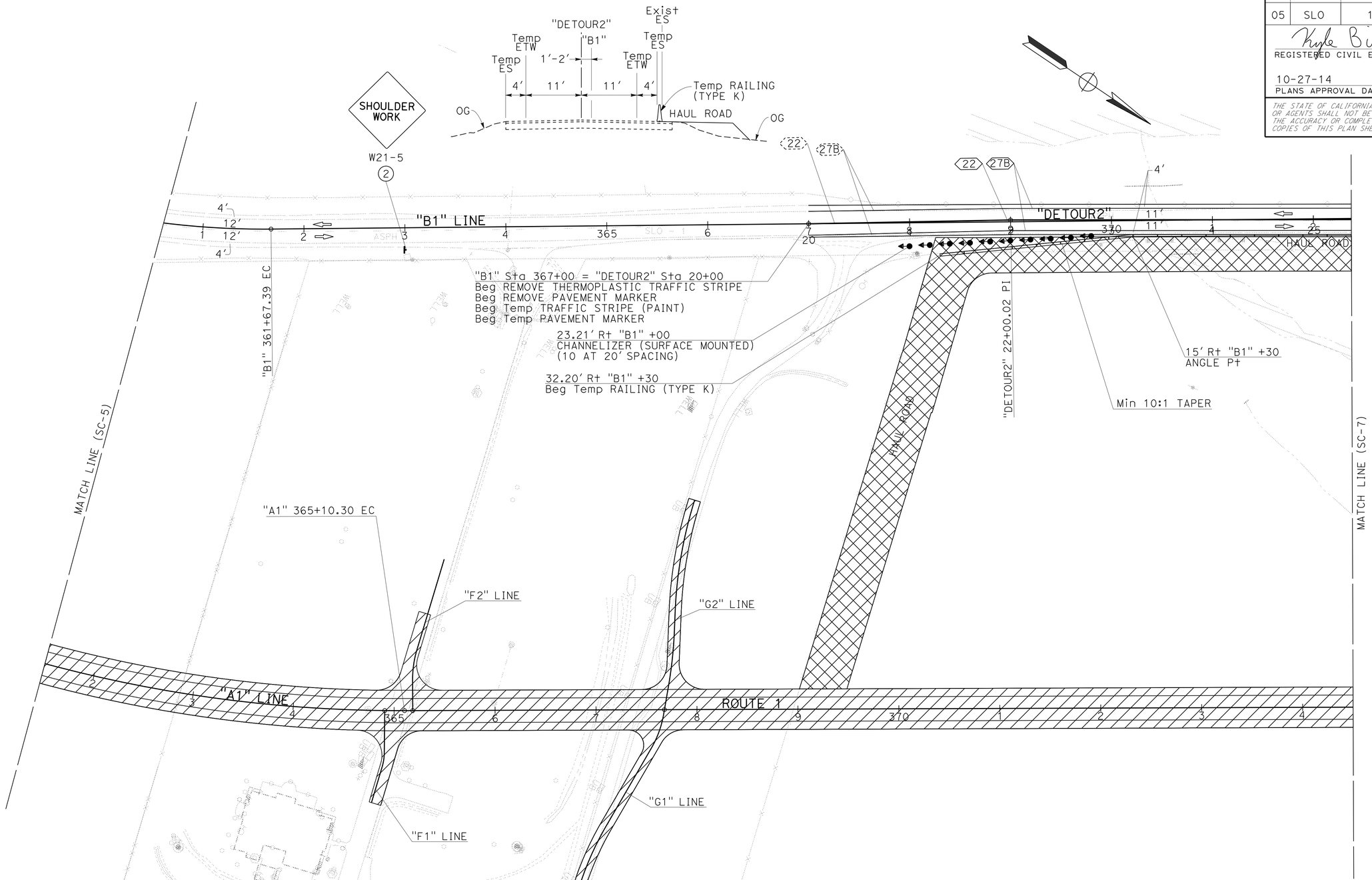

STAGE 1
STAGE CONSTRUCTION AND TRAFFIC HANDLING PLAN

SCALE 1" = 50'

SC-6

APPROVED FOR STAGE CONSTRUCTION AND TRAFFIC HANDLING WORK ONLY

STATE OF CALIFORNIA - DEPARTMENT OF TRANSPORTATION
Caltrans
DESIGN

FUNCTIONAL SUPERVISOR: JOHN FOUCHE
CALCULATED-DESIGNED BY: WES THOMPSON
CHECKED BY: KYLE BIRCH
REVISED BY
DATE REVISED

LAST REVISION 10-27-14
DATE PLOTTED => 04-DEC-2014
TIME PLOTTED => 14:19

Dist	COUNTY	ROUTE	POST MILES TOTAL PROJECT	SHEET No.	TOTAL SHEETS
05	SLO	1	64.0/R66.9	124	265

Kyle Birch 10-27-14
REGISTERED CIVIL ENGINEER DATE

10-27-14
PLANS APPROVAL DATE

REGISTERED PROFESSIONAL ENGINEER
KYLE BIRCH
No. 74994
Exp. 12-31-15
CIVIL
STATE OF CALIFORNIA

THE STATE OF CALIFORNIA OR ITS OFFICERS OR AGENTS SHALL NOT BE RESPONSIBLE FOR THE ACCURACY OR COMPLETENESS OF SCANNED COPIES OF THIS PLAN SHEET.

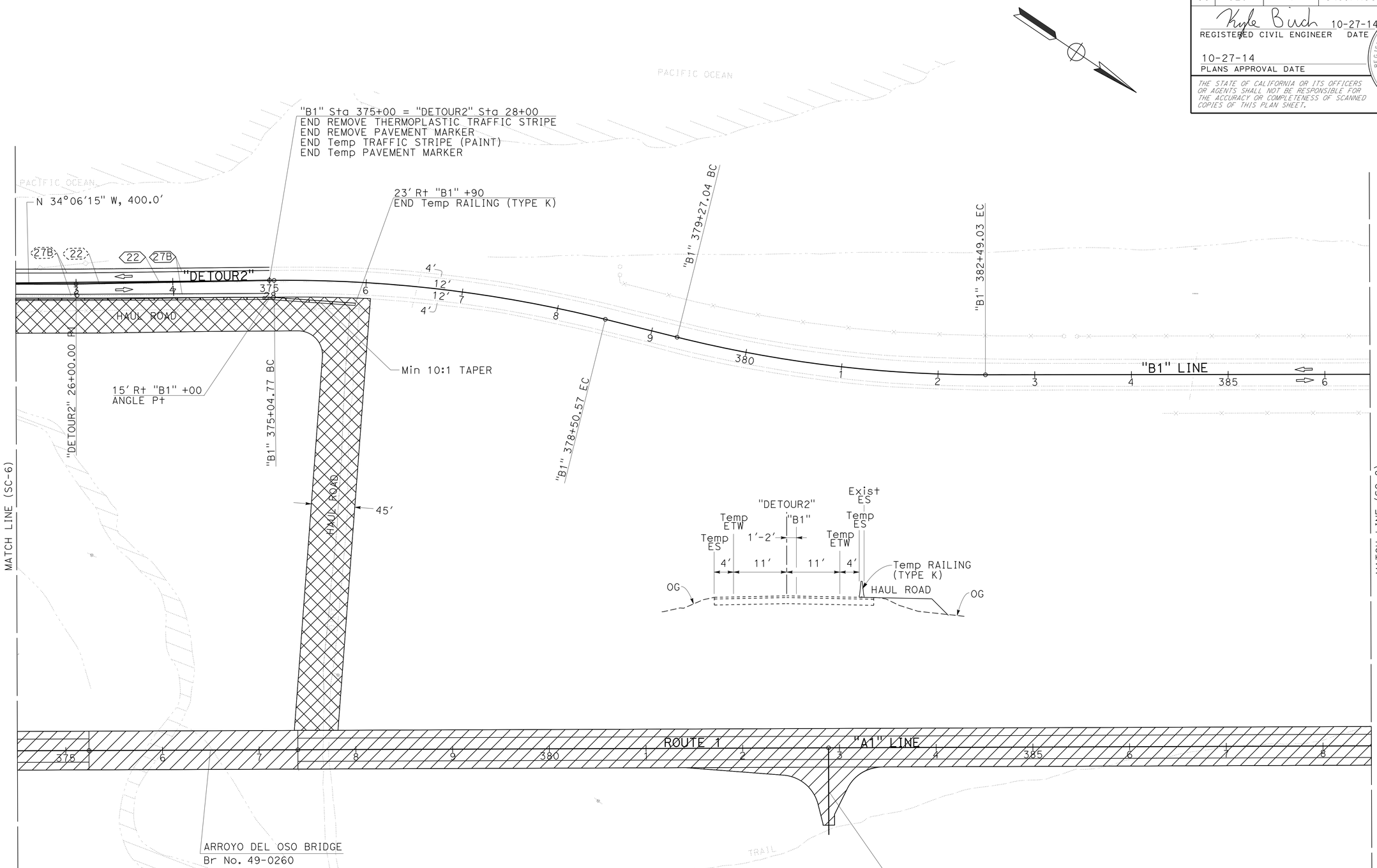

APPROVED FOR STAGE CONSTRUCTION AND TRAFFIC HANDLING WORK ONLY

STAGE 1
STAGE CONSTRUCTION AND TRAFFIC HANDLING PLAN

SCALE 1" = 50'

SC-7

STATE OF CALIFORNIA - DEPARTMENT OF TRANSPORTATION
Caltrans®
DESIGN

FUNCTIONAL SUPERVISOR: JOHN FOUCHE
CALCULATED-DESIGNED BY: WES THOMPSON
CHECKED BY: KYLE BIRCH
REVISED BY
DATE REVISED

LAST REVISION 10-27-14
DATE PLOTTED => 04-DEC-2014
TIME PLOTTED => 14:19

Dist	COUNTY	ROUTE	POST MILES TOTAL PROJECT	SHEET No.	TOTAL SHEETS
05	SLO	1	64.0/R66.9	125	265

Kyle Birch 10-27-14
REGISTERED CIVIL ENGINEER DATE

10-27-14
PLANS APPROVAL DATE

REGISTERED PROFESSIONAL ENGINEER
KYLE BIRCH
No. 74994
Exp. 12-31-15
CIVIL
STATE OF CALIFORNIA

THE STATE OF CALIFORNIA OR ITS OFFICERS OR AGENTS SHALL NOT BE RESPONSIBLE FOR THE ACCURACY OR COMPLETENESS OF SCANNED COPIES OF THIS PLAN SHEET.

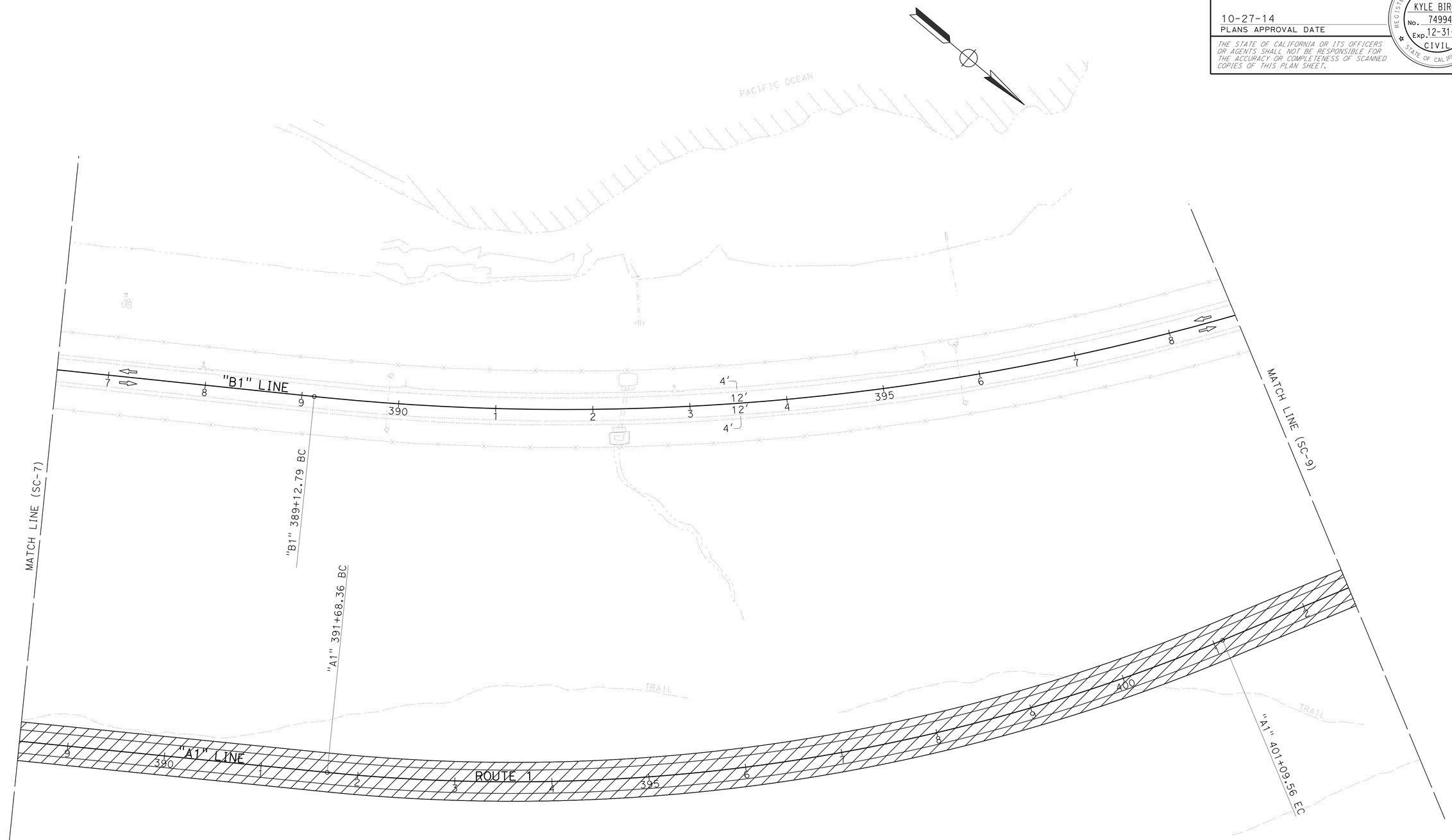

STAGE 1
STAGE CONSTRUCTION AND TRAFFIC HANDLING PLAN

SCALE 1" = 50'

SC-8

APPROVED FOR STAGE CONSTRUCTION AND TRAFFIC HANDLING WORK ONLY

STATE OF CALIFORNIA - DEPARTMENT OF TRANSPORTATION
Caltrans®
DESIGN

FUNCTIONAL SUPERVISOR: JOHN FOUCHE
CALCULATED-DESIGNED BY: WES THOMPSON
CHECKED BY: KYLE BIRCH
REVISED BY
DATE REVISED

LAST REVISION 10-27-14
DATE PLOTTED => 04-DEC-2014
TIME PLOTTED => 14:19

Dist	COUNTY	ROUTE	POST MILES TOTAL PROJECT	SHEET No.	TOTAL SHEETS
05	SLO	1	64.0/R66.9	126	265

Kyle Birch 10-27-14
REGISTERED CIVIL ENGINEER DATE

10-27-14
PLANS APPROVAL DATE

REGISTERED PROFESSIONAL ENGINEER
KYLE BIRCH
No. 74994
Exp. 12-31-15
CIVIL
STATE OF CALIFORNIA

THE STATE OF CALIFORNIA OR ITS OFFICERS OR AGENTS SHALL NOT BE RESPONSIBLE FOR THE ACCURACY OR COMPLETENESS OF SCANNED COPIES OF THIS PLAN SHEET.

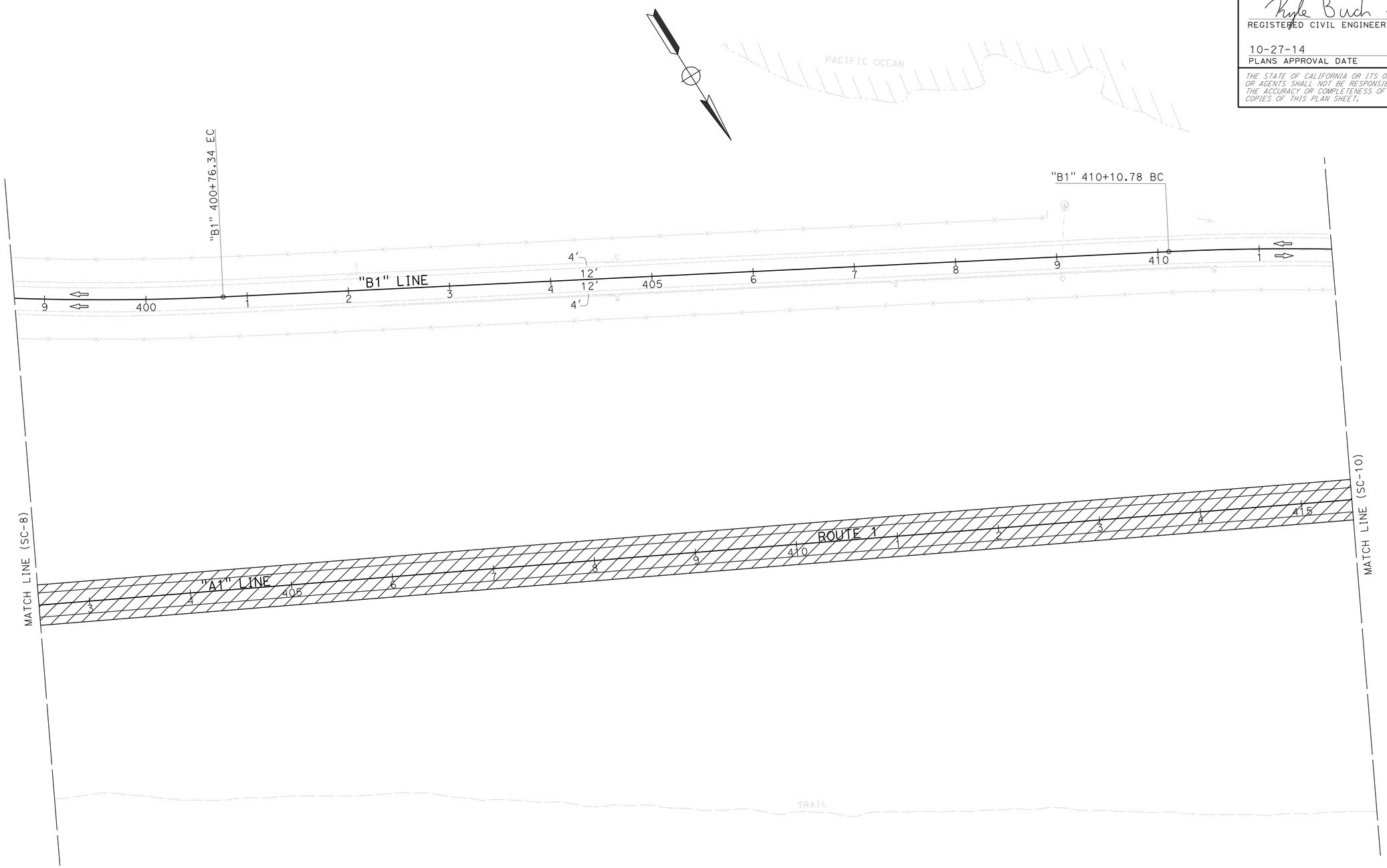

STAGE 1
STAGE CONSTRUCTION AND TRAFFIC HANDLING PLAN

SCALE 1" = 50'

SC-9

APPROVED FOR STAGE CONSTRUCTION AND TRAFFIC HANDLING WORK ONLY

STATE OF CALIFORNIA - DEPARTMENT OF TRANSPORTATION
Caltrans®
DESIGN

FUNCTIONAL SUPERVISOR: JOHN FOUCHE
CALCULATED-DESIGNED BY: WES THOMPSON
CHECKED BY: KYLE BIRCH
REVISED BY
DATE REVISED

LAST REVISION 10-27-14
DATE PLOTTED => 04-DEC-2014
TIME PLOTTED => 14:19

Dist	COUNTY	ROUTE	POST MILES TOTAL PROJECT	SHEET No.	TOTAL SHEETS
05	SLO	1	64.0/R66.9	127	265

Kyle Birch 10-27-14
REGISTERED CIVIL ENGINEER DATE

10-27-14
PLANS APPROVAL DATE

REGISTERED PROFESSIONAL ENGINEER
KYLE BIRCH
No. 74994
Exp. 12-31-15
CIVIL
STATE OF CALIFORNIA

THE STATE OF CALIFORNIA OR ITS OFFICERS OR AGENTS SHALL NOT BE RESPONSIBLE FOR THE ACCURACY OR COMPLETENESS OF SCANNED COPIES OF THIS PLAN SHEET.

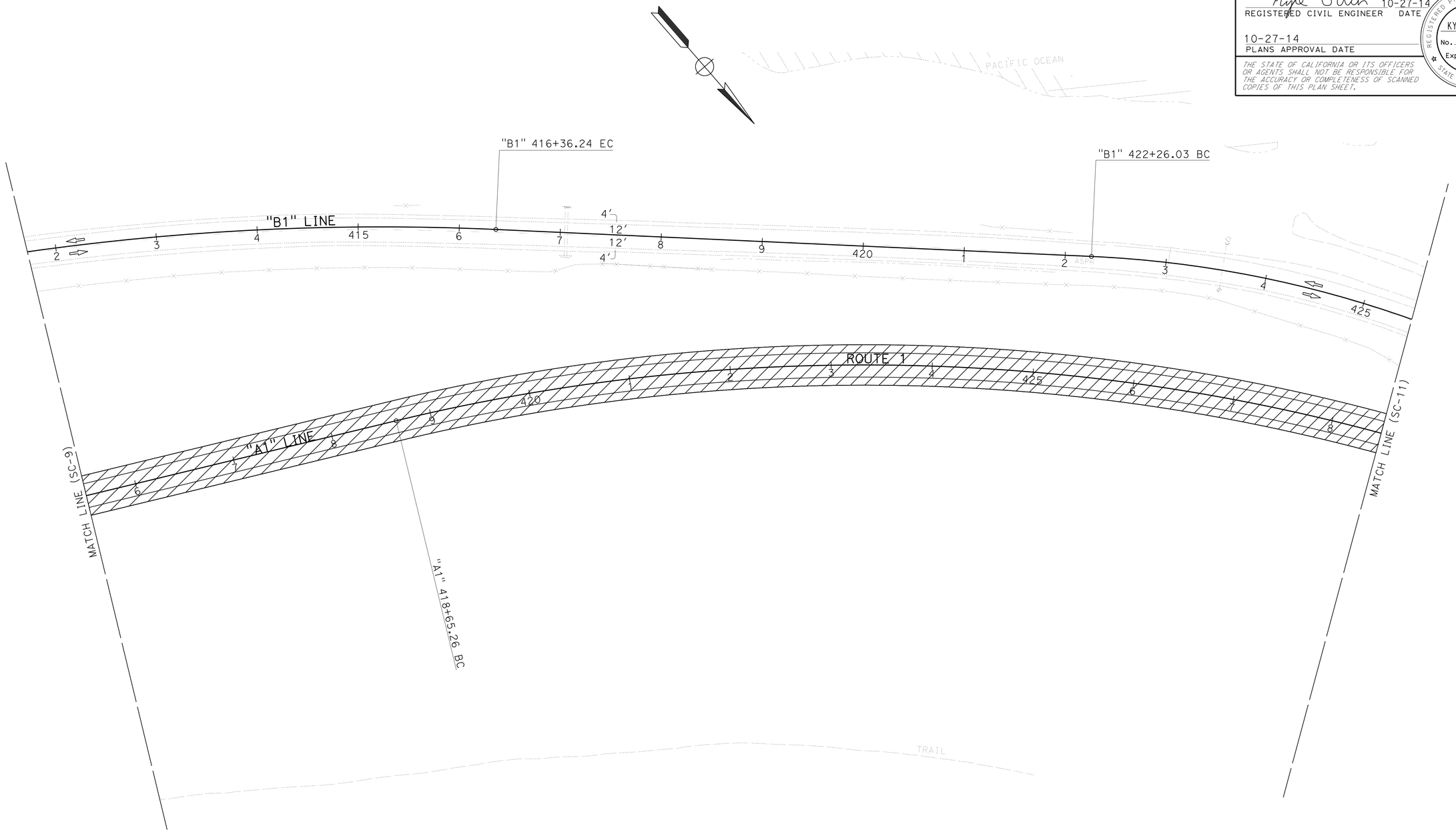

STAGE 1
STAGE CONSTRUCTION AND TRAFFIC HANDLING PLAN

SCALE 1" = 50'

SC-10

APPROVED FOR STAGE CONSTRUCTION AND TRAFFIC HANDLING WORK ONLY

STATE OF CALIFORNIA - DEPARTMENT OF TRANSPORTATION
Caltrans
DESIGN

FUNCTIONAL SUPERVISOR: JOHN FOUCHE
CALCULATED-DESIGNED BY: WES THOMPSON
CHECKED BY: KYLE BIRCH
REVISED BY
DATE REVISED

LAST REVISION 10-27-14
DATE PLOTTED => 04-DEC-2014
TIME PLOTTED => 14:19

Dist	COUNTY	ROUTE	POST MILES TOTAL PROJECT	SHEET No.	TOTAL SHEETS
05	SLO	1	64.0/R66.9	128	265

Kyle Birch 10-27-14
REGISTERED CIVIL ENGINEER DATE

10-27-14
PLANS APPROVAL DATE

REGISTERED PROFESSIONAL ENGINEER
KYLE BIRCH
No. 74994
Exp. 12-31-15
CIVIL
STATE OF CALIFORNIA

THE STATE OF CALIFORNIA OR ITS OFFICERS OR AGENTS SHALL NOT BE RESPONSIBLE FOR THE ACCURACY OR COMPLETENESS OF SCANNED COPIES OF THIS PLAN SHEET.

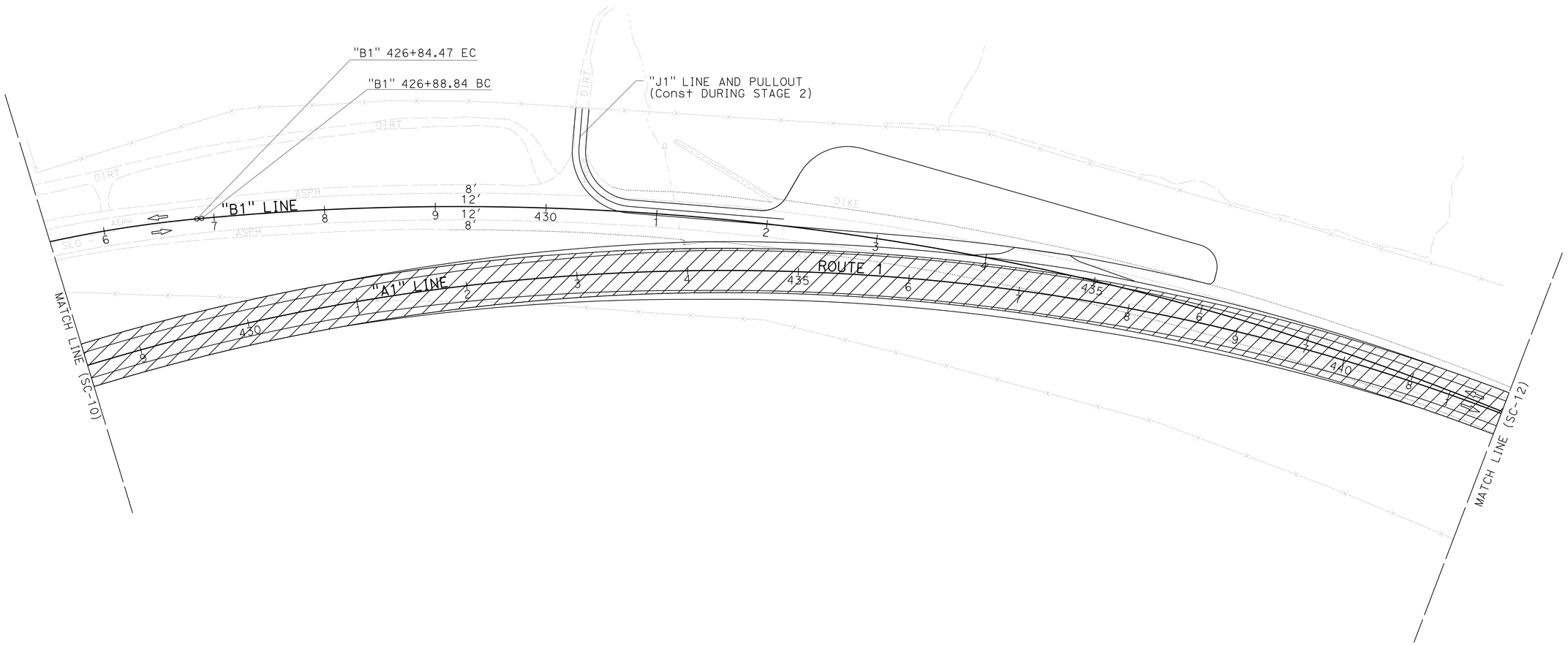

APPROVED FOR STAGE CONSTRUCTION AND TRAFFIC HANDLING WORK ONLY

STAGE 1
STAGE CONSTRUCTION AND TRAFFIC HANDLING PLAN
STAGE 1 - PHASE 1
SCALE 1" = 50'

SC-11

STATE OF CALIFORNIA - DEPARTMENT OF TRANSPORTATION
Caltrans
DESIGN

FUNCTIONAL SUPERVISOR: JOHN FOUCHE
CALCULATED-DESIGNED BY: WES THOMPSON
CHECKED BY: KYLE BIRCH
REVISED BY
DATE REVISED

LAST REVISION 10-27-14
DATE PLOTTED => 04-DEC-2014
TIME PLOTTED => 14:19

Dist	COUNTY	ROUTE	POST MILES TOTAL PROJECT	SHEET No.	TOTAL SHEETS
05	SLO	1	64.0/R66.9	129	265

Kyle Birch 10-27-14
REGISTERED CIVIL ENGINEER DATE

10-27-14
PLANS APPROVAL DATE

REGISTERED PROFESSIONAL ENGINEER
KYLE BIRCH
No. 74994
Exp. 12-31-15
CIVIL
STATE OF CALIFORNIA

THE STATE OF CALIFORNIA OR ITS OFFICERS OR AGENTS SHALL NOT BE RESPONSIBLE FOR THE ACCURACY OR COMPLETENESS OF SCANNED COPIES OF THIS PLAN SHEET.

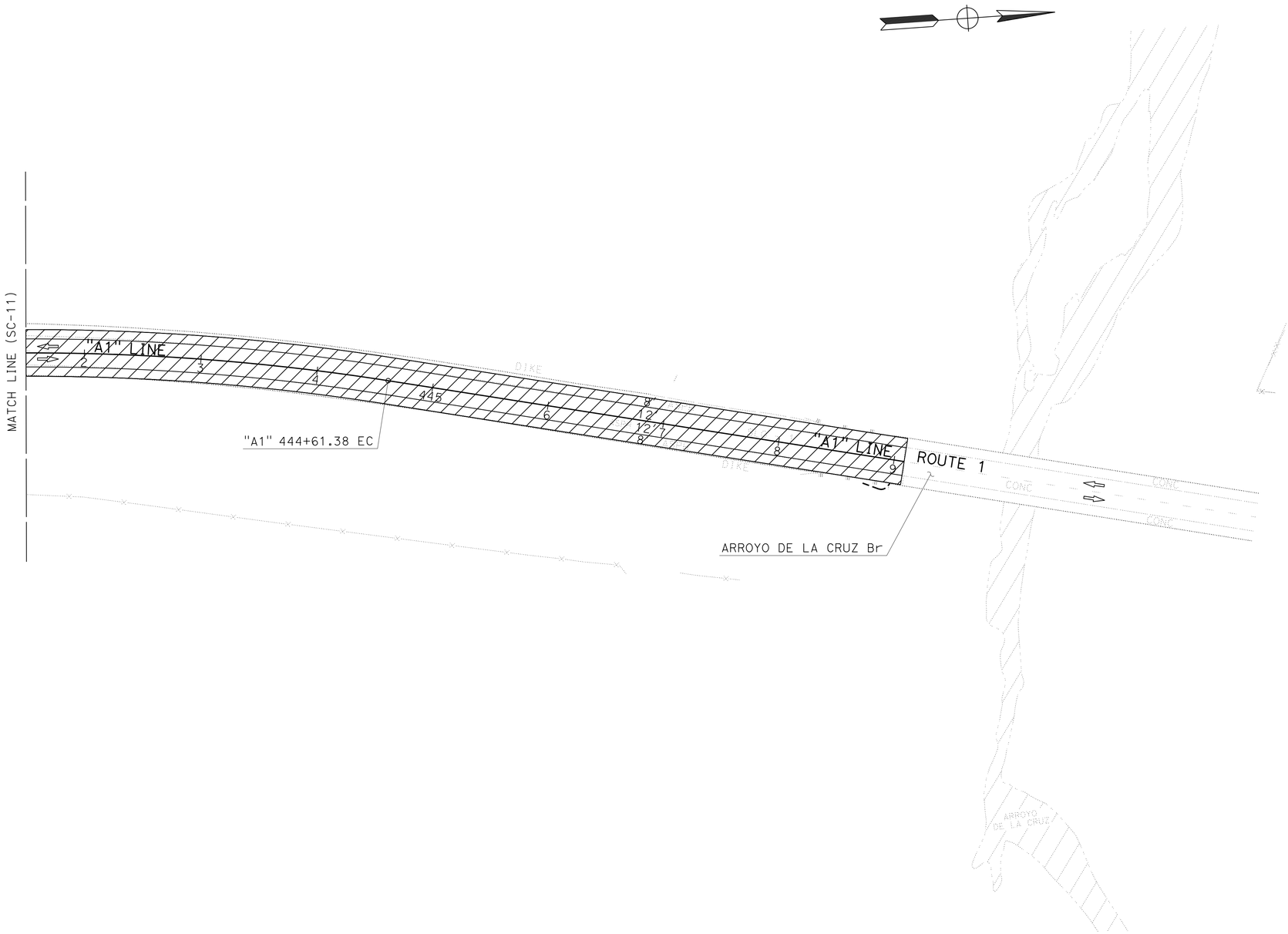

STAGE 1
STAGE CONSTRUCTION AND TRAFFIC HANDLING PLAN

SCALE 1" = 50'

SC-12

APPROVED FOR STAGE CONSTRUCTION AND TRAFFIC HANDLING WORK ONLY

STATE OF CALIFORNIA - DEPARTMENT OF TRANSPORTATION
Caltrans®
DESIGN

FUNCTIONAL SUPERVISOR: JOHN FOUCHE
CALCULATED-DESIGNED BY: WES THOMPSON
CHECKED BY: KYLE BIRCH
REVISED BY
DATE REVISED

LAST REVISION 10-27-14
DATE PLOTTED => 04-DEC-2014
TIME PLOTTED => 14:19

Dist	COUNTY	ROUTE	POST MILES TOTAL PROJECT	SHEET No.	TOTAL SHEETS
05	SLO	1	64.0/R66.9	130	265

Kyle Birch 10-27-14
REGISTERED CIVIL ENGINEER DATE

10-27-14
PLANS APPROVAL DATE

REGISTERED PROFESSIONAL ENGINEER
KYLE BIRCH
No. 74994
Exp. 12-31-15
CIVIL
STATE OF CALIFORNIA

THE STATE OF CALIFORNIA OR ITS OFFICERS OR AGENTS SHALL NOT BE RESPONSIBLE FOR THE ACCURACY OR COMPLETENESS OF SCANNED COPIES OF THIS PLAN SHEET.

NOTES:

1. EXACT SIGN LOCATION TO BE DETERMINED BY THE ENGINEER.
2. SEE SHEET CS-1 FOR ADDITIONAL CONSTRUCTION AREA SIGNS.

STATIONARY MOUNTED CONSTRUCTION AREA SIGNS

SHEET No.	STAGE	SIGN No. (X)	SIGN CODE		PANEL SIZE	SIGN MESSAGE	NUMBER OF POSTS AND SIZE	NUMBER OF SIGNS
			FEDERAL	CALIFORNIA				
SC-1	1	1	W21-5		48" x 48"	SHOULDER WORK	1 - 4" x 6"	1
SC-6	1	2	W21-5		48" x 48"	SHOULDER WORK	1 - 4" x 6"	1

TEMPORARY RAILING (TYPE K)

SHEET No.	STAGE	STATION LIMITS	* TEMPORARY RAILING (TYPE K)
			LF
SC-3 & SC-4	1	"B1" 324+50.00 TO 344+10.00	1,960
SC-6 & SC-7	1	"B1" 368+30.00 TO 375+90.00	760
		TOTAL	2,720

* EXACT LOCATION OF TEMPORARY RAILING (TYPE K) TO BE DETERMINED BY THE ENGINEER

TEMPORARY PAVEMENT DELINEATION QUANTITIES

SHEET No.	LOCATION/STATION	DIRECTION	STAGE	DETAIL No.	TEMPORARY TRAFFIC STRIPE (PAINT)		TEMPORARY PAVEMENT MARKER	REMOVE THERMOPLASTIC TRAFFIC STRIPE	REMOVE PAVEMENT MARKER	CHANNELIZER (SURFACE MOUNTED)	TEMPORARY CRASH CUSHION MODULE	OBJECT MARKER
					4" WHITE SOLID	4" YELLOW SOLID	TYPE H				TYPE 'TS14'	TYPE P
					LF		EA	LF	EA	EA	EA	EA
SC-2 TO SC-4	"B1" 320+00 TO 343+00	NB,SB	1	27B	4,600			4,600				
SC-2 TO SC-4	"B1" 320+00 TO 343+00	NB,SB	1	22		2,300	192	4,600	192			
SC-3	"B1" 324+50	NB	1							15	14	2
SC-6 TO SC-7	"B1" 367+00 TO 375+00	NB,SB	1	27B	1,600			1,600				
SC-6 TO SC-7	"B1" 367+00 TO 375+00	NB,SB	1	22		800	68	1,600	68			
SC-6	"B1" 368+00	NB	1							10		2
SUBTOTAL					6,200	3,100	260	12,400	260	25	14	4
TOTAL					9,300		260	12,400	260	25	14	4

STAGE CONSTRUCTION AND TRAFFIC HANDLING QUANTITIES

SCQ-1

STATE OF CALIFORNIA - DEPARTMENT OF TRANSPORTATION
Caltrans
DESIGN
FUNCTIONAL SUPERVISOR: JOHN FOUCHE
CALCULATED-DESIGNED BY: WES THOMPSON
CHECKED BY: ASHRAF RAHIM
REVISED BY
DATE REVISED

LAST REVISION 10-27-14
DATE PLOTTED => 04-DEC-2014
TIME PLOTTED => 14:19

Dist	COUNTY	ROUTE	POST MILES TOTAL PROJECT	SHEET No.	TOTAL SHEETS
05	SLO	1	64.0/R66.9	131	265

Kyle Birch 10-27-14
REGISTERED CIVIL ENGINEER DATE

10-27-14
PLANS APPROVAL DATE

REGISTERED PROFESSIONAL ENGINEER
KYLE BIRCH
No. 74994
Exp. 12-31-15
CIVIL
STATE OF CALIFORNIA

THE STATE OF CALIFORNIA OR ITS OFFICERS OR AGENTS SHALL NOT BE RESPONSIBLE FOR THE ACCURACY OR COMPLETENESS OF SCANNED COPIES OF THIS PLAN SHEET.

NOTE:

1. FEDERAL SIGN CODES ARE SHOWN UNLESS DESIGNATED BY (CA) WHICH INDICATES A CALIFORNIA SIGN CODE.

LEGEND:

- I_F DELINEATOR (CLASS 1) TYPE F
- I^F_{Gr} GUARD RAILING DELINEATOR TYPE F-1
- ⊢► OBJECT MARKER TYPE L-1 (CA)
- S= DELINEATOR SPACING

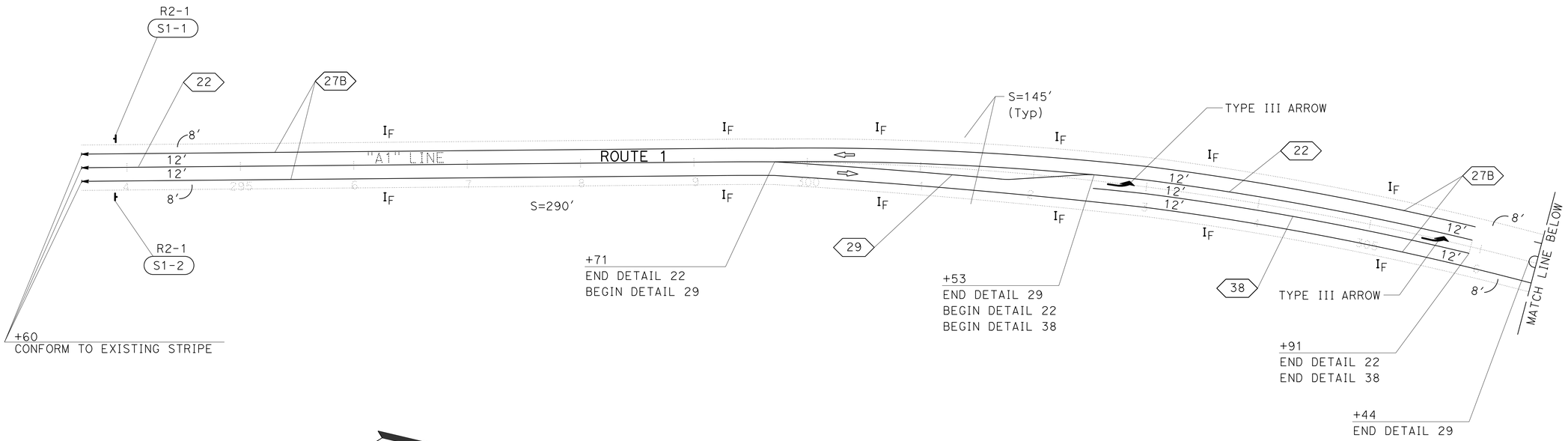

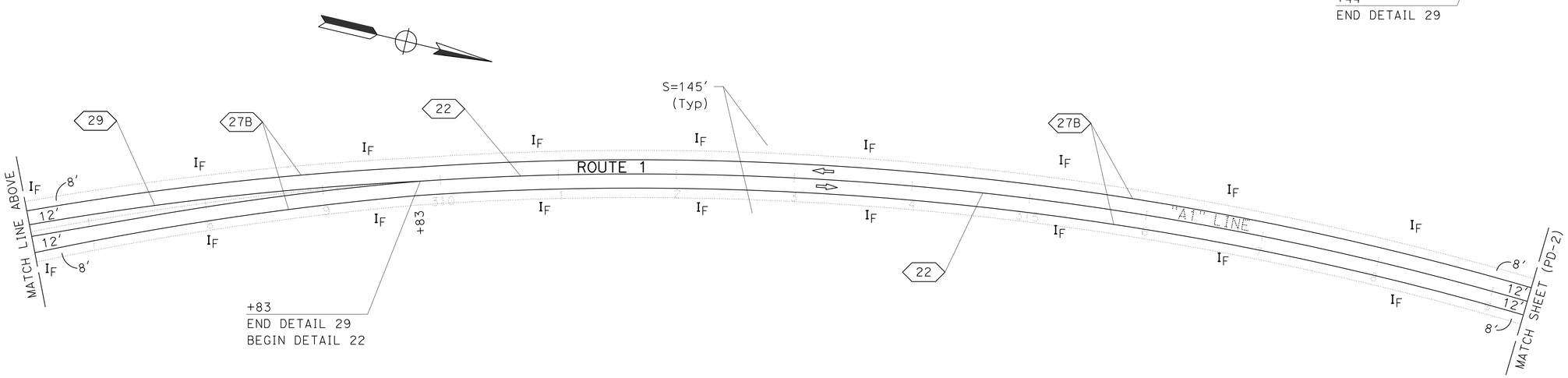

PAVEMENT DELINEATION AND SIGN PLAN

SCALE 1" = 50′ **PD-1**

APPROVED FOR PAVEMENT DELINEATION AND SIGN WORK ONLY

STATE OF CALIFORNIA - DEPARTMENT OF TRANSPORTATION
Caltrans
DESIGN

FUNCTIONAL SUPERVISOR: JOHN FOUCHE
CALCULATED-DESIGNED BY: CHRISTOPHER BAAB
CHECKED BY: DAVID BLACK
REVISED BY
DATE REVISED

LAST REVISION 10-27-14
DATE PLOTTED => 29-DEC-2014
TIME PLOTTED => 11:02

Dist	COUNTY	ROUTE	POST MILES TOTAL PROJECT	SHEET No.	TOTAL SHEETS
05	SLO	1	64.0/R66.9	132	265

Kyle Birch 10-27-14
REGISTERED CIVIL ENGINEER DATE

10-27-14
PLANS APPROVAL DATE

REGISTERED PROFESSIONAL ENGINEER
KYLE BIRCH
No. 74994
Exp. 12-31-15
CIVIL
STATE OF CALIFORNIA

THE STATE OF CALIFORNIA OR ITS OFFICERS OR AGENTS SHALL NOT BE RESPONSIBLE FOR THE ACCURACY OR COMPLETENESS OF SCANNED COPIES OF THIS PLAN SHEET.

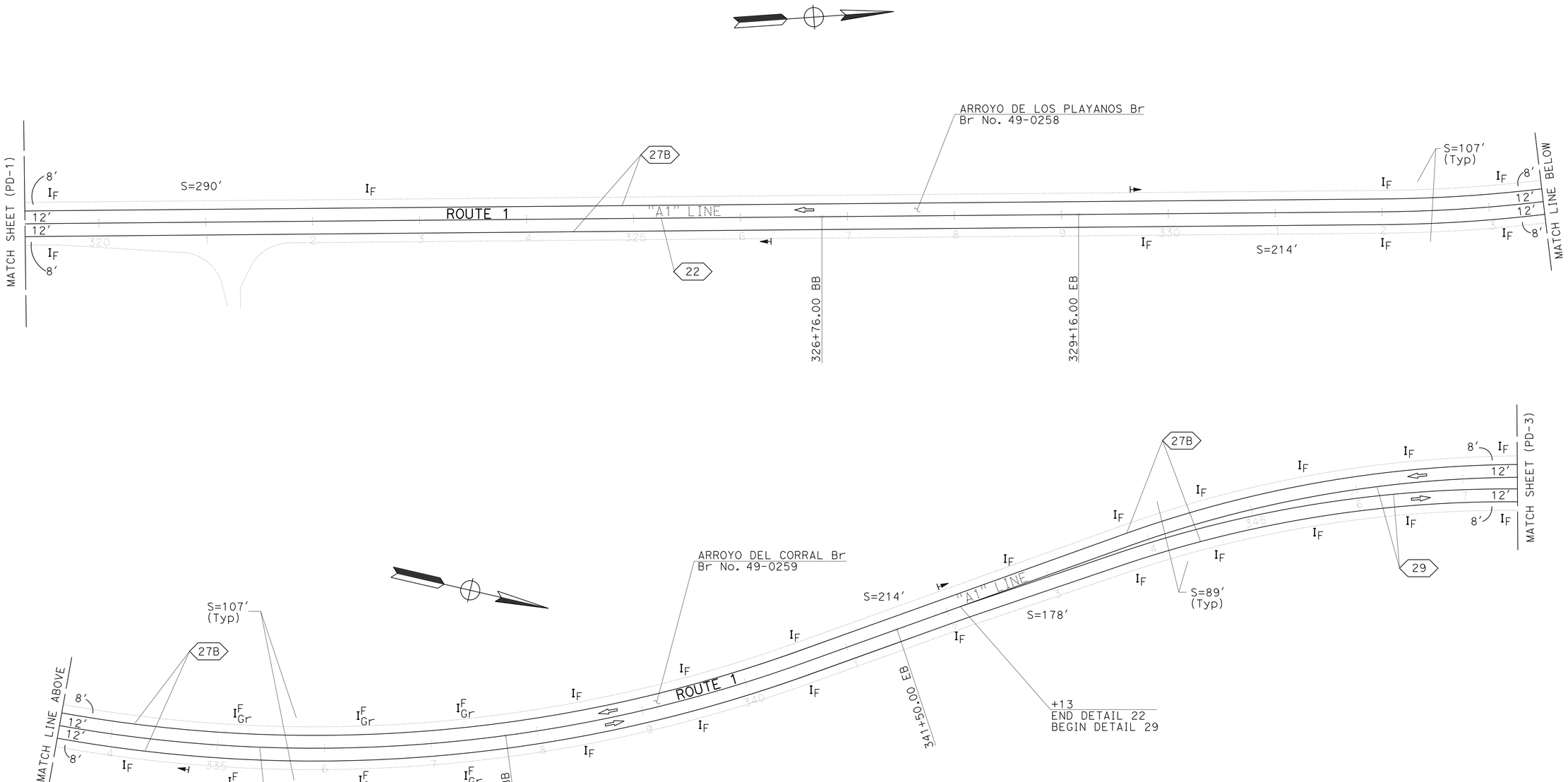

PAVEMENT DELINEATION AND SIGN PLAN

SCALE 1" = 50′ **PD-2**

APPROVED FOR PAVEMENT DELINEATION AND SIGN WORK ONLY

STATE OF CALIFORNIA - DEPARTMENT OF TRANSPORTATION
Caltrans
DESIGN

FUNCTIONAL SUPERVISOR: JOHN FOUCHE
CALCULATED-DESIGNED BY: CHRISTOPHER BAAB
CHECKED BY: DAVID BLACK
REVISED BY
DATE REVISED

LAST REVISION 10-27-14
DATE PLOTTED => 04-DEC-2014
TIME PLOTTED => 14:19

Dist	COUNTY	ROUTE	POST MILES TOTAL PROJECT	SHEET No.	TOTAL SHEETS
05	SLO	1	64.0/R66.9	133	265

Kyle Birch 10-27-14
REGISTERED CIVIL ENGINEER DATE

10-27-14
PLANS APPROVAL DATE

REGISTERED PROFESSIONAL ENGINEER
KYLE BIRCH
No. 74994
Exp. 12-31-15
CIVIL
STATE OF CALIFORNIA

THE STATE OF CALIFORNIA OR ITS OFFICERS OR AGENTS SHALL NOT BE RESPONSIBLE FOR THE ACCURACY OR COMPLETENESS OF SCANNED COPIES OF THIS PLAN SHEET.

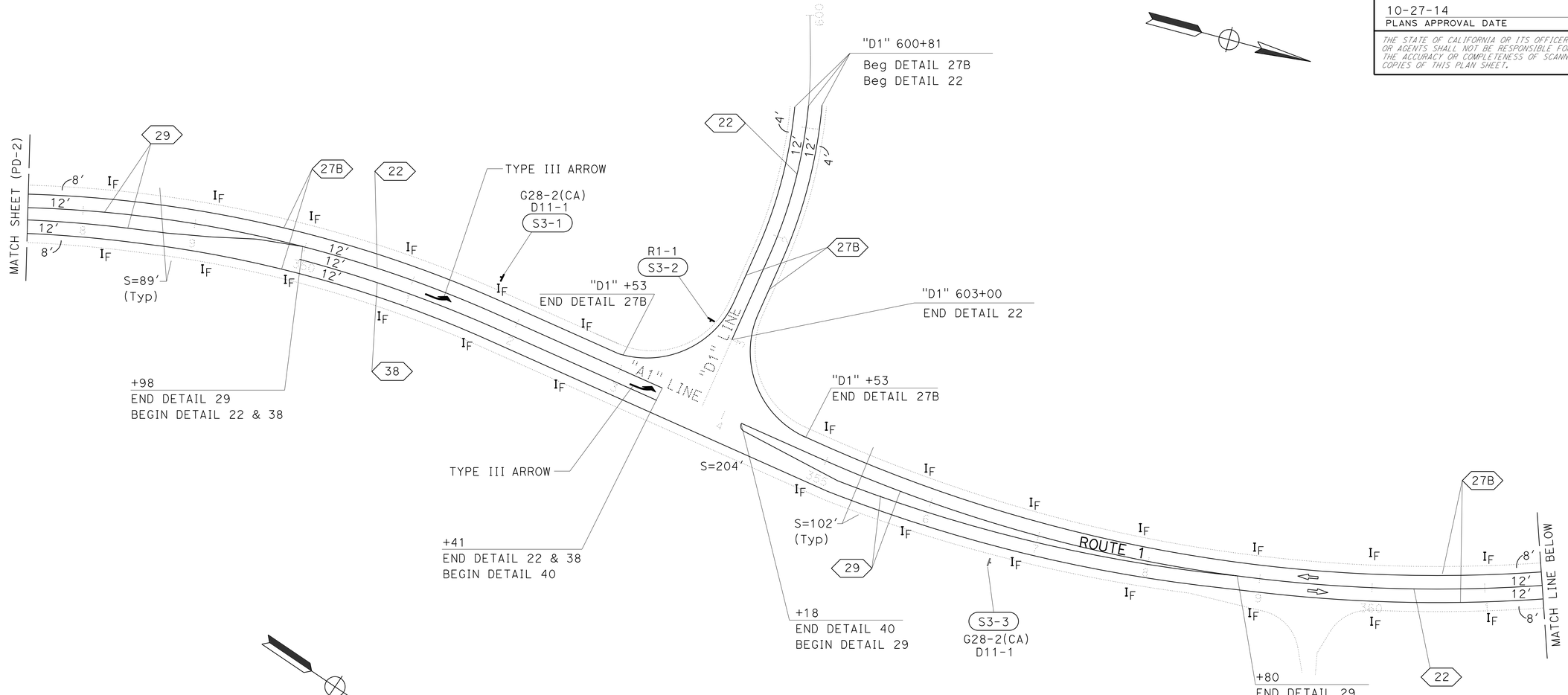

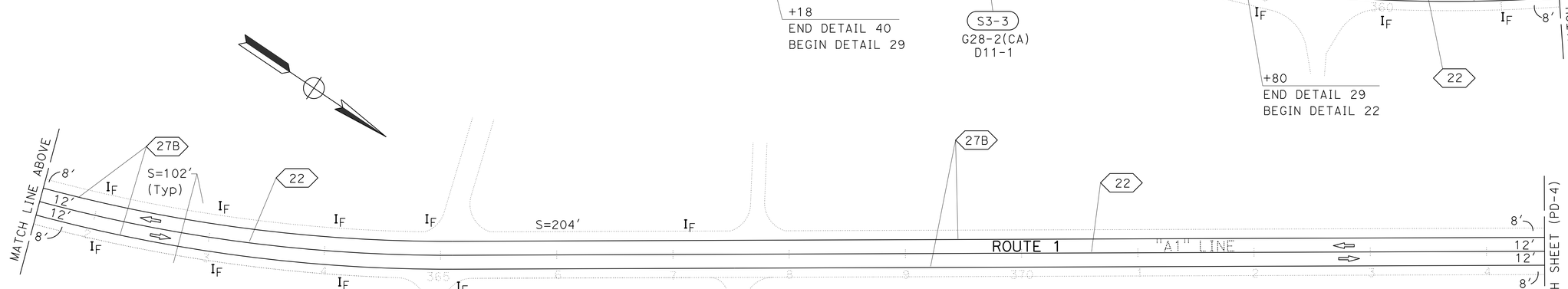

PAVEMENT DELINEATION AND SIGN PLAN

SCALE 1" = 50'

PD-3

APPROVED FOR PAVEMENT DELINEATION AND SIGN WORK ONLY

STATE OF CALIFORNIA - DEPARTMENT OF TRANSPORTATION
Caltrans®
DESIGN

FUNCTIONAL SUPERVISOR: JOHN FOUCHE
CALCULATED-DESIGNED BY: CHRISTOPHER BAAB
CHECKED BY: DAVID BLACK
REVISED BY
DATE REVISED

LAST REVISION 10-27-14
DATE PLOTTED => 29-DEC-2014
TIME PLOTTED => 11:07

Dist	COUNTY	ROUTE	POST MILES TOTAL PROJECT	SHEET No.	TOTAL SHEETS
05	SLO	1	64.0/R66.9	134	265

Kyle Birch 10-27-14
REGISTERED CIVIL ENGINEER DATE

10-27-14
PLANS APPROVAL DATE

REGISTERED PROFESSIONAL ENGINEER
KYLE BIRCH
No. 74994
Exp. 12-31-15
CIVIL
STATE OF CALIFORNIA

THE STATE OF CALIFORNIA OR ITS OFFICERS OR AGENTS SHALL NOT BE RESPONSIBLE FOR THE ACCURACY OR COMPLETENESS OF SCANNED COPIES OF THIS PLAN SHEET.

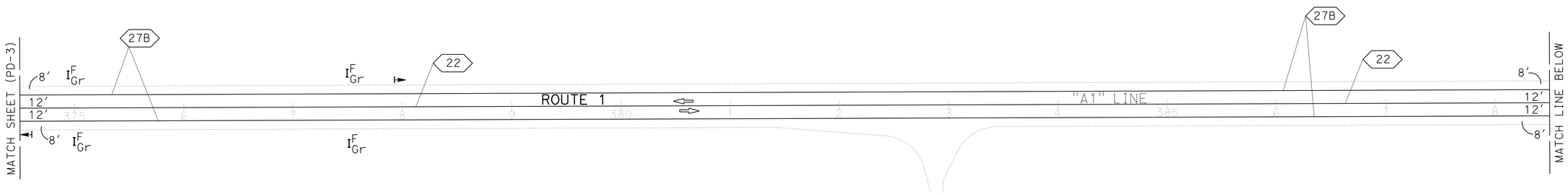

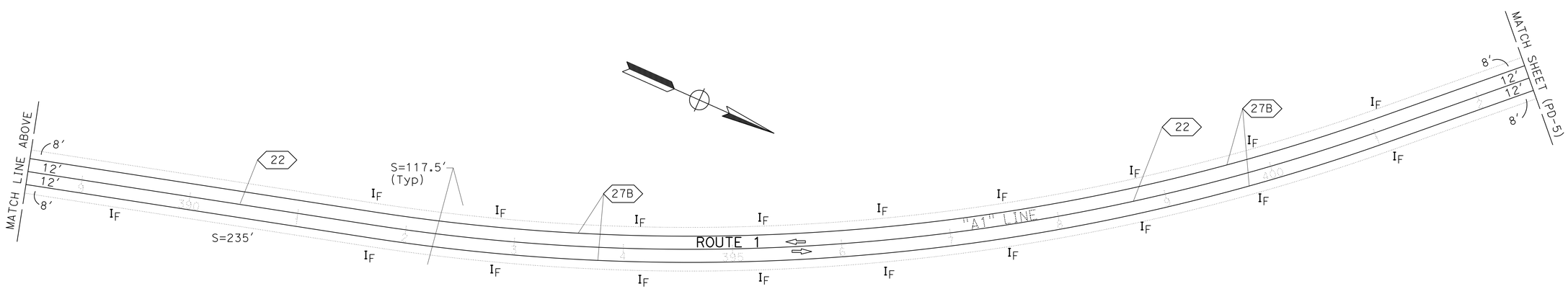

PAVEMENT DELINEATION AND SIGN PLAN

SCALE 1" = 50′ **PD-4**

APPROVED FOR PAVEMENT DELINEATION AND SIGN WORK ONLY

STATE OF CALIFORNIA - DEPARTMENT OF TRANSPORTATION
Caltrans
DESIGN

FUNCTIONAL SUPERVISOR: JOHN FOUCHE
CALCULATED-DESIGNED BY: CHRISTOPHER BAAB
CHECKED BY: DAVID BLACK
REVISED BY
DATE REVISED

LAST REVISION 10-27-14
DATE PLOTTED => 04-DEC-2014
TIME PLOTTED => 14:19

Dist	COUNTY	ROUTE	POST MILES TOTAL PROJECT	SHEET No.	TOTAL SHEETS
05	SLO	1	64.0/R66.9	135	265

Kyle Birch 10-27-14
REGISTERED CIVIL ENGINEER DATE

10-27-14
PLANS APPROVAL DATE

REGISTERED PROFESSIONAL ENGINEER
KYLE BIRCH
No. 74994
Exp. 12-31-15
CIVIL
STATE OF CALIFORNIA

THE STATE OF CALIFORNIA OR ITS OFFICERS OR AGENTS SHALL NOT BE RESPONSIBLE FOR THE ACCURACY OR COMPLETENESS OF SCANNED COPIES OF THIS PLAN SHEET.

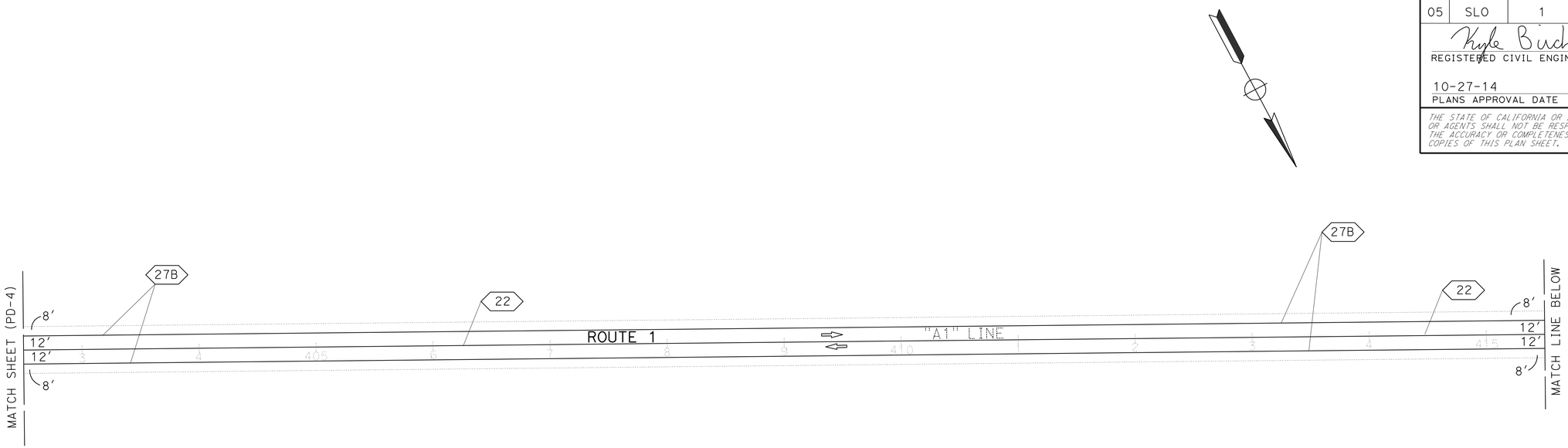

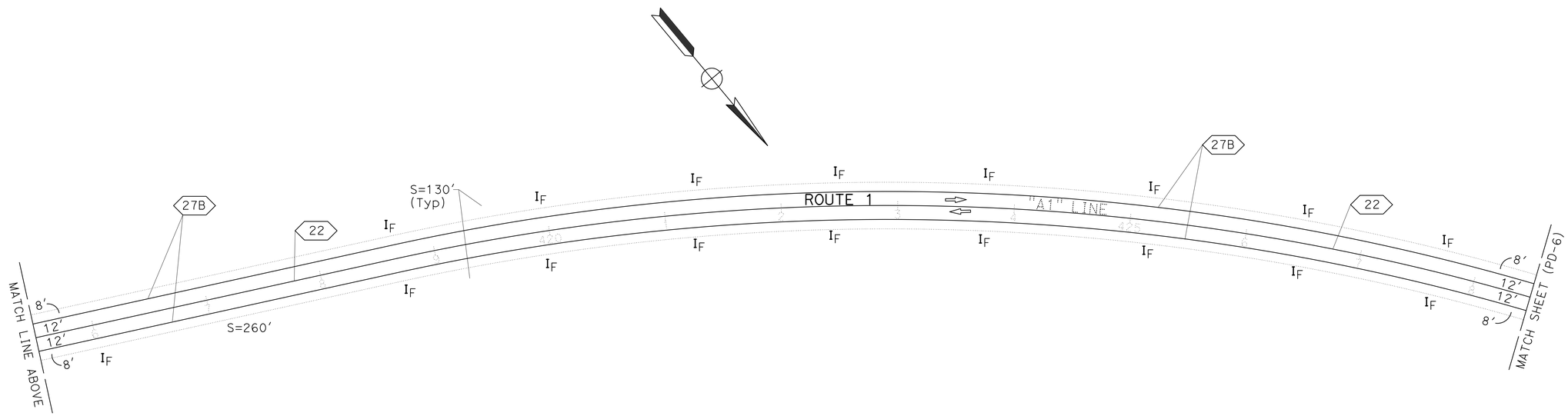

PAVEMENT DELINEATION AND SIGN PLAN

SCALE 1" = 50′ **PD-5**

APPROVED FOR PAVEMENT DELINEATION AND SIGN WORK ONLY

STATE OF CALIFORNIA - DEPARTMENT OF TRANSPORTATION
Caltrans®
DESIGN

FUNCTIONAL SUPERVISOR: JOHN FOUCHE
CALCULATED-DESIGNED BY: CHRISTOPHER BAAB
CHECKED BY: DAVID BLACK
REVISED BY
DATE REVISED

LAST REVISION 10-27-14
DATE PLOTTED => 04-DEC-2014
TIME PLOTTED => 14:19

Dist	COUNTY	ROUTE	POST MILES TOTAL PROJECT	SHEET No.	TOTAL SHEETS
05	SLO	1	64.0/R66.9	136	265

Kyle Birch 10-27-14
REGISTERED CIVIL ENGINEER DATE

10-27-14
PLANS APPROVAL DATE

REGISTERED PROFESSIONAL ENGINEER
KYLE BIRCH
No. 74994
Exp. 12-31-15
CIVIL
STATE OF CALIFORNIA

THE STATE OF CALIFORNIA OR ITS OFFICERS OR AGENTS SHALL NOT BE RESPONSIBLE FOR THE ACCURACY OR COMPLETENESS OF SCANNED COPIES OF THIS PLAN SHEET.

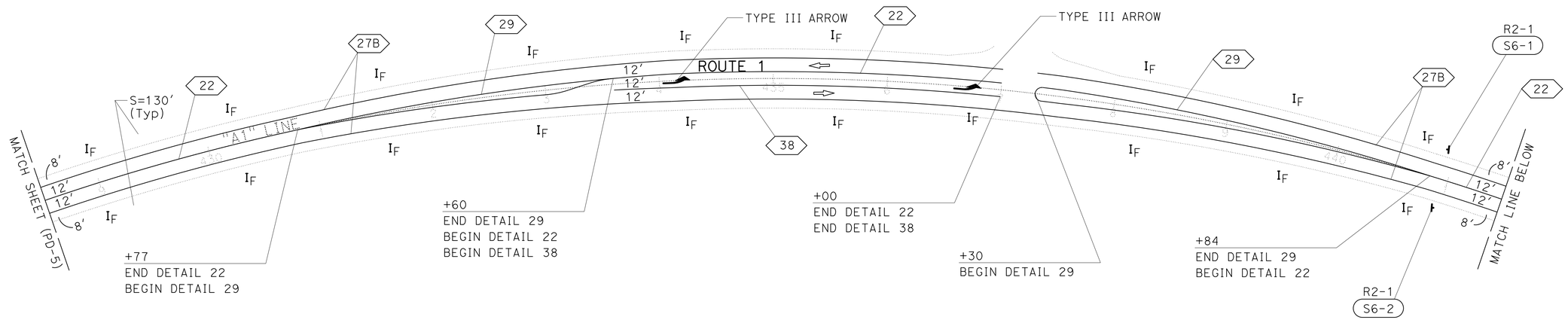

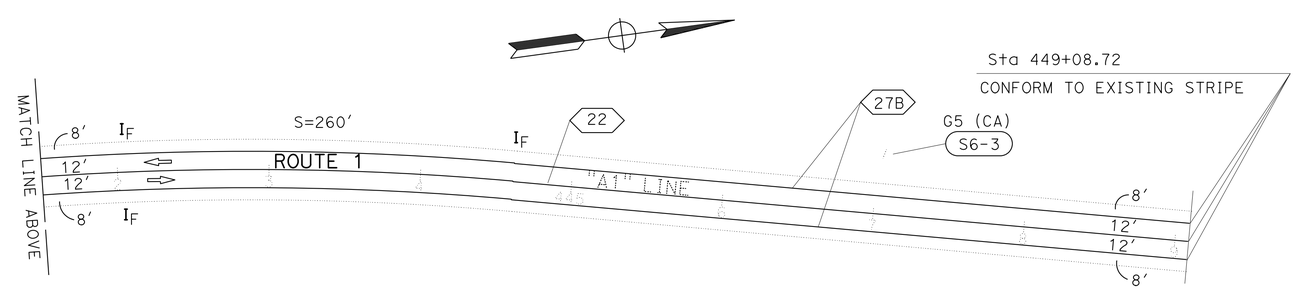

APPROVED FOR PAVEMENT DELINEATION AND SIGN WORK ONLY

PAVEMENT DELINEATION AND SIGN PLAN

SCALE 1" = 50' **PD-6**

STATE OF CALIFORNIA - DEPARTMENT OF TRANSPORTATION
Caltrans®
DESIGN

FUNCTIONAL SUPERVISOR: JOHN FOUCHE
CALCULATED-DESIGNED BY: CHRISTOPHER BAAB
CHECKED BY: DAVID BLACK
REVISED BY
DATE REVISED

LAST REVISION 10-27-14
DATE PLOTTED => 04-DEC-2014
TIME PLOTTED => 14:19

Dist	COUNTY	ROUTE	POST MILES TOTAL PROJECT	SHEET No.	TOTAL SHEETS
05	SLO	1	64.0/R66.9	137	265

Kyle Birch 10-27-14
REGISTERED CIVIL ENGINEER DATE

10-27-14
PLANS APPROVAL DATE

REGISTERED PROFESSIONAL ENGINEER
KYLE BIRCH
No. 74994
Exp. 12-31-15
CIVIL
STATE OF CALIFORNIA

THE STATE OF CALIFORNIA OR ITS OFFICERS OR AGENTS SHALL NOT BE RESPONSIBLE FOR THE ACCURACY OR COMPLETENESS OF SCANNED COPIES OF THIS PLAN SHEET.

NOTES:

1. EXACT LOCATION AND POSITION OF ROADSIDE SIGNS TO BE DETERMINED BY THE ENGINEER.
2. CALIFORNIA SIGN CODES ARE DESIGNATED BY (CA). OTHERWISE, FEDERAL SIGN CODES ARE SHOWN.

PAVEMENT DELINEATION QUANTITIES

SHEET No.	LOCATION/STATION	DIRECTION	DETAIL No.	4" THERMOPLASTIC TRAFFIC STRIPE		THERMOPLASTIC PAVEMENT MARKING	PAVEMENT MARKER (RETROREFLECTIVE)		DELINEATOR (CLASS 1)	GUARD RAILING DELINEATOR	OBJECT MARKER	DESCRIPTION/COMMENTS
				WHITE SOLID	YELLOW SOLID		TYPE D	TYPE G	TYPE F	TYPE F	TYPE L	
				LF	LF	SQFT	EA	EA	EA	EA	EA	
PD-1	"A1" 293+60 TO 319+31	NB,SB	27B	5,090					29			
	"A1" 293+60 TO 319+31	NB,SB	22		611		52					
	"A1" 299+71 TO 309+83	NB,SB	29		565		25					
	"A1" 302+53 TO 305+91	NB,SB	22		339		29					
	"A1" 302+53 TO 305+91	NB	38	337				15				
	"A1" 302+78	NB				42						TYPE III (L) ARROW
	"A1" 305+59	NB				42						TYPE III (L) ARROW
	"A1" 306+44 TO 309+83	NB,SB	29		685		30					
	"A1" 309+83 TO 319+31	NB,SB	22		948		80					
PD-2	"A1" 319+31 TO 347+51	NB,SB	27B	5,638					28	6	4	
	"A1" 319+31 TO 342+13	NB,SB	22		2,282		191					
	"A1" 342+13 TO 347+51	NB,SB	29		1,074		46					
PD-3	"A1" 347+51 TO 349+98	NB,SB	29		492		22					
	"A1" 347+51 TO 374+50	NB,SB	27B	5,166					35			
	"A1" 349+98 TO 353+41	NB,SB	22		343		30					
	"A1" 351+15	NB				42						TYPE III (L) ARROW
	"A1" 353+13	NB				42						TYPE III (L) ARROW
	"A1" 353+41 TO 354+18	NB,SB	40									
	"D1" 600+81 TO 603+53		27B	630								
	"D1" 600+81 TO 603+00		22		219		19					
	"A1" 354+18 TO 358+80	NB,SB	29		930		40					
	"A1" 358+80 TO 374+50	NB,SB	22		1,570		132					
PD-4	"A1" 374+50 TO 402+50	NB,SB	27B	5,600					19	4	2	
	"A1" 374+50 TO 402+50	NB,SB	22		2,800		234					
PD-5	"A1" 402+50 TO 428+50	NB,SB	27B	5,200					17			
	"A1" 402+50 TO 428+50	NB,SB	22		2,600		218					
PD-6	"A1" 428+50 TO 449+09	NB,SB	27B	4088					23			
	"A1" 428+50 TO 430+77	NB,SB	22		277		24					
	"A1" 430+77 TO 433+60	NB,SB	29		564		25					
	"A1" 433+60 TO 437+00	NB,SB	22		341		29					
	"A1" 433+60 TO 437+00	NB	38	339				15				
	"A1" 434+15	NB				42						TYPE III (L) ARROW
	"A1" 436+70	NB				42						TYPE III (L) ARROW
	"A1" 438+30 TO 440+84	NB,SB	29		715		31					
	"A1" 440+84 TO 449+09	NB,SB	22		825		70					
SUBTOTAL				32,088	18,180		1,327	30				
TOTAL				50,268		252	1,357		151	10	6	

STATE OF CALIFORNIA - DEPARTMENT OF TRANSPORTATION
DESIGN
Caltrans

FUNCTIONAL SUPERVISOR: JOHN FOUCHE
CALCULATED-DESIGNED BY: CHRISTOPHER BAAB
CHECKED BY: DAVID BLACK
REVISED BY
DATE REVISED

PAVEMENT DELINEATION QUANTITIES
PDQ-1

Dist	COUNTY	ROUTE	POST MILES TOTAL PROJECT	SHEET No.	TOTAL SHEETS
05	SLO	1	64.0/R66.9	138	265

Kyle Birch 10-27-14
REGISTERED CIVIL ENGINEER DATE

10-27-14
PLANS APPROVAL DATE

REGISTERED PROFESSIONAL ENGINEER
KYLE BIRCH
No. 74994
Exp. 12-31-15
CIVIL
STATE OF CALIFORNIA

THE STATE OF CALIFORNIA OR ITS OFFICERS OR AGENTS SHALL NOT BE RESPONSIBLE FOR THE ACCURACY OR COMPLETENESS OF SCANNED COPIES OF THIS PLAN SHEET.

S6-3 SIGN DETAIL

ROADSIDE SIGN PANEL QUANTITIES

SHEET No.	SIGN No. (SX-X)	SIGN CODE FEDERAL	SIGN CODE CALIFORNIA	SIGN MESSAGE/ DESCRIPTION	PANEL SIZE L x D INCHES	PANEL AREA SQFT	BACKGROUND SHEETING COLOR	BACKGROUND RETROREFLECTIVITY ASTM TYPE	LEGEND SHEETING COLOR	LEGEND RETROREFLECTIVITY ASTM TYPE	PROTECTIVE OVERLAY PREMIUM	REMOVE ROADSIDE SIGN EA	ROADSIDE SIGN TWO POST EA	ROADSIDE SIGN ONE POST EA	FURNISH SINGLE SHEET ALUMINUM SIGN UNFRAMED 0.063" SQFT	FURNISH SINGLE SHEET ALUMINUM SIGN FRAMED 0.080" SQFT
PD-1	S1-1	R2-1		SPEED LIMIT 55 MPH	24 X 30	5.00	WHITE	IX	BLACK					1	5.00	
	S1-2	R2-1		SPEED LIMIT 55 MPH	24 X 30	5.00	WHITE	IX	BLACK					1	5.00	
PD-3	S3-1		G28-2(CA)	CALIFORNIA 1	25 X 24	4.17	GREEN	XI	WHITE		X			1	4.17	
		D11-1		BIKE ROUTE	24 X 18	3.00	BLUE	XI	WHITE		X				3.00	
	S3-2	R1-1		STOP	30 X 30	6.25	RED	XI	WHITE		X			1	6.25	
	S3-3		G28-2(CA)	CALIFORNIA 1	25 X 24	4.17	GREEN	XI	WHITE		X			1	4.17	
		D11-1		BIKE ROUTE	24 X 18	3.00	BLUE	XI	WHITE		X				3.00	
L-5			G28-2(CA)	CALIFORNIA 1								1				
			G28-2(CA)	CALIFORNIA 1								1				
PD-6	S6-1	R2-1		SPEED LIMIT 55 MPH	24 X 30	5.00	WHITE	IX	BLACK					1	5.00	
	S6-2	R2-1		SPEED LIMIT 55 MPH	24 X 30	5.00	WHITE	IX	BLACK					1	5.00	
	S6-3	R2-1	G5(CA)	San Simeon 6 San Luis Obispo 52 Los Angeles 256				XI				1	1			31.50
L-11		W1-2		CAUTION (LEFT TURN) 45 MPH								1				
											TOTAL	4	1	7	40.59	31.50

SIGN DETAILS AND QUANTITIES

NO SCALE

SQ-1

STATE OF CALIFORNIA - DEPARTMENT OF TRANSPORTATION
Caltrans® DESIGN

FUNCTIONAL SUPERVISOR: JOHN FOUCHE
CALCULATED-DESIGNED BY: ASHRAF RAHIM
CHECKED BY: KYLE BIRCH
REVISED BY
DATE REVISED

LAST REVISION 10-27-14
DATE PLOTTED => 29-DEC-2014
TIME PLOTTED => 11:09

Dist	COUNTY	ROUTE	POST MILES TOTAL PROJECT	SHEET No.	TOTAL SHEETS
05	SLO	1	64.0/R66.9	139	265

Kyle Birch 10-27-14
REGISTERED CIVIL ENGINEER DATE

10-27-14
PLANS APPROVAL DATE

REGISTERED PROFESSIONAL ENGINEER
KYLE BIRCH
No. 74994
Exp. 12-31-15
CIVIL
STATE OF CALIFORNIA

THE STATE OF CALIFORNIA OR ITS OFFICERS OR AGENTS SHALL NOT BE RESPONSIBLE FOR THE ACCURACY OR COMPLETENESS OF SCANNED COPIES OF THIS PLAN SHEET.

EARTHWORK QUANTITIES SUMMARY

STATION	ROADWAY EXCAVATION	EMBANKMENT (N)	ROADWAY EXCAVATION (SELECTED MATERIAL) (TOPSOIL) TYPE A	TYPE B	TYPE C	TYPE D	EMBANKMENT (N) (SELECTED MATERIAL) (TOPSOIL)	REMOVE ROCK SLOPE PROTECTION	REMOVE BASE AND SURFACING
	CY	CY	CY	CY	CY	CY	CY	TON	CY
"A1" 293+60.00 TO 326+76.00	20,108	11,206							
"A1" 329+16.00 TO 337+70.00	1,740	18,862							
"A1" 341+50.00 TO 375+24.00	16,291	25,395							
"A1" 375+24.00 TO 449+08.63	144,088	64,237							
"B1" 301+15.77 TO 343+00.00	9,592	11,983							7,617
"B1" 358+86.74 TO 439+50.00	2,277	11,320							15,794
"B1" 365+36.75 TO 374+51.49								42,780	
"B1" 389+12.79 TO 391+80.52								4,220	
"S1" 100+00.00 TO 100+81.97	568	4							
"HS1" 100+20.00 TO 100+80.00	58	3							
"D1" 600+81.24 TO 603+44.32	170	444							
"E1" 100+20.00 TO 103+07.31	7	91							
"F1" 100+20.00 TO 100+92.91	11	138							
"F2" 100+56.64 TO 101+34.12	13	76							
"G1" 100+20.00 TO 102+10.50	36	166							
"G2" 100+00.00 TO 101+83.60	23	610							
"HN1" 100+20.00 TO 100+80.00	66	1							
"J1" 100+00.00 TO 102+52.89	107	57							
*			30,775	988	4,769	7,833	44,365		
TOTAL	195,155	144,593	44,365				44,365	47,000	23,412

(N) - NOT A SEPARATE PAY ITEM, FOR INFORMATION ONLY
(*) - SEE SHEETS C-13 TO C-24 & EC-1 TO EC-12

CLEARING AND GRUBBING

SHEET No.	STATION	DUFF (COLLECT) (N)	OBJECTIONAL MATERIAL REMOVAL (N)				TREE REMOVAL (N)				
		SQFT	SIDE Lt	SIDE Rt	TYPE	SQFT	SPECIES	OFFSET, ft Rt	OFFSET, ft Lt	EA
L-3	"B1" 330+88.54						CYPRESS	34.10		1
L-4	"B1" 340+08.90						EUCALYPTUS	25.75		1
L-7	"A1" 376+16.80						WILLOW		9.20	2
L-11	"A1" 440+39.65						MONTEREY PINE	77.10		1
L-11	"A1" 441+10.00						MONTEREY PINE	24.15		1
L-11	"A1" 441+44.10						MONTEREY PINE	54.32		1
C-18	"B1" 362+72.00 TO 364+08.00			X	CARPOBROTUS	3,014				
C-18	"B1" 364+18.00 TO 364+78.00			X	CARPOBROTUS	2,288				
C-18	"B1" 365+22.00 TO 365+55.00			X	CARPOBROTUS	269				
C-18	"B1" 365+85.00 TO 366+88.00			X	CARPOBROTUS	1,342				
C-18	"B1" 367+08.00 TO 367+24.00			X	CARPOBROTUS	228				
C-19	"B1" 372+21.00 TO 373+28.00		X		CARPOBROTUS	956				
C-19	"B1" 378+74.00 TO 379+82.00		X		CARPOBROTUS	1,903				
C-19	"B1" 382+51.00 TO 383+31.00		X		CARPOBROTUS	1,001				
C-20	"B1" 387+89.00 TO 388+08.00		X		CARPOBROTUS	155				
C-20	"B1" 394+60.00 TO 394+67.00		X		CARPOBROTUS	20				
C-20	"B1" 395+08.00 TO 395+28.00		X		CARPOBROTUS	88				
C-13 TO C-24		387,414								
TOTAL		387,414				11,264				7

(N) - NOT A SEPARATE PAY ITEM, FOR INFORMATION ONLY

MIDWEST GUARDRAIL SYSTEM

STATION	LOCATION	MGS LAYOUT TYPE	MGS (WOOD POST)	ALTERNATIVE FLARED TERMINAL SYSTEM	ALTERNATIVE IN-LINE TERMINAL SYSTEM	TRANSITION RAILING (TYPE WB-31)	VEGETATION CONTROL (MINOR CONCRETE)	REMOVE GUARDRAIL
			LF	EA	EA	EA	SQYD	LF
"A1" 325+95.00 TO 326+55.50	Rt	12B		1		1		
"A1" 325+82.00 TO 326+57.50	Rt						35.0	
"A1" 325+95.00 TO 326+55.50	Lt	12BB		1		1		
"A1" 325+82.00 TO 326+57.50	Lt						35.0	
"A1" 329+36.50 TO 329+99.00	Rt	12BB		1		1		
"A1" 329+34.50 TO 330+08.00	Rt						34.0	
"A1" 329+36.50 TO 329+99.00	Lt	12B		1		1		
"A1" 329+34.50 TO 330+08.00	Lt						34.0	
"A1" 334+48.00 TO 337+48.00	Rt	12A			1	1		
"A1" 335+00.00 TO 337+23.00	Rt		223.0					
"A1" 334+42.00 TO 337+50.00	Rt						101.0	
"A1" 334+48.00 TO 337+48.00	Lt	12AA			1	1		
"A1" 335+00.00 TO 337+23.00	Lt		223.0					
"A1" 334+42.00 TO 337+50.00	Lt						101.0	
"A1" 341+72.00 TO 342+34.00	Rt	12B		1		1		
"A1" 341+70.50 TO 342+48.50	Rt						37.8	
"A1" 341+72.00 TO 342+34.00	Lt	12BB		1		1		
"A1" 341+70.50 TO 342+48.50	Lt						37.8	
"A1" 374+40.00 TO 375+02.50	Rt	12B		1		1		
"A1" 374+30.00 TO 375+04.50	Rt						33.8	
"A1" 374+40.00 TO 375+02.50	Lt	12BB		1		1		
"A1" 374+30.00 TO 375+04.50	Lt						33.8	
"A1" 377+57.50 TO 378+20.00	Rt	12BB		1		1		
"A1" 377+55.50 TO 378+35.00	Rt						33.8	
"A1" 377+57.50 TO 378+20.00	Lt	12B		1		1		
"A1" 377+55.50 TO 378+35.00	Lt						33.8	
"B1" 329+17.50 TO 331+75.00	Lt							257.5
"B1" 329+17.50 TO 331+16.00	Rt							198.5
"B1" 358+00.00 TO 360+45.00	Lt							245.0
"B1" 357+20.00 TO 359+69.50	Rt							249.5
"B1" 369+78.00 TO 371+65.00	Rt							187.0
TOTAL			446.0	10	2	12	550.8	1,137.5

SUMMARY OF QUANTITIES
Q-1

REVISED BY	A. RAHIM
DATE REVISED	08-21-12
CALCULATED-DESIGNED BY	ASHRAF RAHIM
CHECKED BY	KYLE BIRCH
FUNCTIONAL SUPERVISOR	JOHN FOUCHE

STATE OF CALIFORNIA - DEPARTMENT OF TRANSPORTATION
Caltrans
DESIGN

LAST REVISION 10-27-14
DATE PLOTTED => 04-DEC-2014
TIME PLOTTED => 14:19

Dist	COUNTY	ROUTE	POST MILES TOTAL PROJECT	SHEET No.	TOTAL SHEETS
05	SLO	1	64.0/R66.9	140	265

Kyle Birch 10-27-14
REGISTERED CIVIL ENGINEER DATE

10-27-14
PLANS APPROVAL DATE

REGISTERED PROFESSIONAL ENGINEER KYLE BIRCH No. 74994 Exp. 12-31-15 CIVIL STATE OF CALIFORNIA

THE STATE OF CALIFORNIA OR ITS OFFICERS OR AGENTS SHALL NOT BE RESPONSIBLE FOR THE ACCURACY OR COMPLETENESS OF SCANNED COPIES OF THIS PLAN SHEET.

PAVEMENT STRUCTURE

SHEET No.	STATION	HOT MIX ASPHALT (TYPE A)	TACK COAT	CLASS 2 AGGREGATE BASE (CY)	CLASS 3 AGGREGATE SUBBASE	CLASS 1 PERMEABLE MATERIAL (BLANKET)	SUBGRADE ENHANCEMENT GEOTEXTILE CLASS B3	COLD PLANE ASPHALT CONCRETE PAVEMENT
		TON	TON	CY	CY	CY	SQYD	SQYD
L-1	"A1" 293+60.00 TO 294+10.00							230
L-1	"A1" 294+10.00 TO 303+50.00	1,820	0.77	556				
L-1 TO L-3	"A1" 303+50.00 TO 326+66.00	2,985	1.90	4,361				
L-3	"A1" 329+26.00 TO 330+98.00	207	0.15	302				
L-3 TO L-4	"A1" 330+98.00 TO 334+40.00	435	0.30	636		1,570	6,416	
L-4	"A1" 334+60.00 TO 337+60.00	360	0.25	527				
L-4 TO L-5	"A1" 341+60.00 TO 354+70.00	1,895	1.08	2,909				
L-5	"A1" 354+70.00 TO 356+97.00	338	0.19	520		1,138	4,658	
L-5 TO L-7	"A1" 356+97.00 TO 375+14.00	2,189	1.49	3,209				
L-7	"A1" 377+50.00 TO 379+33.00	219	0.15	321				
L-7	"A1" 379+33.00 TO 382+23.00	348	0.24	509		1,222	5,014	
L-7	"A1" 382+23.00 TO 387+00.00	573	0.40	837				
L-7 TO L-8	"A1" 387+00.00 TO 390+81.00	458	0.30	669		2,088	4,177	
L-8 TO L-12	"A1" 390+81.00 TO 442+38.14	6,537	4.23	9,305	1,077			
L-12	"A1" 442+38.14 TO 448+58.63	678	0.53	2				
L-12	"A1" 448+58.63 TO 449+08.63	12	0.01					230
L-1 TO L-2	"S1" 100+00.00 TO 100+81.97	32		144	414			
L-3	"HS1" 100+20.00 TO 100+80.00	47		109				
L-5	"D1" 600+81.24 TO 603+44.32	216		426				
L-5	"E1" 100+20.00 TO 100+80.00	43		96				
L-6	"F1" 100+20.00 TO 100+92.00	26		49				
L-6	"F2" 100+56.64 TO 101+34.12	15		49				
L-6	"G1" 100+20.00 TO 102+10.50	11		80				
L-6	"G2" 100+00.00 TO 101+83.60	13		96				
L-7	"HN1" 100+20.00 TO 100+80.00	52		119				
L-11	"J1" 100+00.00 TO 102+52.89			34	168			
SC-2 TO SC-4	"DETOUR 1" LINE	79		197				
L-1 TO L-12	HMA DIKE	129						
L-1 TO L-12	HMA SAFETY EDGE	318						
L-1 TO L-12	PLACE HMA (Misc AREA)	63						
	TOTAL	20,091	12.00	26,062	1,659	6,018	20,265	460

SAFETY EDGE

STATION	DIRECTION	(N) SAFETY EDGE	HMA (TYPE A)
		LF	TON
"A1" 294+10.00 TO 448+58.63	NB	15,449	159.2
"A1" 294+10.00 TO 448+58.63	SB	15,449	159.2
	TOTAL		318.4*

* QUANTITY INCLUDED IN PAVEMENT STRUCTURE TABLE
(N) - NOT A SEPARATE PAY ITEM, FOR INFORMATION ONLY

PLACE HOT MIX ASPHALT (MISCELLANEOUS AREA)

SHEET No.	LOCATION	(N) LENGTH	PLACE HMA (Misc AREA)	HMA
		LF	SQYD	TON
L-1	HMA VALLEY GUTTER "S1" 100+48.00	31.8	4.2	0.7
L-1 TO L-2	SIDE GUTTER Lt, "S1" 100+48.00 TO Lt ES,"A1" 310+99.00	501.8	163.2	27.5
D-2	OSD Rt ES, "A1" 313+50.00	21.5	10.1	1.7
D-2	OSD Rt ES, "A1" 318+00.00	20.0	8.1	1.4
D-3	OSD Lt ES, "A1" 329+45.20	14.8	6.3	1.1
D-3	OSD Rt ES, "A1" 329+46.50	26.9	10.6	1.8
D-4	OSD Lt ES, "A1" 341+75.00	38.0	11.8	2.0
D-4	OSD Rt ES, "A1" 345+00.00	35.3	16.1	2.7
D-5	OSD Rt ES, "A1" 350+50.00	16.5	6.8	1.1
D-6	OSD Rt ES, "A1" 368+50.00	21.9	8.8	1.5
D-6	OSD Rt ES, "A1" 373+47.00	53.5	21.7	3.7
D-7	OSD Lt ES, "A1" 377+67.50	23.1	9.3	1.6
D-7	OSD Rt ES, "A1" 377+67.50	19.2	7.7	1.3
D-8	OSD Rt ES, "A1" 393+57.78	21.4	7.8	1.3
L-8	SIDE GUTTER Rt ES, "A1" 393+57.78 TO 396+00.00	245.1	81.7	13.8
	TOTAL		374.2	63.2*

* QUANTITY INCLUDED IN PAVEMENT STRUCTURE TABLE
(N) - NOT A SEPARATE PAY ITEM, FOR INFORMATION ONLY

TEMPORARY WATER POLLUTION CONTROL QUANTITIES

SHEET No.	STATION	TEMPORARY LARGE SEDIMENT BARRIER	TEMPORARY FIBER ROLL (TYPE 2)	TEMPORARY CHECK DAM (TYPE 2)	TEMPORARY HYDRAULIC MULCH (BONDED FIBER MATRIX)	TEMPORARY CONSTRUCTION ENTRANCE (TYPE 2)	TEMPORARY DRAINAGE INLET PROTECTION
		LF	LF	LF	SQYD	EA	EA
L-1 TO L-12	"A1" 293+60.00 TO 449+08.63	3,060	11,660	1,120	30,000	20	44
	TOTAL	3,060	11,660	1,120	30,000	20	44

PLACE HOT MIX ASPHALT DIKE

STATION	LOCATION	(TYPE D)	(TYPE E)	HMA (TYPE A)
		LF	LF	TON
"A1" 304+75.00 TO 310+99.00	Lt		638.6	26.4
"A1" 313+50.00 TO 318+00.00	Rt		446.7	18.3
"A1" 345+00.00 TO 350+50.00	Rt		536.0	22.1
"A1" 368+50.00 TO 373+50.00	Rt		500.0	20.7
"A1" 393+57.78 TO 396+00.00	Rt		244.8	10.1
"A1" 439+25.00 TO 446+85.00	Lt	760.0		31.4
TOTAL		760.0	2,366.1	129.0*

* QUANTITY INCLUDED IN PAVEMENT STRUCTURE TABLE

SUMMARY OF QUANTITIES

Q-2

STATE OF CALIFORNIA - DEPARTMENT OF TRANSPORTATION
DESIGN
Caltrans

FUNCTIONAL SUPERVISOR: JOHN FOUCHE
CALCULATED-DESIGNED BY: ASHRAF RAHIM
CHECKED BY: KYLE BIRCH
REVISED BY: A. RAHIM
DATE REVISED: 08-22-12

LAST REVISION 10-27-14
DATE PLOTTED => 04-DEC-2014
TIME PLOTTED => 14:19

Dist	COUNTY	ROUTE	POST MILES TOTAL PROJECT	SHEET No.	TOTAL SHEETS
05	SLO	1	64.0/R66.9	141	265

Kyle Birch 10-27-14
REGISTERED CIVIL ENGINEER DATE

10-27-14
PLANS APPROVAL DATE

REGISTERED PROFESSIONAL ENGINEER
KYLE BIRCH
No. 74994
Exp. 12-31-15
CIVIL
STATE OF CALIFORNIA

THE STATE OF CALIFORNIA OR ITS OFFICERS OR AGENTS SHALL NOT BE RESPONSIBLE FOR THE ACCURACY OR COMPLETENESS OF SCANNED COPIES OF THIS PLAN SHEET.

FENCE AND GATE SUMMARY

SHEET No.	STATION	LOCATION	FENCE (TYPE BW, 5 STRAND, WOOD POST)	FENCE (TYPE WM AND WS)	FENCE (TYPE WS)	14' METAL GATE	REMOVE FENCE (TYPE BW)	REMOVE FENCE	REMOVE GATE	TEMPORARY FENCE (TYPE ESA)	TEMPORARY FENCE (TYPE BW)	TEMPORARY FENCE (TYPE WM AND WS)	TEMPORARY FENCE (TYPE ERTEC)	SALVAGE TEMPORARY FENCE (TYPE ERTEC)	GATEWAY (N)
			LF	LF	LF	EA	LF	LF	EA	LF	LF	LF	LF	LF	EA
C-1	"A1" 293+60 TO 306+50	L+,R+	1,303		1,252					516	1,329				
C-2	"A1" 306+50 TO 319+50	L+,R+	1,276		1,324					2,691	1,283				
C-3	"A1" 319+50 TO 333+50	L+,R+	1,284		3,197					1,147	962	336	1,286	1,286	2
C-3	80.00' R+ "A1" 321+18.80	R+				1									
C-4	"A1" 333+50 TO 347+50	L+,R+	1,246	1,150	1,963					1,394	638	201	1,423	1,423	2
C-5	"A1" 347+50 TO 361+50	L+,R+	1,425		2,615					1,763	1,907				
C-5	80.14' R+ "A1" 359+43.39	R+				1									
C-6	"A1" 361+50 TO 374+50	L+,R+	1,312		2,077					1,633	762				1
C-6	72.04' L+ "A1" 365+15.98	L+				1									
C-6	68.50' L+ "A1" 367+70.50	L+				1									
C-7	"A1" 374+50 TO 388+50	L+,R+	1,434		3,427					3,447	776		918	918	2
C-7	80.00' R+ "A1" 382+81.68	L+,R+				1									
C-8	"A1" 388+50 TO 402+50	L+,R+	1,426		2,575					3,528	1,529				
C-9	"A1" 402+50 TO 415+50	L+,R+	1,300		1,453					4,001	1,451				
C-10	"A1" 415+50 TO 428+50	L+,R+	1,275		1,325					2,108	1,497				
C-11	"A1" 428+50 TO 441+50	L+,R+	1,258		264						1,235				
C-12	"A1" 441+50 TO 446+82	L+,R+	521							785	787				
L-1	"B1" 293+60 TO 306+64	L+					1,427								
L-1	"B1" 293+60 TO 306+64	R+					1,320								
L-2	"B1" 306+64 TO 320+49	L+					1,409								
L-2	"B1" 306+64 TO 320+49	R+					1,373								
L-3	"B1" 320+49 TO 334+43	L+					1,080								
L-3	"B1" 320+49 TO 334+43	R+					1,028								
L-3	40.31' R+ "B1" 325+28.61	R+							1						
L-4	"B1" 334+43 TO 347+50	L+					582	752							
L-4	"B1" 334+43 TO 347+50	R+					1,338								
L-5	"B1" 347+50 TO 360+61	L+					1,096	240							
L-5	"B1" 347+50 TO 360+61	R+					1,647								
L-5	65.41' R+ "B1" 359+52.34	R+							1						
L-6	"B1" 360+61 TO 372+38	L+					1,313								
L-6	"B1" 360+61 TO 372+38	R+					1,346								
L-7	"B1" 372+38 TO 386+47	L+					870								
L-7	"B1" 372+38 TO 386+47	R+					571								
L-7	27.50' R+ "B1" 375+84.17	R+							1						
L-8	"B1" 386+47 TO 398+70	L+					1,197								
L-8	"B1" 386+47 TO 398+70	R+					1,230								
L-9	"B1" 398+70 TO 411+72	L+					1,015								
L-9	"B1" 398+70 TO 411+72	R+					1,304								
L-10	"B1" 411+72 TO 425+50	L+					125								
L-10	"B1" 411+72 TO 425+50	R+					1,490								
L-11	"B1" 425+50 TO 426+74	L+					1,386								
L-11	"B1" 425+50 TO 438+87	R+					1,306								
L-12	"B1" 438+87 TO 444+25	R+					634								
		TOTAL	15,060	1,150	21,492	5	26,087	992	3	23,013	14,156	537	3,627	3,627	7

(N) - NOT A SEPARATE PAY ITEM, FOR INFORMATION ONLY

UTILITY ITEMS

SHEET No.	REMOVE WATER PIPELINE	1-1/2" DOMESTIC WATER LINE	6" CORRUGATED STEEL PIPE CONDUIT (0.64" THICK)
	LF	LF	LF
U-6	881	881	1,334
TOTAL	881	881	1,334

ROCK SLOPE PROTECTION SUMMARY

SHEET No.	LOCATION	RSP (No. 1, METHOD B) (CY)	FABRIC (CLASS 8)
		CY	SQYD
D-1	10' RSP LINED DITCH, "A1" 294+00.00 TO 296+25.00 R+	150.0	355.5
D-6,7	6' RSP LINED DITCH, "A1" 374+00.00 TO 375+34.74 R+	54.0	158.7
D-9	10' RSP LINED DITCH, "A1" 407+00.00 TO 412+50.00 R+	367.0	869.0
DQ-5	FROM DRAINAGE QUANTITIES SUMMARY TABLE	137.1	788.1
	TOTAL	708.1	2171.3

SALVAGE CONCRETE BARRIER (TYPE K)

STATION	SIDE	LF
"B1" 366+96.06 TO 373+33.58	L+	640
TOTAL		640

BOULDER

LOCATION				BOULDERS (COLLECT) (N)	BOULDERS
SHEET No.	STATION "A1" LINE	SIDE L+	SIDE R+	EA	EA
PP-3	367+58 TO 374+35		X		26
PP-3	368+65 TO 374+06	X			24
C-14	369+00 TO 375+50		X	50	
			TOTAL	50	50

(N) - NOT A SEPARATE PAY ITEM, FOR INFORMATION ONLY

SUMMARY OF QUANTITIES

Q-3

STATE OF CALIFORNIA - DEPARTMENT OF TRANSPORTATION
Caltrans®
DESIGN
FUNCTIONAL SUPERVISOR: JOHN FOUCHE
CALCULATED-DESIGNED BY: ASHRAF RAHIM
CHECKED BY: KYLE BIRCH
REVISED BY
DATE REVISED

LAST REVISION 10-27-14
DATE PLOTTED => 04-DEC-2014
TIME PLOTTED => 14:19

Dist	COUNTY	ROUTE	POST MILES TOTAL PROJECT	SHEET No.	TOTAL SHEETS
05	SLO	1	64.0/R66.9	142	265

Katherine Brown
LICENSED LANDSCAPE ARCHITECT

10-27-14
PLANS APPROVAL DATE

LICENSED LANDSCAPE ARCHITECT
KATHERINE BROWN No. 3267
Signature
5-31-16
Renewal Date
10-27-14
Date
STATE OF CALIFORNIA

THE STATE OF CALIFORNIA OR ITS OFFICERS OR AGENTS SHALL NOT BE RESPONSIBLE FOR THE ACCURACY OR COMPLETENESS OF SCANNED COPIES OF THIS PLAN SHEET.

NOTES:

1. FOR ACCURATE RIGHT OF WAY DATA, CONTACT RIGHT OF WAY ENGINEERING AT THE DISTRICT OFFICE.
2. SEE LAYOUT SHEETS FOR EASEMENTS.
3. SEE CONSTRUCTION DETAIL SHEETS FOR BOULDER COLLECTION AREAS.

LEGEND:

○ BOULDER (INSTALL MINIMUM 30 FEET FROM ETW PER PLANS PP-4 AND PP-5)

ESA ESA ENVIRONMENTALLY SENSITIVE AREA (ESA)

WILLOW CUTTINGS

SHEET	SYMBOL	DESCRIPTION	BOTANICAL NAME	COMMON NAME	EA
PP SHEETS		WILLOW CUTTINGS	SALIX LASIOLEPIS	ARROYO WILLOW	167
				TOTAL	167

WILLOW POLES

SHEET	SYMBOL	DESCRIPTION	BOTANICAL NAME	COMMON NAME	EA
PP SHEETS		WILLOW POLES	SALIX LASIOLEPIS	ARROYO WILLOW	33
				TOTAL	33

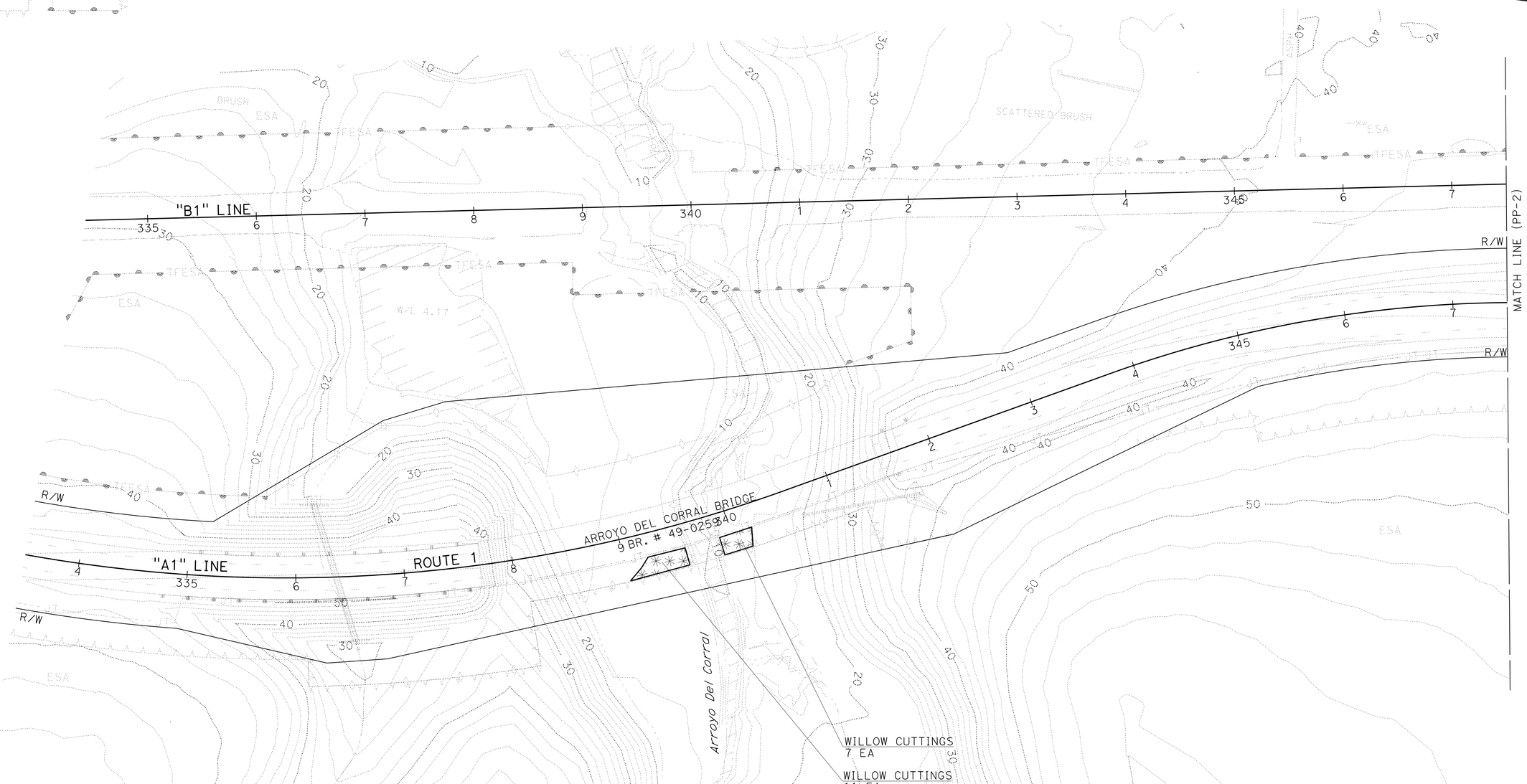

APPROVED FOR PLANTING WORK ONLY

SCALE: 1" = 50'

PLANTING PLAN
PP-1

STATE OF CALIFORNIA - DEPARTMENT OF TRANSPORTATION
Caltrans® LANDSCAPE ARCHITECTURE

SENIOR LANDSCAPE ARCHITECT: DENNIS REEVES
CALCULATED-DESIGNED BY: KATHERINE BROWN
CHECKED BY: KRISTEN LANGAGER
REVISED BY: KLB
DATE REVISED: 5/07/13

LAST REVISION 10-27-14
DATE PLOTTED => 04-DEC-2014
TIME PLOTTED => 14:19

Dist	COUNTY	ROUTE	POST MILES TOTAL PROJECT	SHEET No.	TOTAL SHEETS
05	SLO	1	64.0/R66.9	143	265

Katherine Brown
LICENSED LANDSCAPE ARCHITECT

10-27-14
PLANS APPROVAL DATE

LICENSED LANDSCAPE ARCHITECT
KATHERINE BROWN No. 3297
Signature
5-31-16
Renewal Date
10-27-14
Date
STATE OF CALIFORNIA

THE STATE OF CALIFORNIA OR ITS OFFICERS OR AGENTS SHALL NOT BE RESPONSIBLE FOR THE ACCURACY OR COMPLETENESS OF SCANNED COPIES OF THIS PLAN SHEET.

NOTE:

FOR ACCURATE RIGHT OF WAY DATA, CONTACT
RIGHT OF WAY ENGINEERING AT THE DISTRICT OFFICE.

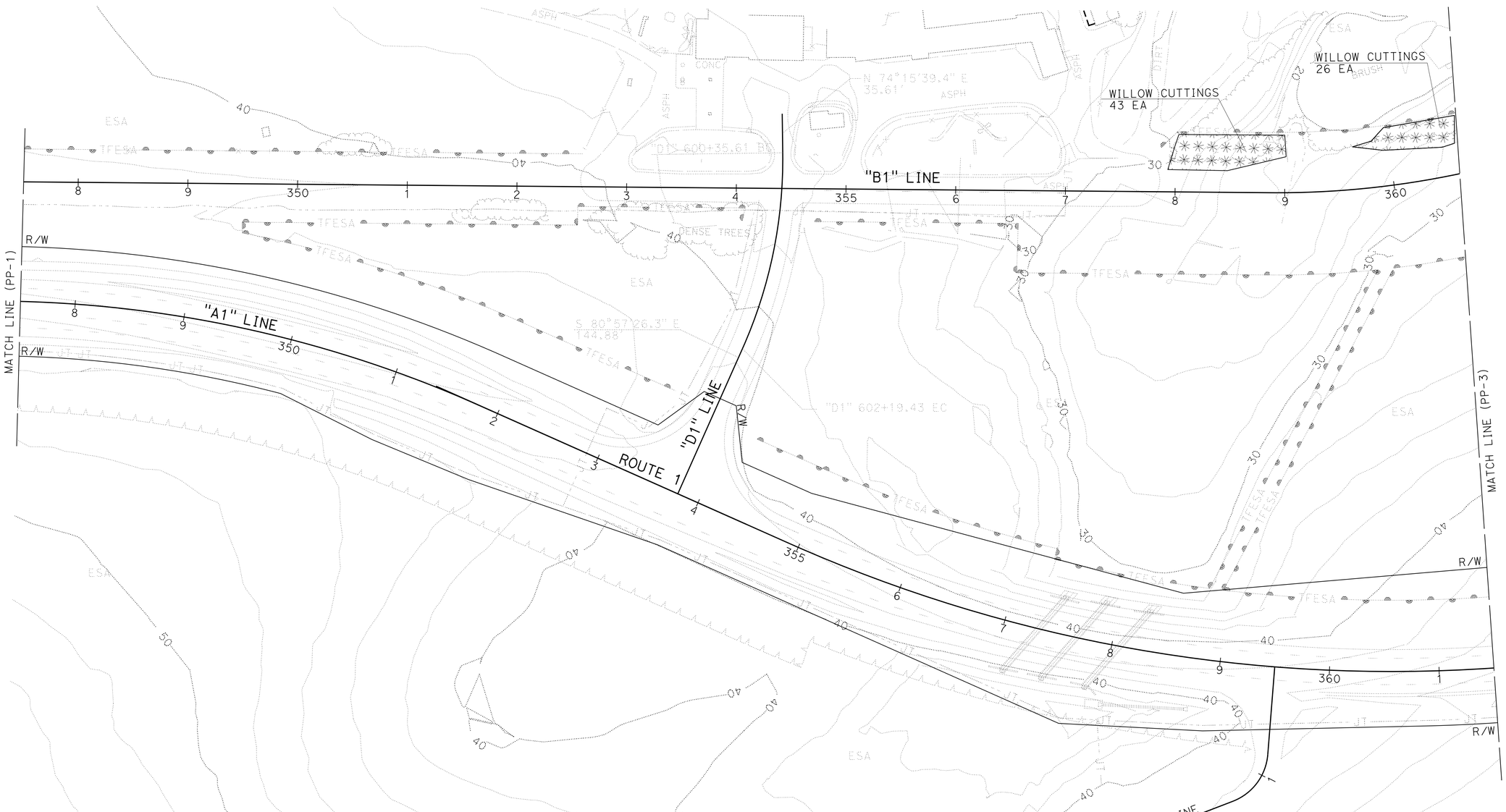

APPROVED FOR PLANTING WORK ONLY

SCALE: 1" = 50'

PLANTING PLAN
PP-2

STATE OF CALIFORNIA - DEPARTMENT OF TRANSPORTATION	SENIOR LANDSCAPE ARCHITECT	CALCULATED-DESIGNED BY	REVISED BY
Caltrans® LANDSCAPE ARCHITECTURE	DENNIS REEVES	CHECKED BY	DATE REVISED
		KRISTEN LANGAGER	5/07/13
		KATHERINE BROWN	KLB

LAST REVISION 10-27-14
DATE PLOTTED => 04-DEC-2014
TIME PLOTTED => 14:19

Dist	COUNTY	ROUTE	POST MILES TOTAL PROJECT	SHEET No.	TOTAL SHEETS
05	SLO	1	64.0/R66.9	144	265

Katherine Brown
LICENSED LANDSCAPE ARCHITECT

10-27-14
PLANS APPROVAL DATE

LICENSED LANDSCAPE ARCHITECT
KATHERINE BROWN, No. 3297
Signature
5-31-16
Renewal date
10-27-14
Date
STATE OF CALIFORNIA

THE STATE OF CALIFORNIA OR ITS OFFICERS OR AGENTS SHALL NOT BE RESPONSIBLE FOR THE ACCURACY OR COMPLETENESS OF SCANNED COPIES OF THIS PLAN SHEET.

NOTE:

FOR ACCURATE RIGHT OF WAY DATA, CONTACT RIGHT OF WAY ENGINEERING AT THE DISTRICT OFFICE.

PLANTING PLAN
PP-3

APPROVED FOR PLANTING WORK ONLY

SCALE: 1" = 50'

STATE OF CALIFORNIA - DEPARTMENT OF TRANSPORTATION
Caltrans® LANDSCAPE ARCHITECTURE

SENIOR LANDSCAPE ARCHITECT: DENNIS REEVES
CALCULATED-DESIGNED BY: KATHERINE BROWN
CHECKED BY: KRISTEN LANGAGER
REVISED BY: KLB
DATE REVISED: 5/07/13

LAST REVISION 10-27-14
DATE PLOTTED => 04-DEC-2014
TIME PLOTTED => 14:19

Dist	COUNTY	ROUTE	POST MILES TOTAL PROJECT	SHEET No.	TOTAL SHEETS
05	SLO	1	64.0/R66.9	145	265

Katherine Brown
LICENSED LANDSCAPE ARCHITECT

10-27-14
PLANS APPROVAL DATE

LICENSED LANDSCAPE ARCHITECT
KATHERINE BROWN No. 3297
Signature
5-31-16
Renewal Date
10-27-14
Date
STATE OF CALIFORNIA

THE STATE OF CALIFORNIA OR ITS OFFICERS OR AGENTS SHALL NOT BE RESPONSIBLE FOR THE ACCURACY OR COMPLETENESS OF SCANNED COPIES OF THIS PLAN SHEET.

NOTE:

FOR ACCURATE RIGHT OF WAY DATA, CONTACT
RIGHT OF WAY ENGINEERING AT THE DISTRICT OFFICE.

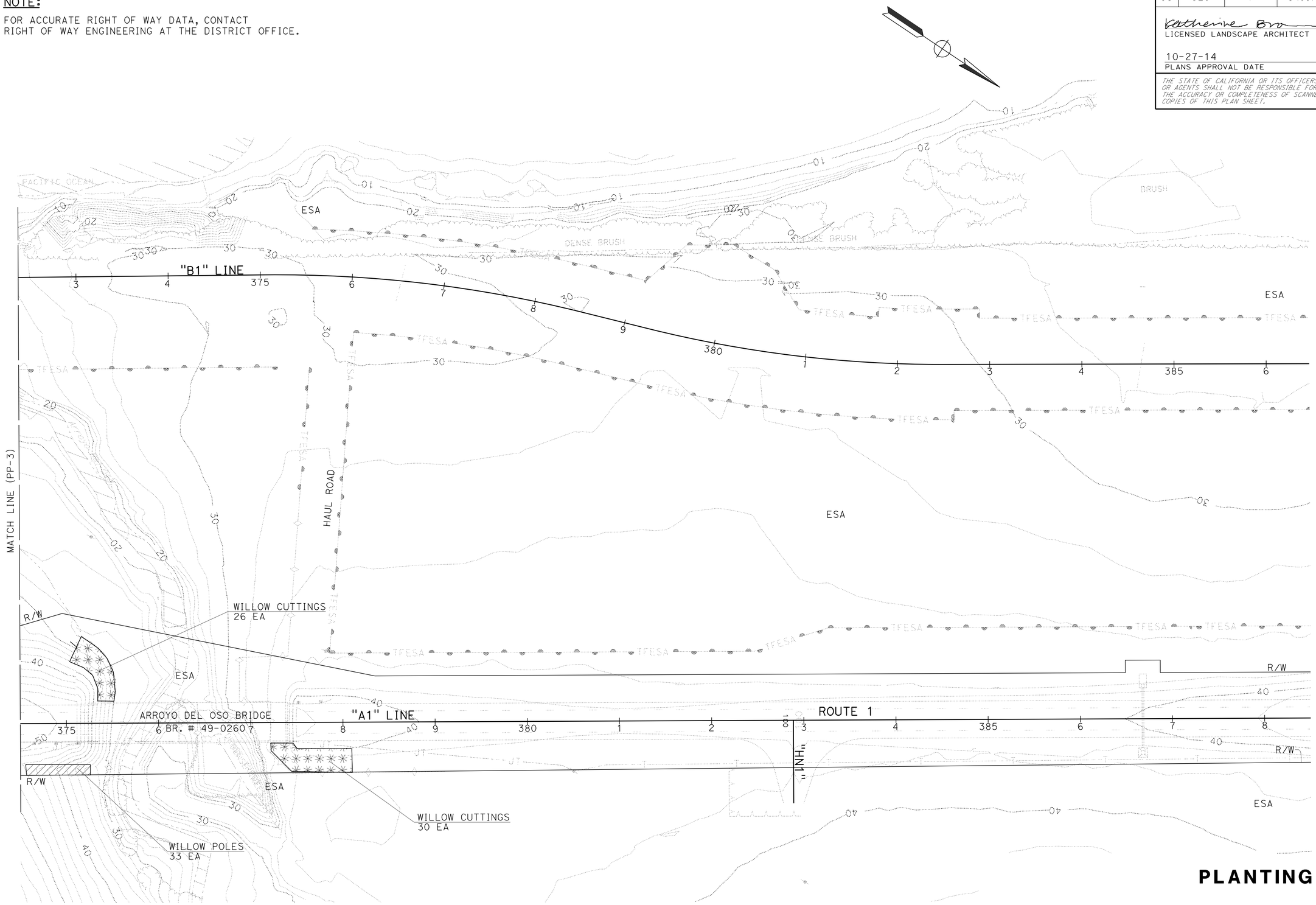

PLANTING PLAN
PP-4

APPROVED FOR PLANTING WORK ONLY

SCALE: 1" = 50'

STATE OF CALIFORNIA - DEPARTMENT OF TRANSPORTATION
Caltrans® LANDSCAPE ARCHITECTURE

SENIOR LANDSCAPE ARCHITECT: DENNIS REEVES
CALCULATED-DESIGNED BY: KATHERINE BROWN
CHECKED BY: KRISTEN LANGAGER
REVISED BY: KLB
DATE REVISED: 5/07/13

LAST REVISION
DATE PLOTTED => 04-DEC-2014
TIME PLOTTED => 14:19

Dist	COUNTY	ROUTE	POST MILES TOTAL PROJECT	SHEET No.	TOTAL SHEETS
05	SLO	1	64.0/R66.9	146	265

Katherine Brown
LICENSED LANDSCAPE ARCHITECT

10-27-14
PLANS APPROVAL DATE

LICENSED LANDSCAPE ARCHITECT
KATHERINE BROWN No. 3297
Signature
5-31-16
Renewal Date
10-27-14
Date
STATE OF CALIFORNIA

THE STATE OF CALIFORNIA OR ITS OFFICERS OR AGENTS SHALL NOT BE RESPONSIBLE FOR THE ACCURACY OR COMPLETENESS OF SCANNED COPIES OF THIS PLAN SHEET.

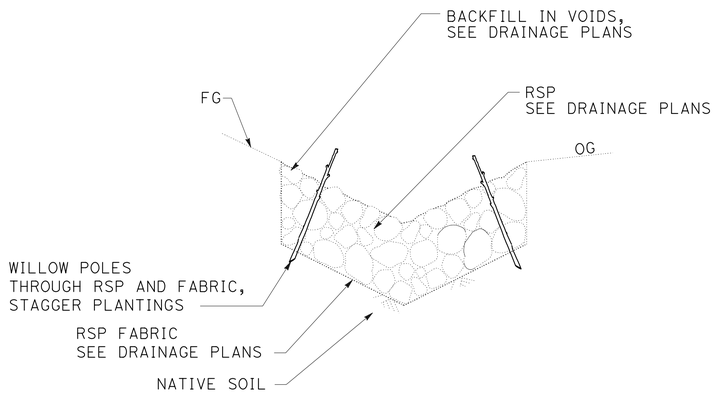

SECTION

WILLOW POLES

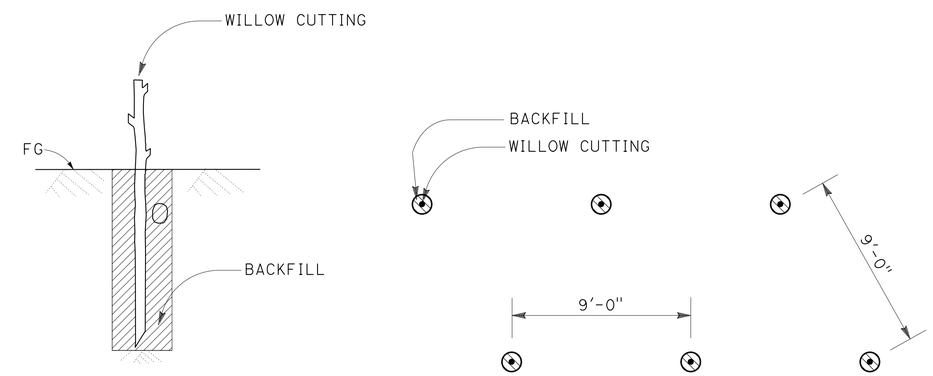

SECTION

PLAN

WILLOW CUTTINGS

LANDSCAPE DETAILS

NO SCALE

LD-1

STATE OF CALIFORNIA - DEPARTMENT OF TRANSPORTATION
Caltrans® LANDSCAPE ARCHITECTURE

SENIOR LANDSCAPE ARCHITECT: DENNIS REEVES
CALCULATED-DESIGNED BY: KATHERINE BROWN
CHECKED BY: KRISTEN LANGAGER
REVISED BY: KLB
DATE REVISED: 5/07/13

LAST REVISION 10-27-14
DATE PLOTTED => 04-DEC-2014
TIME PLOTTED => 14:19

Dist	COUNTY	ROUTE	POST MILES TOTAL PROJECT	SHEET No.	TOTAL SHEETS
05	SLO	1	64.0/R66.9	147	265

Katherine Brown
LICENSED LANDSCAPE ARCHITECT

10-27-14
PLANS APPROVAL DATE

LICENSED LANDSCAPE ARCHITECT
KATHERINE BROWN No. 3297
Signature
5-31-16
Renewal Date
10-27-14
Date
STATE OF CALIFORNIA

THE STATE OF CALIFORNIA OR ITS OFFICERS OR AGENTS SHALL NOT BE RESPONSIBLE FOR THE ACCURACY OR COMPLETENESS OF SCANNED COPIES OF THIS PLAN SHEET.

EROSION CONTROL TYPE 1
(COASTAL PRAIRIE-FLATTER THAN 2:1)

SEQUENCE	ITEM	MATERIAL		APPLICATION RATE	DEPTH
		DESCRIPTION	TYPE		
STEP 1	COMPOST (RATE 1)	COMPOST	MEDIUM	135 CY/ACRE	1 INCH
STEP 2	HYDROSEED (MIX 1)	SEED	MIX 1	37 LB/ACRE	-
		FIBER	WOOD	1500 LB/ACRE	-
		TACKIFIER	PSYLLIUM	125 LB/ACRE	-

EROSION CONTROL TYPE 2
(COASTAL PRAIRIE-STEEPER THAN 2:1)

SEQUENCE	ITEM	MATERIAL		APPLICATION RATE	DEPTH
		DESCRIPTION	TYPE		
STEP 1	COMPOST (RATE 1)	COMPOST	MEDIUM	135 CY/ACRE	1 INCH
STEP 2	HYDROSEED (MIX 1)	SEED	MIX 1	37 LB/ACRE	-
		FIBER	WOOD	1500 LB/ACRE	-
		TACKIFIER	PSYLLIUM	125 LB/ACRE	-
STEP 3	ROLLED EROSION CONTROL PRODUCT (NETTING)	NETTING	A	-	-

EROSION CONTROL TYPE 3
(COASTAL PRAIRIE-DISTURBED AREA)

SEQUENCE	ITEM	MATERIAL		APPLICATION RATE	DEPTH
		DESCRIPTION	TYPE		
STEP 1	HYDROSEED (MIX 1)	SEED	MIX 1	37 LB/ACRE	-
		FIBER	WOOD	1500 LB/ACRE	-
		TACKIFIER	PSYLLIUM	125 LB/ACRE	-

EROSION CONTROL TYPE 4
(COASTAL PRAIRIE WETLAND)

SEQUENCE	ITEM	MATERIAL		APPLICATION RATE	DEPTH
		DESCRIPTION	TYPE		
STEP 1	HYDROSEED (MIX 2)	SEED	MIX 2	36.5 LB/ACRE	-
		FIBER	WOOD	1500 LB/ACRE	-
		TACKIFIER	PSYLLIUM	125 LB/ACRE	-

EROSION CONTROL TYPE 5
(FRESH WATER SEEP WETLAND)

SEQUENCE	ITEM	MATERIAL		APPLICATION RATE	DEPTH
		DESCRIPTION	TYPE		
STEP 1	HYDROSEED (MIX 3)	SEED	MIX 3	8 LB/ACRE	-
		FIBER	WOOD	1500 LB/ACRE	-
		TACKIFIER	PSYLLIUM	125 LB/ACRE	-

EROSION CONTROL TYPE 6
(COASTAL SCRUB)

SEQUENCE	ITEM	MATERIAL		APPLICATION RATE	DEPTH
		DESCRIPTION	TYPE		
STEP 1	COMPOST (RATE 1)	COMPOST	MEDIUM	135 CY/ACRE	1 INCH
STEP 2	HYDROSEED (MIX 4)	SEED	MIX 4	27.7 LB/ACRE	-
		FIBER	WOOD	1500 LB/ACRE	-
		TACKIFIER	PSYLLIUM	125 LB/ACRE	-
STEP 3	DUFF	COASTAL SCRUB	-	-	-

EROSION CONTROL TYPE 7
(HAUL ROAD)

SEQUENCE	ITEM	MATERIAL		APPLICATION RATE	DEPTH
		DESCRIPTION	TYPE		
STEP 1	COMPOST (RATE 2)	COMPOST	MEDIUM	270 CY/ACRE	2 INCHES
STEP 2	INCORPORATE MATERIALS	COMPOST	-	-	8 INCHES
STEP 3	HYDROSEED (MIX 1)	SEED	MIX 1	37 LB/ACRE	-
		FIBER	WOOD	1500 LB/ACRE	-
		TACKIFIER	PSYLLIUM	125 LB/ACRE	-

COMPOST SOCK

SEQUENCE	ITEM	MATERIAL		REMARKS
		DESCRIPTION	TYPE	
IN EC AREAS COMPOST SOCKS MUST BE INSTALLED AFTER RECP (NETTING) AND AFTER HYDROSEED.	COMPOST SOCK	MESH TUBE	8" Dia COTTON	TYPE 2 INSTALLATION PLACE AT TOE OF SLOPE

COMPOST BERM

SEQUENCE	ITEM	MATERIAL		REMARKS
		DESCRIPTION	TYPE	
IN EC AREAS COMPOST BERMS MUST BE INSTALLED AFTER RECP (NETTING) AND AFTER HYDROSEED.	COMPOST BERM	COMPOST	-	-

EROSION CONTROL LEGEND
ECL-1

REVISED BY	DATE REVISED
KLB	5/07/13

KATHERINE BROWN — KRISTEN LANGAGER
CALCULATED-DESIGNED BY — CHECKED BY
SENIOR LANDSCAPE ARCHITECT — DENNIS REEVES

STATE OF CALIFORNIA - DEPARTMENT OF TRANSPORTATION
Caltrans® LANDSCAPE ARCHITECTURE

LAST REVISION 10-27-14 DATE PLOTTED => 04-DEC-2014 TIME PLOTTED => 14:19

Dist	COUNTY	ROUTE	POST MILES TOTAL PROJECT	SHEET No.	TOTAL SHEETS
05	SLO	1	64.0/R66.9	148	265

Katherine Brown
LICENSED LANDSCAPE ARCHITECT

10-27-14
PLANS APPROVAL DATE

LICENSED LANDSCAPE ARCHITECT
KATHERINE BROWN No. 3297
Signature
5-31-16
Renewal Date
10-27-14
Date
STATE OF CALIFORNIA

THE STATE OF CALIFORNIA OR ITS OFFICERS OR AGENTS SHALL NOT BE RESPONSIBLE FOR THE ACCURACY OR COMPLETENESS OF SCANNED COPIES OF THIS PLAN SHEET.

SEED MIX 1

BOTANICAL NAME (COMMON NAME)	PERCENT GERMINATION (MINIMUM)	POUNDS PURE LIVE SEED PER ACRE (SLOPE MEASUREMENT)
BROMUS CARINATUS (CALIFORNIA BROME)	40	6
DANTHONIA CALIFORNICA (CALIFORNIA OAT GRASS)	40	4
ELYMUS GLAUCUS (BLUE WILD RYE)	40	4
HORDEUM BRACHYANTHERUM (MEADOW BARLEY)	40	4
IRIS DOUGLASIANA (DOUGLAS IRIS)	40	2
LAYIA PLATYGLOSSA (TIDY-TIPS)	80	1
LUPINUS BICOLOR (INOCULATED) (PIGMY-LEAVED LUPINE)	40	3
LUPINUS NANUS (NATIVE SKY LUPINE)	35	4
MELICA CALIFORNICA (CALIFORNIA MELIC)	30	3
SISYRINCHIUM BELLUM (BLUE-EYED GRASS)	35	2
STIPA PULCHRA (PURPLE NEEDLEGRASS)	35	4
	TOTAL	37

SEED MIX 2

BOTANICAL NAME (COMMON NAME)	PERCENT GERMINATION (MINIMUM)	POUNDS PURE LIVE SEED PER ACRE (SLOPE MEASUREMENT)
BROMUS CARINATUS (CALIFORNIA BROME)	40	8
DANTHONIA CALIFORNICA (CALIFORNIA OAT GRASS)	40	4
ELYMUS GLAUCUS (BLUE WILD RYE)	40	4
HORDEUM BRACHYANTHERUM (MEADOW BARLEY)	40	6
IRIS DOUGLASIANA (DOUGLAS IRIS)	40	2
JUNCUS BUFONIUS (TOAD RUSH)	30	0.50
JUNCUS OCCIDENTALIS (WESTERN RUSH)	30	2
SISYRINCHIUM BELLUM (BLUE-EYED GRASS)	35	4
STIPA PULCHRA (PURPLE NEEDLEGRASS)	35	6
	TOTAL	36.50

NOTE:

SEED MUST BE COLLECTED IN CALIFORNIA FROM SOUTHERN MONTEREY OR SAN LUIS OBISPO COUNTIES BELOW THE 1,000 FOOT LEVEL.

SEED MIX 3

BOTANICAL NAME (COMMON NAME)	PERCENT GERMINATION (MINIMUM)	POUNDS PURE LIVE SEED PER ACRE (SLOPE MEASUREMENT)
JUNCUS ACUTUS (SPINY RUSH)	30	2
JUNCUS OCCIDENTALIS (WESTERN RUSH)	30	2
SISYRINCHIUM BELLUM (BLUE-EYED GRASS)	35	4
	TOTAL	8

SEED MIX 4

BOTANICAL NAME (COMMON NAME)	PERCENT GERMINATION (MINIMUM)	POUNDS PURE LIVE SEED PER ACRE (SLOPE MEASUREMENT)
ARTEMISIA CALIFORNICA (CALIFORNIA SAGEBRUSH)	30	1
BACCHARIS PILULARIS (CHAPARRAL BROOM)	20	0.10
BROMUS CARINATUS (CALIFORNIA BROME)	40	6
ERIOGONUM PARVIFOLIUM (SEACLIFF BUCKWHEAT)	20	2
ERIOPHYLLUM STAECHADIFOLIUM (SEASIDE WOOLLY SUNFLOWER)	20	2
MIMULUS AURANTIACUS (STICKY MONKEY FLOWER)	30	0.60
RHAMNUS CALIFORNICA (CALIFORNIA COFFEEBERRY)	35	5
SALVIA MELLIFERA (BLACK SAGE)	25	3
STIPA PULCHRA (PURPLE NEEDLEGRASS)	35	8
	TOTAL	27.70

EROSION CONTROL LEGEND
ECL-2

STATE OF CALIFORNIA - DEPARTMENT OF TRANSPORTATION
Caltrans® LANDSCAPE ARCHITECTURE

SENIOR LANDSCAPE ARCHITECT: DENNIS REEVES
CALCULATED-DESIGNED BY: KATHERINE BROWN
CHECKED BY: KRISTEN LANGAGER
REVISED BY: KLB
DATE REVISED: 5/07/13

LAST REVISION 10-27-14
DATE PLOTTED => 04-DEC-2014
TIME PLOTTED => 14:19

Dist	COUNTY	ROUTE	POST MILES TOTAL PROJECT	SHEET No.	TOTAL SHEETS
05	SLO	1	64.0/R66.9	149	265

LICENSED LANDSCAPE ARCHITECT

10-27-14
PLANS APPROVAL DATE

LICENSED LANDSCAPE ARCHITECT
KATHERINE BROWN No. 3297
Signature
5-31-16
Renewal Date
10-27-14
Date
STATE OF CALIFORNIA

THE STATE OF CALIFORNIA OR ITS OFFICERS OR AGENTS SHALL NOT BE RESPONSIBLE FOR THE ACCURACY OR COMPLETENESS OF SCANNED COPIES OF THIS PLAN SHEET.

NOTES:

1. FOR ACCURATE RIGHT OF WAY DATA, CONTACT RIGHT OF WAY ENGINEERING AT THE DISTRICT OFFICE.
2. TOPSOIL Emb = EMBANKMENT OF ROADWAY EXCAVATION (SELECTED MATERIAL) (TOPSOIL).
3. PLACE TOPSOIL - TYPE A TO A DEPTH OF 6".
4. PLACE TOPSOIL - TYPE B TO A DEPTH OF 3".
5. PLACE TOPSOIL - TYPE C TO A DEPTH OF 4".
6. PLACE TOPSOIL - TYPE D TO A DEPTH OF 4".
7. SEE LAYOUT SHEETS FOR EASEMENTS.
8. SEE CONSTRUCTION DETAIL SHEETS FOR CLEARING AND GRUBBING OF DUFF, AND TOPSOIL EXCAVATION.

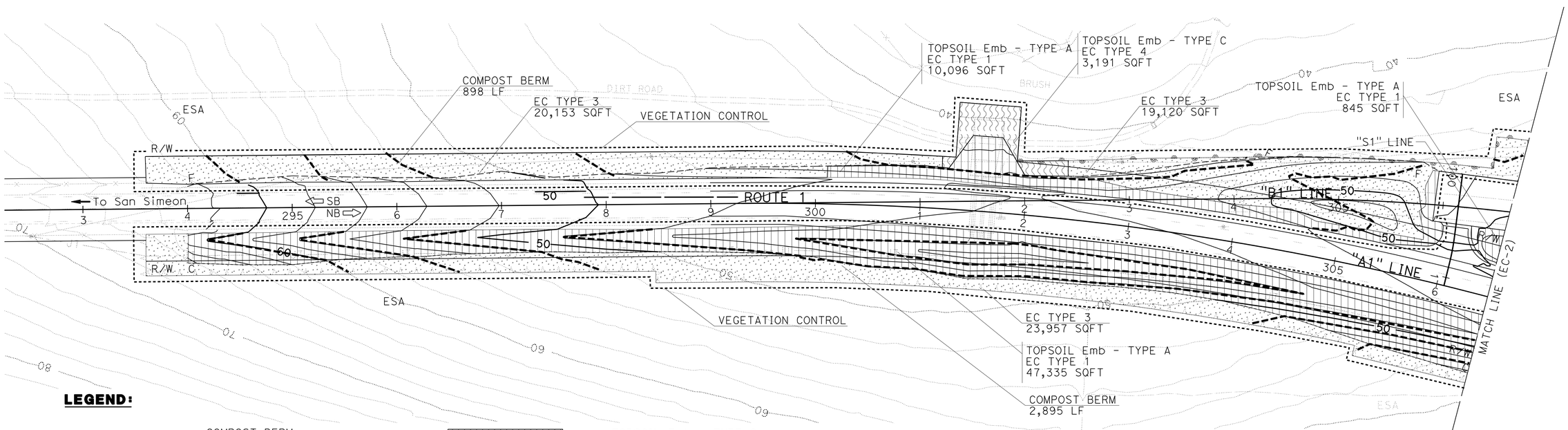

LEGEND:

- COMPOST BERM
- COMPOST SOCK
- TOPSOIL Emb - TYPE A — EROSION CONTROL TYPE 1 (COASTAL PRAIRIE-FLATTER THAN 2:1)
- TOPSOIL Emb - TYPE A — EROSION CONTROL TYPE 2 (COASTAL PRAIRIE-STEEPER THAN 2:1)
- EROSION CONTROL TYPE 3 (COASTAL PRAIRIE - DISTURBED AREA)
- TOPSOIL Emb - TYPE C — EROSION CONTROL TYPE 4 (COASTAL PRAIRIE WETLAND)
- TOPSOIL Emb - TYPE B — EROSION CONTROL TYPE 5 (FRESH WATER SEEP WETLAND)
- TOPSOIL Emb - TYPE D — EROSION CONTROL TYPE 6 (COASTAL SCRUB)
- TOPSOIL Emb - TYPE A — EROSION CONTROL TYPE 7 (HAUL ROAD)
- ESA — ENVIRONMENTALLY SENSITIVE AREA (ESA)
- VEGETATION CONTROL

APPROVED FOR EROSION CONTROL WORK ONLY

EROSION CONTROL PLAN
EC-1

SCALE: 1" = 50'

STATE OF CALIFORNIA - DEPARTMENT OF TRANSPORTATION	Caltrans® LANDSCAPE ARCHITECTURE	SENIOR LANDSCAPE ARCHITECT: DENNIS REEVES	CALCULATED-DESIGNED BY: KATHERINE BROWN
		CHECKED BY: KRISTEN LANGAGER	REVISED BY: KLB
			DATE REVISED: 5/07/13

LAST REVISION 10-27-14 DATE PLOTTED => 04-DEC-2014 TIME PLOTTED => 14:19

Dist	COUNTY	ROUTE	POST MILES TOTAL PROJECT	SHEET No.	TOTAL SHEETS
05	SLO	1	64.0/R66.9	150	265

Katherine Brown
LICENSED LANDSCAPE ARCHITECT

10-27-14
PLANS APPROVAL DATE

THE STATE OF CALIFORNIA OR ITS OFFICERS OR AGENTS SHALL NOT BE RESPONSIBLE FOR THE ACCURACY OR COMPLETENESS OF SCANNED COPIES OF THIS PLAN SHEET.

LICENSED LANDSCAPE ARCHITECT
KATHERINE BROWN No. 5207
Signature
5-31-16
Renewal Date
5/20/2014
Date
STATE OF CALIFORNIA

NOTE:

FOR ACCURATE RIGHT OF WAY DATA, CONTACT
RIGHT OF WAY ENGINEERING AT THE DISTRICT OFFICE.

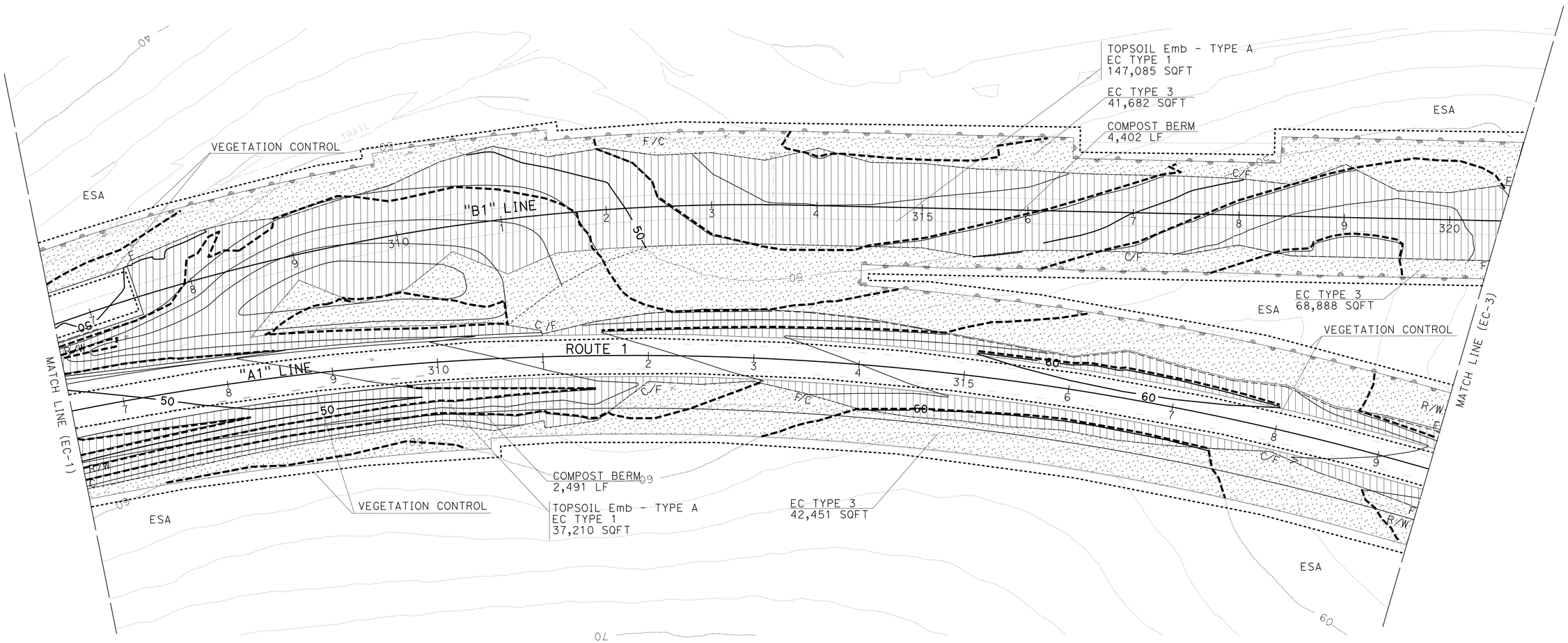

EROSION CONTROL PLAN
EC-2

SCALE: 1" = 50'

APPROVED FOR EROSION CONTROL WORK ONLY

STATE OF CALIFORNIA - DEPARTMENT OF TRANSPORTATION
Caltrans® LANDSCAPE ARCHITECTURE

SENIOR LANDSCAPE ARCHITECT: DENNIS REEVES
CALCULATED-DESIGNED BY: KATHERINE BROWN
CHECKED BY: KRISTEN LANGAGER
REVISED BY: KLB
DATE REVISED: 5/07/13

LAST REVISION 10-27-14
DATE PLOTTED => 04-DEC-2014
TIME PLOTTED => 14:19

Dist	COUNTY	ROUTE	POST MILES TOTAL PROJECT	SHEET No.	TOTAL SHEETS
05	SLO	1	64.0/R66.9	151	265

Katherine Brown
LICENSED LANDSCAPE ARCHITECT

10-27-14
PLANS APPROVAL DATE

LICENSED LANDSCAPE ARCHITECT
KATHERINE BROWN No. 3287
Signature
5-31-16
Renewal Date
10-27-14
Date
STATE OF CALIFORNIA

THE STATE OF CALIFORNIA OR ITS OFFICERS OR AGENTS SHALL NOT BE RESPONSIBLE FOR THE ACCURACY OR COMPLETENESS OF SCANNED COPIES OF THIS PLAN SHEET.

NOTE:

FOR ACCURATE RIGHT OF WAY DATA, CONTACT
RIGHT OF WAY ENGINEERING AT THE DISTRICT OFFICE.

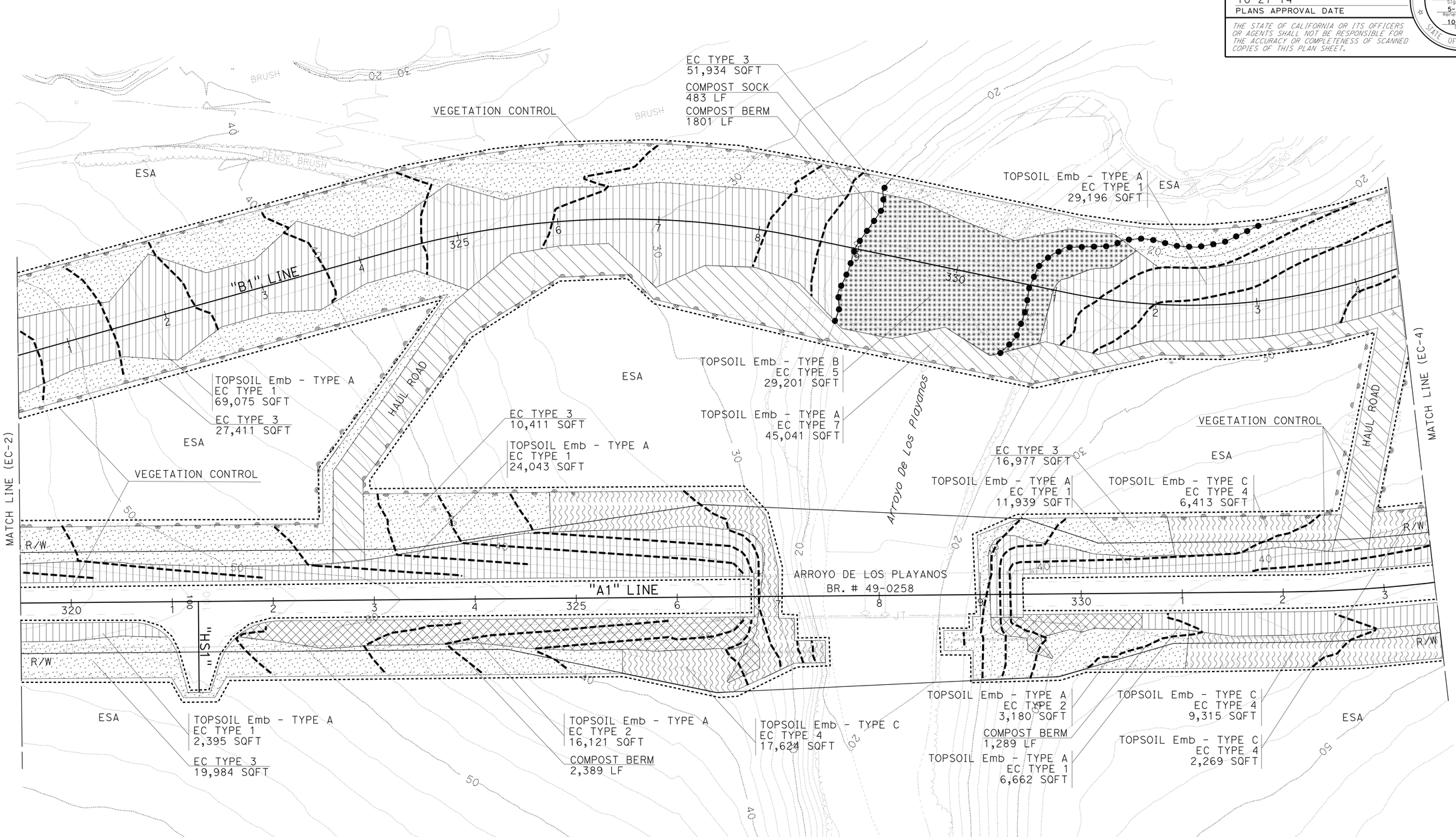

EROSION CONTROL PLAN
EC-3

APPROVED FOR EROSION CONTROL WORK ONLY

SCALE: 1" = 50'

STATE OF CALIFORNIA - DEPARTMENT OF TRANSPORTATION
Caltrans® LANDSCAPE ARCHITECTURE

SENIOR LANDSCAPE ARCHITECT: DENNIS REEVES
CALCULATED-DESIGNED BY: KATHERINE BROWN
CHECKED BY: KRISTEN LANGAGER
REVISED BY: KLB
DATE REVISED: 5/07/13

LAST REVISION 10-27-14
DATE PLOTTED => 04-DEC-2014
TIME PLOTTED => 14:19

Dist	COUNTY	ROUTE	POST MILES TOTAL PROJECT	SHEET No.	TOTAL SHEETS
05	SLO	1	64.0/R66.9	152	265

Katherine Brown
LICENSED LANDSCAPE ARCHITECT

10-27-14
PLANS APPROVAL DATE

LICENSED LANDSCAPE ARCHITECT
KATHERINE BROWN No. 3297
Signature
5-31-16
Renewal Date
10-27-14
Date
STATE OF CALIFORNIA

THE STATE OF CALIFORNIA OR ITS OFFICERS OR AGENTS SHALL NOT BE RESPONSIBLE FOR THE ACCURACY OR COMPLETENESS OF SCANNED COPIES OF THIS PLAN SHEET.

NOTE:

FOR ACCURATE RIGHT OF WAY DATA, CONTACT
RIGHT OF WAY ENGINEERING AT THE DISTRICT OFFICE.

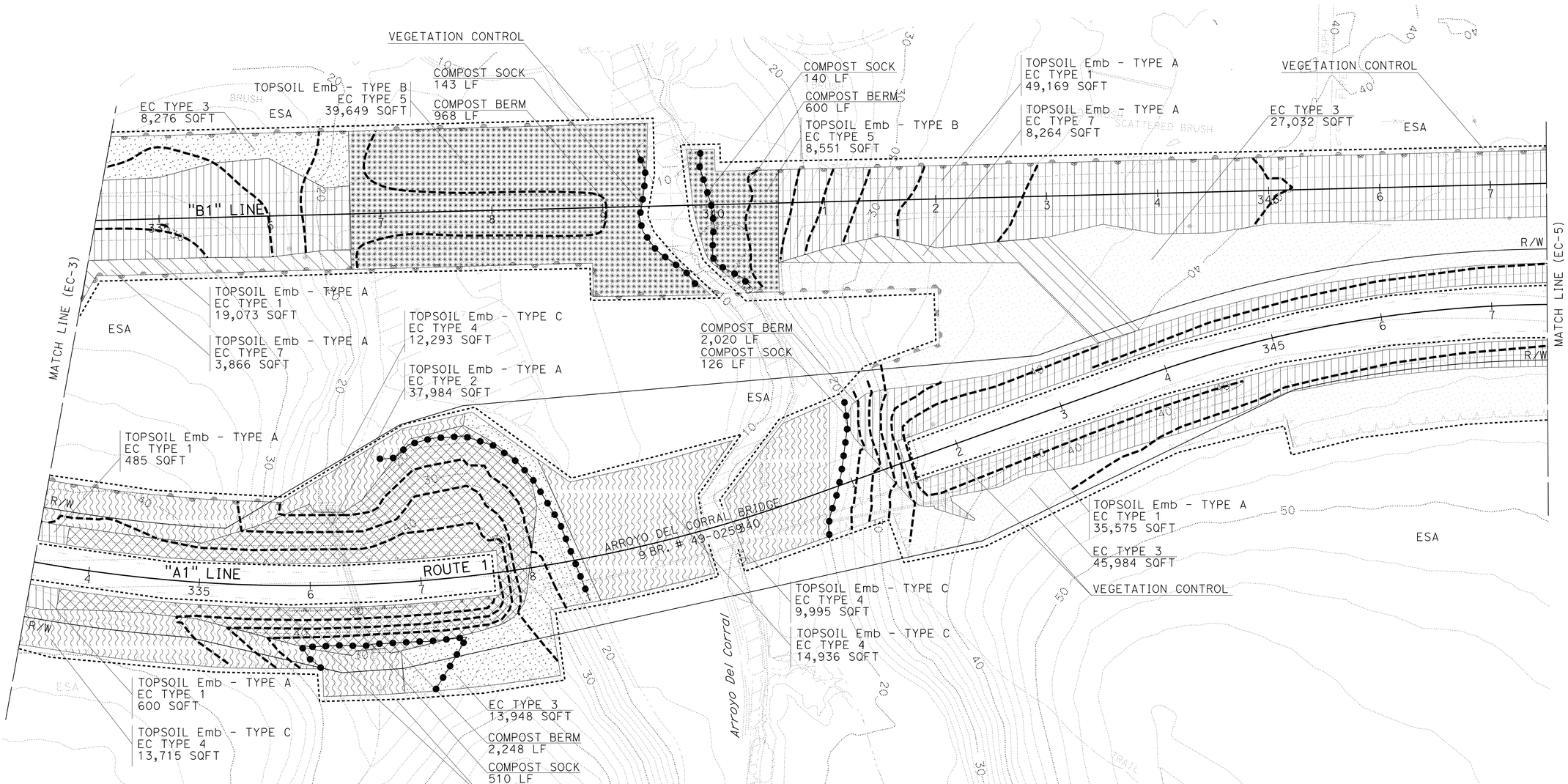

EROSION CONTROL PLAN
EC-4

SCALE: 1" = 50'

APPROVED FOR EROSION CONTROL WORK ONLY

REVISED BY	DATE REVISED
KLB	5/07/13

CALCULATED-DESIGNED BY: KATHERINE BROWN
CHECKED BY: KRISTEN LANGAGER
SENIOR LANDSCAPE ARCHITECT: DENNIS REEVES

STATE OF CALIFORNIA - DEPARTMENT OF TRANSPORTATION
Caltrans® LANDSCAPE ARCHITECTURE

LAST REVISION 10-27-14
DATE PLOTTED => 04-DEC-2014
TIME PLOTTED => 14:19

Dist	COUNTY	ROUTE	POST MILES TOTAL PROJECT	SHEET No.	TOTAL SHEETS
05	SLO	1	64.0/R66.9	153	265

Katherine Brown
LICENSED LANDSCAPE ARCHITECT

10-27-14
PLANS APPROVAL DATE

LICENSED LANDSCAPE ARCHITECT
KATHERINE BROWN No. 3297
Signature
5-31-16
Renewal Date
10-27-14
Date
STATE OF CALIFORNIA

THE STATE OF CALIFORNIA OR ITS OFFICERS OR AGENTS SHALL NOT BE RESPONSIBLE FOR THE ACCURACY OR COMPLETENESS OF SCANNED COPIES OF THIS PLAN SHEET.

NOTE:

FOR ACCURATE RIGHT OF WAY DATA, CONTACT
RIGHT OF WAY ENGINEERING AT THE DISTRICT OFFICE.

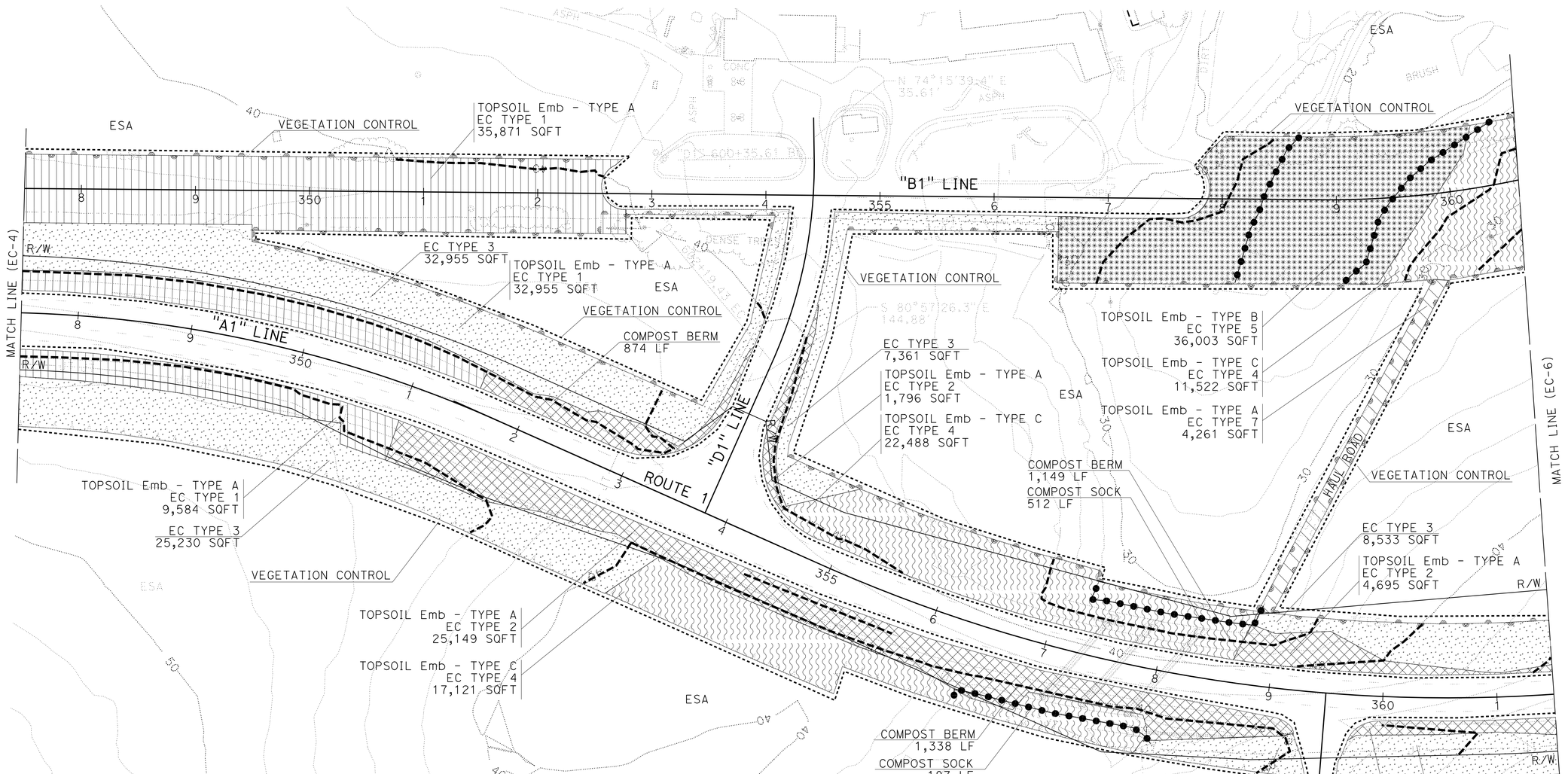

APPROVED FOR EROSION CONTROL WORK ONLY

EROSION CONTROL PLAN
EC-5

SCALE: 1" = 50'

STATE OF CALIFORNIA - DEPARTMENT OF TRANSPORTATION
Caltrans® LANDSCAPE ARCHITECTURE

SENIOR LANDSCAPE ARCHITECT: DENNIS REEVES
CALCULATED-DESIGNED BY: KATHERINE BROWN
CHECKED BY: KRISTEN LANGAGER
REVISED BY: KLB
DATE REVISED: 5/07/13

LAST REVISION 10-27-14
DATE PLOTTED => 04-DEC-2014
TIME PLOTTED => 14:19

Dist	COUNTY	ROUTE	POST MILES TOTAL PROJECT	SHEET No.	TOTAL SHEETS
05	SLO	1	64.0/R66.9	154	265

Katherine Brown
LICENSED LANDSCAPE ARCHITECT

10-27-14
PLANS APPROVAL DATE

LICENSED LANDSCAPE ARCHITECT
KATHERINE BROWN No. 3297
Signature
5-31-16
Renewal date
10-27-14
Date
STATE OF CALIFORNIA

THE STATE OF CALIFORNIA OR ITS OFFICERS OR AGENTS SHALL NOT BE RESPONSIBLE FOR THE ACCURACY OR COMPLETENESS OF SCANNED COPIES OF THIS PLAN SHEET.

NOTE:

FOR ACCURATE RIGHT OF WAY DATA, CONTACT RIGHT OF WAY ENGINEERING AT THE DISTRICT OFFICE.

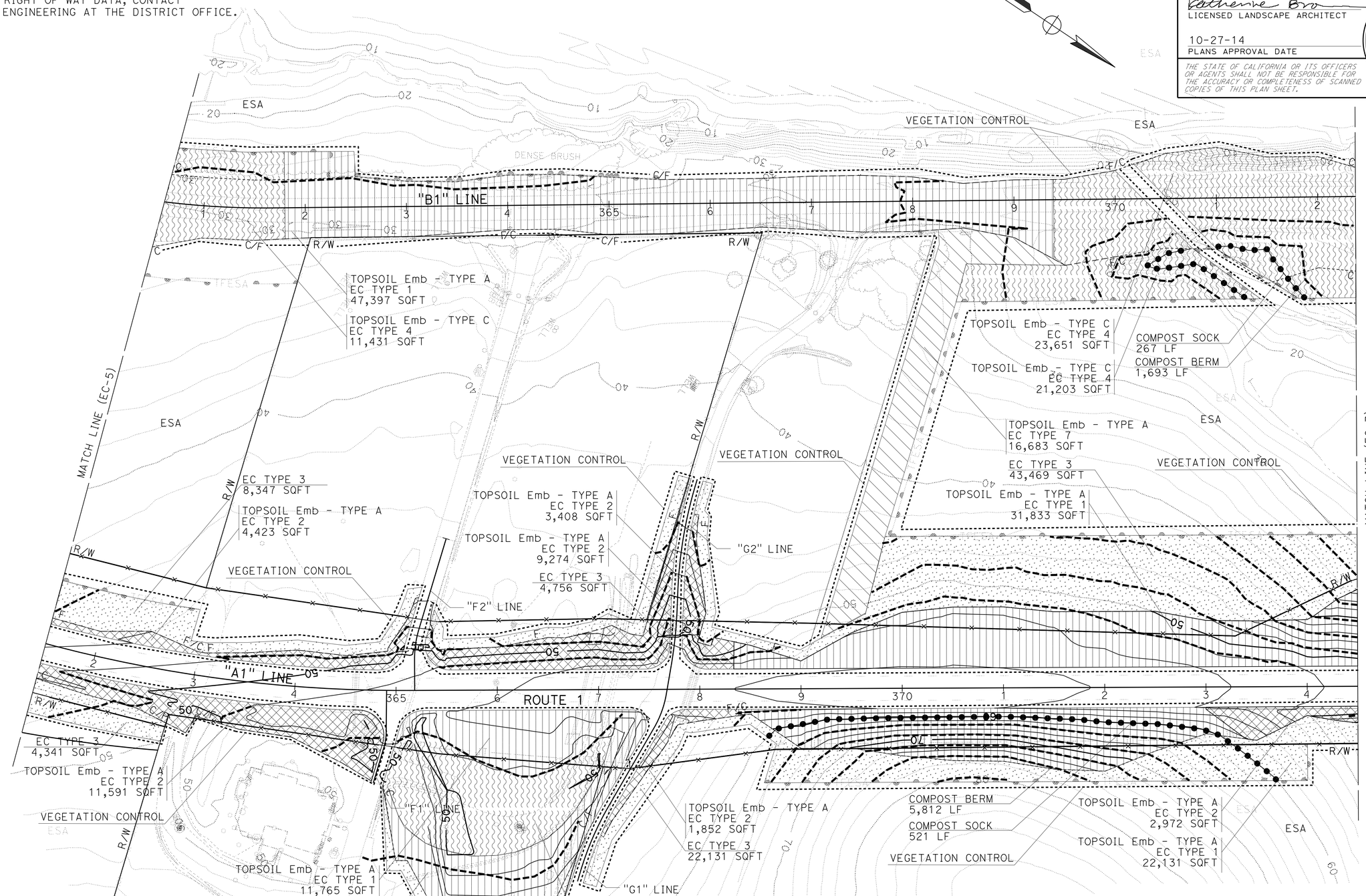

APPROVED FOR EROSION CONTROL WORK ONLY

EROSION CONTROL PLAN
EC-6

SCALE: 1" = 50'

REVISED BY	DATE REVISED
KLB	5/07/13

KATHERINE BROWN
KRISTEN LANGAGER
CALCULATED-DESIGNED BY
CHECKED BY
SENIOR LANDSCAPE ARCHITECT
DENNIS REEVES

STATE OF CALIFORNIA - DEPARTMENT OF TRANSPORTATION
Caltrans® LANDSCAPE ARCHITECTURE

LAST REVISION 10-27-14
DATE PLOTTED => 04-DEC-2014
TIME PLOTTED => 14:19

Dist	COUNTY	ROUTE	POST MILES TOTAL PROJECT	SHEET No.	TOTAL SHEETS
05	SLO	1	64.0/R66.9	155	265

Katherine Brown
LICENSED LANDSCAPE ARCHITECT

10-27-14
PLANS APPROVAL DATE

LICENSED LANDSCAPE ARCHITECT
KATHERINE BROWN No. 3297
Signature
5-31-16
Renewal Date
10-27-14
Date
STATE OF CALIFORNIA

THE STATE OF CALIFORNIA OR ITS OFFICERS OR AGENTS SHALL NOT BE RESPONSIBLE FOR THE ACCURACY OR COMPLETENESS OF SCANNED COPIES OF THIS PLAN SHEET.

NOTE:

FOR ACCURATE RIGHT OF WAY DATA, CONTACT RIGHT OF WAY ENGINEERING AT THE DISTRICT OFFICE.

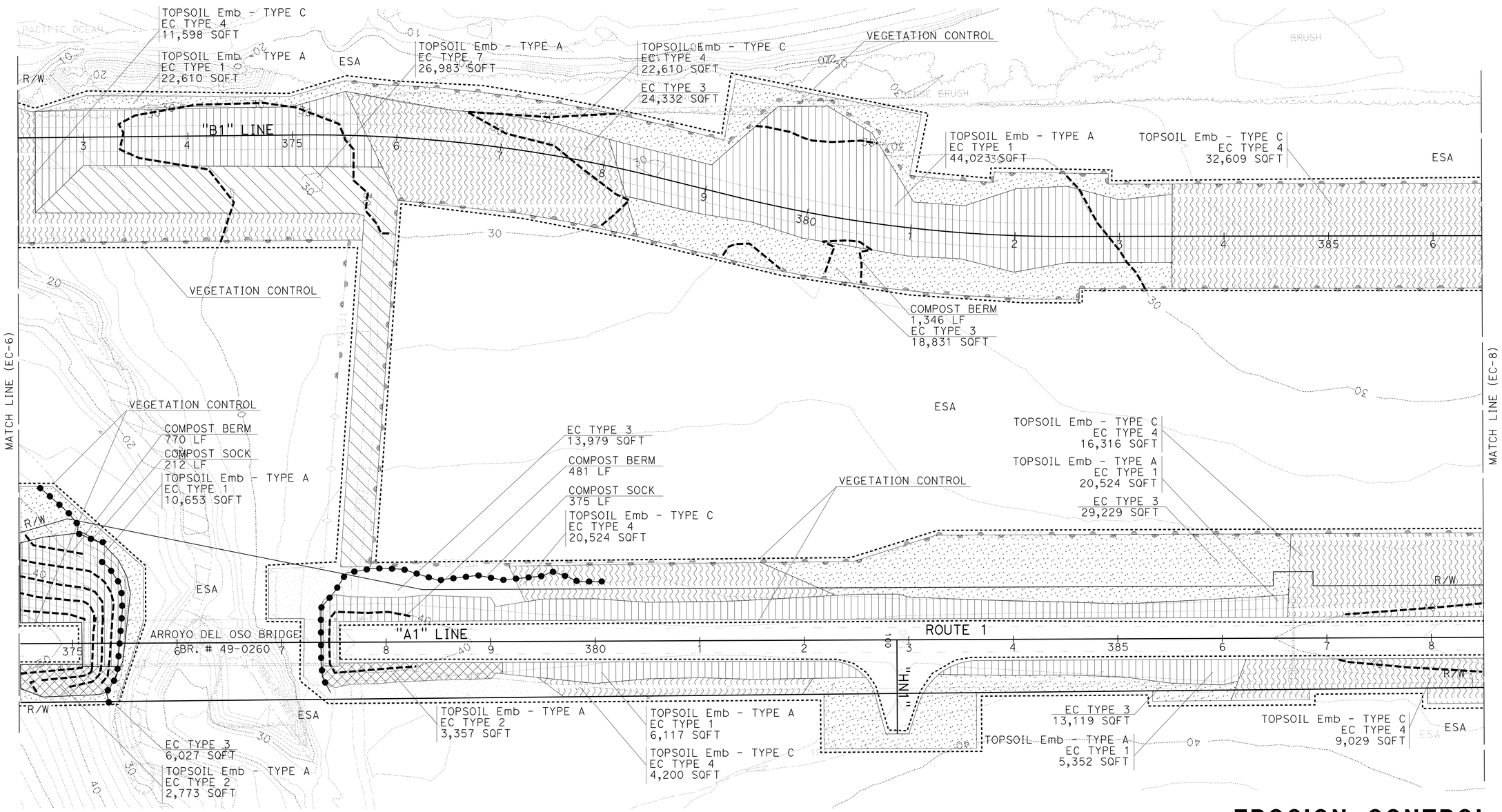

EROSION CONTROL PLAN
EC-7

APPROVED FOR EROSION CONTROL WORK ONLY

SCALE: 1" = 50'

REVISED BY	KLB
DATE REVISED	5/07/13
CALCULATED-DESIGNED BY	KATHERINE BROWN
CHECKED BY	KRISTEN LANGAGER
SENIOR LANDSCAPE ARCHITECT	DENNIS REEVES

STATE OF CALIFORNIA - DEPARTMENT OF TRANSPORTATION
Caltrans® LANDSCAPE ARCHITECTURE

LAST REVISION 10-27-14 | DATE PLOTTED => 04-DEC-2014 | TIME PLOTTED => 14:19

Dist	COUNTY	ROUTE	POST MILES TOTAL PROJECT	SHEET No.	TOTAL SHEETS
05	SLO	1	64.0/R66.9	156	265

Katherine Brown
LICENSED LANDSCAPE ARCHITECT

10-27-14
PLANS APPROVAL DATE

LICENSED LANDSCAPE ARCHITECT
KATHERINE BROWN No. 3267
Katherine Brown
Signature
5-31-16
Renewal Date
10-27-14
Date
STATE OF CALIFORNIA

THE STATE OF CALIFORNIA OR ITS OFFICERS OR AGENTS SHALL NOT BE RESPONSIBLE FOR THE ACCURACY OR COMPLETENESS OF SCANNED COPIES OF THIS PLAN SHEET.

NOTES:

FOR ACCURATE RIGHT OF WAY DATA, CONTACT
RIGHT OF WAY ENGINEERING AT THE DISTRICT OFFICE.

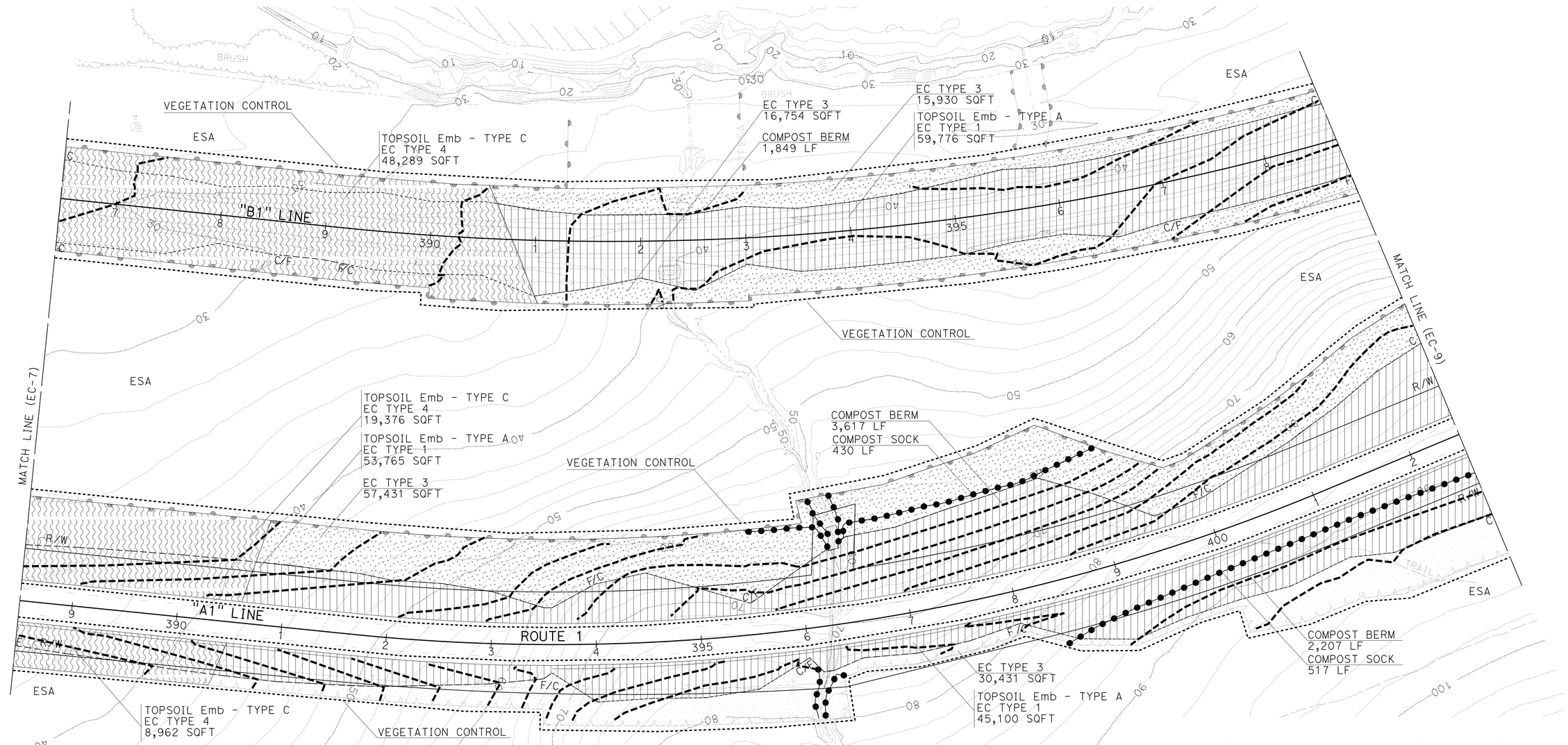

EROSION CONTROL PLAN
EC-8

SCALE: 1" = 50'

APPROVED FOR EROSION CONTROL WORK ONLY

REVISED BY	DATE REVISED
KLB	5/07/13

KATHERINE BROWN — SENIOR LANDSCAPE ARCHITECT
KRISTEN LANGAGER — DENNIS REEVES
CALCULATED-DESIGNED BY / CHECKED BY

STATE OF CALIFORNIA - DEPARTMENT OF TRANSPORTATION
Caltrans® LANDSCAPE ARCHITECTURE

LAST REVISION 10-27-14
DATE PLOTTED => 04-DEC-2014
TIME PLOTTED => 14:19

Dist	COUNTY	ROUTE	POST MILES TOTAL PROJECT	SHEET No.	TOTAL SHEETS
05	SLO	1	64.0/R66.9	157	265

Katherine Brown
LICENSED LANDSCAPE ARCHITECT

10-27-14
PLANS APPROVAL DATE

LICENSED LANDSCAPE ARCHITECT
KATHERINE BROWN No. 3297
Signature
5-31-16
Renewal date
10-27-14
Date
STATE OF CALIFORNIA

THE STATE OF CALIFORNIA OR ITS OFFICERS OR AGENTS SHALL NOT BE RESPONSIBLE FOR THE ACCURACY OR COMPLETENESS OF SCANNED COPIES OF THIS PLAN SHEET.

NOTE:

FOR ACCURATE RIGHT OF WAY DATA, CONTACT RIGHT OF WAY ENGINEERING AT THE DISTRICT OFFICE.

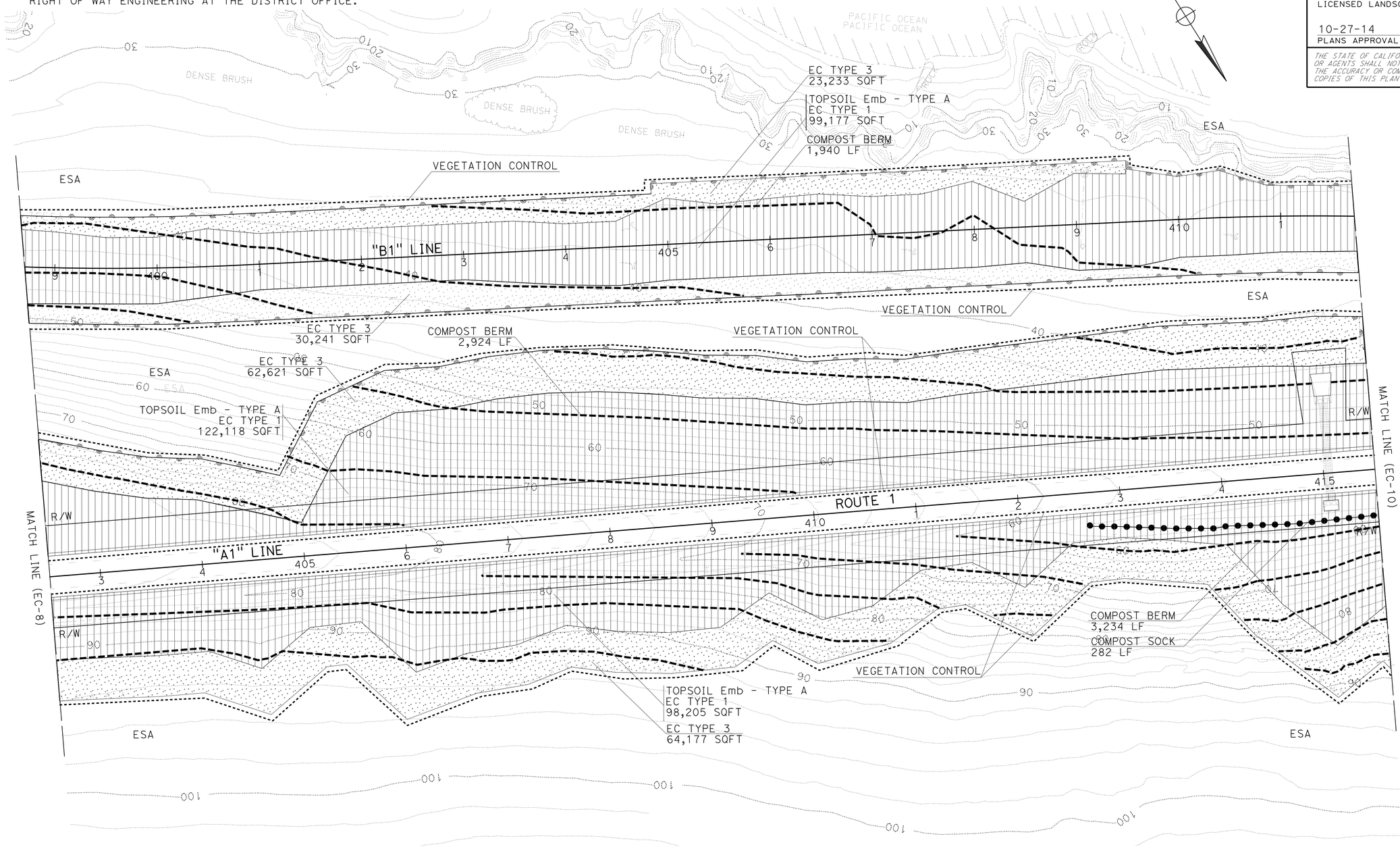

EROSION CONTROL PLAN
EC-9

APPROVED FOR EROSION CONTROL WORK ONLY

SCALE: 1" = 50'

STATE OF CALIFORNIA - DEPARTMENT OF TRANSPORTATION
Caltrans® LANDSCAPE ARCHITECTURE

SENIOR LANDSCAPE ARCHITECT: DENNIS REEVES
CALCULATED-DESIGNED BY: KATHERINE BROWN
CHECKED BY: KRISTEN LANGAGER
REVISED BY: KLB
DATE REVISED: 5/07/13

LAST REVISION 10-27-14
DATE PLOTTED => 04-DEC-2014
TIME PLOTTED => 14:20

Dist	COUNTY	ROUTE	POST MILES TOTAL PROJECT	SHEET No.	TOTAL SHEETS
05	SLO	1	64.0/R66.9	158	265

Katherine Brown
LICENSED LANDSCAPE ARCHITECT

10-27-14
PLANS APPROVAL DATE

THE STATE OF CALIFORNIA OR ITS OFFICERS OR AGENTS SHALL NOT BE RESPONSIBLE FOR THE ACCURACY OR COMPLETENESS OF SCANNED COPIES OF THIS PLAN SHEET.

LICENSED LANDSCAPE ARCHITECT
KATHERINE BROWN No. 5267
Signature
5-31-16
Renewal Date
10-27-14
Date
STATE OF CALIFORNIA

NOTE:

FOR ACCURATE RIGHT OF WAY DATA, CONTACT
RIGHT OF WAY ENGINEERING AT THE DISTRICT OFFICE.

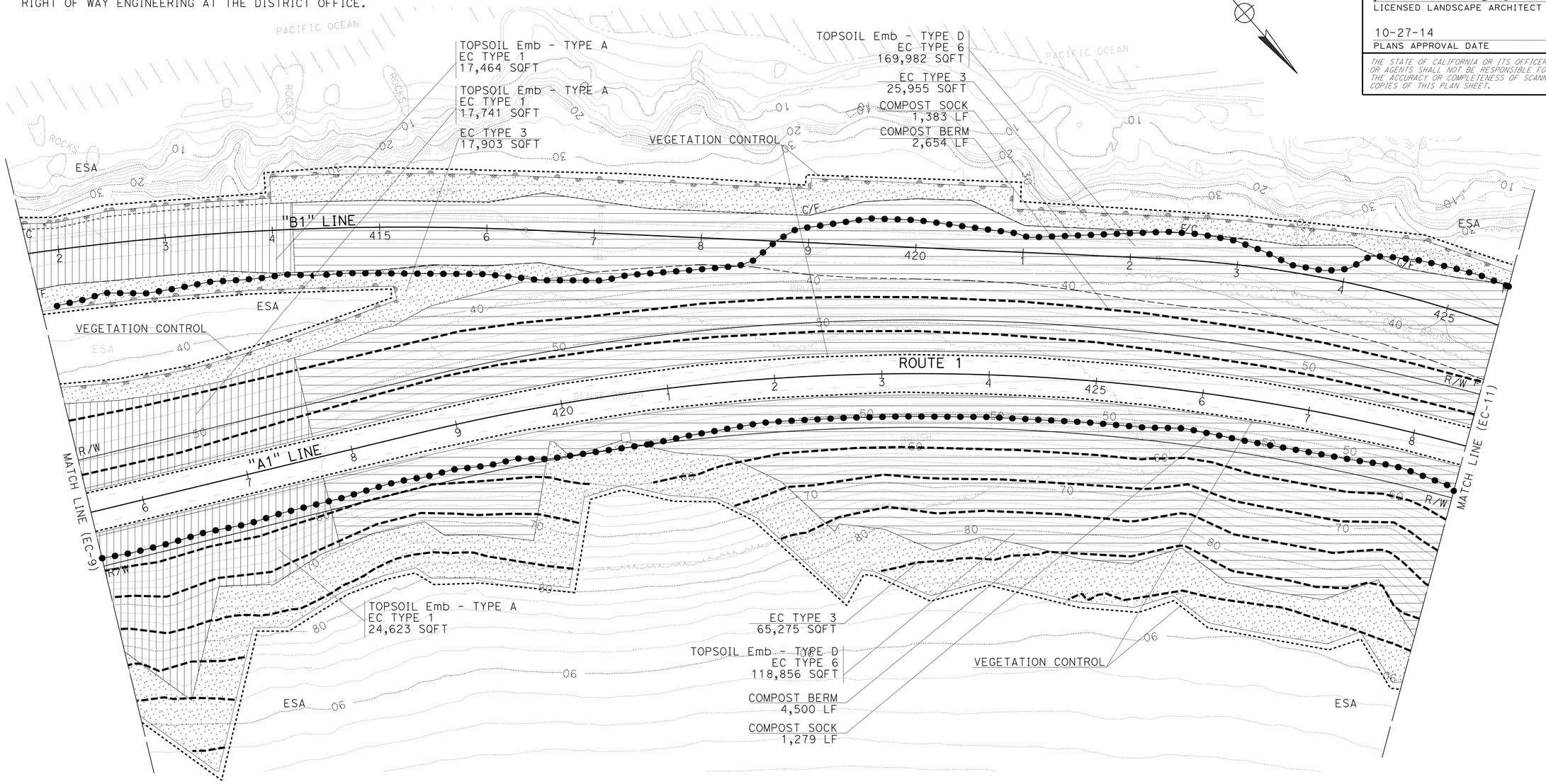

APPROVED FOR EROSION CONTROL WORK ONLY

EROSION CONTROL PLAN
EC-10

SCALE: 1" = 50'

STATE OF CALIFORNIA - DEPARTMENT OF TRANSPORTATION
Caltrans® LANDSCAPE ARCHITECTURE

SENIOR LANDSCAPE ARCHITECT: DENNIS REEVES
CALCULATED-DESIGNED BY: KATHERINE BROWN
CHECKED BY: KRISTEN LANGAGER
REVISED BY: KLB
DATE REVISED: 5/07/13

LAST REVISION 10-27-14
DATE PLOTTED => 04-DEC-2014
TIME PLOTTED => 14:20

Dist	COUNTY	ROUTE	POST MILES TOTAL PROJECT	SHEET No.	TOTAL SHEETS
05	SLO	1	64.0/R66.9	159	265

Katherine Brown
LICENSED LANDSCAPE ARCHITECT

10-27-14
PLANS APPROVAL DATE

LICENSED LANDSCAPE ARCHITECT
KATHERINE BROWN No. 3287
Signature
5-31-16
Renewal Date
10-27-14
Date
STATE OF CALIFORNIA

THE STATE OF CALIFORNIA OR ITS OFFICERS OR AGENTS SHALL NOT BE RESPONSIBLE FOR THE ACCURACY OR COMPLETENESS OF SCANNED COPIES OF THIS PLAN SHEET.

NOTE:

FOR ACCURATE RIGHT OF WAY DATA, CONTACT
RIGHT OF WAY ENGINEERING AT THE DISTRICT OFFICE.

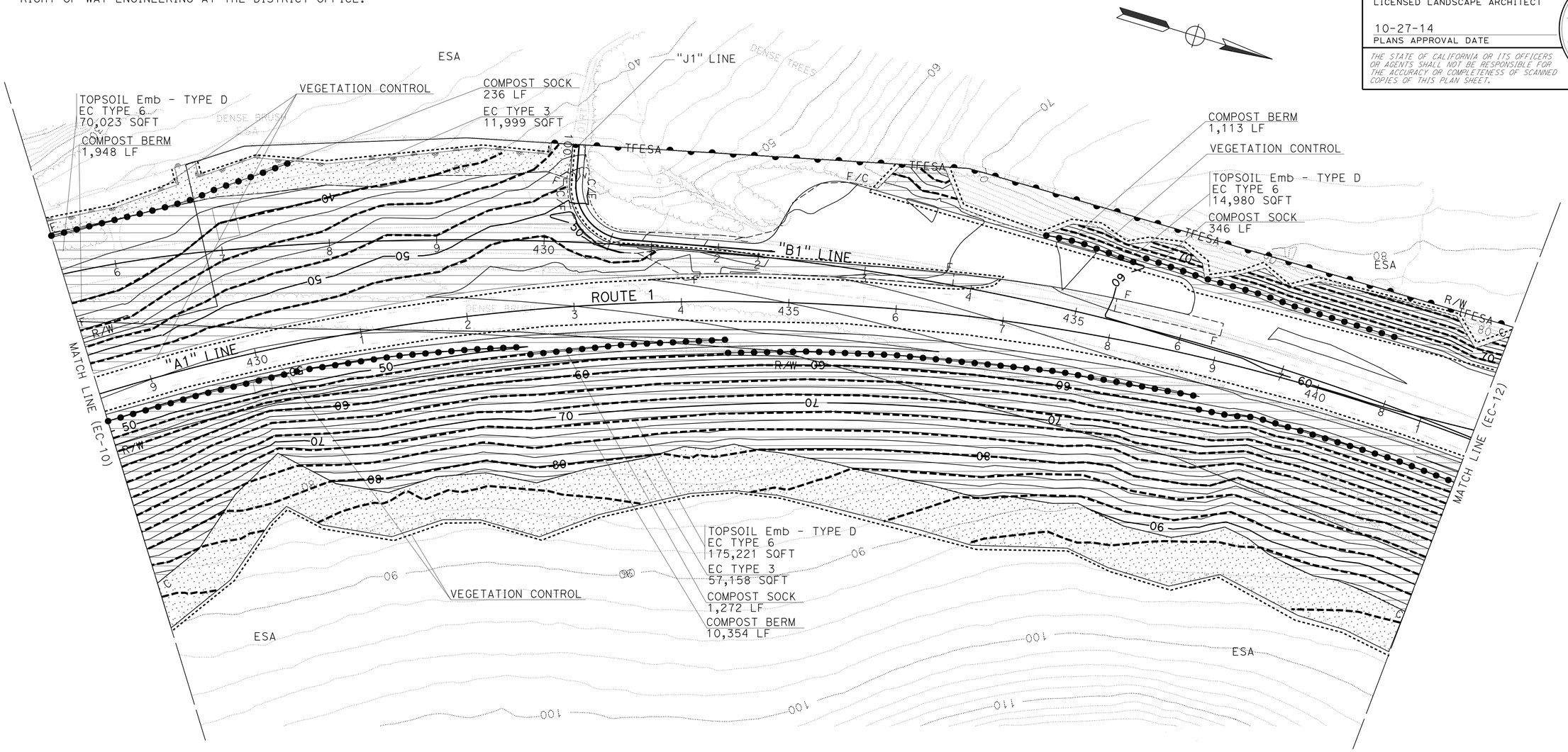

APPROVED FOR EROSION CONTROL WORK ONLY

EROSION CONTROL PLAN
EC-11

SCALE: 1" = 50'

REVISED BY	DATE REVISED
KLB	5/07/13

KATHERINE BROWN
KRISTEN LANGAGER
CALCULATED-DESIGNED BY
CHECKED BY
SENIOR LANDSCAPE ARCHITECT
DENNIS REEVES

STATE OF CALIFORNIA - DEPARTMENT OF TRANSPORTATION
Caltrans® LANDSCAPE ARCHITECTURE

LAST REVISION 10-27-14
DATE PLOTTED => 04-DEC-2014
TIME PLOTTED => 14:20

Dist	COUNTY	ROUTE	POST MILES TOTAL PROJECT	SHEET No.	TOTAL SHEETS
05	SLO	1	64.0/R66.9	160	265

LICENSED LANDSCAPE ARCHITECT

10-27-14
PLANS APPROVAL DATE

LICENSED LANDSCAPE ARCHITECT
KATHERINE BROWN No. 3297
Signature
5-31-16
Renewal Date
10-27-14
Date
STATE OF CALIFORNIA

THE STATE OF CALIFORNIA OR ITS OFFICERS OR AGENTS SHALL NOT BE RESPONSIBLE FOR THE ACCURACY OR COMPLETENESS OF SCANNED COPIES OF THIS PLAN SHEET.

NOTE:

FOR ACCURATE RIGHT OF WAY DATA, CONTACT
RIGHT OF WAY ENGINEERING AT THE DISTRICT OFFICE.

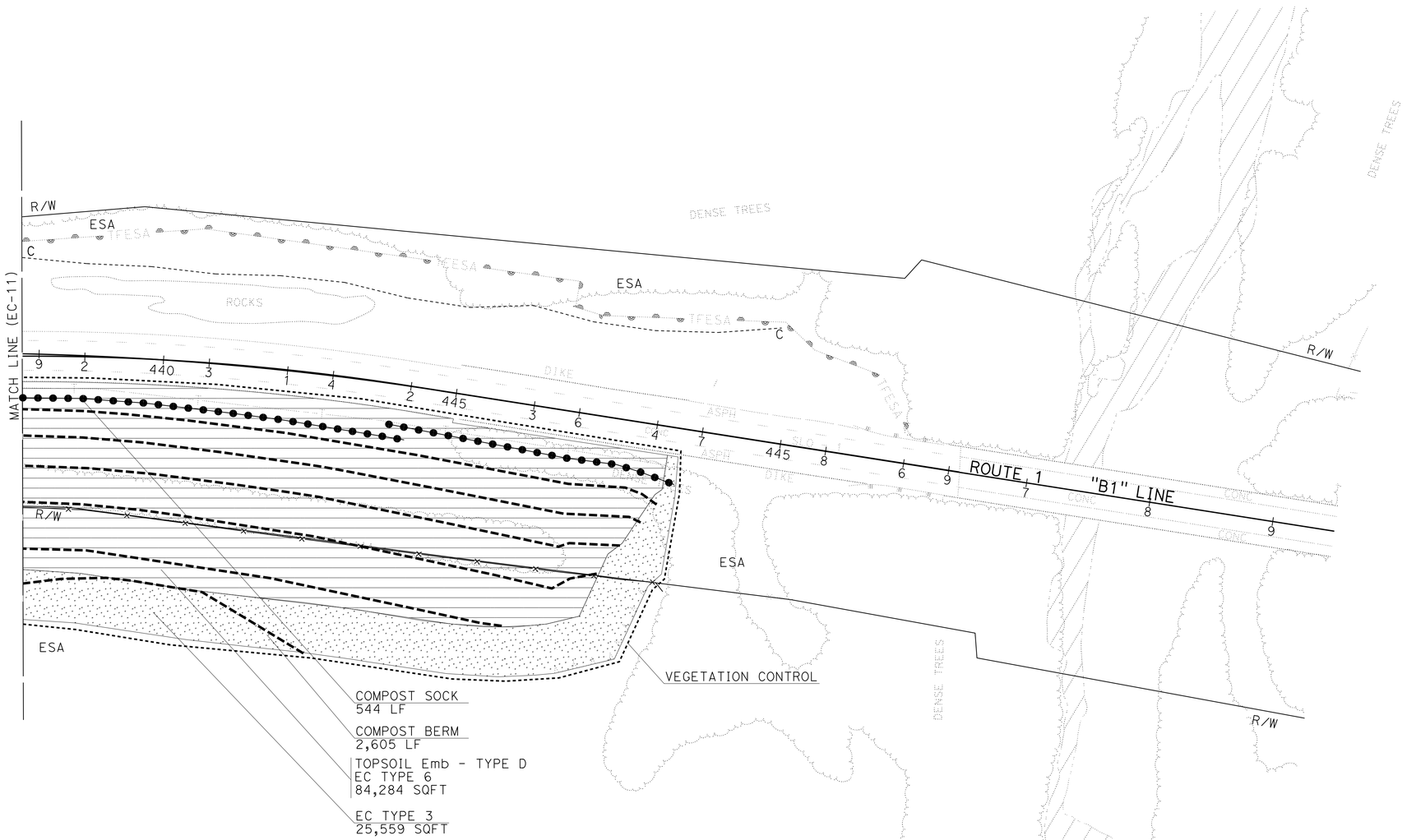

APPROVED FOR EROSION CONTROL WORK ONLY

EROSION CONTROL PLAN
EC-12

SCALE: 1" = 50'

KATHERINE BROWN	REVISED BY
5/07/13	DATE REVISED
KRISTEN LANGAGER	CALCULATED-DESIGNED BY
	CHECKED BY
DENNIS REEVES	SENIOR LANDSCAPE ARCHITECT

STATE OF CALIFORNIA - DEPARTMENT OF TRANSPORTATION
Caltrans® LANDSCAPE ARCHITECTURE

LAST REVISION 10-27-14 | DATE PLOTTED => 04-DEC-2014 | TIME PLOTTED => 14:20

Dist	COUNTY	ROUTE	POST MILES TOTAL PROJECT	SHEET No.	TOTAL SHEETS
05	SLO	1	64.0/R66.9	161	265

Katherine Brown
LICENSED LANDSCAPE ARCHITECT

10-27-14
PLANS APPROVAL DATE

LICENSED LANDSCAPE ARCHITECT KATHERINE BROWN No. 3287 Signature 5-31-16 Renewal Date 10-27-14 Date STATE OF CALIFORNIA

THE STATE OF CALIFORNIA OR ITS OFFICERS OR AGENTS SHALL NOT BE RESPONSIBLE FOR THE ACCURACY OR COMPLETENESS OF SCANNED COPIES OF THIS PLAN SHEET.

EROSION CONTROL

SHEET	EROSION CONTROL TYPE	COMPOST (RATE 1)	COMPOST (RATE 2)	INCORPORATE MATERIALS	HYDROSEED (MIX 1)	HYDROSEED (MIX 2)	HYDROSEED (MIX 3)	HYDROSEED (MIX 4)	ROLLED EROSION CONTROL PRODUCT (NETTING)	DUFF		COMPOST SOCKS	COMPOST BERMS
		SQFT	SQFT	SQFT	SQFT	SQFT	SQFT	SQFT	SQFT	SQFT (N)	ACRE	LF	LF
EC SHEETS	EROSION CONTROL TYPE 1	1,342,665	-	-	1,342,665	-	-	-	-	-	-	-	-
	EROSION CONTROL TYPE 2	130,901	-	-	130,901	-	-	-	130,901	-	-	-	-
	EROSION CONTROL TYPE 3	-	-	-	1,227,024	-	-	-	-	-	-	-	-
	EROSION CONTROL TYPE 4	-	-	-	-	409,245	-	-	-	-	-	-	-
	EROSION CONTROL TYPE 5	-	-	-	-	-	113,404	-	-	-	-	-	-
	EROSION CONTROL TYPE 6	633,346	-	-	-	-	-	633,346	-	633,346	14.5	-	-
	EROSION CONTROL TYPE 7	-	105,098	105,098	105,098	-	-	-	-	-	-	-	-
	COMPOST SOCKS	-	-	-	-	-	-	-	-	-	-	9,765	-
	COMPOST BERMS	-	-	-	-	-	-	-	-	-	-	-	74,409
	TOTAL	2,106,912	105,098	105,098	2,805,688	409,245	113,404	633,346	130,901	633,346	14.5	9,765	74,409

(N) - NOT A SEPARATE PAY ITEM, FOR INFORMATION ONLY

MOVE IN/MOVE OUT (EROSION CONTROL)

LOCATION			EA
STATION	L+	R+	
PROJECT LIMITS	X	X	6
TOTAL			6

EROSION CONTROL QUANTITIES
ECQ-1

STATE OF CALIFORNIA - DEPARTMENT OF TRANSPORTATION
Caltrans® LANDSCAPE ARCHITECTURE

SENIOR LANDSCAPE ARCHITECT: DENNIS REEVES
CALCULATED-DESIGNED BY: KATHERINE BROWN
CHECKED BY: KRISTEN LANGAGER
REVISED BY: KLB
DATE REVISED: 5/07/13

LAST REVISION 10-27-14
DATE PLOTTED => 04-DEC-2014
TIME PLOTTED => 14:20

Dist	COUNTY	ROUTE	POST MILES TOTAL PROJECT	SHEET No.	TOTAL SHEETS
05	SLO	1	64.0/R66.9	162	265

Xavier Alfaro 10-27-14
REGISTERED ELECTRICAL ENGINEER

10-27-14
PLANS APPROVAL DATE

REGISTERED PROFESSIONAL ENGINEER XAVIER I. ALFARO No. E17488 Exp. 6-30-15 ELECTRICAL STATE OF CALIFORNIA

THE STATE OF CALIFORNIA OR ITS OFFICERS OR AGENTS SHALL NOT BE RESPONSIBLE FOR THE ACCURACY OR COMPLETENESS OF SCANNED COPIES OF THIS PLAN SHEET.

NOTES:

1. FOR ACCURATE RIGHT OF WAY DATA, CONTACT RIGHT OF WAY ENGINEERING AT THE DISTRICT OFFICE.
2. EXACT LOCATION OF INDUCTIVE LOOP DETECTORS SHALL BE DETERMINED BY ENGINEER.

ELECTRICAL QUANTITIES

SHEET No.	#5 PULL BOX	TYPE A LOOP DETECTOR	1½"C
	EA	EA	FT
E-1	1	2	20

ITEMS SHOWN IN TABLE ARE NOT A SEPARATE PAY ITEM, FOR INFORMATION USE ONLY.

APPROVED FOR ELECTRICAL WORK ONLY

INDUCTIVE LOOP DETECTORS
E-1

SCALE: 1"=20'

STATE OF CALIFORNIA - DEPARTMENT OF TRANSPORTATION
Caltrans® ELECTRICAL DESIGN

FUNCTIONAL SUPERVISOR: ALI BAKHDOUD
CALCULATED-DESIGNED BY: XAVIER ALFARO
CHECKED BY: PAUL MOTOS
REVISED BY
DATE REVISED

LAST REVISION 10-27-14
DATE PLOTTED => 04-DEC-2014
TIME PLOTTED => 14:20

M

Maint	MAINTENANCE
Max	MAXIMUM
MB	METAL BEAM
MBB	METAL BEAM BARRIER
MBGR	METAL BEAM GUARD RAILING
Med	MEDIAN
MGS	MIDWEST GUARDRAIL SYSTEM
MH	MANHOLE
Min	MINIMUM
Misc	MISCELLANEOUS
Misc I & S	MISCELLANEOUS IRON AND STEEL
Mkr	MARKER
Mod	MODIFIED,
	MODIFY
Mon	MONUMENT
MP	METAL PLATE
MPGR	METAL PLATE GUARD RAILING
MR	MOVEMENT RATING
MSE	MECHANICALLY STABILIZED EMBANKMENT
Mt	MOUNTAIN, MOUNT
Mtl	MATERIAL
MVP	MAINTENANCE VEHICLE PULLOUT

N

N	NORTH
NB	NORTHBOUND
No.	NUMBER (MUST HAVE PERIOD)
Nos.	NUMBERS (MUST HAVE PERIOD)
NPS	NOMINAL PIPE SIZE
NS	NEAR SIDE
NSP	NEW STANDARD PLAN
NTS	NOT TO SCALE

O

Oblr	OBLITERATE
OC	OVERCROSSING
OD	OUTSIDE DIAMETER
OF	OUTSIDE FACE
OG	ORIGINAL GROUND
OGAC	OPEN GRADED ASPHALT CONCRETE
OGFC	OPEN GRADED FRICTION COURSE
OH	OVERHEAD
OHWM	ORDINARY HIGH WATER MARK
O-O	OUT TO OUT
Opp	OPPOSITE
OSD	OVERSIDE DRAIN

P

P	PAGE
PAP	PERFORATED ALUMINUM PIPE
PB	PULL BOX
PC	POINT OF CURVATURE,
	PRECAST
PCC	POINT OF COMPOUND CURVE,
	PORTLAND CEMENT CONCRETE
PCMS	PORTABLE CHANGEABLE MESSAGE SIGN
PCP	PERFORATED CONCRETE PIPE,
	PRESTRESSED CONCRETE PIPE
PCVC	POINT OF COMPOUND VERTICAL CURVE
PEC	PERMIT TO ENTER AND CONSTRUCT
Ped	PEDESTRIAN
Ped OC	PEDESTRIAN OVERCROSSING
Ped UC	PEDESTRIAN UNDERCROSSING
Perm Mtl	PERMEABLE MATERIAL

P continued

PG	PROFILE GRADE
PI	POINT OF INTERSECTION
PJP	PARTIAL JOINT PENETRATION
Pkwy	PARKWAY
ℙ,PL	PLATE
P/L	PROPERTY LINE
PM	POST MILE,
	TIME FROM NOON TO MIDNIGHT
PN	PAVING NOTCH
POC	POINT OF HORIZONTAL CURVE
POT	POINT OF TANGENT
POVC	POINT OF VERTICAL CURVE
PP	PIPE PILE,
	PLASTIC PIPE,
	POWER POLE
PPL	PREFORMED PERMEABLE LINER
PPP	PERFORATED PLASTIC PIPE
PRC	POINT OF REVERSE CURVE
PRF	PAVEMENT REINFORCING FABRIC
PRVC	POINT OF REVERSE VERTICAL CURVE
PS&E	PLANS, SPECIFICATIONS AND ESTIMATES
PS, P/S	PRESTRESSED
PSP	PERFORATED STEEL PIPE
PT	POINT OF TANGENCY
PVC	POLYVINYL CHLORIDE
Pvmt	PAVEMENT

Q

Qty	QUANTITY

R

R	RADIUS
R & D	REMOVE AND DISPOSE
R & S	REMOVE AND SALVAGE
R/C	RATE OF CHANGE
RCA	REINFORCED CONCRETE ARCH
RCB	REINFORCED CONCRETE BOX
RCP	REINFORCED CONCRETE PIPE
RCPA	REINFORCED CONCRETE PIPE ARCH
Rd	ROAD
Reinf	REINFORCED,
	REINFORCEMENT,
	REINFORCING
Rel	RELOCATE
Repl	REPLACEMENT
Ret	RETAINING
Rev	REVISED, REVISION
Rdwy	ROADWAY
RHMA	RUBBERIZED HOT MIX ASPHALT
Riv	RIVER
RM	ROAD-MIXED
RP	RADIUS POINT,
	REFERENCE POINT
RR	RAILROAD
RSP	ROCK SLOPE PROTECTION,
	REVISED STANDARD PLAN
Rt	RIGHT
Rte	ROUTE
RW	REDWOOD,
	RETAINING WALL
R/W	RIGHT OF WAY
Rwy	RAILWAY

S

S	SOUTH,
	SUPPLEMENT
SAE	STRUCTURE APPROACH EMBANKMENT
Salv	SALVAGE
SAPP	STRUCTURAL ALUMINUM PLATE PIPE
SB	SOUTHBOUND
SC	SAND CUSHION
SCSP	SLOTTED CORRUGATED STEEL PIPE
SD	STORM DRAIN
Sec	SECOND,
	SECTION
Sep	SEPARATION
SG	SUBGRADE
Shld	SHOULDER
Sht	SHEET
Sim	SIMILAR
℄	STATION LINE
SM	SELECTED MATERIAL
Spec	SPECIAL,
	SPECIFICATIONS
SPP	SLOTTED PLASTIC PIPE
SS	SLOPE STAKE
SSBM	STRAP AND SADDLE BRACKET METHOD
SSD	STRUCTURAL SECTION DRAIN
SSPA	STRUCTURAL STEEL PLATE ARCH
SSPP	STRUCTURAL STEEL PLATE PIPE
SSPPA	STRUCTURAL STEEL PLATE PIPE ARCH
SSRP	STEEL SPIRAL RIB PIPE
St	STREET
Sta	STATION
STBB	SINGLE THRIE BEAM BARRIER
Std	STANDARD
Str	STRUCTURE
Surf	SURFACING
SW	SIDEWALK,
	SOUND WALL
Swr	SEWER
Sym	SYMMETRICAL
S4S	SURFACE 4 SIDES

T

T	SEMI-TANGENT
Tan	TANGENT
TBB	THRIE BEAM BARRIER
Tbr	TIMBER
TC	TOP OF CURB
TCB	TRAFFIC CONTROL BOX
TCE	TEMPORARY CONSTRUCTION EASEMENT
Tel	TELEPHONE
Temp	TEMPORARY
TG	TOP OF GRADE
Tot	TOTAL
TP	TELEPHONE POLE
TPB	TREATED PERMEABLE BASE
TPM	TREATED PERMEABLE MATERIAL
Trans	TRANSITION

T continued

TS	TRANSVERSE,
	TRAFFIC SIGNAL,
	TUBULAR STEEL
Typ	TYPICAL

U

UC	UNDERCROSSING
UD	UNDERDRAIN
UG	UNDERGROUND
UON	UNLESS OTHERWISE NOTED
UP	UNDERPASS

V

V	VALVE,
	DESIGN SPEED
Var	VARIABLE,
	VARIES
VC	VERTICAL CURVE
VCP	VITRIFIED CLAY PIPE
Vert	VERTICAL
Via	VIADUCT
Vol	VOLUME

W

W	WEST,
	WIDTH
WB	WESTBOUND
WH	WEEP HOLE
WM	WIRE MESH
WS	WATER SURFACE
WSP	WELDED STEEL PIPE
Wt	WEIGHT
WV	WATER VALVE
WW	WINGWALL
WWLOL	WINGWALL LAYOUT LINE

X

X Sec	CROSS SECTION
Xing	CROSSING

Y

Yr	YEAR
Yrs	YEARS

Dist	COUNTY	ROUTE	POST MILES TOTAL PROJECT	SHEET No.	TOTAL SHEETS
05	SLO	1	64.0/R66.9	163	265

Grace M. Tsushima
REGISTERED CIVIL ENGINEER

July 19, 2013
PLANS APPROVAL DATE

REGISTERED PROFESSIONAL ENGINEER
Grace M. Tsushima
No. C49814
Exp. 9-30-14
CIVIL
STATE OF CALIFORNIA

THE STATE OF CALIFORNIA OR ITS OFFICERS OR AGENTS SHALL NOT BE RESPONSIBLE FOR THE ACCURACY OR COMPLETENESS OF SCANNED COPIES OF THIS PLAN SHEET.

TO ACCOMPANY PLANS DATED 10-27-14

UNIT OF MEASUREMENT SYMBOLS:

Some of the symbols used in the project plan quantity tables and in the Bid Item List are:

TABLE A

SYMBOL USED	DEFINITIONS
ACRE	ACRE
CF	CUBIC FOOT
CY	CUBIC YARD
EA	EACH
GAL	GALLON
LB	POUND
LF	LINEAR FOOT
SQFT	SQUARE FOOT
SQYD	SQUARE YARD
STA	100 FEET
TAB	TABLET
TON	2,000 POUNDS

Some of the symbols used in the plans other than in the project plan quantity tables are:

TABLE B

SYMBOL USED	DEFINITIONS
ksi	KIPS PER SQUARE INCH
ksf	KIPS PER SQUARE FOOT
psi	POUNDS PER SQUARE INCH
psf	POUNDS PER SQUARE FOOT
lb/ft^3, pcf	POUNDS PER CUBIC FOOT
tsf	TONS PER SQUARE FOOT
mph, MPH *	MILES PER HOUR
ø	NOMINAL DIAMETER
oz	OUNCE
lb	POUND
kip	1,000 POUNDS
cal	CALORIE
ft	FOOT OR FEET
gal	GALLON

* For use on a sign panel only

STATE OF CALIFORNIA
DEPARTMENT OF TRANSPORTATION

ABBREVIATIONS (SHEET 2 OF 2)

NO SCALE

RSP A10B DATED JULY 19, 2013 SUPERSEDES STANDARD PLAN A10B DATED MAY 20, 2011 - PAGE 2 OF THE STANDARD PLANS BOOK DATED 2010.

REVISED STANDARD PLAN RSP A10B

2010 REVISED STANDARD PLAN RSP A10B

6-7-13

Dist	COUNTY	ROUTE	POST MILES TOTAL PROJECT	SHEET No.	TOTAL SHEETS
05	SLO	1	64.0/R66.9	164	265

REGISTERED CIVIL ENGINEER

April 20, 2012
PLANS APPROVAL DATE

Roberta L. McLaughlin
No. C40375
Exp. 3-31-13
CIVIL
REGISTERED PROFESSIONAL ENGINEER
STATE OF CALIFORNIA

THE STATE OF CALIFORNIA OR ITS OFFICERS OR AGENTS SHALL NOT BE RESPONSIBLE FOR THE ACCURACY OR COMPLETENESS OF SCANNED COPIES OF THIS PLAN SHEET.

TO ACCOMPANY PLANS DATED 10-27-14

2010 REVISED STANDARD PLAN RSP A24A

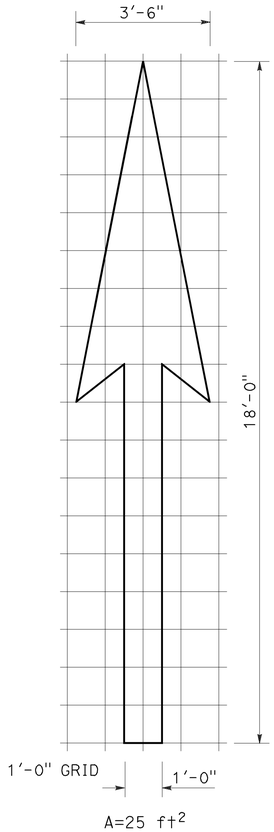

A=25 ft^2

TYPE I 18'-0" ARROW

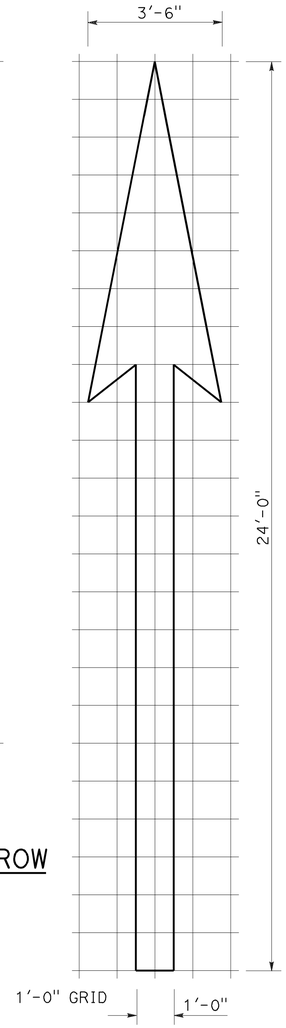

A=31 ft^2

TYPE I 24'-0" ARROW

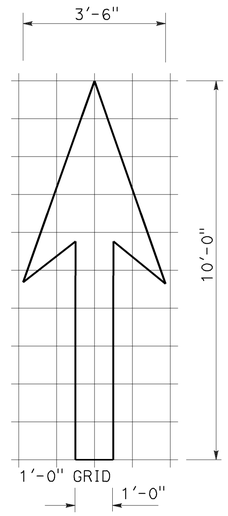

A=14 ft^2

TYPE I 10'-0" ARROW

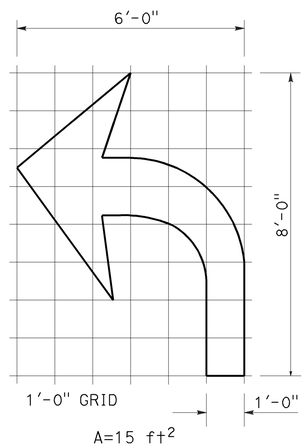

A=15 ft^2

TYPE IV (L) ARROW

(For Type IV (R) arrow, use mirror image)

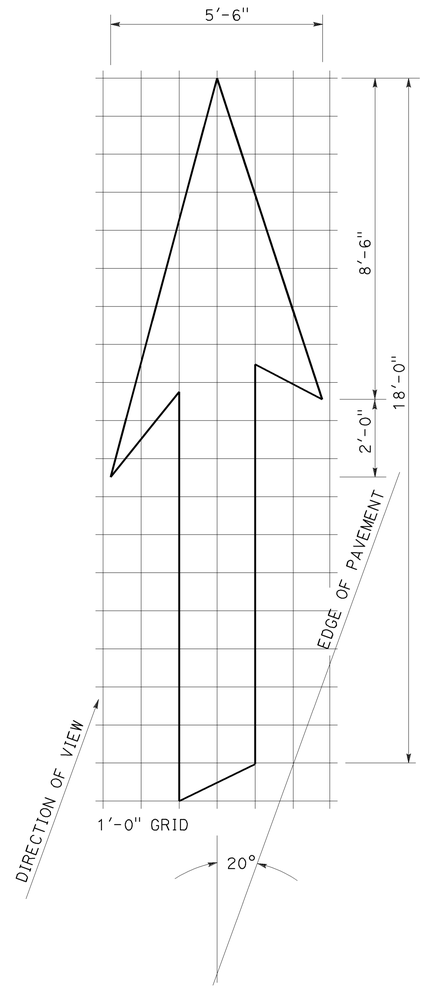

A=42 ft^2

TYPE VI ARROW

Right lane drop arrow
(For left lane, use mirror image)

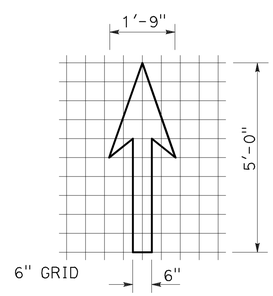

A=3.5 ft^2

BIKE LANE ARROW

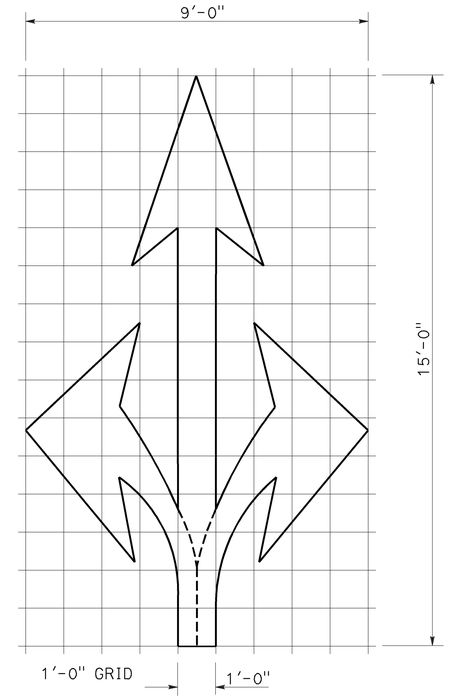

A=36 ft^2

TYPE VIII ARROW

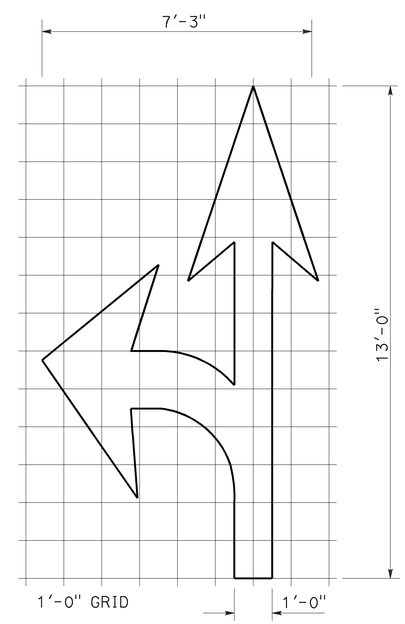

A=27 ft^2

TYPE VII (L) ARROW

(For Type VII (R) arrow, use mirror image)

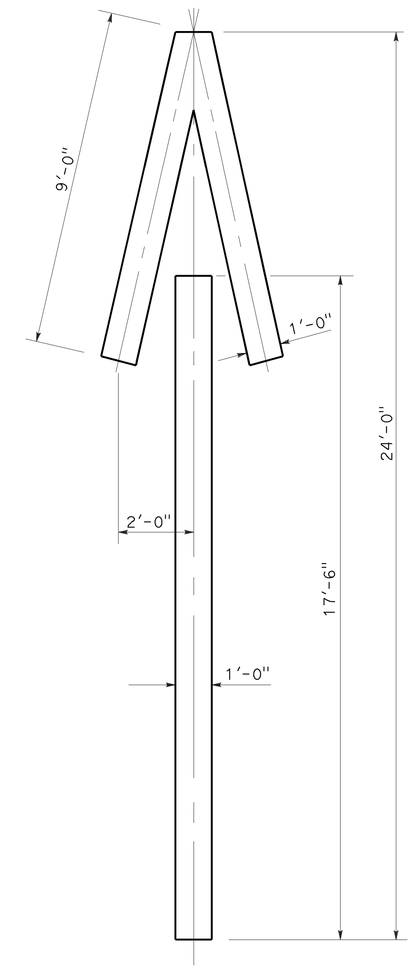

A=33 ft^2

TYPE V ARROW

NOTE:
Minor variations in dimensions may be accepted by the Engineer.

STATE OF CALIFORNIA
DEPARTMENT OF TRANSPORTATION

PAVEMENT MARKINGS ARROWS

NO SCALE

RSP A24A DATED APRIL 20, 2012 SUPERSEDES STANDARD PLAN A24A DATED MAY 20, 2011 - PAGE 13 OF THE STANDARD PLANS BOOK DATED 2010.

REVISED STANDARD PLAN RSP A24A

3-14-12

Dist	COUNTY	ROUTE	POST MILES TOTAL PROJECT	SHEET No.	TOTAL SHEETS
05	SLO	1	64.0/R66.9	165	265

Randell D. Hiatt
REGISTERED CIVIL ENGINEER

July 19, 2013
PLANS APPROVAL DATE

REGISTERED PROFESSIONAL ENGINEER
Randell D. Hiatt
No. C50200
Exp. 6-30-15
CIVIL
STATE OF CALIFORNIA

THE STATE OF CALIFORNIA OR ITS OFFICERS OR AGENTS SHALL NOT BE RESPONSIBLE FOR THE ACCURACY OR COMPLETENESS OF SCANNED COPIES OF THIS PLAN SHEET.

TO ACCOMPANY PLANS DATED 10-27-14

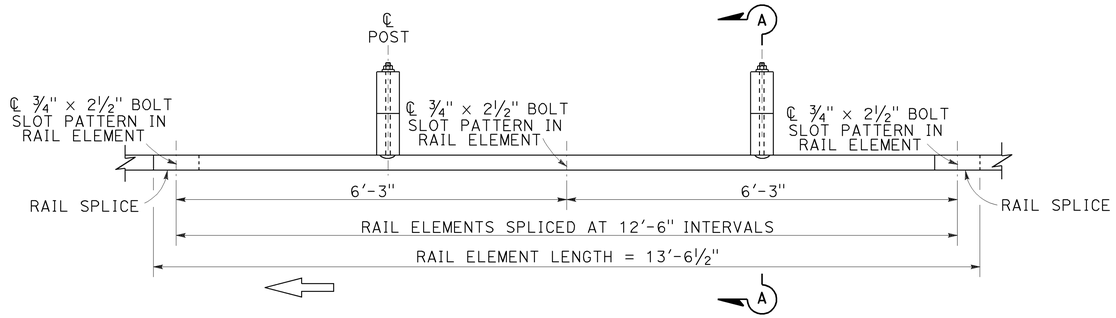

PLAN

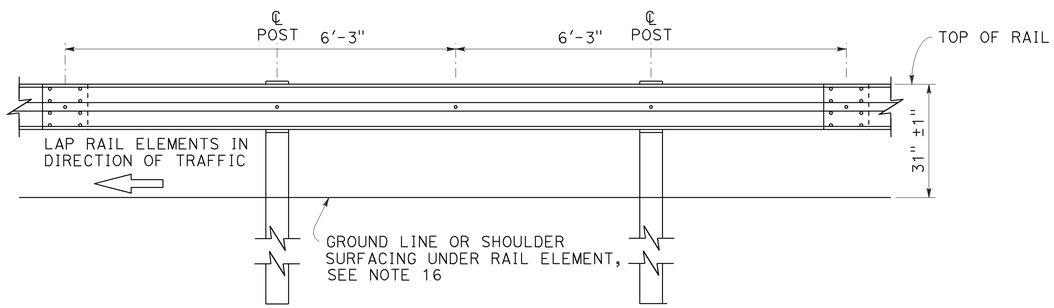

ELEVATION

MIDWEST GUARDRAIL SYSTEM WITH WOOD POST AND BLOCKS

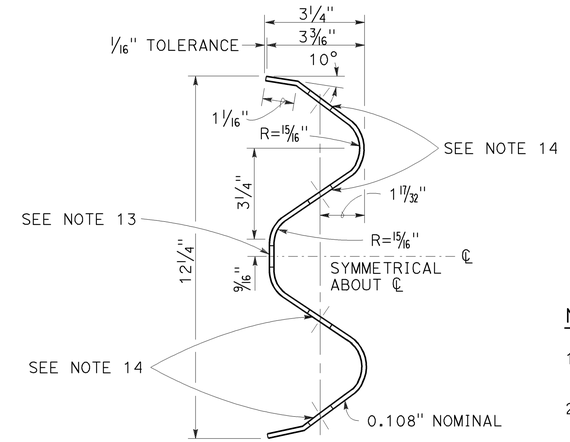

SECTION THRU RAIL ELEMENT

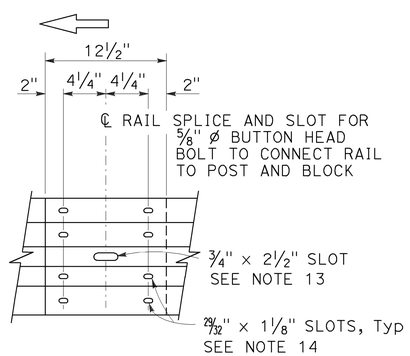

ELEVATION

RAIL ELEMENT SPLICE DETAIL

a) Connect the over lapped end of the rail elements with ⅝" ø × 1⅜" button head oval shoulder splice bolts inserted into the 29⁄32" × 1⅛" slots and bolted together with ⅝" ø recessed hex nuts. Recess of hex nut points toward rail element. A total of 8 bolts and nuts are to be used at each rail splice connection.

b) The ends of the rail elements are to be overlapped in the direction of traffic (see details).

c) Where end cap is to be attached to the end of a rail element, a total of 4 of the above described splice bolts and nuts are to be used.

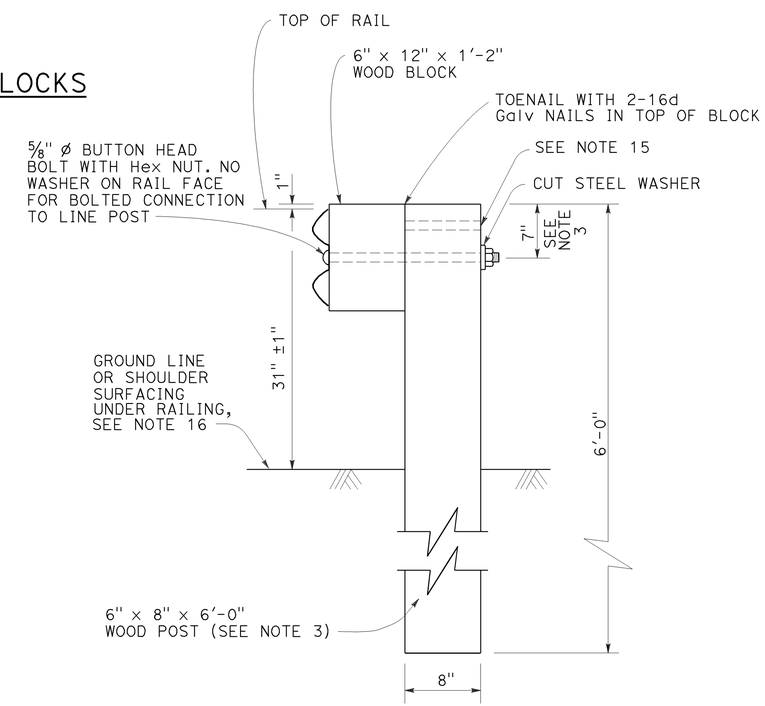

SECTION A-A

TYPICAL WOOD LINE POST INSTALLATION

See Note 4

NOTES:

1. For details of steel post installations, see Revised Standard Plan RSP A77L2.
2. For details of standard hardware used to construct MGS, see Revised Standard Plan RSP A77M1.
3. For details of wood posts and wood blocks used to construct MGS, see Revised Standard Plan RSP A77N1.
4. For additional installation details, see Revised Standard Plan RSP A77N3.
5. MGS post spacing to be 6'-3" center to center, except as otherwise noted.
6. For MGS typical layouts, see the A77P, A77Q and A77R Series of Standard Plans.
7. If railing is connected to terminal system end treatment, use 31" height terminal system end treatment.
8. For MGS end anchor details, see Revised Standard Plans RSP A77S1 and RSP A77T2.
9. For details of MGS transition to bridge railing, see Revised Standard Plan RSP A77U4.
10. For additional details of MSG connection to bridge railing, see Revised Standard Plans RSP A77U1, RSP A77U2 and RSP A77V1.
11. For MGS connection details to abutments and walls, see Revised Standard Plan RSP A77U3.
12. For typical MGS delineation and dike positioning details, see Revised Standard Plan RSP A77N4.
13. Slotted hole for bolted connection of rail element to block and post. See "Section Thru Rail Element".
14. Slotted holes for splice bolts to overlap ends of rail element. See "Section Thru Rail Element".
15. Additional hole in uppermost portion of line post is for potential future adjustments of railing height. See Revised Standard Plan RSP A77N1.
16. Install posts in soil.

STATE OF CALIFORNIA
DEPARTMENT OF TRANSPORTATION

MIDWEST GUARDRAIL SYSTEM STANDARD RAILING SECTION (WOOD POST WITH WOOD BLOCK)

NO SCALE

RSP A77L1 DATED JULY 19, 2013 SUPPLEMENTS STANDARD PLANS BOOK DATED 2010.

REVISED STANDARD PLAN RSP A77L1

2010 REVISED STANDARD PLAN RSP A77L1

Dist	COUNTY	ROUTE	POST MILES TOTAL PROJECT	SHEET No.	TOTAL SHEETS
05	SLO	1	64.0/R66.9	166	265

Randell D. Hiatt
REGISTERED CIVIL ENGINEER

July 19, 2013
PLANS APPROVAL DATE

REGISTERED PROFESSIONAL ENGINEER
Randell D. Hiatt
No. C50200
Exp. 6-30-15
CIVIL
STATE OF CALIFORNIA

THE STATE OF CALIFORNIA OR ITS OFFICERS OR AGENTS SHALL NOT BE RESPONSIBLE FOR THE ACCURACY OR COMPLETENESS OF SCANNED COPIES OF THIS PLAN SHEET.

TO ACCOMPANY PLANS DATED 10-27-14

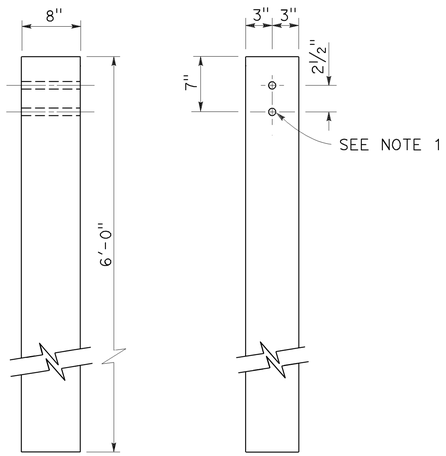

SIDE FRONT

6" x 8" WOOD POST
See Note 3

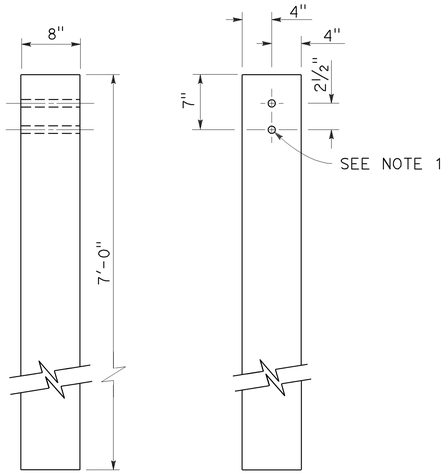

SIDE FRONT

8" x 8" WOOD POST
See Note 4

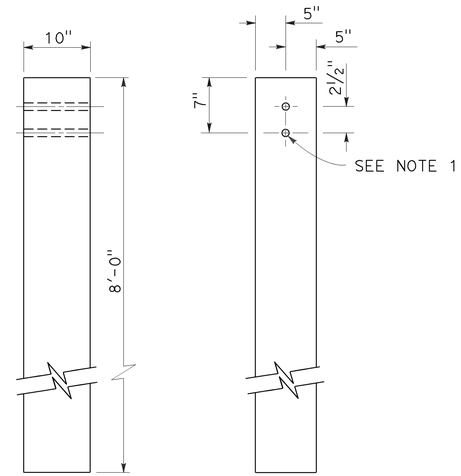

SIDE FRONT

10" x 10" WOOD POST
See Note 5

NOTES:

1. All holes in wood posts and blocks shall be 3/4" Dia ± 1/16".
2. Dimensions shown for wood post are nominal.
3. This post and block combination used for standard line post sections of MGS.
4. This post and 8" x 12" block combination used for line post sections of MGS on narrow roadways.
5. This post and 8" x 12" block combination is typically used where strengthened line post sections of MGS are warranted to shield fixed objects.
6. See Revised Standard Plan RSP A77L3 for use of 6" x 8" and 8" x 8" wood blocks.

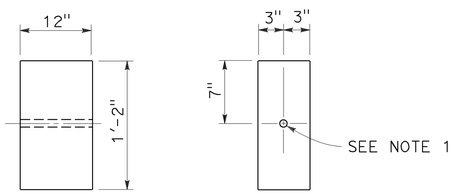

SIDE FRONT

6" x 12" WOOD BLOCK
See Note 3

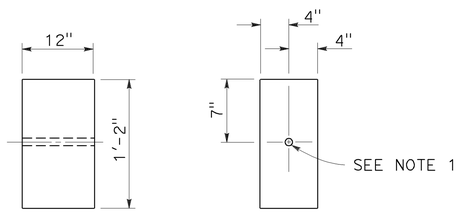

SIDE FRONT

8" x 12" WOOD BLOCK

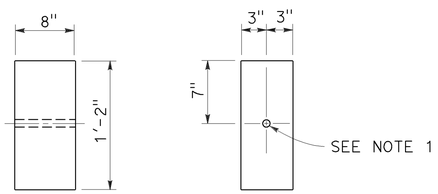

SIDE FRONT

6" x 8" WOOD BLOCK
Only for use with metal beam guard rail see Note 6

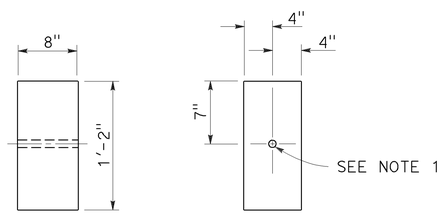

SIDE FRONT

8" x 8" WOOD BLOCK
Only for use with metal beam guard rail see Note 6

STATE OF CALIFORNIA
DEPARTMENT OF TRANSPORTATION

MIDWEST GUARDRAIL SYSTEM WOOD POST AND WOOD BLOCK DETAILS

NO SCALE

RSP A77N1 DATED JULY 19, 2013 SUPPLEMENTS THE STANDARD PLANS BOOK DATED 2010.

REVISED STANDARD PLAN RSP A77N1

2010 REVISED STANDARD PLAN RSP A77N1

7-3-13

Dist	COUNTY	ROUTE	POST MILES TOTAL PROJECT	SHEET No.	TOTAL SHEETS
05	SLO	1	64.0/R66.9	167	265

Randell D. Hiatt
REGISTERED CIVIL ENGINEER

July 19, 2013
PLANS APPROVAL DATE

REGISTERED PROFESSIONAL ENGINEER
Randell D. Hiatt
No. C50200
Exp. 6-30-15
CIVIL
STATE OF CALIFORNIA

THE STATE OF CALIFORNIA OR ITS OFFICERS OR AGENTS SHALL NOT BE RESPONSIBLE FOR THE ACCURACY OR COMPLETENESS OF SCANNED COPIES OF THIS PLAN SHEET.

TO ACCOMPANY PLANS DATED 10-27-14

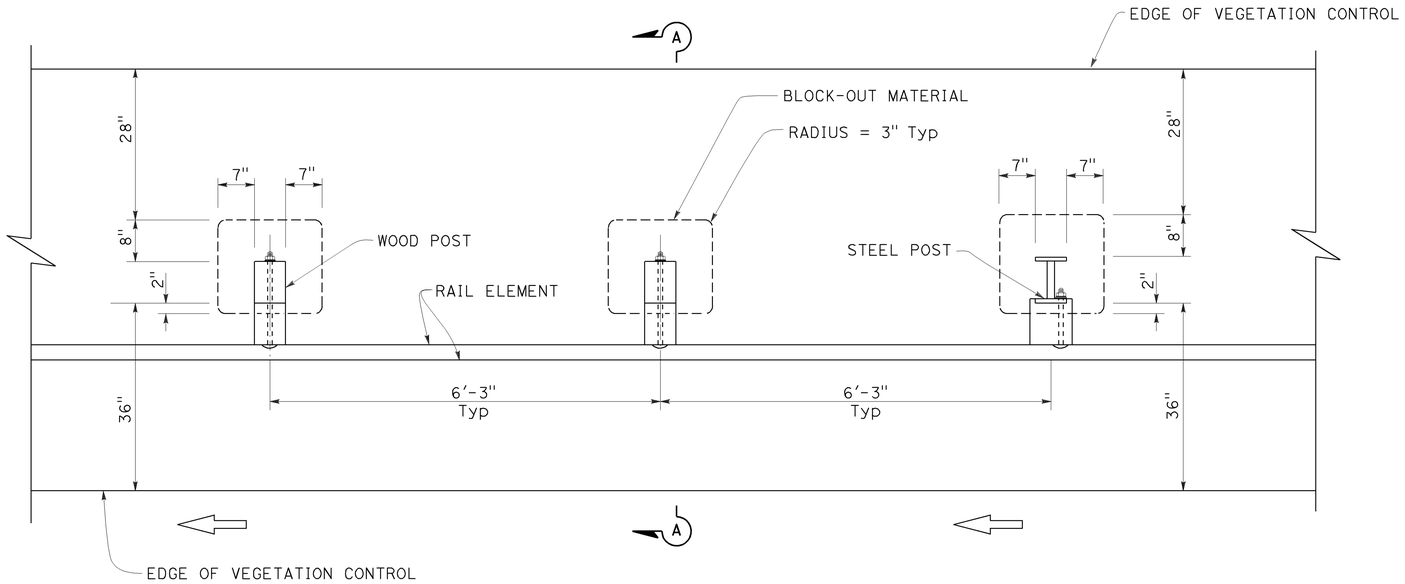

PLAN

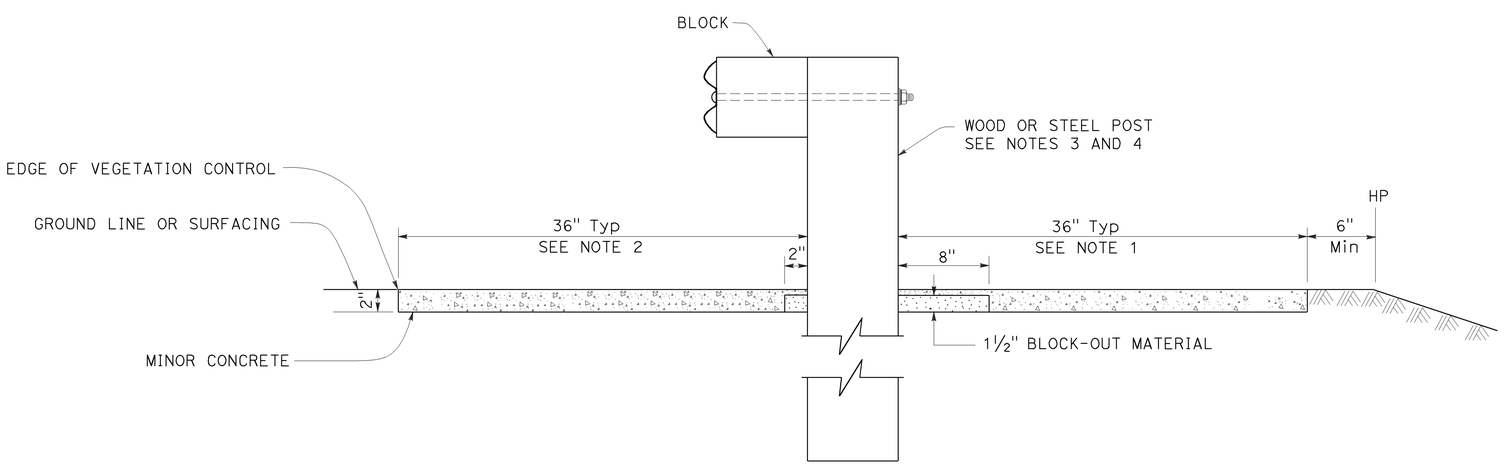

SECTION A-A

NOTES:

1. Where the distance between back of post and hinge point is less than 42", construct vegetation control to 6" from hinge point while maintaining the 8" block-out at back of post. If the 8" block-out at back of post can not be maintained, construct vegetation control flush with the back edge of post.
2. Where dike is constructed under railing, construct vegetation control to back edge of dike. Where paved shoulder is constructed within 36" in front of the post, construct vegetation control to the edge of paved shoulder.
3. For wood post sizes, see Revised Standard Plan RSP A77N1.
4. For steel post sizes, see Revised Standard Plan RSP A77N2.
5. For details not shown, see Revised Standard Plans RSP A77L1 and RSP A77L2.

STATE OF CALIFORNIA
DEPARTMENT OF TRANSPORTATION

MIDWEST GUARDRAIL SYSTEM TYPICAL VEGETATION CONTROL STANDARD RAILING SECTION

NO SCALE

RSP A77N5 DATED JULY 19, 2013 SUPPLEMENTS THE STANDARD PLANS BOOK DATED 2010.

REVISED STANDARD PLAN RSP A77N5

2010 REVISED STANDARD PLAN RSP A77N5

7-3-13

Dist	COUNTY	ROUTE	POST MILES TOTAL PROJECT	SHEET No.	TOTAL SHEETS
05	SLO	1	64.0/R66.9	168	265

Randell D. Hiatt
REGISTERED CIVIL ENGINEER

July 19, 2013
PLANS APPROVAL DATE

REGISTERED PROFESSIONAL ENGINEER
Randell D. Hiatt
No. C50200
Exp. 6-30-15
CIVIL
STATE OF CALIFORNIA

THE STATE OF CALIFORNIA OR ITS OFFICERS OR AGENTS SHALL NOT BE RESPONSIBLE FOR THE ACCURACY OR COMPLETENESS OF SCANNED COPIES OF THIS PLAN SHEET.

TO ACCOMPANY PLANS DATED 10-27-14

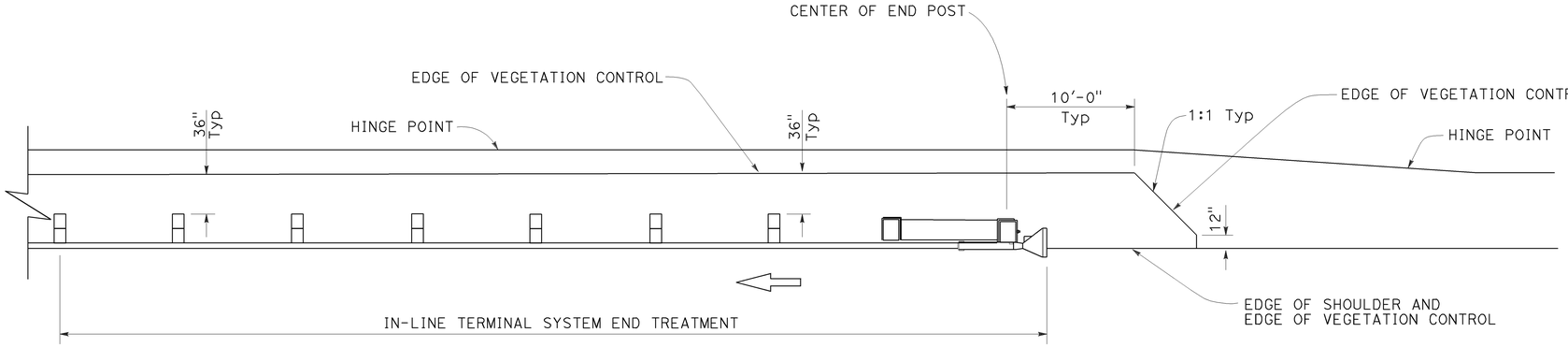

PLAN

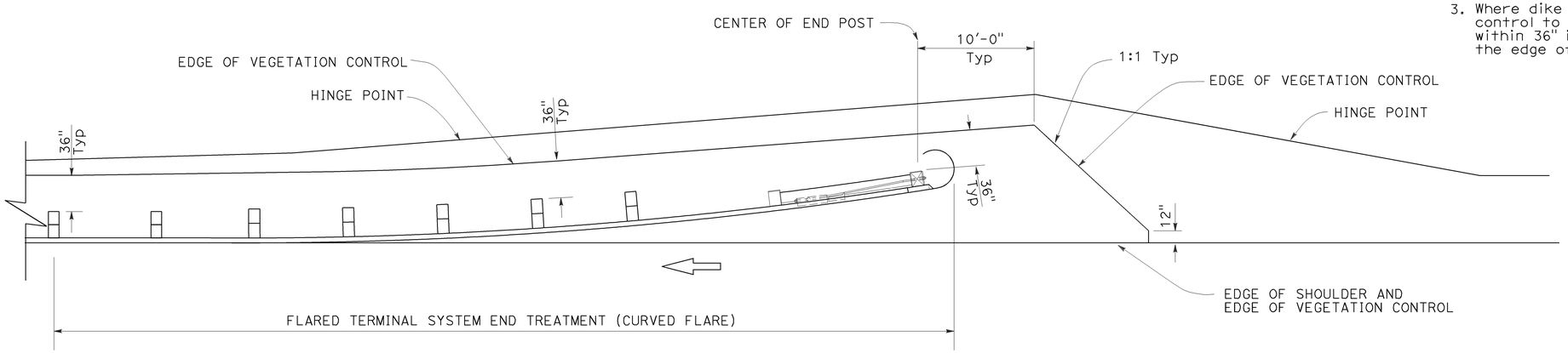

PLAN

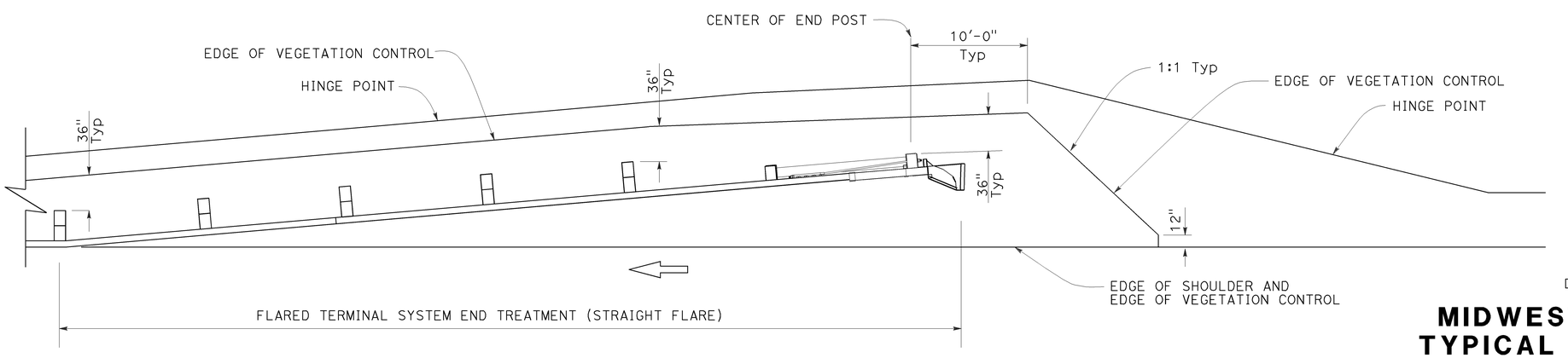

PLAN

NOTES:

1. See Revised Standard Plan RSP A77N5 for additional vegetation control details.
2. Where the distance between back of post and hinge point is less than 42", construct vegetation control to 6" from hinge point while maintaining the 8" block-out at back of post. If the 8" block-out at back of post can not be maintained, construct vegetation control flush with the back edge of post.
3. Where dike is constructed under railing, construct vegetation control to back edge of dike. Where paved shoulder is constructed within 36" in front of the post, construct vegetation control to the edge of paved shoulder.

STATE OF CALIFORNIA
DEPARTMENT OF TRANSPORTATION

MIDWEST GUARDRAIL SYSTEM TYPICAL VEGETATION CONTROL FOR TERMINAL SYSTEM END TREATMENTS

NO SCALE

RSP A77N6 DATED JULY 19, 2013 SUPPLEMENTS THE STANDARD PLANS BOOK DATED 2010.

REVISED STANDARD PLAN RSP A77N6

2010 REVISED STANDARD PLAN RSP A77N6

6-12-13

Dist	COUNTY	ROUTE	POST MILES TOTAL PROJECT	SHEET No.	TOTAL SHEETS
05	SLO	1	64.0/R66.9	169	265

Randell D. Hiatt
REGISTERED CIVIL ENGINEER

July 19, 2013
PLANS APPROVAL DATE

REGISTERED PROFESSIONAL ENGINEER
Randell D. Hiatt
No. C50200
Exp. 6-30-15
CIVIL
STATE OF CALIFORNIA

THE STATE OF CALIFORNIA OR ITS OFFICERS OR AGENTS SHALL NOT BE RESPONSIBLE FOR THE ACCURACY OR COMPLETENESS OF SCANNED COPIES OF THIS PLAN SHEET.

TO ACCOMPANY PLANS DATED 10-27-14

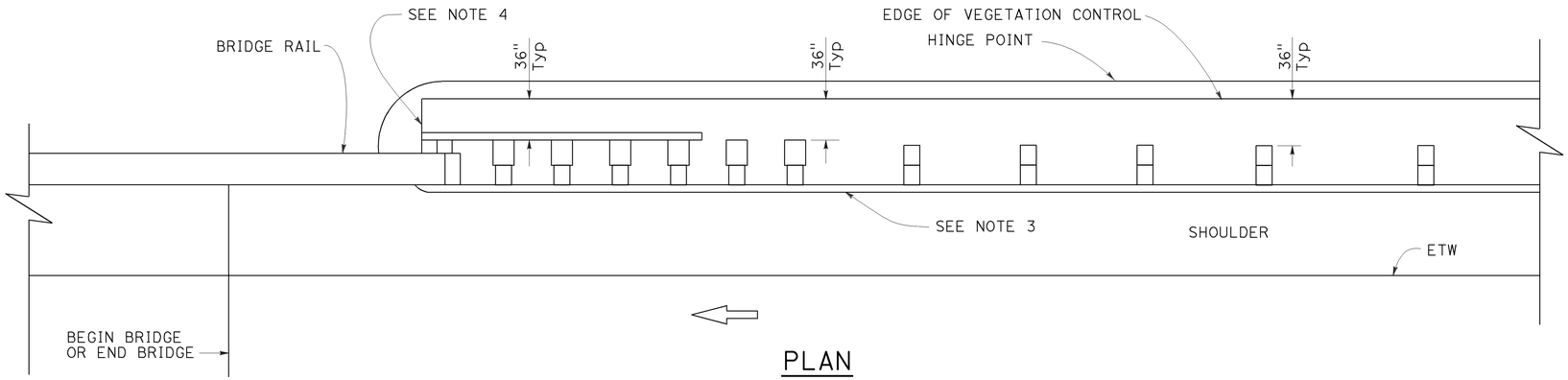

PLAN

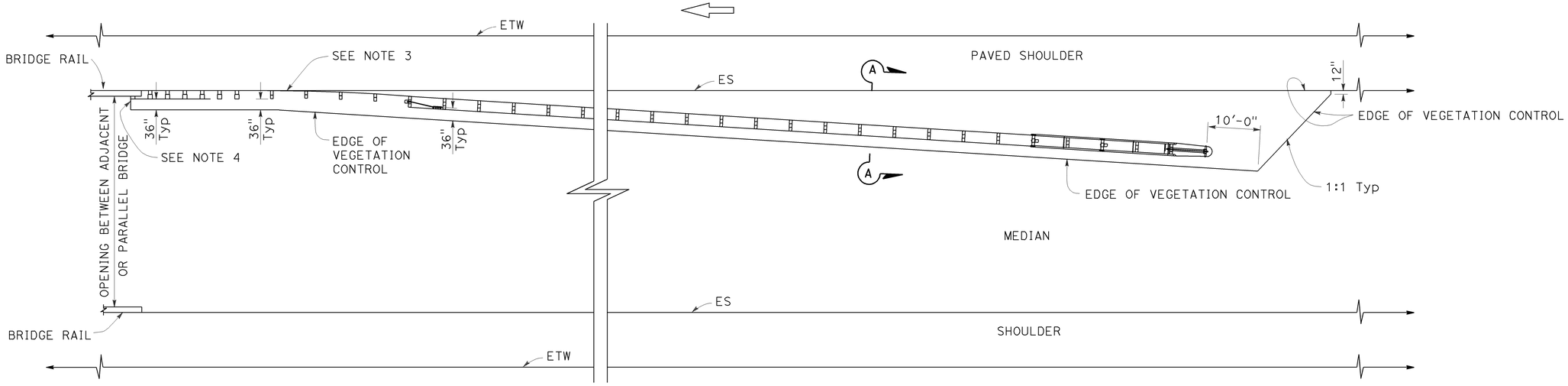

PLAN

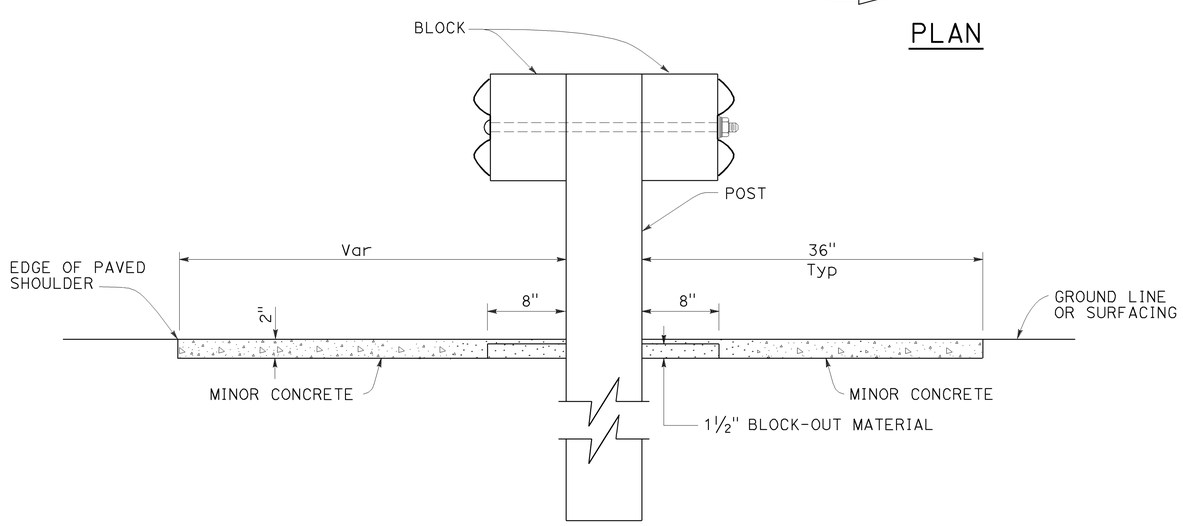

SECTION A-A

NOTES:

1. See Revised Standard Plan RSP A77N5 for additional vegetation control details.
2. Where the distance between back of post and hinge point is less than 42", construct vegetation control to 6" from hinge point while maintaining the 8" block-out at back of post. If the 8" block-out at back of post can not be maintained, construct vegetation control flush with the back edge of post.
3. Where dike is constructed under railing, construct vegetation control to back edge of dike. Where paved shoulder is constructed within 36" in front of the post, construct vegetation control to the edge of paved shoulder.
4. End vegetation control at end of backside rail element.

STATE OF CALIFORNIA
DEPARTMENT OF TRANSPORTATION

MIDWEST GUARDRAIL SYSTEM TYPICAL VEGETATION CONTROL AT STRUCTURE APPROACH

NO SCALE

RSP A77N7 DATED JULY 19, 2013 SUPPLEMENTS THE STANDARD PLANS BOOK DATED 2010.

REVISED STANDARD PLAN RSP A77N7

2010 REVISED STANDARD PLAN RSP A77N7

6-12-13

Dist	COUNTY	ROUTE	POST MILES TOTAL PROJECT	SHEET No.	TOTAL SHEETS
05	SLO	1	64.0/R66.9	170	265

Randell D. Hiatt
REGISTERED CIVIL ENGINEER

July 19, 2013
PLANS APPROVAL DATE

REGISTERED PROFESSIONAL ENGINEER
Randell D. Hiatt
No. C50200
Exp. 6-30-15
CIVIL
STATE OF CALIFORNIA

THE STATE OF CALIFORNIA OR ITS OFFICERS OR AGENTS SHALL NOT BE RESPONSIBLE FOR THE ACCURACY OR COMPLETENESS OF SCANNED COPIES OF THIS PLAN SHEET.

TO ACCOMPANY PLANS DATED 10-27-14

2010 REVISED STANDARD PLAN RSP A77N8

NOTES:

1. See Revised Standard Plan RSP A77N5 for additional vegetation control details.
2. Where the distance between back of post and hinge point is less than 42", construct vegetation control to 6" from hinge point while maintaining the 8" block-out at back of post. If the 8" block-out at back of post can not be maintained, construct vegetation control flush with the back edge of post.
3. Where dike is constructed under railing, construct vegetation control to back edge of dike. Where paved shoulder is constructed within 36" in front of the post, construct vegetation control to the edge of paved shoulder.

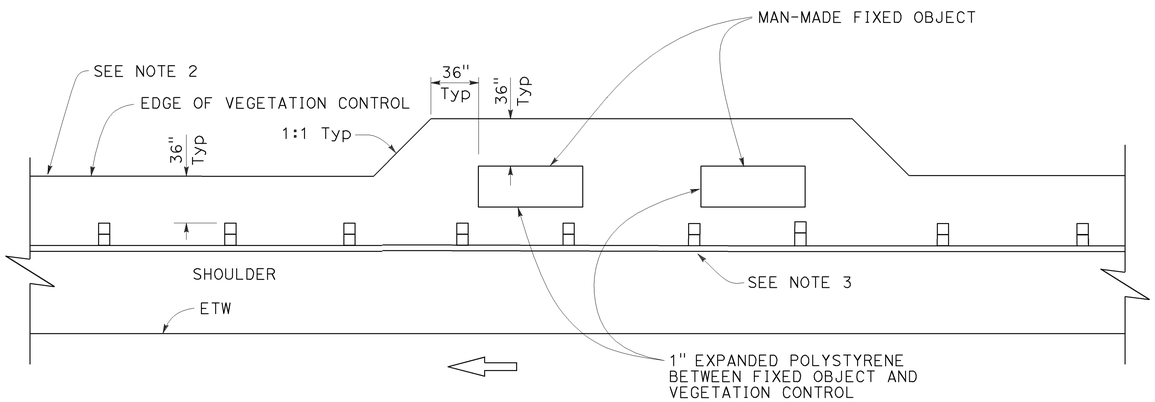

PLAN

Fixed object(s) on shoulder

STATE OF CALIFORNIA
DEPARTMENT OF TRANSPORTATION

MIDWEST GUARDRAIL SYSTEM TYPICAL VEGETATION CONTROL AT FIXED OBJECT

NO SCALE

RSP A77N8 DATED JULY 19, 2013 SUPPLEMENTS THE STANDARD PLANS BOOK DATED 2010.

REVISED STANDARD PLAN RSP A77N8

Dist	COUNTY	ROUTE	POST MILES TOTAL PROJECT	SHEET No.	TOTAL SHEETS
05	SLO	1	64.0/R66.9	171	265

Randell D. Hiatt
REGISTERED CIVIL ENGINEER

July 19, 2013
PLANS APPROVAL DATE

REGISTERED PROFESSIONAL ENGINEER
Randell D. Hiatt
No. C50200
Exp. 6-30-15
CIVIL
STATE OF CALIFORNIA

THE STATE OF CALIFORNIA OR ITS OFFICERS OR AGENTS SHALL NOT BE RESPONSIBLE FOR THE ACCURACY OR COMPLETENESS OF SCANNED COPIES OF THIS PLAN SHEET.

TO ACCOMPANY PLANS DATED 10-27-14

2010 REVISED STANDARD PLAN RSP A77N9

NOTES:

1. See Revised Standard Plan RSP A77N5 for additional vegetation control details.
2. Where dike is constructed under railing, construct vegetation control to back edge of dike. Where paved shoulder is constructed within 36" in front of the post, construct vegetation control to the edge of paved shoulder.

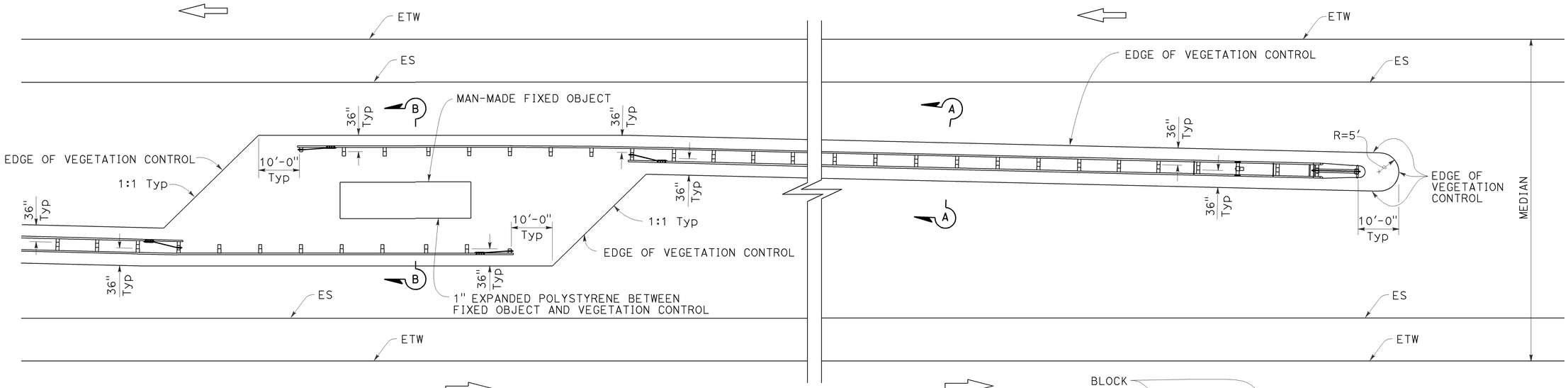

PLAN

Fixed object(s) in median

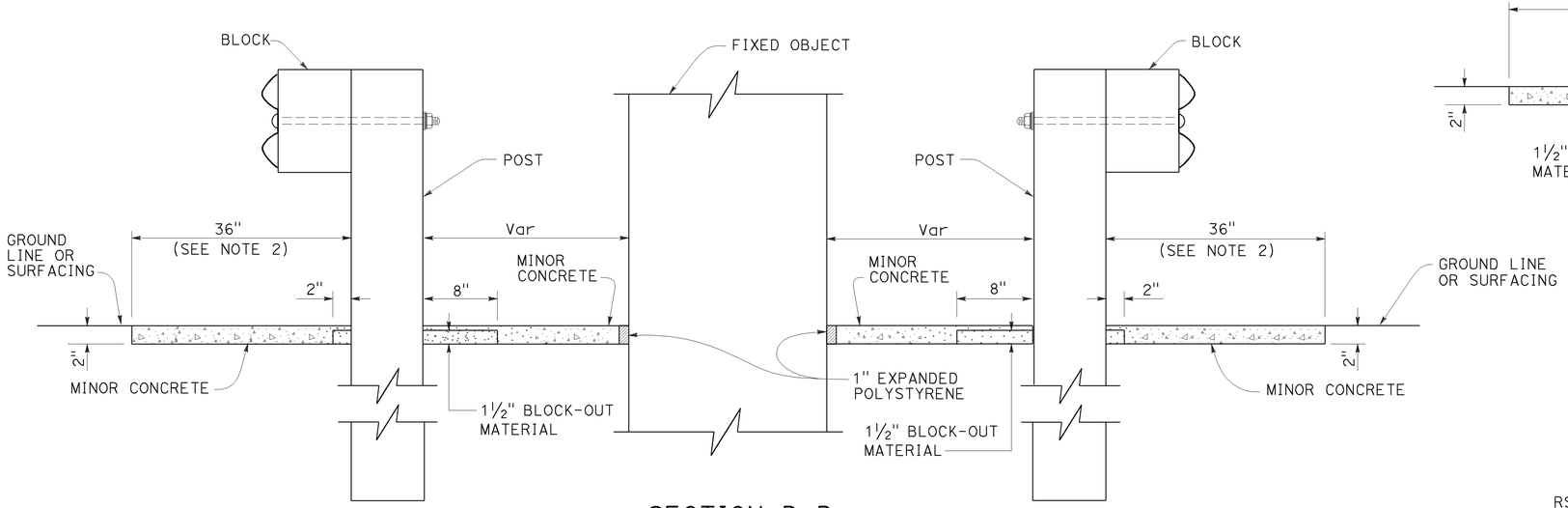

SECTION B-B

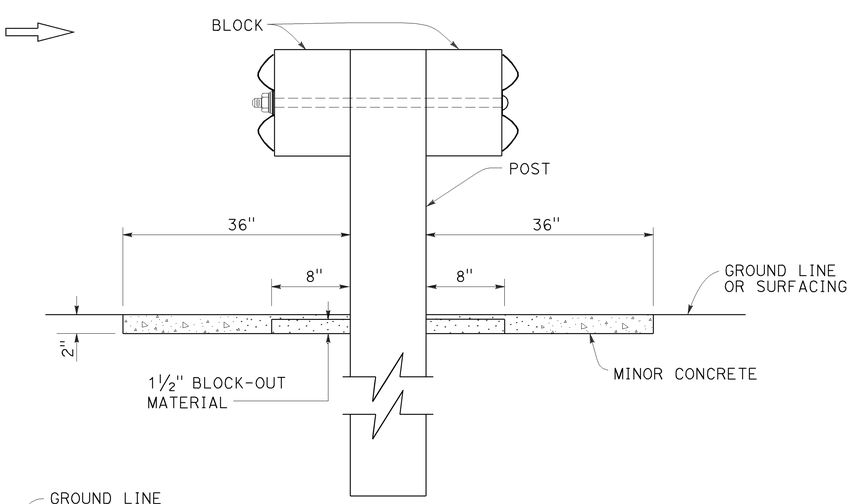

SECTION A-A

STATE OF CALIFORNIA
DEPARTMENT OF TRANSPORTATION

MIDWEST GUARDRAIL SYSTEM TYPICAL VEGETATION CONTROL AT FIXED OBJECT

NO SCALE

RSP A77N9 DATED JULY 19, 2013 SUPPLEMENTS THE STANDARD PLANS BOOK DATED 2010.

REVISED STANDARD PLAN RSP A77N9

6-12-13

Dist	COUNTY	ROUTE	POST MILES TOTAL PROJECT	SHEET No.	TOTAL SHEETS
05	SLO	1	64.0/R66.9	172	265

Randell D. Hiatt
REGISTERED CIVIL ENGINEER

July 19, 2013
PLANS APPROVAL DATE

REGISTERED PROFESSIONAL ENGINEER
Randell D. Hiatt
No. C50200
Exp. 6-30-15
CIVIL
STATE OF CALIFORNIA

THE STATE OF CALIFORNIA OR ITS OFFICERS OR AGENTS SHALL NOT BE RESPONSIBLE FOR THE ACCURACY OR COMPLETENESS OF SCANNED COPIES OF THIS PLAN SHEET.

TO ACCOMPANY PLANS DATED 10-27-14

2010 REVISED STANDARD PLAN RSP A77N10

NOTES:

1. See Revised Standard Plan RSP A77N5 for additional vegetation control details.
2. Where dike is constructed under railing, construct vegetation control to back edge of dike. Where paved shoulder is constructed within 36" in front of the post, construct vegetation control to the edge of paved shoulder.

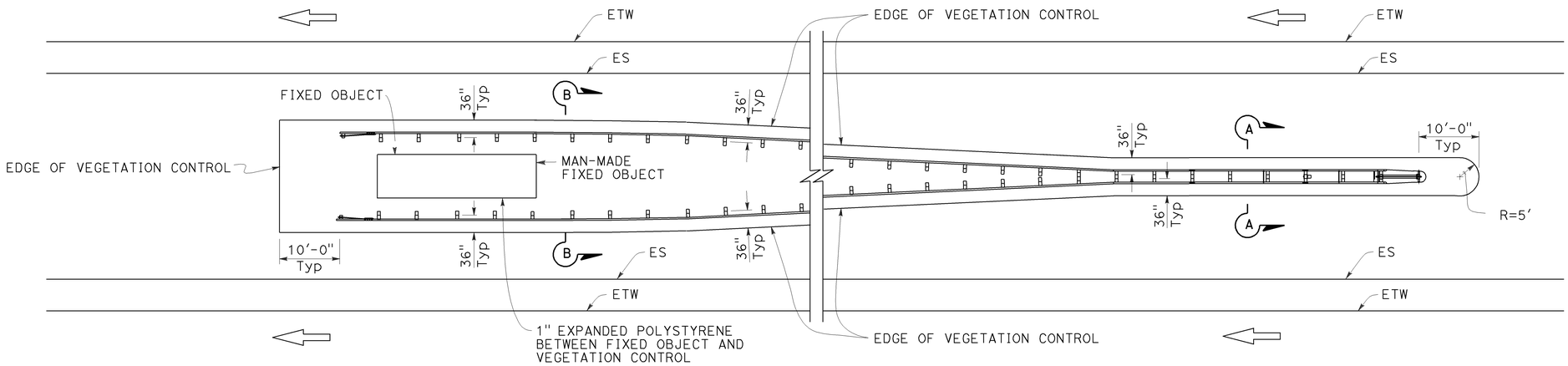

PLAN

Fixed object(s) between separate roadbeds
(One-Way Traffic)

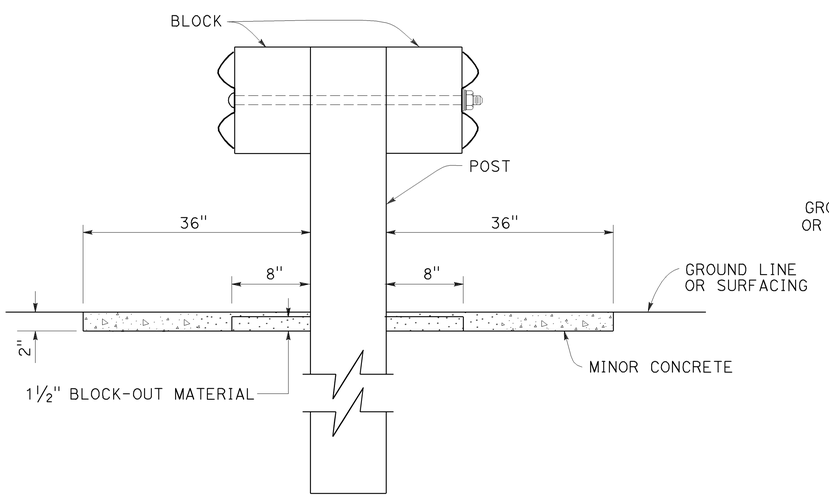

SECTION A-A

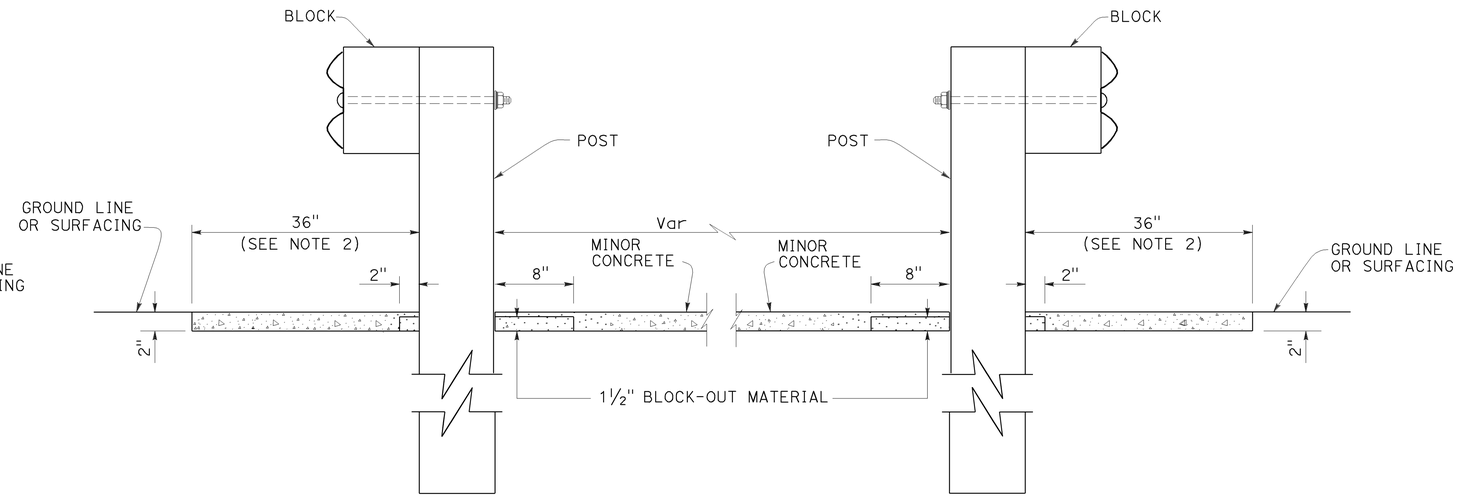

SECTION B-B

STATE OF CALIFORNIA
DEPARTMENT OF TRANSPORTATION

MIDWEST GUARDRAIL SYSTEM TYPICAL VEGETATION CONTROL AT FIXED OBJECT

NO SCALE

RSP A77N10 DATED JULY 19, 2013 SUPPLEMENTS THE STANDARD PLANS BOOK DATED 2010.

REVISED STANDARD PLAN RSP A77N10

6-12-13

Dist	COUNTY	ROUTE	POST MILES TOTAL PROJECT	SHEET No.	TOTAL SHEETS
05	SLO	1	64.0/R66.9	173	265

Randell D. Hiatt
REGISTERED CIVIL ENGINEER

July 19, 2013
PLANS APPROVAL DATE

REGISTERED PROFESSIONAL ENGINEER
Randell D. Hiatt
No. C50200
Exp. 6-30-15
CIVIL
STATE OF CALIFORNIA

THE STATE OF CALIFORNIA OR ITS OFFICERS OR AGENTS SHALL NOT BE RESPONSIBLE FOR THE ACCURACY OR COMPLETENESS OF SCANNED COPIES OF THIS PLAN SHEET.

TO ACCOMPANY PLANS DATED 10-27-14

2010 REVISED STANDARD PLAN RSP A77Q3

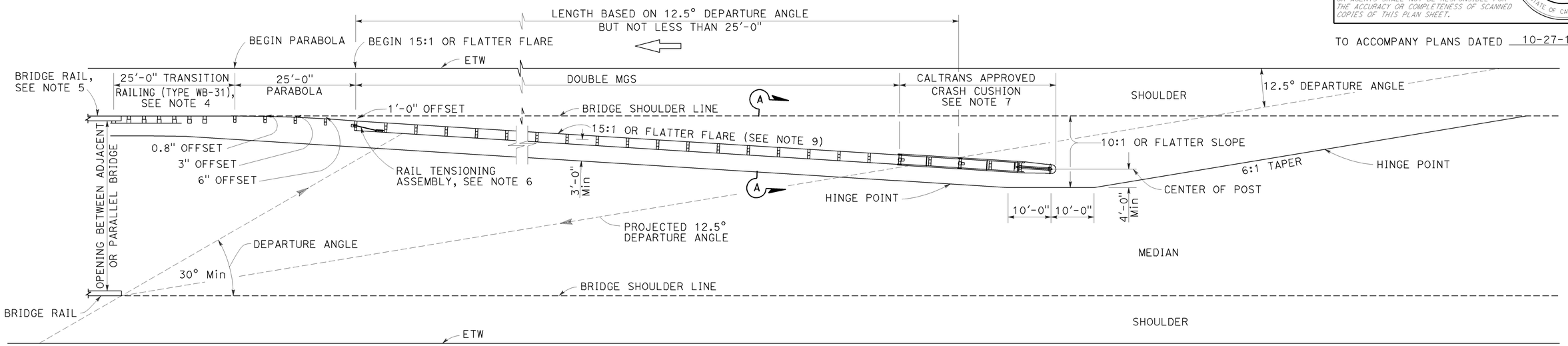

TYPE 12E LAYOUT

See Note 9

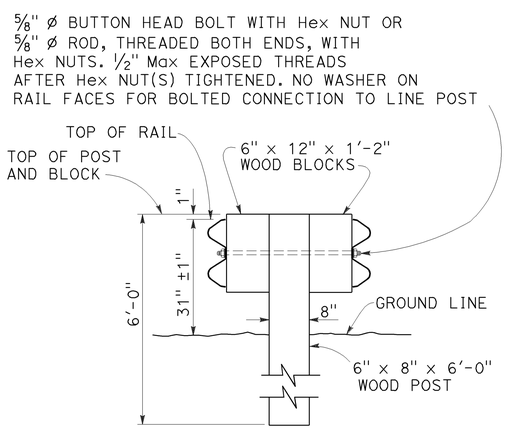

SECTION A-A
TYPICAL DOUBLE MIDWEST GUARDRAIL SYSTEM

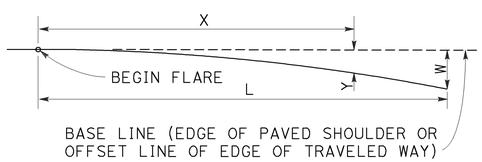

$$Y = \frac{WX^2}{L^2}$$

Y = OFFSET FROM BASE LINE
W = MAXIMUM OFFSET
X = DISTANCE ALONG BASE LINE
L = LENGTH OF FLARE

PARABOLIC FLARE OFFSETS

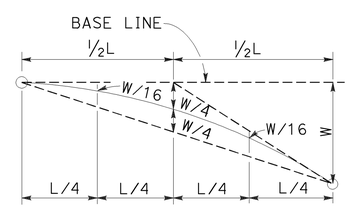

TYPICAL PARABOLIC LAYOUT

NOTES:

1. Line post, blocks and hardware to be used are shown on Revised Standard Plans RSP A77L1, RSP A77L2, RSP A77M1, RSP A77N1 and RSP A77N2.
2. MGS post spacing to be 6'-3" center to center, except as otherwise noted.
3. Except as noted, line posts are 6" x 8" x 6'-0" wood with 6" x 12" x 1'-2" wood blocks. W6 x 8.5 or W6 x 9 steel posts, 6'-0" in length, with 6" x 12" x 1'-2" notched wood blocks or notched recycled plastic blocks may be used for 6" x 8" x 6'-0" wood line posts with 6" x 12" x 1'-2" wood blocks where applicable and when specified.
4. For Transition Railing (Type WB-31) details, see Revised Standard Plan RSP A77U4.
5. For additional details of a typical connection to bridge rail, see Connection Detail AA on Revised Standard Plan RSP A77U1.
6. For Rail Tensioning Assembly details, see Revised Standard Plan RSP A77S2.
7. The type of Crash Cushion to be used will be shown on the Project Plans.
8. Type 12E Layout is typically used left of approaching traffic at the end of each structure on multilane freeways or expressways where a median type barrier is not constructed between separated roadbeds.
9. The 15:1 or flatter flare is measured off of the edge of traveled way.

STATE OF CALIFORNIA
DEPARTMENT OF TRANSPORTATION

MIDWEST GUARDRAIL SYSTEM TYPICAL LAYOUTS FOR STRUCTURE APPROACH

NO SCALE

RSP A77Q3 DATED JULY 19, 2013 SUPPLEMENTS THE STANDARD PLANS BOOK DATED 2010.

REVISED STANDARD PLAN RSP A77Q3

Dist	COUNTY	ROUTE	POST MILES TOTAL PROJECT	SHEET No.	TOTAL SHEETS
05	SLO	1	64.0/R66.9	174	265

Randell D. Hiatt
REGISTERED CIVIL ENGINEER

July 19, 2013
PLANS APPROVAL DATE

REGISTERED PROFESSIONAL ENGINEER
Randell D. Hiatt
No. C50200
Exp. 6-30-15
CIVIL
STATE OF CALIFORNIA

THE STATE OF CALIFORNIA OR ITS OFFICERS OR AGENTS SHALL NOT BE RESPONSIBLE FOR THE ACCURACY OR COMPLETENESS OF SCANNED COPIES OF THIS PLAN SHEET.

TO ACCOMPANY PLANS DATED 10-27-14

2010 REVISED STANDARD PLAN RSP A77Q4

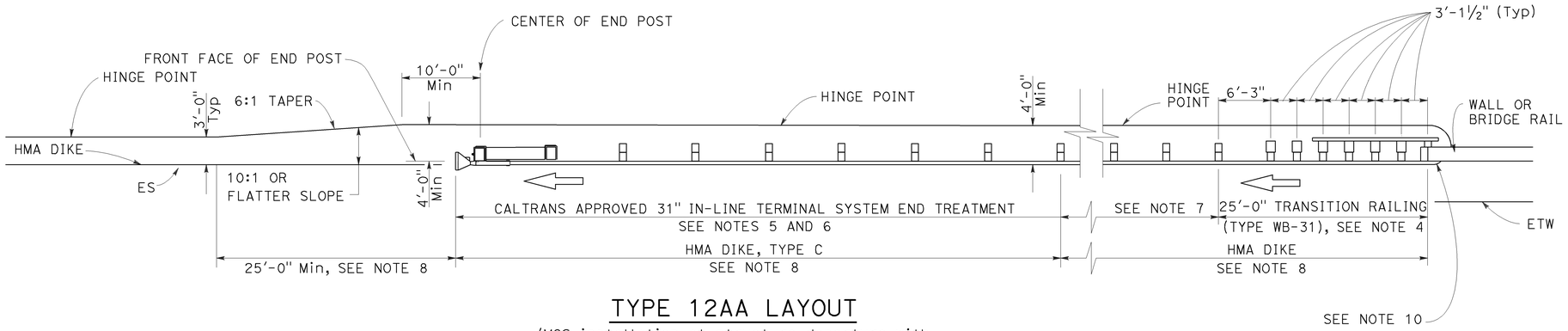

TYPE 12AA LAYOUT

(MGS installation at structure departure with
31" in-line end treatment at trailing end of railing)
See Notes 8 and 9

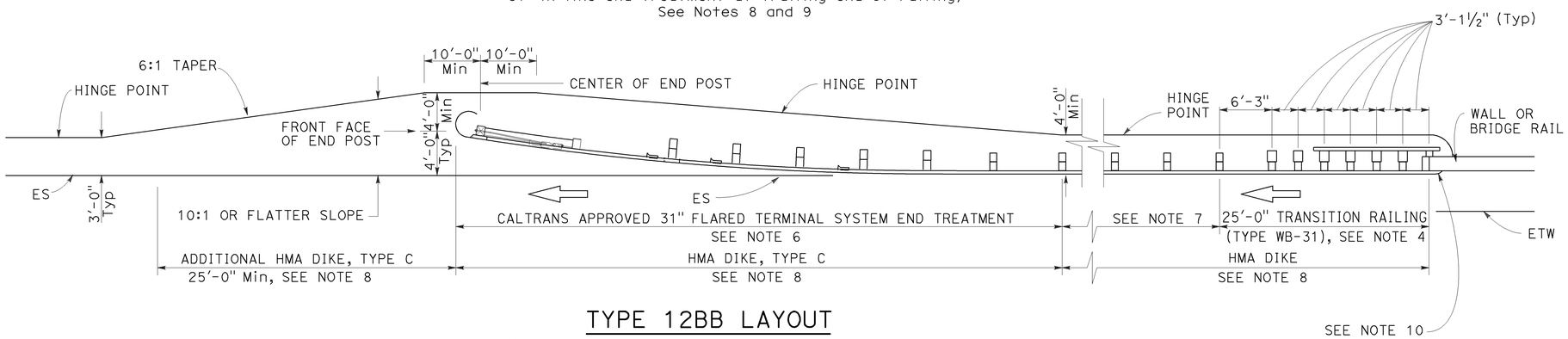

TYPE 12BB LAYOUT

(MGS installation at structure departure with
31" flared end treatment at trailing end of railing)
See Notes 8 and 9

NOTES:

1. Line post, blocks and hardware to be used are shown on Revised Standard Plans RSP A77L1, RSP A77L2, RSP A77M1, RSP A77N1 and RSP A77N2.
2. MGS post spacing to be 6'-3" center to center, except as otherwise noted.
3. Except as noted, line posts are 6" x 8" x 6'-0" wood with 6" x 12" x 1'-2" wood blocks. W6 x 8.5 or W6 x 9 steel posts, 6'-0" in length, with 6" x 12" x 1-2" notched wood blocks or notched recycled plastic blocks may be used for 6" x 8" x 6'-0" wood posts with 6" x 12" x 1'-2" wood blocks where applicable and when specified.
4. For Transition Railing (Type WB-31) details for Types 12AA and 12BB Layouts, see Revised Standard Plan RSP A77U4.
5. 31" in-line terminal system treatments are used where site conditions will not accommodate a 31" flared end treatment.
6. The type of 31" terminal system to be used will be shown on the Project Plans.
7. Dependent on site conditions (embankment height, side slopes, other fixed objects), it may be advisable to construct additional MGS (a length equal to multiples of 12'-6" with 6'-3" post spacing) between the transition railing and 31" end treatments.
8. Where placement of dike is required with MGS installations, see Revised Standard Plan RSP A77N4 for dike positioning details.
9. Type 12AA or Type 12BB Layouts are typically used to the right of traffic departing a structure on two-way conventional highways where the roadbed width across the structure is less than 40 feet.
10. For additional details of typical connections to bridge rail, see Connection Detail CC on Revised Standard Plan RSP A77U2 and Connection Detail HH on Revised Standard Plan RSP A77V2.

STATE OF CALIFORNIA
DEPARTMENT OF TRANSPORTATION

MIDWEST GUARDRAIL SYSTEM TYPICAL LAYOUTS FOR STRUCTURE DEPARTURE

NO SCALE

RSP A77Q4 DATED JULY 19, 2013 SUPPLEMENTS THE STANDARD PLANS BOOK DATED 2010.

REVISED STANDARD PLAN RSP A77Q4

6-19-13

Dist	COUNTY	ROUTE	POST MILES TOTAL PROJECT	SHEET No.	TOTAL SHEETS
05	SLO	1	64.0/R66.9	175	265

Randell D. Hiatt
REGISTERED CIVIL ENGINEER

July 19, 2013
PLANS APPROVAL DATE

REGISTERED PROFESSIONAL ENGINEER
Randell D. Hiatt
No. C50200
Exp. 6-30-15
CIVIL
STATE OF CALIFORNIA

THE STATE OF CALIFORNIA OR ITS OFFICERS OR AGENTS SHALL NOT BE RESPONSIBLE FOR THE ACCURACY OR COMPLETENESS OF SCANNED COPIES OF THIS PLAN SHEET.

TO ACCOMPANY PLANS DATED 10-27-14

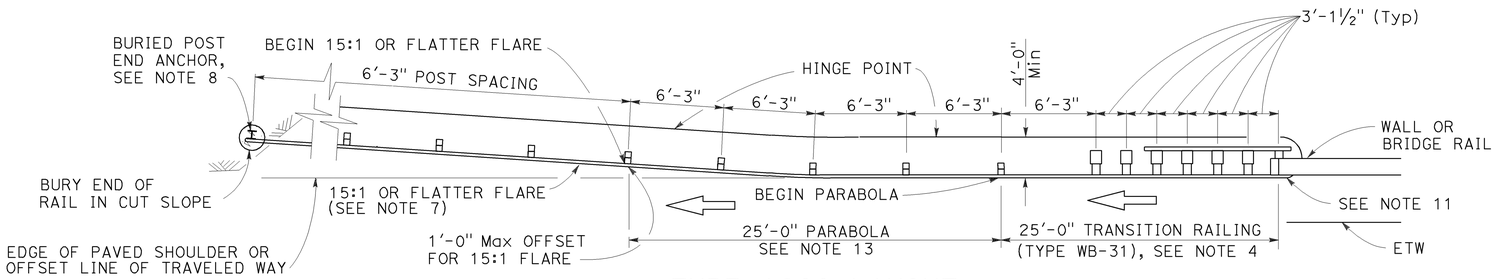

TYPE 12CC LAYOUT

(MGS installation at structure departure with a
Buried end anchor treatment at trailing end of railing)
See Notes 9 and 10

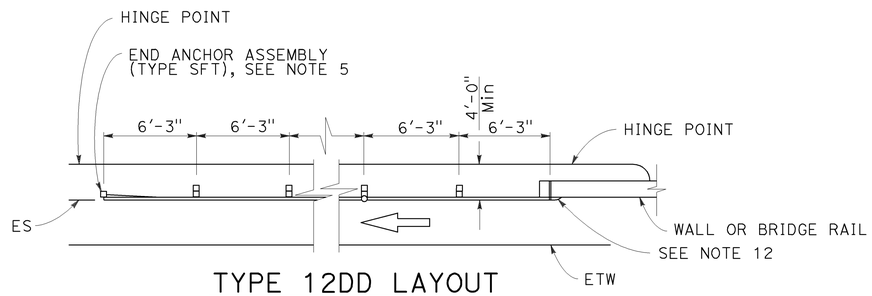

TYPE 12DD LAYOUT

(MGS installation at structure departure
With end anchor assembly at trailing end of railing)
See Notes 6 and 9

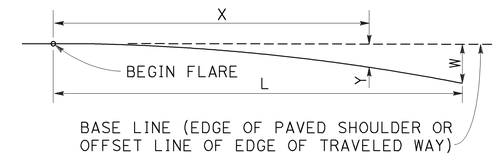

$$Y = \frac{WX^2}{L^2}$$

Y = OFFSET FROM BASE LINE
W = MAXIMUM OFFSET
X = DISTANCE ALONG BASE LINE
L = LENGTH OF FLARE

PARABOLIC FLARE OFFSETS

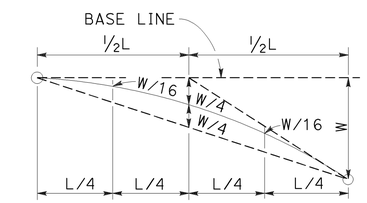

TYPICAL PARABOLIC LAYOUT

NOTES:

1. Line post, blocks and hardware to be used are shown on Revised Standard Plans RSP A77L1, RSP A77L2, RSP A77M1, RSP A77N1 and RSP A77N2.
2. MSG post spacing to be 6'-3" center to center, except as otherwise noted.
3. Except as noted, line posts are 6" x 8" x 6'-0" wood with 6" x 12" x 1'-2" wood blocks. W6 x 8.5 or W6 x 9 steel posts, 6'-0" in length, with 6" x 12" x 1'-2" notched wood blocks or notched recycled plastic blocks may be used for 6" x 8" x 6'-0" wood line posts with 6" x 12" x 1'-2" wood blocks where applicable and when specified.
4. For Transition Railing (Type WB-31) details for Type 12CC Layout, see Revised Standard Plan RSP A77U4.
5. For details of End Anchor Assembly (Type SFT) used with Type 12DD Layout, see Revised Standard Plan RSP A77S1.
6. Type 12DD layout is typically used to the right of traffic departing a structure on two-way conventional highways where the roadbed width across the structure is equal to or greater than 40 feet and MGS is recommended (embankment height, side slopes, other fixed objects). Length of railing to be equal to multiples of 12'-6". For MGS connection details to bridge rail, see Revised Standard Plans RSP A77U1 and RSP A77V1. For MGS connection details to wall, see Revised Standard Plan RSP A77U3.
7. The 15:1 or flatter flare for Type 12CC Layout is based on the edge of the paved shoulder or offset line of edge of the traveled way. The length of MGS within the 15:1 or flatter flare is based on site conditions and should be a length equal to multiples of 12'-6".
8. For details of the buried post end anchor used with Type 12CC Layout, see Revised Standard Plan RSP A77T2.
9. Where placement of dike is required with MGS installations, see Revised Standard Plan RSP A77N4 for dike positioning details.
10. Type 12CC Layout is typically used to the right of traffic departing a structure on two-way conventional highways where the roadbed width across the structure is less than 40 feet.
11. For additional details of a typical connection to bridge rail for Layout Type 12CC, see Connection Detail CC on Revised Standard Plan RSP A77U2 and Connection Detail HH on Revised Standard Plan RSP A77V2.
12. For additional details of a typical connection to bridge rail for Layout Type 12DD, see Connection Detail BB on Revised Standard Plan RSP A77U1 and Connection Detail GG on Revised Standard Plan RSP A77V1.
13. For typical flare offsets for 25'-0" length parabola with maximum offset of 1'-0", see Revised Standard Plan RSP A77P1.

STATE OF CALIFORNIA
DEPARTMENT OF TRANSPORTATION

MIDWEST GUARDRAIL SYSTEM TYPICAL LAYOUTS FOR STRUCTURE DEPARTURE

NO SCALE

RSP A77Q5 DATED JULY 19, 2013 SUPPLEMENTS THE STANDARD PLANS BOOK DATED 2010.

REVISED STANDARD PLAN RSP A77Q5

2010 REVISED STANDARD PLAN RSP A77Q5

6-20-13

Dist	COUNTY	ROUTE	POST MILES TOTAL PROJECT	SHEET No.	TOTAL SHEETS
05	SLO	1	64.0/R66.9	176	265

Randell D. Hiatt
REGISTERED CIVIL ENGINEER

November 15, 2013
PLANS APPROVAL DATE

REGISTERED PROFESSIONAL ENGINEER
Randell D. Hiatt
No. C50200
Exp. 6-30-15
CIVIL
STATE OF CALIFORNIA

THE STATE OF CALIFORNIA OR ITS OFFICERS OR AGENTS SHALL NOT BE RESPONSIBLE FOR THE ACCURACY OR COMPLETENESS OF SCANNED COPIES OF THIS PLAN SHEET.

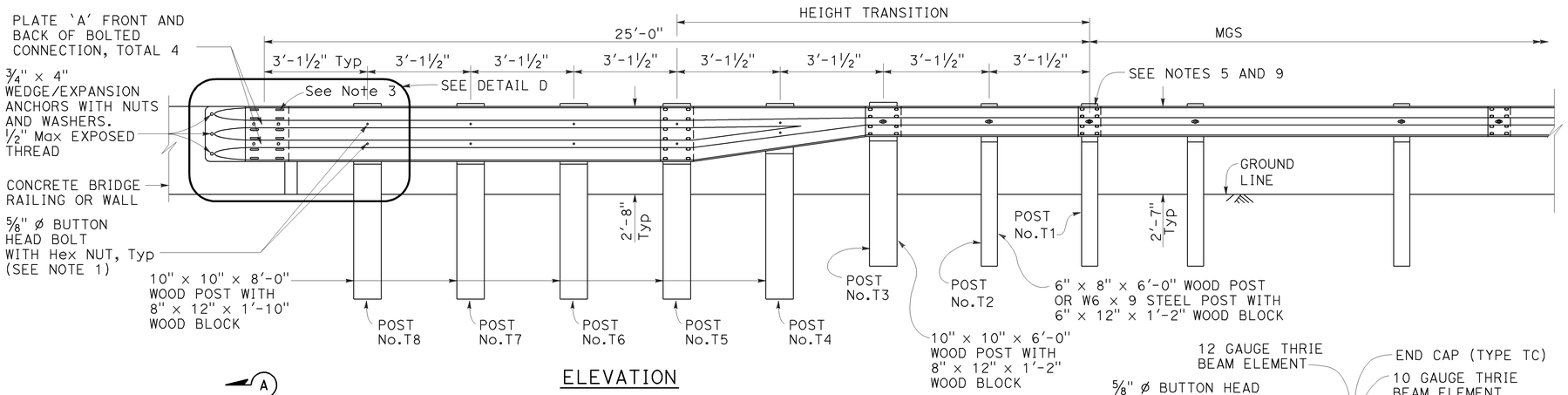

ELEVATION

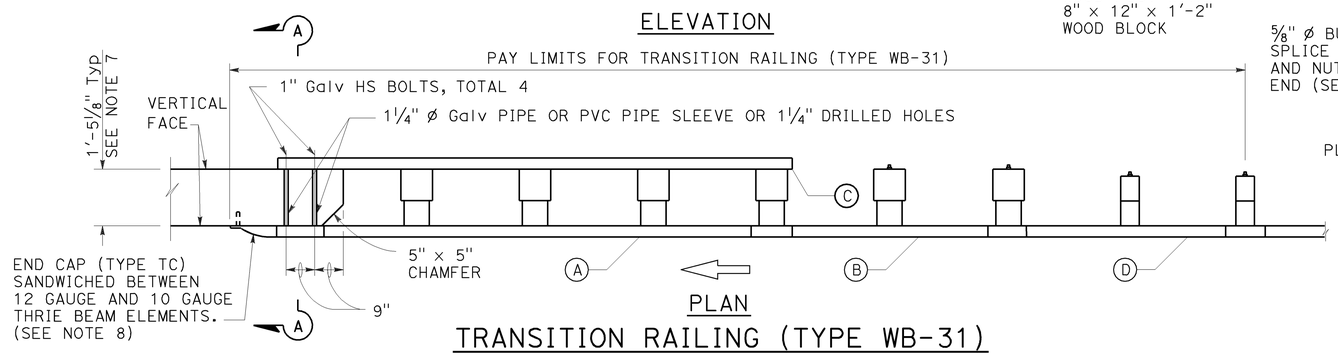

PLAN

TRANSITION RAILING (TYPE WB-31)

(No Blockout Attachment)

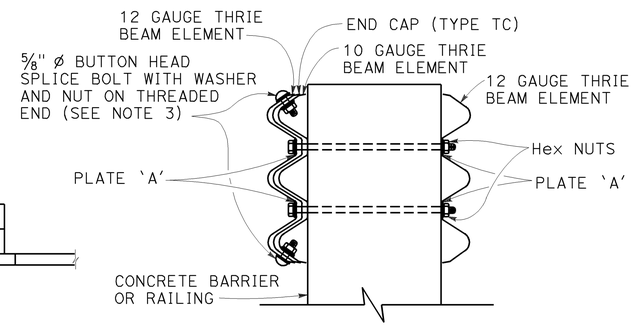

SECTION A-A

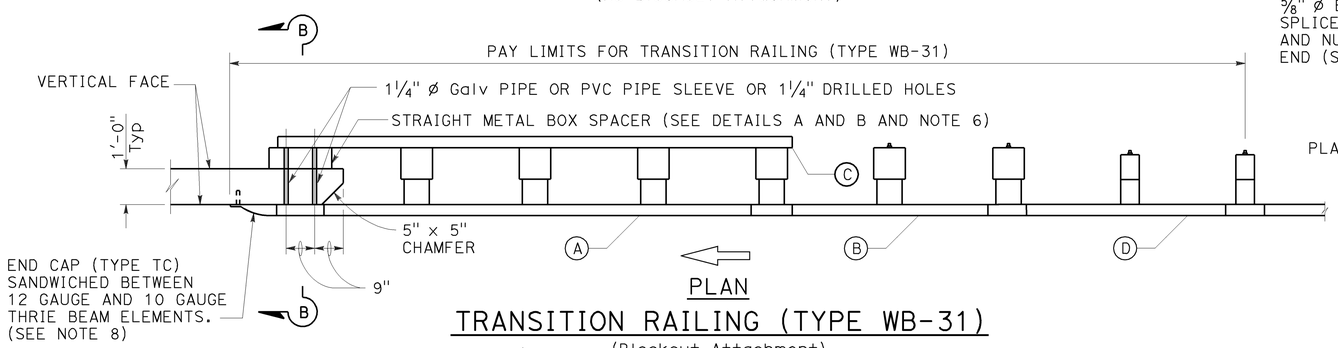

PLAN

TRANSITION RAILING (TYPE WB-31)

(Blockout Attachment)

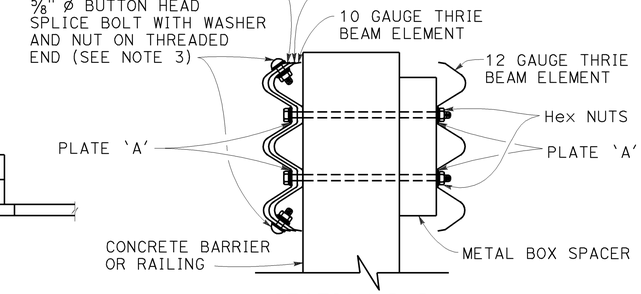

SECTION B-B

LEGEND:

- (A) NESTED THRIE BEAM ELEMENTS (ONE 12 GAUGE ELEMENT NESTED OVER ONE 10 GAUGE ELEMENT).
- (B) ONE ASYMMETRICAL 10 GAUGE "W" BEAM TO THRIE BEAM ELEMENT.
- (C) ONE 12 GAUGE THRIE BEAM ELEMENT.
- (D) ONE 10 GAUGE "W" BEAM RAIL ELEMENT (7'-3 1/2"LENGTH)

10 GAUGE = 0.138" THICK
12 GAUGE = 0.108" THICK

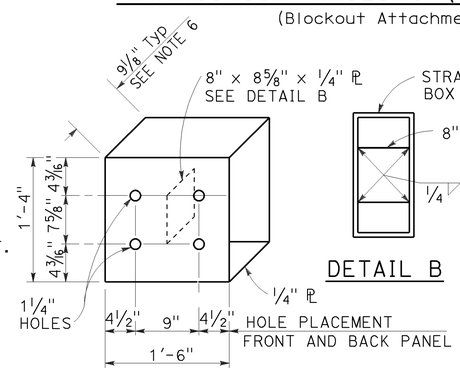

DETAIL A

STRAIGHT METAL BOX SPACER

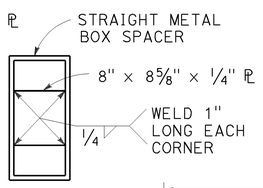

DETAIL B

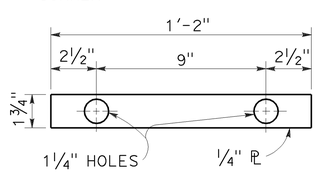

DETAIL C

PLATE 'A'

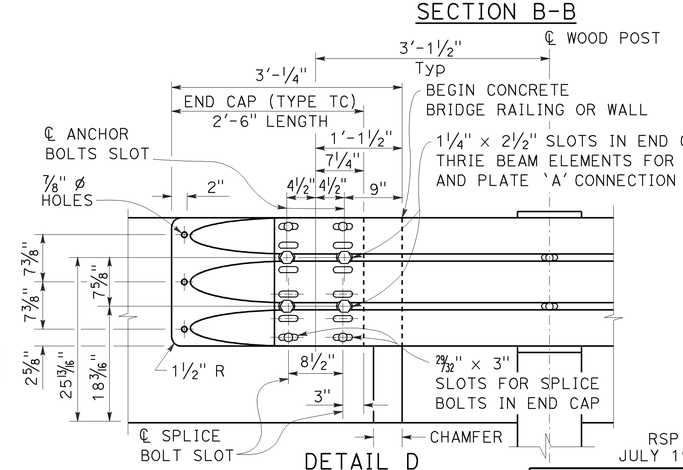

DETAIL D

NOTES:

TO ACCOMPANY PLANS DATED 10-27-14

1. Use 5/8" ø Button head bolts and hex nuts for connections to posts. No washer on rail face for bolted connections to post.
2. The nested rail elements, end cap, and 'W' beam to thrie beam element may be spliced together prior to bolting the elements to the wood post and concrete barrier or railing.
3. Exterior splice bolt holes for rail element splices at Post No. T5 and the connection to the concrete barrier or railing shall be the standard 29/32" x 1 1/8" slot size. Interior splice bolt holes at these locations may be increased up to 1 1/4" ø. Only the top 4 and the bottom 4 splice bolts with washers and nuts are required for rail splices at Post No. T5 and the connection to the concrete barrier or railing.
4. The top elevation of Posts No. T2 through No. T7 shall not project more than 1" above the top elevation of the rail element.
5. Typically, the railing connected to Transition Railing (Type WB-31) will be either standard railing section of MGS with height transition ratio of 150:1 or a Caltrans approved 31" end treatment attached to Post No. T1.
6. The depth of the metal box spacer varies from the 9 1/8" to 1 1/2" and is dependent on the width of the concrete railing or wall. The combined dimension for the depth of the metal box spacer plus the width of railing or wall is typically 21 1/8". Where the space between the backside of the concrete railing or wall and the rear thrie beam element is less than 1 1/2", metal plates similar to Plate 'A' are to be used as spacers.
7. Where the width of the concrete railing or wall is greater than 17 1/8", wood blocks are to be used to fill the space created between the backside of Posts No. T5 through No. T8 and the rear thrie beam element. These wood blocks shall be 8" in width and 1'-2" in length. The dimension between the front thrie beam element and the rear thrie beam element is to match the width of the concrete railing or wall.
8. End cap may be installed over 12 gauge and 10 gauge thrie beam elements where transition railing is installed on the departure end of bridge railing.
9. Conform standard railing section height to 31" at Post No. T1 using height transition ratio of 150:1.

STATE OF CALIFORNIA
DEPARTMENT OF TRANSPORTATION

MIDWEST GUARDRAIL SYSTEM TRANSITION RAILING (TYPE WB-31)

NO SCALE

RSP A77U4 DATED NOVEMBER 15, 2013 SUPERSEDES RSP A77U4 DATED JULY 19, 2013 THAT SUPPLEMENTS THE STANDARD PLANS BOOK DATED 2010.

REVISED STANDARD PLAN RSP A77U4

2010 REVISED STANDARD PLAN RSP A77U4

10-4-13

Dist	COUNTY	ROUTE	POST MILES TOTAL PROJECT	SHEET No.	TOTAL SHEETS
05	SLO	1	64.0/R66.9	177	265

Raymond Don Tsztoo
REGISTERED CIVIL ENGINEER

October 19, 2012
PLANS APPROVAL DATE

REGISTERED PROFESSIONAL ENGINEER
Raymond Don Tsztoo
No. C37332
Exp. 6-30-14
CIVIL
STATE OF CALIFORNIA

THE STATE OF CALIFORNIA OR ITS OFFICERS OR AGENTS SHALL NOT BE RESPONSIBLE FOR THE ACCURACY OR COMPLETENESS OF SCANNED COPIES OF THIS PLAN SHEET.

TO ACCOMPANY PLANS DATED 10-27-14

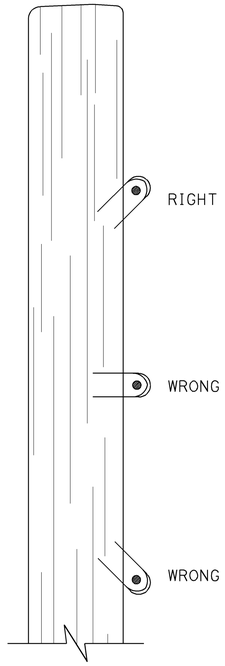

DRIVE STAPLES AT ANGLE

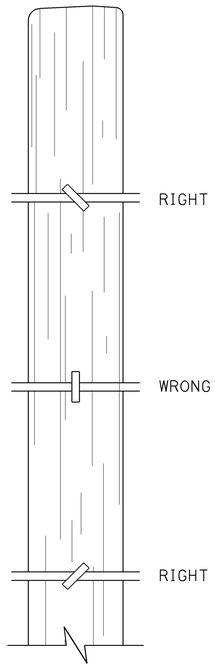

DO NOT DRIVE STAPLES PARALLEL TO SIDE OF POST

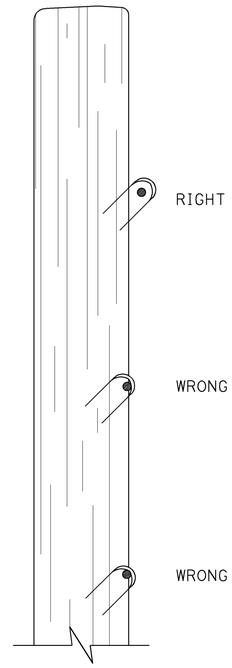

LEAVE WIRE LOOSE IN STAPLE

LINE POST STAPLING DETAILS

(Apply to rectangular/square and round posts)
Do not staple vertical wire in wire mesh.

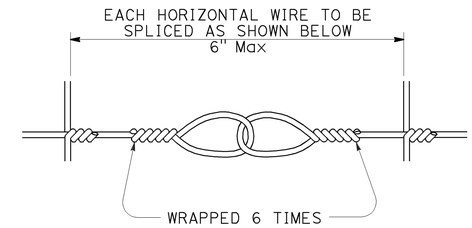

SPLICE DETAIL FOR BARBED WIRE/WIRE MESH FENCE

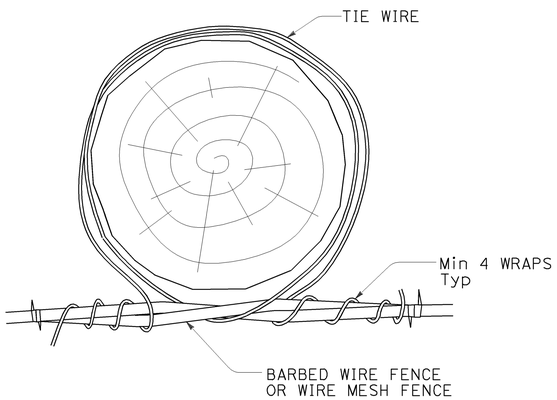

OPTION A

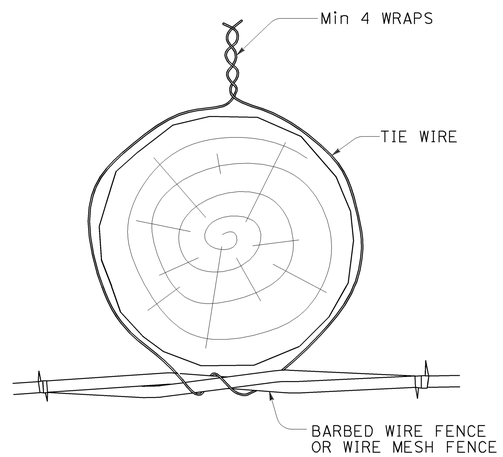

OPTION B

LINE POST WIRE TIE OPTION DETAILS

(Option details also apply to rectangular/square posts)

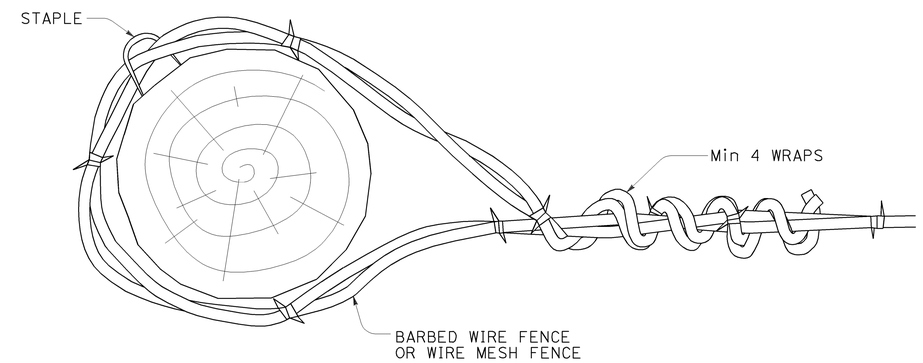

END, LATCH, PULL, AND CORNER POST DETAIL

(Also applies to rectangular/square posts)

STATE OF CALIFORNIA
DEPARTMENT OF TRANSPORTATION

BARBED WIRE AND WIRE MESH FENCE - MISCELLANEOUS DETAILS

NO SCALE

RSP A86D DATED OCTOBER 19, 2012 SUPPLEMENTS THE STANDARD PLANS BOOK DATED 2010.

REVISED STANDARD PLAN RSP A86D

2010 REVISED STANDARD PLAN RSP A86D

10-9-12

Dist	COUNTY	ROUTE	POST MILES TOTAL PROJECT	SHEET No.	TOTAL SHEETS
05	SLO	1	64.0/R66.9	178	265

REGISTERED CIVIL ENGINEER

July 19, 2013
PLANS APPROVAL DATE

REGISTERED PROFESSIONAL ENGINEER
Michael Janzen
No. 44788
Exp. 03-31-14
CIVIL
STATE OF CALIFORNIA

THE STATE OF CALIFORNIA OR ITS OFFICERS OR AGENTS SHALL NOT BE RESPONSIBLE FOR THE ACCURACY OR COMPLETENESS OF SCANNED COPIES OF THIS PLAN SHEET.

TO ACCOMPANY PLANS DATED 10-27-14

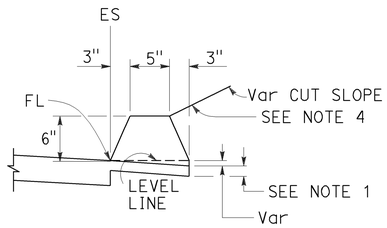

TYPE A
See Note 3

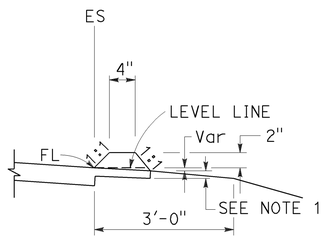

TYPE C

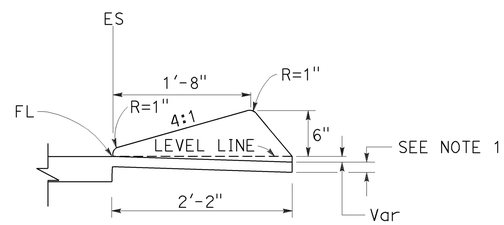

TYPE D

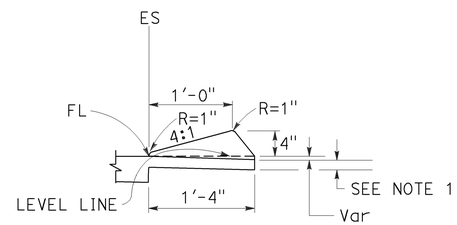

TYPE E

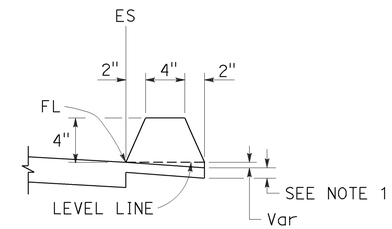

TYPE F
See Note 5

DIKES

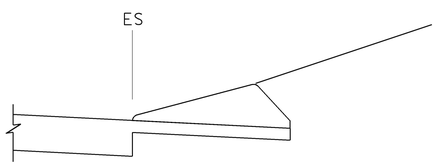

CASE C-1
Cut Slope

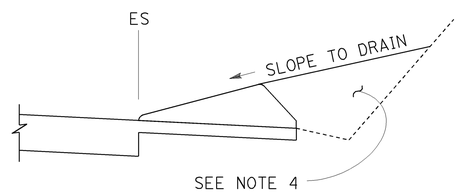

CASE C-2
Cut Slope

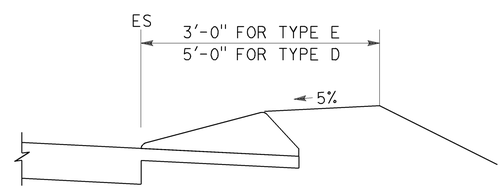

CASE F

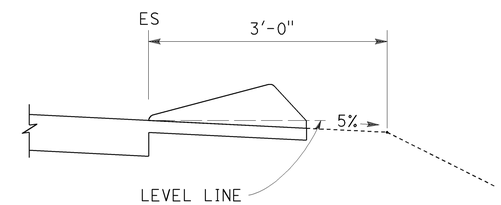

CASE R
See Note 2

TYPE D AND E BACKFILL DETAILS

NOTES:

1. For HMA shoulders only, extend top layer of HMA placed on the shoulder under dike with no joint at the ES. For projects with OGFC shoulders, do not extend OGFC under dike. See project plans for modified dike detail.
2. Case R applies to retrofit only projects where restrictive conditions do not provide enough width for Case F backfill.
3. Type A dike only to be used where restrictive slope conditions do not provide enough width to use Type D or Type E dike.
4. Fill and compact with excavated material to top of dike.
5. Use Type F dike, where dike is required with guard railing installations. See Revised Standard Plan RSP A77N4 for dike positioning details.

DIKE QUANTITIES

TYPE	CUBIC YARDS PER LINEAR FOOT
A	0.0135
C	0.0038
D	0.0293
E	0.0130
F	0.0066

Quantities based on 5% cross slope.

STATE OF CALIFORNIA
DEPARTMENT OF TRANSPORTATION

HOT MIX ASPHALT DIKES

NO SCALE

RSP A87B DATED JULY 19, 2013 SUPERSEDES STANDARD PLAN A87B DATED MAY 20, 2011 - PAGE 120 OF THE STANDARD PLANS BOOK DATED 2010.

REVISED STANDARD PLAN RSP A87B

2010 REVISED STANDARD PLAN RSP A87B

6-27-13

DIST	COUNTY	ROUTE	POST MILES TOTAL PROJECT	SHEET No.	TOTAL SHEETS
05	SLO	1	64.0/R66.9	179	265

REGISTERED CIVIL ENGINEER

November 15, 2013
PLANS APPROVAL DATE

REGISTERED PROFESSIONAL ENGINEER
Cornelis M. Hakim
No. C55610
Exp. 12-31-14
CIVIL
STATE OF CALIFORNIA

THE STATE OF CALIFORNIA OR ITS OFFICERS OR AGENTS SHALL NOT BE RESPONSIBLE FOR THE ACCURACY OR COMPLETENESS OF SCANNED COPIES OF THIS PLAN SHEET.

TO ACCOMPANY PLANS DATED 10-27-14

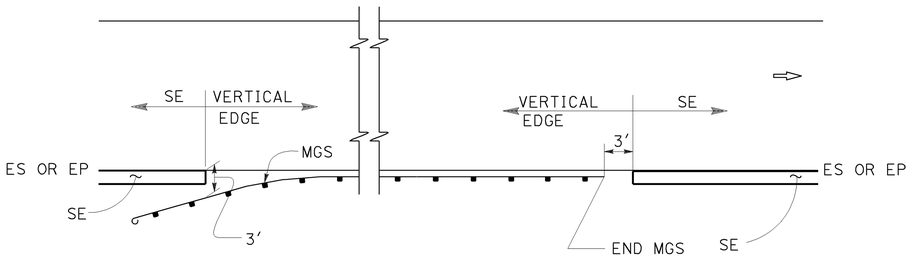

MGS

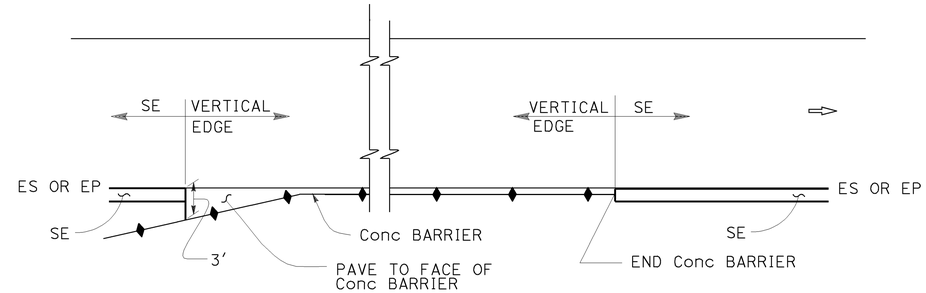

CONCRETE BARRIER

ABBREVIATIONS:

SE SAFETY EDGE

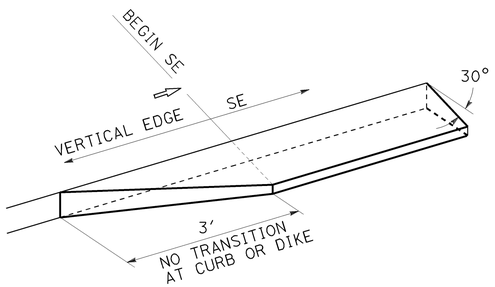

TRANSITION DETAIL FOR CONCRETE ONLY

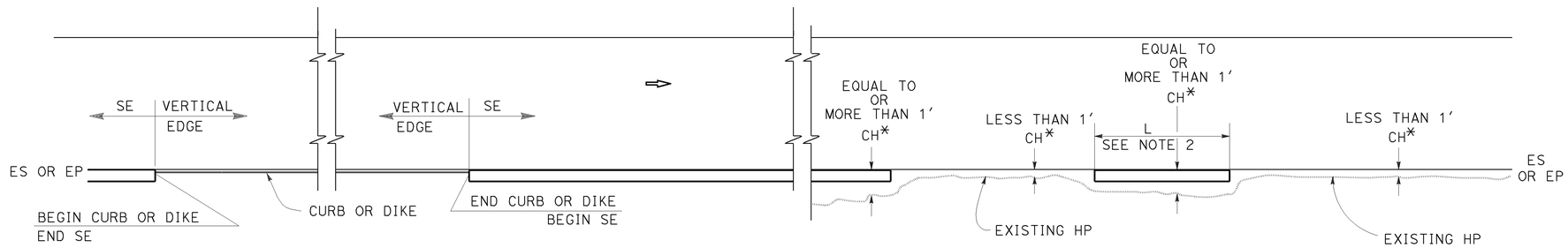

CURB OR DIKE

NARROW SIDE SLOPE

* CH = Distance from ES or EP to existing HP.

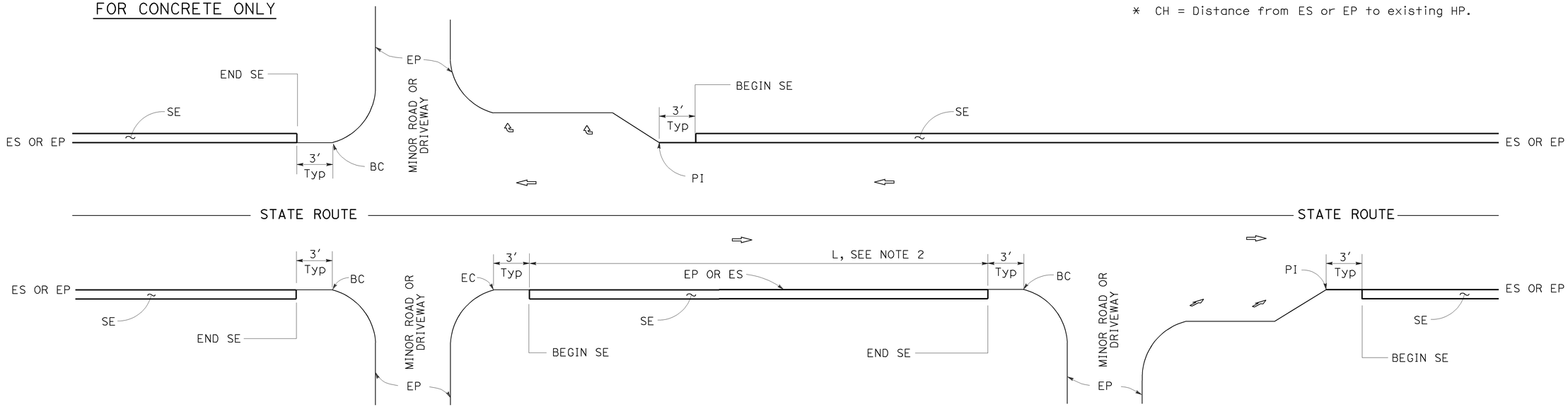

INTERSECTION

MINOR ROADWAY OR DRIVEWAY

DRIVEWAY AND INTERSECTION

STATE OF CALIFORNIA
DEPARTMENT OF TRANSPORTATION

PAVEMENT EDGE TREATMENTS

NO SCALE

RSP P74 DATED NOVEMBER 15, 2013 SUPERSEDES RSP P74 DATED JANUARY 20, 2012 THAT SUPPLEMENTS THE STANDARD PLANS BOOK DATED 2010.

NOTES:

1. For details not shown, see Revised Standard Plans RSP P75 and RSP P76.
2. Safety edge is optional when L is less than 30′.

REVISED STANDARD PLAN RSP P74

2010 REVISED STANDARD PLAN RSP P74

10-11-13

DIST	COUNTY	ROUTE	POST MILES TOTAL PROJECT	SHEET No.	TOTAL SHEETS
05	SLO	1	64.0/R66.9	180	265

REGISTERED CIVIL ENGINEER

November 15, 2013
PLANS APPROVAL DATE

REGISTERED PROFESSIONAL ENGINEER
Cornelis M. Hakim
No. C55610
Exp. 12-31-14
CIVIL
STATE OF CALIFORNIA

THE STATE OF CALIFORNIA OR ITS OFFICERS OR AGENTS SHALL NOT BE RESPONSIBLE FOR THE ACCURACY OR COMPLETENESS OF SCANNED COPIES OF THIS PLAN SHEET.

TO ACCOMPANY PLANS DATED 10-27-14

LEGEND:

- HMA PAVEMENT
- HMA OR CONCRETE PAVEMENT
- CONCRETE PAVEMENT

ABBREVIATIONS:

SE SAFETY EDGE
TT TOTAL THICKNESS OF SE
HW HINGE WIDTH, DISTANCE FROM ES OR EP TO HP

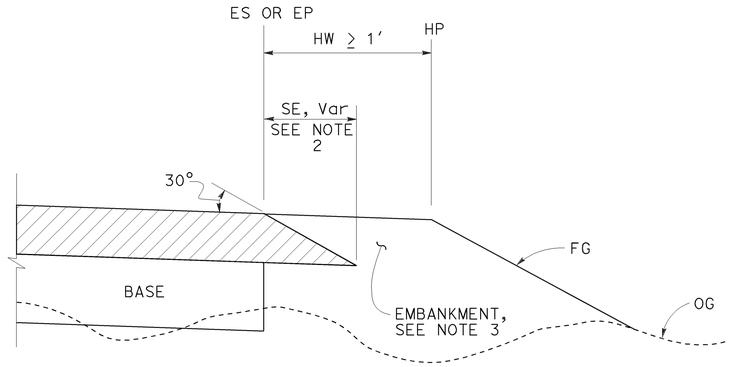

CASE K
Safety Edge - Fill Section, HW ≥ 1′

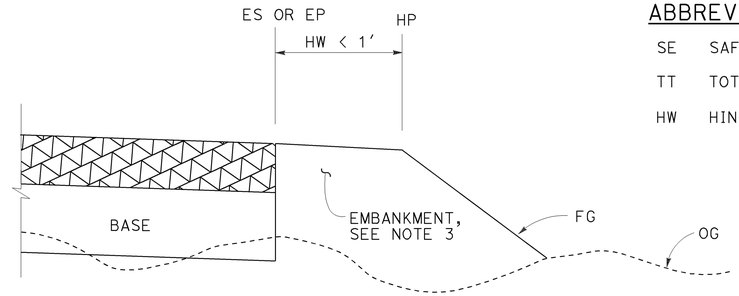

CASE L
Vertical Edge - Fill Section, HW < 1′

FILL SECTION

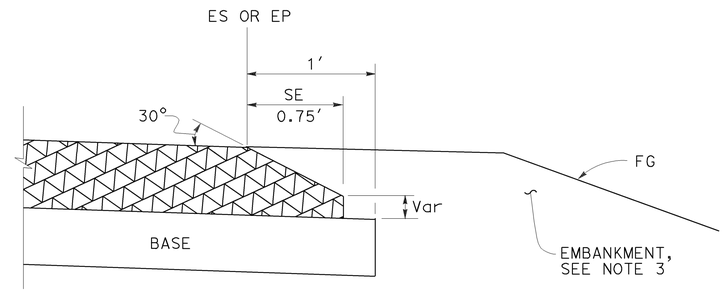

DETAIL "B"
For HMA pavement thickness more than 0.43′ or concrete pavement

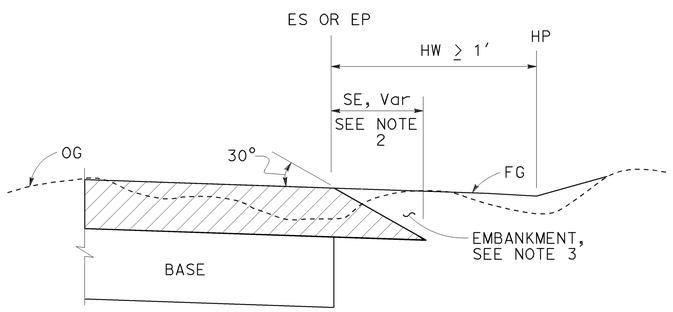

CASE M
Safety Edge - Cut Section, HW ≥ 1′

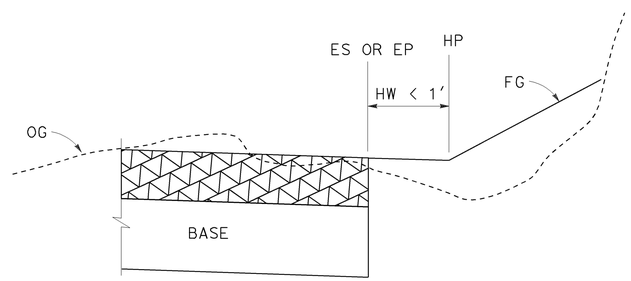

CASE N
Vertical Edge - Cut Section, HW < 1′

CUT SECTION

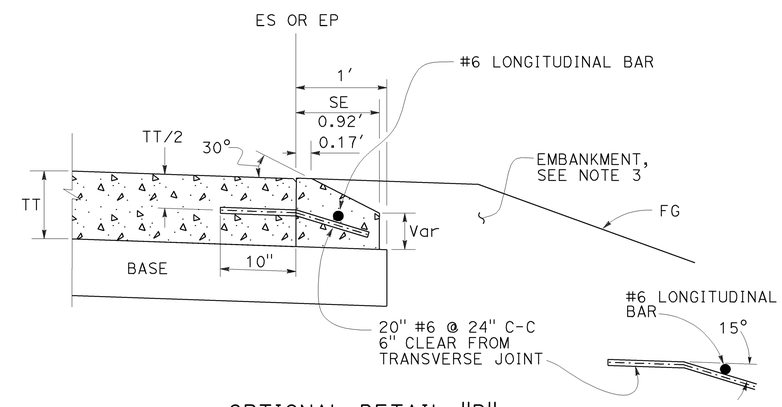

OPTIONAL DETAIL "B"
For concrete pavement
See Note 4

NOTES:

1. For limits of safety edge and vertical edge treatments, see Revised Standard Plan RSP P74
2. Details shown for HMA pavement thickness less than 0.43′. See Detail "B" for HMA pavement thickness more than 0.43′ or concrete pavement.
3. For locations and limits of embankment see project plans.
4. Safety edge transverse joint must match pavement transverse joint. End of #6 longitudinal bar must be 2" ±½" clear from transverse joint.
5. Safety edge is not needed in the area of MGS, barrier, right turn lane and acceleration lane. See Revised Standard Plan RSP P74.

STATE OF CALIFORNIA
DEPARTMENT OF TRANSPORTATION

PAVEMENT EDGE TREATMENTS-NEW CONSTRUCTION

NO SCALE

RSP P76 DATED NOVEMBER 15, 2013 SUPERSEDES RSP P76 DATED JANUARY 20, 2012 THAT SUPPLEMENTS THE STANDARD PLANS BOOK DATED 2010.

REVISED STANDARD PLAN RSP P76

2010 REVISED STANDARD PLAN RSP P76

10-4-13

Dist	COUNTY	ROUTE	POST MILES TOTAL PROJECT	SHEET No.	TOTAL SHEETS
05	SLO	1	64.0/R66.9	181	265

REGISTERED CIVIL ENGINEER

July 18, 2014
PLANS APPROVAL DATE

REGISTERED PROFESSIONAL ENGINEER Carl M. Duan No. C59976 Exp. 6-30-16 CIVIL STATE OF CALIFORNIA

THE STATE OF CALIFORNIA OR ITS OFFICERS OR AGENTS SHALL NOT BE RESPONSIBLE FOR THE ACCURACY OR COMPLETENESS OF SCANNED COPIES OF THIS PLAN SHEET.

TO ACCOMPANY PLANS DATED 10-27-14

2010 REVISED STANDARD PLAN RSP D82

DESIGN NOTES:

Design Specifications:
AASHTO LRFD Bridge Design Specifications, 4th Edition with California Amendments.

Loading:
Live load: (AASHTO LRFD 3.6.1.2)
HL-93 consists of design truck or design tandem and design lane load.

Impact Factor: (Apply to roof slab only)
$IM = 33(1.0-0.125D_E) \geq 0\%$ (AASHTO LRFD 3.6.2.2)
D_E = minimum depth of earth cover

Earth load:
Earth pressure for two conditions:
140 pcf vertical, 42 pcf horizontal
140 pcf vertical, 140 pcf horizontal

Load Factors:
AASHTO LRFD Table 3.4.1.1 & Table 3.4.1.2

Unit stresses:
f'_c = 3600 psi
f_y = 60,000 psi

Distribution "d" bars:
Up to and including 10'-0" cover
Express as a percentage of main positive reinforcement required: $\frac{100}{\sqrt{S}}$, Max 50%,

Over 10'-0" cover,
4 @ 12 maximum

Shear:
$V_c = \{2.14\sqrt{f'_c}+4600\frac{A_s}{bd_e}\frac{V_u d_e}{M_u}\}b.d_e \leq 4.0\sqrt{f'_c}b.d_e$ (Pounds)
V_c shall not be less than $3.00\sqrt{f'_c}b.d_e$ for frame members and $2.5\sqrt{f'_c}b.d_e$ for simply supported members.

Exclusion:
Compressive reinforcement and negative moment reduction (for continuity) do not apply.
Axial loading on members has not been considered.

CONSTRUCTION NOTES:

Construction loads:
Strutting required as shown on Standard Plan D88.
Strutting may be required on culvert extensions when existing parapet is removed.

Expansion joints:
Invert:
No expansion joints shall be permitted.

Roof and Walls:
When cover is less than span length-
Place ½" premolded expansion joint filler at 30'-0" ± centers outside the paved roadway lanes and place Bridge Detail 3-2, Standard Plan B0-3, at 30'-0" centers under paved roadway lanes.
When cover is more than span length-
Place ½" premolded expansion joint filler at 30'-0" ± centers and additional ½" premolded expansion joints at locations of change in foundation character, as directed by the Engineer.

Construction joints:
Temporary joints may be permitted if normal (or radial) to ℄ of RCB. Otherwise, the contractor is to submit a proposal for consideration.

Cutoff walls:
4'-0" cutoff walls are to be provided at inlet and/or outlet unless adjacent channel is lined and unless otherwise shown. These walls are to be extended if scour conditions warrant.

Earthwork:
See Standard Plan A62E.

Backfill:
See Standard Specifications, except that the difference in level of backfill (against outside walls) shall not exceed 2'-0".

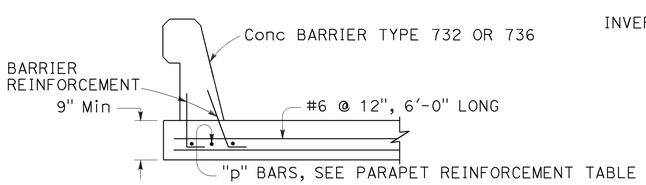

BARRIER SECTION (30'-0" MINIMUM)

GENERAL NOTES:

Designation:
Standard single or multiple box culverts are shown on plans as span times height with maximum cover over roof thus: 8' x 5' RCB with 10' or double 10' x 5' RCB with 20', followed by alternatives.

Alternatives:
Single cell: Invert will be sloped unless "trapezoidal invert", "flat invert" or "V invert" is included in designation.
Multiple cell: Invert will be vee unless "flat invert" is specified. Ends of culvert will be rounded unless "square ends" are designated. Parapets will be as shown unless designated in plans. Such designations may be different for inlet and outlet ends.

Quantities:
Quantities do not include the following:
- Concrete for parapet, paving notches and cut-off wall.
- Reinforcement for 2% splices, parapets, paving notches, cut-off wall and additional required bars for exposed top slab (D-80, Note 9).

Reinforcement placement:
Main reinforcement is to be placed transversely or, for curved culverts, radially. When radial, reinforcing spacing of the "a", "f" and "g" bars is measured along the centerline. Stagger splices not shown. Hooks may be rotated or tilted, as necessary, for clearance.

Special reinforcement coverage:
Box standard plans are not to be used for culverts in a corrosive environment or where there is a severe abrasive flow condition or in freeze-thaw locations.

Special design:
Required for culverts with conditions, loads, design bearing pressures or sizes greater than those given on this plan or Standard Plans D80 & D81. Also required for multiple cell culverts with unequal spans. For culverts with railroad loading, see the current AREMA design specification.

3 or more cells:
For culverts with more than two cells, use dimensions and reinforcement for the standard "double box culvert" and adjust quantities accordingly.

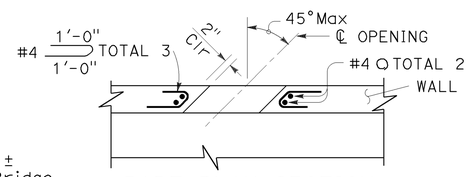

PART PLAN-SECTION

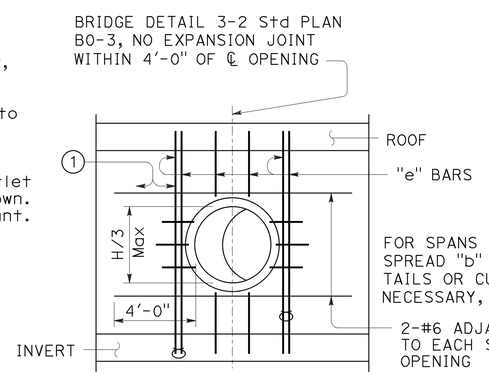

LONGITUDINAL SECTION

UTILITY OPENING-WALL

H=Height of box

(1) Adjacent to each side of the opening, place additional bars equivalent to half the interrupted main reinforcement.

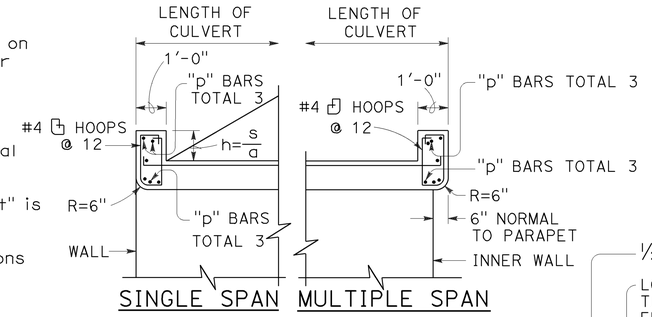

PARAPET DETAIL

s = Clear span (ft)
a = 12 cosine skew angle
h = Height, 1'-0" Min

PARAPET "p" BARS			
SPAN \ SKEW ANGLE	0° TO 15°	16° TO 30°	31° TO 45°
4'	#4	#4	#4
6'	#4	#4	#5
8'	#4	#5	#6
10'	#5	#6	#7
12'	#6	#7	#8
14'	#7	#8	#9

PARAPET REINFORCEMENT

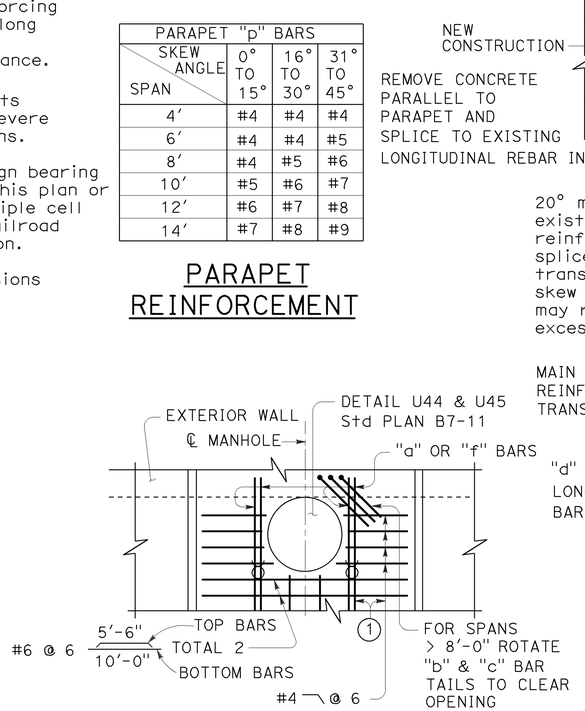

PART PLAN

PART LONGITUDINAL SECTION

MANHOLE

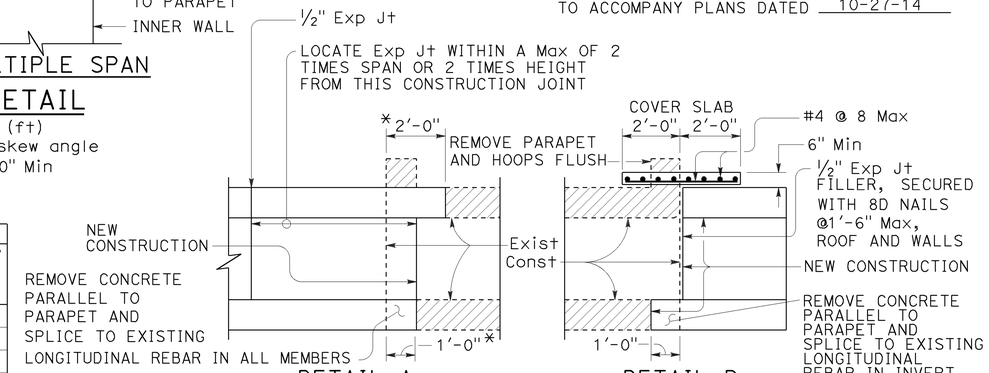

DETAIL A

20° maximum skew as shown. If existing longitudinal and transverse reinforcing bars in top slab are lap spliced with new longitudinal and transverse reinforcing bars, the 20° skew may be exceeded. Lap splicing may require removal of top slab in excess of 2'-0" shown.

DETAIL B

Single cell only, no skew allowed, 1'-0" minimum cover.

* Measured perpendicular to parapet

CULVERT EXTENSION

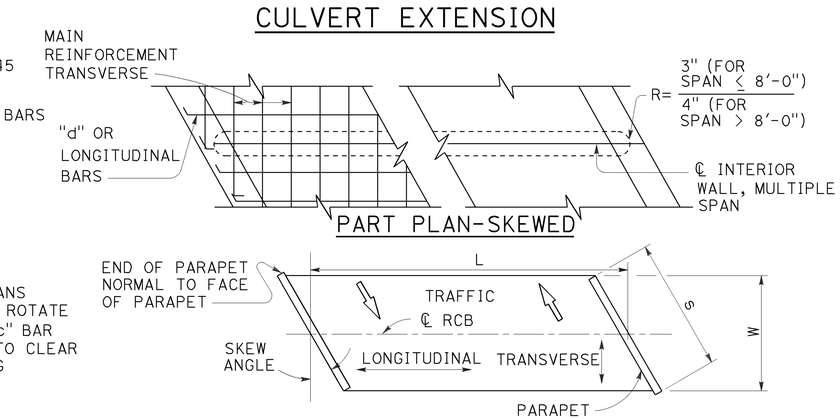

PART PLAN-SKEWED

RCB TERMINOLOGY

STATE OF CALIFORNIA
DEPARTMENT OF TRANSPORTATION

CAST-IN-PLACE REINFORCED CONCRETE BOX CULVERT MISCELLANEOUS DETAILS

NO SCALE

RSP D82 DATED JULY 18, 2014 SUPERSEDES STANDARD PLAN D82 DATED MAY 20, 2011 - PAGE 174 OF THE STANDARD PLANS BOOK DATED 2010.

REVISED STANDARD PLAN RSP D82

4-3-14

Dist	COUNTY	ROUTE	POST MILES TOTAL PROJECT	SHEET No.	TOTAL SHEETS
05	SLO	1	64.0/R66.9	182	265

REGISTERED CIVIL ENGINEER

July 18, 2014
PLANS APPROVAL DATE

REGISTERED PROFESSIONAL ENGINEER
Carl M. Duan
No. C59976
Exp. 6-30-16
CIVIL
STATE OF CALIFORNIA

THE STATE OF CALIFORNIA OR ITS OFFICERS OR AGENTS SHALL NOT BE RESPONSIBLE FOR THE ACCURACY OR COMPLETENESS OF SCANNED COPIES OF THIS PLAN SHEET.

TO ACCOMPANY PLANS DATED 10-27-14

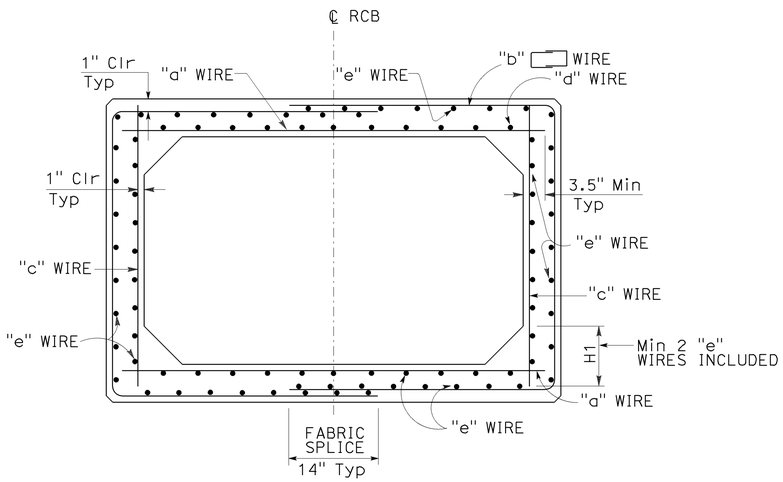

TYPICAL SECTION - SPANS 4'-0" THRU 12'-0"

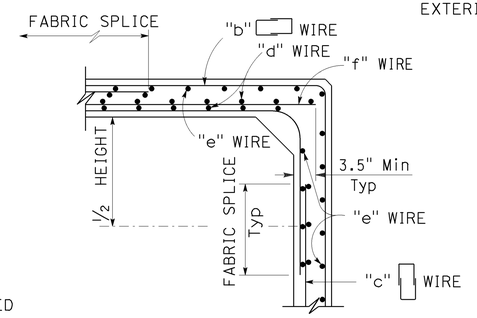

ALTERNATIVE DETAILING OPTION

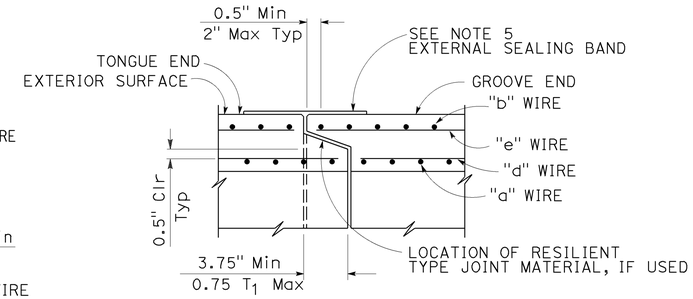

END JOINT DETAIL

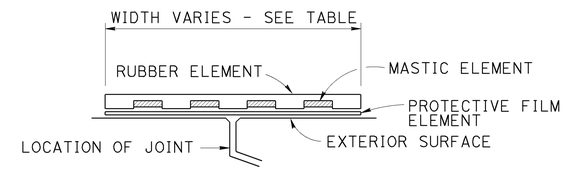

EXTERNAL SEALING BAND SCHEMATIC

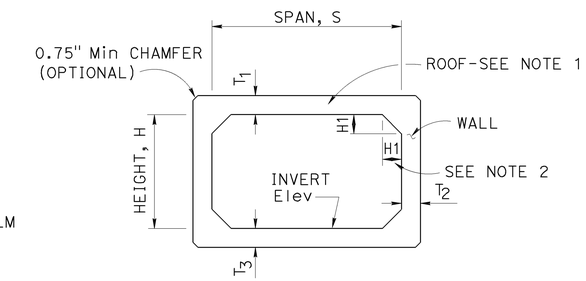

SCHEMATIC

TABLE	
SPAN	EXTERNAL SEALING BAND WIDTH
4'-6'	9"
7'-8'	11"
10'-12'	13"

SPAN, S			4'						5'								6'								7'									
HEIGHT, H			2'		3'		4'		2'		3'		4'		5'		3'		4'		5'		6'		3'		4'		5'		6'		7'	
MAXIMUM EARTH COVER			10'	20'	10'	20'	10'	20'	10'	20'	10'	20'	10'	20'	10'	20'	10'	20'	10'	20'	10'	20'	10'	20'	10'	20'	10'	20'	10'	20'	10'	20'	10'	20'
CONCRETE (INCH)	ROOF	T_1	5.5"	5.5"	5.5"	5.5"	5.5"	5.5"	6"	6"	6"	6"	6"	6"	6"	6"	7"	7"	7"	7"	7"	7"	7"	7"	8"	8"	8"	8"	8"	8"	8"	8"	8"	8"
	SIDE WALL	T_2	5.5"	5.5"	5.5"	5.5"	5.5"	5.5"	6"	6"	6"	6"	6"	6"	6"	6"	7"	7"	7"	7"	7"	7"	7"	7"	8"	8"	8"	8"	8"	8"	8"	8"	8"	8"
	INVERT	T_3	5.5"	5.5"	5.5"	5.5"	5.5"	5.5"	6"	6"	6"	6"	6"	6"	6"	6"	7"	7"	7"	7"	7"	7"	7"	7"	8"	8"	8"	8"	8"	8"	8"	8"	8"	8"
MINIMUM WELDED WIRE FABRIC ($inch^2/ft$)		"a"	.33	.47	.34	.49	.34	.50	.40	.62	.41	.62	.42	.64	.43	.64	.44	.67	.45	.70	.46	.71	.47	.72	.47	.72	.48	.75	.50	.78	.50	.79	.51	.80
		"b"	.23	.28	.23	.25	.21	.23	.26	.36	.24	.36	.24	.33	.24	.30	.28	.44	.27	.40	.27	.37	.27	.38	.33	.52	.31	.48	.30	.45	.30	.43	.30	.48
		"c"	.11	.11	.11	.12	.18	.24	.11	.11	.11	.11	.13	.23	.24	.34	.11	.11	.11	.12	.19	.27	.27	.42	.11	.11	.11	.11	.13	.20	.26	.31	.30	.50
		"d"	.16	.11	.16	.11	.16	.11	.17	.11	.18	.11	.18	.11	.18	.11	.17	.11	.18	.11	.18	.11	.18	.11	.17	.11	.17	.11	.18	.11	.18	.11	.18	.11
		"e"	.11	.11	.11	.11	.11	.11	.11	.11	.11	.11	.11	.11	.11	.11	.11	.11	.11	.11	.11	.11	.11	.11	.11	.11	.11	.11	.11	.11	.11	.11	.11	.11
		"f"	.22	.36	.23	.37	.22	.26	.29	.51	.30	.51	.29	.41	.26	.30	.33	.56	.34	.58	.27	.44	.21	.30	.36	.61	.37	.64	.37	.57	.25	.48	.21	.30
* QUANTITY	Conc	CY/LF	.31		.34		.38		.37		.41		.44		.48		.51		.56		.60		.64		.63		.68		.73		.78		.83	
	Reinf	LB/LF	35	41	39	45	45	51	49	58	49	62	54	69	62	78	60	79	64	83	72	93	80	107	72	98	76	102	81	110	92	120	101	143
** SOIL PRESSURE (ksf)			2.3	4.4	2.4	4.5	2.4	4.5	3.1	4.4	3.1	4.5	3.1	4.5	3.2	4.5	2.7	4.5	2.8	4.5	2.8	4.6	2.8	4.6	2.5	4.5	2.5	4.6	2.5	4.6	2.5	4.6	2.6	4.6

SPAN, S			8'										10'												12'													
HEIGHT, H			4'		5'		6'		7'		8'		5'		6'		7'		8'		9'		10'		6'		7'		8'		9'		10'		11'		12'	
MAXIMUM EARTH COVER			10'	20'	10'	20'	10'	20'	10'	20'	10'	20'	10'	20'	10'	20'	10'	20'	10'	20'	10'	20'	10'	20'	10'	20'	10'	20'	10'	20'	10'	20'	10'	20'	10'	20'	10'	20'
CONCRETE (INCH)	ROOF	T_1	8.5"	8.5"	8.5"	8.5"	8.5"	8.5"	8.5"	8.5"	8.5"	8.5"	10"	10"	10"	10"	10"	10"	10"	10"	10"	10"	10"	10"	12"	12"	12"	12"	12"	12"	12"	12"	12"	12"	12"	12"	12"	12"
	SIDE WALL	T_2	8.5"	8.5"	8.5"	8.5"	8.5"	8.5"	8.5"	8.5"	8.5"	8.5"	10"	10"	10"	10"	10"	10"	10"	10"	10"	10"	10"	10"	12"	12"	12"	12"	12"	12"	12"	12"	12"	12"	12"	12"	12"	12"
	INVERT	T_3	8.5"	8.5"	8.5"	8.5"	8.5"	8.5"	8.5"	8.5"	8.5"	8.5"	10"	10"	10"	10"	10"	10"	10"	10"	10"	10"	10"	10"	12"	12"	12"	12"	12"	12"	12"	12"	12"	12"	12"	12"	12"	12"
MINIMUM WELDED WIRE FABRIC ($inch^2/ft$)		"a"	.55	.87	.56	.90	.57	.92	.58	.93	.58	.94	.66	1.07	.67	1.10	.69	1.13	.70	1.14	.70	1.16	.77	1.16	.73	1.21	1.21	1.24	.77	1.27	1.24	1.29	1.27	1.31	.78	1.32	1.29	1.32
		"b"	.37	.59	.35	.55	.33	.52	.33	.52	.36	.57	.45	.74	.43	.70	.41	.67	.40	.64	.43	.67	.48	.67	.51	.85	.85	.81	.49	.77	.81	.74	.77	.77	.53	.79	.74	.79
		"c"	.11	.11	.11	.11	.20	.31	.31	.42	.38	.62	.11	.11	.11	.11	.22	.31	.36	.42	.40	.62	.54	.86	.11	.11	.11	.11	.23	.30	.37	.42	.42	.60	.54	.82	.42	1.06
		"d"	.19	.11	.19	.11	.20	.11	.20	.11	.20	.11	.20	.11	.20	.11	.21	.11	.21	.11	.21	.11	.21	.11	.20	.11	.20	.11	.21	.11	.22	.11	.22	.11	.22	.11	.22	.11
		"e"	.11	.11	.11	.11	.11	.11	.11	.11	.11	.11	.11	.11	.11	.11	.11	.11	.11	.11	.11	.11	.11	.11	.11	.11	.11	.11	.11	.11	.11	.11	.11	.11	.11	.11	.11	.11
		"f"	.44	.76	.45	.79	.37	.61	.27	.52	.20	.31	.55	.96	.56	.99	.47	.81	.34	.73	.31	.53	.16	.30	.62	1.10	1.10	1.13	.64	.97	1.13	.87	.97	.71	.40	.50	.87	.26
* QUANTITY	Conc	CY/LF	.78		.83		.88		.94		.99		1.10		1.17		1.23		1.29		1.35		1.41		1.56		1.63		1.70		1.78		1.85		1.93		2.00	
	Reinf	LB/LF	93	129	97	133	105	148	117	161	131	189	133	191	138	196	148	212	191	225	176	253	201	282	174	255	179	261	191	279	207	293	223	323	249	357	281	393
** SOIL PRESSURE (ksf)			2.5	4.6	2.5	4.6	2.5	4.6	2.5	4.6	2.5	4.6	3.8	4.6	3.8	4.7	3.8	4.7	4.6	4.7	3.9	4.7	3.9	4.8	3.6	4.7	3.7	4.7	3.7	4.8	3.7	4.8	3.7	4.8	3.8	4.9	3.8	4.9

* See Note 3 ** See Note 6

NOTES:

1. The inside and outside surfaces of the RCB roof shall be marked "TOP".
2. H1 minimum shall equal the wall thickness. H1 maximum shall be 8" for spans through 8' and 14" for spans over 8'.
3. Quantities are approximate and for design purposes only.
4. For design and details not shown see Revised Standard Plan RSP D83B.
5. For external sealing band applications see Standard Plan A62G.
6. Soil pressures shown are factored per AASHTO LRFD and include soil weight of fill over box, self weight of box and live load where applicable.

STATE OF CALIFORNIA
DEPARTMENT OF TRANSPORTATION

PRECAST REINFORCED CONCRETE BOX CULVERT

NO SCALE

RSP D83A DATED JULY 18, 2014 SUPERSEDES STANDARD PLAN D83A DATED MAY 20, 2011 - PAGE 175 OF THE STANDARD PLANS BOOK DATED 2010.

REVISED STANDARD PLAN RSP D83A

2010 REVISED STANDARD PLAN RSP D83A

4-3-14

Dist	COUNTY	ROUTE	POST MILES TOTAL PROJECT	SHEET No.	TOTAL SHEETS
05	SLO	1	64.0/R66.9	183	265

REGISTERED CIVIL ENGINEER

July 18, 2014
PLANS APPROVAL DATE

REGISTERED PROFESSIONAL ENGINEER Carl M. Duan No. C59976 Exp. 6-30-16 CIVIL STATE OF CALIFORNIA

THE STATE OF CALIFORNIA OR ITS OFFICERS OR AGENTS SHALL NOT BE RESPONSIBLE FOR THE ACCURACY OR COMPLETENESS OF SCANNED COPIES OF THIS PLAN SHEET.

TO ACCOMPANY PLANS DATED 10-27-14

2010 REVISED STANDARD PLAN RSP D83B

DESIGN NOTES:

Specifications:

AASHTO LRFD Bridge Design Specifications, 4th Edition with California Amendments.

Earth load:

Earth pressures for two conditions:
140 pcf Vert, 42 pcf Horiz
140 pcf Vert, 140 pcf Horiz

Unit stresses:

f'c = 5.0 ksi
fy = 65.0 ksi for weld wire fabric
n = 7

Shear:

Based on

$V_c = \{2.14\sqrt{f_c'} + 4600 \frac{A_s}{b d_e} \frac{V_u d_e}{M_u}\} b.d_e \leq 4.0\sqrt{f_c'} b.d_e$ (Pounds)

V_c shall not be less than $3.00\sqrt{f_c'} b.d_e$ for frame members and $2.5\sqrt{f_c'} b.d_e$ for simply supported members.

Exclusion:

Axial loading on the members has not been considered.

GENERAL NOTES:

Designation:

Standard single or multiple precast box culverts are shown on the plans as span times height with maximum cover over roof thus: 8' x 5' RCB with 10'-0" or double 10' x 5' RCB with 20'-0", followed by alternatives.

Alternatives:

Single cell:

Standard dimensions of AASHTO Material Specification 'M259' or 'M273'.

Multiple cell:

Constructed by placing single cells adjacent to each other. Inlet and outlet ends of culvert will be rounded unless square ends are designated. Parapet will be shown unless designated in plans. Such designation may be different for inlet and outlet ends.

Limitations:

Where the overfill is less than 12", Precast RCB culverts are not to be used. Precast RCB culverts are not to be used in siphon or pressurized installations unless appropriate "watertight" jointing is provided.

Special reinforcement coverage:

Precast RCB culvert standard plans are not to be used in a corrosive environment or where there is a severe abrasive flow condition or freeze-thaw locations.

Special design:

Required for culvert with different conditions, loads or design bearing pressures greater than those given on these plans. Required for culverts where end details need higher skew angles, higher parapets or barrier sections.

CONSTRUCTION NOTES:

Cutoff walls:

4'-0" Cutoff walls are to be provided at inlet and/or outlet unless channel is lined and unless otherwise shown. These walls are to be extended if scour conditions warrant. See Standard Plans D84, D85 and D86A.

Wingwalls:

Wingwalls shall be cast-in-place and shall conform to standard plan details for box culvert wingwalls. See Standard Plans D84, D85 and D86A.

Earthwork:

See Standard Plan A62G.

Construction loads:

Strutting may be required near temporary ends. For construction loads on culverts, See Standard Plan D88.

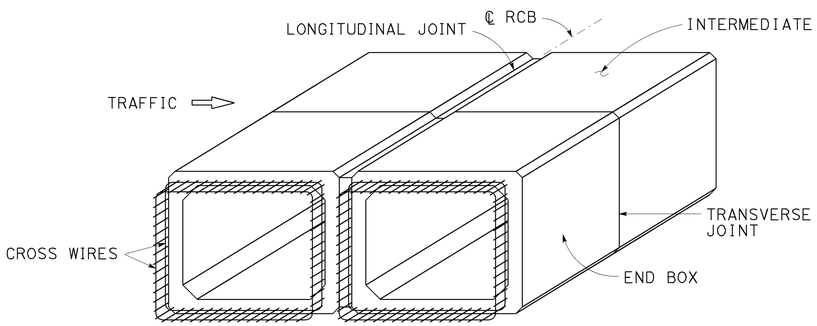

PRECAST RCB TERMINOLOGY

NOTE: Inner and outer reinforcement to be exposed as required to tie to cast-in-place construction. A minimum of two cross wires shall be exposed on all sides.

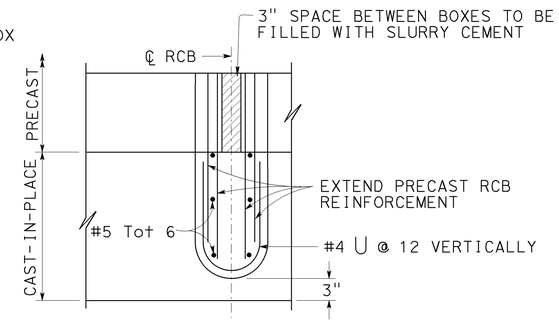

PARTIAL PLAN INTERIOR WALL MULTICELL CULVERT

PARAPET "P" BARS			
SPAN \ SKEW ANGLE	0° TO 15°	16° TO 30°	31° TO 45°
4'-0"	#5	#5	#5
5'-0"	#5	#5	#6
6'-0"	#6	#6	#6
7'-0"	#7	#7	#7
8'-0"	#7	#7	#8
10'-0"	#8	#8	#9
12'-0"	#9	#9	#10

BARRIER PARAPET REINFORCEMENT

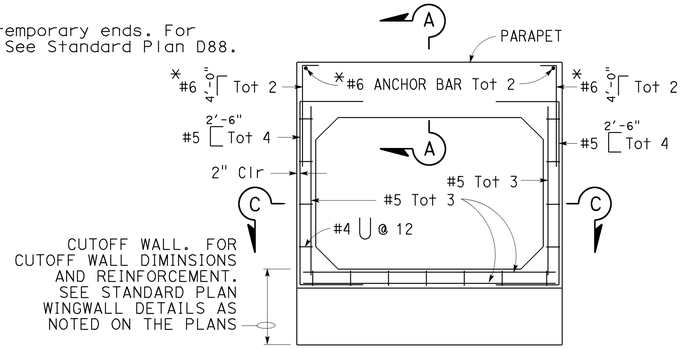

CAST-IN-PLACE END ELEVATION

* Reinforcing required for barrier parapet application only.

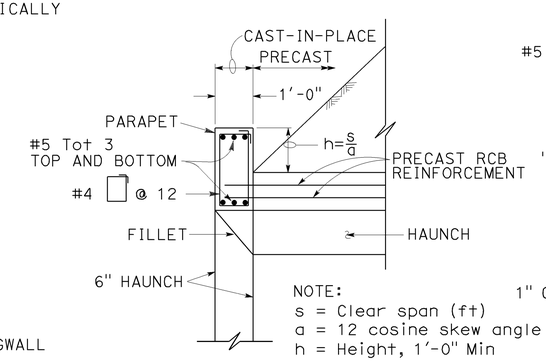

SECTION A-A
(Standard Height Parapet)

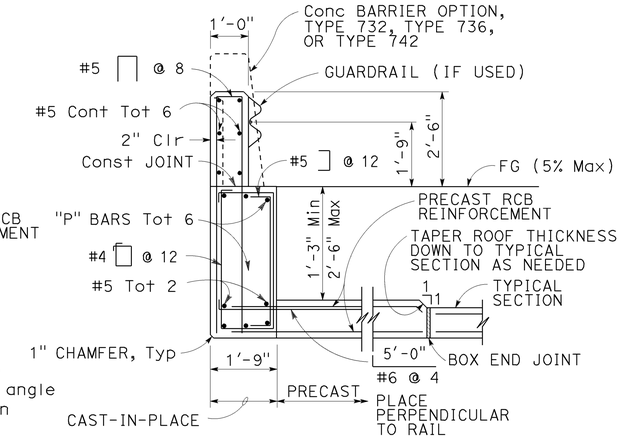

SECTION A-A
(Barrier Parapet)

TYPICAL CULVERT END DETAILS

For wall and invert reinforcement not shown, See "End Elevation" detail.

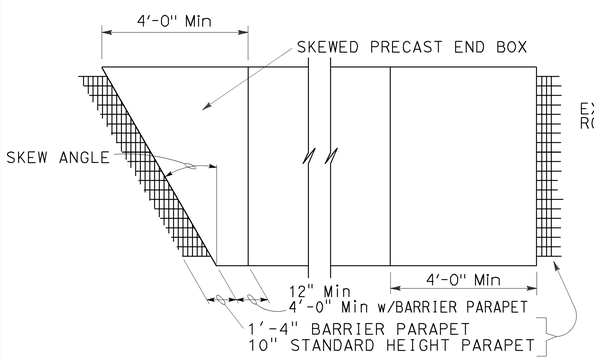

PARTIAL PLAN VIEW

For illustrative purposes only.
For correct skew direction see plans.

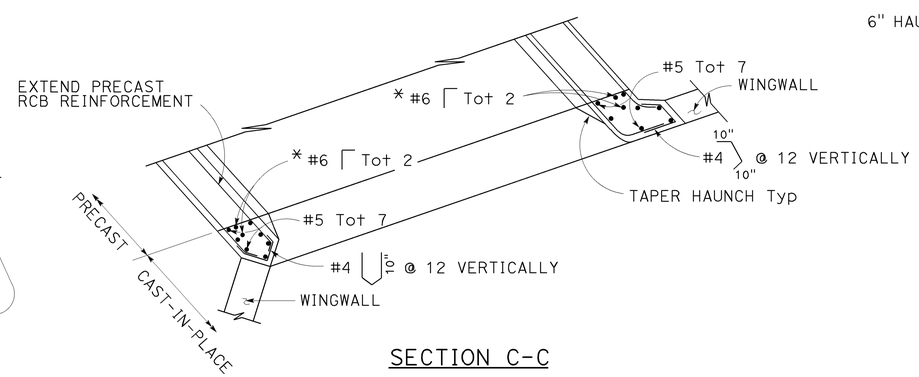

SECTION C-C

* Reinforcing required for barrier parapet application only.

STATE OF CALIFORNIA
DEPARTMENT OF TRANSPORTATION

PRECAST REINFORCED CONCRETE BOX CULVERT MISCELLANEOUS DETAILS

NO SCALE

RSP D83B DATED JULY 18, 2014 SUPERSEDES STANDARD PLAN D83B DATED MAY 20, 2011 - PAGE 176 OF THE STANDARD PLANS BOOK DATED 2010.

REVISED STANDARD PLAN RSP D83B

4-3-14

Dist	COUNTY	ROUTE	POST MILES TOTAL PROJECT	SHEET No.	TOTAL SHEETS
05	SLO	1	64.0/R66.9	184	265

REGISTERED CIVIL ENGINEER

July 19, 2013
PLANS APPROVAL DATE

REGISTERED PROFESSIONAL ENGINEER
Gurinderpal Bhullar
No. C48815
Exp. 9-30-14
CIVIL
STATE OF CALIFORNIA

THE STATE OF CALIFORNIA OR ITS OFFICERS OR AGENTS SHALL NOT BE RESPONSIBLE FOR THE ACCURACY OR COMPLETENESS OF SCANNED COPIES OF THIS PLAN SHEET.

TO ACCOMPANY PLANS DATED 10-27-14

2010 REVISED STANDARD PLAN RSP T9

TABLE 1

TAPER LENGTH CRITERIA AND CHANNELIZING DEVICE SPACING

SPEED (S)	MINIMUM TAPER LENGTH * FOR WIDTH OF OFFSET 12 FEET (W)				MAXIMUM CHANNELIZING DEVICE SPACING		
					X	Y	Z **
	TANGENT 2L	MERGING L	SHIFTING L/2	SHOULDER L/3	TAPER	TANGENT	CONFLICT
mph	ft	ft	ft	ft	ft	ft	ft
20	160	80	40	27	20	40	10
25	250	125	63	42	25	50	12
30	360	180	90	60	30	60	15
35	490	245	123	82	35	70	17
40	640	320	160	107	40	80	20
45	1080	540	270	180	45	90	22
50	1200	600	300	200	50	100	25
55	1320	660	330	220	55	110	27
60	1440	720	360	240	60	120	30
65	1560	780	390	260	65	130	32
70	1680	840	420	280	70	140	35

* - For other offsets, use the following merging taper length formula for L:
For speed of 40 mph or less, $L = WS^2/60$
For speed of 45 mph or more, $L = WS$

Where: L = Taper length in feet
W = Width of offset in feet
S = Posted speed limit, off-peak 85th-percentile speed prior to work starting, or the anticipated operating speed in mph

** - Use for taper and tangent sections where there are no pavement markings or where there is a conflict between existing pavement markings and channelizers (CA).

TABLE 2

LONGITUDINAL BUFFER SPACE AND FLAGGER STATION SPACING

SPEED *	Min D **	DOWNGRADE Min D ***		
		-3%	-6%	-9%
mph	ft	ft	ft	ft
20	115	116	120	126
25	155	158	165	173
30	200	205	215	227
35	250	257	271	287
40	305	315	333	354
45	360	378	400	427
50	425	446	474	507
55	495	520	553	593
60	570	598	638	686
65	645	682	728	785
70	730	771	825	891

* - Speed is posted speed limit, off-peak 85th-percentile speed prior to work starting, or the anticipated operating speed in mph

** - Longitudinal buffer space or flagger station spacing

*** - Use on sustained downgrade steeper than -3 percent and longer than 1 mile.

TABLE 3

ADVANCE WARNING SIGN SPACING

ROAD TYPE	DISTANCE BETWEEN SIGNS *		
	A	B	C
	ft	ft	ft
URBAN - 25 mph OR LESS	100	100	100
URBAN - MORE THAN 25 mph TO 40 mph	250	250	250
URBAN - MORE THAN 40 mph	350	350	350
RURAL	500	500	500
EXPRESSWAY / FREEWAY	1000	1500	2640

* - The distances are approximate, are intended for guidance purposes only, and should be applied with engineering judgment. These distances should be adjusted by the Engineer for field conditions, if necessary, by increasing or decreasing the recommmended distances.

STATE OF CALIFORNIA
DEPARTMENT OF TRANSPORTATION

TRAFFIC CONTROL SYSTEM TABLES FOR LANE AND RAMP CLOSURES

NO SCALE

RSP T9 DATED JULY 19, 2013 SUPERSEDES RSP T9 DATED APRIL 19, 2013 THAT SUPPLEMENTS THE STANDARD PLANS BOOK DATED 2010.

REVISED STANDARD PLAN RSP T9

Dist	COUNTY	ROUTE	POST MILES TOTAL PROJECT	SHEET No.	TOTAL SHEETS
05	SLO	1	64.0/R66.9	185	265

REGISTERED CIVIL ENGINEER

July 18, 2014
PLANS APPROVAL DATE

REGISTERED PROFESSIONAL ENGINEER Gurinderpal Bhullar No. C48815 Exp. 9-30-14 CIVIL STATE OF CALIFORNIA

THE STATE OF CALIFORNIA OR ITS OFFICERS OR AGENTS SHALL NOT BE RESPONSIBLE FOR THE ACCURACY OR COMPLETENESS OF SCANNED COPIES OF THIS PLAN SHEET.

TO ACCOMPANY PLANS DATED 10-27-14

NOTES:

See Revised Standard Plan RSP T9 for tables.

Use cone spacing X for taper segment, Y for tangent segment or Z for conflict situations, as approriate, per Table 1, unless X, Y, or Z cone spacing is shown on this sheet.

Unless otherwise specified in the special provisions, all temporary warning signs shall have black legend on fluorescent orange background.

California codes are designated by (CA). Otherwise, Federal (MUTCD) codes are shown.

TYPICAL LANE CLOSURE WITH REVERSIBLE CONTROL

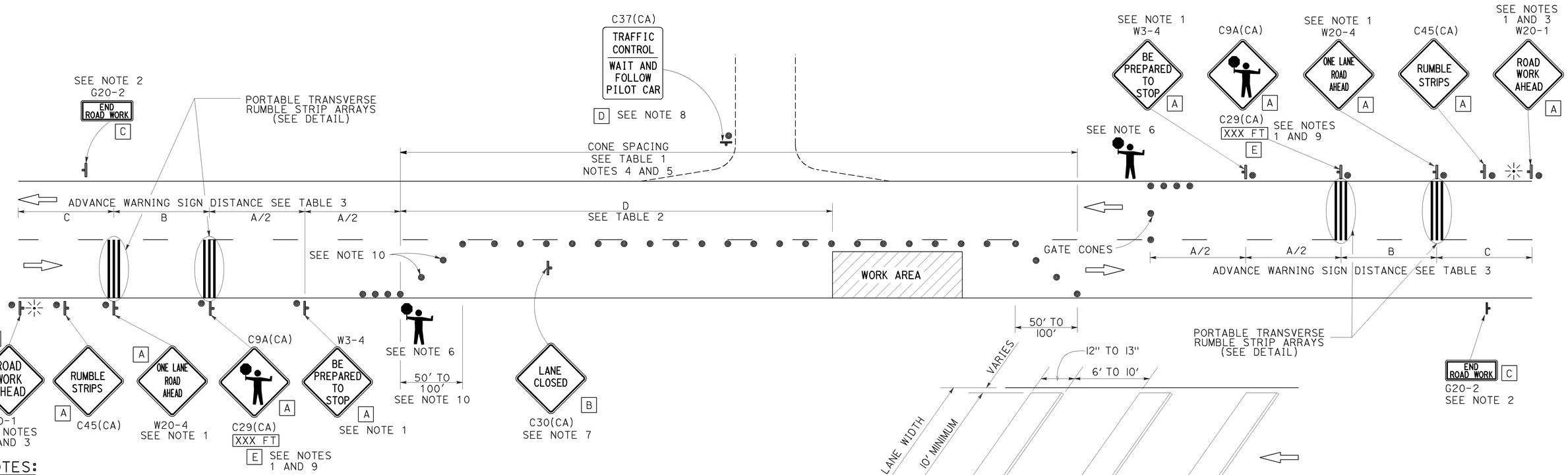

NOTES:

1. Each advance warning sign in each direction of travel shall be equipped with at least two flags for daytime closure. Each flag shall be at least 16" x 16" in size and shall be orange or fluorescent red-orange in color. Flashing beacons shall be placed at the locations indicated for lane closure during hours of darkness.
2. A G20-2 "END ROAD WORK" sign, as appropriate, shall be placed at the end of the lane control unless the end of work area is obvious, or ends within a larger project's limits.
3. If the W20-1 sign would follow within 2000' of a stationary W20-1 or G20-1 "ROAD WORK NEXT _____ MILES", use a W20-4 sign for the first advance warning sign.
4. All cones used for lane closures during the hours of darkness shall be fitted with retroreflective bands (or sleeves) as specified in the specifications.
5. Portable delineators, placed at one-half the spacing indicated for traffic cones, may be used instead of cones for daytime closures only.
6. Additional advance flaggers may be required. Flagger should stand in a conspicuous place, be visible to approaching traffic as well as approaching vehicles after the first vehicle has stopped. During the hours of darkness, the flagging-station and flagger shall be illuminated and clearly visible to approaching traffic. The illumination footprint of the lighting on the ground shall be at least 20' in diameter. Place a minimum of four cones at 50' intervals in advance of flagger station as shown.
7. Place C30(CA) "LANE CLOSED" sign at 500' to 1000' intervals throughout extended work areas. They are optional if the work area is visible from the flagger station.
8. When a pilot car is used, place a C37(CA) "TRAFFIC CONTROL-WAIT AND FOLLOW PILOT CAR" sign with black legend on white background at all intersections, driveways and alleys without a flagger within traffic control area. Signs shall be clean and visible at all times. Where traffic can not be effectively self-regulated, at least one flagger shall be used at each intersection within traffic control area.
9. An optional C29(CA) sign may be placed below the C9A(CA) sign.
10. Either traffic cones or barricades shall be placed on the taper. Barricades shall be Type I, II, or III.
11. The color of the portable transverse rumble strips shall be black or orange. Use 2 arrays, each array shall consist of 3 rumble strips.
12. Portable transverse rumble strips shall not be placed on sharp horizontal or vertical curves nor shall they be placed through pedestrian crossings.
13. If the portable transverse rumble strips become out of alignment (skewed) by more than 6 inches, measured from one end to the other, they shall be readjusted to bring the placement back to the original location.

PORTABLE TRANSVERSE RUMBLE STRIP ARRAY DETAIL

SIGN PANEL SIZE (Min)

A	48" x 48"
B	30" x 30"
C	36" x 18"
D	36" x 42"
E	20" x 7"

LEGEND

- TRAFFIC CONE
- TEMPORARY TRAFFIC CONTROL SIGN
- PORTABLE FLASHING BEACON
- FLAGGER

STATE OF CALIFORNIA
DEPARTMENT OF TRANSPORTATION

TRAFFIC CONTROL SYSTEM FOR LANE CLOSURE ON TWO LANE CONVENTIONAL HIGHWAYS

NO SCALE

RSP T13 DATED JULY 18, 2014 SUPERSEDES RSP T13 DATED APRIL 19, 2013 AND STANDARD PLAN T13 DATED MAY 20, 2011 - PAGE 241 OF THE STANDARD PLANS BOOK DATED 2010.

REVISED STANDARD PLAN RSP T13

2010 REVISED STANDARD PLAN RSP T13

6-19-14

Dist	COUNTY	ROUTE	POST MILES TOTAL PROJECT	SHEET No.	TOTAL SHEETS
05	SLO	1	64.0/R66.9	186	265

REGISTERED CIVIL ENGINEER

July 19, 2013
PLANS APPROVAL DATE

REGISTERED PROFESSIONAL ENGINEER Marc Friedheim No. C57968 Exp. 6-30-14 CIVIL STATE OF CALIFORNIA

THE STATE OF CALIFORNIA OR ITS OFFICERS OR AGENTS SHALL NOT BE RESPONSIBLE FOR THE ACCURACY OR COMPLETENESS OF SCANNED COPIES OF THIS PLAN SHEET.

TO ACCOMPANY PLANS DATED 10-27-14

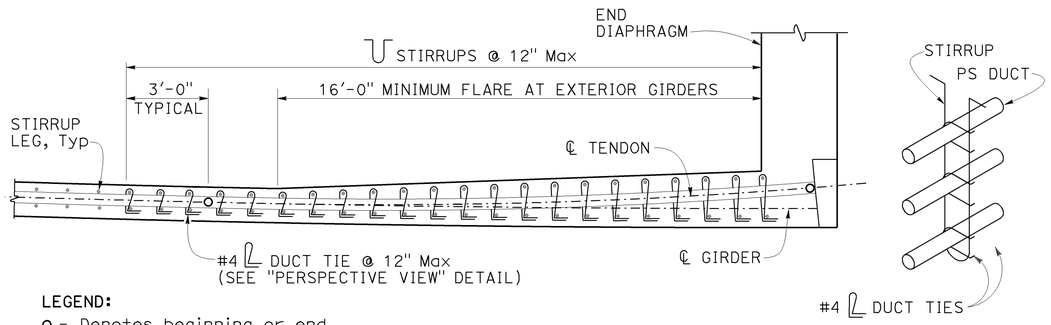

LEGEND:

o - Denotes beginning or end of tendon horizontal angle change (BC, EC or PCC)

PLAN

PERSPECTIVE VIEW

DUCT TIES AT TENDON HORIZONTAL ANGLE CHANGES
DETAIL 5-1

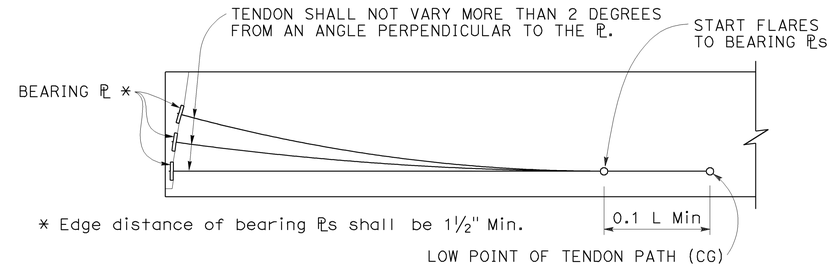

* Edge distance of bearing ℙs shall be 1½" Min.

ELEVATION - BEARING PLATE AND PRESTRESSING PATH
DETAIL 5-2

NOTES FOR DETAIL 5-1

1. Tendon horizontal angle change at end diaphragm shown. Duct tie placement similar for other locations where tendon horizontal angle changes occur. For curved girders place duct ties at tendon angle changes where ℄ tendon radius is smaller than ℄ girder radius.
2. Adjacent duct ties may be staggered to facilitate placement if stirrup spacing is less than 12 inches.
3. Place closed end of duct ties toward inside of tendon curve.
4. Wrap duct ties around both stirrup legs.
5. Individual duct ties may only be used to anchor one duct.

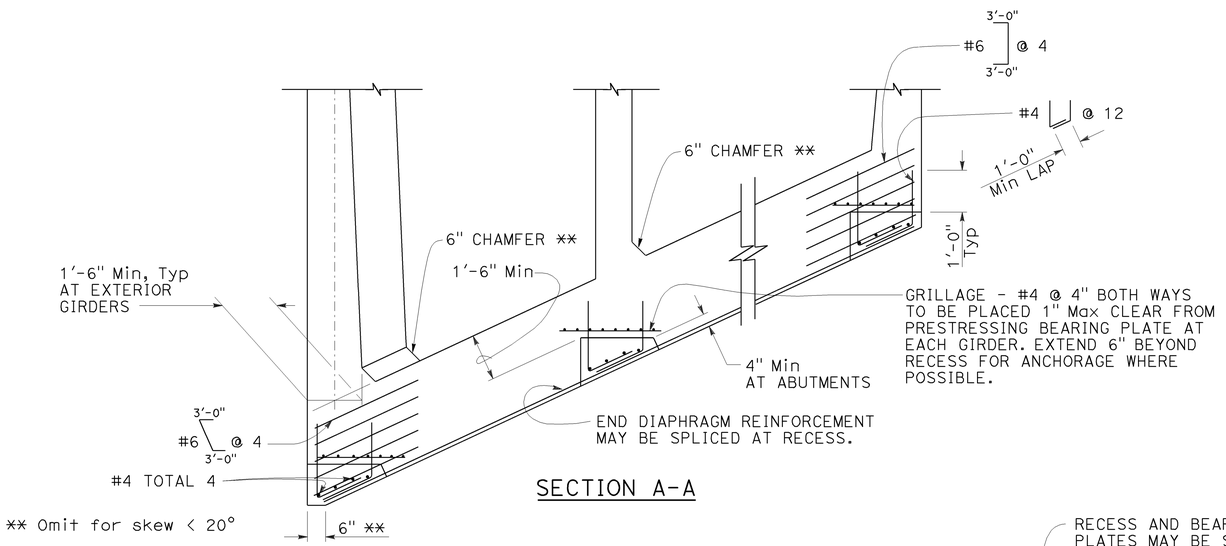

SECTION A-A

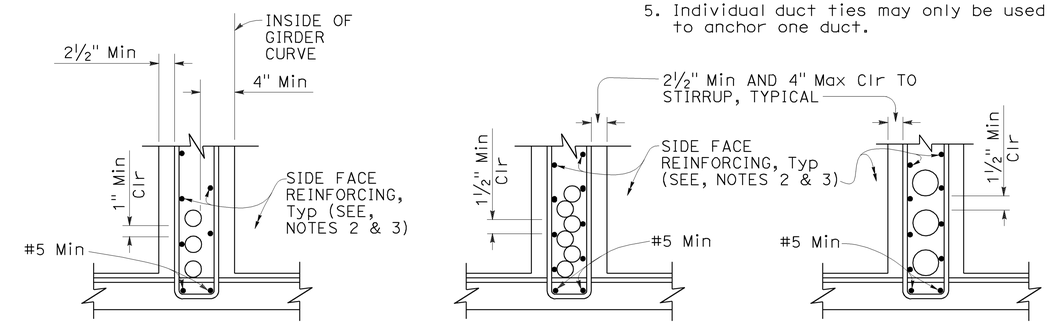

DUCTS 4½" OD AND LESS FOR HORIZONTAL CURVE RADIUS ≤ 2000'

DUCTS 4½" OD AND LESS

DUCTS OVER 4½" OD

CLEARANCE REQUIREMENTS FOR DUCTS
DETAIL 5-4

NOTES FOR DETAIL 5-4:

1. ⊔ Stirrups may also be used.
2. For additional details, see Standard Plan B7-1, and Project Plans.
3. Bar reinforcing which interferes with prestressing ducts may be adjusted as approved by the Engineer.

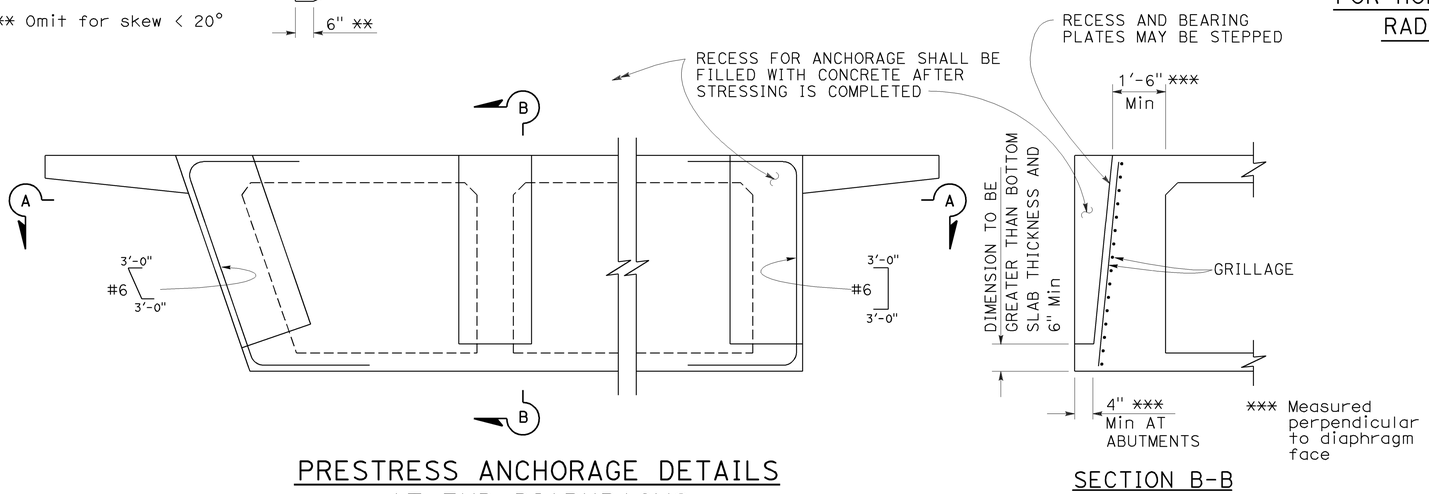

PRESTRESS ANCHORAGE DETAILS AT END DIAPHRAGMS
DETAIL 5-3

SECTION B-B

STATE OF CALIFORNIA
DEPARTMENT OF TRANSPORTATION

CAST-IN-PLACE POST-TENSIONED GIRDER DETAILS

NO SCALE

RSP B8-5 DATED JULY 19, 2013 SUPERSEDES STANDARD PLAN B8-5 DATED MAY 20, 2011 - PAGE 291 OF THE STANDARD PLANS BOOK DATED 2010.

REVISED STANDARD PLAN RSP B8-5

2010 REVISED STANDARD PLAN RSP B8-5

4-17-13

Dist	COUNTY	ROUTE	POST MILES TOTAL PROJECT	SHEET No.	TOTAL SHEETS
05	SLO	1	64.0/R66.9	187	265

REGISTERED CIVIL ENGINEER

July 19, 2013
PLANS APPROVAL DATE

REGISTERED PROFESSIONAL ENGINEER
Tillat Satter
No. C42892
Exp. 3-31-14
CIVIL
STATE OF CALIFORNIA

THE STATE OF CALIFORNIA OR ITS OFFICERS OR AGENTS SHALL NOT BE RESPONSIBLE FOR THE ACCURACY OR COMPLETENESS OF SCANNED COPIES OF THIS PLAN SHEET.

TO ACCOMPANY PLANS DATED 10-27-14

2010 REVISED STANDARD PLAN RSP B11-67

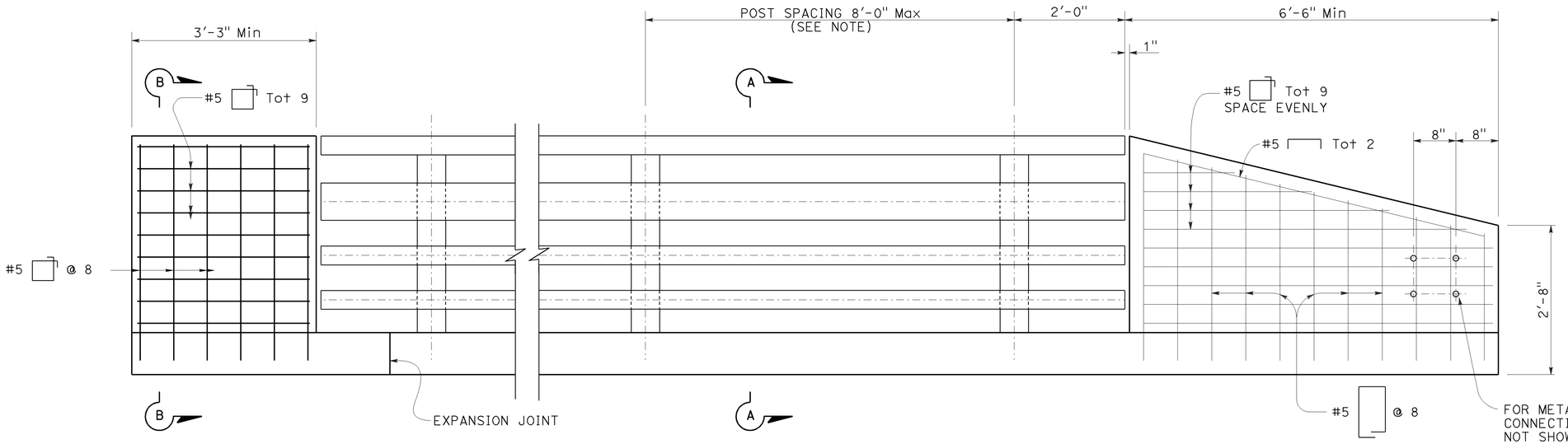

END OF RAILING ELEVATION

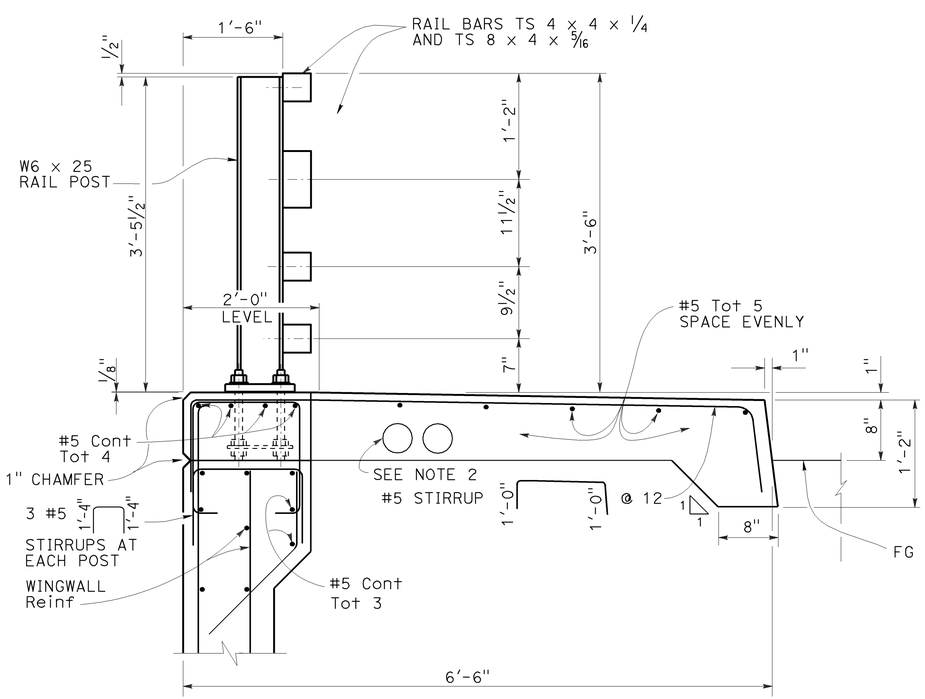

SECTION A-A

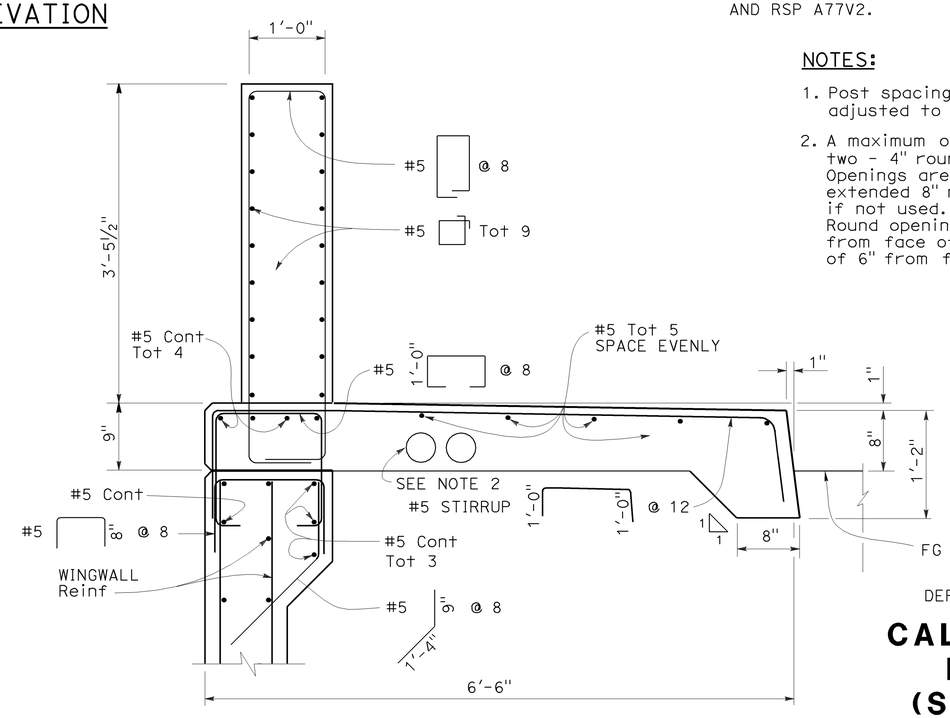

SECTION B-B

NOTES:

1. Post spacing and/or end block length to be adjusted to fit bridge length or wingwall length.
2. A maximum of six - 4" and a minimum of two - 4" round openings for future utilities. Openings are to be sealed at ends and extended 8" minimum past end of sidewalk if not used. Duct forms are to be tied down. Round openings are to be a minimum of 1'-6" from face of sidewalk curb and a minimum of 6" from face of rail.

STATE OF CALIFORNIA
DEPARTMENT OF TRANSPORTATION

CALIFORNIA ST-40 BRIDGE RAIL (SHEET 2 OF 2)

NO SCALE

RSP B11-67 DATED JULY 19, 2013 SUPERSEDES STANDARD PLAN B11-67
DATED MAY 20, 2011 - PAGE 307 OF THE STANDARD PLANS BOOK DATED 2010.

REVISED STANDARD PLAN RSP B11-67

6-27-13

Dist	COUNTY	ROUTE	POST MILES TOTAL PROJECT	SHEET No.	TOTAL SHEETS
05	SLO	1	64.0/R66.9	188	265

REGISTERED CIVIL ENGINEER

April 20, 2012
PLANS APPROVAL DATE

REGISTERED PROFESSIONAL ENGINEER
Tillat Satter
No. C42892
Exp. 3-31-14
CIVIL
STATE OF CALIFORNIA

THE STATE OF CALIFORNIA OR ITS OFFICERS OR AGENTS SHALL NOT BE RESPONSIBLE FOR THE ACCURACY OR COMPLETENESS OF SCANNED COPIES OF THIS PLAN SHEET.

TO ACCOMPANY PLANS DATED 10-27-14

2010 REVISED STANDARD PLAN RSP B11-68

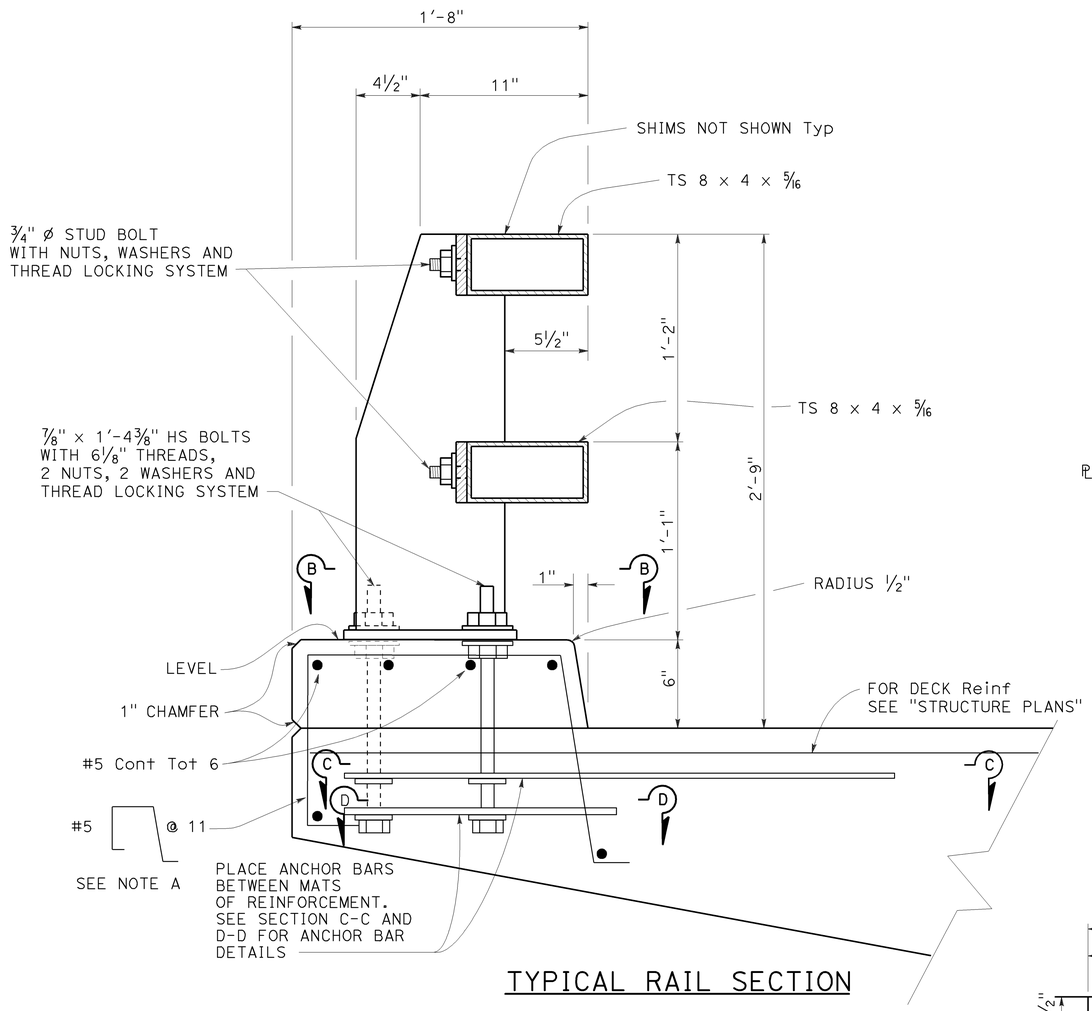

TYPICAL RAIL SECTION

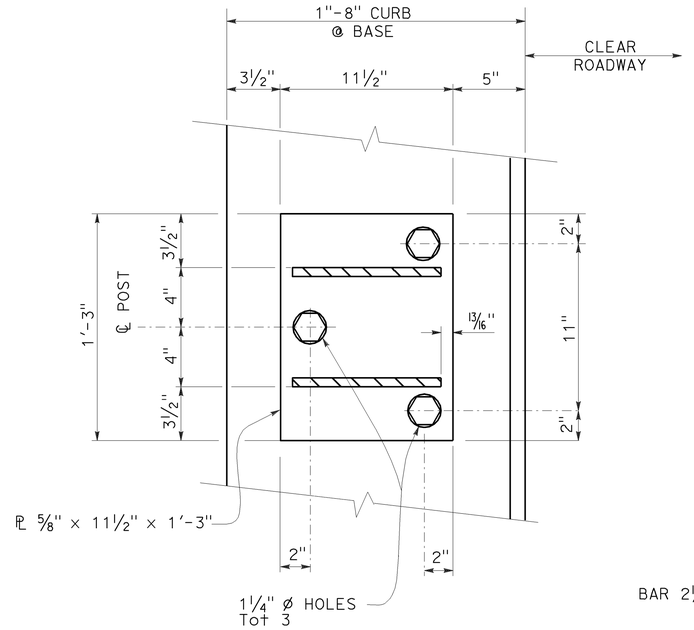

SECTION B-B

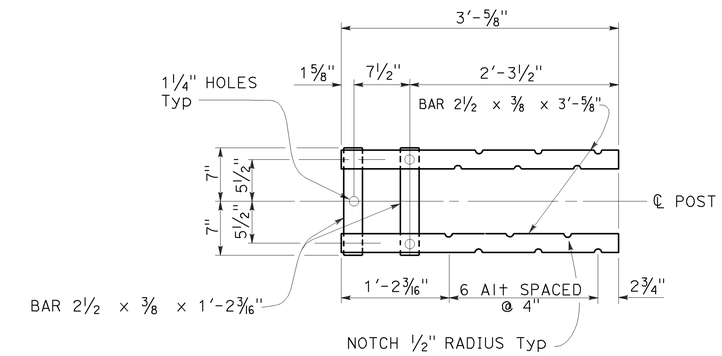

SECTION C-C
Top Anchorage

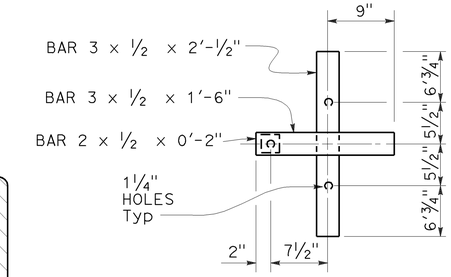

SECTION D-D
Lower Anchorage

NOTE A

Adjust spacing to clear scupper opening by 2" if applicable.

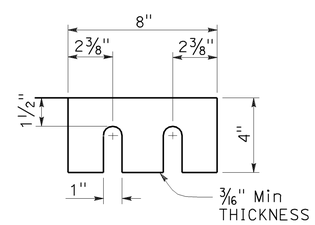

SHIMS REQUIRED FOR TOP AND BOTTOM RAIL

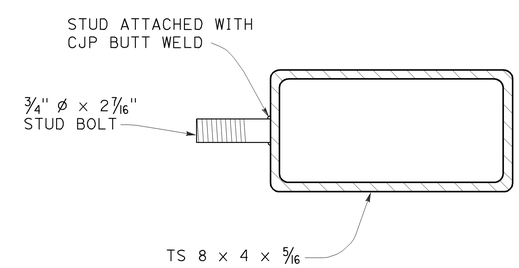

SECTION AT POST

STUD BOLT DETAIL

STATE OF CALIFORNIA
DEPARTMENT OF TRANSPORTATION

CALIFORNIA ST-10 BRIDGE RAIL (SHEET 1 OF 3)

NO SCALE

RSP B11-68 DATED APRIL 20, 2012 SUPERSEDES STANDARD PLAN B11-68 DATED MAY 20, 2011 - PAGE 308 OF THE STANDARD PLANS BOOK DATED 2010.

REVISED STANDARD PLAN RSP B11-68

3-23-12

Dist	COUNTY	ROUTE	POST MILES TOTAL PROJECT	SHEET No.	TOTAL SHEETS
05	SLO	1	64.0/R66.9	189	265

REGISTERED CIVIL ENGINEER

July 19, 2013
PLANS APPROVAL DATE

REGISTERED PROFESSIONAL ENGINEER
Tillat Satter
No. C42892
Exp. 3-31-14
CIVIL
STATE OF CALIFORNIA

THE STATE OF CALIFORNIA OR ITS OFFICERS OR AGENTS SHALL NOT BE RESPONSIBLE FOR THE ACCURACY OR COMPLETENESS OF SCANNED COPIES OF THIS PLAN SHEET.

TO ACCOMPANY PLANS DATED 10-27-14

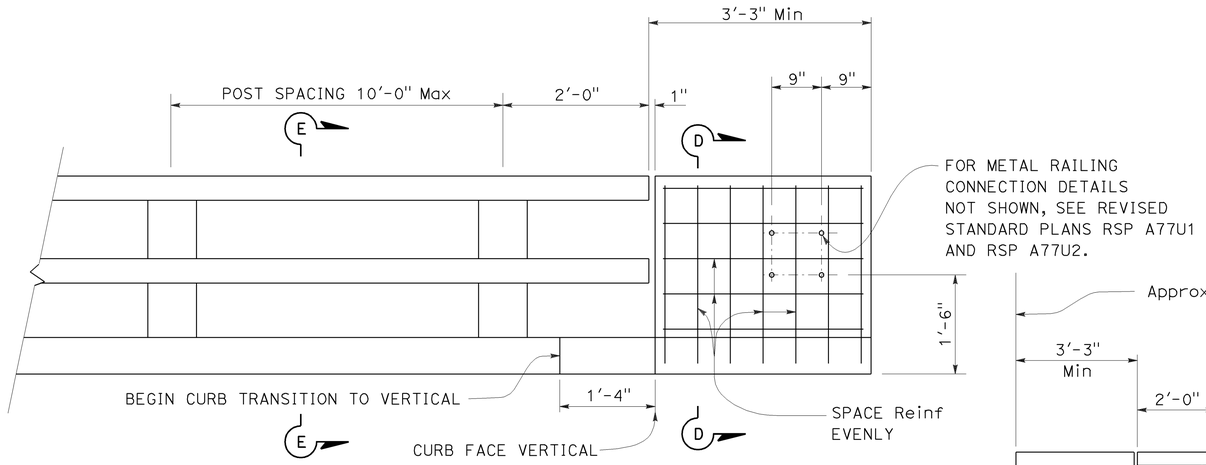

END OF RAILING ELEVATION

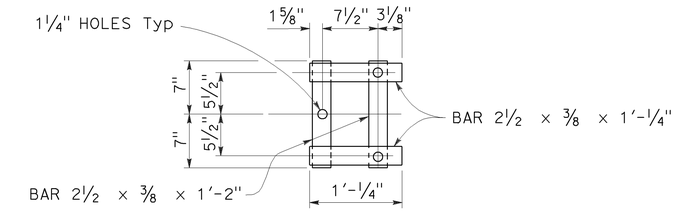

WALL ANCHOR PLATE DETAIL

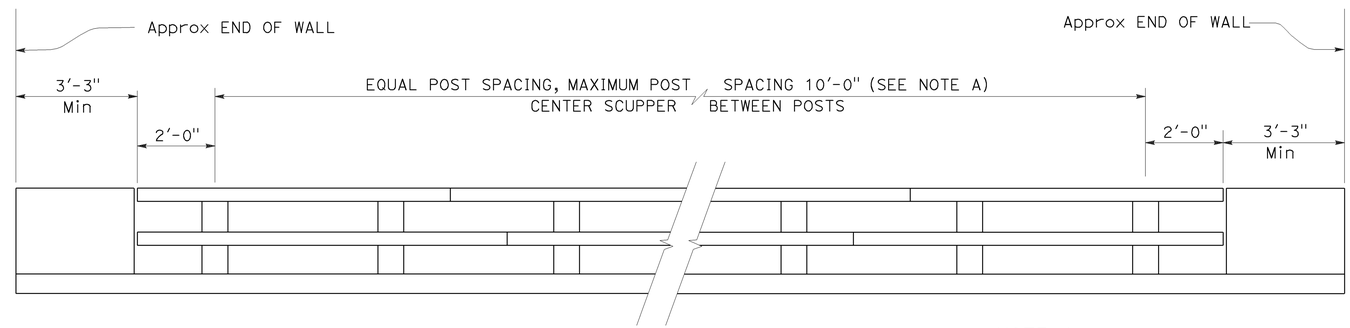

BRIDGE RAILING ELEVATION

NOTE A:

Post spacing and/or block length to be adjusted to fit bridge length or wingwall length.

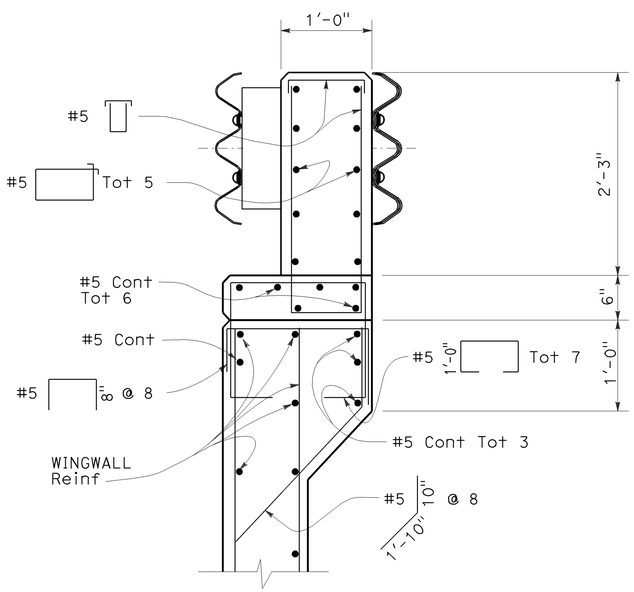

SECTION D-D

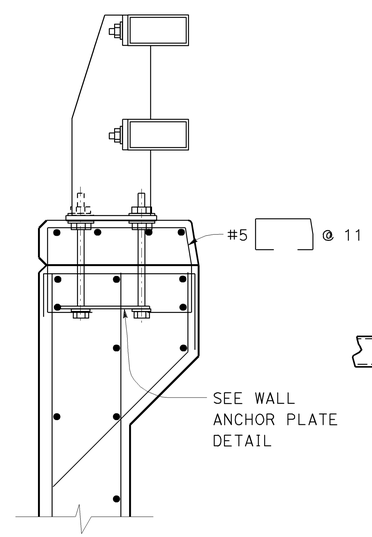

SECTION E-E

Reinf same as for Section D-D except as noted.

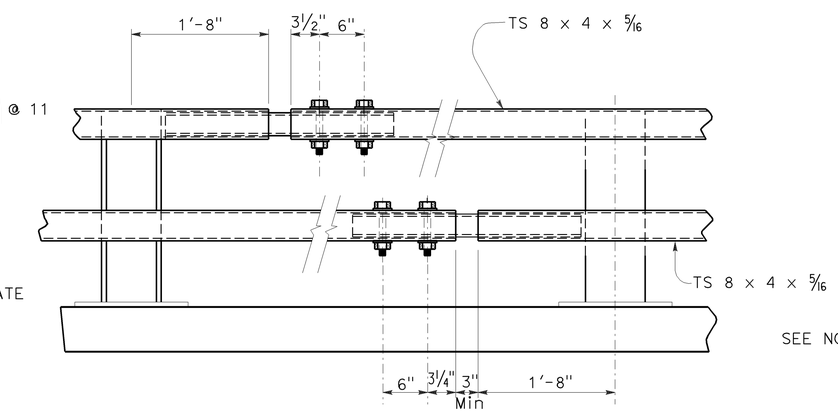

EXPANSION SPLICE

NOTE B:

Use ¾" ⌀ x 5⅝" Hs bolts with washers, fully tensioned.
1" holes in rail Typ

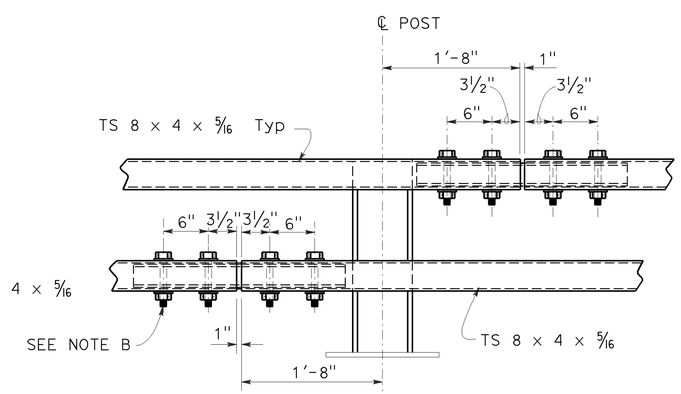

STANDARD SPLICE

STATE OF CALIFORNIA
DEPARTMENT OF TRANSPORTATION

CALIFORNIA ST-10 BRIDGE RAIL (SHEET 3 OF 3)

NO SCALE

RSP B11-70 DATED JULY 19, 2013 SUPERSEDES STANDARD PLAN B11-70
DATED MAY 20, 2011 - PAGE 310 OF THE STANDARD PLANS BOOK DATED 2010.

REVISED STANDARD PLAN RSP B11-70

2010 REVISED STANDARD PLAN RSP B11-70

6-27-13

DIST	COUNTY	ROUTE	POST MILES TOTAL PROJECT	SHEET No.	TOTAL SHEETS
05	SLO	1	64.0/R66.9	190	265

REGISTERED CIVIL ENGINEER 10-27-14 DATE

10-27-14
PLANS APPROVAL DATE

REGISTERED PROFESSIONAL ENGINEER MICHAEL POPE No. C54503 Exp. 12/31/15 CIVIL STATE OF CALIFORNIA

The State of California or its officers or agents shall not be responsible for the accuracy or completeness of electronic copies of this plan sheet.

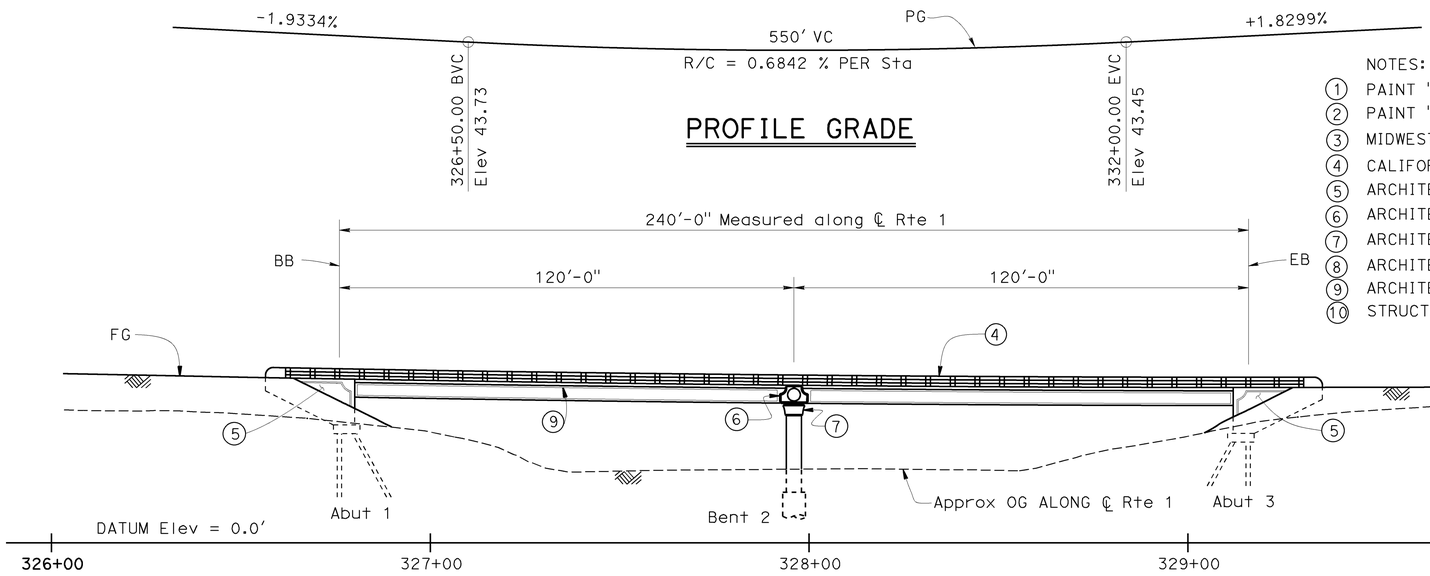

PROFILE GRADE

ELEVATION

1" = 20'

NOTES:

1. PAINT "BRIDGE NO. 49-0258"
2. PAINT "ARROYO DE LOS PLAYANOS"
3. MIDWEST GUARDRAIL, SEE "ROAD PLANS"
4. CALIFORNIA ST-10 BRIDGE RAIL(MOD) WITH BICYCLE RAILING
5. ARCHITECTURAL TREATMENT ON ABUTMENT AND WINGWALL FACES
6. ARCHITECTURAL TREATMENT ON BENT CAP
7. ARCHITECTURAL TREATMENT ON COLUMN TOP
8. ARCHITECTURAL TREATMENT ON BARRIER
9. ARCHITECTURAL TREATMENT ON EXTERIOR GIRDER
10. STRUCTURE APPROACH TYPE EQ(10)

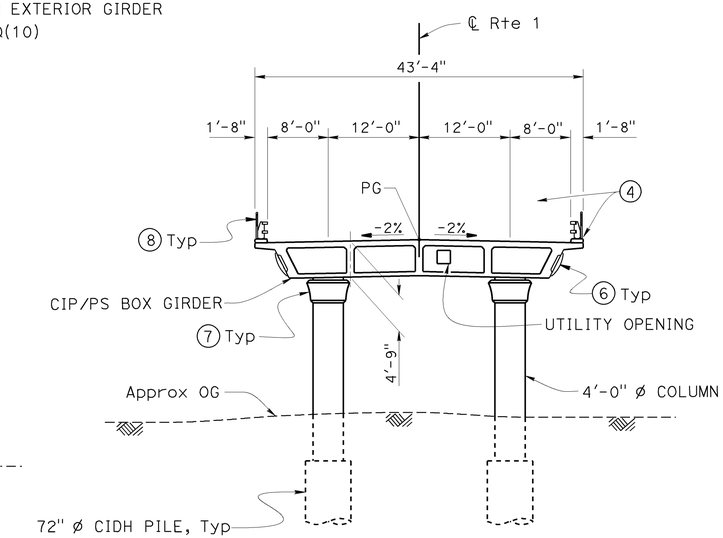

TYPICAL SECTION

1" = 10'

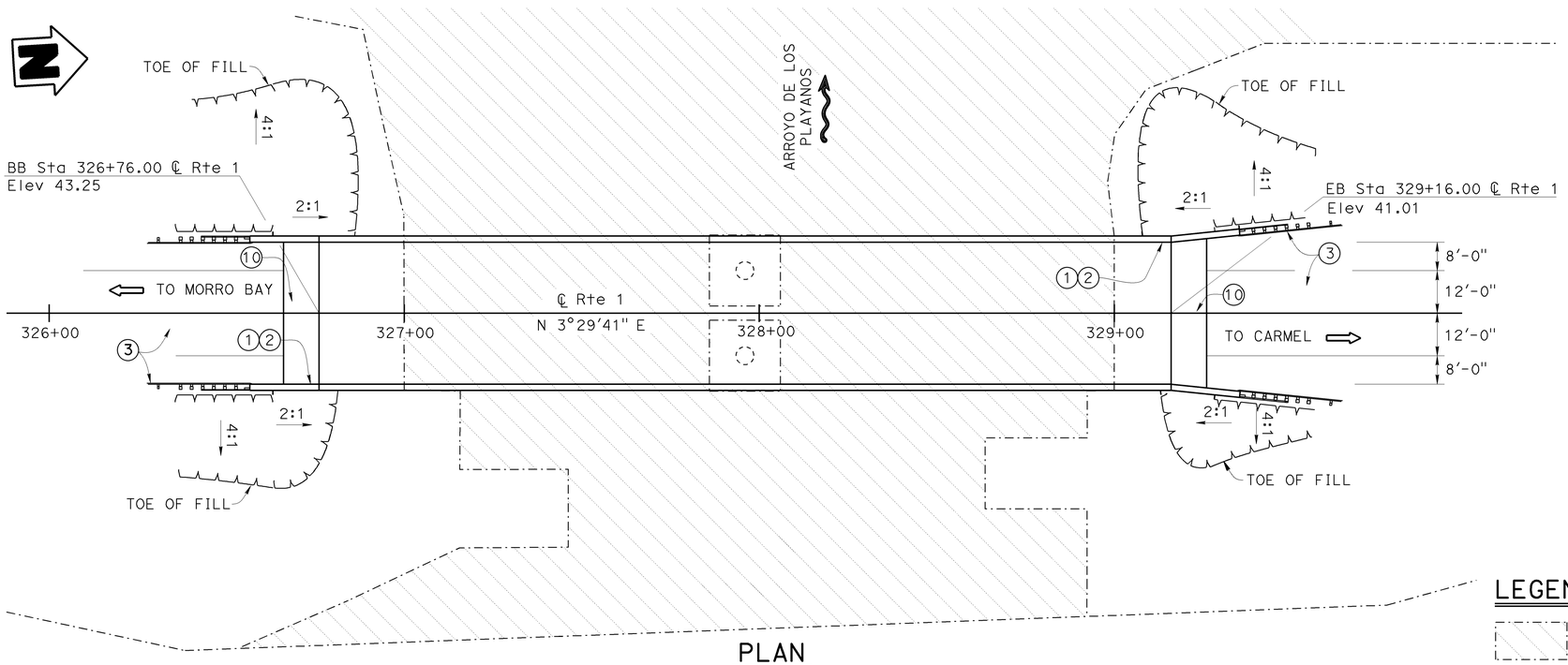

PLAN

1" = 20'

QUANTITIES

STRUCTURE EXCAVATION (BRIDGE)	258	CY
STRUCTURE EXCAVATION (TYPE D)	13	CY
STRUCTURE BACKFILL (BRIDGE)	149	CY
FURNISH STEEL PILING (HP 14 X 89)	344	LF
DRIVE STEEL PILE (HP 14 X 89)	22	EA
72" CAST-IN-DRILLED-HOLE CONCRETE PILING	185	LF
PRESTRESSING CAST-IN-PLACE CONCRETE	LUMP	SUM
STRUCTURAL CONCRETE, BRIDGE FOOTING	51	CY
STRUCTURAL CONCRETE, BRIDGE	803	CY
STRUCTURAL CONCRETE, APPROACH SLAB (TYPE EQ)	24	CY
ARCHITECTURAL TREATMENT	1,150	SQFT
JOINT SEAL (MR 1½")	87	LF
BAR REINFORCING STEEL (BRIDGE)	245,800	LB
BRIDGE DECK DRAINAGE SYSTEM	1,890	LB
CALIFORNIA ST-10 BRIDGE RAIL (MODIFIED) (WITH BICYCLE RAILING)	562	LF

LEGEND

Denotes Approx ESA Limits

NEW CONSTRUCTION

MIKE POPE
DESIGN ENGINEER

DESIGN	BY ZIHAN YAN	CHECKED MATT GIOVANNONI	LOAD & RESISTANCE FACTOR DESIGN — LIVE LOADING: HL93 W/"LOW-BOY"; PERMIT DESIGN VEHICLE
DETAILS	BY F. RASHEDI / J. GUO	CHECKED MATT GIOVANNONI	LAYOUT BY ZIHAN YAN — CHECKED MATT GIOVANNONI
QUANTITIES	BY ZIHAN YAN	CHECKED MATT GIOVANNONI	SPECIFICATIONS BY TODD GEERTS — PLANS AND SPECS COMPARED TODD GEERTS

ORIGINAL SCALE IN INCHES FOR REDUCED PLANS 0 1 2 3

STATE OF CALIFORNIA
DEPARTMENT OF TRANSPORTATION

DIVISION OF ENGINEERING SERVICES
STRUCTURE DESIGN
DESIGN BRANCH 18

BRIDGE NO. 49-0258
POST MILE R 64.62

ARROYO DE LOS PLAYANOS BRIDGE
GENERAL PLAN

UNIT: 3603
PROJECT NUMBER & PHASE: 0500000576 1
CONTRACT NO.: 05-492801

DISREGARD PRINTS BEARING EARLIER REVISION DATES

REVISION DATES 03/07/11 12/06/13 04/08/13 01/04/14

SHEET 1 OF 24

USERNAME => s115755 DATE PLOTTED => 16-DEC-2014 TIME PLOTTED => 14:13

STRUCTURES DESIGN GENERAL PLAN SHEET (ENGLISH) (REV.09-01-10)

FILE => 49-0258-a-gp.dgn

DIST	COUNTY	ROUTE	POST MILES TOTAL PROJECT	SHEET No.	TOTAL SHEETS
05	SLO	1	64.0/R66.9	191	265

REGISTERED CIVIL ENGINEER 10-27-14 DATE

10-27-14
PLANS APPROVAL DATE

REGISTERED PROFESSIONAL ENGINEER MICHAEL POPE No. C54503 Exp. 12/31/15 CIVIL STATE OF CALIFORNIA

The State of California or its officers or agents shall not be responsible for the accuracy or completeness of scanned copies of this plan sheet.

GENERAL NOTES
LOAD AND RESISTANCE FACTOR DESIGN

DESIGN:
AASHTO LRFD BRIDGE DESIGN SPECIFICATIONS, 4TH EDITION AND THE CALTRANS AMENDMENTS, PREFACE DATED NOVEMBER 2011

SEISMIC DESIGN:
CALTRANS SEISMIC DESIGN CRITERIA (SDC), VERSION 1.6, NOVEMBER 2010

DEAD LOAD:
INCLUDES 35 PSF FOR FUTURE WEARING SURFACE

LIVE LOADING:
HL93 AND PERMIT DESIGN LOAD

SEISMIC LOADING:
SEE "ACCELERATION RESPONSE SPECTRA CURVE"
SOIL PROFILE: VS30 = 1500 FT/SEC FOR THE TOP 100 FT OF SOIL
MOMENT MAGNITUDE: MMAX = 7.5
PEAK GROUND ACCELERATION = 0.50 G

CONCRETE:
F_Y = 60 KSI
F'_C = SEE "CONCRETE STRENGTH AND TYPE LIMITS".

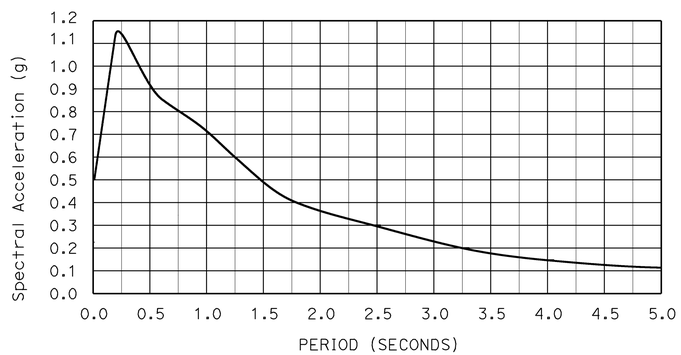

ACCELERATION RESPONSE SPECTRA CURVE

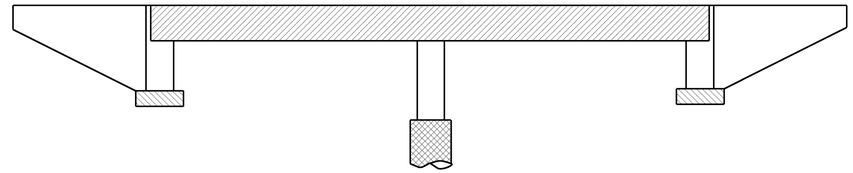

STRUCTURAL CONCRETE, BRIDGE (3600 psi at 28 DAYS)
STRUCTURAL CONCRETE, BRIDGE (4000 psi at 28 DAYS)
STRUCTURAL CONCRETE, BRIDGE FOOTING (3600 psi at 28 DAYS)
CAST-IN-PLACE CONCRETE PILE (3600 psi at 28 DAYS)

CONCRETE STRENGTH AND TYPE LIMITS
No Scale

TIME DEPENDENT CAMBER VALUE	
Elapsed time measured from prestressing box girder to placement of closure pour	% of the values as shown in camber diagram
30 days	140
45 days	160
60 days	180
75 days	200
90 days	220
120 days	240
150 days	245
180 days	250

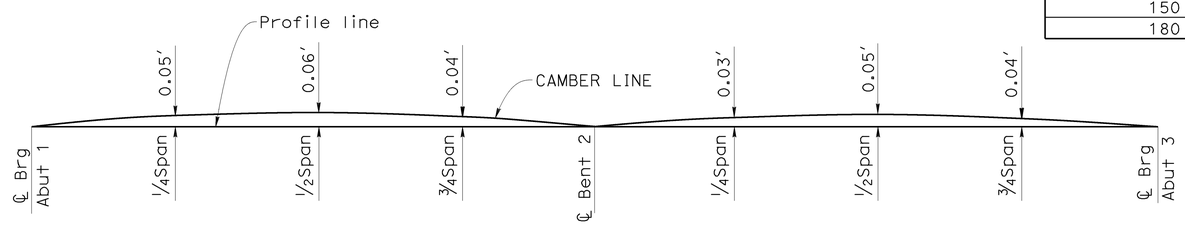

CAMBER DIAGRAM
No Scale
NOTE: Does not include allowance for falsework settlement

PILE DATA TABLE						
LOCATION	PILE TYPE	NOMINAL RESISTANCE (kips)		CUT-OFF ELEVATION (ft)	DESIGN TIP ELEVATIONS (ft)	SPECIFIED TIP ELEVATION (ft)
		COMPRESSION	TENSION			
ABUTMENT 1	HP 14X89	310	0	29.67	12.0 (a)	12.0
BENT 2	72"Ø CIDH	3530	0	13.40	-79.0 (a), -26.0 (b)	-79.0
ABUTMENT 3	HP 14X89	310	0	27.67	15.0 (a)	15.0

1. DESIGN TIP ELEVATIONS ARE CONTROLLED BY: (A) COMPRESSION, (B) LATERAL LOAD
2. THERE ARE NO DESIGN TIP ELEVATIONS FOR SETTLEMENTS BECAUSE THE ABUTMENT PILES ARE DRIVEN TO ROCK AND THE CIDH PILES AT PIER ARE EMBEDDED INTO ROCK.

INDEX TO PLANS

SHEET NO.	TITLE
1.	GENERAL PLAN
2.	INDEX TO PLANS
3.	DECK COUNTOURS
4.	FOUNDATION PLAN
5.	ABUTMENT LAYOUT
6.	ABUTMENT DETAILS NO. 1
7.	ABUTMENT DETAILS NO. 2
8.	ABUTMENT DETAILS NO. 3
9.	BENT DETAILS NO. 1
10.	BENT DETAILS NO. 2
11	TYPICAL SECTION
12.	GIRDER LAYOUT
13.	ADDITIONAL GIRDER REINFORCEMENT
14.	ARCHITECTURAL TREATMENT DETAILS NO. 1
15.	ARCHITECTURAL TREATMENT DETAILS NO. 2
16.	CALIFORNIA ST-10 BRIDGE RAIL(MOD) DETAILS NO. 1
17.	CALIFORNIA ST-10 BRIDGE RAIL(MOD) DETAILS NO. 2
18.	STRUCTURE APPROACH TYPE EQ (10)
19.	STRUCTURE APPROACH DRAINAGE DETAILS
20.	LOG OF TEST BORINGS NO. 1
21.	LOG OF TEST BORINGS NO. 2
22.	LOG OF TEST BORINGS NO. 3
23.	LOG OF TEST BORINGS NO. 4
24.	LOG OF TEST BORINGS NO. 5

STANDARD PLANS DATED 2010

A10A-A10B	ABBREVIATIONS
A10C-A10E	LINES & SYMBOLS
A10F-A10G	LEGEND SOIL
A10H	LEGEND ROCK
A62B	LIMITS OF PAYMENT FOR EXCAVATION AND BACKFILL BRIDGE SURCHARGE AND WALL
A62C	LIMITS OF PAYMENT FOR EXCAVATION AND BACKFILL BRIDGE
B0-1	BRIDGE DETAILS
B0-3	BRIDGE DETAILS
B0-5	BRIDGE DETAILS
B0-13	BRIDGE DETAILS
B6-21	JOINT SEALS (MAXIMUM MOVEMENT RATING = 2")
B7-1	BOX GIRDER DETAILS
B7-6	DECK DRAIN TYPES D-1 AND D-2
B7-7	DECK DRAIN - TYPE D-3
B7-8	DECK DRAINAGE DETAILS
B7-10	UTILITY OPENING-BOX GIRDER
B7-11	UTILITY DETAILS
RSP B8-5	CAST-IN-PLACE POST-TENSIONED GIRDER DETAILS
RSP B11-68	CALIFORNIA ST-10 BRIDGE RAIL (SHEET 1 OF 3)
B11-69	CALIFORNIA ST-10 BRIDGE RAIL (SHEET 2 OF 3)
RSP B11-70	CALIFORNIA ST-10 BRIDGE RAIL (SHEET 3 OF 3)
B14-3	COMMUNICATION AND SPRINKLER CONTROL CONDUITS (CONDUIT LESS THAN 4")
B14-5	WATER SUPPLY LINE (DETAILS) (PIPE SIZES LESS THAN 4")

STANDARD PLAN SHEET NO.
DETAIL NO.

	BY	CHECKED
DESIGN	ZIHAN YAN	MATT GIOVANNONI
DETAILS	JINLI GUO	MATT GIOVANNONI
QUANTITIES	ZIHAN YAN	MATT GIOVANNONI

STATE OF CALIFORNIA
DEPARTMENT OF TRANSPORTATION

DIVISION OF ENGINEERING SERVICES
STRUCTURE DESIGN
DESIGN BRANCH 18

BRIDGE NO. 49-0258
POST MILE R 64.62

ARROYO DE LOS PLAYANOS BRIDGE
INDEX TO PLANS

STRUCTURES DESIGN DETAIL SHEET (ENGLISH) (REV. 09-01-10)

ORIGINAL SCALE IN INCHES FOR REDUCED PLANS 0 1 2 3

UNIT: 3603
PROJECT NUMBER & PHASE: 0500000576 1
CONTRACT NO.: 05-492801

DISREGARD PRINTS BEARING EARLIER REVISION DATES
REVISION DATES 10/12/12 01/04/13 02/07/13 04/23/13

SHEET 2 OF 24

FILE => 49-0258-b-indexpl.dgn

USERNAME => s115755 DATE PLOTTED => 16-DEC-2014 TIME PLOTTED => 14:13

DIST	COUNTY	ROUTE	POST MILES TOTAL PROJECT	SHEET No.	TOTAL SHEETS
05	SLO	1	64.0/R66.9	192	265

REGISTERED CIVIL ENGINEER 10-27-14 DATE

10-27-14
PLANS APPROVAL DATE

REGISTERED PROFESSIONAL ENGINEER
MICHAEL POPE
No. C54503
Exp. 12/31/15
CIVIL
STATE OF CALIFORNIA

The State of California or its officers or agents shall not be responsible for the accuracy or completeness of electronic copies of this plan sheet.

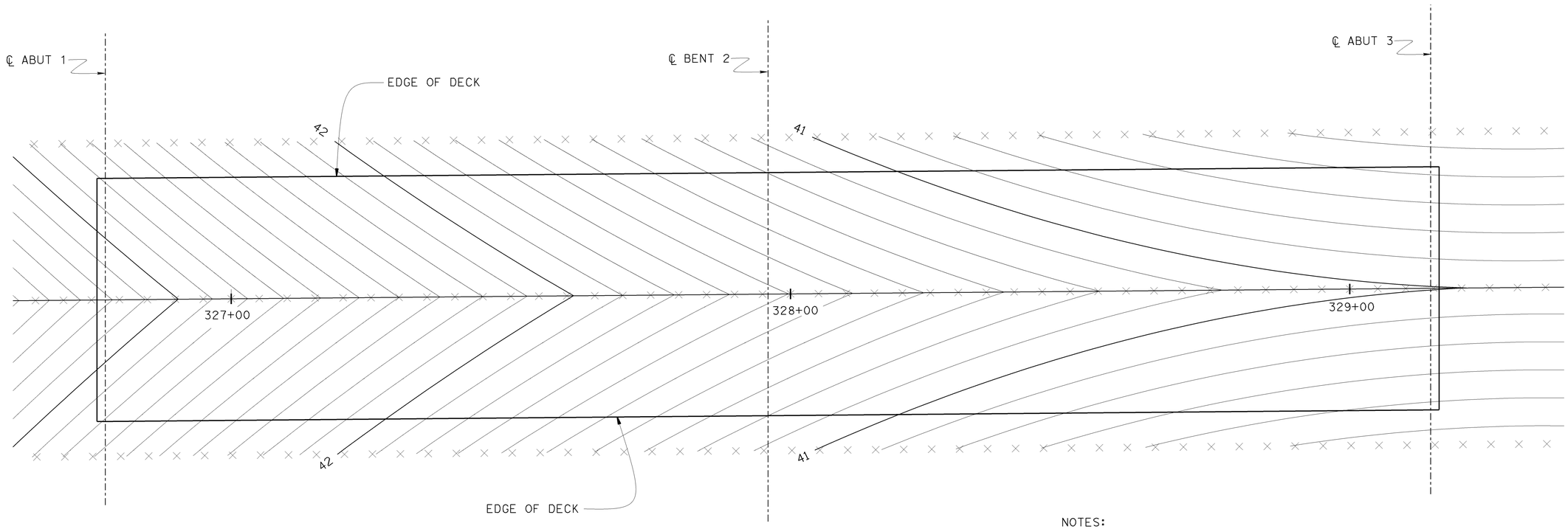

NOTES:

X=5.0′ INTERVAL ALONG LOL
1. CONTOURS DO NOT INCLUDE CAMBER
2. CONTOUR INTERVAL=0.1′

DECK CONTOURS

1" = 10′

DESIGN	BY ZIHAN YAN	CHECKED MATT GIOVANNONI	
DETAILS	BY JINLI GUO	CHECKED MATT GIOVANNONI	
QUANTITIES	BY ZIHAN YAN	CHECKED MATT GIOVANNONI	

STATE OF CALIFORNIA
DEPARTMENT OF TRANSPORTATION

DIVISION OF ENGINEERING SERVICES
STRUCTURE DESIGN
DESIGN BRANCH 18

BRIDGE NO. 49-0258
POST MILE R 64.62

ARROYO DE LOS PLAYANOS BRIDGE
DECK CONTOURS

STRUCTURES DESIGN DETAIL SHEET (ENGLISH) (REV. 09-01-10)

ORIGINAL SCALE IN INCHES FOR REDUCED PLANS 0 1 2 3

UNIT: 3603
PROJECT NUMBER & PHASE: 0500000576 1
CONTRACT NO.: 05-492801

DISREGARD PRINTS BEARING EARLIER REVISION DATES

REVISION DATES: 6/22/12 11/05/12

SHEET 3 OF 24

FILE => 49-0258-d-dc.dgn

USERNAME => s115755 DATE PLOTTED => 16-DEC-2014 TIME PLOTTED => 14:13

DIST	COUNTY	ROUTE	POST MILES TOTAL PROJECT	SHEET No.	TOTAL SHEETS
05	SLO	1	64.0/R66.9	193	265

REGISTERED CIVIL ENGINEER 10-27-14 DATE

10-27-14
PLANS APPROVAL DATE

REGISTERED PROFESSIONAL ENGINEER MICHAEL POPE No. C54503 Exp. 12/31/15 CIVIL STATE OF CALIFORNIA

The State of California or its officers or agents shall not be responsible for the accuracy or completeness of electronic copies of this plan sheet.

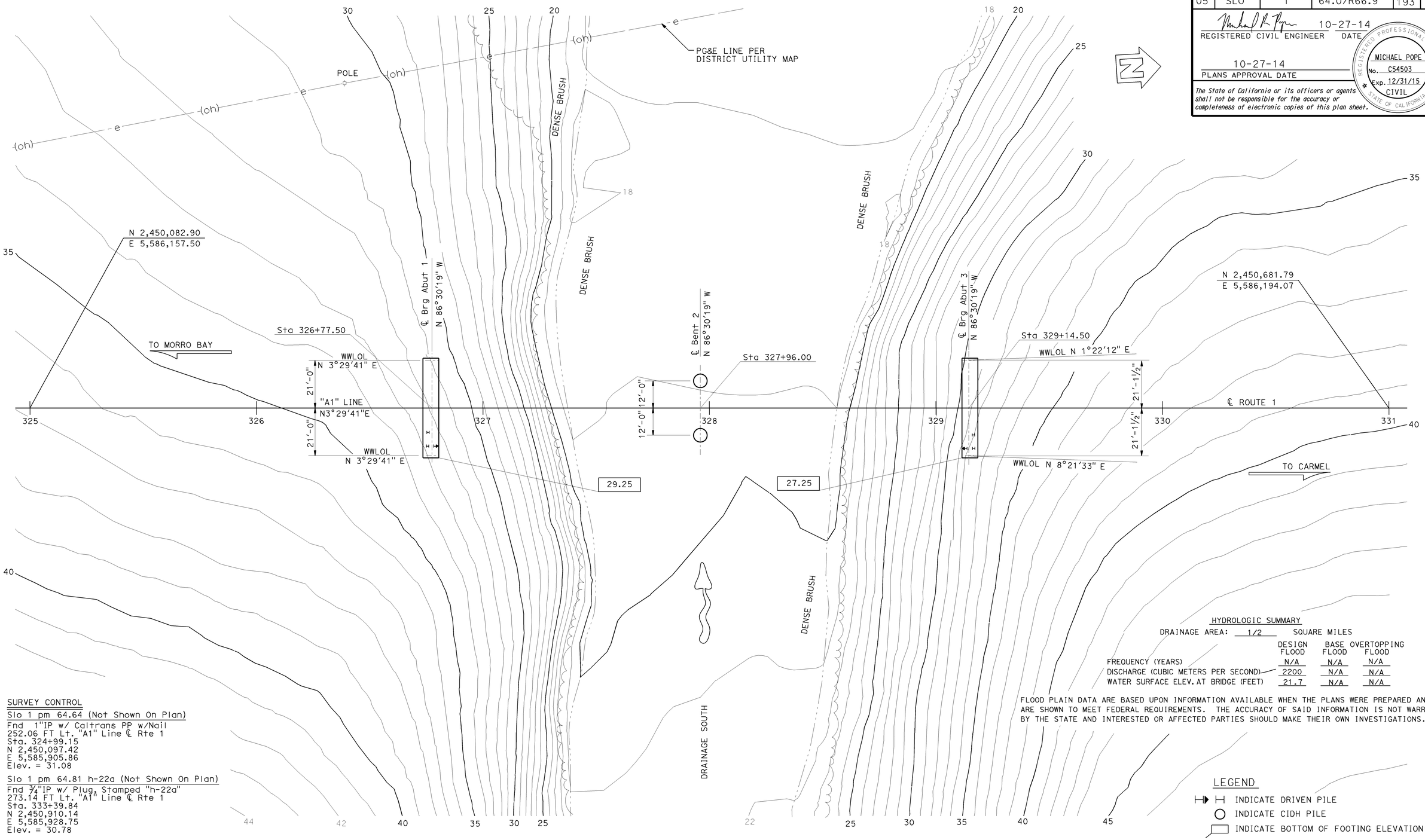

HYDROLOGIC SUMMARY

DRAINAGE AREA: 1/2 SQUARE MILES

	DESIGN FLOOD	BASE FLOOD	OVERTOPPING FLOOD
FREQUENCY (YEARS)	N/A	N/A	N/A
DISCHARGE (CUBIC METERS PER SECOND)	2200	N/A	N/A
WATER SURFACE ELEV. AT BRIDGE (FEET)	21.7	N/A	N/A

FLOOD PLAIN DATA ARE BASED UPON INFORMATION AVAILABLE WHEN THE PLANS WERE PREPARED AND ARE SHOWN TO MEET FEDERAL REQUIREMENTS. THE ACCURACY OF SAID INFORMATION IS NOT WARRANTED BY THE STATE AND INTERESTED OR AFFECTED PARTIES SHOULD MAKE THEIR OWN INVESTIGATIONS.

SURVEY CONTROL

Slo 1 pm 64.64 (Not Shown On Plan)
Fnd 1"IP w/ Caltrans PP w/Nail
252.06 FT Lt. "A1" Line ℄ Rte 1
Sta. 324+99.15
N 2,450,097.42
E 5,585,905.86
Elev. = 31.08

Slo 1 pm 64.81 h-22a (Not Shown On Plan)
Fnd ¾"IP w/ Plug, Stamped "h-22a"
273.14 FT Lt. "A1" Line ℄ Rte 1
Sta. 333+39.84
N 2,450,910.14
E 5,585,928.75
Elev. = 30.78

LEGEND

- INDICATE DRIVEN PILE
- INDICATE CIDH PILE
- INDICATE BOTTOM OF FOOTING ELEVATION

PRELIMINARY INVESTIGATION SECTION

SCALE 1"=20'	VERT.DATUM NAVD88	PHOTOGRAMMETRY AS OF: X			
	HORZ.DATUM NAD83(92) (1991.35)	SURVEYED	BY District	CHECKED	BY J.Borden 06/2011
ALIGNMENT TIES Dist. Traverse Sheet		DRAFTED	BY T.Zolnikov 06/2011	CHECKED	BY L.Lew 06/2011

DESIGN	BY ZIHAN YAN	CHECKED	MATT GIOVANNONI
DETAILS	BY JINLI GUO	CHECKED	MATT GIOVANNONI
QUANTITIES	BY ZIHAN YAN	CHECKED	MATT GIOVANNONI

STATE OF CALIFORNIA
DEPARTMENT OF TRANSPORTATION

DIVISION OF ENGINEERING SERVICES
STRUCTURE DESIGN
DESIGN BRANCH 18

BRIDGE NO. 49-0258
POST MILE R 64.62

ARROYO DE LOS PLAYANOS BRIDGE
FOUNDATION PLAN

STRUCTURES FOUNDATION PLAN SHEET (ENGLISH) (REV. 09-01-10)

ORIGINAL SCALE IN INCHES FOR REDUCED PLANS 0 1 2 3

UNIT: 3603
PROJECT NUMBER & PHASE: 0500000576 1 CONTRACT NO.: 05-492801

DISREGARD PRINTS BEARING EARLIER REVISION DATES

REVISION DATES 06/27/11 06/27/12 08/27/12 04/15/13

SHEET 4 OF 24

FILE => 49-0258-e-fp101.dgn

DIST	COUNTY	ROUTE	POST MILES TOTAL PROJECT	SHEET No.	TOTAL SHEETS
05	SLO	1	64.0/R66.9	194	265

REGISTERED CIVIL ENGINEER 10-27-14 DATE

10-27-14
PLANS APPROVAL DATE

REGISTERED PROFESSIONAL ENGINEER MICHAEL R POPE No. C54503 Exp. 12/31/15 CIVIL STATE OF CALIFORNIA

The State of California or its officers or agents shall not be responsible for the accuracy or completeness of scanned copies of this plan sheet.

NOTES:

1. FOR "SECTION A-A", "SECTION B-B" & "SECTION C-C", SEE "ABUTMENT DETAILS NO. 1" SHEET
2. FOR "FOOTING PLAN", SEE "ABUTMENT DETAILS NO. 1" SHEET
3. SEE "ABUTMENT DETAILS NO. 3" SHEET FOR JOINT PROTECTION DETAIL

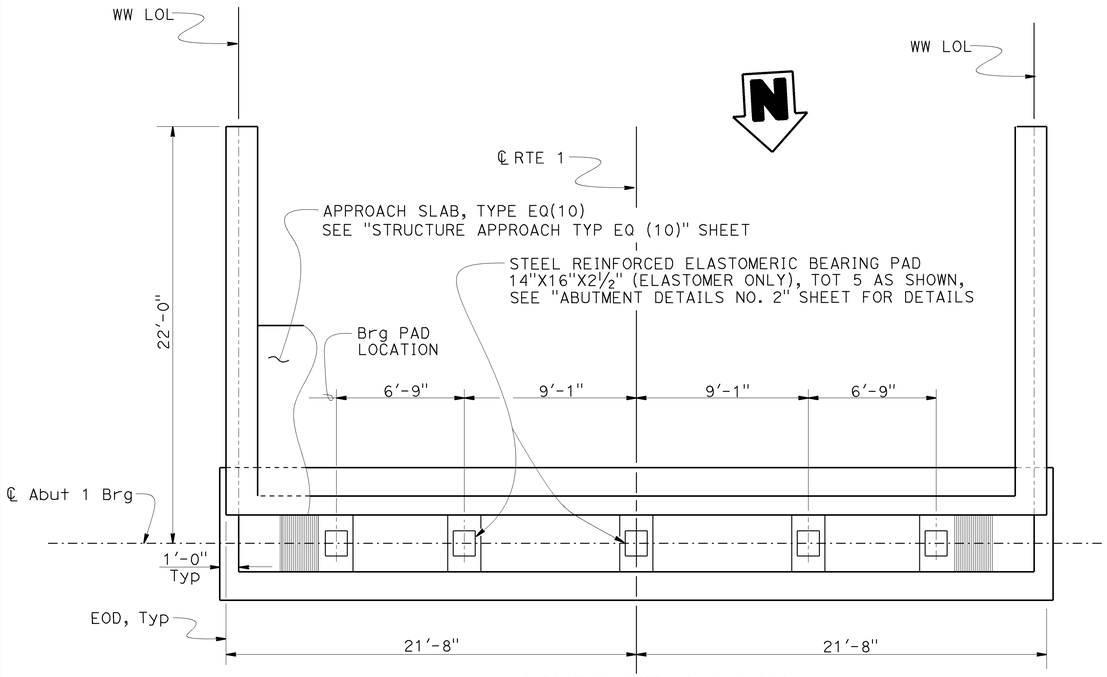

ABUTMENT 1 PLAN

¼" = 1'-0"

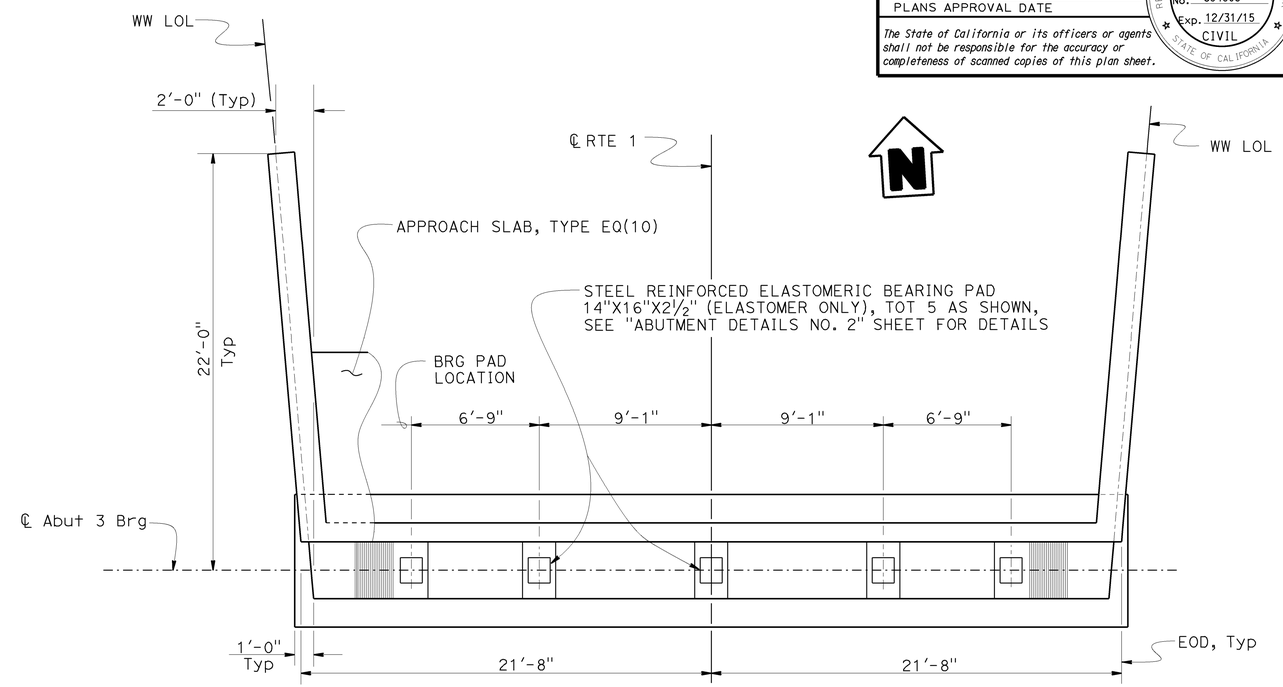

ABUTMENT 3 PLAN

¼" = 1'-0"

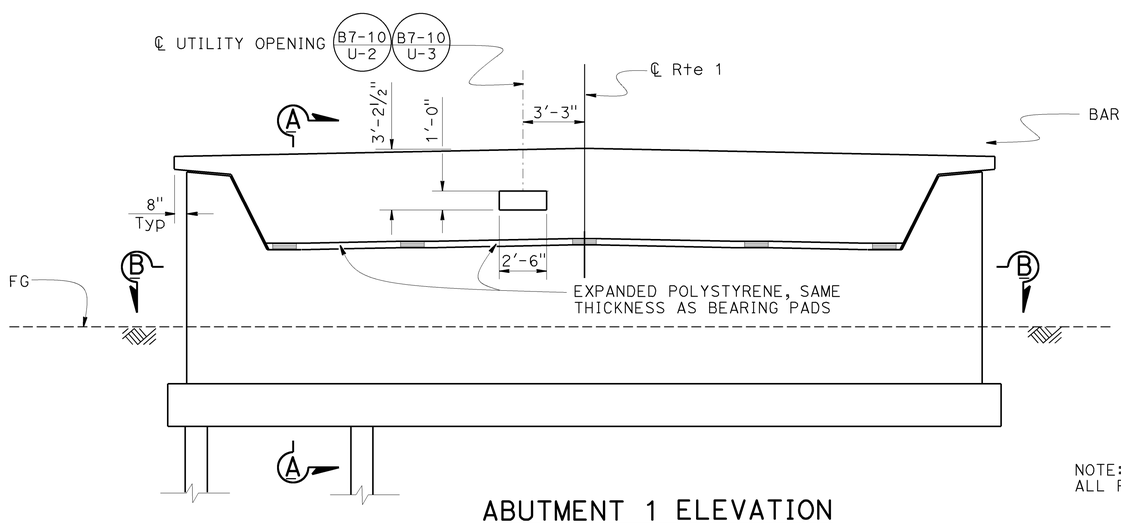

ABUTMENT 1 ELEVATION

¼" = 1'-0"

NOTE:
ALL PILES NOT SHOWN

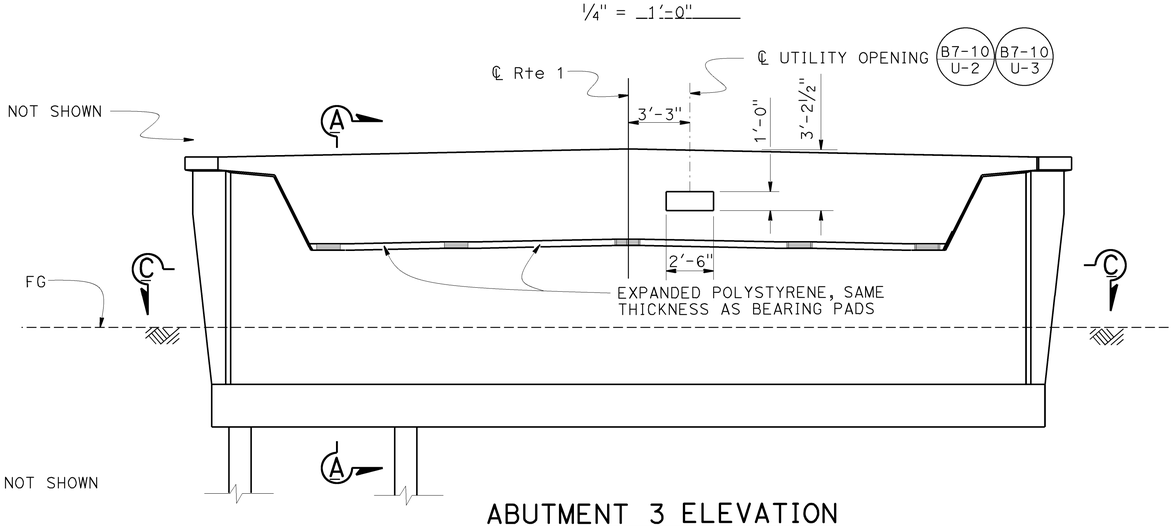

ABUTMENT 3 ELEVATION

¼" = 1'-0"

	BY	CHECKED
DESIGN	ZIHAN YAN	M. GIOVANNONI / P. RIMAL
DETAILS	JINLI GUO	M. GIOVANNONI / P. RIMAL
QUANTITIES	ZIHAN YAN	M. GIOVANNONI / P. RIMAL

STATE OF CALIFORNIA
DEPARTMENT OF TRANSPORTATION

DIVISION OF ENGINEERING SERVICES
STRUCTURE DESIGN
DESIGN BRANCH 18

BRIDGE NO. 49-0258
POST MILE R 64.62

ARROYO DE LOS PLAYANOS BRIDGE
ABUTMENT LAYOUT

STRUCTURES DESIGN DETAIL SHEET (ENGLISH) (REV. 09-01-10)

ORIGINAL SCALE IN INCHES FOR REDUCED PLANS 0 1 2 3

UNIT: 3603
PROJECT NUMBER & PHASE: 0500000576 1
CONTRACT NO.: 05-492801

DISREGARD PRINTS BEARING EARLIER REVISION DATES

REVISION DATES 2/22/13 1/04/13

SHEET 5 OF 24

FILE => 49-0258-f abtlyt.dgn

USERNAME => s116755 DATE PLOTTED => 16-DEC-2014 TIME PLOTTED => 14:08

DIST	COUNTY	ROUTE	POST MILES TOTAL PROJECT	SHEET No.	TOTAL SHEETS
05	SLO	1	64.0/R66.9	195	265

REGISTERED CIVIL ENGINEER 10-27-14 DATE

10-27-14
PLANS APPROVAL DATE

REGISTERED PROFESSIONAL ENGINEER MICHAEL R POPE No. C54503 Exp. 12/31/15 CIVIL STATE OF CALIFORNIA

The State of California or its officers or agents shall not be responsible for the accuracy or completeness of electronic copies of this plan sheet.

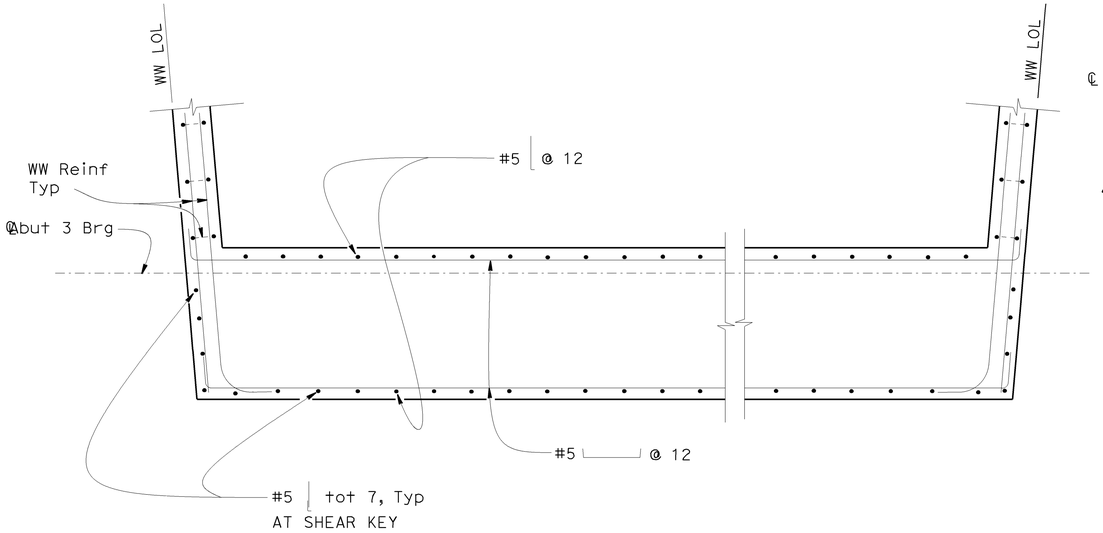

SECTION C - C (ABUTMENT 3)

½" = 1'-0"

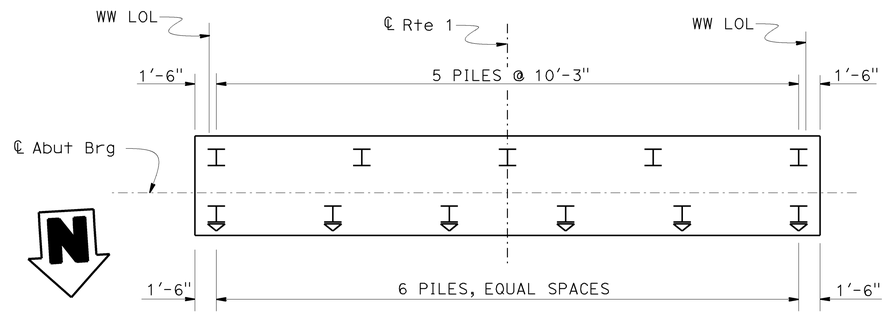

FOOTING PLAN

3/16" = 1'-0"

(ABUT 1 SHOWN, ABUT 3 SIMILAR)

LEGEND

I DENOTES VERTICAL PILE

I DENOTES BATTERED PILE

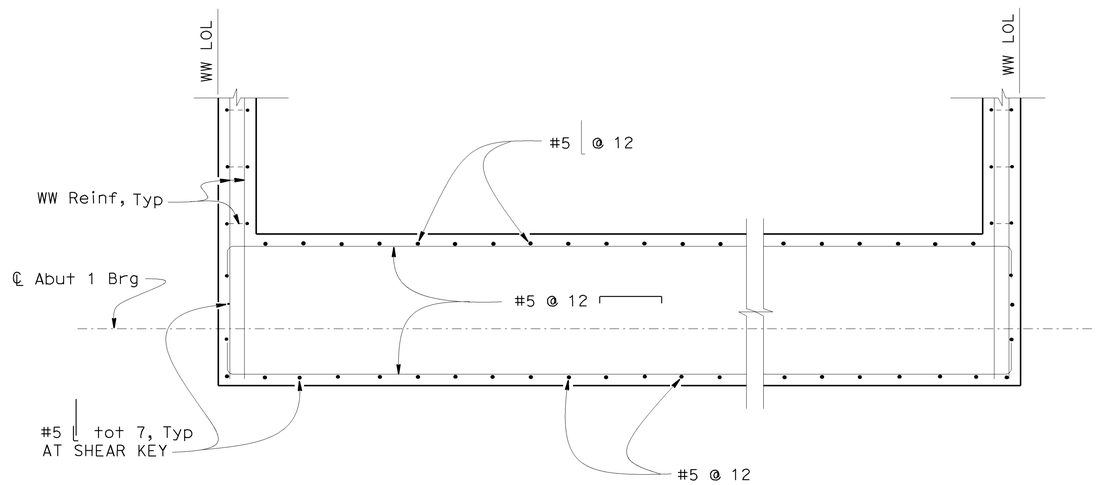

SECTION B - B (ABUTMENT 1)

½" = 1'-0"

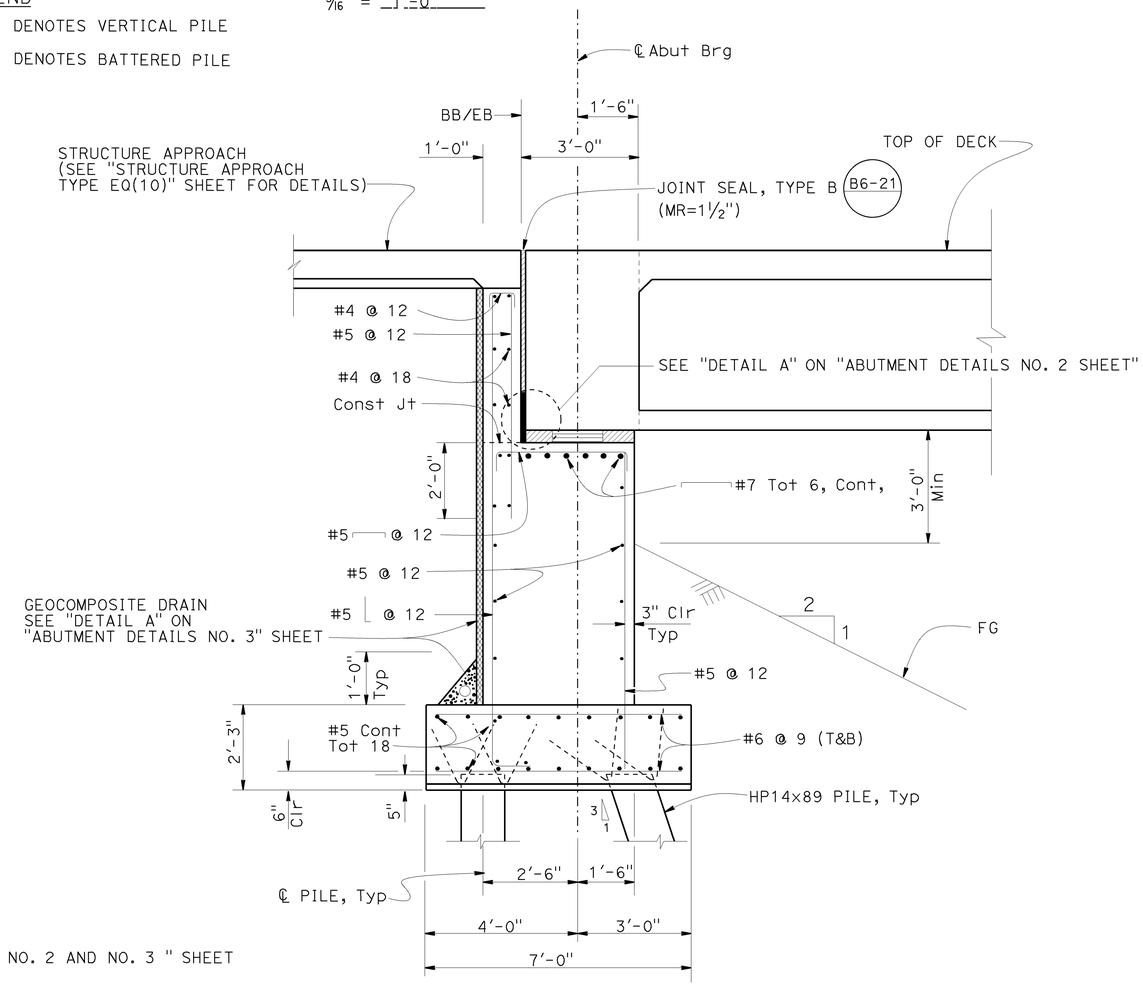

SECTION A-A

½" = 1'-0"

NOTES:

1. FOR SECTIONS AND DETAILS NOT SHOWN, SEE "ABUTMENT DETAILS NO. 2 AND NO. 3 " SHEET
2. FOR UTILITY SIZE AND OWNERS, SEE "TYPICAL SECTION" SHEET
3. FOR ELASTIOMETRIC BEARING PAD, SEE "ABUTMENT DETAILS NO. 3" SHEET
4. FOR STEEL PILE ANCHOR, SEE "ABUTMENT DETAILS NO. 3" SHEET

	BY	CHECKED
DESIGN	ZIHAN YAN	MATT GIOVANNONI
DETAILS	JINLI GUO	MATT GIOVANNONI
QUANTITIES	ZIHAN YAN	MATT GIOVANNONI

STATE OF CALIFORNIA
DEPARTMENT OF TRANSPORTATION

DIVISION OF ENGINEERING SERVICES
STRUCTURE DESIGN
DESIGN BRANCH 18

BRIDGE NO. 49-0258
POST MILE R 64.62

ARROYO DE LOS PLAYANOS BRIDGE
ABUTMENT DETAILS NO. 1

STRUCTURES DESIGN DETAIL SHEET (ENGLISH) (REV. 09-01-10)

ORIGINAL SCALE IN INCHES FOR REDUCED PLANS 0 1 2 3

UNIT: 3603
PROJECT NUMBER & PHASE: 0500000576 1
CONTRACT NO.: 05-492801

DISREGARD PRINTS BEARING EARLIER REVISION DATES

REVISION DATES: 08/07/12 04/23/13 01/16/13

SHEET 6 OF 24

FILE => 49-0258-g-abtdet01.dgn

USERNAME => s115755 DATE PLOTTED => 16-DEC-2014 TIME PLOTTED => 14:08

DIST	COUNTY	ROUTE	POST MILES TOTAL PROJECT	SHEET No.	TOTAL SHEETS
05	SLO	1	64.0/R66.9	196	265

REGISTERED CIVIL ENGINEER 10-27-14 DATE

10-27-14
PLANS APPROVAL DATE

REGISTERED PROFESSIONAL ENGINEER MICHAEL R POPE No. C54503 Exp. 12/31/15 CIVIL STATE OF CALIFORNIA

The State of California or its officers or agents shall not be responsible for the accuracy or completeness of scanned copies of this plan sheet.

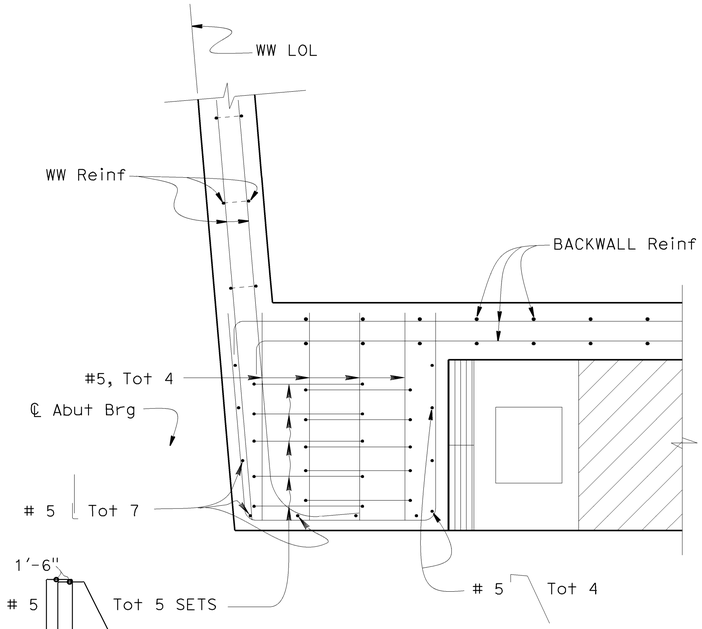

SECTION D - D (ABUTMENT 3)

3/4" = 1'-0"

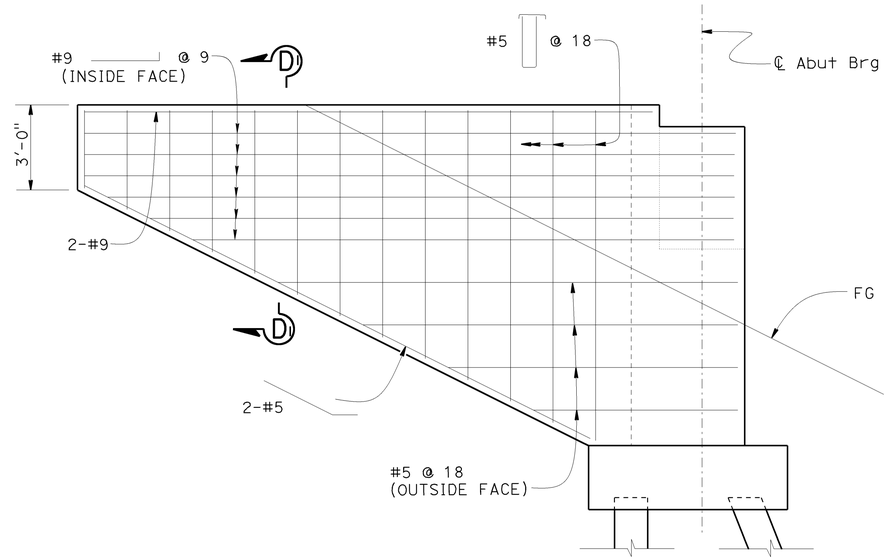

WINGWALL ELEVATION

3/8" = 1'-0"

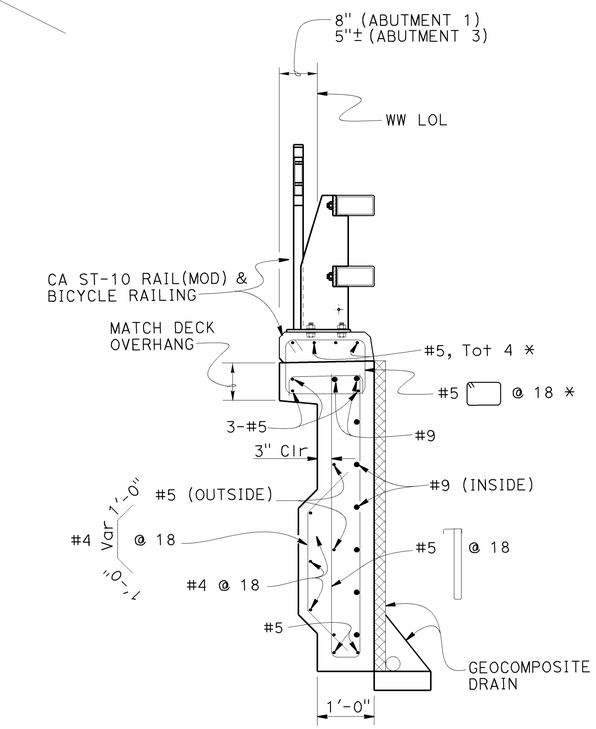

* EPOXY-COATED REINF.

SECTION D - D

3/4" = 1'-0"

NOTE:
For limit of Architectural Treatment, see "ARCHITECTURAL TREATMENT DETAILS NO. 2" sheet.

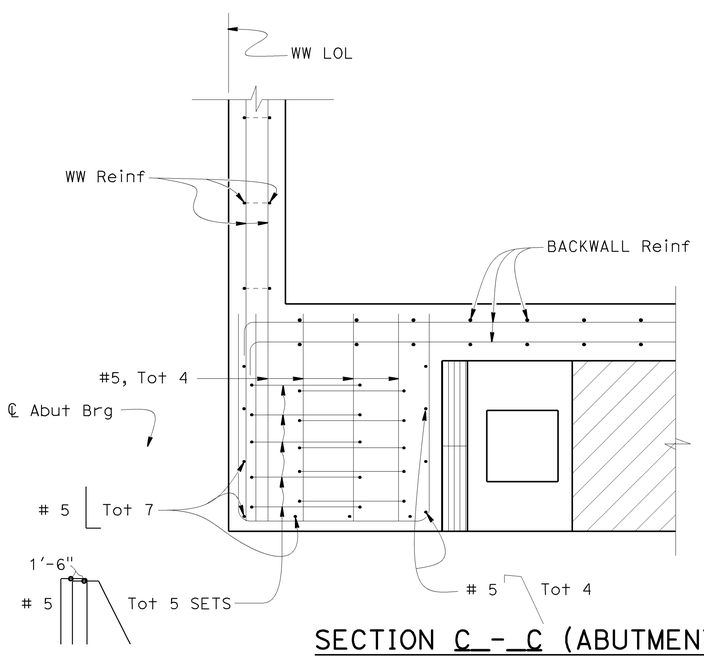

SECTION C - C (ABUTMENT 1)

3/4" = 1'-0"

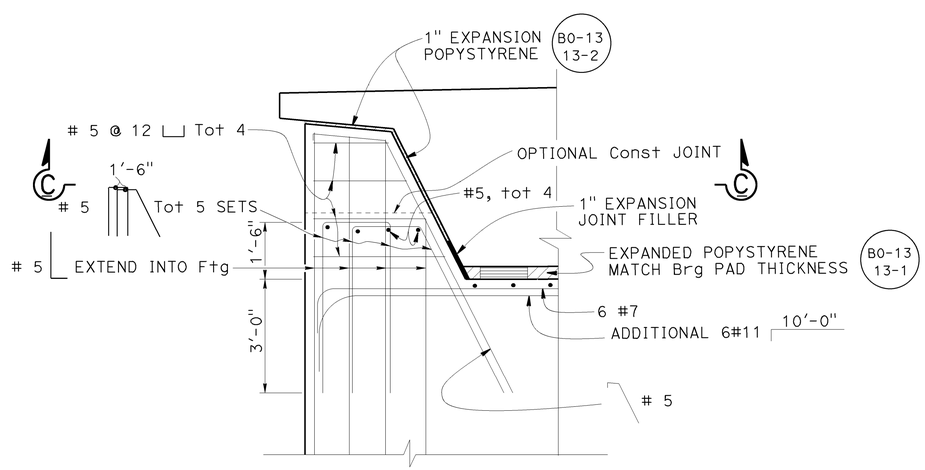

EXTERNAL SHEAR KEY ELEVATION

1/2" = 1'-0"

DESIGN	BY ZIHAN YAN	CHECKED MATT GIOVANNONI	
DETAILS	BY JINLI GUO	CHECKED MATT GIOVANNONI	
QUANTITIES	BY ZIHAN YAN	CHECKED MATT GIOVANNONI	

STATE OF CALIFORNIA
DEPARTMENT OF TRANSPORTATION

DIVISION OF ENGINEERING SERVICES
STRUCTURE DESIGN
DESIGN BRANCH 18

BRIDGE NO. 49-0258
POST MILE R 64.62

ARROYO DE LOS PLAYANOS BRIDGE
ABUTMENT DETAILS NO. 2

STRUCTURES DESIGN DETAIL SHEET (ENGLISH) (REV. 09-01-10)

ORIGINAL SCALE IN INCHES FOR REDUCED PLANS 0 1 2 3

UNIT: 3603
PROJECT NUMBER & PHASE: 0500000576 1
CONTRACT NO.: 05-492801

DISREGARD PRINTS BEARING EARLIER REVISION DATES

REVISION DATES 09/01/12 01/21/13 03/21/13

SHEET 7 OF 24

FILE => 49-0258-g-abtdet02.dgn

USERNAME => s115755 DATE PLOTTED => 16-DEC-2014 TIME PLOTTED => 14:08

DIST	COUNTY	ROUTE	POST MILES TOTAL PROJECT	SHEET No.	TOTAL SHEETS
05	SLO	1	64.0/R66.9	197	265

REGISTERED CIVIL ENGINEER 10-27-14 DATE

10-27-14
PLANS APPROVAL DATE

REGISTERED PROFESSIONAL ENGINEER MICHAEL R POPE No. C54503 Exp. 12/31/15 CIVIL STATE OF CALIFORNIA

The State of California or its officers or agents shall not be responsible for the accuracy or completeness of scanned copies of this plan sheet.

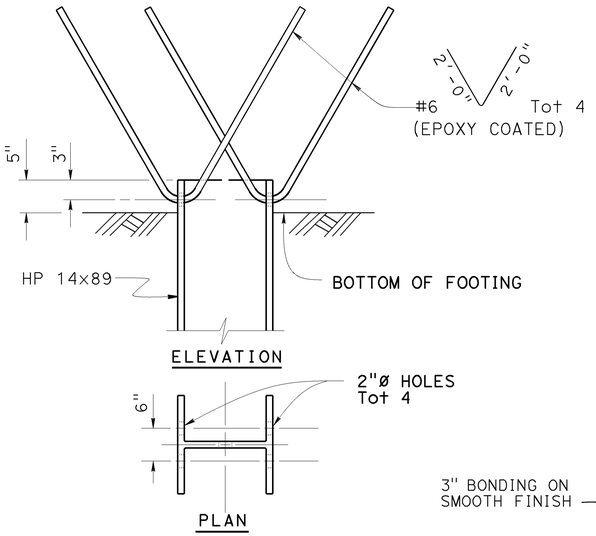

STEEL PILE ANCHOR

No Scale

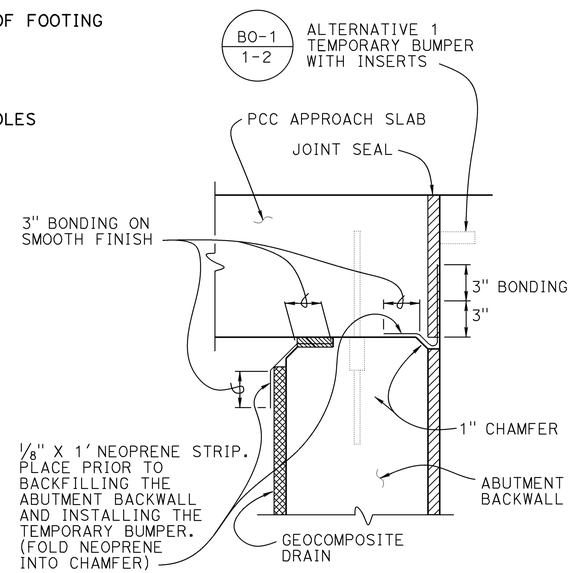

JOINT PROTECTION DETAIL

No Scale

NOTE:
For "a" dimension, see B6-21

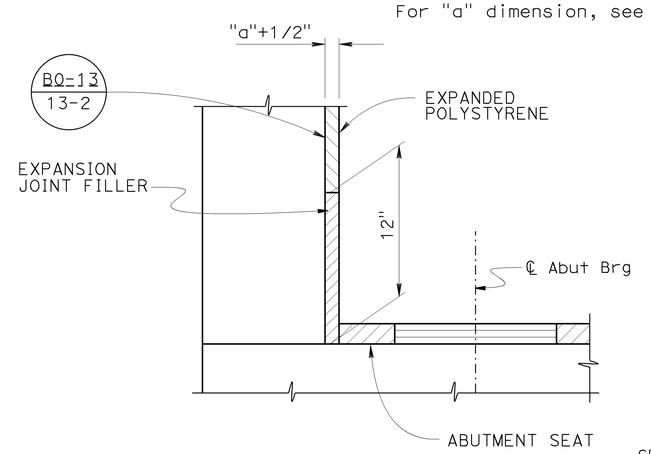

DETAIL A

No Scale

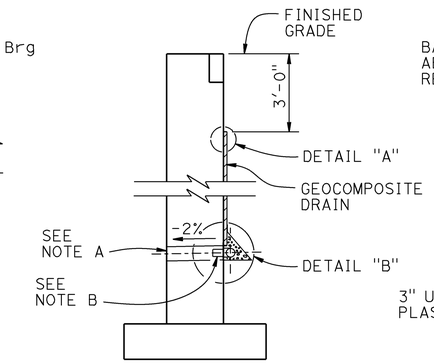

WALL SECTION

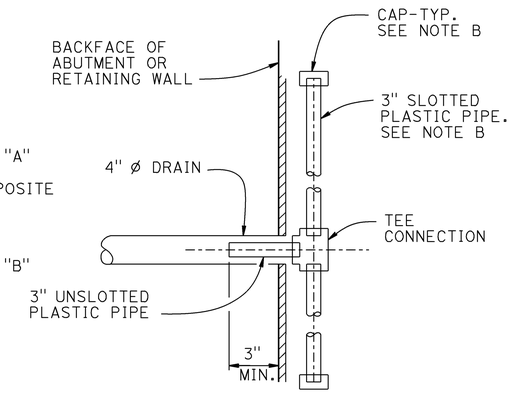

SECTION A-A

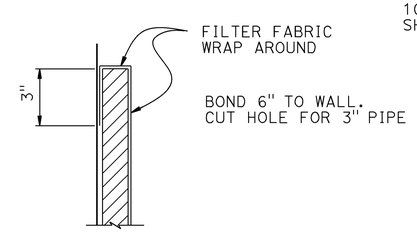

DETAIL "A"

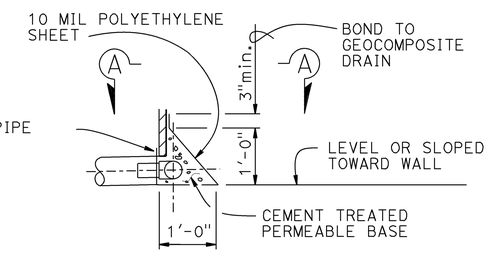

DETAIL "B"

WEEP HOLE AND GEOCOMPOSITE DRAIN

ALTERNATIVE TO BRIDGE DETAIL B0-3 / 3-1

Notes:

A. 4" ø drains at intermediate sag points and at 25' max center to center (9' c-c for Type 3 and 9'-3" c-c for Type 4 retaining walls).
For walls adjacent to sidewalks or curbs, provide 4" cast iron or asbestos cement pipe under the sidewalk to discharge through curb face.
Exposed wall drains shall be located 3"± above finished grade.

B. Geocomposite drain, cement treated permeable base, and 3"ø slotted plastic pipe continuous behind retaining wall or abutment. Cap ends of pipe. Provide "Tee" connection at each 4" ø drain.

C. Connect the low end of plastic pipe to the main outlet pipe as apprlicable.

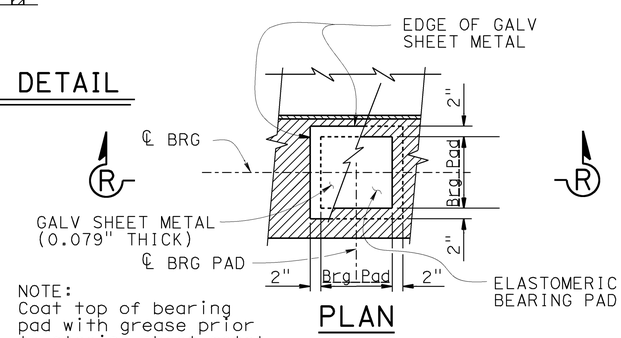

NOTE:
Coat top of bearing pad with grease prior to placing sheet metal.

PLAN

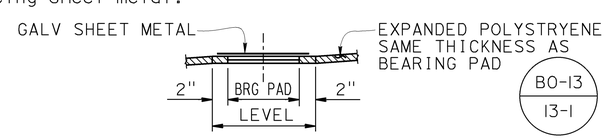

SECTION R-R

BEARING PAD DETAIL

NO SCALE

DETAILS TYPICAL AT ALL BEARING PADS

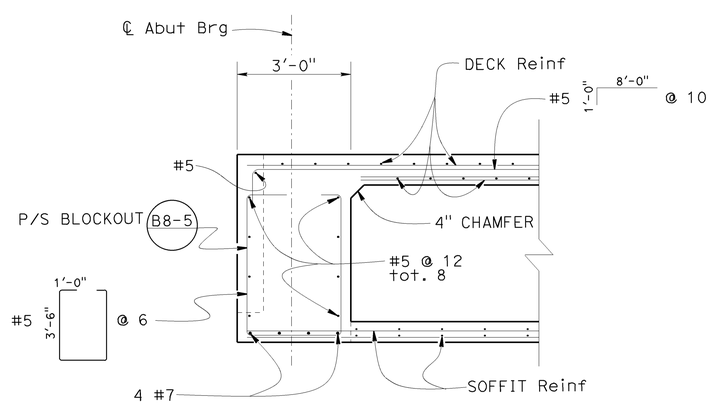

END DIAPHRAGAM DETAIL

1/2" = 1'-0"

DESIGN	BY ZIHAN YAN	CHECKED MATT GIOVANNONI	
DETAILS	BY JINLI GUO	CHECKED MATT GIOVANNONI	
QUANTITIES	BY ZIHAN YAN	CHECKED MATT GIOVANNONI	

STATE OF CALIFORNIA
DEPARTMENT OF TRANSPORTATION

DIVISION OF ENGINEERING SERVICES
STRUCTURE DESIGN
DESIGN BRANCH 18

BRIDGE NO. 49-0258
POST MILE R 64.62

ARROYO DE LOS PLAYANOS BRIDGE
ABUTMENT DETAILS NO. 3

STRUCTURES DESIGN DETAIL SHEET (ENGLISH) (REV. 09-01-10)

ORIGINAL SCALE IN INCHES FOR REDUCED PLANS 0 1 2 3

UNIT: 3603
PROJECT NUMBER & PHASE: 0500000576 1
CONTRACT NO.: 05-492801

DISREGARD PRINTS BEARING EARLIER REVISION DATES

REVISION DATES 10/25/12 01/11/13

SHEET 8 OF 24

FILE => 49-0258-g-abtdet03.dgn

USERNAME => s115755 DATE PLOTTED => 16-DEC-2014 TIME PLOTTED => 14:08

DIST	COUNTY	ROUTE	POST MILES TOTAL PROJECT	SHEET No.	TOTAL SHEETS
05	SLO	1	64.0/R66.9	198	265

REGISTERED CIVIL ENGINEER 10-27-14 DATE

10-27-14
PLANS APPROVAL DATE

REGISTERED PROFESSIONAL ENGINEER MICHAEL R POPE No. C54503 Exp. 12/31/15 CIVIL STATE OF CALIFORNIA

The State of California or its officers or agents shall not be responsible for the accuracy or completeness of electronic copies of this plan sheet.

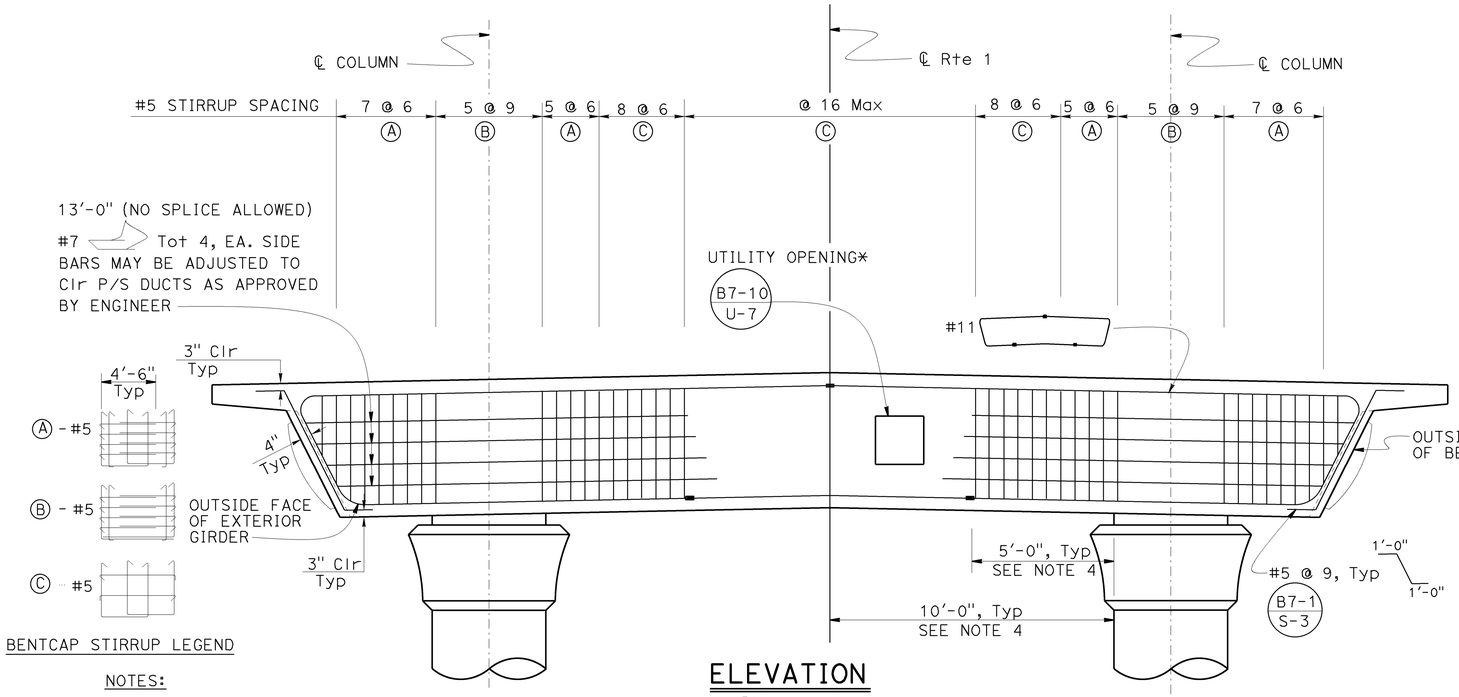

NOTES:

1. SEE "TYPICAL SECTION" SHEET FOR UTILITY DETAILS
2. SEE "BENT DETAILS NO. 2" & "ARCHITECTURAL TREATMENT DETAILS NO. 1" SHEETS FOR ARCH. DETAILS NOT SHOWN.

ELEVATION

3/8" = 1'-0"

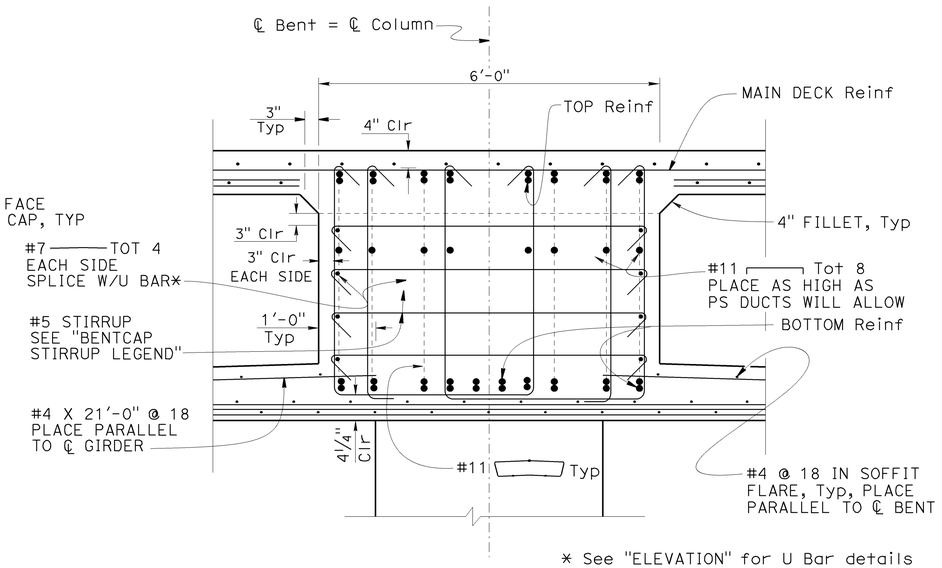

* See "ELEVATION" for U Bar details

BENT CAP SECTION

3/4" = 1'-0"

NOTES:

1. Place stirrups perpendicular to and space along ℄ Bent
2. For reinforcement shown but not noted see "TYPICAL SECTION" sheet

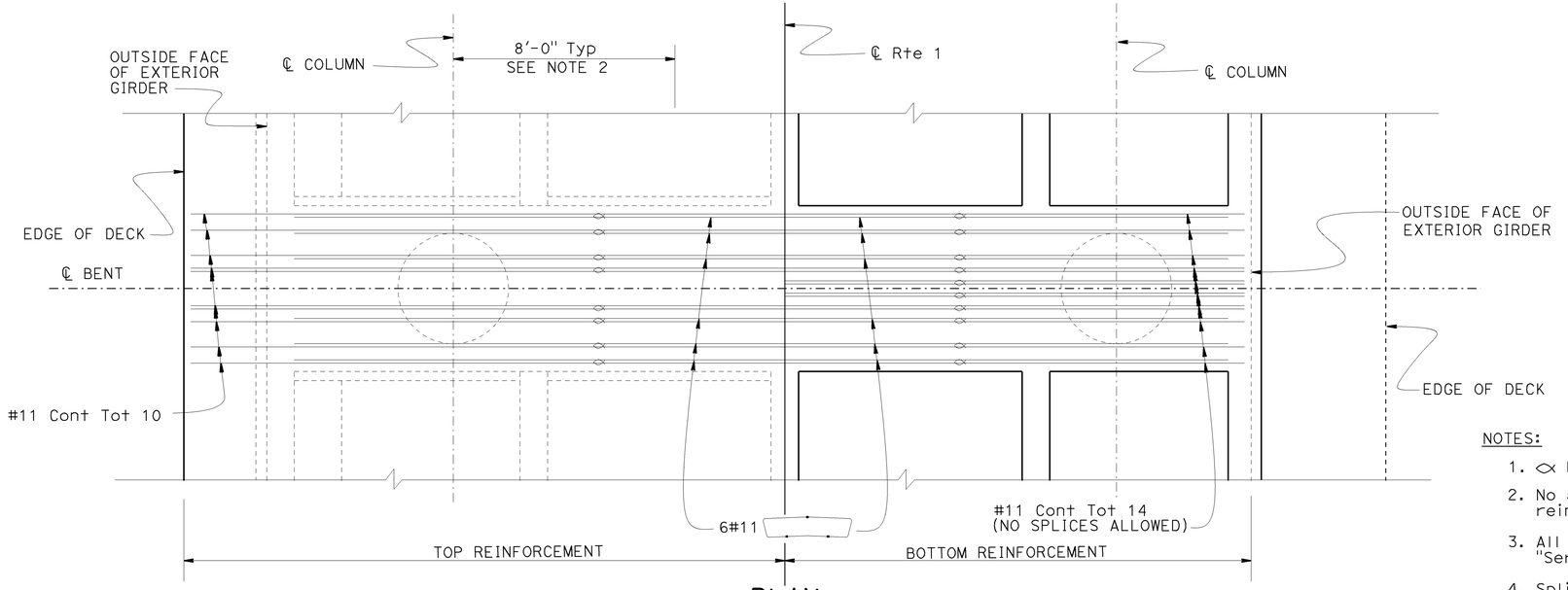

PLAN

1" = 1'-0"

NOTES:

1. ⟡ Denotes Bundled Bars
2. No splices allowed in continuous top reinforcement in this zone
3. All top and bottom reinforcement is "Service" butt spliced
4. Splice location. No addition splices allowed in #11

	BY	CHECKED
DESIGN	ZIHAN YAN	MATT GIOVANNONI
DETAILS	JINLI GUO	MATT GIOVANNONI
QUANTITIES	ZIHAN YAN	MATT GIOVANNONI

STATE OF CALIFORNIA
DEPARTMENT OF TRANSPORTATION

DIVISION OF ENGINEERING SERVICES
STRUCTURE DESIGN
DESIGN BRANCH 18

BRIDGE NO. 49-0258
POST MILE R 64.62

ARROYO DE LOS PLAYANOS BRIDGE
BENT DETAIL NO. 1

STRUCTURES DESIGN DETAIL SHEET (ENGLISH) (REV. 09-01-10)

ORIGINAL SCALE IN INCHES FOR REDUCED PLANS 0 1 2 3

UNIT: 3603
PROJECT NUMBER & PHASE: 0500000576 1
CONTRACT NO.: 05-492801

DISREGARD PRINTS BEARING EARLIER REVISION DATES

REVISION DATES 08/08/12 01/17/13 04/22/13

SHEET 9 OF 24

FILE => 49-0258-h-bet1.dgn

USERNAME => s115755 DATE PLOTTED => 16-DEC-2014 TIME PLOTTED => 14:08

DIST	COUNTY	ROUTE	POST MILES TOTAL PROJECT	SHEET No.	TOTAL SHEETS
05	SLO	1	64.0/R66.9	199	265

REGISTERED CIVIL ENGINEER 10-27-14 DATE

10-27-14
PLANS APPROVAL DATE

REGISTERED PROFESSIONAL ENGINEER MICHAEL R POPE No. C54503 Exp. 12/31/15 CIVIL STATE OF CALIFORNIA

The State of California or its officers or agents shall not be responsible for the accuracy or completeness of scanned copies of this plan sheet.

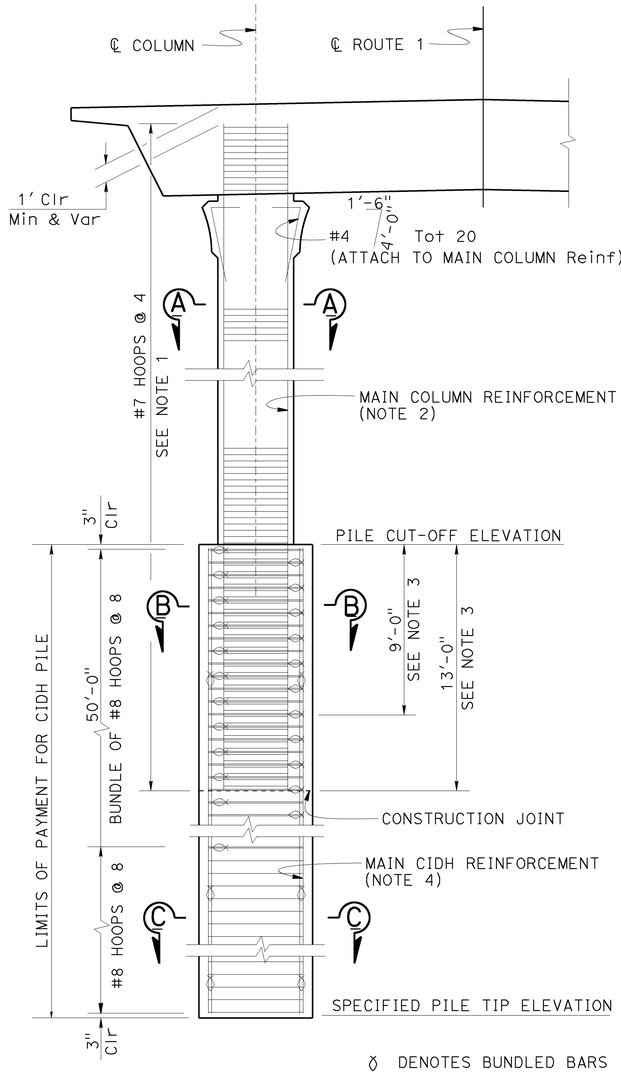

BENT ELEVATION

1/4" = 1'-0"

NOTES:

1. All hoops shall be "UTTIMATE BUTT-SPLICED"
2. No splices allowed in main column reinforcement
3. Alternate cut off lengths of main column reinforcement No splices allowed in main CIDH Reinf in top 50'-0" of pile. Only staggered "ULTIMATE" Butt Splices allowed elsewhere.
4. See "ARCHITECTURAL TREATMENT DETAILS NO. 1" sheet for column top dimensions not shown

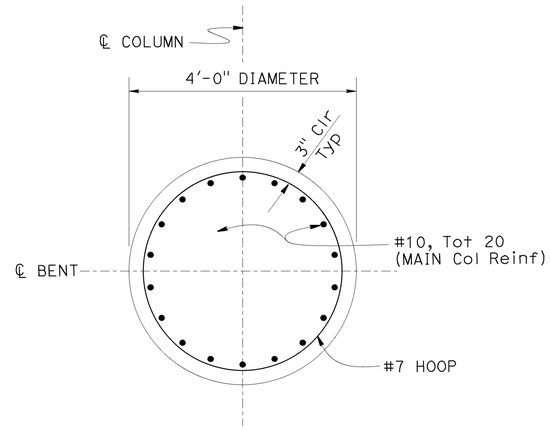

SECTION A-A

3/4" = 1'

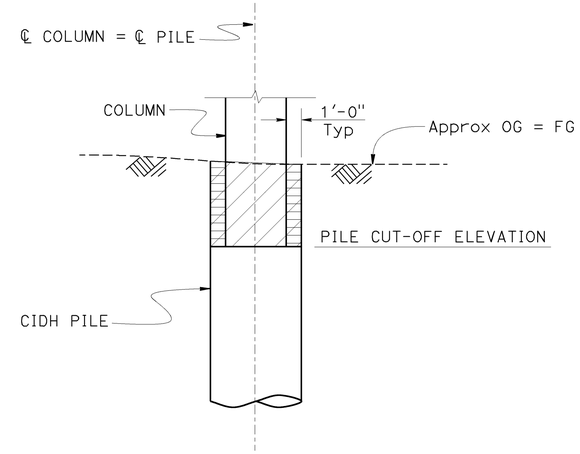

PAY LIMITS FOR STRUCTURE EXCAVATION AND BACKFILL

NO SCALE

LEGEND

DENOTES STRUCTURE EXCAVATION (TYPE D)

DENOTES STRUCTURE BACKFILL

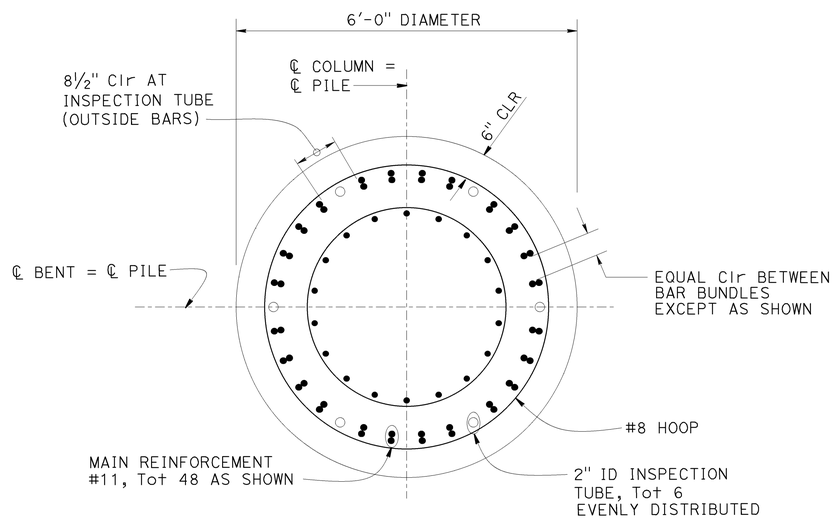

SECTION B-B

3/4" = 1'

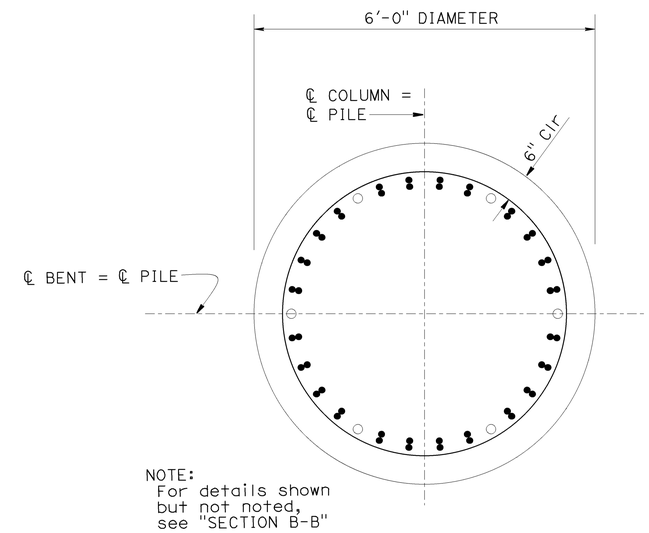

SECTION C-C

3/4" = 1'

DESIGN	BY ZIHAN YAN	CHECKED MATT GIOVANNONI	
DETAILS	BY JINLI GUO	CHECKED MATT GIOVANNONI	
QUANTITIES	BY ZIHAN YAN	CHECKED MATT GIOVANNONI	

STATE OF CALIFORNIA
DEPARTMENT OF TRANSPORTATION

DIVISION OF ENGINEERING SERVICES
STRUCTURE DESIGN
DESIGN BRANCH 18

BRIDGE NO. 49-0258
POST MILE R 64.62

ARROYO DE LOS PLAYANOS BRIDGE
BENT DETAIL NO. 2

STRUCTURES DESIGN DETAIL SHEET (ENGLISH) (REV. 09-01-10)

ORIGINAL SCALE IN INCHES FOR REDUCED PLANS 0 1 2 3

UNIT: 3603
PROJECT NUMBER & PHASE: 0500000576 1
CONTRACT NO.: 05-492801

DISREGARD PRINTS BEARING EARLIER REVISION DATES

REVISION DATES 12/04/12 01/04/14

SHEET 10 OF 24

FILE => 49-0258-h-bet2.dgn

USERNAME => s115755 DATE PLOTTED => 16-DEC-2014 TIME PLOTTED => 14:09

DIST	COUNTY	ROUTE	POST MILES TOTAL PROJECT	SHEET No.	TOTAL SHEETS
05	SLO	1	64.0/R66.9	200	265

REGISTERED CIVIL ENGINEER 10-27-14 DATE

10-27-14
PLANS APPROVAL DATE

REGISTERED PROFESSIONAL ENGINEER MICHAEL R POPE No. C54503 Exp. 12/31/15 CIVIL STATE OF CALIFORNIA

The State of California or its officers or agents shall not be responsible for the accuracy or completeness of electronic copies of this plan sheet.

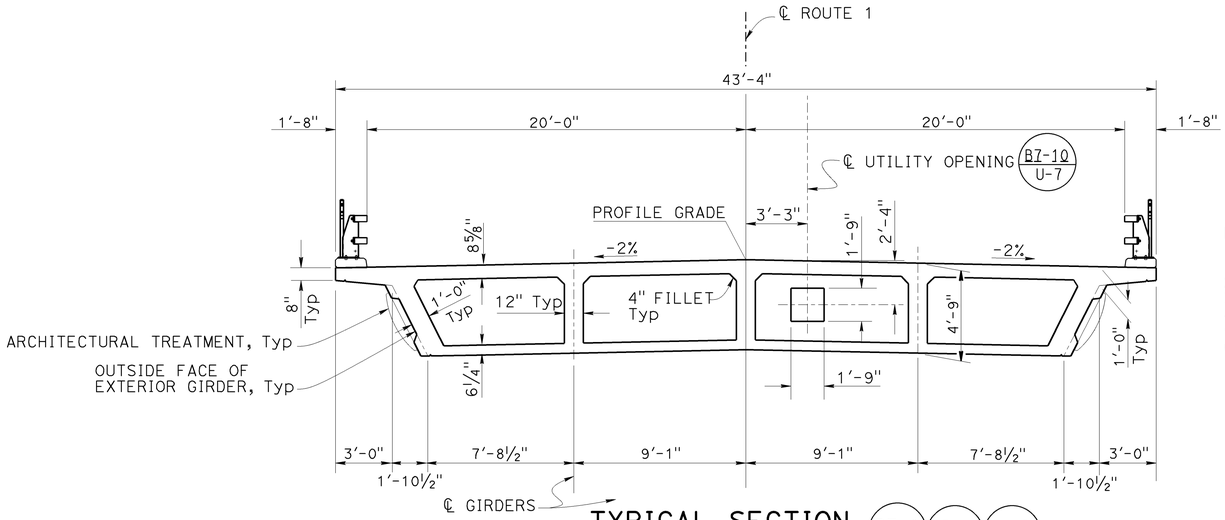

TYPICAL SECTION

B7-1 | B7-10 U-7 | 14-3

1/4" = 1'-0"

NOTES

1. FOR STIRRUP LAYOUT, SEE "GIRDER LAYOUT" SHEET
2. SEE "CALIFORNIA ST-10 BRIDGE RAIL(MOD) DETAILS NO. 1" SHEET FOR BARRIER REINF DETAILS
3. SEE "ADDITIONAL GIRDER REINFORCEMENT" SHEET FOR DETAILS
4. SEE "CALIFORNIA ST-10 BRIDGE RAIL(MOD) DETAILS NO. 1 & NO. 2" SHEET FOR MODIFIED CA ST-10 RAIL DETAILS
5. SEE "CALIFORNIA ST-10 BRIDGE RAIL(MOD) DETAILS NO. 1 & NO. 2" SHEET FOR BICYCLE RAILING DETAILS
6. SEE "ARCHITECTURAL TREATMENT DETAILS NO. 1" SHEET FOR EXTERIOR GIRDER DIMENSIONS NOT SHOWN

TABLE OF UTILITY CONDUITS

OWNER/TYPE	SIZE	QUANTITY	NOTES
AT&T TELECOMMUNICATION	4Ø	2	
PG & E	6Ø	1	
PG & E	4Ø	2	

NOTE:
For concrete cradle, refer Std Plan B14-3

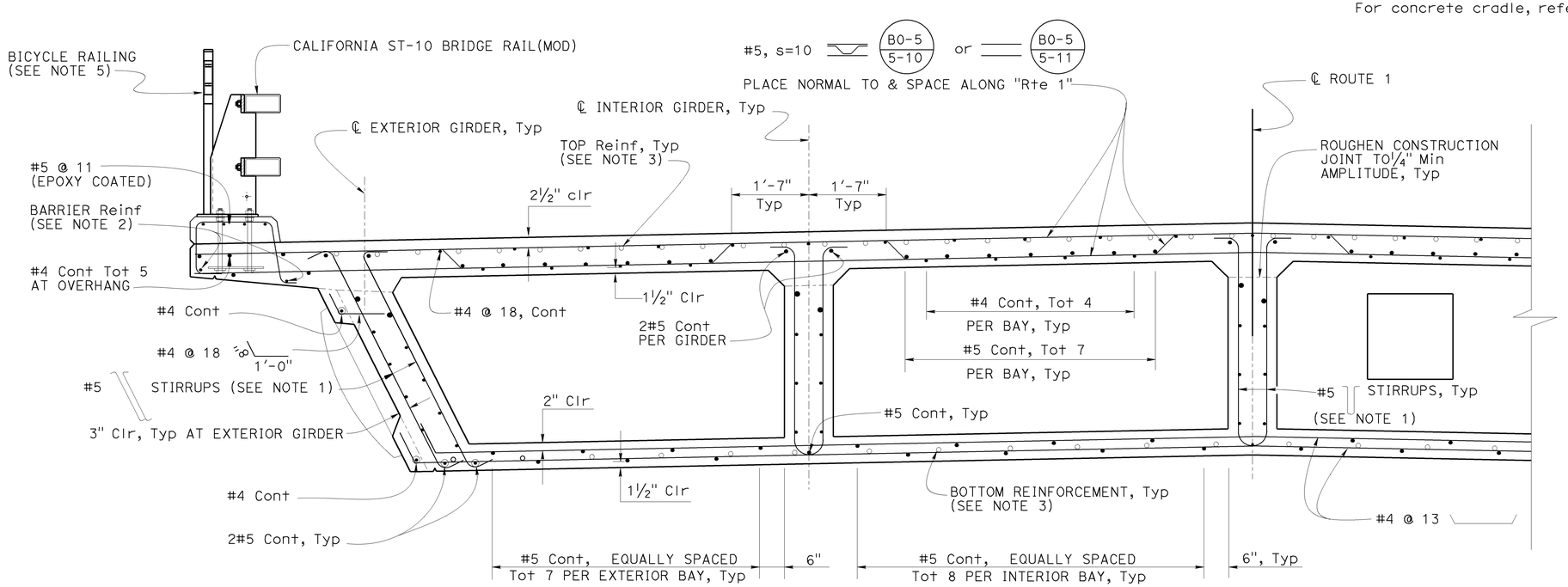

PART TYPICAL SECTION

B0-5 | B7-1 | B8-5

3/4" = 1'-0"

NOTE:
THE CONTRACTOR SHALL VERIFY ALL CONTROLLING FIELD DIMENSIONS BEFORE ORDERING OR FABRICATING ANY MATERIAL.

DESIGN	BY ZIHAN YAN	CHECKED MATT GIOVANNONI	
DETAILS	BY JINLI GUO	CHECKED MATT GIOVANNONI	
QUANTITIES	BY ZIHAN YAN	CHECKED MATT GIOVANNONI	

STATE OF CALIFORNIA
DEPARTMENT OF TRANSPORTATION

DIVISION OF ENGINEERING SERVICES
STRUCTURE DESIGN
DESIGN BRANCH 18

BRIDGE NO. 49-0258
POST MILE R 64.62

ARROYO DE LOS PLAYANOS BRIDGE
TYPICAL SECTION

STRUCTURES DESIGN DETAIL SHEET (ENGLISH) (REV. 09-01-10)

ORIGINAL SCALE IN INCHES FOR REDUCED PLANS 0 1 2 3

UNIT: 3603
PROJECT NUMBER & PHASE: 0500000576 1
CONTRACT NO.: 05-492801

DISREGARD PRINTS BEARING EARLIER REVISION DATES

REVISION DATES: 03/06/12 05/14/12 01/11/13 04/23/13

SHEET 11 OF 24

FILE => 49-0258-k-ts.dgn

USERNAME => s115755 DATE PLOTTED => 16-DEC-2014 TIME PLOTTED => 14:09