INFORMATION HANDOUT

For Contract No. 05-1F69U4
At 05-Mon-101-55.2/73.8

Identified by
Project ID 0515000041

MATERIALS INFORMATION

1. Alternative Temporary Crash Cushions
2. Alternative Flared Terminal Systems
3. Alternative In-line Terminal Systems
4. Water Source Information
5. As-builts for Route 101 alignment for Precast Concrete Pavement Area

ADDED PER ADDENDUM NO. 1 DATED AUGUST 14, 2015

MATERIALS INFORMATION

1. Alternative Temporary Crash Cushions

BARRIER SYSTEMS INC

TECHNICAL
BRIEF

180 River Road • Rio Vista, CA 94571 • Tel 707-374-6800 • Fax 707-374-6801
Email: info@barriersystemsinc.com • Website: barriersystemsinc.com

Product Specification

ABSORB 350™ TL-3
Non-Redirective, Gating, Crash Cushion
Applied to Permanent and Portable Concrete Barrier

I. General

The ABSORB 350™ TL-3 System is a Non-Redirective, Gating, Crash Cushion in accordance with the definitions in the National Cooperative Highway Research Program Report 350 (NCHRP 350). The system shall be tested and perform in an acceptable manner in accordance with the guidelines of NCHRP 350 at Test Level 3 (100 km/h).

II. Performance

The ABSORB 350 is designed to absorb the impact energy of an errant vehicle in accordance with NCHRP 350 guidelines for Non-Redirective, Gating, Crash Cushions. The system is designed to be attached to Permanent Concrete Barrier and Portable Concrete Barrier with section lengths of at least 3.1 meters (10 feet). When attached in accordance with the manufacturers instructions, the ABSORB 350 system is capable of safely stopping a 2000 kg (4400 pound) pickup truck impacting the system at 100 km/h (62.3 mph) and 0 degrees and an 820 kg (1800 pound) compact vehicle impacting the system at 100 km/h (62.3 mph), 0 degrees and with an offset of the vehicle and system centerlines of one-fourth the vehicle width.

A. When properly installed according to the manufacturer's recommendations the ABSORB 350 system shall be fully tested to and meet the recommended structural adequacy, occupant risk, and vehicle trajectory criteria set forth in NCHRP 350 for Test Level 3 Non-Redirective, Gating Crash Cushions (NCHRP 350 TL-3):

1. Impact at 0 degrees at w/4 offset (centerline of vehicle offset 1/4 width of vehicle from centerline of system) at 100 km/h with an 820C vehicle. This is Test 3-40 of NCHRP 35.

2. Impact at 0 degrees into center nose of device (0 offset from centerline of vehicle) at 100 km/h with a 2000P vehicle. This is Test 3-41 of NCHRP 350.

3. Impact at 15 degrees into center nose of device (0 offset from centerline of vehicle) at 100 km/h with an 820C vehicle unless the Federal Highway Administration, due to acceptable performance in test 3-40, waives this test. This is Test 3-42 of NCHRP 350.

4. Impact at 15 degrees into center nose of device (0 offset from centerline of vehicle) at 100 km/h with a 2000P vehicle. This is Test 3-43 of NCHRP 350.

5. Impact at 20 degrees along the side of the unit (with the centerline of the vehicle aligned with the centerline of the attachment of the barrier and the ABSORB 350™) at 100 km/h with a 2000P vehicle. This is Test 3-44 of NCHRP 350 as modified by the Federal Highway Administration.

B. The impact velocity of a hypothetical front seat passenger against the vehicle interior as calculated from the longitudinal vehicle acceleration and 600 mm [23 5/8 in] forward displacement, and the lateral vehicle acceleration and 300 mm [1 ft] lateral displacement shall be less than 12 m/s (39.3 ft/s] and the highest 10 ms average vehicle acceleration in the longitudinal and lateral directions subsequent to the instant of hypothetical occupant impact shall be less than 20 g's in NCHRP 350 tests 3-40, 41, 42 and 43.

For TL-3 impacts detached debris shall not show potential for penetrating the vehicle occupant compartment or presenting a hazard to other traffic, pedestrians, or workers in a work zone. The vehicle shall remain upright during and after the collision although moderate roll, pitch and yaw may occur.

III. Description of System

A. The ABSORB 350 system shall be made up of the following components and the system shall be fabricated from materials conforming to the following specifications:

1. ABSORB 350 Energy Absorbing Element – Each element of the system shall be composed of a plastic container, steel side bars, end plate/ hinge assemblies, an evaporation prevention cap with tether and appropriate fasteners. The overall dimensions of the assembled element are 610 mm (24 inches) wide, 812 mm (32 inches) tall and 1000 mm (39 1/2 inches) long, as shown in the attached drawing (B000524). Each element of the system shall weigh approximately 50 kg (110 pounds) when empty and 325 kg (717 pounds) when filled. The first element of the assembled system should always be empty of fluid with the evaporation prevention cap installed. All other elements of the system should be filled with fluid in accordance with the installation instructions and the evaporation prevention cap shall be securely installed. All elements shall be attached in accordance with the installation instructions and drawings supplied by the manufacturer.

a. The plastic elements shall be molded from Linear Low Density Polyethylene.

b. All steel sidebars, end plate/hinge assemblies shall be fabricated from mild steel in conformance with ASTM A-36 specifications.

c. The evaporation prevention cap shall be molded from low density polyethylene

2. ABSORB 350 Nose Piece – Each ABSORB 350 system shall contain one Nose Piece at the front of the system. The Nose Piece is approximately 620 mm (24 3/8inches) wide, 825mm (32 1/2inches) tall and 610mm (24 inches) long, as shown in the attached drawing (B000526). The Nose Piece shall weigh approximately 60 kg (132 pounds) and shall be attached to the first Energy Absorbing Element in accordance with the installation instructions and drawings supplied by the manufacturer.

    a. The Nose Piece shall be fabricated from mild steel in conformance with ASTM A-36.

    b. The Nose Piece shall also have an aluminum skin on the front portion to provide an aesthetic cover and a place for attaching traffic control signage, if needed. This skin shall be fabricated from 5052 H32 in conformance with ASTM B209 and shall be attached to the steel portion of the Nose Piece with adhesives and pop rivets.

3. ABSORB 350 Transition Hardware for PCB – The transition configuration is as shown in the attached drawing B000608.

    a. PCB Transition Hardware is fabricated from mild steel in conformance with ASTM A-36 as shown in the attached drawing (B000531). The steel components shall weigh approximately 80 kg (176 pounds).

B. Attachment of the ABSORB 350™ system to PCB systems shall require nine (9) Energy Absorbing Elements. Assembly should be in compliance with the manufactures drawings and written instructions.

C. The ABSORB 350™ system shall be able to be refurbished after a NCHRP 350 type impact in less than 1 hour with two people, an adequate fluid supply and refurbishment materials.

D. The ABSORB 350™ system shall not require attachment to a foundation. Attachment to the PCB system will require attachment in accordance with the manufacturer's drawings and instructions.

E. The ABSORB 350™ system shall be assembled and filled with fluid in accordance with the manufacturers instructions. If there is a possibility that the fluid in the system could freeze due to low temperatures, proper antifreeze agents should be used in accordance with local standards and environmental regulations.

IV. Application of Safety Appurtenances

Highway safety appurtenances should be applied to hazardous sites in accordance with the guidelines and recommendations in the American Association of State Highway Transportation Officials (AASHTO), "Roadside Design Guide," 1989, and other Federal Highway Administration and State Department of Transportation requirements. Placement and use of the ABSORB 350 system should comply with these specifications and guidelines.

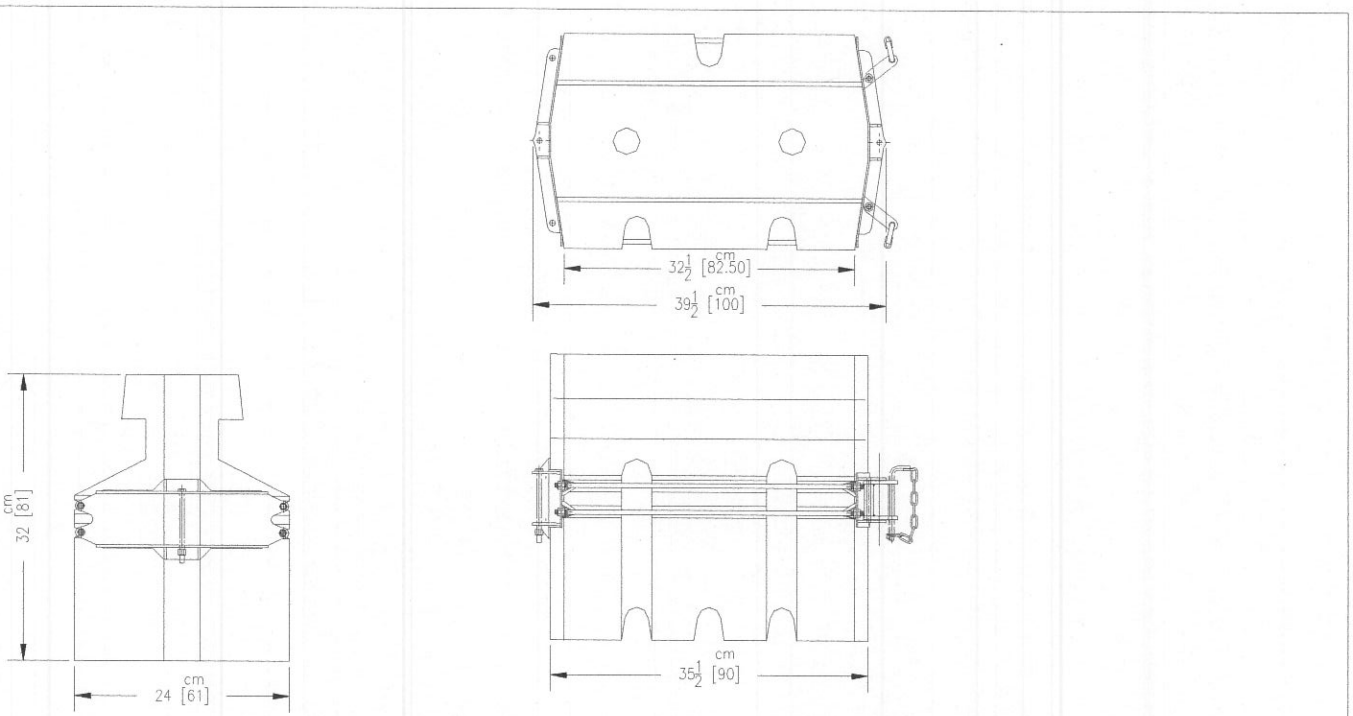

NOTE:
THICKNESS OF WELD TO BE EQUAL TO THE THINNER OF 2 PIECES BEING JOINED. WELD TO BE ALL AROUND UNLESS OTHERWISE NOTED.

© 2000 Barrier Systems, Inc.
The information heron is proprietary to Barrier Systems Inc. and shall not be disclosed, duplicated or used otherwise without the express written approval of Barrier Systems Inc.

REV.	CHANGES	DATE	BY	REQ'D	NEXT ASSY.	ITEM

SCALE: 1=10

	DATE	INIT.
DRAWN BY	3/2/00	R.R.C.
APPR'D BY		

Standard Tolerance
Angular ± 1/2°
Fractional ± 1/16
Decimal ± .010

TITLE : ABSORB 350 ELEMENT

MODEL	DRAWING NUMBER	REV.
	B000524	

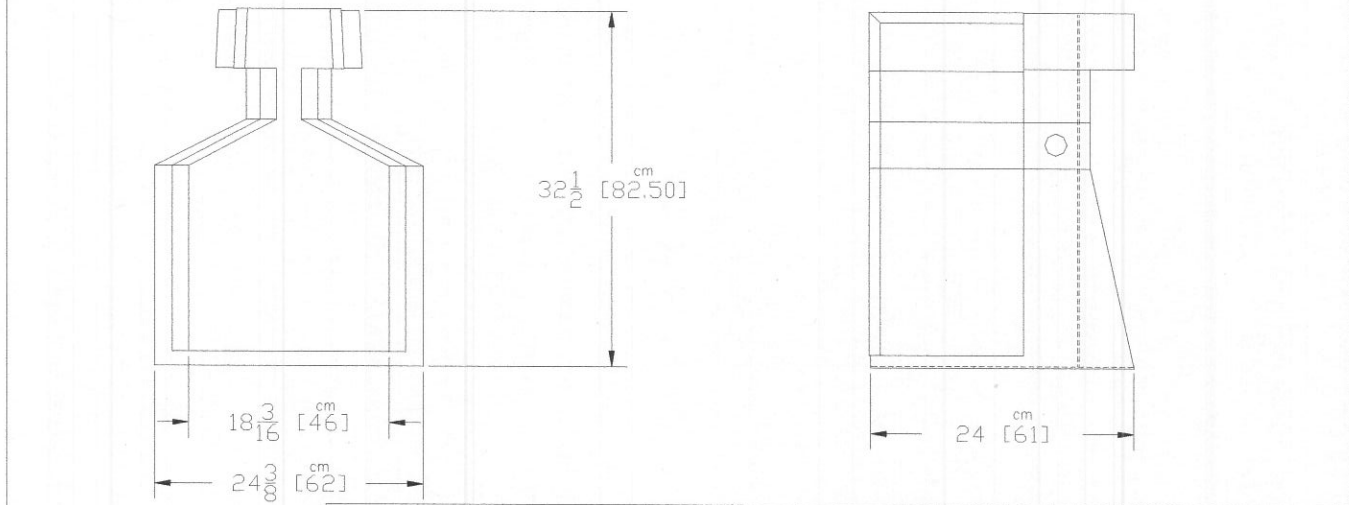

© 1999 Barrier Systems, Inc.
The information heron is proprietary to Barrier Systems Inc. and shall not be disclosed, duplicated or used otherwise without the express written approval of Barrier Systems Inc.

NOTE:
THICKNESS OF WELD TO BE EQUAL TO THE THINNER OF 2 PIECES BEING JOINED. WELD TO BE ALL AROUND UNLESS OTHERWISE NOTED.

REV.	CHANGES	DATE	BY	REQ'D	NEXT ASSY.	ITEM
						1

SCALE: EIGHTH

	DATE	INIT.
DRAWN BY	05/24/00	RSS
APPR'D BY		

Standard Tolerance
Angular ± 1/2°
Fractional ± 1/16
Decimal ± .010

TITLE : ABSORB 350
NOSE PIECE

MODEL	DRAWING NUMBER	REV.
	B000526	

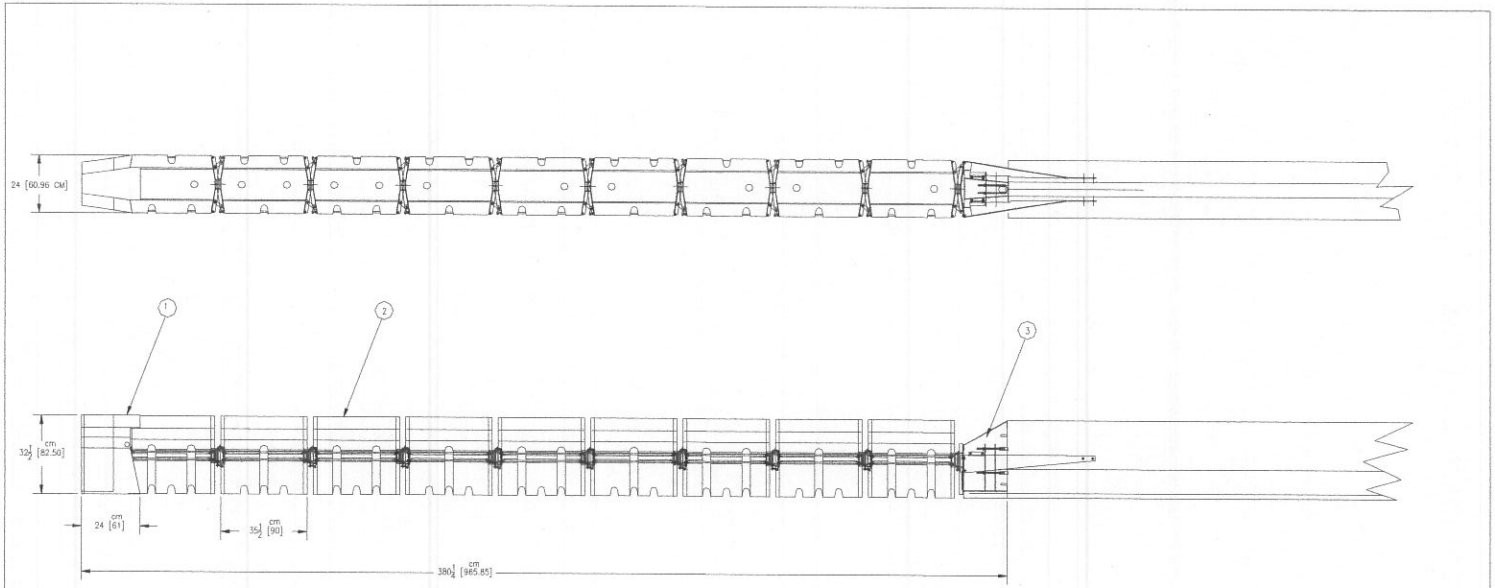

SEE B000608.BOM FOR MATERIAL LIST

NOTE:
THICKNESS OF WELD TO BE EQUAL TO THE THINNER OF 2 PIECES BEING JOINED. WELD TO BE ALL AROUND UNLESS OTHERWISE NOTED.

© 2000 Barrier Systems, Inc.
The information heron is proprietary to Barrier Systems Inc. and shall not be disclosed, duplicated or used otherwise without the express written approval of Barrier Systems Inc.

REV.	CHANGES	DATE	BY	REQ'D	NEXT ASSY.	ITEM

SCALE: 1=40

	DATE	INIT.
DRAWN BY	5/24/00	DGB
APPR'D BY		

Standard Tolerance
Angular ± 1/2°
Fractional ± 1/16
Decimal ± .010

TITLE : ASSEMBLY SYSTEM, ABSORB TL3 P.C.B.

MODEL	DRAWING NUMBER	REV.
	B000608	

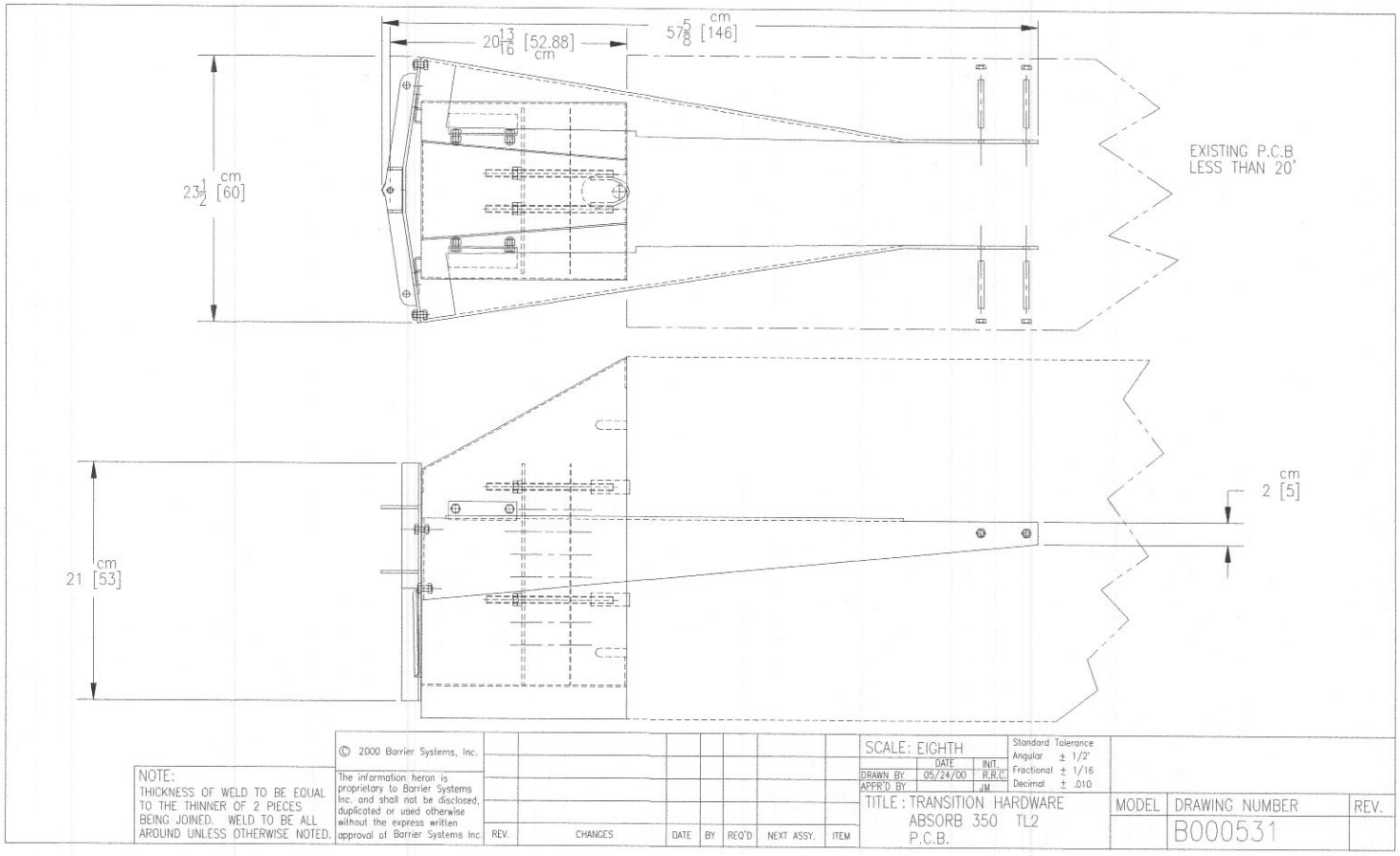

NOTE:
THICKNESS OF WELD TO BE EQUAL TO THE THINNER OF 2 PIECES BEING JOINED. WELD TO BE ALL AROUND UNLESS OTHERWISE NOTED.

© 2000 Barrier Systems, Inc.
The information heron is proprietary to Barrier Systems Inc. and shall not be disclosed, duplicated or used otherwise without the express written approval of Barrier Systems Inc.

REV.	CHANGES	DATE	BY	REQ'D	NEXT ASSY.	ITEM

SCALE: EIGHTH

	DATE	INIT.
DRAWN BY	05/24/00	R.R.C.
APPR'D BY		JM

Standard Tolerance
Angular ± 1/2°
Fractional ± 1/16
Decimal ± .010

TITLE : TRANSITION HARDWARE
ABSORB 350 TL2
P.C.B.

MODEL	DRAWING NUMBER	REV.
	B000531	

U.S. Department
of Transportation
Federal Highway Administration

1200 New Jersey Ave., SE
Washington, D.C. 20590

February 9, 2011

In Reply Refer To:
HSST/CC-114

Mr. Geoff Maus
Chief Design Engineer
TrafFix Devices, Inc.
160 Avenida La Pata
San Clemente, California 92673

Dear Mr. Maus:

This letter is in response to your request for the Federal Highway Administration (FHWA) acceptance of a roadside safety system for use on the National Highway System (NHS).

Name of system:	SLED – Sentry Longitudinal Energy Dissipater
Type of system:	Gating Crash Cushion/Impact Attenuator
Test Level:	NCHRP Report 350 Test Level 3 (TL-3)
Testing conducted by:	KARCO Engineering
Date of request:	August 31, 2010
Date initially acknowledged:	August 31, 2010

You requested that we find this system acceptable for use on the NHS under the provisions of the National Cooperative Highway Research Program (NCHRP) Report 350.

Requirements
Roadside safety devices should meet the guidelines contained in the Report 350. The FHWA memorandum "ACTION: Identifying Acceptable Highway Safety Features" of July 24, 1997, provides further guidance on crash testing requirements of longitudinal barriers.

Decision
The following device was found acceptable, with details provided below:

- TL-3 SLED – Sentry Longitudinal Energy Dissipater

Description
The SLED End Treatment is a high-density polyethylene (HDPE) water filled crash cushion designed to shield the end of permanent and portable barrier shapes including concrete, steel, and plastic. The SLED End Treatment modules are designed for uni- and bi-directional traffic applications where a gating device is acceptable to the road authority.

FHWA:HSST:NArtimovich:ms:x61331:2/9/11
File: s://directory folder/HSST/Artimovich CC114_Sled_TL3.dotx
cc: HSST (NArtimovich; JDewar)

The SLED End Treatment modules are designated by their yellow color, each module has overall dimensions of approximately 6.3 ft (1.93 m) x 1.875 ft (.57 m) x 3.8 ft (1.16 m) and weighs approximately 160 lbs empty and 2000 lbs filled. Each module has eleven connecting lugs, five on one end and six on the opposite end. The four upper lugs on every module contain an independent corrosion resistant wire rope. A 1.125 inch (28.6 mm) diameter steel t-pin drops through the 1.5 inch (38 mm) diameter holes in the lugs linking the sections together.
At the front of the end treatment, pinned directly to module #1 is the Containment Impact Sled (CIS). The CIS is made of all steel construction with a flat bottom, a curved sheet metal nose, and support frames made of structural rectangular steel tubes. The CIS is designed to attach to either the five or six knuckle ends of module #1. The CIS has a curved impact face to fit over the curved knuckle contour of module #1. The vertical t-pin connects the CIS to module #1 through the series of vertical knuckles and the internal molded-in cables. Module #1 is designed to be an empty module. To prevent module #1 from being filled, six holes are designed into the lower edge of the side walls. Modules 2, 3, and 4 are filled entirely and weigh approximately 2000lbs (907 kg) each when filled.

When the Sentry SLED End Treatment is used to shield an end of an array of Sentry Water Cable Barriers, one CIS, and one module #1 is attached. For TL-3 applications, the SLED End Treatment is attached to a minimum of ten (unlimited maximum number) Sentry Water Cable Barriers.

For shielding all permanent and portable barriers, an adjustable steel transition has been designed. This transition securely attaches the rear of the Sentry SLED End Treatment to the shielded object. The transition is designed to accommodate assorted safety barrier shapes and sizes by using hinged outboard transition panels. The transition panels are made of 0.188 inch (4.8 mm) thick steel, which when attached to the barrier, conforms to the contour of the barrier. The combination of hinging, and contouring, allow the panels allows the SLED End Treatment to be attached to narrow and wide and profile shapes with either converging, or diverging angles, up to 10 degrees. For testing, the contoured hinged panels were anchored to the barriers using a minimum of eight 1 inch diameter anchor bolts with expansion sleeves, minimum four per side.

Crash Testing

A non-redirective gating crash cushion requires the following tests be conducted:
3-40, 3-41, 3-42, 3-43, and 3-44. The following full-scale tests were conducted on the SLED:

Tests for Shielding Sentry Water Cable Barrier

NCHRP-350 Test Number	Test Vehicle Weight (kg)	Impact Speed (kph)	Impact Condition	Occ. Imp Velocity (m/s)	Ridedown Acceleration (G)
3-40	820	99.6	¼ offset	10.6	15.7
3-41	2000	102	0°	11.1	11.0
3-43	2000	102.4	15°	8.0	4.8

Tests for Shielding F-Shape CMB Unpinned and Permanently Anchored

NCHRP-350 Test Number	Test Vehicle Weight (kg)	Impact Speed (kph)	Impact Angle Degree	Occ. Imp Velocity (m/s)	Ridedown Acceleration (G)
3-41 Free Standing	2000	101.5	0°	9.2	9.6
3-41 Anchored	2000	99.1	0°	9.7	12.3
3-44 Anchored	2000	103.1	20°	9.8	10.6
3-44M Anchored	2000	96.2	15°	8.4	15.6

You requested waivers of the following tests:

Test 3-40 -Shielding permanent and portable concrete barriers.
Test 3-42 -Shielding Sentry Water Cable Barrier and permanent and portable concrete barriers.
Test 3-43- Shielding permanent and portable concrete barriers.
Test 3-44 -Shielding Sentry Water Cable Barrier.

You detailed your reasoning behind the waiver requests as follows:

Test 3-40 Shielding Permanent and Portable Concrete Barriers
The Sentry SLED End Treatment shielding Sentry Water Cable Barrier recorded an OIV of 10.6 m/s and a ridedown acceleration of 15.7 g's. These values are below accepted levels, and were recorded prior to movement of the fourth Sentry module. You expect little or no change in performance with the SLED End Treatment attached to a fixed object.

Tests 3-42 Shielding Sentry Water Cable Barrier and Permanent and Portable Concrete Barriers
You expect the impacting car to push the sled and first empty module aside, allowing the end treatment to act as a gating device, similar to the 3-43 test performed. Just as the 3-43 test had lower measured values than the 3-41 test, we would expect the 3-42 test would have lower values than the 3-40 test.

Test 3-43 Shielding Permanent and Portable Concrete Barriers
As tested, shielding the Sentry Water Cable Barrier, the trajectory of the impacting vehicle carried past the angled barrier and remained upright during and after the collision with only moderate, roll pitch, and yaw. It would be expected that the impacting vehicle would have similar test results regardless of the type of barrier that is being shielded.

Test 3-44 Shielding Sentry Water Cable Barriers
The SLED End Treatment was tested twice in the most severe condition, attached to rigid anchored F-shape safety concrete barrier, in test 3-44 and 3-44M parameters. In these tests, all specified evaluation criteria (C,D,F,K, and N) were met. In addition, evaluation criteria H and I (OIV and Ridedown) were well below the maximum accepted values. Based on the 3-11 performance of Sentry Water Cable Barriers, and the products ability to deflect, you expect equal or better performance for evaluation criteria C,D,F,K and N with the SLED End Treatment attached to Sentry Water Cable Barriers.

All physical crash test summaries are included as enclosures to this correspondence.

Findings
Because the SLED is a non-redirecting, gating cash cushion, it should be applied to hazards that are not likely to be impacted at an angle on the side at any significant velocity. We note also that proper antifreezing agents must be used as filler when the SLED and Sentry products are used in areas where low temperatures can be anticipated. All users of this device should be made aware of the factors that contribute to its proper performance.

Therefore, the system described in the requests above and detailed in the enclosed drawings is acceptable for use on the NHS under the range of conditions tested, when such use is acceptable to a highway agency.

Please note the following standard provisions that apply to FHWA letters of acceptance:

- This acceptance is limited to the crashworthiness characteristics of the systems and does not cover their structural features, nor conformity with the Manual on Uniform Traffic Control Devices.
- Any changes that may adversely influence the crashworthiness of the system will require a new acceptance letter.
- Should the FHWA discover that the qualification testing was flawed, that in-service performance reveals unacceptable safety problems, or that the system being marketed is significantly different from the version that was crash tested, we reserve the right to modify or revoke our acceptance.
- You will be expected to supply potential users with sufficient information on design and installation requirements to ensure proper performance.
- You will be expected to certify to potential users that the hardware furnished has essentially the same chemistry, mechanical properties, and geometry as that submitted for acceptance, and that it will meet the crashworthiness requirements of the FHWA and NCHRP Report 350.
- To prevent misunderstanding by others, this letter of acceptance is designated as number CC-114 and shall not be reproduced except in full. This letter and the test documentation upon which it is based are public information. All such letters and documentation may be reviewed at our office upon request.
- The Sentry and SLED are patented products and considered proprietary. If proprietary devices are specified by a highway agency for use on Federal-aid projects, except exempt, non-NHS projects, (a) they must be supplied through competitive bidding with equally suitable unpatented items; (b) the highway agency must certify that they are essential for synchronization with the existing highway facilities or that no equally suitable alternative exists; or (c) they must be used for research or for a distinctive type of construction on relatively short sections of road for experimental purposes. Our regulations concerning proprietary products are contained in Title 23, Code of Federal Regulations, Section 635.411.
- This acceptance letter shall not be construed as authorization or consent by the FHWA to use, manufacture, or sell any patented system for which the applicant is not the patent holder.

The acceptance letter is limited to the crashworthiness characteristics of the candidate system, and the FHWA is neither prepared nor required to become involved in issues concerning patent law. Patent issues, if any, are to be resolved by the applicant.

Sincerely,

Michael S. Griffith
Director, Office of Safety Technologies
Office of Safety

Enclosures

U.S. Department
of Transportation
Federal Highway Administration

1200 New Jersey Ave., SE
Washington, D.C. 20590

February 9, 2011

In Reply Refer To:
HSST/CC-114

Mr. Geoff Maus
Chief Design Engineer
TrafFix Devices, Inc.
160 Avenida La Pata
San Clemente, California 92673

Dear Mr. Maus:

This letter is in response to your request for the Federal Highway Administration (FHWA) acceptance of a roadside safety system for use on the National Highway System (NHS).

Name of system:	SLED – Sentry Longitudinal Energy Dissipater
Type of system:	Gating Crash Cushion/Impact Attenuator
Test Level:	NCHRP Report 350 Test Level 3 (TL-3)
Testing conducted by:	KARCO Engineering
Date of request:	August 31, 2010
Date initially acknowledged:	August 31, 2010

You requested that we find this system acceptable for use on the NHS under the provisions of the National Cooperative Highway Research Program (NCHRP) Report 350.

Requirements
Roadside safety devices should meet the guidelines contained in the Report 350. The FHWA memorandum "ACTION: Identifying Acceptable Highway Safety Features" of July 24, 1997, provides further guidance on crash testing requirements of longitudinal barriers.

Decision
The following device was found acceptable, with details provided below:

- TL-3 SLED – Sentry Longitudinal Energy Dissipater

Description
The SLED End Treatment is a high-density polyethylene (HDPE) water filled crash cushion designed to shield the end of permanent and portable barrier shapes including concrete, steel, and plastic. The SLED End Treatment modules are designed for uni- and bi-directional traffic applications where a gating device is acceptable to the road authority.

The SLED End Treatment modules are designated by their yellow color, each module has overall dimensions of approximately 6.3 ft (1.93 m) x 1.875 ft (.57 m) x 3.8 ft (1.16 m) and weighs approximately 160 lbs empty and 2000 lbs filled. Each module has eleven connecting lugs, five on one end and six on the opposite end. The four upper lugs on every module contain an independent corrosion resistant wire rope. A 1.125 inch (28.6 mm) diameter steel t-pin drops through the 1.5 inch (38 mm) diameter holes in the lugs linking the sections together.
At the front of the end treatment, pinned directly to module #1 is the Containment Impact Sled (CIS). The CIS is made of all steel construction with a flat bottom, a curved sheet metal nose, and support frames made of structural rectangular steel tubes. The CIS is designed to attach to either the five or six knuckle ends of module #1. The CIS has a curved impact face to fit over the curved knuckle contour of module #1. The vertical t-pin connects the CIS to module #1 through the series of vertical knuckles and the internal molded-in cables. Module #1 is designed to be an empty module. To prevent module #1 from being filled, six holes are designed into the lower edge of the side walls. Modules 2, 3, and 4 are filled entirely and weigh approximately 2000lbs (907 kg) each when filled.

When the Sentry SLED End Treatment is used to shield an end of an array of Sentry Water Cable Barriers, one CIS, and one module #1 is attached. For TL-3 applications, the SLED End Treatment is attached to a minimum of ten (unlimited maximum number) Sentry Water Cable Barriers.

For shielding all permanent and portable barriers, an adjustable steel transition has been designed. This transition securely attaches the rear of the Sentry SLED End Treatment to the shielded object. The transition is designed to accommodate assorted safety barrier shapes and sizes by using hinged outboard transition panels. The transition panels are made of 0.188 inch (4.8 mm) thick steel, which when attached to the barrier, conforms to the contour of the barrier. The combination of hinging, and contouring, allow the panels allows the SLED End Treatment to be attached to narrow and wide and profile shapes with either converging, or diverging angles, up to 10 degrees. For testing, the contoured hinged panels were anchored to the barriers using a minimum of eight 1 inch diameter anchor bolts with expansion sleeves, minimum four per side.

Crash Testing

A non-redirective gating crash cushion requires the following tests be conducted:
3-40, 3-41, 3-42, 3-43, and 3-44. The following full-scale tests were conducted on the SLED:

Tests for Shielding Sentry Water Cable Barrier

NCHRP-350 Test Number	Test Vehicle Weight (kg)	Impact Speed (kph)	Impact Condition	Occ. Imp Velocity (m/s)	Ridedown Acceleration (G)
3-40	820	99.6	¼ offset	10.6	15.7
3-41	2000	102	0°	11.1	11.0
3-43	2000	102.4	15°	8.0	4.8

Tests for Shielding F-Shape CMB Unpinned and Permanently Anchored

NCHRP-350 Test Number	Test Vehicle Weight (kg)	Impact Speed (kph)	Impact Angle Degree	Occ. Imp Velocity (m/s)	Ridedown Acceleration (G)
3-41 Free Standing	2000	101.5	0°	9.2	9.6
3-41 Anchored	2000	99.1	0°	9.7	12.3
3-44 Anchored	2000	103.1	20°	9.8	10.6
3-44M Anchored	2000	96.2	15°	8.4	15.6

You requested waivers of the following tests:

Test 3-40 -Shielding permanent and portable concrete barriers.
Test 3-42 -Shielding Sentry Water Cable Barrier and permanent and portable concrete barriers.
Test 3-43- Shielding permanent and portable concrete barriers.
Test 3-44 -Shielding Sentry Water Cable Barrier.

You detailed your reasoning behind the waiver requests as follows:

Test 3-40 Shielding Permanent and Portable Concrete Barriers
The Sentry SLED End Treatment shielding Sentry Water Cable Barrier recorded an OIV of 10.6 m/s and a ridedown acceleration of 15.7 g's. These values are below accepted levels, and were recorded prior to movement of the fourth Sentry module. You expect little or no change in performance with the SLED End Treatment attached to a fixed object.

Tests 3-42 Shielding Sentry Water Cable Barrier and Permanent and Portable Concrete Barriers
You expect the impacting car to push the sled and first empty module aside, allowing the end treatment to act as a gating device, similar to the 3-43 test performed. Just as the 3-43 test had lower measured values than the 3-41 test, we would expect the 3-42 test would have lower values than the 3-40 test.

Test 3-43 Shielding Permanent and Portable Concrete Barriers
As tested, shielding the Sentry Water Cable Barrier, the trajectory of the impacting vehicle carried past the angled barrier and remained upright during and after the collision with only moderate, roll pitch, and yaw. It would be expected that the impacting vehicle would have similar test results regardless of the type of barrier that is being shielded.

Test 3-44 Shielding Sentry Water Cable Barriers
The SLED End Treatment was tested twice in the most severe condition, attached to rigid anchored F-shape safety concrete barrier, in test 3-44 and 3-44M parameters. In these tests, all specified evaluation criteria (C,D,F,K, and N) were met. In addition, evaluation criteria H and I (OIV and Ridedown) were well below the maximum accepted values. Based on the 3-11 performance of Sentry Water Cable Barriers, and the products ability to deflect, you expect equal or better performance for evaluation criteria C,D,F,K and N with the SLED End Treatment attached to Sentry Water Cable Barriers.

All physical crash test summaries are included as enclosures to this correspondence.

Findings

Because the SLED is a non-redirecting, gating cash cushion, it should be applied to hazards that are not likely to be impacted at an angle on the side at any significant velocity. We note also that proper antifreezing agents must be used as filler when the SLED and Sentry products are used in areas where low temperatures can be anticipated. All users of this device should be made aware of the factors that contribute to its proper performance.

Therefore, the system described in the requests above and detailed in the enclosed drawings is acceptable for use on the NHS under the range of conditions tested, when such use is acceptable to a highway agency.

Please note the following standard provisions that apply to FHWA letters of acceptance:

- This acceptance is limited to the crashworthiness characteristics of the systems and does not cover their structural features, nor conformity with the Manual on Uniform Traffic Control Devices.
- Any changes that may adversely influence the crashworthiness of the system will require a new acceptance letter.
- Should the FHWA discover that the qualification testing was flawed, that in-service performance reveals unacceptable safety problems, or that the system being marketed is significantly different from the version that was crash tested, we reserve the right to modify or revoke our acceptance.
- You will be expected to supply potential users with sufficient information on design and installation requirements to ensure proper performance.
- You will be expected to certify to potential users that the hardware furnished has essentially the same chemistry, mechanical properties, and geometry as that submitted for acceptance, and that it will meet the crashworthiness requirements of the FHWA and NCHRP Report 350.
- To prevent misunderstanding by others, this letter of acceptance is designated as number CC-114 and shall not be reproduced except in full. This letter and the test documentation upon which it is based are public information. All such letters and documentation may be reviewed at our office upon request.
- The Sentry and SLED are patented products and considered proprietary. If proprietary devices are specified by a highway agency for use on Federal-aid projects, except exempt, non-NHS projects, (a) they must be supplied through competitive bidding with equally suitable unpatented items; (b) the highway agency must certify that they are essential for synchronization with the existing highway facilities or that no equally suitable alternative exists; or (c) they must be used for research or for a distinctive type of construction on relatively short sections of road for experimental purposes. Our regulations concerning proprietary products are contained in Title 23, Code of Federal Regulations, Section 635.411.
- This acceptance letter shall not be construed as authorization or consent by the FHWA to use, manufacture, or sell any patented system for which the applicant is not the patent holder.

The acceptance letter is limited to the crashworthiness characteristics of the candidate system, and the FHWA is neither prepared nor required to become involved in issues concerning patent law. Patent issues, if any, are to be resolved by the applicant.

Sincerely,

Michael S. Griffith
Director, Office of Safety Technologies
Office of Safety

Enclosures

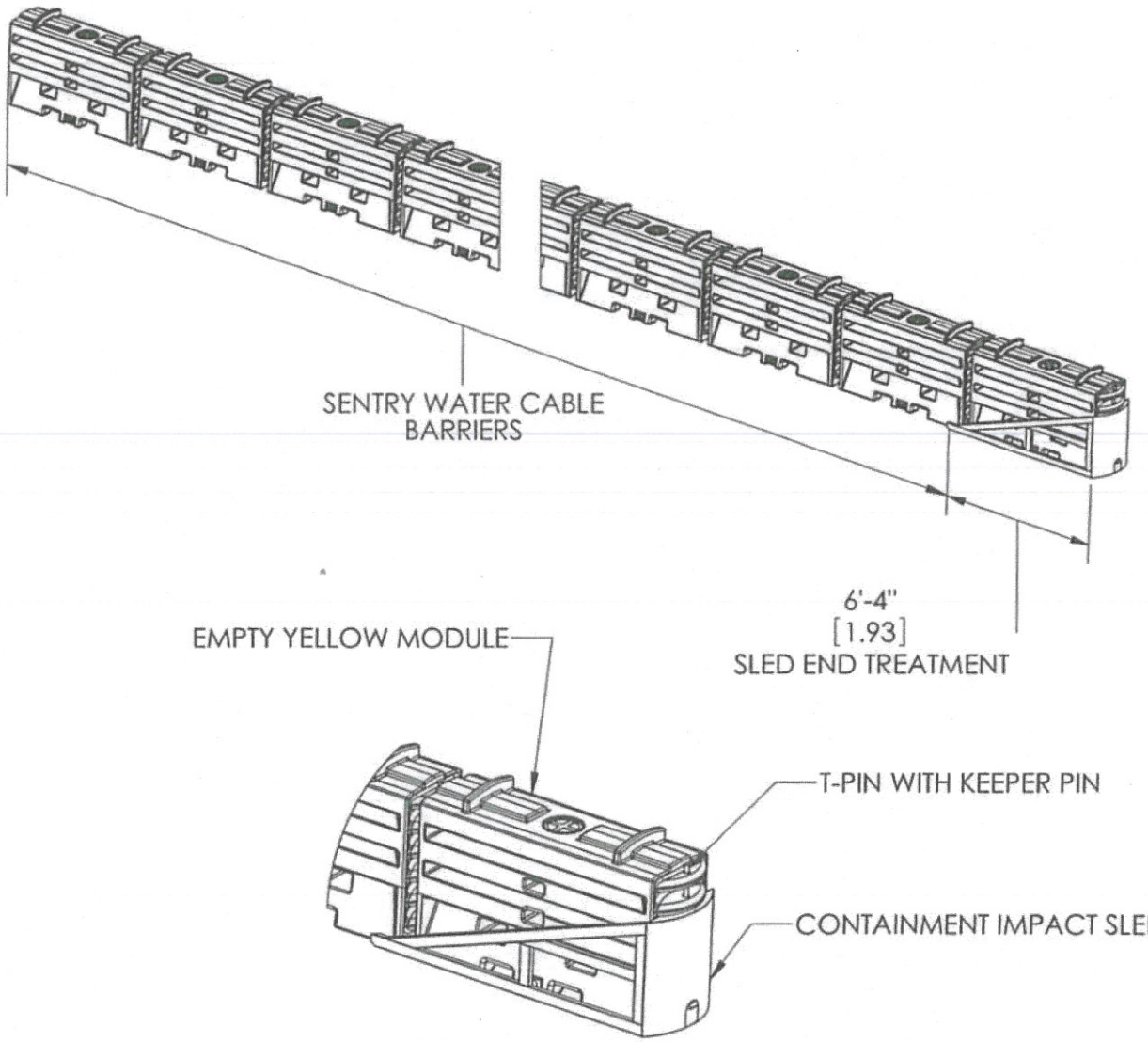

SLED END TREATMENT

TrafFix Devices Inc.

SER##

SHEET NO.	DATE:
1 OF 2	08/27/2010

INTENDED USE

The Sentry Longitudinal Energy Dissipater (SLED) End Treatment is a narrow water filled non-redirective, gating crash cushion designed to shield the Sentry Water Cable Barrier. Like the Sentry Water Cable Barrier the SLED End Treatment does not require foundation anchor bolts to be attached to road surface. The complete end treatment can be installed on firm soil, asphalt, and concrete.

The SLED End Treatment meets NCHRP-350 TL-3, TL-2, and TL-1 crashworthy test criteria as a non-redirective crash cushion. The complete end treatment consists of one yellow empty module and a Containment Impact Sled (CIS).

SLED End Treatment
Length: 75-3/4 in (1.93 m)
Height: 42-11/16 in (1.09 m)
Width: 22-1/2 in (0.57 m)

The SLED End Treatment has been fully tested to the recommended procedures of Report NCHRP-350.

ACCEPTANCE

FHWA Acceptance Letters:

CONTACT INFORMATION

TrafFix Devices, Inc.
Corporate Headquarters
160 Avenida La Pata
San Clemente, CA 92673
www.traffixdevices.com

Phone: +1(949)-361-5663
Fax: +1(949)-361-9205
Email: info@traffixdevices.com

SLED END TREATMENT

SER##

SHEET NO.	DATE:
2 OF 2	08/27/2010

TrafFix Devices Inc.

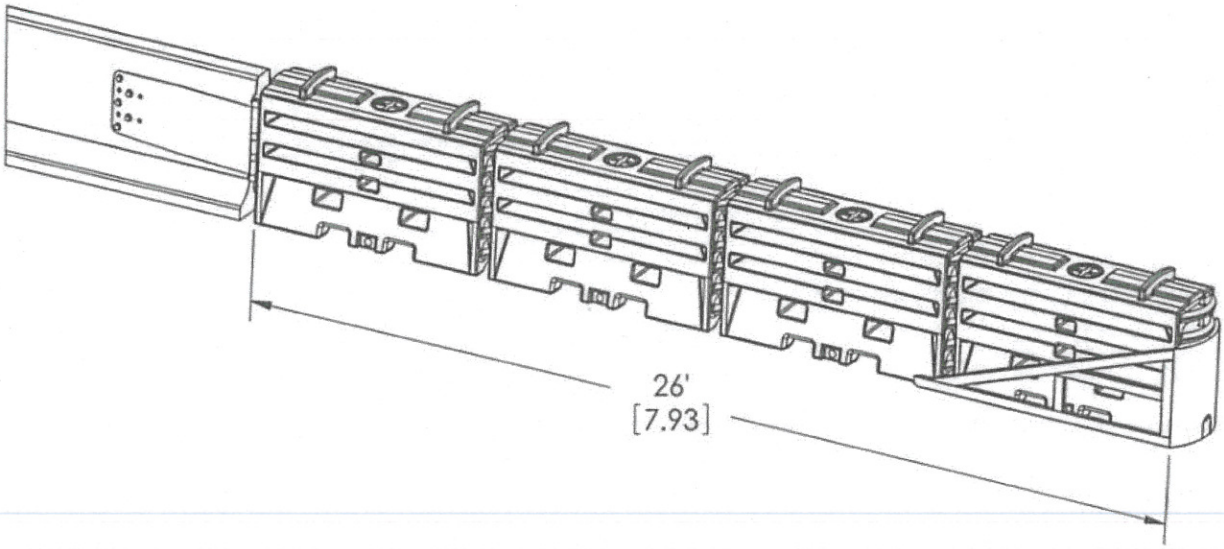

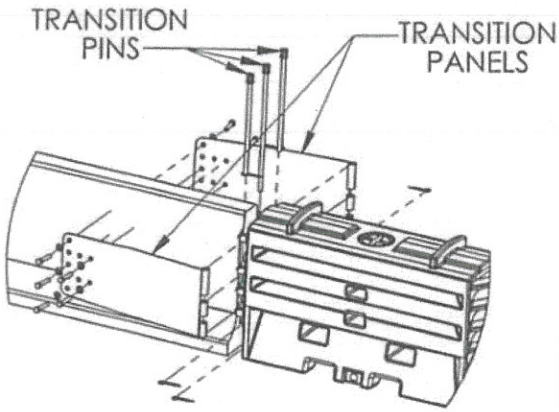

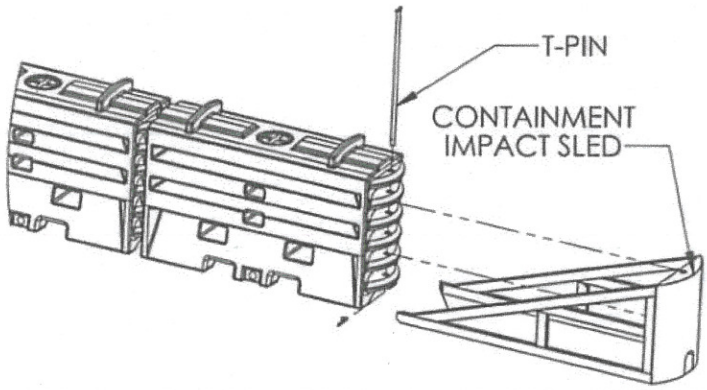

SLED END TREATMENT

TrafFix Devices Inc.

SER##

SHEET NO.	DATE:
1 OF 2	08/27/2010

INTENDED USE

The Sentry Longitudinal Energy Dissipater (SLED) End Treatment is a narrow water-filled non-redirective, gating crash cushion designed to shield the end of all permanent and portable barrier shapes including concrete, steel, and plastic. The SLED End Treatment does not require foundation anchor bolts to be attached to the road surface. The complete crash cushion can be installed on firm soil, asphalt, and concrete.

The SLED End Treatment meets NCHRP-350 TL-3, TL-2, and TL-1 crashworthy test requirements as a non-redirective crash cushion. Four yellow modules make up the complete crash cushion assembly. Front module 1 is left empty and weighs 160 lbs. [75.6 kg]. Modules 2, 3, and 4 are filled and weigh approximately 2000 lbs [907.2 kg]. The Containment Impact Sled is attached to the front of Module 1 and the Transition is attached to the rear of Module 4.

SLED End Treatment
Length: 26 ft (7.93 m) Four (4) Modules
Height: 42-11 16 in (1.09 m)
Width: 22-1 2 in (0.57 m)

The SLED End Treatment has been fully tested to the recommended procedures of NCHRP-350.

ACCEPTANCE

FHWA Acceptance Letters:

CONTACT INFORMATION

TrafFix Devices, Inc.
Corporate Headquarters
160 Avenida La Pata
San Clemente, CA 92673
www.traffixdevices.com

Phone: +1(949)-361-5663
Fax: +1(949)-361-9205
Email: info@traffixdevices.com

SLED END TREATMENT

SER##

SHEET NO.	DATE:
2 OF 2	08/27/2010

TrafFix Devices Inc.

DATA SHEET 4

SUMMARY OF RESULTS

Test Article:	TrafFix Devices Sentry End Treatment	Project No.:	P30061-01
Test Program:	NCHRP 350 3-40	Test Date:	05/14/10
Test Vehicle:	1995 Geo Metro		

GENERAL INFORMATION	
TEST AGENCY	KARCO Engineering, LLC
TEST NO.	3-40
DATE	5/14/2010
TEST ARTICLE	
TYPE	Crash Cushion
INSTALLATION LENGTH	25.0 m (82.1 ft.)
SIZE AND/OR DIMENSION OF KEY ELEMENTS	Nominal Mass 79.4 kg (175 lbs)
SOIL TYPE AND CONDITION	Concrete
TEST VEHICLE	
TYPE	Production Model
DESIGNATION	820C
MODEL	1995 Geo Metro
MASS (CURB)	807.0 kg (1779 lbs)
MASS (TEST INERTIAL)	806.5 kg (1778 lbs)
DUMMY MASS	75.0 kg (165 lbs)
MASS (GROSS STATIC)	885.5 kg (1952 lbs)
IMPACT CONDITIONS	
VELOCITY (km/h)	99.6 km/h (61.9 mi/h)
ANGLE (°)	0.1
IMPACT SEVERITY (kJ)	337.9
EXIT CONDITIONS	
VELOCITY (km/h)	
ANGLE (°)	

OCCUPANT RISK VALUES	
FLAIL SPACE VELOCITY (m/sec)	
X DIRECTION	10.6
Y DIRECTION	0.4
THIV (Optional)	
RIDEDOWN ACCELERATION (g's)	
X DIRECTION	-15.7
Y DIRECTION	2.2
PHD (Optional)	
ASI (Optional)	
TEST ARTICLE DEFLECTIONS (m)	
DYNAMIC	
PERMANENT	
VEHICLE DAMAGE	
EXTERIOR	
VDS	12-FR-5
CDC	12FREW2
INTERIOR	
OCDI	FS0000000
POST-IMPACT VEHICULAR BEHAVIOR	
MAXIMUM ROLL ANGLE (°)	-7.0
MAXIMUM PITCH ANGLE (°)	-7.4
MAXIMUM YAW ANGLE (°)	-165.3

DATA SHEET 4

SUMMARY OF RESULTS

Test Article: TrafFix Devices Sentry End Treatment

Project No.: P30040-01

Test Program: NCHRP 350 3-41

Test Date: 04/15/10

Test Vehicle: 1998 Chevrolet 2500 Cheyenne

GENERAL INFORMATION	
TEST AGENCY	KARCO Engineering, LLC
TEST NO.	3-41
DATE	4/15/2010
TEST ARTICLE	
TYPE	Crash Cushion
INSTALLATION LENGTH	25.0 m (82.1 ft.)
SIZE AND/OR DIMENSION OF KEY ELEMENTS	Nominal Mass 79.4 kg (175 lbs)
SOIL TYPE AND CONDITION	Concrete
TEST VEHICLE	
TYPE	Production Model
DESIGNATION	2000P
MODEL	1998 Chevrolet 2500 Cheyenne
MASS (CURB)	2155 kg (4752 lbs)
MASS (TEST INERTIAL)	2034 kg (4484 lbs)
DUMMY MASS	N/A
MASS (GROSS STATIC)	2034 kg (4484 lbs)
IMPACT CONDITIONS	
VELOCITY (km/h)	102.0 km/h (63.3 mi/h)
ANGLE (°)	0.1
IMPACT SEVERITY (kJ)	815.9
EXIT CONDITIONS	
VELOCITY (km/h)	
ANGLE (°)	

OCCUPANT RISK VALUES	
FLAIL SPACE VELOCITY (m/sec)	
X DIRECTION	11.1
Y DIRECTION	0.1
THIV (Optional)	
RIDEDOWN ACCELERATION (g's)	
X DIRECTION	-11.0
Y DIRECTION	-2.7
PHD (Optional)	
ASI (Optional)	
TEST ARTICLE DEFLECTIONS (m)	
DYNAMIC	
PERMANENT	
VEHICLE DAMAGE	
EXTERIOR	
VDS	12-FC-5
CDC	12FCEN2
INTERIOR	
OCDI	FS0000000
POST-IMPACT VEHICULAR BEHAVIOR	
MAXIMUM ROLL ANGLE (°)	-6.0
MAXIMUM PITCH ANGLE (°)	3.4
MAXIMUM YAW ANGLE (°)	-6.6

DATA SHEET 4

SUMMARY OF RESULTS

Test Article: TrafFix Devices Sentry End Treatment

Project No.: P30075-01

Test Program: NCHRP 350 3-43

Test Date: 06/17/10

Test Vehicle: 1998 Chevrolet Silverado 2500

GENERAL INFORMATION	
TEST AGENCY	KARCO Engineering, LLC
TEST NO.	3-43
DATE	6/17/2010
TEST ARTICLE	
TYPE	Crash Cushion
INSTALLATION LENGTH	25.1 m (82.4 ft.)
SIZE AND/OR DIMENSION OF KEY ELEMENTS	Nominal Mass 79.4 kg (175 lbs)
SOIL TYPE AND CONDITION	Concrete
TEST VEHICLE	
TYPE	Production Model
DESIGNATION	2000P
MODEL	1998 Chevrolet Silverado 2500
MASS (CURB)	2122.5 kg (4679 lbs)
MASS (TEST INERTIAL)	2044.0 kg (4506 lbs)
DUMMY MASS	N/A
MASS (GROSS STATIC)	2044.0 kg (4506 lbs)
IMPACT CONDITIONS	
VELOCITY (km/h)	102.4 km/h (63.6 mi/h)
ANGLE (°)	15.5
IMPACT SEVERITY (kJ)	826.8
EXIT CONDITIONS	
VELOCITY (km/h)	
ANGLE (°)	23.0

OCCUPANT RISK VALUES	
FLAIL SPACE VELOCITY (m/sec)	
X DIRECTION	8.0
Y DIRECTION	1.9
THIV (Optional)	
RIDEDOWN ACCELERATION (g's)	
X DIRECTION	-4.8
Y DIRECTION	3.7
PHD (Optional)	
ASI (Optional)	
TEST ARTICLE DEFLECTIONS (m)	
DYNAMIC	
PERMANENT	
VEHICLE DAMAGE	
EXTERIOR	
VDS	11-FL-4
CDC	11FLEN2
INTERIOR	
OCDI	FS0000000
POST-IMPACT VEHICULAR BEHAVIOR	
MAXIMUM ROLL ANGLE (°)	6.3
MAXIMUM PITCH ANGLE (°)	-2.7
MAXIMUM YAW ANGLE (°)	-14.3

DATA SHEET 4

SUMMARY OF RESULTS

Test Article:	TrafFix Devices Sentry End Treatment	Project No.:	P30043-01
Test Program:	NCHRP 350 3-41	Test Date:	05/27/10
Test Vehicle:	1994 GMC Sierra 2500		

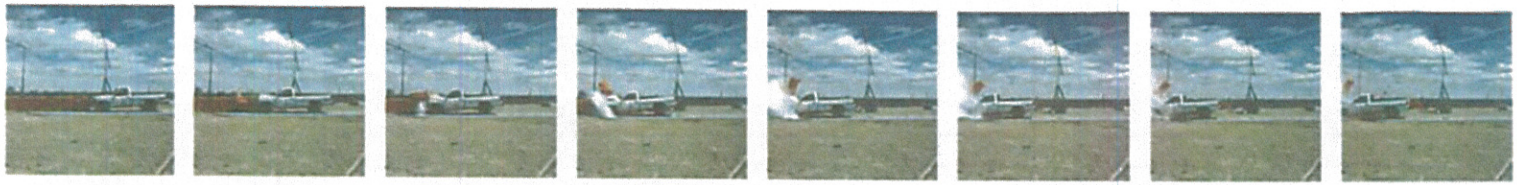

GENERAL INFORMATION	
TEST AGENCY	KARCO Engineering, LLC
TEST NO.	3-41
DATE	5/27/2010
TEST ARTICLE	
TYPE	Crash Cushion
INSTALLATION LENGTH	20.1 m (65.9 ft.)
END TREATMENT LENGTH	7.9 m (25.9 ft.)
SIZE AND/OR DIMENSION OF KEY ELEMENTS	Nominal Mass 79.4 kg (175 lbs)
SOIL TYPE AND CONDITION	Concrete
TEST VEHICLE	
TYPE	Production Model
DESIGNATION	2000P
MODEL	1994 GMC Sierra 2500
MASS (CURB)	2092.5 kg (4614 lbs)
MASS (TEST INERTIAL)	2016 kg (4445 lbs)
DUMMY MASS	N/A
MASS (GROSS STATIC)	2016 kg (4445 lbs)
IMPACT CONDITIONS	
VELOCITY (km/h)	101.5 km/h (63.1 mi/h)
ANGLE (°)	0.2
IMPACT SEVERITY (kJ)	801.9
EXIT CONDITIONS	
VELOCITY (km/h)	
ANGLE (°)	

OCCUPANT RISK VALUES	
FLAIL SPACE VELOCITY (m/sec)	
X DIRECTION	9.2
Y DIRECTION	0.1
THIV (Optional)	
RIDEDOWN ACCELERATION (g's)	
X DIRECTION	-9.6
Y DIRECTION	-3.4
PHD (Optional)	
ASI (Optional)	
TEST ARTICLE DEFLECTIONS (m)	
DYNAMIC	
PERMANENT	
VEHICLE DAMAGE	
EXTERIOR	
VDS	12-FC-5
CDC	12FCEN2
INTERIOR	
OCDI	FS0000000
POST-IMPACT VEHICULAR BEHAVIOR	
MAXIMUM ROLL ANGLE (°)	-2.8
MAXIMUM PITCH ANGLE (°)	3.6
MAXIMUM YAW ANGLE (°)	3.6

DATA SHEET 4

SUMMARY OF RESULTS

Test Article: TrafFix Devices Sentry End Treatment

Project No.: P30072-01

Test Program: NCHRP 350 3-41

Test Date: 06/15/10

Test Vehicle: 1992 Chevrolet Silverado 2500

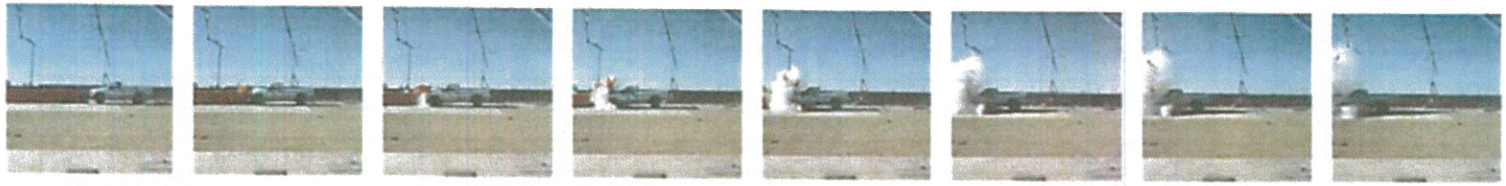

GENERAL INFORMATION	
TEST AGENCY	KARCO Engineering, LLC
TEST NO.	3-41
DATE	6/15/2010
TEST ARTICLE	
TYPE	Crash Cushion
INSTALLATION LENGTH	20.3 m (66.6 ft.)
END TREATMENT LENGTH	8.0 m (26.2 ft.)
SIZE AND/OR DIMENSION OF KEY ELEMENTS	Nominal Mass 79.4 kg (175 lbs)
SOIL TYPE AND CONDITION	Concrete
TEST VEHICLE	
TYPE	Production Model
DESIGNATION	2000P
MODEL	1992 Chevrolet Silverado 2500
MASS (CURB)	2130 kg (4696 lbs)
MASS (TEST INERTIAL)	2013.5 kg (4439 lbs)
DUMMY MASS	N/A
MASS (GROSS STATIC)	2013.5 kg (4439 lbs)
IMPACT CONDITIONS	
VELOCITY (km/h)	99.1 km/h (61.5 mi/h)
ANGLE (°)	0.1
IMPACT SEVERITY (kJ)	762.6
EXIT CONDITIONS	
VELOCITY (km/h)	
ANGLE (°)	

OCCUPANT RISK VALUES	
FLAIL SPACE VELOCITY (m/sec)	
X DIRECTION	9.7
Y DIRECTION	0.3
THIV (Optional)	
RIDEDOWN ACCELERATION (g's)	
X DIRECTION	-12.3
Y DIRECTION	3.5
PHD (Optional)	
ASI (Optional)	
TEST ARTICLE DEFLECTIONS (m)	
DYNAMIC	
PERMANENT	
VEHICLE DAMAGE	
EXTERIOR	
VDS	12-FC-5
CDC	12FCEN2
INTERIOR	
OCDI	FS0000000
POST-IMPACT VEHICULAR BEHAVIOR	
MAXIMUM ROLL ANGLE (°)	-5.6
MAXIMUM PITCH ANGLE (°)	-2.6
MAXIMUM YAW ANGLE (°)	-4.1

DATA SHEET 4

SUMMARY OF RESULTS

Test Article: TrafFix Devices Sentry End Treatment CMB

Project No.: P30077-01

Test Program: NCHRP 350 3-44

Test Date: 06/28/10

Test Vehicle: 1996 Chevrolet Cheyenne 2500

GENERAL INFORMATION	
TEST AGENCY	KARCO Engineering, LLC
TEST NO.	3-44
DATE	6/28/2010
TEST ARTICLE	
TYPE	Crash Cushion
INSTALLATION LENGTH	20.3 m (66.6 ft)
END TREATMENT LENGTH	8.0 m (26.2 ft)
SIZE AND/OR DIMENSION OF KEY ELEMENTS	Nominal Mass 66.5 kg (146 lbs)
SOIL TYPE AND CONDITION	Concrete
TEST VEHICLE	
TYPE	Production Model
DESIGNATION	2000P
MODEL	1996 Chevrolet Cheyenne 2500
MASS (CURB)	2087.0 kg (4601 lbs)
MASS (TEST INERTIAL)	2044.5 kg (4507 lbs)
DUMMY MASS	N/A
MASS (GROSS STATIC)	2044.5 kg (4507 lbs)
IMPACT CONDITIONS	
VELOCITY (km/h)	103.1 km/h (64.1 mi/h)
ANGLE (°)	20.1
IMPACT SEVERITY (kJ)	99.0
EXIT CONDITIONS	
VELOCITY (km/h)	
ANGLE (°)	

OCCUPANT RISK VALUES	
FLAIL SPACE VELOCITY (m/sec)	
X DIRECTION	9.8
Y DIRECTION	2.2
THIV (Optional)	
RIDEDOWN ACCELERATION (g's)	
X DIRECTION	-10.6
Y DIRECTION	4.3
PHD (Optional)	
ASI (Optional)	
TEST ARTICLE DEFLECTIONS (m)	
DYNAMIC	
PERMANENT	
VEHICLE DAMAGE	
EXTERIOR	
VDS	1-FR-5
CDC	01FREW2
INTERIOR	
OCDI	FS0000000
POST-IMPACT VEHICULAR BEHAVIOR	
MAXIMUM ROLL ANGLE (°)	-35.7
MAXIMUM PITCH ANGLE (°)	-5.2
MAXIMUM YAW ANGLE (°)	-15.2

DATA SHEET 4

SUMMARY OF RESULTS

Test Article: TrafFix Devices Sentry End Treatment CMB

Project No.: P30074-01

Test Program: NCHRP 350 3-44 (Modified)

Test Date: 06/16/10

Test Vehicle: 1990 Chevrolet Silverado

GENERAL INFORMATION	
TEST AGENCY	KARCO Engineering, LLC
TEST NO.	NCHRP 350 3-44 (Modified)
DATE	6/16/2010
TEST ARTICLE	
TYPE	Crash Cushion
INSTALLATION LENGTH	20.3 m (66.5 ft)
END TREATMENT LENGTH	8.0 m (26.2 ft)
SIZE AND/OR DIMENSION OF KEY ELEMENTS	Nominal Mass 71.7 kg (158 lbs)
SOIL TYPE AND CONDITION	Concrete
TEST VEHICLE	
TYPE	Production Model
DESIGNATION	2000P
MODEL	1990 Chevrolet Silverado
MASS (CURB)	2020.5 kg (4454 lbs)
MASS (TEST INERTIAL)	1983.0 kg (4372 lbs)
DUMMY MASS	N/A
MASS (GROSS STATIC)	1983.0 kg (4372 lbs)
IMPACT CONDITIONS	
VELOCITY (km/h)	96.2 km/h (59.8 mi/h)
ANGLE (°)	15.0
IMPACT SEVERITY (kJ)	47.4
EXIT CONDITIONS	
VELOCITY (km/h)	
ANGLE (°)	

OCCUPANT RISK VALUES	
FLAIL SPACE VELOCITY (m/sec)	
X DIRECTION	8.4
Y DIRECTION	2.0
THIV (Optional)	
RIDEDOWN ACCELERATION (g's)	
X DIRECTION	-15.6
Y DIRECTION	7.4
PHD (Optional)	
ASI (Optional)	
TEST ARTICLE DEFLECTIONS (m)	
DYNAMIC	
PERMANENT	
VEHICLE DAMAGE	
EXTERIOR	
VDS	1-FR-5
CDC	01FREW2
INTERIOR	
OCDI	FS0000000
POST-IMPACT VEHICULAR BEHAVIOR	
MAXIMUM ROLL ANGLE (°)	-19.3
MAXIMUM PITCH ANGLE (°)	10.7
MAXIMUM YAW ANGLE (°)	4.0

U.S. Department of Transportation
Federal Highway Administration

1200 New Jersey Avenue, SE.
Washington, DC 20590

February 13, 2009

In Reply Refer To: HSSD/CC-47D

Mr. Barry D. Stephens, P.E.
Senior Vice President of Engineering
Energy Absorption Systems, Inc.
3617 Cincinnati Avenue
Rocklin, CA 95765

Dear Mr. Stephens:

This letter is in response to your request for the Federal Highway Administration (FHWA) acceptance of a roadside safety system for use on the National Highway System (NHS).

Name of system: Mod. TRITON Concrete End Treatment ACZ-350™ System
Type of system: Non-redirecting barrier terminal
Test Level: NCHRP Report 350 TL-3
Testing conducted by: E-TECH Testing Services
Date of request: December 17, 2008

You requested that we find this system acceptable for use on the NHS under the provisions of National Cooperative Highway Research Program (NCHRP) Report 350 "Recommended Procedures for the Safety Performance Evaluation of Highway Features."

Requirements
Roadside safety systems should meet the guidelines contained in the NCHRP Report 350. The FHWA Memorandum "Identifying Acceptable Highway Safety Features" of July 25, 1997, provides further guidance on crash testing requirements of longitudinal barriers.

Description
The ACZ-350™ System is designed to perform as a narrow, non-redirecting crash cushion to shield the blunt ends of both permanent and variable length portable concrete median barrier (P/CMB), as well as crashworthy steel median barrier systems such as the Vulcan Barrier.

The ACZ-350™ System consists of a sheet metal nose, four water-filled plastic shell segments, and a steel transition pinned together to act as an end treatment. The nose is constructed of light gauge steel and connects directly to the front-most water filled segment. Each of the four water filled segments is equipped with an external, top-mounted steel stiffener which is rigidly fixed to each respective segment. The front two water filled segments do not contain an internal steel frame or external, side-mounted laminated steel straps. In contrast, the next (or last) two water

MOVING THE AMERICAN ECONOMY

filled Triton segments are equipped with an internal steel frame as well as external side-mounted steel laminated straps. A heavy duty non-crushable steel transition completes the system by connecting the last water filled segment to the blunt end of the downstream barrier, be it P/CMB or Vulcan barrier. The total length of the ACZ-350™ System is 9.6 meters (31'-7"). In bi-directional traffic applications, there are no rigid exposed vehicle snag points for traffic traveling from the reverse direction.

Crash Testing

You requested acceptance of the ACZ-350™ System based on the successful results of three NCHRP Report 350 crash tests. The first was Test 3-40 in which an 820C compact car impacted the unit head-on, and with the vehicle offset at w/4. The second test was Test 3-41 in which a 2000P pickup truck impacted the unit head-on. The third test was a modification of Test 3-44 in which a 2000P vehicle impacts the side of the system at 20 degrees with the centerline of the vehicle aligned with the centerline of the rigid hazard. The NCHRP Report 350 states that the intent of Test 3-44 is "...to evaluate the ability of the cushion to safely stop a large passenger car prior to a life-threatening impact with the corner of the hazard object being shielded." Aligning the centerline of the impacting vehicle at the center of the shielded concrete barrier is clearly the critical impact point for the ACZ-350 design and the impact conditions are essentially the same as Test 3-38 for redirecting crash cushions. Report 350 acknowledges that test 3-38 "would be difficult to pass for a nonredirective crash cushion", and thus does not require that the nominal limiting occupant impact velocities and ridedown accelerations be achieved. However, we recognize your newly designed ACZ-350™ System is a nonredirective crash cushion that meets the occupant impact velocities and ridedown accelerations with reported values of 10.5 m/s and 18.4 g's while the impacting vehicle showed no evidence of penetration, climbing or vaulting.

We agree with your conclusions that Tests 3-42 and 3-43 do not require retesting. There has been no significant change in system shape, system height or component weights between the original TRITON CET and the ACZ-350. Individual system sections near the front of the system are designed to articulate in the same fashion as the TRITON Concrete End Treatment. This articulation will allow the errant vehicle to pass through the system as expected for a gating system. Based on these design principals we believe the new ACZ-350™ system will behave with similar results as the TRITON Concrete End Treatment when tested to 3-42 and 3-43 criteria.

Findings

Based upon the results of the reported Tests 3-40, 3-41, and 3-44, and the discussions above, the FHWA concludes the ACZ-350™ System is acceptable for use on the NHS to act as a narrow, non-redirecting gating crash cushion for permanent and portable concrete median barrier of varying individual lengths as well as steel barrier such as Vulcan. It is acceptable for use on the NHS under the range of conditions tested, when such use is acceptable to a highway agency. The cushion should be used in locations where side impacts are unlikely, penetration behind the barrier is acceptable for angled nose impacts, and where the use of a redirective crash cushion is not feasible for reasons other than cost or convenience.

Please note the following standard provisions that apply to the FHWA letters of acceptance:

- This acceptance is limited to the crashworthiness characteristics of the systems and does not cover their structural features, nor conformity with the Manual on Uniform Traffic Control Devices.
- Any changes that may adversely influence the crashworthiness of the system will require a new acceptance letter.
- Should the FHWA discover that the qualification testing was flawed, that in-service performance reveals unacceptable safety problems, or that the system being marketed is significantly different from the version that was crash tested, we reserve the right to modify or revoke our acceptance.
- You will be expected to supply potential users with sufficient information on design and installation requirements to ensure proper performance.
- You will be expected to certify to potential users that the hardware furnished has essentially the same chemistry, mechanical properties, and geometry as that submitted for acceptance, and that it will meet the crashworthiness requirements of the FHWA and the NCHRP Report 350.
- To prevent misunderstanding by others, this letter of acceptance is designated as number CC-47D and shall not be reproduced except in full. This letter and the test documentation upon which it is based are public information. All such letters and documentation may be reviewed at our office upon request.
- The ACZ-350™ System is a patented product and considered proprietary. If proprietary systems are specified by a highway agency for use on Federal-aid projects, except exempt, non-NHS projects, (a) they must be supplied through competitive bidding with equally suitable unpatented items; (b) the highway agency must certify that they are essential for synchronization with the existing highway facilities or that no equally suitable alternative exists; or (c) they must be used for research or for a distinctive type of construction on relatively short sections of road for experimental purposes. Our regulations concerning proprietary products are contained in Title 23, Code of Federal Regulations, Section 635.411.
- This acceptance letter shall not be construed as authorization or consent by the FHWA to use, manufacture, or sell any patented system for which the applicant is not the patent holder. The acceptance letter is limited to the crashworthiness characteristics of the candidate system, and the FHWA is neither prepared nor required to become involved in issues concerning patent law. Patent issues, if any, are to be resolved by the applicant.

Sincerely yours,

David A. Nicol
Director, Office of Safety Design
Office of Safety

Enclosures

PARTS LIST			
ITEM	STOCK NO.	DESCRIPTION	QTY.
1		ACZ-350 SECTION 2	1
2		ACZ-350 TRANSITION ASSY	1
3		ACZ-350 SECTION 1	1
4		ACZ-350 NOSE ASSY	1

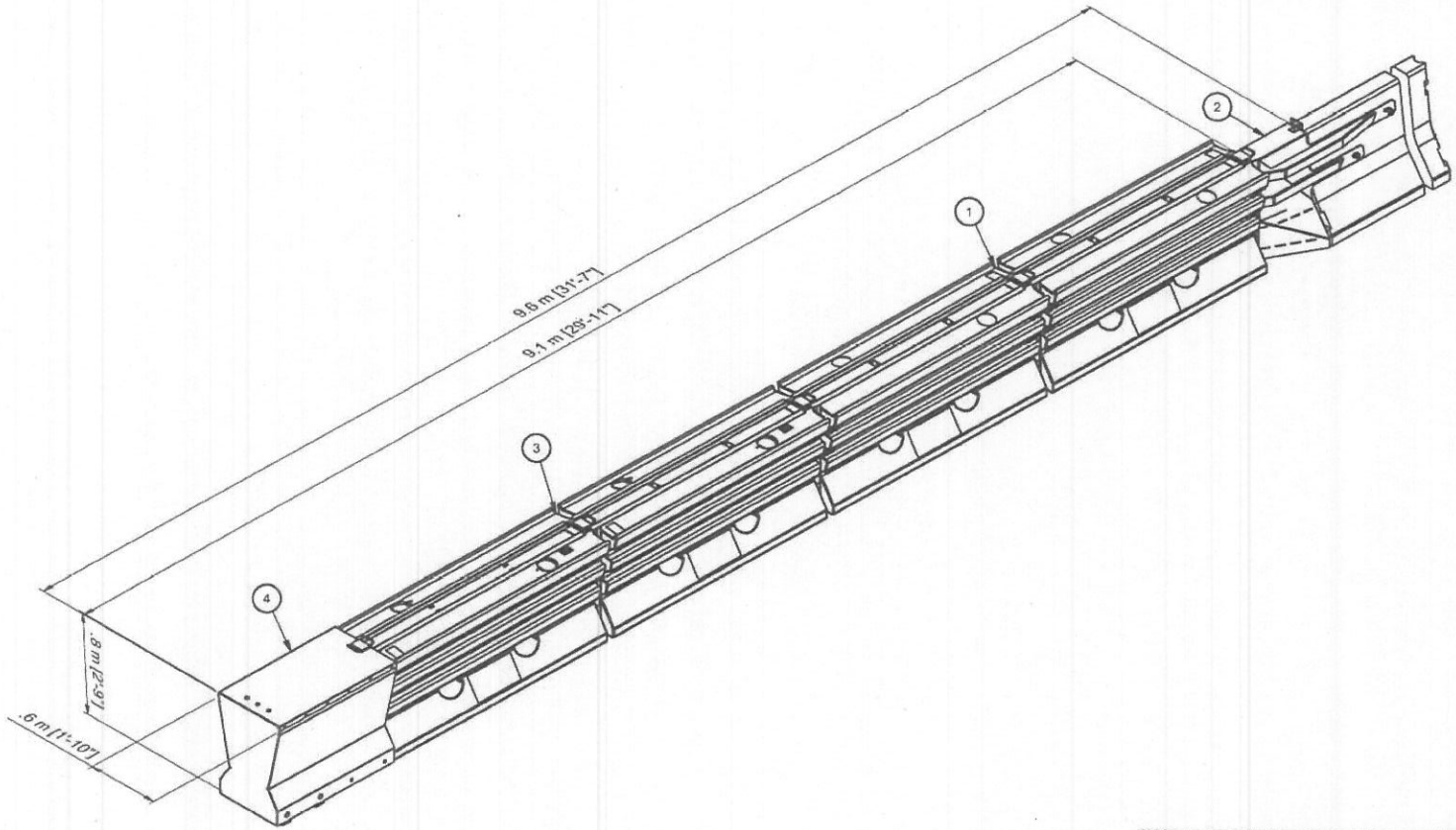

Figure 1

DRAWN: aaron.cox	DATE: 11/12/2008	ENERGY ABSORPTION SYSTEMS, INC. ENGINEERING AND RESEARCH DEPARTMENT
ENGINEER: aaron.cox	DATE:	ACZ-350 TL-3 CRASH CUSHION
CHECKED:	DATE:	
APPROVED:	DATE:	
	DATE:	
UNLESS OTHERWISE NOTED, ALL DIMENSIONS ARE IN INCHES. DIMENSIONS ACCORDING TO ASME Y14.5M-1994 UNLESS OTHERWISE SPECIFIED.		DRAWING: SHEET 1 of 1 REV:

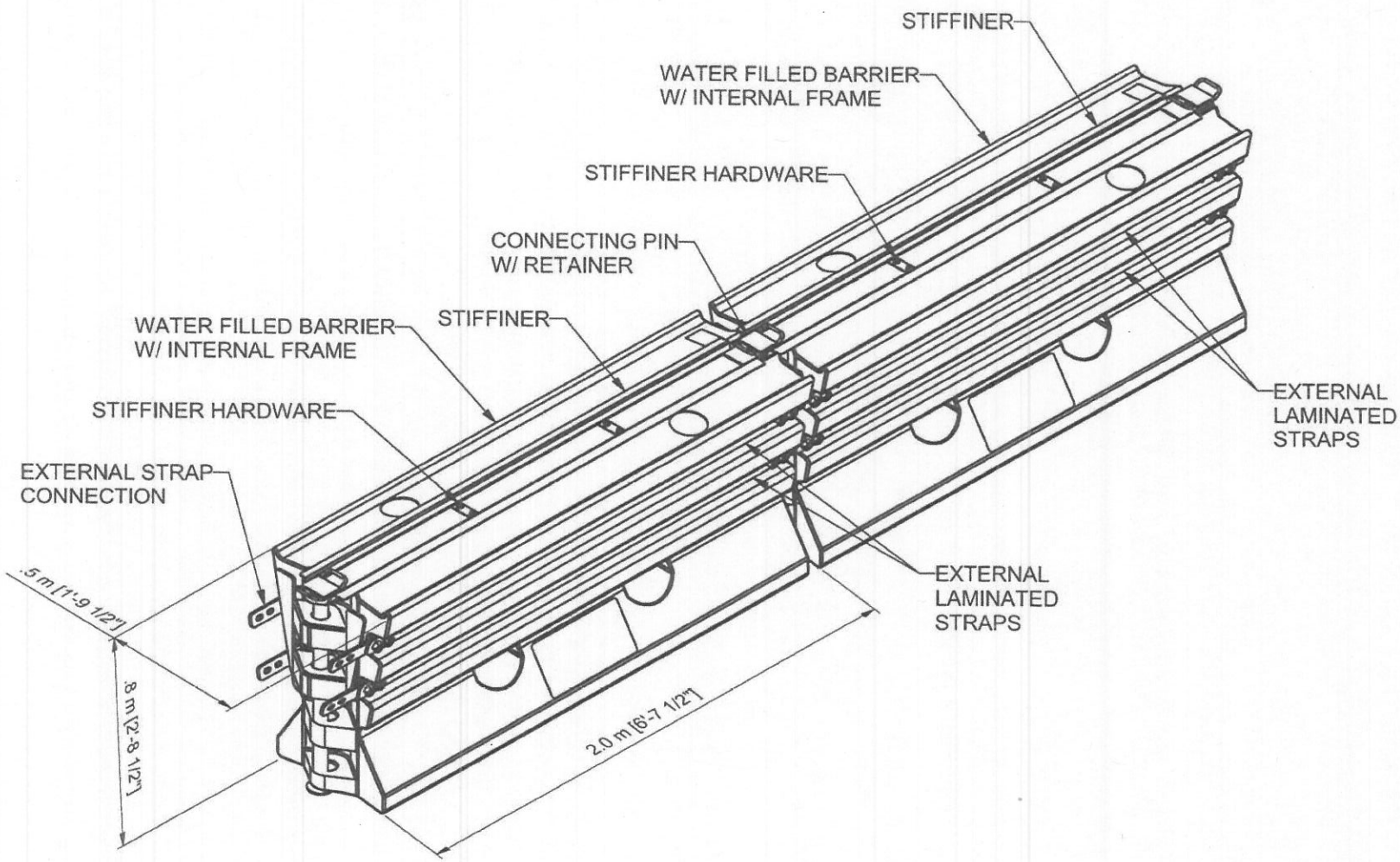

DRAWN: aaron.cox	DATE: 11/13/2008	ENERGY ABSORPTION SYSTEMS, INC. ENGINEERING AND RESEARCH DEPARTMENT
DESIGNED: aaron.cox	DATE:	
CHECKED:	DATE:	ACZ-350 SECTION 2
APPROVED:	DATE:	
Q.C.	DATE:	
UNLESS OTHERWISE NOTED, ALL DIMENSIONS ARE IN INCHES. DIMENSIONS ACCORDING TO ASME Y14.5M-1994 UNLESS OTHERWISE SPECIFIED.		DRAWING: / SHEET: 1 of 1 / REV

Figure 4

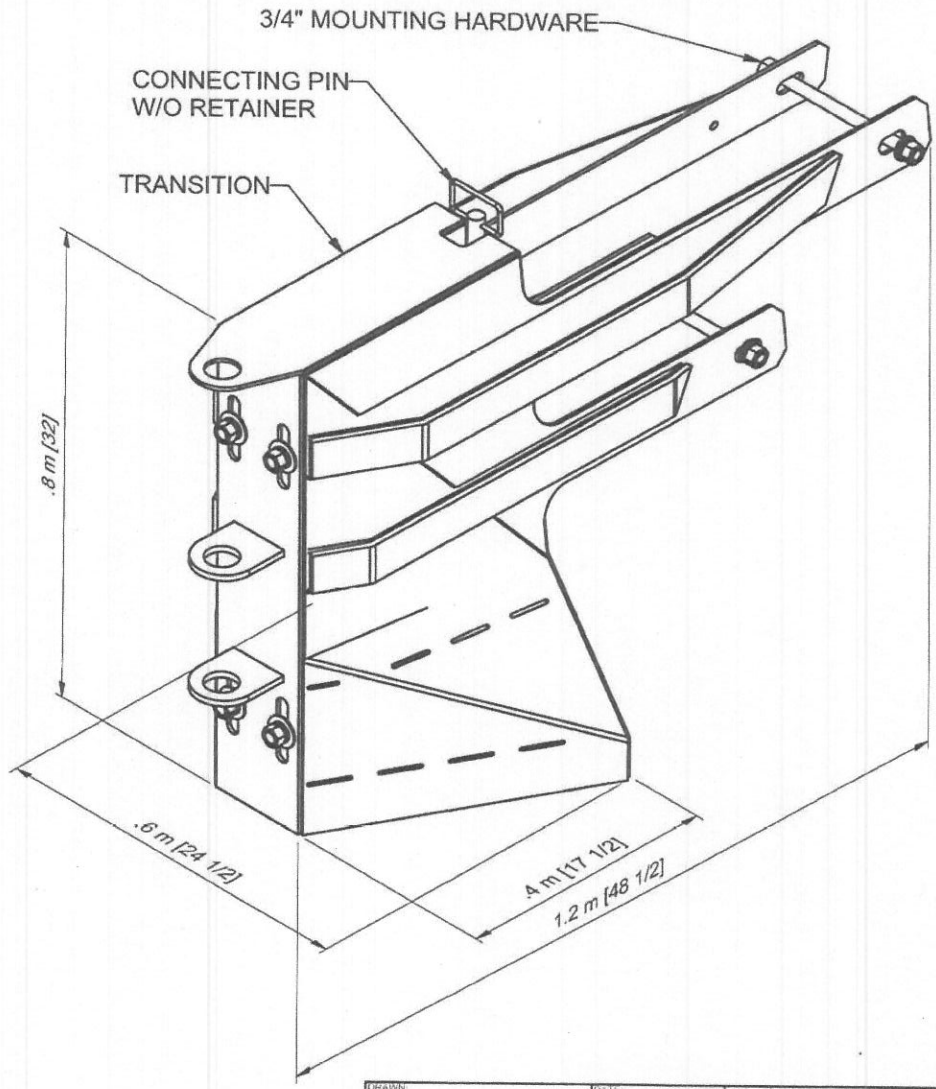

DRAWN: aaron.cox	DATE: 11/13/2008	ENERGY ABSORPTION SYSTEMS, INC. ENGINEERING AND RESEARCH DEPARTMENT	
DESIGNED: aaron.cox	DATE:		
CHECKED:	DATE:	ACZ-350 TRANSITION ASSY	
APPROVED:	DATE:		
Q.C.	DATE:		
UNLESS OTHERWISE NOTED, ALL DIMENSIONS ARE IN INCHES. DIMENSIONS ACCORDING TO ASME Y14.5M-1994 UNLESS OTHERWISE SPECIFIED.		DRAWING:	SHEET: 1 of 1 REV

Figure 3

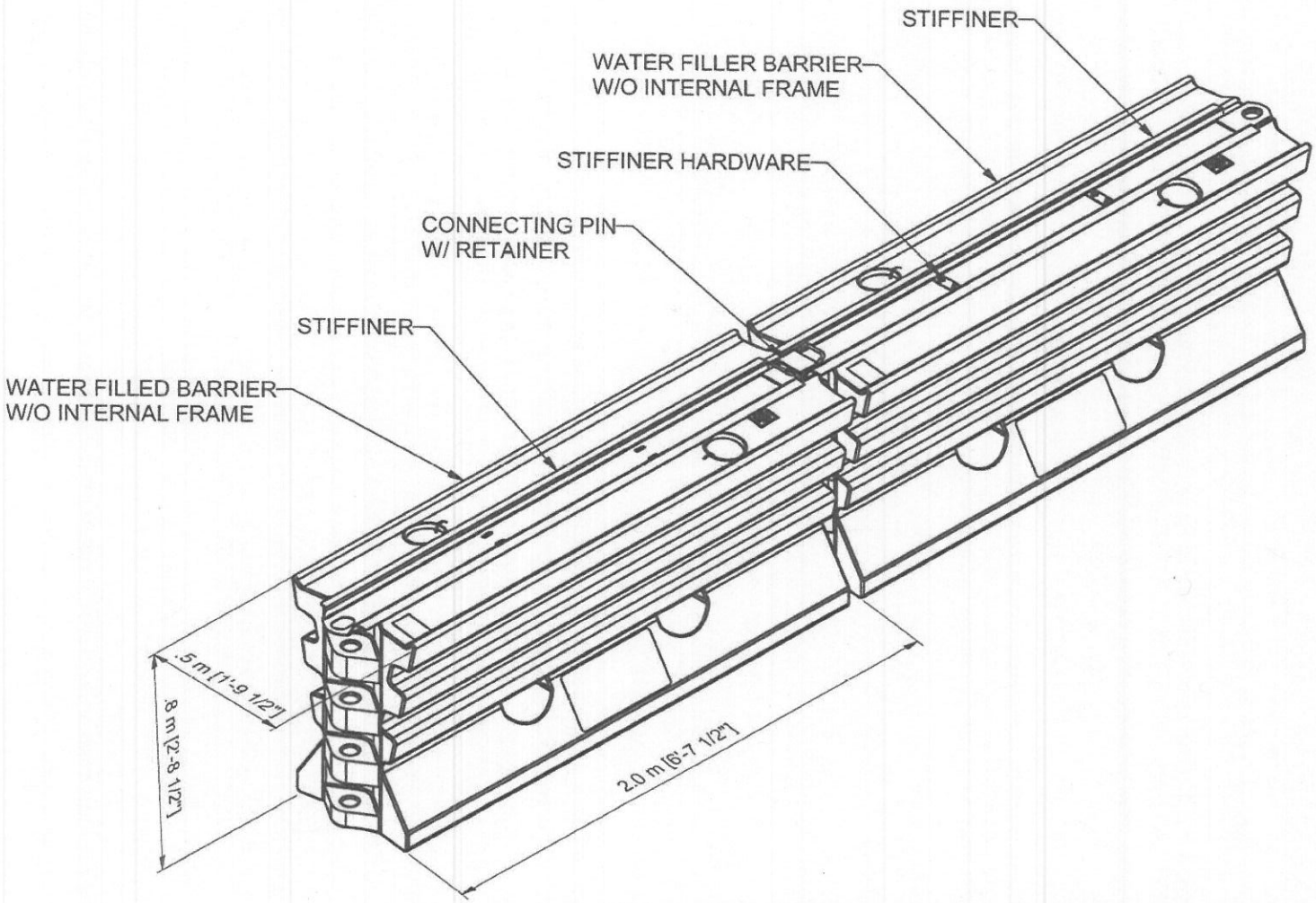

DRAWN: aaron.cox	DATE: 11/12/2008	ENERGY ABSORPTION SYSTEMS, INC. ENGINEERING AND RESEARCH DEPARTMENT
DESIGNED: aaron.cox	DATE:	
CHECKED:	DATE:	ACZ-350 SECTION 1
APPROVED:	DATE:	
Q.C.	DATE:	
UNLESS OTHERWISE NOTED, ALL DIMENSIONS ARE IN INCHES. DIMENSIONS ACCORDING TO ASME Y14.5M-1994 UNLESS OTHERWISE SPECIFIED.		DRAWING: / SHEET: 1 of 1 / REV

Figure 2

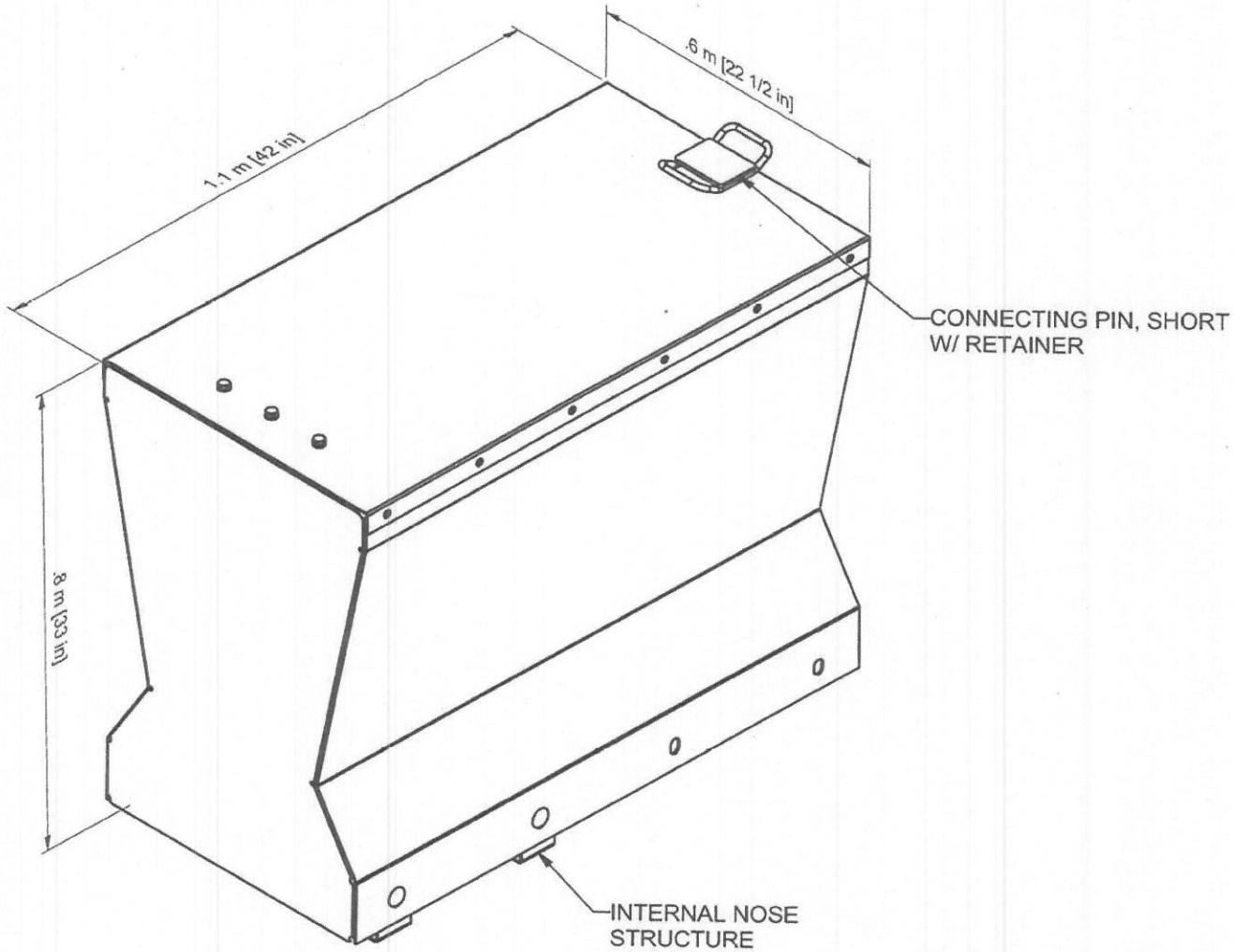

DRAWN: aaron.cox	DATE: 11/12/2008	ENERGY ABSORPTION SYSTEMS, INC. ENGINEERING AND RESEARCH DEPARTMENT	
DESIGNED: aaron.cox	DATE:		
CHECKED:	DATE:	ACZ-350 NOSE ASSY	
APPROVED:	DATE:		
Q.C.	DATE:		
UNLESS OTHERWISE NOTED, ALL DIMENSIONS ARE IN INCHES. DIMENSIONS ACCORDING TO ASME Y14.5M-1994 UNLESS OTHERWISE SPECIFIED.		DRAWING:	SHEET: 1 of 1 REV:

Figure 5

TL-3 (100 km/h = 62.1 mph)

NCHRP 350
TEST MATRIX
TERMINALS & CRASH CUSHIONS
NONREDIRECTIVE GATING

ACZ-350 SYSTEM

← = 820C

← = 2000P

* F FOR TL-2 & TL-3; G FOR TL-1

PASSED

TEST 3-40
820C/100 km/h/0°
C,D,F*,H,I,(J),K,N

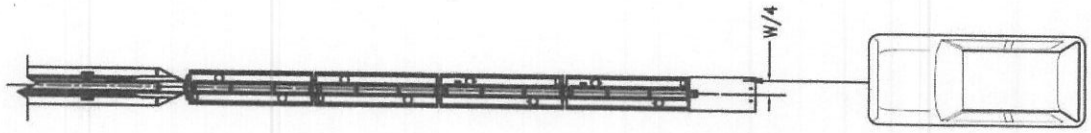

PASSED

TEST 3-41
2000P/100km/h/0°
C,D,F*,H,I,(J),K,N

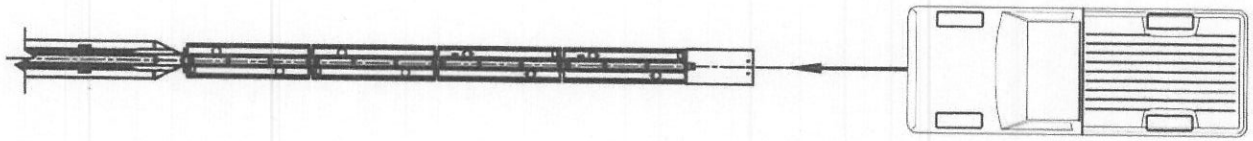

PASSED

TEST 3-44
2000P/100km/h/20°
C,D,F*,K,N

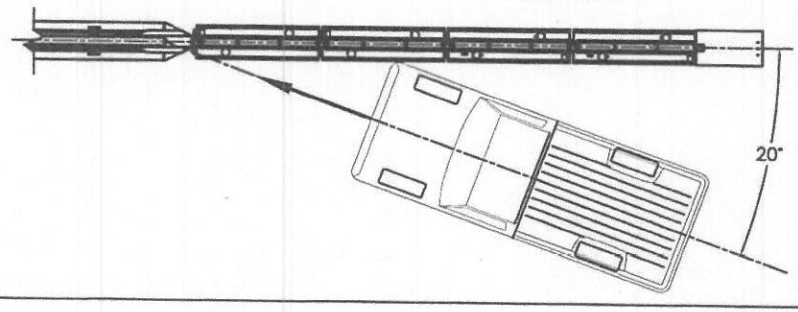

Figure 6

t = 0.000 sec | t = 0.160 sec | t = 0.320 sec | t = 0.480 sec | t = 0.640 sec | t = 0.800 sec

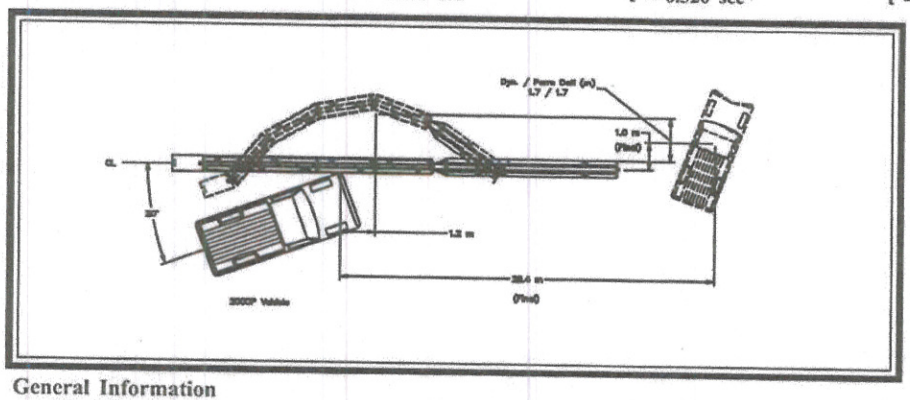

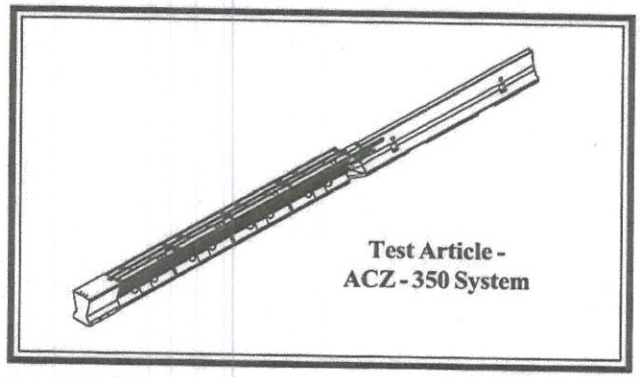

General Information	
Test Agency	E-TECH Testing Services, Inc.
Test Designation	NCHRP 350 Test 3-44 modified
Test No.	01-4317-003
Date	12/4/08
Test Article	
Type	Energy Absorption System
	ACZ - 350 System
Installation Length,	9.0 m - (4) segment total,
	pinned and freestanding
	w/ steel nose
Material and key elements	Polyethylene plastic segments
	(4 water filled), first two w/o frame and
	steel side straps, last two with, 14 ga
	hollow steel nose, transition to (3) 3 m
	freestanding PCMB with last section
	anchored
	Segment Length x Width x Height:
	(2021 mm x 533 mm x 813 mm)
Foundation Type and Condition	Portland Cement Concrete,
	clean and dry, unanchored
Test Vehicle	
Type	Production Model
Designation	2000P
Model	1988 Chevrolet C2500 Pickup
Mass (kg)	
Curb	1907
Test inertial	2000
Dummy	N/A
Gross Static	2000

Impact Conditions	
Speed (km/h)	96.4
Angle (deg)	20
Impact Severity (kJ)	717.0
Exit conditions	
Speed (km/h)	N/A
Angle (deg - veh. c.g.)	N/A
Occupant Risk Values	
Impact Velocity (m/s)	
x-direction	10.5
y-direction	6.9
Ridedown Acceleration (g's)	
x-direction	-18.4
y-direction	-12.0
European Committee for Normalization (CEN) Values	
THIV (km/h)	43.3
PHD (g's)	31.0
ASI	1.8
Post-Impact Vehicular Behavior (deg - rate gyro)	
Maximum Roll Angle	-17.5
Maximum Pitch Angle	24.9
Maximum Yaw Angle	-59.5
Test Article Deflections (m)	
Dynamic	1.7
Permanent	1.7
Vehicle Damage (Primary Impact)	
Exterior	
VDS	FL-4
CDC	11FLEW4
Interior	
VCDI	AS1020000
Maximum Deformation (mm)	195

Figure 11. Summary of Results - ACZ - 350 System Test 01-4317-003

t = 0.0.0 sec | t = 0.129 sec | t = 0.258 sec | t = 0.387 sec | t = 0.516 sec | t = 0.968 sec

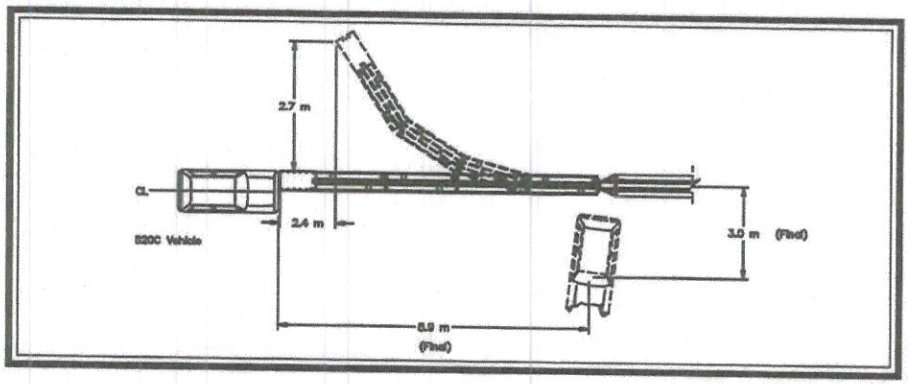

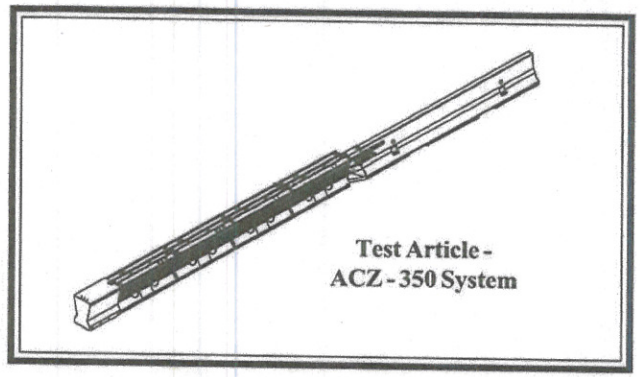

General Information	
Test Agency	E-TECH Testing Services, Inc.
Test Designation	NCHRP 350 Test 3-40
Test No.	01-4317-002
Date	11/6/08
Test Article	
Type	Energy Absorption System
	ACZ - 350 System
Installation Length,	9.0 m - (4) segment total,
	pinned and freestanding
	w/ steel nose
Material and key elements	Polyethylene plastic segments
	(4 water filled), first two w/o frame and
	steel side straps, last two with, 14 ga
	hollow steel nose, transition to (3) 3 m
	freestanding PCMB with last section
	anchored
	Segment Length x Width x Height:
	(2021 mm x 533 mm x 813 mm)
Foundation Type and Condition	Portland Cement Concrete,
	clean and dry, unanchored
Test Vehicle	
Type	Production Model
Designation	820C
Model	1993 Ford Festiva
Mass (kg)	
Curb	821
Test inertial	816
Dummy	75
Gross Static	891

Impact Conditions	
Speed (km/h)	99.0
Angle (deg)	0
Impact Severity (kJ)	308.5
Exit conditions	
Speed (km/h)	N/A
Angle (deg - veh. c.g.)	N/A
Occupant Risk Values	
Impact Velocity (m/s)	
x-direction	11.9
y-direction	-0.6
Ridedown Acceleration (g's)	
x-direction	-12.5
y-direction	-3.6
European Committee for Normalization (CEN) Values	
THIV (km/h)	44.2
PHD (g's)	12.5
ASI	1.1
Post-Impact Vehicular Behavior (deg - rate gyro)	
Maximum Roll Angle	20.1
Maximum Pitch Angle	-43.5
Maximum Yaw Angle	-244.9
Test Article Deflections (m)	
Dynamic	2.7
Permanent	2.7
Vehicle Damage (Primary Impact)	
Exterior	
VDS	FD-4
CDC	12FDEW4
Interior	
VCDI	AS0001000
Maximum Deformation (mm)	21 mm

Figure 1. Summary of Results - ACZ - 350 System Test 01-4317-002

t = 0.000 sec | t = 0.210 sec | t = 0.420 sec | t = 0.630 sec | t = 0.840 sec | t = 1.260 sec

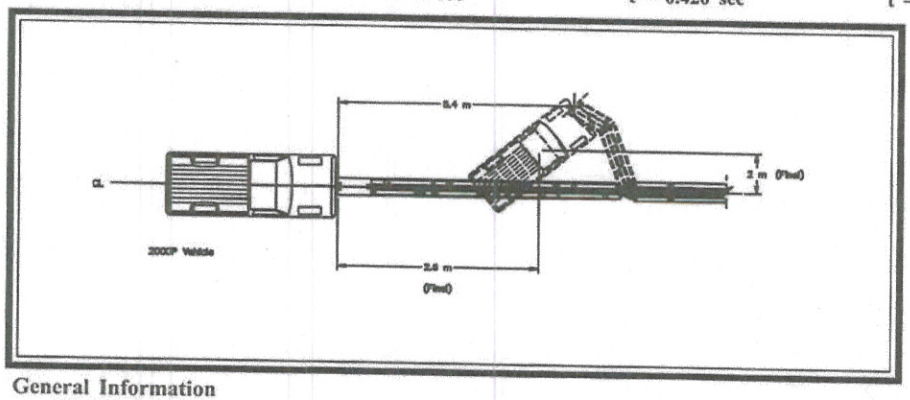

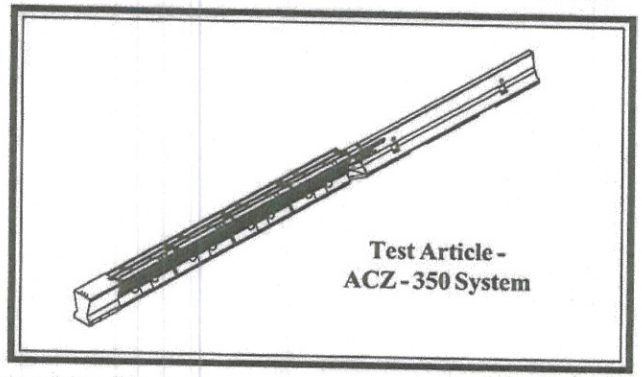

General Information	
Test Agency	E-TECH Testing Services, Inc.
Test Designation	NCHRP 350 Test 3-41
Test No.	01-4317-001
Date	10/30/08
Test Article Type	Energy Absorption System
	ACZ - 350 System
Installation Length,	9.0 m - (4) segment total,
	pinned and freestanding
	w/ steel nose
Material and key elements	Polyethylene plastic segments
	(4 water filled), first two w/o frame and
	steel side straps, last two with, 14 ga
	hollow steel nose, transition to (3) 3 m
	freestanding PCMB with last section
	anchored
	Segment Length x Width x Height:
	(2021 mm x 533 mm x 813 mm)
Foundation Type and Condition	Portland Cement Concrete,
	clean and dry, unanchored
Test Vehicle	
Type	Production Model
Designation	2000P
Model	1988 Chevrolet C2500 Pickup
Mass (kg)	
Curb	1853
Test inertial	1995
Dummy	N/A
Gross Static	1995

Impact Conditions	
Speed (km/h)	98.3
Angle (deg)	0
Impact Severity (kJ)	744.0
Exit conditions	
Speed (km/h)	N/A
Angle (deg - veh. c.g.)	N/A
Occupant Risk Values	
Impact Velocity (m/s)	
x-direction	9.9
y-direction	-0.3
Ridedown Acceleration (g's)	
x-direction	-11.1
y-direction	-5.7
European Committee for Normalization (CEN) Values	
THIV (km/h)	35.6
PHD (g's)	11.2
ASI	0.9
Post-Impact Vehicular Behavior (deg - rate gyro)	
Maximum Roll Angle	-7.6
Maximum Pitch Angle	20.0
Maximum Yaw Angle	-39.2
Test Article Deflections (m)	
Dynamic	5.4
Permanent	5.4
Vehicle Damage (Primary Impact)	
Exterior	
VDS	FD-4
CDC	12FDEW4
Interior	
VCDI	AS0000000
Maximum Deformation (mm)	14

Figure 6. Summary of Results - ACZ - 350 System Test 01-4317-001

MATERIALS INFORMATION

2. Alternative Flared Terminal Systems

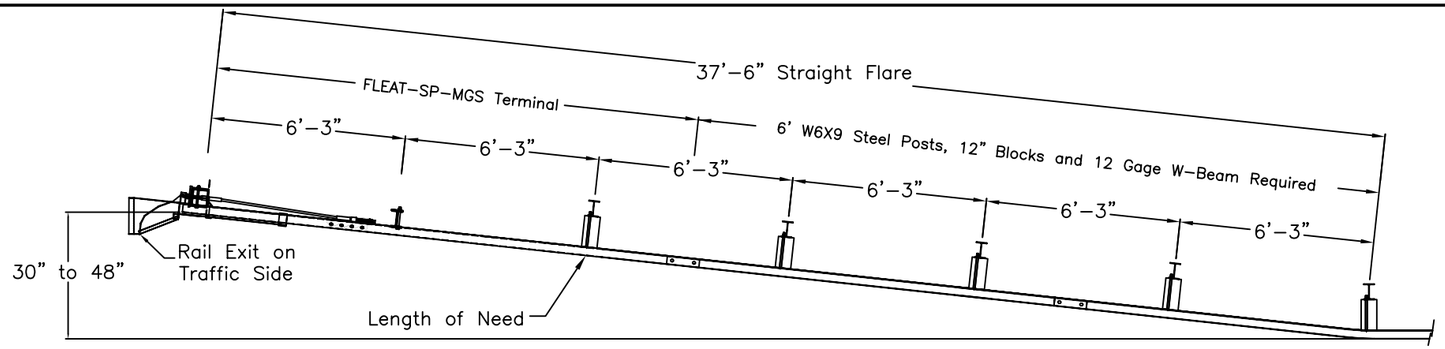

PLAN

TRAFFIC

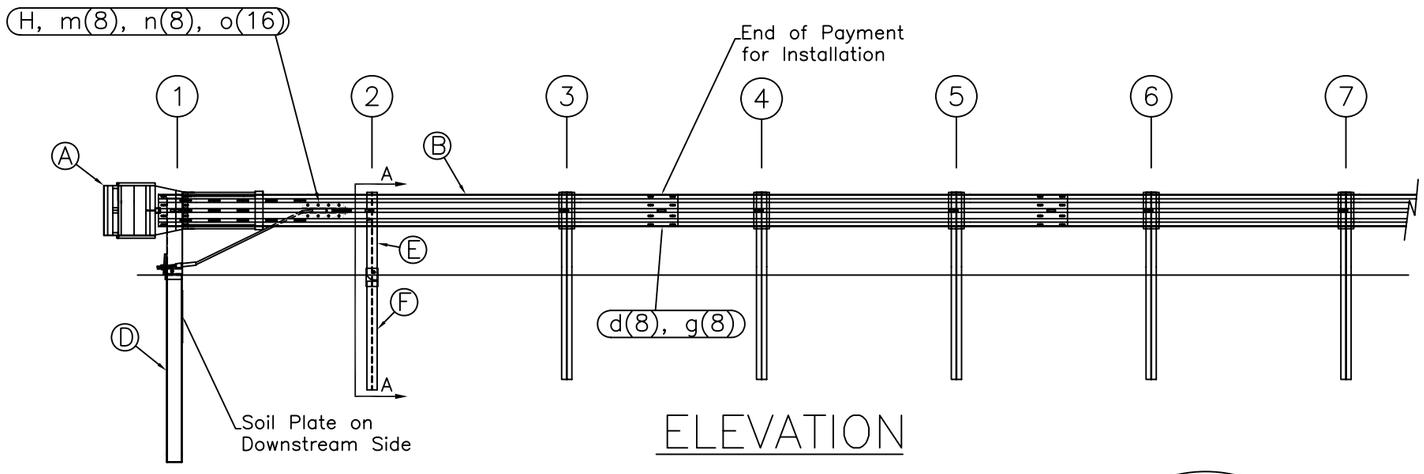

ELEVATION

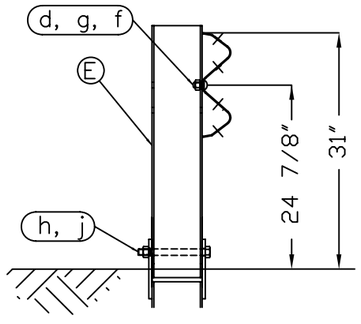

SECTION A-A
Post #2

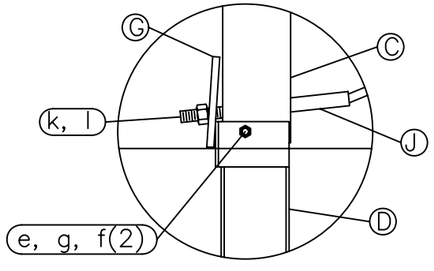

Post #1 Connection Detail

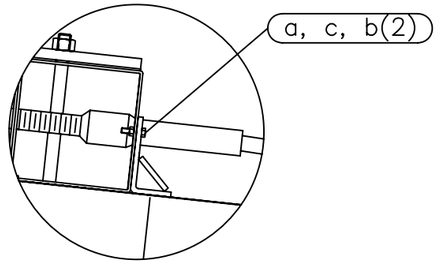

Impact Head Connection Detail

ITEM	QTY	BILL OF MATERIALS	ITEM NO.
A	1	IMPACT HEAD	F3000
B	1	W-BEAM GUARDRAIL END SECTION, 12 Ga.	MGS-SF1303
C	1	FIRST POST TOP (6X6X$\frac{1}{8}$" Tube)	TPHP1A
D	1	FIRST POST BOTTOM (6' W6X15)	TPHP1B
E	1	SECOND POST ASSEMBLY TOP	UHP2A
F	1	SECOND POST ASSEMBLY BOTTOM	HP3B
G	1	BEARING PLATE	E750
H	1	CABLE ANCHOR BOX	S760
J	1	BCT CABLE ANCHOR ASSEMBLY	E770
		HARDWARE (ALL DIMENSIONS IN INCHES)	
a	2	5/16 x 1 HEX BOLT GRD 5	B5160104A
b	4	5/16 WASHER	W0516
c	2	5/16 HEX NUT	N0516
d	9	5/8 Dia. x 1 1/4 SPLICE BOLT (POST #2)	B580122
e	1	5/8 Dia. x 9 HEX BOLT GRD 5	B580904A
f	3	5/8 WASHER	W050
g	10	5/8 Dia. H.G.R NUT	N050
h	1	3/4 Dia. x 8 1/2 HEX BOLT GRD A449	B340854A
j	1	3/4 Dia. HEX NUT	N030
k	2	1 ANCHOR CABLE HEX NUT	N100
l	2	1 ANCHOR CABLE WASHER	W100
m	8	CABLE ANCHOR BOX SHOULDER BOLT	SB58A
n	8	1/2 A325 STRUCTURAL NUT	N055A
o	16	1 1/16 OD x 9/16 ID A325 STR. WASHER	W050A

GENERAL NOTES:
1. All bolts, nuts, cable assemblies, cable anchors and bearing plates shall be galvanized.
2. The lower sections of the Posts 1&2 shall not protrude more than 4 in above the ground (measured along a 5' cord). Site grading may be necessary to meet this requirement.
3. The lower sections of the hinged posts should not be driven with the upper post attached. If the post is placed in a drilled hole, the backfill material must be satisfactorily compacted to prevent settlement.
4. When competent rock is encountered, a 12" Ø post hole, 20 in. deep cored into the rock surface may be used if approved by the engineer for post 1. Granular material will be placed in the bottom of the hole, approximately 2.5" deep to provide drainage. The first post can be field cut to length, placed in the hole and backfilled with suitable backfill. The soil plate may be trimmed if required.
5. The breakaway cable assembly must be taut. A locking device (vice grips or channel lock pliers) should be used to prevent the cable from twisting when tightening nuts.

RSI
Road Systems, Inc.
Big Spring, TX
Phone: 432-263-2435
or Phone: 330-346-0721

FLEAT-SP-MGS Terminal Midwest Guardrail System 31" Top of Rail

Sheet:	Date:	By:
1	02/24/10	JRR

Drawing Name:	Scale:	Rev:
FLT-SP-S-MGS	None	0

OFFSET NOTES:
1) POST OFFSET DIMENSIONS ARE GIVEN TO THE CENTER OF THE TRAFFIC FACE OF POSTS, EXCEPT AT POSTS #7 & #8, WHERE DIMENSION IS TO CENTER OF THE TRAFFIC FACE OF THE BLOCKOUTS.
2) GUARDRAIL BETWEEN POST 1–7 IS ON A STRAIGHT LINE FLARE.

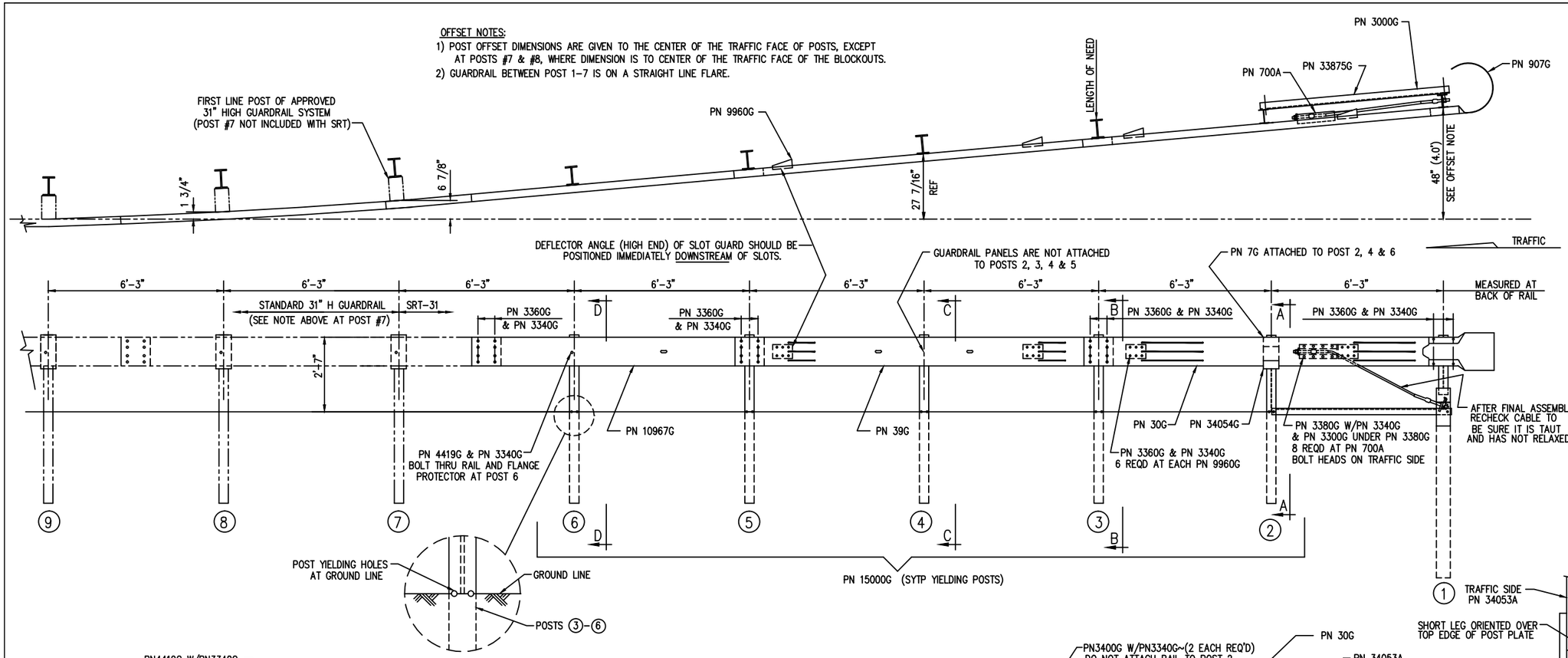

BILL OF MATERIAL

PN	QTY	DESCRIPTION
7G	3	12/6"/FLG PROTECTOR (AT POST 2, 4 & 6)
30G	1	12/12'6/S SRT-1 (GUARDRAIL)
39G	1	12/12'6/S SRT-2 (GUARDRAIL)
700A	1	CABLE ANCHOR BRACKET
907G	1	12/BUFFER/ROLLED (TERMINAL)
3000G	1	3/4 x 6'-6" CABLE
HARDWARE		
3240G	2	5/16" WASHER (AT POST 1)
3245G	2	5/16" HEX NUT (AT POST 1)
3300G	12	5/8" WASHER
3340G	67	5/8" HEX HGR NUT
3360G	52	5/8"ø x 1 1/4" HGR SPLICE BOLT
3380G	8	5/8"ø x 1 1/2" HEX HD BOLT
3400G	4	5/8"ø x 2" HGR POST BOLT (AT POSTS 1, 2 & 4)
3391G	2	5/8"ø x 1 3/4" HEX BOLT (A325) (AT STRUT)
3900G	2	1" WASHER (AT CABLE)
3910G	2	1" HEX NUT (AT CABLE)
4211G	2	5/16"ø x 1 3/4" HEX BOLT (AT POST 1)
4419G	1	5/8"ø x 1 3/4" COUNTERSUNK HD BOLT (AT POST 6)
9960G	4	SLOT GUARD BRACKET
10967G	1	12/9'4.5/3'1.5/S SRT-3 (GUARDRAIL)
15000G	5	6'-0" SYT POST (W6 X 8.5)
33909G	1	CABLE ANCHOR BRACKET (AT POST 1)
33875G	1	ANGLE STRUT 3 x 3 x 1/4
34052A	1	CR POST 1 BOT (W6 x 15)
34053A	1	CR POST 1 TOP (W6 x 8.5)
34054G	1	POST SHELF ANGLE (AT POST 2)

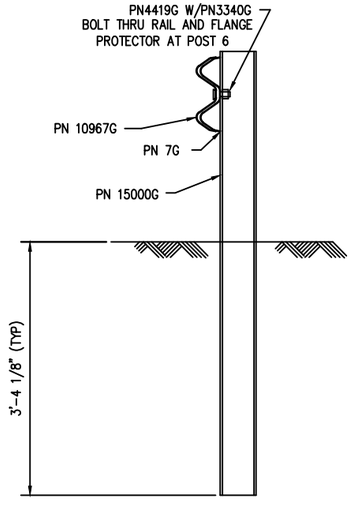

SECTION "D–D"
(@ POST #6)

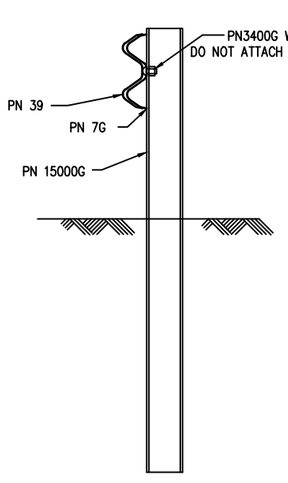

SECTION "C–C"
(@ POST #4)

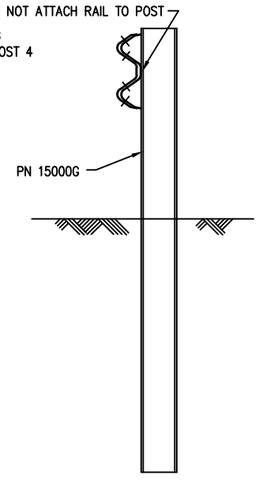

SECTION "B–B"
(@ POST #3 & #5)

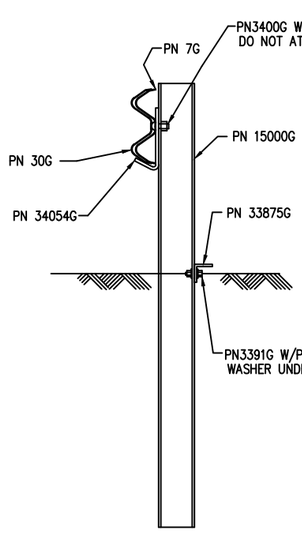

SECTION "A–A"
(@ POST #2)

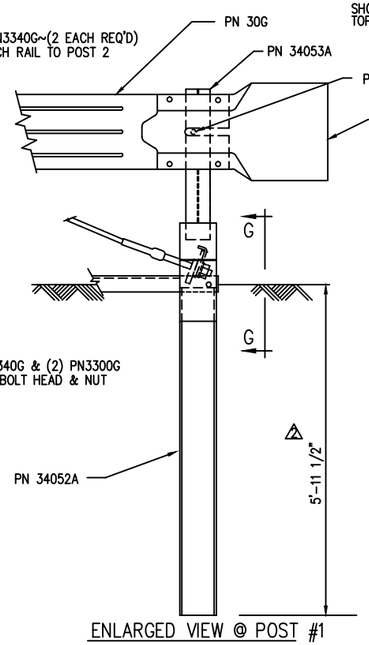

ENLARGED VIEW @ POST #1

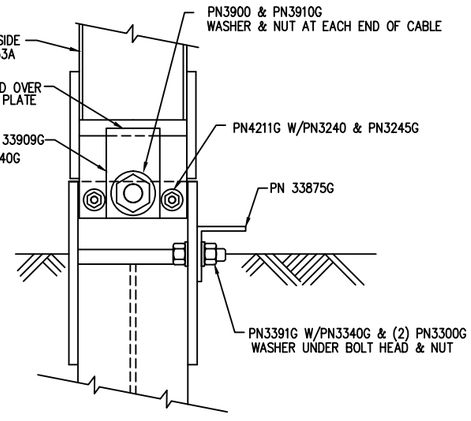

VIEW "G–G"
(@ POST #1)

REV.	CHK'D	BY	DATE	REMARKS
4	BT	LH	10/6/10	OFFSET POSTS #7 & #8
3	BT	LH	2/26/09	REVISED HARDWARE
2	SG	LH	7/28/08	REVISED POST #1 LENGTH IN GROUND
1	SG	LH	1/16/08	REVISED HARDWARE QUANTITY IN BILL OF MATERIAL

SRT-31

SLOTTED RAIL TERMINAL SRT-31 (31" H) ERECTION DETAILS (3 PANELS, CR AND SYT POSTS)

DRAWN	BT
CHECKED	SG
SCALE	NTS
DATE	10/30/07
ENG. FILE #	SS436-01E
SHT.No.	E1 OF 1
DRAWING NO.	SS 436
REV.	4

The drawings and the information shown thereon are copyrighted by Trinity Highway Products (2010) and the sole property of Trinity Highway Products. Neither the drawings nor such information is to be used for any purpose other than that for which it was specifically furnished from Trinity Highway Products, LLC., nor is any reproduction authorized without written permission.

TRINITY HIGHWAY PRODUCTS, LLC.
2525 STEMMONS FREEWAY
DALLAS, TX 75207

ITEM NO.	PART NUMBER	DESCRIPTION	QTY	UOM
1	BSI-1301252-KT	X-Tension Terminal Comp, 31 in	1	EACH
2	K070202	X-Tension Hardware Kit, GT,	1	EACH
3	K070206	X-Tension System Hardware Kit,	1	EACH
4	K070210	X-Tension GT Guardrail	1	EACH
5	B061100	BSI, I-Beam Post, Middle, X350	1	EACH
6	MANXT1	X-TENSION Installation Manual	1	EACH

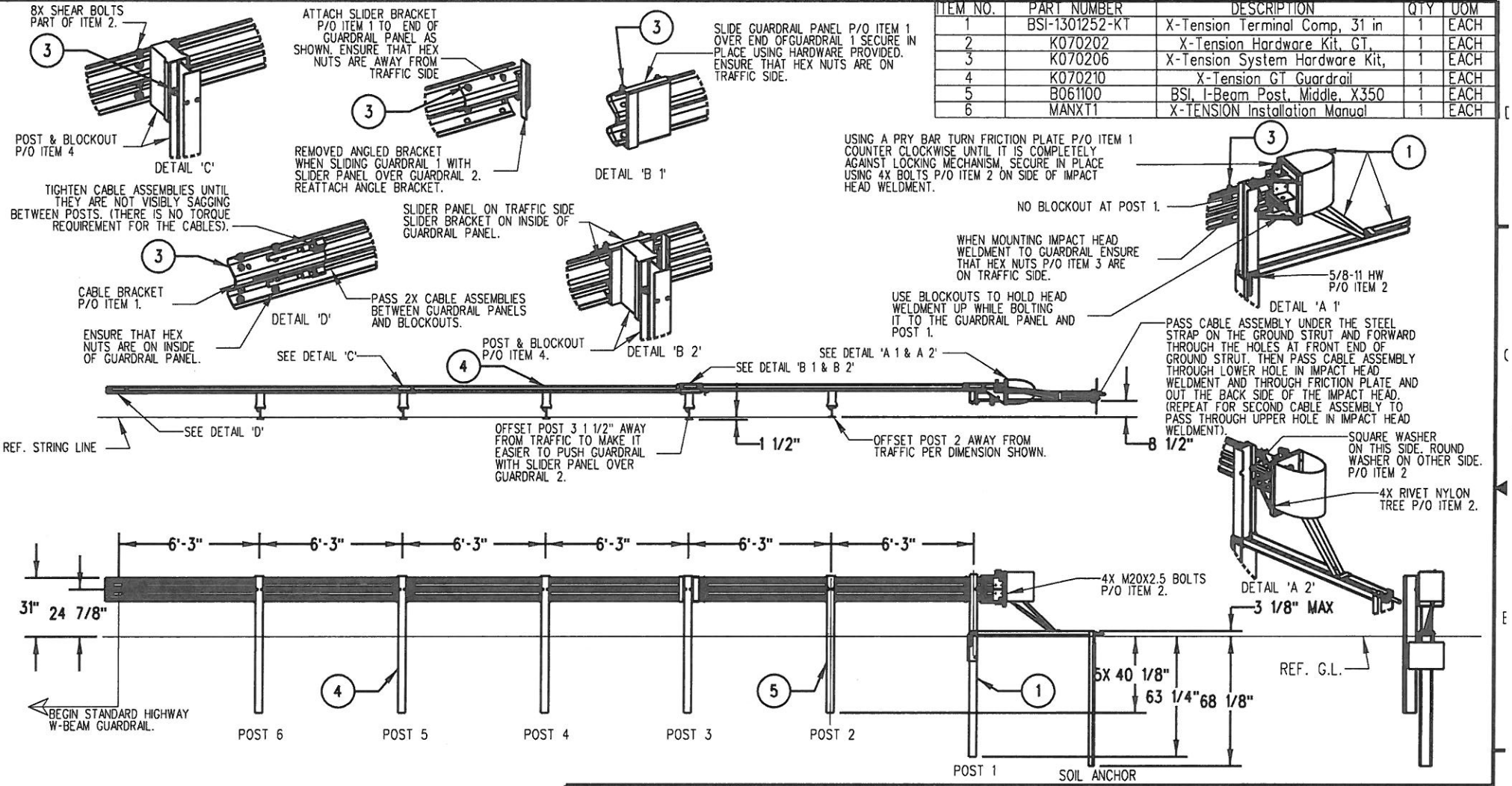

NOTES: UNLESS OTHERWISE SPECIFIED.

1. SYSTEM TO BE INSTALLED PER MANUFACTURER SPECIFICATIONS.
2. ONLY TIGHTEN THE CABLE ASSEMBLIES USING THE NUTS AT THE CABLE BRACKET (SEE DETAIL 'D'). DO NOT TIGHTEN THE CABLES AT THE FRONT OF THE GROUND ANCHOR.
3. WHEN DRIVING STEEL POST, ENSURE THAT A DRIVING CAP WITH TIMBER OR PLASTIC INSERT IS USED TO PREVENT DAMAGE TO THE GALVANIZING TO THE TOP OF THE POST.

©2012 BARRIER SYSTEMS INC. THE INFORMATION CONTAINED IN THIS DRAWING IS THE SOLE PROPERTY OF BARRIER SYSTEMS INC. ANY REPRODUCTION IN PART OR WHOLE WITHOUT THE WRITTEN PERMISSION OF BARRIER SYSTEMS INC. IS PROHIBITED.

APPROVALS

DRAWN BY:	NMV
DRAWN DATE:	2/08/13
APPR'D BY:	JMT
APPR'D DATE:	2/08/13

UNLESS OTHERWISE SPECIFIED DIMENSIONS ARE IN INCHES. TOLERANCES ARE:
FRACTIONS ±1/16 DECIMAL .XX ±.03 .XXX ±.010 ANGLES ±1/2°
INTERPRET DIMENSIONS AND TOLERANCES PER ASME Y14.5-1994
THIRD ANGLE PROJECTION
DO NOT SCALE DRAWING

REV	ECN#	DATE
B	2067	05/02/13
A	2022	2/08/13

LINDSAY TRANSPORTATION SOLUTIONS™
BARRIER SYSTEMS INC.
3333 Vaca Valley Parkway Ste 800
Vacaville, CA 95688
Tel: 888-800-3691
www.barriersystemsinc.com

TITLE
X-TENSION GUARDRAIL TERMINAL SYSTEM
STEEL POST WITH COMPOSITE BLOCKOUT
31" RAIL HEIGHT

SIZE	DWG NO.	REV.
B	XTGTSS5	B

SCALE 1:50 SHEET 1 OF 1

Doc. B100108

MATERIALS INFORMATION

3. Alternative In-line Terminal Systems

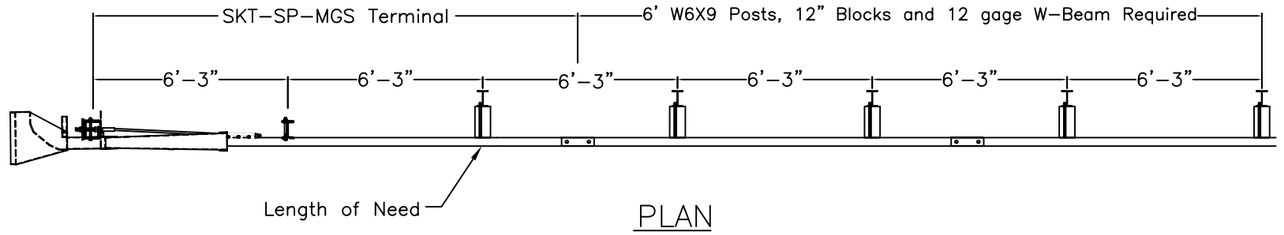

PLAN

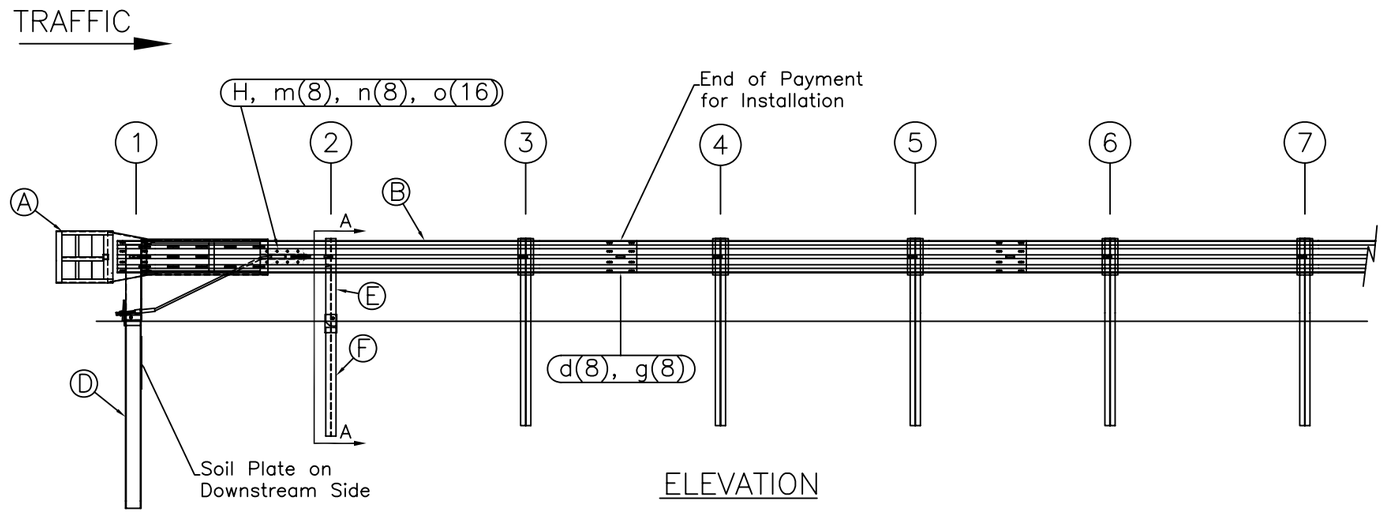

ELEVATION

ITEM	QTY	BILL OF MATERIALS	ITEM NO.
A	1	IMPACT HEAD	S3000
B	1	W-BEAM GUARDRAIL END SECTION, 12 Ga.	MGS-SF1303
C	1	FIRST POST TOP (6X6X$\frac{1}{8}$" Tube)	TPHP1A
D	1	FIRST POST BOTTOM (6' W6X15)	TPHP1B
E	1	SECOND POST ASSEMBLY TOP	UHP2A
F	1	SECOND POST ASSEMBLY BOTTOM	HP3B
G	1	BEARING PLATE	E750
H	1	CABLE ANCHOR BOX	S760
J	1	BCT CABLE ANCHOR ASSEMBLY	E770
		HARDWARE (ALL DIMENSIONS IN INCHES)	
a	2	5/16 x 1 HEX BOLT GRD 5	B5160104A
b	4	5/16 WASHER	W0516
c	2	5/16 HEX NUT	N0516
d	9	5/8 Dia. x 1 1/4 SPLICE BOLT (POST #2)	B580122
e	1	5/8 Dia. x 9 HEX BOLT GRD 5	B580904A
f	3	5/8 WASHER	W050
g	10	5/8 Dia. H.G.R NUT	N050
h	1	3/4 Dia. x 8 1/2 HEX BOLT GRD A449	B340854A
j	1	3/4 Dia. HEX NUT	N030
k	2	1 ANCHOR CABLE HEX NUT	N100
l	2	1 ANCHOR CABLE WASHER	W100
m	8	CABLE ANCHOR BOX SHOULDER BOLT	SB58A
n	8	1/2 A325 STRUCTURAL NUT	N055A
o	16	1 1/16 OD x 9/16 ID A325 STR. WASHER	W050A

GENERAL NOTES:
1. All bolts, nuts, cable assemblies, cable anchors and bearing plates shall be galvanized.
2. The lower sections of the Posts 1&2 shall not protrude more than 4 in above the ground (measured along a 5' cord). Site grading may be necessary to meet this requirement.
3. The lower sections of the hinged posts should not be driven with the upper post attached. If the post is placed in a drilled hole, the backfill material must be satisfactorily compacted to prevent settlement.
4. When competent rock is encountered, a 12" Ø post hole, 20 in. deep cored into the rock surface may be used if approved by the engineer for post 1. Granular material will be placed in the bottom of the hole, approximately 2.5" deep to provide drainage. The first post can be field cut to length, placed in the hole and backfilled with suitable backfill. The soil plate may be trimmed if required.
5. A site evaluation should be considered if there is less than 25' between the outlet side of the terminal and any adjacent driving lane.
6. The breakaway cable assembly must be taut. A locking device (vice grips or channel lock pliers) should be used to prevent the cable from twisting when tightening nuts.

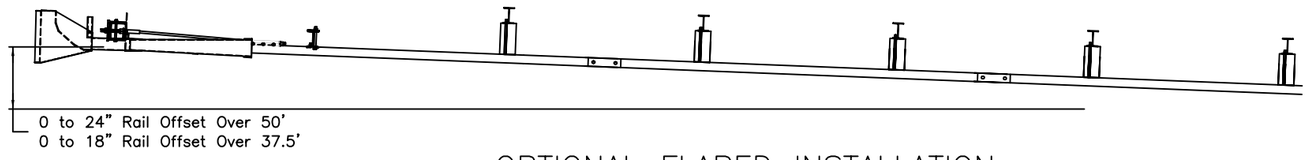

OPTIONAL FLARED INSTALLATION
25:1 maximum flare rate

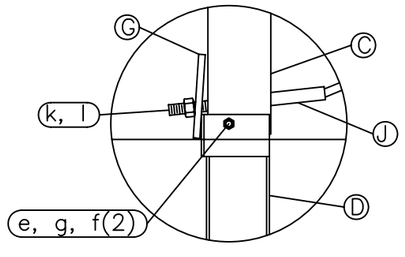

Post #1 Connection Detail

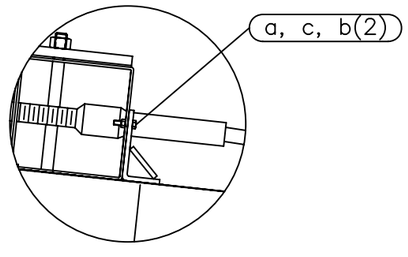

Impact Head Connection Detail

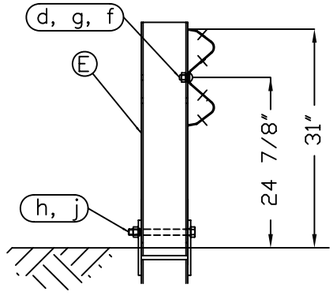

SECTION A-A
Post #2

Road Systems, Inc.
Big Spring, TX
Phone: 432-263-2435
or Phone: 330-346-0721

SKT-SP-MGS Terminal
Midwest Guardrail System
31" Top of Rail

Sheet: 1
Date: 02/24/10
By: JRR
Drawing Name: SKT-SP-S-MGS
Scale: None
Rev: 0

ET-31™ Guardrail End Treatment

Product Description Assembly Manual

Part No. 620182B

Created January 2013

TRINITY HIGHWAY PRODUCTS
ENERGY ABSORPTION SYSTEMS

ET-31™ Guardrail End Treatment

Product Description
Assembly Manual

TRINITY HIGHWAY PRODUCTS
ENERGY ABSORPTION SYSTEMS

2525 Stemmons Freeway
Dallas, Texas 75207

Important: These instructions are to be used only in conjunction with the assembly, maintenance, and repair of the ET-31™ Guardrail End Treatment. These instructions are for standard assembly specified by the appropriate highway authority only. In the event the specified system assembly, maintenance, or repair would require a deviation from standard assembly parameters, contact the appropriate highway authority engineer. This system has been determined to meet the criteria for eligibility for reimbursement by the Federal Highway Administration for use on the national highway system under strict criteria utilized by that agency. A Trinity Highway Products, LLC representative is available for consultation if required.

This Manual must be available to the worker overseeing and/or assembling the product at all times. For additional copies, contact Trinity Highway Products at (888) 323-6374 or download from the website listed below.

The instructions contained in this Manual supersede all previous information and Manuals. All information, illustrations, and specifications in this Manual are based on the latest ET-31™ Guardrail End Treatment information available to Trinity Highway Products at the time of printing. We reserve the right to make changes at any time. Please contact Trinity Highway Products to confirm that you are referring to the most current instructions.

Part No. 620182B
Created January 2013

All rights in copyright reserved

Table of Contents

Customer Service Contacts 3
Important Introductory Notes 3
Recommended Safety Rules ET-31™ Guardrail End Treatment 4
Safety Symbols 5
Warnings and Cautions 5
Know Your ET-31™Guardrail End Treatment 8
Bill of Materials English (Metric) 20
Assembling the ET-31™ Guardrail End Treatment 22
    Materials 22
Recommended Tools 22
Recommend Tools for Repair 22
Site Preparation 23
    Post Placed in Rigid Material 24
    Assembling the ET-31™ Guardrail End Treatment on a Curve 24
Assembling the Posts 25
Assembling HBA™ Post 25
Assembling HBA™ Top Post 26
Assembling the Steel Yielding Treatment Post™ (SYTP™) 26
Assembling Foundation Tubes 27
6’ 0” Foundation Tube (Post locations 1 and/or 2) 27
4’ 6” Foundation Tube with Soil Plate (Post locations 1 and/or 2) 27
4’ 6” Foundation Tube (Post locations 2 - 6, per state specifications): 28
3’ 10” Foundation Tube (Post locations 2 - 6, per state specifications): 28
Assembly Options for Foundation Tubes 29
    Assembling Wood Posts in Tubes 30
    Assembling Wood CRT Posts 31
    Assembling Foundation Tubes, HBA™ Posts, or SYTP™ when Encountering Rock 31
Assembling the Strut 32
    Assembling the Strut with HBA™ Post at Post 1 and SYTP™ at Post 2 32
    Assembling the Strut with Wood CRT Post in Tube at Post 1 and SYTP™ at Post 2 34
    Assembling the Strut with Wood Posts in Soil Tubes (Post Locations 1 and 2) 35
    Assembling Offset Blocks and Rail Panels 35
Assembling the Cable Anchor Assembly 38
Assembling the ET-PLUS™ Extruder (Head) 39
Delineation Option for the ET-31™ Guardrail End Treatment 39
Assembly Checklist 40
Maintenance and Repair 42
Maintenance 42
Repair 42

All rights in copyright reserved

Customer Service Contacts

Trinity Highway Products, LLC is committed to the highest level of customer service. Feedback regarding the ET-31™ Guardrail End Treatment, its assembly procedures, supporting documentation, and performance is always welcome. Additional information can be obtained from the contact information below.

Trinity Highway Products:

Telephone:	(888) 323-6374 (U.S. Calls) (214) 589-8140 (International Calls)
Fax:	(214) 589-8423
E-mail:	product.info@trin.net
Internet: Trinity Highway Products, LLC	http://www.highwayguardrail.com

Regional Telephone Contacts:

Dallas, Texas	(800) 527-6050
Centerville, Utah	(800) 772-7976
Elizabethtown, Kentucky	(800) 282-7668
Girard, Ohio	(800) 321-2755
Orangeburg, South Carolina	(800) 835-9307
International	+1 214-589-8140

Important Introductory Notes

Proper assembly of the ET-31™ Guardrail End Treatment is essential to achieve performance of the system under appropriate federal and state criteria. These instructions should be read in their entirety and understood before assembling the ET-31™ Guardrail End Treatment. These instructions are to be used only in conjunction with the assembly of the ET-31™ Guardrail End Treatment and are for standard assemblies only as specified by the applicable highway authority. In the event your system assembly requires or involves deviation from standard parameters or, during the assembly process a question arises, please contact the appropriate highway authority that specified this system at this particular location for guidance. Trinity Highway Products is available for consultation with that agency. These instructions are intended for an individual who is qualified to both read and accurately interpret them as written. They are intended for the individual who is experienced and skilled in the assembly of highway products which are specified and selected by the highway authority.

All rights in copyright reserved

Important: Read safety instructions thoroughly and follow the assembly directions and suggested safe practices before assembling, maintaining, or repairing the ET-31™ Guardrail End Treatment. Failure to follow this warning can result in serious injury or death to workers and/or bystanders. It further compromises the acceptance of this system by the FHWA. Please have these instructions available for use and reference by anyone involved in the assembly of the product.

Warning: Ensure that all of the ET-31™ Guardrail End Treatment Warnings, Cautions, and Important Statements within the ET-31™ Guardrail End Treatment Manual are completely followed. Failure to follow this warning could result in serious injury or death in the event of a collision.

Recommended Safety Rules ET-31™ Guardrail End Treatment

* Important Safety Instructions *

This Manual must be kept in a location where it is readily available to persons who are skilled and experienced in the assembly, maintenance, or repair of the ET-31™ Guardrail End Treatment system. Additional copies of this Manual are immediately available from Trinity Highway Products by calling (888) 323-6374 or by email at product.info@trin.net. This Manual may also be downloaded directly from the websites indicated below. Please contact Trinity Highway Products if you have any questions concerning the information in this Manual or about the ET-31™ Guardrail End Treatment.

Always use appropriate safety precautions when operating power equipment and when moving heavy equipment or the ET-31™ Guardrail End Treatment components. Gloves, safety goggles, steel toe boots, and back protection should be used.

Safety measures incorporating traffic control devices specified by the highway authority must be used to provide safety for personnel while at the assembly, maintenance, or repair site.

All rights in copyright reserved

Safety Symbols

This section describes the safety symbols that appear in this ET-31™ Guardrail End Treatment Manual. Read the Manual for complete safety, assembly, operating, maintenance, repair, and service information.

Symbol	Meaning
	Safety Alert Symbol: Indicates Danger, Warning, Important, or Caution. Failure to read and follow Danger, Warning, Safety, or Important Statement indicators could result in serious injury or death to workers and/or bystanders.

Warnings and Cautions

Read all instructions before assembling, maintaining, or repairing the ET-31™ Guardrail End Treatment.

Warning: Do not assemble, maintain, or repair the ET-31™ Guardrail End Treatment until you have read this Manual thoroughly and completely understand it. Ensure that all Warnings, Cautions, and Important Statements within the Manual are completely followed. Please call Trinity Highway Products at (888) 323-6374 if you do not understand these instructions. Failure to follow this warning could result in serious injury or death.

Warning: Safety measures incorporating appropriate traffic control devices specified by the highway authority must be used to protect all personnel while at the assembly, maintenance, or repair site. Failure to follow this warning could result in serious injury or death.

Warning: Use only Trinity Highway Products parts that are specified herein for the ET-31™ Guardrail End Treatment for assembling, maintaining, or repairing the ET-31™ Guardrail End Treatment. **Do not utilize or otherwise comingle parts from other systems** even if those systems are other Trinity Highway Products systems. Such configurations have not been tested, nor have they been accepted for use. Assembly, maintenance, or repairs using unspecified parts or accessories is strictly prohibited. Failure to follow this warning could result in serious injury or death in the event of a vehicle impact with an UNACCEPTED system.

Warning: Do NOT modify the ET-31™ Guardrail End Treatment in any way. Failure to follow this warning could result in serious injury or death.

Warning: Ensure that the ET-31™ Guardrail End Treatment and delineation used meet all federal, state, specifying agency, and local specifications. Failure to follow this warning could result in serious injury or death.

Warning: Ensure that your assembly meets all appropriate Manual on Uniform Traffic Control Devices (MUTCD) and local standards. Failure to follow this warning could result in serious injury or death.

All rights in copyright reserved

Warning: Be aware of hazards of using compressed air (small objects may become projectiles). Failure to follow this warning can result in serious injury or death to the workers and/or bystanders.

Warning: DO NOT perform assembly, maintenance, or repair, if the ET-31™ Guardrail End Treatment site, shoulder, or traveled area is covered or encroached by road debris. Failure to follow this warning could result in serious injury or death in the event of a collision.

Warning: Ensure that the entire work zone site is well lighted at all times. Failure to follow this warning could result in serious injury or death to the workers and/or bystanders.

Warning: Use caution when working near public roads. Be mindful of vehicles in motion nearby. Failure to follow this warning could result in serious injury or death to the workers and/or bystanders.

Warning: Safety measures, incorporating traffic control devices, must be used to protect all personnel, while at the assembly, maintenance, or repair site. Failure to follow this warning could result in serious injury or death to the workers and/or bystanders. Trinity Highway Products offers an economical and effective truck mounted attenuator, the MPS-350, for the protection of workers in work zones. For more information on the MPS-350, call (888) 323-6374 or visit the Trinity Highway Products website at www.highwayguardrail.com.

Warning: Ensure that all guardrail products and delineation meet all federal, state or specifying agency, and local specifications. Failure to follow this warning could result in serious injury or death in the event of a collision.

Warning: DO NOT place a Steel Yielding Treatment Post (SYTP™) at location No. 1. Failure to follow this warning could result in serious injury or death in the event of a collision.

Warning: DO NOT place a Wood 6’ 0” long Controlled Release Terminal (CRT) post at location No. 1. Failure to follow this warning could result in serious injury or death in the event of a collision.

Warning: DO NOT bolt the Rail Panel in any fashion to the Post at location No. 1 in any of the ET-31™ Guardrail End Treatments. Doing so may impede the extrusion of the rail through the Head.

Note: The Head is attached to the No. 1 Post with an upper and lower 3/8” diameter fastener that has been shown to shear during impact within NCHRP 350 criteria.

Failure to follow this warning could result in serious injury or death in the event of a collision

Warning: Ensure that there is proper site grading for tube and post placement, as dictated by the state or specifying agency, pursuant to FHWA acceptance. Failure to follow this warning could result in serious injury or death in the event of a collision.

All rights in copyright reserved

Warning: Ensure that the proper leaveout (the specified area of open space in the pavement) around the posts is reserved and filled with state or specifying agency approved backfill material that will not prevent movement for any posts. Surrounding posts with rigid pavement such as any thickness of concrete or asphalt will prevent post movement in the soil and is NOT allowed. Failure to follow this warning could result in serious injury or death in the event of a collision.

Warning: Ensure that all of the ET-31™ Guardrail End Treatment Warnings, Cautions, and Important Statements within the ET-31™ Guardrail End Treatment Manual are completely followed. Failure to follow this warning could result in serious injury or death in the event of a collision.

Warning: Always use safety precautions when performing assembly, maintenance or repair, mixing chemicals, and/or moving heavy equipment. Wear steel toe shoes, gloves, safety goggles, and back protection. Failure to follow this warning could result in serious injury or death to the workers and/or bystanders.

Warning: Ensure all Wood Blocks or Composite Blocks used with Steel Posts are routered to establish a fixed vertical orientation relative to the Posts. Failure to follow this warning could result in serious injury or death in the event of a collision.

Warning: Ensure that this assembly conforms with the guidance provided by the *AASHTO Roadside Design Guide*, including, but not limited to, those regarding placement on curbs or islands. Failure to follow this warning could result in serious injury or death in the event of a collision.

Warning: Any grout, backfill, or other materials (such as concrete, asphalt, or soil) must be low enough so as not to obstruct, constrain, or otherwise engage the Bearing Plate. Failure to eliminate the interaction of soil or materials with the Bearing Plate will hinder the performance of the ET-31™ Guardrail End Treatment and could result in serious injury or death in the event of a collision.

Caution: Ensure before assembling, maintaining, or repairing the ET-31™ Guardrail End Treatment that no parts are frayed, damaged, or broken. Failure to follow this warning could result in serious injury to the workers and/or bystanders.

Warning: Do not place anything under the rail to post bolt head that would prevent the bolt from pulling through the Rail Panel. Failure to follow this warning could result in serious injury or death in the event of a collision.

All rights in copyright reserved

Know Your ET-31™ Guardrail End Treatment

ET-31™ Guardrail End Treatment
NCHRP Report 350 Test Level 3
System Length 34'-4 1/2" (10.48 m)

For specific assembly, maintenance, or repair details refer to the state or specifying agency's standard drawings and/or Trinity Highway Products standard layout drawings.

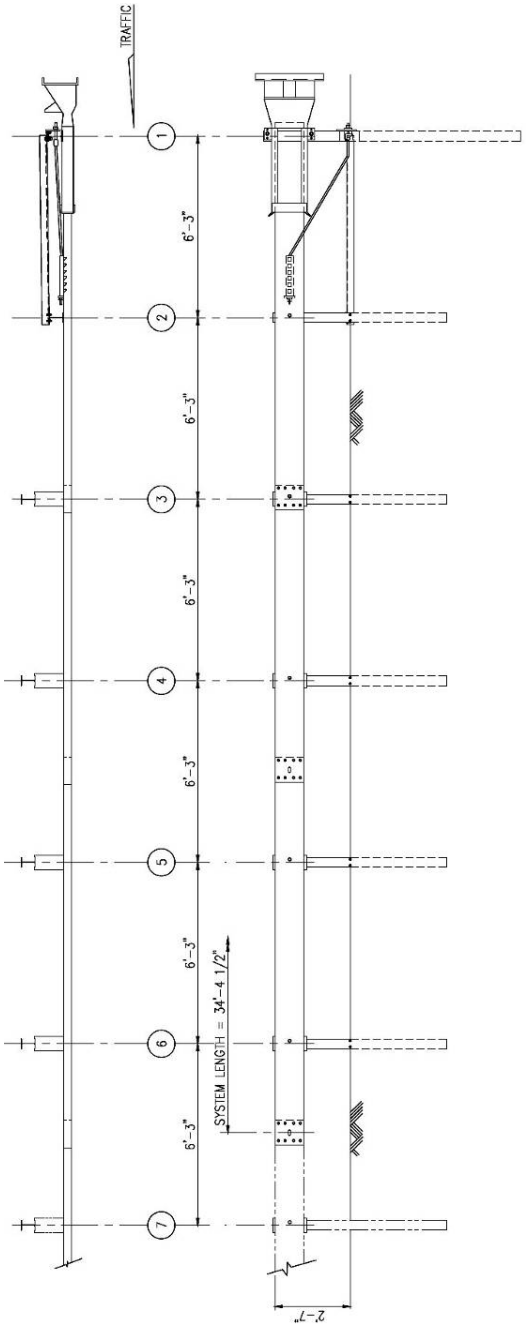

Figure 1 (TL-3)

[This drawing represents one version of the 34'-4 1/2" (10.48 m) system]

All rights in copyright reserved

Alternative Post Combinations

At Post locations 1 and 2, the alternates to HBA Post at location 1 and 6' Steel Yielding Treatment Post (SYTP) at location 2 are:

	Post Location 1	**Post Location 2**
Option 1	HBA Post	Short Foundation Tube with SYT Post Insert
Option 2	Long Foundation Tube with Wood Post insert	6’ SYTP or short Foundation Tube with SYT Post Insert
Option 3	Long foundation Tube with Wood Post Inserts	Long foundation Tube with Wood Post Inserts
Option 4	Short Foundation Tube with Soil Plate and Wood Post Inserts	Short Foundation Tube with Soil Plate and Wood Inserts
Option 5	Long Foundation Tube with Wood Post Inserts or Short Foundation Tube with Soil Plate and Wood Post Inserts	6’ SYTP or Short Foundation Tube with SYT Post Insert

For post locations 3 through 6, alternates to 6’ SYT posts are:

- All Short Tubes with Wood Post Inserts
- All 6’ Wood CRT Posts
- All Short Foundation Tubes with SYT Post Insert
- Any combination of above options, as accepted by the FHWA and dictated by the state or specifying agency

All rights in copyright reserved

ET-31™ Guardrail End Treatment
NCHRP Report 350 Test Level 3
System Length 40'-7 1/2" (12.35 m)

For specific assembly, maintenance, or repair details refer to the state or specifying agency's standard drawings and/or Trinity Highway Products standard layout drawings.

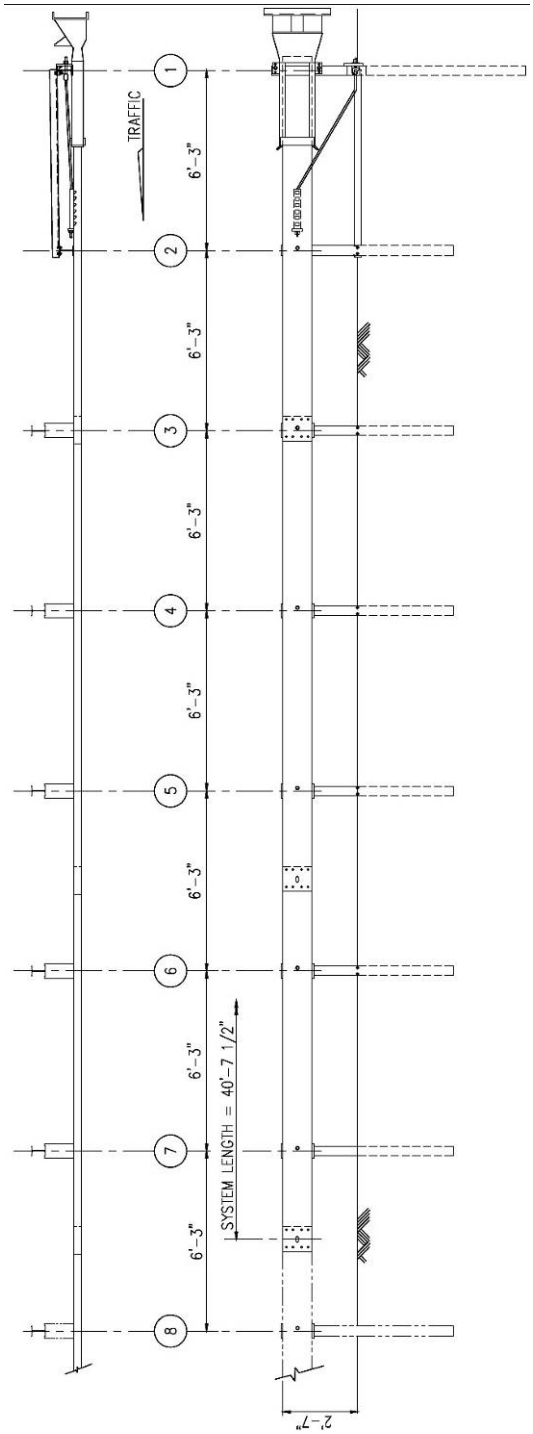

Figure 2 (TL-3)

[This drawing represents one version of the 40'-7 1/2" (12.38 m) system]

All rights in copyright reserved

Alternative Post and Rail Panel Combinations

At Post locations 1 and 2, the alternates to HBA Post at location 1 and 6' Steel Yielding Treatment Post (SYTP) at location 2 are:

	Post Location 1	**Post Location 2**
Option 1	HBA Post	Short Foundation Tube with SYT Post insert
Option 2	Long Foundation Tube with Wood Post insert	6’ SYTP or short foundation Tube with SYT Post insert
Option 3	Long Foundation Tube with Wood Post Inserts	Long foundation Tube with Wood Post Inserts
Option 4	Short Foundation Tube with soil plates and Wood Post Inserts	Short Foundation Tube with soil plates and Wood Inserts
Option 5	Long foundation Tube with soil Post insert or Short Foundation Tube with soil plate and Wood Post Inserts	6’ SYTP or Short Foundation Tube with SYT Post insert

For Post locations 3 through 6, alternates to 6’ SYT Posts are:

- All Short Tubes with Wood Post Inserts
- All 6’ Wood CRT Posts
- All Short Foundation Tubes with SYT Post insert
- Any combination of above options as accepted by the FHWA and dictated by the state or specifying agency

For Post location 7:

- Steel or Wood line Post dictated by the state or specifying agency

All rights in copyright reserved

ET-31™ Guardrail End Treatment
NCHRP Report 350 Test Level 3
System Length 46'-10 1/2" (14.29 m)

For specific assembly, maintenance, or repair details refer to the state or specifying agency's standard drawings and/or Trinity standard layout drawings.

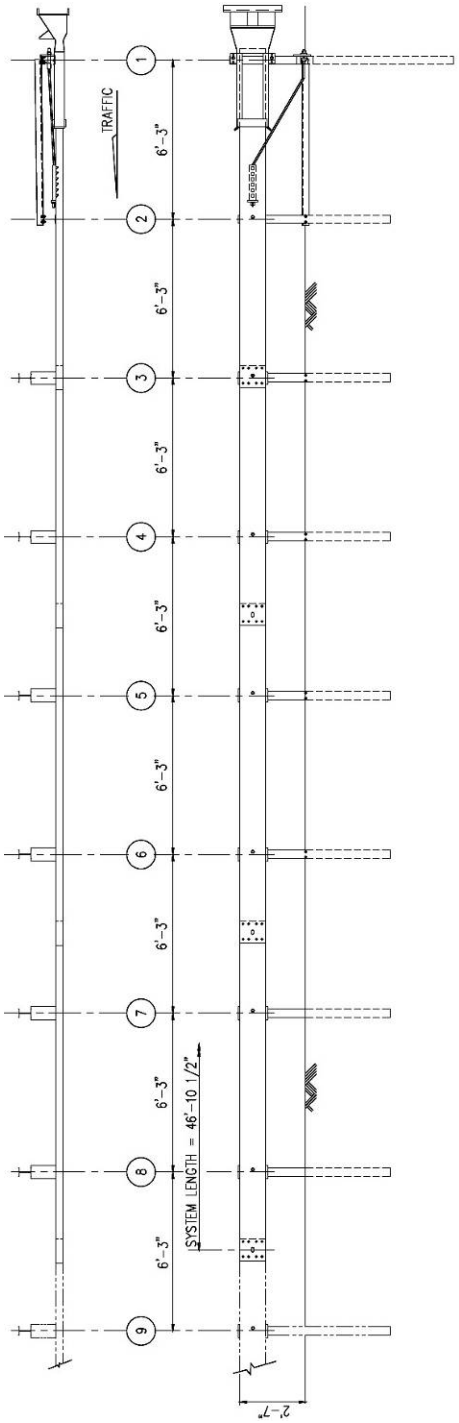

Figure 3 (TL-3)

[This drawing represents one version of the 46'-10 1/2" (14.29 m) system]

All rights in copyright reserved

Alternative Post and Rail Panel Combinations

At Post locations 1 and 2, the alternates to HBA Post at location 1 and 6' Steel Yielding Treatment Post (SYTP) at location 2 are:

	Post Location 1	**Post Location 2**
Option 1	HBA Post	Short Foundation Tube with SYT Post insert
Option 2	Long Foundation Tube with Wood Post Insert	6’ SYTP or Short Foundation Tube with SYT Post Insert
Option 3	Long Foundation Tube with Wood Post Inserts	Long foundation Tube with Wood Post Inserts
Option 4	Short Foundation Tube with soil plates and Wood Post Inserts	Short Foundation Tube with Soil Plates and Wood Post Inserts
Option 5	Long Foundation Tube with Wood Post Inserts or Short Foundation Tube with Soil Plates and Wood Post Inserts	6’ SYTP or Short Foundation Tube with SYT Post Insert

The alternate to two 12’ 6” (3.81 m) long rail elements is one 25’ 0” (7.62 m) long rail element.

For Post locations 3 through 6, alternates to 6’ SYT Posts are:

- All Short Tubes with Wood Post Inserts
- All 6’ Wood CRT Posts
- All Short Foundation Tubes with SYT Post insert
- Any combination of above options, as accepted by the FHWA and dictated by the state or specifying agency

For Post location 7 and 8:

- Steel or Wood line Post dictated by the state or specifying agency

All rights in copyright reserved

ET-31™ Guardrail End Treatment
NCHRP Report 350 Test Level 3
System Length 53'-1 1/2" (16.19 m)

For specific assembly, maintenance, or repair details refer to the state or specifying agency's standard drawings and/or Trinity standard layout drawings.

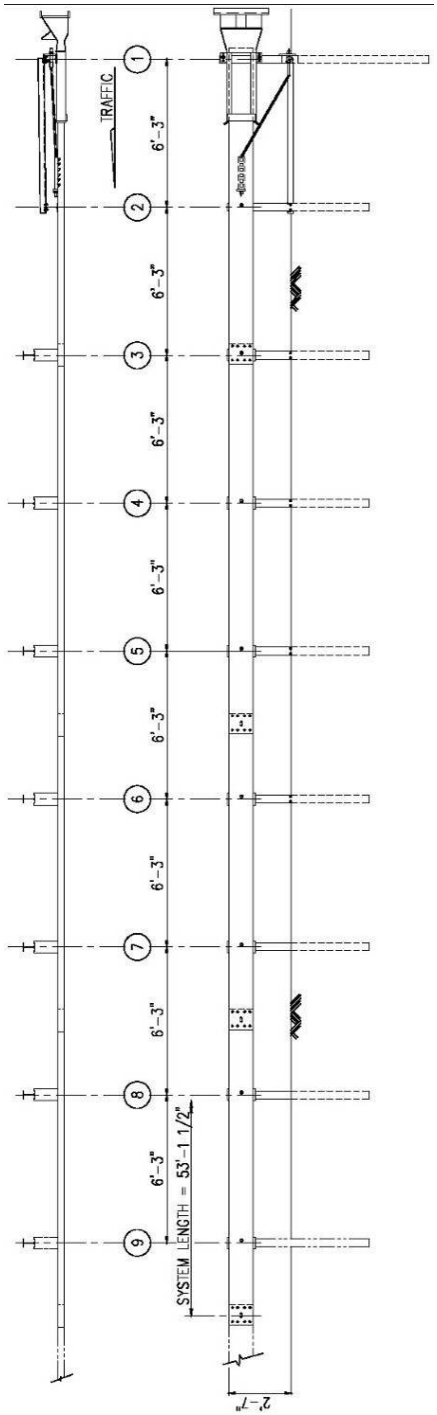

Figure 4 (TL-3)

[This drawing represents one version of the 53'-1 1/2" (16.19 m) system]

All rights in copyright reserved

Alternative Post and Rail Panel Combinations

At Post locations 1 and 2, the alternates to HBA Post at location 1 and 6' Steel Yielding Treatment Post (SYTP) at location 2 are:

	Post Location 1	**Post Location 2**
Option 1	HBA Post	Short Foundation Tube with SYT Post insert
Option 2	Long Foundation Tube with Wood Post insert	6’ SYTP or Short Foundation Tube with SYT Post Insert
Option 3	Long Foundation Tubes with Wood Post Inserts	Long foundation Tubes with Wood Post Inserts
Option 4	Short Foundation Tubes with Soil Plates and Wood Post Inserts	Short Foundation Tubes with Soil Plates and Wood Post Inserts
Option 5	Long Foundation Tube with Wood Post Inserts or Short Foundation Tube with Soil Plates and Wood Post Inserts	6' SYTP or Short Foundation Tube with SYT Post Insert

The alternate to two 12’ 6” (3.81 m) long Rail Panel elements is one 25’ 0” (7.62 m) long Rail Panel element.

For Post locations 3 through 6, alternates to 6’ SYT Posts are:

- All Short Tubes with Wood Post Inserts
- All 6’ Wood CRT Posts
- All Short Foundation Tubes with SYT Post Insert
- Any combination of above options, as accepted by the FHWA and dictated by the state or specifying agency

For Post location 7 through 9:

- Steel or Wood line Post dictated by the state or specifying agency

All rights in copyright reserved

ET-31™ Guardrail End Treatment
NCHRP Report 350 Test Level 2
System Length 21'-10 1/2" (6.68 m)

For specific assembly, maintenance, or repair details refer to the state or specifying agency's standard drawings and/or Trinity Highway Products standard layout drawings.

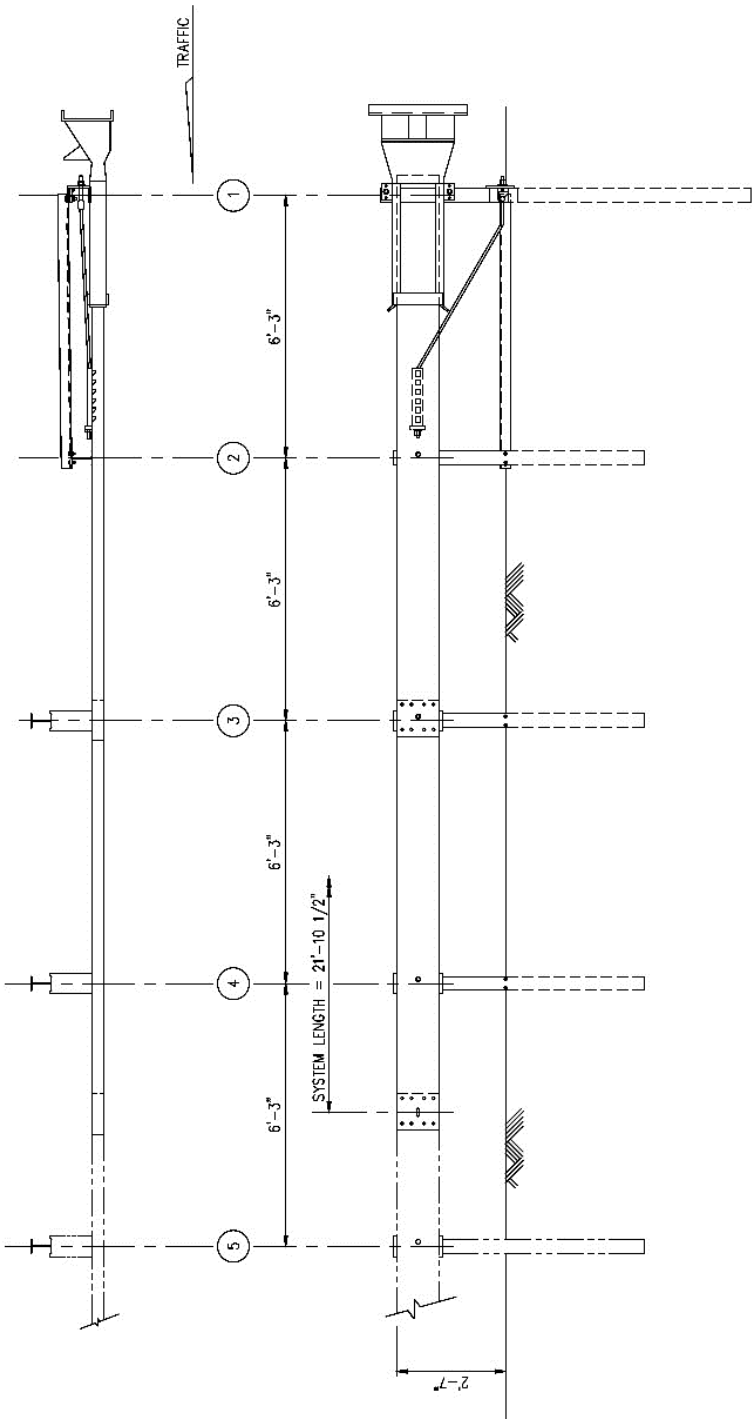

Figure 5 (TL-2)

[This drawing represents one version of the 21'-10 1/2" (6.68 m) system]

All rights in copyright reserved

Alternative Post Combinations

At Post locations 1 and 2, the alternates to HBA Post at location 1 and 6' Steel Yielding Treatment Post (SYTP) at location 2 are:

	Post Location 1	**Post Location 2**
Option 1	HBA Post	Short Foundation tube with SYT Post Insert
Option 2	Long Foundation Tube with Wood Post Insert	6' SYTP or Short Foundation Tube with SYT Post Insert
Option 3	Long Foundation Tubes with Wood Post Inserts	Long Foundation Tubes with Wood Post Inserts
Option 4	Short Foundation Tubes with Soil Plates and Wood Post Inserts	Short Foundation Tubes with Soil Plates and Wood Post Inserts
Option 5	Long Foundation Tube with Wood Post Inserts or Short Foundation Tube with Soil Plates and Wood Post Inserts	6' SYTP or Short Foundation Tube with SYT Post Insert

For Post locations 3 and 4, alternates to 6’ SYT Posts are:

- All Short Foundation Tubes with Wood Post Inserts
- All 6’ Wood CRT Posts
- All Short Foundation Tubes with SYT Post Insert
- Any combination of above options, as accepted by the FHWA and dictated by the state or specifying agency

All rights in copyright reserved

ET-31™ Guardrail End Treatment
NCHRP Report 350 Test Level 2
System Length 28’-1 1/2" (8.57 m)

For specific assembly, maintenance, or repair details refer to the state or specifying agency’s standard drawings and/or Trinity Highway Products standard layout drawings.

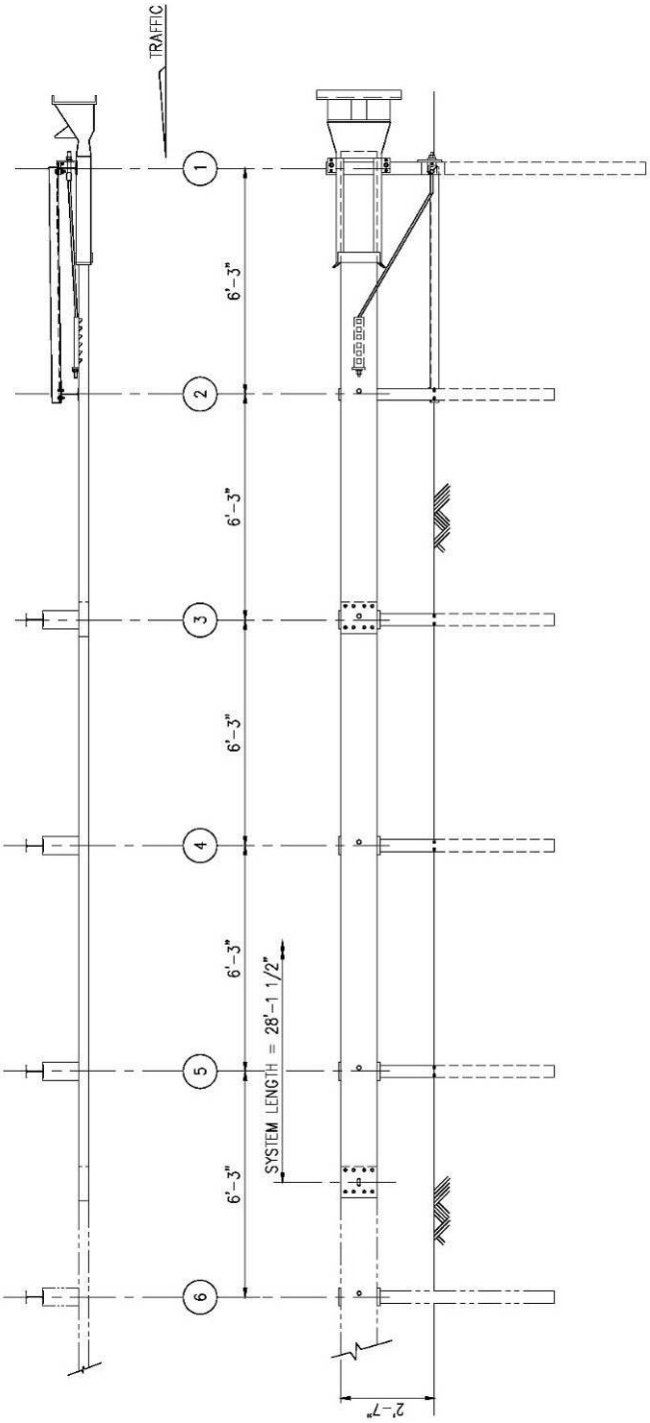

Figure 6 (TL-2)

[This drawing represents one version of the 28'-1 1/2” (8.57 m) system]

All rights in copyright reserved

Alternative Post Combinations

At Post locations 1 and 2, the alternates to HBA Post at location 1 and 6' Steel Yielding Treatment Post (SYTP) at location 2 are:

	Post Location 1	**Post Location 2**
Option 1	HBA Post	Short Foundation Tube with SYT Post Insert
Option 2	Long Foundation Tube with Wood Post Insert	6' SYTP or short Foundation Tube with SYT Post Insert
Option 3	Long Foundation Tubes with Wood Post Inserts	Long Foundation Tubes with Wood Post Inserts
Option 4	Short Foundation Tubes with soil plates and Wood Post Inserts	Short Foundation Tubes with Soil Plates and Wood Post Inserts
Option 5	Long Foundation Tube with Wood Post Inserts or Short Foundation Tube with Soil Plates and Wood Post Inserts	6' SYTP or short Foundation Tube with SYT Post Insert

For Post locations 3 and 4, alternates to 6' SYT Posts are:

- All Short Foundation Tubes with Wood Post Inserts
- All 6' Wood CRT Posts
- All Short Foundation Tubes with SYT Post Insert
- Any combination of above options, as accepted by the FHWA and dictated by the state or specifying agency

For Post locations 5:

- Steel or Wood line Post dictated by the state or specifying agency

All rights in copyright reserved

Bill of Materials English (Metric)

Warning: Use only Trinity Highway Products parts that are specified herein for the ET-31™ Guardrail End Treatment for assembling, maintaining, or repairing the ET-31™ Guardrail End Treatment. Do not utilize or otherwise comingle parts from other systems even if those systems are other Trinity Highway Products systems. Such configurations have not been tested, nor have they been accepted for use. Assembly, maintenance, or repairs using unspecified parts or accessories is strictly prohibited. Failure to follow this warning could result in serious injury or death in the event of a vehicle impact with an UNACCEPTED system.

ET-31™ Guardrail End Treatment

(For specific materials and quantities, see state or specifying agency's options and Trinity standard layout drawings)

PN	Description
11G	12/12.5'/3'-1.5"/S (2.67/3.81/0.952/S) (Guardrail)
32G	12/12.5"/6' 3"/S (2.67/3.81/1.905/S) ANC (Guardrail)
60G	12/25'/6' 3"/S (2.67/7.62/1.905/S) (Guardrail)
704A	Cable Anchor Bracket (unique to ET systems), with welded ears
705G	Pipe Sleeve - 2" STD Pipe x 51/2" (50 STD Pipe x 150 Pipe)
740G	6" x 8" x 4' 6" x 3/16 (152 x 203 x 1375 x 4.8) Tube Sleeve
749G	6" x 8" x 6' 0" x 3/16 (152 x 203 x 1830 x 4.8) Tube Sleeve (Alternate to using 740G and 766G)
758G	6" x 8" x 3'10"x 3/16" (252 x 203 x 1168 x 4.8) Tube Sleeve
766G	18" x 24" x 1/4" (460 x 610 x 16) Soil Plate
782G	8" x 8" x 5/8" (200 x 200 x 16) Bearing Plate **(For Wood Post)**
995A	ET-PLUS™ Extruder (Head)
3000G	Cable (Assembly) 3/4" x 6' 6" (19 x 1981)
3300G	5/8" (16) Round Washer
3340G	5/8" (16) HGR Nut
3391G	5/8" DIA. x 1 3/4" (16 DIA. x 45) Hex Head Bolt (High Strength)
3360G	5/8" DIA. X 1 1/4" (16 DIA. x 35) Splice Bolt (HGR)
3478G	5/8" DIA. x 7 1/2" (16 DIA. x 190) Hex Head Bolt
3497G	5/8" DIA. x 9 1/2" (16 DIA. x 240) Hex Head Bolt
3500G	5/8" DIA. x 10" (16 DIA. x 255) HGR Post Bolt
3580G	5/8" DIA. x 18" (16 DIA. x 460) HGR Post Bolt
3620G	5/8" DIA. x 22" (16 DIA. x 560) HGR Post Bolt
3700G	3/4" (19) Washer (F844)
3701G	3/4" (19) Washer (F436)
3704G	3/4" (19) Hex Nut
3717G	3/4" x 2 1/2" (19 x 75) Hex Head Bolt (High Strength)
3718G	3/4" x 3" (19 x 75) Hex Head Bolt (High Strength)
3900G	1" (25) Round Washer
3910G	1" (25) Hex Nut
4071B	Wood Post 6" x 8" x 6' 0" (150 x 200 x 1830) CRT

All rights in copyright reserved

4075B	Wood Block 6" x 8" x 14" (150 x 200 x 355) DR
4076B	Wood Block 6” x 8” x 14” (150 x 200 x 355) DR Routed
4140B	Wood Post 5 1/2” x 7 1/2” x 4’-0 1/4" (140 x 190 x 1225)
4161B	HDPE spacer (SYTP™)
4228B	3/8” x 4" (10 x 100) Lag Screw
4254G	3/8” (10) Round Washer
4255G	3/8” (10) Fender Washer 1 1/2” OD (38)
4258G	3/8” (10) Lock Washer
4261G	3/8” DIA. X 1 1/2" (10 x 38) Hex Head Bolt (Grade 5)
4389G	7/16” (11) Round Washer
4390G	7/16” DIA. x 1 1/2” (11 x 38) GR. 5 Hex Head Bolt
4393G	7/16” (11) Lock Washer
4396G	7/16” (11) Hex Nut
4660B	Wood Block 6” x 12 3/8” x 14” (150 x 315 x 350) Routed
4699G	3/4” (19) Lock Washer
5148G	3/4” DIA. X 9 1/2” (19 DIA. x 240) Hex Head Bolt (High Strength)
5978B	Polymer Block 4 x 12 x 14 (100 x 305 x 350)
6120G	Wood Block 6” x 12” x 14” (150 x 305 x 350)
6321G	3/8” x 2’ (10 x 50) Hex Head Bolt (Grade 5)
6405G	3/8” (10) Hex Nut
6907B	Polymer Block 4” x 7 1/2” x 14” (100 x 187 x 350) [King Block]
10967G	12/9'4.5/3'1.5/S (2.67/2.85/0.952/S) (Guardrail)
14328G	3’ 9 7/8” Steel Yielding Treatment Post (SYTP™)
15000G	6’ Steel Yielding Treatment Post™ (SYTP™)
19258A	8" x 8" x 5/8” (200 x 200 x 16) Bearing Plate With Two Ears/Tabs **(For HBA Post)**
19948G	1 ¾” x 10 GA x 1 ¾” (44 x 3 x 44) Plate Washer
20442G	12/15'7.5/3'1.5:2@6'3/S (2.67/4.76/.952:2@1.905/S) (Guardrail)
49398A	ET HBA™ Post #1 Top
33873A	ET HBA™ Post #1 Bottom
9852A	Strut (and Yoke Assembly)
32922G	6' 6" (1980) Angle Strut HBA™ / SYTP™ / Wood
33875G	6' 6" (1980) Angle Strut ET HBA™ (6’-3 C/C Slots)
33795G	6’ 6” (1980) Angle Strut HBA™ / SYTP™
33730G	6’ 7 1/2” (2020) Angle Strut SYTP™ / Wood
33847G	6’ 9 1/8” (2060) Angle Strut SYTP™ / CRP

Delineation Options

PN	Description
6206B	Right Side 13” x 27 1/2” (325 x 700) Reflective Sheeting Amber
6207B	Left Side 13” x 27 1/2” (325 x 700) Reflective Sheeting Amber
6668B	Either Side 12” x 12” (305 x 305) Reflective Sheeting (Typically 2 required) Amber
3534B	Either Side 12” x 12” (305 x 305) Reflective Sheeting (Typically 2 required) Silver

All rights in copyright reserved

Assembling the ET-31™ Guardrail End Treatment

Materials

As packaged, the NCHRP Report 350 ET-31™ Guardrail End Treatment includes all materials needed for a complete assembly. The pay limit will include a 34’ 4.5” (10.48 m) system, 40’ 7.5” (12.38 m) system, 46’ 10.5” (14.29 m) system, or 53’ 1.5” (16.19 m) system for TL-3 or 21’ 10.5” (6.68 m) or 28’ 1.5” (8.57 m) system for TL-2, unless otherwise specified in the contract plans.

Note: Concrete footings or foundations are not required.

Recommended Tools

- 9/16” (14 mm) Socket or wrench
- 15/16” (24 mm) Socket or wrench
- 1 1/4” (32 mm) Socket or wrench
- 1 1/2” (38 mm) Socket or wrench
- Augers
- Post pounders (commonly used in driving Posts)
- Locking pliers
- Tape measure

Recommend Tools for Repair

- Acetylene torch to cut off extruded rail
- Heavy-duty chain to remove the ET-PLUS™ Extruder (Head)
- Locking pliers or Channel Lock pliers
- Sledge hammer
- Post removal tool and other normal guardrail tools
- Eye bolts connected to heavy duty chain (to remove the Posts from Tubes)
- Vehicle to pull the Extruder (Head) from the damaged rail

Note: The above list(s) of tools is a general recommendation. Depending on specific site conditions and the complexity of the assembly specified by the appropriate highway authority, additional or fewer tools may be required. Decisions as to what tools are needed to perform the job are entirely within the discretion of the specifying highway authority, and the authority’s selected contractor performing the assembly of the system at the authority’s specified site. It is the province of the engineer working under the authority of the local highway authority that owns and has specified this product as to whether or not they wish to use the Extruder (Head) again after impact. Trinity makes no recommendation in this regard.

All rights in copyright reserved

Site Preparation

When the Guardrail is placed in-line with edge of the shoulder (without any offset), a 25:1 or flatter straight flare over the length of the systems can be used to position the ET-PLUS™ Extruder (Head) further away from the edge of the shoulder. Site grading may be necessary for assemblies beyond the edge of the shoulder for the proper placement of the steel tubes and the CRT Posts. Use the state or specifying agency's standard specifications and drawings for the site grading. Trinity does not direct grading. Complete all grading before the start of the assembly of the ET-31™ Guardrail End Treatment. See *Assembly of the ET-31™ Guardrail End Treatment on a Curve* section for the layout of the ET-31™ Guardrail End Treatment on a curve on Page 24.

If the system is deployed on a curve, see *Assembly of the ET-31™ Guardrail End Treatment on a Curve* section on Page 24. When placing the ET-31™ Guardrail End Treatment outside or inside the curve, the ET-31™ Guardrail End Treatment must be straight over the length of the system. If there are special field conditions encountered when assembling the ET-31™ Guardrail End Treatment, contact the state or specifying agency's engineer. Trinity Highway Products LLC, at (888) 323-6374, is available for consultation with that agency.

All rights in copyright reserved

Post Placed in Rigid Material

Provide the proper leaveout (the specified area of open space in the pavement) around a Post when assembling the Post in any thickness of concrete or asphalt. The top surfaces of any grout or other backfill placed in the rigid material leaveout **MUST be low enough** so that it does not restrict smooth release of the Anchor Cable Bearing Plate at Post 1 or otherwise obstruct or constrain the 3/8" shear bolts or the 3/4" hinge bolts of the HBA Post. The assembly shall not impede in any fashion the hinging-action or release mechanism of the No. 1 HBA post by burying it in rigid material (asphalt, concrete, rigid soil, etc.)

For leaveout information, please consult the applicable state or specifying agency. Additional source of leaveout information or details can be found in the U.S. Department of Transportation, Federal Highway Administration, Memorandum B 64-B, dated 3/10/04. Trinity can provide this FHWA memo upon request.

Assembling the ET-31™ Guardrail End Treatment on a Curve

When the ET-31™ Guardrail End Treatment is placed on a curve, use the following layouts. All offsets are measured to the face of the rail. Under no circumstances shall the guardrail within the ET-31™ Guardrail End Treatment pay limit be curved.

- Outside the curve: With the line guardrail placed parallel to the curve, the Treatment end is offset from the curve a distance equal to the line guardrail offset plus the value in Table 1. Consult state or specifying agency drawings for details.
- Inside the curve (radius greater than 1000 feet): With the line guardrail placed parallel to the curve, the Treatment end is offset from the curve a distance equal to the line guardrail offset plus the value in Table 1. Consult state or specifying agency drawings for details.
- Inside the curve (radius 1000 feet or less): With the line guardrail placed parallel to the curve, the Treatment end is offset from the curve a distance equal to the line guardrail offset plus one foot maximum in Table 1. Consult state or specifying agency drawings for details.

Table 1

ET-31™ Length	Outside the Curve Max Offset	Inside the Curve With a Radius Greater Than 1000 Feet Max Offset	Inside the Curve With a Radius 1000 Feet or Less Max Offset
53' 1.5"	24 Inches	24 Inches	12 Inches
46' 10.5"	18 Inches	18 Inches	12 Inches
40' 7.5"	18 Inches	18 Inches	12 Inches
34' 4.5"	12 Inches	12 Inches	12 Inches
28'-1 1/2"	12 Inches	12 Inches	12 Inches
21'-10 1/2"	12 Inches	12 Inches	9 Inches

All rights in copyright reserved

Assembling the Posts

Complete the following steps when assembling HBA™ Posts, Steel Yielding Treatment Posts™ (SYTP™), foundation tube with wood Posts and wood CRT Posts. For non-breakaway posts, follow the agency's assembly instructions. For placing posts in rigid pavement, also see the Post Assembled in Rigid Material section.

Assembling HBA™ Post

Assembling HBA™ Bottom Post – Post Location 1

Complete the following steps to assemble the HBA™ Bottom Post:

Step	Actions
1.	Arrange the HBA™ bottom (PN-33873A) posts so that the large hole (13/16" [21 mm]) is placed downstream (away from the impact end of the system).
2.	Select Option A or Option B for this assembly.
Option A	Drive the HBA™ Bottom Post with an approved driving head to a depth of approximately 72" (1830 mm).
Option B	1. Drill a 12" (300 mm) maximum diameter pilot hole approximately 72" (1830 mm) deep. 2. Insert the bottom HBA™ Post in the hole. 3. Backfill the holes with compactable materials in 6" (150 mm) lifts and compact with pneumatic equipment to optimum compaction. **Note:** In either option, the optimum depth will have the 13/16" (21 mm) hole in the post plates (ears/tabs) even with the finished grade.

All rights in copyright reserved

Assembling HBA™ Top Post

Complete the following steps to assemble the HBA™ Top Post, after the Bottom Post has been assembled:

Step	Actions
1.	Place the Top Post (PN-49398A) at Post 1, by aligning the holes of the post plates (ears) on the top and bottom posts. **Note:** The Top Post's post plates (ears) can be attached on either side of the Bottom Post's post plates (ears).
2.	Insert a 3/8" (10 mm) diameter x 2" (50 mm) hex head high strength bolt (PN-6321G) through the 7/16" (11 mm) holes of the post plates (ears) on the Top and Bottom Posts.
3.	Place a 3/8" (10 mm) washer (PN-4252G) and a 3/8" (10 mm) lock washer (PN-4258G) under a 3/8" (10 mm) hex nut (PN-6405G) on the inserted bolts to secure. **Note:** The bolts can be assembled so the nuts are on the inside or outside of the post plates (ears).
4.	Tighten the nuts to a snug position. The designer does not recommend a torque requirement for the HBA field assembly.
5.	Insert a 3/4" (19 mm) diameter x 2 1/2" (63 mm) hex head high strength bolt (PN-5148G) in the 13/16" (21 mm) hole of the HBA™ Post 1 post plates on the side opposite the strut. Do not assemble the 3/4" (19 mm) bolt on the strut side of Post 1, until the strut is ready to be assembled. **Note:** The bolts can be assembled so the nuts are on the inside or outside of the post plates (ears).
6.	Place a 3/4" (19 mm) washer (PN-3701G) and a 3/4" (19 mm) lock washer (PN-4699G) under a 3/4" (19 mm) hex nut on the inserted bolt to secure.
7.	Tighten the nuts to a snug position. The designer does not recommend a torque requirement for the HBA field assembly.

Assembling the Steel Yielding Treatment Post™ (SYTP™)

The SYTP™ can be driven or assembled in a tube. For SYTP™ assembly in a tube, see the *Assembling the SYTP™ in Tubes* section. The SYTP™ can be assembled at all locations EXCEPT at location 1. Complete the following step to assemble the SYTP™:

Warning: Do NOT assemble SYTP™ at location 1. Failure to follow this warning could result in serious injury or death in the event of a collision.

Placing the 6' (1.83 m) SYTP™

Step	Actions
1.	Drive all the 6' 0" SYTP™ (PN-15000G) to the optimum depth where the centers of the four yielding holes through the flange are at the ground line.
	Warning: DO NOT assemble SYTP™ at location 1. Failure to follow this warning could result in serious injury or death in the event of a collision.
	Warning: Ensure that the proper leaveout (the specified area of open space in the pavement) around the posts is reserved and filled with state or specifying agency approved backfill material that will not prevent movement, for any posts assembled in rigid pavement such as any thickness of concrete or asphalt. Failure to follow this warning could result in serious injury or death in the event of a collision.

All rights in copyright reserved

Assembling Foundation Tubes

Complete the following steps to assemble foundation tubes.

6’ 0” Foundation Tube (Post locations 1 and/or 2)

Step	Actions
1.	Assemble a 5/8” x 7 ½” (16 mm x 190 mm) hex head bolt (PN-3478G) and 5/8” (16 mm) HGR nut (PN-3340G) in the Foundation Tube (PN-749G) as a post stop. Use 2 bolts when the SYTP is assembled. Use 1 bolt when a Wood Post is assembled. **Note**: Do not over tighten the nuts and deform the tubes as this will complicate post replacement.
2.	The foundation tube can be assembled by driving or with a pilot hole. See *For Driven Foundation Tube Assembling* or *For Pilot Hole Foundation Tube Assembly* sections for assembly instructions.
3.	Assemble the foundation tubes at locations 1 and 2. Use the strut as a guide for the spacing of the tubes. **Note:** Do not drive Tubes with the Wood Post inserted; this will complicate post replacement.
	Warning: Ensure that the proper leaveout (the specified area of open space in the pavement) around the posts is reserved and filled with state or specifying agency approved backfill material that will not prevent movement, for any posts assembled in rigid pavement such as any thickness of concrete or asphalt. Failure to follow this warning could result in serious injury or death in the event of a collision.

4’ 6” Foundation Tube with Soil Plate (Post locations 1 and/or 2)

Step	Actions
1.	Bolt the Soil Plate (PN-766G) to the Foundation Tube (PN-740G) with two 5/8" x 7 1/2" (16 mm x 190 mm) hex head bolts (PN-3478G) and 5/8" (16 mm) HGR nuts (PN-3340G) (no washers). **Note:** Do not over tighten the nuts and deform the tubes; this will complicate post replacement.
2.	The foundation tube can be placed by driving or with a pilot hole. See *For Driven Foundation Tube Assembly* or *For Pilot Hole Foundation Tube Assembly* sections for assembly instructions.
3.	Assemble the foundation tubes at locations 1 and 2. Use the strut as a guide for the spacing of the tubes. If the Soil Plate is utilized, position it on the downstream side of the post (away from the Impact Head). **Note:** Do not drive Tubes with the Wood Post inserted; this will complicate post replacement.
	Warning: Ensure that the proper leaveout (the specified area of open space in the pavement) around the posts is reserved and filled with state or specifying agency approved backfill material that will not prevent movement, for any posts assembled in rigid pavement such as any thickness of concrete or asphalt. Failure to follow this warning could result in serious injury or death in the event of a collision.

All rights in copyright reserved

4’ 6” Foundation Tube (Post locations 2 - 6, per state specifications):

Step	Actions
1.	Assemble a 5/8” x 7 ½” (16 mm x 190 mm) hex head bolt (PN-3478G) and 5/8” (16 mm) HGR nut (PN-3340G) in the Foundation Tube (PN-749G) as a post stop. Use 2 bolts where the SYTP is placed. Use 1 bolt when a wood post is attached. **Note:** Do not over tighten the nuts and deform the tubes as this will complicate post replacement.
2.	The foundation tube can be assembled by driving or with a pilot hole. See *For Driven Foundation Tube Assembly* or *For Pilot Hole Foundation Tube Assembly* sections for Assembly instructions.
3.	Assemble the foundation tubes. Use the strut as a guide for the spacing of the tube at location 2. **Note:** Do not drive tubes with the wood post inserted; this will complicate post replacement.
	Warning: Ensure that the proper leaveout (the specified area of open space in the pavement) around the posts is reserved and filled with state or specifying agency approved backfill material that will not prevent movement, for any posts placed in rigid pavement such as any thickness of concrete or asphalt. Failure to follow this warning could result in serious injury or death in the event of a collision.

3’ 10” Foundation Tube (Post locations 2 - 6, per state specifications):

Step	Actions
1.	Assemble a 5/8” x 7 ½” (16 mm x 190 mm) hex head bolt (PN-3478G) and 5/8” (16 mm) HGR nut (PN-3340G) in the Foundation Tube (PN-758G) as a post stop. Use 2 bolts where the SYTP is deployed. Use 1 bolt when a wood post is deployed. **Note:** Do not over tighten the nuts and deform the tubes as this will complicate post replacement.
2.	The foundation tube can be assembled by driving or with a pilot hole. See *For Driven Foundation Tube Assembly* or *For Pilot Hole Foundation Tube Assembly* sections for Assembly instructions.
3.	Assemble the foundation tubes. Use the strut as a guide for the spacing of the tube at location 2. **Note:** Do not drive Tubes with the Wood Post inserted; this will complicate post replacement.
	Warning: Ensure that the proper leaveout (the specified area of open space in the pavement) around the Posts is reserved and filled with state or specifying agency approved backfill material that will not prevent movement, for any posts placed in rigid pavement such as any thickness of concrete or asphalt. Failure to follow this warning could result in serious injury or death in the event of a collision.

All rights in copyright reserved

Assembly Options for Foundation Tubes

Complete the following steps to place foundation tubes.

For Driven Foundation Tube Assembly

Step	Actions
1.	Drive the foundation tubes (with an appropriate driving head) to the optimum depth, where the top of the tube is 2 5/8” (67 mm) above the finished grade. **Note:** Take extra care to prevent settlement or lateral displacement of the tubes, to ensure the posts attach to the guardrail, correctly.
2.	Ensure that the finished guardrail height will be approximately 31" (787 mm) above the finished grade, or as the state or specifying agency plans indicate.
3.	Ensure that the tubes do not project more than 4" (100 mm) above the finished grade.
	Warning: Ensure that the proper leaveout (the specified area of open space in the pavement) around the posts is reserved and filled with state or specifying agency approved backfill material that will not prevent movement, for any posts placed in rigid pavement such as any thickness of concrete or asphalt. Failure to follow this warning could result in serious injury or death in the event of a collision.

For Pilot Hole Foundation Tube Assembly

Step	Actions
1.	Drill a 12” (300 mm) maximum diameter pilot hole approximately 49” (1245 mm) deep for the 3’ 10” (1168 mm) long foundation tube, 57” (1450 mm) deep for the 4’ 6” (1370 mm) long foundation tube or 75” (1905 mm) for the 6’ 0” (1830 mm) long foundation tube. If the foundation tube has a soil plate, use Option A or B with this step.
Option A	Cut slots for the soil plates out by hand or by using a rock bar and then follow all of the steps of Option A for 4’ 6” tube with soil plate, above.
Option B	Drill three adjacent 12” (300 mm) maximum diameter holes or one 24” (610 mm) maximum diameter hole to accommodate the soil plate / tube assembly and then follow all of the steps of Option A for 4’ 6” tube with soil plate, above. **Note:** Take extra care to prevent settlement or lateral displacement of the tubes, to ensure the posts attach to the guardrail correctly.
	Warning: Ensure that the proper leaveout (specified area of open space in the pavement) around the posts is reserved and filled with state or specifying agency approved backfill material that will not prevent movement, for any posts placed in rigid pavement such as any thickness of concrete or asphalt. Failure to follow this warning could result in serious injury or death in the event of a collision.
2.	Backfill the hole with compactable materials in 6" (150 mm) lifts and compact with pneumatic equipment to optimum compaction.
3.	Ensure that the finished guardrail height will be approximately 31" (787 mm) above the finished grade, or as the state or specifying agency plans indicate.
4.	Ensure that the tubes do not project more than 4" (100 mm) above the finished grade.

Created January 2013
All rights in copyright reserved

Assembling the SYTP™ in Tubes (Post Locations 2 through 6)

Step	Actions
1.	Attach the 3’ 9 7/8” (1.16 m) SYTP™ (PN-14328G) in tubes.
	Warning: DO NOT assemble SYTP™ at location 1. Failure to follow this warning could result in serious injury or death in the event of a collision.
	Warning: Ensure that the proper leave out (the specified area of open space in the pavement) around the posts is reserved and filled with state or specifying agency approved backfill material that will not prevent movement, for any posts assembled in rigid pavement such as any thickness of concrete or asphalt. Failure to follow this warning could result in serious injury or death in the event of a collision.
2.	Follow the instructions in the *Assembling the Strut* section, Step 5.
3.	Except at Post 1, assemble the SYTP™ in a tube at locations required for the system with the four yielding holes (through the flange) at the top of the tube.
4.	From the embankment side of the tube, insert a 5/8” x 9 1/2” (16 mm x 240 mm) hex head bolt (PN-3497G) through the tube, the spacer (PN-4161), and the SYTP™
5.	Place a 5/8” (16 mm) HGR nut (PN-3340G) on the inserted bolt, to secure the SYTP™ to the tube. **Note:** Do not over tighten the nut and deform the tubes; this will complicate post replacement.

Assembling Wood Posts in Tubes

Complete the following steps to assemble wood posts in tubes:

Step	Actions
1.	Insert Pipe Sleeve (PN-705G) in post (PN-4140B) and assemble the wood post in the steel tube at location 1.
2.	Assemble Wood Post(s) (PN-4140B) in tubes at locations required for the system, as dictated by the state or specifying agency.
3.	Insert a 5/8” x 9 1/2” (16 mm x 240 mm) hex head bolt (PN-3497G) through the Foundation Tube and the Wood Post at all locations EXCEPT locations 1 and 2. **Note:** The bolt must be assembled from the embankment side, to aid in possible post replacement.
4.	Place a 5/8” (16 mm) HGR nut (PN-3340G) on the end of the inserted bolt.
5.	Tighten the nuts to a snug position. **Note:** Do not over tighten the bolts and deform the tubes; this will complicate post replacement.
	Warning: Ensure that the proper leaveout (the specified area of open space in the pavement) around the posts is reserved and filled with state or specifying agency approved backfill material that will not prevent movement, for any posts assembled in rigid pavement such as any thickness of concrete or asphalt. Failure to follow this warning could result in serious injury or death in the event of a collision.

All rights in copyright reserved

Assembling Wood CRT Posts

Complete the following steps to assemble the wood CRT posts:

Step	Actions
1.	Assemble the Wood Posts (PN-4071B) at locations required for the system, spaced at 6' 3" (1270 mm) apart. Select Option A or Option B to place the CRT posts.
Option A	Drive posts into the ground.
Option B	1. Drill 12” (300 mm) maximum diameter pilot holes approximately 44" (1120 mm) deep. 2. Insert the 6' 0" (1830 mm) Wood Posts into these holes. 3. Backfill the holes with compactable materials in 6" (150 mm) lifts and compact with pneumatic equipment to optimum compaction.
	Note: In either option within Step 1, the bottom of the upper 3 1/2" (90 mm) hole in the post is approximately at the finished grade.
	Warning: DO NOT assemble 6’ 0” CRT post at location 1 and 2. Failure to follow this warning could result in serious injury or death in the event of a collision.
	Warning: Ensure that the proper leaveout (the specified area of open space in the pavement) around the posts is reserved and filled with state or specifying agency approved backfill material that will not prevent movement, for any posts assembled in rigid pavement such as any thickness of concrete or asphalt. Failure to follow this warning could result in serious injury or death in the event of a collision.

Assembling Foundation Tubes, HBA™ Posts, or SYTP™ when Encountering Rock

Complete the following steps to assemble foundation tubes, HBA™ posts or SYTP™ when encountering rock:

Step	Actions
1	Select Option A or Option B below when encountering rock, unless there is a more restrictive state or specifying agency specification.
Option A	If rock is encountered and 20 inches (510 mm) or less of the full length post or foundation tube remains to be embedded:
	1. Drill a 12" to 16" (300 mm to 400 mm) diameter hole into the rock.
	2. Drill holes 2" (50 mm) deeper than the required embedment depth.
	3. Place granular material or small pieces of the drilled rock in the bottom 2" (50 mm) of the hole for drainage.
	4. Assemble the tube or post into the hole. Backfill the hole with compactable materials in 6" (150 mm) lifts and compact with pneumatic equipment to optimum compaction. **Note:** If compactable, the material removed from the hole may be used for backfill.

Created January 2013
All rights in copyright reserved

Option B	If rock is encountered and more than 20 inches (510) of the full length post or foundation tube remains to be embedded: 1. Drill a 12" to 16" (300 mm to 400 mm) diameter hole 22" (560 mm) deep into the rock. 2. Cut off the embedded portion of the tube or post so the Guardrail will be at the proper mounting height. Cutting off the bottom of the embedded portion of full length post or foundation tube is permitted only when a minimum of 20” (510 mm) embedment into rock can be achieved. 3. Place granular material or small pieces of the drilled rock in the bottom 2" (50 mm) of the hole for drainage. 4. Assemble the tube or post in the hole. Backfill the hole with compactable materials in 6" (150 mm) lifts and compact with pneumatic equipment to optimum compaction. **Note:** If compactable, the material removed from the hole may be used for backfill.
	Warning: Ensure that the proper leaveout (the specified area of open space in the pavement) around the posts is reserved and filled with state or specifying agency approved backfill material that will not prevent movement, for any posts assembled in rigid pavement such as any thickness of concrete or asphalt. Failure to follow this warning could result in serious injury or death in the event of a collision.

Assembling the Strut

Complete the following steps when assembling the strut:

Note: For all strut assemblies, the assembler must provide a shallow valley or trough for assembly of the strut, since a portion of the angle strut will be below grade.

Assembling the Strut with HBA™ Post at Post 1 and SYTP™ at Post 2

Complete the following steps to assemble the strut.

At Post 1

Step	Actions
1.	Place the angle strut on the outside flanges of the HBA™ post. **Note:** The strut can be placed with one of the legs flat on the ground or with the leg edge on the ground. The strut may be attached either on the traffic side or the field side of the posts.
2.	Assemble a 3/4” (19 mm) diameter x 2 1/2” (63 mm) hex head high strength bolt (PN-3717G) in the 13/16” (21 mm) hole of the HBA™ Post 1 post plates. Place the bolt through the top and bottom post’s post plates and through the strut.
3.	Place a 3/4” (19 mm) washer (PN-3700G) and a 3/4” (19 mm) lock washer under a 3/4” (19 mm) hex nut on the end of the bolt to secure.
4.	Tighten the nuts to a snug position. (The designer does not recommend a torque requirement.)

All rights in copyright reserved

For Angle Strut with 6' SYTP™ at Post 2

Step	Actions
1.	Place the Angle Strut (PN-33795G) on the embankment side of the SYTP™. (The strut can be placed with one of the legs flat on the ground or with the leg edge on the ground.)
2.	Place a 7/16" (11 mm) round washer (PN-4389G) on the two 7/16" (11 mm) diameter x 1 1/2" (38 mm) hex head high strength bolts (PN-4390G).
3.	Insert the two bolts through the two slotted holes of the strut and the yielding diameter holes of the SYTP™, at Post 2.
4.	Place a 7/16" (11 mm) lock washer (PN-4393G) and a plate washer (PN-19948G) under a 7/16" (11 mm) hex nut (PN-4388G) on the ends of inserted bolts. When in the correct position, plate washer is placed against yielding holes of the post and under the lock washer and nut.
5.	Tighten the nuts to a snug position. (The designer does not recommend a torque requirement.)

For Angle Strut with SYTP™ in Tube at Post 2

Step	Actions
1.	Place the Angle Strut (PN-33875G) on the embankment side of the tube. (The strut can be placed with one of the legs flat on the ground or with the leg edge on the ground.)
2.	Place a 3/4" (19 mm) washer (PN-3701G) on a 3/4" (19 mm) diameter x 9 1/2" (240 mm) hex head high strength bolt (PN-5148G).
3.	From the embankment side, insert the bolt through the Strut, Foundation Tube, spacer (PN-4161), and the SYTP™ at Post 2.
4.	Place a 3/4" (19 mm) washer (PN-3701G) under a 3/4" (19 mm) hex nut on the end of the inserted bolt.
5.	Tighten the nuts to a snug position. (The designer does not recommend a torque requirement.) **Note:** Do not over tighten the bolts and deform the tubes; this will complicate possible post replacement.

All rights in copyright reserved

Assembling the Strut with Wood CRT Post in Tube at Post 1 and SYTP™ at Post 2

Complete the following steps to assemble the strut:

At Post 1

Step	Actions
1.	Place the Angle Strut on the embankment side of the Foundation Tube.
2.	Place a 3/4" (19 mm) washer (PN-3701G) on a 3/4" (19 mm) diameter x 9 1/2" (240 mm) hex head high strength bolt (PN-5148G).
3.	From the embankment side, insert the bolt through the Strut, the Foundation Tube, and the Wood Post.
4.	Place a second washer under a 3/4" (19 mm) hex nut (PN-3704G) on the end of the inserted bolt.
5.	Tighten the nuts to a snug position. (The designer does not recommend a torque requirement.)

For Angle Strut with 6' SYTP™ at Post 2

Step	Actions
1.	Place the Angle Strut (PN-33730G) on the embankment side of the SYTP™. (The Strut can be placed with one of the legs flat on the ground or with the leg edge on the ground.)
2.	Place a 7/16" (11 mm) round washer (PN-4389G) on the two 7/16" (11 mm) diameter x 1 1/2" (38 mm) hex head high strength bolts (PN-4390G).
3.	Insert the two bolts through the two slotted holes of the strut and the yielding diameter holes of the SYTP™, at Post 2.
4.	Place a 7/16" (11 mm) lock washer (PN-4393G) and a plate washer (PN-19948G) under a 7/16" (11 mm) hex nut (PN-4388G) on the ends of inserted bolts. When in the correct position, the plate washer is assembled against the yielding holes of the post and under the lock washer and nut.
5.	Tighten the nuts to a snug position. (The designer does not recommend a torque requirement)

For Angle Strut with SYTP™ in Tube at Post 2

Step	Actions
1.	Place the Angle Strut (PN-33875G) on the embankment side of the tube. (The Strut can be placed with one of the legs flat on the ground or with the leg edge on the ground.)
2.	Place a 3/4" (19 mm) washer (PN-3701G) on a 3/4" (19 mm) diameter x 9 1/2" (240 mm) hex head high strength bolt (PN-5148G).
3.	From the embankment side, insert the bolt through the Strut, Foundation Tube, spacer (PN-4161), and the SYTP™ at Post 2.
4.	Place a 3/4" (19 mm) washer (PN-3701G) under a 3/4" (19 mm) hex nut on the end of the inserted bolt
5.	Tighten the nuts to a snug position. (The designer does not recommend a torque requirement.) **Note:** Do not over tighten the bolts and deform the tubes; this will complicate possible post replacement

All rights in copyright reserved

Assembling the Strut with Wood Posts in Soil Tubes (Post Locations 1 and 2)

Complete the following steps to assemble the strut:

For Angle Strut

Step	Actions
1.	Place the Angle Strut (PN-33875G) on the embankment side of the Foundation Tubes.
2.	Place a 3/4” (19 mm) washer (PN-3701G) on a 3/4” (19 mm) diameter x 9 1/2” (240 mm) hex head high strength bolt (PN-5148G).
3.	From the embankment side, insert the bolt through the Strut, the Foundation Tube, and the Wood Post.
4.	Place a second washer under a 3/4” (19 mm) hex nut (PN-3704G) on the end of the inserted bolt.
5.	Tighten the nuts to a snug position. (The designer does not recommend a torque requirement.)

For Channel Ground Strut

Step	Actions
1.	Place the slotted yokes of the Ground Strut (PN-9852A) over the Foundation Tubes.
2.	Place a 5/8" (16 mm) round washer (PN-3300G) on a 5/8" (16 mm) diameter x 9 1/2" (240 mm) hex head bolt (PN-3497G).
3.	From the embankment side, insert the bolt through the Strut, Foundation Tube, and the Wood Post.
4.	Place a second washer under a 5/8" (16 mm) HGR hex nut on the end of the inserted bolt.
5.	Tighten the nuts to a snug position. (The designer does not recommend a torque requirement.) **Note:** Do not over tighten the bolts and deform the tubes; this will complicate possible post replacement.

Assembling Offset Blocks and Rail Panels

The ET-31™ Guardrail End Treatment uses a 12’ 6” (3.81 m) Rail Panel (PN-32G). Depending on the state or specifying agency standards, a combination of the following Rail Panels will be used for their system: 9’ 4 1/2” (2.86 m) Rail Panel (PN-10967G), 15’ 7 ½” (4.76 m) Rail Panel (PN-20442G), 12’ 6” (3.81 m) Rail Panel (PN-11G), or 25’ (7.62 m) Rail Panel (PN-60G).

Warning: DO NOT bolt the Rail Panel to the post at location 1 in any of the ET-31™ Guardrail End Treatment. Failure to follow this warning could result in serious injury or death in the event of a collision.

Created January 2013
All rights in copyright reserved

Splicing the Rail Panels

Complete the following steps to splice the rail panels:

Step	Actions
1.	Lap the Treatment rail in the direction of traffic, unless the state or specifying agency's policy dictates otherwise. EACH RAIL PANEL MUST BE STRAIGHT WITH NO VISIBLE DISTORTIONS OR BLEMISHES SUCH AS CURVES, DENTS, CUTS, TEARS, EXTRA HOLES, CUT-OUTS, CORROSION OR SIGNS OF PAST REPAIRS. Rails with distortions that could compromise its ability to resist compressive load induced by the Head during head-on impacts shall not be used.
2.	Splice the Rail Panels together with eight 5/8" x 1 1/4" (16 mm x 32 mm), HGR splice bolts (PN-3360G), and 5/8" (16 mm) HGR hex nuts.
	Warning: USE ONLY PROPER LENGTH SPLICE BOLTS (1-1/4" LONG) which have Trinity's "TRN" identifying mark stamped into the top of the bolt head. Failure to follow this warning could result in serious injury or death in the event of a collision.
3.	Tighten the bolts. (There is no torque requirement.)

Assembling the Offset Block and Rail Panel to Wood Posts (Posts 3 through 6)

Complete the following steps to attach the Offset Blocks and Rail Panels to the Wood Posts:

Step	Actions
1.	1. At locations with Wood Posts and Wood Blocks, insert a 5/8" (16 mm) diameter 22" (560 mm) HGR post bolt (PN-3620G) through the Rail Panel, Offset Block (PN-4660B), and the Post. **Note:** Offset Blocks are NOT used at post locations 1 and 2, but are used at all other locations.
	Warning: Do NOT bolt the Rail Panel to the post at location 1 in any of the ET-31™ Guardrail End Treatment. Failure to follow this warning could result in serious injury or death in the event of a collision.
2.	Place a 5/8" (16 mm) round washer (PN-3300G) under a 5/8" (16 mm) HGR nut (PN-3340G).
3.	Tighten the bolts. (There is no torque requirement for these bolts.)
4.	Secure the Offset Block by toe nailing the Block to the Post or the Post to the Block, with two 16d hot-dipped galvanized nails approximately 3" (75 mm) from the top of the Post or Block, one on each side, to prevent it from rotating.

Assembling the Offset Block and Rail Panel to SYTP™ (Posts 3 through 6)

Complete the following steps to attach the Offset Blocks and Rail Panels to the SYTP™:

Step	Actions
1.	At locations with Steel Yielding Treatment Post™ (SYTP™) with Offset Blocks, insert a 5/8" (16 mm) diameter x 14" (355 mm) HGR post bolt (PN-3540G) through the Rail Panel, routered Wood (PN-4076B) or Composite (PN-6707B) Blockout, and the SYTP™. **Note:** Offset Blocks are NOT used at post locations 1 and 2. For SYTP™ Inserts, there are two sets of holes in the SYTP™ for attaching the rail. Use the holes in the SYTP™ that will place the rail at the correct height.
	Warning: DO NOT bolt the Rail Panel to the post at location 1 in any of the ET-PLUS™ systems. Failure to follow this warning could result in serious injury or death in the event of a collision.

All rights in copyright reserved

	Warning: Ensure all Wood Blocks or Composite Blocks used with steel posts are routered. Failure to follow this warning could result in serious injury or death in the event of a collision.
2.	Place a 5/8” (16 mm) round washer (PN-3300G) under a 5/8” (16 mm) HGR nut (PN-3340G) on the inserted bolt.
3.	Tighten the bolts. (There is no torque requirement for these bolts.)

Assembling the Rail Panel to the Post without Offset Block at Post 2

Complete the following steps to attach the Rail Panel to the Post without Offset Block at Post 2:

Step	Actions
1.	Select Option A or Option B to attach the Rail Panel without Offset Block at Post 2:
Option A	**For Wood Post:** 1. Insert a 5/8” (16 mm) diameter x 10” (255 mm) HGR post bolt (PN-3500G) through the Rail Panel and the Wood Post at location 2. 2. Place a 5/8” (16 mm) round washer (PN-3300G) under a 5/8” (16 mm) HGR nut (PN-3340G) on the inserted bolt. Tighten the bolts. (There is no torque requirement for these bolts.)
Option B	**For SYTP™:** 1. Insert a 5/8” (16 mm) diameter x 1 1/4” (31 mm) HGR bolt (PN-3360G) through the Rail Panel and the hole in the SYTP™. **Note:** For SYTP™ Inserts use the hole in the SYTP™ that will place the Rail Panel at the correct height. (If there are two sets of holes in the SYTP™ for attaching the Rail Panel.) 2. Place a 5/8” (16 mm) round washer (PN-3300G) under a 5/8” (16 mm) HGR nut (PN- 3340G) on the inserted bolt.

All rights in copyright reserved

Assembling the Cable Anchor Assembly

The Cable Anchor Bracket (PN-704A) is secured to the Rail Panel, by inserting the square protruding hooks / lugs on the bracket into the square slots in the rail panel. The Cable Anchor Bracket is locked into place, by pulling the bracket towards the impact end of the unit, making sure the hooks / lugs are well seated into the square holes.

Complete the following steps to assemble the Cable Anchor Bracket assembly:

Step	Actions
1.	Slide one end of the Cable (PN-3000G) into the Cable Anchor Bracket and the other end through Post 1.
2.	Place a 1" (25 mm) washer (PN-3900G) and 1” (25 mm) hex nut (PN-3910G) on the end of the cable that extends through the Cable Anchor Bracket. Turn the nut, until at least 2 threads are completely through the nut.
3.	Place the Bearing Plate (PN-19258A with two side ears/tabs on the steel post, PN-782G with no side ears/tabs on Wood Post) on the impact side of Post 1 where the Cable extends through the Post. The Cable Bearing Plate MUST BE oriented with the “long” dimension turned up. The hole in the Bearing Plate is off center (in the vertical direction), 5” (125 mm) from one edge and 3” (75 mm) from the opposite edge. The two ears/tabs on the Bearing Plate (PN-19258A) must straddle the left and right side of the HBA hinge assembly.
4.	If applying the Bearing Plate with no side ears/tabs (PN-782G) to a wood post at Post 1, drive two 16d hot-dipped **galvanized** nails along the top edge of the bearing plate and bend over to prevent the bearing plate from rotating.
	Warning: Any grout, backfill, or other materials (such as concrete, asphalt, or soil) must be low enough so as not to obstruct, constrain, or otherwise engage the Bearing Plate. Failure to eliminate the interaction of soil or materials with the Bearing Plate will hinder the performance of the ET-31™ Guardrail End Treatment and could result in serious injury or death in the event of a collision.
5.	Place a 1” (25 mm) washer under a nut on the end of the Cable extending through Post 1.
6.	Restrain the Cable with locking pliers at the end being tightened, to avoid twisting the Cable.
7.	Tighten the hex nuts on the Cable ends, until the Cable is taut. The Cable is considered taut when it does not deflect more than 1” (25 mm) when pressure is applied by hand in an up or down direction.
8.	The shank portion of the Anchor Cable MUST BE positioned so it bears on the bottom edge of the web of the HBA post. The shank portion of the Anchor Cable must also be centered so that the Bearing Plate bears uniformly on both flanges of Post 1.

All rights in copyright reserved

Assembling the ET-PLUS™ Extruder (Head)

Complete the following steps to assemble the ET-PLUS™ Extruder (Head):

Step	Actions
1.	Place the ET-PLUS™ Extruder (Head) (PN-995A) over the end of the Rail Panel as the final piece to attach to the assembly. **Note:** The ET-PLUS™ Extruder (Head) can be used on the left or right hand shoulder.
2.	Push the ET-PLUS™ Extruder (Head) as far as it will go onto the front-most Rail Panel, making sure the Rail Panel is fully engaged into the full length of the channel guide attached to the Head until it stops.
3.	Assemble the ET-PLUS™ Extruder (Head) with channel guide attached to it approximately parallel to the ground. The upper and lower attachment tabs welded to the guide chute have three holes in each to provide a means to level the Head (See following steps).
4.	Select Option A or Option B for the ET-PLUS™ Extruder (Head) assembly.
Option A	**For Wood post:** 1. Place the ET-PLUS™ Extruder (Head) against the Wood Post, at location 1. 2. Choose the hole in the tab welded to the guide chute that is closest to the center of the Post. 3. Drill a 1/4” (6 mm) pilot hole to avoid breaking the lag screw during assembly. 4. Screw one 3/8” (10 mm) diameter x 4” (100 mm) lag screw (PN-4228B) through the top and bottom tab. The lag screw must be screwed into the Wood Post to prevent it from pulling out or cracking the post. DO NOT OVER TIGHTEN, causing the threads in the Wood Post to strip.
Option B	**For HBA™ post:** 1. Place the ET-PLUS™ Extruder (Head) against the HBA™ post, at location 1. 2. Place a 3/8” (10 mm) round washer (PN-4254G) onto a 3/8” (10 mm) diameter x 1 1/2” (38 mm) hex head bolt (PN-4261G). 3. Insert this bolt through the tab welded to the side of the guide channel attached to the ET-PLUS™ Extruder (Head) and then through the hole in the flange of HBA™ Post. 4. Place a 3/8” (10 mm) fender washer (PN-4255G) under a 3/8” (10 mm) nut (PN-6405G) onto the inserted bolt. A larger fender washer is used to cover the relatively large hole in the flange of the HBA Post. 5. Repeat this assembly step for the top and bottom tabs. When completed, the Head will be attached to the HBA post via an upper and lower 3/8” diameter hex head bolt (PN-4261G). 6. Tighten the nuts to a snug position. The designer does not recommend a torque requirement for the HBA field assembly.

Delineation Option for the ET-31™ Guardrail End Treatment

Apply High Intensity Reflective Sheeting (PN-6206B [Right Side] or PN-6207B [Left Side]) on the front face of the ET-PLUS™ Extruder (Head), per the state or specifying agency’s *Manual on Uniform Traffic Control Devices* (MUTCD) for options or proper delineation. Alternate Reflective Sheeting is PN-6668B. The Alternate Reflective Sheeting requires two pieces and may be rotated for proper right or left delineation.

Note: The Reflective Sheeting is an option to the ET-31™ Guardrail End Treatment and needs to be ordered separate from the ET-31™ Guardrail End Treatment package.

All rights in copyright reserved

Assembly Checklist

State: _____Project: _____

Date: _____Location: _____

- ☐ The leaveout (the specified area of open space in the pavement) around the Posts is reserved and filled with state or specifying agency approved backfill material that will not prevent movement for any posts placed in rigid pavement such as any thickness of concrete or asphalt.
- ☐ The finished guardrail height is approximately 31” (787 mm) above the finished grade, or as the state or specifying agency plans indicate.
- ☐ Any site grading needed was completed, before the start of the assembly of the ET-31™ Guardrail End Treatment.
- ☐ The Steel Tubes or Post Plates (ears) to the HBA™ bottom post do not protrude more than 4” (100 mm) above the finished grade measured by the American Association of State Highway and Transportation Officials (AASHTO) 5’ (1.5 m) cord method. Site grading may be necessary to meet this requirement.
- ☐ The 3/4” (19 mm) bolts connecting the tops of the HBA™ Bottom Post to the bottom of the HBA™ Top Post are tightened to a snug position. The designer does not recommend a torque requirement for the HBA field assembly.
- ☐ The 3/8” (10 mm) bolts connecting the tops of the HBA™ Bottom Post to the bottom of the HBA™ Top Post are tightened to a snug position. The designer does not recommend a torque requirement for the HBA field assembly.
- ☐ The bolts at the top of the Steel Tubes are not over tightened. The walls of the Steel Tubes are not collapsed.
- ☐ If an Angle Strut was utilized, the bolts connecting the Angle Strut are 3/4” (19 mm) DIA. high strength.
- ☐ The ET-PLUS™ Extruder (Head) is pushed as far as it will go on the Rail Panel, ensuring the Rail Panel is fully engage into the channel guide that is welded to the Extruder (Head).
- ☐ The two 3/8” diameter bolts holding the ET-PLUS™ Extruder (Head) to Post 1 are snug and the channel guide welded to the Head is approximately parallel to the finished grade.
- ☐ The Cable Anchor Bracket is locked into place, by pulling the Bracket towards the impact end of the unit, making sure the hooks / lugs are well seated into the square holes.
- ☐ The shank portion of the Anchor Cable MUST BE positioned vertically flush against the bottom web of the top section of the HBA Post. The shank portion of the Cable MUST also be centered so that the Bearing Plate bears uniformly on both flanges of Post 1.
- ☐ Any grout, backfill, or other materials (such as concrete, asphalt, or soil) must be low enough so as not to obstruct, constrain, or otherwise engage the Bearing Plate.

All rights in copyright reserved

- ☐ The hex nuts on the Cable ends are tightened, until the Cable is taut. The Cable is considered taut, when it does not deflect more than 1” (25 mm) when pressure is applied by hand in an up or down direction.
- ☐ Do not place anything under the rail to post bolt head that would prevent the bolt from pulling through the Rail Panel.
- ☐ The Bearing Plate is placed on the front of Post 1 where the Cable extends through the Post. The Cable Bearing Plate MUST BE oriented with the “long” dimension turned up. The hole in the Bearing Plate is off center (in the vertical direction), 5” (125 mm) from one edge and 3” (75 mm) from the opposite edge. If the Bearing Plate has two “ears/tabs”, these need to straddle the left and right side of the No. 1 Post and be on the upper side of the plate.
- ☐ The top surfaces of any grout or other backfill placed in the mow strip “leave out” must be low enough so that it does not engage the Bearing Plate or otherwise obstruct or constrain the 3/8” (10 mm) shear bolts or the 3/4” (19 mm) hinge bolts of the HBA Post
- ☐ Any Wood Offset Blocks used have been toe nailed to the Wood Posts.
- ☐ If backfilled, make sure the backfill material around the Posts is properly compacted.
- ☐ Each HBA™ Post has two bolts on either side of the Post with the larger bolt downstream of the smaller bolt (away from the Impact Head).
- ☐ The SYTP™ holes are at the finished grade.
- ☐ The Wood CRT Post has two 3 1/2” (90 mm) breakaway holes (checked prior to assembly). They are located parallel to the roadway with the top hole located approximately at the finished grade.
- ☐ The tube bolts are attached with the nuts on the pavement side of the Tube for ease of future removal.
- ☐ The Rail Panels are lapped correctly and not attached to the Posts at locations identified for the system.
- ☐ Each Rail Panel used in the ET-31™ pay length is straight, with no visible distortions or blemishes such as curves, dents, cuts, tears, extra holes, cut-outs, corrosion, or signs of past repairs.
- ☐ The Reflective Sheeting is correctly positioned on the Extruder face.
- ☐ Ensure that this assembly conforms with the guidance provided by the *AASHTO Roadside Design Guide*, including, but not limited to, those regarding placement on curbs.

All rights in copyright reserved

Maintenance and Repair

Always keep the Manual in a location where it is easily accessed by persons who assemble, maintain, or repair the ET-31™ Guardrail End Treatment. If you have any questions concerning the information in this Manual or about the ET-31™ Guardrail End Treatment, contact Trinity Highway Products at 888-323-6374.

Maintenance

Complete the following steps, periodically, to check the safety of the system:

Step	Actions
1.	Ensure the nuts have not been removed from the Cable. Replace nuts, if needed.
2.	Ensure the end fitting on the Anchor Cable MUST BE positioned vertically, up flush against the bottom web of the top section of the Post. The end fitting of the Cable **MUST** be centered horizontally so that the Bearing Plate bears uniformly on both flanges of Post 1.
3.	Ensure the Cable is taut. The Cable is considered taut when it does not deflect more than 1 inch when pressure is applied by hand in an up or down direction. Tighten Cable if needed.
4.	Ensure the Bearing Plate has not rotated. **Note:** The Cable Bearing Plate MUST BE oriented with the "long" dimension turned up. The hole in the Bearing Plate is off center (in the vertical direction), 5" (125 mm) from one edge and 3" (75 mm) from the opposite edge.
5.	Ensure Wood Blocks are in place and in good condition, as defined by the state or specifying agency.
6.	Ensure the Block Outs have not rotated. Correct the Block Out position and reattach the 16d hot-dipped galvanized nails, if needed.

Repair

Complete the following steps to repair the ET-31™ Guardrail End Treatment:

Step	Actions
1.	Set up necessary traffic control at the accident site and then remove any debris that has encroached onto the traveled way or shoulder.
2.	Take inventory of the damaged system and determine what parts are reusable, as defined by the state or specifying agency and what parts need to be replaced.
3.	Check the ET-PLUS™ Extruder (Head) for damage. The determination as to whether or not the Head is reusable rests **entirely** within the discretion of the DOT or other appropriate highway authority. Before reusing a Head, please make sure that an experienced, trained engineer for the highway authority inspects the Head to his or her satisfaction and authorizes its reuse. For consideration of reuse of the Extruder Head, the rail guide chute must be fully intact and not distorted in any way; the slot that flattens the rail shall not be excessively distorted in any way; the slot that flattens the rail shall not be excessively distorted; the front impact face must not be excessively distorted, and all the original welds must be intact. Again before reusing a Head, a trained DOT or applicable highway authority engineer shall inspect it and authorize its reuse.
4.	Check the Anchor Cable and Cable Anchor Bracket for damage. (The Bearing Plate, nuts, washers, and Cable Anchor Bracket are rarely damaged.)
5.	Obtain the Trinity Highway Products parts that need to be replaced from Trinity Highway Products. (See *Tools Required* section for a list of recommended tools for the repair of the ET-31™ Guardrail End Treatment.)

All rights in copyright reserved

6.	Return to the repair site with the replacement parts and tools needed.
7.	Cut off the extruded rail near the ET-PLUS™ Extruder (Head). Do not cut the ET-PLUS™ Extruder (Head) from the non-extruded rail.
8.	Secure a chain to the ET-PLUS™ Extruder (Head).
9.	Attach the chain to a truck frame while the other end of the Rail Panel is still connected to the downstream Posts (away from the Impact Head) to provide anchorage.
10.	Pull the ET-PLUS™ Extruder (Head) off the Rail Panel.
11.	Remove any damaged Rail Panel(s).
12.	Remove the broken Posts from the Steel Tubes.
13.	Remove all damaged CRT, SYTP™, or HBA™ Posts. Undamaged HBA™ Posts can be reset.
14.	Remove and discard any rubber bumpers or construction legs.
15.	Reconstruct the system following the assembly instructions after the site has been cleared of damaged debris.
16.	Attach proper delineation for the repaired system in accordance with the state or specifying agency's *Manual on Uniform Traffic Control Devices* (MUTCD).

All rights in copyright reserved

Notes:

All rights in copyright reserved

2525 Stemmons Freeway
Dallas, Texas 75207
888-323-6374 (USA only)
214-589-8140 (Outside USA)
www.energyabsorption.com
www.highwayguardrail.com

ET-31™ Guardrail End Treatment
NCHRP Report 350 Test Level 3
System Length 53'-1 1/2" (16.19 m)

For specific assembly, maintenance, or repair details refer to the state or specifying agency's standard drawings and/or Trinity standard layout drawings.

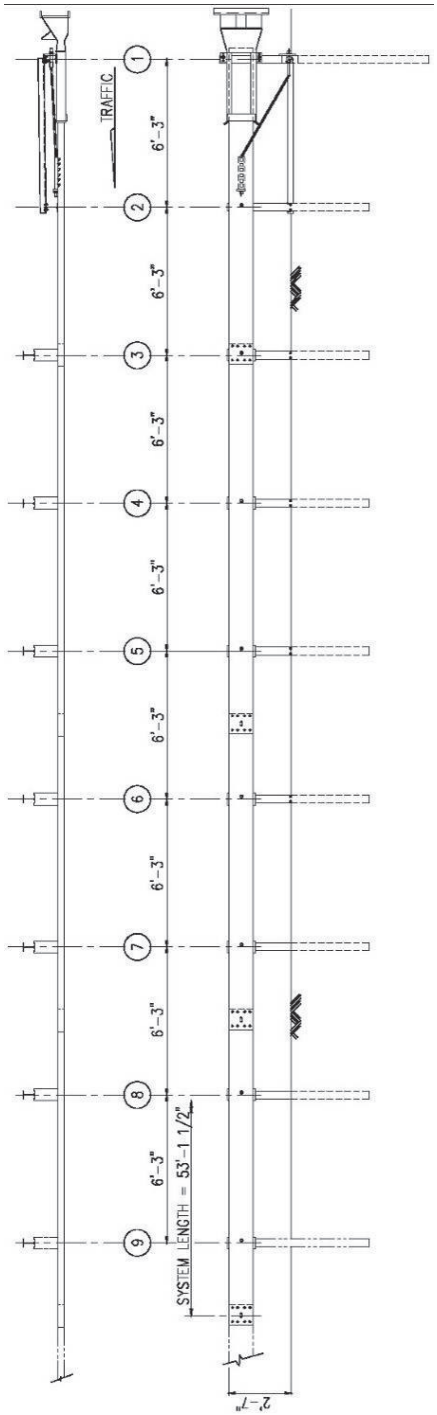

Figure 4 (TL-3)

[This drawing represents one version of the 53'-1 1/2" (16.19 m) system]

All rights in copyright reserved

ITEM NO.	PART NUMBER	DESCRIPTION	QTY	UOM
1	BSI-1301252-KT	X-Tension Terminal Comp, 31 in	1	EACH
2	K070202	X-Tension Hardware Kit, GT,	1	EACH
3	K070206	X-Tension System Hardware Kit,	1	EACH
4	K070210	X-Tension GT Guardrail	1	EACH
5	B061100	BSI, I-Beam Post, Middle, X350	1	EACH
6	MANXT1	X-TENSION Installation Manual	1	EACH

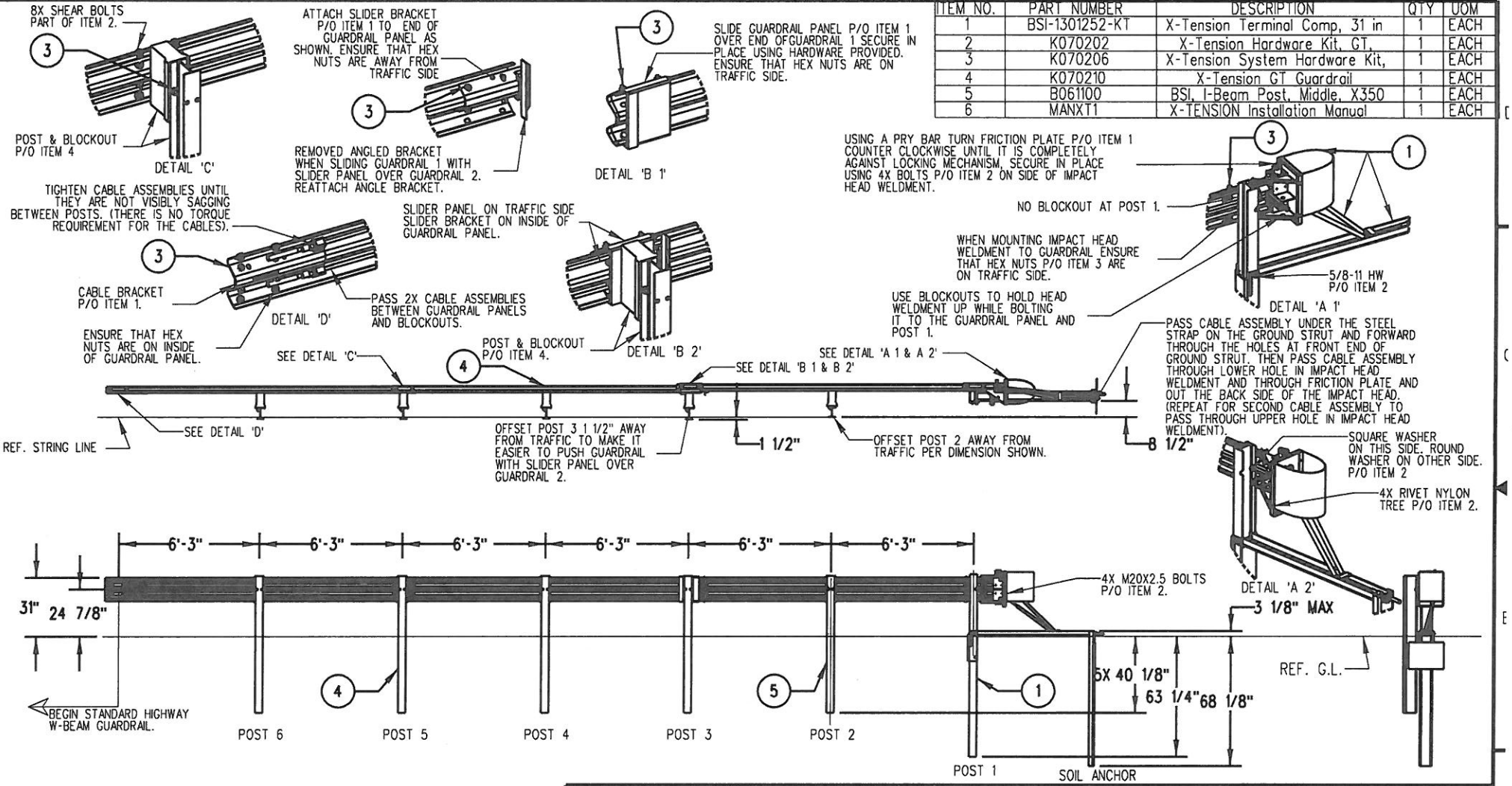

NOTES: UNLESS OTHERWISE SPECIFIED.

1. SYSTEM TO BE INSTALLED PER MANUFACTURER SPECIFICATIONS.
2. ONLY TIGHTEN THE CABLE ASSEMBLIES USING THE NUTS AT THE CABLE BRACKET (SEE DETAIL 'D'). DO NOT TIGHTEN THE CABLES AT THE FRONT OF THE GROUND ANCHOR.
3. WHEN DRIVING STEEL POST, ENSURE THAT A DRIVING CAP WITH TIMBER OR PLASTIC INSERT IS USED TO PREVENT DAMAGE TO THE GALVANIZING TO THE TOP OF THE POST.

©2012 BARRIER SYSTEMS INC. THE INFORMATION CONTAINED IN THIS DRAWING IS THE SOLE PROPERTY OF BARRIER SYSTEMS INC. ANY REPRODUCTION IN PART OR WHOLE WITHOUT THE WRITTEN PERMISSION OF BARRIER SYSTEMS INC. IS PROHIBITED.

APPROVALS

DRAWN BY:	NMV
DRAWN DATE:	2/08/13
APPR'D BY:	JMT
APPR'D DATE:	2/08/13

UNLESS OTHERWISE SPECIFIED DIMENSIONS ARE IN INCHES. TOLERANCES ARE:
FRACTIONS ±1/16 DECIMAL .XX ±.03 .XXX ±.010 ANGLES ±1/2°
INTERPRET DIMENSIONS AND TOLERANCES PER ASME Y14.5-1994
THIRD ANGLE PROJECTION
DO NOT SCALE DRAWING

REV	ECN#	DATE
B	2067	05/02/13
A	2022	2/08/13

LINDSAY TRANSPORTATION SOLUTIONS™
BARRIER SYSTEMS INC.
3333 Vaca Valley Parkway Ste 800
Vacaville, CA 95688
Tel: 888-800-3691
www.barriersystemsinc.com

TITLE
X-TENSION GUARDRAIL TERMINAL SYSTEM
STEEL POST WITH COMPOSITE BLOCKOUT
31" RAIL HEIGHT

SIZE	DWG NO.	REV.
B	XTGTSS5	B

SCALE 1:50 SHEET 1 OF 1

Doc. B100108

MATERIALS INFORMATION

4.Water Source Information

April 16, 2015

Mr. Jack Walker
2015 E. Shields, Suite 100
Fresno, Ca 93726

RE: CONSTRUCTION WATER-

Dear Mr. Walker,

Pursuant to your emails to the City of Soledad Public Works Director, Don Wilcox, the City of Soledad anticipates being able to supply construction water for various projects located in the Monterey County area surrounding the City of Soledad. The City can provide the projects with either Title 22 Reclaimed Water or Potable Water. Listed below are details for each water source.

POTABLE WATER

1. Our nearest connection point is located on 1013 South Front Street.
2. The City can provide a 3" construction meter on an existing fire hydrant at this location. *Should the contractor desire to place an overhead tank trailer, an alternative location will be required.*
3. An "Application for Water Service" will need to be completed.
4. A deposit of $100.00 is required (credit against water use). Also included in the $100.00 is the application fee.
5. A fixed meter fee of $138.50/month and water consumption of $1.58.00 per unit. (one unit is 100 cubic feet or 748 gallons)
6. Ability to provide service may be impacted by any emergency drought measures that may be in place at time of application. Currently, the City has no drought restrictions on providing water service.

TITLE 22 RECLAIMED WATER

1. Our nearest connection point is located on 34520 Morisoli Road.
2. The City can provide a 3" construction meter on an existing fire hydrant at this location. *Should the contractor desire to place an overhead tank trailer, an alternative location will be required.*
3. An "Application for Water Service" will need to be completed.
4. A deposit of $100.00 is required (credit against water use). Also included in the $100.00 is the application fee.

5. A fixed meter fee of $138.50/month and water consumption of $1.58.00 per unit. (one unit is 100 cubic feet or 748 gallons)
6. Currently, the City has no drought restrictions on providing Title 22 Reclaimed Water Service and no plans for water restrictions on the Title 22 Reclaimed Water.

If you have any questions, please contact me by telephone at (831) 223-5190 or by email at Ed.Waggoner@cityofsoledad.com.

Sincerely,

Edward Waggoner

Ed Waggoner,
Water Resources Manager
City of Soledad WRF
34520 Morisoli Road
Soledad Ca. 93960

ph 831-223-5190
fax 831-223-5192

MATERIALS INFORMATION

5. As-builts for Route 101 alignment for Precast Concrete Pavement Area

DIST	COUNTY	ROUTE	POST MILE TOTAL PROJECT	SHEET NO.	TOTAL SHEETS
05	Mon	101	59.8/61.7	1	136

ER-3311(004)Y
ACNH-P101(855)Y

STATE OF CALIFORNIA

DEPARTMENT OF TRANSPORTATION

PROJECT PLANS FOR CONSTRUCTION ON

STATE HIGHWAY

IN MONTEREY COUNTY
NEAR SOLEDAD FROM 0.6 MILE SOUTH OF ARROYO SECO ROAD OVERCROSSING TO 0.2 MILE NORTH OF ROUTE 146/101 SEPARATION

To be supplemented by Standard Plans dated July, 1992

INDEX OF SHEETS

Sheet No.	Description
1	Title and Location Map
2	Typical Cross Sections
3-4	Standard Plans List
5-9	Layouts
10-11	Profiles
12-13	Construction Details
14-25	Stage Construction
26-28	Construction Area Signs
29-33	Pavement Delineation Plans and Quantities and Sign Plans
34-35	Summary of Quantities
36-42	Revised Standard Plans
43	New Standard Plan
	STRUCTURES PLANS
44	Structure Project Plan Br.No..44-0002R/L
45-84	Salinas River Bridge (Left Replace) Br.No.44-0002L
85-128	Salinas River Bridge (Right Replace) Br.No.44-0002R
	BUILDING PLANS
129-132	Architectural Plans Br.No.44-0002R
133-136	Structural Plans Br.No.44-0002R

Caltrans

The State of California or its officers or agents shall not be responsible for the accuracy or completeness of electronic copies of this plan sheet.

NO SCALE

The Contractor shall possess the Class (or Classes) of license as specified in the ''Notice to Contractors''.

Jeffy C. Kepley
Project Engineer Date
Registered Civil Engineer
4/9/97

REGISTERED PROFESSIONAL ENGINEER
J. KEPLEY
No. 53361
Exp 6-30-99
CIVIL
STATE OF CALIFORNIA

April 14, 1997
Plans Approval Date

AS BUILT PLANS
Contract No. 05-453404
Resident Eng. Ken Lee
Date 1-9-99

Contract No. **05-453404**

PROJECT ENGINEER | DATE | PROJECT MANAGER | DATE

LAST REVISION 00-00-00

TIME PLOTTED => 04-MAY-2004 15:41

FORM DC-OE-93-PF (REV. 3/88)

FOR REDUCED PLANS ORIGINAL SCALE IS IN INCHES 0 1 2 3

USERNAME => tkoshare
DGN FILE => 545340A01.dgn

CU 05200

EA 453401

DIST	COUNTY	ROUTE	POST MILES TOTAL PROJECT	SHEET NO.	TOTAL SHEETS
05	Mon	101	59.8/61.7	2	136

Jeffry C. Kepley 4-9-97
REGISTERED CIVIL ENGINEER

4-14-97
PLANS APPROVAL DATE

The State of California or its officers or agents shall not be responsible for the accuracy or completeness of electronic copies of this plan sheet.

REGISTERED PROFESSIONAL ENGINEER
J.C. KEPLEY
No. 53361
Exp. 6-30-99
CIVIL
STATE OF CALIFORNIA

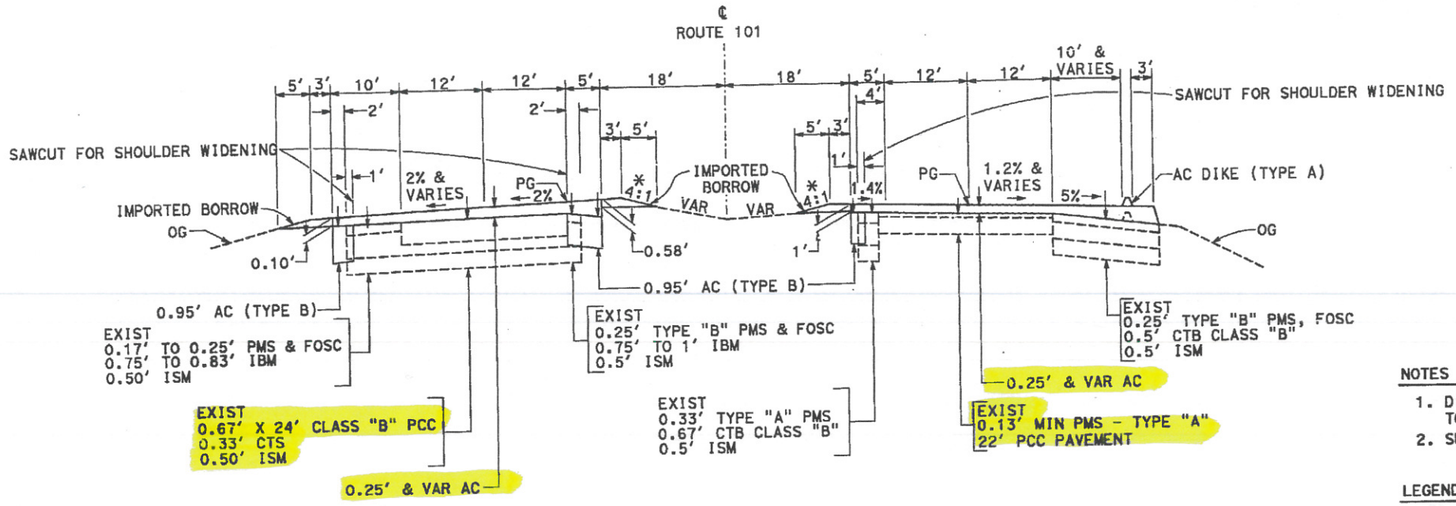

STA 400+00 TO 403+58.97

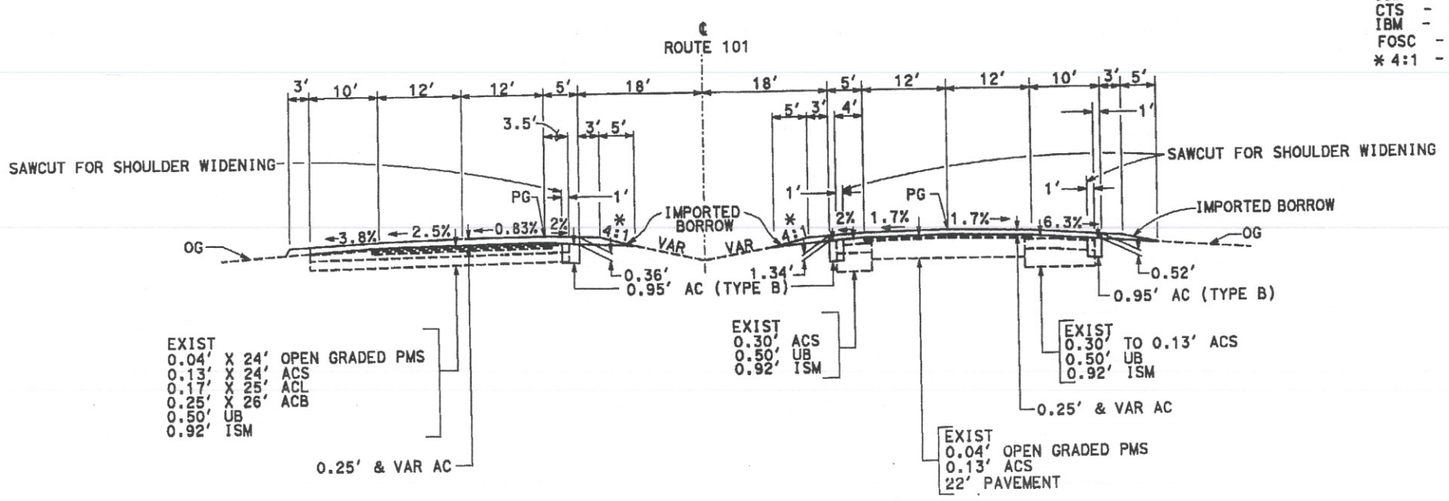

STA 419+63.47 TO 423+00

NOTES

1. DIMENSIONS OF THE STRUCTURAL SECTIONS ARE SUBJECT TO TOLERANCES SPECIFIED IN THE STANDARD SPECIFICATIONS.
2. SUPERELEVATION AS SHOWN OR AS DIRECTED BY THE ENGINEER.

LEGEND

PMS - PLANT MIXED SURFACING
ACS, ACL, ACB - ASPHALT CONCRETE SURFACE, LEVELING, BASE
UB - UNTREATED BASE
ISM - IMPORTED SUBBASE MATERIAL
CTS - CEMENT TREATED SUBGRADE
IBM - IMPORTED BASE MATERIAL
FOSC - FOG SEAL COAT
* 4:1 - 4:1 OR GREATER

AS BUILT PLANS
Contract No. 05-453404
Resident Eng. Ken Lee
Date 1-9-99

TYPICAL CROSS SECTIONS

NO SCALE

X-1

DATE	REVISED BY	DATE REVISED

CALCULATED/DESIGNED BY
CHECKED BY

PROJECT ENGINEER
JEFFRY C. KEPLEY

STATE OF CALIFORNIA - DEPARTMENT OF TRANSPORTATION
ENGINEERING SERVICE CENTER
OFFICE OF STRUCTURES EXTERNAL LIAISON AND SUPPORT, DESIGN BRANCH "C"
DESIGN SECTION 15

Caltrans

FORM DC-OE-92-PF (REV. 3/88)

FOR REDUCED PLANS ORIGINAL SCALE IS IN INCHES 0 1 2 3

USERNAME => tkoshare
DGN FILE => 545340B01.dgn

CU 05200

EA 453401

LAST REVISION 00-00-00
DATE PLOTTED => 04-MAY-2004
TIME PLOTTED => 15:42

F-0179 (3) 1 49

INDEX OF SHEETS

Sheet No.	1	Title Sheet
" "	2 – 3	Typical Sections
" "	4	Paving Details
" "	5 – 16	Plan And Profile
" "	17 – 21	Intersection Details
" "	22 – 24	Miscellaneous Profiles
" "	25 – 27	Drainage Structure Details
" "	28 – 29	Quantity Summary
" "	30 – 33	Highway Lighting Details
" "	34 – 37	Standard Structures
" "	1 – 12	Arroyo Seco Road Overcrossing
" "	1 – 51	Cross Sections
" "	1 – 1	Mass Diagram

STATE OF CALIFORNIA

DEPARTMENT OF PUBLIC WORKS

DIVISION OF HIGHWAYS

PLAN AND PROFILE OF

STATE HIGHWAY

In Monterey County, between 1.0 mile north of Greenfield and Salinas River

Scales { Plan: 1 In. = 100 Ft.
Profile: Hor. 1 In. = 100 Ft. Vert. 1 In. = 10 Ft.

(being the detail plans of a portion of the route for the State highway adopted by the California Highway Commission)

August 25, 1954 and declared a

FREEWAY

by resolution of the California Highway Commission August 25, 1954

New 05-Mon-101-53-5/8-1

STATE OF CALIFORNIA
KEY MAP

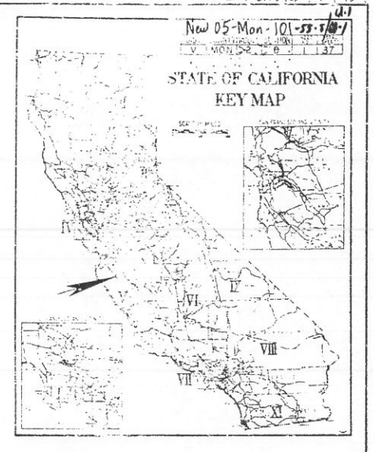

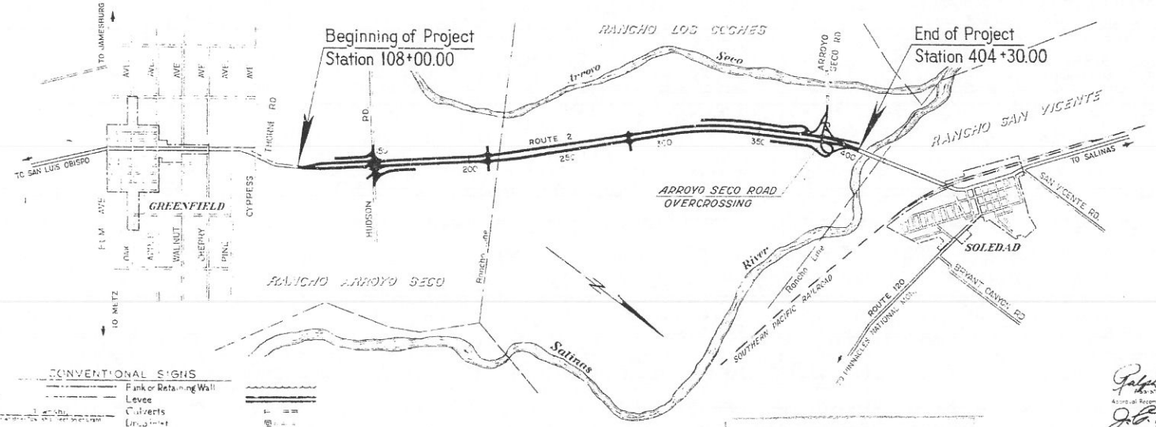

CONVENTIONAL SIGNS

County Line		Bank or Retaining Wall	
City or Town Line		Levee	
Township Line		Culverts	
Section Line		Drop Inlet	
Grant Line		Trolley Pole	
Fence		Fire Lane	
Guard Rail		Power Tower	
Unfenced Property		Telegraph or Telephone Pole	
Right of Way Line			
Base or Survey Line			
Traveled Way			
Railway Tracks		Marsh	

SCALE
0 2500 5000 7500 10,000 Feet

Length of Project 29,632.13 Feet = 5.612 Miles

AS BUILT PLANS
Contract No. 58-5TC4-F
Date Completed
Document No. 50000470

Ralph A. Lagomarsino
Assistant Engineer
Approval Recommended
J. E. Young
Engineer of Design
January 21, 1957
By Tom E. Waite
State Highway Engineer
Civil Engineer License 2034
Frank B. Durham
Director of Public Works

58-5TC4-F

DIST.	COUNTY	ROUTE	SECTION	SHEET NO.	TOTAL SHEETS
V	MON	2	D	2	37

DESIGN CLASSIFICATION 1120-70-T-60

January 21, 1957

G. T. McCoy

By Edwin E. Wentz

Deputy State Highway Engineer
Civil Engineer License No. 5431

DIST.	STATE	FEDERAL PROJECT NO.	SHEET NO.	TOTAL SHEETS
7	CALIF.	F-0179 (3)	2	49

AS BUILT PLANS
Contract No. 58-5TC4-F
Date Completed
Document No. 50000 470

INTERCEPTION DITCHES
Ditch & Channel Excavation

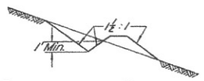

SLOPE ROUNDING
(To Be Used On All Cuts)

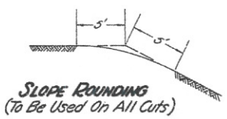

*PAVED GUTTER & BACK SLOPE
Where Required
At Low Side of Super.

*See Sheet #3 For Additional Gutters

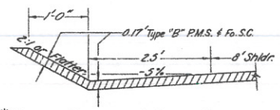

6" P.M.S. DIKE (Type "B")
Scale: 1"=1'-0"

2" P.M.S. DIKE (Type "B")
Scale: 1"=1'-0"

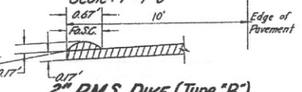

0.35' Min. CTB-Cl "B" over PCC where "h" > 8"

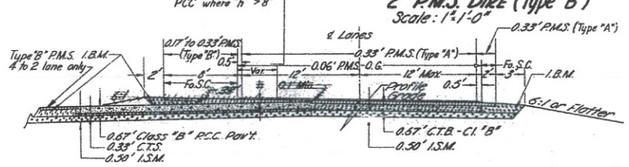

TRANSITION SECTION Lt. LANES
2 TO 4 LANE
4 TO 2 LANE

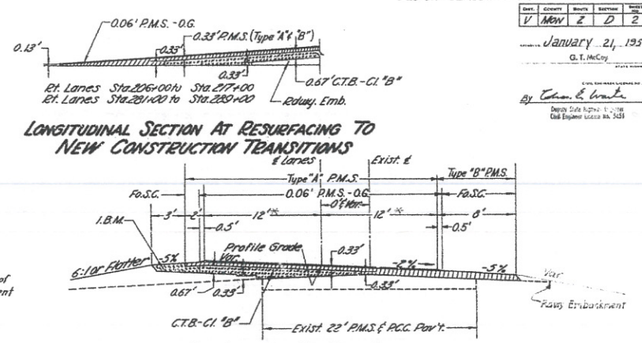

LONGITUDINAL SECTION AT RESURFACING TO NEW CONSTRUCTION TRANSITIONS

RESURFACING TO NEW CONSTRUCTION TRANSITION DETAILS
Sta. 206+00 to Sta. 217+00
Sta. 281+00 to Sta. 289+00

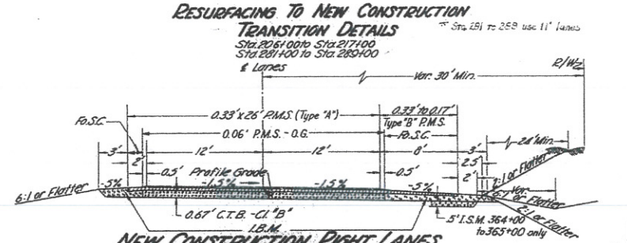

NEW CONSTRUCTION RIGHT LANES
Sta. 316+00 to Sta. 328+00
Sta. 330+00 to Sta. 363+00

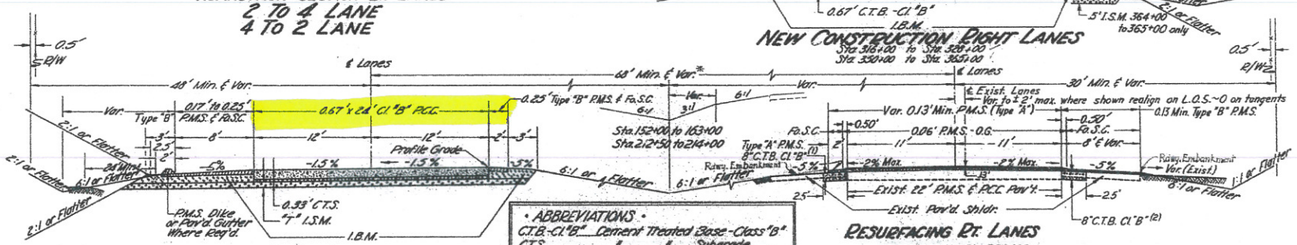

LT. LANES
Sta. 113+00 to Sta. 403+81

		"T"
Sta. 113+00 to	Sta. 121+00	0.50'
Sta. 121+00 to	Sta. 364+00	0.00'
Sta. 364+00 to	Sta. 403+81	0.50'

RT. LANES
Sta. 378+00 to Sta. 397+00

RESURFACING Rt. LANES
Sta. 103+00 to Sta. 206+00
Sta. 217+00 to Sta. 281+00
Sta. 289+00 to Sta. 316+00
Sta. 328+00 to Sta. 338+00
Sta. 363+00 to Sta. 370+00

* ABBREVIATIONS *

C.T.B.-Cl "B"	Cement Treated Base-Class "B"
C.T.S.	" " Subgrade
I.B.M.	Imported Base Material
I.S.M.	" Subbase Material
P.M.S.	Plant-Mixed Surfacing
P.C.C.	Portland Cement Concrete
P.M.S.-O.G.	Plant-Mix Surfacing-Open Graded
Fa.S.C.	Fog Seal Coat

(1) Sta. 249+62 to 254+62 only
(2) Sta. 293+50 to 298+50 only

V-MON-2-D
BETWEEN 1.0 MI. N GREENFIELD & THE SALINAS RIVER

TYPICAL CROSS-SECTIONS

SCALE: 1"=5' & AS SHOWN

58-5TC4-F

Edwin E. Wentz
Registered Engineer
Civil Engineer License No. 5431

Edwin E. Wentz

DIST.	COUNTY	ROUTE	SECTION	SHEET NO.	TOTAL SHEETS
V	MON	2	D	3	37

DESIGN CLASSIFICATION: I 120-78-F 60

By: John E. Goerke — January 21, 1957

G. T. McCoy

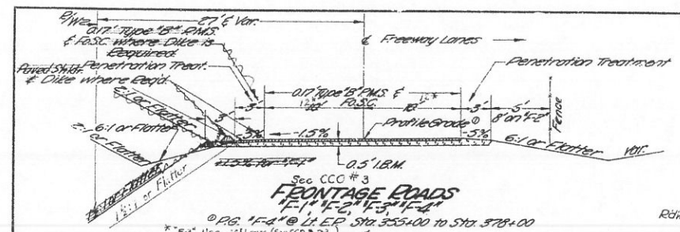

FRONTAGE ROADS
"F-1" "F-2" "F-3" "F-4"

© P.G. "F-4" @ 12 E.P. Sta. 355+00 to Sta. 378+00

* "F-3" Use 10' Lanes (See CCC # 33)

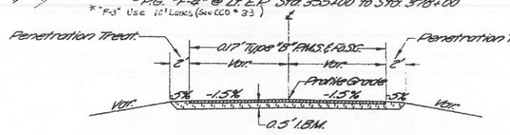

PRIVATE ROAD APPROACHES
Rancho Line (near Sta. 211) lt. & rt., Sta. 265+15 lt. & rt.

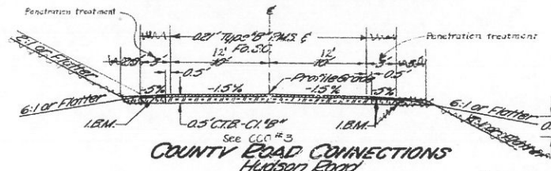

COUNTY ROAD CONNECTIONS
Hudson Road

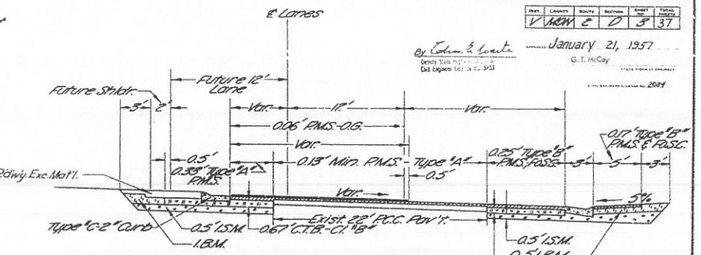

BLANKET & WIDENING - Pt. LANES
Sta. 397+00 to Sta. 405+96

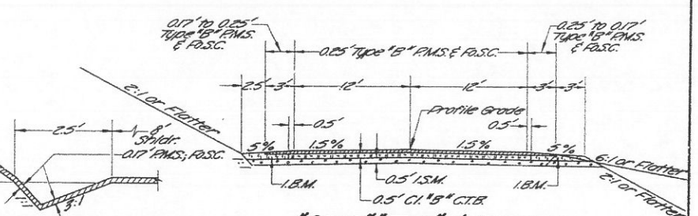

*PAVED GUTTER & BACK SLOPE "OC-6," "F-5," & DETOURS
At High Side of Super: Where Required - No Scale

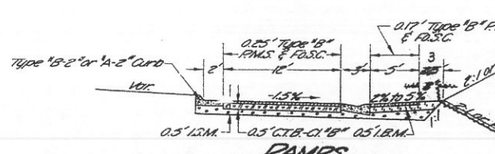

RAMPS
"R-2," "R-6," "R-7," "R-8"

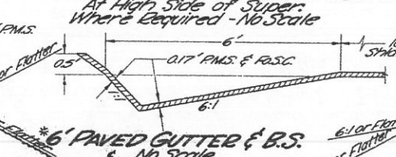

*6' PAVED GUTTER & B.S.
No Scale

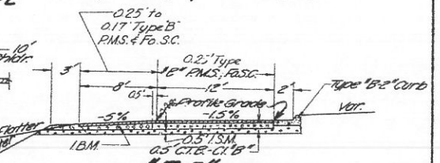

"F-5"
One Lane Portion

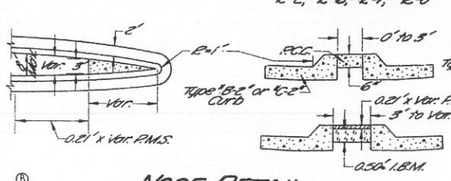

NOSE DETAIL
No Scale

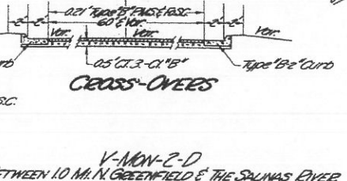

CROSS-OVERS

*See Sheet #2 For Additional Gutter

V-MON-2-D
BETWEEN 1.0 MI. N. GREENFIELD & THE SALINAS RIVER

TYPICAL CROSS-SECTIONS

SCALE: 1"=5' & AS SHOWN

58-5TC4-F

John E. Goerke
Engineer in Charge
Civil Engineer Calif. No. 5431

William Lewis
Registered Engineer Calif. No. 5431

AS BUILT PLANS
Contract No. 58-5TC4-F
Date Completed
Document No. Sheet 4 of 20

* CHW DEC. 2006

TQ1-007-6(10)

Dist.	County	Route	Post Miles	Sheet No.	Total Sheets
05	MON	101	55.2 / 60.2	1	20

E. F. Hyegaard
DISTRICT DIRECTOR OF TRANSPORTATION
REGISTERED CIVIL ENGINEER NO. 9237

Neal Cadwell
CHIEF, PROJECT DEVELOPMENT DIVISION
REGISTERED CIVIL ENGINEER NO. 9532

DATE APPROVED May 3, 1976

INDEX OF SHEETS

SHEET NO.		
1		Location Map & Typical Cross Sections
2-6		Layout Plans
7		Profiles
8		Construction Details
9-11		Drainage Details
11		Quantity Summaries & Drainage List
12-16		Special Details
17-19		Pavement Markers
20		Traffic Control System for Lane Closures
1-11		Cross Sections

APPLICABLE STANDARD PLANS

A62-A.3, A62-C.7, A77-C.8W, A79-A.8, D73-11, D77-A.2, D88-4, N8-A

BEGINNING OF MAJOR CONSTRUCTION
Sta. 111+40
PM 55.2

BEGINNING OF WORK
Sta. 80+00

END OF MAJOR CONSTRUCTION
Sta. 378+00
PM 60.2

END OF WORK
Sta. 400+00

Excavation Area

RANCHO ARROYO SECO

RANCHO LOS COCHES

Arroyo Seco

Ranch Boundary

To Greenfield

CYPRESS AVE.

THORNE RD.

HUDSON RD.

ARROYO SECO RD.

SALINAS RIVER

Scale In Feet 0 1000 2000 3000

Length Of Major Construction = 5.0 Miles
Length Of Work = 5.4 Miles

LEGEND
- New Vertical Alignment
- A.C. Blanket Only
- Replace A.C. - Rt. Lane And Blanket Roadway
- Replace A.C. & C.T.B. - Rt. Lane And Blanket Roadway
- Left Turn Lanes

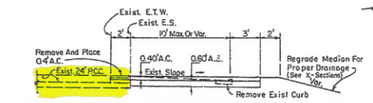

SOUTH BOUND
Left Turn Lanes
Sta. 151+10 To 154+70 Lt. Lanes
Sta. 212+25 To 215 +95 Lt. Lanes
Sta. 286+10 To 289 +70 Lt. Lanes

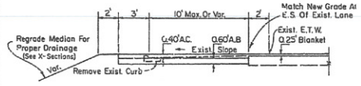

NORTH BOUND
Left Turn Lanes
Sta. 145+80 To 149 +42 Rt. Lanes
Sta. 206+45 To 210 +40 Rt. Lanes
Sta. 280+80 To 284 +20 Rt. Lanes

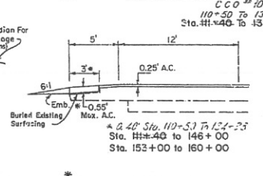

* Excavate existing base shoulder to top of existing buried surfacing and replace with 0.55' max. A.C.

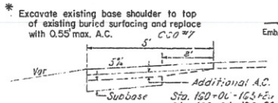

ALE TYPICAL SECTION
Scale: 1"=5'

Sta. 150-01 - 165+75
Sta. 159+51 - 172+00
Sta. 178+50 - 184+35
Sta. 190+70 - 378+00

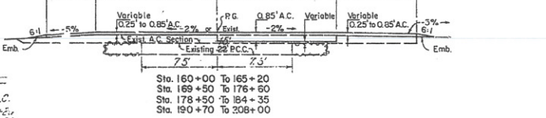

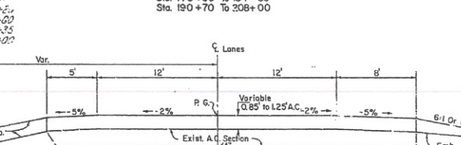

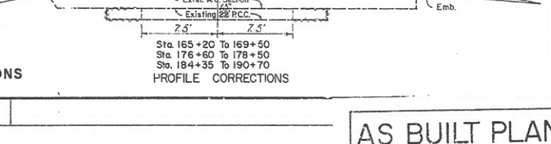

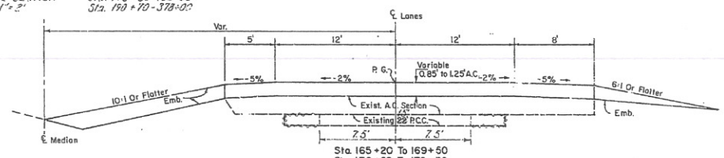

TYPICAL SECTIONS
Scale: 1"= 5'

PROFILE CORRECTIONS

SYMBOLS
E.S. Edge Of Shoulder
E.T.W. Edge Of Traveled Way
A.C. Type B Asphalt Concrete
A.B. Class 2 Aggregate Base
C.T.B. Cement Treated Base
P.C.C. Portland Cement Concrete
Emb. Roadway Embankment
P.G. Profile Grade

DESIGN DESIGNATION
ADT (70) = 12,000 D= 65 %
ADT (95) = 20,500 T= 5 %
DHV (95) = 2,100

Area of Responsibility: R. A. Lajolnhat; D. A. Bishop; R. S. Scamura

AS BUILT PLANS
Contract No. 05-208504
Resident Engineer W. K. GREENE
Date 2-10-77

LOCATION OF WORK
P.M. 55.2 / 60.2

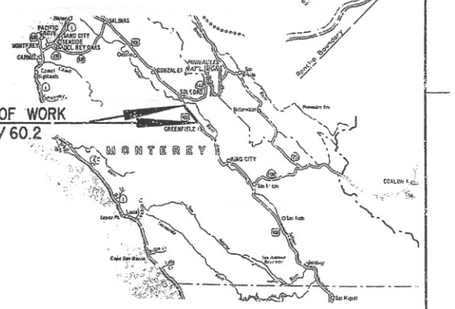

LOCATION MAP
SCALE IN MILES 0 10 20 30 40

STATE OF CALIFORNIA
BUSINESS AND TRANSPORTATION AGENCY
DEPARTMENT OF TRANSPORTATION

PROJECT PLANS FOR CONSTRUCTION ON
STATE HIGHWAY
IN MONTEREY COUNTY,
FROM 0.5 MILE NORTH OF
THE NORTH GREENFIELD OVERCROSSING,
NEAR GREENFIELD,
TO 0.2 MILE SOUTH OF ARROYO SECO OVERCROSSING,
NEAR SOLEDAD
to be supplemented by Standard Plans dated January, 1975

Contract No. 05-208504

05201 208501

AS BUILT PLANS
Contract No. 05-208504
Date Completed 2-4-77
Document No. 5006-3048

I HEREBY CERTIFY THAT THIS IS A TRUE AND ACCURATE COPY OF THE ABOVE DOCUMENT TAKEN UNDER MY DIRECTION AND CONTROL ON THIS DATE IN SACRAMENTO, CALIFORNIA PURSUANT TO AUTHORIZATION BY THE DIRECTOR OF TRANSPORTATION.

16 April 77 | Joseph M. Smith | Engineer

MICROFILM - STATE OF CALIFORNIA - DEPARTMENT OF TRANSPORTATION - MICROFILM
SCALE 1"= 50' 0 100 200
SCALE 1"= 50' 0 50 100 150 200 250 300 350 400 450 500 550 600 650 700
SCALE 1"= 20' 0 10 20 30 40 50 60 70 80 90 100
SCALE 1"= 20' 0 10 20 30 40 50 60 70 80 90 100 110 120 130 140 150 160 170 180 190 200
SCALE 1"= 10' or 1"= 100' 0 10 20 30 40 50 60 70 80 90 100
SCALE 1"= 10' or 1"= 100' 0 10 20 30 40 50 60 70 80 90 100 110 120 130 140 150
SCALE 1"= 40' 0 20 40 60 80 100 120 140 160 180 200 220 240 260 280 300
SCALE 1"= 40' 0 20 40 60 80 100 120 140 160 180 200 220 240 260 280 300 320 340 360 380 400 420 440 460 480 500 520 540 560 580 600

7	CALIF.	F-[illegible]	[illegible]	1	95

New 05-Mon-101

61.5/63.7

STATE OF CALIFORNIA
KEY MAP

INDEX OF SHEETS

Sheet No.		
"	1	Title Sheet
"	2-3	Typical Sections
"	4-10	Plan And Profile
"	11-14	Construction And Intersection Details
"	15-16	Miscellaneous Profiles
"	17-21	Quantity Summary
"	22-24	Miscellaneous Construction Details
"	25-29	Highway Lighting Plans
"	30-44	Overhead Illuminated Sign Details
"	45-52	Standard Structures
"	1-3	Replace Curb And Railing Br. No. 44-02R
"	1-12	Salinas River Bridge Br. No. 44-02L
"	1-14	South Soledad Separation Br. No. 44-90
"	1-14	North Soledad Overhead Br. No. 44-91 L/R
"	1-43	Cross Sections
"	1-2	Mass Diagram

STATE OF CALIFORNIA

DEPARTMENT OF PUBLIC WORKS

DIVISION OF HIGHWAYS

PLANS FOR CONSTRUCTION ON

STATE HIGHWAY

In Monterey County, between 0.3 mile south of Salinas River and 1.2 miles north of Soledad

(being the detail plans of a portion of the route for the State highway adopted by the California Highway Commission May 18, 1955 and declared a - FREEWAY - by resolution of the California Highway Commission May 18, 1955

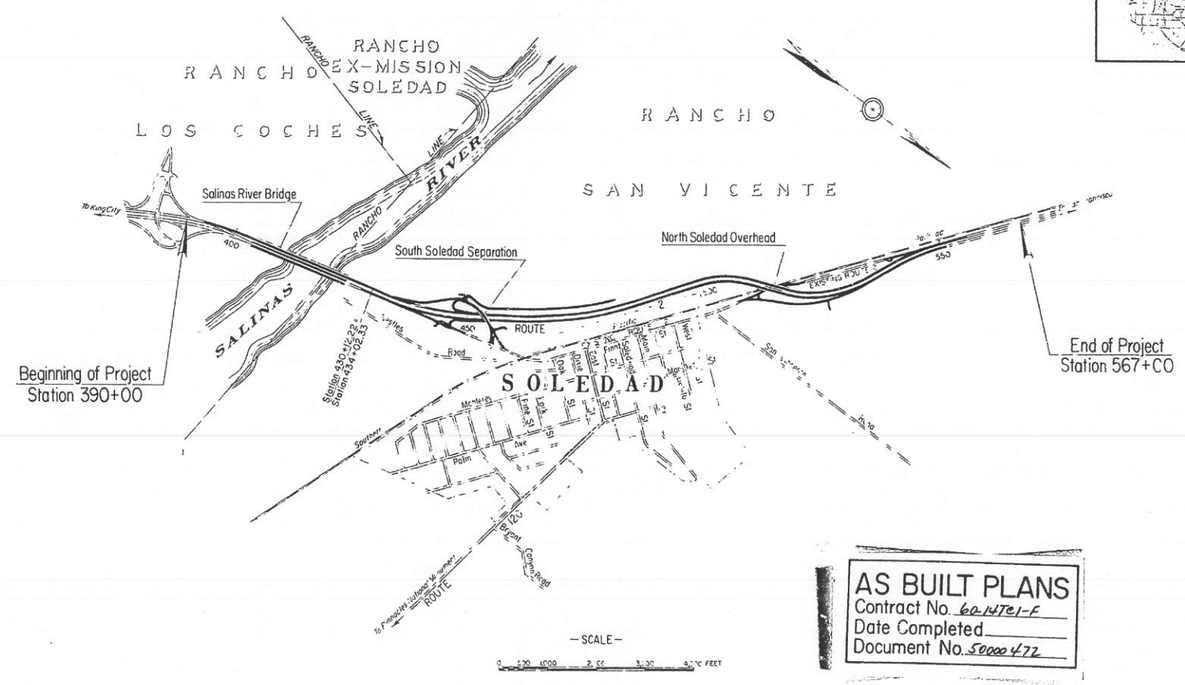

Length of Project = 17,315.01 feet = 3.28 miles

AS BUILT PLANS
Contract No. 60-14TC1-F
Date Completed
Document No. 50000472

60-14TC1-F

A. M. Nash
District Engineer

G. Langner
Engineer of Design

Approved [illegible]

G. Mills
State Highway Engineer
Department of Public Works

T. F. Bagshaw
Director of Public Works

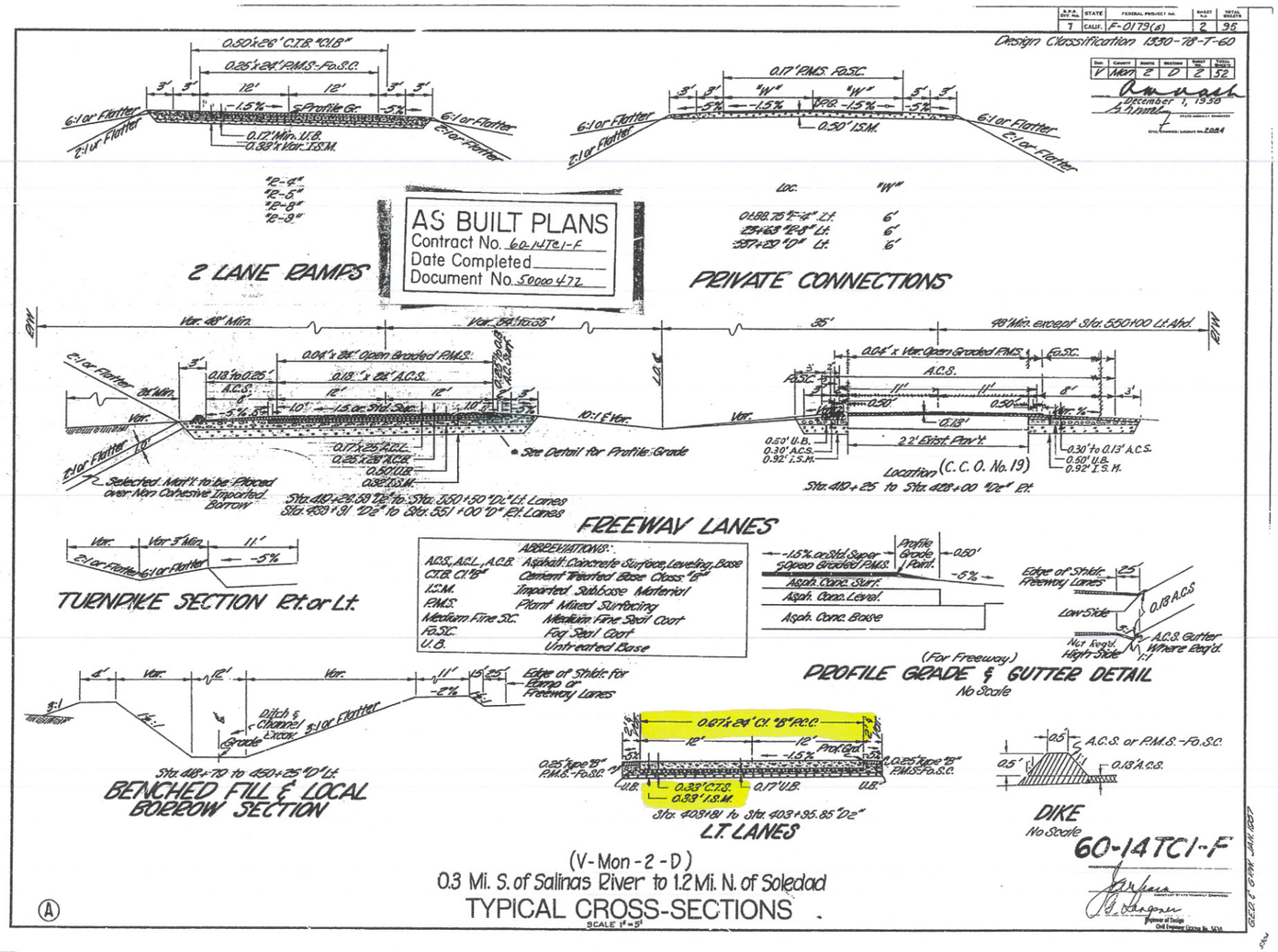

Design Classification 1330-78-T-60
AS BUILT PLANS
Contract No. 60-14TC1-F
Date Completed
Document No. 50000472
2 LANE RAMPS
PRIVATE CONNECTIONS
FREEWAY LANES
TURNPIKE SECTION Rt. or Lt.
PROFILE GRADE & GUTTER DETAIL
No Scale
(For Freeway)
BENCHED FILL & LOCAL BORROW SECTION
L.T. LANES
DIKE
No Scale
60-14TC1-F
(V-Mon-2-D)
0.3 Mi. S. of Salinas River to 1.2 Mi. N. of Soledad
TYPICAL CROSS-SECTIONS
SCALE 1" = 5'

D.P.R. DIST. NO.	STATE	FEDERAL PROJECT No.	SHEET NO.	TOTAL SHEETS
7	CALIF.	F-0177(6)	3	95

Design Classification 1950-78-T-60

Route	County	Sheet	Section	Sheet No.	Total Sheets
V	Mon	2	D	3	32

December 1, 1958

CIVIL ENGINEER LICENSE No. 2084

AS BUILT PLANS
Contract No. 60-147E1-F
Date Completed
Document No. 51000422

SNOW PARK 3 SIGNING

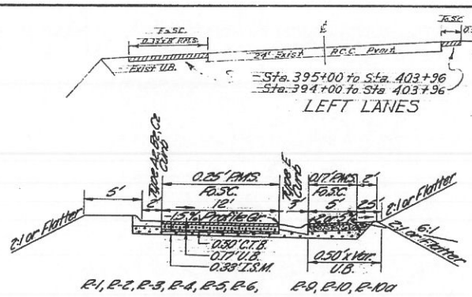

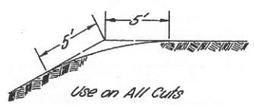

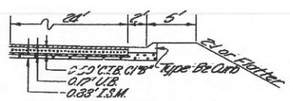

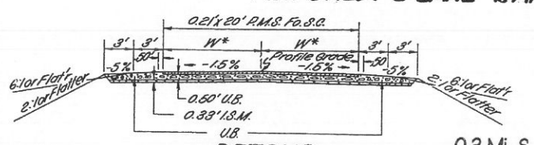

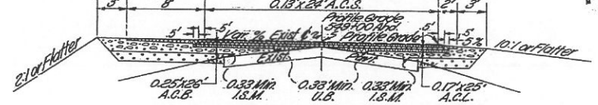

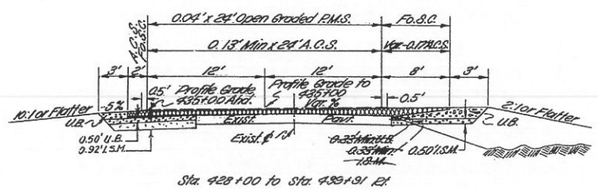

60-14TC1-F

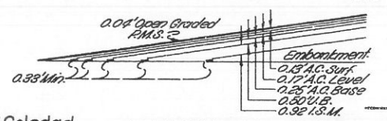

(V-Mon · 2-D)
0.3 Mi. S. of Salinas River to 1.2 Mi. N. of Soledad

TYPICAL CROSS-SECTIONS

SCALE 1" = 5'

Engineer of Design
Civil Engineer License No. 5630