Dist	COUNTY	ROUTE	POST MILES TOTAL PROJECT	SHEET No.	TOTAL SHEETS
05	SLO	166	35.0/44.0	1	10

INDEX OF PLANS

SHEET No.	DESCRIPTION
1	TITLE AND LOCATION MAP
2	TYPICAL CROSS SECTIONS
3-4	CONSTRUCTION DETAILS
5	CONSTRUCTION AREA SIGNS
6	SUMMARY OF QUANTITIES
7-8	TRAFFIC CONTROL SYSTEM
9-10	REVISED STANDARD PLANS

THE STANDARD PLANS LIST APPLICABLE TO THIS CONTRACT IS INCLUDED IN THE NOTICE TO BIDDERS AND SPECIAL PROVISIONS BOOK.

STATE OF CALIFORNIA

DEPARTMENT OF TRANSPORTATION

PROJECT PLANS FOR CONSTRUCTION ON

STATE HIGHWAY

IN SAN LUIS OBISPO COUNTY
ABOUT 25 MILES EAST OF SANTA MARIA
FROM CUYAMA RIVER BRIDGE
TO 0.3 MILE WEST OF CARRIZO CANYON BRIDGE

TO BE SUPPLEMENTED BY STANDARD PLANS DATED 2010

LOCATION MAP

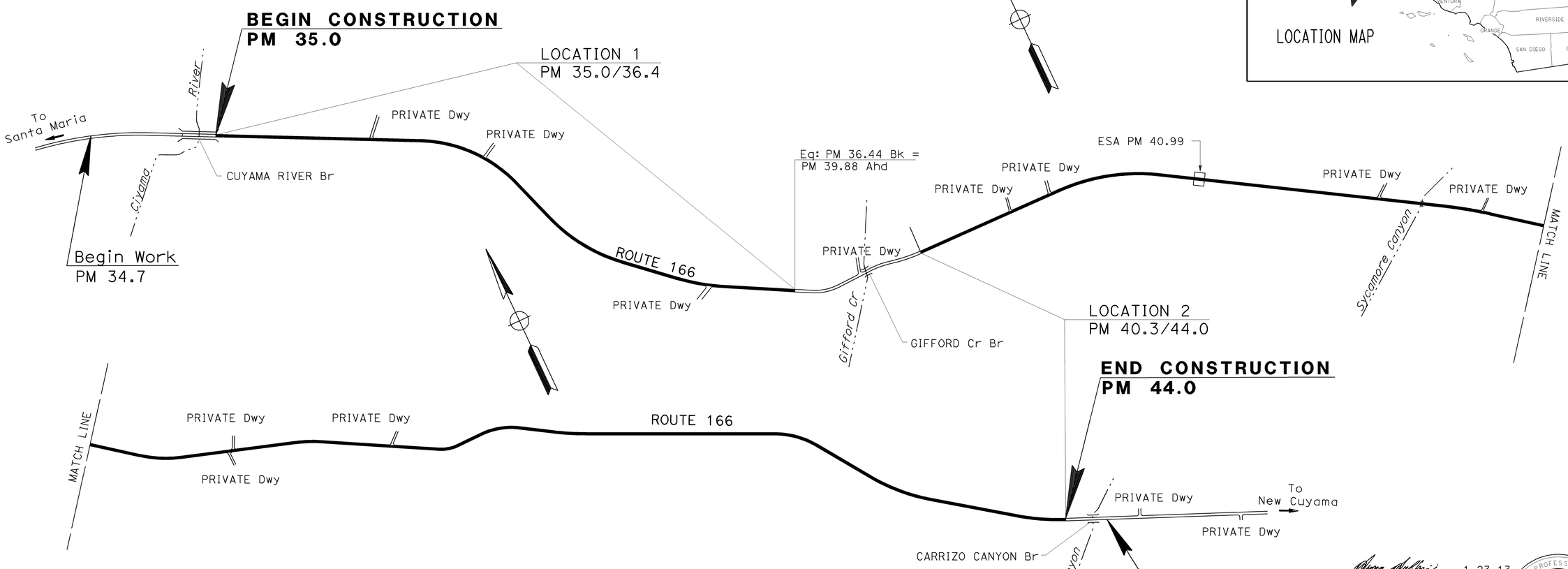

PROJECT MANAGER: KELLY McCLAIN

DESIGN ENGINEER: KELLY McCLAIN

THE CONTRACTOR SHALL POSSESS THE CLASS (OR CLASSES) OF LICENSE AS SPECIFIED IN THE "NOTICE TO BIDDERS."

ARMAN ASEFVAZIRI 1-23-13
PROJECT ENGINEER DATE
REGISTERED CIVIL ENGINEER

FEBRUARY 4, 2013
PLANS APPROVAL DATE

REGISTERED PROFESSIONAL ENGINEER ARMAN ASEFVAZIRI No. 52047 Exp. 12-31-14 CIVIL STATE OF CALIFORNIA

THE STATE OF CALIFORNIA OR ITS OFFICERS OR AGENTS SHALL NOT BE RESPONSIBLE FOR THE ACCURACY OR COMPLETENESS OF SCANNED COPIES OF THIS PLAN SHEET.

CONTRACT No.	05-1F0104
PROJECT ID	0513000035

LAST REVISION 01-23-13

DATE PLOTTED => 04-FEB-2013
TIME PLOTTED => 15:19

Dist	COUNTY	ROUTE	POST MILES TOTAL PROJECT	SHEET No.	TOTAL SHEETS
05	SLO	166	35.0/44.0	2	10

REGISTERED CIVIL ENGINEER 1-23-13 DATE

2-4-13
PLANS APPROVAL DATE

REGISTERED PROFESSIONAL ENGINEER ARMAN ASEFVAZIRI No. 52047 Exp. 12-31-14 CIVIL STATE OF CALIFORNIA

THE STATE OF CALIFORNIA OR ITS OFFICERS OR AGENTS SHALL NOT BE RESPONSIBLE FOR THE ACCURACY OR COMPLETENESS OF SCANNED COPIES OF THIS PLAN SHEET.

NOTES:

1. DIMENSIONS OF THE PAVEMENT STRUCTURES (STRUCTURAL SECTIONS) ARE SUBJECT TO TOLERANCES SPECIFIED IN THE STANDARD SPECIFICATIONS.
2. SUPERELEVATION AS SHOWN OR AS DIRECTED BY THE ENGINEER.
3. LOCATION OF COLD PLANE AC DIKES AND PLACE HMA DIKES ARE SHOWN IN SUMMARY OF QUANTITIES SHEET.
4. EXISTING UTILITY FACILITIES HAVE NOT BEEN PLOTTED ON THESE PLANS.
5. LOCATION OF RECONSTRUCT MBGR'S ARE SHOWN IN SUMMARY OF QUANTITIES SHEET.

ABBREVIATION:

CIR = COLD IN-PLACE RECYCLING

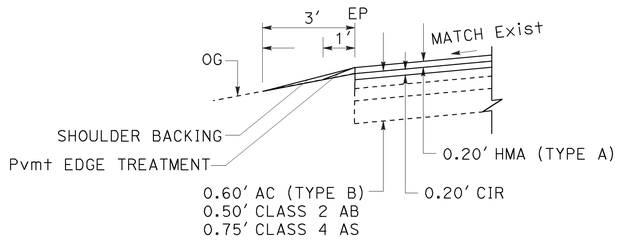

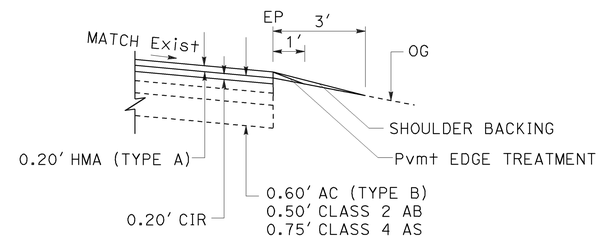

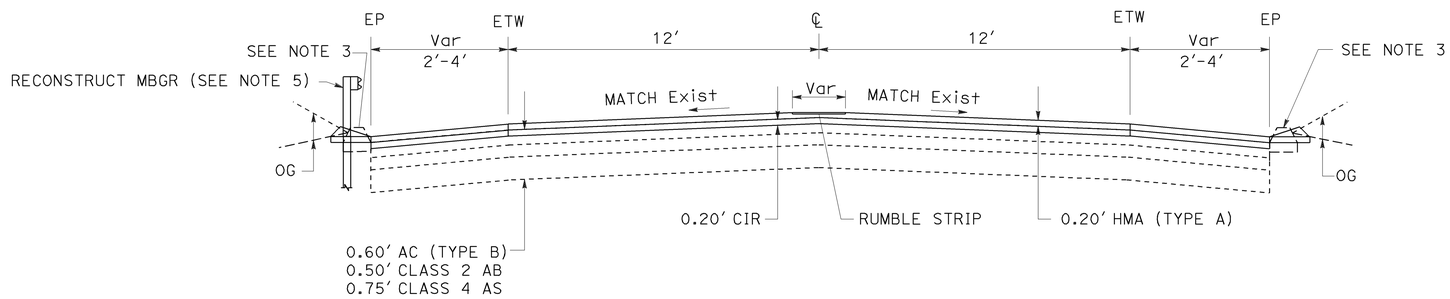

PM 42.5 TO 44.0

ROUTE 166

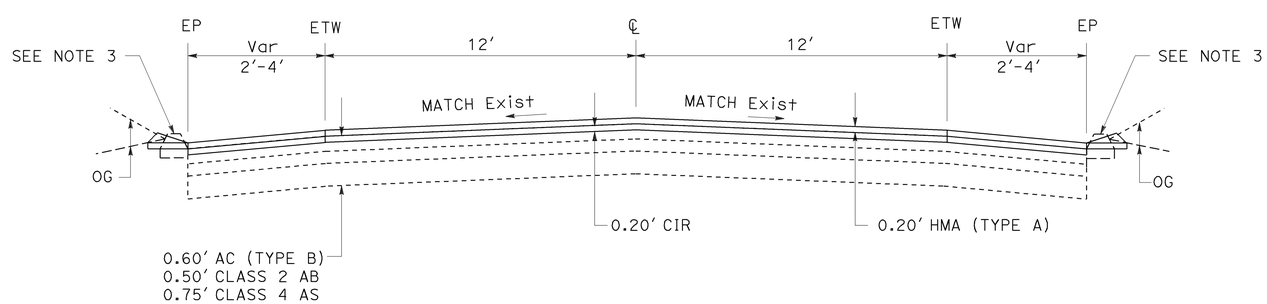

PM 35.0 TO 36.4
PM 40.3 TO 42.5

ROUTE 166

TYPICAL CROSS SECTIONS

NO SCALE

X-1

REVISED BY	DATE REVISED
AA	09-12-12

ARMAN ASEFVAZIRI — KELLY McCLAIN

CALCULATED-DESIGNED BY — CHECKED BY

FUNCTIONAL SUPERVISOR: KELLY McCLAIN

STATE OF CALIFORNIA - DEPARTMENT OF TRANSPORTATION
Caltrans® MAINTENANCE DESIGN

LAST REVISION 01-23-13 | DATE PLOTTED => 04-FEB-2013 | TIME PLOTTED => 15:19

Dist	COUNTY	ROUTE	POST MILES TOTAL PROJECT	SHEET No.	TOTAL SHEETS
05	SLO	166	35.0/44.0	3	10

REGISTERED CIVIL ENGINEER 1-23-13 DATE

2-4-13
PLANS APPROVAL DATE

REGISTERED PROFESSIONAL ENGINEER ARMAN ASEFVAZIRI No. 52047 Exp. 12-31-14 CIVIL STATE OF CALIFORNIA

THE STATE OF CALIFORNIA OR ITS OFFICERS OR AGENTS SHALL NOT BE RESPONSIBLE FOR THE ACCURACY OR COMPLETENESS OF SCANNED COPIES OF THIS PLAN SHEET.

LEGEND:

COLD PLANE AC Pvmt

ABBREVIATION:

CIR = COLD IN-PLACE RECYCLING

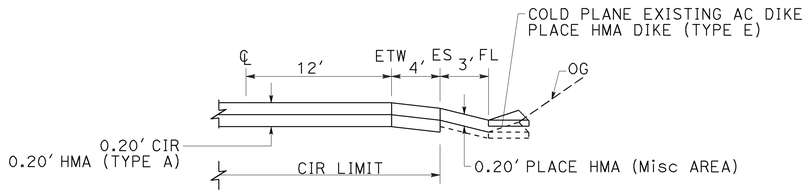

EASTBOUND
PM 42.60 TO 42.71

WESTBOUND
PM 42.69 TO 42.79
PM 42.81 TO 42.96

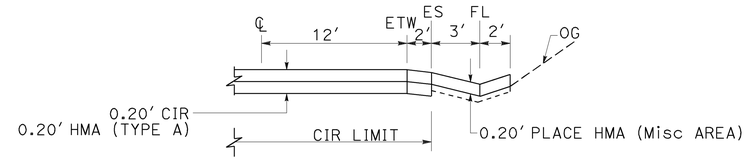

WESTBOUND
PM 35.07 TO 35.39
PM 35.84 TO 36.28

AC DITCH CONFORM

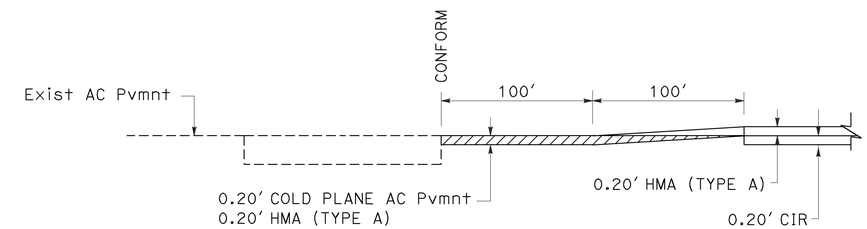

CUYAMA RIVER Br

BRIDGE CONFORM

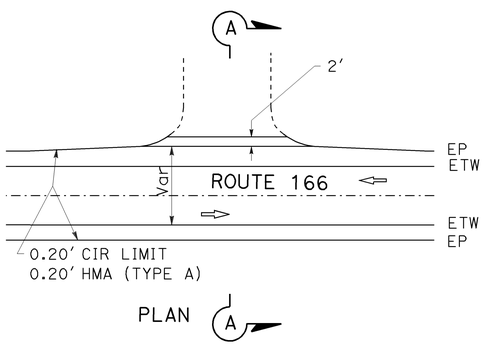

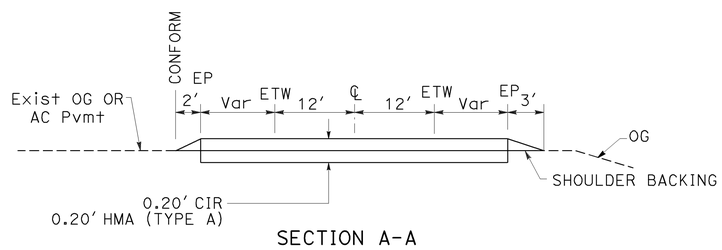

TYPICAL PRIVATE DRIVEWAY CONFORM

AC DIKE TRANSITION

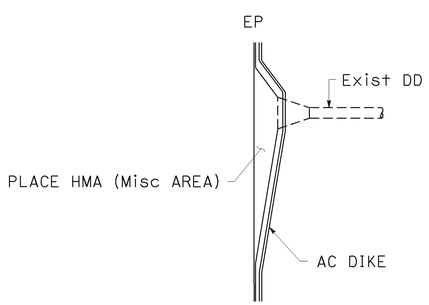

DOWN DRAIN

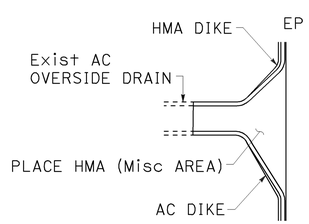

OVERSIDE DRAIN

PLAN

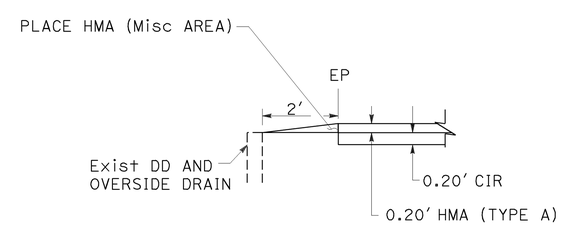

PROFILE

DRAINAGE CONFORM

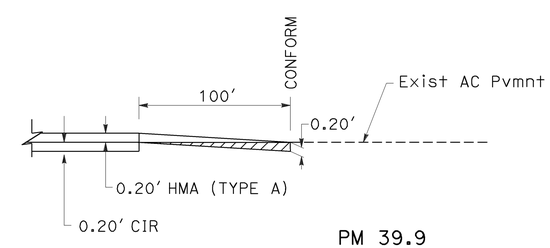

PM 39.9
PM 40.3
PM 44.0

LONGITUDINAL CONFORM

CONSTRUCTION DETAILS

NO SCALE

C-1

REVISED BY	DATE REVISED
AA	09-12-12

ARMAN ASEFVAZIRI — KELLY McCLAIN — CALCULATED-DESIGNED BY — CHECKED BY — FUNCTIONAL SUPERVISOR — KELLY McCLAIN

STATE OF CALIFORNIA - DEPARTMENT OF TRANSPORTATION
Caltrans® MAINTENANCE DESIGN

LAST REVISION 01-23-13 | DATE PLOTTED => 04-FEB-2013 | TIME PLOTTED => 15:19

Dist	COUNTY	ROUTE	POST MILES TOTAL PROJECT	SHEET No.	TOTAL SHEETS
05	SLO	166	35.0/44.0	4	10

REGISTERED CIVIL ENGINEER 1-23-13 DATE

2-4-13
PLANS APPROVAL DATE

REGISTERED PROFESSIONAL ENGINEER ARMAN ASEFVAZIRI No. 52047 Exp. 12-31-14 CIVIL STATE OF CALIFORNIA

THE STATE OF CALIFORNIA OR ITS OFFICERS OR AGENTS SHALL NOT BE RESPONSIBLE FOR THE ACCURACY OR COMPLETENESS OF SCANNED COPIES OF THIS PLAN SHEET.

LEGEND:

- GROUND-IN INDENTATION
- TYPE D TWO-WAY YELLOW RETROREFLECTIVE PAVEMENT MARKER
- TYPE H ONE-WAY YELLOW RETROREFLECTIVE PAVEMENT MARKER
- TYPE AY YELLOW NON-REFLECTIVE
- 4" YELLOW THERMOPLASTIC TRAFFIC STRIPE

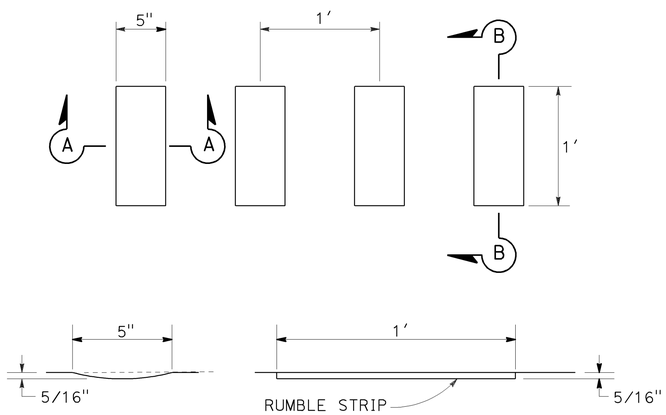

SECTION A-A SECTION B-B

CENTERLINE RUMBLE STRIP GROUND-IN INDENTATIONS

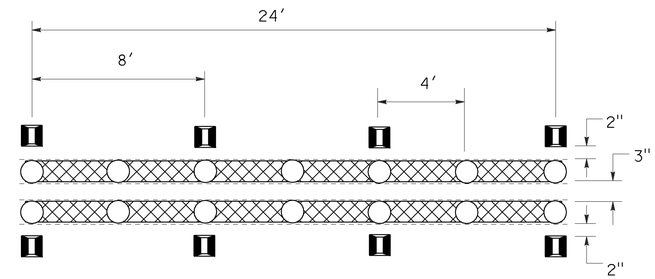

PM 42.45 TO 42.54
PM 43.17 TO 43.20

DETAIL 23 MODIFIED

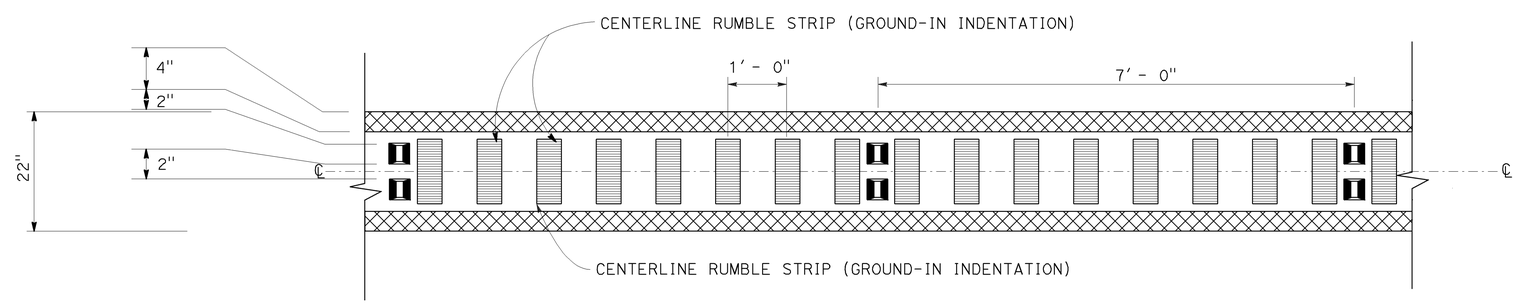

PM 42.54 TO 43.17
PM 43.20 TO 44.00

DETAIL 22 MODIFIED

CONSTRUCTION DETAILS

NO SCALE

C-2

REVISED BY	DATE REVISED
AA	09-12-12

ARMAN ASEFVAZIRI — KELLY McCLAIN
CALCULATED-DESIGNED BY — CHECKED BY
FUNCTIONAL SUPERVISOR — KELLY McCLAIN

STATE OF CALIFORNIA - DEPARTMENT OF TRANSPORTATION
Caltrans® MAINTENANCE DESIGN

LAST REVISION 01-23-13 | DATE PLOTTED => 04-FEB-2013 | TIME PLOTTED => 15:19

Dist	COUNTY	ROUTE	POST MILES TOTAL PROJECT	SHEET No.	TOTAL SHEETS
05	SLO	166	35.0/44.0	5	10

REGISTERED CIVIL ENGINEER 1-23-13 DATE

2-4-13
PLANS APPROVAL DATE

REGISTERED PROFESSIONAL ENGINEER ARMAN ASEFVAZIRI No. 52047 Exp. 12-31-14 CIVIL STATE OF CALIFORNIA

THE STATE OF CALIFORNIA OR ITS OFFICERS OR AGENTS SHALL NOT BE RESPONSIBLE FOR THE ACCURACY OR COMPLETENESS OF SCANNED COPIES OF THIS PLAN SHEET.

NOTES:

1. ALL SIGNS SHALL BE BLACK ON ORANGE BACKGROUND.
2. EXISTING UTILITY FACILITIES HAVE NOT BEEN PLOTTED ON THESE PLANS.

STATIONARY MOUNTED CONSTRUCTION AREA SIGNS

SIGN No. (X)	SIGN CODE		PANEL SIZE	SIGN MESSAGE	NUMBER OF POSTS AND SIZE	NUMBER OF SIGNS
	FEDERAL	CALIFORNIA				
(A)	W20-1		48" x 48"	ROAD WORK AHEAD	1 - 4" x 4"	2
(B)	G20-2		36" x 18"	END ROAD WORK	1 - 4" x 4"	2

EXACT SIGN LOCATIONS TO BE DETERMINED BY THE ENGINEER.

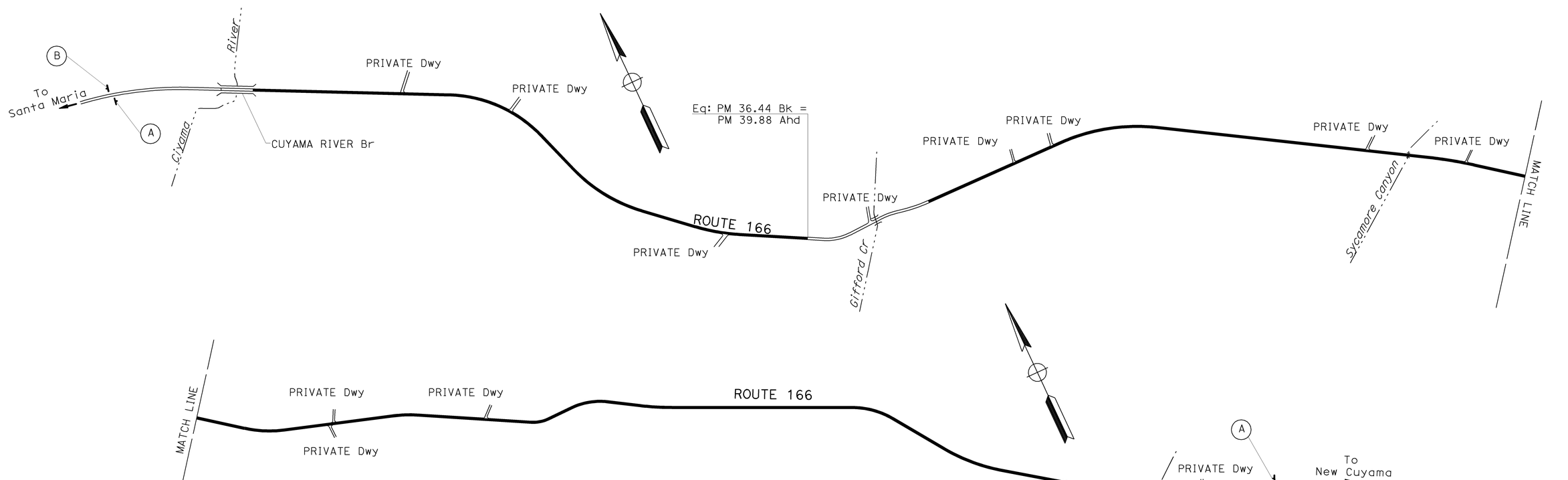

APPROVED FOR CONSTRUCTION AREA SIGN WORK ONLY

CONSTRUCTION AREA SIGNS

NO SCALE

CS-1

STATE OF CALIFORNIA - DEPARTMENT OF TRANSPORTATION
Caltrans MAINTENANCE DESIGN

FUNCTIONAL SUPERVISOR: KELLY McCLAIN

CALCULATED-DESIGNED BY: ARMAN ASEFVAZIRI
CHECKED BY: KELLY McCLAIN

REVISED BY: AA
DATE REVISED: 09-12-12

LAST REVISION 01-23-13 | DATE PLOTTED => 04-FEB-2013 | TIME PLOTTED => 15:19

Dist	COUNTY	ROUTE	POST MILES TOTAL PROJECT	SHEET No.	TOTAL SHEETS
05	SLO	166	35.0/44.0	6	10

REGISTERED CIVIL ENGINEER 1-23-13 DATE

2-4-13
PLANS APPROVAL DATE

REGISTERED PROFESSIONAL ENGINEER ARMAN ASEFVAZIRI No. 52047 Exp. 12-31-14 CIVIL STATE OF CALIFORNIA

THE STATE OF CALIFORNIA OR ITS OFFICERS OR AGENTS SHALL NOT BE RESPONSIBLE FOR THE ACCURACY OR COMPLETENESS OF SCANNED COPIES OF THIS PLAN SHEET.

METAL BEAM GUARD RAILING

LOCATION		RECONSTRUCT MBGR	RECONSTRUCT END ANCHOR ASSEMBLY (TYPE SFT)	RECONSTRUCT END ANCHOR ASSEMBLY (TYPE SRT)
		LF	EA	EA
WB	PM 42.96	125	1	1
TOTAL		125	1	1

PAVEMENT STRUCTURE

LIMIT	COLD IN-PLACE RECYCLING AREA					HMA (TYPE A)				COLD PLANE AC PAVEMENT	TACK COAT	SHOULDER BACKING	PLACE HMA (Misc AREA)	CENTERLINE RUMBLE STRIP (HMA,GROUND-IN INDENTATION)
	COLD IN-PLACE RECYCLING	EMULSIFIED RECYCLING AGENT	SAND COVER	RECYCLING ADDITIVE (CEMENT)	ASPHALTIC EMULSION (FOG SEAL COAT)	MAINLINE	HMA DIKE	Misc AREA	EDGE TREATMENT					
PM	SQYD	TON	TON	TON	TON	TON	TON	TON	TON	SQYD	TON	TON	SQYD	STA
35.0 TO 44.0	91,000	310	70	55	40	11,800	410	120	170	1,800	30	1,700	3,150	80
TOTAL	91,000	310	70	55	40	12,500				1,800	30	1,700	3,150	80

HMA DIKE AND COLD PLANE AC DIKE

DIRECTION	LIMIT	PLACE HMA DIKE (TYPE E)	PLACE HMA DIKE (TYPE F)	COLD PLANE AC DIKE	
	PM	LF	LF	TYPE	SQYD
EASTBOUND	35.59 TO 35.65	317		A	24
	35.71 TO 35.81	528		A	39
	36.10 TO 36.16	317		A	24
	42.62 TO 42.91	1,540		E	114
WESTBOUND	35.28 TO 35.31	158		A	12
	35.80 TO 35.83	158		A	12
	42.64 TO 42.79	792		E	59
	42.81 TO 42.95	739		E	55
	31.94 TO 32.00		210	F	12
TOTAL		4,549	210		351

REMOVE YELLOW THERMOPLASTIC TRAFFIC STRIPE (HAZARDOUS WASTE)

LIMIT	4" THERMOPLASTIC TRAFFIC STRIPE			
	SOLID		BROKEN	
	DETAIL			
	19	22	6	19
PM	LF			
35.0 TO 44.0	5,385	39,178	540	1,345
TOTAL	46,448			

TRAFFIC STRIPE AND PAVEMENT MARKERS

LIMIT	4" THERMOPLASTIC TRAFFIC STRIPE			4" THERMOPLASTIC TRAFFIC STRIPE (BROKEN 36-12)		PAVEMENT MARKER (RETROREFLECTIVE)	
	DETAIL			DETAIL		TYPE	
	19	22	27B	6	19	D	H
PM	LF			LF		EA	
35.0 TO 44.0	5,500	39,500	55,000	2,200	5,500	3,431	226
TOTAL	100,000			7,700		3,657	

SUMMARY OF QUANTITIES
Q-1

STATE OF CALIFORNIA - DEPARTMENT OF TRANSPORTATION
Caltrans MAINTENANCE DESIGN

FUNCTIONAL SUPERVISOR: KELLY McCLAIN
CALCULATED-DESIGNED BY: ARMAN ASEFVAZIRI
CHECKED BY: KELLY McCLAIN
REVISED BY: AA
DATE REVISED: 09-12-12

LAST REVISION 01-23-13 | DATE PLOTTED => 04-FEB-2013 | TIME PLOTTED => 15:19

Dist	COUNTY	ROUTE	POST MILES TOTAL PROJECT	SHEET No.	TOTAL SHEETS
05	SLO	166	35.0/44.0	7	10

REGISTERED CIVIL ENGINEER 12-7-12 DATE

2-4-13
PLANS APPROVAL DATE

REGISTERED PROFESSIONAL ENGINEER Gurinderpal Bhullar No. C48815 Exp. 9-30-14 CIVIL STATE OF CALIFORNIA

THE STATE OF CALIFORNIA OR ITS OFFICERS OR AGENTS SHALL NOT BE RESPONSIBLE FOR THE ACCURACY OR COMPLETENESS OF SCANNED COPIES OF THIS PLAN SHEET.

NOTES:

Unless otherwise specified in the special provisions, all temporary warning signs shall have black legend on orange background.

California code are designated by (CA). Otherwise, Federal (MUTCD) codes are shown.

TYPICAL LANE CLOSURE WITH REVERSIBLE CONTROL

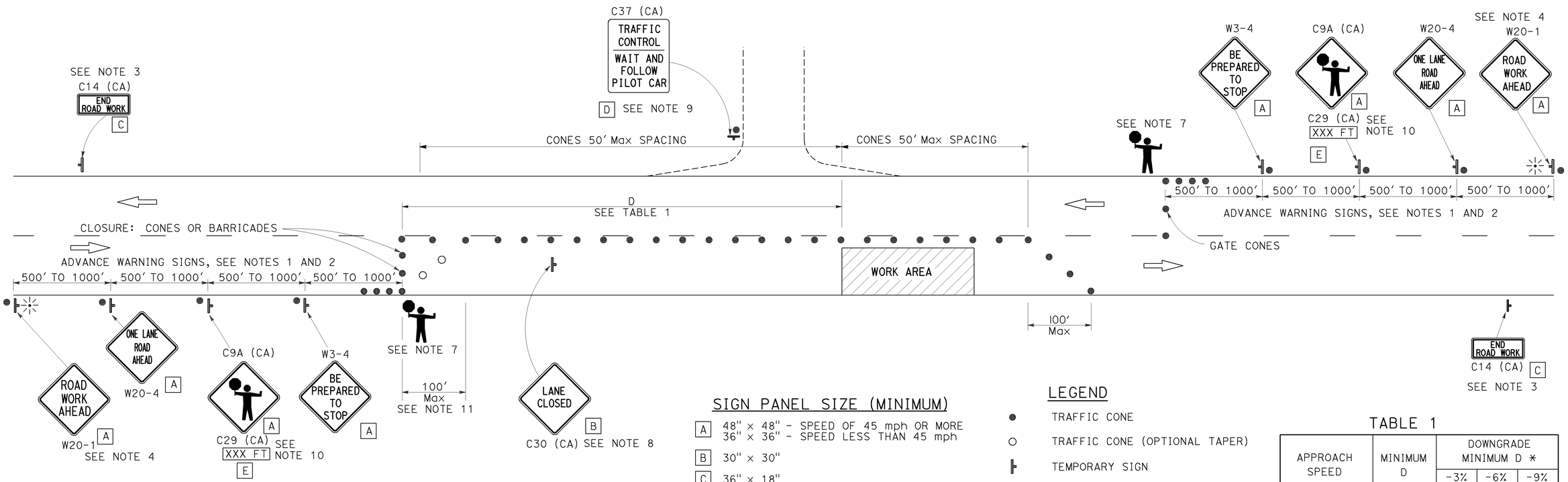

SIGN PANEL SIZE (MINIMUM)

A	48" x 48" - SPEED OF 45 mph OR MORE 36" x 36" - SPEED LESS THAN 45 mph
B	30" x 30"
C	36" x 18"
D	36" x 42"
E	36" x 9"

LEGEND

- ● TRAFFIC CONE
- ○ TRAFFIC CONE (OPTIONAL TAPER)
- TEMPORARY SIGN
- PORTABLE FLASHING BEACON
- FLAGGER

TABLE 1

APPROACH SPEED	MINIMUM D	DOWNGRADE MINIMUM D *		
		-3%	-6%	-9%
mph	ft	ft	ft	ft
25 AND BELOW	155	158	165	173
30	200	205	215	227
35	250	257	271	287
40	305	315	333	354
45	360	378	400	427
50	425	446	474	507
55	495	520	553	593
60	570	598	638	686
65	645	682	728	785

* USE ON SUSTAINED DOWNGRADE STEEPER THAN -3 PERCENT AND LONGER THAN 1 MILE.

NOTES:

1. Where approach speeds are low, advance warning signs may be placed at 300' spacing, and closer in urban areas.
2. Each advance warning sign in each direction of travel shall be equipped with at least two flags for daytime closure. Each flag shall be at least 16" x 16" in size and shall be orange or fluorescent red-orange in color. Flashing beacons shall be placed at the locations indicated for lane closure during hours of darkness.
3. A C14 (CA) "END ROAD WORK" sign, as appropriate, shall be placed at the end of the lane control unless the end of work area is obvious, or ends within a larger project's limits.
4. If the W20-1 sign would follow within 2000' of a stationary W20-1 or C11 (CA) "ROAD WORK NEXT _____MILES", use a W20-4 sign for the first advance warning sign.
5. All cones used for lane closures during the hours of darkness shall be fitted with retroreflective bands (or sleeves) as specified in the specifications.
6. Portable delineators, placed at one-half the spacing indicated for traffic cones, may be used instead of cones for daytime closures only.
7. Additional advance flaggers may be required. Flagger should stand in a conspicuous place, be visible to approaching traffic as well as approaching vehicles after the first vehicle has stopped. During the hours of darkness, the flagging-station and flagger shall be illuminated and clearly visible to approaching traffic. The illumination footprint of the lighting on the ground shall be at least 20' in diameter. Place a minimum of four cones at 50' intervals in advance of flagger station as shown.
8. Place C30 (CA) "LANE CLOSED" sign at 500' to 1000' intervals throughout extended work areas. They are optional if the work area is visible from the flagger station.
9. When a pilot car is used, place a C37 (CA) "TRAFFIC CONTROL-WAIT AND FOLLOW PILOT CAR" sign at all intersections within traffic control area. Signs shall be clean and visible at all times.
10. An optional C29 (CA) sign may be placed below the C9A (CA) sign.
11. Traffic cones or barricades may be placed on the optional taper as shown, barricades shall be Type I, II, or III.

STATE OF CALIFORNIA
DEPARTMENT OF TRANSPORTATION

TRAFFIC CONTROL SYSTEM FOR LANE CLOSURE ON TWO LANE CONVENTIONAL HIGHWAYS

NO SCALE

TCS-1

STATE OF CALIFORNIA - DEPARTMENT OF TRANSPORTATION

Caltrans

FUNCTIONAL SUPERVISOR | CALCULATED-DESIGNED BY | CHECKED BY | REVISED BY | DATE REVISED

LAST REVISION 01-23-13 | DATE PLOTTED => 10-DEC-2012 | TIME PLOTTED => 09:45

Dist	COUNTY	ROUTE	POST MILES TOTAL PROJECT	SHEET No.	TOTAL SHEETS
05	SLO	166	35.0/44.0	8	10

REGISTERED CIVIL ENGINEER 12-7-12 DATE

2-4-13
PLANS APPROVAL DATE

REGISTERED PROFESSIONAL ENGINEER Gurinderpal Bhullar No. C48815 Exp. 9-30-14 CIVIL STATE OF CALIFORNIA

THE STATE OF CALIFORNIA OR ITS OFFICERS OR AGENTS SHALL NOT BE RESPONSIBLE FOR THE ACCURACY OR COMPLETENESS OF SCANNED COPIES OF THIS PLAN SHEET.

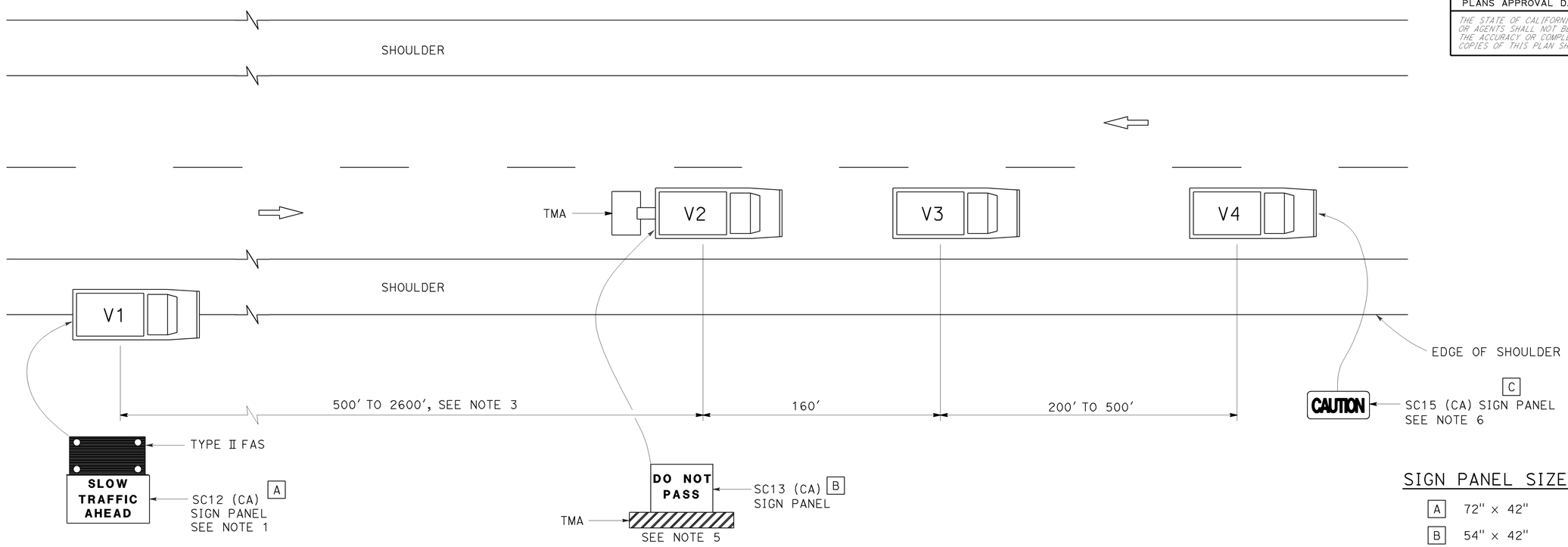

SIGN PANEL SIZE (Min)

A	72" × 42"
B	54" × 42"
C	54" × 24"

LEGEND

V1	SIGN VEHICLE
V2	SHADOW VEHICLE
V3	WORK/APPLICATION VEHICLE
V4	SIGN VEHICLE
TMA	TRUCK-MOUNTED ATTENUATOR
	FLASHING ARROW SIGN (FAS) IN FLASHING CAUTION MODE

NOTES:

1. Either a changeable message sign or a SC12 (CA) "SLOW TRAFFIC AHEAD" sign shall be mounted on the rear of sign vehicle V1. A Type II flashing arrow sign may be used with the SC12 (CA) sign panel.
2. Sign vehicle V1 should be positioned where highly visible when shoulders are not available.
3. If traffic queues develop, sign vehicle V1 should be positioned upstream from the end of queue.
4. Vehicle-mounted sign panels shall be Type III, IV VII, VIII or IX retroreflective sheeting, black on white, black on orange, or black on fluorescent orange, with 6" minimum series D letters per Caltrans sign specifications.
5. Gross Vehicle Weight of shadow vehicle shall be a minimum of 20,000 pounds and shall be equipped with a truck-mounted attenuator. The sign panel shown shall be mounted on the rear of shadow vehicle V2. The message "LANE CLOSED" may be used in place of the "DO NOT PASS" message.
6. The sign panel shown shall be mounted on the front of sign vehicle V4, facing opposing traffic.
7. All vehicles shall be equipped with flashing or rotating amber lights.
8. Sign vehicle V4 will not be required when the work and vehicles V2 and V3 are 2' or more from the centerline of the highway during the work or application operations.
9. All vehicles used for lane closures shall be equipped with two-way radios and the vehicle operators shall maintain communication during the work or application operation.
10. When multiple work vehicles are used in close proximity to each other, only one shadow vehicle is required and spacing between work vehicles shall be minimized in order to deter traffic from entering the closed lane.

STATE OF CALIFORNIA
DEPARTMENT OF TRANSPORTATION

TRAFFIC CONTROL SYSTEM FOR MOVING LANE CLOSURE ON TWO LANE HIGHWAYS

NO SCALE

TCS-2

REVISED BY | DATE REVISED
CALCULATED-DESIGNED BY | CHECKED BY
FUNCTIONAL SUPERVISOR
STATE OF CALIFORNIA - DEPARTMENT OF TRANSPORTATION
Caltrans

LAST REVISION 01-23-13 | DATE PLOTTED => 10-DEC-2012 TIME PLOTTED => 09:45

DIST	COUNTY	ROUTE	POST MILES TOTAL PROJECT	SHEET No.	TOTAL SHEETS
05	SLO	166	35.0/44.0	9	10

REGISTERED CIVIL ENGINEER

January 20, 2012
PLANS APPROVAL DATE

REGISTERED PROFESSIONAL ENGINEER
Cornelis M. Hakim
No. C55610
Exp. 12-31-12
CIVIL
STATE OF CALIFORNIA

THE STATE OF CALIFORNIA OR ITS OFFICERS OR AGENTS SHALL NOT BE RESPONSIBLE FOR THE ACCURACY OR COMPLETENESS OF SCANNED COPIES OF THIS PLAN SHEET.

TO ACCOMPANY PLANS DATED 2-4-13

ABBREVIATIONS:

SE SAFETY EDGE

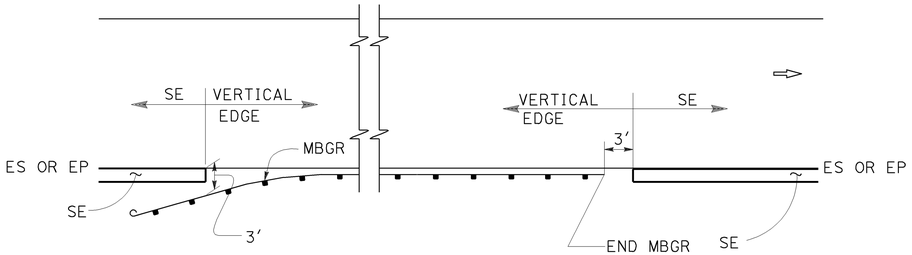

MBGR

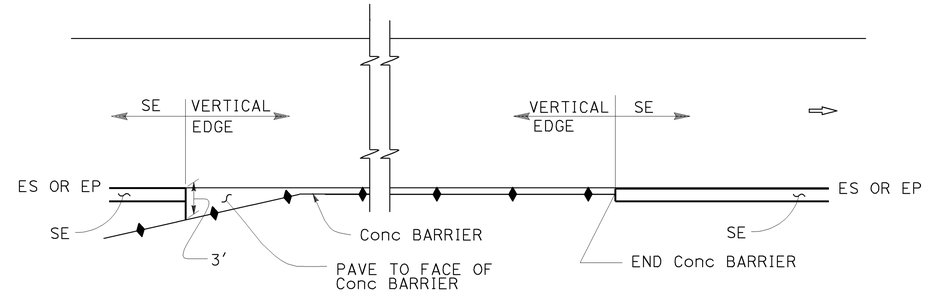

CONCRETE BARRIER

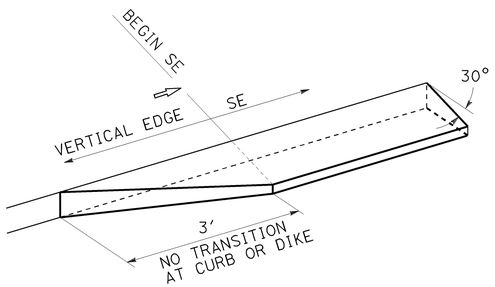

TRANSITION DETAIL FOR CONCRETE ONLY

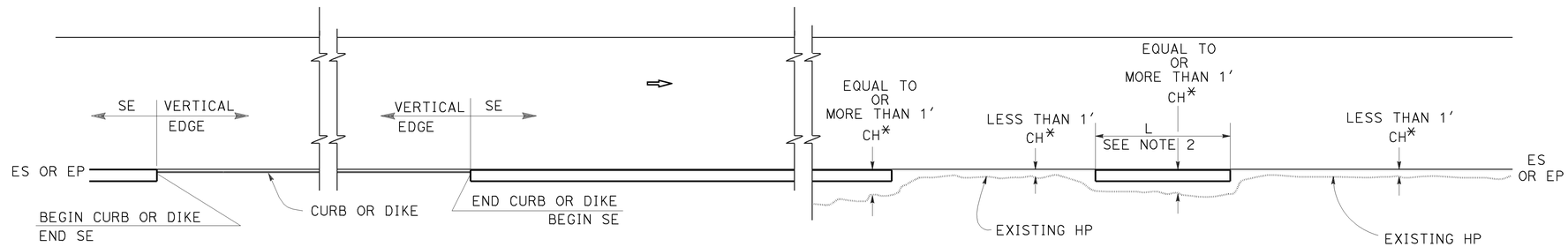

CURB OR DIKE

NARROW SIDE SLOPE

* CH = Distance from ES or EP to existing HP.

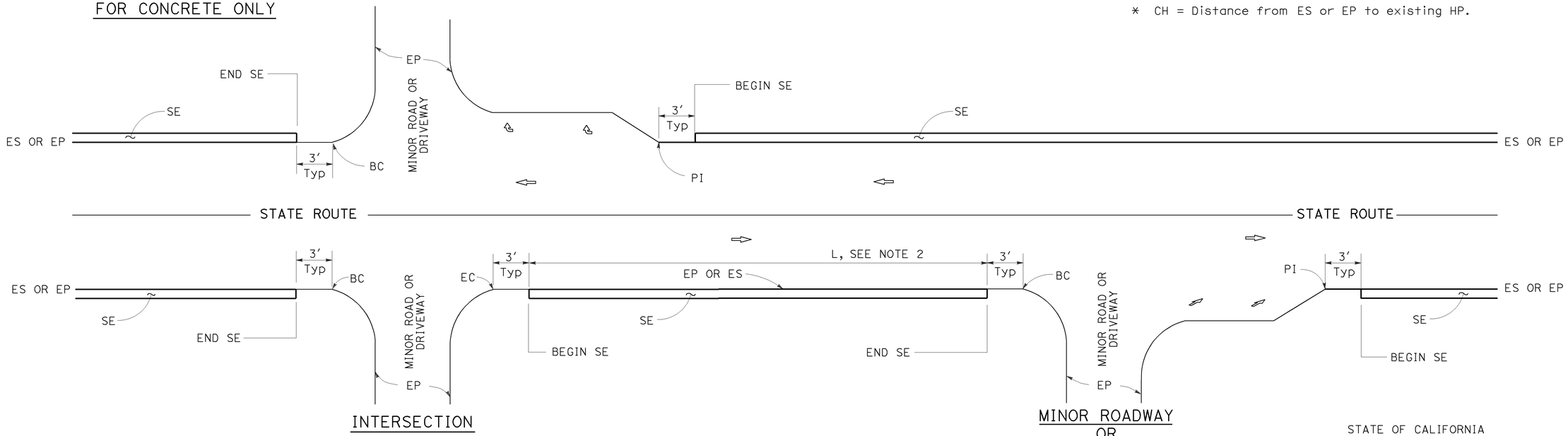

INTERSECTION

DRIVEWAY AND INTERSECTION

MINOR ROADWAY OR DRIVEWAY

NOTES:

1. For details not shown, see Revised Standard Plans RSP P75 and RSP P76.
2. Safety edge is optional when L is less than 30′.

STATE OF CALIFORNIA
DEPARTMENT OF TRANSPORTATION

PAVEMENT EDGE TREATMENTS

NO SCALE

RSP P74 DATED JANUARY 20, 2012 SUPPLEMENTS THE STANDARD PLANS BOOK DATED 2010.

REVISED STANDARD PLAN RSP P74

2010 REVISED STANDARD PLAN RSP P74

01-05-12

DIST	COUNTY	ROUTE	POST MILES TOTAL PROJECT	SHEET No.	TOTAL SHEETS
05	SLO	166	35.0/44.0	10	10

REGISTERED CIVIL ENGINEER

January 20, 2012
PLANS APPROVAL DATE

REGISTERED PROFESSIONAL ENGINEER Cornelis M. Hakim No. C55610 Exp. 12-31-12 CIVIL STATE OF CALIFORNIA

THE STATE OF CALIFORNIA OR ITS OFFICERS OR AGENTS SHALL NOT BE RESPONSIBLE FOR THE ACCURACY OR COMPLETENESS OF SCANNED COPIES OF THIS PLAN SHEET.

TO ACCOMPANY PLANS DATED 2-4-13

2010 REVISED STANDARD PLAN RSP P75

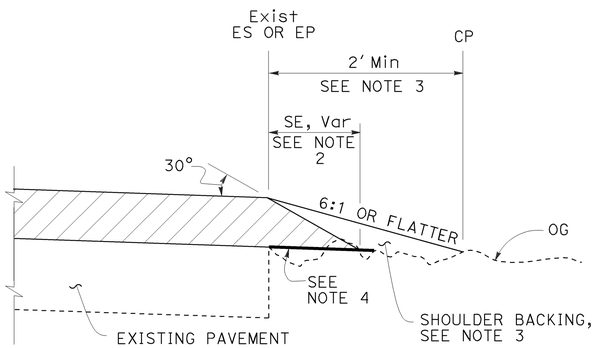

CASE A
Safety Edge

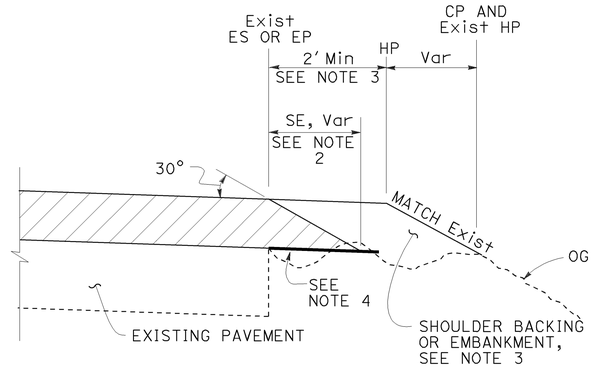

CASE B
Safety Edge

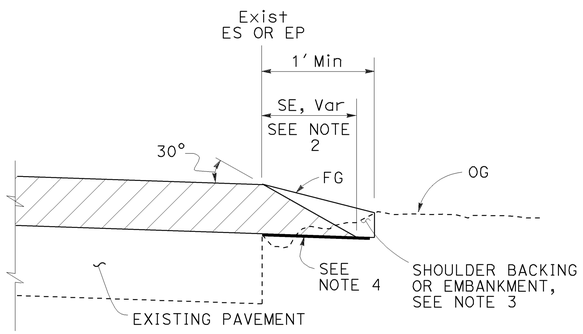

CASE C
Safety Edge

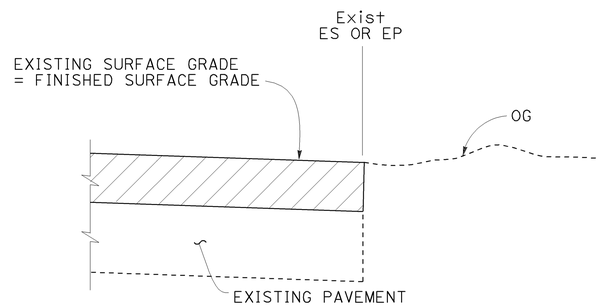

CASE D
Vertical Edge

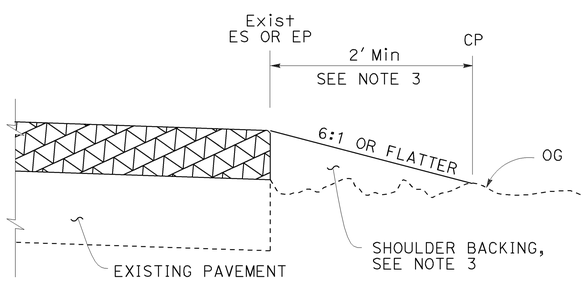

CASE E
Vertical Edge

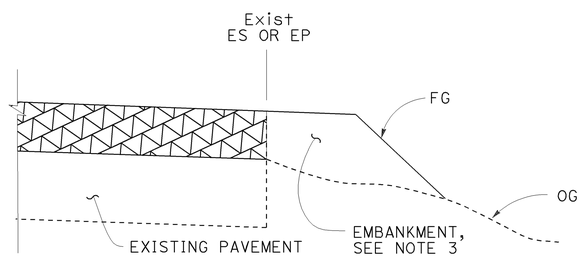

CASE F
Vertical Edge
* See Table A and Revised Std Plan RSP P74

LEGEND:

- HMA OVERLAY
- HMA OR CONCRETE OVERLAY
- CONCRETE OVERLAY

ABBREVIATIONS:

SE SAFETY EDGE
TT TOTAL THICKNESS OF SE

TABLE A
EDGE TREATMENT FOR VARIOUS OVERLAY THICKNESS AND CONDITIONS

	OVERLAY THICKNESS	
FIELD CONDITION	LESS THAN 0.15′	0.15′ OR MORE
Exist SLOPE 6:1 OR FLATTER	CASE E	CASE A
Exist SLOPE 3:1 TO 6:1	CASE E	CASE B
Exist SLOPE STEEPER THAN 3:1	CASE F	CASE F
CUT SECTION (REPLACE, COLD PLANE, MILL PAVEMENT)	CASE D	CASE C

ADDITIONAL HMA OR CONCRETE QUANTITIES FOR SE/SIDE/MILE

TYPICAL CROSS SECTION	TT	TOTAL ADDITIONAL MATERIAL FOR SE/SIDE/MILE		
		HMA (TON)	CONCRETE (CY)*	CONCRETE (CY)**
TT	0.15′	NA	NA	NA
	0.20′	13.7	NA	NA
	0.30′	30.9	NA	NA
	0.40′	54.9	NA	NA
	0.45′	69.4	NA	NA
TT 0.43′	0.50′	84.2	NA	NA
	0.60′	113.9	NA	NA
	0.70′	143.6	70.9	94.2
	0.80′	173.3	85.6	112.2
	0.90′	203.0	100.3	130.2
	1.00′	232.7	114.9	148.2
	1.10′	262.4	129.6	166.2
	1.20′	292.1	144.3	184.2

* For Detail "A"
** For Optional Detail "A"

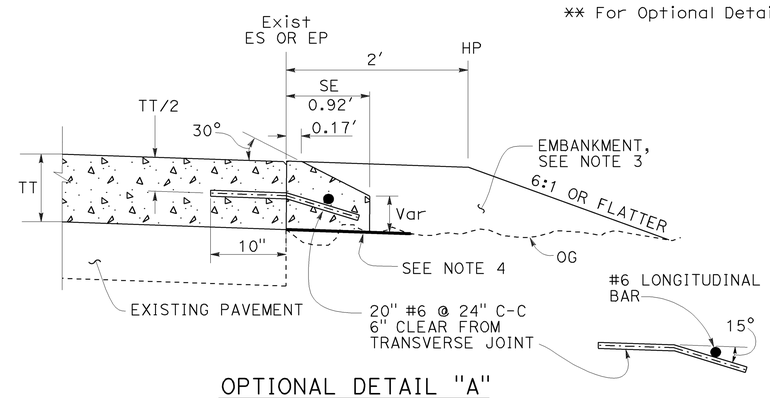

OPTIONAL DETAIL "A"
For concrete overlay
See Note 5

NOTES:

1. For limits of safety edge and vertical edge treatments, see Revised Standard Plan RSP P74.
2. Details shown for HMA overlay thickness less than 0.43′. See Detail "A" for HMA overlay thickness more than 0.43′ or concrete overlay.
3. For locations and limits of shoulder backing or embankment see project plans.
4. Grade existing ground to place safety edge. 1′ minimum width
5. Safety edge transverse joint must match overlay transverse joint. End of #6 longitudinal bar must be 2" ±½" clear from transverse joint.
6. Safety edge is not needed in the area of MBGR, barrier, right turn lane and acceleration lane. See Revised Standard Plan RSP P74.

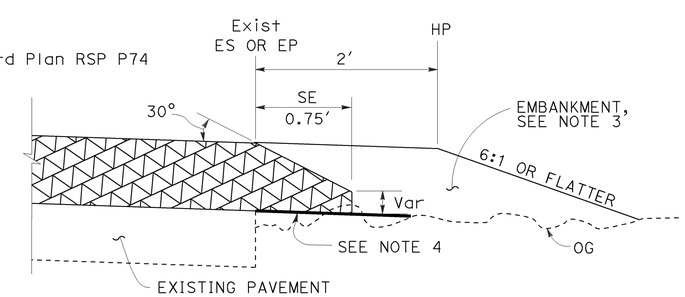

DETAIL "A"
For HMA overlay thickness more than 0.43′ or concrete overlay

STATE OF CALIFORNIA
DEPARTMENT OF TRANSPORTATION

PAVEMENT EDGE TREATMENTS-OVERLAYS

NO SCALE

RSP P75 DATED JANUARY 20, 2012 SUPPLEMENTS THE STANDARD PLANS BOOK DATED 2010.

REVISED STANDARD PLAN RSP P75

01-09-12