| Dist | COUNTY | ROUTE | POST MILES TOTAL PROJECT | SHEET No. | TOTAL SHEETS |
|---|---|---|---|---|---|
| 05 | SCr | 1 | 20.2/37.4 | 1 | 39 |

INDEX OF PLANS


| SHEET No. | DESCRIPTION |
|---|---|
| 1 | TITLE AND LOCATION MAP |
| 2-6 | TYPICAL CROSS SECTIONS |
| 7-14 | CONSTRUCTION DETAILS |
| 15 | CONSTRUCTION AREA SIGNS |
| 16-20 | PAVEMENT DELINEATION DETAILS AND QUANTITIES |
| 21-25 | SUMMARY OF QUANTITIES |
| 26-39 | REVISED STANDARD PLANS |


THE STANDARD PLANS LIST APPLICABLE TO THIS CONTRACT IS INCLUDED IN THE NOTICE TO BIDDERS AND SPECIAL PROVISIONS BOOK.

STATE OF CALIFORNIA

# DEPARTMENT OF TRANSPORTATION

ACSTP-P001(587)E

# PROJECT PLANS FOR CONSTRUCTION ON

# STATE HIGHWAY

## IN SANTA CRUZ COUNTY NEAR SANTA CRUZ FROM 0.1 MILE NORTH OF WESTERN DRIVE TO SAN MATEO COUNTY LINE

TO BE SUPPLEMENTED BY STANDARD PLANS DATED 2010

LOCATION MAP

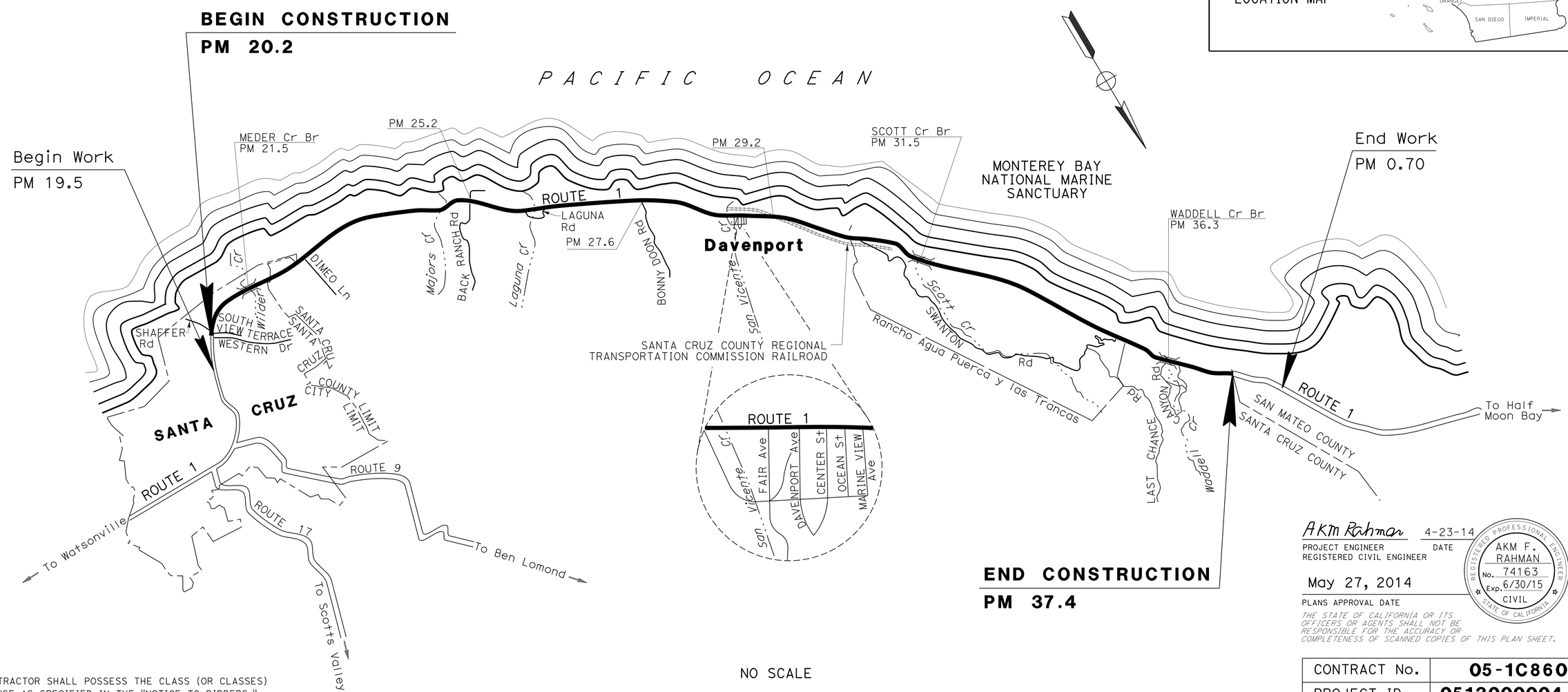


NO SCALE

THE CONTRACTOR SHALL POSSESS THE CLASS (OR CLASSES) OF LICENSE AS SPECIFIED IN THE "NOTICE TO BIDDERS."

AKM Rahman 4-23-14
PROJECT ENGINEER DATE
REGISTERED CIVIL ENGINEER

May 27, 2014
PLANS APPROVAL DATE

REGISTERED PROFESSIONAL ENGINEER AKM F. RAHMAN No. 74163 Exp. 6/30/15 CIVIL STATE OF CALIFORNIA

*THE STATE OF CALIFORNIA OR ITS OFFICERS OR AGENTS SHALL NOT BE RESPONSIBLE FOR THE ACCURACY OR COMPLETENESS OF SCANNED COPIES OF THIS PLAN SHEET.*

| | |
|---|---|
| CONTRACT No. | 05-1C8604 |
| PROJECT ID | 0513000004 |

PROJECT MANAGER: DOUG HESSING
DESIGN ENGINEER: GETACHEW ESHETE

LAST REVISION 05-27-14 | DATE PLOTTED => 11-AUG-2014 TIME PLOTTED => 16:53

| Dist | COUNTY | ROUTE | POST MILES TOTAL PROJECT | SHEET No. | TOTAL SHEETS |
|---|---|---|---|---|---|
| 05 | SCr | 1 | 20.2/37.4 | 2 | 39 |

AKM Rahman 4-23-14
REGISTERED CIVIL ENGINEER DATE

5-27-14
PLANS APPROVAL DATE

REGISTERED PROFESSIONAL ENGINEER AKM F. RAHMAN No. 74163 Exp. 6/30/15 CIVIL STATE OF CALIFORNIA

*THE STATE OF CALIFORNIA OR ITS OFFICERS OR AGENTS SHALL NOT BE RESPONSIBLE FOR THE ACCURACY OR COMPLETENESS OF SCANNED COPIES OF THIS PLAN SHEET.*

## NOTES:

1. DIMENSIONS OF THE PAVEMENT STRUCTURES (STRUCTURAL SECTIONS) ARE SUBJECT TO TOLERANCES SPECIFIED IN THE STANDARD SPECIFICATIONS.
2. TYPICAL WIDTH OF SHOULDER BACKING IS 3′.
3. EXACT LOCATIONS AND TYPES OF DIKES ARE SHOWN IN THE SUMMARY OF QUANTITIES SHEETS. FOR RUMBLE STRIP PLACEMENT FOLLOW THE CONSTRUCTION DETAILS.
4. GRADE EXISTING GROUND TO PLACE SAFETY EDGE.
5. ADJUST GUARDRAIL BLOCK AND RAIL ELEMENT SO THAT THE TOP OF THE GUARDRAIL IS 29" ABOVE THE FINISH GRADE, TOLERANCE IS +1"-1 "¼
6. RESET THE TERMINAL SYSTEMS SO THAT THE TOP OF THE RAIL IS 29" ABOVE THE FINISH GRADE, TOLERANCE IS +1"-1 "¼
7. FOR ACCURATE RIGHT OF WAY DATA, CONTACT RIGHT OF WAY ENGINEERING AT THE DISTRICT OFFICE.
8. EXISTING UTILITY FACILITIES HAVE NOT BEEN INCLUDED ON THESE PLANS.
9. PLACE ASPHALTIC EMULSION (FOG SEAL COAT) ON ALL NEW HMA DIKES.
10. FOR EXACT LOCATION OF REPAIR FAILED AREAS AND COLD PLANE AREAS SEE SHEET Q-1 AND Q-2.

## PAVEMENT CLIMATE REGION

CENTRAL COAST

## ABBREVIATION:

| | |
|---|---|
| LTL | LEFT TURN LANE |
| RTL | RIGHT TURN LANE |
| RHMA-G | RUBBERIZED HOT MIX ASPHALT (GAP GRADED) |

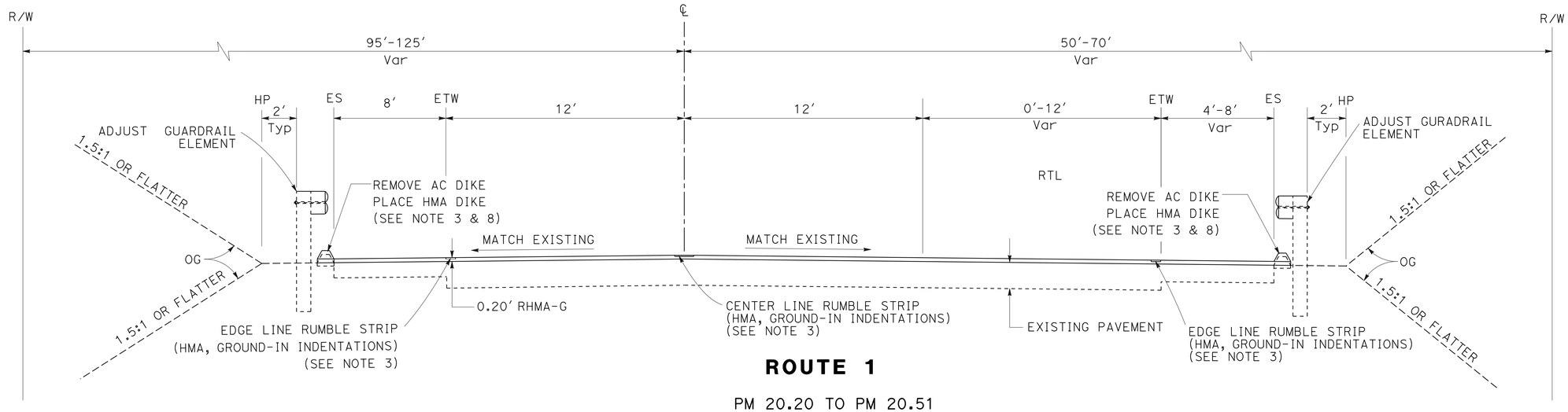


**ROUTE 1**

PM 20.20 TO PM 20.51

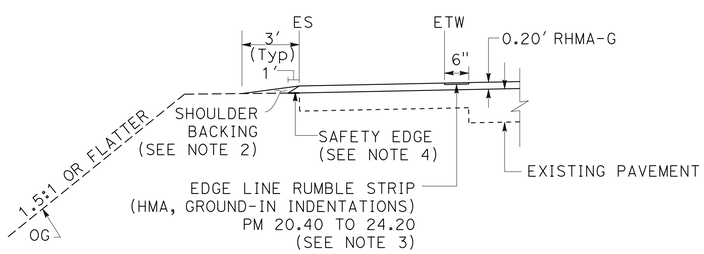


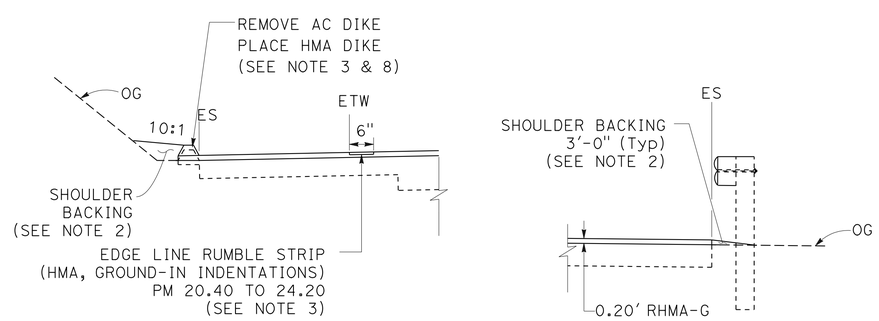


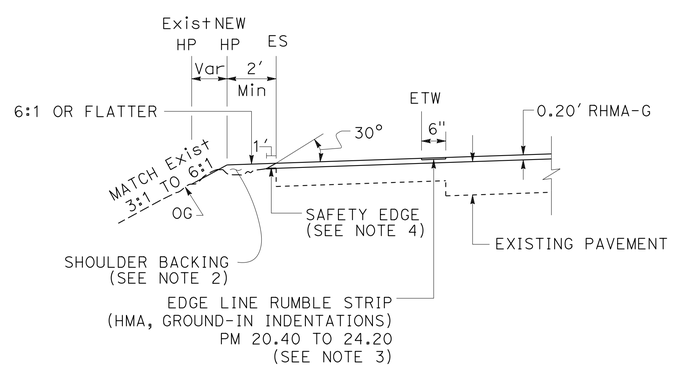


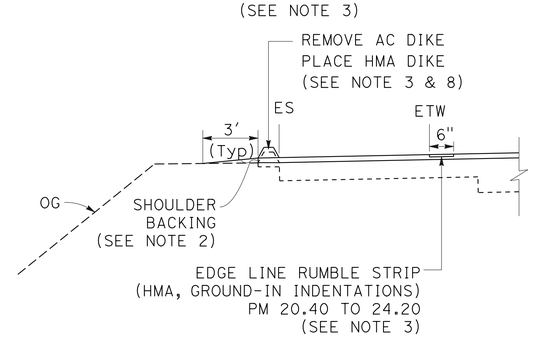


# TYPICAL CROSS SECTIONS

NO SCALE

**X-1**

STATE OF CALIFORNIA - DEPARTMENT OF TRANSPORTATION
Caltrans®
06-DESIGN

FUNCTIONAL SUPERVISOR: GETACHEW ESHETE
CALCULATED-DESIGNED BY: BILL LEE
CHECKED BY: AKM RAHMAN
REVISED BY
DATE REVISED

LAST REVISION 05-27-14
DATE PLOTTED => 27-AUG-2014
TIME PLOTTED => 10:14

| Dist | COUNTY | ROUTE | POST MILES TOTAL PROJECT | SHEET No. | TOTAL SHEETS |
|---|---|---|---|---|---|
| 05 | SCr | 1 | 20.2/37.4 | 3 | 39 |

AKM Rahman 4-23-14
REGISTERED CIVIL ENGINEER DATE

5-27-14
PLANS APPROVAL DATE

REGISTERED PROFESSIONAL ENGINEER
AKM F. RAHMAN
No. 74163
Exp. 6/30/15
CIVIL
STATE OF CALIFORNIA

*THE STATE OF CALIFORNIA OR ITS OFFICERS OR AGENTS SHALL NOT BE RESPONSIBLE FOR THE ACCURACY OR COMPLETENESS OF SCANNED COPIES OF THIS PLAN SHEET.*

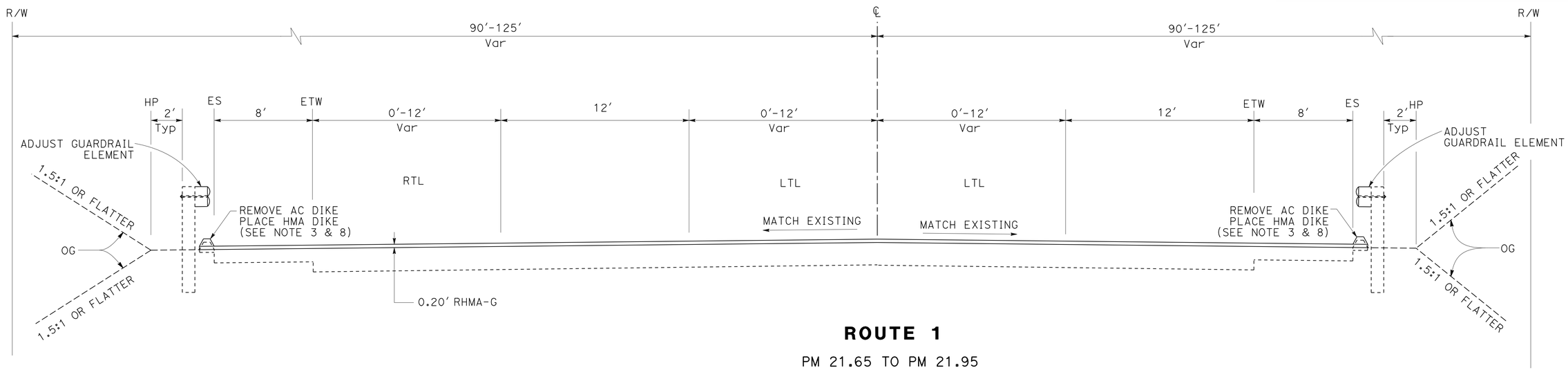


## ROUTE 1

PM 21.65 TO PM 21.95

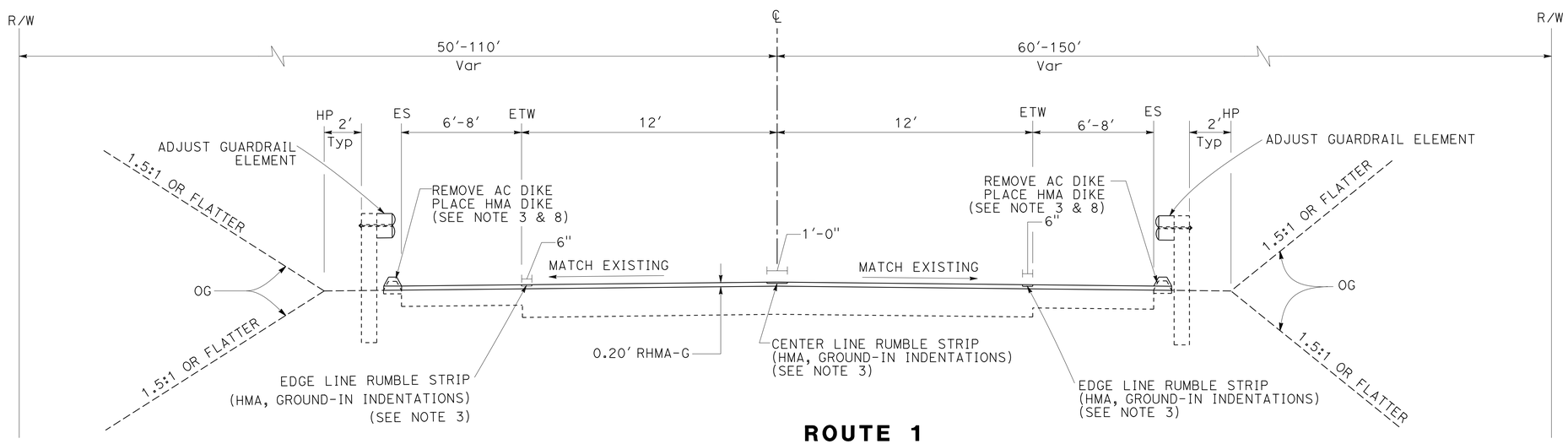


## ROUTE 1

PM 20.51 TO PM 21.65
PM 22.91 TO PM 23.34
PM 24.62 TO PM 27.48
PM 27.78 TO PM 28.56
PM 28.83 TO PM 31.41
PM 31.81 TO PM 36.23
PM 36.37 TO PM 37.45

# TYPICAL CROSS SECTIONS

NO SCALE

**X-2**

| REVISED BY | DATE REVISED |
|---|---|
| BILL LEE | AKM RAHMAN |
| CALCULATED-DESIGNED BY | CHECKED BY |
| FUNCTIONAL SUPERVISOR | GETACHEW ESHETE |

STATE OF CALIFORNIA - DEPARTMENT OF TRANSPORTATION
Caltrans
06-DESIGN

LAST REVISION 05-27-14
DATE PLOTTED => 11-AUG-2014
TIME PLOTTED => 16:27

| Dist | COUNTY | ROUTE | POST MILES TOTAL PROJECT | SHEET No. | TOTAL SHEETS |
|---|---|---|---|---|---|
| 05 | SCr | 1 | 20.2/37.4 | 4 | 39 |

AKM Rahman 4-23-14
REGISTERED CIVIL ENGINEER DATE

5-27-14
PLANS APPROVAL DATE

REGISTERED PROFESSIONAL ENGINEER
AKM F. RAHMAN
No. 74163
Exp. 6/30/15
CIVIL
STATE OF CALIFORNIA

*THE STATE OF CALIFORNIA OR ITS OFFICERS OR AGENTS SHALL NOT BE RESPONSIBLE FOR THE ACCURACY OR COMPLETENESS OF SCANNED COPIES OF THIS PLAN SHEET.*

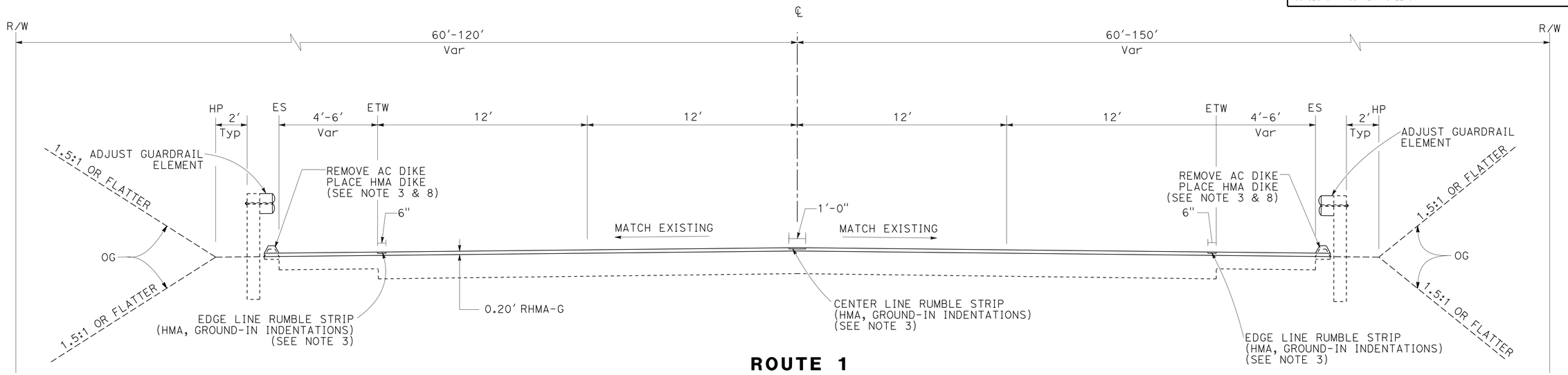


**ROUTE 1**

PM 22.07 to PM 22.76
PM 23.66 TO PM 24.62

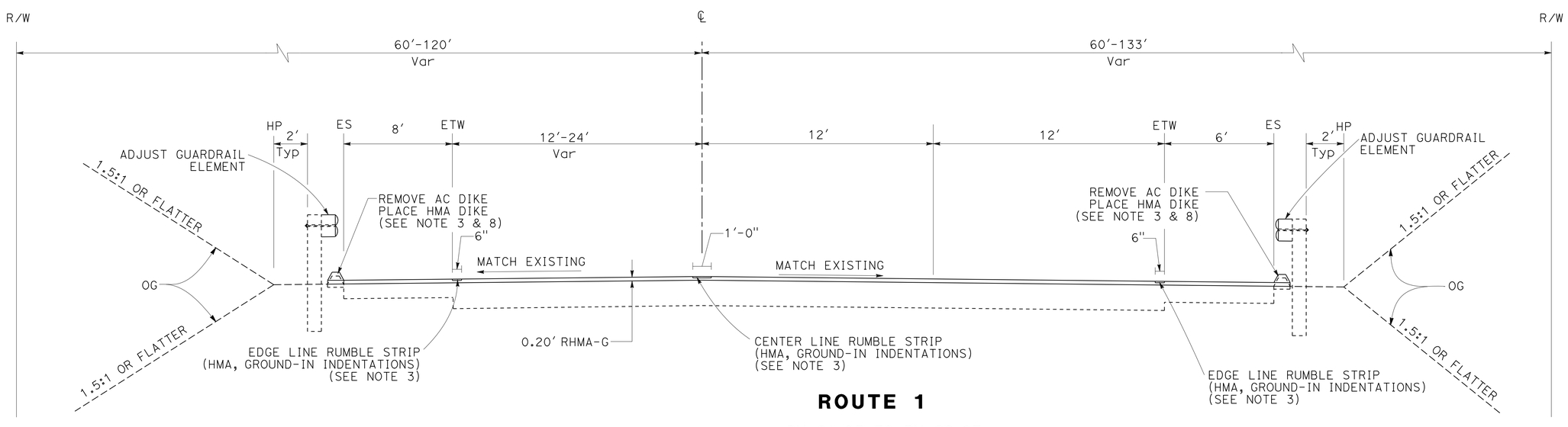


**ROUTE 1**

PM 21.95 TO PM 22.07
PM 23.34 TO PM 23.66

# TYPICAL CROSS SECTIONS

NO SCALE

**X-3**

REVISED BY | DATE REVISED
BILL LEE | AKM RAHMAN
CALCULATED-DESIGNED BY | CHECKED BY
FUNCTIONAL SUPERVISOR
GETACHEW ESHETE

STATE OF CALIFORNIA - DEPARTMENT OF TRANSPORTATION
Caltrans
06-DESIGN

LAST REVISION 05-27-14 | DATE PLOTTED => 11-AUG-2014 | TIME PLOTTED => 16:27

| Dist | COUNTY | ROUTE | POST MILES TOTAL PROJECT | SHEET No. | TOTAL SHEETS |
|---|---|---|---|---|---|
| 05 | SCr | 1 | 20.2/37.4 | 5 | 39 |

AKM Rahman 4-23-14
REGISTERED CIVIL ENGINEER DATE

5-27-14
PLANS APPROVAL DATE

REGISTERED PROFESSIONAL ENGINEER
AKM F. RAHMAN
No. 74163
Exp. 6/30/15
CIVIL
STATE OF CALIFORNIA

*THE STATE OF CALIFORNIA OR ITS OFFICERS OR AGENTS SHALL NOT BE RESPONSIBLE FOR THE ACCURACY OR COMPLETENESS OF SCANNED COPIES OF THIS PLAN SHEET.*

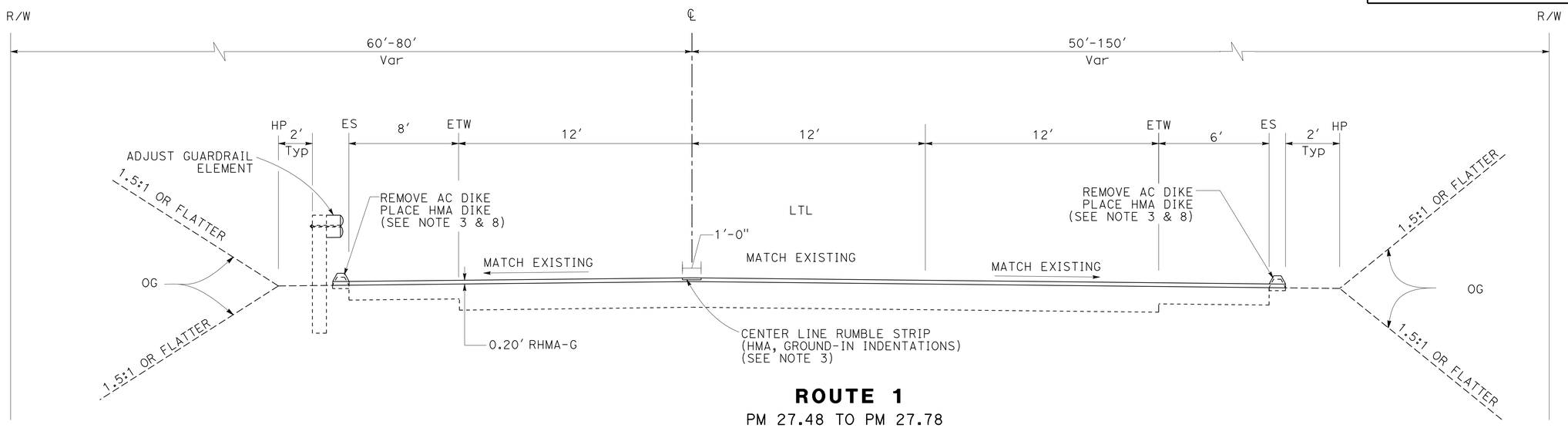


**ROUTE 1**

PM 27.48 TO PM 27.78
PM 28.56 TO PM 28.60

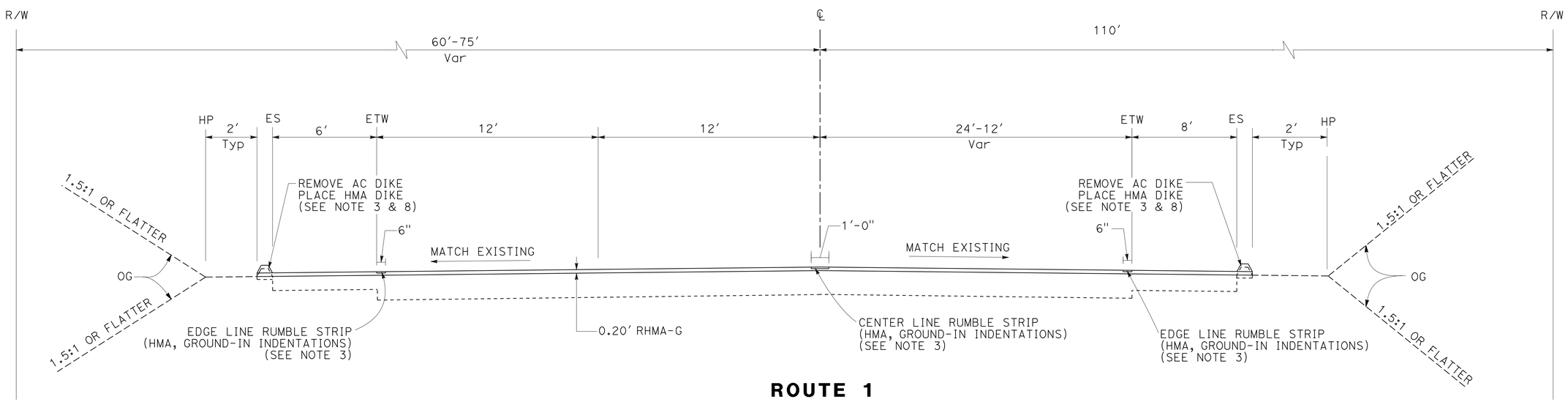


**ROUTE 1**

PM 22.76 TO PM 22.91

# TYPICAL CROSS SECTIONS

NO SCALE

**X-4**

REVISED BY | DATE REVISED
BILL LEE | AKM RAHMAN
CALCULATED-DESIGNED BY | CHECKED BY
FUNCTIONAL SUPERVISOR
GETACHEW ESHETE

STATE OF CALIFORNIA - DEPARTMENT OF TRANSPORTATION
Caltrans
06-DESIGN

LAST REVISION | DATE PLOTTED => 11-AUG-2014
05-27-14 | TIME PLOTTED => 16:27

| Dist | COUNTY | ROUTE | POST MILES TOTAL PROJECT | SHEET No. | TOTAL SHEETS |
|---|---|---|---|---|---|
| 05 | SCr | 1 | 20.2/37.4 | 6 | 39 |

AKM Rahman 4-23-14
REGISTERED CIVIL ENGINEER DATE

5-27-14
PLANS APPROVAL DATE

REGISTERED PROFESSIONAL ENGINEER
AKM F. RAHMAN
No. 74163
Exp. 6/30/15
CIVIL
STATE OF CALIFORNIA

*THE STATE OF CALIFORNIA OR ITS OFFICERS OR AGENTS SHALL NOT BE RESPONSIBLE FOR THE ACCURACY OR COMPLETENESS OF SCANNED COPIES OF THIS PLAN SHEET.*

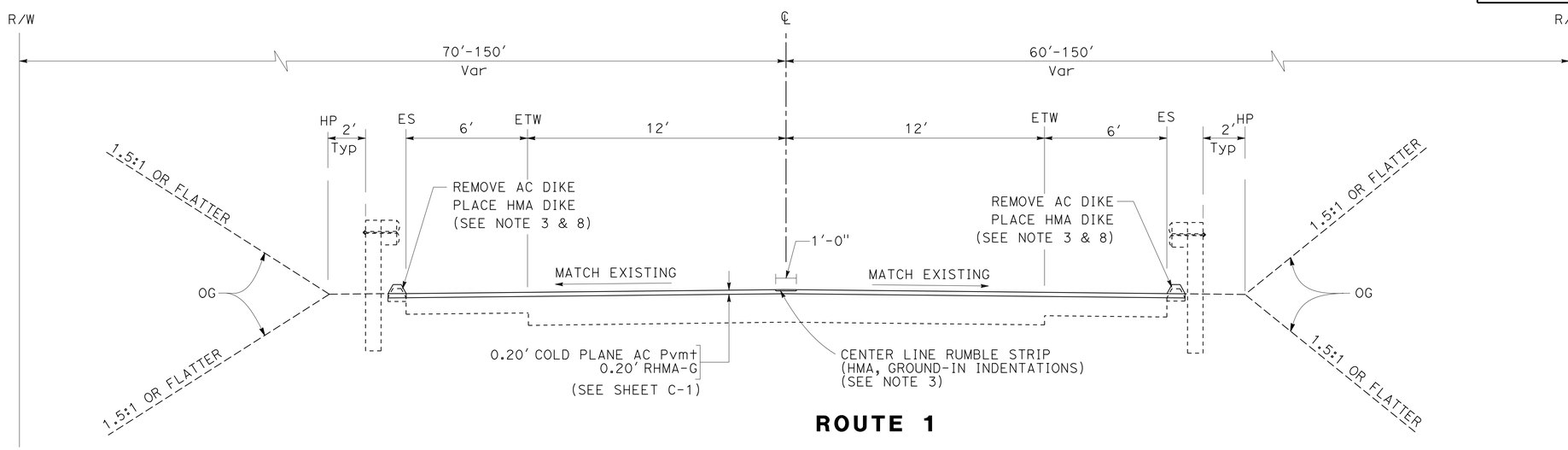


## ROUTE 1

PM 31.41 TO PM 31.55
PM 31.58 TO PM 31.81
PM 36.23 TO PM 36.30
PM 36.33 TO PM 36.37

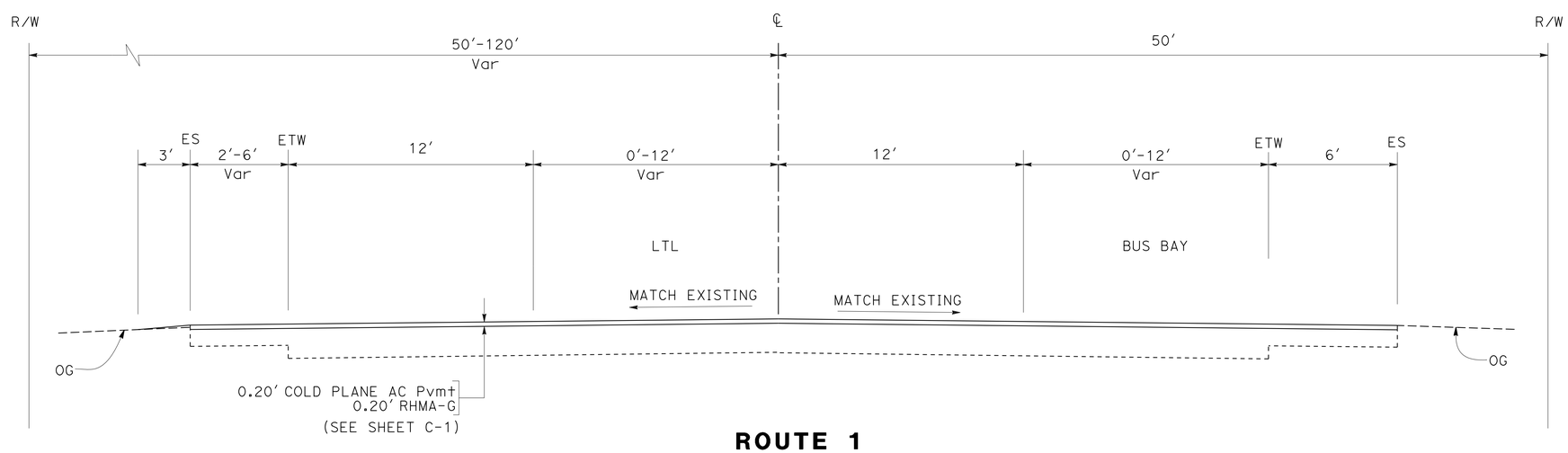


## ROUTE 1

PM 28.60 TO PM 28.83

# TYPICAL CROSS SECTIONS

NO SCALE

**X-5**

STATE OF CALIFORNIA - DEPARTMENT OF TRANSPORTATION
Caltrans
06-DESIGN

FUNCTIONAL SUPERVISOR: GETACHEW ESHETE
CALCULATED-DESIGNED BY: BILL LEE
CHECKED BY: AKM RAHMAN
REVISED BY
DATE REVISED

LAST REVISION 05-27-14
DATE PLOTTED => 11-AUG-2014
TIME PLOTTED => 16:27

| Dist | COUNTY | ROUTE | POST MILES TOTAL PROJECT | SHEET No. | TOTAL SHEETS |
|---|---|---|---|---|---|
| 05 | SCr | 1 | 20.2/37.4 | 7 | 39 |

AKM Rahman 4-23-14
REGISTERED CIVIL ENGINEER DATE

5-27-14
PLANS APPROVAL DATE

REGISTERED PROFESSIONAL ENGINEER AKM F. RAHMAN No. 74163 Exp. 6/30/15 CIVIL STATE OF CALIFORNIA

*THE STATE OF CALIFORNIA OR ITS OFFICERS OR AGENTS SHALL NOT BE RESPONSIBLE FOR THE ACCURACY OR COMPLETENESS OF SCANNED COPIES OF THIS PLAN SHEET.*

## NOTES:

1. BEGIN TAPERING FOR COLD PLANE 60′ SOUTH OF SOUTHERN EDGE OF DAVENPORT AVENUE.
2. BEGIN TAPERING FOR COLD PLANE 60′ SOUTH OF NB BRIDGE APPROACH GUARDRAIL OF SCOTT CREEK BRIDGE. INCLUDE PARKING AREAS WITHIN THE LIMITS.
3. END TAPERING FOR COLD PLANE 60′ NORTH OF NB DEPARTURE GUARDRAIL OF SCOTT CREEK BRIDGE.
4. BEGIN TAPERING FOR COLD PLANE 60′ SOUTH OF NB BRIDGE APPROACH GUARDRAIL OF WADDELL CREEK BRIDGE.
5. END TAPERING FOR COLD PLANE 60′ NORTH OF SB APPROACH GUARDRAIL OF WADDELL CREEK BRIDGE.

## LEGENDS:

- SANTA CRUZ COUNTY REGIONAL TRANSPORTATION COMMISSION RAILROAD
- COLD PLANE AC Pvmt RHMA-G
- EXISTING CONCRETE TO REMAIN IN PLACE
- REPAIR FAILED AREAS
- REMOVE AC
- REMOVE Conc
- MINOR Conc (MINOR Str)
- DIRECTION OF TRAVEL

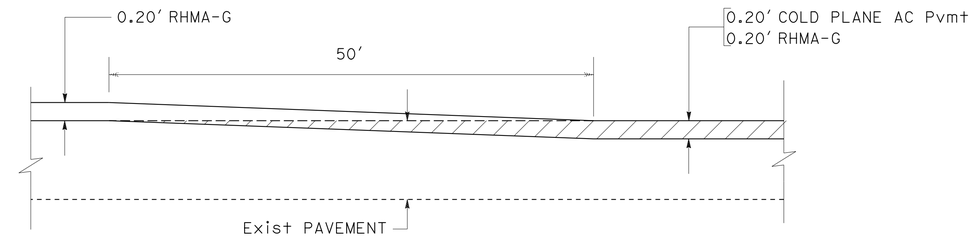


## LONGITUDINAL CONFORM AT PM 28.60, 28.83, 31.41, 31.81, 36.23 & 36.37

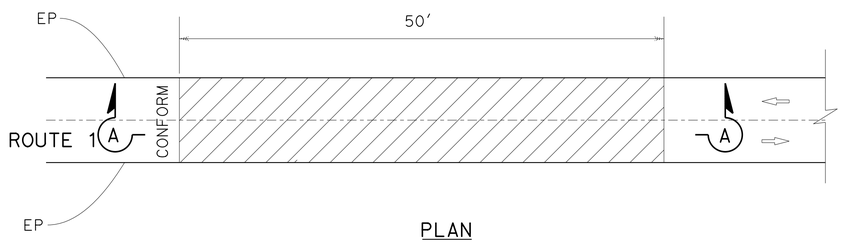


PLAN

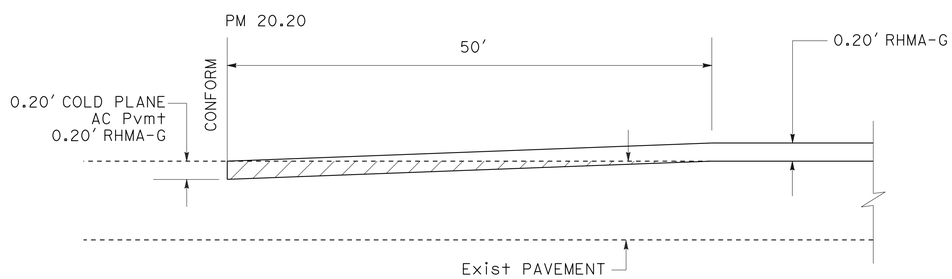


SECTION A-A

## LONGITUDINAL CONFORM AT BEGIN OF PROJECT

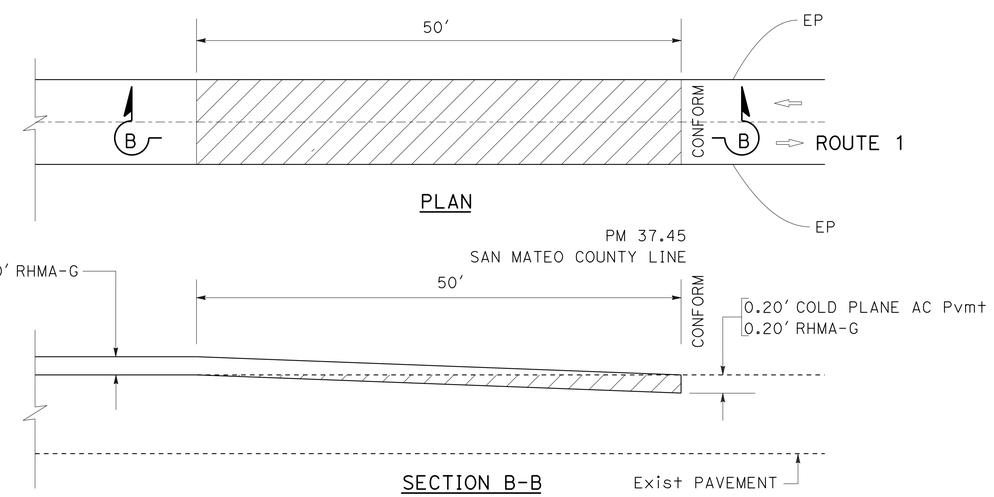


PLAN

SECTION B-B

## LONGITUDINAL CONFORM AT END OF PROJECT

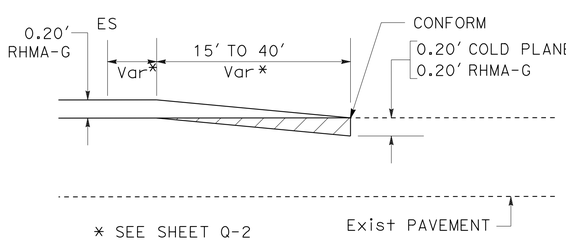


## TYPICAL DRIVEWAY CONFORM

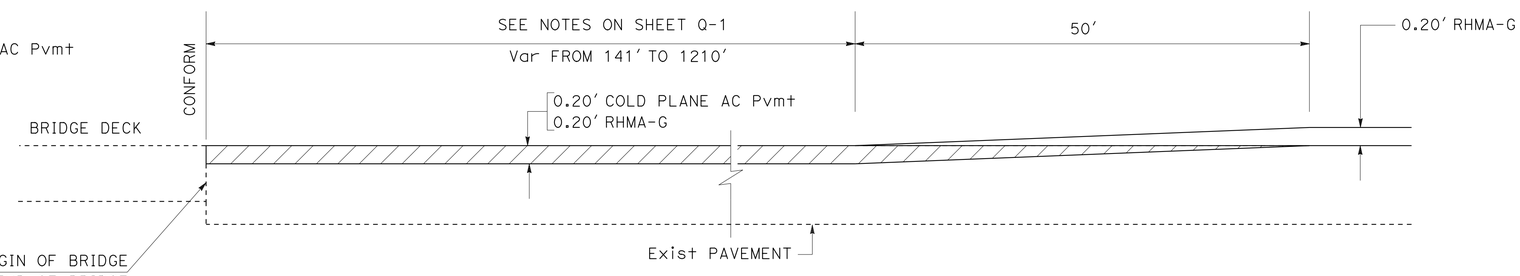


## LONGITUDINAL CONFORM AT BEGIN OR END OF BRIDGE

# CONSTRUCTION DETAILS

NO SCALE

C-1

STATE OF CALIFORNIA - DEPARTMENT OF TRANSPORTATION
Caltrans 06-DESIGN

FUNCTIONAL SUPERVISOR: GETACHEW ESHETE
CALCULATED-DESIGNED BY: AKM RAHMAN
CHECKED BY: SAUL AGUILAR
REVISED BY / DATE REVISED

LAST REVISION 05-27-14
DATE PLOTTED => 11-AUG-2014
TIME PLOTTED => 16:28

| Dist | COUNTY | ROUTE | POST MILES TOTAL PROJECT | SHEET No. | TOTAL SHEETS |
|---|---|---|---|---|---|
| 05 | SCr | 1 | 20.2/37.4 | 8 | 39 |

AKM Rahman 4-21-14
REGISTERED CIVIL ENGINEER DATE

5-27-14
PLANS APPROVAL DATE

REGISTERED PROFESSIONAL ENGINEER AKM F. RAHMAN No. 74163 Exp. 6/30/15 CIVIL STATE OF CALIFORNIA

*THE STATE OF CALIFORNIA OR ITS OFFICERS OR AGENTS SHALL NOT BE RESPONSIBLE FOR THE ACCURACY OR COMPLETENESS OF SCANNED COPIES OF THIS PLAN SHEET.*

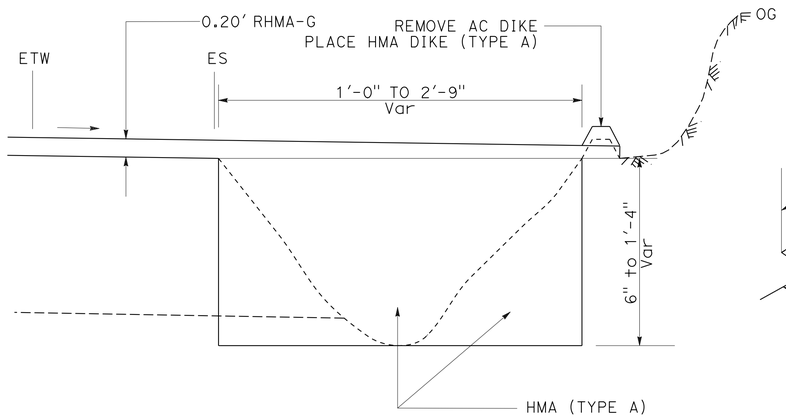


## FILL THE 70' ERODED AREA WITH HMA (TYPE A)

SB PM 28.38

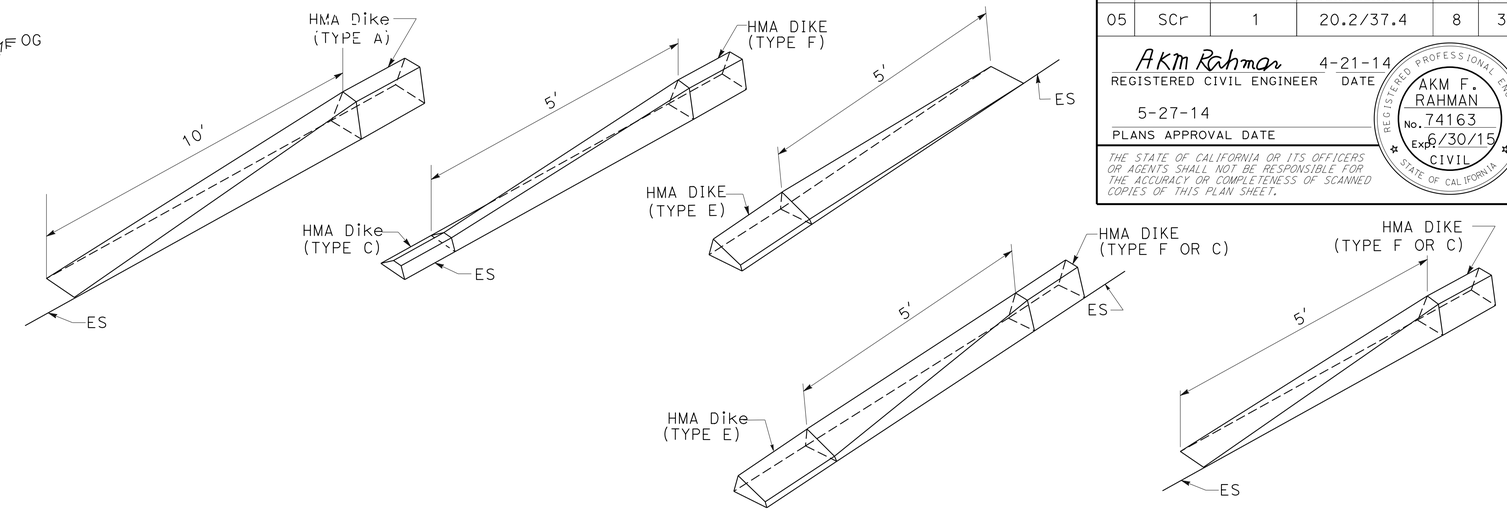


## HMA DIKE TRANSITION DETAILS

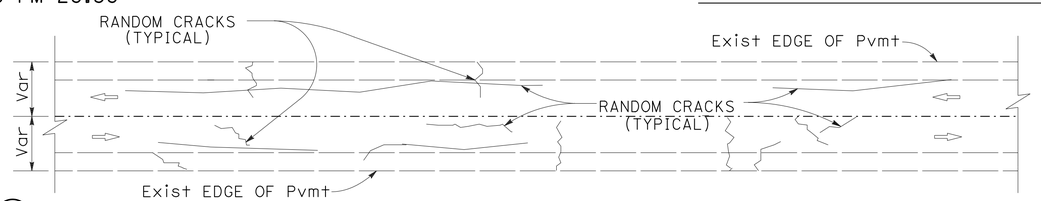


## CRACK TREATMENT DETAIL

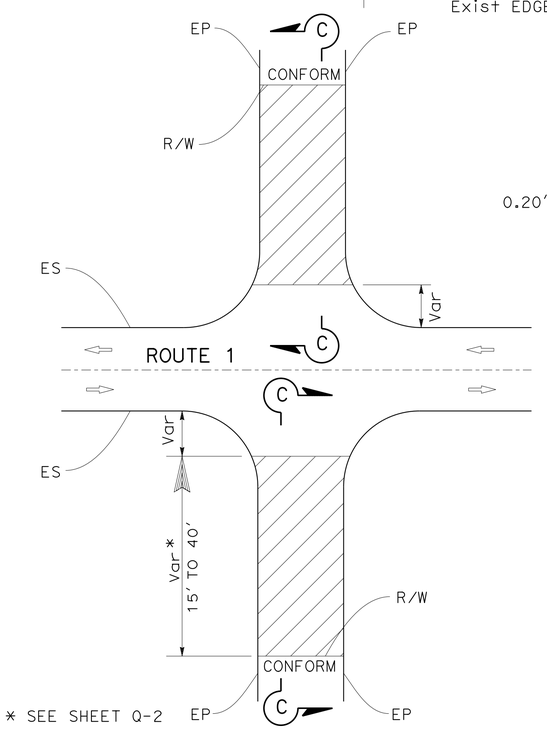


* SEE SHEET Q-2

## TYPICAL LOCAL ROAD CONFORM

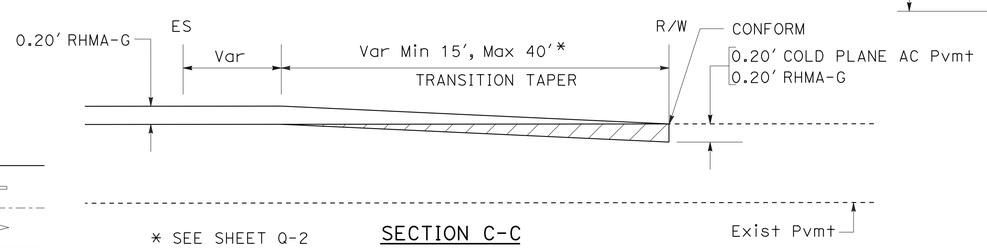


* SEE SHEET Q-2

SECTION C-C

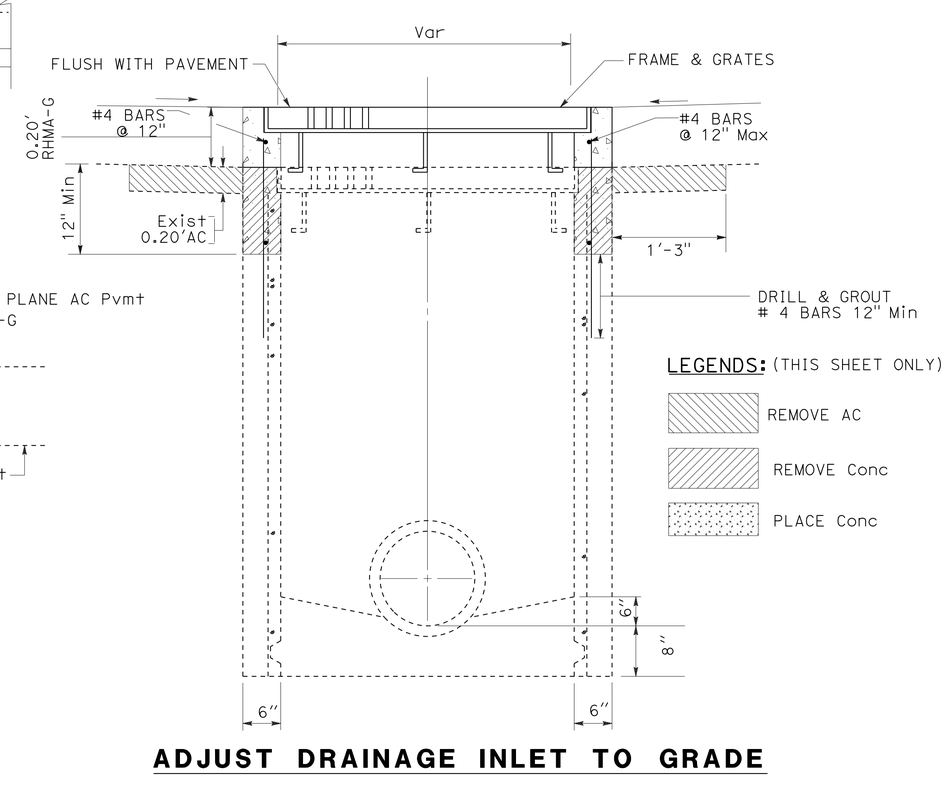


## ADJUST DRAINAGE INLET TO GRADE

# CONSTRUCTION DETAILS

NO SCALE

C-2

STATE OF CALIFORNIA - DEPARTMENT OF TRANSPORTATION
Caltrans
06-DESIGN

FUNCTIONAL SUPERVISOR: GETACHEW ESHETE
CALCULATED-DESIGNED BY: AKM RAHMAN
CHECKED BY: SAUL AGUILAR
REVISED BY
DATE REVISED

LAST REVISION 05-27-14 | DATE PLOTTED => 11-AUG-2014 | TIME PLOTTED => 16:28

| Dist | COUNTY | ROUTE | POST MILES TOTAL PROJECT | SHEET No. | TOTAL SHEETS |
|---|---|---|---|---|---|
| 05 | SCr | 1 | 20.2/37.4 | 9 | 39 |

AKM Rahman 4-21-14
REGISTERED CIVIL ENGINEER DATE

5-27-14
PLANS APPROVAL DATE

REGISTERED PROFESSIONAL ENGINEER AKM F. RAHMAN No. 74163 Exp 6/30/15 CIVIL STATE OF CALIFORNIA

*THE STATE OF CALIFORNIA OR ITS OFFICERS OR AGENTS SHALL NOT BE RESPONSIBLE FOR THE ACCURACY OR COMPLETENESS OF SCANNED COPIES OF THIS PLAN SHEET.*

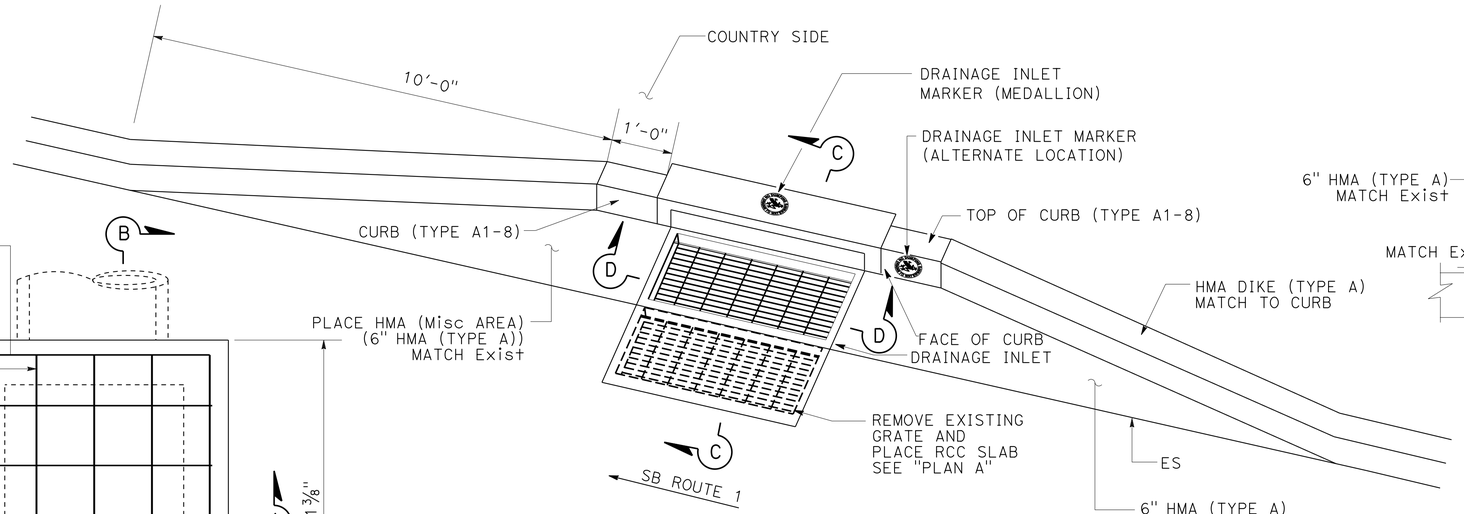


PERSPECTIVE VIEW: DRAINAGE INLET
AT SB PM 27.72

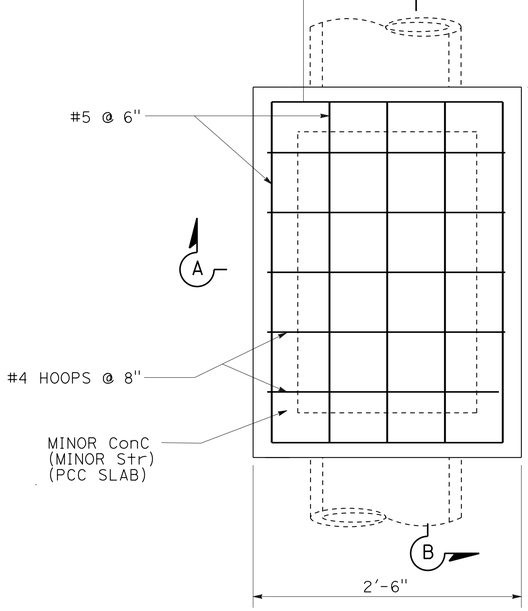


PLAN A
MINOR Conc (MINOR Str)
PCC SLAB ON Exist DRAINAGE INLET

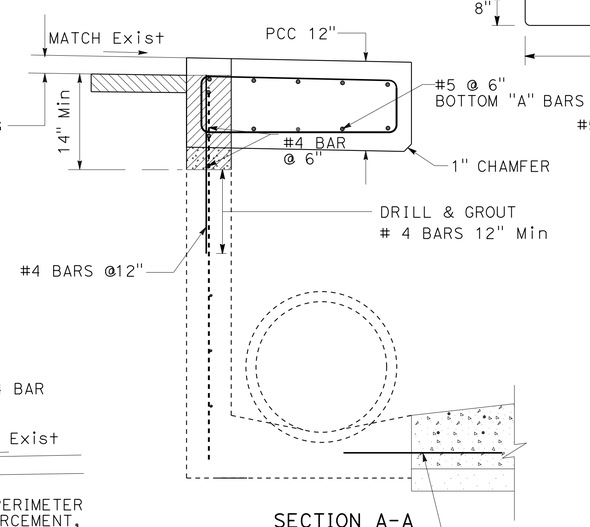


SECTION A-A

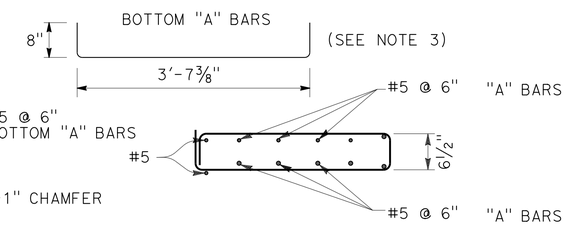


TYPICAL SECTION
(HOOP)

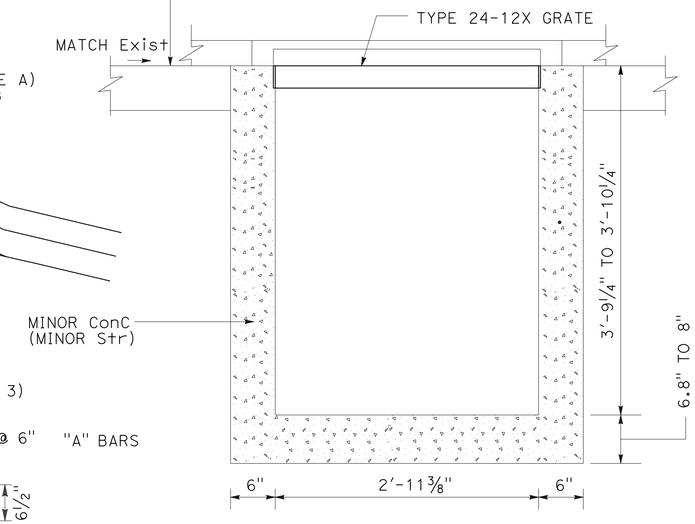


SECTION D-D

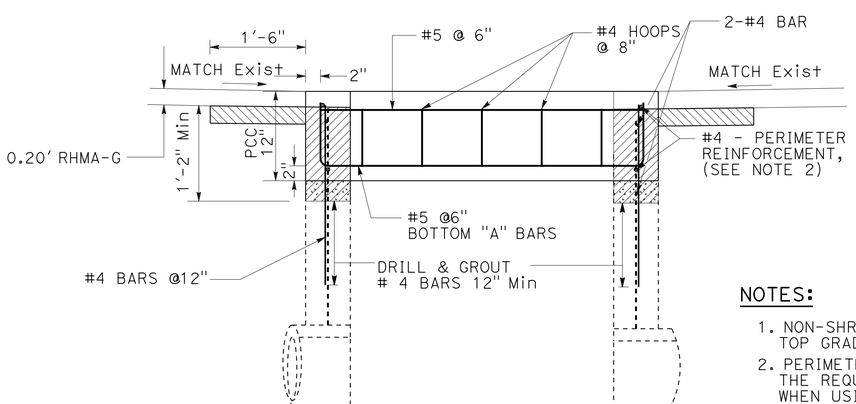


SECTION B-B

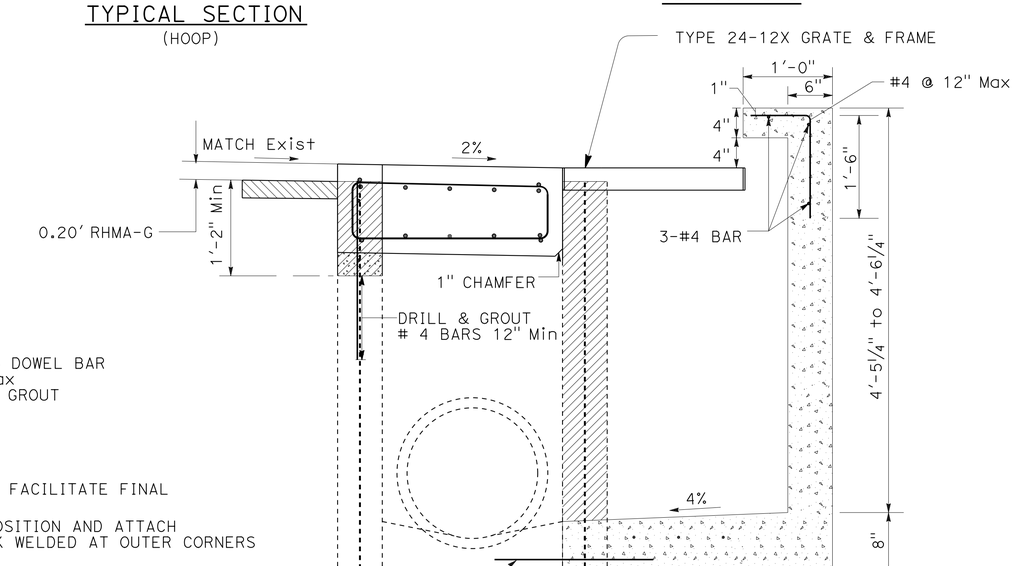


SECTION C-C
(SEE NOTE 4)

NOTES:

1. NON-SHRINK GROUT CAN BE USED FOR UPPER MOST JOINT TO FACILITATE FINAL TOP GRADE ADJUSTMENT.
2. PERIMETER REINFORCEMENT SERVES AS A RIGID FRAME TO POSITION AND ATTACH THE REQUIRED STRUCTURAL REINFORCEMENT AND MAY BE TACK WELDED AT OUTER CORNERS WHEN USING ASTM A706 WELDABLE BARS.
3. PLACE "A" BARS AT AN ANGLE SO HOOKED ENDS WILL MAINTAIN 2" CLEAR COVERAGE.
4. FOR FURTHER DETAILS SEE Std PLAN D74B.

**MODIFY DRAINAGE INLET**
**AT SB PM 27.72**

**CONSTRUCTION DETAILS**
NO SCALE

**C-3**

REVISED BY | DATE REVISED
AKM RAHMAN | SAUL AGUILAR
CALCULATED-DESIGNED BY | CHECKED BY
FUNCTIONAL SUPERVISOR | GETACHEW ESHETE

STATE OF CALIFORNIA - DEPARTMENT OF TRANSPORTATION
Caltrans
06-DESIGN

LAST REVISION 05-27-14 | DATE PLOTTED => 11-AUG-2014 | TIME PLOTTED => 16:28

| Dist | COUNTY | ROUTE | POST MILES TOTAL PROJECT | SHEET No. | TOTAL SHEETS |
|---|---|---|---|---|---|
| 05 | SCr | 1 | 20.2/37.4 | 10 | 39 |

AKM Rahman 4-21-14
REGISTERED CIVIL ENGINEER DATE

5-27-14
PLANS APPROVAL DATE

REGISTERED PROFESSIONAL ENGINEER AKM F. RAHMAN No. 74163 Exp. 6/30/15 CIVIL STATE OF CALIFORNIA

*THE STATE OF CALIFORNIA OR ITS OFFICERS OR AGENTS SHALL NOT BE RESPONSIBLE FOR THE ACCURACY OR COMPLETENESS OF SCANNED COPIES OF THIS PLAN SHEET.*

## LEGENDS:

1. EXISTING DRAINAGE INLET
2. MODIFY OR CONSTRUCT DRAINAGE INLET

## NOTES:

1. NON-SHRINK GROUT CAN BE USED FOR UPPER MOST JOINT TO FACILITATE FINAL TOP GRADE ADJUSTMENT.
2. PERIMETER REINFORCEMENT SERVES AS A RIGID FRAME TO POSITION AND ATTACH THE REQUIRED STRUCTURAL REINFORCEMENT AND MAY BE TACK WELDED AT OUTER CORNERS WHEN USING ASTM A706 WELDABLE BARS.
3. PLACE "A" BARS AT AN ANGLE SO HOOKED ENDS WILL MAINTAIN 2" CLEAR COVERAGE.
4. FOR FURTHER NOTES AND ADDITIONAL INFORMATION SEE REVISED STANDARD PLAN D73.

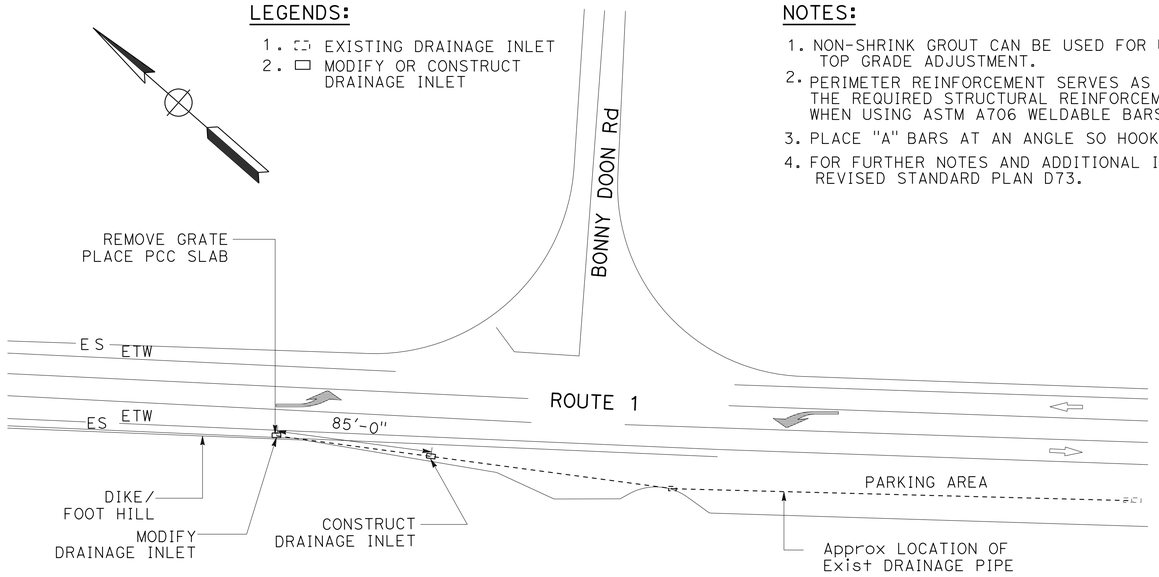


## MODIFY OR CONSTRUCT DRAINAGE INLET

SB PM 27.65

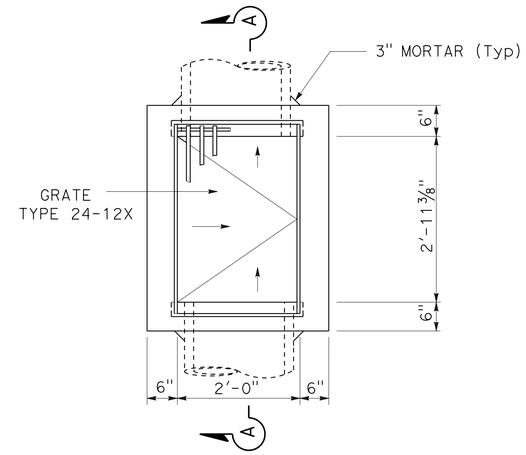


DRAINAGE INLET PLAN
TYPE G1

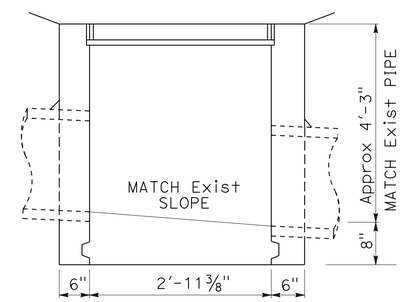


SECTION A-A

## CONSTRUCT DRAINAGE INLET (TYPE G1)

SB PM 27.65

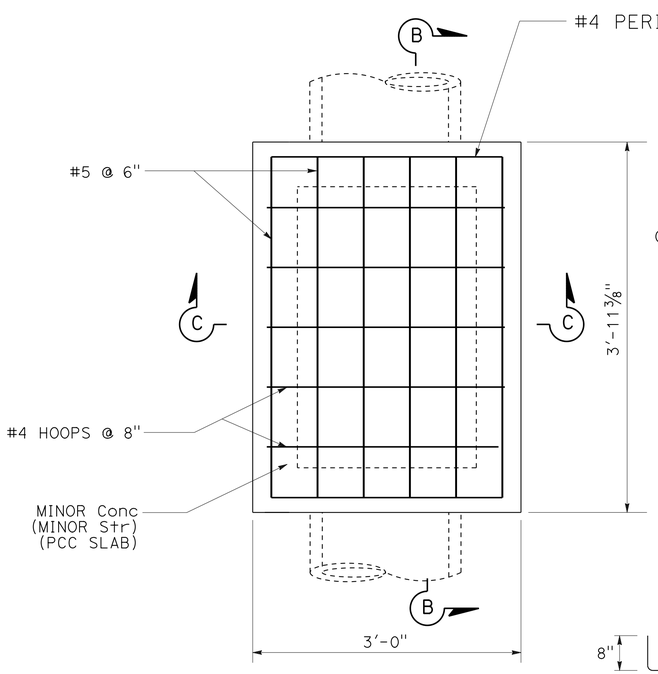


MINOR Conc (MINOR Str)
PCC SLAB ON Exist DI

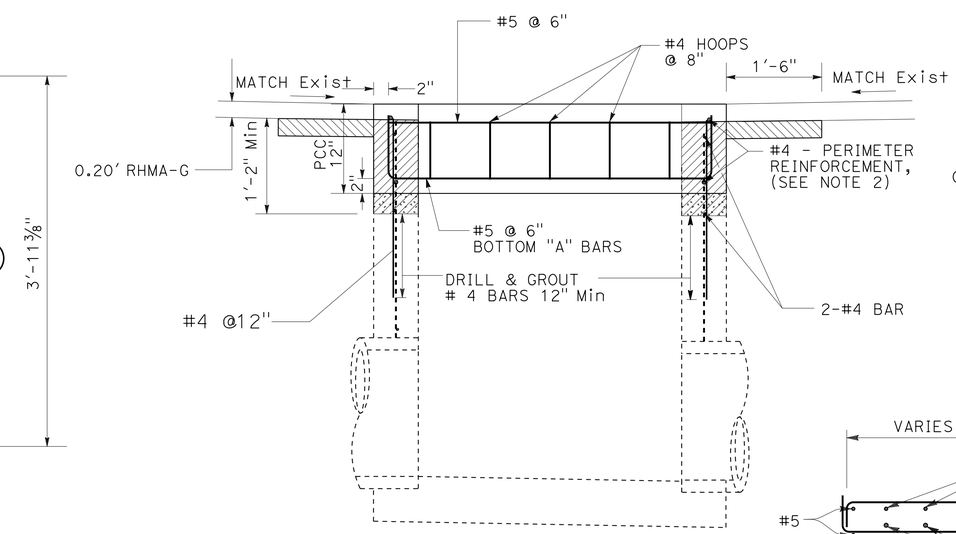


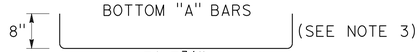


SECTION B-B

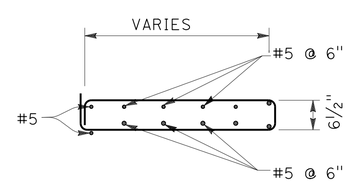


TYPICAL SECTION
(HOOP)

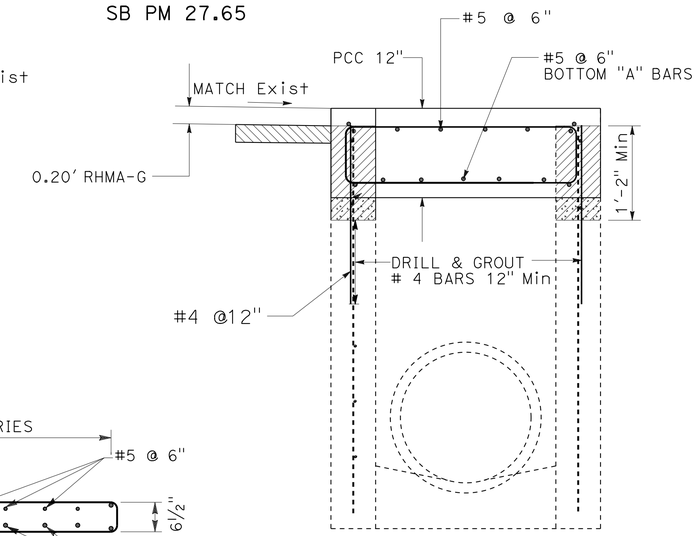


SECTION C-C

## MODIFY DRAINAGE INLET

SB PM 27.65

# CONSTRUCTION DETAILS

NO SCALE

C-4

STATE OF CALIFORNIA - DEPARTMENT OF TRANSPORTATION
Caltrans
06-DESIGN

FUNCTIONAL SUPERVISOR: GETACHEW ESHETE
CALCULATED-DESIGNED BY: AKM RAHMAN
CHECKED BY: SAUL AGUILAR
REVISED BY
DATE REVISED

LAST REVISION 05-27-14
DATE PLOTTED => 11-AUG-2014
TIME PLOTTED => 16:28

| Dist | COUNTY | ROUTE | POST MILES TOTAL PROJECT | SHEET No. | TOTAL SHEETS |
|---|---|---|---|---|---|
| 05 | SCr | 1 | 20.2/37.4 | 11 | 39 |

AKM Rahman 4-21-14
REGISTERED CIVIL ENGINEER DATE

5-27-14
PLANS APPROVAL DATE

REGISTERED PROFESSIONAL ENGINEER AKM F. RAHMAN No. 74163 Exp. 6/30/15 CIVIL STATE OF CALIFORNIA

*THE STATE OF CALIFORNIA OR ITS OFFICERS OR AGENTS SHALL NOT BE RESPONSIBLE FOR THE ACCURACY OR COMPLETENESS OF SCANNED COPIES OF THIS PLAN SHEET.*

**NOTE:** FOR ACCURATE RIGHT OF WAY DATA, CONTACT RIGHT OF WAY ENGINEERING AT THE DISTRICT OFFICE.

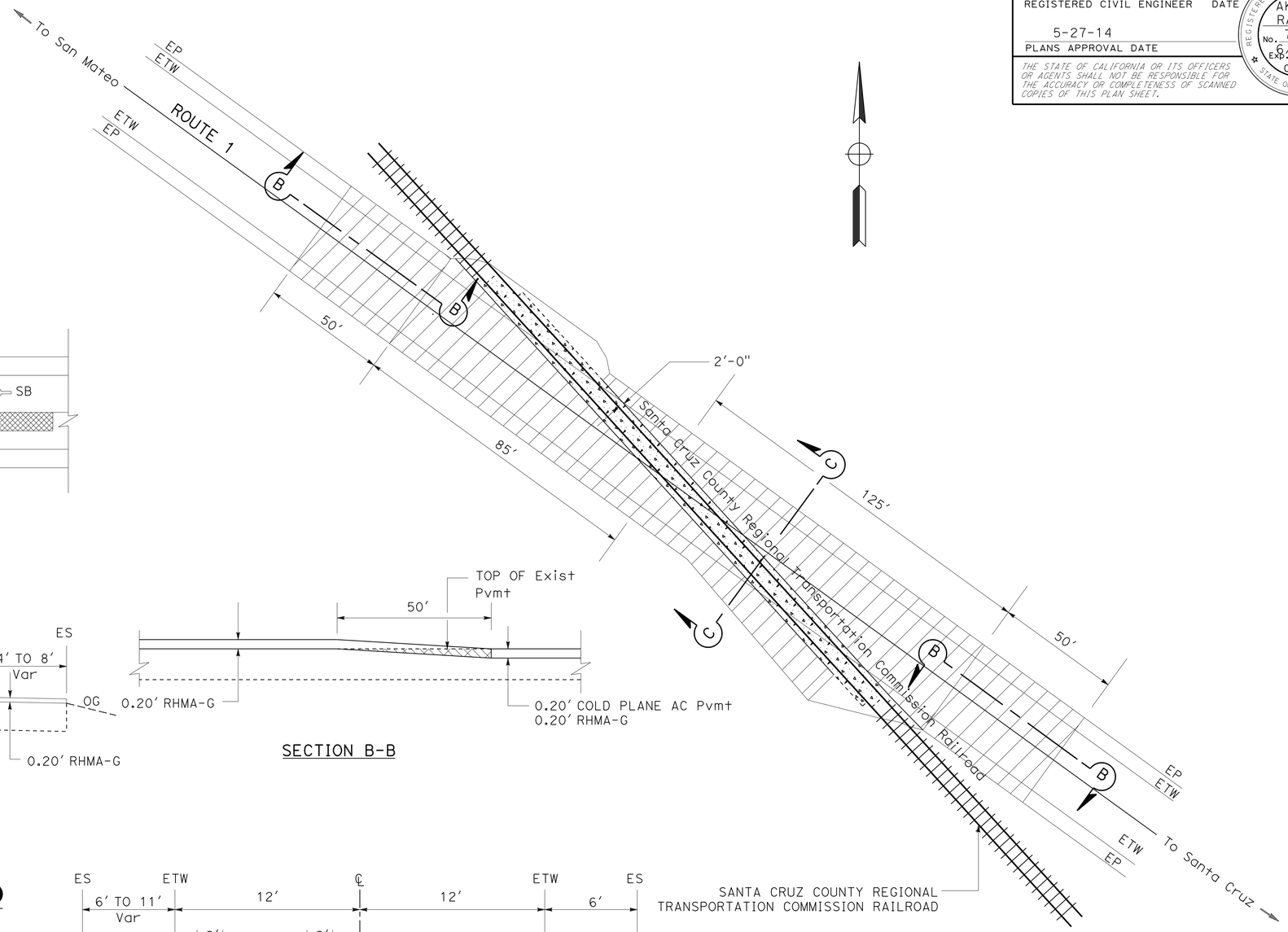


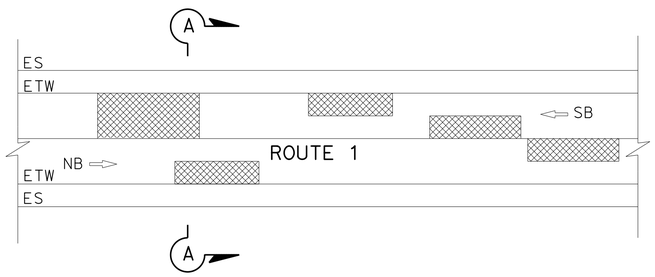


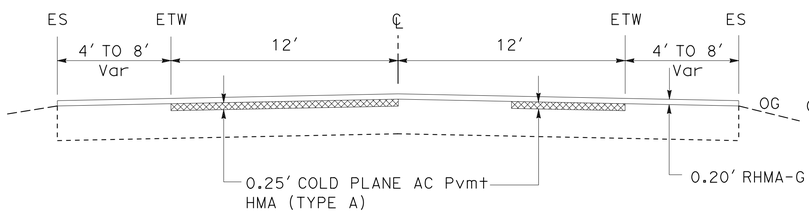


SECTION A-A

**REPAIR FAILED AREAS (Typ)**




SECTION B-B

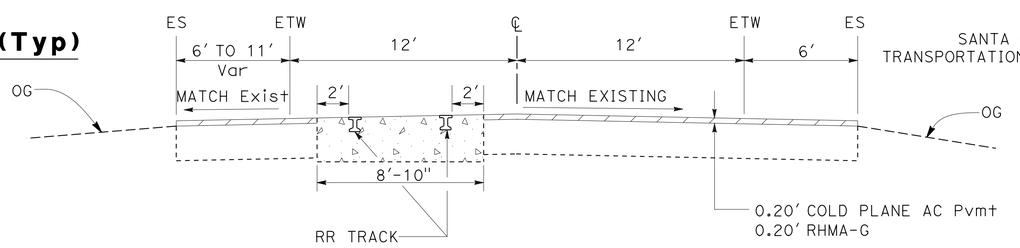


SECTION C-C

**WORK UP TO 2' FROM RAILROAD TRACK**

SCr Rte 01, PM 29.02

# CONSTRUCTION DETAILS
## C-5

STATE OF CALIFORNIA - DEPARTMENT OF TRANSPORTATION
06-DESIGN
Caltrans®

FUNCTIONAL SUPERVISOR: GETACHEW ESHETE
CALCULATED-DESIGNED BY: AKM RAHMAN
CHECKED BY: SAUL AGUILAR
REVISED BY
DATE REVISED

LAST REVISION 05-27-14
DATE PLOTTED => 27-AUG-2014
TIME PLOTTED => 10:14

| Dist | COUNTY | ROUTE | POST MILES TOTAL PROJECT | SHEET No. | TOTAL SHEETS |
|---|---|---|---|---|---|
| 05 | SCr | 1 | 20.2/37.4 | 12 | 39 |

AKM Rahman 4-21-14
REGISTERED CIVIL ENGINEER DATE

5-27-14
PLANS APPROVAL DATE

REGISTERED PROFESSIONAL ENGINEER AKM F. RAHMAN No. 74163 Exp. 6/30/15 CIVIL STATE OF CALIFORNIA

*THE STATE OF CALIFORNIA OR ITS OFFICERS OR AGENTS SHALL NOT BE RESPONSIBLE FOR THE ACCURACY OR COMPLETENESS OF SCANNED COPIES OF THIS PLAN SHEET.*

**NOTE:**
DETAIL 22 AND DETAIL 6 TRAFFIC STRIPES SHOWN, SEE PDQ SHEETS FOR TRAFFIC STRIPE DETAILS IN PASSING AND NO PASSING ZONES TO BE USED.

**LEGEND:**
TYPE D TWO-WAY YELLOW RETROREFLECTIVE

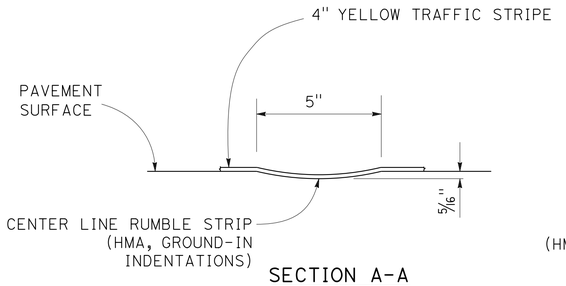


SECTION A-A

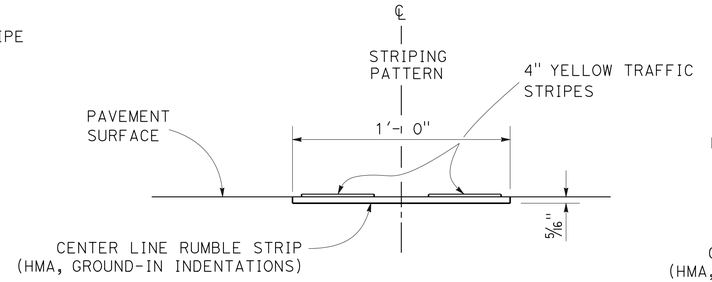


SECTION B-B

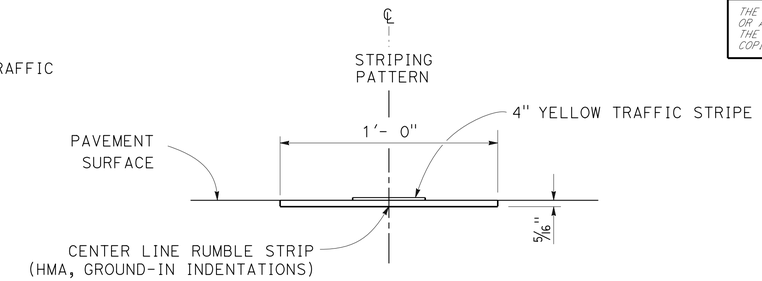


SECTION C-C

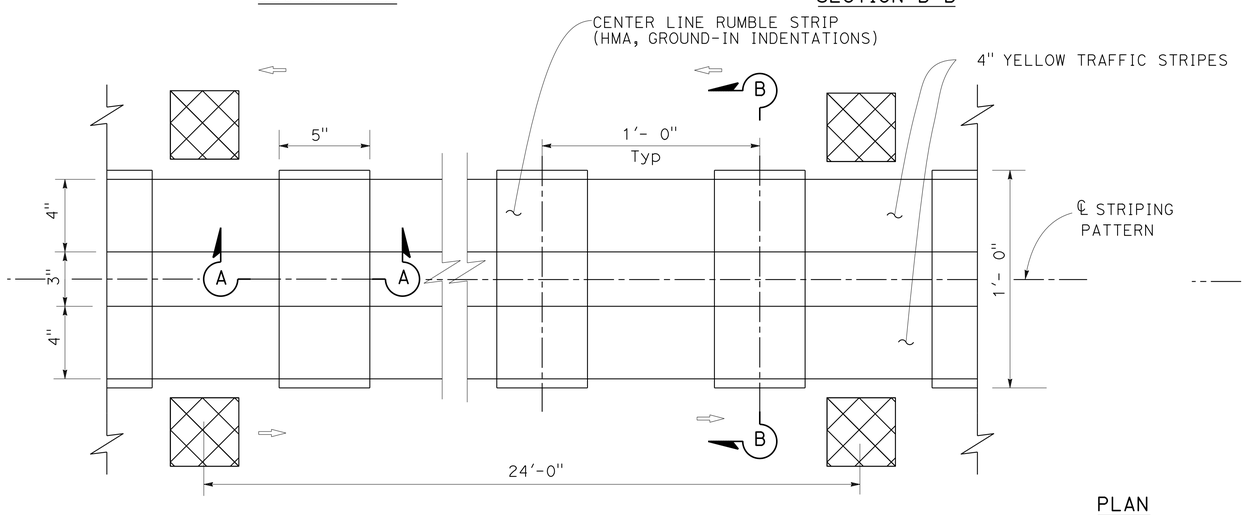


**RUMBLE STRIP PLACEMENT IN NO PASSING ZONE**

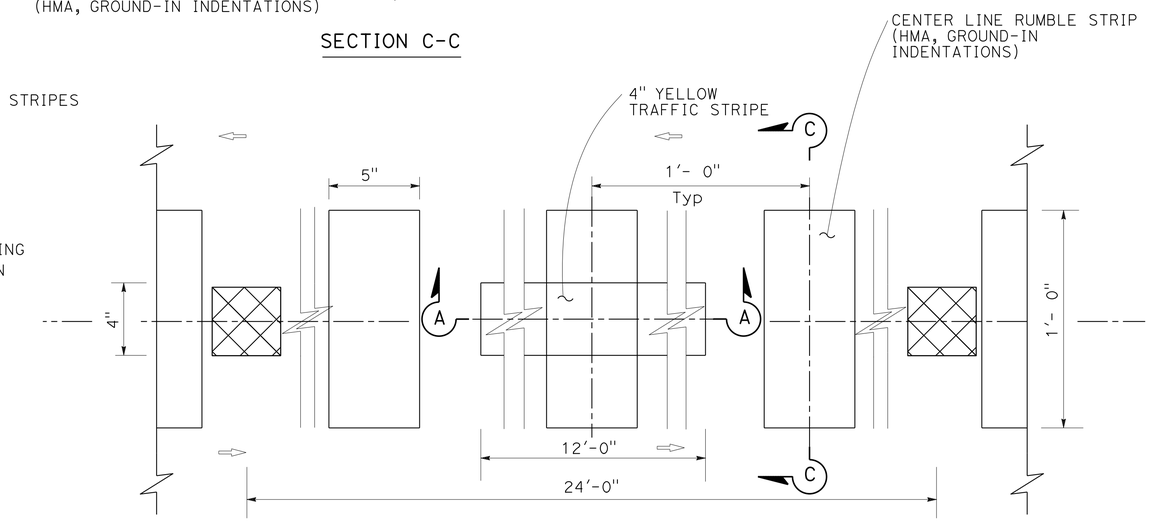


**RUMBLE STRIP IN PASSING ZONE**

PLAN

**TYPICAL CENTERLINE RUMBLE STRIP (HMA, GROUND-IN INDENTATIONS)**

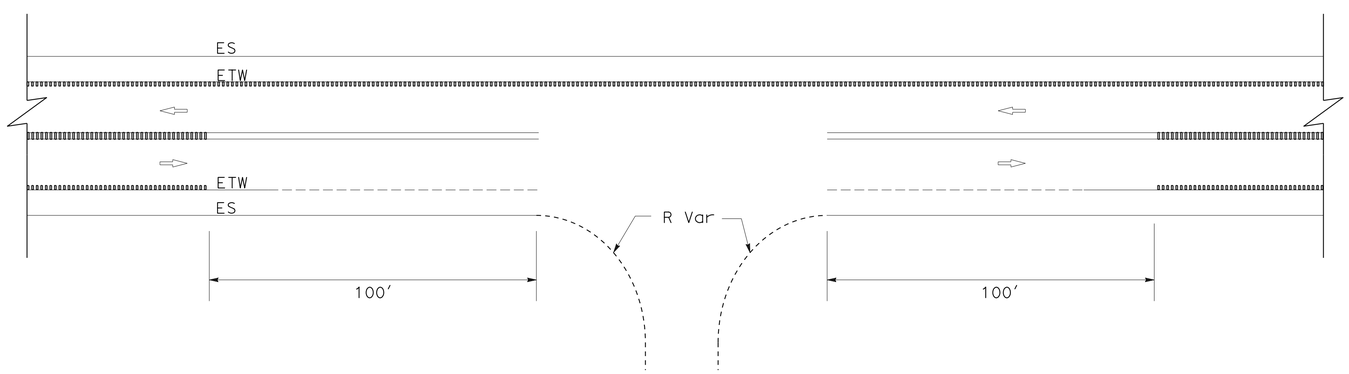


**RUMBLE STRIP AT FARM ACCESS ROAD (Typ)**

**CONSTRUCTION DETAILS**
NO SCALE
**C-6**

STATE OF CALIFORNIA - DEPARTMENT OF TRANSPORTATION
Caltrans
DESIGN

FUNCTIONAL SUPERVISOR: GETACHEW ESHETE
CALCULATED-DESIGNED BY: AKM RAHMAN
CHECKED BY: BILL LEE
REVISED BY
DATE REVISED

LAST REVISION 05-27-14
DATE PLOTTED => 11-AUG-2014
TIME PLOTTED => 16:28

| Dist | COUNTY | ROUTE | POST MILES TOTAL PROJECT | SHEET No. | TOTAL SHEETS |
|---|---|---|---|---|---|
| 05 | SCr | 1 | 20.2/37.4 | 13 | 39 |

AKM Rahman 4-21-14
REGISTERED CIVIL ENGINEER DATE

5-27-14
PLANS APPROVAL DATE

REGISTERED PROFESSIONAL ENGINEER AKM F. RAHMAN No. 74163 Exp. 6/30/15 CIVIL STATE OF CALIFORNIA

*THE STATE OF CALIFORNIA OR ITS OFFICERS OR AGENTS SHALL NOT BE RESPONSIBLE FOR THE ACCURACY OR COMPLETENESS OF SCANNED COPIES OF THIS PLAN SHEET.*

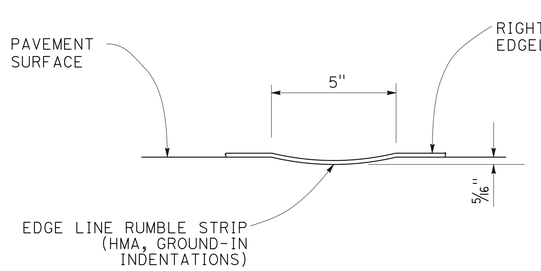


SECTION C-C

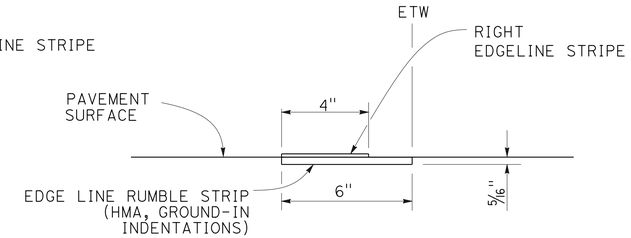


SECTION D-D

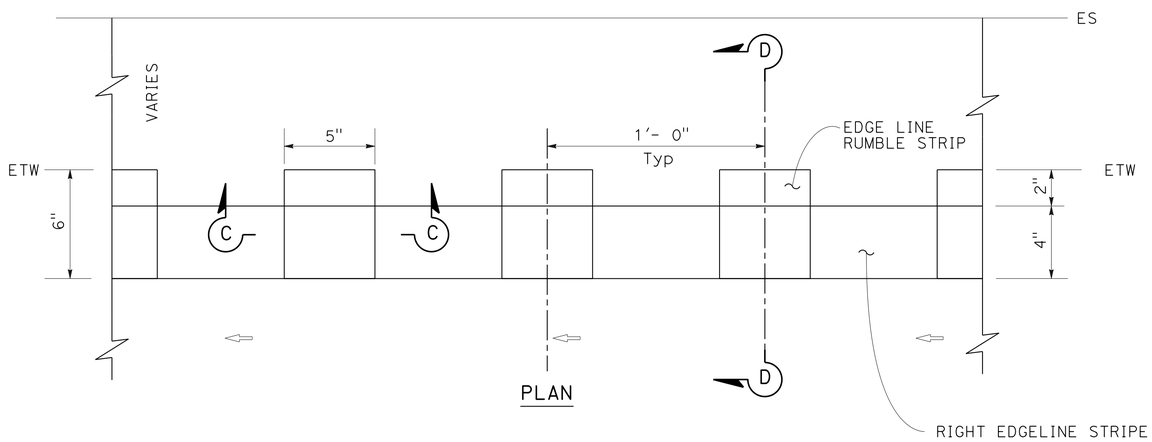


## EDGE LINE RUMBLE STRIP

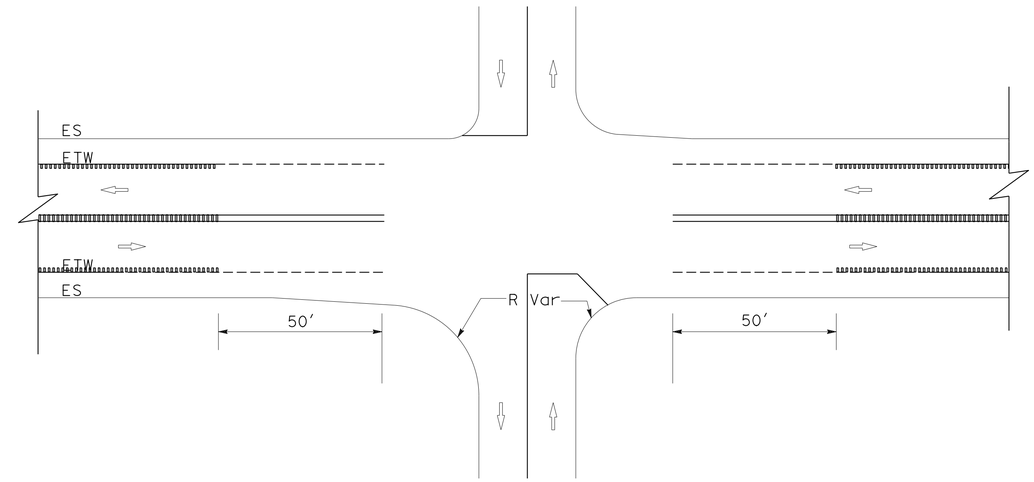


## RUMBLE STRIP AT INTERSECTIONS AND MAJOR DRIVEWAYS (Typ)

## RUMBLE STRIP AT BRIDGE (Typ)

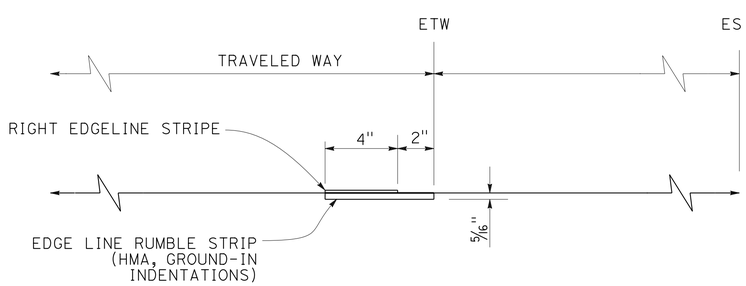


EDGE LINE RUMBLE STRIP PLACEMENT
RIGHT OF DIRECTION OF TRAVEL

## TYPICAL EDGE LINE RUMBLE STRIP (HMA, GROUND-IN INDENTATIONS)

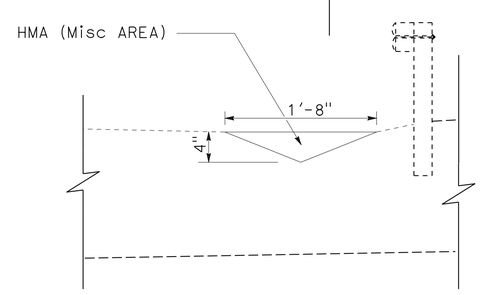


## FILL V-DITCH

NB PM 31.59 TO 31.80
SB PM 31.59 TO 31.78

# CONSTRUCTION DETAILS

NO SCALE

C-7

STATE OF CALIFORNIA - DEPARTMENT OF TRANSPORTATION
Caltrans®
06-DESIGN

FUNCTIONAL SUPERVISOR: GETACHEW ESHETE
CALCULATED-DESIGNED BY: AKM RAHMAN
CHECKED BY: SAUL AGUILAR
REVISED BY
DATE REVISED

LAST REVISION 05-27-14
DATE PLOTTED => 11-AUG-2014
TIME PLOTTED => 16:28

| Dist | COUNTY | ROUTE | POST MILES TOTAL PROJECT | SHEET No. | TOTAL SHEETS |
|---|---|---|---|---|---|
| 05 | SCr | 1 | 20.2/37.4 | 14 | 39 |

AKM Rahman 4-21-14
REGISTERED CIVIL ENGINEER DATE

5-27-14
PLANS APPROVAL DATE

REGISTERED PROFESSIONAL ENGINEER AKM F. RAHMAN No. 74163 Exp. 6/30/15 CIVIL STATE OF CALIFORNIA

*THE STATE OF CALIFORNIA OR ITS OFFICERS OR AGENTS SHALL NOT BE RESPONSIBLE FOR THE ACCURACY OR COMPLETENESS OF SCANNED COPIES OF THIS PLAN SHEET.*

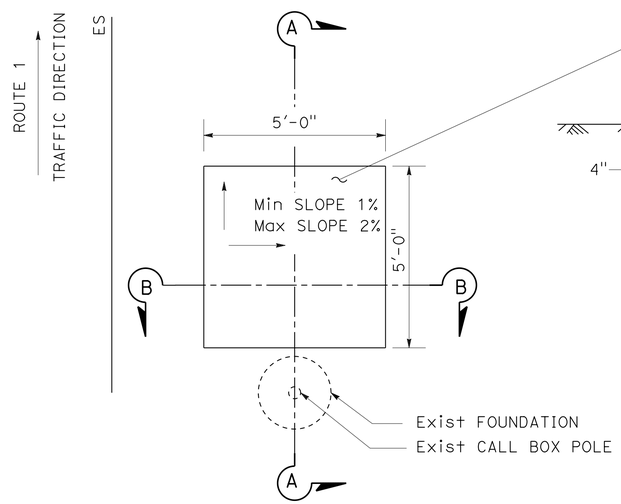


PLAN VIEW
PEDESTRIAN PAD

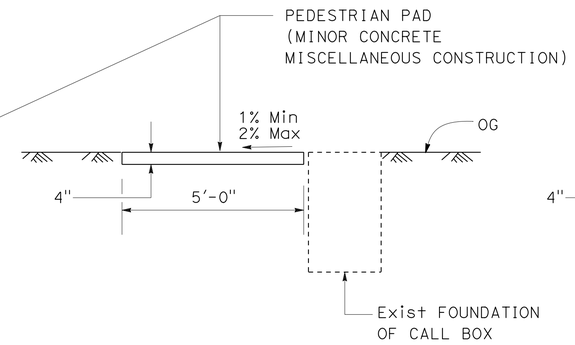


SECTION A-A

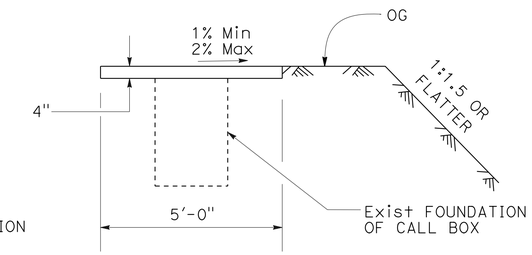


SECTION B-B

## CALL BOX PEDESTRIAN PAD

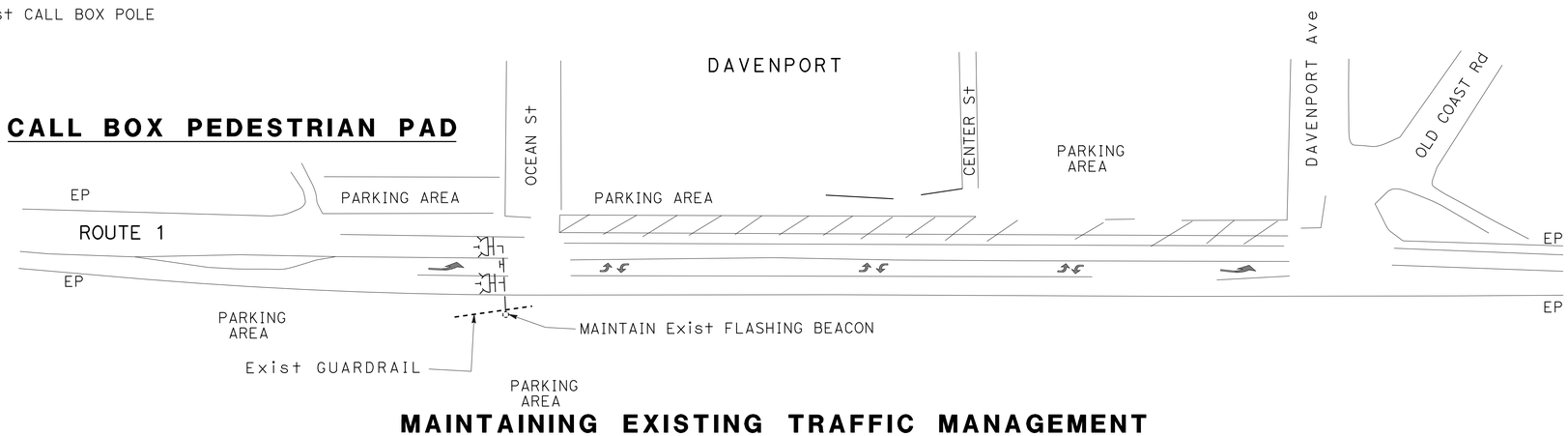


## MAINTAINING EXISTING TRAFFIC MANAGEMENT SYSTEM ELEMENTS DURING CONSTRUCTION

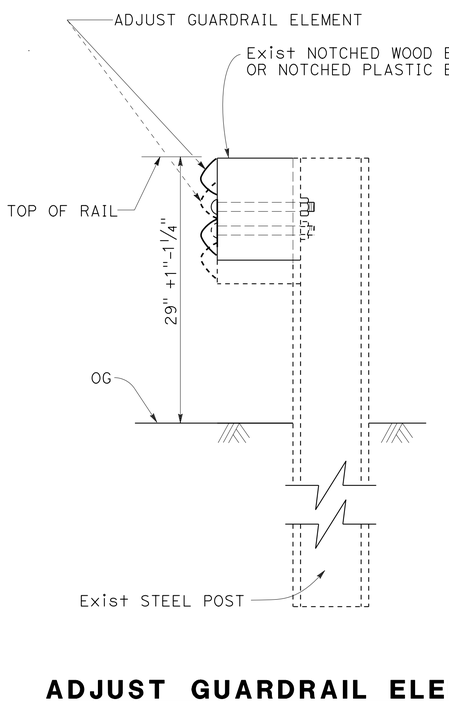


## ADJUST GUARDRAIL ELEMENT

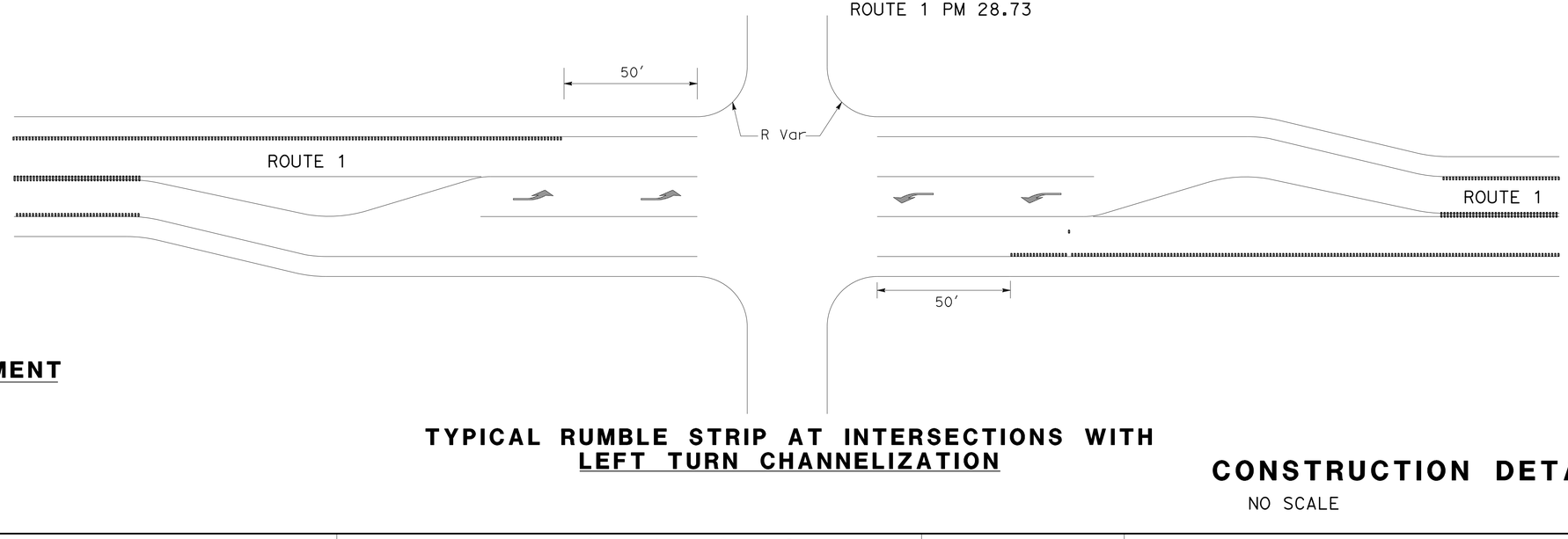


## TYPICAL RUMBLE STRIP AT INTERSECTIONS WITH LEFT TURN CHANNELIZATION

# CONSTRUCTION DETAILS

NO SCALE

C-8

REVISED BY | DATE REVISED
AKM RAHMAN | SAUL AGUILAR
CALCULATED-DESIGNED BY | CHECKED BY
FUNCTIONAL SUPERVISOR | GETACHEW ESHETE

STATE OF CALIFORNIA - DEPARTMENT OF TRANSPORTATION
Caltrans
06-DESIGN

LAST REVISION | DATE PLOTTED => 11-AUG-2014 | TIME PLOTTED => 16:28
05-22-14

| Dist | COUNTY | ROUTE | POST MILES TOTAL PROJECT | SHEET No. | TOTAL SHEETS |
|---|---|---|---|---|---|
| 05 | SCr | 1 | 20.2/37.4 | 15 | 39 |

REGISTERED CIVIL ENGINEER 04/14/14 DATE

5-27-14
PLANS APPROVAL DATE

REGISTERED PROFESSIONAL ENGINEER HUE NGUYEN No. 74484 Exp. 12/31/15 CIVIL STATE OF CALIFORNIA

*THE STATE OF CALIFORNIA OR ITS OFFICERS OR AGENTS SHALL NOT BE RESPONSIBLE FOR THE ACCURACY OR COMPLETENESS OF SCANNED COPIES OF THIS PLAN SHEET.*

# STATIONARY MOUNTED CONSTRUCTION AREA SIGNS

| SIGN No. (X) | SIGN CODE FEDERAL | SIGN CODE CALIFORNIA | PANEL SIZE | SIGN MESSAGE | NUMBER OF POSTS AND SIZE | NUMBER OF SIGNS |
|---|---|---|---|---|---|---|
| (A) | G20-1 | | 60" x 36" | ROAD WORK NEXT XX MILES | 2 - 4" x 6" | 2 |
| (B) | G20-2 | | 36" x 18" | END ROAD WORK | 1 - 4" x 4" | 2 |
| (C) | W20-1 | | 36" x 36" | ROAD WORK AHEAD | 1 - 4" x 6" | 16 |
| (D) | W20-1 | | 48" x 48" | ROAD WORK AHEAD | 1 - 6" x 6" | 2 |
| (E) | | CPFIS | 132" x 84" | CONSTRUCTION PROJECT FUNDING IDENTIFICATION SIGN | 2 - 6" x 8" | 2 |

NOTE:
EXACT CONSTRUCTION AREA SIGN LOCATIONS WILL BE DETERMINED BY THE ENGINEER.

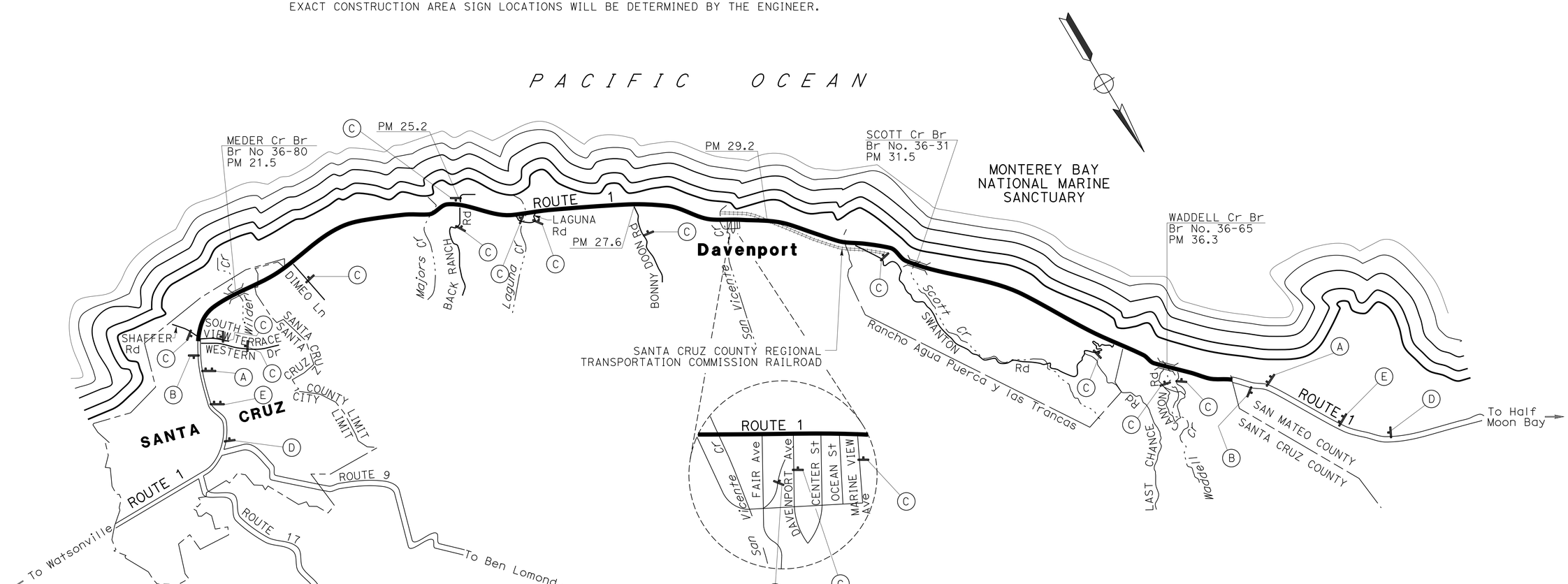


*APPROVED FOR CONSTRUCTION AREA SIGN WORK ONLY*

## CONSTRUCTION AREA SIGN

NO SCALE

**CS-1**

STATE OF CALIFORNIA - DEPARTMENT OF TRANSPORTATION
Caltrans® TRAFFIC DESIGN

FUNCTIONAL SUPERVISOR: MOHAMMED QATAMI
CALCULATED-DESIGNED BY: RAJINI TEKALKOTE
CHECKED BY: HUE NGUYEN
REVISED BY: RT
DATE REVISED: 02/11/14

LAST REVISION 03-12-14
DATE PLOTTED => 27-AUG-2014
TIME PLOTTED => 10:14

| Dist | COUNTY | ROUTE | POST MILES TOTAL PROJECT | SHEET No. | TOTAL SHEETS |
|---|---|---|---|---|---|
| 05 | SCr | 1 | 20.2/37.4 | 16 | 39 |

REGISTERED CIVIL ENGINEER 05/14/14 DATE

5-27-14
PLANS APPROVAL DATE

REGISTERED PROFESSIONAL ENGINEER HUE NGUYEN No. 74484 Exp. 12/31/15 CIVIL STATE OF CALIFORNIA

*THE STATE OF CALIFORNIA OR ITS OFFICERS OR AGENTS SHALL NOT BE RESPONSIBLE FOR THE ACCURACY OR COMPLETENESS OF SCANNED COPIES OF THIS PLAN SHEET.*

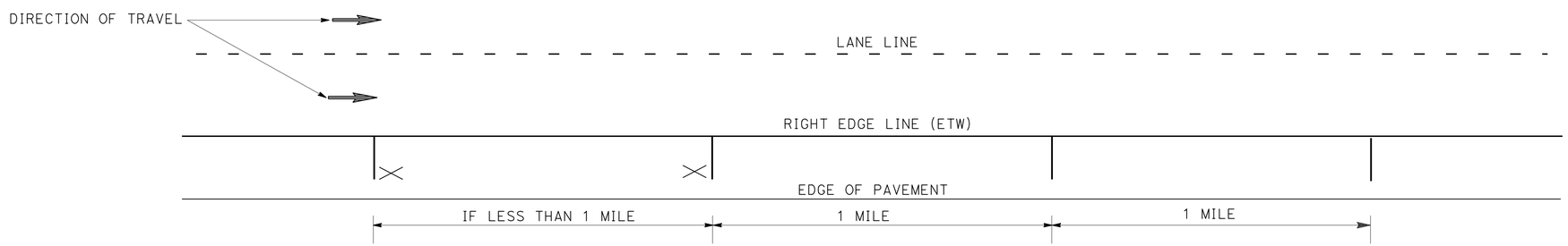


## AIRCRAFT PATROL PAVEMENT MARKING LAYOUT

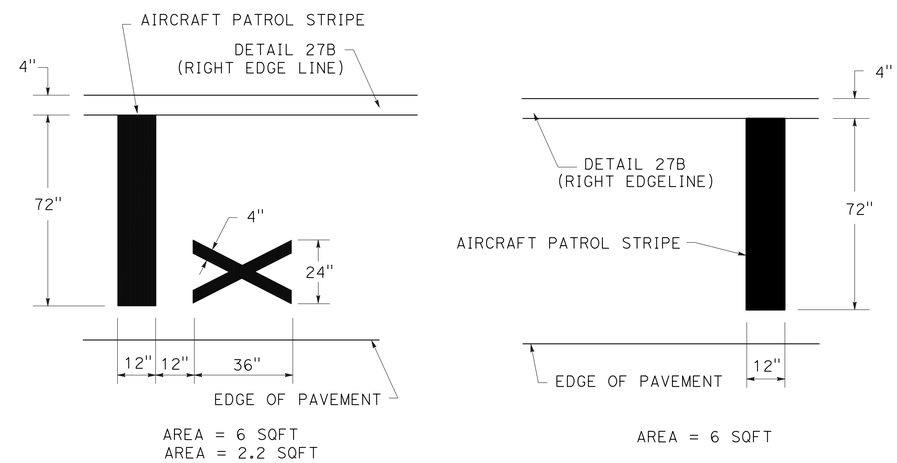


## AIRCRAFT PATROL PAVEMENT MARKING DETAILS

NOTE: ALL MARKINGS FOR THIS DETAIL SHALL BE WHITE

# PAVEMENT DELINEATION DETAILS

**PDD-1**

STATE OF CALIFORNIA - DEPARTMENT OF TRANSPORTATION
Caltrans
**TRAFFIC DESIGN**

FUNCTIONAL SUPERVISOR: MOHAMMED QATAMI
CALCULATED-DESIGNED BY: RAJINI TEKALKOTE
CHECKED BY: HUE NGUYEN
REVISED BY
DATE REVISED

LAST REVISION 05-15-14
DATE PLOTTED => 11-AUG-2014
TIME PLOTTED => 16:28

| Dist | COUNTY | ROUTE | POST MILES TOTAL PROJECT | SHEET No. | TOTAL SHEETS |
|---|---|---|---|---|---|
| 05 | SCr | 1 | 20.2/37.4 | 17 | 39 |

REGISTERED CIVIL ENGINEER 05/14/14 DATE

5-27-14
PLANS APPROVAL DATE

REGISTERED PROFESSIONAL ENGINEER
HUE NGUYEN
No. 74484
Exp. 12/31/15
CIVIL
STATE OF CALIFORNIA

*THE STATE OF CALIFORNIA OR ITS OFFICERS OR AGENTS SHALL NOT BE RESPONSIBLE FOR THE ACCURACY OR COMPLETENESS OF SCANNED COPIES OF THIS PLAN SHEET.*

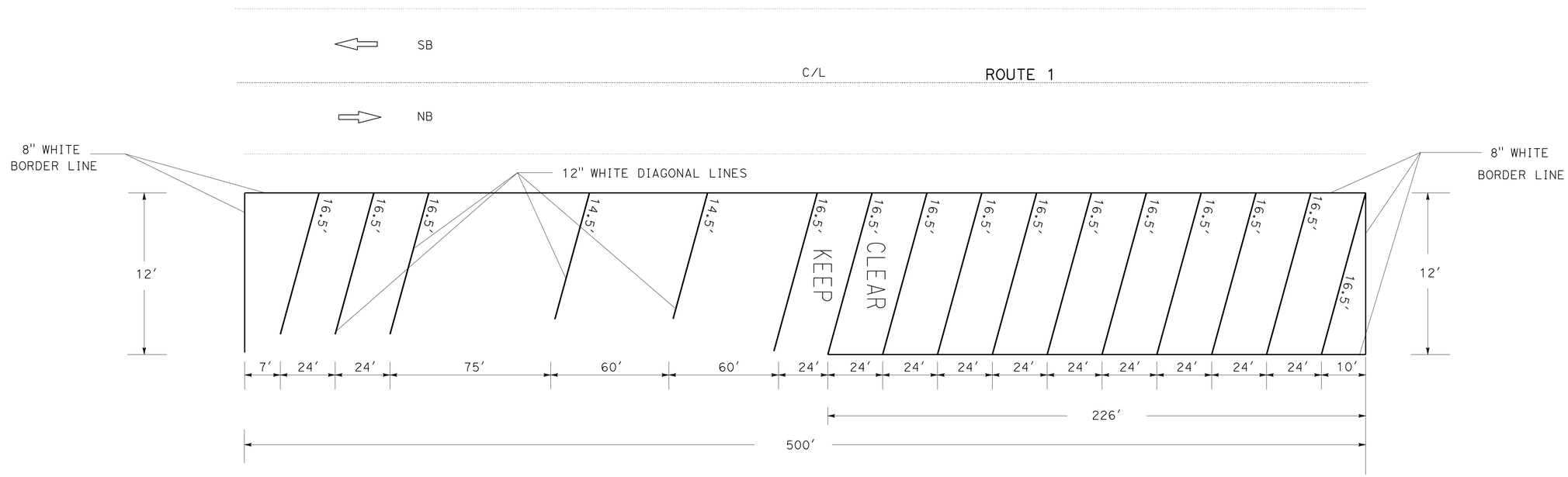


P.M 28.6

## 8" BORDER LINES AND 12" DIAGONAL LINES PAVEMENT MARKING DETAILS

NOTE: ALL MARKINGS FOR THIS DETAIL SHALL BE WHITE

# PAVEMENT DELINEATION DETAILS

NO SCALE

**PDD-2**

| REVISED BY | DATE REVISED |
|---|---|
| | |

CALCULATED-DESIGNED BY: RAJINI TEKALKOTE
CHECKED BY: HUE NGUYEN

FUNCTIONAL SUPERVISOR: MOHAMMED QATAMI

STATE OF CALIFORNIA - DEPARTMENT OF TRANSPORTATION
Caltrans
**TRAFFIC DESIGN**

LAST REVISION 05-22-14 | DATE PLOTTED => 11-AUG-2014 | TIME PLOTTED => 16:28

| Dist | COUNTY | ROUTE | POST MILES TOTAL PROJECT | SHEET No. | TOTAL SHEETS |
|---|---|---|---|---|---|
| 05 | SCr | 1 | 20.2/37.4 | 18 | 39 |

REGISTERED CIVIL ENGINEER 04/14/14 DATE

5-27-14
PLANS APPROVAL DATE

REGISTERED PROFESSIONAL ENGINEER HUE NGUYEN No. 74484 Exp. 12/31/15 CIVIL STATE OF CALIFORNIA

*THE STATE OF CALIFORNIA OR ITS OFFICERS OR AGENTS SHALL NOT BE RESPONSIBLE FOR THE ACCURACY OR COMPLETENESS OF SCANNED COPIES OF THIS PLAN SHEET.*

# PAVEMENT DELINEATION QUANTITIES

| POST MILE | DIRECTION | THERMOPLASTIC TRAFFIC STRIPE | | | | | | | | | | | | | | PAVEMENT MARKER (RETRO--REFLECTIVE) | | |
|---|---|---|---|---|---|---|---|---|---|---|---|---|---|---|---|---|---|---|
| | | 4" WHITE SOLID | 4" YELLOW SOLID | | | | | 4" WHITE (BROKEN 36-12) | 4" YELLOW (BROKEN 36-12) | | | 4" WHITE (BROKEN 12-3) | 8" WHITE SOLID | | | | | |
| | | DETAIL | DETAIL | | | | | DETAIL | DETAIL | | | DETAIL | DETAIL | | | TYPE | TYPE | TYPE |
| | | 27B | 19 | 32 | 21 | 22 | 29 | 12 | 6 | 19 | 32 | 27C | 38 | 38A | 38B | G | H | D |
| | | LF | LF | LF | LF | LF | LF | LF | LF | LF | LF | LF | LF | LF | LF | EA | EA | EA |
| P.M 20.20 TO P.M 20.51 | NB | 1,587 | | | | 1,447 | 3,400 | | | | | | | | | | | 136 |
| | SB | 1,587 | | | | | | | | | | | 512 | | | 22 | | |
| P.M 20.51 TO P.M 21.65 | NB | 6,109 | 354 | | | 517 | | | 5,407 | 354 | | | | | | | 16 | 146 |
| | SB | 6,109 | | | | | | | | | | | | | | | | |
| P.M 21.65 TO P.M 21.95 | NB | 1,506 | 148 | | | 1,478 | 3,189 | | | 148 | | | 187 | | | 9 | 7 | 136 |
| | SB | 1,506 | | | | | | | | | | | 298 | | | 13 | | |
| P.M 21.95 TO P.M 22.07 | NB | 633.50 | | | | 1,172 | 200 | 554 | | | | | | | | 13 | | 58 |
| | SB | 633.50 | | | | | | | | | | | | | | | | |
| P.M 22.07 TO P.M 22.76 | NB | 3,564.50 | | | | 7,149 | | 3,575 | | | | | | | | 75 | | 300 |
| | SB | 3,564.50 | | | | | | 3,575 | | | | | | | | 75 | | |
| P.M 22.76 TO P.M 22.91 | NB | 792 | | | | 1,584 | | | | | | | | | | | | 68 |
| | SB | 792 | | | | | | 792 | | | | | | | | 18 | | |
| P.M 22.91 TO P.M 23.34 | NB | 2,270.50 | | | | 4,541 | | | | | | | | | | | | 190 |
| | SB | 2,270.50 | | | | | | | | | | | | | | | | |
| P.M 23.34 TO P.M 23.66 | NB | 1,689.50 | | | | 3,379 | | 1,299 | | | | | | | | 28 | | 144 |
| | SB | 1,689.50 | | | | | | | | | | | | | | | | |
| P.M 23.66 TO P.M 24.62 | NB | 5,069 | | | | 10,138 | | 5,069 | | | | | | | | 107 | | 424 |
| | SB | 5,069 | | | | | | 4,884 | | | | | | | | 103 | | |
| P.M 24.62 TO P.M 27.48 | NB | 14,830 | 2,746 | | | 22,144 | 85 | 174 | 1,051 | 2,746 | | 78 | | | | 5 | 116 | 1010 |
| | SB | 14,830 | | | | | | 174 | | | | | | | | 5 | | |
| P.M 27.48 TO P.M 27.78 | NB | 1,584 | | | | 1,489 | 3,210 | | | | | | 285 | | | 13 | | 134 |
| | SB | 1,584 | | | | | | | | | | | 396 | | | 18 | | |
| P.M 27.78 TO P.M 28.56 | NB | 4,118.50 | 1,357 | | | 4,805 | | | 359 | 1,357 | | | | | | | 58 | 240 |
| | SB | 4,118.50 | | | | | | | | | | | | | | | | |
| P.M 28.56 TO P.M 28.80 | NB | 1,230 | | 877 | | 391 | 2,197 | | | | 877 | 74 | | | | | | 118 |
| | SB | 1,230 | | | | | | | | | | | 129 | | | 6 | | |
| P.M 28.80 TO P.M 31.55 | NB | 14,090 | 2,809 | | | 11,014 | 232 | | 5,840 | 2,809 | | 327 | | | | | 118 | 651 |
| | SB | 14,090 | | | | | | | | | | | | | | | | |
| SUBTOTAL | | 117,967 | 7,414 | 877 | | 71,248 | 12,513 | 20,096 | 12,657 | 7,414 | 877 | | 1,807 | | | 510 | 315 | 3,755 |
| TOTAL | | 210,019 | | | | | | 41,044 | | | | 479 | 1,807 | | | 4,580 | | |

| REVISED BY | DATE REVISED |
|---|---|
| RT | 05/08/14 |
| RT | 03/10/14 |
| RT | 02/25/14 |

CALCULATED-DESIGNED BY: RAJINI TEKALKOTE
CHECKED BY: HUE NGUYEN
FUNCTIONAL SUPERVISOR: MOHAMMED QATAMI

STATE OF CALIFORNIA - DEPARTMENT OF TRANSPORTATION
Caltrans
TRAFFIC DESIGN

**PAVEMENT DELINEATION QUANTITIES**

**PDQ-1**

LAST REVISION 05-27-14
DATE PLOTTED => 11-AUG-2014
TIME PLOTTED => 16:28

| Dist | COUNTY | ROUTE | POST MILES TOTAL PROJECT | SHEET No. | TOTAL SHEETS |
|---|---|---|---|---|---|
| 05 | SCr | 1 | 20.2/37.4 | 19 | 39 |

REGISTERED CIVIL ENGINEER 04/14/14 DATE

5-27-14
PLANS APPROVAL DATE

REGISTERED PROFESSIONAL ENGINEER HUE NGUYEN No. 74484 Exp. 12/31/15 CIVIL STATE OF CALIFORNIA

*THE STATE OF CALIFORNIA OR ITS OFFICERS OR AGENTS SHALL NOT BE RESPONSIBLE FOR THE ACCURACY OR COMPLETENESS OF SCANNED COPIES OF THIS PLAN SHEET.*

# PAVEMENT DELINEATION QUANTITIES

| POST MILE | DIRECTION | THERMOPLASTIC TRAFFIC STRIPE | | | | | | | | | | | | | | PAVEMENT MARKER (RETRO--REFLECTIVE) | | |
|---|---|---|---|---|---|---|---|---|---|---|---|---|---|---|---|---|---|---|
| | | 4"WHITE SOLID | 4" YELLOW SOLID | | | | | 4" WHITE (BROKEN 36-12) | 4" YELLOW (BROKEN 36-12) | | | 4" WHITE (BROKEN 12-3) | 8" WHITE SOLID | | | | | |
| | | DETAIL | DETAIL | | | | | DETAIL | DETAIL | | | DETAIL | DETAIL | | | TYPE | TYPE | TYPE |
| | | 27B | 19 | 32 | 21 | 22 | 29 | 12 | 6 | 19 | 32 | 27C | 38 | 38A | 38B | G | H | D |
| | | LF | LF | LF | LF | LF | LF | LF | LF | LF | LF | LF | LF | LF | LF | EA | EA | EA |
| P.M 31.55 TO P.M 36.30 | NB | 24,801.50 | 7,081 | | | 31,648 | | | 1,917 | 7,081 | | 399 | | | | | 296 | 1,509 |
| | SB | 24,801.50 | | | | | | | | | | 158 | | | | | | |
| P.M 36.30 TO P.M 37.45 | NB | 5,908.50 | 1,269 | | | 6,674 | | | 892 | 1,269 | | 116 | | | | | 76 | 338 |
| | SB | 5,908.50 | | | | | | | | | | 211 | | | | | | |
| LOCAL Rd @ P.M 20.229 | NB | | | | | | | | | | | | | 193 | | | | |
| SHAFFER Rd @ P.M 20.416 | SB | | | | | 152 | | | | | | | | | | | | 8 |
| LOCAL Rd @ P.M 21.780 | SB | | | | | 100 | | | | | | | | | | | | 6 |
| DIMEO Ln @ P.M 22.700 | NB | | | | 84 | | | | | | | | | | | | | |
| SCARONI Rd @ P.M 24.740 | SB | | | | | 112 | | | | | | | | | | | | 8 |
| SCARONI Rd @ P.M 24.990 | SB | | | | 100 | | | | | | | | | | | | | |
| COAST Rd @ P.M 25.260 | SB | | | | | 60 | | | | | | | | | | | | 4 |
| COAST Rd @ P.M 25.540 | SB | | | | | 88 | | | | | | | | | | | | 6 |
| COAST\LAGUNA Rd @ P.M 25.741 | NB | | | | | 100 | | | | | | | | | | | | 6 |
| COAST\LAGUNA Rd @ P.M 25.974 | NB | | | | 102 | | | | | | | | | | | | | |
| BONNY DOON Rd @ P.M 27.619 | NB | | | | | 170 | | | | | | | | | | | | 10 |
| DAVENPORT Ave @ P.M 28.620 | NB | | | | 40 | | | | | | | | | | | | | |
| OCEAN St @ P.M 28.730 | NB | | | | 40 | | | | | | | | | | | | | |
| CEMENT PLANT Rd @ P.M 29.146 | NB | 20 | | | | | | | | | | | | | | | | |
| DAVENPORT LANDING Rd @ P.M 30.069 | SB | | | | | 64 | | | | | | | | | | | | 4 |
| CEMENT PLANT Rd @ P.M 30.069 | NB | | | | | 64 | | | | | | | | | | | | 4 |
| DAVENPORT LANDING Rd @ P.M 30.435 | SB | | | | | | | | | | | | | | 30 | 4 | | |
| SWANTON Rd @ P.M 30.448 | NB | | | | | 64 | | | | | | | | | | | | 4 |
| SWANTON Rd @ P.M 35.275 | NB | | | | 72 | | | | | | | | | | | | | |
| SUBTOTAL | | 61,440 | 8,350 | | 438 | 39,296 | | | 2,809 | 8,350 | | | | 193 | 30 | 4 | 372 | 1,907 |
| THIS SHEET TOTAL | | 109,524 | | | | | | 11,159 | | | | 884 | 223 | | | 2,283 | | |
| PDQ-1 SHEET TOTAL | | 210,019 | | | | | | 41,044 | | | | 479 | 1,807 | | | 4,580 | | |
| TOTAL | | 319,543 | | | | | | 52,203 | | | | 1,363 | 2,030 | | | 6,863 | | |

# REMOVE PAVEMENT DELINEATION QUANTITIES

| POST MILE | DIRECTION | REMOVE YELLOW THERMOPLASTIC TRAFFIC STRIPE (HAZARDOUS WASTE) | REMOVE THERMOPLASTIC TRAFFIC STRIPE | REMOVE THERMOPLASTIC PAVEMENT MARKING | REMOVE PAVEMENT MARKER |
|---|---|---|---|---|---|
| | | LF | LF | SQFT | EA |
| P.M 20.20 TO P.M 37.45 | NB/SB | 164,797 | | | 5,745 |
| P.M 20.20 TO P.M 37.45 | NB | | 96,132 | 672 | 262 |
| P.M 20.20 TO P.M 37.45 | SB | | 97,044 | 546 | 228 |
| TOTAL | | 164,797 | 193,176 | 1,218 | 6,235 |

## PAVEMENT DELINEATION QUANTITIES

PDQ-2

| REVISED BY | DATE REVISED |
|---|---|
| RT | 05/08/14 |
| RT | 03/10/14 |
| RT | 02/25/14 |

CALCULATED-DESIGNED BY: RAJINI TEKALKOTE
CHECKED BY: HUE NGUYEN
FUNCTIONAL SUPERVISOR: MOHAMMED QATAMI

STATE OF CALIFORNIA - DEPARTMENT OF TRANSPORTATION
Caltrans TRAFFIC DESIGN

LAST REVISION 05-27-14 | DATE PLOTTED => 11-AUG-2014 TIME PLOTTED => 16:28

| Dist | COUNTY | ROUTE | POST MILES TOTAL PROJECT | SHEET No. | TOTAL SHEETS |
|---|---|---|---|---|---|
| 05 | SCr | 1 | 20.2/37.4 | 20 | 39 |

REGISTERED CIVIL ENGINEER 04/14/14 DATE

5-27-14
PLANS APPROVAL DATE

REGISTERED PROFESSIONAL ENGINEER HUE NGUYEN No. 74484 Exp. 12/31/15 CIVIL STATE OF CALIFORNIA

*THE STATE OF CALIFORNIA OR ITS OFFICERS OR AGENTS SHALL NOT BE RESPONSIBLE FOR THE ACCURACY OR COMPLETENESS OF SCANNED COPIES OF THIS PLAN SHEET.*

## THERMOPLASTIC PAVEMENT MARKING

| POST MILE | DIRECTION | THERMOPLASTIC PAVEMENT MARKING | | | | | | | | | | |
|---|---|---|---|---|---|---|---|---|---|---|---|---|
| | | TYPE III | TYPE IV | TYPE VI | RR | LIMIT LINE | STOP | AIRCRAFT PATROL | KEEP | CLEAR | 8" BORDER LINES | 12" DIAGONAL LINES |
| | | SQFT | SQFT | SQFT | SQFT | SQFT | SQFT | SQFT | SQFT | SQFT | SQFT | SQFT |
| PM 20.2 TO PM 37.4 | NB | | | | | | | 107 | | | | |
| | SB | | | | | | | 107 | | | | |
| PM 20.20 TO PM 20.51 | NB | 210 | | | | | | | | | | |
| PM 21.65 TO PM 21.95 | NB | 84 | | | | | | | | | | |
| | SB | 168 | | | | | | | | | | |
| PM 22.07 TO PM 22.76 | NB | | | 126 | | | | | | | | |
| | SB | | | 126 | | | | | | | | |
| PM 23.66 TO PM 24.62 | NB | | | 84 | | | | | | | | |
| | SB | | | 126 | | | | | | | | |
| PM 24.62 TO PM 27.48 | NB | | | 42 | | | | | | | | |
| PM 27.48 TO PM 27.78 | NB | 126 | | | | | | | | | | |
| | SB | 126 | | | | | | | | | | |
| PM 28.56 TO PM 28.80 | NB | | 90 | | | | | | 144 | 162 | 500 | 260 |
| | SB | 84 | | | | | | | | | | |
| PM 28.80 TO PM 31.55 | NB | | | | 118 | 24 | | | | | | |
| | SB | | | | 118 | 24 | | | | | | |
| LOCAL Rd @ PM 20.229 | NB | | 15 | | | 23 | 22 | | | | | |
| SHAFFER Rd @ PM 20.416 | SB | | | | | 39 | 22 | | | | | |
| LOCAL Rd @ PM 21.780 | SB | | | | | 36 | 22 | | | | | |
| LOCAL Rd @ PM 21.780 | NB | | | | | 36 | 22 | | | | | |
| DIMEO Ln @ PM 22.700 | NB | | | | | 50 | 44 | | | | | |
| SCARONI Rd @ PM 24.740 | SB | | | | | 34 | 22 | | | | | |
| SCARONI Rd @ PM 24.990 | SB | | | | | 20 | 22 | | | | | |
| COAST Rd @ PM 25.260 | SB | | | | | 37 | 22 | | | | | |
| COAST Rd @ PM 25.540 | SB | | | | | 42 | 22 | | | | | |
| COAST\LAGUNA Rd @ PM 25.741 | NB | | | | | 54 | 44 | | | | | |
| COAST\LAGUNA Rd @ PM 25.974 | NB | | | | | 46 | 22 | | | | | |
| BONNY DOON Rd @ PM 27.619 | NB | | | | | 59 | 44 | | | | | |
| DAVENPORT Ave @ PM 28.620 | NB | | | | | 13 | 22 | | | | | |
| OCEAN St @ PM 28.730 | NB | | | | | 12 | 22 | | | | | |
| CEMENT PLANT Rd @ PM 29.146 | NB | | | | | 40 | 22 | | | | | |
| DAVENPORT LANDING Rd @ PM 30.069 | SB | | | | | 30 | 22 | | | | | |
| CEMENT PLANT Rd @ PM 30.069 | NB | | | | | 29 | 22 | | | | | |
| DAVENPORT LANDING Rd @ PM 30.435 | SB | | | | | 39 | 44 | | | | | |
| SWANTON Rd @ PM 30.448 | NB | | | | | 25 | 22 | | | | | |
| PARKING LOT @ PM 34.92 | SB | | | | | 33 | 22 | | | | | |
| SWANTON Rd @ PM 35.275 | NB | | | | | 22 | 22 | | | | | |
| 3564 CABILLIO Hwy @ PM 35.634 | NB | | | | | 48 | 22 | | | | | |
| SUBTOTAL | | 798 | 105 | 504 | 236 | 815 | 572 | 214 | 144 | 162 | 500 | 260 |
| TOTAL | | 4,310 | | | | | | | | | | |

## OBJECT MARKER & DELINEATOR

| DIRECTION | POST MILE | OBJECT MARKER (TYPE L) | GUARD RAILING DELINEATOR |
|---|---|---|---|
| | | EA | EA |
| NORTHBOUND | PM 20.24 TO PM 20.40 | 1 | 9 |
| | PM 20.71 TO PM 20.76 | 1 | 3 |
| | PM 20.83 TO PM 20.90 | 1 | 3 |
| | PM 21.00 TO PM 21.04 | 1 | 2 |
| | PM 21.25 TO PM 21.29 | 1 | 2 |
| | PM 21.38 TO PM 21.53 | 1 | 9 |
| | PM 21.71 TO PM 21.77 | 1 | 4 |
| | PM 21.78 TO PM 21.98 | 1 | 12 |
| | PM 22.97 TO PM 23.11 | 1 | 9 |
| | PM 23.45 TO PM 23.49 | 1 | 2 |
| | PM 23.74 TO PM 23.89 | 1 | 9 |
| | PM 25.73 TO PM 25.99 | 1 | 15 |
| | PM 26.79 TO PM 26.86 | 1 | 4 |
| | PM 28.01 TO PM 28.09 | 1 | 4 |
| | PM 28.46 TO PM 28.65 | 1 | 10 |
| | PM 29.04 TO PM 29.07 | 1 | 1 |
| | PM 31.20 TO PM 31.35 | 1 | 9 |
| | PM 32.12 TO PM 32.18 | 1 | 4 |
| | PM 32.85 TO PM 32.92 | 1 | 4 |
| | PM 33.89 TO PM 33.97 | 1 | 5 |
| | PM 34.15 TO PM 34.24 | 1 | 5 |
| | PM 35.39 TO PM 35.52 | 1 | 7 |
| SOUTHBOUND | PM 20.39 TO PM 20.21 | 1 | 10 |
| | PM 20.91 TO PM 20.71 | 1 | 11 |
| | PM 21.29 TO PM 21.25 | 1 | 2 |
| | PM 21.53 TO PM 21.37 | 1 | 9 |
| | PM 22.04 TO PM 21.83 | 1 | 11 |
| | PM 22.10 TO PM 22.07 | 1 | 2 |
| | PM 22.68 TO PM 22.12 | 1 | 32 |
| | PM 23.11 TO PM 22.97 | 1 | 8 |
| | PM 23.17 TO PM 23.12 | 1 | 3 |
| | PM 23.57 TO PM 23.45 | 1 | 7 |
| | PM 23.74 TO PM 23.68 | 1 | 3 |
| | PM 23.97 TO PM 23.74 | 1 | 13 |
| | PM 25.24 TO PM 25.13 | 1 | 6 |
| | PM 26.00 TO PM 25.73 | 1 | 14 |
| | PM 26.88 TO PM 26.79 | 1 | 5 |
| | PM 28.09 TO PM 28.02 | 1 | 3 |
| | PM 28.62 TO PM 28.40 | 1 | 13 |
| | PM 28.75 TO PM 28.72 | 1 | 1 |
| | PM 29.07 TO PM 29.05 | 1 | 1 |
| | PM 29.22 TO PM 29.19 | 1 | 1 |
| | PM 31.29 TO PM 31.20 | 1 | 6 |
| | PM 32.17 TO PM 32.12 | 1 | 3 |
| | PM 32.40 TO PM 32.30 | 1 | 5 |
| | PM 32.90 TO PM 32.71 | 1 | 10 |
| | PM 33.92 TO PM 33.87 | 1 | 3 |
| | PM 34.26 TO PM 34.14 | 1 | 6 |
| | TOTAL | 48 | 320 |

# PAVEMENT DELINEATION QUANTITIES

**PDQ-3**

| REVISED BY | DATE REVISED |
|---|---|
| RT | 05/08/14 |
| RT | 03/10/14 |
| RT | 02/25/14 |

CALCULATED-DESIGNED BY: RAJINI TEKALKOTE
CHECKED BY: HUE NGUYEN
FUNCTIONAL SUPERVISOR: MOHAMMED QATAMI

STATE OF CALIFORNIA - DEPARTMENT OF TRANSPORTATION
Caltrans® TRAFFIC DESIGN

LAST REVISION 05-27-14 | DATE PLOTTED => 11-AUG-2014 | TIME PLOTTED => 16:28

| Dist | COUNTY | ROUTE | POST MILES TOTAL PROJECT | SHEET No. | TOTAL SHEETS |
|---|---|---|---|---|---|
| 05 | SCr | 1 | 20.2/37.4 | 21 | 39 |

AKM Rahman 5-7-14
REGISTERED CIVIL ENGINEER DATE

5-27-14
PLANS APPROVAL DATE

REGISTERED PROFESSIONAL ENGINEER AKM F. RAHMAN No. 74163 Exp. 6/30/15 CIVIL STATE OF CALIFORNIA

*THE STATE OF CALIFORNIA OR ITS OFFICERS OR AGENTS SHALL NOT BE RESPONSIBLE FOR THE ACCURACY OR COMPLETENESS OF SCANNED COPIES OF THIS PLAN SHEET.*

LEGEND: (FOR THIS SHEET ONLY)

* EXACT LOCATIONS AND EXTENTS OF COLD PLANE WILL BE DETERMINED BY THE ENGINEER.
** QUANTITY INCLUDED IN COLD PLANE AC PAVEMENT TABLE.
\# QUANTITY INCLUDED IN HMA QUANTITIES TABLE ON SHEET Q-2.
(N) NOT A SEPARATE PAY ITEM, FOR INFORMATION ONLY.

## REPAIR FAILED AREAS

| NB STATION (PM TO PM) LANE #1 | COLD PLANE AC PAVEMENT * | HMA (TYPE A) | TACK COAT | LENGTH (N) | WIDTH (N) | REMARKS |
|---|---|---|---|---|---|---|
| | SQYD | TON | TON | LF | LF | |
| 20.20 TO 21.00 | 1,670 | 281.8 | 0.49 | 2,505 | 6 | 4 Loc AT Lt & 4 Loc AT Rt |
| 21.00 TO 22.00 | 670 | 113.1 | 0.20 | 1,005 | 6 | 5 Loc AT Lt & 5 Loc AT Rt |
| 22.00 TO 23.00 | 800 | 135.0 | 0.23 | 1,200 | 6 | 4 Loc AT Lt & 4 Loc AT Rt |
| 23.00 TO 24.00 | 1,200 | 202.5 | 0.35 | 1,800 | 6 | 7 Loc AT Lt & 4 Loc AT Rt |
| 24.00 TO 25.00 | 535 | 90.3 | 0.16 | 803 | 6 | 6 Loc AT Lt & 6 Loc AT Rt |
| 25.00 TO 26.00 | 735 | 124.0 | 0.21 | 1,103 | 6 | 2 Loc AT Lt & 4 Loc AT Rt |
| 26.00 TO 27.00 | 535 | 90.3 | 0.16 | 803 | 6 | 5 Loc AT Rt |
| 29.00 TO 30.00 | 2,870 | 484.3 | 0.84 | 4,305 | 6 | 7 Loc AT Lt & 12 Loc AT Rt |
| 30.00 TO 31.00 | 1,800 | 303.8 | 0.53 | 2,700 | 6 | 6 Loc AT Lt & 6 Loc AT Rt |
| 31.00 TO 32.00 | 2,800 | 472.5 | 0.82 | 4,200 | 6 | 7 Loc AT Lt & 8 Loc AT Rt |
| 32.00 TO 33.00 | 2,200 | 371.3 | 0.64 | 3,300 | 6 | 9 Loc AT Lt & 9 Loc AT Rt |
| 33.00 TO 34.00 | 935 | 157.8 | 0.27 | 1,403 | 6 | 6 Loc AT Lt & 6 Loc AT Rt |
| 34.00 TO 35.00 | 200 | 33.8 | 0.06 | 300 | 6 | 1 Loc AT Lt & 2 Loc AT Rt |
| 36.00 TO 37.00 | 400 | 67.5 | 0.12 | 600 | 6 | 2 Loc AT Lt WT 2 Loc AT Rt |
| NB LANE #2 | | | | | | |
| 21.94 TO 22.00 | 200 | 33.8 | 0.06 | 300 | 6 | 1 Loc AT Lt & 1 Loc AT Rt |
| 22.00 TO 22.83 | 950 | 160.3 | 0.28 | 1,425 | 6 | 5 Loc AT Lt & 4 Loc AT Rt |
| 23.00 TO 24.00 | 870 | 146.8 | 0.25 | 1,305 | 6 | 6 Loc AT Lt & 5 Loc AT Rt |
| 24.00 TO 25.00 | 1,400 | 236.3 | 0.41 | 2,100 | 6 | 2 Loc AT Lt & 5 Loc AT Rt |
| NB SUB-TOTAL | 20,770 | 3,505.2 | 6.08 | | | |
| SB LANE #1 | | | | | | |
| 20.20 TO 21.00 | 935 | 157.8 | 0.27 | 1,403 | 6 | 4 Loc AT Lt & 6 Loc AT Rt |
| 21.00 TO 22.00 | 2,540 | 428.6 | 0.74 | 3,810 | 6 | 9 Loc AT Lt & 6 Loc AT Rt |
| 22.00 TO 23.00 | 533 | 90.0 | 0.15 | 800 | 6 | 3 Loc AT Lt & 2 Loc AT Rt |
| 23.00 TO 24.00 | 735 | 124.0 | 0.21 | 1,103 | 6 | 7 Loc AT Lt & 4 Loc AT Rt |
| 24.00 TO 25.00 | 800 | 135.0 | 0.23 | 1,200 | 6 | 6 Loc AT Lt & 6 Loc AT Rt |
| 25.00 TO 26.00 | 870 | 146.8 | 0.25 | 1,305 | 6 | 4 Loc AT Lt & 4 Loc AT Rt |
| 29.00 TO 30.00 | 935 | 157.8 | 0.27 | 1,403 | 6 | 3 Loc AT Lt & 6 Loc AT Rt |
| 30.00 TO 31.00 | 1,140 | 192.4 | 0.33 | 1,710 | 6 | 6 Loc AT Lt & 6 Loc AT Rt |
| 31.00 TO 32.00 | 1,070 | 180.6 | 0.31 | 1,605 | 6 | 2 Loc AT Lt & 4 Loc AT Rt |
| 32.00 TO 33.00 | 870 | 146.8 | 0.25 | 1,305 | 6 | 3 Loc AT Lt & 2 Loc AT Rt |
| 33.00 TO 34.00 | 550 | 92.8 | 0.16 | 825 | 6 | 3 Loc AT Lt & 1 Loc AT Rt |
| 36.00 TO 37.00 | 670 | 113.1 | 0.20 | 1,000 | 6 | 2 Loc AT Lt & 2 Loc AT Rt |
| 37.00 TO 37.45 | 1,070 | 180.6 | 0.31 | 803 | 12 | |
| SB LANE #2 | | | | | | |
| 22.00 TO 23.00 | 1,470 | 248.1 | 0.43 | 2,205 | 6 | 6 Loc AT Lt & 7 Loc AT Rt |
| 24.00 TO 25.00 | 1,060 | 178.9 | 0.31 | 1,590 | 6 | 3 Loc AT Lt & 5 Loc AT Rt |
| SB SUB-TOTAL | 15,248 | 2,550.8 | 4.42 | | | |
| TOTAL | 36,018 ** | 6,056.0 # | 10.50 # | | | |

## COLD PLANE AC PAVEMENT

| STATION (PM TO PM) | COLD PLANE AC PAVEMENT | ## NOTES | REMARKS |
|---|---|---|---|
| | SQYD | | |
| 20.20, CONFORM | 306 | | Beg PROJECT |
| 28.60 TO 28.83 | 7,110 | 1 | DAVENPORT TOWN AREA |
| RAIL ROAD PM 29.02 | 1,240 | | SEE C-5 |
| 31.41 TO 31.55 | 4,373 | 2 | SCOTT Cr Br APPROACH |
| 31.58 TO 31.81 | 5,034 | 3 | SCOTT Cr Br DEPARTURE |
| 36.23 TO 36.30 | 1,464 | 4 | WADDELL Cr Br APPROACH |
| 36.33 TO 36.37 | 902 | 5 | WADDELL Cr Br DEPARTURE |
| 37.45, CONFORM | 200 | | END OF PROJECT |
| SUB-TOTAL | 20,629 | | |
| FROM REPAIR FAILED AREAS TABLE | 36,018 | | |
| LOCAL ROADS & PARKING AREAS | 4,331 | | |
| TOTAL | 60,978 | | |

## SEE SHEET C-1

## CRACK TREATMENT

| STATION (PM TO PM) | CRACK TREATMENT |
|---|---|
| | LNMI |
| 26.00 TO 27.00 | 2 |
| TOTAL | 2 |

## HMA (Misc AREA)

| STATION (PM TO PM) | HMA (TYPE A) | PLACE HMA (Misc AREA) | TACK COAT |
|---|---|---|---|
| | TON | SQYD | TON |
| FILL V-DITCH NB 31.59 TO 31.80 | 24.2 | 213.4 | 0.07 |
| FILL V-DITCH SB 31.59 TO 31.78 | 21.7 | 192.5 | 0.06 |
| SUB-TOTAL | 45.9 | 405.9 | 0.13 |
| 70' HMA FILL AT SB PM 28.38 | 9.0 | 14.8 | |
| FROM MODIFY DI TABLE | 1.8 | 4.1 | |
| TOTAL | 56.7 # | 424.8 | 0.13 # |

## MINOR CONCRETE (Misc CONSTRUCTION)

| CALL BOX LOCATION (PM) | DIRECTION | MINOR CONCRETE (Misc CONSTRUCTION) |
|---|---|---|
| | | CY |
| 21.66 | SB | 0.31 |
| 23.34 | SB | 0.31 |
| 24.19 | NB | 0.31 |
| 28.07 | SB | 0.31 |
| 28.87 | NB | 0.31 |
| 29.53 | NB | 0.31 |
| 31.02 | SB | 0.31 |
| 31.88 | NB | 0.31 |
| 32.68 | SB | 0.31 |
| 34.26 | SB | 0.31 |
| 36.39 | NB | 0.31 |
| TOTAL | | 3.41 |

# SUMMARY OF QUANTITIES
# Q-1

REVISED BY | DATE REVISED
AKM RAHMAN | PAUL JENSEN
CALCULATED-DESIGNED BY | CHECKED BY
FUNCTIONAL SUPERVISOR
GETACHEW ESHETE

STATE OF CALIFORNIA - DEPARTMENT OF TRANSPORTATION
Caltrans
06-DESIGN

LAST REVISION 05-27-14 | DATE PLOTTED => 11-AUG-2014 | TIME PLOTTED => 16:28

| Dist | COUNTY | ROUTE | POST MILES TOTAL PROJECT | SHEET No. | TOTAL SHEETS |
|---|---|---|---|---|---|
| 05 | SCr | 1 | 20.2/37.4 | 22 | 39 |

AKM Rahman 5-7-14
REGISTERED CIVIL ENGINEER DATE

5-27-14
PLANS APPROVAL DATE

REGISTERED PROFESSIONAL ENGINEER AKM F. RAHMAN No. 74163 Exp. 6/30/15 CIVIL STATE OF CALIFORNIA

*THE STATE OF CALIFORNIA OR ITS OFFICERS OR AGENTS SHALL NOT BE RESPONSIBLE FOR THE ACCURACY OR COMPLETENESS OF SCANNED COPIES OF THIS PLAN SHEET.*

## LOCAL ROADS AND DRIVEWAYS

| LOCATION (PM) | DESCRIPTION | SIDE | RUBBERIZED HOT MIX ASPHALT (GAP GRADED) | TACK COAT | (N) DISTANCE FROM ES** TO CONFORM | (N) LENGTH OF TRANSITION TAPER | COLD PLANE ASPHALT CONCRETE PAVEMENT |
|---|---|---|---|---|---|---|---|
| | | | TON | TON | LF | LF | SQYD |
| 20.23 | SOUTH VIEW | R | 32.1 | 0.07 | 22 | 15 | 98.0 |
| 20.42 | SHAFFER Rd | L | 66.6 | 0.15 | 75 | 40 | 160.0 |
| 20.42 | Dwy | R | 18.5 | 0.04 | 40 | 30 | 45.0 |
| 20.70 | Dwy | L | 44.0 | 0.10 | 78 | 40 | 111.1 |
| 20.70 | Dwy | R | 16.1 | 0.04 | 60 | 40 | 80.0 |
| 20.98 | Dwy | L | 48.5 | 0.11 | 110 | 40 | 83.3 |
| 20.98 | COAST ROAD | R | 20.9 | 0.05 | 63 | 40 | 80.0 |
| 21.24 | 1700 COAST Rd | L | 34.8 | 0.08 | 80 | 40 | 71.1 |
| 21.24 | Dwy | R | 20.6 | 0.05 | 50 | 40 | 66.1 |
| 21.78 | COAST ROAD | L | 34.2 | 0.07 | 65 | 40 | 97.3 |
| 21.78 | Dwy | R | 41.7 | 0.09 | 55 | 40 | 151.9 |
| 22.12 | Dwy | L | 20.7 | 0.05 | 30 | 20 | 67.3 |
| 22.70 | DIMEO LANE | L | 27.7 | 0.06 | 46 | 30 | 86.7 |
| 22.70 | DIMEO LANE | R | 56.2 | 0.12 | 70 | 40 | 140.7 |
| 23.11 | Dwy | L | 34.8 | 0.08 | 60 | 40 | 85.8 |
| 23.11 | Dwy | R | 31.2 | 0.07 | 95 | 40 | 58.7 |
| 23.45 | Dwy | L | 29.4 | 0.06 | 55 | 40 | 115.6 |
| 23.45 | 3800 CABILLO Hwy | R | 36.3 | 0.08 | 95 | 40 | 55.6 |
| 23.76 | Dwy | L | 27.2 | 0.06 | 40 | 20 | 53.1 |
| 23.76 | Dwy | R | 37.3 | 0.08 | 102 | 40 | 71.1 |
| 24.56 | Dwy | R | 36.8 | 0.08 | 107 | 40 | 53.4 |
| 24.74 | SCARONI Rd | L | 30.3 | 0.07 | 79 | 40 | 75.6 |
| 24.99 | SCARONI Rd | L | 17.8 | 0.04 | 43 | 30 | 73.3 |
| 25.11 | Dwy | L | 11.2 | 0.02 | 31 | 20 | 48.9 |
| 25.26 | 5221 COAST Rd | L | 38.3 | 0.08 | 40 | 30 | 158.4 |
| 25.26 | BACK RANCH Rd | R | 24.0 | 0.05 | 40 | 30 | 100.7 |
| 25.54 | 5495 COAST Rd | L | 76.9 | 0.17 | 64 | 40 | 184.5 |
| 25.74 | COAST/LAGUNA Rd | R | 88.2 | 0.19 | 97 | 40 | 124.5 |
| 25.97 | COAST/LAGUNA Rd | R | 82.6 | 0.18 | 97 | 40 | 133.3 |
| 27.62 | BONNY DOON Rd | R | 86.6 | 0.19 | 83 | 40 | 186.7 |
| 28.62 | DAVENPORT Ave | R | 63.2 | 0.14 | 30 | 20 | 144.5 |
| 28.73 | OCEAN St | R | 11.2 | 0.02 | 22 | 15 | 59.2 |
| 29.15 | CEMENT PLANT Rd | R | 45.0 | 0.08 | 21 | 15 | 90.2 |
| 29.70 | CEMENT PLANT Rd | R | 31.8 | 0.07 | 27 | 15 | 60.2 |
| 30.07 | DAVENPORT LANDING Rd | L | 22.7 | 0.05 | 32 | 20 | 91.6 |
| 30.07 | CEMENT PLANT Rd | R | 25.0 | 0.05 | 32 | 20 | 93.3 |
| 30.43 | DAVENPORT LANDING Rd | L | 18.9 | 0.04 | 32 | 20 | 44.4 |
| 30.45 | SWANTON Rd | R | 25.5 | 0.06 | 32 | 20 | 62.2 |
| 30.63 | Dwy | R | 30.5 | 0.07 | 32 | 20 | 142.2 |
| | SUB-TOTAL I | | 1,445.3 | 3.16 | | | 3,705.5 |

ΦQUANTITIES INCLUDED IN THE LOCAL ROADS TOTAL IN THIS SHEET.

ABBREVIATION:

PA - PARKING AREA

LEGEND: (THIS SHEET ONLY)

* DISTANCES ARE Approx, ENGINEER WILL DETERMINE EXACT DISTANCE.
** QUANTITY INCLUDED IN COLD PLANE AC PAVEMENT TABLE, SHEET Q-1.
\# QUANTITIES INCLUDED IN THE HMA QUANTITIES TABLE.
(N) NOT A SEPARATE PAY ITEM, FOR INFORMATION ONLY.

## LOCAL ROADS AND DRIVEWAYS

| LOCATION (PM) | DESCRIPTION | SIDE | RUBBERIZED HOT MIX ASPHALT (GAP GRADED) | TACK COAT | (N) DISTANCE FROM ES* TO CONFORM | (N) TRANSITION LENGTH TO CONFORM | COLD PLANE ASPHALT CONCRETE PAVEMENT |
|---|---|---|---|---|---|---|---|
| | | | TON | TON | LF | LF | SQYD |
| 34.92 | PARKING LOT | L | 35.5 | 0.08 | 42 | 30 | 130.7 |
| 35.16 | Dwy | L | 27.0 | 0.04 | 42 | 30 | 47.8 |
| 35.16 | Dwy | R | 28.6 | 0.04 | 42 | 30 | 60.0 |
| 35.27 | SWANTON Rd | R | 32.1 | 0.07 | 42 | 30 | 100.6 |
| 35.63 | 3564 CABILLO Hwy | R | 48.7 | 0.11 | 42 | 30 | 155.3 |
| 36.23 | CANYON Rd | R | 32.5 | 0.07 | 22 | 15 | 65.4 |
| 36.41 | Dwy | R | 24.6 | 0.05 | 22 | 15 | 65.4 |
| | SUB-TOTAL II | | 229.0 | 0.46 | | | 625.2 |
| | SUB-TOTAL I | | 1,445.3 | 3.16 | | | 3,705.5 |
| | LOCAL ROADS TOTAL | | 1,674.3 # | 3.62 # | | | 4,330.7** |

## MVP & PARKING AREAS

| LOCATION (PM TO PM) | DESCRIPTION | SIDE | RUBBERIZED HOT MIX ASPHALT (GAP GRADED) | TACK COAT |
|---|---|---|---|---|
| | | | TON | TON |
| 27.47 TO 27.61 | PARKING AREA | L | 357.7 | 0.78 |
| 27.61 TO 27.63 | MVP | L | 40.3 | 0.09 |
| 31.11 TO 31.13 | MVP | L | 42.6 | 0.07 |
| 31.38 TO 31.54 | PARKING AREA | L | 189.0 | 0.41 |
| 36.42 | PARKING AREA | L | 30.6 | 0.07 |
| MVP & PARKING AREA TOTAL | | | 660.2# | 1.42 # |

## HMA QUANTITIES

| LOCATION (PM TO PM) | RUBBERIZED HOT MIX ASPHALT (GAP GRADED) | TACK COAT | HOT MIX ASPHALT (TYPE A) |
|---|---|---|---|
| | TON | TON | TON |
| 20.20 TO 20.51 | 1,111.2 | 2.54 | |
| 20.51 TO 21.50 | 3,110.2 | 7.15 | |
| 21.51 TO 21.95 | 1,413.7 | 3.25 | |
| 21.95 TO 22.91 | 4,374.3 | 9.91 | |
| 22.91 TO 23.66 | 2,600.9 | 5.95 | |
| 23.66 TO 24.12 | 2,239.7 | 5.06 | |
| 24.12 to 24.62 | 2,183.7 | 4.95 | |
| 24.62 TO 25.54 | 2,593.8 | 6.00 | |
| 25.54 TO 27.48 | 5,457.6 | 12.61 | |
| 27.48 TO 28.80 | 4,404.5 | 10.10 | |
| 28.80 TO 30.07 | 3,572.7 | 8.26 | |
| 30.07 TO 31.55 | 4,163.5 | 9.62 | |
| 31.58 TO 32.00 | 1,178.7 | 2.72 | |
| 32.00 TO 33.00 | 2,813.2 | 6.50 | |
| 33.00 TO 34.00 | 2,813.2 | 6.50 | |
| 34.00 TO 35.00 | 2,813.2 | 6.50 | |
| 35.00 TO 36.30 | 3,657.1 | 8.45 | |
| 36.33 TO 37.45 | 3,142.3 | 7.26 | |
| ROADWAY TOTAL | 53,643.5 | 123.33 | |
| LOCAL ROADS & DRIVEWAYS TABLE | 1,674.3 | 3.62 | |
| MVP & PARKING AREAS TABLE | 660.2 | 1.42 | |
| REPAIR FAILED AREAS TABLE | | 10.50 | 6,056.0 |
| HOT MIX ASPHALT DIKE TABLE | | | 991.3 |
| HMA (Misc AREA) TABLE | | 0.13 | 56.7 |
| SAFETY EDGE TABLE | 1,099.8 | | |
| TOTAL | 57,077.8 | 139.00 | 7,104.0 |

# SUMMARY OF QUANTITIES

# Q-2

REVISED BY | DATE REVISED
AKM RAHMAN | SAUL AGUILAR
CALCULATED-DESIGNED BY | CHECKED BY
FUNCTIONAL SUPERVISOR | GETACHEW ESHETE
STATE OF CALIFORNIA - DEPARTMENT OF TRANSPORTATION
Caltrans
06-DESIGN

LAST REVISION 05-27-14 | DATE PLOTTED => 11-AUG-2014 | TIME PLOTTED => 16:28

| Dist | COUNTY | ROUTE | POST MILES TOTAL PROJECT | SHEET No. | TOTAL SHEETS |
|---|---|---|---|---|---|
| 05 | SCr | 1 | 20.2/37.4 | 23 | 39 |

AKM Rahman 5-7-14
REGISTERED CIVIL ENGINEER DATE

5-27-14
PLANS APPROVAL DATE

REGISTERED PROFESSIONAL ENGINEER AKM F. RAHMAN No. 74163 Exp. 6/30/15 CIVIL STATE OF CALIFORNIA

*THE STATE OF CALIFORNIA OR ITS OFFICERS OR AGENTS SHALL NOT BE RESPONSIBLE FOR THE ACCURACY OR COMPLETENESS OF SCANNED COPIES OF THIS PLAN SHEET.*

# HOT MIX ASPHALT DIKE

| NB STATION (PM TO PM) | REMOVE AC DIKE | PLACE HOT MIX ASPHALT DIKE (TYPE A) | (TYPE C) | (TYPE E) | (TYPE F) | HMA (TYPE A) | ASPHALTIC EMULSION (FOG SEAL COAT) | SB STATION (PM TO PM) | REMOVE AC DIKE | PLACE HOT MIX ASPHALT DIKE (TYPE A) | (TYPE C) | (TYPE E) | (TYPE F) | HMA (TYPE A) | ASPHALTIC EMULSION (FOG SEAL COAT) |
|---|---|---|---|---|---|---|---|---|---|---|---|---|---|---|---|
| | LF | LF | LF | LF | LF | TON | TON | | LF | LF | LF | | LF | TON | TON |
| 20.20 TO 20.22 | 130.0 | 130.0 | | | | 3.5 | 0.02 | 35.94 TO 36.08 | 740.0 | 740.0 | | | | 20.0 | 0.11 |
| 20.24 TO 20.40 | 880.0 | | 67.5 | | 812.5 | 11.2 | 0.09 | 35.19 TO 35.40 | 1,120.0 | 1,120.0 | | | | 30.2 | 0.16 |
| 20.43 TO 20.70 | 1,670.0 | 1,670.0 | | | | 45.0 | 0.24 | 34.14 TO 34.26 | 650.0 | | 125.0 | | 525.0 | 7.9 | 0.06 |
| 20.71 TO 20.76 | 225.0 | | | | 225.0 | 3.0 | 0.02 | 31.58 TO 31.78 | | | 62.5 | | 1,025.0 | 14.0 | 0.12 |
| 20.83 TO 20.90 | 260.0 | | 37.5 | | 222.5 | 3.2 | 0.03 | 31.20 TO 31.29 | 500.0 | | | | 500.0 | 6.6 | 0.05 |
| 21.00 TO 21.04 | 192.5 | | 67.5 | | 125.0 | 2.2 | 0.02 | 28.75 TO 28.87 | 630.0 | 630.0 | | | | 17.0 | 0.09 |
| 21.25 TO 21.29 | 175.0 | | 55.0 | | 175.0 | 2.3 | 0.02 | 28.40 TO 28.62 | 1,125.0 | | | | 1,125.0 | 14.8 | 0.12 |
| 21.38 TO 21.53 | 770.0 | | | | 715.0 | 9.8 | 0.08 | 28.37 TO 28.40 | 130.0 | 130.0 | | | | 3.5 | 0.02 |
| 21.53 TO 21.66 | 660.0 | 660.0 | | | | 17.8 | 0.10 | 28.02 TO 28.09 | 425.0 | | 100.0 | | 325.0 | 5.0 | 0.04 |
| 21.71 TO 21.77 | 407.3 | 70.0 | | | 337.3 | 6.3 | 0.05 | 27.96 TO 28.02 | 340.0 | 340.0 | | | | 9.2 | 0.05 |
| 21.78 TO 21.98 | 1,050.0 | | 50.0 | | 1,000.0 | 13.6 | 0.11 | 27.63 TO 27.82 | 1,010.0 | 1,010.0 | | | | 27.2 | 0.15 |
| 21.98 TO 22.17 | 1,000.0 | | | 1,000.0 | | 26.0 | 1.48 | 27.43 TO 27.46 | 150.0 | 150.0 | | | | 4.1 | 0.02 |
| 22.38 TO 22.60 | 1,180.0 | 1,180.0 | | | | 31.8 | 0.17 | 27.04 TO 27.09 | 264.0 | 264.0 | | | | 7.1 | 0.04 |
| 22.62 TO 22.67 | | | | 250.0 | | 6.5 | 0.37 | 26.79 TO 26.88 | 475.0 | | | | 475.0 | 6.3 | 0.05 |
| 22.71 TO 22.74 | 175.0 | | | 175.0 | | 4.6 | 0.26 | 26.37 TO 26.43 | 285.0 | 285.0 | | | | 7.7 | 0.04 |
| 22.78 TO 22.97 | 1,000.0 | 1,000.0 | | | | 27.0 | 0.15 | 25.72 TO 25.99 | 1,241.0 | | 65.0 | | 1,176.0 | 16.0 | 0.13 |
| 22.98 TO 23.11 | 746.0 | | | 40.0 | 706.0 | 10.3 | 0.13 | 25.53 TO 25.56 | 160.0 | 160.0 | | | | 4.3 | 0.02 |
| 23.11 TO 23.32 | 1,120.0 | 1,120.0 | | | | 30.2 | 0.16 | 25.26 TO 25.32 | 355.0 | 355.0 | | | | 9.6 | 0.05 |
| 23.45 TO 23.49 | 200.0 | | | | 200.0 | 2.6 | 0.02 | 25.16 TO 25.24 | 441.0 | | 67.5 | | 373.5 | 5.4 | 0.04 |
| 23.51 TO 23.70 | 955.0 | 955.0 | | | | 25.8 | 0.14 | 24.33 TO 24.40 | 370.0 | 370.0 | | | | 10.0 | 0.05 |
| 23.74 TO 23.89 | 775.0 | | 90.0 | | 685.0 | 9.7 | 0.08 | 24.25 TO 24.32 | 385.0 | 385.0 | | | | 10.4 | 0.06 |
| 23.91 TO 24.11 | 970.0 | 970.0 | | | | 26.2 | 0.14 | 23.99 TO 24.08 | 460.0 | 460.0 | | | | 12.4 | 0.07 |
| 24.18 TO 24.48 | 1,610.0 | | | 1,610.0 | | 41.8 | 2.39 | 23.95 TO 23.97 | 106.0 | | 76.0 | | 30.0 | 1.0 | 0.02 |
| 24.58 TO 24.60 | 100.0 | | | 100.0 | | 2.6 | 0.15 | 23.68 TO 23.73 | 264.0 | | 80.0 | | 184.0 | 3.0 | 0.03 |
| 25.08 TO 25.25 | 940.0 | 940.0 | | | | 25.4 | 0.14 | 23.62 TO 23.68 | 205.0 | 205.0 | | | | 5.5 | 0.03 |
| 25.39 TO 25.42 | 160.0 | 160.0 | | | | 4.3 | 0.02 | 23.45 TO 23.57 | 667.5 | | 67.5 | | 600.0 | 8.4 | 0.07 |
| 25.73 TO 25.99 | 1,350.0 | | | | 1,350.0 | 17.8 | 0.14 | 23.33 TO 23.36 | 160.0 | 160.0 | | | | 4.3 | 0.02 |
| 26.02 TO 26.04 | 80.0 | 80.0 | | | | 2.2 | 0.01 | 22.97 TO 23.06 | 530.0 | | 42.5 | | 487.5 | 6.8 | 0.06 |
| 26.39 TO 26.40 | 60.0 | 60.0 | | | | 1.6 | 0.01 | 22.79 TO 22.96 | 850.0 | 850.0 | | | | 22.9 | 0.12 |
| 26.79 TO 26.86 | 412.5 | | 25.0 | | 387.5 | 5.3 | 0.05 | 22.67 TO 22.68 | 50.0 | | 50.0 | | | 0.4 | 0.01 |
| 27.06 TO 27.11 | 250.0 | 250.0 | | | | 6.7 | 0.04 | 22.42 TO 22.43 | 40.0 | 40.0 | | | | 1.1 | 0.01 |
| 27.43 TO 27.61 | 960.0 | 960.0 | | | | 25.9 | 0.14 | 22.16 TO 22.34 | 970.0 | | | | 970.0 | 12.8 | 0.10 |
| 27.64 TO 27.67 | 160.0 | 160.0 | | | | 4.3 | 0.02 | 22.03 TO 22.07 | 150.0 | 150.0 | | | | 4.1 | 0.02 |
| 27.97 TO 28.01 | 220.0 | 220.0 | | | | 5.9 | 0.03 | 22.07 TO 22.10 | 65.5 | 65.5 | | | | 0.5 | 0.01 |
| 28.01 TO 28.09 | 425.0 | | 100.0 | | 325.0 | 5.0 | 0.04 | 21.81 TO 22.04 | 215.0 | | 50.0 | | 165.0 | 2.6 | 0.03 |
| 28.46 TO 28.65 | | | 125.0 | | 900.0 | 12.8 | 0.10 | 21.66 TO 21.78 | 675.0 | 675.0 | | | | 18.2 | 0.10 |
| 28.82 TO 28.91 | 480.0 | 480.0 | | | | 12.9 | 0.07 | 21.38 TO 21.53 | 817.5 | | 62.5 | | 755.0 | 10.4 | 0.09 |
| 29.14 TO 29.16 | 80.0 | 80.0 | | | | 2.2 | 0.01 | 21.29 TO 21.38 | 475.2 | 475.2 | | | | 12.8 | 0.07 |
| 31.58 TO 31.80 | | | | | 1,150.0 | 15.2 | 0.12 | 21.25 TO 21.29 | 255.0 | | 67.5 | | 187.5 | 3.0 | 0.02 |
| 35.17 TO 35.27 | 590.0 | 590.0 | | | | 15.9 | 0.09 | 20.98 TO 21.24 | 1,525.0 | 1,243.5 | 125.0 | | 156.5 | 36.6 | 0.21 |
| 38.28 TO 35.43 | 790.0 | 790.0 | | | | 21.3 | 0.12 | 20.94 TO 20.97 | 175.0 | 175.0 | | | | 4.7 | 0.03 |
| | | | | | | | | 20.70 TO 20.89 | 1,025.0 | | 50.0 | | 975.0 | 13.2 | 0.11 |
| | | | | | | | | 20.31 TO 20.37 | 375.0 | 375.0 | | | | 10.1 | 0.05 |
| | | | | | | | | 20.21 TO 20.39 | 987.5 | | 92.5 | | 895.0 | 12.5 | 0.10 |
| | | | | | | | | SB SUB-TOTAL | 21,839.2 | 10,813.2 | 1,183.5 | | 10,930.0 | 443.6 | 2.85 |
| | | | | | | | | NB SUB-TOTAL | 23,208.3 | 12,525.0 | 617.5 | 3,175.0 | 9,315.8 | 547.7 | 7.57 |
| NB SUB-TOTAL | 23,208.3 | 12,525.0 | 617.5 | 3,175.0 | 9,315.8 | 547.7 | 7.57 | TOTAL | 45,047.5 | 23,338.2 | 1,801.0 | 3,175.0 | 20,245.8 | 991.3 # | 10.42 |

# QUANTITY INCLUDED IN HMA QUANTITIES TABLE

NOTES:

1. NO CENTER LINE RUMBLE STRIP FROM PM 28.57 TO 29.24 IN THE DAVENPORT TOWN AREA.

## EDGE LINE RUMBLE STRIP (HMA, GROUND-IN INDENTATIONS)

| LOCATION | SHOULDER RUMBLE STRIP (HMA, GROUND-IN INDENTATIONS) STA |
|---|---|
| NB PM 20.40 TO 24.20 | 171 |
| SB PM 20.40 TO 24.20 | 165 |
| TOTAL | 336 |

## CENTER LINE RUMBLE STRIP (HMA, GROUND-IN INDENTATIONS)

| LOCATION | RUMBLE STRIP STA |
|---|---|
| FROM PM 20.40 TO 37.45 | 722 |
| TOTAL | 722 |

## SUMMARY OF QUANTITIES

Q-3

STATE OF CALIFORNIA - DEPARTMENT OF TRANSPORTATION
Caltrans® 06-DESIGN

FUNCTIONAL SUPERVISOR: GETACHEW ESHETE
CALCULATED-DESIGNED BY: AKM RAHMAN
CHECKED BY: PAUL JENSEN
REVISED BY
DATE REVISED

LAST REVISION DATE PLOTTED => 11-AUG-2014
05-27-14 TIME PLOTTED => 16:28

| Dist | COUNTY | ROUTE | POST MILES TOTAL PROJECT | SHEET No. | TOTAL SHEETS |
|---|---|---|---|---|---|
| 05 | SCr | 1 | 20.2/37.4 | 24 | 39 |

AKM Rahman 5-7-14
REGISTERED CIVIL ENGINEER DATE

5-27-14
PLANS APPROVAL DATE

REGISTERED PROFESSIONAL ENGINEER AKM F. RAHMAN No. 74163 Exp. 6/30/15 CIVIL STATE OF CALIFORNIA

*THE STATE OF CALIFORNIA OR ITS OFFICERS OR AGENTS SHALL NOT BE RESPONSIBLE FOR THE ACCURACY OR COMPLETENESS OF SCANNED COPIES OF THIS PLAN SHEET.*

## GUARDRAIL QUANTITIES

| NORTHBOUND LOCATIONS * (Beg PM TO END PM) | LAYOUT TYPE | ADJUST GUARDRAIL ELEMENT | RESET FLARED TERMINAL SYSTEM | REMOVE BURIED POST END ANCHOR | BURIED POST END ANCHOR | END ANCHOR ASSEMBLY (TYPE SFT) | RECONSTRUCT END CAP (TYPE C) |
|---|---|---|---|---|---|---|---|
| | | LF | EA | EA | EA | EA | EA |
| 20.24 TO 20.40 | 11L | 812.5 | 1 | 1 | 1 | | |
| 20.71 TO 20.76 | | 225.0 | 1 | | | 1 | 1 |
| 20.83 TO 20.90 | 11G | 312.5 | 1 | 1 | 1 | | |
| 21.00 TO 21.04 | 11E | 125.0 | 2 | | | | |
| 21.25 TO 21.29 | 11B | 175.0 | 1 | | | 1 | 1 |
| 21.38 TO 21.53 | 11F | 775.0 | | 2 | 2 | | |
| 21.71 TO 21.77 | 11C | 362.5 | | 1 | 1 | 1 | 1 |
| 21.78 TO 21.98 | | 1,050.0 | | 1 | 1 | 1 | 1 |
| 22.97 TO 23.11 | 11C | 775.0 | | 1 | 1 | 1 | 1 |
| 23.45 TO 23.49 | | 200.0 | 1 | | | 1 | 1 |
| 23.74 TO 23.89 | | 775.0 | | 1 | 1 | 1 | |
| 25.73 TO 25.99 | | 1,350.0 | | | | 2 | 2 |
| 26.79 TO 26.86 | 11G | 350.0 | 1 | 1 | 1 | | |
| 28.01 TO 28.09 | 11E | 325.0 | 2 | | | | |
| 28.46 TO 28.65 | 11E | 900.0 | 2 | | | | |
| 29.04 TO 29.07 | 16L | 37.5 | 1 | 1 | 1 | | |
| 31.20 TO 31.35 | 11F | 800.0 | | 2 | 2 | | |
| 32.12 TO 32.18 | 11F | 325.0 | | 2 | 2 | | |
| 32.85 TO 32.92 | 11F | 375.0 | | 2 | 2 | | |
| 33.89 TO 33.97 | 11F | 425.0 | | 2 | 2 | | |
| 34.15 TO 34.24 | 11F | 450.0 | | 2 | 2 | | |
| 35.39 TO 35.52 | 11G | 625.0 | 1 | 1 | 1 | | |
| NB SUBTOTAL | | 11,550.0 | 14 | 21 | 21 | 9 | 8 |

| SOUTHBOUND LOCATIONS * (Beg PM TO END PM) | LAYOUT TYPE | ADJUST GUARDRAIL ELEMENT | RESET FLARED TERMINAL SYSTEM | RESET IN-LINE TERMINAL SYSTEM | REMOVE BURIED POST END ANCHOR | BURIED POST END ANCHOR | END ANCHOR ASSEMBLY (TYPE SFT) | RECONSTRUCT END CAP (TYPE C) |
|---|---|---|---|---|---|---|---|---|
| | | LF | EA | EA | EA | EA | EA | EA |
| 20.39 TO 20.21 | 11L | 912.5 | 1 | | 1 | 1 | | |
| 20.91 TO 20.71 | 11E | 1,000.0 | 2 | | | | | |
| 21.29 TO 21.25 | | 187.5 | 1 | | | | 1 | 1 |
| 21.53 TO 21.37 | 11G | 825.0 | 1 | | 1 | 1 | | |
| 22.04 TO 21.83 | 11G | 1,025.0 | 1 | | 1 | 1 | | |
| 22.10 TO 22.07 | 11G | 125.0 | 1 | | 1 | 1 | | |
| 22.68 TO 22.12 | 11E | 2,850.0 | 2 | | | | | |
| 23.11 TO 22.97 | | 762.5 | 1 | | | | 1 | 1 |
| 23.17 TO 23.12 | 11C | 287.5 | | | 1 | 1 | 1 | 1 |
| 23.57 TO 23.45 | 11B | 612.5 | 1 | | | | 1 | 1 |
| 23.74 TO 23.68 | | 287.5 | | | 1 | 1 | 1 | 1 |
| 23.97 TO 23.74 | 11C | 1,200.0 | | | 1 | 1 | 1 | 1 |
| 25.24 TO 25.13 | 11H | 500.0 | 1 | 1 | | | | |
| 26.00 TO 25.73 | 11F | 1,250.0 | | | 2 | 2 | | |
| 26.88 TO 26.79 | 11F | 475.0 | | | 2 | 2 | | |
| 28.09 TO 28.02 | 11E | 300.0 | 2 | | | | | |
| 28.62 TO 28.40 | 11F | 1,125.0 | | | 2 | 2 | | |
| 28.75 TO 28.72 | 16D | 62.5 | 1 | 1 | | | | |
| 29.07 TO 29.05 | 11E | 12.5 | 2 | | | | | |
| 29.22 TO 29.19 | 11D | 50.0 | | 2 | | | | |
| 31.29 TO 31.20 | 11G | 500.0 | 1 | | 1 | 1 | | |
| 32.17 TO 32.12 | 11L | 275.0 | 1 | | 1 | 1 | | |
| 32.40 TO 32.30 | 11L | 475.0 | 1 | | 1 | 1 | | |
| 32.90 TO 32.71 | 11E | 900.0 | 2 | | | | | |
| 33.92 TO 33.87 | 11G | 250.0 | 1 | | 1 | 1 | | |
| 34.26 TO 34.14 | 11E | 525.0 | 2 | | | | | |
| SB SUBTOTAL | | 16,775.0 | 25 | 4 | 17 | 17 | 6 | 6 |
| NB SUBTOTAL | | 11,550.0 | 14 | | 21 | 21 | 9 | 8 |
| TOTAL | | 28,325.0 | 39 | 4 | 38 | 38 | 15 | 14 |

* APPROXIMATE LOCATIONS ONLY, EXACT LOCATIONS WILL BE DETERMINED BY THE ENGINEER.

## SHOULDER BACKING

| NB STATION (PM TO PM) | LENGTH (N) | SHOULDER BACKING | SB STATION (PM TO PM) | LENGTH (N) | SHOULDER BACKING |
|---|---|---|---|---|---|
| | LF | TON | | LF | TON |
| 20.20 TO 20.22 | 105 | 3.7 | 20.39 TO 20.71 | 1,690 | 59.1 |
| 20.43 TO 20.71 | 1,480 | 51.7 | 20.91 TO 21.24 | 1,745 | 61.0 |
| 20.76 TO 20.83 | 370 | 12.9 | 21.29 TO 21.37 | 425 | 14.8 |
| 20.90 TO 21.00 | 530 | 18.5 | 21.53 TO 21.83 | 1,585 | 55.4 |
| 21.04 TO 21.25 | 1,110 | 38.8 | 22.04 TO 22.97 | 4,910 | 66.5 |
| 21.29 TO 21.38 | 475 | 16.6 | 23.11 TO 23.45 | 1,795 | 62.8 |
| 21.53 TO 21.71 | 950 | 33.3 | 23.57 TO 23.68 | 580 | 20.3 |
| 21.98 TO 22.97 | 5,230 | 183.0 | 23.97 TO 25.13 | 6,125 | 214.4 |
| 23.11 TO 23.45 | 1,795 | 62.8 | 25.24 TO 25.73 | 2,590 | 90.6 |
| 23.49 TO 23.74 | 1,320 | 46.2 | 26.00 TO 26.79 | 4,170 | 146.0 |
| 23.89 TO 25.73 | 9,715 | 340.0 | 26.88 TO 28.02 | 6,020 | 211.4 |
| 25.99 TO 26.79 | 4,225 | 147.8 | 28.09 TO 28.40 | 1,640 | 57.3 |
| 26.86 TO 28.01 | 6,070 | 212.5 | 28.62 TO 28.72 | 530 | 18.5 |
| 28.09 TO 28.46 | 1,955 | 68.4 | 28.75 TO 29.05 | 1,585 | 55.4 |
| 28.65 TO 29.04 | 2,060 | 72.1 | 29.07 TO 29.19 | 635 | 22.2 |
| 29.07 TO 31.20 | 11,245 | 382.5 | 29.22 TO 31.20 | 10,455 | 365.9 |
| 31.35 TO 31.42 | 370 | 12.9 | 31.29 TO 31.54 | 1,320 | 46.2 |
| 31.80 TO 32.12 | 1,690 | 59.1 | 31.78 TO 32.12 | 1,795 | 62.8 |
| 32.18 TO 32.85 | 3,855 | 123.8 | 32.17 TO 32.30 | 685 | 24.0 |
| 32.92 TO 33.89 | 5,120 | 179.3 | 32.40 TO 32.71 | 1,635 | 57.3 |
| 33.97 TO 34.15 | 950 | 33.3 | 32.90 TO 33.87 | 5,120 | 179.3 |
| 34.24 TO 35.39 | 6,070 | 210.7 | 33.92 TO 34.14 | 1,160 | 40.7 |
| 35.52 TO 36.24 | 3,800 | 133.1 | 34.26 TO 35.19 | 4,910 | 171.9 |
| 36.34 TO 36.44 | 530 | 18.5 | 35.19 TO 36.25 | 5,595 | 195.9 |
| 37.39 TO 37.45 | 320 | 11.1 | 36.34 TO 37.45 | 5,860 | 205.1 |
| | | | SB SUB-TOTAL | | 2,504.8 |
| | | | NB SUB-TOTAL | | 2,472.6 |
| NB SUB-TOTAL | | 2,472.6 | TOTAL | | 4,977.4 |

## CONSTRUCT OR MODIFY DRAINAGE INLET

| LOCATION | DIRECTION | MINOR Conc (MINOR Str) | HMA (TYPE A) ΦΦ | PLACE HMA (Misc AREA) ΦΦ | REMOVE Conc & AC | TYPE 24-12X GRATE (N) | Misc IRON & STEEL | MINOR CONCRETE BACKFILL | MINOR Conc CURB (TYPE A1-8) | REMOVE GRATE | REMARKS |
|---|---|---|---|---|---|---|---|---|---|---|---|
| | | CY | TON | SQYD | CY | EA | LB | CY | LF | EA | |
| PM 27.65 | SB | 1.70 | | | | 1 | 565 | 3.47 | | | DI (TYPE G1) |
| PM 27.65 | SB | 0.45 | | | 0.5 | | | | | 1 | MODIFY DI |
| PM 27.72 | SB | 1.65 | 1.8 | 4.1 | 0.5 | 1 | 565 | 2.50 | 2 | 1 | MODIFY DI |
| TOTAL | | 3.79 | 1.8 | 4.1 | 1.0 | 2 | 1130 | 5.97 | 2 | 2 | |

(N) NOT A SEPARATE PAY ITEM, FOR INFORMATION ONLY.
ΦΦ INCLUDED IN HMA (Misc AREA) TABLE.

## SUMMARY OF QUANTITIES
## Q-4

REVISED BY | DATE REVISED
AKM RAHMAN | SAUL AGUILAR
CALCULATED-DESIGNED BY | CHECKED BY
FUNCTIONAL SUPERVISOR: GETACHEW ESHETE
STATE OF CALIFORNIA - DEPARTMENT OF TRANSPORTATION
Caltrans® 06-DESIGN

LAST REVISION 05-27-14 | DATE PLOTTED => 27-AUG-2014 | TIME PLOTTED => 10:14

| Dist | COUNTY | ROUTE | POST MILES TOTAL PROJECT | SHEET No. | TOTAL SHEETS |
|---|---|---|---|---|---|
| 05 | SCr | 1 | 20.2/37.4 | 25 | 39 |

AKM Rahman 5-7-14
REGISTERED CIVIL ENGINEER DATE

5-27-14
PLANS APPROVAL DATE

REGISTERED PROFESSIONAL ENGINEER AKM F. RAHMAN No. 74163 Exp. 6/30/15 CIVIL STATE OF CALIFORNIA

*THE STATE OF CALIFORNIA OR ITS OFFICERS OR AGENTS SHALL NOT BE RESPONSIBLE FOR THE ACCURACY OR COMPLETENESS OF SCANNED COPIES OF THIS PLAN SHEET.*

## TEMPORARY DRAINAGE INLET PROTECTION

| DRAINAGE INLET LOCATION (PM) | DIRECTION | QUANTITY |
|---|---|---|
| | | EA |
| 20.23 | NB | 1 |
| 20.25 | NB | 1 |
| 20.32 | NB | 1 |
| 20.42 | NB | 1 |
| 21.26 | NB | 1 |
| 21.60 | NB | 1 |
| 22.19 | NB | 1 |
| 22.23 | NB | 1 |
| 22.47 | NB | 1 |
| 23.36 | NB | 1 |
| 23.50 | NB | 1 |
| 23.68 | NB | 1 |
| 23.80 | NB | 1 |
| 23.98 | NB | 1 |
| 24.09 | NB | 1 |
| 24.17 | NB | 1 |
| 24.58 | NB | 1 |
| 33.12 | NB | 1 |
| 33.54 | NB | 1 |
| 35.26 | NB | 1 |
| 20.25 | SB | 1 |
| 20.32 | SB | 1 |
| 20.42 | SB | 1 |
| 21.26 | SB | 1 |
| 21.77 | SB | 1 |
| 22.81 | SB | 1 |
| 22.93 | SB | 1 |
| 22.97 | SB | 1 |
| 23.25 | SB | 1 |
| 23.36 | SB | 1 |
| 23.68 | SB | 1 |
| 23.98 | SB | 1 |
| 27.65 | SB | 1 |
| 27.72 | SB | 1 |
| 31.00 | SB | 1 |
| TOTAL | | 35 |

## ADJUST DRAINAGE INLETS TO GRADE

| DRAINAGE INLET LOCATION (PM) | DIRECTION | QUANTITY |
|---|---|---|
| | | EA |
| 20.23 | NB | 1 |
| 20.25 | NB | 1 |
| 20.32 | NB | 1 |
| 20.42 | NB | 1 |
| 21.26 | NB | 1 |
| 21.60 | NB | 1 |
| 22.19 | NB | 1 |
| 22.23 | NB | 1 |
| 22.47 | NB | 1 |
| 23.36 | NB | 1 |
| 23.50 | NB | 1 |
| 23.68 | NB | 1 |
| 23.80 | NB | 1 |
| 23.98 | NB | 1 |
| 24.09 | NB | 1 |
| 24.17 | NB | 1 |
| 24.58 | NB | 1 |
| 33.12 | NB | 1 |
| 33.54 | NB | 1 |
| 35.26 | NB | 1 |
| 20.25 | SB | 1 |
| 20.32 | SB | 1 |
| 20.42 | SB | 1 |
| 21.26 | SB | 1 |
| 21.77 | SB | 1 |
| 22.81 | SB | 1 |
| 22.93 | SB | 1 |
| 22.97 | SB | 1 |
| 23.25 | SB | 1 |
| 23.36 | SB | 1 |
| 23.68 | SB | 1 |
| 23.98 | SB | 1 |
| 31.00 | SB | 1 |
| TOTAL | | 33 |

## SAFETY EDGE

| LOCATION (PM TO PM) | DIRECTION | (N) TOTAL THICKNESS OF SAFETY EDGE | (N) LENGTH OF SAFETY EDGE | RUBBERIZED HOT MIX ASPHALT (GAP GRADED) | LOCATION (PM TO PM) | DIRECTION | (N) TOTAL THICKNESS OF SAFETY EDGE | (N) LENGTH OF SAFETY EDGE | RUBBERIZED HOT MIX ASPHALT (GAP GRADED) |
|---|---|---|---|---|---|---|---|---|---|
| | | FT | LF | TON | | | FT | LF | TON |
| 20.39 TO 20.71 | SB | 0.40 | 1,690 | 16.9 | 20.90 TO 20.98 | NB | 0.40 | 422 | 4.2 |
| 20.91 TO 20.94 | SB | 0.40 | 158 | 1.6 | 21.04 TO 21.25 | NB | 0.40 | 1,109 | 11.1 |
| 22.68 TO 22.79 | SB | 0.40 | 581 | 5.8 | 22.17 TO 22.38 | NB | 0.40 | 1,109 | 11.1 |
| 23.17 TO 23.33 | SB | 0.40 | 845 | 8.5 | 22.60 TO 22.62 | NB | 0.40 | 106 | 1.1 |
| 23.36 TO 23.45 | SB | 0.40 | 475 | 4.8 | 22.67 TO 22.71 | NB | 0.40 | 211 | 2.1 |
| 24.08 TO 24.15 | SB | 0.40 | 370 | 3.7 | 22.74 TO 22.78 | NB | 0.40 | 211 | 2.1 |
| 24.17 TO 24.25 | SB | 0.40 | 422 | 4.2 | 23.32 TO 23.45 | NB | 0.40 | 686 | 6.9 |
| 24.40 TO 24.73 | SB | 0.40 | 1,742 | 17.4 | 23.70 TO 23.73 | NB | 0.40 | 158 | 1.6 |
| 24.79 TO 24.99 | SB | 0.40 | 1,056 | 10.6 | 24.11 TO 24.16 | NB | 0.40 | 264 | 2.6 |
| 25.00 TO 25.13 | SB | 0.40 | 686 | 6.9 | 24.48 TO 24.58 | NB | 0.40 | 528 | 5.3 |
| 25.32 TO 25.53 | SB | 0.40 | 1,109 | 11.1 | 24.60 TO 25.08 | NB | 0.40 | 2,534 | 25.3 |
| 25.56 TO 25.72 | SB | 0.40 | 845 | 8.5 | 25.25 TO 25.39 | NB | 0.40 | 739 | 7.4 |
| 26.00 TO 26.37 | SB | 0.40 | 1,954 | 19.5 | 25.42 TO 25.71 | NB | 0.40 | 1,531 | 15.3 |
| 26.43 TO 26.79 | SB | 0.40 | 1,901 | 19.0 | 26.04 TO 26.39 | NB | 0.40 | 1,848 | 18.5 |
| 26.88 TO 27.04 | SB | 0.40 | 845 | 8.5 | 26.40 TO 26.79 | NB | 0.40 | 2,059 | 20.6 |
| 27.09 TO 27.43 | SB | 0.40 | 1,795 | 18.0 | 26.86 TO 27.06 | NB | 0.40 | 1,056 | 10.6 |
| 27.43 TO 27.46 | SB | 0.40 | 158 | 1.6 | 27.11 TO 27.43 | NB | 0.40 | 1,690 | 16.9 |
| 27.82 TO 27.96 | SB | 0.40 | 739 | 7.4 | 27.67 TO 27.97 | NB | 0.40 | 1,584 | 15.8 |
| 28.09 TO 28.37 | SB | 0.40 | 1,478 | 14.8 | 28.09 TO 28.46 | NB | 0.40 | 1,954 | 19.5 |
| 28.62 TO 28.72 | SB | 0.40 | 528 | 5.3 | 29.04 TO 29.11 | NB | 0.40 | 370 | 3.7 |
| 28.87 TO 29.05 | SB | 0.40 | 950 | 9.5 | 29.16 TO 29.69 | NB | 0.40 | 2,798 | 28.0 |
| 29.07 TO 29.19 | SB | 0.40 | 634 | 6.3 | 29.72 TO 30.06 | NB | 0.40 | 1,795 | 18.0 |
| 29.22 TO 30.06 | SB | 0.40 | 4,435 | 44.4 | 30.07 TO 30.43 | NB | 0.40 | 1,901 | 19.0 |
| 30.08 TO 30.43 | SB | 0.40 | 1,848 | 18.5 | 30.46 TO 30.62 | NB | 0.40 | 845 | 8.4 |
| 30.44 TO 31.11 | SB | 0.40 | 3,538 | 35.4 | 30.63 TO 31.42 | NB | 0.40 | 4,171 | 41.7 |
| 31.13 TO 31.20 | SB | 0.40 | 370 | 3.7 | 31.80 TO 35.15 | NB | 0.40 | 17,688 | 176.9 |
| 31.80 TO 32.30 | SB | 0.40 | 2,640 | 26.4 | 35.29 TO 35.39 | NB | 0.40 | 528 | 5.3 |
| 32.40 TO 32.71 | SB | 0.40 | 1,637 | 16.4 | 35.52 TO 35.63 | NB | 0.40 | 581 | 5.8 |
| 32.90 TO 33.87 | SB | 0.40 | 5,112 | 51.2 | 35.65 TO 36.24 | NB | 0.40 | 3,115 | 31.2 |
| 33.92 TO 34.14 | SB | 0.40 | 1,162 | 11.6 | 36.36 TO 36.41 | NB | 0.40 | 264 | 2.6 |
| 34.26 TO 35.19 | SB | 0.40 | 4,910 | 49.1 | | | | | |
| 35.40 TO 35.94 | SB | 0.40 | 2,851 | 28.5 | | | | | |
| 36.08 TO 36.24 | SB | 0.40 | 845 | 8.5 | | | NB SUB-TOTAL | | 538.6 |
| 36.36 TO 37.45 | SB | 0.40 | 5,755 | 57.6 | | | SB SUB-TOTAL | | 561.2 |
| SB SUB-TOTAL | | | | 561.2 | | | TOTAL | | 1,099.8 # |

# QUANTITY TRANSFERRED TO HMA QUANTITIES TABLE, SHEET Q-2.
(N) NOT A SEPARATE PAY ITEM, FOR INFORMATION ONLY.

# SUMMARY OF QUANTITIES
# Q-5

STATE OF CALIFORNIA - DEPARTMENT OF TRANSPORTATION
Caltrans
06-DESIGN

FUNCTIONAL SUPERVISOR: GETACHEW ESHETE
CALCULATED-DESIGNED BY: AKM RAHMAN
CHECKED BY: SAUL AGUILAR
REVISED BY
DATE REVISED

LAST REVISION 05-27-14 | DATE PLOTTED => 11-AUG-2014 | TIME PLOTTED => 16:28

## M

| | |
|---|---|
| Maint | MAINTENANCE |
| Max | MAXIMUM |
| MB | METAL BEAM |
| MBB | METAL BEAM BARRIER |
| MBGR | METAL BEAM GUARD RAILING |
| Med | MEDIAN |
| MGS | MIDWEST GUARDRAIL SYSTEM |
| MH | MANHOLE |
| Min | MINIMUM |
| Misc | MISCELLANEOUS |
| Misc I & S | MISCELLANEOUS IRON AND STEEL |
| Mkr | MARKER |
| Mod | MODIFIED, |
| | MODIFY |
| Mon | MONUMENT |
| MP | METAL PLATE |
| MPGR | METAL PLATE GUARD RAILING |
| MR | MOVEMENT RATING |
| MSE | MECHANICALLY STABILIZED EMBANKMENT |
| Mt | MOUNTAIN, MOUNT |
| Mtl | MATERIAL |
| MVP | MAINTENANCE VEHICLE PULLOUT |

## N

| | |
|---|---|
| N | NORTH |
| NB | NORTHBOUND |
| No. | NUMBER (MUST HAVE PERIOD) |
| Nos. | NUMBERS (MUST HAVE PERIOD) |
| NPS | NOMINAL PIPE SIZE |
| NS | NEAR SIDE |
| NSP | NEW STANDARD PLAN |
| NTS | NOT TO SCALE |

## O

| | |
|---|---|
| Oblr | OBLITERATE |
| OC | OVERCROSSING |
| OD | OUTSIDE DIAMETER |
| OF | OUTSIDE FACE |
| OG | ORIGINAL GROUND |
| OGAC | OPEN GRADED ASPHALT CONCRETE |
| OGFC | OPEN GRADED FRICTION COURSE |
| OH | OVERHEAD |
| OHWM | ORDINARY HIGH WATER MARK |
| O-O | OUT TO OUT |
| Opp | OPPOSITE |
| OSD | OVERSIDE DRAIN |

## P

| | |
|---|---|
| P | PAGE |
| PAP | PERFORATED ALUMINUM PIPE |
| PB | PULL BOX |
| PC | POINT OF CURVATURE, |
| | PRECAST |
| PCC | POINT OF COMPOUND CURVE, |
| | PORTLAND CEMENT CONCRETE |
| PCMS | PORTABLE CHANGEABLE MESSAGE SIGN |
| PCP | PERFORATED CONCRETE PIPE, |
| | PRESTRESSED CONCRETE PIPE |
| PCVC | POINT OF COMPOUND VERTICAL CURVE |
| PEC | PERMIT TO ENTER AND CONSTRUCT |
| Ped | PEDESTRIAN |
| Ped OC | PEDESTRIAN OVERCROSSING |
| Ped UC | PEDESTRIAN UNDERCROSSING |
| Perm Mtl | PERMEABLE MATERIAL |

## P continued

| | |
|---|---|
| PG | PROFILE GRADE |
| PI | POINT OF INTERSECTION |
| PJP | PARTIAL JOINT PENETRATION |
| Pkwy | PARKWAY |
| ℙL,PL | PLATE |
| P/L | PROPERTY LINE |
| PM | POST MILE, |
| | TIME FROM NOON TO MIDNIGHT |
| PN | PAVING NOTCH |
| POC | POINT OF HORIZONTAL CURVE |
| POT | POINT OF TANGENT |
| POVC | POINT OF VERTICAL CURVE |
| PP | PIPE PILE, |
| | PLASTIC PIPE, |
| | POWER POLE |
| PPL | PREFORMED PERMEABLE LINER |
| PPP | PERFORATED PLASTIC PIPE |
| PRC | POINT OF REVERSE CURVE |
| PRF | PAVEMENT REINFORCING FABRIC |
| PRVC | POINT OF REVERSE VERTICAL CURVE |
| PS&E | PLANS, SPECIFICATIONS AND ESTIMATES |
| PS, P/S | PRESTRESSED |
| PSP | PERFORATED STEEL PIPE |
| PT | POINT OF TANGENCY |
| PVC | POLYVINYL CHLORIDE |
| Pvmt | PAVEMENT |

## Q

| | |
|---|---|
| Qty | QUANTITY |

## R

| | |
|---|---|
| R | RADIUS |
| R & D | REMOVE AND DISPOSE |
| R & S | REMOVE AND SALVAGE |
| R/C | RATE OF CHANGE |
| RCA | REINFORCED CONCRETE ARCH |
| RCB | REINFORCED CONCRETE BOX |
| RCP | REINFORCED CONCRETE PIPE |
| RCPA | REINFORCED CONCRETE PIPE ARCH |
| Rd | ROAD |
| Reinf | REINFORCED, |
| | REINFORCEMENT, |
| | REINFORCING |
| Rel | RELOCATE |
| Repl | REPLACEMENT |
| Ret | RETAINING |
| Rev | REVISED, REVISION |
| Rdwy | ROADWAY |
| RHMA | RUBBERIZED HOT MIX ASPHALT |
| Riv | RIVER |
| RM | ROAD-MIXED |
| RP | RADIUS POINT, |
| | REFERENCE POINT |
| RR | RAILROAD |
| RSP | ROCK SLOPE PROTECTION, |
| | REVISED STANDARD PLAN |
| Rt | RIGHT |
| Rte | ROUTE |
| RW | REDWOOD, |
| | RETAINING WALL |
| R/W | RIGHT OF WAY |
| Rwy | RAILWAY |

## S

| | |
|---|---|
| S | SOUTH, |
| | SUPPLEMENT |
| SAE | STRUCTURE APPROACH EMBANKMENT |
| Salv | SALVAGE |
| SAPP | STRUCTURAL ALUMINUM PLATE PIPE |
| SB | SOUTHBOUND |
| SC | SAND CUSHION |
| SCSP | SLOTTED CORRUGATED STEEL PIPE |
| SD | STORM DRAIN |
| Sec | SECOND, |
| | SECTION |
| Sep | SEPARATION |
| SG | SUBGRADE |
| Shld | SHOULDER |
| Sht | SHEET |
| Sim | SIMILAR |
| ℄ | STATION LINE |
| SM | SELECTED MATERIAL |
| Spec | SPECIAL, |
| | SPECIFICATIONS |
| SPP | SLOTTED PLASTIC PIPE |
| SS | SLOPE STAKE |
| SSBM | STRAP AND SADDLE BRACKET METHOD |
| SSD | STRUCTURAL SECTION DRAIN |
| SSPA | STRUCTURAL STEEL PLATE ARCH |
| SSPP | STRUCTURAL STEEL PLATE PIPE |
| SSPPA | STRUCTURAL STEEL PLATE PIPE ARCH |
| SSRP | STEEL SPIRAL RIB PIPE |
| St | STREET |
| Sta | STATION |
| STBB | SINGLE THRIE BEAM BARRIER |
| Std | STANDARD |
| Str | STRUCTURE |
| Surf | SURFACING |
| SW | SIDEWALK, |
| | SOUND WALL |
| Swr | SEWER |
| Sym | SYMMETRICAL |
| S4S | SURFACE 4 SIDES |

## T

| | |
|---|---|
| T | SEMI-TANGENT |
| Tan | TANGENT |
| TBB | THRIE BEAM BARRIER |
| Tbr | TIMBER |
| TC | TOP OF CURB |
| TCB | TRAFFIC CONTROL BOX |
| TCE | TEMPORARY CONSTRUCTION EASEMENT |
| Tel | TELEPHONE |
| Temp | TEMPORARY |
| TG | TOP OF GRADE |
| Tot | TOTAL |
| TP | TELEPHONE POLE |
| TPB | TREATED PERMEABLE BASE |
| TPM | TREATED PERMEABLE MATERIAL |
| Trans | TRANSITION |

## T continued

| | |
|---|---|
| TS | TRANSVERSE, |
| | TRAFFIC SIGNAL, |
| | TUBULAR STEEL |
| Typ | TYPICAL |

## U

| | |
|---|---|
| UC | UNDERCROSSING |
| UD | UNDERDRAIN |
| UG | UNDERGROUND |
| UON | UNLESS OTHERWISE NOTED |
| UP | UNDERPASS |

## V

| | |
|---|---|
| V | VALVE, |
| | DESIGN SPEED |
| Var | VARIABLE, |
| | VARIES |
| VC | VERTICAL CURVE |
| VCP | VITRIFIED CLAY PIPE |
| Vert | VERTICAL |
| Via | VIADUCT |
| Vol | VOLUME |

## W

| | |
|---|---|
| W | WEST, |
| | WIDTH |
| WB | WESTBOUND |
| WH | WEEP HOLE |
| WM | WIRE MESH |
| WS | WATER SURFACE |
| WSP | WELDED STEEL PIPE |
| Wt | WEIGHT |
| WV | WATER VALVE |
| WW | WINGWALL |
| WWLOL | WINGWALL LAYOUT LINE |

## X

| | |
|---|---|
| X Sec | CROSS SECTION |
| Xing | CROSSING |

## Y

| | |
|---|---|
| Yr | YEAR |
| Yrs | YEARS |

| Dist | COUNTY | ROUTE | POST MILES TOTAL PROJECT | SHEET No. | TOTAL SHEETS |
|---|---|---|---|---|---|
| 05 | SCr | 1 | 20.2/37.4 | 26 | 39 |

Grace M. Tsushima
REGISTERED CIVIL ENGINEER

July 19, 2013
PLANS APPROVAL DATE

REGISTERED PROFESSIONAL ENGINEER
Grace M. Tsushima
No. C49814
Exp. 9-30-14
CIVIL
STATE OF CALIFORNIA

THE STATE OF CALIFORNIA OR ITS OFFICERS OR AGENTS SHALL NOT BE RESPONSIBLE FOR THE ACCURACY OR COMPLETENESS OF SCANNED COPIES OF THIS PLAN SHEET.

TO ACCOMPANY PLANS DATED 5-27-14

### UNIT OF MEASUREMENT SYMBOLS:

Some of the symbols used in the project plan quantity tables and in the Bid Item List are:

TABLE A

| SYMBOL USED | DEFINITIONS |
|---|---|
| ACRE | ACRE |
| CF | CUBIC FOOT |
| CY | CUBIC YARD |
| EA | EACH |
| GAL | GALLON |
| LB | POUND |
| LF | LINEAR FOOT |
| SQFT | SQUARE FOOT |
| SQYD | SQUARE YARD |
| STA | 100 FEET |
| TAB | TABLET |
| TON | 2,000 POUNDS |

Some of the symbols used in the plans other than in the project plan quantity tables are:

TABLE B

| SYMBOL USED | DEFINITIONS |
|---|---|
| ksi | KIPS PER SQUARE INCH |
| ksf | KIPS PER SQUARE FOOT |
| psi | POUNDS PER SQUARE INCH |
| psf | POUNDS PER SQUARE FOOT |
| $lb/ft^3$, pcf | POUNDS PER CUBIC FOOT |
| tsf | TONS PER SQUARE FOOT |
| mph, MPH * | MILES PER HOUR |
| ø | NOMINAL DIAMETER |
| oz | OUNCE |
| lb | POUND |
| kip | 1,000 POUNDS |
| cal | CALORIE |
| ft | FOOT OR FEET |
| gal | GALLON |

* For use on a sign panel only

STATE OF CALIFORNIA
DEPARTMENT OF TRANSPORTATION

# ABBREVIATIONS (SHEET 2 OF 2)

NO SCALE

RSP A10B DATED JULY 19, 2013 SUPERSEDES STANDARD PLAN A10B DATED MAY 20, 2011 - PAGE 2 OF THE STANDARD PLANS BOOK DATED 2010.

**REVISED STANDARD PLAN RSP A10B**

**2010 REVISED STANDARD PLAN RSP A10B**

6-7-13

| Dist | COUNTY | ROUTE | POST MILES TOTAL PROJECT | SHEET No. | TOTAL SHEETS |
|---|---|---|---|---|---|
| 05 | SCr | 1 | 20.2/37.4 | 27 | 39 |

REGISTERED CIVIL ENGINEER

April 20, 2012
PLANS APPROVAL DATE

REGISTERED PROFESSIONAL ENGINEER
Roberta L. McLaughlin
No. C40375
Exp. 3-31-13
CIVIL
STATE OF CALIFORNIA

*THE STATE OF CALIFORNIA OR ITS OFFICERS OR AGENTS SHALL NOT BE RESPONSIBLE FOR THE ACCURACY OR COMPLETENESS OF SCANNED COPIES OF THIS PLAN SHEET.*

TO ACCOMPANY PLANS DATED 5-27-14

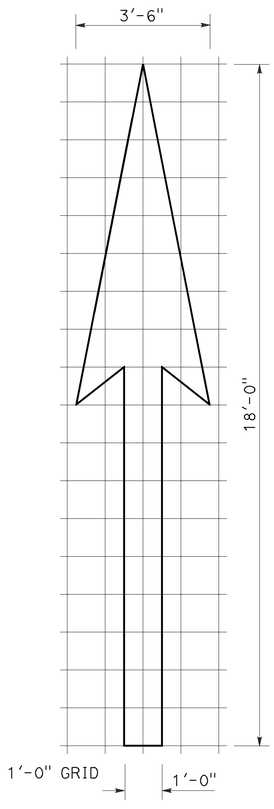


A=25 ft$^2$

TYPE I 18'-0" ARROW

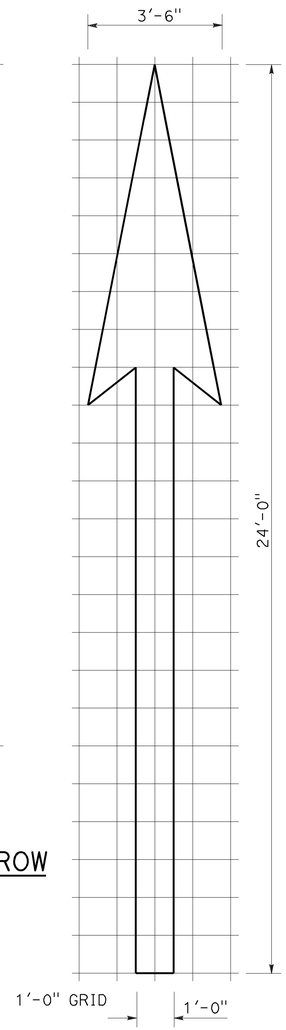


A=31 ft$^2$

TYPE I 24'-0" ARROW

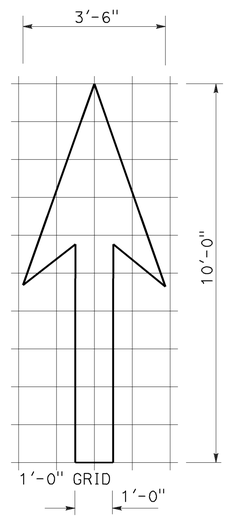


A=14 ft$^2$

TYPE I 10'-0" ARROW

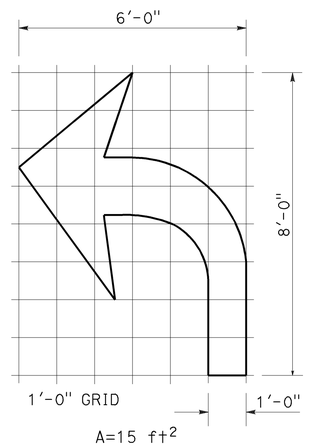


A=15 ft$^2$

TYPE IV (L) ARROW

(For Type IV (R) arrow, use mirror image)

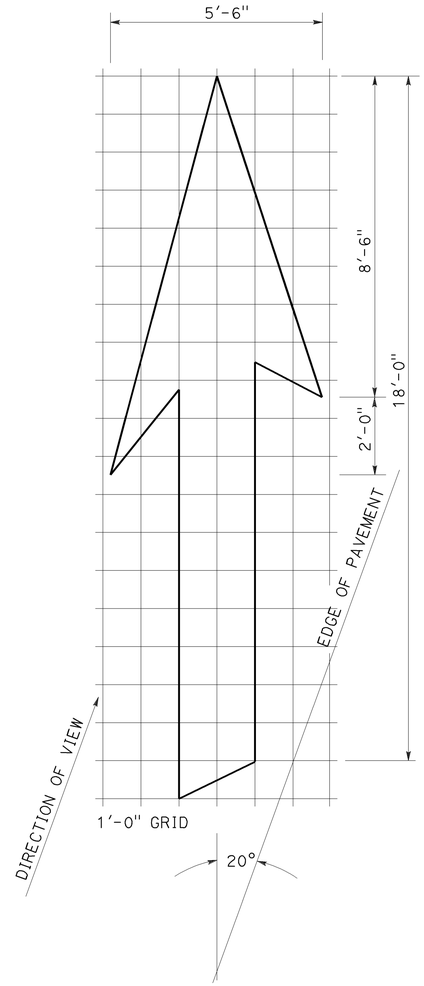


A=42 ft$^2$

TYPE VI ARROW

Right lane drop arrow
(For left lane, use mirror image)

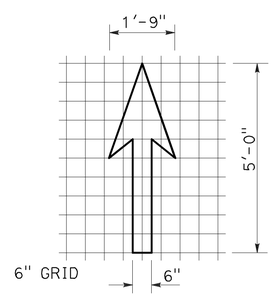


A=3.5 ft$^2$

BIKE LANE ARROW

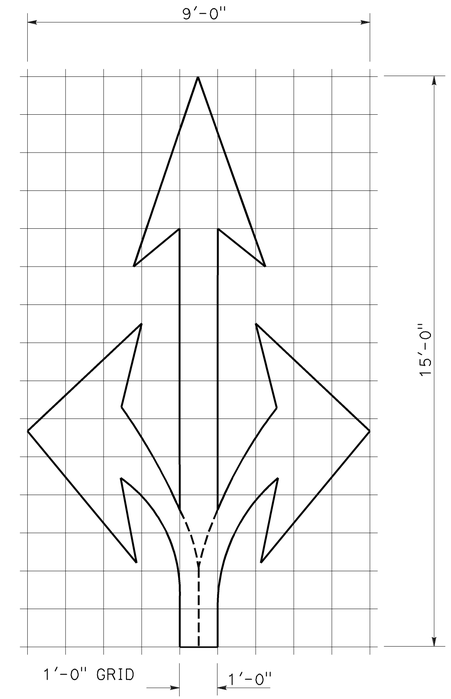


A=36 ft$^2$

TYPE VIII ARROW

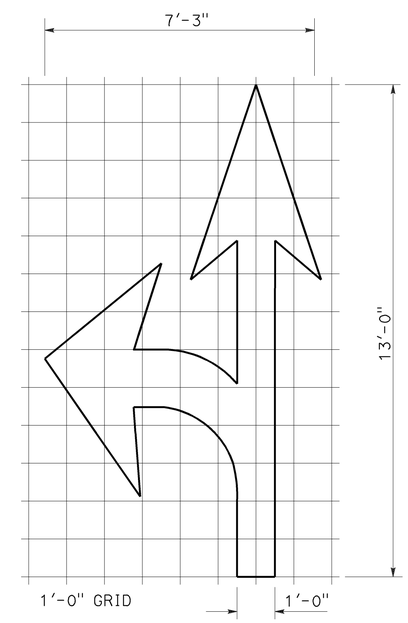


A=27 ft$^2$

TYPE VII (L) ARROW

(For Type VII (R) arrow, use mirror image)

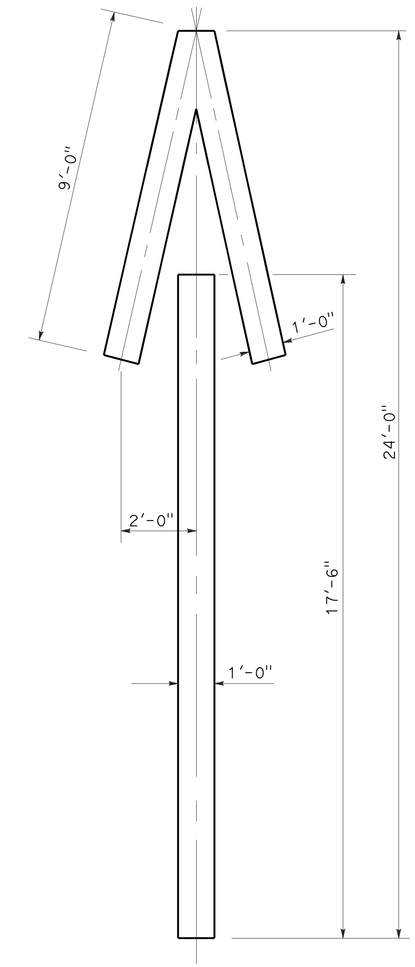


A=33 ft$^2$

TYPE V ARROW

NOTE:
Minor variations in dimensions may be accepted by the Engineer.

STATE OF CALIFORNIA
DEPARTMENT OF TRANSPORTATION

# PAVEMENT MARKINGS ARROWS

NO SCALE

RSP A24A DATED APRIL 20, 2012 SUPERSEDES STANDARD PLAN A24A DATED MAY 20, 2011 - PAGE 13 OF THE STANDARD PLANS BOOK DATED 2010.

**REVISED STANDARD PLAN RSP A24A**

**2010 REVISED STANDARD PLAN RSP A24A**

3-14-12

| Dist | COUNTY | ROUTE | POST MILES TOTAL PROJECT | SHEET No. | TOTAL SHEETS |
|---|---|---|---|---|---|
| 05 | SCr | 1 | 20.2/37.4 | 28 | 39 |

REGISTERED CIVIL ENGINEER

July 20, 2012
PLANS APPROVAL DATE

REGISTERED PROFESSIONAL ENGINEER
Roberta L. McLaughlin
No. C40375
Exp. 3-31-13
CIVIL
STATE OF CALIFORNIA

*THE STATE OF CALIFORNIA OR ITS OFFICERS OR AGENTS SHALL NOT BE RESPONSIBLE FOR THE ACCURACY OR COMPLETENESS OF SCANNED COPIES OF THIS PLAN SHEET.*

TO ACCOMPANY PLANS DATED 5-27-14

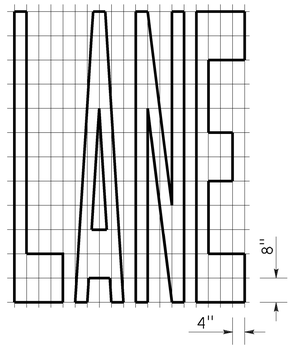


A=24 ft²

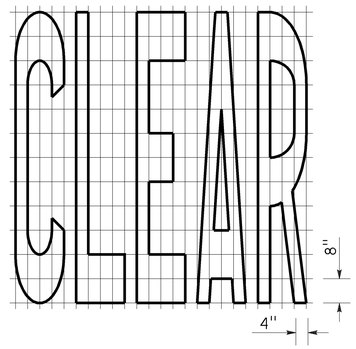


A=27 ft²

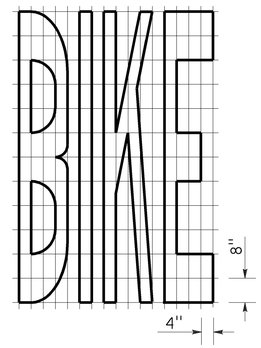


A=21 ft²

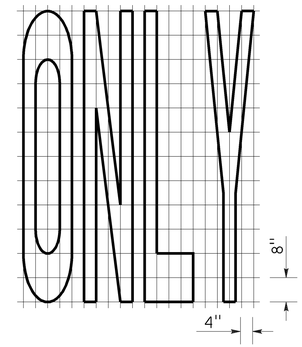


A=22 ft²

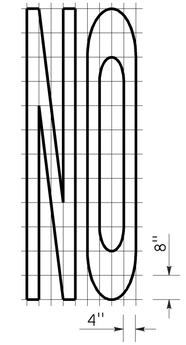


A=14 ft²

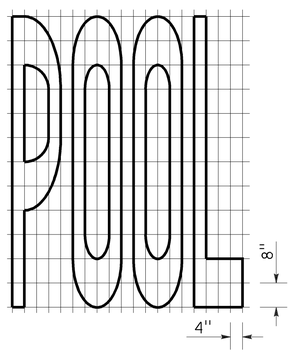


A=23 ft²

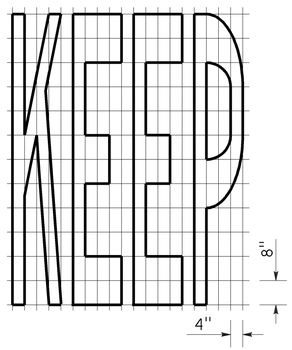


A=24 ft²

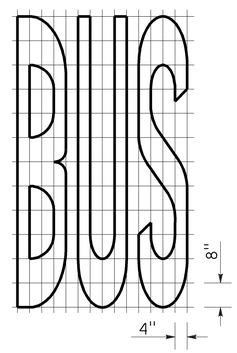


A=20 ft²

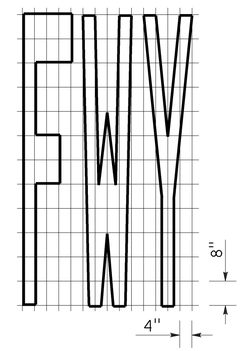


A=16 ft²

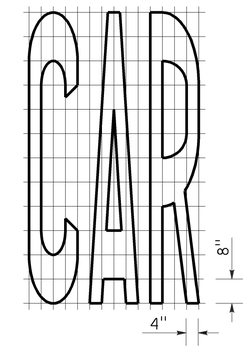


A=17 ft²

| WORD MARKINGS | | | |
|---|---|---|---|
| ITEM | ft² | ITEM | ft² |
| LANE | 24 | NO | 14 |
| POOL | 23 | BIKE | 21 |
| CAR | 17 | BUS | 20 |
| CLEAR | 27 | ONLY | 22 |
| KEEP | 24 | FWY | 16 |

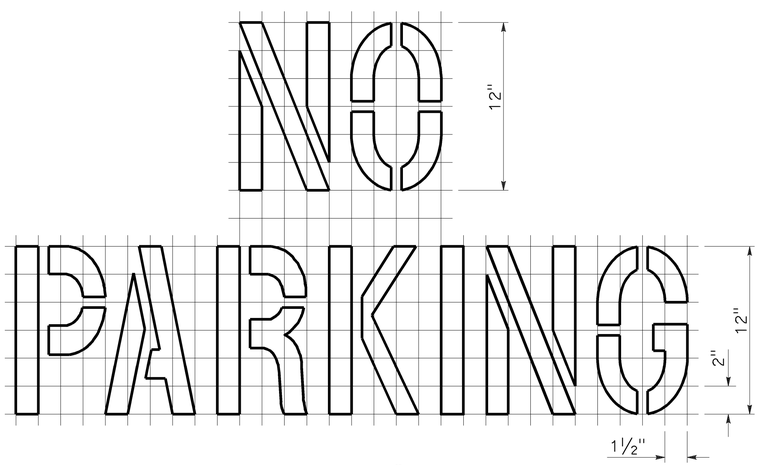


A=2 ft²
See Notes 6 and 7

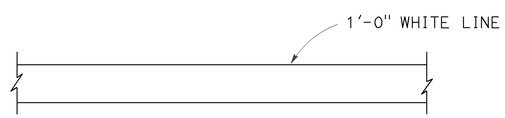


LIMIT LINE (STOP LINE)

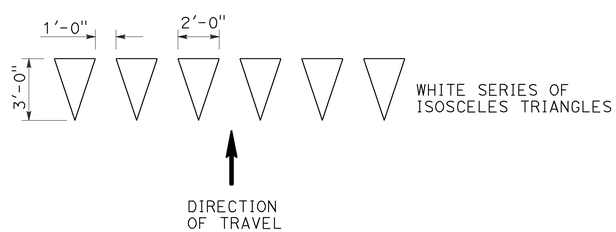


YIELD LINE

NOTES:

1. If a message consists of more than one word, it should read "UP", i.e., the first word should be nearest the driver.
2. The space between words should be at least four times the height of the characters for low speed roads, but not more than ten times the height of the characters. The space may be reduced appropriately where there is limited space because of local conditions.
3. Minor variations in dimensions may be accepted by the Engineer.
4. Portions of a letter, number or symbol may be separated by connecting segments not to exceed 2" in width.
5. The words "NO PARKING" pavement marking is to be used for parking facilities. For typical locations of markings, see Standard Plans A90A and A90B.
6. The words "NO PARKING", shall be painted in white letters no less than 1'-0" high on a contrasting background and located so that it is visible to traffic enforcement officials.

STATE OF CALIFORNIA
DEPARTMENT OF TRANSPORTATION

# PAVEMENT MARKINGS WORDS, LIMIT AND YIELD LINES

NO SCALE

RSP A24E DATED JULY 20, 2012 SUPERSEDES STANDARD PLAN A24E
DATED MAY 20, 2011 - PAGE 17 OF THE STANDARD PLANS BOOK DATED 2010.

**REVISED STANDARD PLAN RSP A24E**

**2010 REVISED STANDARD PLAN RSP A24E**

6-12-12

| Dist | COUNTY | ROUTE | POST MILES TOTAL PROJECT | SHEET No. | TOTAL SHEETS |
|---|---|---|---|---|---|
| 05 | SCr | 1 | 20.2/37.4 | 29 | 39 |

Randell D. Hiatt
REGISTERED CIVIL ENGINEER

July 19, 2013
PLANS APPROVAL DATE

REGISTERED PROFESSIONAL ENGINEER
Randell D. Hiatt
No. C50200
Exp. 6-30-15
CIVIL
STATE OF CALIFORNIA

*THE STATE OF CALIFORNIA OR ITS OFFICERS OR AGENTS SHALL NOT BE RESPONSIBLE FOR THE ACCURACY OR COMPLETENESS OF SCANNED COPIES OF THIS PLAN SHEET.*

TO ACCOMPANY PLANS DATED 5-27-14

**2010 REVISED STANDARD PLAN RSP A77L3**

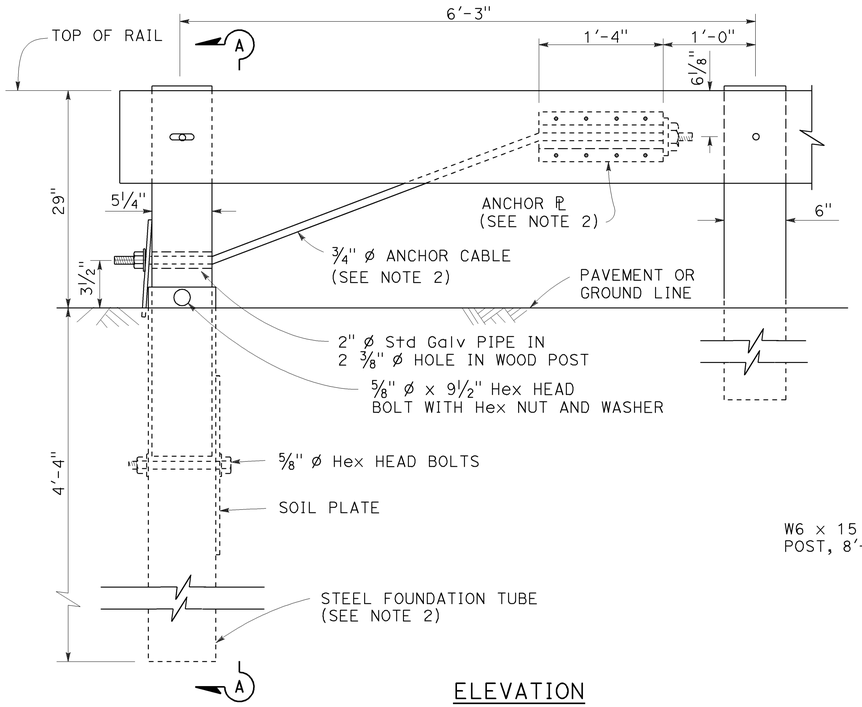


ELEVATION
END ANCHOR
ASSEMBLY (TYPE SFT)

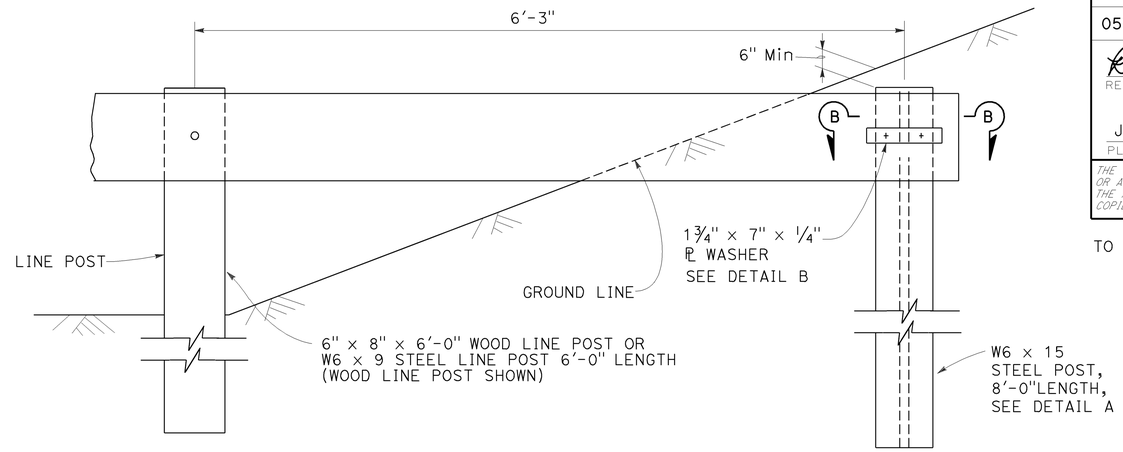


BURIED POST END ANCHOR

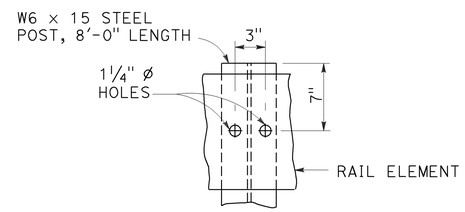


DETAIL A

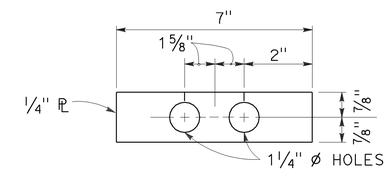


DETAIL B

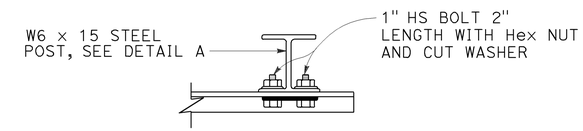


SECTION B-B

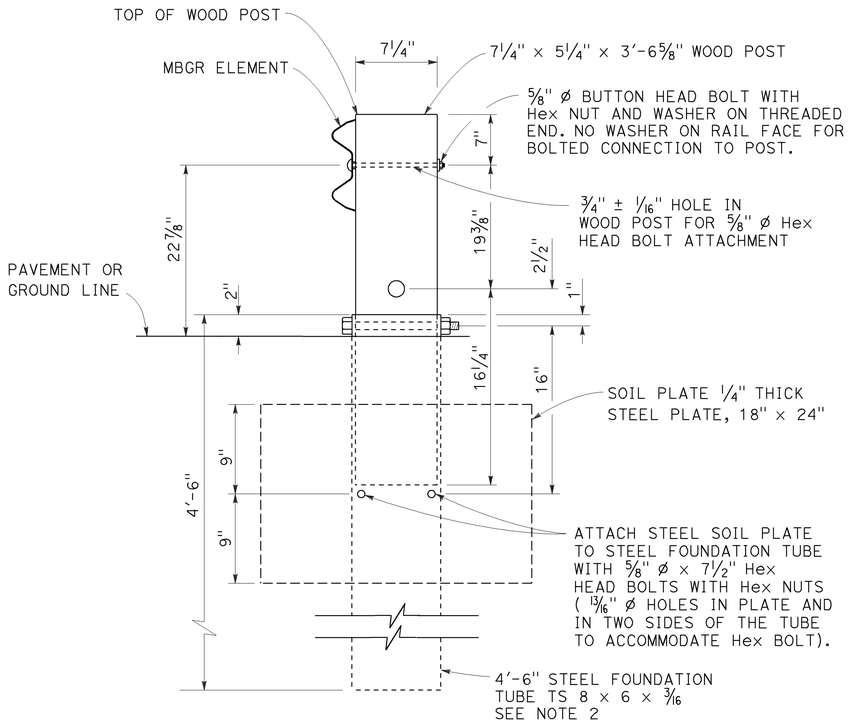


SECTION A-A

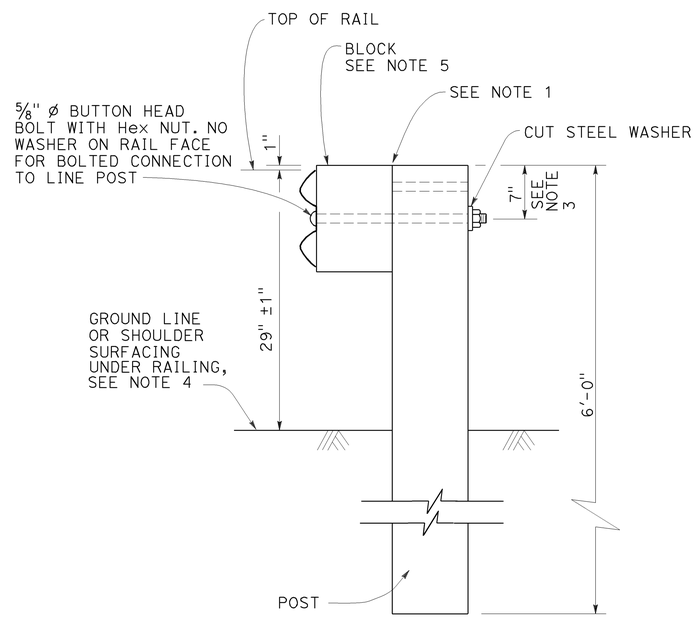


TYPICAL LINE
POST INSTALLATION

NOTES:

1. For wood post and wood block, toenail with 2-16d Galv nails in top of block. For steel post and notched wood or plastic block, notched face of block faces steel post.
2. A 6'-0" Length steel foundation tube, TS 8 x 6 x 3/16, without a soil plate, may be furnished and installed in place of the 4'-6" length steel foundation tube and soil plate shown, Minimum embadment of the 6'-0" length tube shall be 5'-9". A 5/8" ø Hex head bolt and nut shall be installed in the hole in the 6'-0" length tube to keep the wood post from dropping into the tube.
3. To connect railing to 27" terminal system end treatment, transition the top of railing height at a ratio of 120:1 to terminal system end treatment height plus one 12'-6" standard railing section at the transitioned height for a horizontal connection to the end treatment.
4. Install posts in soil.
5. See Revised Standard Plans RSP A77N1 and RSP A77N2 for details.
6. Holes excavation in the slope to construct the buried post end anchor shall be backfilled with selected earth, placed in layers approximately 1'-0" thick. Each layer shall be moistened and thoroughly compacted.

STATE OF CALIFORNIA
DEPARTMENT OF TRANSPORTATION

# METAL BEAM GUARD RAILING RECONSTRUCT INSTALLATION

NO SCALE

RSP A77L3 DATED JULY 19, 2013 SUPPLEMENTS THE STANDARD PLANS BOOK DATED 2010.

**REVISED STANDARD PLAN RSP A77L3**

| Dist | COUNTY | ROUTE | POST MILES TOTAL PROJECT | SHEET No. | TOTAL SHEETS |
|---|---|---|---|---|---|
| 05 | SCr | 1 | 20.2/37.4 | 30 | 39 |

Randell D. Hiatt
REGISTERED CIVIL ENGINEER

July 19, 2013
PLANS APPROVAL DATE

REGISTERED PROFESSIONAL ENGINEER
Randell D. Hiatt
No. C50200
Exp. 6-30-15
CIVIL
STATE OF CALIFORNIA

*THE STATE OF CALIFORNIA OR ITS OFFICERS OR AGENTS SHALL NOT BE RESPONSIBLE FOR THE ACCURACY OR COMPLETENESS OF SCANNED COPIES OF THIS PLAN SHEET.*

TO ACCOMPANY PLANS DATED 5-27-14

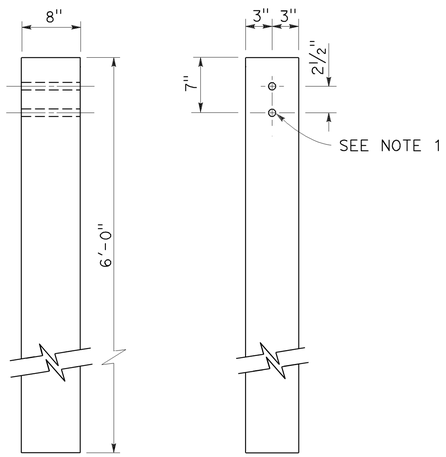


SIDE FRONT

6" x 8" WOOD POST
See Note 3

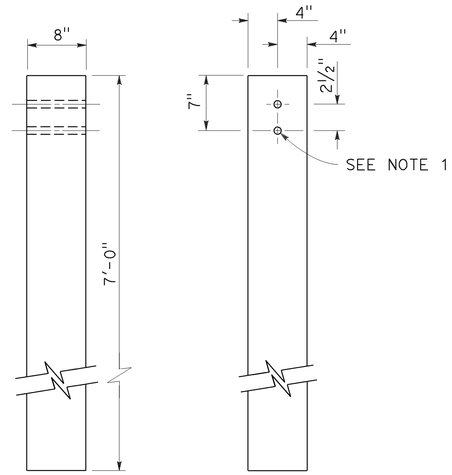


SIDE FRONT

8" x 8" WOOD POST
See Note 4

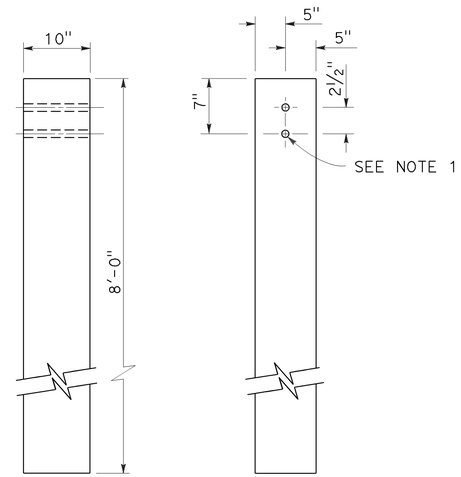


SIDE FRONT

10" x 10" WOOD POST
See Note 5

## NOTES:

1. All holes in wood posts and blocks shall be ¾" Dia ± 1/16".
2. Dimensions shown for wood post are nominal.
3. This post and block combination used for standard line post sections of MGS.
4. This post and 8" x 12" block combination used for line post sections of MGS on narrow roadways.
5. This post and 8" x 12" block combination is typically used where strengthened line post sections of MGS are warranted to shield fixed objects.
6. See Revised Standard Plan RSP A77L3 for use of 6" x 8" and 8" x 8" wood blocks.

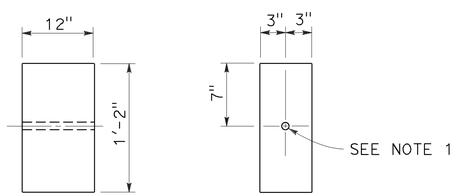


SIDE FRONT

6" x 12" WOOD BLOCK
See Note 3

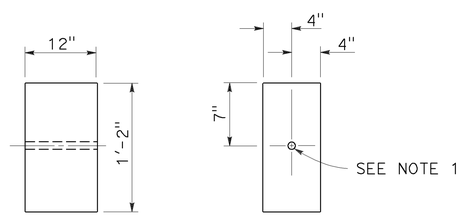


SIDE FRONT

8" x 12" WOOD BLOCK

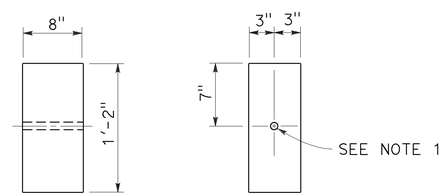


SIDE FRONT

6" x 8" WOOD BLOCK
Only for use with metal beam guard rail see Note 6

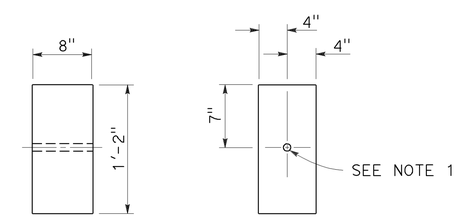


SIDE FRONT

8" x 8" WOOD BLOCK
Only for use with metal beam guard rail see Note 6

STATE OF CALIFORNIA
DEPARTMENT OF TRANSPORTATION

# MIDWEST GUARDRAIL SYSTEM WOOD POST AND WOOD BLOCK DETAILS

NO SCALE

RSP A77N1 DATED JULY 19, 2013 SUPPLEMENTS THE STANDARD PLANS BOOK DATED 2010.

**REVISED STANDARD PLAN RSP A77N1**

**2010 REVISED STANDARD PLAN RSP A77N1**

7-3-13

| Dist | COUNTY | ROUTE | POST MILES TOTAL PROJECT | SHEET No. | TOTAL SHEETS |
|---|---|---|---|---|---|
| 05 | SCr | 1 | 20.2/37.4 | 31 | 39 |

Randell D. Hiatt
REGISTERED CIVIL ENGINEER

November 15, 2013
PLANS APPROVAL DATE

REGISTERED PROFESSIONAL ENGINEER
Randell D. Hiatt
No. C50200
Exp. 6-30-15
CIVIL
STATE OF CALIFORNIA

THE STATE OF CALIFORNIA OR ITS OFFICERS OR AGENTS SHALL NOT BE RESPONSIBLE FOR THE ACCURACY OR COMPLETENESS OF SCANNED COPIES OF THIS PLAN SHEET.

TO ACCOMPANY PLANS DATED 5-27-14

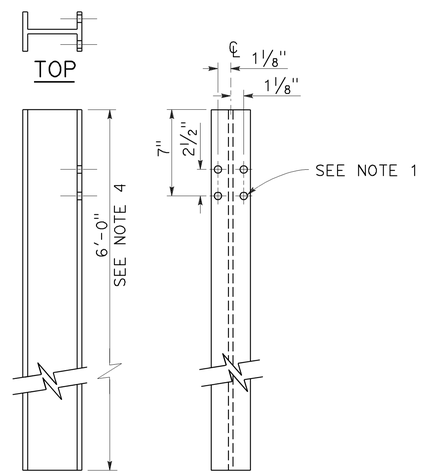


W6 x 9 OR W6 x 8.5
STEEL POST
See Note 4

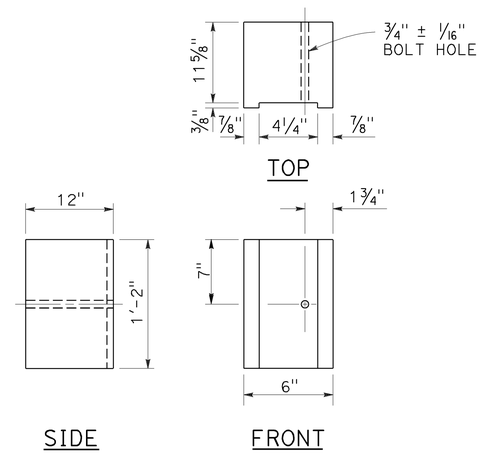


6" x 12"
NOTCHED WOOD BLOCK
See Notes 2 and 3

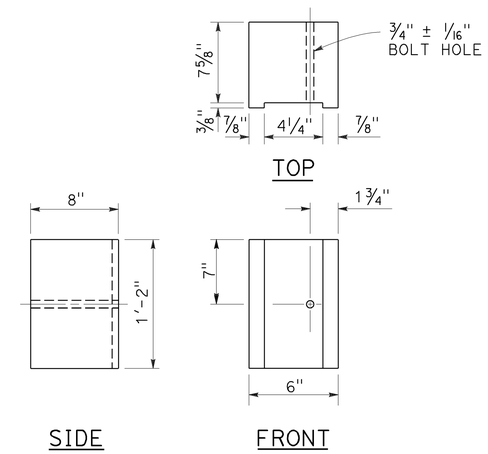


6" x 8"
NOTCHED WOOD BLOCK
Only for use with metal beam guard railing. See Note 5

## NOTES:

1. All holes in steel post shall be 13/16" Dia maximum.
2. Dimensions shown for wood block are nominal.
3. Notched face of block faces steel post.
4. 6'-0" length posts to be used for typical roadway installation. See Revised Standard Plan RSP A77N3.
5. See Revised Standard Plan RSP A77L3 for use of 6" x 8" and 8" x 8" notched wood blocks.
6. This post and 8" x 12" block combination to be used for line post sections of MGS on narrow roadways and where strengthened line post sections of MGS are warranted to shield fixed objects.

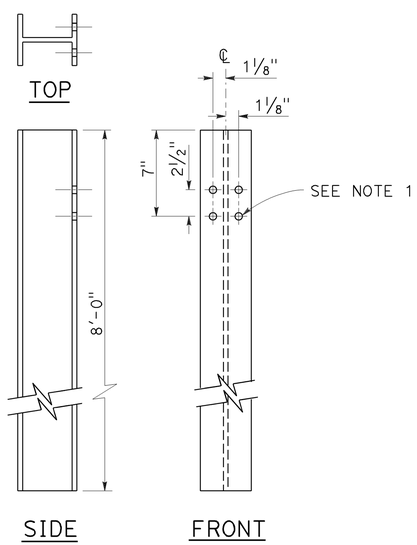


W6 x 15
STEEL POST
See Note 6

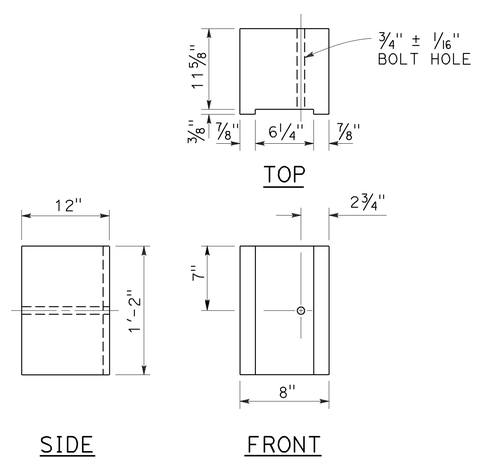


8" x 12"
NOTCHED WOOD BLOCK
See Notes 2 and 3

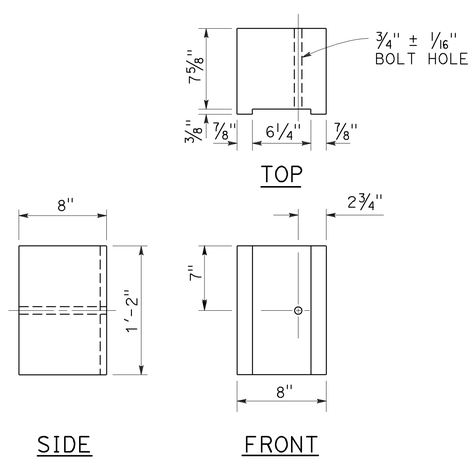


8" x 8"
NOTCHED WOOD BLOCK
Only for use with metal beam guard railing. See Note 5

STATE OF CALIFORNIA
DEPARTMENT OF TRANSPORTATION

# MIDWEST GUARDRAIL SYSTEM STEEL POST AND NOTCHED WOOD BLOCK DETAILS

NO SCALE

RSP A77N2 DATED NOVEMBER 15, 2013 SUPERSEDES RSP A77N2
DATED JULY 19, 2013 THAT SUPPLEMENTS THE STANDARD PLANS BOOK DATED 2010.

**REVISED STANDARD PLAN RSP A77N2**

**2010 REVISED STANDARD PLAN RSP A77N2**

10-29-13

TO ACCOMPANY PLANS DATED 5-27-14

| Dist | COUNTY | ROUTE | POST MILES TOTAL PROJECT | SHEET No. | TOTAL SHEETS |
|---|---|---|---|---|---|
| 05 | SCr | 1 | 20.2/37.4 | 32 | 39 |

REGISTERED CIVIL ENGINEER

October 19, 2012
PLANS APPROVAL DATE

REGISTERED PROFESSIONAL ENGINEER Glenn DeCou No. C34547 Exp. 9-30-13 CIVIL STATE OF CALIFORNIA

*THE STATE OF CALIFORNIA OR ITS OFFICERS OR AGENTS SHALL NOT BE RESPONSIBLE FOR THE ACCURACY OR COMPLETENESS OF SCANNED COPIES OF THIS PLAN SHEET.*

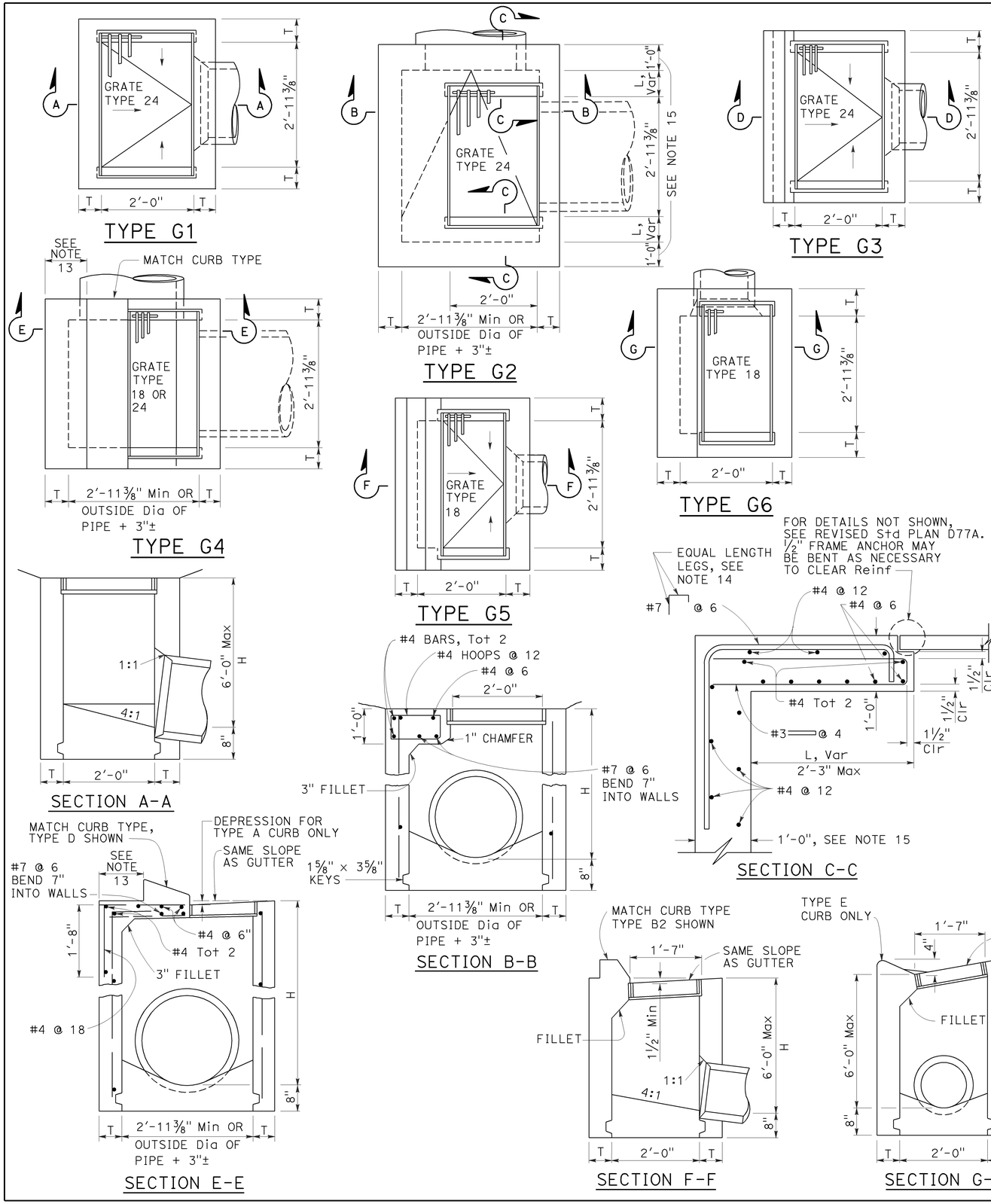


## NOTES:

1. "H" is the difference in elevation between the outlet pipe flow line and the normal gutter grade line undepressed.
2. For "T" wall thickness, see Table A below.
3. Wall reinforcing not required when "H" is 8'-0" or less and the unsupported width or length is 7'-0" or less. Walls exceeding these limits shall be reinforced with #4 bars @ 1'-6" ± centers placed 1½" clear to inside of box unless otherwise shown.
4. Inlet bottom reinforcing not required. See Standard Plan D74C for alternative reinforced bottom and alternative half round bottom.
5. Steps-None required where "H" is less than 2'-6". Where "H" is 2'-6" or more, install steps with lowest rung 1'-0" above the floor and highest rung not more than 6" below top of inlet. The distance between steps shall not exceed 1'-0" and shall be uniform throughout the length of the wall. Place steps in the wall without an opening. Steps inserts may be substituted for the bar steps. Step inserts shall comply with State Industrial Safety requirements. See Standard Plan D74C for step details.
6. Details shown apply to both metal and concrete pipe.
7. Pipe(s) can be placed in any wall.
8. Curb section shall match adjacent curb.
9. Basin floors shall have wood trowel finish and a minimum slope of 12:3 from all directions toward outlet pipe.
10. Set inlet so that grate bars are parallel to direction of principal surface flow.
11. See Revised Standard Plans D77A and D77B for grate and frame details and weights of miscellaneous iron and steel.
12. See Standard Plan D78A for gutter depression details.
13. This dimenison will vary with different grates, curbs types, box width and wall thickness.
14. Bar may be rotated as necessary to clear opening. Where "L" is 6" or less, bar may be omitted.
15. Where "L" is 6" or less, wall thickness shall be as shown in Table A.
16. Cast-in-place inlets to be formed around all pipes/stubs intersecting the inlet, and concrete poured in one continuous operation. Precast inlets shall have mortared connections conforming to details for Type GCP Inlet shown on Standard Plan D75B. See Standard Specifications for mortar composition.

TABLE A

| CONCRETE QUANTITIES | | | | |
|---|---|---|---|---|
| TYPE | H=3'-0" TO 8'-0" (T=6") | | H=8'-1" TO 20'-0" (T=8") | |
| | H=3'-0" (CY) | ADDITIONAL PCC PER FOOT (CY) | H=8'-1" (CY) | ADDITIONAL PCC PER FOOT (CY) |
| G-1 | 0.95 | 0.220 | See Note A | SEE NOTE A |
| G-2* | 1.31 | 0.255 | 3.50 | 0.357 |
| G-3 | 1.03 | 0.220 | See Note A | SEE NOTE A |
| G-4* (TYPE 24) | 1.27 | 0.255 | 3.48 | 0.357 |
| G-4* (TYPE 18) | 1.30 | 0.255 | 3.50 | 0.357 |
| G-5 | 1.02 | 0.220 | SEE NOTE A | SEE NOTE A |
| G-6 | 1.04 | 0.220 | SEE NOTE A | SEE NOTE A |

TABLE BASED ON 8" FLOOR SLAB. NO DEDUCTIONS ARE TO BE MADE TO THESE QUANTITIES BECAUSE OF PIPE OPENINGS, DIFFERENT FLOOR ALTERNATIVES OR DIFFERENT CURB TYPES. * QUANTITIES FOR TYPE G-2 AND G-4 INLETS BASED ON THE MINIMUM INTERIOR DIMENSIONS.

NOTE A:

Maximum allowable height 6'-0".

STATE OF CALIFORNIA
DEPARTMENT OF TRANSPORTATION

# DRAINAGE INLETS

NO SCALE

RSP D73 DATED OCTOBER 19, 2012 SUPERSEDES STANDARD PLAN D73 DATED MAY 20, 2011 - PAGE 156 OF THE STANDARD PLANS BOOK DATED 2010.

**REVISED STANDARD PLAN RSP D73**

**2010 REVISED STANDARD PLAN RSP D73**

7-19-12

| Dist | COUNTY | ROUTE | POST MILES TOTAL PROJECT | SHEET No. | TOTAL SHEETS |
|---|---|---|---|---|---|
| 05 | SCr | 1 | 20.2/37.4 | 33 | 39 |

Raymond Don Tsztoo
REGISTERED CIVIL ENGINEER

April 19, 2013
PLANS APPROVAL DATE

REGISTERED PROFESSIONAL ENGINEER Raymond Don Tsztoo No. C37332 Exp. 6-30-14 CIVIL STATE OF CALIFORNIA

*THE STATE OF CALIFORNIA OR ITS OFFICERS OR AGENTS SHALL NOT BE RESPONSIBLE FOR THE ACCURACY OR COMPLETENESS OF SCANNED COPIES OF THIS PLAN SHEET.*

TO ACCOMPANY PLANS DATED 5-27-14

**2010 REVISED STANDARD PLAN RSP D77B**

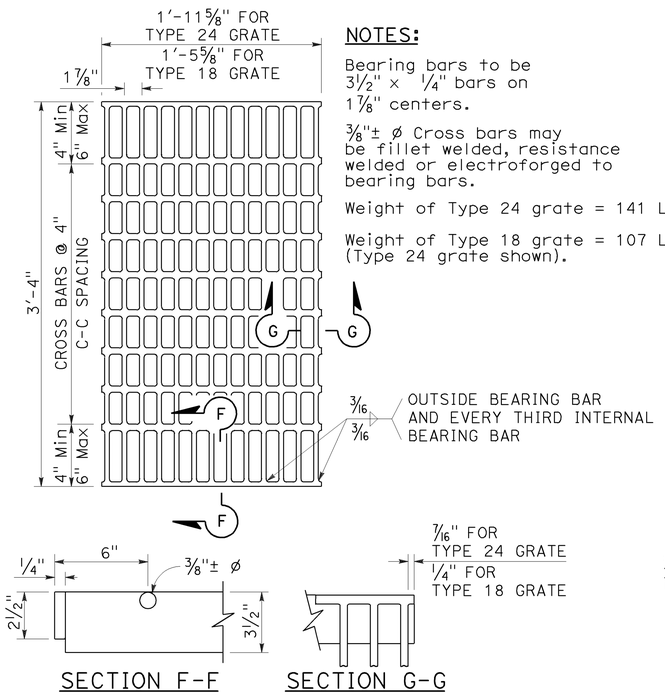


SECTION F-F SECTION G-G

## TYPE 18-10 AND 24-13 GRATE

(Welded Steel)

**NOTES:**

Bearing bars to be 3½" × ¼" bars on 1⅞" centers.

⅜"± ø Cross bars may be fillet welded, resistance welded or electroforged to bearing bars.

Weight of Type 24 grate = 141 LBS.

Weight of Type 18 grate = 107 LBS. (Type 24 grate shown).

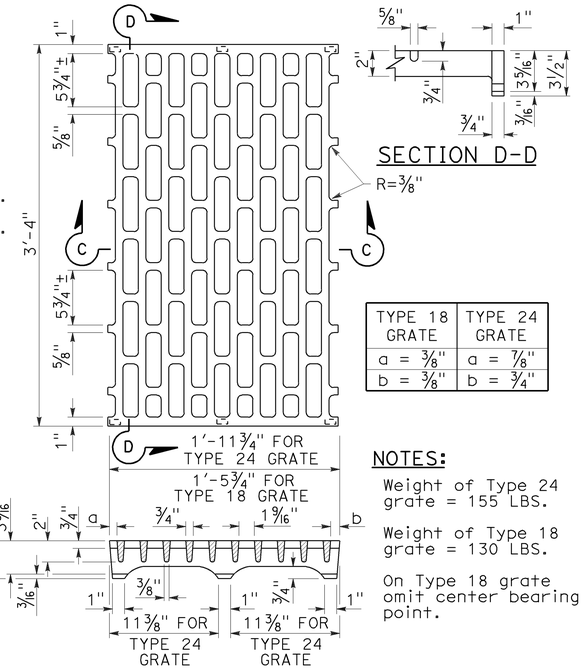


SECTION D-D

| TYPE 18 GRATE | TYPE 24 GRATE |
|---|---|
| a = ⅜" | a = ⅞" |
| b = ⅜" | b = ¾" |

**NOTES:**

Weight of Type 24 grate = 155 LBS.

Weight of Type 18 grate = 130 LBS.

On Type 18 grate omit center bearing point.

SECTION C-C

## TYPE 18-8C AND 24-10C GRATE

(Cast ductile iron)

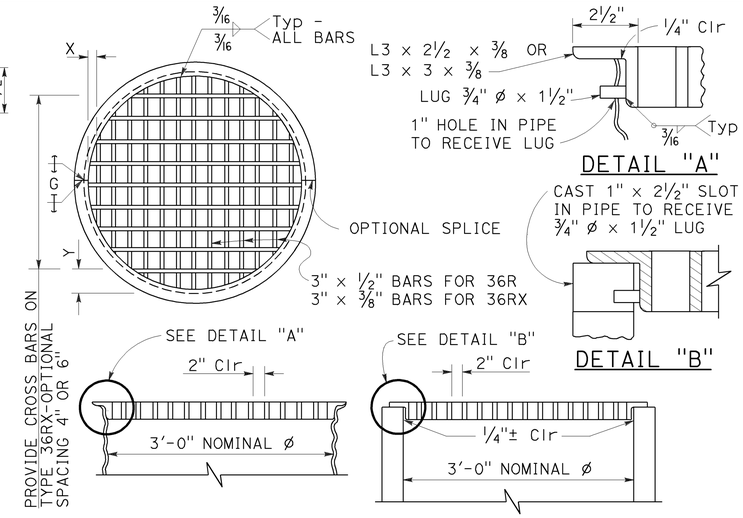


## TYPE 36R AND 36RX GRATE DETAILS

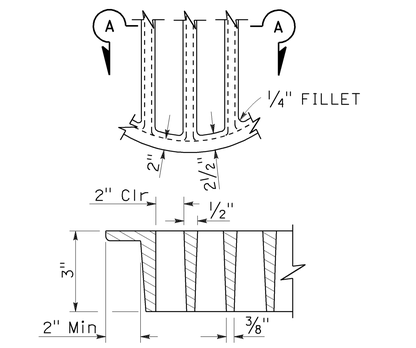


SECTION A-A

## ALTERNATIVE CAST DUCTILE IRON GRATE OR CAST CARBON STEEL GRATE TYPE 36R AND 36RX

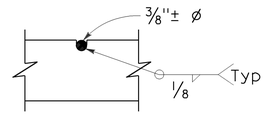


⅜"± ø Cross bars may be fillet welded, resistance welded or electroforged to bearing bars.

## CROSS BAR DETAIL TYPE 36RX GRATE (WELDED STEEL)

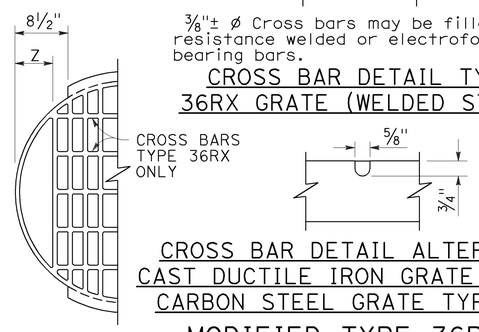


## CROSS BAR DETAIL ALTERNATIVE CAST DUCTILE IRON GRATE OR CAST CARBON STEEL GRATE TYPE 36RX

## MODIFIED TYPE 36R AND 36RX GRATE FOR ODI INLET

**NOTES:**

1. When alternative grates are allowed - Final pay based on alternative with the lesser weight.
2. Use frame shown on Standard Plan D74A, D74B or RSP D77A as appropriate.
3. When Type 24-10S, 24-12X or 24-13 grates are used with GDO Inlets, a ¼" × 3½" × 3'-4⅞" steel bar shall be welded across the center of inlet frame to separate the individual grates.
4. See Revised Standard Plan RSP D77A for connecting chain to welded grate and frame. When chain is required, do not use cast ductile iron grate.

BASIS FOR Misc IRON AND STEEL FINAL PAY WEIGHTS FOR DRAINAGE INLETS

| INLET TYPE | GRATE TYPE | No. OF GRATES | WEIGHT LB |
|---|---|---|---|
| GDO (SEE NOTE 4) | 24-10C | 2 | 391 |
| | 24-10S | 2 | 456 |
| | 24-12X | 2 | 473 |
| | 24-13 | 2 | 374 |
| G0,G0L,G1,G2, G3,G4 (TYPE 24) | 24-10C | 1 | 202 |
| | 24-10S | 1 | 229 |
| | 24-12X | 1 | 239 |
| | 24-13 | 1 | 188 |
| G4 (TYPE 18) G5,G6 | 18-8S | 1 | 187 |
| | 18-9X | 1 | 187 |
| | 18-10 | 1 | 149 |
| GT1,GT2 | 18-8S | 2 | 374 |
| | 18-9X | 2 | 374 |
| | 18-10 | 2 | 298 |
| GT3,GT4 | 24-10C | 2 | 404 |
| | 24-10S | 2 | 458 |
| | 24-12X | 2 | 478 |
| | 24-13 | 2 | 376 |
| ODI | 36RX (Mod) | 1 | 196 |
| GMP,GCP,GCPI | 36RX | 1 | 215 |
| ODI | 36R (Mod) | 1 | 220 |
| GMP,GCP,GCPI | 36R | 1 | 236 |
| TRASH RACK | | | 22 |
| GRATE CHAIN | | | 3 |

GRATE BAR SPACING TABLE

| TYPE | No. OF BARS | CLEAR BAR SPACING | X | Y 4" SPACING | Y 6" SPACING | Z |
|---|---|---|---|---|---|---|
| 36R | 13 | 2" | 2⅛" | - | - | - |
| 36RX (STEEL) | 15 | 2" | 9/16" | 3¾" | 5¾" | - |
| 36RX (CAST) | 13 | 2" | 2⅛" | 3¾" | 5¾" | - |
| 36R Mod | 12 | 2" | 2⅛" | - | - | 5" |
| 36RX Mod (STEEL) | 13 | 2" | 9/16" | 3¾" | 5¾" | 5 11/16" |
| 36RX Mod (CAST) | 12 | 2" | 2⅛" | 3¾" | 5¾" | 5" |

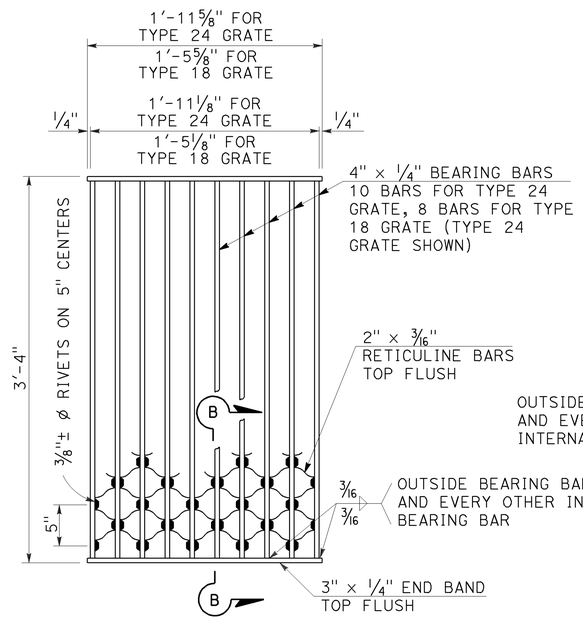


**NOTES:**

Weight of Type 24 grate = 182 LBS.
Weight of Type 18 grate = 145 LBS.

SECTION B-B

## TYPE 18-8S AND 24-10S GRATE

(Welded Steel) Reticuline type

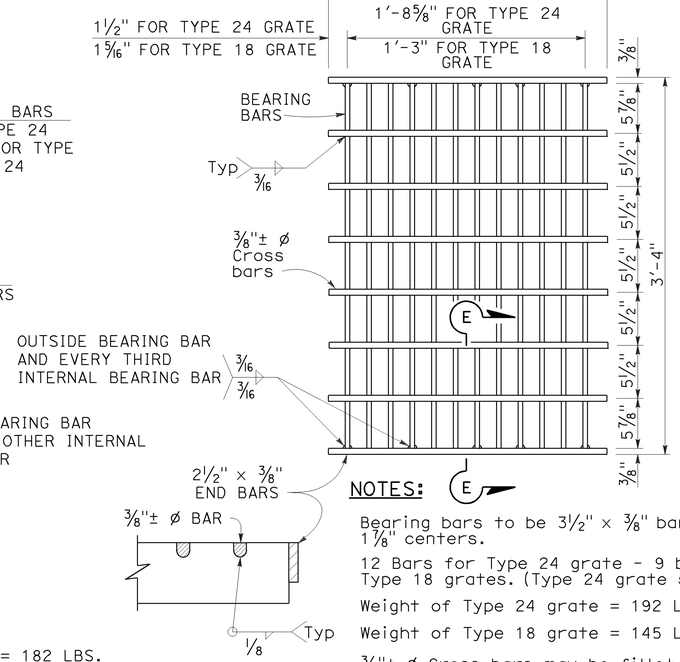


SECTION E-E

**NOTES:**

Bearing bars to be 3½" × ⅜" bars on 1⅞" centers.

12 Bars for Type 24 grate - 9 bars for Type 18 grates. (Type 24 grate shown).

Weight of Type 24 grate = 192 LBS.

Weight of Type 18 grate = 145 LBS.

⅜"± ø Cross bars may be fillet welded, resistance welded or electroforged to bearing bars.

## TYPE 18-9X AND 24-12X GRATE

(Welded Steel)

STATE OF CALIFORNIA
DEPARTMENT OF TRANSPORTATION

# GRATE DETAILS No. 2

NO SCALE

RSP D77B DATED APRIL 19, 2013 SUPERSEDES RSP D77B DATED JULY 20, 2012 AND STANDARD PLAN D77B DATED MAY 20, 2011 - PAGE 165 OF THE STANDARD PLANS BOOK DATED 2010.

**REVISED STANDARD PLAN RSP D77B**

4-4-13

| Dist | COUNTY | ROUTE | POST MILES TOTAL PROJECT | SHEET No. | TOTAL SHEETS |
|---|---|---|---|---|---|
| 05 | SCr | 1 | 20.2/37.4 | 34 | 39 |

LICENSED LANDSCAPE ARCHITECT

July 19, 2013
PLANS APPROVAL DATE

LICENSED LANDSCAPE ARCHITECT
Gregory A. Balzer 2576
Expires
2-28-15
Renewal Date
7-19-13
Date
STATE OF CALIFORNIA

*THE STATE OF CALIFORNIA OR ITS OFFICERS OR AGENTS SHALL NOT BE RESPONSIBLE FOR THE ACCURACY OR COMPLETENESS OF SCANNED COPIES OF THIS PLAN SHEET.*

TO ACCOMPANY PLANS DATED 5-27-14

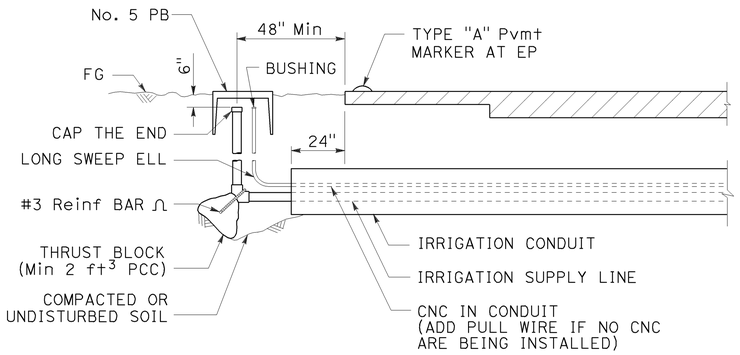


SECTION

## IRRIGATION CONDUIT

UNDER TRAVELED WAY

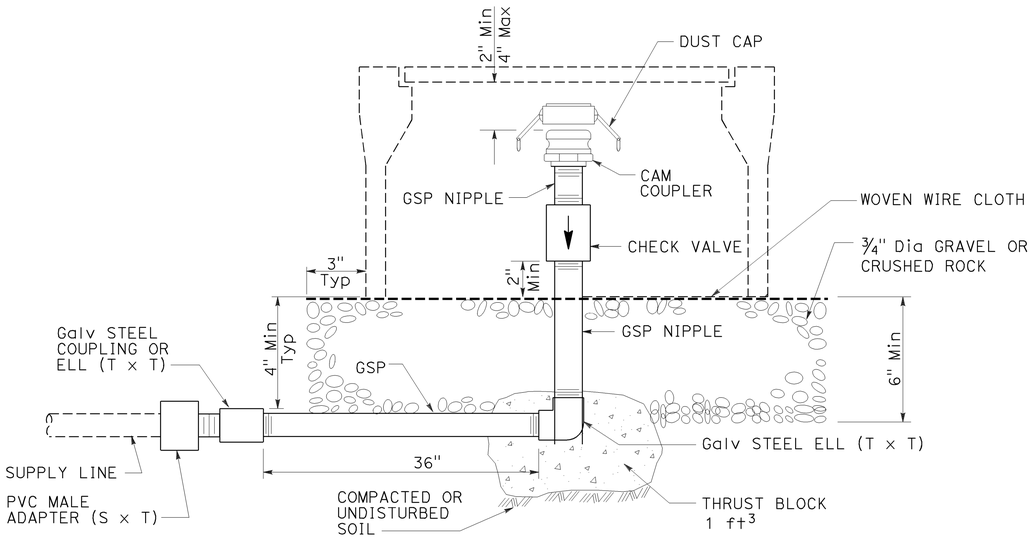


ELEVATION

## CAM COUPLER ASSEMBLY

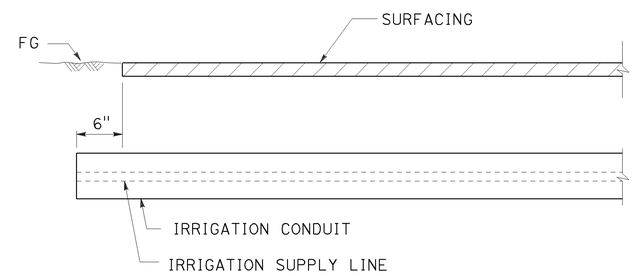


SECTION

## IRRIGATION CONDUIT

UNDER SIDEWALKS, DRIVEWAYS AND PATHS

STATE OF CALIFORNIA
DEPARTMENT OF TRANSPORTATION

# LANDSCAPE DETAILS

NO SCALE

RSP H9 DATED JULY 19, 2013 SUPERSEDES STANDARD PLAN H9
DATED MAY 20, 2011 - PAGE 226 OF THE STANDARD PLANS BOOK DATED 2010.

**REVISED STANDARD PLAN RSP H9**

**2010 REVISED STANDARD PLAN RSP H9**

6-28-13

| Dist | COUNTY | ROUTE | POST MILES TOTAL PROJECT | SHEET No. | TOTAL SHEETS |
|---|---|---|---|---|---|
| 05 | SCr | 1 | 20.2/37.4 | 35 | 39 |

REGISTERED CIVIL ENGINEER

July 19, 2013
PLANS APPROVAL DATE

REGISTERED PROFESSIONAL ENGINEER
Gurinderpal Bhullar
No. C48815
Exp. 9-30-14
CIVIL
STATE OF CALIFORNIA

THE STATE OF CALIFORNIA OR ITS OFFICERS OR AGENTS SHALL NOT BE RESPONSIBLE FOR THE ACCURACY OR COMPLETENESS OF SCANNED COPIES OF THIS PLAN SHEET.

TO ACCOMPANY PLANS DATED 5-27-14

2010 REVISED STANDARD PLAN RSP T9

## TABLE 1

### TAPER LENGTH CRITERIA AND CHANNELIZING DEVICE SPACING

| SPEED (S) | MINIMUM TAPER LENGTH * FOR WIDTH OF OFFSET 12 FEET (W) | | | | MAXIMUM CHANNELIZING DEVICE SPACING | | |
|---|---|---|---|---|---|---|---|
| | | | | | X | Y | Z ** |
| | TANGENT 2L | MERGING L | SHIFTING L/2 | SHOULDER L/3 | TAPER | TANGENT | CONFLICT |
| mph | ft | ft | ft | ft | ft | ft | ft |
| 20 | 160 | 80 | 40 | 27 | 20 | 40 | 10 |
| 25 | 250 | 125 | 63 | 42 | 25 | 50 | 12 |
| 30 | 360 | 180 | 90 | 60 | 30 | 60 | 15 |
| 35 | 490 | 245 | 123 | 82 | 35 | 70 | 17 |
| 40 | 640 | 320 | 160 | 107 | 40 | 80 | 20 |
| 45 | 1080 | 540 | 270 | 180 | 45 | 90 | 22 |
| 50 | 1200 | 600 | 300 | 200 | 50 | 100 | 25 |
| 55 | 1320 | 660 | 330 | 220 | 55 | 110 | 27 |
| 60 | 1440 | 720 | 360 | 240 | 60 | 120 | 30 |
| 65 | 1560 | 780 | 390 | 260 | 65 | 130 | 32 |
| 70 | 1680 | 840 | 420 | 280 | 70 | 140 | 35 |

* - For other offsets, use the following merging taper length formula for L:
For speed of 40 mph or less, $L = WS^2/60$
For speed of 45 mph or more, $L = WS$

Where: L = Taper length in feet
W = Width of offset in feet
S = Posted speed limit, off-peak 85th-percentile speed prior to work starting, or the anticipated operating speed in mph

** - Use for taper and tangent sections where there are no pavement markings or where there is a conflict between existing pavement markings and channelizers (CA).

## TABLE 2

### LONGITUDINAL BUFFER SPACE AND FLAGGER STATION SPACING

| SPEED * | Min D ** | DOWNGRADE Min D *** | | |
|---|---|---|---|---|
| | | -3% | -6% | -9% |
| mph | ft | ft | ft | ft |
| 20 | 115 | 116 | 120 | 126 |
| 25 | 155 | 158 | 165 | 173 |
| 30 | 200 | 205 | 215 | 227 |
| 35 | 250 | 257 | 271 | 287 |
| 40 | 305 | 315 | 333 | 354 |
| 45 | 360 | 378 | 400 | 427 |
| 50 | 425 | 446 | 474 | 507 |
| 55 | 495 | 520 | 553 | 593 |
| 60 | 570 | 598 | 638 | 686 |
| 65 | 645 | 682 | 728 | 785 |
| 70 | 730 | 771 | 825 | 891 |

* - Speed is posted speed limit, off-peak 85th-percentile speed prior to work starting, or the anticipated operating speed in mph

** - Longitudinal buffer space or flagger station spacing

*** - Use on sustained downgrade steeper than -3 percent and longer than 1 mile.

## TABLE 3

### ADVANCE WARNING SIGN SPACING

| ROAD TYPE | DISTANCE BETWEEN SIGNS * | | |
|---|---|---|---|
| | A | B | C |
| | ft | ft | ft |
| URBAN - 25 mph OR LESS | 100 | 100 | 100 |
| URBAN - MORE THAN 25 mph TO 40 mph | 250 | 250 | 250 |
| URBAN - MORE THAN 40 mph | 350 | 350 | 350 |
| RURAL | 500 | 500 | 500 |
| EXPRESSWAY / FREEWAY | 1000 | 1500 | 2640 |

* - The distances are approximate, are intended for guidance purposes only, and should be applied with engineering judgment. These distances should be adjusted by the Engineer for field conditions, if necessary, by increasing or decreasing the recommmended distances.

STATE OF CALIFORNIA
DEPARTMENT OF TRANSPORTATION

# TRAFFIC CONTROL SYSTEM TABLES FOR LANE AND RAMP CLOSURES

NO SCALE

RSP T9 DATED JULY 19, 2013 SUPERSEDES RSP T9 DATED APRIL 19, 2013 THAT SUPPLEMENTS THE STANDARD PLANS BOOK DATED 2010.

**REVISED STANDARD PLAN RSP T9**

| Dist | COUNTY | ROUTE | POST MILES TOTAL PROJECT | SHEET No. | TOTAL SHEETS |
|---|---|---|---|---|---|
| 05 | SCr | 1 | 20.2/37.4 | 36 | 39 |

REGISTERED CIVIL ENGINEER

April 19, 2013
PLANS APPROVAL DATE

REGISTERED PROFESSIONAL ENGINEER Gurinderpal Bhullar No. C48815 Exp. 9-30-14 CIVIL STATE OF CALIFORNIA

*THE STATE OF CALIFORNIA OR ITS OFFICERS OR AGENTS SHALL NOT BE RESPONSIBLE FOR THE ACCURACY OR COMPLETENESS OF SCANNED COPIES OF THIS PLAN SHEET.*

TO ACCOMPANY PLANS DATED 5-27-14

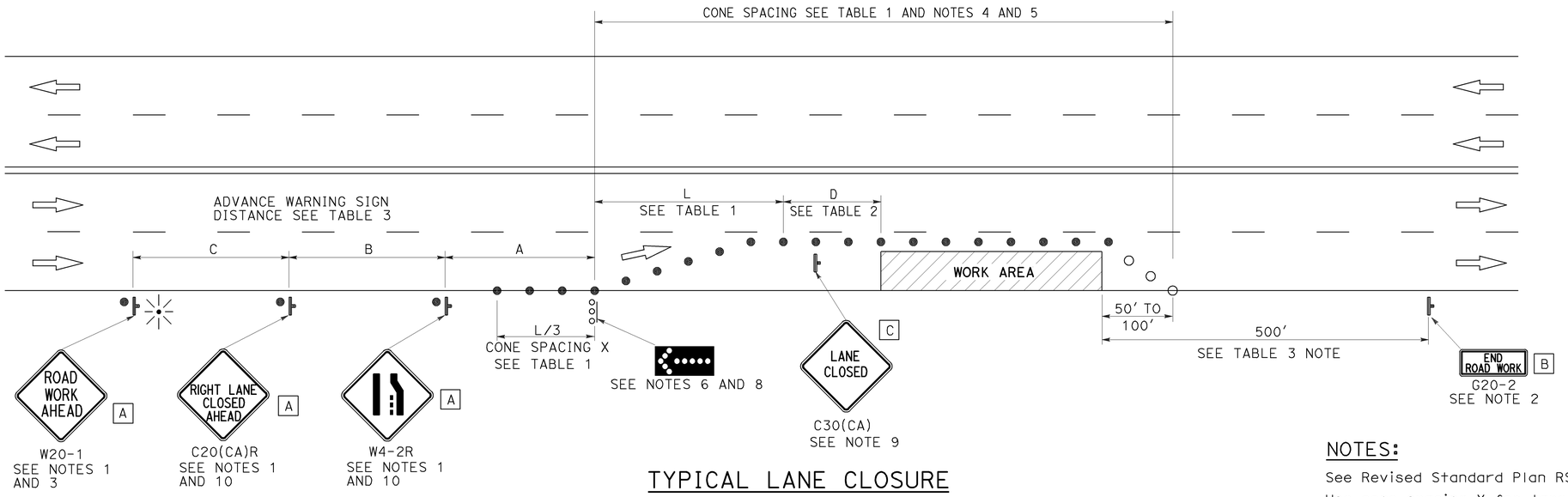


## TYPICAL LANE CLOSURE

## NOTES:

See Revised Standard Plan RSP T9 for tables.

Use cone spacing X for taper segment, Y for tangent segment or Z for conflict situations, as approriate, per Table 1, unless X, Y, or Z cone spacing is shown on this sheet.

Unless otherwise specified in the special provisions, all temporary warning signs shall have black legend on fluorescent orange background.

California codes are designated by (CA). Otherwise, Federal (MUTCD) codes are shown.

## NOTES:

1. Each advance warning sign shall be equipped with at least two flags for daytime closure. Each flag shall be at least 16" x 16" in size and shall be orange or fluorescent red-orange in color. Flashing beacons shall be placed at the locations indicated for lane closure during hours of darkness.
2. A G20-2 "END ROAD WORK" sign, as appropriate, shall be placed at the end of the lane closure unless the end of work area is obvious, or ends within a larger project's limits.
3. If the W20-1 sign would follow within 2000' of a stationary W20-1 or G20-1 "ROAD WORK NEXT _____ MILES", use a C20(CA) sign for the first advance warning sign.
4. All cones used for lane closures during the hours of darkness shall be fitted with retroreflective bands (or sleeves) as specified in the specifications.
5. Portable delineators, placed at one-half the spacing indicated for traffic cones, may be used instead of cones for daytime closures only.
6. Flashing arrow sign shall be either Type I or Type II.
7. For approach speeds over 50 mph, use the "Traffic Control System for Lane Closure On Freeways And Expressways" plan for lane closure details and requirements.
8. A minimum 1500' of sight distance shall be provided where possible for vehicles approaching the first flashing arrow sign. Lane closures shall not begin at the top of crest vertical curve or on a horizontal curve.
9. Place a C30(CA) sign every 2000' throughout length of lane closure.
10. Median lane closures shall conform to the details as shown except that C20(CA)L and W4-2L signs shall be used.
11. At least one person shall be assigned to provide full time maintenance of traffic control devices for lane closure unless, otherwise directed by the Engineer.

## LEGEND

- TRAFFIC CONE
- TRAFFIC CONE (OPTIONAL TAPER)
- TEMPORARY TRAFFIC CONTROL SIGN
- FLASHING ARROW SIGN (FAS)
- FAS SUPPORT OR TRAILER
- PORTABLE FLASHING BEACON

## SIGN PANEL SIZE (Min)

| | |
|---|---|
| A | 48" x 48" |
| B | 36" x 18" |
| C | 30" x 30" |

STATE OF CALIFORNIA
DEPARTMENT OF TRANSPORTATION

# TRAFFIC CONTROL SYSTEM FOR LANE CLOSURE ON MULTILANE CONVENTIONAL HIGHWAYS

NO SCALE

RSP T11 DATED APRIL 19, 2013 SUPERSEDES STANDARD PLAN T11 DATED MAY 20, 2011 - PAGE 239 OF THE STANDARD PLANS BOOK DATED 2010.

**REVISED STANDARD PLAN RSP T11**

**2010 REVISED STANDARD PLAN RSP T11**

4-2-13

| Dist | COUNTY | ROUTE | POST MILES TOTAL PROJECT | SHEET No. | TOTAL SHEETS |
|---|---|---|---|---|---|
| 05 | SCr | 1 | 20.2/37.4 | 37 | 39 |

REGISTERED CIVIL ENGINEER

July 18, 2014
PLANS APPROVAL DATE

REGISTERED PROFESSIONAL ENGINEER Gurinderpal Bhullar No. C48815 Exp. 9-30-14 CIVIL STATE OF CALIFORNIA

THE STATE OF CALIFORNIA OR ITS OFFICERS OR AGENTS SHALL NOT BE RESPONSIBLE FOR THE ACCURACY OR COMPLETENESS OF SCANNED COPIES OF THIS PLAN SHEET.

TO ACCOMPANY PLANS DATED 5-27-14

## NOTES:

See Revised Standard Plan RSP T9 for tables.

Use cone spacing X for taper segment, Y for tangent segment or Z for conflict situations, as approriate, per Table 1, unless X, Y, or Z cone spacing is shown on this sheet.

Unless otherwise specified in the special provisions, all temporary warning signs shall have black legend on fluorescent orange background.

California codes are designated by (CA). Otherwise, Federal (MUTCD) codes are shown.

# TYPICAL LANE CLOSURE WITH REVERSIBLE CONTROL

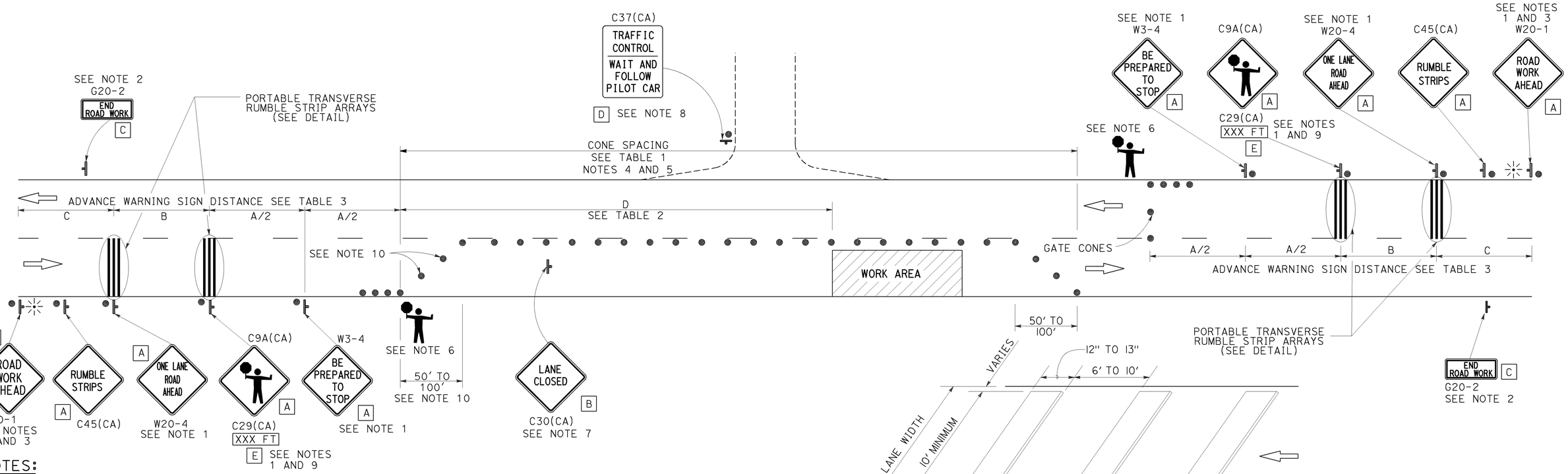


PORTABLE TRANSVERSE RUMBLE STRIP ARRAY DETAIL

## NOTES:

1. Each advance warning sign in each direction of travel shall be equipped with at least two flags for daytime closure. Each flag shall be at least 16" x 16" in size and shall be orange or fluorescent red-orange in color. Flashing beacons shall be placed at the locations indicated for lane closure during hours of darkness.
2. A G20-2 "END ROAD WORK" sign, as appropriate, shall be placed at the end of the lane control unless the end of work area is obvious, or ends within a larger project's limits.
3. If the W20-1 sign would follow within 2000' of a stationary W20-1 or G20-1 "ROAD WORK NEXT _____ MILES", use a W20-4 sign for the first advance warning sign.
4. All cones used for lane closures during the hours of darkness shall be fitted with retroreflective bands (or sleeves) as specified in the specifications.
5. Portable delineators, placed at one-half the spacing indicated for traffic cones, may be used instead of cones for daytime closures only.
6. Additional advance flaggers may be required. Flagger should stand in a conspicuous place, be visible to approaching traffic as well as approaching vehicles after the first vehicle has stopped. During the hours of darkness, the flagging-station and flagger shall be illuminated and clearly visible to approaching traffic. The illumination footprint of the lighting on the ground shall be at least 20' in diameter. Place a minimum of four cones at 50' intervals in advance of flagger station as shown.
7. Place C30(CA) "LANE CLOSED" sign at 500' to 1000' intervals throughout extended work areas. They are optional if the work area is visible from the flagger station.
8. When a pilot car is used, place a C37(CA) "TRAFFIC CONTROL-WAIT AND FOLLOW PILOT CAR" sign with black legend on white background at all intersections, driveways and alleys without a flagger within traffic control area. Signs shall be clean and visible at all times. Where traffic can not be effectively self-regulated, at least one flagger shall be used at each intersection within traffic control area.
9. An optional C29(CA) sign may be placed below the C9A(CA) sign.
10. Either traffic cones or barricades shall be placed on the taper. Barricades shall be Type I, II, or III.
11. The color of the portable transverse rumble strips shall be black or orange. Use 2 arrays, each array shall consist of 3 rumble strips.
12. Portable transverse rumble strips shall not be placed on sharp horizontal or vertical curves nor shall they be placed through pedestrian crossings.
13. If the portable transverse rumble strips become out of alignment (skewed) by more than 6 inches, measured from one end to the other, they shall be readjusted to bring the placement back to the original location.

## LEGEND

- TRAFFIC CONE
- TEMPORARY TRAFFIC CONTROL SIGN
- PORTABLE FLASHING BEACON
- FLAGGER

## SIGN PANEL SIZE (Min)

| | |
|---|---|
| A | 48" x 48" |
| B | 30" x 30" |
| C | 36" x 18" |
| D | 36" x 42" |
| E | 20" x 7" |

STATE OF CALIFORNIA
DEPARTMENT OF TRANSPORTATION

# TRAFFIC CONTROL SYSTEM FOR LANE CLOSURE ON TWO LANE CONVENTIONAL HIGHWAYS

NO SCALE

RSP T13 DATED JULY 18, 2014 SUPERSEDES RSP T13 DATED APRIL 19, 2013 AND STANDARD PLAN T13 DATED MAY 20, 2011 - PAGE 241 OF THE STANDARD PLANS BOOK DATED 2010.

**REVISED STANDARD PLAN RSP T13**

2010 REVISED STANDARD PLAN RSP T13

6-19-14

| Dist | COUNTY | ROUTE | POST MILES TOTAL PROJECT | SHEET No. | TOTAL SHEETS |
|---|---|---|---|---|---|
| 05 | SCr | 1 | 20.2/37.4 | 38 | 39 |

REGISTERED CIVIL ENGINEER

April 19, 2013
PLANS APPROVAL DATE

REGISTERED PROFESSIONAL ENGINEER Gurinderpal Bhullar No. C48815 Exp. 9-30-14 CIVIL STATE OF CALIFORNIA

*THE STATE OF CALIFORNIA OR ITS OFFICERS OR AGENTS SHALL NOT BE RESPONSIBLE FOR THE ACCURACY OR COMPLETENESS OF SCANNED COPIES OF THIS PLAN SHEET.*

TO ACCOMPANY PLANS DATED 5-27-14

**2010 REVISED STANDARD PLAN RSP T15**

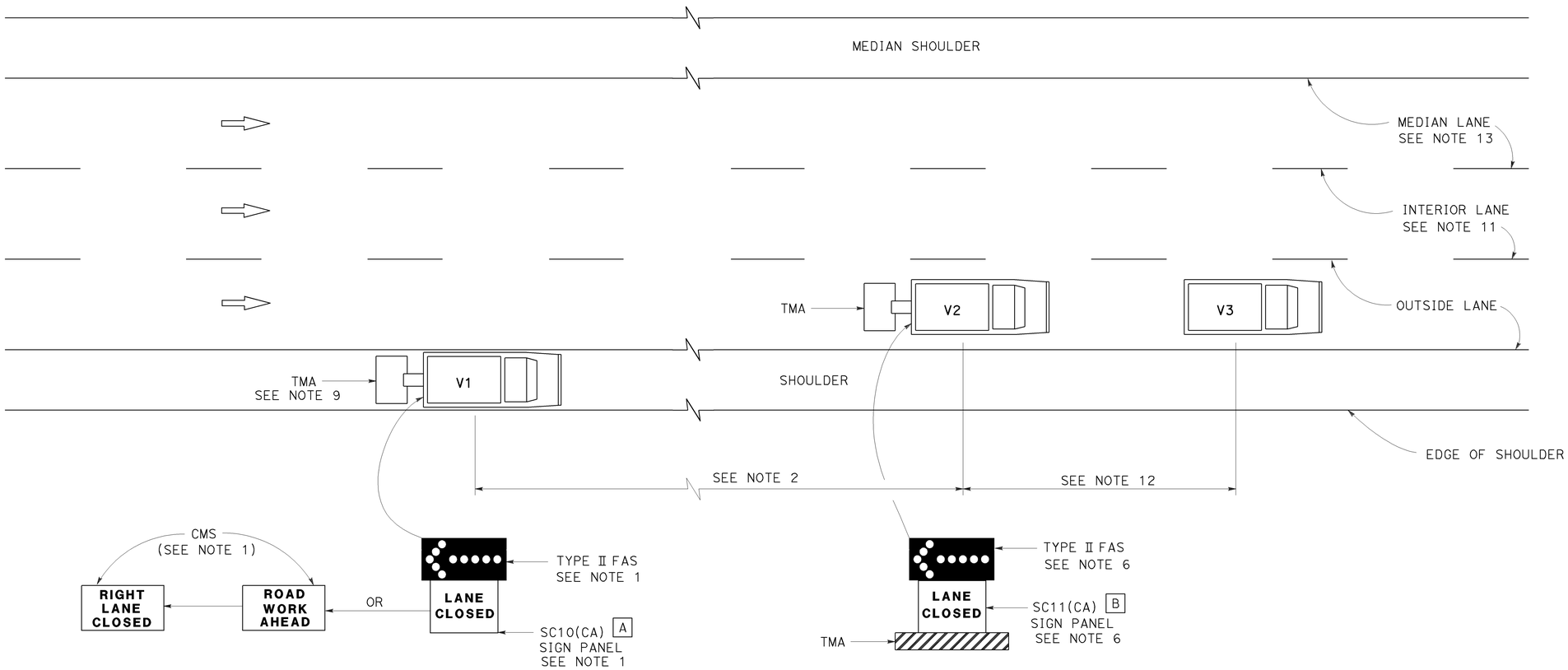


## MOVING LANE CLOSURE ON MEDIAN LANE OR OUTSIDE LANE OF MULTILANE HIGHWAYS

### SIGN PANEL SIZE (Min)

A 66" x 36"

B 54" x 42"

### LEGEND

| | |
|---|---|
| V1 | SIGN VEHICLE |
| V2 | SHADOW VEHICLE |
| V3 | WORK/APPLICATION VEHICLE |
| ⬅ | FLASHING ARROW SIGN (FAS) |
| CMS | CHANGEABLE MESSAGE SIGN |
| TMA | TRUCK-MOUNTED ATTENUATOR |

### NOTES:

1. Either a changeable message sign or a SC10(CA) sign panel and a Type II flashing arrow sign shall be mounted on the rear of sign vehicle V1. The changeable message sign shall be sequenced to show the "ROAD WORK AHEAD" message first, followed by the "RIGHT LANE CLOSED" message. For median lane closure, the flashing arrow symbol shall be reversed with the arrowhead on the right and the changeable message sign shall show "LEFT LANE CLOSED".
2. If traffic queues develop, sign vehicle V1 should be positioned upstream from the end of queue. Sign vehicle V1 shall be positioned where highly visible when shoulders are not available.
3. A minimum sight distance of 1500′ should be provided in advance of sign vehicle V1.
4. Sign vehicle V1 should remain at the beginning of horizontal or vertical curves until the other vehicles (V2 and V3) are far enough beyond the curve to resume the minimum sight distance of 1500′.
5. Vehicle-mounted sign panels shall have Type III or above retroreflective sheeting, black on white, or black on fluorescent orange, with 6" minimum series D letters per Caltrans sign specifications.
6. Shadow vehicle V2 shall be equipped with a truck-mounted attenuator. The sign panel shown and a Type II flashing arrow sign shall be mounted on the rear of shadow vehicle V2. For median lane closure the flashing arrow sign symbol shall be displayed with the arrowhead on the right.
7. All vehicles used for lane closures shall be equipped with two-way radios, and the vehicle operators shall maintain communication during the work or application operation.
8. All vehicles shall be equipped with flashing or rotating amber lights.
9. If sign vehicle V1 encroaches into the traffic lane due to insufficient shoulder width, sign vehicle V1 shall be equipped with a truck-mounted attenuator. Sign vehicle V1 shall stay as close to the edge of shoulder as practicable.
10. Where workers would be on foot in the work area, a stationary type lane closure (Revised Standard Plan T10, T11, etc., as applicable) shall be used instead of this plan.
11. For moving lane closure on interior lane of multilane highways, use Revised Standard Plan T16.
12. The spacing between work vehicle(s) and the shadow vehicles, and between each shadow vehicle should be minimized to deter road users from driving in between.
13. When the work/application vehicle V3 occupies the median lane, sign vehicle V1 should drive in the median shoulder and indicate left lane closed ahead.

STATE OF CALIFORNIA
DEPARTMENT OF TRANSPORTATION

# TRAFFIC CONTROL SYSTEM FOR MOVING LANE CLOSURE ON MULTILANE HIGHWAYS

NO SCALE

RSP T15 DATED APRIL 19, 2013 SUPERSEDES STANDARD PLAN T15
DATED MAY 20, 2011 - PAGE 243 OF THE STANDARD PLANS BOOK DATED 2010.

**REVISED STANDARD PLAN RSP T15**

12-18-12

| Dist | COUNTY | ROUTE | POST MILES TOTAL PROJECT | SHEET No. | TOTAL SHEETS |
|---|---|---|---|---|---|
| 05 | SCr | 1 | 20.2/37.4 | 39 | 39 |

REGISTERED CIVIL ENGINEER

April 19, 2013
PLANS APPROVAL DATE

REGISTERED PROFESSIONAL ENGINEER
Gurinderpal Bhullar
No. C48815
Exp. 9-30-14
CIVIL
STATE OF CALIFORNIA

THE STATE OF CALIFORNIA OR ITS OFFICERS OR AGENTS SHALL NOT BE RESPONSIBLE FOR THE ACCURACY OR COMPLETENESS OF SCANNED COPIES OF THIS PLAN SHEET.

TO ACCOMPANY PLANS DATED 5-27-14

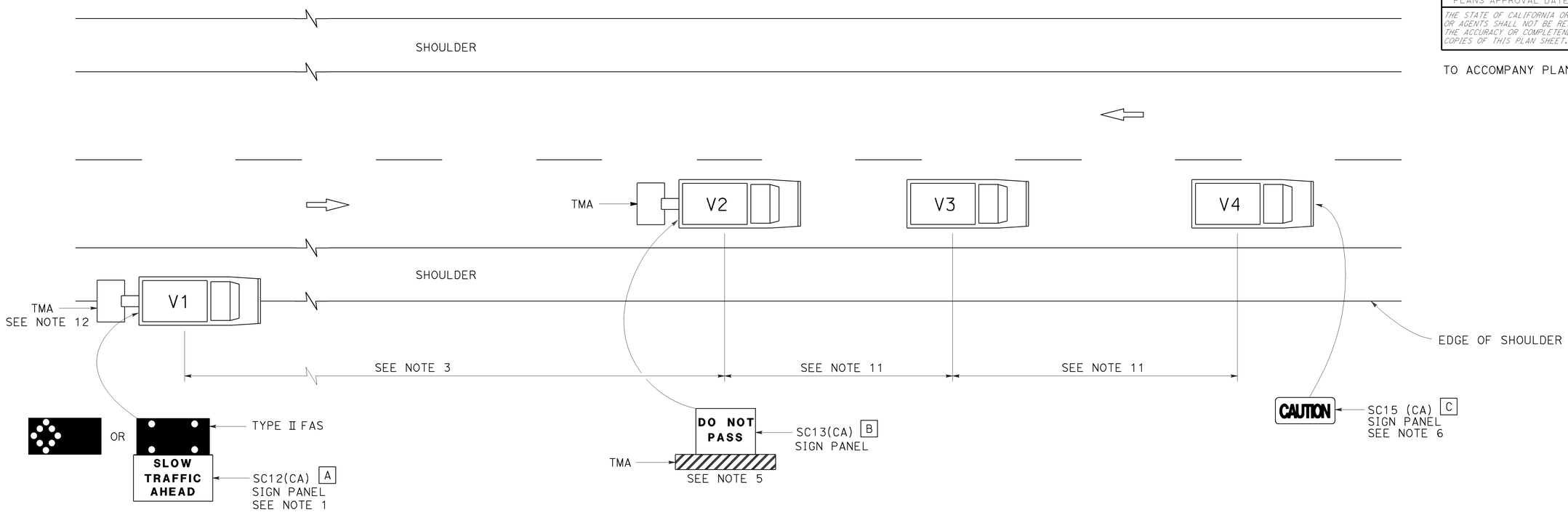


## LEGEND

| | |
|---|---|
| V1 | SIGN VEHICLE |
| V2 | SHADOW VEHICLE |
| V3 | WORK/APPLICATION VEHICLE |
| V4 | SIGN VEHICLE |
| TMA | TRUCK-MOUNTED ATTENUATOR |
| | FLASHING ARROW SIGN (FAS) IN FLASHING CAUTION MODE |
| | FLASHING ARROW SIGN (FAS) IN ALTERNATING DIAMOND CAUTION |

## SIGN PANEL SIZE (Min)

| | |
|---|---|
| A | 72" x 42" |
| B | 54" x 42" |
| C | 54" x 24" |

## NOTES:

1. Either a changeable message sign or a SC12(CA) "SLOW TRAFFIC AHEAD" sign shall be mounted on the rear of sign vehicle V1. The changeable message sign shall be sequenced to show the "CAUTION" message first, follow by the "SLOW TRAFFIC AHEAD" message. A Type II flashing arrow sign may be used with the SC12(CA) sign panel.
2. Sign vehicle V1 should be positioned where highly visible when shoulders are not available.
3. If traffic queues develop, sign vehicle V1 should be positioned upstream from the end of queue.
4. Vehicle-mounted sign panels shall have Type III or above retroreflective sheeting, black on white, or black on fluorescent orange, with 6" minimum series D letters per Caltrans sign specifications.
5. Shadow vehicle shall be equipped with a truck-mounted attenuator. The sign panel shown shall be mounted on the rear of shadow vehicle V2. The message "LANE CLOSED" may be used in place of the "DO NOT PASS" message.
6. The sign panel shown shall be mounted on the front of sign vehicle V4, facing opposing traffic.
7. All vehicles shall be equipped with flashing or rotating amber lights.
8. Sign vehicle V4 will not be required when the work and vehicles V2 and V3 are 2′ or more from the centerline of the highway during the work or application operations.
9. All vehicles used for lane closures shall be equipped with two-way radios and the vehicle operators shall maintain communication during the work or application operation.
10. This plan shall not be used where workers would be on foot in the work area. Use a stationary type lane closure (Revised Standard Plan T13) for this condition.
11. Minimize spacing between vehicles V2 and V3 and vehicles V3 and V4 to deter road users from driving in between them.
12. If sign vehicle V1 encroaches into the traffic lane due to insufficient shoulder width, sign vehicle V1 shall be equipped with a truck-mounted attenuator. Sign vehicle V1 shall stay as close to the edge of shoulder as practicable.

STATE OF CALIFORNIA
DEPARTMENT OF TRANSPORTATION

# TRAFFIC CONTROL SYSTEM FOR MOVING LANE CLOSURE ON TWO LANE HIGHWAYS

NO SCALE

RSP T17 DATED APRIL 19, 2013 SUPERSEDES STANDARD PLAN T17
DATED MAY 20, 2011 - PAGE 245 OF THE STANDARD PLANS BOOK DATED 2010.

**REVISED STANDARD PLAN RSP T17**

**2010 REVISED STANDARD PLAN RSP T17**

12-18-12