Dist	COUNTY	ROUTE	POST MILES TOTAL PROJECT	SHEET No.	TOTAL SHEETS
05	SB	154	0.0/5.5	1	29

INDEX OF PLANS

SHEET No.	DESCRIPTION
1	TITLE AND LOCATION MAP
2	TYPICAL CROSS SECTIONS
3-6	CONSTRUCTION DETAILS
7	CONSTRUCTION AREA SIGNS
8-9	SUMMARY OF QUANTITIES
10-29	REVISED AND NEW STANDARD PLANS

THE STANDARD PLANS LIST APPLICABLE TO THIS CONTRACT IS INCLUDED IN THE NOTICE TO BIDDERS AND SPECIAL PROVISIONS BOOK.

STATE OF CALIFORNIA

DEPARTMENT OF TRANSPORTATION

PROJECT PLANS FOR CONSTRUCTION ON

STATE HIGHWAY

IN SANTA BARBARA COUNTY AT AND NEAR LOS OLIVOS FROM ROUTE 101 SEPARATION TO 0.4 MILE WEST OF BASELINE AVENUE

TO BE SUPPLEMENTED BY STANDARD PLANS DATED MAY 2006

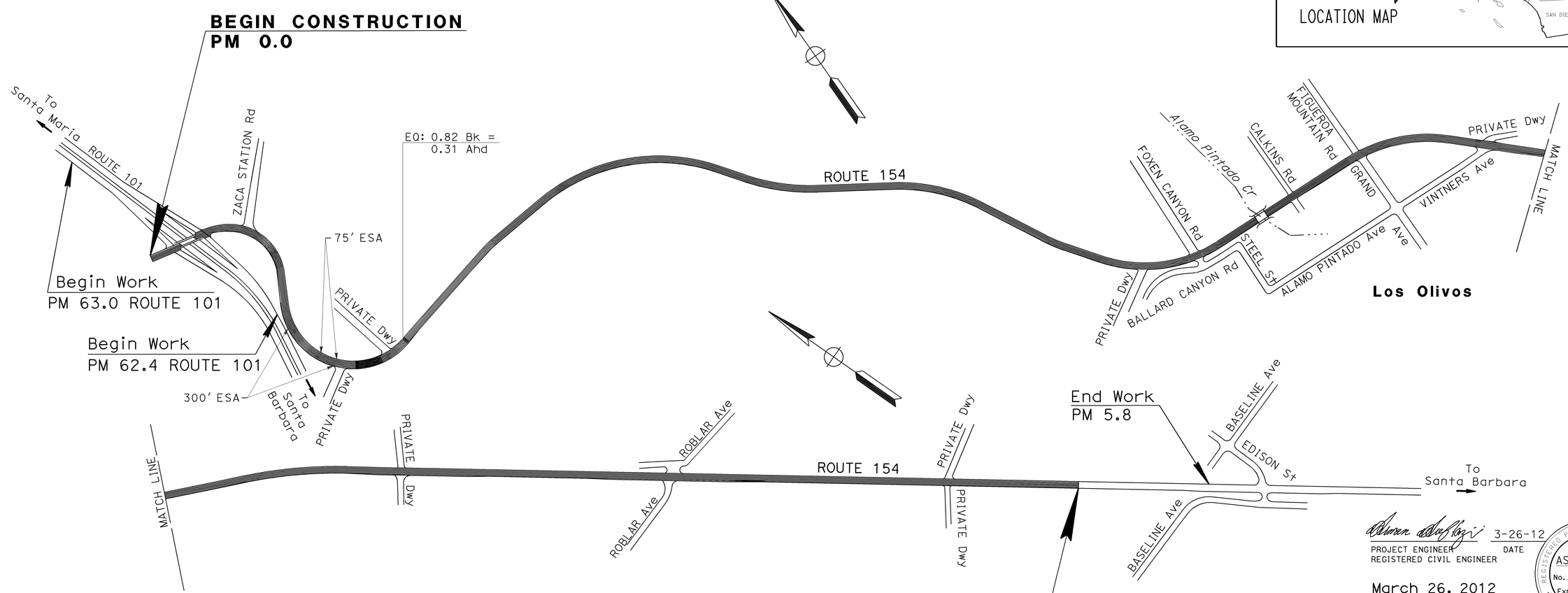

PROJECT MANAGER: KELLY McCLAIN

DESIGN ENGINEER: KELLY McCLAIN

THE CONTRACTOR SHALL POSSESS THE CLASS (OR CLASSES) OF LICENSE AS SPECIFIED IN THE "NOTICE TO BIDDERS."

PROJECT ENGINEER REGISTERED CIVIL ENGINEER — DATE 3-26-12

March 26, 2012
PLANS APPROVAL DATE

REGISTERED PROFESSIONAL ENGINEER — ARMAN ASEFVAZIRI — No. 52047 — Exp. 12-31-12 — CIVIL — STATE OF CALIFORNIA

THE STATE OF CALIFORNIA OR ITS OFFICERS OR AGENTS SHALL NOT BE RESPONSIBLE FOR THE ACCURACY OR COMPLETENESS OF SCANNED COPIES OF THIS PLAN SHEET.

CONTRACT No.	05-1A3104
PROJECT ID	0500020298

LAST REVISION 03-26-12

DATE PLOTTED => 26-MAR-2012
TIME PLOTTED => 09:12

Dist	COUNTY	ROUTE	POST MILES TOTAL PROJECT	SHEET No.	TOTAL SHEETS
05	SB	154	0.0/5.5	2	29

REGISTERED CIVIL ENGINEER 3-26-12 DATE

3-26-12
PLANS APPROVAL DATE

REGISTERED PROFESSIONAL ENGINEER ARMAN ASEFVAZIRI No. 52047 Exp. 12-31-12 CIVIL STATE OF CALIFORNIA

THE STATE OF CALIFORNIA OR ITS OFFICERS OR AGENTS SHALL NOT BE RESPONSIBLE FOR THE ACCURACY OR COMPLETENESS OF SCANNED COPIES OF THIS PLAN SHEET.

NOTES:

1. DIMENSIONS OF THE PAVEMENT STRUCTURES (STRUCTURAL SECTIONS) ARE SUBJECT TO TOLERANCES SPECIFIED IN THE STANDARD SPECIFICATIONS.
2. SUPERELEVATION AS SHOWN OR AS DIRECTED BY THE ENGINEER.
3. FOR ACCURATE RIGHT OF WAY DATA, CONTACT RIGHT OF WAY ENGINEERING AT THE DISTRICT OFFICE.
4. LOCATION AND TYPE OF HMA DIKES ARE SHOWN ON SUMMARY OF QUANTITIES.
5. LOCATION OF RECONSTRUCT MBGR ARE SHOWN ON SUMMARY OF QUANTITIES.

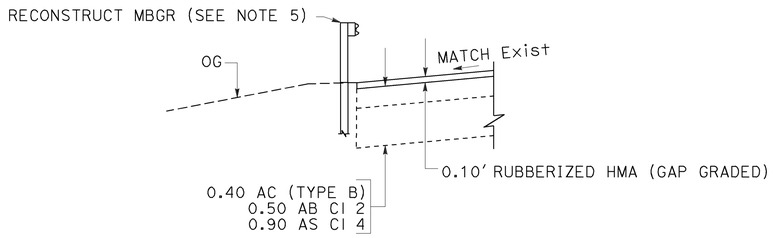

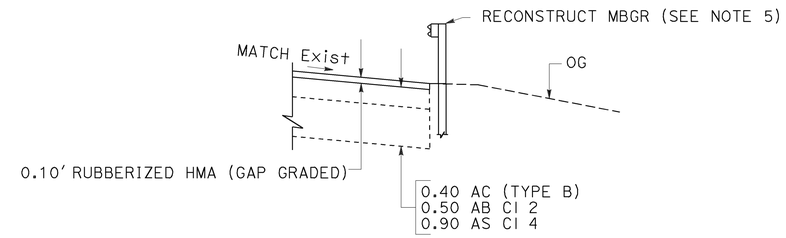

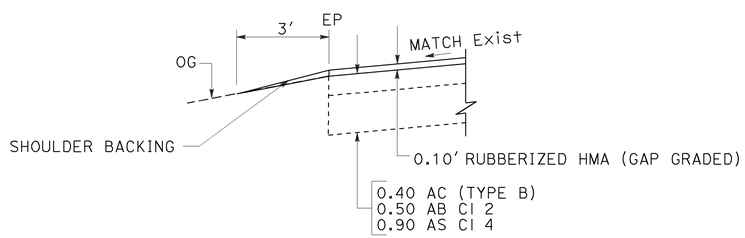

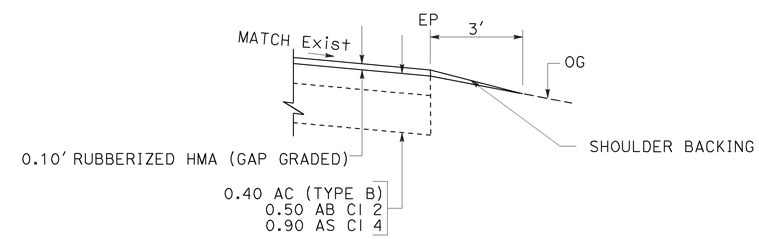

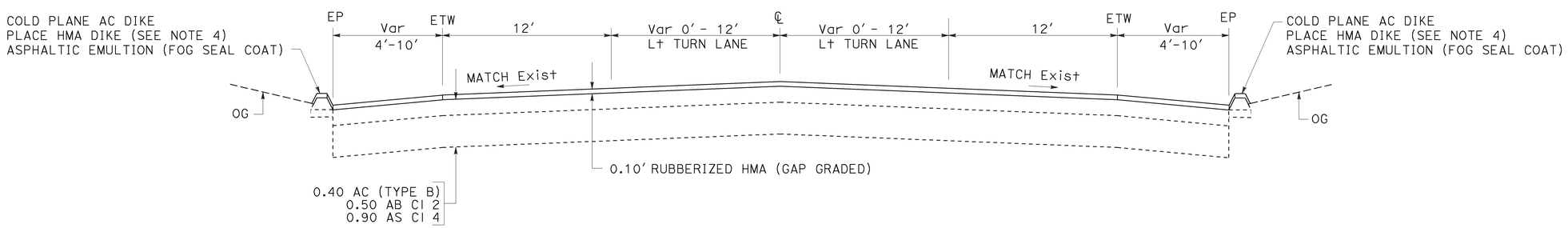

ROUTE 154
PM 0.0 TO 5.5

TYPICAL CROSS SECTIONS

NO SCALE

X-1

REVISED BY	DATE REVISED
AA	2-29-12

CALCULATED-DESIGNED BY: ARMAN ASEFVAZIRI
CHECKED BY: KELLY McCLAIN
FUNCTIONAL SUPERVISOR: KELLY McCLAIN

STATE OF CALIFORNIA - DEPARTMENT OF TRANSPORTATION
Caltrans MAINTENANCE DESIGN

LAST REVISION 03-26-12 | DATE PLOTTED => 26-MAR-2012 | TIME PLOTTED => 13:42

Dist	COUNTY	ROUTE	POST MILES TOTAL PROJECT	SHEET No.	TOTAL SHEETS
05	SB	154	0.0/5.5	3	29

REGISTERED CIVIL ENGINEER 3-26-12 DATE

3-26-12
PLANS APPROVAL DATE

REGISTERED PROFESSIONAL ENGINEER ARMAN ASEFVAZIRI No. 52047 Exp. 12-31-12 CIVIL STATE OF CALIFORNIA

THE STATE OF CALIFORNIA OR ITS OFFICERS OR AGENTS SHALL NOT BE RESPONSIBLE FOR THE ACCURACY OR COMPLETENESS OF SCANNED COPIES OF THIS PLAN SHEET.

NOTE:

1. FOR LOCATIONS OF COLD PLANE AC PAVEMENT, SEE SUMMARY OF QUANTITIES SHEET.

LEGEND:

- 0.20′ COLD PLANE AC Pvmt
  0.20′ HMA (TYPE A)
- 0.10′ COLD PLANE AC Pvmt
  0.10′ RUBBERIZED HMA (GAP GRADED)
- ⇨ DIRECTIONAL ARROW

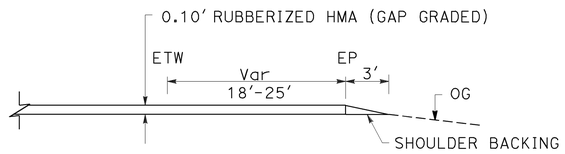

SECTION B-B

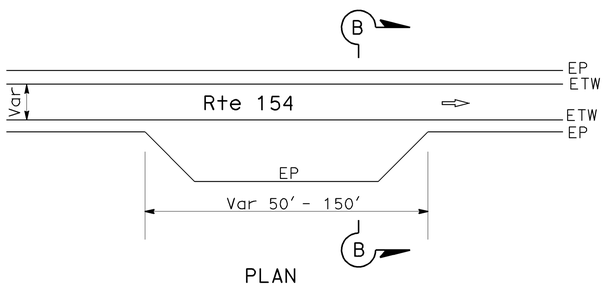

PLAN

TYPICAL MAINTENANCE VEHICLE PULLOUT CONFORM

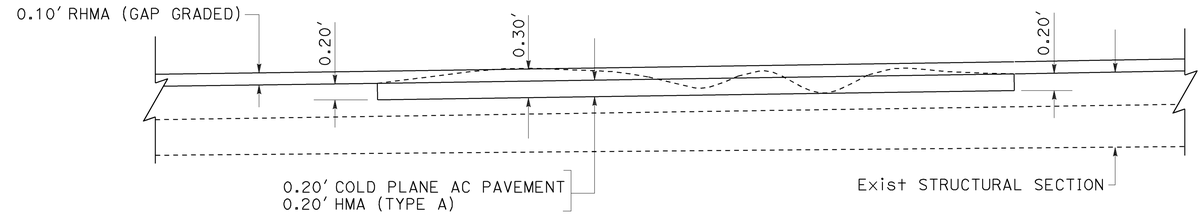

PROFILE

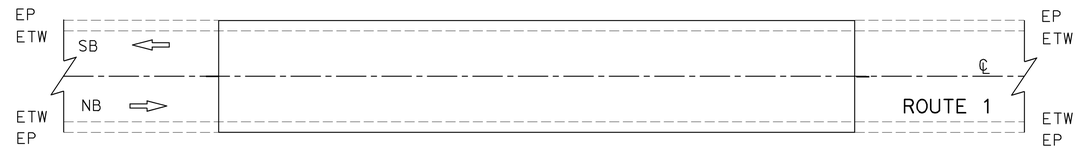

PM 0.42 TO 0.48

PLAN

PROFILE CORRECTION

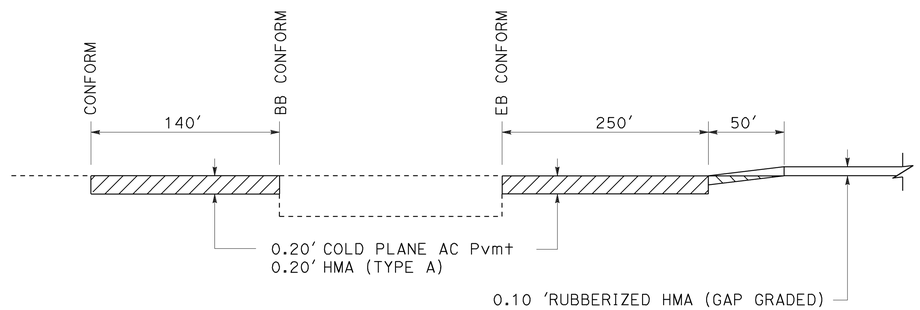

SECTION A-A

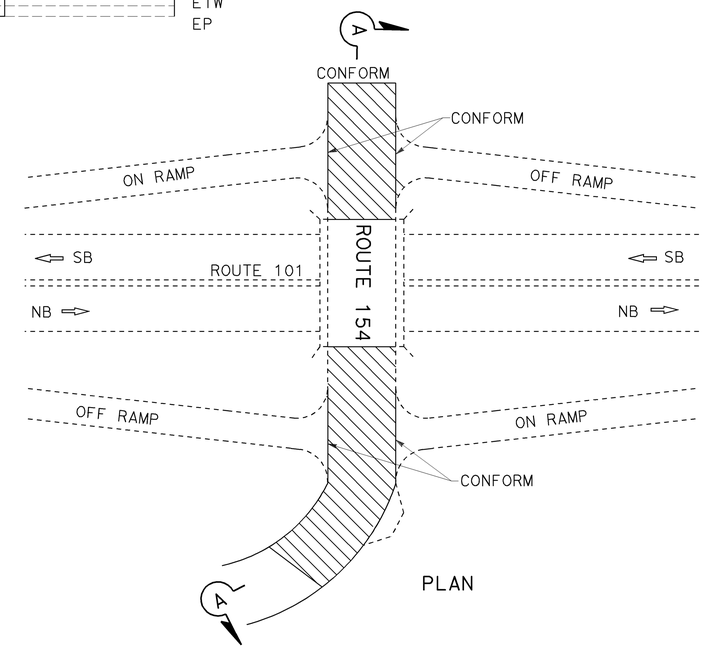

PLAN

ROUTE 101/154 SEPARATION CONFORM

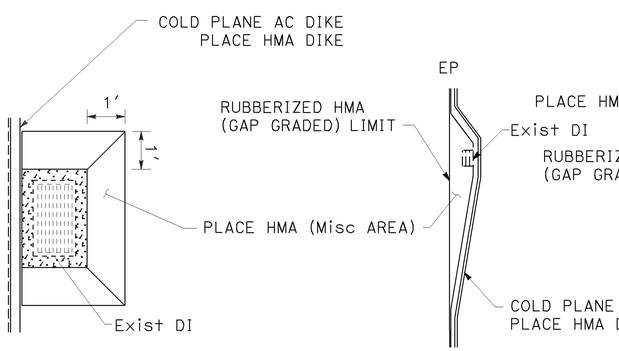

DRAINAGE INLET

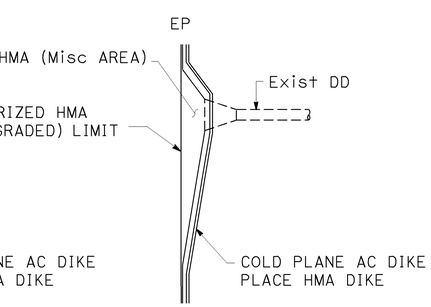

DOWN DRAIN

PLAN

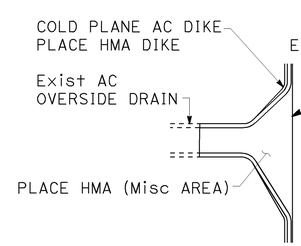

OVERSIDE DRAIN

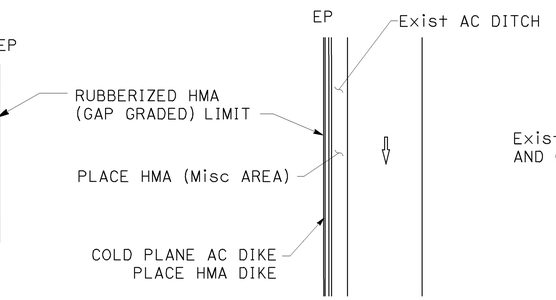

AC DITCH

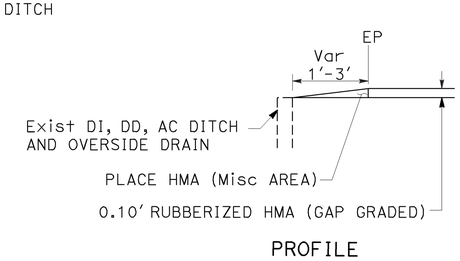

PROFILE

DRAINAGE FACILITY CONFORM

CONSTRUCTION DETAILS

NO SCALE

C-1

REVISED BY	DATE REVISED
AA	2-29-12

ARMAN ASEFVAZIRI — KELLY McCLAIN — CALCULATED-DESIGNED BY — CHECKED BY — FUNCTIONAL SUPERVISOR: KELLY McCLAIN

STATE OF CALIFORNIA - DEPARTMENT OF TRANSPORTATION — Caltrans® MAINTENANCE DESIGN

LAST REVISION 03-26-12 — DATE PLOTTED => 26-MAR-2012 — TIME PLOTTED => 09:12

Dist	COUNTY	ROUTE	POST MILES TOTAL PROJECT	SHEET No.	TOTAL SHEETS
05	SB	154	0.0/5.5	4	29

REGISTERED CIVIL ENGINEER 3-26-12 DATE

3-26-12
PLANS APPROVAL DATE

REGISTERED PROFESSIONAL ENGINEER ARMAN ASEFVAZIRI No. 52047 Exp. 12-31-12 CIVIL STATE OF CALIFORNIA

THE STATE OF CALIFORNIA OR ITS OFFICERS OR AGENTS SHALL NOT BE RESPONSIBLE FOR THE ACCURACY OR COMPLETENESS OF SCANNED COPIES OF THIS PLAN SHEET.

AC DIKE TRANSITION

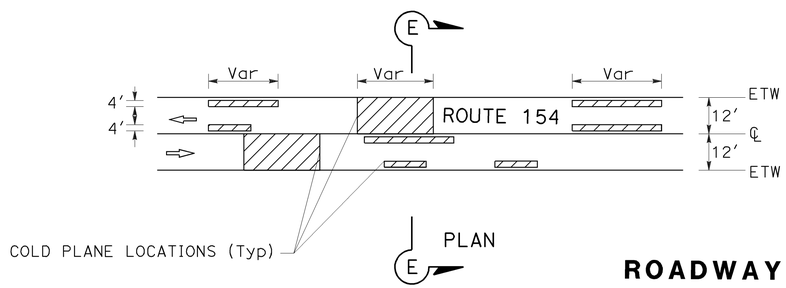

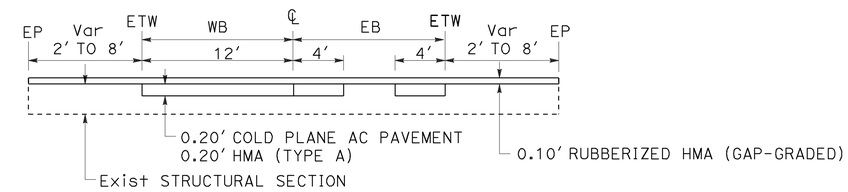

ROADWAY REPAIR

SECTION E-E

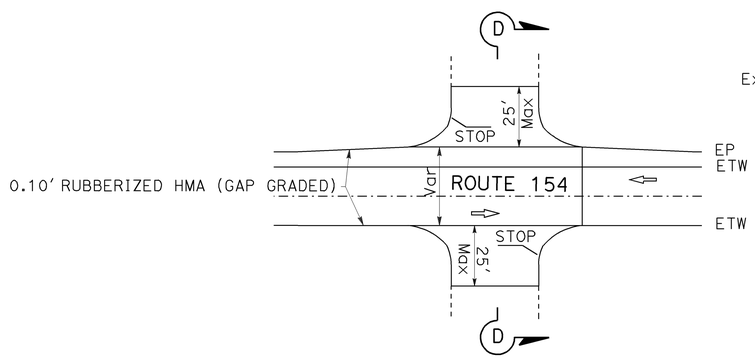

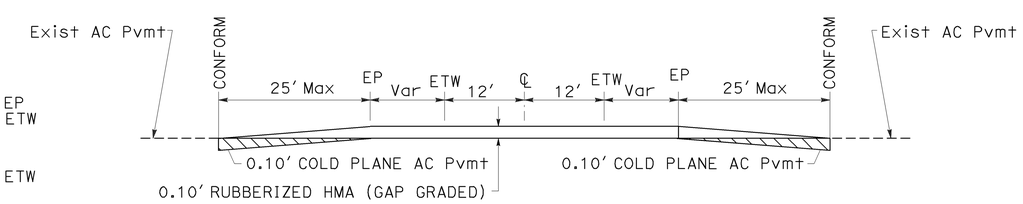

SECTION D-D

TYPICAL INTERSECTION CONFORM

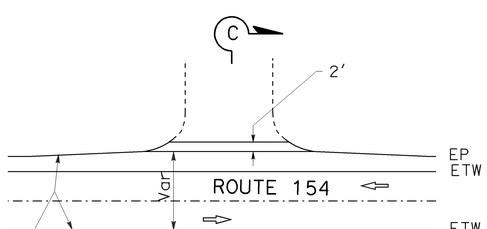

TYPICAL PRIVATE DRIVEWAY CONFORM

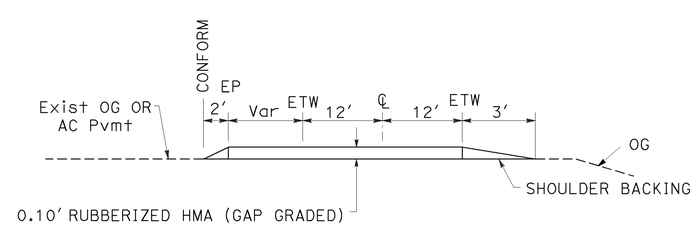

SECTION C-C

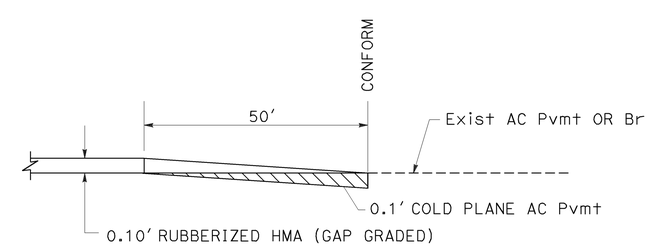

TYPICAL LONGITUDINAL CONFORM

CONSTRUCTION DETAILS

NO SCALE

C-2

STATE OF CALIFORNIA - DEPARTMENT OF TRANSPORTATION
Caltrans® MAINTENANCE DESIGN

FUNCTIONAL SUPERVISOR: KELLY McCLAIN
CALCULATED-DESIGNED BY: ARMAN ASEFVAZIRI
CHECKED BY: KELLY McCLAIN
REVISED BY: AA
DATE REVISED: 2-29-12

LAST REVISION 03-26-12
DATE PLOTTED => 26-MAR-2012
TIME PLOTTED => 09:12

Dist	COUNTY	ROUTE	POST MILES TOTAL PROJECT	SHEET No.	TOTAL SHEETS
05	SB	154	0.0/5.5	5	29

REGISTERED CIVIL ENGINEER 3-26-12 DATE

3-26-12
PLANS APPROVAL DATE

REGISTERED PROFESSIONAL ENGINEER ARMAN ASEFVAZIRI No. 52047 Exp. 12-31-12 CIVIL STATE OF CALIFORNIA

THE STATE OF CALIFORNIA OR ITS OFFICERS OR AGENTS SHALL NOT BE RESPONSIBLE FOR THE ACCURACY OR COMPLETENESS OF SCANNED COPIES OF THIS PLAN SHEET.

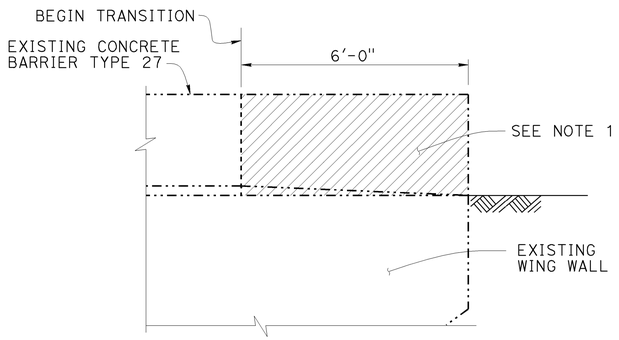

CONCRETE REMOVAL

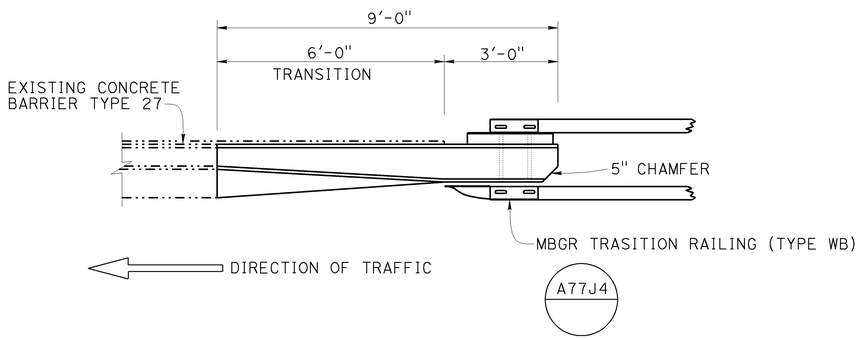

PLAN

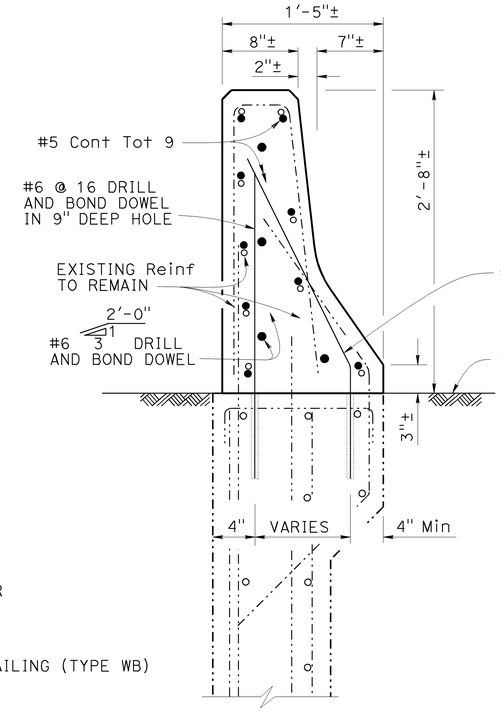

SECTION B-B

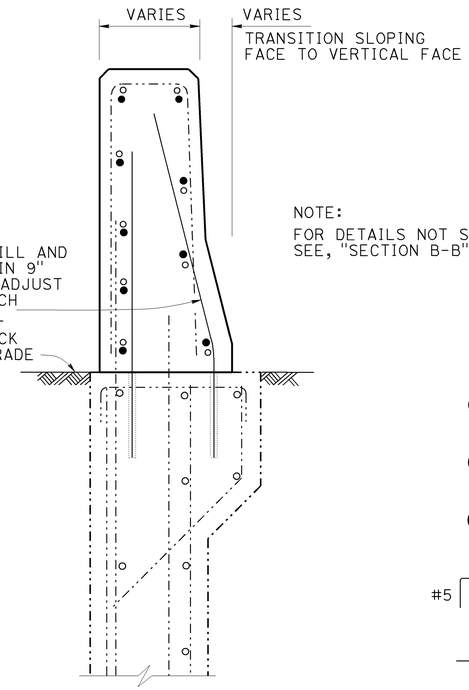

NOTE:
FOR DETAILS NOT SHOWN SEE, "SECTION B-B"

SECTION C-C

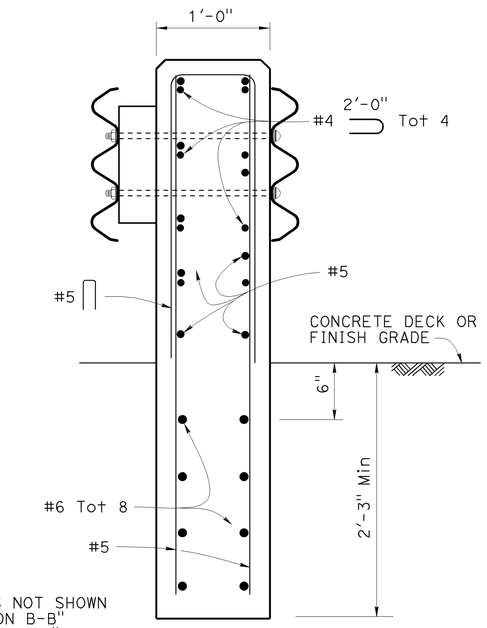

NOTE:
FOR DETAILS NOT SHOWN SEE, "SECTION B-B" AND "SECTION C-C"

SECTION D-D

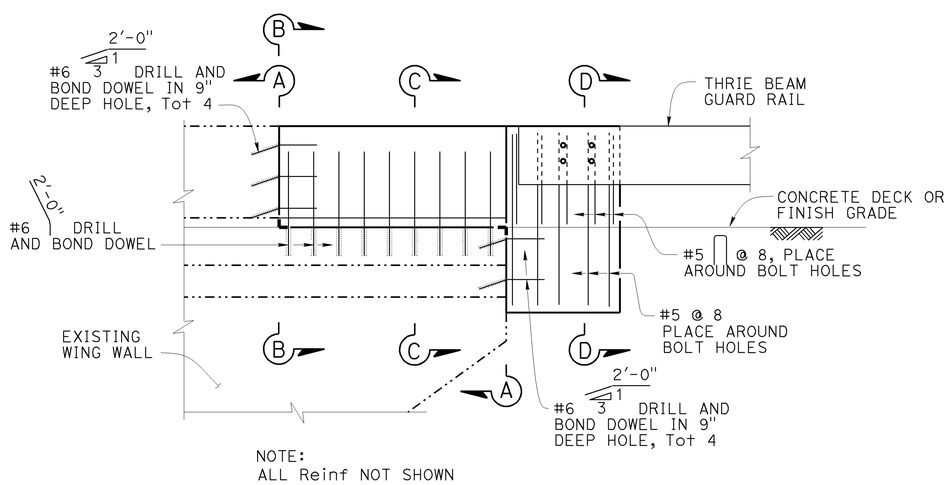

NOTE:
ALL Reinf NOT SHOWN

ELEVATION

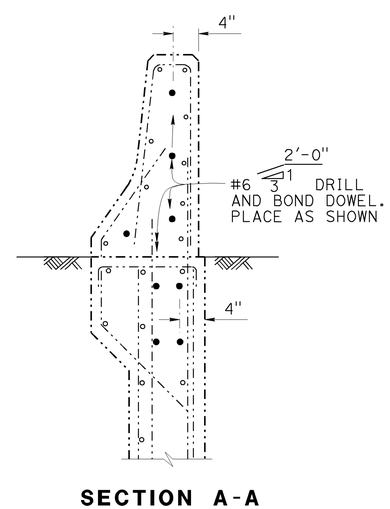

SECTION A-A

NOTES:

1. CUT AND REMOVE THE PORTION OF CONCRETE BARRIER TYPE 27 AS REQUIRED. EXISTING REINFORCEMENT TO REMAIN
2. WINGWALL REINFORCEMENT TO REMAIN

LEGEND:

- INDICATES EXISTING STRUCTURE
- INDICATES NEW CONSTRUCTION
- CONCRETE REMOVAL
- INDICATES EXISTING REINFORCEMENT

NOTE:
THE CONTRACTOR SHALL VERIFY ALL CONTROLLING FIELD DIMENSIONS BEFORE ORDERING OR FABRICATING ANY MATERIAL.

CONCRETE BARRIER TRANSITION
PM 0.71

CONSTRUCTION DETAILS

NO SCALE

C-3

REVISED BY	DATE REVISED
AA	2-29-12

ARMAN ASEFVAZIRI — KELLY McCLAIN — CALCULATED-DESIGNED BY — CHECKED BY — FUNCTIONAL SUPERVISOR: KELLY McCLAIN

STATE OF CALIFORNIA - DEPARTMENT OF TRANSPORTATION — Caltrans® MAINTENANCE DESIGN

LAST REVISION 03-26-12 — DATE PLOTTED => 26-MAR-2012 — TIME PLOTTED => 13:43

Dist	COUNTY	ROUTE	POST MILES TOTAL PROJECT	SHEET No.	TOTAL SHEETS
05	SB	154	0.0/5.5	6	29

REGISTERED CIVIL ENGINEER 3-26-12 DATE

3-26-12
PLANS APPROVAL DATE

REGISTERED PROFESSIONAL ENGINEER ARMAN ASEFVAZIRI No. 52047 Exp. 12-31-12 CIVIL STATE OF CALIFORNIA

THE STATE OF CALIFORNIA OR ITS OFFICERS OR AGENTS SHALL NOT BE RESPONSIBLE FOR THE ACCURACY OR COMPLETENESS OF SCANNED COPIES OF THIS PLAN SHEET.

NOTE:

1. CUT AND REMOVE TYPE 9 BRIDGE RAILING AND MBGR AS REQUIRED

LEGEND:

-·-·- INDICATES EXISTING STUCTURE

——— INDICATES NEW STRUCTURE

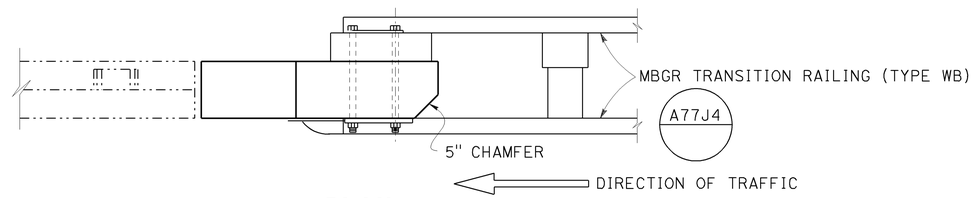

PLAN

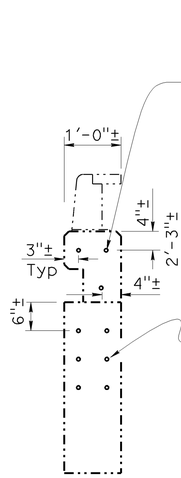

ALTERNATIVE 1
NO EXISTING END BLOCK

SECTION A-A

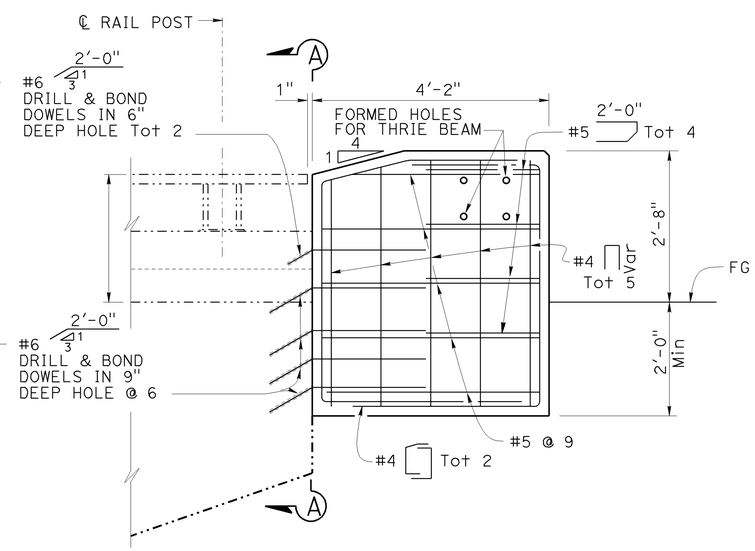

ELEVATION

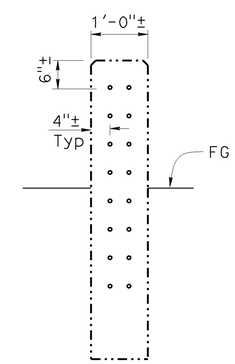

ALTERNATIVE 5
EXISTING END BLOCK

SECTION A-A

NOTE:
ALTERNATIVE 1 SHOWN (NO EXISTING END BLOCK),
ALTERNATIVE 5 SIMILAR (EXISTING END BLOCK)

NOTE:
THE CONTRACTOR SHALL VERIFY ALL CONTROLLING FIELD DIMENSIONS BEFORE ORDERING OR FABRICATING ANY MATERIAL.

CONCRETE BARRIER TRANSITION
ALAMO PINTADO BRIDGE

CONSTRUCTION DETAILS

NO SCALE

C-4

STATE OF CALIFORNIA - DEPARTMENT OF TRANSPORTATION
Caltrans® MAINTENANCE DESIGN

FUNCTIONAL SUPERVISOR: KELLY McCLAIN
CALCULATED-DESIGNED BY: ARMAN ASEFVAZIRI
CHECKED BY: KELLY McCLAIN
REVISED BY: AA
DATE REVISED: 2-29-12

LAST REVISION 03-26-12 | DATE PLOTTED => 26-MAR-2012 | TIME PLOTTED => 13:43

Dist	COUNTY	ROUTE	POST MILES TOTAL PROJECT	SHEET No.	TOTAL SHEETS
05	SB	154	0.0/5.5	7	29

REGISTERED CIVIL ENGINEER 3-26-12 DATE

3-26-12
PLANS APPROVAL DATE

REGISTERED PROFESSIONAL ENGINEER ARMAN ASEFVAZIRI No. 52047 Exp. 12-31-12 CIVIL STATE OF CALIFORNIA

THE STATE OF CALIFORNIA OR ITS OFFICERS OR AGENTS SHALL NOT BE RESPONSIBLE FOR THE ACCURACY OR COMPLETENESS OF SCANNED COPIES OF THIS PLAN SHEET.

NOTES:

1. ALL SIGNS SHALL BE BLACK ON ORANGE BACKGROUND.
2. EXISTING UTILITY FACILITIES HAVE NOT BEEN PLOTTED ON THESE PLANS.

STATIONARY MOUNTED CONSTRUCTION AREA SIGNS

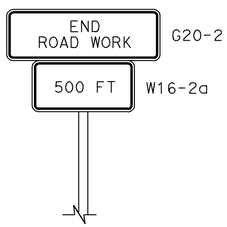

SIGN F DETAIL

SIGN NUMBER	SIGN CODE	PANEL SIZE	SIGN MESSAGE	No. OF POSTS AND SIZE	No. OF SIGNS
A	G20-1	36" x 18"	ROAD WORK AHEAD NEXT ___ MILE	1 - 4" x 6"	1
B	G20-2	36" x 18"	END ROAD WORK	1 - 4" x 6"	1
C	W20-1	30" x 30"	ROAD WORK AHEAD	1 - 4" x 4"	9
E	W20-1	48" X 48"	ROAD WORK AHEAD	1 - 4" X 4"	2
	W16-7pL OR W16-7pR	30" X 18"	(ONE DIRECTION LARGE ARROW)		
	G28-2(CA)	24" X 25"	CALIFORNIA 154 (STATE ROUTE MARKER)		
F	G20-2	36" x 18"	END ROAD WORK	1 - 4" X 4"	1
	W16-2a	24" X 12"	500 FT		

EXACT SIGN LOCATIONS TO BE DETERMINED BY THE ENGINEER.

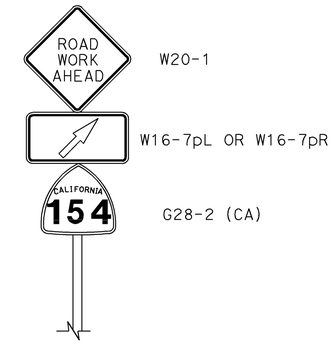

SIGN E DETAIL

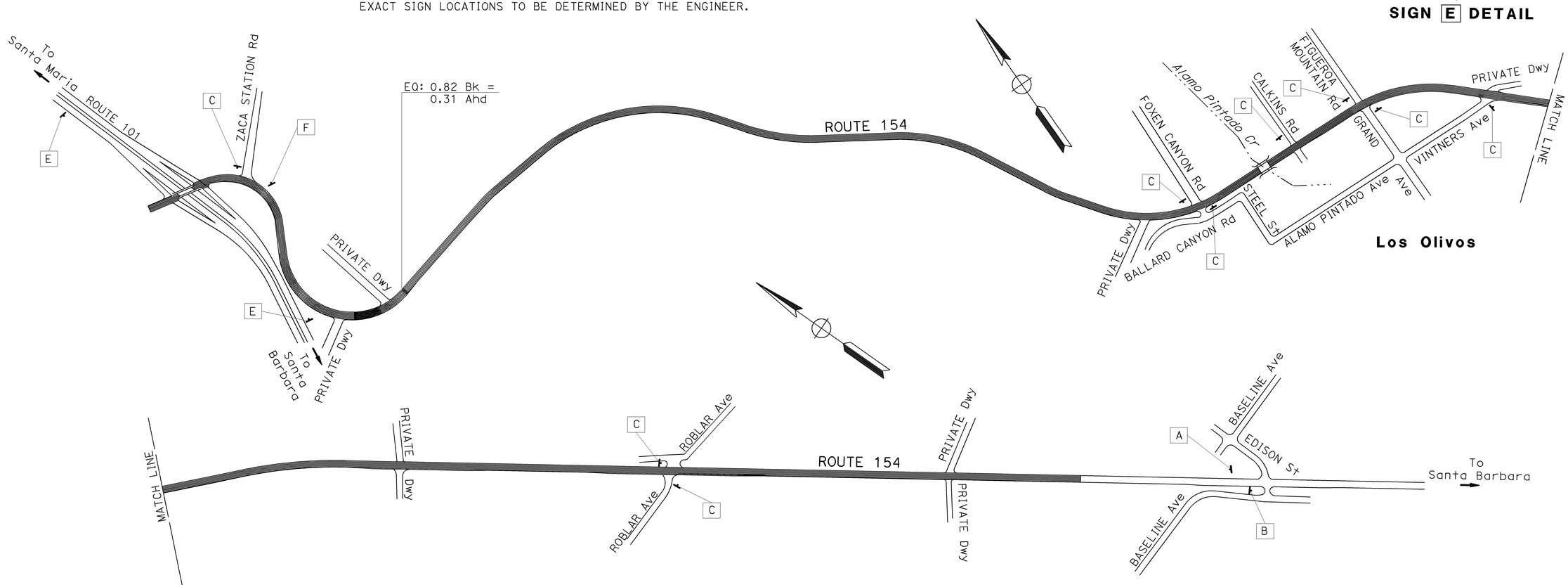

APPROVED FOR CONSTRUCTION AREA SIGN WORK ONLY

CONSTRUCTION AREA SIGNS

NO SCALE

CS-1

STATE OF CALIFORNIA - DEPARTMENT OF TRANSPORTATION
Caltrans® MAINTENANCE DESIGN

FUNCTIONAL SUPERVISOR: KELLY McCLAIN
ARMAN ASEFVAZIRI | REVISED BY: AA | DATE REVISED: 2-29-12
CALCULATED-DESIGNED BY | CHECKED BY: KELLY McCLAIN

LAST REVISION 03-26-12 | DATE PLOTTED => 26-MAR-2012 | TIME PLOTTED => 09:12

Dist	COUNTY	ROUTE	POST MILES TOTAL PROJECT	SHEET No.	TOTAL SHEETS
05	SB	154	0.0/5.5	8	29

REGISTERED CIVIL ENGINEER 3-26-12 DATE

3-26-12
PLANS APPROVAL DATE

REGISTERED PROFESSIONAL ENGINEER ARMAN ASEFVAZIRI No. 52047 Exp. 12-31-12 CIVIL STATE OF CALIFORNIA

THE STATE OF CALIFORNIA OR ITS OFFICERS OR AGENTS SHALL NOT BE RESPONSIBLE FOR THE ACCURACY OR COMPLETENESS OF SCANNED COPIES OF THIS PLAN SHEET.

PAVEMENT STRUCTURES

LIMIT	RUBBERIZED HMA (GAP GRADED)	HMA (TYPE A)				COLD PLANE AC PAVEMENT		TACK COAT		SHOULDER BACKING	PLACE HMA (Misc AREA)	ASPHALTIC EMULTION (FOG SEAL COAT)
		PROFILE CORRECTION	Rdwy REPAIR	HMA DIKE	Misc AREA	0.20'	0.10'	OVERLAY	Rdwy REPAIR			
PM	TON	TON				SQYD		TON		TON	SQYD	TON
0.0 TO 5.5	11,000	300	750	580	20	8600	2800	46	2	600	300	3
TOTAL	11,000	1650				11,400		48		600	300	3

REMOVE YELLOW THERMOPLASTIC

LIMIT	REMOVE YELLOW THERMOPLASTIC TRAFFIC STRIPE (HAZARDOUSE WASTE)					REMOVE YELLOW THERMOPLASTIC PAVEMENT MARKING (HAZARDOUSE WASTE)			
	SOLID			BROKEN					
	DETAIL								
	19	21 OR 22	28 OR 29	6	19	SLOW	SCHOOL	XING	CROSSWALK
PM	LF					SQFT			
0.0 TO 5.5	422	44,458	32,102	132	106	46	70	42	177
TOTAL	77,220					335			

REMOVE THERMOPLASTIC PAVEMENT MARKING

LIMIT	TYPE III ARROW		STOP		AHEAD	
	EA (N)	SQFT	EA (N)	SQFT	EA (N)	SQFT
0.0 TO 5.5	23	966	1	22	1	33
TOTAL	1021					

SURVEY MONUMENT (TYPE D)

Exist LOCATION		NEW LOCATION
PM	EA	
0.15	1	LOCATION TO BE DETERMINED BY SURVEYS
0.33	1	LOCATION TO BE DETERMINED BY SURVEYS
0.38	1	LOCATION TO BE DETERMINED BY SURVEYS
0.80	1	LOCATION TO BE DETERMINED BY SURVEYS
TOTAL	4	

STRIPING CHANGE

LIMIT	Exist STRIPING	NEW STRIPING
PM	DETAIL	
0.09 TO 0.12	21 WITH Mod 23	22
0.12 TO 0.16	29 WITH Mod 30	29
0.16 TO 0.19	21 WITH Mod 23	22
0.20 TO 0.32	29 WITH Mod 30	29
0.32 TO 0.51	21 WITH Mod 23	22
0.51 TO 0.61	29 WITH Mod 30	29
0.61 TO 0.68	21 WITH Mod 23	22
0.68 TO 0.80	29 WITH Mod 30	29
2.75 TO 2.80	29 WITH 30	29
2.80 TO 3.00	22 WITH 23	22
3.00 TO 3.12	29 WITH 30	29
3.20 TO 3.33	29 WITH 30	29
3.33 TO 3.40	22 WITH 23	22
4.36 TO 4.41	28 WITH 30	29
4.41 TO 4.51	21 WITH 23	22
4.51 TO 4.61	28 WITH 30	29
4.86 TO 4.94	28 WITH 30	29
4.94 TO 5.15	21 WITH 23	22
5.15 TO 5.32	28 WITH 30	29

TRAFFIC STRIPE AND PAVEMENT MARKERS

LIMIT	4" THERMOPLASTIC TRAFFIC STRIPE				4" THERMOPLASTIC TRAFFIC STRIPE (BROKEN 12-3)	4" THERMOPLASTIC TRAFFIC STRIPE (BROKEN 36-12)		8" THERMOPLASTIC TRAFFIC STRIPE	PAVEMENT MARKER (RETROREFLECTIVE)	
	DETAIL								TYPE	
	19	22	27B	29	27C	6	19	38	D	H
PM	LF								EA	
0.0 TO 5.5	422	44,458	60,466	32,102	280	528	422	3920	6457	19
TOTAL	137,448				280	950		3920	6476	

THERMOPLASTIC PAVEMENT MARKING

LIMIT	TYPE III ARROW		STOP		AHEAD		SLOW		SCHOOL		XING		LIMIT LINE AND CROSSWALK	YELLOW CROSSWALK
	EA (N)	SQFT	EA (N)	SQFT	EA (N)	SQFT	EA (N)	SQFT	EA (N)	SQFT	EA (N)	SQFT	SQFT	SQFT
0.0 TO 5.5	23	966	18	396	1	33	2	46	2	70	2	42	560	177
TOTAL	2290													

(N) - NOT A SEPARATE PAY ITEM, FOR INFORMATION ONLY.

REMOVE THERMOPLASTIC TRAFFIC STRIPE

LIMIT	4" THERMOPLASTIC TRAFFIC STRIPE	4" THERMOPLASTIC TRAFFIC STRIPE (BROKEN 12-3)	8" THERMOPLASTIC
	DETAIL		
	27B	27C	38
	LF		
0.0 TO 5.5	60,466	282	7822
TOTAL	68,570		

SUMMARY OF QUANTITIES
Q-1

REVISED BY	DATE REVISED
AA	2-29-12

ARMAN ASEFVAZIRI — KELLY McCLAIN — CALCULATED-DESIGNED BY — CHECKED BY — FUNCTIONAL SUPERVISOR: KELLY McCLAIN

STATE OF CALIFORNIA - DEPARTMENT OF TRANSPORTATION — Caltrans — MAINTENANCE DESIGN

LAST REVISION 03-26-12 — DATE PLOTTED => 26-MAR-2012 — TIME PLOTTED => 09:12

Dist	COUNTY	ROUTE	POST MILES TOTAL PROJECT	SHEET No.	TOTAL SHEETS
05	SB	154	0.0/5.5	9	29

REGISTERED CIVIL ENGINEER 3-26-12 DATE

3-26-12
PLANS APPROVAL DATE

REGISTERED PROFESSIONAL ENGINEER ARMAN ASEFVAZIRI No. 52047 Exp. 12-31-12 CIVIL STATE OF CALIFORNIA

THE STATE OF CALIFORNIA OR ITS OFFICERS OR AGENTS SHALL NOT BE RESPONSIBLE FOR THE ACCURACY OR COMPLETENESS OF SCANNED COPIES OF THIS PLAN SHEET.

COLD PLANE AND HMA AC DIKE

	LIMIT	COLD PLANE AC DIKE	PLACE HMA DIKE (TYPE A)	(TYPE C)	(TYPE E)	(TYPE F)
	PM	SQYD	LF			
EASTBOUND	0.08 TO 0.09	5	53			
	0.10 TO 0.21	86			581	
	0.40 TO 0.55	81	792			
	0.32 TO 0.39	38	370			
	0.39 TO 0.57	141			950	
	0.57 TO 0.60	16	158			
	0.60 TO 0.72	94			634	
	0.72 TO 1.16	237	2323			
	1.16 TO 1.24	63			422	
	1.36 TO 1.58	118	1162			
	1.58 TO 1.68	78			528	
	3.17 TO 3.84	360	3538			
WESTBOUND	0.0 TO 0.01	5	53			
	0.02 TO 0.03	5				53
	0.10 TO 0.11	4		53		
	0.75 TO 0.76	4		53		
	0.76 TO 0.81	27	264			
	0.32 TO 0.35	16				158
	0.36 TO 0.36	4		53		
	0.36 TO 0.41	27	264			
	0.41 TO 0.42	4		53		
	0.42 TO 0.53	59				581
	0.53 TO 0.54	4		53		
	0.54 TO 0.64	54	528			
	0.64 TO 0.65	4		53		
	0.65 TO 0.71	32				317
	1.20 TO 1.26	32				317
	1.26 TO 1.27	4		53		
	1.27 TO 1.50	124	1214			
	1.50 TO 1.58	63			422	
	1.70 TO 2.06	194	1901			
	2.20 TO 2.31	59	581			
	2.31 TO 2.34	16				158
	2.34 TO 2.37	23			158	
	2.99 TO 3.13	75	739			
	3.19 TO 3.20	4		53		
	3.20 TO 3.36	86				845
	3.36 TO 3.37	5		53		
	3.37 TO 3.84	253	2482			
	4.96 TO 5.15	102	1003			
	TOTAL	2606	17,425	477	3696	2429

ROADWAY REPAIR SUMMARY TABLE

LOCATION	EASTBOUND LENGTH	WIDTH	COLD PLANE AC Pvmt	HMA (TYPE A)	TACK COAT
PM	FT	FT	SQYD	TON	TON
0.20	75	4	33	4	0.01
0.25	125	4	56	7	0.02
0.30	25	4	11	1	0.01
0.52 TO 0.70	875	12	1167	149	0.34
0.50 TO 0.15	500	4	222	28	0.06
0.18	75	4	100	13	0.03
0.37	225	4	100	13	0.03
0.44	100	4	44	6	0.01
0.46	275	4	122	16	0.04
0.98	175	4	78	10	0.02
1.10	100	4	44	6	0.01
1.10	100	4	44	6	0.01
1.20	275	4	122	16	0.04
SUBTOTAL			* 2144	* 274	* 0.63

* QUANTITIES ARE INCLUDED IN PAVEMENT STRUCTURES.

LOCATION	WESTBOUND LENGTH	WIDTH	COLD PLANE AC Pvmt	HMA (TYPE A)	TACK COAT
PM	FT	FT	SQYD	TON	TON
0.20	250	4	111	14	0.03
0.25	400	4	178	23	0.05
0.38	125	4	56	7	0.02
0.48	50	12	67	9	0.02
0.50	150	4	67	9	0.02
0.51	250	4	111	14	0.03
0.57	100	4	44	6	0.01
0.62	125	4	56	7	0.02
0.62	200	4	89	11	0.03
0.75	100	4	44	6	0.01
0.82	165	4	73	9	0.02
1.13	100	12	133	17	0.04
1.25	50	4	22	3	0.01
2.25	125	4	56	7	0.02
2.21	250	4	111	14	0.03
2.35	50	4	22	3	0.01
2.52	25	4	11	1	0.00
2.58	50	12	67	9	0.02
2.58	50	12	67	9	0.02
2.82	200	4	89	11	0.03
SUBTOTAL			* 1473	* 188	* 0.45

* QUANTITIES ARE INCLUDED IN PAVEMENT STRUCTURES.

METAL BEAM GUARD RAILING

DIRECTION	LOCATION	RECONSTRUCT MBGR	REMOVE MBGR	REMOVE CAA (N)	ALTERNATIVE FLARED TERMINAL SYSTEM	TRANSITION RAILING (TYPE WB)	CONCRETE BARRIER TRANSITION	BURIED POST END ANCHOR (N)
	PM	LF	LF	EA	EA	EA	LF	EA
EB	0.71/0.78	175	75	2	2	2	18	
EB	ALAMO PINTADO Br		75	2	2	2	9	
WB	0.36/0.76	600	37.5	1	1			1
WB	0.41/0.54	700	37.5	1	1			1
WB	0.64/0.79	675	75	2	2			
WB	1.04/1.27	1162.5	37.5	1	1			1
WB	2.31/2.34	87.5	75	2	2			
WB	ALAMO PINTADO Br		75	2	2	2	9	
WB	3.20/3.34	900	37.5	1	1			1
TOTAL		4300	525		14	6	36	

(N) NOT A SEPARATE PAY ITEM, FOR INFORMATION ONLY.

SUMMARY OF QUANTITIES
Q-2

STATE OF CALIFORNIA - DEPARTMENT OF TRANSPORTATION
Caltrans MAINTENANCE DESIGN

FUNCTIONAL SUPERVISOR: KELLY McCLAIN
CALCULATED-DESIGNED BY: ARMAN ASEFVAZIRI
CHECKED BY: KELLY McCLAIN
REVISED BY: AA
DATE REVISED: 2-29-12

LAST REVISION 03-26-12
DATE PLOTTED => 26-MAR-2012
TIME PLOTTED => 09:12

DIST	COUNTY	ROUTE	POST MILES TOTAL PROJECT	SHEET NO.	TOTAL SHEETS
05	SB	154	0.0/5.5	10	29

Mark S. Turner
PROFESSIONAL LAND SURVEYOR

June 30, 2006
PLANS APPROVAL DATE

LICENSED LAND SURVEYOR
Mark S. Turner
No. 6228
Exp. 3-31-08
STATE OF CALIFORNIA

The State of California or its officers or agents shall not be responsible for the accuracy or completeness of electronic copies of this plan sheet.

To accompany plans dated 3-26-12

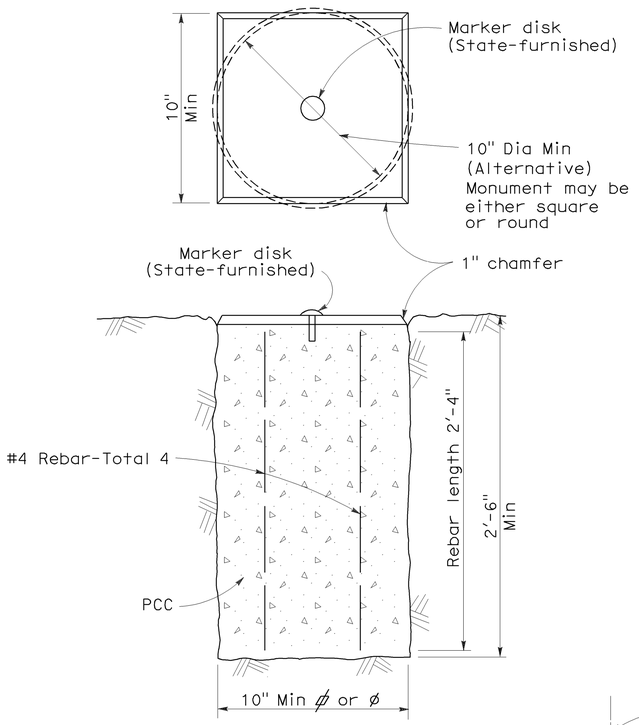

TYPE A

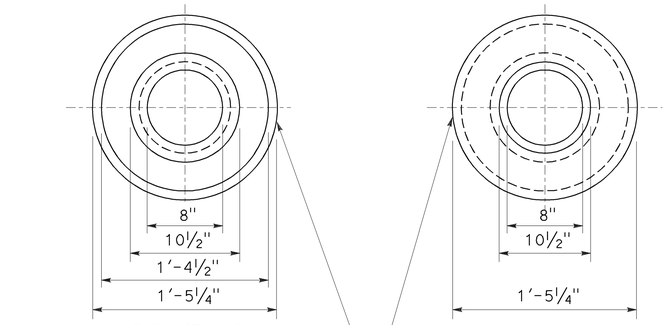

TOP VIEW OF
MONUMENT OF WELL RING

BOTTOM VIEW OF
MONUMENT OF WELL RING

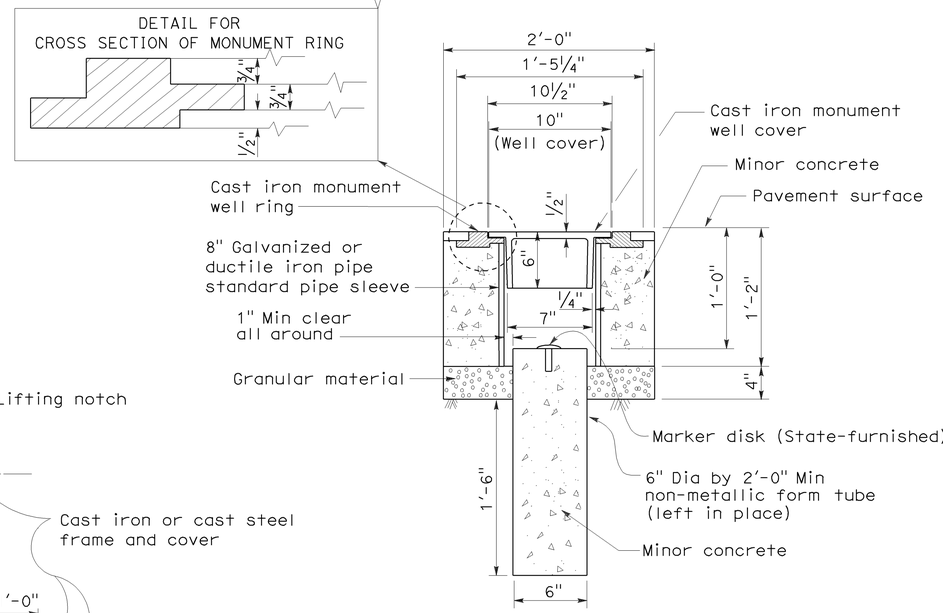

TYPE B

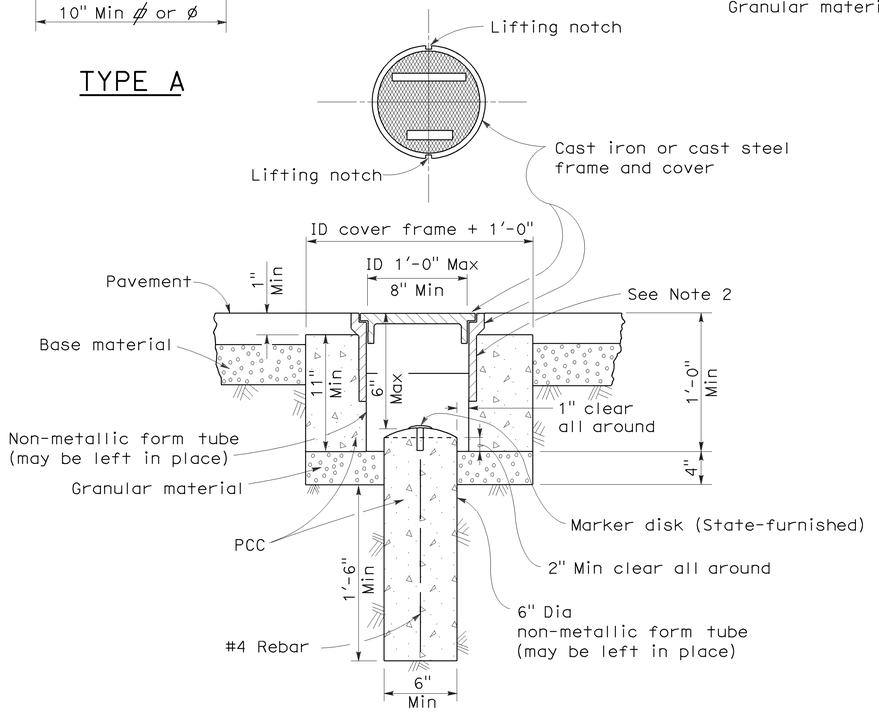

TYPE D
Alternative No. 1

NOTES:

1. The configuration of the cast iron or cast steel frame and cover may vary from that shown.
2. Frame shall be embedded in the concrete a minimum of 3".
3. Type D monument shall be either Alternative No. 1 or Alternative No. 2 at the contractor's option.
4. All portland cement concrete shall be Class 2 or minor concrete with 1" maximum aggregate.

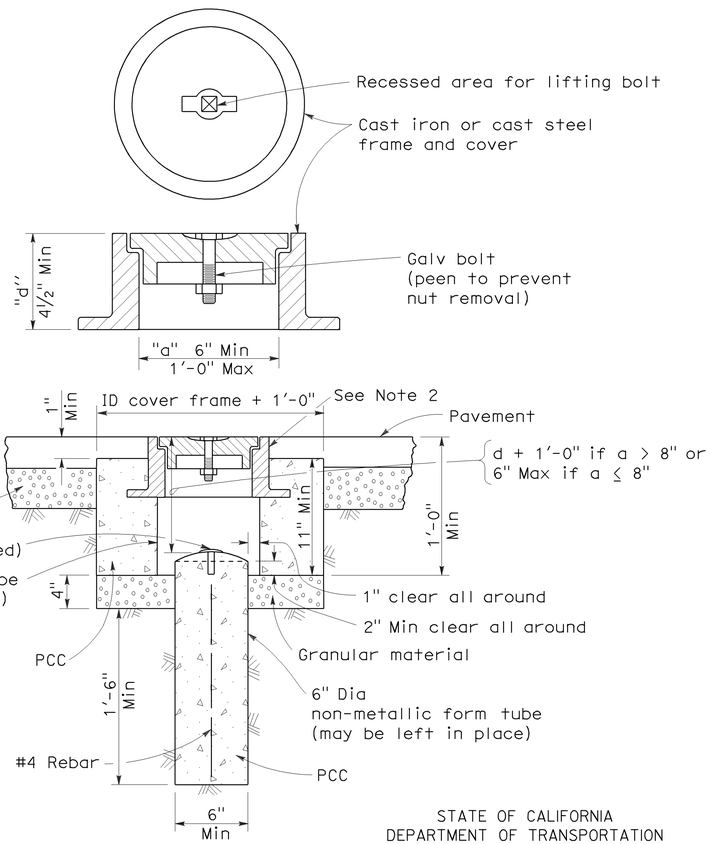

TYPE D
Alternative No. 2

STATE OF CALIFORNIA
DEPARTMENT OF TRANSPORTATION

SURVEY MONUMENTS

NO SCALE

RSP A74 DATED JUNE 30, 2006 SUPERSEDES STANDARD PLAN DATED MAY 1, 2006 - PAGE 28 OF THE STANDARD PLANS BOOK DATED MAY 2006.

REVISED STANDARD PLAN RSP A74

2006 REVISED STANDARD PLAN RSP A74

5-24-06

Dist	COUNTY	ROUTE	POST MILES TOTAL PROJECT	SHEET No.	TOTAL SHEETS
05	SB	154	0.0/5.5	11	29

Randell D. Hiatt
REGISTERED CIVIL ENGINEER

May 20, 2011
PLANS APPROVAL DATE

REGISTERED PROFESSIONAL ENGINEER
Randell D. Hiatt
No. C50200
Exp. 6-30-11
CIVIL
STATE OF CALIFORNIA

The State of California or its officers or agents shall not be responsible for the accuracy or completeness of electronic copies of this plan sheet.

To accompany plans dated 3-26-12

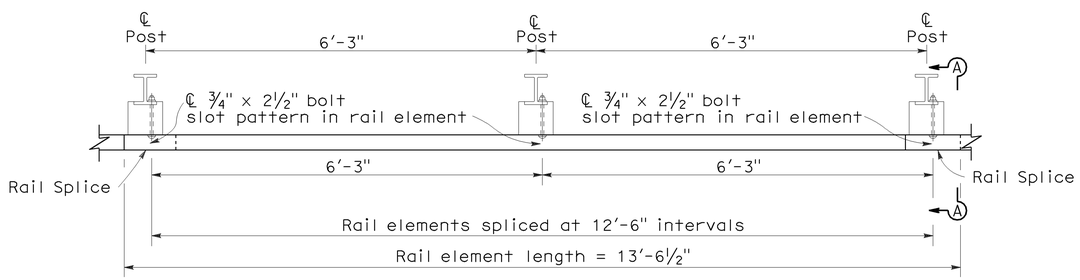

PLAN

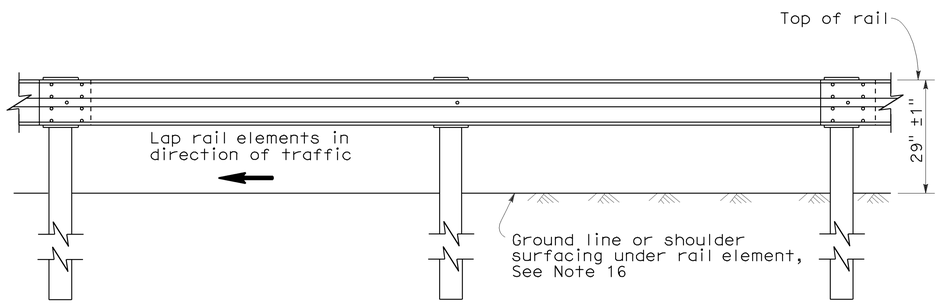

ELEVATION

METAL BEAM GUARD RAILING WITH STEEL POSTS AND NOTCHED WOOD OR NOTCHED RECYCLED PLASTIC BLOCKS

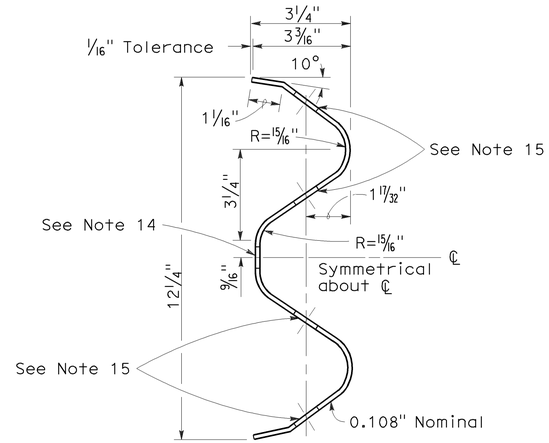

SECTION THRU RAIL ELEMENT

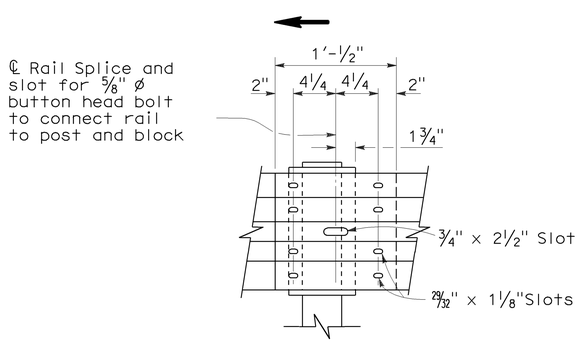

ELEVATION

RAIL ELEMENT SPLICE DETAIL

a) Connect the over lapped end of the rail elements with ⅝" ø × 1⅜" button head oval shoulder splice bolts inserted into the 29⁄32" × 1⅛" slots and bolted together with ⅝" ø recessed hex nuts. Recess of hex nut points toward rail element. A total of 8 bolts and nuts are to be used at each rail splice connection.

b) The ends of the rail elements are to be overlapped in the direction of traffic (see details).

c) Where end cap is to be attached to the end of a rail element, a total of 4 of the above described splice bolts and nuts are to be used.

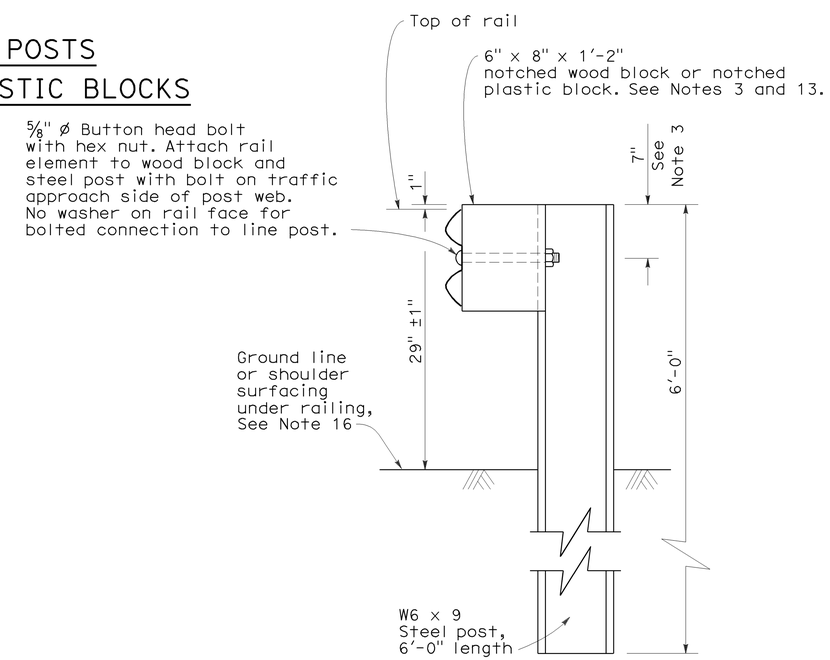

SECTION A-A

TYPICAL STEEL LINE POST INSTALLATION

See Note 4

NOTES:

1. For details of wood post installations, see Standard Plan A77A1.
2. For details of standard hardware used to construct guard railing, see Standard Plan A77B1.
3. For details of steel posts and notched wood blocks used to construct guard railing, see Standard Plan A77C2.
4. For additional installation details, see Standard Plan A77C3.
5. Guard railing post spacing to be 6′-3" center to center, except as otherwise noted.
6. For guard railing typical layouts, see the A77E, A77F and A77G Series of Standard Plans.
7. For terminal system end treatment details, see the A77L Series of Standard Plans. To connect railing to terminal system end treatment, transition the top of railing height at a ratio of 120:1 to terminal system end treatment height plus one 12′-6" standard railing section at the transitioned height for a horizontal connection to the end treatment.
8. For guard railing end anchor details, see Standard Plans A77H1 and A77I2.
9. For details of guard railing transition to bridge railing, see Standard Plan A77J4.
10. For additional details of guard railing connection to bridge railings, see Standard Plans A77J1, A77J2 and A77K1.
11. For dike positioning and guard railing delineation details, see Standard Plan A77C4.
12. Direction of adjacent traffic indicated by → .
13. Notched face of block faces steel post.
14. Slotted hole for bolted connection of rail element to block and post. See "Section Thru Rail Element".
15. Slotted holes for splice bolts to overlap ends of rail element. See "Section Thru Rail Element".
16. Install posts in soil.

STATE OF CALIFORNIA
DEPARTMENT OF TRANSPORTATION

METAL BEAM GUARD RAILING STANDARD RAILING SECTION (STEEL POST WITH NOTCHED WOOD OR NOTCHED RECYCLED PLASTIC BLOCK)

NO SCALE

RSP A77A2 DATED MAY 20, 2011 SUPERSEDES STANDARD PLAN A77A2 DATED MAY 1, 2006 - PAGE 42 OF THE STANDARD PLANS BOOK DATED MAY 2006.

REVISED STANDARD PLAN RSP A77A2

2006 REVISED STANDARD PLAN RSP A77A2

5-4-11

To accompany plans dated 3-26-12

Dist	COUNTY	ROUTE	POST MILES TOTAL PROJECT	SHEET No.	TOTAL SHEETS
05	SB	154	0.0/5.5	12	29

Randell D. Hiatt
REGISTERED CIVIL ENGINEER

May 20, 2011
PLANS APPROVAL DATE

REGISTERED PROFESSIONAL ENGINEER
Randell D. Hiatt
No. C50200
Exp. 6-30-11
CIVIL
STATE OF CALIFORNIA

The State of California or its officers or agents shall not be responsible for the accuracy or completeness of electronic copies of this plan sheet.

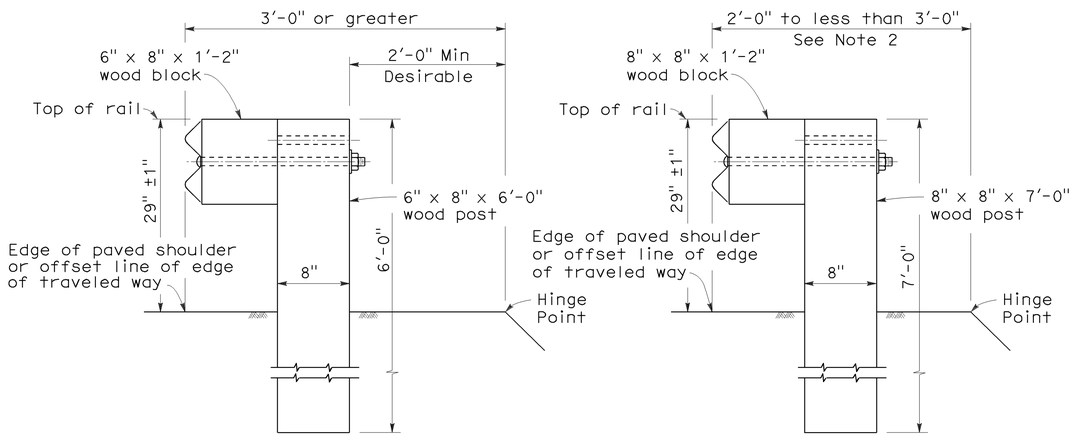

DETAIL A
TYPICAL ROADWAY INSTALLATION
See Note 1

DETAIL B
NARROW ROADWAY INSTALLATION
See Note 1

POST EMBEDMENT

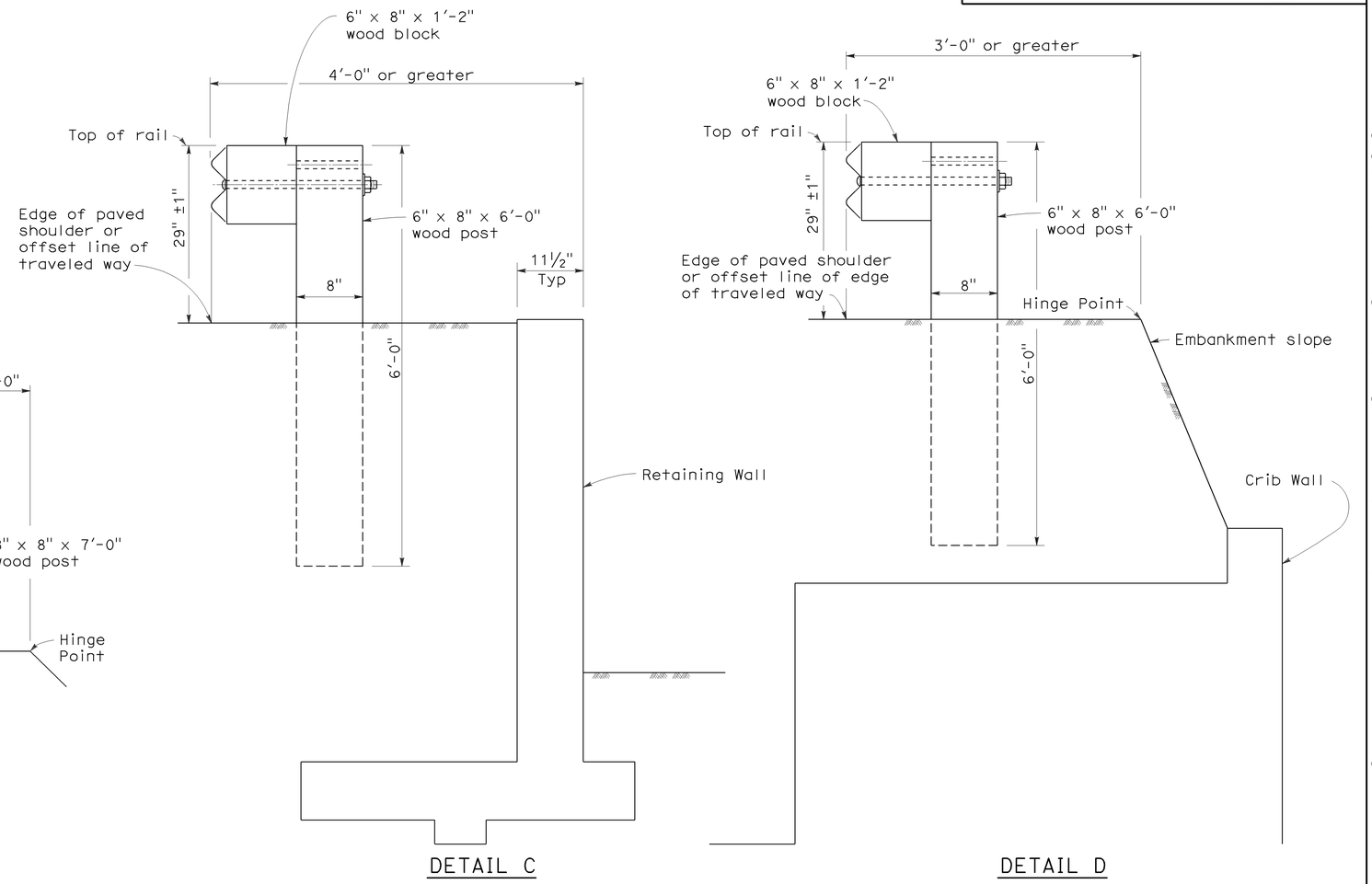

DETAIL C

DETAIL D

INSTALLATION AT EARTH RETAINING WALLS

NOTES:

1. These installation details also applicable to steel line post installations. For Detail A, C, and D, where steel line post installations are constructed, W6 x 9 steel post, 6'-0" in length, with 6" x 8" x 1'-2" notched wood blocks or notched recycled plastic blocks are to be used in place of the size of wood post and wood block shown. For Detail B, where steel line post installations are constructed, W6 x 9 steel post, 7'-0" in length, with 6" x 8" x 1'-2" notched wood blocks or notched recycled plastic blocks are to be used in place of the size of wood post and wood block shown. For additional installation details, see Standard Plans A77A1 and A77A2.
2. Where the distance between the face of the rail and the hinge point is less than 2'-0", see the Project Plans for special details.
3. For dike positioning with guard railing installations, see Standard Plan A77C4.

STATE OF CALIFORNIA
DEPARTMENT OF TRANSPORTATION

METAL BEAM GUARD RAILING TYPICAL LINE POST EMBEDMENT AND HINGE POINT OFFSET DETAILS

NO SCALE

RSP A77C3 DATED MAY 20, 2011 SUPERSEDES STANDARD PLAN A77C3
DATED MAY 1, 2006 - PAGE 46 OF THE STANDARD PLANS BOOK DATED MAY 2006.

REVISED STANDARD PLAN RSP A77C3

2006 REVISED STANDARD PLAN RSP A77C3

3-10-11

Dist	COUNTY	ROUTE	POST MILES TOTAL PROJECT	SHEET No.	TOTAL SHEETS
05	SB	154	0.0/5.5	13	29

Randell D. Hiatt
REGISTERED CIVIL ENGINEER

May 20, 2011
PLANS APPROVAL DATE

REGISTERED PROFESSIONAL ENGINEER
Randell D. Hiatt
No. C50200
Exp. 6-30-11
CIVIL
STATE OF CALIFORNIA

The State of California or its officers or agents shall not be responsible for the accuracy or completeness of electronic copies of this plan sheet.

To accompany plans dated 3-26-12

NOTES:

1. When necessary to place dike in front of face of guard railing, only Type C dike may be used. For dike details, see Standard Plan A87B.
2. For standard railing post embedment, see Standard Plans A77C3.
3. Guard railing delineation to be used where shown on the Project Plans.
4. When dike or curb is placed under guard railing, the maximum height of the dike or curb shall be 4". Mountable dike should not be used. For dike and curb details, see Standard Plans A87A and A87B.
5. For details of typical distance between the face of rail and hinge point, see Standard Plan A77C3.
6. For steel line posts, use 1/4 - 20 self-tapping screws in 0.22" diameter holes or 1/4" bolts in 9/32" diameter holes.

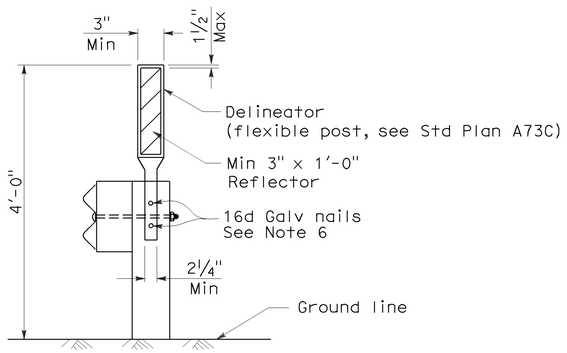

GUARD RAILING DELINEATION

See Note 3

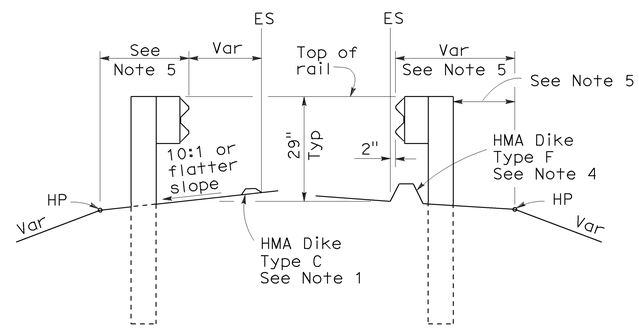

DIKE POSITIONING

See Note 1

STATE OF CALIFORNIA
DEPARTMENT OF TRANSPORTATION

METAL BEAM GUARD RAILING TYPICAL RAILING DELINEATION AND DIKE POSITIONING DETAILS

NO SCALE

RSP A77C4 DATED MAY 20, 2011 SUPERSEDES RSP A77C4 DATED JUNE 6, 2008 AND STANDARD PLAN A77C4 DATED MAY 1, 2006 - PAGE 47 OF THE STANDARD PLANS BOOK DATED MAY 2006.

REVISED STANDARD PLAN RSP A77C4

2006 REVISED STANDARD PLAN RSP A77C4

3-10-11

DIST	COUNTY	ROUTE	POST MILES TOTAL PROJECT	SHEET NO.	TOTAL SHEETS
05	SB	154	0.0/5.5	14	29

Randell D. Hiatt
REGISTERED CIVIL ENGINEER

June 6, 2008
PLANS APPROVAL DATE

REGISTERED PROFESSIONAL ENGINEER
Randell D. Hiatt
No. C50200
Exp. 6-30-09
CIVIL
STATE OF CALIFORNIA

The State of California or its officers or agents shall not be responsible for the accuracy or completeness of electronic copies of this plan sheet.

To accompany plans dated 3-26-12

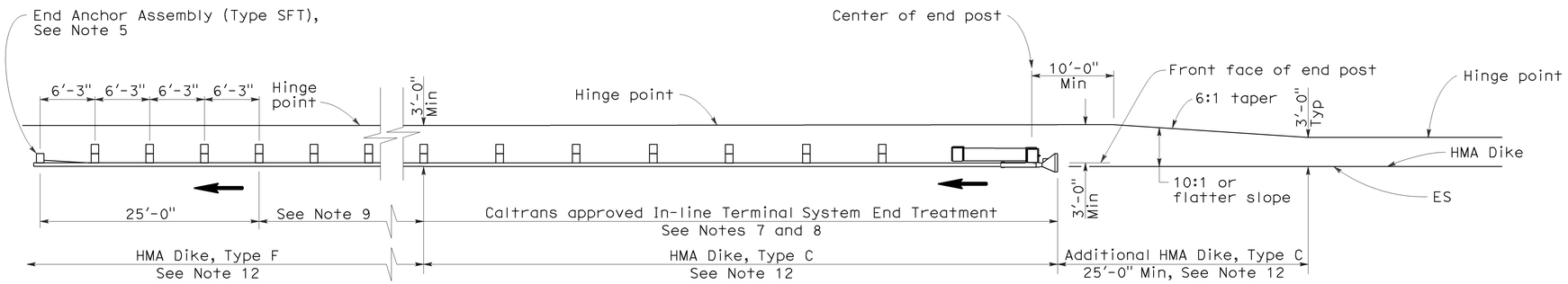

TYPE 11A LAYOUT

(EMBANKMENT GUARD INSTALLATION WITH IN-LINE END TREATMENT AT TRAFFIC APPROACH END OF RAILING)
See Note 6

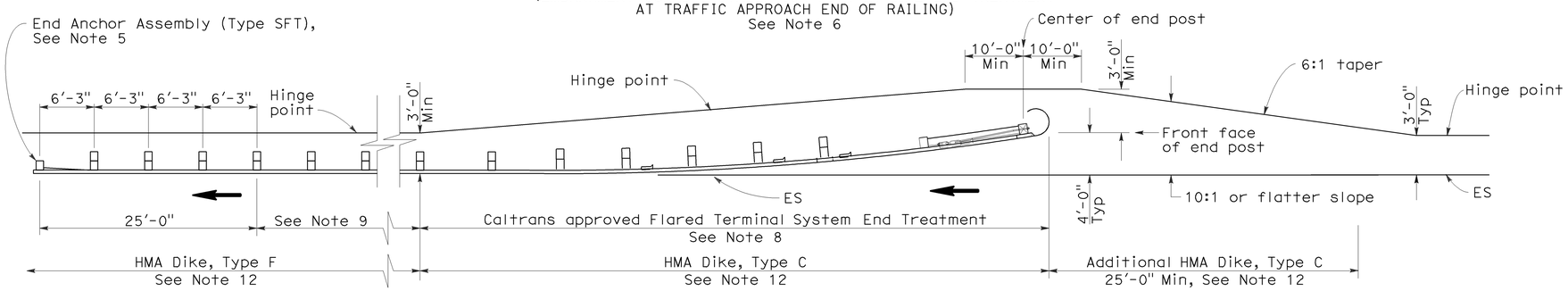

TYPE 11B LAYOUT

(EMBANKMENT GUARD RAILING INSTALLATION WITH FLARED END TREATMENT AT TRAFFIC APPROACH END OF RAILING)
See Note 6

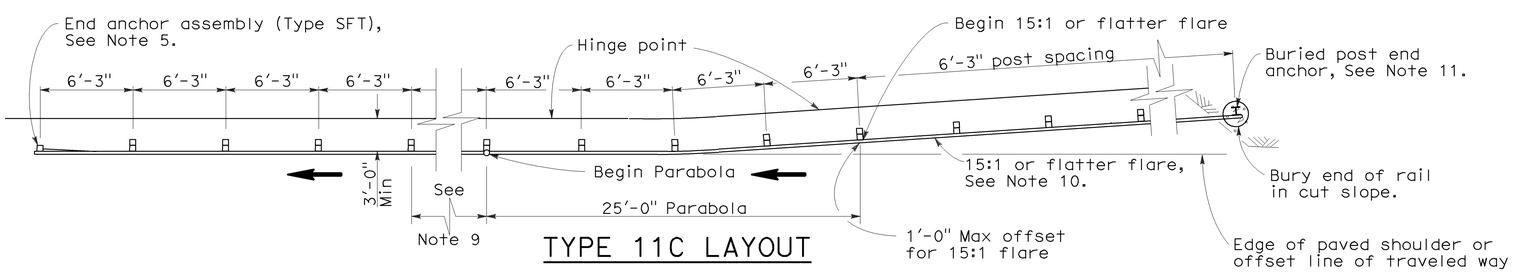

TYPE 11C LAYOUT

(EMBANKMENT GUARD RAILING INSTALLATION WITH BURIED END ANCHOR TREATMENT AT TRAFFIC APPROACH END OF RAILING)
See Notes 6 and 12

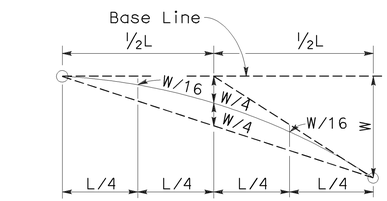

TYPICAL PARABOLIC LAYOUT

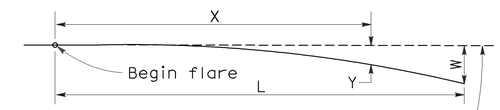

Base Line (Edge of paved shoulder or offset line of edge of traveled way)

$$Y = \frac{WX^2}{L^2}$$

Y = Offset from base line
W = Maximum offset
X = Distance along base line
L = Length of flare

PARABOLIC FLARE OFFSETS

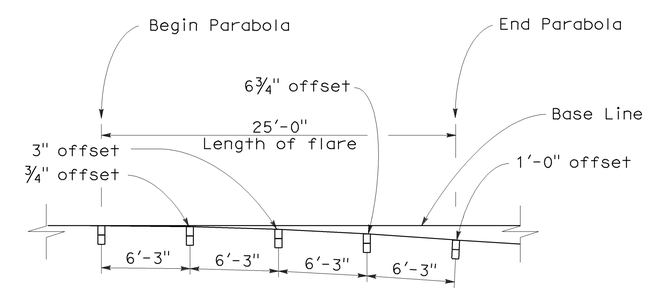

TYPICAL FLARE OFFSETS FOR 1 FOOT MAX END OFFSET

NOTES:

1. Line post, blocks and hardware to be used are shown on Standard Plans A77A1, A77A2, A77B1, A77C1, and A77C2.
2. Guard rail post spacing to be 6'-3" center to center, except as otherwise noted.
3. Except as noted, line posts are 6" x 8" x 6'-0" wood with 6" x 8" x 1'-2" wood blocks. W6 x 9 steel posts, 6'-0" in length, with 6" x 8" x 1'-2" notched wood blocks or recycled plastic blocks may be used for 6" x 8" x 6'-0" wood post with 6" x 8" x 1'-2" wood blocks where applicable and when specified.
4. Direction of adjacent traffic indicated by ➡.
5. For End Anchor Assembly (Type SFT) details, see Standard Plan A77H1.
6. Layout Types 11A, 11B or 11C are typically used where guard railing is recommended to shield embankment slopes and a crashworthy end treatment is required for only one direction of traffic.
7. In-line Terminal System End Treatments are used where site conditions will not accommodate a flared end treatment.
8. The type of terminal system end treatment to be used will be shown on the Project Plans.
9. Dependent on site conditions (embankment height and side slope), construction of additional guard railing (length equal to multiples of 12'-6" with 6'-3" post spacing) may be advisable.
10. The 15:1 or flatter flare used with buried end anchors is based on the edge of the paved shoulder or offset line of edge of the traveled way. The length of guard railing within the 15:1 or flatter flare is based on site conditions and should be a length equal to multiples of 12'-6".
11. For details of the buried post end anchor used with Type 11C Layout, see Standard Plan A77I2.
12. Where placement of dike is required with guard railing installations, see Revised Standard Plan RSP A77C4 for dike positioning details.

STATE OF CALIFORNIA
DEPARTMENT OF TRANSPORTATION

METAL BEAM GUARD RAILING TYPICAL LAYOUTS FOR EMBANKMENTS

NO SCALE

RSP A77E1 DATED JUNE 6, 2008 SUPERSEDES STANDARD PLAN A77E1 DATED MAY 1, 2006 - PAGE 48 OF THE STANDARD PLANS BOOK DATED MAY 2006.

REVISED STANDARD PLAN RSP A77E1

2006 REVISED STANDARD PLAN RSP A77E1

12-10-07

DIST	COUNTY	ROUTE	POST MILES TOTAL PROJECT	SHEET NO.	TOTAL SHEETS
05	SB	154	0.0/5.5	15	29

Randell D. Hiatt
REGISTERED CIVIL ENGINEER

June 6, 2008
PLANS APPROVAL DATE

REGISTERED PROFESSIONAL ENGINEER
Randell D. Hiatt
No. C50200
Exp. 6-30-09
CIVIL
STATE OF CALIFORNIA

The State of California or its officers or agents shall not be responsible for the accuracy or completeness of electronic copies of this plan sheet.

To accompany plans dated 3-26-12

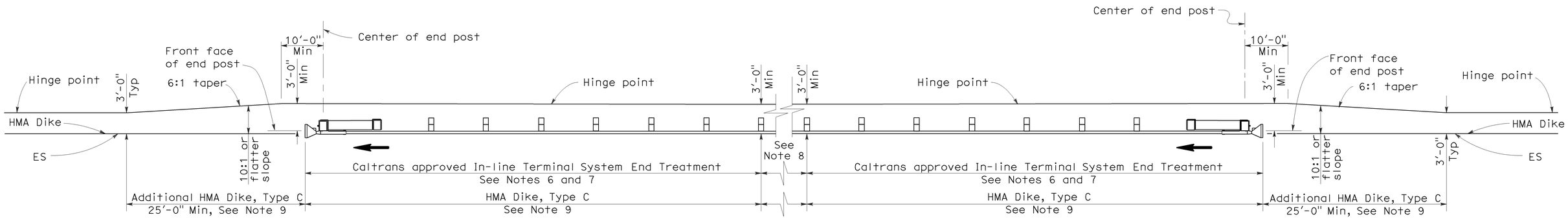

TYPE 11D LAYOUT

(EMBANKMENT GUARD RAILING INSTALLATION WITH IN-LINE END TREATMENT AT EACH END OF RAILING)
See Note 5

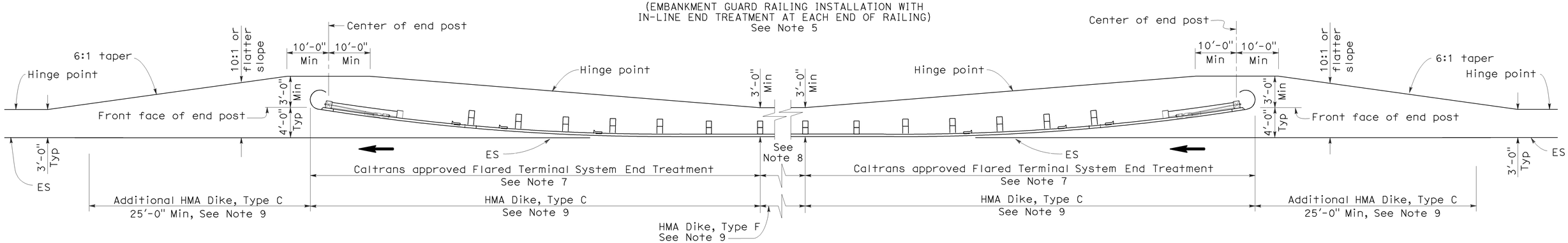

TYPE 11E LAYOUT

(EMBANKMENT GUARD RAILING INSTALLATION WITH FLARED END TREATMENT AT EACH END OF RAILING)
See Note 5

NOTES:

1. Line post, blocks and hardware to be used are shown on Standard Plans A77A1, A77A2, A77B1, A77C1 and A77C2.
2. Guard rail post spacing to be 6'-3" center to center, except as otherwise noted.
3. Except as noted, line posts are 6" x 8" x 6'-0" wood with 6" x 8" x 1'-2" wood blocks. W6 x 9 steel posts, 6'-0" in length, with 6" x 8" x 1'-2" notched wood blocks or plastic blocks may be used for 6" x 8" x 6'-0" wood post with 6" x 8" x 1'-2" wood blocks where applicable and when specified.
4. Direction of adjacent traffic indicated by ⟶.
5. Layout Types 11D through 11L, shown on the A77E Series of Revised Standard Plans, are typically used where guard railing is recommended to shield embankment slopes and a crashworthy end treatment is required for both directions of traffic.
6. In-line Terminal System End Treatments are used where site conditions will not accommodate a flared end treatment.
7. The type of terminal system end treatment to be used will be shown on the Project Plans.
8. Dependent on site conditions (embankment height and side slope), construction of additional guard railing (length equal to multiples of 12'-6" with 6'-3" post spacing) may be advisable.
9. Where placement of dike is required with guard railing installations, see Revised Standard Plan RSP A77C4 for dike positioning details.

STATE OF CALIFORNIA
DEPARTMENT OF TRANSPORTATION

METAL BEAM GUARD RAILING TYPICAL LAYOUTS FOR EMBANKMENTS

NO SCALE

RSP A77E2 DATED JUNE 6, 2008 SUPERSEDES STANDARD PLAN A77E2
DATED MAY 1, 2006 - PAGE 49 OF THE STANDARD PLANS BOOK DATED MAY 2006.

REVISED STANDARD PLAN RSP A77E2

2006 REVISED STANDARD PLAN RSP A77E2

12-10-07

DIST	COUNTY	ROUTE	POST MILES TOTAL PROJECT	SHEET NO.	TOTAL SHEETS
05	SB	154	0.0/5.5	16	29

Randell D. Hiatt
REGISTERED CIVIL ENGINEER

June 6, 2008
PLANS APPROVAL DATE

REGISTERED PROFESSIONAL ENGINEER
Randell D. Hiatt
No. C50200
Exp. 6-30-09
CIVIL
STATE OF CALIFORNIA

The State of California or its officers or agents shall not be responsible for the accuracy or completeness of electronic copies of this plan sheet.

To accompany plans dated 3-26-12

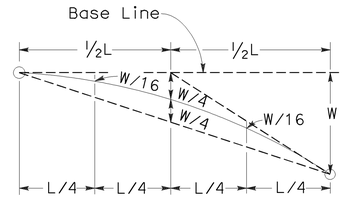

TYPICAL PARABOLIC LAYOUT

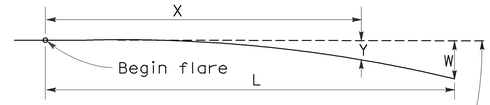

Base Line (Edge of paved shoulder or offset line of edge of traveled way)

$$Y = \frac{WX^2}{L^2}$$

Y = Offset from base line
W = Maximum offset
X = Distance along base line
L = Length of flare

PARABOLIC FLARE OFFSETS

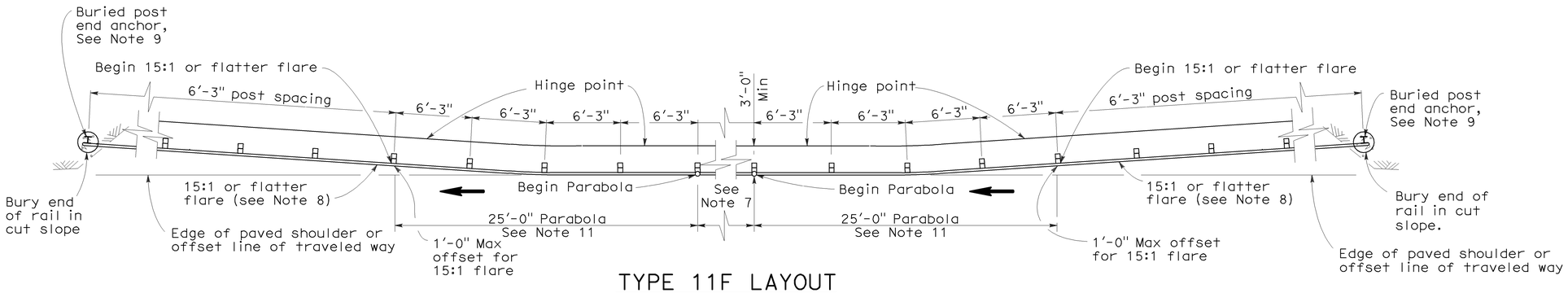

TYPE 11F LAYOUT

(EMBANKMENT GUARD RAILING INSTALLATION WITH A BURIED END ANCHOR TREATMENT AT EACH END OF RAILING)
See Notes 5 and 10

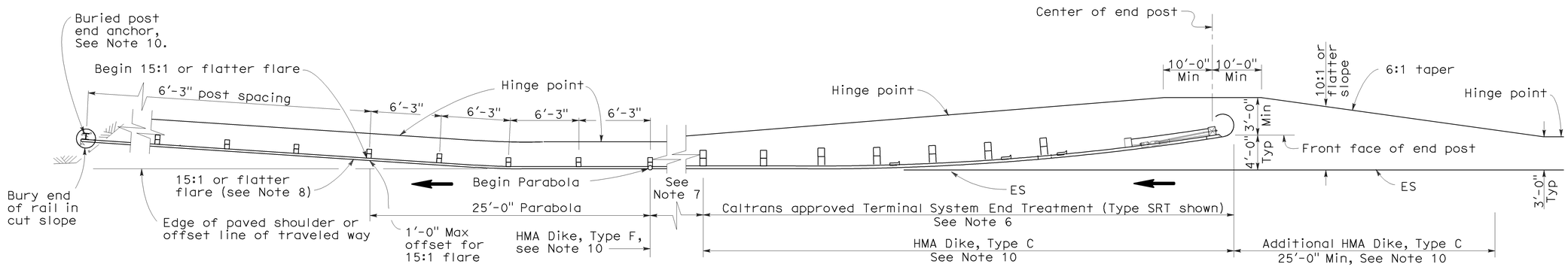

TYPE 11G LAYOUT

(EMBANKMENT GUARD RAILING INSTALLATION WITH FLARED END TREATMENT AND A BURIED END ANCHOR TREATMENT AT THE ENDS OF RAILING)
See Notes 5 and 10

NOTES:

1. Line post, blocks and hardware to be used are shown on Standard Plans A77A1, A77A2, A77B1, A77C1 and A77C2.
2. Guard rail post spacing to be 6'-3" center to center, except as otherwise noted.
3. Except as noted, line posts are 6" x 8" x 6'-0" wood with 6" x 8" x 1'-2" wood blocks. W6 x 9 steel posts, 6'-0" in length, with 6" x 8" x 1'-2" notched wood blocks or plastic blocks may be used for 6" x 8" x 6'-0" wood post with 6" x 8" x 1'-2" wood blocks where applicable and when specified.
4. Direction of adjacent traffic indicated by ⟶.
5. Layout Types 11D through 11L, shown on the A77E Series of Revised Standard Plans, are typically used where guard railing is recommended to shield embankment slopes and a crashworthy end treatment is required for both directions of traffic.
6. The type of terminal system end treatment to be used will be shown on the Project Plans.
7. Dependent on site conditions (embankment height and side slope), construction of additional guard railing (length equal to multiples of 12'-6" with 6'-3" post spacing) may be advisable.
8. The 15:1 or flatter flare used with buried end anchors is based on the edge of the paved shoulder or offset line of edge of the traveled way. The length of guard railing within the 15:1 or flatter flare is based on site conditions and should be a length equal to multiples of 12'-6".
9. For details of the buried post end anchor used with Type 11F and 11G Layouts, see Standard Plan A77I2.
10. Where placement of dike is required with guard railing installations, see Revised Standard Plan RSP A77C4 for dike positioning details.
11. For typical flare offsets for 25'-0" length parabola with maximum offset of 1'-0", see Revised Standard Plan RSP A77E1.

STATE OF CALIFORNIA
DEPARTMENT OF TRANSPORTATION

METAL BEAM GUARD RAILING TYPICAL LAYOUTS FOR EMBANKMENTS

NO SCALE

RSP A77E3 DATED JUNE 6, 2008 SUPERSEDES STANDARD PLAN A77E3 DATED MAY 1, 2006 - PAGE 50 OF THE STANDARD PLANS BOOK DATED MAY 2006.

REVISED STANDARD PLAN RSP A77E3

2006 REVISED STANDARD PLAN RSP A77E3

12-10-07

DIST	COUNTY	ROUTE	POST MILES TOTAL PROJECT	SHEET NO.	TOTAL SHEETS
05	SB	154	0.0/5.5	17	29

Randell D. Hiatt
REGISTERED CIVIL ENGINEER

June 6, 2008
PLANS APPROVAL DATE

REGISTERED PROFESSIONAL ENGINEER
Randell D. Hiatt
No. C50200
Exp. 6-30-09
CIVIL
STATE OF CALIFORNIA

The State of California or its officers or agents shall not be responsible for the accuracy or completeness of electronic copies of this plan sheet.

To accompany plans dated 3-26-12

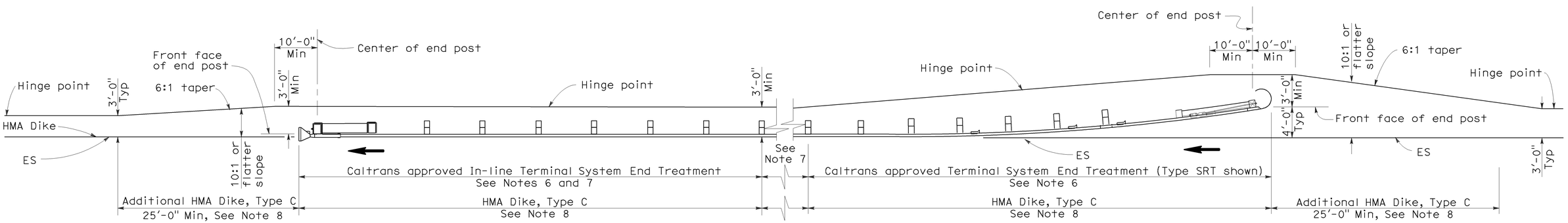

TYPE 11H LAYOUT

(EMBANKMENT GUARD RAILING INSTALLATION WITH FLARED END TREATMENT
AND AN IN-LINE TREATMENT AT THE ENDS OF RAILING)
See Notes 5 and 8

NOTES:

1. Line post, blocks and hardware to be used are shown on Standard Plans A77A1, A77A2, A77B1, A77C1 and A77C2.
2. Guard rail post spacing to be 6'-3" center to center, except as otherwise noted.
3. Except as noted, line posts are 6" x 8" x 6'-0" wood with 6" x 8" x 1'-2" wood blocks. W6 x 9 steel posts, 6'-0" in length, with 6" x 8" x 1'-2" notched wood blocks or plastic blocks may be used for 6" x 8" x 6'-0" wood post with 6" x 8" x 1'-2" wood blocks where applicable and when specified.
4. Direction of adjacent traffic indicated by ⟶.
5. Layout Types 11D through 11L, shown on the A77E Series of Revised Standard Plans, are typically used where guard railing is recommended to shield embankment slopes and a crashworthy end treatment is required for both directions of traffic.
6. The type of terminal system end treatment to be used will be shown on the Project Plans.
7. Dependent on site conditions (embankment height and side slope), construction of additional guard railing (length equal to multiples of 12'-6" with 6'-3" post spacing) may be advisable.
8. Where placement of dike is required with guard railing installations, see Revised Standard Plan RSP A77C4 for dike positioning details.

STATE OF CALIFORNIA
DEPARTMENT OF TRANSPORTATION

METAL BEAM GUARD RAILING TYPICAL LAYOUTS FOR EMBANKMENTS

NO SCALE

RSP A77E4 DATED JUNE 6, 2008 SUPERSEDES STANDARD PLAN A77E4
DATED MAY 1, 2006 - PAGE 51 OF THE STANDARD PLANS BOOK DATED MAY 2006.

REVISED STANDARD PLAN RSP A77E4

2006 REVISED STANDARD PLAN RSP A77E4

12-10-07

DIST	COUNTY	ROUTE	POST MILES TOTAL PROJECT	SHEET NO.	TOTAL SHEETS
05	SB	154	0.0/5.5	18	29

Randell D. Hiatt
REGISTERED CIVIL ENGINEER

June 6, 2008
PLANS APPROVAL DATE

REGISTERED PROFESSIONAL ENGINEER Randell D. Hiatt No. C50200 Exp. 6-30-09 CIVIL STATE OF CALIFORNIA

The State of California or its officers or agents shall not be responsible for the accuracy or completeness of electronic copies of this plan sheet.

To accompany plans dated 3-26-12

2006 REVISED STANDARD RSP A77E5

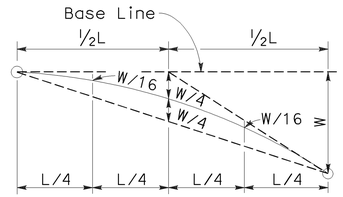

TYPICAL PARABOLIC LAYOUT

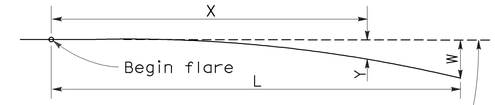

Base Line (Edge of paved shoulder or offset line of edge of traveled way)

$$Y = \frac{WX^2}{L^2}$$

Y = Offset from base line
W = Maximum offset
X = Distance along base line
L = Length of flare

PARABOLIC FLARE OFFSETS

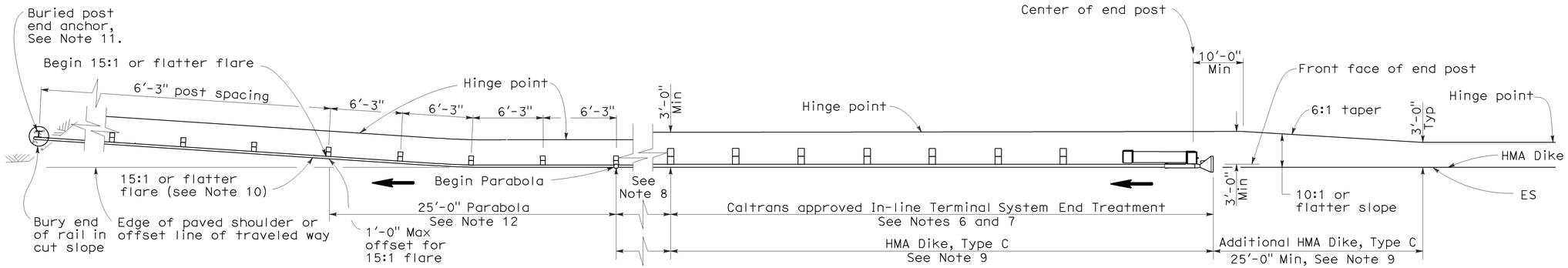

TYPE 11I LAYOUT

(EMBANKMENT GUARD RAILING INSTALLATION WITH IN-LINE END TREATMENT AND A BURIED END ANCHOR TREATMENT AT THE ENDS OF RAILING)
See Note 5

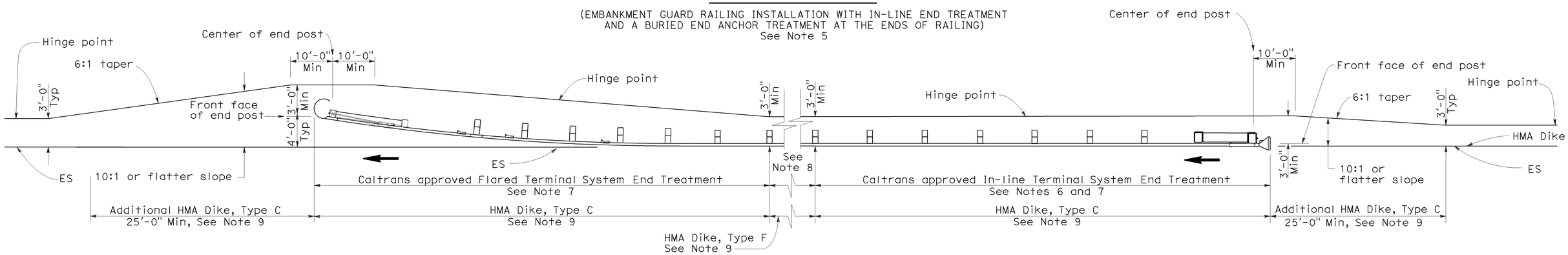

TYPE 11J LAYOUT

(EMBANKMENT GUARD RAILING INSTALLATION WITH IN-LINE END TREATMENT AND FLARED END TREATMENT AT THE ENDS OF RAILING)
See Note 5

NOTES:

1. Line post, blocks and hardware to be used are shown on Standard Plans A77A1, A77A2, A77B1, A77C1 and A77C2.
2. Guard rail post spacing to be 6'-3" center to center, except as otherwise noted.
3. Except as noted, line posts are 6" x 8" x 6'-0" wood with 6" x 8" x 1'-2" wood blocks. W6 x 9 steel posts, 6'-0" in length, with 6" x 8" x 1'-2" notched wood blocks or plastic blocks may be used for 6" x 8" x 6'-0" wood post with 6" x 8" x 1'-2" wood blocks where applicable and when specified.
4. Direction of adjacent traffic indicated by ⟶.
5. Layout Types 11D through 11L, shown on the A77E Series of Revised Standard Plans, are typically used where guard railing is recommended to shield embamkment slopes and a crashworthy end treatment is required for both directions of traffic.
6. In-line Terminal System End Treatments are used where site conditions will not accommodate a flared end treatment.
7. The type of terminal system end treatment to be used will be shown on the Project Plans.
8. Dependent on site conditions (embankment height and side slope), construction of additional guard railing (length equal to multiples of 12'-6" with 6'-3" post spacing) may be advisable.
9. Where placement of dike is required with guard railing installations, see Revised Standard Plan RSP A77C4 for dike positioning details.
10. The 15:1 or flatter flare used with buried end anchors is based on the edge of the paved shoulder or offset line of edge of the traveled way. The length of guard railing within the 15:1 or flatter flare is based on site conditions and should be a length equal to multiples of 12'-6".
11. For details of the buried post end anchor used with Type 11I Layout, see Standard Plan A77I2.
12. For typical flare offsets for 25'-0" length parabola with maximum offset of 1'-0", see Revised Standard Plan RSP A77E1.

STATE OF CALIFORNIA
DEPARTMENT OF TRANSPORTATION

METAL BEAM GUARD RAILING TYPICAL LAYOUTS FOR EMBANKMENTS

NO SCALE

RSP A77E5 DATED JUNE 6, 2008 SUPERSEDES STANDARD PLAN A77E5 DATED MAY 1, 2006 - PAGE 52 OF THE STANDARD PLANS BOOK DATED MAY 2006.

REVISED STANDARD PLAN RSP A77E5

12-10-07

DIST	COUNTY	ROUTE	POST MILES TOTAL PROJECT	SHEET NO.	TOTAL SHEETS
05	SB	154	0.0/5.5	19	29

Randell D. Hiatt
REGISTERED CIVIL ENGINEER

June 6, 2008
PLANS APPROVAL DATE

REGISTERED PROFESSIONAL ENGINEER
Randell D. Hiatt
No. C50200
Exp. 6-30-09
CIVIL
STATE OF CALIFORNIA

The State of California or its officers or agents shall not be responsible for the accuracy or completeness of electronic copies of this plan sheet.

To accompany plans dated 3-26-12

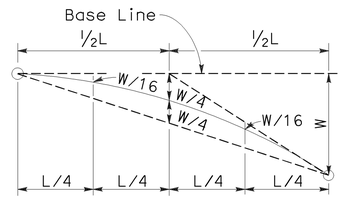

TYPICAL PARABOLIC LAYOUT

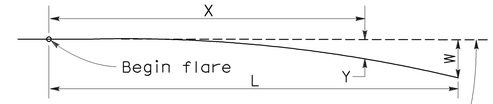

Base Line (Edge of paved shoulder or offset line of edge of traveled way)

$$Y = \frac{WX^2}{L^2}$$

Y = Offset from base line
W = Maximum offset
X = Distance along base line
L = Length of flare

PARABOLIC FLARE OFFSETS

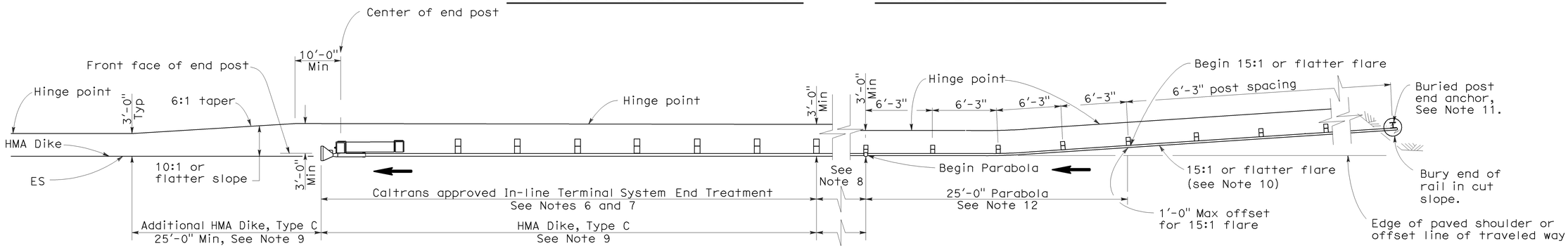

TYPE 11K LAYOUT

(EMBANKMENT GUARD RAILING INSTALLATION WITH A BURIED END ANCHOR TREATMENT AND AN IN-LINE END TREATMENT AT THE ENDS OF RAILING)
See Note 5

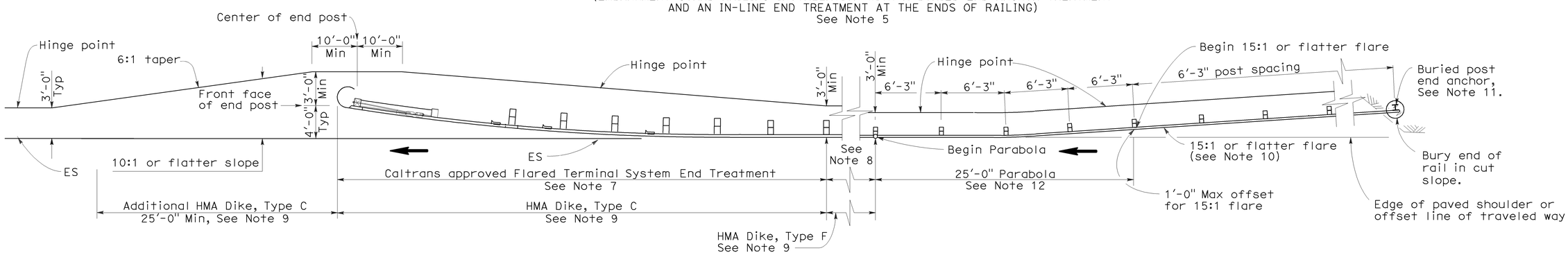

TYPE 11L LAYOUT

(EMBANKMENT GUARD RAILING INSTALLATION WITH A BURIED END ANCHOR TREATMENT AND A FLARED END TREATMENT AT THE ENDS OF RAILING)
See Note 5

NOTES:

1. Line post, blocks and hardware to be used are shown on Standard Plans A77A1, A77A2, A77B1, A77C1 and A77C2.
2. Guard rail post spacing to be 6'-3" center to center, except as otherwise noted.
3. Except as noted, line posts are 6" x 8" x 6'-0" wood with 6" x 8" x 1'-2" wood blocks. W6 x 9 steel posts, 6'-0" in length, with 6" x 8" x 1'-2" notched wood blocks or plastic blocks may be used for 6" x 8" x 6'-0" wood post with 6" x 8" x 1'-2" wood blocks where applicable and when specified.
4. Direction of adjacent traffic indicated by ⟶.
5. Layout Types 11D through 11L, shown on the A77E Series of Revised Standard Plans, are typically used where guard railing is recommended to shield embamkment slopes and a crashworthy end treatment is required for both directions of traffic.
6. In-line Terminal System End Treatments are used where site conditions will not accommodate a flared end treatment.
7. The type of terminal system end treatment to be used will be shown on the Project Plans.
8. Dependent on site conditions (embankment height and side slope), construction of additional guard railing (length equal to multiples of 12'-6" with 6'-3" post spacing) may be advisable.
9. Where placement of dike is required with guard railing installations, see Revised Standard Plan RSP A77C4 for dike positioning details.
10. The 15:1 or flatter flare used with buried end anchors is based on the edge of the paved shoulder or offset line of edge of the traveled way. The length of guard railing within the 15:1 or flatter flare is based on site conditions and should be a length equal to multiples of 12'-6".
11. For details of the buried post end anchor used with Type 11K and 11L Layouts, see Standard Plan A77I2.
12. For typical flare offsets for 25'-0" length parabola with maximum offset of 1'-0", see Revised Standard Plan RSP A77E1.

STATE OF CALIFORNIA
DEPARTMENT OF TRANSPORTATION

METAL BEAM GUARD RAILING TYPICAL LAYOUTS FOR EMBANKMENTS

NO SCALE

RSP A77E6 DATED JUNE 6, 2008 SUPERSEDES STANDARD PLAN A77E6
DATED MAY 1, 2006 - PAGE 53 OF THE STANDARD PLANS BOOK DATED MAY 2006.

REVISED STANDARD PLAN RSP A77E6

2006 REVISED STANDARD PLAN RSP A77E6

12-10-07

DIST	COUNTY	ROUTE	POST MILES TOTAL PROJECT	SHEET NO.	TOTAL SHEETS
05	SB	154	0.0/5.5	20	29

Randell D. Hiatt
REGISTERED CIVIL ENGINEER

June 6, 2008
PLANS APPROVAL DATE

REGISTERED PROFESSIONAL ENGINEER
Randell D. Hiatt
No. C50200
Exp. 6-30-09
CIVIL
STATE OF CALIFORNIA

The State of California or its officers or agents shall not be responsible for the accuracy or completeness of electronic copies of this plan sheet.

To accompany plans dated 3-26-12

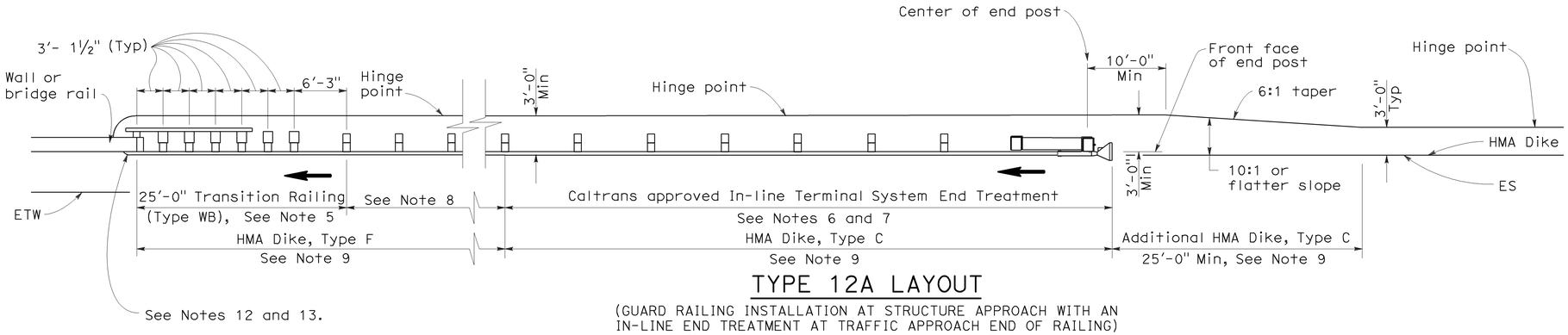

TYPE 12A LAYOUT

(GUARD RAILING INSTALLATION AT STRUCTURE APPROACH WITH AN IN-LINE END TREATMENT AT TRAFFIC APPROACH END OF RAILING)
See Notes 10

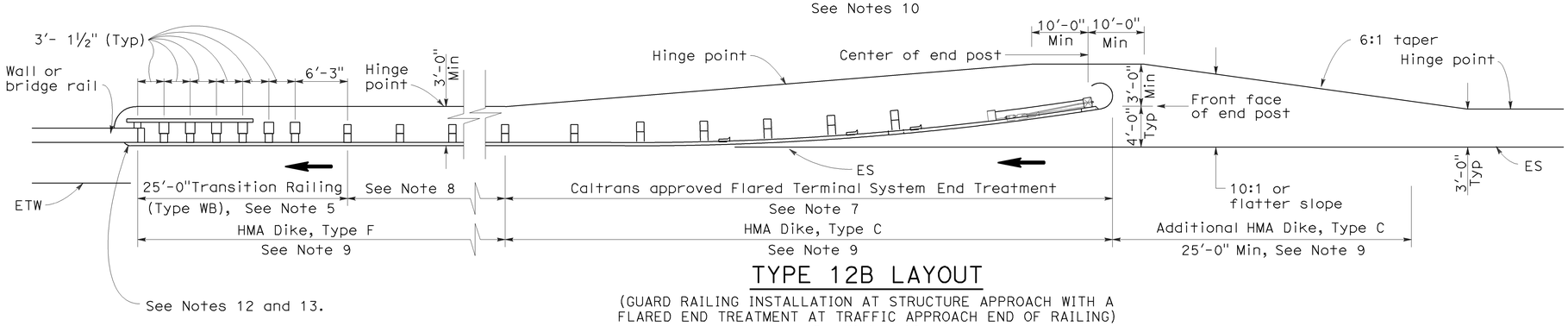

TYPE 12B LAYOUT

(GUARD RAILING INSTALLATION AT STRUCTURE APPROACH WITH A FLARED END TREATMENT AT TRAFFIC APPROACH END OF RAILING)
See Notes 10

NOTES:

1. Line post, blocks and hardware to be used are shown on Standard Plans A77A1, A77A2, A77B1, A77C1 and A77C2.
2. Guard rail post spacing to be 6'-3" center to center, except as otherwise noted.
3. Except as noted, line posts are 6" x 8" x 6'-0" wood with 6" x 8" x 1'-2" wood blocks. W6 x 9 steel posts, 6'-0" in length, with 6" x 8" x 1'-2" notched wood blocks or plastic blocks may be used for 6" x 8" x 6'-0" wood posts with 6" x 8" x 1'-2" wood blocks where applicable and when specified.
4. Direction of adjacent traffic indicated by ➡.
5. For Transition Railing (Type WB) details for Types 12A and 12B Layouts, see Standard Plan A77J4.
6. In-line Terminal System End Treatments are used where site conditions will not accommodate a flared end treatment.
7. The type of terminal system end treatment to be used will be shown on the Project Plans.
8. Dependent on site conditions (embankment height, side slopes, or other fixed objects), it may be advisable to construct additional guard railing (a length equal to multiples of 12'-6" with 6'-3" post spacing) between the transition railing and end treatment.
9. Where placement of dike is required with guard railing installations, see Revised Standard Plan RSP A77C4 for dike positioning details.
10. Type 12A or Type 12B Layouts are typically used:
    a. To the right of approaching traffic, at the end of a structure, on two-lane conventional highway where the roadbed width across the structure is less than 40 feet.
    b. To the left of approaching traffic, at the end of a structure, on two-lane conventional highway where the roadbed width across the structure is less than 40 feet.
    c. To the right of approaching traffic at the end of each structure on multilane freeways or expressways with separate adjacent or parallel bridges.
    d. To the right of approaching traffic at the end of the structure on multilane freeways or expressways with decked median on the bridge.
11. See Revised Standard Plan RSP A77F3 for typical layout used left of approaching traffic at the ends of each structure on multilane freeways or expressways with separate adjacent or parallel bridges.
12. For additional details of typical connections to bridge rail, see Connection Detail AA on Revised Standard Plans RSP A77J1 and RSP A77J2 and Connection Detail FF on Standard Plans A77K1 and A77K2.
13. For additional details of a typical connection to walls or abutments, see Standard Plan A77J3.

STATE OF CALIFORNIA
DEPARTMENT OF TRANSPORTATION

METAL BEAM GUARD RAILING TYPICAL LAYOUTS FOR STRUCTURE APPROACH

NO SCALE

RSP A77F1 DATED JUNE 6, 2008 SUPERSEDES STANDARD PLAN A77F1
DATED MAY 1, 2006 - PAGE 54 OF THE STANDARD PLANS BOOK DATED MAY 2006.

REVISED STANDARD PLAN RSP A77F1

2006 REVISED STANDARD PLAN RSP A77F1

12-10-07

DIST	COUNTY	ROUTE	POST MILES TOTAL PROJECT	SHEET NO.	TOTAL SHEETS
05	SB	154	0.0/5.5	21	29

Randell D. Hiatt
REGISTERED CIVIL ENGINEER

June 6, 2008
PLANS APPROVAL DATE

REGISTERED PROFESSIONAL ENGINEER
Randell D. Hiatt
No. C50200
Exp. 6-30-09
CIVIL
STATE OF CALIFORNIA

The State of California or its officers or agents shall not be responsible for the accuracy or completeness of electronic copies of this plan sheet.

To accompany plans dated 3-26-12

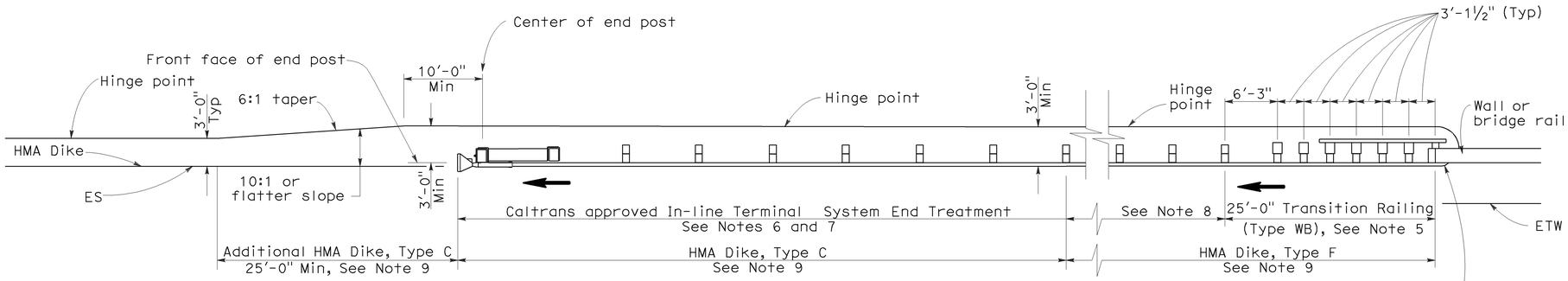

TYPE 12AA LAYOUT

(GUARD RAILING INSTALLATION AT STRUCTURE DEPARTURE WITH AN IN-LINE END TREATMENT AT TRAILING END OF RAILING)
See Notes 9 and 10

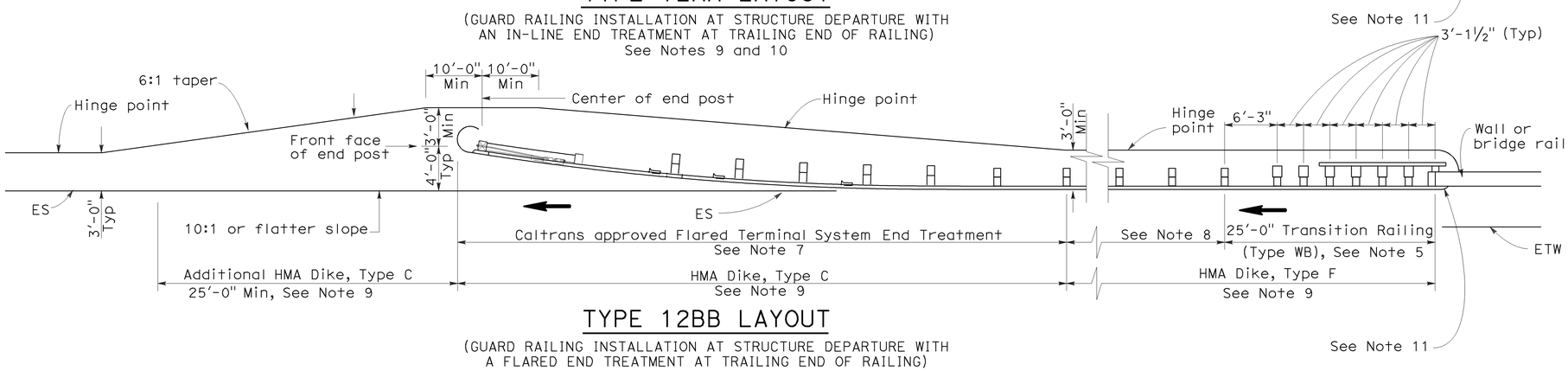

TYPE 12BB LAYOUT

(GUARD RAILING INSTALLATION AT STRUCTURE DEPARTURE WITH A FLARED END TREATMENT AT TRAILING END OF RAILING)
See Notes 9 and 10

NOTES:

1. Line post, blocks and hardware to be used are shown on Standard Plans A77A1, A77A2, A77B1, A77C1 and A77C2.
2. Guard rail post spacing to be 6'-3" center to center, except as otherwise noted.
3. Except as noted, line posts are 6" x 8" x 6'-0" wood with 6" x 8" x 1'-2" wood blocks. W6 x 9 steel posts, 6'-0" in length, with 6" x 8" x 1-2" notched wood blocks or notched recycled plastic blocks may be used for 6" x 8" x 6'-0" wood posts with 6" x 8" x 1'-2" wood blocks where applicable and when specified.
4. Direction of adjacent traffic indicated by ➡.
5. For Transition Railing (Type WB) details for Types 12AA and 12BB Layouts, see Standard Plan A77J4.
6. In-line Terminal System Treatments are used where site conditions will not accommodate a flared end treatment.
7. The type of terminal system to be used will be shown on the Project Plans.
8. Dependent on site conditions (embankment height, side slopes, other fixed objects), it may be advisable to construct additional guard railing (a length equal to multiples of 12'-6" with 6'-3" post spacing) between the transition railing and end treatments.
9. Where placement of dike is required with guard railing installations, see Revised Standard Plan RSP A77C4 for dike positioning details.
10. Type 12AA or Type 12BB Layouts are typically used to the right of traffic departing a structure on two-way conventional highways where the roadbed width across the structure is less than 40 feet.
11. For additional details of typical connections to bridge rail, see Connection Detail CC on Revised Standard Plan RSP A77J2 and Connection Detail HH on Standard Plans A77k2.

STATE OF CALIFORNIA
DEPARTMENT OF TRANSPORTATION

METAL BEAM GUARD RAILING TYPICAL LAYOUTS FOR STRUCTURE DEPARTURE

NO SCALE

RSP A77F4 DATED JUNE 6, 2008 SUPERSEDES STANDARD PLAN A77F4
DATED MAY 1, 2006 - PAGE 57 OF THE STANDARD PLANS BOOK DATED MAY 2006.

REVISED STANDARD PLAN RSP A77F4

2006 REVISED STANDARD PLAN RSP A77F4

12-10-07

Dist	COUNTY	ROUTE	POST MILES TOTAL PROJECT	SHEET No.	TOTAL SHEETS
05	SB	154	0.0/5.5	22	29

Randell D. Hiatt
REGISTERED CIVIL ENGINEER

May 20, 2011
PLANS APPROVAL DATE

REGISTERED PROFESSIONAL ENGINEER
Randell D. Hiatt
No. C50200
Exp. 6-30-11
CIVIL
STATE OF CALIFORNIA

The State of California or its officers or agents shall not be responsible for the accuracy or completeness of electronic copies of this plan sheet.

To accompany plans dated 3-26-12

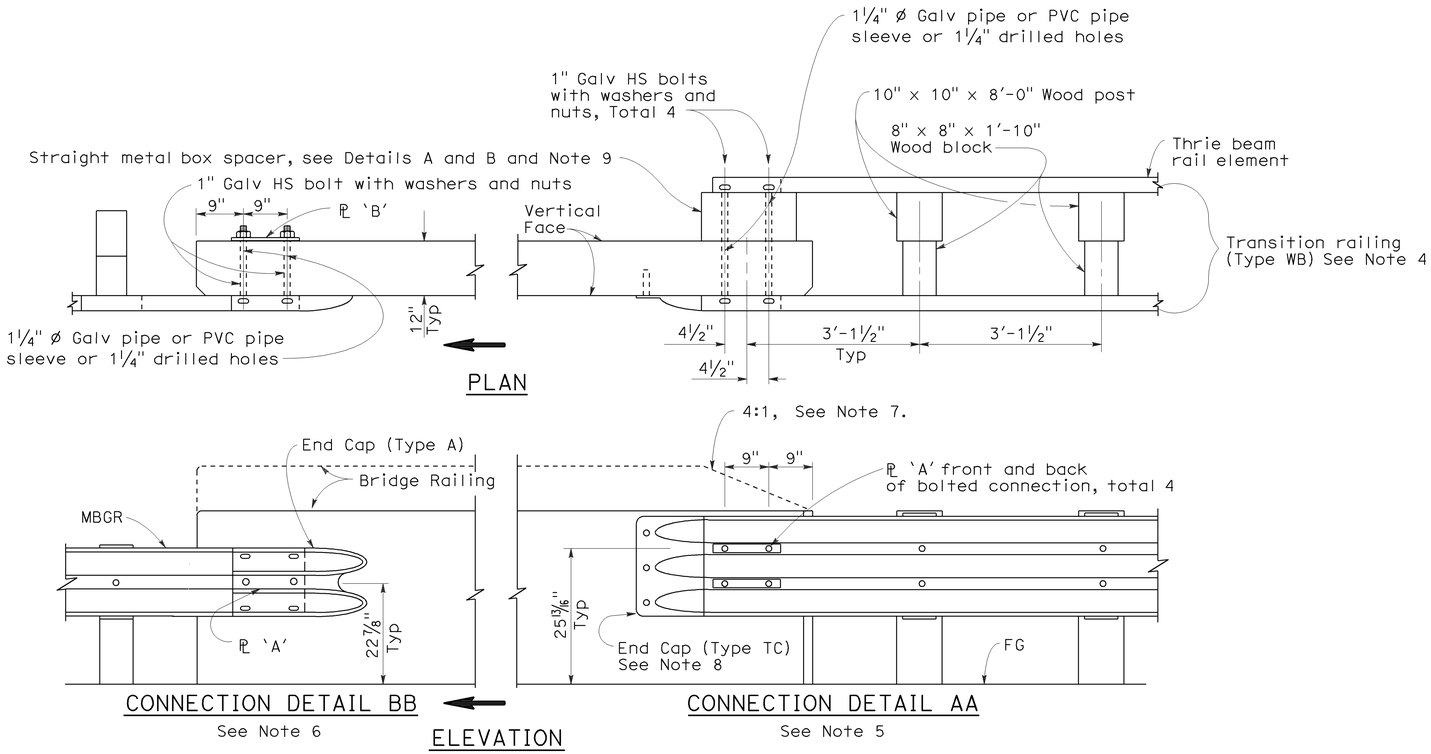

GUARD RAILING CONNECTION TO BRIDGE RAILING WITHOUT SIDEWALK

NOTES:

1. See Revised Standard Plan RSP A77J2 for additional connection details to bridges without sidewalks.
2. Additional details of posts, blocks and hardware are shown on Standard Plan A77B1, A77C1 and A77C2.
3. Direction of adjacent traffic indicated by ➡.
4. For additional details of Transition Railing (Type WB), see Standard Plan A77J4. Transition Railing (Type WB) transitions the 12 gage w-beam standard railing section of guard railing to a heavier gage nested thrie beam railing section which is connected to the concrete bridge railing.
5. For typical use of Connection Detail AA, see Layout Types 12A and 12B on Revised Standard Plan RSP A77F1, Layout Types 12C and 12D on Standard Plan A77F2, and Layout Type 12E on Revised Standard Plan RSP A77F3.
6. For typical use of Connection Detail BB, see Layout Type 12D (structure departure railing connection) on Standard Plan A77F2 and Layout Type 12DD on Standard Plan A77F5.
7. Where the height of the bridge railing exceeds the height of the thrie beam railing by more than 1" at Connection Detail AA, taper the top of the end of the bridge railing at 4:1 to match the top elevation of the thrie beam rail.
8. For details of End Cap (Type TC), see Standard Plan A77J4.
9. See Standard Plan A77J4 for additional details regarding depth dimension for straight metal box spacer.

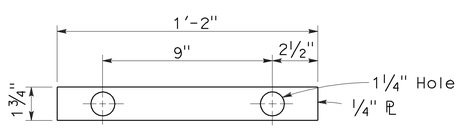

PLATE 'A'

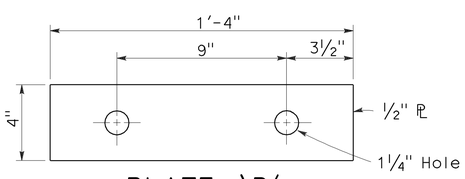

PLATE 'B'
(For backside of connection BB)

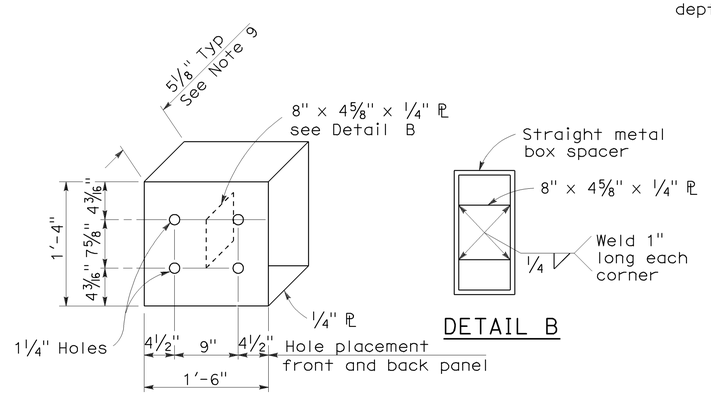

DETAIL A

DETAIL B

STRAIGHT METAL BOX SPACER

STATE OF CALIFORNIA
DEPARTMENT OF TRANSPORTATION

METAL BEAM GUARD RAILING CONNECTIONS TO BRIDGE RAILINGS WITHOUT SIDEWALKS DETAILS No.1

NO SCALE

RSP A77J1 DATED MAY 20, 2011 SUPERSEDES RSP A77J1 DATED JUNE 6, 2008 AND STANDARD PLAN A77J1 DATED MAY 1, 2006 - PAGE 72 OF THE STANDARD PLANS BOOK DATED MAY 2006.

REVISED STANDARD PLAN RSP A77J1

2006 REVISED STANDARD PLAN RSP A77J1

3-10-11

DIST	COUNTY	ROUTE	POST MILES TOTAL PROJECT	SHEET NO.	TOTAL SHEETS
05	SB	154	0.0/5.5	23	29

Randell D. Hiatt
REGISTERED CIVIL ENGINEER

June 6, 2008
PLANS APPROVAL DATE

REGISTERED PROFESSIONAL ENGINEER
Randell D. Hiatt
No. C50200
Exp. 6-30-09
CIVIL
STATE OF CALIFORNIA

The State of California or its officers or agents shall not be responsible for the accuracy or completeness of electronic copies of this plan sheet.

To accompany plans dated 3-26-12

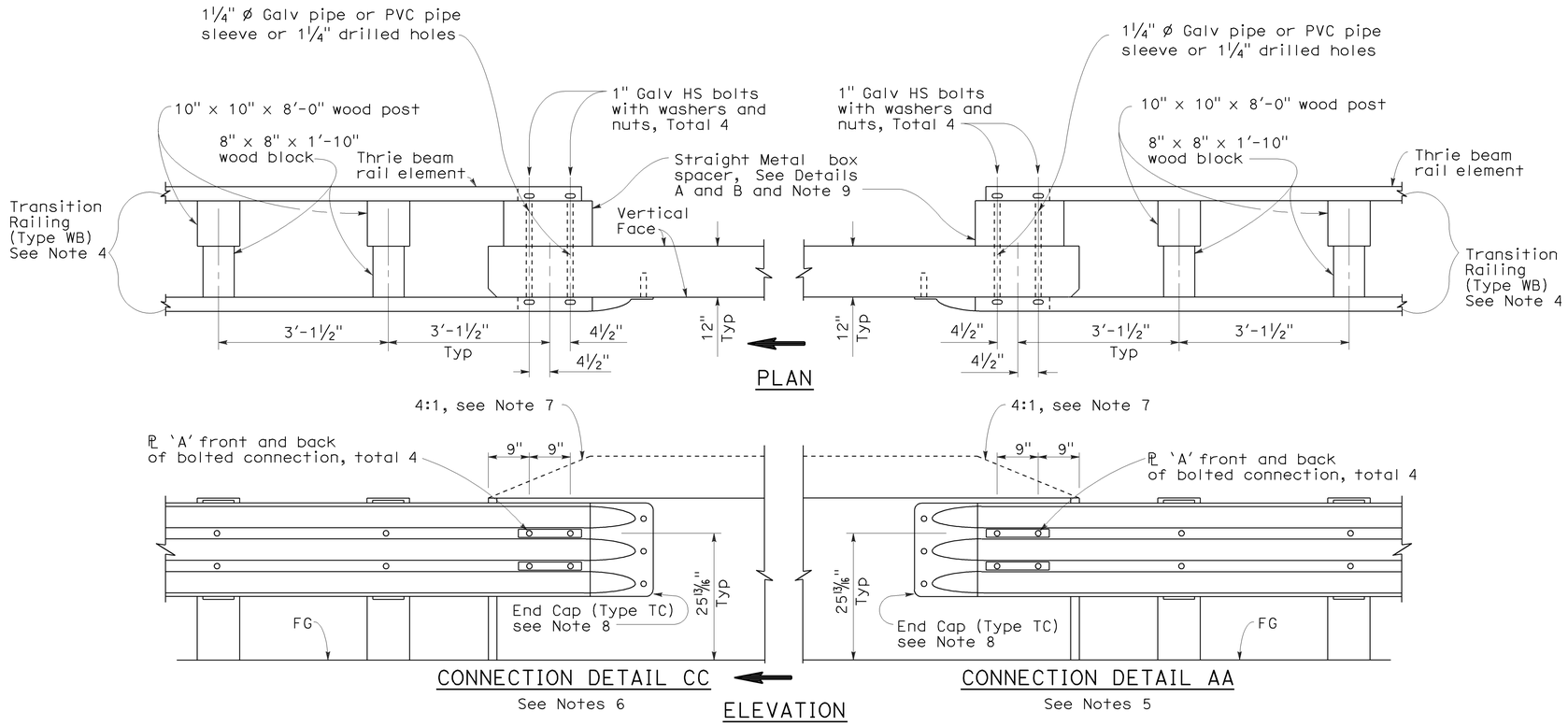

GUARD RAILING CONNECTION TO BRIDGE RAILING WITHOUT SIDEWALK

NOTES:

1. See Revised Standard Plan RSP A77J1 for additional connection details to bridges without sidewalks.
2. Additional details of posts, blocks and hardware are shown on Standard Plan A77B1, A77C1 and A77C2.
3. Direction of adjacent traffic indicated by ⟹.
4. For additional details of Transition Railing (Type WB), see Standard Plan A77J4. Transition Railing (Type WB) transitions the 12 gage w-beam standard railing section of guard railing to a heavier gage nested thrie beam railing section which is connected to the concrete bridge railing.
5. For typical use of Connection Detail AA, see Layout Types 12A and 12B on Revised Standard Plan RSP A77F1, Layout Types 12C and 12D on Standard Plan A77F2, and Layout Type 12E on Revised Standard Plan RSP A77F3.
6. For typical use of Connection Detail CC, see Layout Types 12AA and 12BB on Standard Plan A77F4 and Layout Type 12CC on Standard Plan A77F5.
7. Where the height of the bridge railing exceeds the height of the thrie beam railing by more than 1" at Connection Detail AA and connection Detail CC, taper the top of the end of the bridge railing at 4:1 to match the top elevation of the thrie beam railing.
8. For details of End Cap (Type TC), see Standard Plans A77J4.
9. See Standard Plans A77J4 for additional details regarding depth dimension for straight metal box spacer.

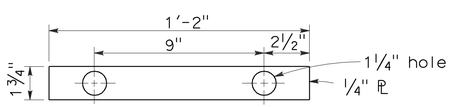

PLATE 'A'

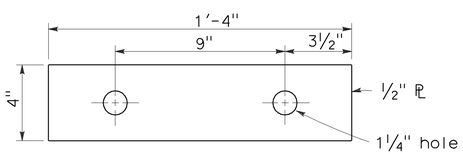

PLATE 'B'
(For backside of connection BB)

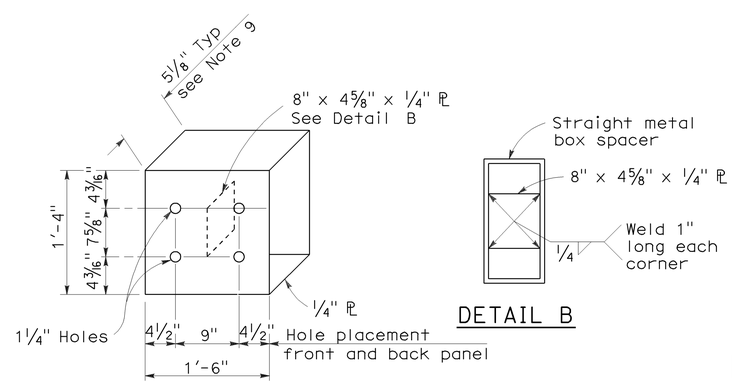

DETAIL A

DETAIL B

STRAIGHT METAL BOX SPACER

STATE OF CALIFORNIA
DEPARTMENT OF TRANSPORTATION

METAL BEAM GUARD RAILING CONNECTIONS TO BRIDGE RAILINGS WITHOUT SIDEWALKS DETAILS No.2

NO SCALE

RSP A77J2 DATED JUNE 6, 2008 SUPERSEDES STANDARD PLAN A77J2 DATED MAY 1, 2006 - PAGE 73 OF THE STANDARD PLANS BOOK DATED MAY 2006.

REVISED STANDARD PLAN RSP A77J2

2006 REVISED STANDARD PLAN RSP A77J2

12-10-07

Dist	COUNTY	ROUTE	POST MILES TOTAL PROJECT	SHEET No.	TOTAL SHEETS
05	SB	154	0.0/5.5	24	29

Randell D. Hiatt
REGISTERED CIVIL ENGINEER

May 20, 2011
PLANS APPROVAL DATE

REGISTERED PROFESSIONAL ENGINEER
Randell D. Hiatt
No. C50200
Exp. 6-30-11
CIVIL
STATE OF CALIFORNIA

The State of California or its officers or agents shall not be responsible for the accuracy or completeness of electronic copies of this plan sheet.

To accompany plans dated 3-26-12

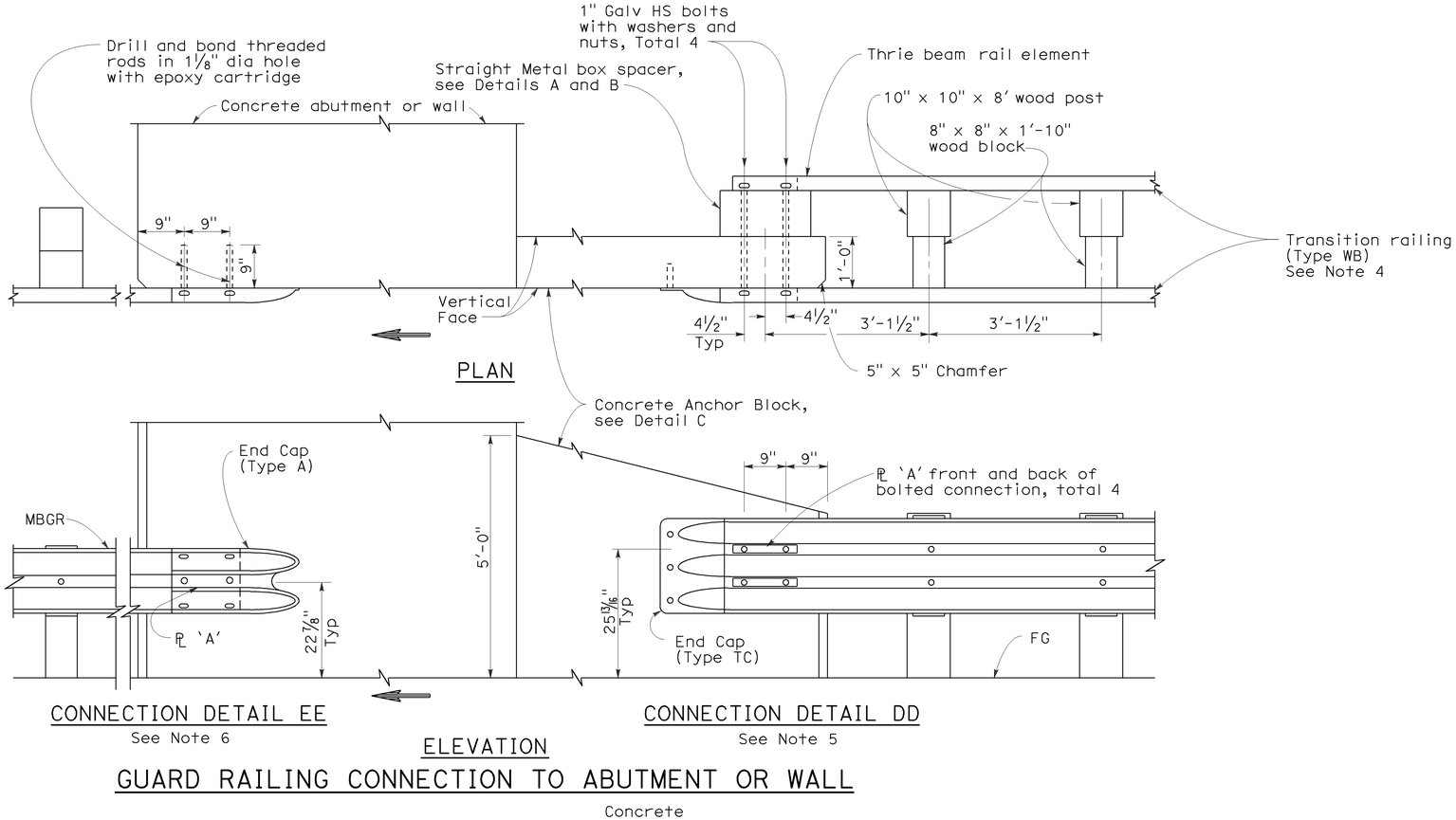

GUARD RAILING CONNECTION TO ABUTMENT OR WALL

NOTES:

1. These connection details apply to abutments and walls.
2. Additional details of posts, blocks and hardware are shown on Standard Plans A77B1, A77C1 and A77C2.
3. Direction of adjacent traffic indicated by ➡.
4. For additional details of Transition Railing (Type WB), see Standard Plan A77J4 Transition Railing (Type WB) transitions the 12 gage w-beam standard railing section of guard railing to a heavier gage nested thrie beam railing section which is connected to the concrete anchor block.
5. For typical use of Connection Details DD, See Layout Types 12A and 12B on Standard Plan A77F1 and Layout Types 12C and 12D on Standard Plan A77F2.
6. For typical use of Connection Detail EE, see Layout Type 12D on Standard Plan A77F2 and Layout Type 12DD on Standard Plan A77F5.

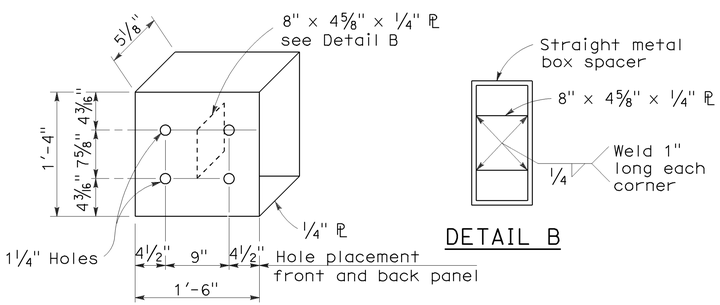

DETAIL A

STRAIGHT METAL BOX SPACER

DETAIL B

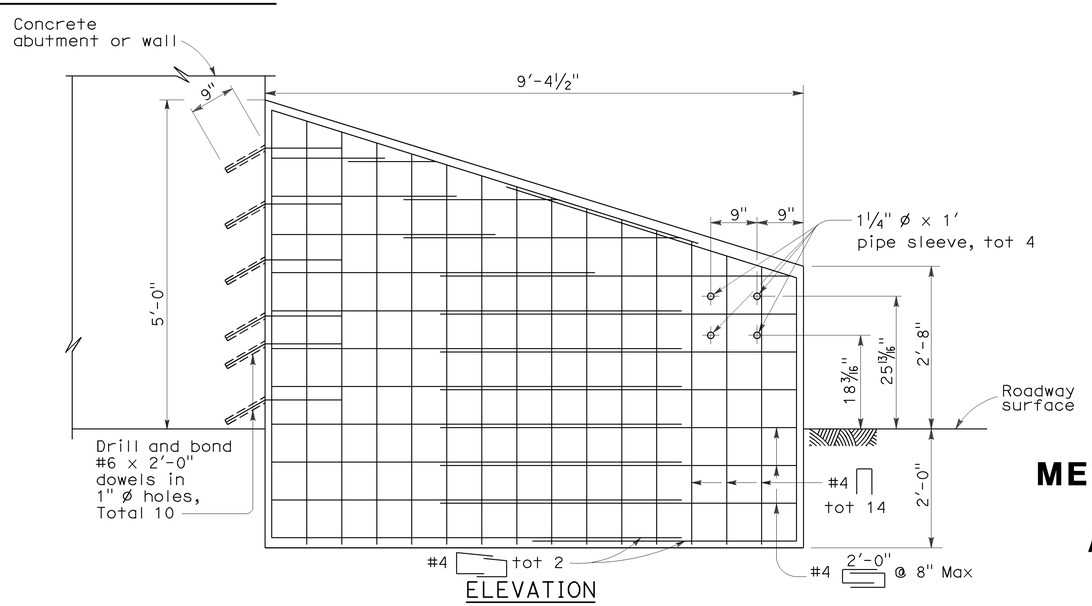

ELEVATION

ANCHOR BLOCK FOR TRANSITION RAILING CONNECTION

DETAIL C

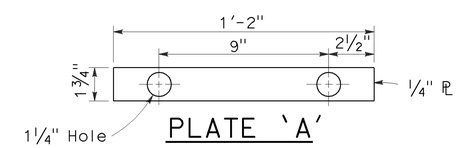

PLATE 'A'

STATE OF CALIFORNIA
DEPARTMENT OF TRANSPORTATION

METAL BEAM GUARD RAILING CONNECTIONS TO ABUTMENTS AND WALLS

NO SCALE

RSP A77J3 DATED MAY 20, 2011 SUPERSEDES STANDARD PLAN A77J3 DATED MAY 1, 2006 - PAGE 74 OF THE STANDARD PLANS BOOK DATED MAY 2006.

REVISED STANDARD PLAN RSP A77J3

2006 REVISED STANDARD PLAN RSP A77J3

3-10-11

Dist	COUNTY	ROUTE	POST MILES TOTAL PROJECT	SHEET No.	TOTAL SHEETS
05	SB	154	0.0/5.5	25	29

Randell D. Hiatt
REGISTERED CIVIL ENGINEER

May 20, 2011
PLANS APPROVAL DATE

To accompany plans dated 3-26-12

REGISTERED PROFESSIONAL ENGINEER Randell D. Hiatt No. C50200 Exp. 6-30-11 CIVIL STATE OF CALIFORNIA

The State of California or its officers or agents shall not be responsible for the accuracy or completeness of electronic copies of this plan sheet.

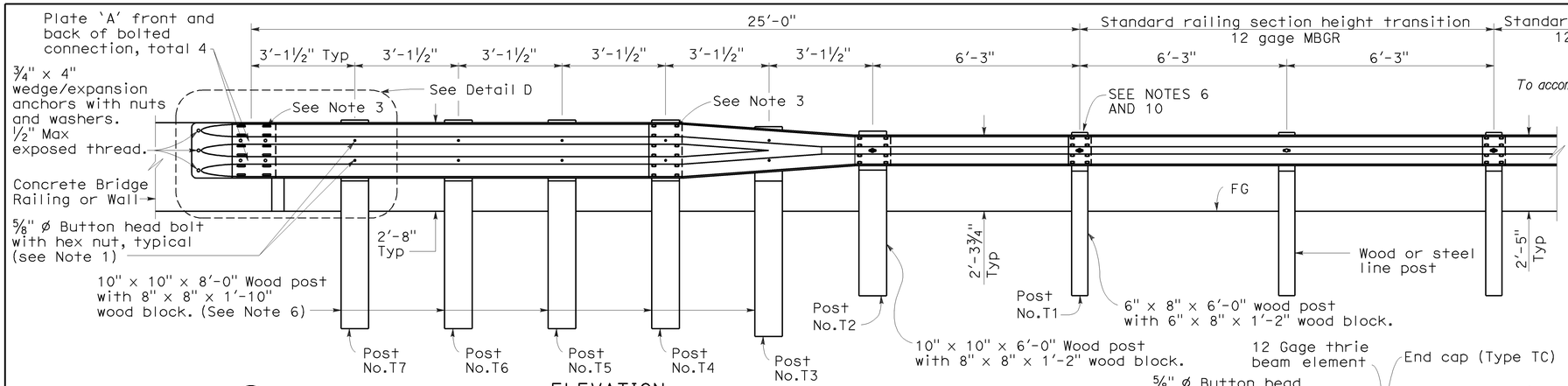

ELEVATION

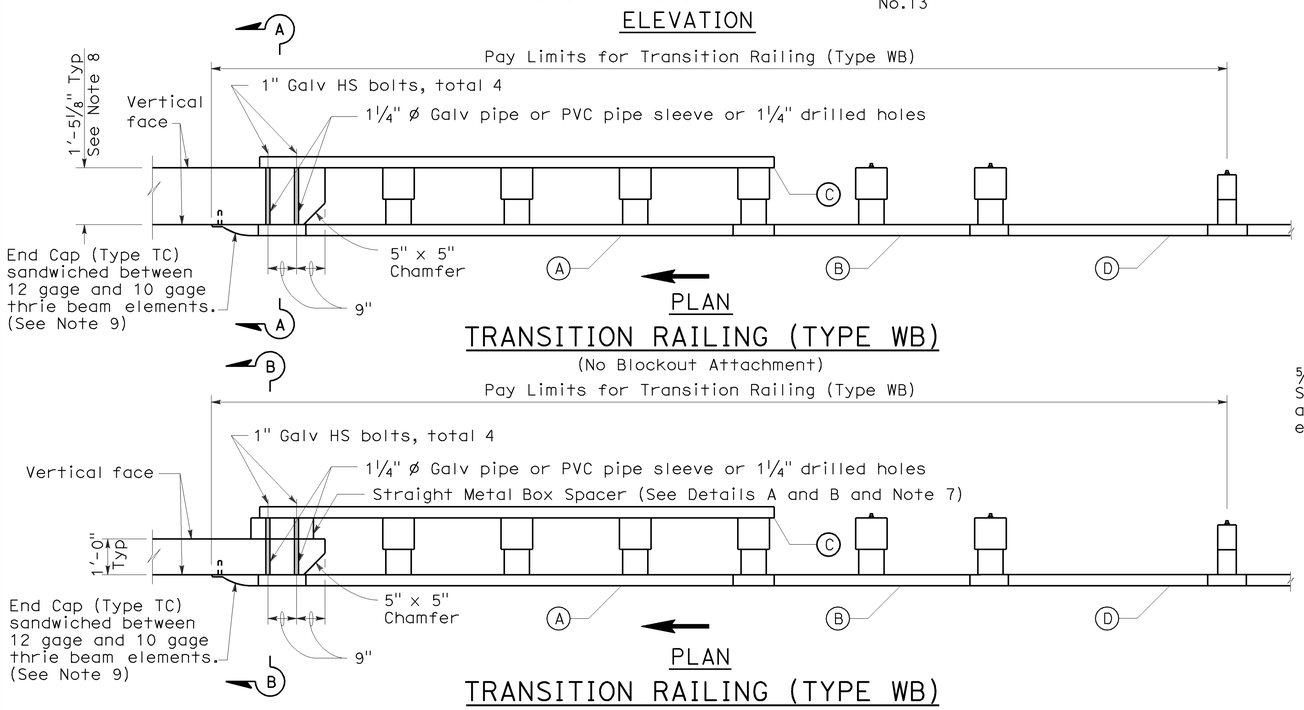

PLAN

TRANSITION RAILING (TYPE WB)

(No Blockout Attachment)

PLAN

TRANSITION RAILING (TYPE WB)

(Blockout Attachment)

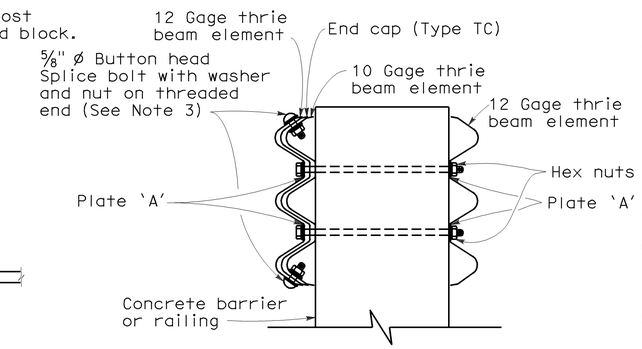

SECTION A-A

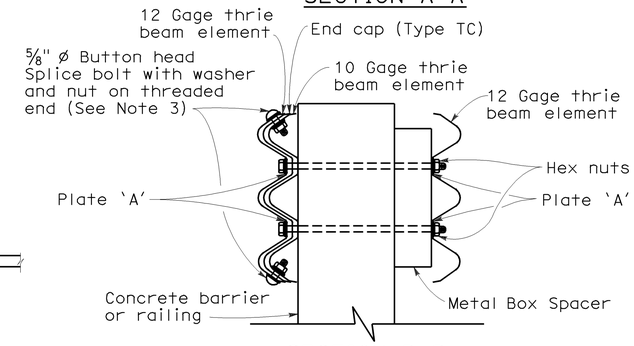

SECTION B-B

NOTES:

1. Use ⅝" ø Button head bolts and hex nuts for connections to posts. No washer on rail face for bolted connections to post.
2. The nested rail elements, end cap, and 'W' beam to thrie beam element may be spliced together prior to bolting the elements to the wood post and concrete barrier or railing.
3. Exterior splice bolt holes for rail element splices at Post No. T4 and the connection to the concrete barrier or railing shall be the standard 29/32" x 1⅛" slot size. Interior splice bolt holes at these locations may be increased up to 1¼" ø. Only the top 2 and the bottom 2 splice bolts with washers and nuts are required for rail splices at Post No. T4 and the connection to the concrete barrier or railing.
4. Direction of adjacent traffic indicated by ⟶ .
5. The top elevation of Posts No. T2 through No. T7 shall not project more than 1" above the top elevation of the rail element.
6. Typically, the railing connected to Transition Railing (Type WB) will be either standard railing section of metal beam guard railing with height transition ratio of 120:1 or an approved Caltrans end treatment attached to Post No. T1.
7. The depth of the metal box spacer varies from the 5⅛" to 1½" and is dependent on the width of the concrete railing or wall. The combined dimension for the depth of the metal box spacer plus the width of railing or wall is typically 17⅛". Where the space between the backside of the concrete railing or wall and the rear thrie beam element is less than 1½", metal plates similar to Plate 'A' are to be used as spacers.
8. Where the width of the concrete railing or wall is greater than 17⅛", wood blocks are to be used to fill the space created between the backside of Posts No. T4 through No. T7 and the rear thrie beam element. These wood blocks shall be 8" in width and 1'-2" in length. The dimension between the front thrie beam element and the rear thrie beam element is to match the width of the concrete railing or wall.
9. End cap may be installed over 12 gage and 10 gage thrie beam elements where transition railing is installed on the departure end of bridge railing.
10. Conform standard railing section height to 2'-3¾" at Post No. T1 using height transition ratio of 120:1.

LEGEND

(A) Nested thrie beam elements (one 12 gage element nested over one 10 gage element).

(B) One 10 gage "W" beam to thrie beam element.

(C) One 12 gage thrie beam element.

(D) One 10 gage "W" beam rail element (7'-3½" length)

10 gage = 0.135" thick

12 gage = 0.108" thick

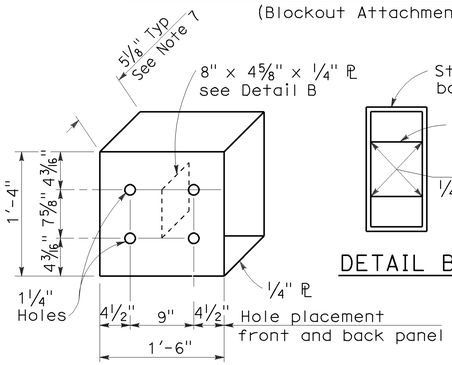

DETAIL A

STRAIGHT METAL BOX SPACER

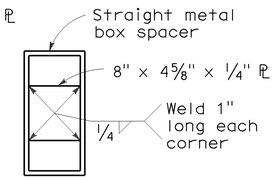

DETAIL B

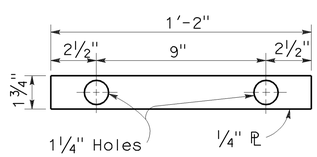

DETAIL C

PLATE 'A'

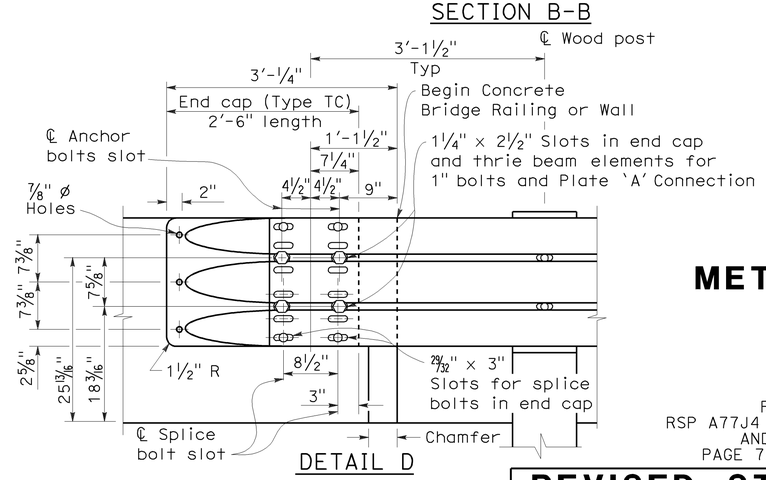

DETAIL D

STATE OF CALIFORNIA
DEPARTMENT OF TRANSPORTATION

METAL BEAM GUARD RAILING TRANSITION RAILING (TYPE WB)

NO SCALE

RSP A77J4 DATED MAY 20, 2011 SUPERSEDES
RSP A77J4 DATED JUNE 5, 2009, RSP A77J4 DATED JUNE 6, 2008
AND STANDARD PLAN A77J4 DATED MAY 1, 2006 -
PAGE 75 OF THE STANDARD PLANS BOOK DATED MAY 2006.

REVISED STANDARD PLAN RSP A77J4

2006 REVISED STANDARD PLAN RSP A77J4

5-14-09

DIST	COUNTY	ROUTE	POST MILES TOTAL PROJECT	SHEET NO.	TOTAL SHEETS
05	SB	154	0.0/5.5	26	29

Randell D. Hiatt
REGISTERED CIVIL ENGINEER

June 6, 2008
PLANS APPROVAL DATE

REGISTERED PROFESSIONAL ENGINEER
Randell D. Hiatt
No. C50200
Exp. 6-30-09
CIVIL
STATE OF CALIFORNIA

The State of California or its officers or agents shall not be responsible for the accuracy or completeness of electronic copies of this plan sheet.

To accompany plans dated 3-26-12

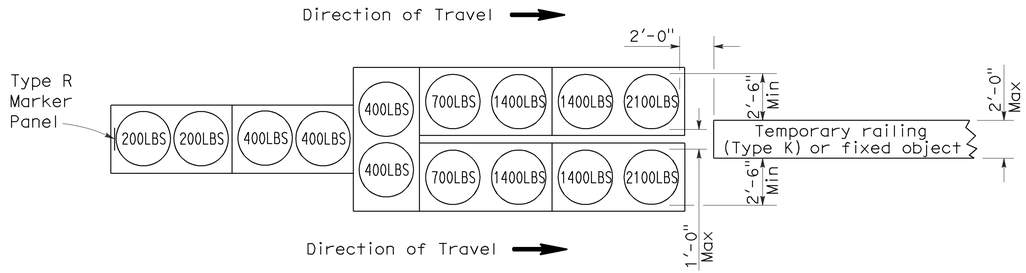

ARRAY 'TU14'

Approach speed 45 mph or more

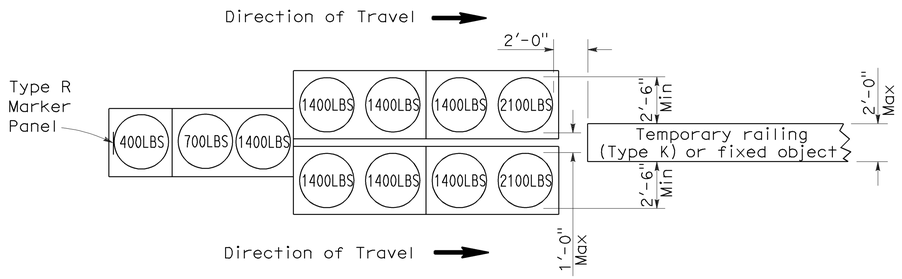

ARRAY 'TU11'

Approach speed less than 45 mph

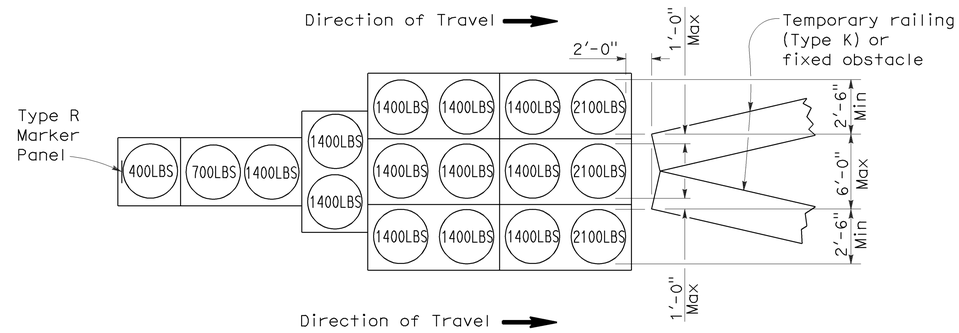

ARRAY 'TU17'

Approach speed less than 45 mph

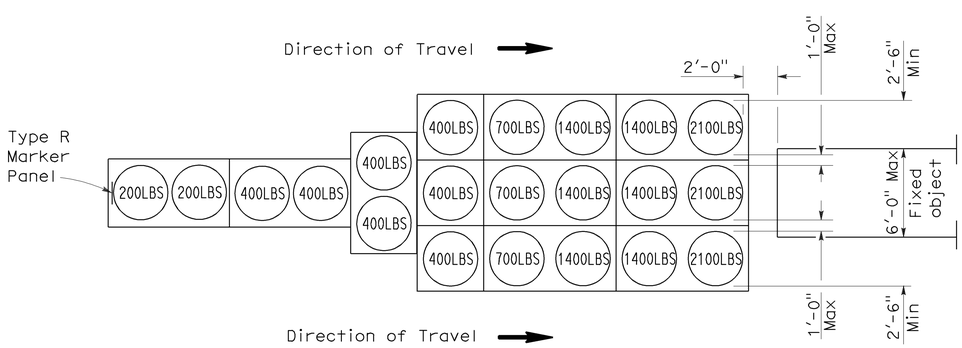

ARRAY 'TU21'

Approach speed 45 mph or more

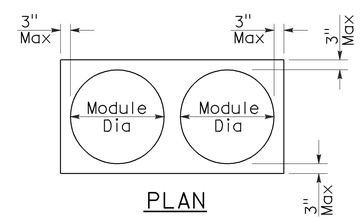

PLAN

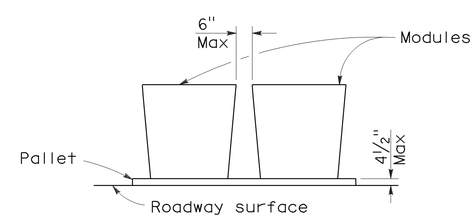

ELEVATION

CRASH CUSHION PALLET DETAIL

See Note 7

NOTES:

1. (XXX) Indicates sand filled module location and weight of sand in pounds for each module. Module spacing is based on the greater diameter of the module.
2. All sand weights are nominal.
3. Temporary crash cushion arrays shall not encroach on the traveled way.
4. Place the top of Type R marker panel 1" below the module lid.
5. Refer to Standard Plan A73B for marker details.
6. Approach speeds indicated conform to NCHRP 350 Report criteria.
7. Use of pallets is optional.

STATE OF CALIFORNIA
DEPARTMENT OF TRANSPORTATION

TEMPORARY CRASH CUSHION, SAND FILLED (UNIDIRECTIONAL)

NO SCALE

RSP T1A DATED JUNE 6, 2008 SUPERSEDES STANDARD PLAN T1A
DATED MAY 1, 2006 - PAGE 211 OF THE STANDARD PLANS BOOK DATED MAY 2006.

REVISED STANDARD PLAN RSP T1A

2006 REVISED STANDARD PLAN RSP T1A

DIST	COUNTY	ROUTE	POST MILES TOTAL PROJECT	SHEET NO.	TOTAL SHEETS
05	SB	154	0.0/5.5	27	29

Randell D. Hiatt
REGISTERED CIVIL ENGINEER

June 6, 2008
PLANS APPROVAL DATE

REGISTERED PROFESSIONAL ENGINEER
Randell D. Hiatt
No. C50200
Exp. 6-30-09
CIVIL
STATE OF CALIFORNIA

The State of California or its officers or agents shall not be responsible for the accuracy or completeness of electronic copies of this plan sheet.

To accompany plans dated 3-26-12

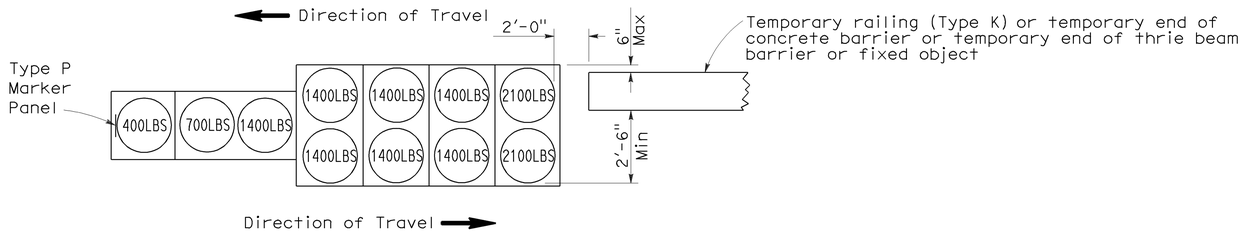

ARRAY 'TB11'

Approach speed less than 45 mph

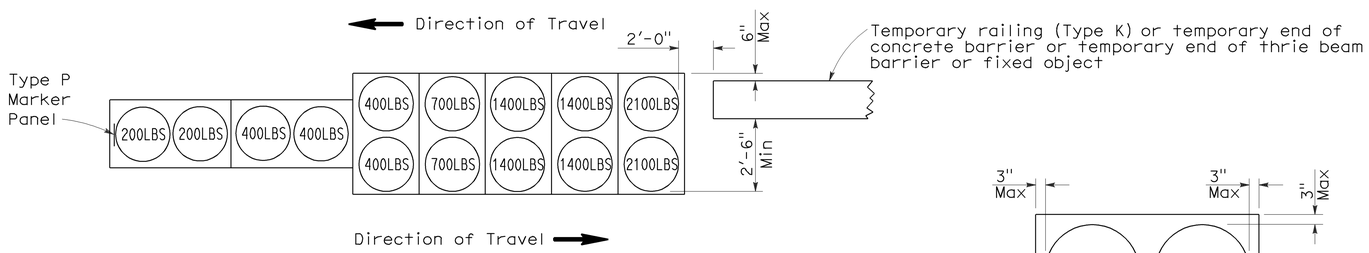

ARRAY 'TB14'

Approach speed 45 mph or more

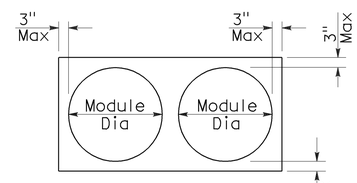

PLAN

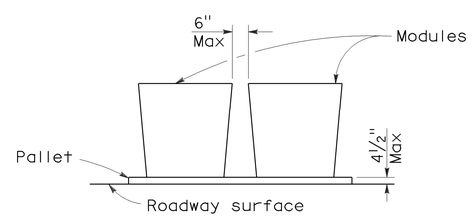

ELEVATION

CRASH CUSHION PALLET DETAIL

See Note 7

NOTES:

1. (XXX) Indicates sand filled module location and weight of sand in pounds for each module. Module spacing is based on the greater diameter of the module.
2. All sand weights are nominal.
3. Temporary crash cushion arrays shall not encroach on the traveled way.
4. Place the Type P marker panel so that the bottom of the panel rests upon the pallet.
5. Refer to Standard Plan A73B for marker details.
6. Approach speeds indicated conform to NCHRP 350 Report criteria.
7. Use of pallets is optional.

STATE OF CALIFORNIA
DEPARTMENT OF TRANSPORTATION

TEMPORARY CRASH CUSHION, SAND FILLED (BIDIRECTIONAL)

NO SCALE

RSP T1B DATED JUNE 6, 2008 SUPERSEDES STANDARD PLAN T1B
DATED MAY 1, 2006 - PAGE 212 OF THE STANDARD PLANS BOOK DATED MAY 2006.

REVISED STANDARD PLAN RSP T1B

2006 REVISED STANDARD PLAN RSP T1B

5-15-08

DIST	COUNTY	ROUTE	POST MILES TOTAL PROJECT	SHEET NO.	TOTAL SHEETS
05	SB	154	0.0/5.5	28	29

Randell D. Hiatt
REGISTERED CIVIL ENGINEER

June 6, 2008
PLANS APPROVAL DATE

REGISTERED PROFESSIONAL ENGINEER
Randell D. Hiatt
No. C50200
Exp. 6-30-09
CIVIL
STATE OF CALIFORNIA

The State of California or its officers or agents shall not be responsible for the accuracy or completeness of electronic copies of this plan sheet.

To accompany plans dated 3-26-12

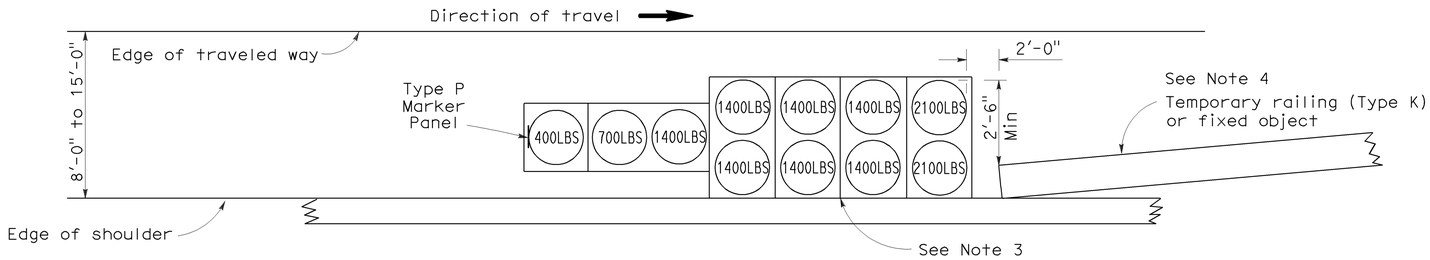

ARRAY 'TS11'

Approach speed less than 45 mph
See Note 9

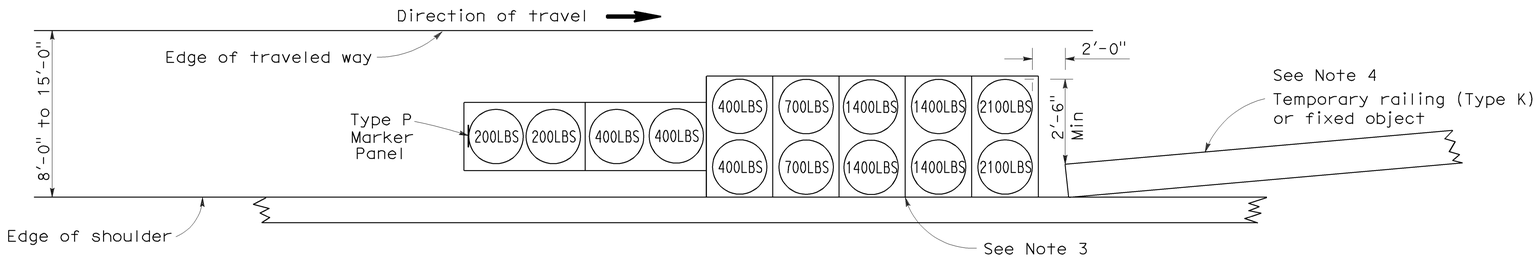

ARRAY 'TS14'

Approach speed 45 mph or more
See Note 9

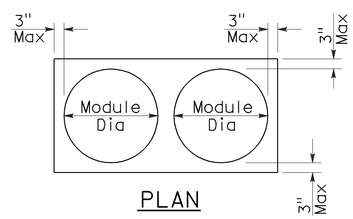

PLAN

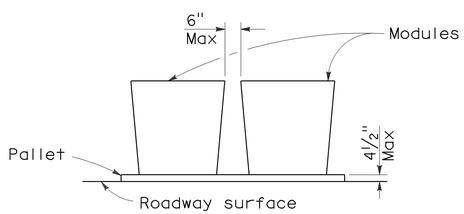

ELEVATION

CRASH CUSHION PALLET DETAIL

See Note 11

NOTES:

1. (XXX) Indicates sand filled module location and weight of sand in pounds for each module. Module spacing is based on the greater diameter of the module.
2. All sand weights are nominal.
3. The temporary crash cushion arrays shown on this plan shall be used only in locations where there will be traffic on one side of the temporary crash cushion array.
4. If the fixed object or approach end of the temporary railing is less than 15'-0" from the edge of traveled way, a temporary crash cushion is required in a construction or work zone.
5. Temporary crash cushion arrays shall not encroach on the traveled way.
6. Arrays for median shoulders shall conform to details shown on this plan for outside shoulders.
7. Place the Type P marker panel so that the bottom of the panel rests upon the pallet and faces traffic.
8. Refer to Standard Plan A73B for marker details.
9. For shoulder widths less than 8'-0", appropriate approved crash cushion protection, other than sand filled modules, shall be provided at fixed objects and at approach ends of temporary railing. The specific type of crash cushion shall be as shown on the project plans or as specified in the Special Provisions, or if not shown on the project plans or specified in the Special Provisions, shall be as approved by the Engineer.
10. Approach speeds indicated conform to NCHRP 350 Report criteria.
11. Use of pallets is optional.

STATE OF CALIFORNIA
DEPARTMENT OF TRANSPORTATION

TEMPORARY CRASH CUSHION, SAND FILLED (SHOULDER INSTALLATIONS)

NO SCALE

RSP T2 DATED JUNE 6, 2008 SUPERSEDES STANDARD PLAN T2
DATED MAY 1, 2006 - PAGE 213 OF THE STANDARD PLANS BOOK DATED MAY 2006.

REVISED STANDARD PLAN RSP T2

2006 REVISED STANDARD PLAN RSP T2

5-15-08

Dist	COUNTY	ROUTE	POST MILES TOTAL PROJECT	SHEET No.	TOTAL SHEETS
05	SB	154	0.0/5.5	29	29

Randell D. Hiatt
REGISTERED CIVIL ENGINEER

May 20, 2011
PLANS APPROVAL DATE

REGISTERED PROFESSIONAL ENGINEER
Randell D. Hiatt
No. C50200
Exp. 6-30-11
CIVIL
STATE OF CALIFORNIA

The State of California or its officers or agents shall not be responsible for the accuracy or completeness of electronic copies of this plan sheet.

To accompany plans dated 3-26-12

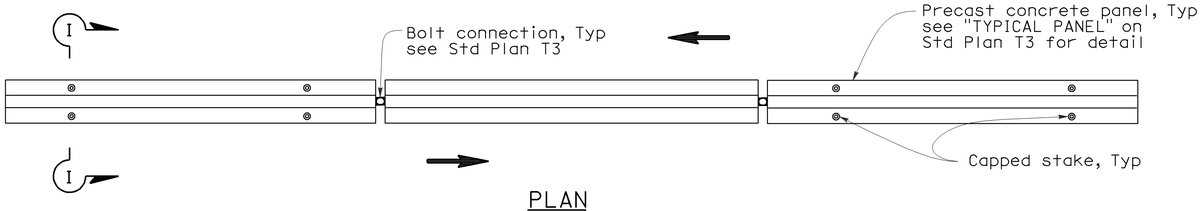

PLAN

RAILING STAKING CONFIGURATION FOR TWO-WAY TRAFFIC

See Note 1

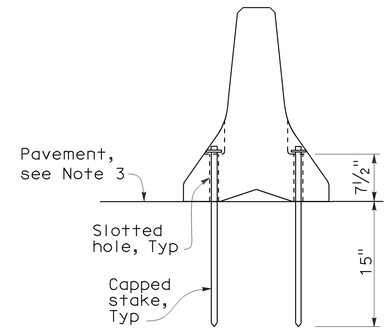

SECTION I-I

NOTES:

1. Where Type K Temporary Railing is placed as a temporary or long term barrier in two-way traffic on highways with less than 24" from the edge of traveled way, use four capped stakes per every other panel with end panels staked.
2. Where Type K Temporary Railing is placed 3" to 24" from the edge of an excavation on highways, use two capped stakes per panel along the traffic side.
3. Staked Type K Temporary Railing must be supported by at least 4" thick concrete, hot mix asphalt or existing asphalt concrete pavement.
4. The minimum yield strength for the washer must be 60,000 psi.
5. Direction of adjacent traffic indicated by ⟹.

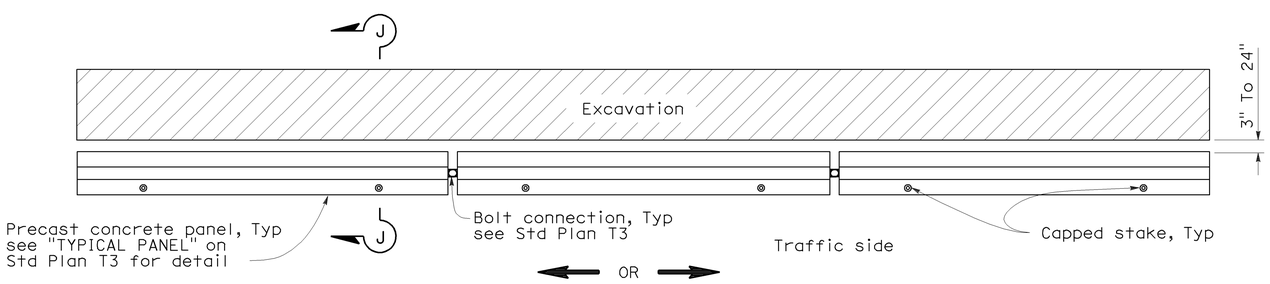

PLAN

RAILING STAKING CONFIGURATION ADJACENT TO AN EXCAVATION

See Note 2

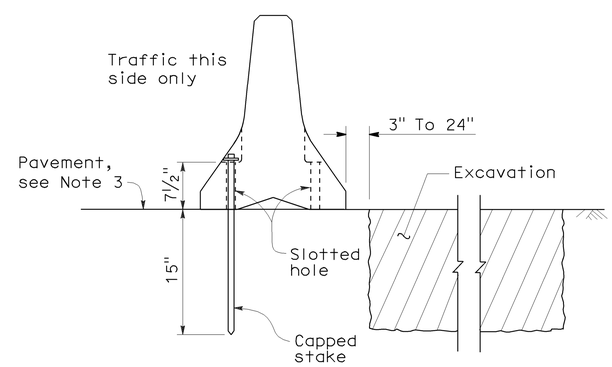

SECTION J-J

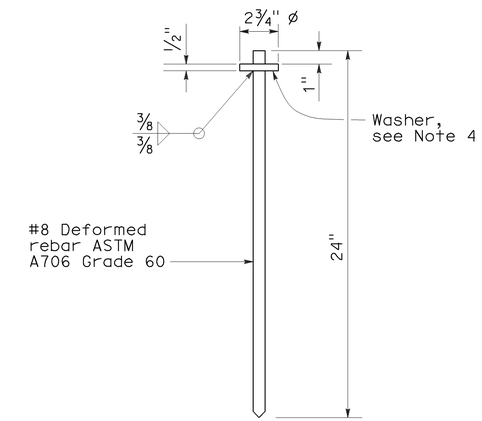

CAPPED STAKE DETAIL

STATE OF CALIFORNIA
DEPARTMENT OF TRANSPORTATION

TEMPORARY RAILING (TYPE K)

NO SCALE

NSP T3A DATED MAY 20, 2011 SUPPLEMENTS
THE STANDARD PLANS BOOK DATED MAY 2006.

NEW STANDARD PLAN NSP T3A

2006 NEW STANDARD PLAN NSP T3A