INDEX OF PLANS

SHEET No.	DESCRIPTION
1	TITLE AND LOCATION MAP
2-4	TYPICAL CROSS SECTIONS
5	LAYOUT
6-7	PROFILES AND SUPERELEVATION DIAGRAMS
8-12	CONSTRUCTION DETAILS
13-16	DRAINAGE PLANS, PROFILES, DETAILS AND QUANTITIES
17	UTILITY PLAN
18	CONSTRUTION AREA SIGNS
19-22	STAGE CONSTRUCTION, TRAFFIC HANDLING PLANS AND QUANTITIES
23-24	PAVEMENT DELINEATION, SIGN PLAN AND QUANTITIES
25	SUMMARY OF QUANTITIES
26	EROSION CONTROL LEGEND AND QUANTITIES
27-28	ELECTRICAL PLANS AND QUANTITIES
29-48	REVISED STANDARD PLANS

THE STANDARD PLANS LIST APPLICABLE TO THIS CONTRACT IS INCLUDED IN THE NOTICE TO BIDDERS AND SPECIAL PROVISIONS BOOK.

STATE OF CALIFORNIA

DEPARTMENT OF TRANSPORTATION

ACHSSTP-P246(017)E

Dist	COUNTY	ROUTE	POST MILES TOTAL PROJECT	SHEET No.	TOTAL SHEETS
05	SB	246	33.2/33.5	1	48

PROJECT PLANS FOR CONSTRUCTION ON

STATE HIGHWAY

IN SANTA BARBARA COUNTY
AT SANTA YNEZ
FROM 0.1 MILE EAST OF EDISON STREET
TO 0.1 MILE EAST OF MEADOWVALE LANE

TO BE SUPPLEMENTED BY STANDARD PLANS DATED 2010

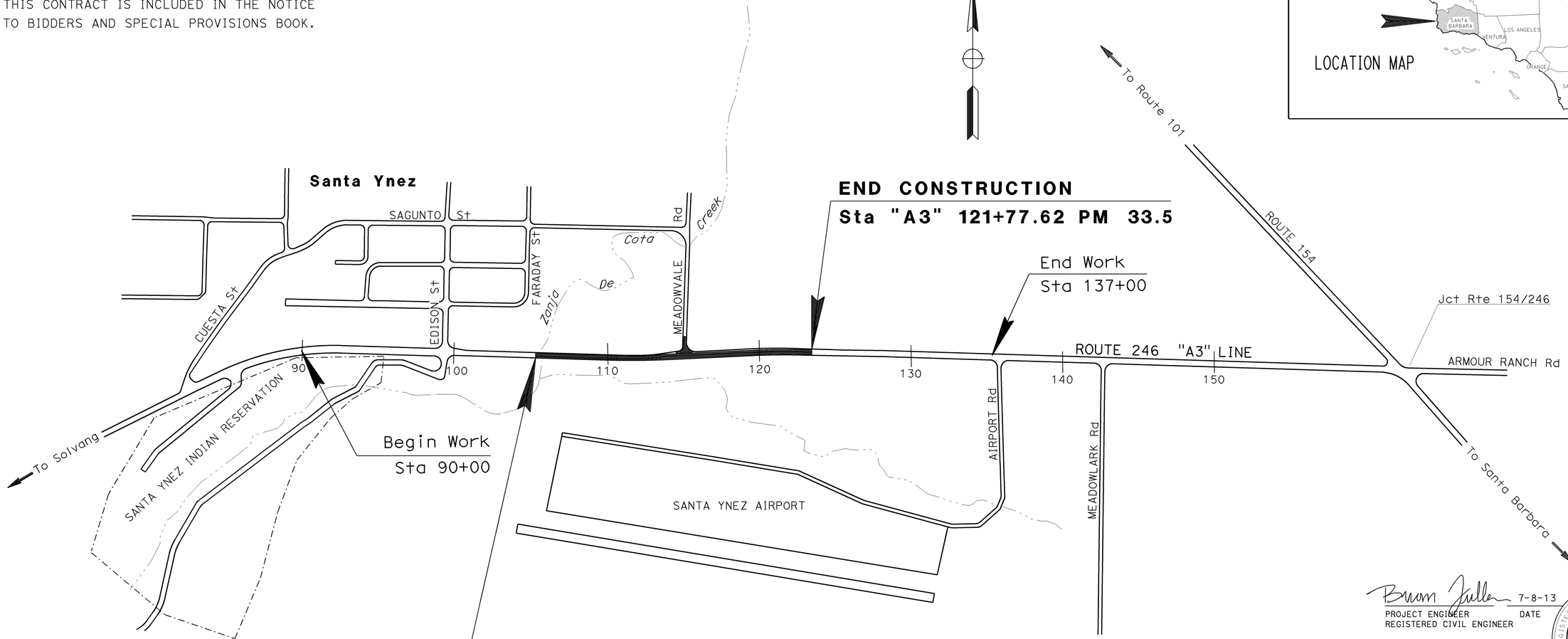

NO SCALE

THE CONTRACTOR SHALL POSSESS THE CLASS (OR CLASSES) OF LICENSE AS SPECIFIED IN THE "NOTICE TO BIDDERS."

PROJECT MANAGER: AMY DONATELLO

DESIGN ENGINEER: STEVE WYATT

Brian Fuller 7-8-13
PROJECT ENGINEER DATE
REGISTERED CIVIL ENGINEER

July 8, 2013
PLANS APPROVAL DATE

REGISTERED PROFESSIONAL ENGINEER
BRIAN FULLER
No. 73000
Exp. 12-31-14
CIVIL
STATE OF CALIFORNIA

THE STATE OF CALIFORNIA OR ITS OFFICERS OR AGENTS SHALL NOT BE RESPONSIBLE FOR THE ACCURACY OR COMPLETENESS OF SCANNED COPIES OF THIS PLAN SHEET.

CONTRACT No.	05-0T9704
PROJECT ID	0500020226

LAST REVISION 07-08-13
DATE PLOTTED => 18-SEP-2013
TIME PLOTTED => 08:04

Dist	COUNTY	ROUTE	POST MILES TOTAL PROJECT	SHEET No.	TOTAL SHEETS
05	SB	246	33.2/33.5	2	48

REGISTERED CIVIL ENGINEER — DATE 7-8-13

PLANS APPROVAL DATE 7-8-13

BRIAN FULLER No. 73000 Exp. 12-31-14 CIVIL — REGISTERED PROFESSIONAL ENGINEER — STATE OF CALIFORNIA

THE STATE OF CALIFORNIA OR ITS OFFICERS OR AGENTS SHALL NOT BE RESPONSIBLE FOR THE ACCURACY OR COMPLETENESS OF SCANNED COPIES OF THIS PLAN SHEET.

NOTES:

1. DIMENSIONS OF THE PAVEMENT STRUCTURES (STRUCTURAL SECTIONS) ARE SUBJECT TO TOLERANCES SPECIFIED IN THE STANDARD SPECIFICATIONS.
2. SUPERELEVATIONS ARE SHOWN ON THE SUPERELEVATION DIAGRAMS.
3. SAWCUT PER TABLE, Sht C-4.
4. SEE LAYOUT AND SUMMARY OF QUANTITIES FOR EXACT LOCATIONS AND TYPES OF HMA DIKE AND MGS.
5. 5′ HP TO ES FROM Sta Lt 109+75 TO 109+90
   3′ HP TO ES FROM Sta Lt 105+20 TO 105+75
   2′ HP TO ES FROM Sta Lt 105+90 TO 106+00
   2.5′ HP TO ES FROM Sta Lt 106+25 TO 106+75
6. 2:1 SLOPE FROM Sta 110+50 TO 111+50.
7. ROUND TOPS OF ALL CUT SLOPES.
8. SAFETY EDGE PER RSP P75.

ROUTE 246 DESIGN DESIGNATION

ADT (2011)	20,437	D	55%
ADT (2021)	23,228	T	3%
DHV	1,929	V	55 MPH
ESAL	3,020,000	TI20	10

PAVEMENT CLIMATE REGION

SOUTH COAST

ABBREVIATIONS

SC	SAWCUT
VCP	VITRIFIED CLAY PIPE

STRUCTURAL SECTIONS:

1 — Exist
0.45′ AND Var AC
1.55′ AND Var AB

2 — 0.50′ HMA (TYPE A)
1.80′ CLASS 2 AB

3 — 0.05′ TO 0.25′ COLD PLANE AC PAVEMENT
0.20′ HMA (TYPE A)

4 — 0.25′ HMA (TYPE A)
1.00′ CL 2 AGG BASE

5 — 0.20′ COLD PLANE AC PAVEMENT
0.20′ HMA (TYPE A)

6 — Exist
0.25′ AND Var AC
1.00′ AND Var AB

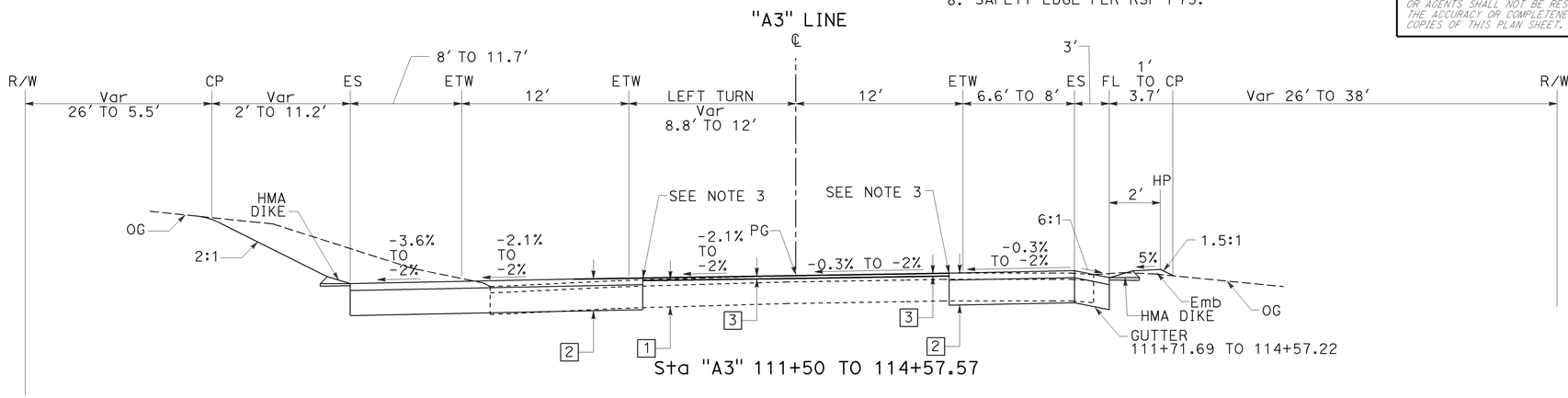

Sta "A3" 111+50 TO 114+57.57

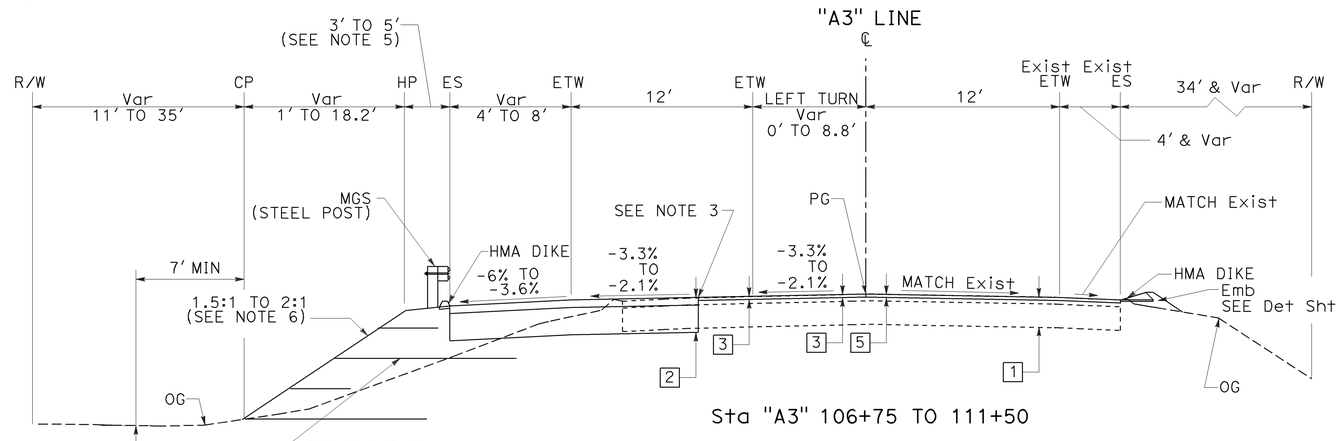

Sta "A3" 106+75 TO 111+50

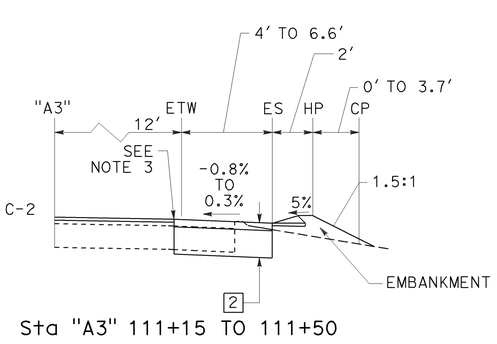

Sta "A3" 111+15 TO 111+50

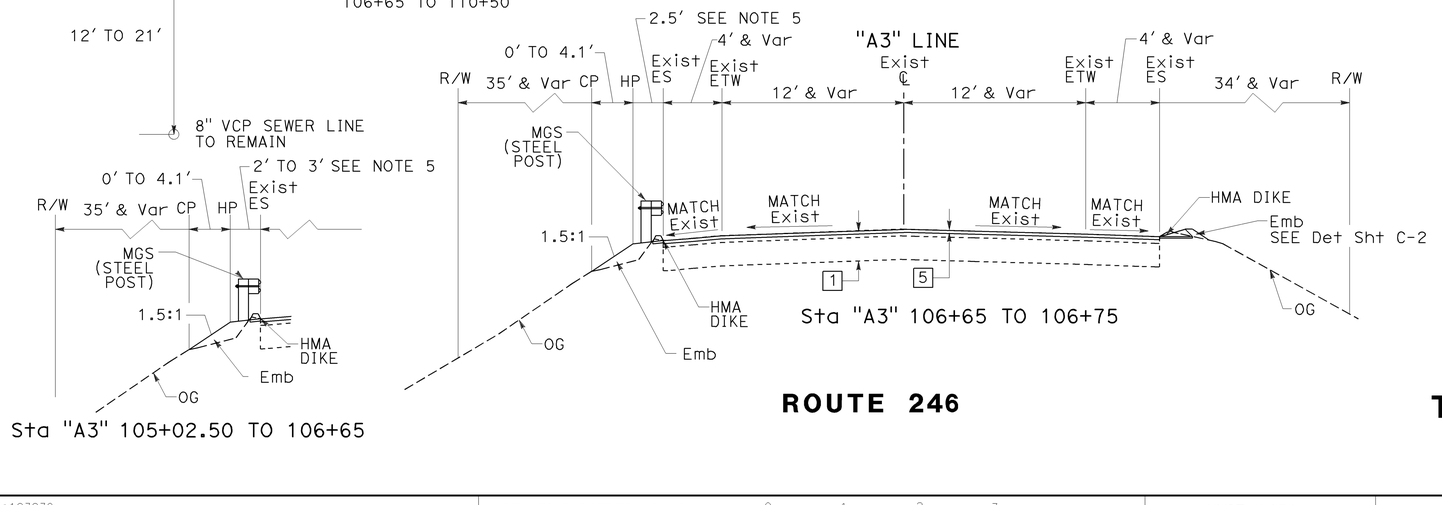

Sta "A3" 106+65 TO 106+75

Sta "A3" 105+02.50 TO 106+65

ROUTE 246

TYPICAL CROSS SECTIONS

NO SCALE

X-1

LAST REVISION — DATE PLOTTED => 15-AUG-2013 — TIME PLOTTED => 08:14 — 07-08-13

BRIAN FULLER — DESIGNED BY
MIKE O'NEAL — CALCULATED-
CHECKED BY
STEVE WYATT — FUNCTIONAL SUPERVISOR
REVISED BY — DATE REVISED

STATE OF CALIFORNIA - DEPARTMENT OF TRANSPORTATION
DESIGN

Dist	COUNTY	ROUTE	POST MILES TOTAL PROJECT	SHEET No.	TOTAL SHEETS
05	SB	246	33.2/33.5	3	48

Brian Fuller 7-8-13
REGISTERED CIVIL ENGINEER DATE

7-8-13
PLANS APPROVAL DATE

REGISTERED PROFESSIONAL ENGINEER
BRIAN FULLER
No. 73000
Exp. 12-31-14
CIVIL
STATE OF CALIFORNIA

THE STATE OF CALIFORNIA OR ITS OFFICERS OR AGENTS SHALL NOT BE RESPONSIBLE FOR THE ACCURACY OR COMPLETENESS OF SCANNED COPIES OF THIS PLAN SHEET.

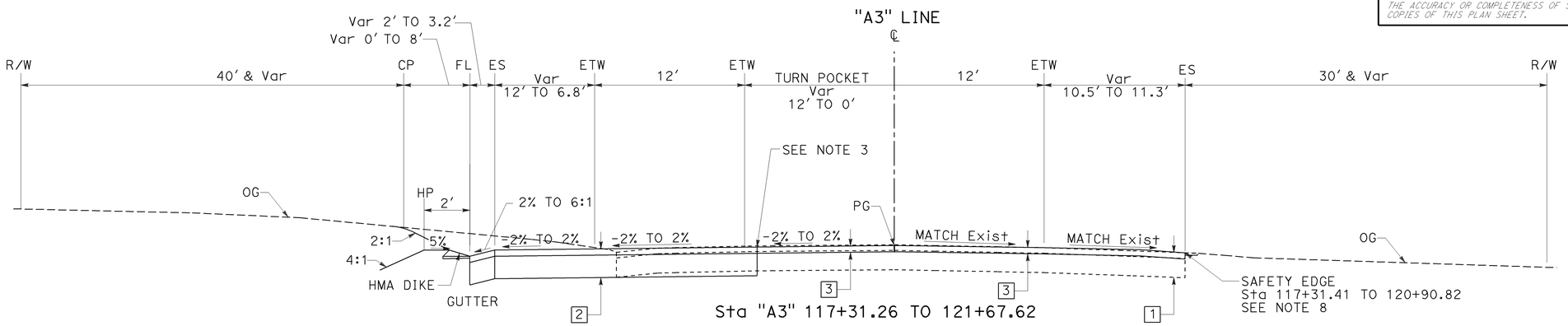

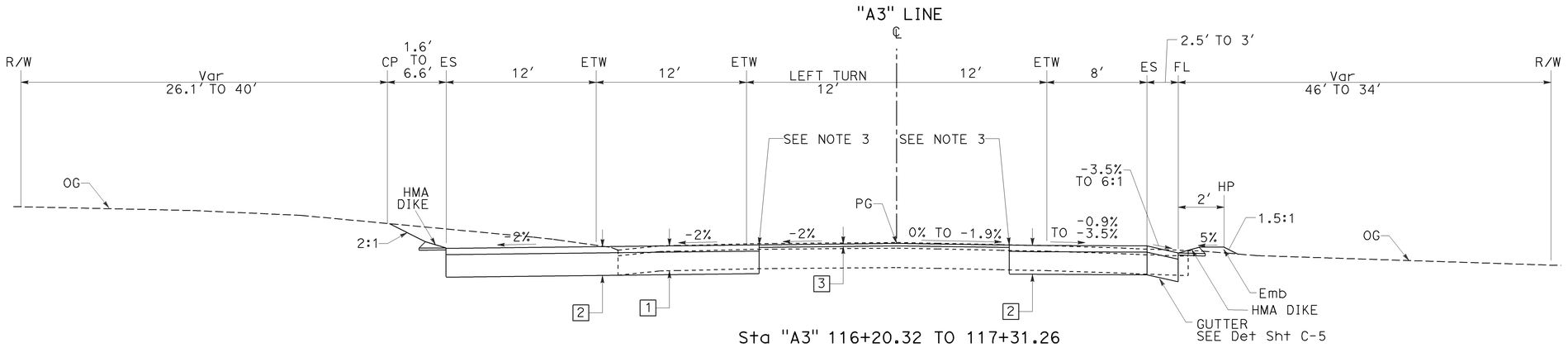

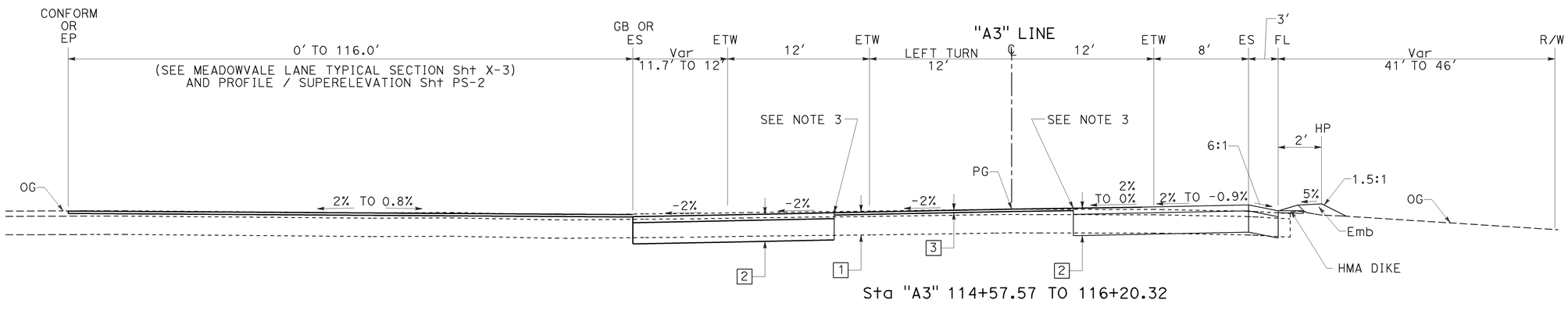

ROUTE 246

TYPICAL CROSS SECTIONS

NO SCALE

X-2

STATE OF CALIFORNIA - DEPARTMENT OF TRANSPORTATION
DESIGN
FUNCTIONAL SUPERVISOR: STEVE WYATT
CALCULATED-DESIGNED BY
CHECKED BY: MIKE O'NEAL
REVISED BY
DATE REVISED
BRIAN FULLER

LAST REVISION DATE PLOTTED => 15-AUG-2013
07-08-13 TIME PLOTTED => 08:14

BORDER LAST REVISED 7/2/2010
USERNAME => s123239
DGN FILE => 0500020226ca002.dgn
RELATIVE BORDER SCALE IS IN INCHES 0 1 2 3
UNIT 1450
PROJECT NUMBER & PHASE 05000202261

Dist	COUNTY	ROUTE	POST MILES TOTAL PROJECT	SHEET No.	TOTAL SHEETS
05	SB	246	33.2/33.5	4	48

REGISTERED CIVIL ENGINEER — DATE 7-8-13

BRIAN FULLER No. 73000 Exp. 12-31-14 CIVIL — REGISTERED PROFESSIONAL ENGINEER — STATE OF CALIFORNIA

PLANS APPROVAL DATE 7-8-13

THE STATE OF CALIFORNIA OR ITS OFFICERS OR AGENTS SHALL NOT BE RESPONSIBLE FOR THE ACCURACY OR COMPLETENESS OF SCANNED COPIES OF THIS PLAN SHEET.

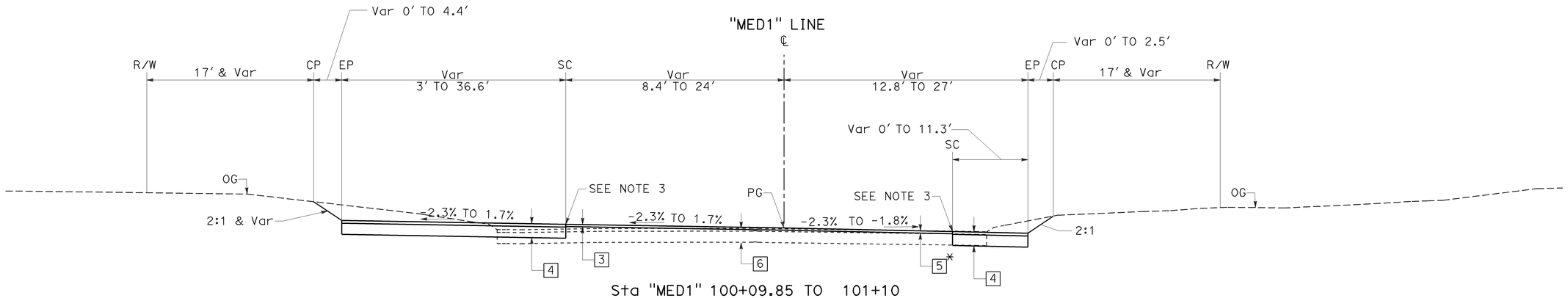

Sta "MED1" 100+09.85 TO 101+10

*5 FROM 100+09.85 TO 100+40 AND
3 FROM 100+40 TO 101+26.98

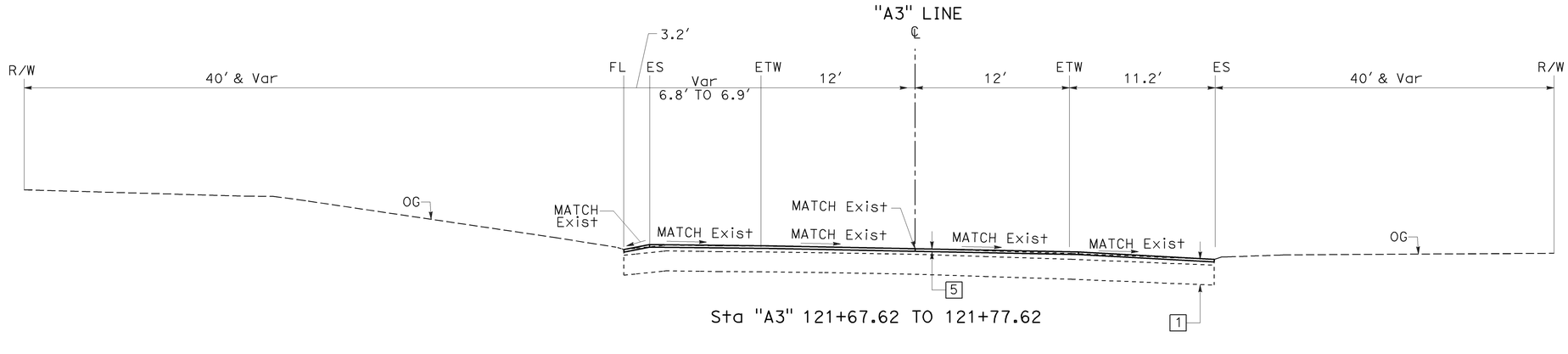

Sta "A3" 121+67.62 TO 121+77.62

ROUTE 246

TYPICAL CROSS SECTIONS

NO SCALE

X-3

BRIAN FULLER — CALCULATED-DESIGNED BY
MIKE O'NEAL — CHECKED BY
STEVE WYATT — FUNCTIONAL SUPERVISOR
REVISED BY — DATE REVISED

STATE OF CALIFORNIA - DEPARTMENT OF TRANSPORTATION
DESIGN

LAST REVISION | DATE PLOTTED => 15-AUG-2013
07-08-13 | TIME PLOTTED => 08:14

BORDER LAST REVISED 7/2/2010 | USERNAME => s123239 | DGN FILE => 0500020226ca003.dgn | RELATIVE BORDER SCALE IS IN INCHES 0 1 2 3 | UNIT 1450 | PROJECT NUMBER & PHASE 05000202261

Dist	COUNTY	ROUTE	POST MILES TOTAL PROJECT	SHEET No.	TOTAL SHEETS
05	SB	246	33.2/33.5	5	48

REGISTERED CIVIL ENGINEER — 7-8-13 DATE

BRIAN FULLER No. 73000 Exp.12-31-14 CIVIL — REGISTERED PROFESSIONAL ENGINEER — STATE OF CALIFORNIA

7-8-13
PLANS APPROVAL DATE

THE STATE OF CALIFORNIA OR ITS OFFICERS OR AGENTS SHALL NOT BE RESPONSIBLE FOR THE ACCURACY OR COMPLETENESS OF SCANNED COPIES OF THIS PLAN SHEET.

NOTES:

1. FOR ACCURATE RIGHT OF WAY DATA, CONTACT RIGHT OF WAY ENGINEERING AT THE DISTRICT OFFICE.
2. UNLESS OTHERWISE NOTED ES IS DIKE FL.
3. TRANSITION BETWEEN DIKE TYPES PER Sht C-2.

LEGEND:

COLD PLANE AC PAVEMENT AND HMA OVERLAY

HMA OVERLAY

ABBREVIATION:

HSS HIGH SIDE SUPER

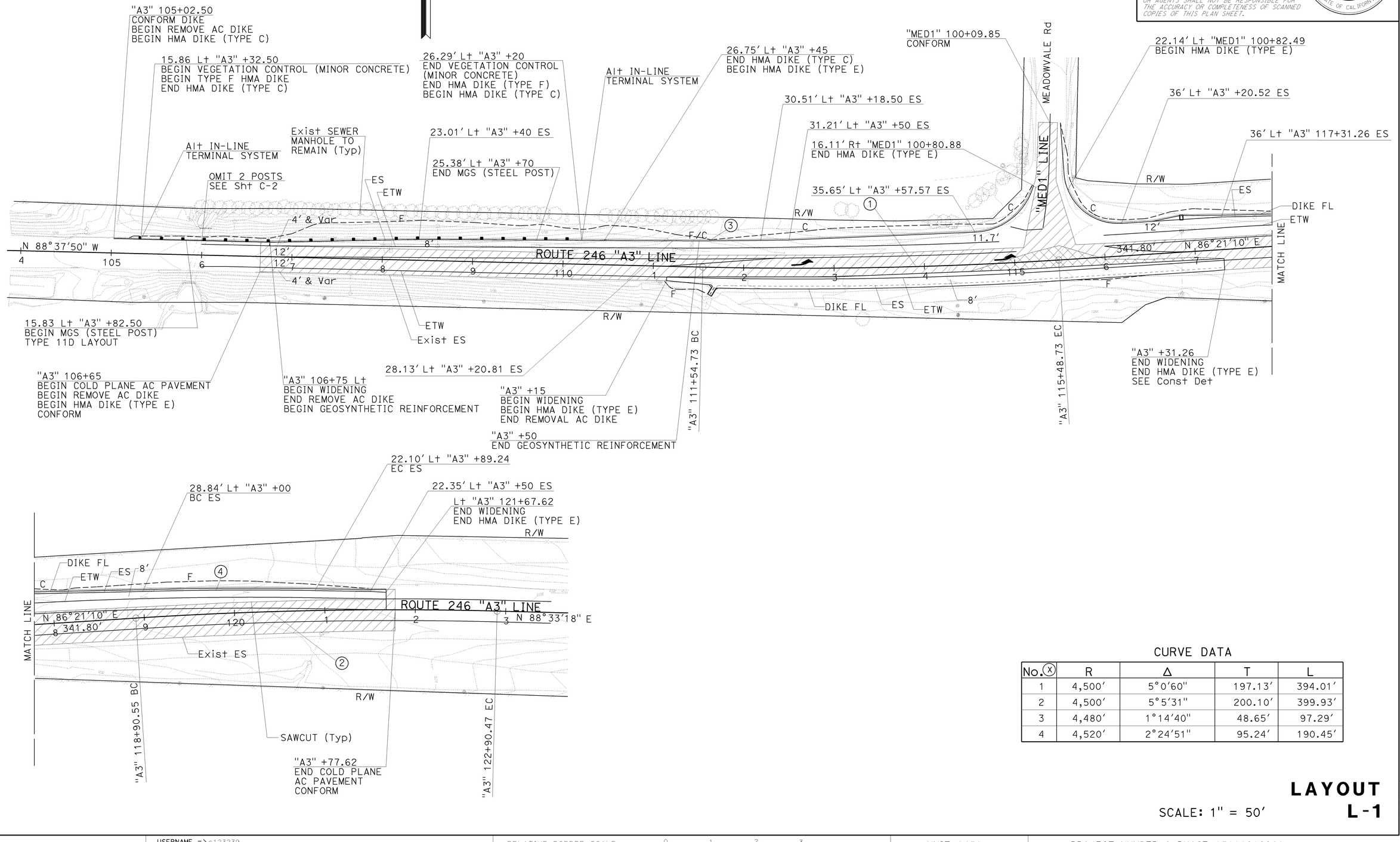

CURVE DATA

No. (X)	R	Δ	T	L
1	4,500′	5°0′60"	197.13′	394.01′
2	4,500′	5°5′31"	200.10′	399.93′
3	4,480′	1°14′40"	48.65′	97.29′
4	4,520′	2°24′51"	95.24′	190.45′

LAYOUT
SCALE: 1" = 50′ **L-1**

REVISED BY | DATE REVISED
BRIAN FULLER | MIKE O'NEAL
CALCULATED-DESIGNED BY | CHECKED BY
FUNCTIONAL SUPERVISOR: STEVE WYATT
STATE OF CALIFORNIA - DEPARTMENT OF TRANSPORTATION
DESIGN

LAST REVISION DATE PLOTTED => 15-AUG-2013
TIME PLOTTED => 08:14
07-08-13

BORDER LAST REVISED 7/2/2010 | USERNAME => s123239 | DGN FILE => 0500020226ea001.dgn | RELATIVE BORDER SCALE IS IN INCHES 0 1 2 3 | UNIT 1450 | PROJECT NUMBER & PHASE 05000202261

NOTE:

ALL ELEVATIONS BASED ON NAVD 1988.

Dist	COUNTY	ROUTE	POST MILES TOTAL PROJECT	SHEET No.	TOTAL SHEETS
05	SB	246	33.2/33.5	6	48

REGISTERED CIVIL ENGINEER — DATE 7-8-13

BRIAN FULLER No. 73000 Exp. 12-31-14 CIVIL — REGISTERED PROFESSIONAL ENGINEER — STATE OF CALIFORNIA

7-8-13
PLANS APPROVAL DATE

THE STATE OF CALIFORNIA OR ITS OFFICERS OR AGENTS SHALL NOT BE RESPONSIBLE FOR THE ACCURACY OR COMPLETENESS OF SCANNED COPIES OF THIS PLAN SHEET.

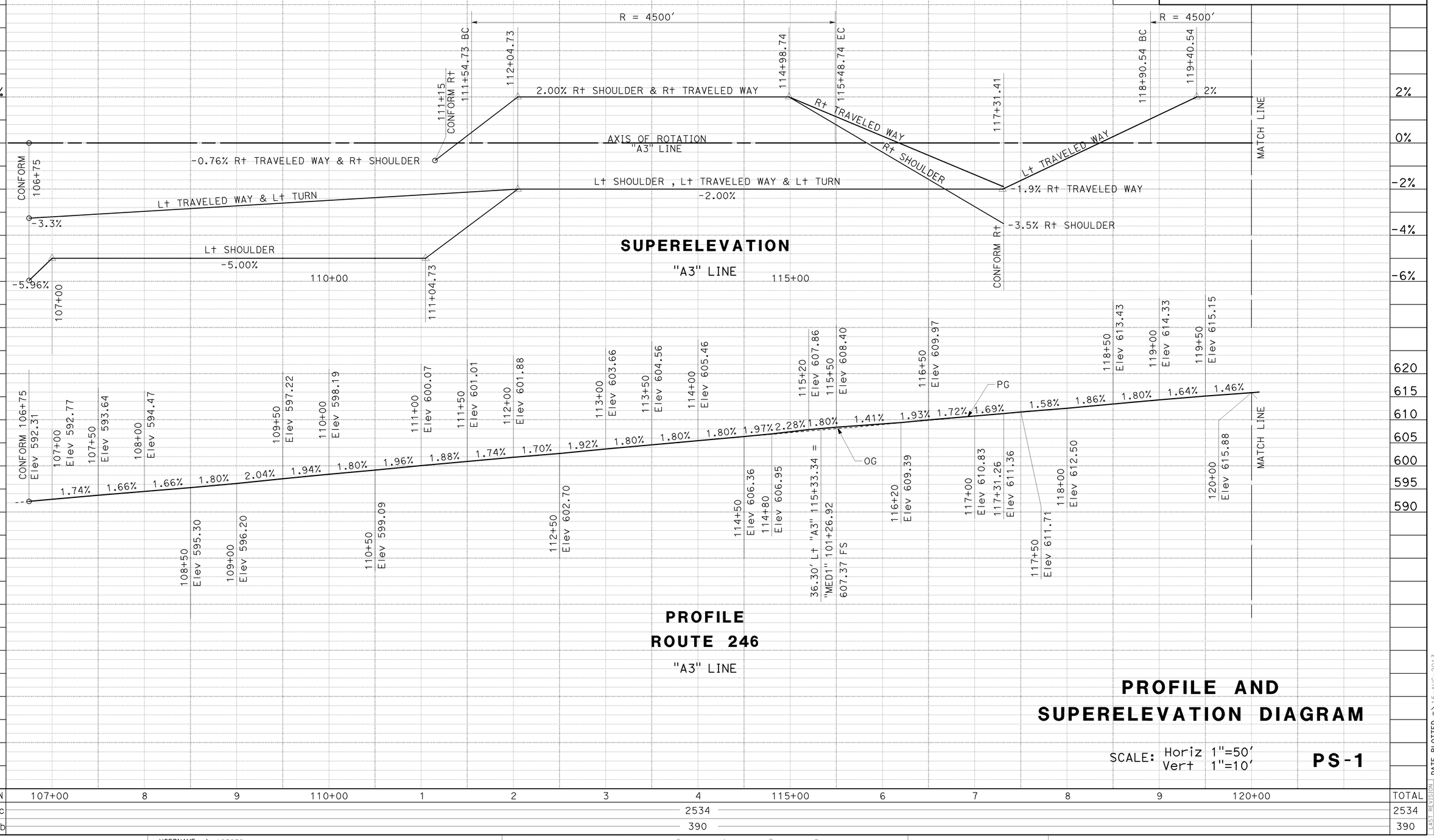

SUPERELEVATION

"A3" LINE

PROFILE

ROUTE 246

"A3" LINE

PROFILE AND SUPERELEVATION DIAGRAM

SCALE: Horiz 1"=50'
Vert 1"=10'

PS-1

STATION	107+00	8	9	110+00	1	2	3	4	115+00	6	7	8	9	120+00	TOTAL
CY Exc								2534							2534
CY Emb								390							390

STATE OF CALIFORNIA - DEPARTMENT OF TRANSPORTATION — DESIGN

Caltrans

FUNCTIONAL SUPERVISOR: STEVE WYATT

CALCULATED-DESIGNED BY: BRIAN FULLER

CHECKED BY: MIKE O'NEAL

REVISED BY

DATE REVISED

LAST REVISION — DATE PLOTTED => 15-AUG-2013 — TIME PLOTTED => 08:14 — 07-08-13

BORDER LAST REVISED 7/2/2010

USERNAME => s123239
DGN FILE => 0500020226fb001.dgn

RELATIVE BORDER SCALE IS IN INCHES 0 1 2 3

UNIT 1450

PROJECT NUMBER & PHASE 05000202261

Dist	COUNTY	ROUTE	POST MILES TOTAL PROJECT	SHEET No.	TOTAL SHEETS
05	SB	246	33.2/33.5	7	48

REGISTERED CIVIL ENGINEER — DATE: 7-8-13

BRIAN FULLER No. 73000 Exp. 12-31-14 CIVIL — REGISTERED PROFESSIONAL ENGINEER — STATE OF CALIFORNIA

7-8-13
PLANS APPROVAL DATE

THE STATE OF CALIFORNIA OR ITS OFFICERS OR AGENTS SHALL NOT BE RESPONSIBLE FOR THE ACCURACY OR COMPLETENESS OF SCANNED COPIES OF THIS PLAN SHEET.

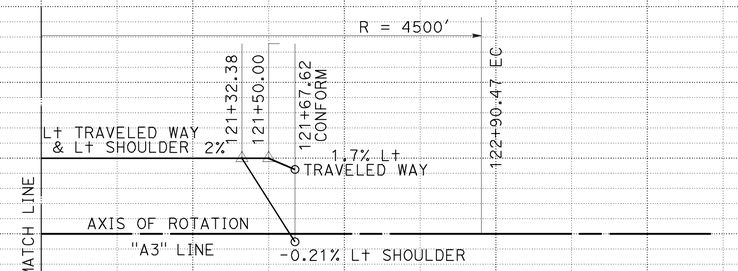

SUPERELEVATION
ROUTE 246
"A3" LINE

PROFILE
ROUTE 246
"A3" LINE

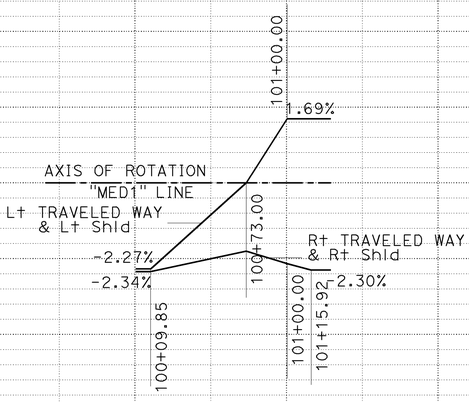

SUPERELEVATION
MEADOWVALE Rd

PROFILE
MEADOWVALE Rd
"MED1" LINE

PROFILE AND SUPERELEVATION DIAGRAM

SCALE: Horiz 1"=50'
Vert 1"=10'

PS-2

STATION	120+00	1	2	3	TOTAL
CY Exc					
CY Emb					

STATE OF CALIFORNIA - DEPARTMENT OF TRANSPORTATION — DESIGN — Caltrans

FUNCTIONAL SUPERVISOR: STEVE WYATT

CALCULATED-DESIGNED BY: BRIAN FULLER

CHECKED BY: MIKE O'NEAL

REVISED BY / DATE REVISED

LAST REVISION DATE PLOTTED => 15-AUG-2013
TIME PLOTTED => 08:14
07-08-13

Dist	COUNTY	ROUTE	POST MILES TOTAL PROJECT	SHEET No.	TOTAL SHEETS
05	SB	246	33.2/33.5	8	48

REGISTERED CIVIL ENGINEER — DATE 7-8-13

BRIAN FULLER No. 73000 Exp. 12-31-14 CIVIL — REGISTERED PROFESSIONAL ENGINEER — STATE OF CALIFORNIA

PLANS APPROVAL DATE 7-8-13

THE STATE OF CALIFORNIA OR ITS OFFICERS OR AGENTS SHALL NOT BE RESPONSIBLE FOR THE ACCURACY OR COMPLETENESS OF SCANNED COPIES OF THIS PLAN SHEET.

NOTES:

1. FOR ACCURATE RIGHT OF WAY DATA, CONTACT RIGHT OF WAY ENGINEERING AT THE DISTRICT OFFICE.
2. SEE SHEET PD-1 FOR SIGN RELOCATION Det.
3. DIVISION BETWEEN MAINLINE STRUCTURAL SECTION AND MEADOWVALE LANE STRUCTURAL SECTION IS GRADE BREAK LINE.

LEGEND:

COLD PLANE AC PAVEMENT AND HMA OVERLAY

HMA OVERLAY

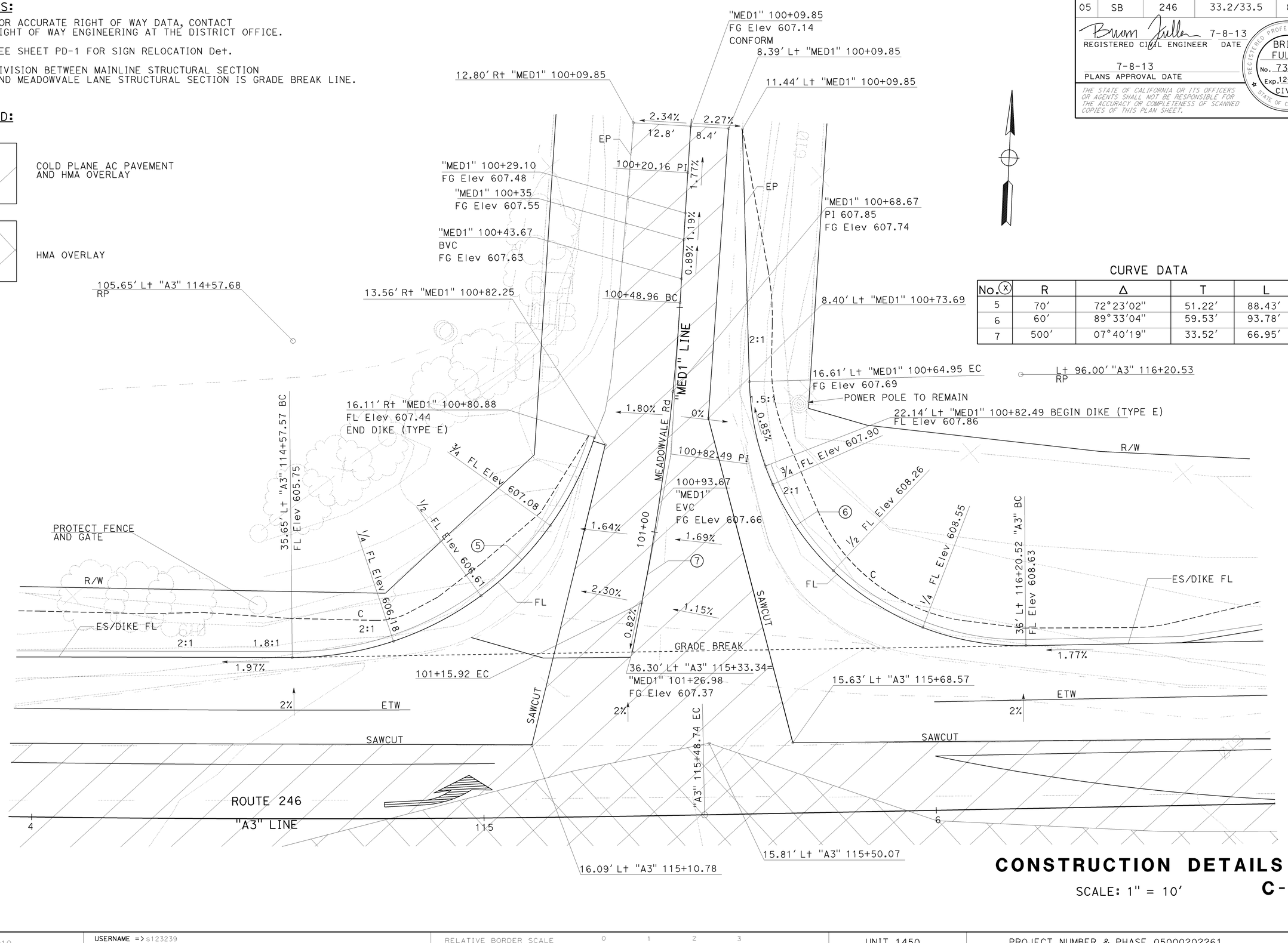

CURVE DATA

No. (X)	R	Δ	T	L
5	70′	72°23′02"	51.22′	88.43′
6	60′	89°33′04"	59.53′	93.78′
7	500′	07°40′19"	33.52′	66.95′

CONSTRUCTION DETAILS

SCALE: 1" = 10′

C-1

REVISED BY	DATE REVISED

CALCULATED-DESIGNED BY: BRIAN FULLER
CHECKED BY: MIKE O'NEAL
FUNCTIONAL SUPERVISOR: STEVE WYATT
STATE OF CALIFORNIA - DEPARTMENT OF TRANSPORTATION
DESIGN

LAST REVISION DATE PLOTTED => 15-AUG-2013
07-08-13 TIME PLOTTED => 08:14

BORDER LAST REVISED 7/2/2010

USERNAME => s123239
DGN FILE => 0500020226ga001.dgn

RELATIVE BORDER SCALE IS IN INCHES 0 1 2 3

UNIT 1450

PROJECT NUMBER & PHASE 05000202261

Dist	COUNTY	ROUTE	POST MILES TOTAL PROJECT	SHEET No.	TOTAL SHEETS
05	SB	246	33.2/33.5	9	48

Brian Fuller 7-8-13
REGISTERED CIVIL ENGINEER DATE

7-8-13
PLANS APPROVAL DATE

REGISTERED PROFESSIONAL ENGINEER
BRIAN FULLER
No. 73000
Exp. 12-31-14
CIVIL
STATE OF CALIFORNIA

THE STATE OF CALIFORNIA OR ITS OFFICERS OR AGENTS SHALL NOT BE RESPONSIBLE FOR THE ACCURACY OR COMPLETENESS OF SCANNED COPIES OF THIS PLAN SHEET.

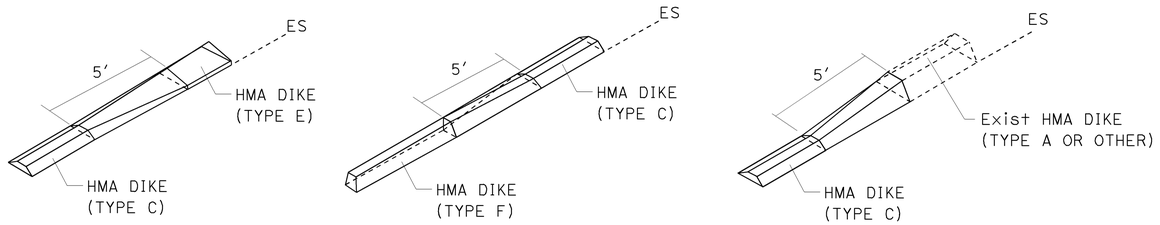

HMA DIKE TRANSITIONS

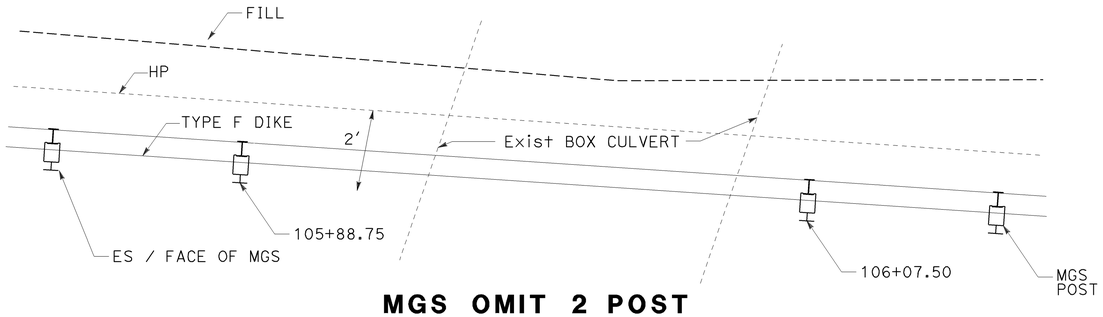

MGS OMIT 2 POST

PLAN

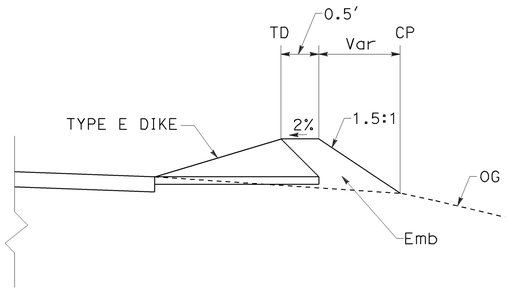

HMA DIKE (TYPE E)
105+02.50 TO 111+15 EMBANKMENT

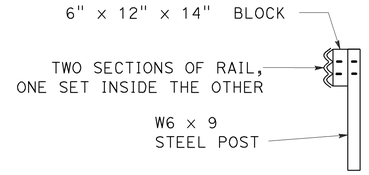

SECTION A-A

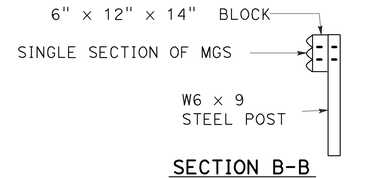

SECTION B-B

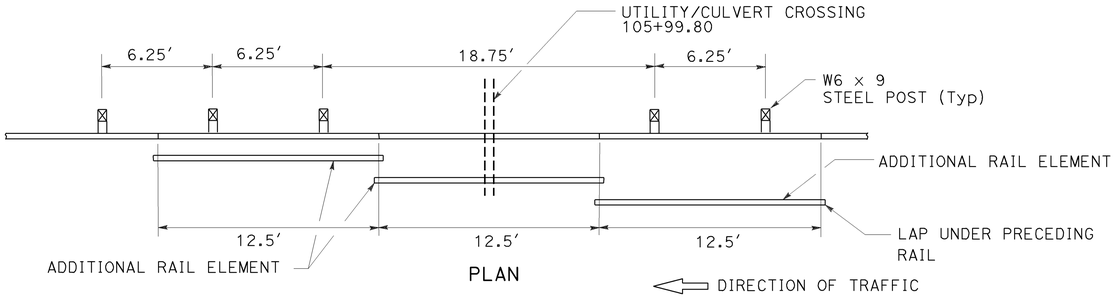

PLAN

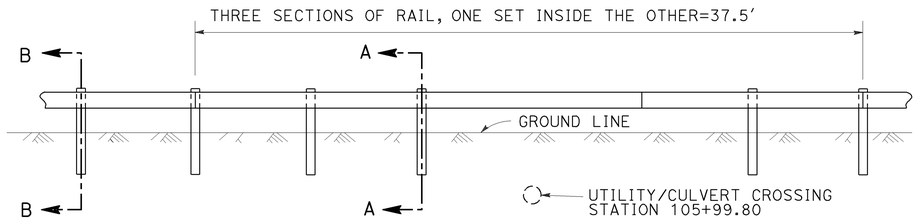

ELEVATION

NESTED MGS BEAM
TWO POST OMITTED

NOTES:

1. ALL RAIL ELEMENTS ARE 13′-6.5" LONG.
2. SEE STANDARD PLANS FOR DETAILS NOT SHOWN.
3. ADJUST POST SPACING TO AVOID PIPE LATERALS AND UTILITIES.

CONSTRUCTION DETAILS

NO SCALE

C-2

REVISED BY | DATE REVISED
BRIAN FULLER | MIKE O'NEAL
CALCULATED-DESIGNED BY | CHECKED BY
FUNCTIONAL SUPERVISOR: STEVE WYATT
STATE OF CALIFORNIA - DEPARTMENT OF TRANSPORTATION
Caltrans
DESIGN

LAST REVISION | DATE PLOTTED => 15-AUG-2013 | TIME PLOTTED => 08:14
07-08-13

BORDER LAST REVISED 7/2/2010
USERNAME => s123239
DGN FILE => 0500020226ga002.dgn
RELATIVE BORDER SCALE IS IN INCHES 0 1 2 3
UNIT 1450
PROJECT NUMBER & PHASE 05000202261

Dist	COUNTY	ROUTE	POST MILES TOTAL PROJECT	SHEET No.	TOTAL SHEETS
05	SB	246	33.2/33.5	10	48

Dan Appelbaum 7-8-13
REGISTERED CIVIL ENGINEER DATE

7-8-13
PLANS APPROVAL DATE

REGISTERED PROFESSIONAL ENGINEER — DAN APPELBAUM — No. 50001 — Exp. 6-30-15 — CIVIL — STATE OF CALIFORNIA

THE STATE OF CALIFORNIA OR ITS OFFICERS OR AGENTS SHALL NOT BE RESPONSIBLE FOR THE ACCURACY OR COMPLETENESS OF SCANNED COPIES OF THIS PLAN SHEET.

DESIGN PARAMETERS:

FRICTION ANGLE FOR FILL = 33 DEGREES
COHESION = 0 PSF
COMPACTED UNIT WEIGHT = 125 PCF
FACTOR OF SAFETY - GLOBAL = 1.5
GEOSYNTHETIC LONG TERM DESIGN STRENGTH (LTDS) = 1 KIP/FT

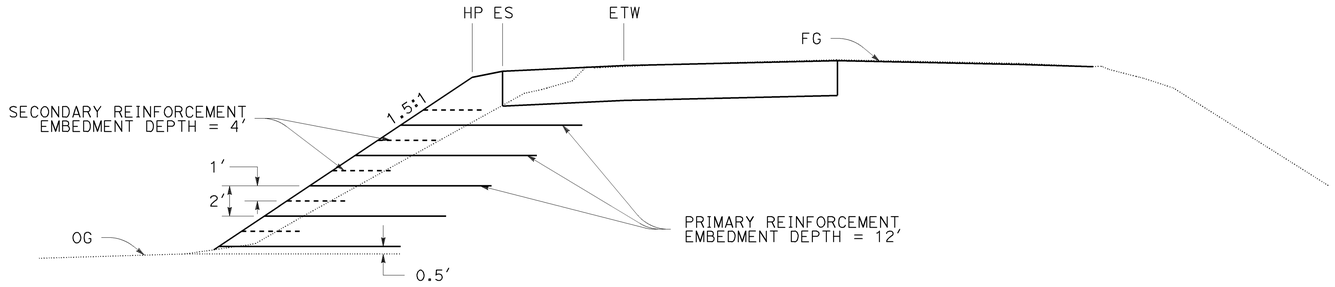

TYPICAL CROSS SECTION

Sta "A3106+75 TO 110+50

ROUTE 246

SCALE: 1"=5'

MIRROR ELEVATION

SCALE Horiz: 1"=20'
Vert: 1"=5'

CONSTRUCTION DETAILS
(GEOSYNTHETIC REINFORCED EMBANKEMNT)
C-3

SCALE AS SHOWN

STATE OF CALIFORNIA - DEPARTMENT OF TRANSPORTATION
Caltrans® GEOTECHNICAL DESIGN
FUNCTIONAL SUPERVISOR: MIKE FINEGAN
CALCULATED-DESIGNED BY: D.L. APPELBAUM
CHECKED BY: BRIAN FULLER
REVISED BY
DATE REVISED

LAST REVISION 07-08-13
DATE PLOTTED => 15-AUG-2013
TIME PLOTTED => 08:14

BORDER LAST REVISED 7/2/2010
USERNAME => s123239
DGN FILE => 0500020226ga003_.dgn
RELATIVE BORDER SCALE IS IN INCHES 0 1 2 3
UNIT 3657
PROJECT NUMBER & PHASE 05120002261

Dist	COUNTY	ROUTE	POST MILES TOTAL PROJECT	SHEET No.	TOTAL SHEETS
05	SB	246	33.2/33.5	11	48

Brian Fuller 7-8-13
REGISTERED CIVIL ENGINEER DATE

7-8-13
PLANS APPROVAL DATE

REGISTERED PROFESSIONAL ENGINEER
BRIAN FULLER
No. 73000
Exp. 12-31-14
CIVIL
STATE OF CALIFORNIA

THE STATE OF CALIFORNIA OR ITS OFFICERS OR AGENTS SHALL NOT BE RESPONSIBLE FOR THE ACCURACY OR COMPLETENESS OF SCANNED COPIES OF THIS PLAN SHEET.

NOTES:

1. (0.XX) DENOTES OVERLAY THICKNESS
2. CROSS SLOPES PER SUPERELEVATION DIAGRAM

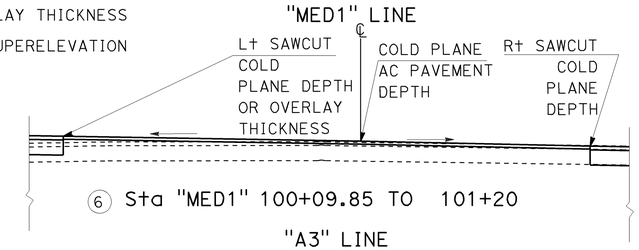

⑥ Sta "MED1" 100+09.85 TO 101+20

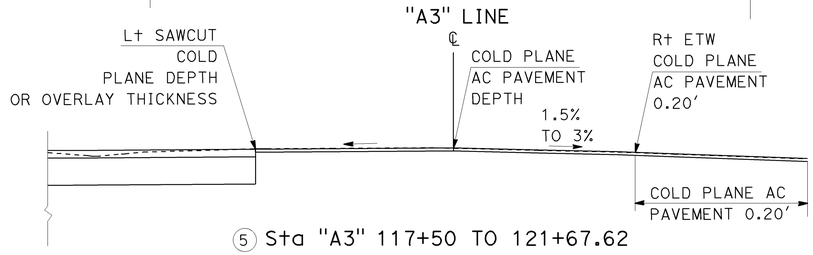

⑤ Sta "A3" 117+50 TO 121+67.62

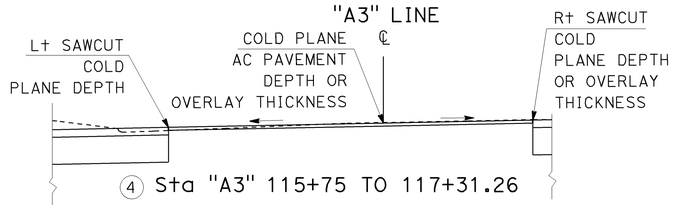

④ Sta "A3" 115+75 TO 117+31.26

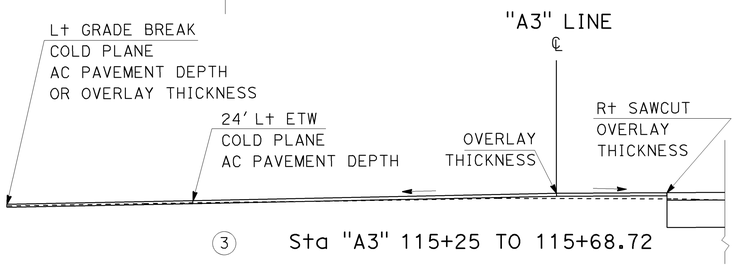

③ Sta "A3" 115+25 TO 115+68.72

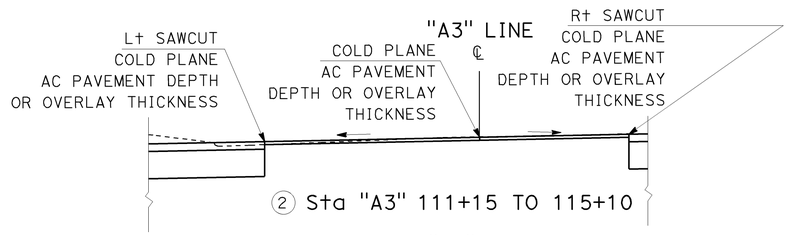

② Sta "A3" 111+15 TO 115+10

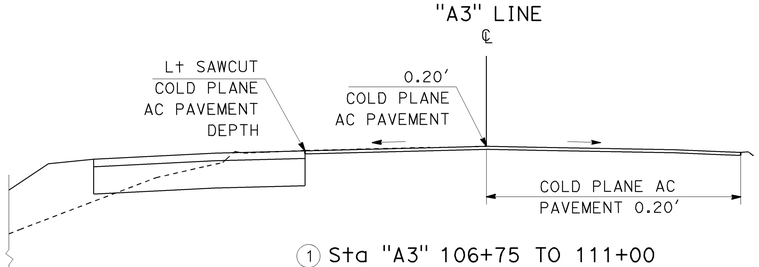

① Sta "A3" 106+75 TO 111+00

STATION RANGE ①	
STATION	Lt DEPTH
106+75	0.20′
107+00	0.17′
107+25	0.17′
107+50	0.17′
107+75	0.20′
108+00	0.23′
108+25	0.26′
108+50	0.27′
108+75	0.25′
109+00	0.27′
109+25	0.26′
109+50	0.24′
109+75	0.24′
110+00	0.23′
110+25	0.18′
110+50	0.10′
110+75	0.07′
111+00	0.06′

STATION RANGE ②			
STATION	Lt DEPTH	CL DEPTH	Rt DEPTH
111+15	0.10′	0.22′	0.20′
111+25	0.13′	0.21′	0.19′
111+50	0.11′	0.20′	0.12′
111+75	(0.23′)	0.20′	0.12′
112+00	(0.27′)	0.17′	0.15′
112+25	(0.26′)	0.20′	0.15′
112+50	(0.20′)	0.22′	0.23′
112+75	(0.23′)	0.19′	0.20′
113+00	(0.27′)	0.18′	0.17′
113+25	(0.23′)	0.20′	0.13′
113+50	(0.20′)	0.17′	0.09′
113+75	0.04′	0.17′	0.13′
114+00	0.10′	0.20′	0.16′
114+25	0.16′	0.20′	0.13′
114+50	0.22′	0.18′	0.10′
114+75	0.23′	0.13′	0.02′
115+00	0.13′	(0.20′)	(0.33′)
115+10	0.05′	(0.24′)	(0.37′)

STATION RANGE ③				
STATION	Lt OFFSET GB DEPTH	Lt ETW 24′ Lt DEPTH	CL DEPTH	Rt DEPTH AT SAWCUT
115+25	-36.3′, 0.25	0.14′	(0.30′)	(0.44′)
115+50	-36.3′, 0.09′	0.05′	(0.35′)	(0.47′)
115+68.72	-15.6′, (0.23′)		(0.33′)	(0.39′)

STATION RANGE ④			
STATION	Lt DEPTH	CL DEPTH	Rt DEPTH
115+75	0.05′	(0.30′)	(0.37′)
116+00	0.14′	(0.20′)	(0.27′)
116+25	0.23′	0.11′	0.03′
116+50	0.18′	0.06′	(0.21′)
116+75	0.17′	0.07′	(0.20′)
117+00	0.19′	0.07′	0.02′
117+25	0.24′	0.08′	0.07′
117+31.26	0.25′	0.08′	0.08′

STATION RANGE ⑤		
STATION	Lt DEPTH AT SAWCUT	CL DEPTH
117+50	0.33′	0.20′
117+75	0.25′	0.18′
118+00	0.19′	0.17′
118+25	0.12′	0.19′
118+50	0.07′	0.18′
118+75	0.03′	0.19′
119+00	(0.21′)	0.20′
119+25	0.03′	0.23′
119+50	0.05′	0.20′
119+75	0.09′	0.20′
120+00	0.12′	0.20′
120+25	0.12′	0.18′
120+50	0.14′	0.20′
120+75	0.15′	0.22′
121+00	0.10′	0.20′
121+25	0.16′	0.22′
121+50	0.17′	0.20′
121+67.62	0.20′	0.20′

STATION RANGE ⑥					
STATION "MED1"	Lt OFFSET	Lt DEPTH	CL DEPTH	Rt OFFSET	Rt DEPTH
100+09.85	8.39′	0.20′	0.20′	12.80′	0.20′
100+20	8.34′	0.13′	0.20′	12.73′	0.20′
100+40	8.13′	0.14′	0.20′	13.19′	0.20′
100+60	8.05′	0.22′	0.24′	13.88′	0.23′
100+80	10.90′	0.25′	0.25′	15.89′	0.21′
101+00	19.52′	(0.35′)	0.20′	15.20′	0.20′
101+20	29.17′	0.05	0.14′	16.33	0.20

SAWCUT LINE HORIZONTAL CONTROL

STATION	Lt OFFSET	STATION	Lt OFFSET	Rt OFFSET	STATION	Rt OFFSET	STATION	Lt OFFSET	Rt OFFSET	STATION	Lt OFFSET
106+75	-12.00′	111+15	-12.35′	11.84′	115+25	7.91′	115+75	-15.57′	8.28′	117+50	-13.80′
107+00	-12.00′	111+25	-12.58′	11.59′	115+50	8.07′	116+00	-15.30′	8.50′	117+75	-13.55′
107+25	-12.01′	111+50	-13.16′	10.99′	115+68.72	8.23′	116+25	-15.05′	8.79′	118+00	-13.30′
107+50	-12.03′	111+75	-13.70′	10.43′			116+50	-14.80′	9.08′	118+25	-12.91′
107+75	-12.04′	112+00	-14.09′	10.02′			116+75	-14.55′	9.36′	118+50	-12.52′
108+00	-12.05′	112+25	-14.35′	9.72′			117+00	-14.30′	9.65′	118+75	-12.13′
108+25	-12.06′	112+50	-14.47′	9.57′			117+25	-14.05′	9.94′	119+00	-11.74′
108+50	-12.07′	112+75	-12.07′	9.57′			117+31.26	-13.99′	10.01′	119+25	-11.47′
108+75	-12.09′	113+00	-14.30′	9.70′						119+50	-11.34′
109+00	-12.10′	113+25	-15.01′	8.99′						119+75	-11.35′
109+25	-12.09′	113+50	-15.58′	8.41′						120+00	-11.50′
109+50	-12.07′	113+75	-16.01′	7.98′						120+25	-11.34′
109+75	-12.06′	114+00	-16.31′	7.69′						120+50	-11.32′
110+00	-12.05′	114+25	-16.46′	7.53′						120+75	-11.44′
110+25	-12.04′	114+50	-16.48′	7.52′						121+00	-11.70′
110+50	-12.02′	114+75	-16.36′	7.64′						121+25	-11.59′
110+75	-12.01′	115+00	-16.10′	7.90′						121+50	-11.62′
111+00	-12.00′	115+10	-15.94′	7.89′						121+67.62	

CONSTRUCTION DETAILS

NO SCALE

C-4

REVISED BY	DATE REVISED
BRIAN FULLER	
MIKE O'NEAL	
CALCULATED-DESIGNED BY	
CHECKED BY	
FUNCTIONAL SUPERVISOR	
STEVE WYATT	

STATE OF CALIFORNIA - DEPARTMENT OF TRANSPORTATION
DESIGN

LAST REVISION 07-08-13
DATE PLOTTED => 15-AUG-2013
TIME PLOTTED => 08:14

Dist	COUNTY	ROUTE	POST MILES TOTAL PROJECT	SHEET No.	TOTAL SHEETS
05	SB	246	33.2/33.5	12	48

REGISTERED CIVIL ENGINEER — 7-8-13 DATE

7-8-13
PLANS APPROVAL DATE

BRIAN FULLER No. 73000 Exp. 12-31-14 CIVIL — REGISTERED PROFESSIONAL ENGINEER — STATE OF CALIFORNIA

THE STATE OF CALIFORNIA OR ITS OFFICERS OR AGENTS SHALL NOT BE RESPONSIBLE FOR THE ACCURACY OR COMPLETENESS OF SCANNED COPIES OF THIS PLAN SHEET.

NOTE:

SEE SHEET L-1 AND C-4 FOR COLD PLANE AND OVERLAY DETAILS.

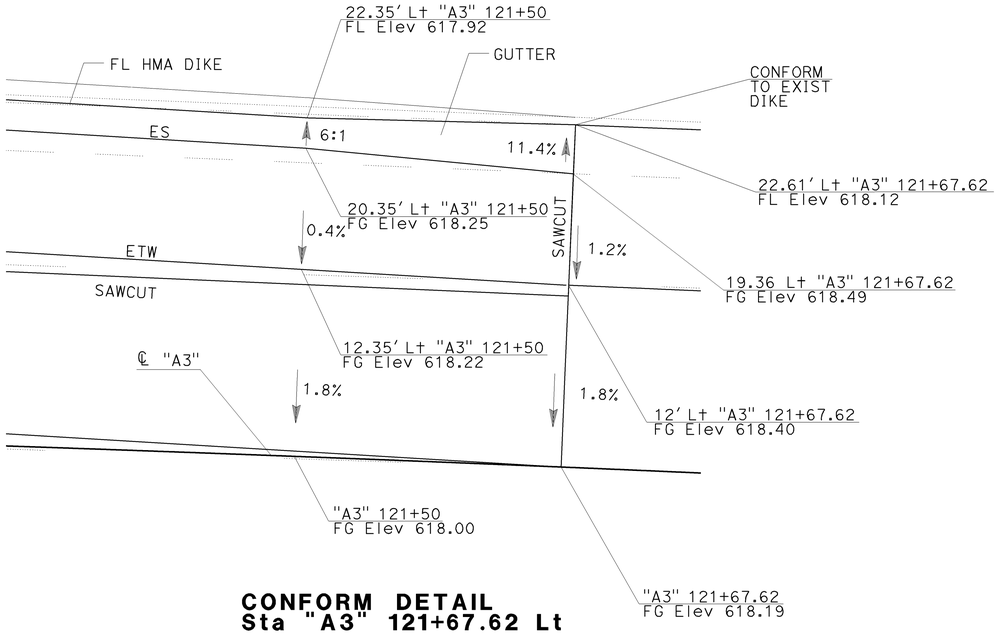

CONFORM DETAIL
Sta "A3" 121+67.62 Lt

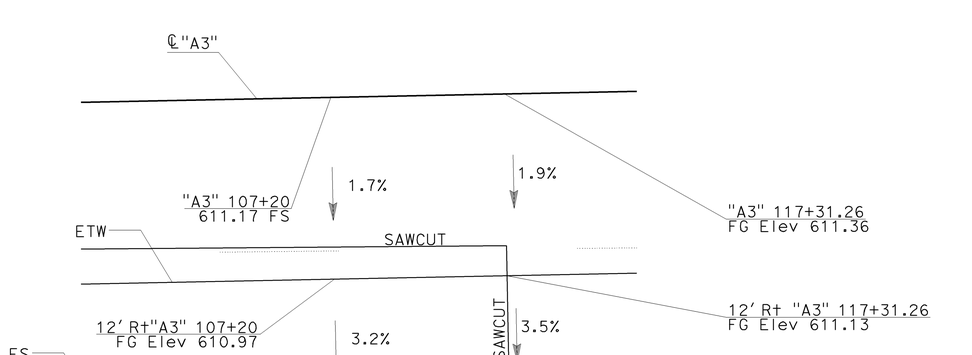

CONFORM DETAIL
Sta "A3" 117+31.26 Rt

CONSTRUCTION DETAILS

SCALE: 1" = 5'

C-5

REVISED BY | DATE REVISED
BRIAN FULLER | MIKE O'NEAL
CALCULATED-DESIGNED BY | CHECKED BY
FUNCTIONAL SUPERVISOR: STEVE WYATT
STATE OF CALIFORNIA - DEPARTMENT OF TRANSPORTATION
DESIGN
Caltrans

LAST REVISION 07-08-13
DATE PLOTTED => 15-AUG-2013
TIME PLOTTED => 08:14

Dist	COUNTY	ROUTE	POST MILES TOTAL PROJECT	SHEET No.	TOTAL SHEETS
05	SB	246	33.2/33.5	13	48

REGISTERED CIVIL ENGINEER — 7-8-13 DATE

BRIAN FULLER No. 73000 Exp. 12-31-14 CIVIL — REGISTERED PROFESSIONAL ENGINEER — STATE OF CALIFORNIA

7-8-13
PLANS APPROVAL DATE

THE STATE OF CALIFORNIA OR ITS OFFICERS OR AGENTS SHALL NOT BE RESPONSIBLE FOR THE ACCURACY OR COMPLETENESS OF SCANNED COPIES OF THIS PLAN SHEET.

NOTE:

1. FOR ACCURATE RIGHT OF WAY DATA, CONTACT RIGHT OF WAY ENGINEERING AT THE DISTRICT OFFICE.

ABBREVIATIONS

EG	EXISTING GRADE
PP	PLASTIC PIPE
TG	TOP OF GRATE
COB	CENTER OF BOX

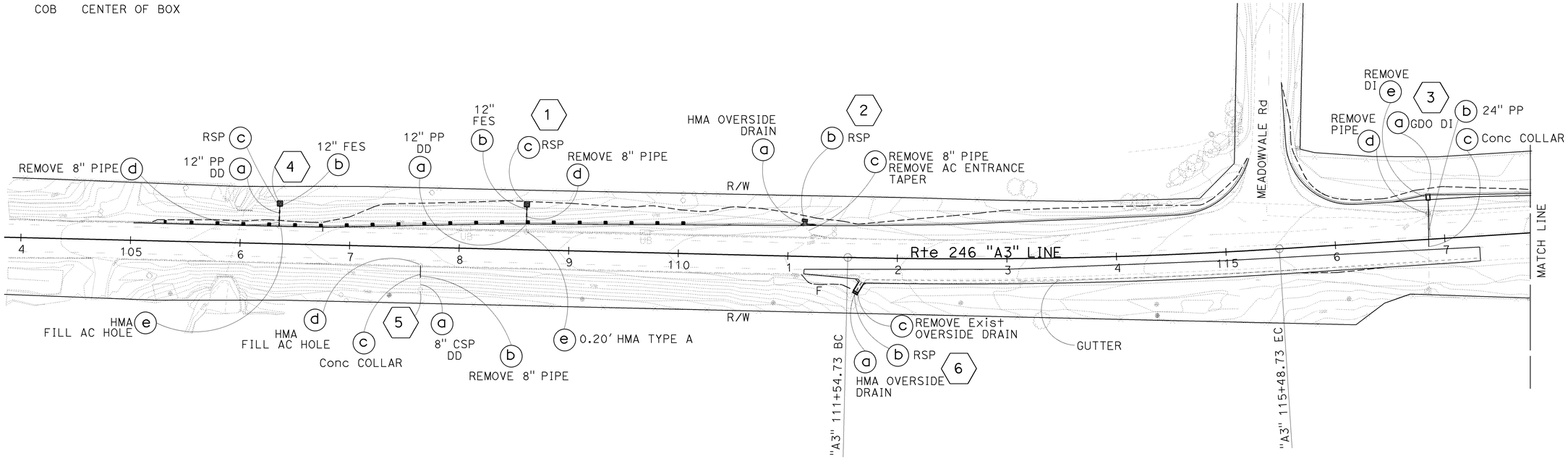

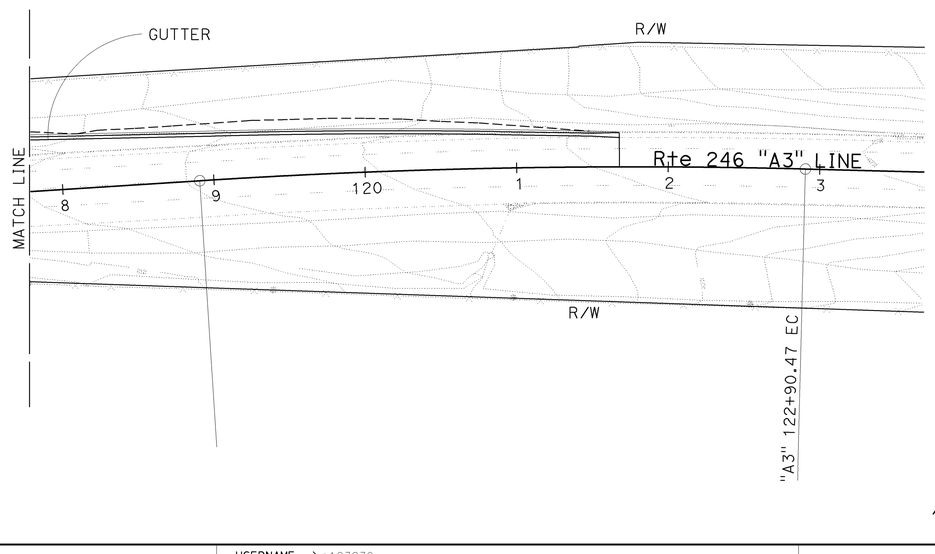

APPROVED FOR DRAINAGE WORK ONLY

DRAINAGE PLAN

SCALE: 1" = 50' **D-1**

REVISED BY	DATE REVISED

CALCULATED-DESIGNED BY: BRIAN FULLER
CHECKED BY: MIKE O'NEAL
FUNCTIONAL SUPERVISOR: STEVE WYATT

STATE OF CALIFORNIA - DEPARTMENT OF TRANSPORTATION
DESIGN

LAST REVISION 07-08-13
DATE PLOTTED => 15-AUG-2013
TIME PLOTTED => 08:14

BORDER LAST REVISED 7/2/2010
USERNAME => s123239
DGN FILE => 05000202261a001.dgn
RELATIVE BORDER SCALE IS IN INCHES 0 1 2 3
UNIT 1450
PROJECT NUMBER & PHASE 05000202261

NOTES:

1. FOR HMA OVERSIDE DRAIN SEE Std PLAN D87D AND DETAIL ON SHEET DD-1.
2. FOR Conc COLLAR DETAIL SEE SHEET DD-1.
3. PROVIDE OPENING IN HMA DIKE TO CONFORM TO DOWNDRAINS.

Dist	COUNTY	ROUTE	POST MILES TOTAL PROJECT	SHEET No.	TOTAL SHEETS
05	SB	246	33.2/33.5	14	48

Brian Fuller 7-8-13
REGISTERED CIVIL ENGINEER DATE

7-8-13
PLANS APPROVAL DATE

BRIAN FULLER No. 73000 Exp.12-31-14 CIVIL — REGISTERED PROFESSIONAL ENGINEER — STATE OF CALIFORNIA

THE STATE OF CALIFORNIA OR ITS OFFICERS OR AGENTS SHALL NOT BE RESPONSIBLE FOR THE ACCURACY OR COMPLETENESS OF SCANNED COPIES OF THIS PLAN SHEET.

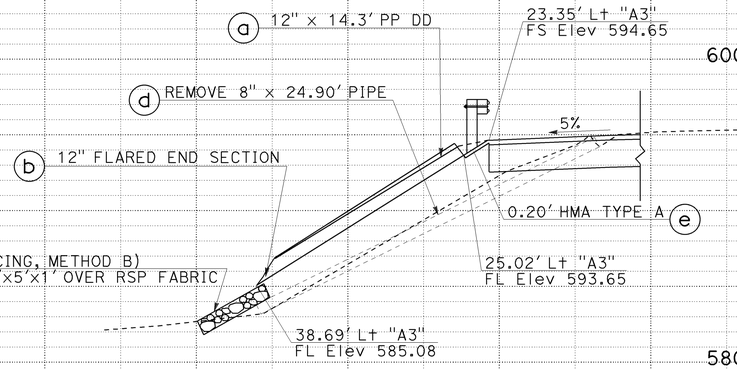

DRAINAGE SYSTEM No. 1

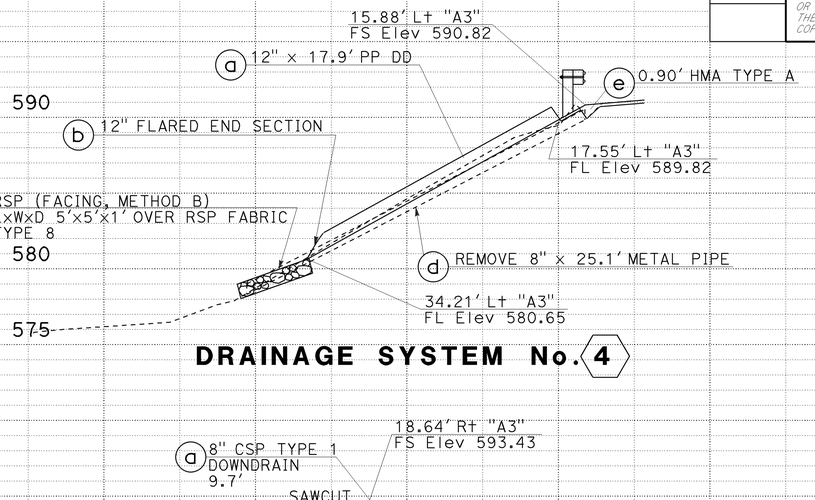

DRAINAGE SYSTEM No. 4

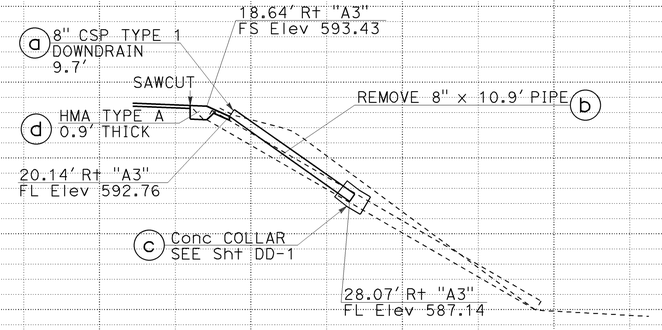

DRAINAGE SYSTEM No. 5

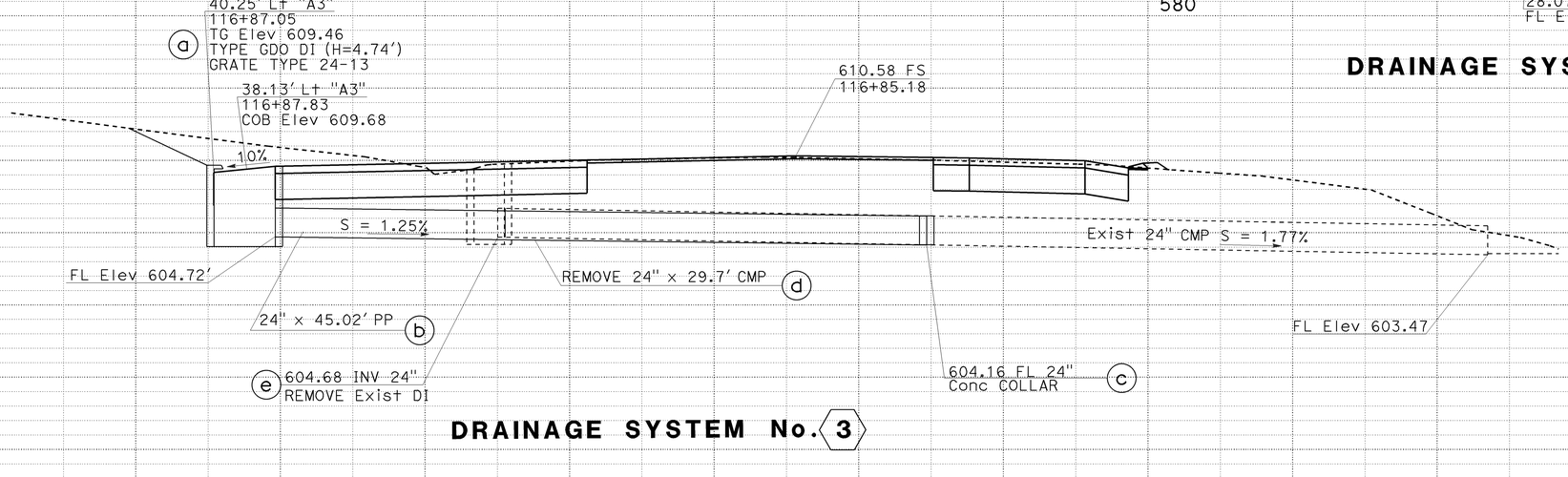

DRAINAGE SYSTEM No. 3

DRAINAGE PROFILES

SCALE: Vert 1" = 5'
Horiz 1" = 5'

DP-1

STATION		TOTAL
CY	Exc	
	Emb	

STATE OF CALIFORNIA - DEPARTMENT OF TRANSPORTATION
DESIGN
FUNCTIONAL SUPERVISOR: STEVE WYATT
CALCULATED-DESIGNED BY: BRIAN FULLER
CHECKED BY: MIKE O'NEAL
REVISED BY
DATE REVISED

LAST REVISION DATE PLOTTED => 15-AUG-2013
TIME PLOTTED => 08:14
07-08-13

BORDER LAST REVISED 7/2/2010
USERNAME => s123239
DGN FILE => 05000202261b001.dgn
RELATIVE BORDER SCALE IS IN INCHES 0 1 2 3
UNIT 1450
PROJECT NUMBER & PHASE 05000202261

Dist	COUNTY	ROUTE	POST MILES TOTAL PROJECT	SHEET No.	TOTAL SHEETS
05	SB	246	33.2/33.5	15	48

Brian Fuller 7-8-13
REGISTERED CIVIL ENGINEER DATE

7-8-13
PLANS APPROVAL DATE

BRIAN FULLER No. 73000 Exp. 12-31-14 CIVIL — REGISTERED PROFESSIONAL ENGINEER — STATE OF CALIFORNIA

THE STATE OF CALIFORNIA OR ITS OFFICERS OR AGENTS SHALL NOT BE RESPONSIBLE FOR THE ACCURACY OR COMPLETENESS OF SCANNED COPIES OF THIS PLAN SHEET.

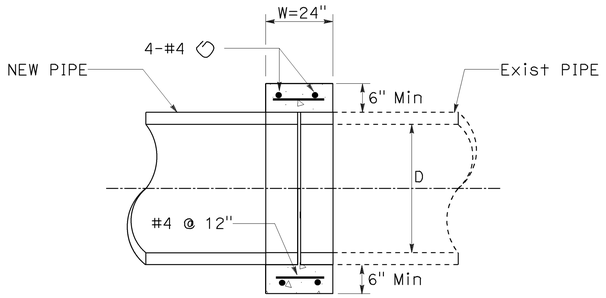

CONCRETE COLLAR
DRAINAGE SYSTEM No. 3 (c) 5 (c)

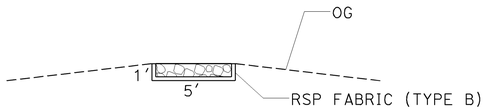

Typ RSP INSTALLATION
DRAINAGE SYSTEM No. 1 2 4 6

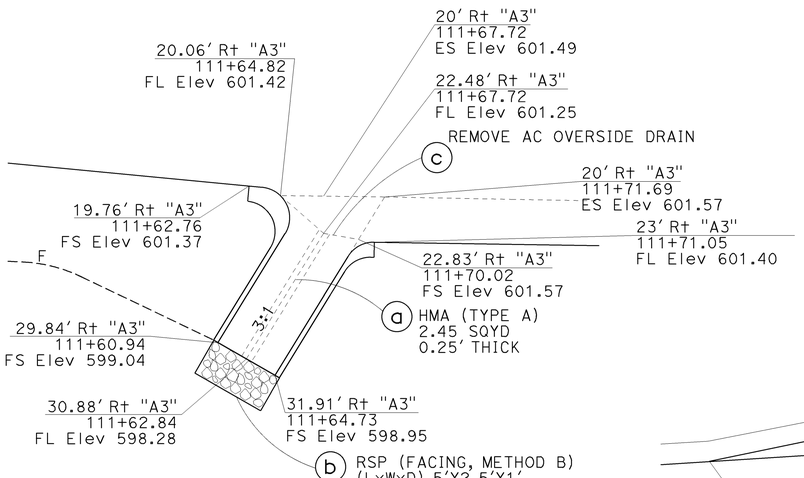

HMA OVERSIDE DRAIN
DRAINAGE SYSTEM No. 6
Sta 111+67.72

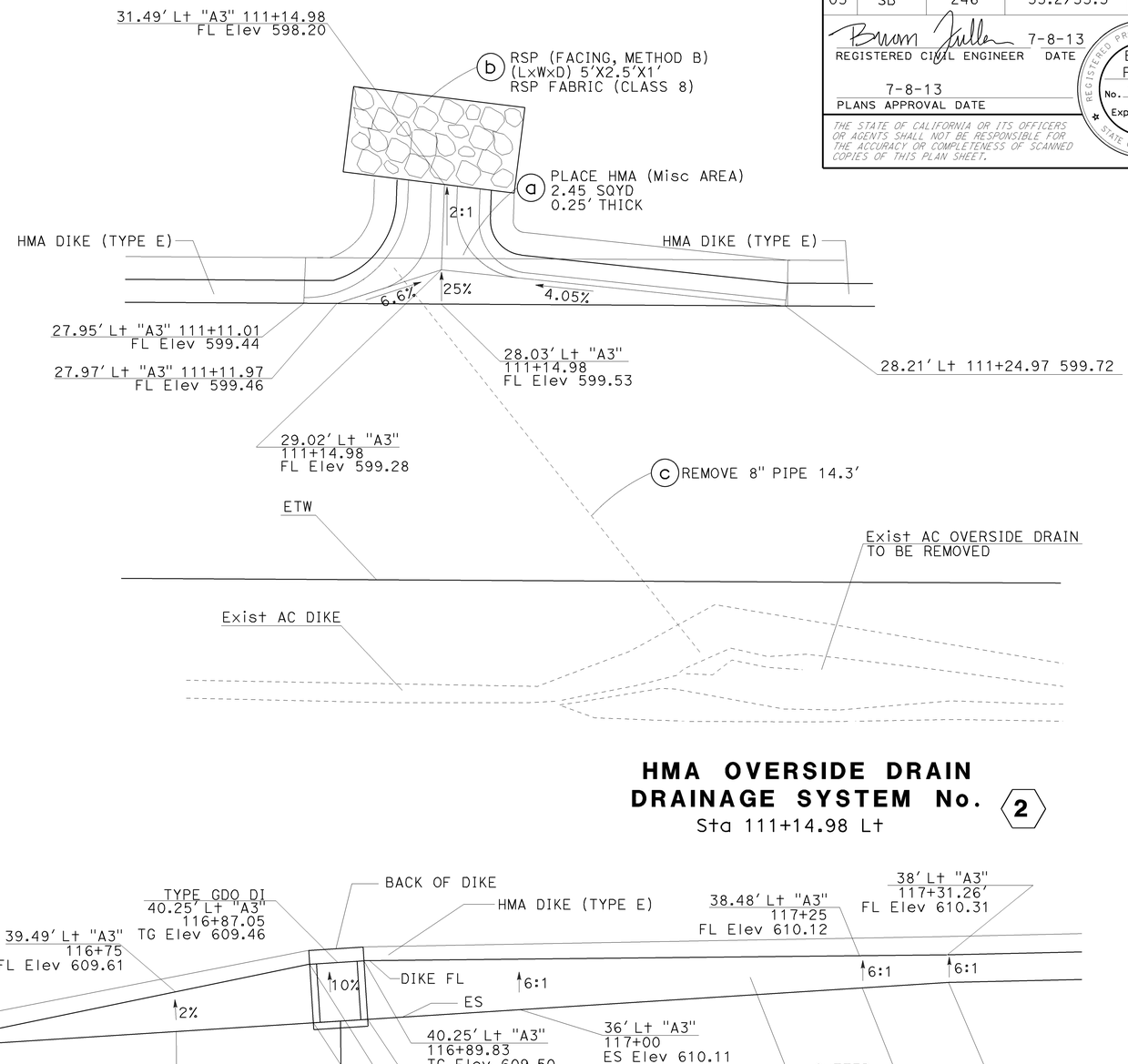

HMA OVERSIDE DRAIN
DRAINAGE SYSTEM No. 2
Sta 111+14.98 Lt

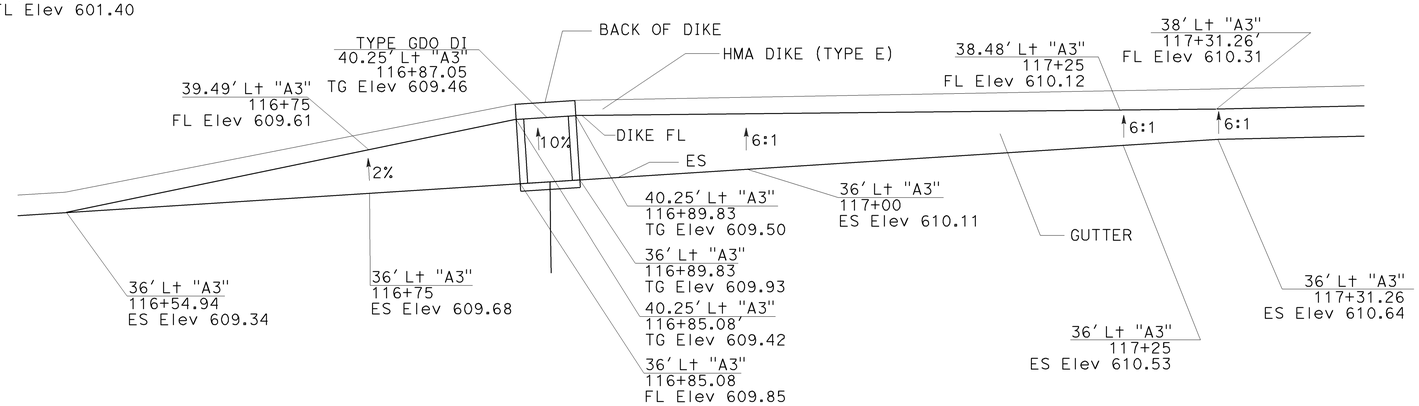

GDO DI AND DIKE DETAIL
DRAINAGE SYSTEM No. 3

DRAINAGE DETAILS

NO SCALE

DD-1

STATE OF CALIFORNIA - DEPARTMENT OF TRANSPORTATION
DESIGN
FUNCTIONAL SUPERVISOR: STEVE WYATT
CALCULATED-DESIGNED BY: BRIAN FULLER
CHECKED BY: MIKE O'NEAL
REVISED BY
DATE REVISED

LAST REVISION 07-08-13
DATE PLOTTED => 15-AUG-2013
TIME PLOTTED => 08:14

Dist	COUNTY	ROUTE	POST MILES TOTAL PROJECT	SHEET No.	TOTAL SHEETS
05	SB	246	33.2/33.5	16	48

Brian Fuller 7-8-13
REGISTERED CIVIL ENGINEER DATE

7-8-13
PLANS APPROVAL DATE

REGISTERED PROFESSIONAL ENGINEER
BRIAN FULLER
No. 73000
Exp. 12-31-14
CIVIL
STATE OF CALIFORNIA

THE STATE OF CALIFORNIA OR ITS OFFICERS OR AGENTS SHALL NOT BE RESPONSIBLE FOR THE ACCURACY OR COMPLETENESS OF SCANNED COPIES OF THIS PLAN SHEET.

DRAINAGE QUANTITIES

DRAINAGE SHEET No.	DRAINAGE SYSTEM No. ⬡	DRAINAGE UNIT ○	REMOVE PIPE (LF) LF	REMOVE DRAINAGE FACILITY (EA) EA	HMA (TYPE A) TON	PLACE HMA (Misc AREA) SQYD	MINOR Conc (MINOR STRUCTURE) CY	24" PLASTIC PIPE LF	8" CSP DOWNDRAIN LF	12" PLASTIC PIPE DOWNDRAIN LF	12" STEEL FLARED END SECTION EA	ROCK SLOPE PROTECTION (FACING, METHOD B) CY	ROCK SLOPE PROTECTION FABRIC (CLASS 8) SQYD	Misc IRON AND STEEL LB	CONCRETE COLLAR (N) EA	DESCRIPTION	STATION	DRAINAGE SYSTEM No. ⬡	DRAINAGE UNIT ○
	1	a								14.3						TYPE 1 DD	108+60.80 L†	1	a
		b									1					FES			b
		c										0.93	2.8			RSP			c
		d	24.9													REMOVE 8" PIPE			d
		e			0.05	0.33										HMA PIPE ENTRANCE			e
	2	a			0.40	2.45										HMA OVERSIDE DRAIN	111+14.98 L†	2	a
		b										0.46	1.4			RSP			b
		c	14.3													REMOVE 8" PIPE AND ENTRANCE TAPER			c
D-1	3	a					2.2							374		GDO DI GRATE TYPE 24-13 H=4.74′	116+87.83 L†	3	a
		b						45.02								NEW PIPE 24" PP			b
		c					0.3								1				c
		d	29.7													REMOVE 24" PIPE			d
		e		1												REMOVE DI (G-1)			e
	4	a								17.9						TYPE 1 DD	106+35.24 L†	4	a
		b									1					FES			b
		c										0.93	2.8			RSP			c
		d	25.1													REMOVE 8" METAL PIPE			d
		e			0.20	0.33										FILL AC HOLE			e
	5	a							9.7							TYPE 1 DD	107+65.21 R†	5	a
		b	10.9													REMOVE 8" PIPE			b
		c					0.2								1				c
		d			0.20	0.33										FILL AC HOLE			d
	6	a			0.40	2.45										HMA OVERSIDE DRAIN	111+64.82 R†	6	a
		b										0.46	1.4			RSP			b
		c		1												REMOVE AC OVERSIDE DRAIN			c
TOTAL			104.9	2	1.25*	6.0	2.8	45.02	9.7	32.2	2	2.8	8.4	374	2	TOTAL			

* QUANTITY INCLUDED IN PAVEMENT STRUCTURE QUANTITIES SUMMARY
(N) NOT A SEPARATE PAY ITEM. FOR INFORMATION ONLY.

DRAINAGE QUANTITIES

DQ-1

CALCULATED-DESIGNED BY: BRIAN FULLER
CHECKED BY: MIKE O'NEAL
FUNCTIONAL SUPERVISOR: STEVE WYATT
REVISED BY
DATE REVISED

STATE OF CALIFORNIA - DEPARTMENT OF TRANSPORTATION
DESIGN

LAST REVISION 07-08-13
DATE PLOTTED => 15-AUG-2013
TIME PLOTTED => 08:14

Dist	COUNTY	ROUTE	POST MILES TOTAL PROJECT	SHEET No.	TOTAL SHEETS
05	SB	246	33.2/33.5	17	48

Brian Fuller 7-8-13
REGISTERED CIVIL ENGINEER DATE

7-8-13
PLANS APPROVAL DATE

BRIAN FULLER No. 73000 Exp.12-31-14 CIVIL — REGISTERED PROFESSIONAL ENGINEER — STATE OF CALIFORNIA

THE STATE OF CALIFORNIA OR ITS OFFICERS OR AGENTS SHALL NOT BE RESPONSIBLE FOR THE ACCURACY OR COMPLETENESS OF SCANNED COPIES OF THIS PLAN SHEET.

NOTES:

1. ALL UTILITIES TO BE PROTECTED IN PLACE.
2. UTILITY OWNERSHIP:
   ELECTRICAL - PACIFIC GAS AND ELECTRIC
   SEWER - SANTA YNEZ CSD
   GAS - SOUTHERN CALIFORNIA GAS
   WATER - SANTA YNEZ WATER DISTRICT

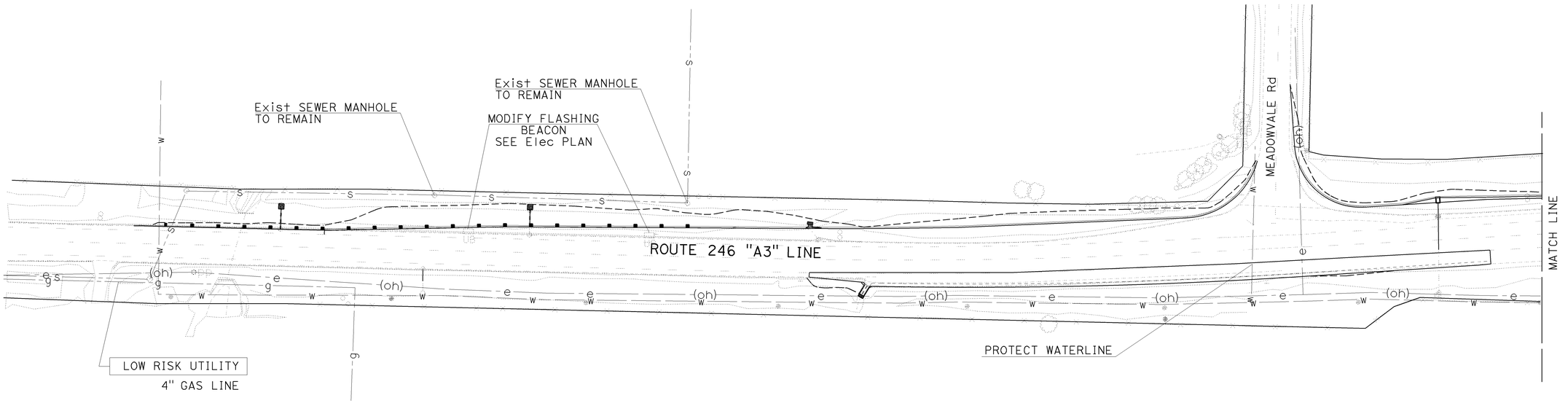

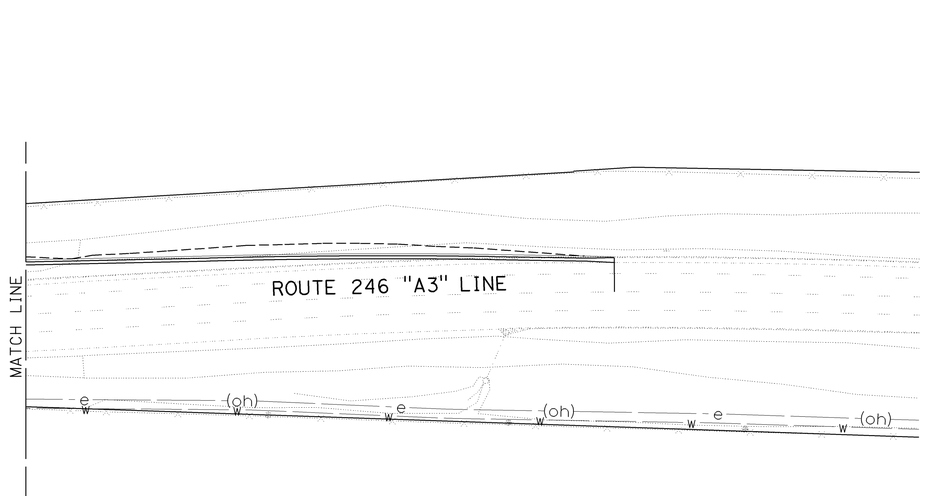

APPROVED FOR UTILITY WORK ONLY

UTILITY PLAN

SCALE: 1" = 50'

U-1

LAST REVISION DATE PLOTTED => 15-AUG-2013
07-08-13 TIME PLOTTED => 08:14

STATE OF CALIFORNIA - DEPARTMENT OF TRANSPORTATION
Caltrans®
DESIGN

FUNCTIONAL SUPERVISOR: STEVE WYATT

CALCULATED-DESIGNED BY: BRIAN FULLER
CHECKED BY: MIKE O'NEAL

REVISED BY | DATE REVISED

BORDER LAST REVISED 7/2/2010

USERNAME => s123239
DGN FILE => 0500020226ka001.dgn

RELATIVE BORDER SCALE IS IN INCHES 0 1 2 3

UNIT 1450

PROJECT NUMBER & PHASE 05000202261

Dist	COUNTY	ROUTE	POST MILES TOTAL PROJECT	SHEET No.	TOTAL SHEETS
05	SB	246	33.2/33.5	18	48

Brian Fuller 7-8-13
REGISTERED CIVIL ENGINEER DATE

7-8-13
PLANS APPROVAL DATE

REGISTERED PROFESSIONAL ENGINEER
BRIAN FULLER
No. 73000
Exp. 12-31-14
CIVIL
STATE OF CALIFORNIA

THE STATE OF CALIFORNIA OR ITS OFFICERS OR AGENTS SHALL NOT BE RESPONSIBLE FOR THE ACCURACY OR COMPLETENESS OF SCANNED COPIES OF THIS PLAN SHEET.

NOTES:

1. FOR ADDITIONAL CONSTRUCTION AREA SIGNS, SEE STAGE CONSTRUCTION PLANS.
2. EXACT LOCATIONS OF PCMS WILL BE DETERMINED BY THE ENGINEER.
3. LOCATION OF CONSTRUCTION AREA SIGNS ARE APPROXIMATE. EXACT LOCATIONS WILL BE DETERMINED BY THE ENGINEER.

STATIONARY MOUNTED CONSTRUCTION AREA SIGNS

SIGN No. (X)	SIGN CODE		PANEL SIZE	SIGN MESSAGE	No. OF POST AND SIZE	No. OF SIGNS
	FEDERAL	CALIFORNIA				
A	W20-1		48" X 48"	ROAD WORK AHEAD	1 - 4" X 4"	5
B	G20-2	C14	36" X 18"	END ROAD WORK	1 - 4" X 4"	5
C	M4-9a		30" X 30"	BIKE / Ped DETOUR RIGHT ARROW	1 - 4" X 4"	4
D	M4-9a		30" X 30"	BIKE / Ped DETOUR LEFT ARROW	1 - 4" X 4"	4

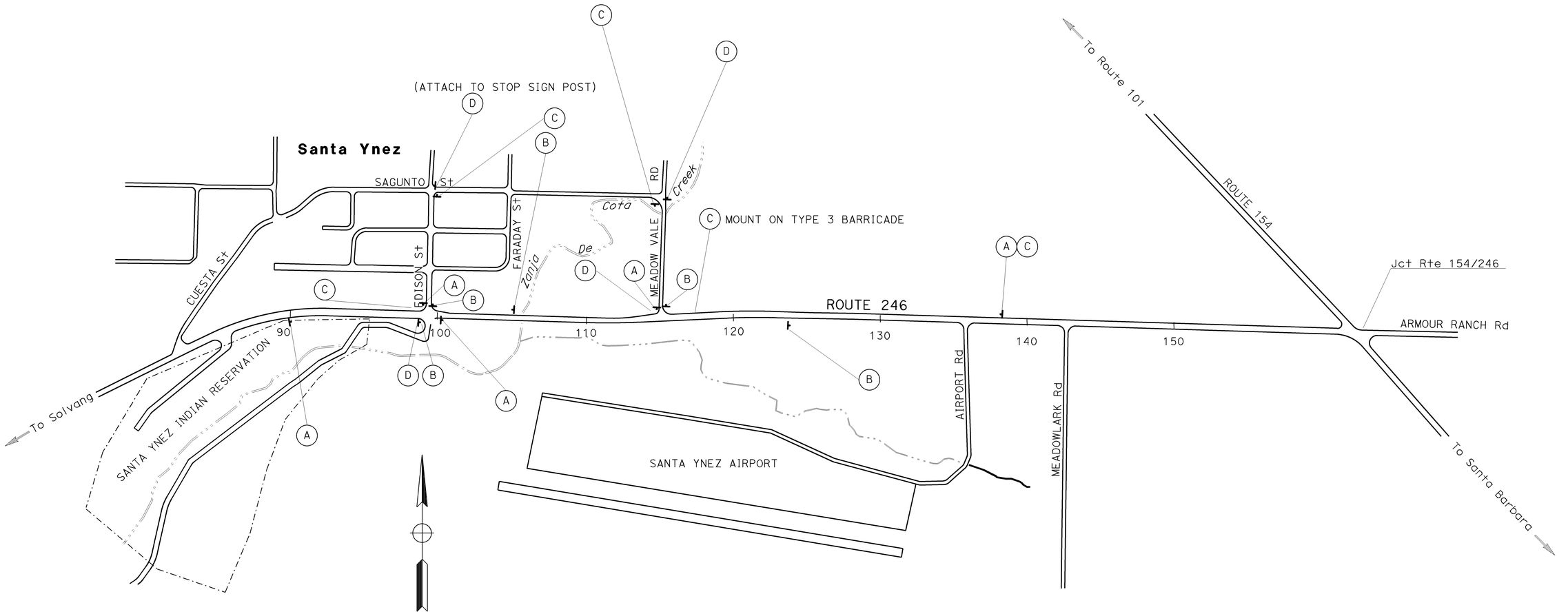

APPROVED FOR CONSTRUCTION AREA SIGN WORK ONLY

CONSTRUCTION AREA SIGNS

NO SCALE

CS-1

STATE OF CALIFORNIA - DEPARTMENT OF TRANSPORTATION
DESIGN
FUNCTIONAL SUPERVISOR: STEVE WYATT
CALCULATED-DESIGNED BY: BRIAN FULLER
CHECKED BY: MIKE O'NEAL
REVISED BY
DATE REVISED

LAST REVISION
DATE PLOTTED => 15-AUG-2013
TIME PLOTTED => 08:14
07-08-13

Dist	COUNTY	ROUTE	POST MILES TOTAL PROJECT	SHEET No.	TOTAL SHEETS
05	SB	246	33.2/33.5	19	48

REGISTERED CIVIL ENGINEER — DATE 7-8-13

BRIAN FULLER No. 73000 Exp. 12-31-14 CIVIL — REGISTERED PROFESSIONAL ENGINEER — STATE OF CALIFORNIA

PLANS APPROVAL DATE 7-8-13

THE STATE OF CALIFORNIA OR ITS OFFICERS OR AGENTS SHALL NOT BE RESPONSIBLE FOR THE ACCURACY OR COMPLETENESS OF SCANNED COPIES OF THIS PLAN SHEET.

NOTES:

1. Temp RAILING (TYPE K) TO BE PINNED WHEN PLACED ON SAWCUT.
2. K-RAIL OFFSETS ARE TO TRAFFIC SIDE FACE OF RAIL.
3. ALL STAGE AREAS PLACE FINAL LIFT OF HMA IN STAGE 3.
4. FOR ACCURATE RIGHT OF WAY DATA, CONTACT RIGHT OF WAY ENGINEERING AT THE DISTRICT OFFICE.
5. Temp PAVEMENT MARKING TO REMAIN IN PLACE UNTIL FINAL LIFT OF HMA AND PERMENANT PAVEMENT DELINEATION IS PLACED.
6. TRAFFIC HANDLING SIGNS TO REMAIN IN PLACE UNTIL STAGE 3 COMPLETE, EXCEPT (1-1)

ABBREVIATIONS:

SC SAWCUT

LEGEND:

CHANNELIZER (SURFACE MOUNTED) 10' O/C
DIRECTION OF TRAFFIC
TEMPORARY RAILING (TYPE K)
Exist STRIPE TO BE REMOVED
TEMPORARY TRAFFIC STRIPE
CONSTRUCT THIS STAGE
SIGN
TEMPORARY PAVEMENT MARKING (PAINT)

TRAFFIC:

1. TWO WAY TRAFFIC WILL RUN ON EXIST PAVEMENT SHIFTED TO SOUTH.
2. INTERSECTION OF MEADOWVALE LANE AND ROUTE 246 TO BE CONSTRUCTED WITH FLAGGING OPERATION.
3. BIKE AND Ped TRAFFIC DETOUR VIA MEADOWVALE AND EDISON STREETS, SEE Sht CS-1.

STAGE 1 CONSTRUCTION:

1. INSTALL CONSTRUCTION AREA SIGNS.
2. REMOVE Exist STRIPING AND PLACE Temp STRIPES.
3. PLACE Temp RAILING (TYPE K)
4. CONSTRUCT STAGE 1

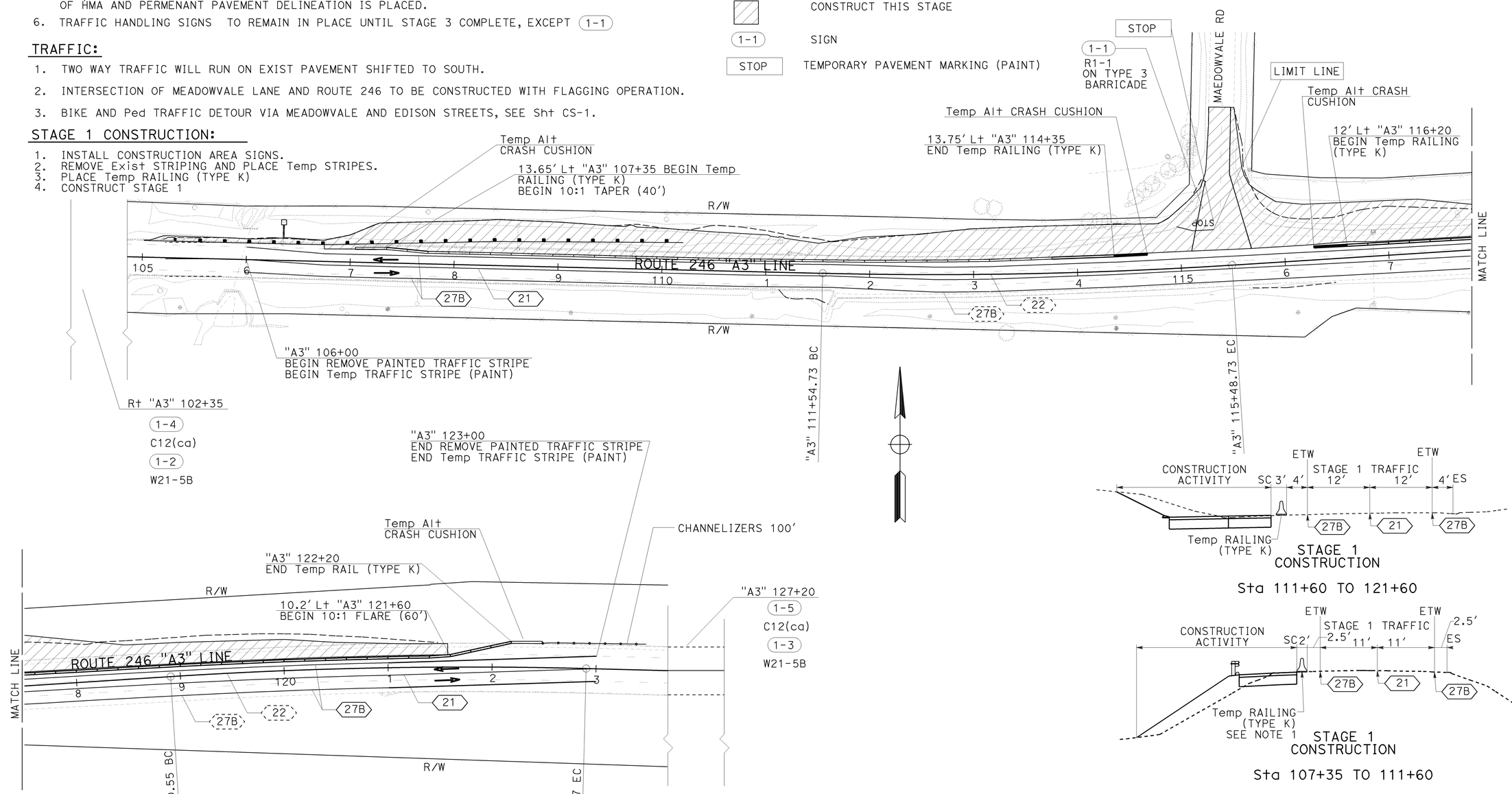

STAGE 1 CONSTRUCTION

Sta 111+60 TO 121+60

STAGE 1 CONSTRUCTION

Sta 107+35 TO 111+60

STAGE CONSTRUCTION AND TRAFFIC HANDLING PLAN (STAGE 1)

SCALE: 1" = 50'

SC-1

APPROVED FOR STAGE CONSTRUCTION AND TRAFFIC HANDLING WORK ONLY

REVISED BY | DATE REVISED
BRIAN FULLER | MIKE O'NEAL
CALCULATED-DESIGNED BY | CHECKED BY
FUNCTIONAL SUPERVISOR: STEVE WYATT
STATE OF CALIFORNIA - DEPARTMENT OF TRANSPORTATION
Caltrans® DESIGN

LAST REVISION | DATE PLOTTED => 15-AUG-2013
07-08-13 | TIME PLOTTED => 08:14

Dist	COUNTY	ROUTE	POST MILES TOTAL PROJECT	SHEET No.	TOTAL SHEETS
05	SB	246	33.2/33.5	20	48

Brian Fuller 7-8-13
REGISTERED CIVIL ENGINEER DATE

7-8-13
PLANS APPROVAL DATE

BRIAN FULLER No. 73000 Exp. 12-31-14 CIVIL — REGISTERED PROFESSIONAL ENGINEER — STATE OF CALIFORNIA

THE STATE OF CALIFORNIA OR ITS OFFICERS OR AGENTS SHALL NOT BE RESPONSIBLE FOR THE ACCURACY OR COMPLETENESS OF SCANNED COPIES OF THIS PLAN SHEET.

TRAFFIC:

1. ONE WAY TRAFFIC WITH LANE CLOSURE AND TWO WAY TRAFFIC ON Exist HIGHWAY WHEN FEASIBLE
2. FOR ACCURATE RIGHT OF WAY DATA, CONTACT RIGHT OF WAY ENGINEERING AT THE DISTRICT OFFICE.

STAGE 2 CONSTRUCTION:

1. REMOVE Temp RAILING (TYPE K) FROM STAGE 1
2. REMOVE Temp STRIPING FROM STAGE 1
3. CONSTRUCT STAGE 2

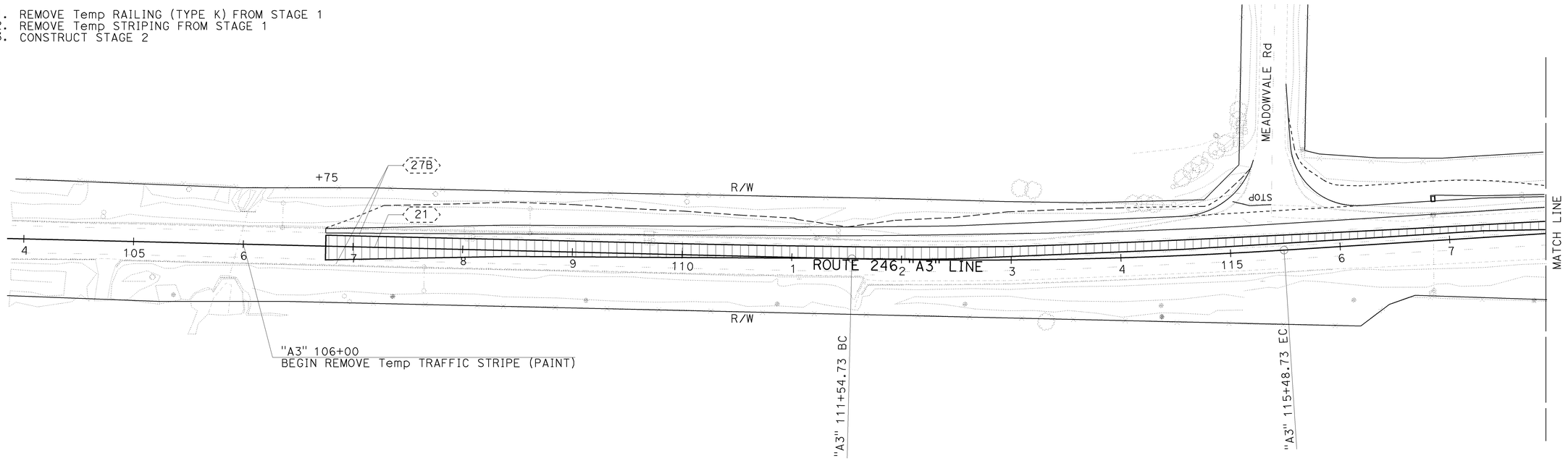

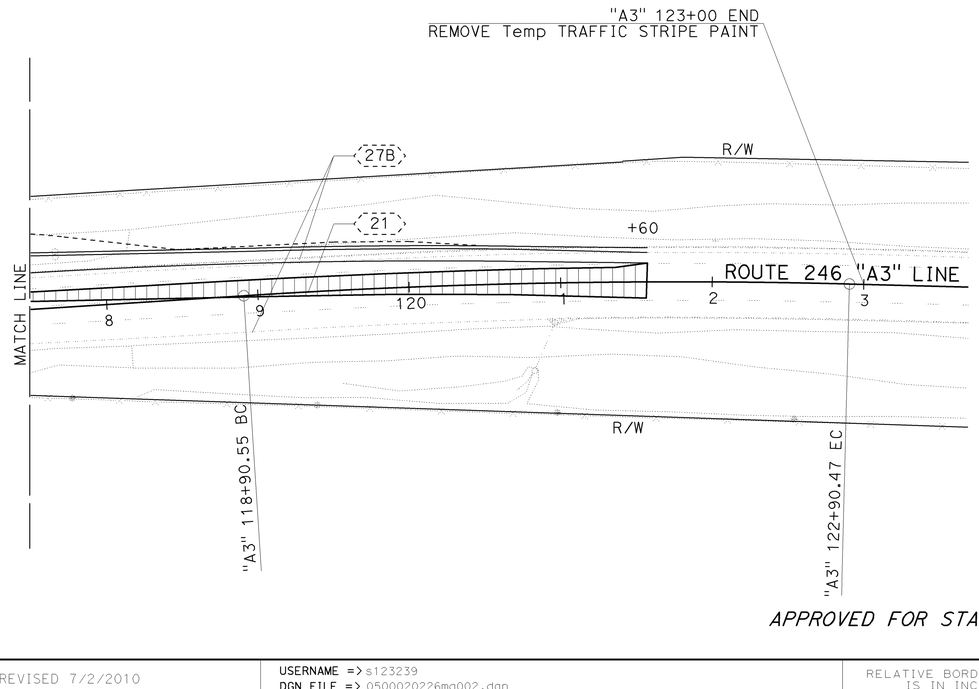

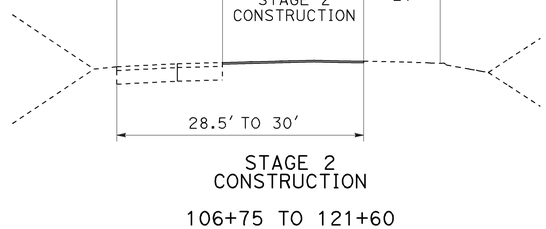

STAGE 2
CONSTRUCTION

106+75 TO 121+60

APPROVED FOR STAGE CONSTRUCTION AND TRAFFIC HANDLING WORK ONLY

STAGE CONSTRUCTION AND TRAFFIC HANDLING PLAN (STAGE 2)

SCALE: 1" = 50'

SC-2

REVISED BY | DATE REVISED

BRIAN FULLER — CALCULATED-DESIGNED BY

MIKE O'NEAL — CHECKED BY

STEVE WYATT — FUNCTIONAL SUPERVISOR

STATE OF CALIFORNIA - DEPARTMENT OF TRANSPORTATION

DESIGN

Caltrans

LAST REVISION | DATE PLOTTED => 15-AUG-2013 | 07-08-13 | TIME PLOTTED => 08:14

Dist	COUNTY	ROUTE	POST MILES TOTAL PROJECT	SHEET No.	TOTAL SHEETS
05	SB	246	33.2/33.5	21	48

REGISTERED CIVIL ENGINEER — DATE 7-8-13

BRIAN FULLER No. 73000 Exp. 12-31-14 CIVIL — REGISTERED PROFESSIONAL ENGINEER — STATE OF CALIFORNIA

7-8-13
PLANS APPROVAL DATE

THE STATE OF CALIFORNIA OR ITS OFFICERS OR AGENTS SHALL NOT BE RESPONSIBLE FOR THE ACCURACY OR COMPLETENESS OF SCANNED COPIES OF THIS PLAN SHEET.

TRAFFIC:

1. TWO WAY TRAFFIC ON NORTH SIDE OF HIGHWAY
2. ONE WAY TRAFFIC WITH LANE CLOSURE
3. FOR ACCURATE RIGHT OF WAY DATA, CONTACT RIGHT OF WAY ENGINEERING AT THE DISTRICT OFFICE.

STAGE 3 CONSTRUCTION:

1. PLACE Temp STRIPING AND Temp RAILING (TYPE K)
2. CONSTRUCT STAGE 3
3. REMOVE Temp RAILING (TYPE K)
4. REMOVE Temp STRIPING
5. PLACE FINAL LIFT OF HMA ALL AREAS
6. PLACE PERMENANT PAVEMENT DELINEATION

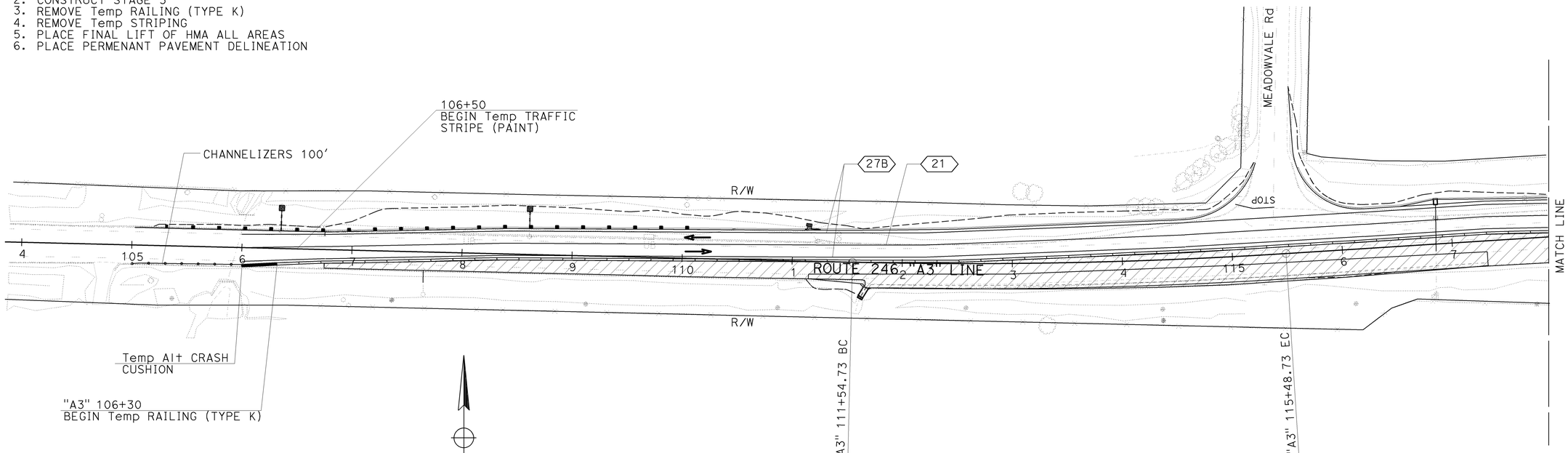

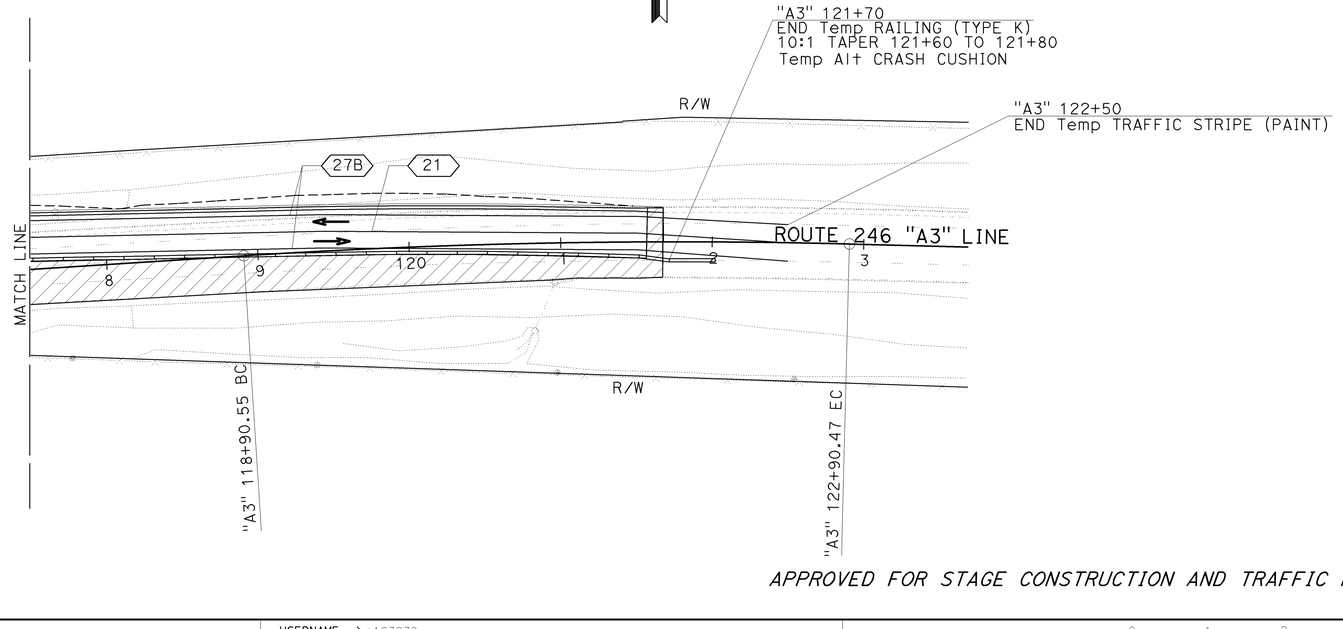

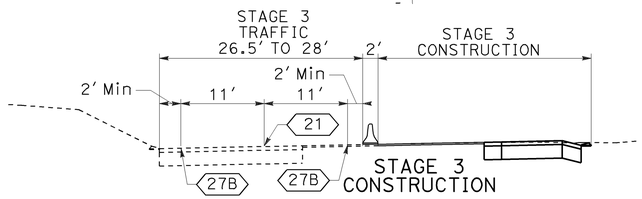

Sta 111+10 TO 121+80

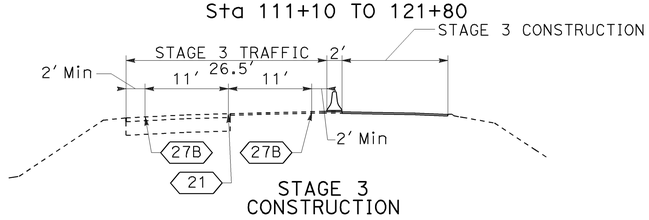

Sta 106+75 TO 111+10

STAGE CONSTRUCTION AND TRAFFIC HANDLING PLAN (STAGE 3)

SCALE: 1" = 50'

SC-3

APPROVED FOR STAGE CONSTRUCTION AND TRAFFIC HANDLING WORK ONLY

REVISED BY	DATE REVISED

CALCULATED-DESIGNED BY: BRIAN FULLER
CHECKED BY: MIKE O'NEAL
FUNCTIONAL SUPERVISOR: STEVE WYATT

STATE OF CALIFORNIA - DEPARTMENT OF TRANSPORTATION
Caltrans®
DESIGN

LAST REVISION | DATE PLOTTED => 15-AUG-2013
07-08-13 | TIME PLOTTED => 08:14

Dist	COUNTY	ROUTE	POST MILES TOTAL PROJECT	SHEET No.	TOTAL SHEETS
05	SB	246	33.2/33.5	22	48

REGISTERED CIVIL ENGINEER — DATE 7-8-13

BRIAN FULLER No. 73000 Exp. 12-31-14 CIVIL — REGISTERED PROFESSIONAL ENGINEER — STATE OF CALIFORNIA

7-8-13
PLANS APPROVAL DATE

THE STATE OF CALIFORNIA OR ITS OFFICERS OR AGENTS SHALL NOT BE RESPONSIBLE FOR THE ACCURACY OR COMPLETENESS OF SCANNED COPIES OF THIS PLAN SHEET.

STATIONARY MOUNTED CONSTRUCTION AREA SIGNS

SHEET No.	SIGN No.	SIGN CODE	SIGN MESSAGE	No. OF POST	PANEL SIZE	EA
SC-1	1-1	R1-1	STOP		24" x 24"	1
SC-1	1-2	W21-5B	RIGHT SHOULDER CLOSED 500 FT	1	48" x 48"	1
SC-1	1-3	W21-5B	RIGHT SHOULDER CLOSED 500 FT	1	48" x 48"	1
SC-1	1-4	C12(CA)	NARROW LANE	1	48" x 48"	1
SC-1	1-5	C12(CA)	NARROW LANE	1	48" x 48"	1

TRAFFIC HANDLING DEVICES

SHEET No.	LOCATION	Temp RAILING (TYPE K)	TYPE III BARRICADE	CHANNELIZER (SURFACE MOUNTED)	REMARKS
		LF	EA	EA	
SC-1	107+35 TO 114+35 116+20 TO 122+20	1,300			
CS-1	116+00		1		BIKE/PED DETOUR
SC-3	106+30 TO 121+70	1,540			
SC-1	MEADOWVALE		1		STOP
SC-1	122+20 TO 123+20			15	
SC-3	105+00 TO 106+00			15	
TOTAL		2,840	2	30	

CRASH CUSHIONS

SHEET No.	LOCATION	Temp Alt CRASH CUSHION
		EA
SC-1	107+00	1
	114+35	1
	116+20	1
	122+20	1
SC-3	106+00	1
	121+70	1
TOTAL		6

TEMPORARY PAVEMENT DELINEATION

SHEET No.	LOCATION	TEMPORARY TRAFFIC STRIPE (PAINT)		REMOVE PAVEMENT MARKER	REMOVE PAINTED TRAFFIC STRIPE			TEMPORARY PAVEMENT MARKING (PAINT)	
		Det 21	Det 27B		Det 22	Det 27B	Det 21	"STOP"	LIMIT LINE
		LF		EA	LF			SQFT	
SC-1	106+00 TO 123+00	1,700	3,400	141	3,400	1,700			
SC-3	106+50 TO 123+00	1,600	3,200			3,400	3,400		
SC-1	MEADOWVALE Rd							22	22
TOTAL		9,900		141	11,900			44	

STAGE CONSTRUCTION AND TRAFFIC HANDLING QUANTITIES

SCQ-1

BRIAN FULLER — CALCULATED-DESIGNED BY
MIKE O'NEAL — CHECKED BY
STEVE WYATT — FUNCTIONAL SUPERVISOR
STATE OF CALIFORNIA - DEPARTMENT OF TRANSPORTATION — DESIGN
Caltrans

LAST REVISION — DATE PLOTTED => 15-AUG-2013 — TIME PLOTTED => 08:14 — 07-08-13

BORDER LAST REVISED 7/2/2010 | USERNAME => s123239 | DGN FILE => 0500020226mc001.dgn | RELATIVE BORDER SCALE IS IN INCHES 0 1 2 3 | UNIT 1450 | PROJECT NUMBER & PHASE 05000202261

Dist	COUNTY	ROUTE	POST MILES TOTAL PROJECT	SHEET No.	TOTAL SHEETS
05	SB	246	33.2/33.5	23	48

Brian Fuller 7-8-13
REGISTERED CIVIL ENGINEER DATE

7-8-13
PLANS APPROVAL DATE

BRIAN FULLER No. 73000 Exp.12-31-14 CIVIL — REGISTERED PROFESSIONAL ENGINEER — STATE OF CALIFORNIA

THE STATE OF CALIFORNIA OR ITS OFFICERS OR AGENTS SHALL NOT BE RESPONSIBLE FOR THE ACCURACY OR COMPLETENESS OF SCANNED COPIES OF THIS PLAN SHEET.

NOTES:

1. ALL SIGN RELOCATIONS WILL BE DETERMINED BY THE ENGINEER.
2. MODIFY FLASHING BEACON PER ELECTRICAL PLAN.

LEGEND:

- BEGIN / END TRAFFIC STRIPE DETAIL
- CHANGE OF TRAFFIC STRIPE DETAIL
- GDE GUARD RAILING DELINEATOR (TYPE E) @ 20' SPACING C-C
- OML OBJECT MARKER (TYPE L-1)
- STOP PAVEMENT MARKING

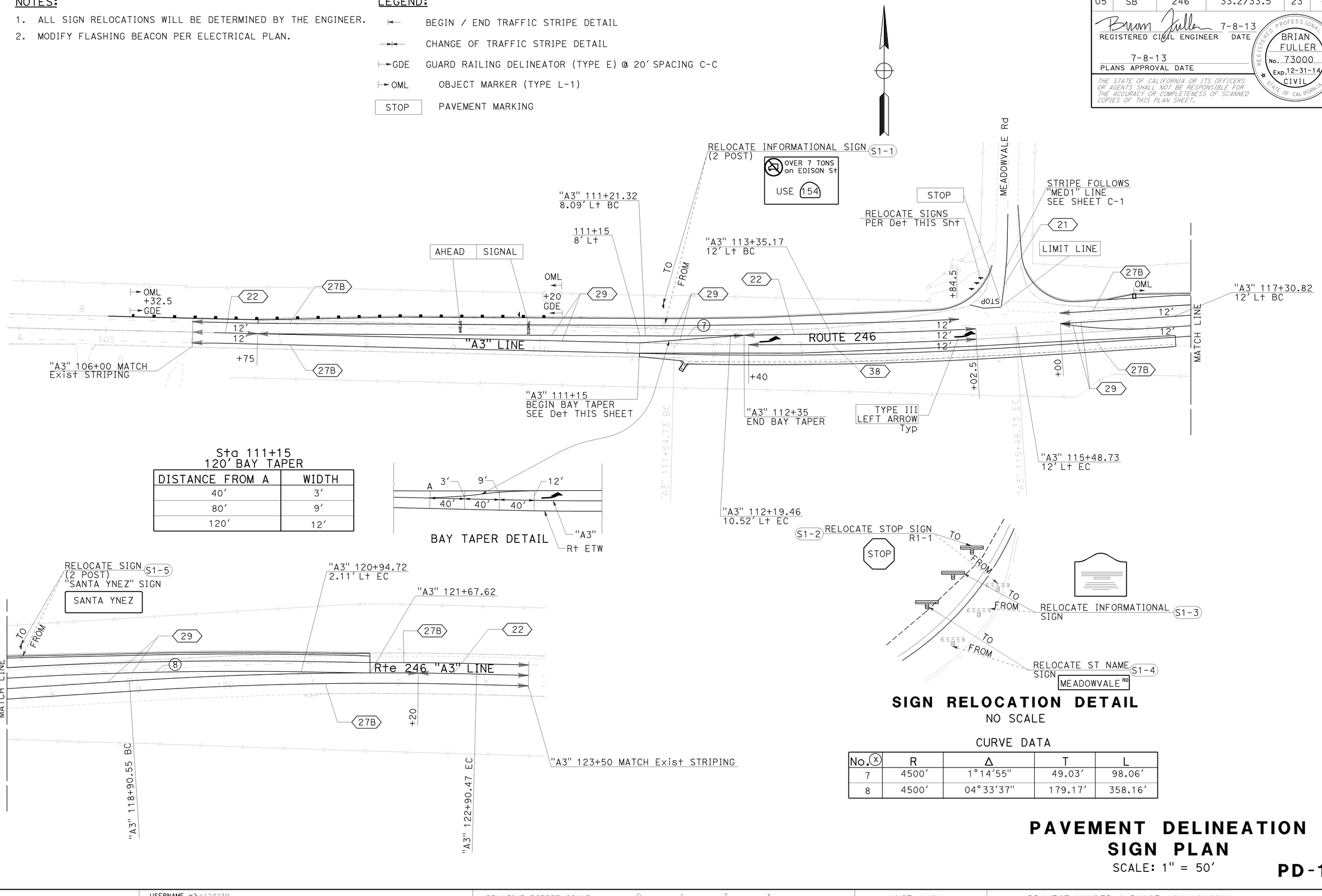

Sta 111+15
120' BAY TAPER

DISTANCE FROM A	WIDTH
40'	3'
80'	9'
120'	12'

BAY TAPER DETAIL

SIGN RELOCATION DETAIL

NO SCALE

CURVE DATA

No. (X)	R	Δ	T	L
7	4500'	1°14'55"	49.03'	98.06'
8	4500'	04°33'37"	179.17'	358.16'

PAVEMENT DELINEATION SIGN PLAN

SCALE: 1" = 50'

PD-1

REVISED BY | DATE REVISED
BRIAN FULLER | MIKE O'NEAL
CALCULATED-DESIGNED BY | CHECKED BY
FUNCTIONAL SUPERVISOR: STEVE WYATT

STATE OF CALIFORNIA - DEPARTMENT OF TRANSPORTATION
DESIGN

LAST REVISION 07-08-13 | DATE PLOTTED => 15-AUG-2013 | TIME PLOTTED => 08:14

BORDER LAST REVISED 7/2/2010 | USERNAME => s123239 | DGN FILE => 0500020226rna001.dgn | RELATIVE BORDER SCALE IS IN INCHES 0 1 2 3 | UNIT 1450 | PROJECT NUMBER & PHASE 05000202261

Dist	COUNTY	ROUTE	POST MILES TOTAL PROJECT	SHEET No.	TOTAL SHEETS
05	SB	246	33.2/33.5	24	48

REGISTERED CIVIL ENGINEER — DATE: 7-8-13

PLANS APPROVAL DATE: 7-8-13

BRIAN FULLER No. 73000 Exp. 12-31-14 CIVIL — REGISTERED PROFESSIONAL ENGINEER — STATE OF CALIFORNIA

THE STATE OF CALIFORNIA OR ITS OFFICERS OR AGENTS SHALL NOT BE RESPONSIBLE FOR THE ACCURACY OR COMPLETENESS OF SCANNED COPIES OF THIS PLAN SHEET.

PAVEMENT DELINEATION

SHEET No.	STATION LIMITS	THERMOPLASTIC TRAFFIC STRIPE (SPRAYABLE)					THERMOPLASTIC PAVEMENT MARKING					PAVEMENT MARKER		GUARD RAILING DELINEATOR	OBJECT MARKER
		4" YELLOW			4" WHITE	8" WHITE						(RETROREFLECTIVE)			
		DETAIL 21	DETAIL 22	DETAIL 29	DETAIL 27B	DETAIL 38	TYPE III ARROW	LIMIT LINE	"STOP"	"SIGNAL"	"AHEAD"	TYPE D	TYPE G	TYPE E	L-1
		LF	LF	LF	LF	LF	SQFT	SQFT	SQFT	SQFT	SQFT	EA	EA	EA	EA
PD-1	"A3" 106+00 TO 106+75		75									8			
	"A3" 112+35 TO 115+02.50		267.5									45			
	"MED1" 100+09.85 TO 101+26.98	117.1										26			
	"A3" 122+20 TO 123+50		130									26			
	"A3" 106+00 TO 114+84.50 Lt				884.5										
	"A3" 116+00 TO 123+50 Lt				750										
	"A3" 106+00 TO 123+50 Rt				1,750										
	"A3" 106+75 TO 112+35 Rt/Lt			1,120								47			
	"A3" 116+00 TO 122+20 Rt			620								26			
	"A3" 116+00 TO 122+20 Lt			620								20			
	"A3" 112+40 TO 115+02.50					267.5							13		
	"A3" 112+50						42								
	"A3" 115+00						42								
	MEDOWVALE / Rte 246							22	22	32	31				
	"A3" 105+32.50 TO 117+00													32	3
SUBTOTAL		117.1	472.5	2,360	3,384.5	267.5	84	22	22	32	31	198	13	32	3
TOTAL		6,601.6					191					211		32	3

ROADSIDE SIGN QUANTITIES

SHEET No.	SIGN No.	SIGN CODE		RELOCATE ROADSIDE SIGN		REMARKS
		FEDERAL	CALIFORNIA	ONE POST EACH	TWO POST EACH	
PD-1	S1-1				1	NO TRUCKS OVER 7 TONS
	S1-2	R1-1		1		"STOP"
	S1-3		G14	1		INFORMATIONAL
	S1-4		D3-1	1		STREET NAME
	S1-5		G9-2		1	"SANTA YNEZ"
TOTAL				3	2	

PAVEMENT DELINEATION QUANTITIES

PDQ-1

REVISED BY | DATE REVISED

BRIAN FULLER | MIKE O'NEAL

CALCULATED-DESIGNED BY | CHECKED BY

FUNCTIONAL SUPERVISOR: STEVE WYATT

STATE OF CALIFORNIA - DEPARTMENT OF TRANSPORTATION — DESIGN

Caltrans

LAST REVISION 07-08-13 | DATE PLOTTED => 15-AUG-2013 | TIME PLOTTED => 08:14

BORDER LAST REVISED 7/2/2010

USERNAME => s123239
DGN FILE => 0500020226nb001.dgn

RELATIVE BORDER SCALE IS IN INCHES 0 1 2 3

UNIT 1450

PROJECT NUMBER & PHASE 05000202261

Dist	COUNTY	ROUTE	POST MILES TOTAL PROJECT	SHEET No.	TOTAL SHEETS
05	SB	246	33.2/33.5	25	48

REGISTERED CIVIL ENGINEER — DATE 7-8-13

BRIAN FULLER No. 73000 Exp. 12-31-14 CIVIL — REGISTERED PROFESSIONAL ENGINEER — STATE OF CALIFORNIA

7-8-13
PLANS APPROVAL DATE

THE STATE OF CALIFORNIA OR ITS OFFICERS OR AGENTS SHALL NOT BE RESPONSIBLE FOR THE ACCURACY OR COMPLETENESS OF SCANNED COPIES OF THIS PLAN SHEET.

PAVEMENT STRUCTURE

SHEET No.	LOCATION / DESCRIPTION	COLD PLANE AC Pvmt	CI 2 AB	HOT MIX ASPHALT (TYPE A)	TACK COAT	SAFETY EDGE (N)
		SQYD	CY	TON		LF
L-1	106+65 TO 121+77.62	5,064	2,197	2,028.6	2	
L-1	HMA DIKE			65.0		
D-1	DRAINAGE			1.25		
X-2	SAFETY EDGE			1.1		359.4
TOTAL		5,064	2,197	2,096.0	2	359.4

(N) NOT A SEPERATE PAY ITEM. FOR INFORMATION ONLY.

SAFETY EDGE

LOCATION	(N) TOTAL THICKNESS OF SAFETY EDGE	(N) LENGTH SAFETY EDGE	HOT MIX ASPHALT (TYPE A)
	FT	LF	TON
"A3" 117+31.41 TO 120+90.82 Rt	0.2	359.4	1.1
TOTAL		359.4	1.1*

* QUANTITY INCLUDED IN PAVEMENT STRUCTURE QUANTITIES SUMMARY
(N) NOT A SEPERATE PAY ITEM. FOR INFORMATION ONLY.

EARTHWORK

SHEET No.	LOCATION	ROADWAY EXCAVATION	EMBANKMENT (N)	GEOSYNTHETIC REINFORCEMENT	SAFETY EDGE (N)
		CY		SQYD	LF
L-1	"A3" 106+75 TO 110+50			2,523	
	"A3" 105+02 TO 121+77.62	2,739	561		
	"MED1" 100+09.85 TO 101+26.98	117 CY			
	"A3" 117+31.41 TO 120+90.82 Rt	1.6	1.6		359.4
TOTAL		2,857.6	562.6	2,523	

(N) NOT A SEPARATE PAY ITEM, FOR INFORMATION ONLY

TEMPORARY WATER POLLUTION CONTROL

LOCATION	Temp FIBER ROLL	Temp DI PROTECTION	Temp CHECK DAM	Temp SOIL BINDER
	LF	EA	LF	SQYD
106+65 TO 121+67.38	1,500	1	250	800
TOTAL	1,500	1	250	800

EXACT LOCATION OF TEMPORARY BMPS WILL BE APPROVED BY THE ENGINEER.

MIDWEST GUARD RAIL SYSTEM

LOCATION	Alt IN-LINE TERMINAL Sys	MGS (STEEL POST)	Veg CONTROL (Min Conc)
	EA	LF	SQYD
"A3" 105+82.5 TO 109+70 Lt		387.5	108.9
"A3" 105+32.5 Lt	1		
"A3" 109+70 Lt	1		
TOTAL	2	387.5	108.9

HMA DIKE

LOCATION	PLACE HMA DIKE (TYPE C)	PLACE HMA DIKE (TYPE E)	PLACE HMA DIKE (TYPE F)	HMA (TYPE A)	REMOVE AC DIKE
	LF	LF	LF	TONS	LF
"A3" 105+02.50 TO 105+32.50 Lt	30			0.2	
"A3" 105+32.50 TO 110+20 Lt			487.5	6.7	
"A3" 110+20 TO 110+45 Lt	25			0.2	
"A3" 110+45 TO 114+57.57 Lt		412.6		10.9	
"A3" 114+57.57 Lt TO "MED1" 100+80.88 Rt		88.4		2.3	
"MED1" 100+82.49 Lt TO "A3" 116+20.52 Lt		74.7		2.0	
"A3" 116+20.52 TO 121+67.62 Lt		554.9		14.6	
"A3" 106+65 TO 117+31.26 Rt		1,066.3		28.1	
"A3" 106+65 TO 111+15 Rt					485
"A3" 105+02.50 TO 106+75 Lt					172.5
TOTAL	55	2,196.9	487.5	65.0*	657.5

* QUANTITY INCLUDED IN PAVEMENT STRUCTURE QUANTITIES SUMMARY

SUMMARY OF QUANTITIES
Q-1

STATE OF CALIFORNIA - DEPARTMENT OF TRANSPORTATION — DESIGN — Caltrans
FUNCTIONAL SUPERVISOR: STEVE WYATT
CALCULATED-DESIGNED BY: BRIAN FULLER
CHECKED BY: MIKE O'NEAL
REVISED BY
DATE REVISED

LAST REVISION | DATE PLOTTED => 15-AUG-2013 | 07-08-13 | TIME PLOTTED => 08:14

BORDER LAST REVISED 7/2/2010 | USERNAME => s123239 | DGN FILE => 0500020226pa001.dgn | RELATIVE BORDER SCALE IS IN INCHES 0 1 2 3 | UNIT 1450 | PROJECT NUMBER & PHASE 05000202261

Dist	COUNTY	ROUTE	POST MILES TOTAL PROJECT	SHEET No.	TOTAL SHEETS
05	SB	246	33.2/33.5	26	48

LICENSED LANDSCAPE ARCHITECT

7-8-13
PLANS APPROVAL DATE

LICENSED LANDSCAPE ARCHITECT
Laurie D. Dunn No. 3506
Signature
4/30/14
Renewal Date
XX/XX/XX
Date
STATE OF CALIFORNIA

THE STATE OF CALIFORNIA OR ITS OFFICERS OR AGENTS SHALL NOT BE RESPONSIBLE FOR THE ACCURACY OR COMPLETENESS OF SCANNED COPIES OF THIS PLAN SHEET.

EROSION CONTROL

SEQUENCE	ITEM	MATERIAL		APPLICATION RATE
		DESCRIPTION	TYPE	
STEP 1	COMPOST	COMPOST	MEDIUM	270 CY/ACRE
STEP 2	HYDROSEED	SEED	SEED MIX	46 LB/ACRE
		FIBER	WOOD	500 LB/ACRE
STEP 3	HYDROMULCH	FIBER	WOOD	1500 LB/ACRE
		TACKIFIER	PSYLLIUM	125 LB/ACRE

SEED MIX

BOTANICAL NAME (COMMON NAME)	PERCENT GERMINATION (MINIMUM)	POUNDS PURE LIVE SEED PER ACRE (SLOPE MEASUREMENT)
ACHILLEA MILLEFOLIUM (YARROW)	75	4
ELYMUS GLAUCUS (BLUE WILDRYE)	75	12
HORDEUM CALIFORNICUM (CALIFORNIA BARLEY)	70	16
LOTUS SCOPARIUS (DEERWEED)	60	8
LUPINUS BICOLOR (MINIATURE LUPINE)	60	6

EROSION CONTROL QUANTITIES

SHEET	LOCATION			DESCRIPTION	COMPOST	HYDROSEED	HYDROMULCH	FIBER ROLLS
	STATION	Lt	Rt		SQFT	SQFT	SQFT	LF
NOT SHOWN ON PLANS	"A3" 106+75 TO 121+50	X		EROSION CONTROL	20,000	20,000	20,000	
				FIBER ROLLS				2,900
TOTAL					20,000	20,000	20,000	2,900

FIBER ROLLS

SEQUENCE	ITEM	MATERIAL		REMARKS
		DESCRIPTION	TYPE	
IN HYDROSEED AREAS FIBER ROLLS MUST BE INSTALLED BEFORE HYDROSEEDING.	FIBER ROLLS	FIBER ROLL	STRAW FILL 8" TO 10" Dia	TYPE 1 INSTALLATION, PLACE AT TOE OF SLOPE IN ADDITION TO STANDARD SPACING AT FACE OF SLOPE

EROSION CONTROL LEGEND AND QUANTITIES
ECL-1

STATE OF CALIFORNIA - DEPARTMENT OF TRANSPORTATION
Caltrans® LANDSCAPE ARCHITECTURE

SENIOR LANDSCAPE ARCHITECT: DENNIS REEVES
CALCULATED-DESIGNED BY: LAURIE D. DUNN
CHECKED BY: JO JACKSON
REVISED BY
DATE REVISED

LAST REVISION 07-08-13
DATE PLOTTED => 15-AUG-2013
TIME PLOTTED => 08:14

Dist	COUNTY	ROUTE	POST MILES TOTAL PROJECT	SHEET No.	TOTAL SHEETS
05	SB	246	33.2/33.5	27	48

Xavier Alfaro 7-8-13
REGISTERED ELECTRICAL ENGINEER

7-8-13
PLANS APPROVAL DATE

REGISTERED PROFESSIONAL ENGINEER
XAVIER I. ALFARO
No. E17488
Exp. 6-30-15
ELECTRICAL
STATE OF CALIFORNIA

THE STATE OF CALIFORNIA OR ITS OFFICERS OR AGENTS SHALL NOT BE RESPONSIBLE FOR THE ACCURACY OR COMPLETENESS OF SCANNED COPIES OF THIS PLAN SHEET.

NOTE:

FOR ACCURATE RIGHT OF WAY DATA, CONTACT
RIGHT OF WAY ENGINEERING AT THE DISTRICT OFFICE.

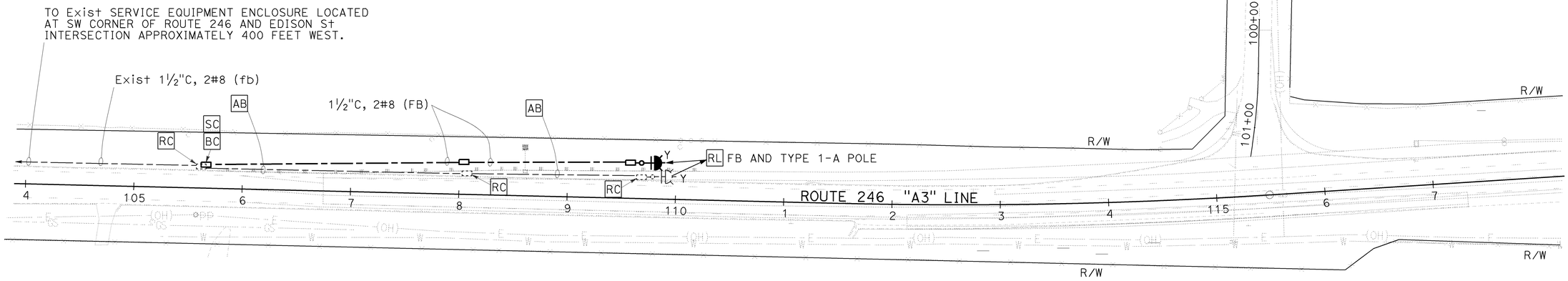

APPROVED FOR ELECTRICAL WORK ONLY

MODIFY FLASHING BEACON
E-1

SCALE: 1"=50'

CALCULATED-
DESIGNED BY
CHECKED BY

XAVIER ALFARO
DANIEL VO

REVISED BY
DATE REVISED

FUNCTIONAL SUPERVISOR
ALI BAKHDOUD

STATE OF CALIFORNIA - DEPARTMENT OF TRANSPORTATION
Caltrans® ELECTRICAL DESIGN

LAST REVISION
DATE PLOTTED => 15-AUG-2013
TIME PLOTTED => 08:14
07-08-13

BORDER LAST REVISED 7/2/2010

USERNAME => s123239
DGN FILE => 0500020226ua001.dgn

RELATIVE BORDER SCALE IS IN INCHES
0 1 2 3

UNIT 1515

PROJECT NUMBER & PHASE 05000202261

Dist	COUNTY	ROUTE	POST MILES TOTAL PROJECT	SHEET No.	TOTAL SHEETS
05	SB	246	33.2/33.5	28	48

Xavier Alfaro 7-8-13
REGISTERED ELECTRICAL ENGINEER

7-8-13
PLANS APPROVAL DATE

REGISTERED PROFESSIONAL ENGINEER
XAVIER I. ALFARO
No. E17488
Exp. 6-30-15
ELECTRICAL
STATE OF CALIFORNIA

THE STATE OF CALIFORNIA OR ITS OFFICERS OR AGENTS SHALL NOT BE RESPONSIBLE FOR THE ACCURACY OR COMPLETENESS OF SCANNED COPIES OF THIS PLAN SHEET.

NOTE:
THE QUANITIES ON THIS SHEET ARE FOR INFORMATION ONLY AND ARE NOT SEPARATE PAY ITEMS

MODIFY FLASHING BEACON

SHEET No.	BC	RC PB	No. 5 PB	1½" TYPE 3 CONDUIT	AB CONDUIT	#8 CONDUCTORS	SC	RL Exist FB
	EA	EA	EA	LF	LF	LF	EA	EA
E-1	1	3	2	410	410	900	4	1

REVISED BY
DATE REVISED
XAVIER ALFARO
DANIEL VO
CALCULATED-DESIGNED BY
CHECKED BY
FUNCTIONAL SUPERVISOR
ALI BAKHDOUD
STATE OF CALIFORNIA - DEPARTMENT OF TRANSPORTATION
Caltrans® ELECTRICAL DESIGN

ELECTRICAL QUANTITIES

E-2

LAST REVISION 07-08-13
DATE PLOTTED => 15-AUG-2013
TIME PLOTTED => 08:14

M

Maint	MAINTENANCE
Max	MAXIMUM
MB	METAL BEAM
MBB	METAL BEAM BARRIER
MBGR	METAL BEAM GUARD RAILING
Med	MEDIAN
MGS	MIDWEST GUARDRAIL SYSTEM
MH	MANHOLE
Min	MINIMUM
Misc	MISCELLANEOUS
Misc I & S	MISCELLANEOUS IRON AND STEEL
Mkr	MARKER
Mod	MODIFIED, MODIFY
Mon	MONUMENT
MP	METAL PLATE
MPGR	METAL PLATE GUARD RAILING
MR	MOVEMENT RATING
MSE	MECHANICALLY STABILIZED EMBANKMENT
Mt	MOUNTAIN, MOUNT
Mtl	MATERIAL
MVP	MAINTENANCE VEHICLE PULLOUT

N

N	NORTH
NB	NORTHBOUND
No.	NUMBER (MUST HAVE PERIOD)
Nos.	NUMBERS (MUST HAVE PERIOD)
NPS	NOMINAL PIPE SIZE
NS	NEAR SIDE
NSP	NEW STANDARD PLAN
NTS	NOT TO SCALE

O

Oblr	OBLITERATE
OC	OVERCROSSING
OD	OUTSIDE DIAMETER
OF	OUTSIDE FACE
OG	ORIGINAL GROUND
OGAC	OPEN GRADED ASPHALT CONCRETE
OGFC	OPEN GRADED FRICTION COURSE
OH	OVERHEAD
OHWM	ORDINARY HIGH WATER MARK
O-O	OUT TO OUT
Opp	OPPOSITE
OSD	OVERSIDE DRAIN

P

P	PAGE
PAP	PERFORATED ALUMINUM PIPE
PB	PULL BOX
PC	POINT OF CURVATURE, PRECAST
PCC	POINT OF COMPOUND CURVE, PORTLAND CEMENT CONCRETE
PCMS	PORTABLE CHANGEABLE MESSAGE SIGN
PCP	PERFORATED CONCRETE PIPE, PRESTRESSED CONCRETE PIPE
PCVC	POINT OF COMPOUND VERTICAL CURVE
PEC	PERMIT TO ENTER AND CONSTRUCT
Ped	PEDESTRIAN
Ped OC	PEDESTRIAN OVERCROSSING
Ped UC	PEDESTRIAN UNDERCROSSING
Perm Mtl	PERMEABLE MATERIAL

P continued

PG	PROFILE GRADE
PI	POINT OF INTERSECTION
PJP	PARTIAL JOINT PENETRATION
Pkwy	PARKWAY
℄,PL	PLATE
P/L	PROPERTY LINE
PM	POST MILE, TIME FROM NOON TO MIDNIGHT
PN	PAVING NOTCH
POC	POINT OF HORIZONTAL CURVE
POT	POINT OF TANGENT
POVC	POINT OF VERTICAL CURVE
PP	PIPE PILE, PLASTIC PIPE, POWER POLE
PPL	PREFORMED PERMEABLE LINER
PPP	PERFORATED PLASTIC PIPE
PRC	POINT OF REVERSE CURVE
PRF	PAVEMENT REINFORCING FABRIC
PRVC	POINT OF REVERSE VERTICAL CURVE
PS&E	PLANS, SPECIFICATIONS AND ESTIMATES
PS, P/S	PRESTRESSED
PSP	PERFORATED STEEL PIPE
PT	POINT OF TANGENCY
PVC	POLYVINYL CHLORIDE
Pvmt	PAVEMENT

Q

Qty	QUANTITY

R

R	RADIUS
R & D	REMOVE AND DISPOSE
R & S	REMOVE AND SALVAGE
R/C	RATE OF CHANGE
RCA	REINFORCED CONCRETE ARCH
RCB	REINFORCED CONCRETE BOX
RCP	REINFORCED CONCRETE PIPE
RCPA	REINFORCED CONCRETE PIPE ARCH
Rd	ROAD
Reinf	REINFORCED, REINFORCEMENT, REINFORCING
Rel	RELOCATE
Repl	REPLACEMENT
Ret	RETAINING
Rev	REVISED, REVISION
Rdwy	ROADWAY
RHMA	RUBBERIZED HOT MIX ASPHALT
Riv	RIVER
RM	ROAD-MIXED
RP	RADIUS POINT, REFERENCE POINT
RR	RAILROAD
RSP	ROCK SLOPE PROTECTION, REVISED STANDARD PLAN
Rt	RIGHT
Rte	ROUTE
RW	REDWOOD, RETAINING WALL
R/W	RIGHT OF WAY
Rwy	RAILWAY

S

S	SOUTH, SUPPLEMENT
SAE	STRUCTURE APPROACH EMBANKMENT
Salv	SALVAGE
SAPP	STRUCTURAL ALUMINUM PLATE PIPE
SB	SOUTHBOUND
SC	SAND CUSHION
SCSP	SLOTTED CORRUGATED STEEL PIPE
SD	STORM DRAIN
Sec	SECOND, SECTION
Sep	SEPARATION
SG	SUBGRADE
Shld	SHOULDER
Sht	SHEET
Sim	SIMILAR
℄	STATION LINE
SM	SELECTED MATERIAL
Spec	SPECIAL, SPECIFICATIONS
SPP	SLOTTED PLASTIC PIPE
SS	SLOPE STAKE
SSBM	STRAP AND SADDLE BRACKET METHOD
SSD	STRUCTURAL SECTION DRAIN
SSPA	STRUCTURAL STEEL PLATE ARCH
SSPP	STRUCTURAL STEEL PLATE PIPE
SSPPA	STRUCTURAL STEEL PLATE PIPE ARCH
SSRP	STEEL SPIRAL RIB PIPE
St	STREET
Sta	STATION
STBB	SINGLE THRIE BEAM BARRIER
Std	STANDARD
Str	STRUCTURE
Surf	SURFACING
SW	SIDEWALK, SOUND WALL
Swr	SEWER
Sym	SYMMETRICAL
S4S	SURFACE 4 SIDES

T

T	SEMI-TANGENT
Tan	TANGENT
TBB	THRIE BEAM BARRIER
Tbr	TIMBER
TC	TOP OF CURB
TCB	TRAFFIC CONTROL BOX
TCE	TEMPORARY CONSTRUCTION EASEMENT
Tel	TELEPHONE
Temp	TEMPORARY
TG	TOP OF GRADE
Tot	TOTAL
TP	TELEPHONE POLE
TPB	TREATED PERMEABLE BASE
TPM	TREATED PERMEABLE MATERIAL
Trans	TRANSITION

T continued

TS	TRANSVERSE, TRAFFIC SIGNAL, TUBULAR STEEL
Typ	TYPICAL

U

UC	UNDERCROSSING
UD	UNDERDRAIN
UG	UNDERGROUND
UON	UNLESS OTHERWISE NOTED
UP	UNDERPASS

V

V	VALVE, DESIGN SPEED
Var	VARIABLE, VARIES
VC	VERTICAL CURVE
VCP	VITRIFIED CLAY PIPE
Vert	VERTICAL
Via	VIADUCT
Vol	VOLUME

W

W	WEST, WIDTH
WB	WESTBOUND
WH	WEEP HOLE
WM	WIRE MESH
WS	WATER SURFACE
WSP	WELDED STEEL PIPE
Wt	WEIGHT
WV	WATER VALVE
WW	WINGWALL
WWLOL	WINGWALL LAYOUT LINE

X

X Sec	CROSS SECTION
Xing	CROSSING

Y

Yr	YEAR
Yrs	YEARS

Dist	COUNTY	ROUTE	POST MILES TOTAL PROJECT	SHEET No.	TOTAL SHEETS
05	SB	246	33.2/33.5	29	48

Grace M. Tsushima
REGISTERED CIVIL ENGINEER

July 19, 2013
PLANS APPROVAL DATE

REGISTERED PROFESSIONAL ENGINEER — Grace M. Tsushima No. C49814 Exp. 9-30-14 CIVIL — STATE OF CALIFORNIA

THE STATE OF CALIFORNIA OR ITS OFFICERS OR AGENTS SHALL NOT BE RESPONSIBLE FOR THE ACCURACY OR COMPLETENESS OF SCANNED COPIES OF THIS PLAN SHEET.

TO ACCOMPANY PLANS DATED 7-8-13

UNIT OF MEASUREMENT SYMBOLS:

Some of the symbols used in the project plan quantity tables and in the Bid Item List are:

TABLE A

SYMBOL USED	DEFINITIONS
ACRE	ACRE
CF	CUBIC FOOT
CY	CUBIC YARD
EA	EACH
GAL	GALLON
LB	POUND
LF	LINEAR FOOT
SQFT	SQUARE FOOT
SQYD	SQUARE YARD
STA	100 FEET
TAB	TABLET
TON	2,000 POUNDS

Some of the symbols used in the plans other than in the project plan quantity tables are:

TABLE B

SYMBOL USED	DEFINITIONS
ksi	KIPS PER SQUARE INCH
ksf	KIPS PER SQUARE FOOT
psi	POUNDS PER SQUARE INCH
psf	POUNDS PER SQUARE FOOT
lb/ft^3, pcf	POUNDS PER CUBIC FOOT
tsf	TONS PER SQUARE FOOT
mph, MPH *	MILES PER HOUR
ø	NOMINAL DIAMETER
oz	OUNCE
lb	POUND
kip	1,000 POUNDS
cal	CALORIE
ft	FOOT OR FEET
gal	GALLON

* For use on a sign panel only

STATE OF CALIFORNIA
DEPARTMENT OF TRANSPORTATION

ABBREVIATIONS (SHEET 2 OF 2)

NO SCALE

RSP A10B DATED JULY 19, 2013 SUPERSEDES STANDARD PLAN A10B DATED MAY 20, 2011 - PAGE 2 OF THE STANDARD PLANS BOOK DATED 2010.

REVISED STANDARD PLAN RSP A10B

2010 REVISED STANDARD PLAN RSP A10B

6-7-13

Dist	COUNTY	ROUTE	POST MILES TOTAL PROJECT	SHEET No.	TOTAL SHEETS
05	SB	246	33.2/33.5	30	48

Roberta L. McLaughlin
REGISTERED CIVIL ENGINEER

April 20, 2012
PLANS APPROVAL DATE

REGISTERED PROFESSIONAL ENGINEER — Roberta L. McLaughlin — No. C40375 — Exp. 3-31-13 — CIVIL — STATE OF CALIFORNIA

THE STATE OF CALIFORNIA OR ITS OFFICERS OR AGENTS SHALL NOT BE RESPONSIBLE FOR THE ACCURACY OR COMPLETENESS OF SCANNED COPIES OF THIS PLAN SHEET.

TO ACCOMPANY PLANS DATED 7-8-2013

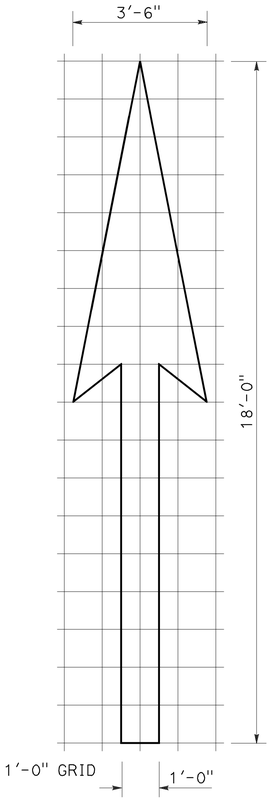

A=25 ft²

TYPE I 18'-0" ARROW

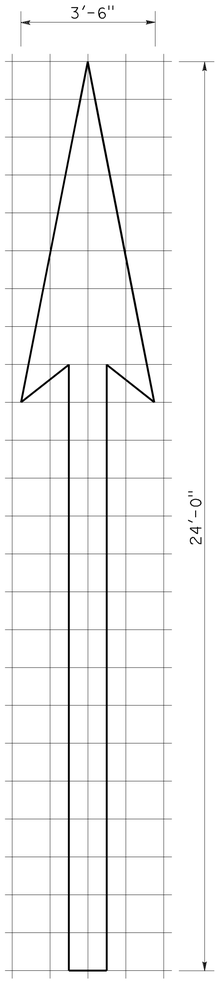

A=31 ft²

TYPE I 24'-0" ARROW

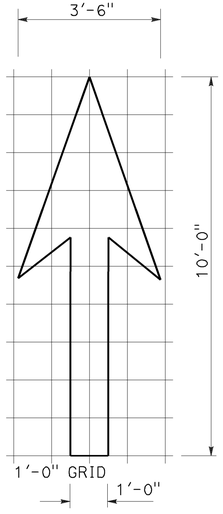

A=14 ft²

TYPE I 10'-0" ARROW

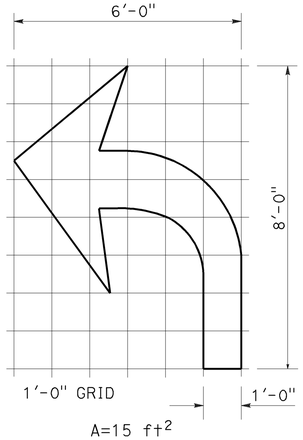

A=15 ft²

TYPE IV (L) ARROW

(For Type IV (R) arrow, use mirror image)

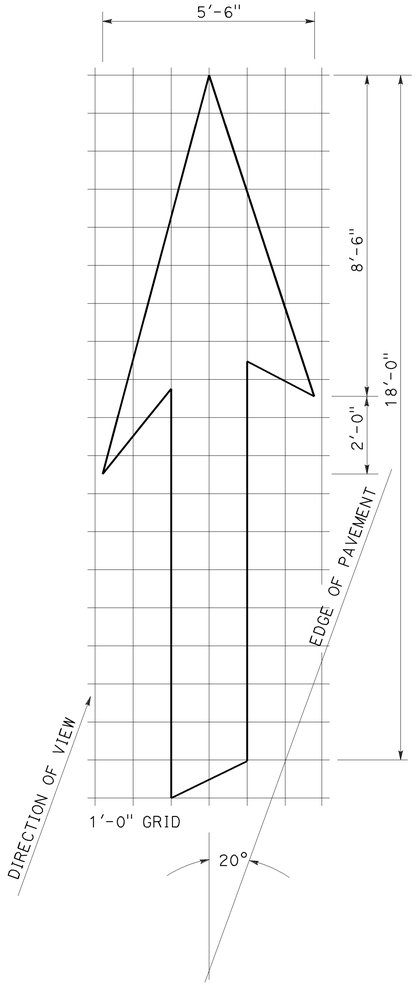

A=42 ft²

TYPE VI ARROW

Right lane drop arrow (For left lane, use mirror image)

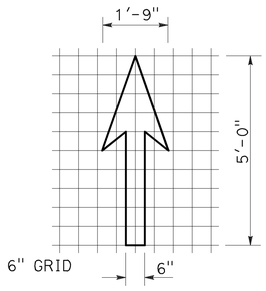

A=3.5 ft²

BIKE LANE ARROW

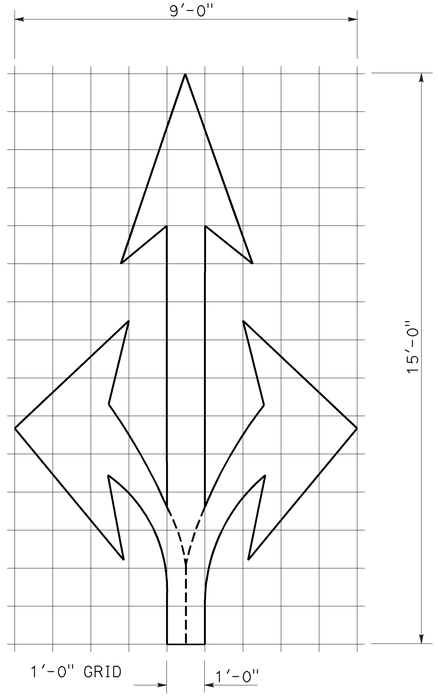

A=36 ft²

TYPE VIII ARROW

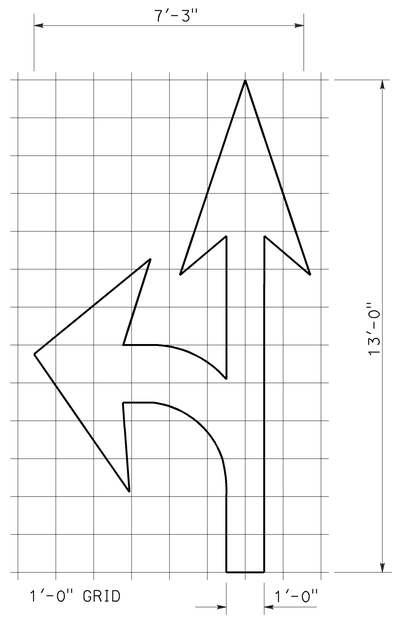

A=27 ft²

TYPE VII (L) ARROW

(For Type VII (R) arrow, use mirror image)

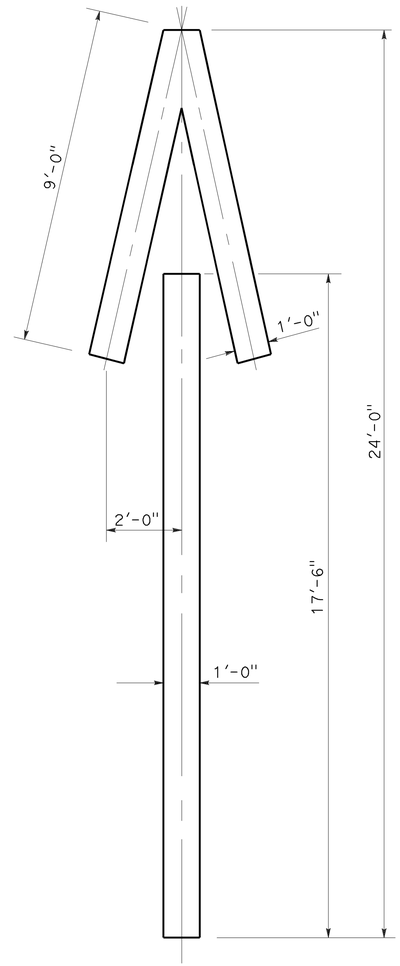

A=33 ft²

TYPE V ARROW

NOTE:
Minor variations in dimensions may be accepted by the Engineer.

STATE OF CALIFORNIA
DEPARTMENT OF TRANSPORTATION

PAVEMENT MARKINGS ARROWS

NO SCALE

RSP A24A DATED APRIL 20, 2012 SUPERSEDES STANDARD PLAN A24A DATED MAY 20, 2011 - PAGE 13 OF THE STANDARD PLANS BOOK DATED 2010.

REVISED STANDARD PLAN RSP A24A

2010 REVISED STANDARD PLAN RSP A24A

3-14-12

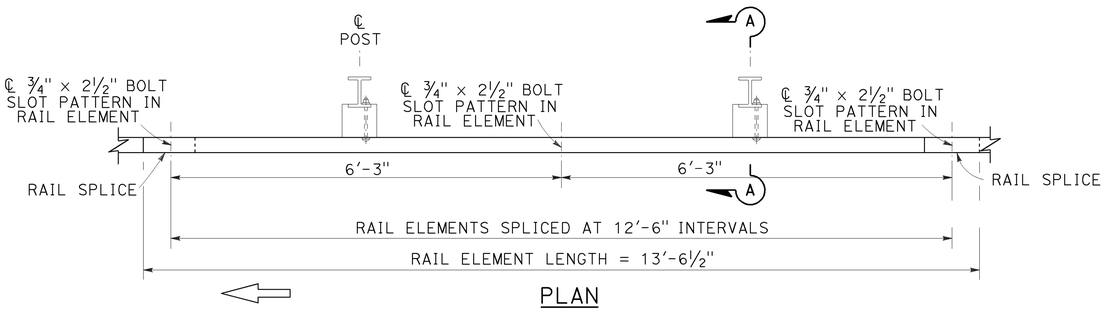

PLAN

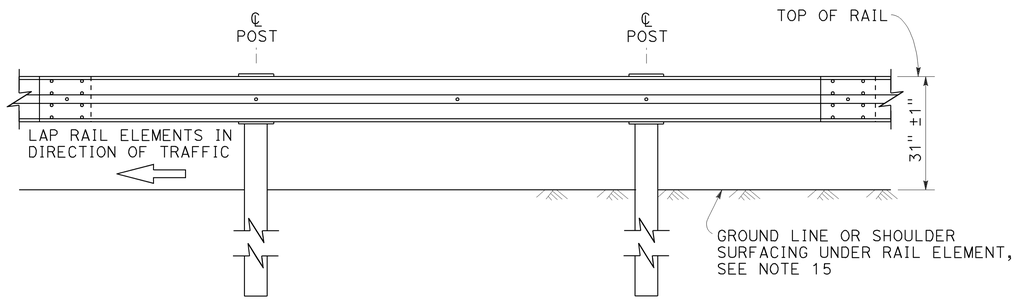

ELEVATION

MIDWEST GUARDRAIL SYSTEM WITH STEEL POSTS AND NOTCHED WOOD OR NOTCHED RECYCLED PLASTIC BLOCKS

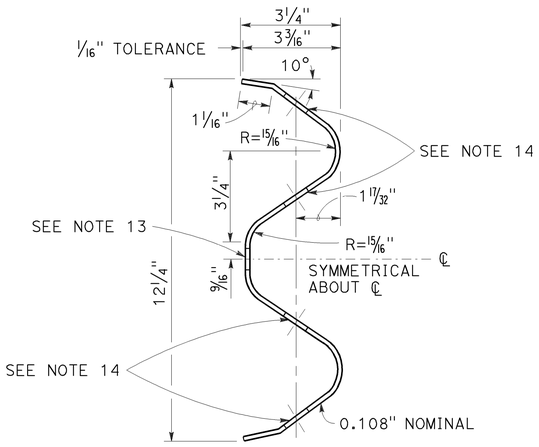

SECTION THRU RAIL ELEMENT

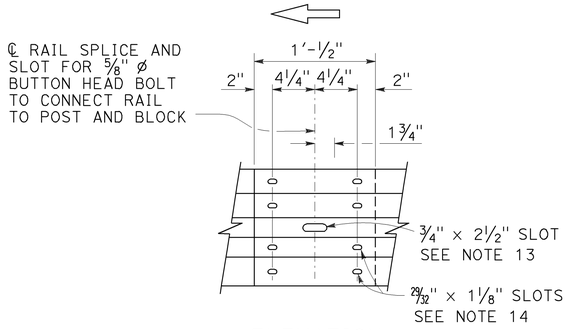

ELEVATION

RAIL ELEMENT SPLICE DETAIL

a) Connect the over lapped end of the rail elements with ⅝" ø × 1⅜" button head oval shoulder splice bolts inserted into the 29/32" × 1⅛" slots and bolted together with ⅝" ø recessed hex nuts. Recess of hex nut points toward rail element. A total of 8 bolts and nuts are to be used at each rail splice connection.

b) The ends of the rail elements are to be overlapped in the direction of traffic (see details).

c) Where end cap is to be attached to the end of a rail element, a total of 4 of the above described splice bolts and nuts are to be used.

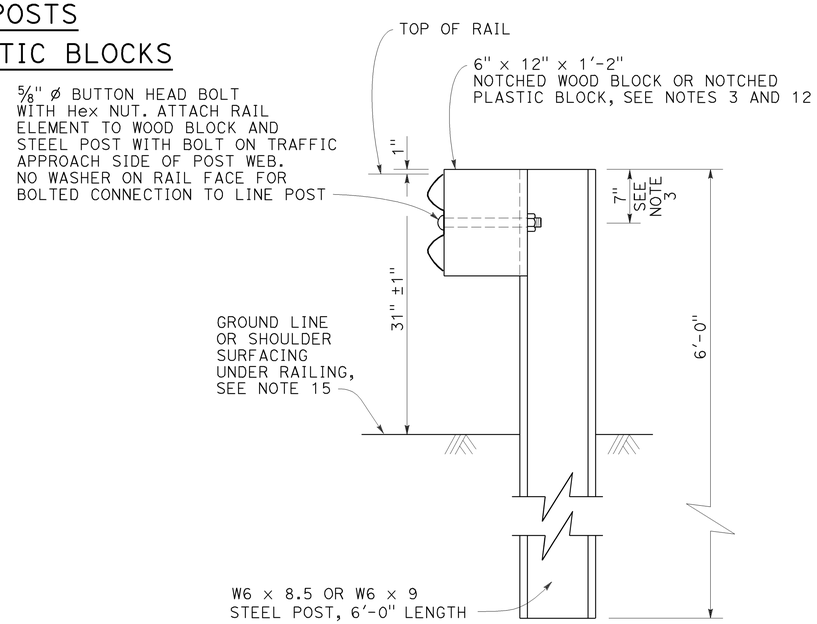

SECTION A-A

TYPICAL STEEL LINE POST INSTALLATION

See Note 4

Dist	COUNTY	ROUTE	POST MILES TOTAL PROJECT	SHEET No.	TOTAL SHEETS
05	SB	246	33.2/33.5	31	48

Randell D. Hiatt
REGISTERED CIVIL ENGINEER

July 19, 2013
PLANS APPROVAL DATE

REGISTERED PROFESSIONAL ENGINEER — Randell D. Hiatt — No. C50200 — Exp. 6-30-15 — CIVIL — STATE OF CALIFORNIA

THE STATE OF CALIFORNIA OR ITS OFFICERS OR AGENTS SHALL NOT BE RESPONSIBLE FOR THE ACCURACY OR COMPLETENESS OF SCANNED COPIES OF THIS PLAN SHEET.

TO ACCOMPANY PLANS DATED 7-8-13

NOTES:

1. For details of wood post installations, see Revised Standard Plan RSP A77L1.
2. For details of standard hardware used to construct MGS, see Revised Standard Plan RSP A77M1.
3. For details of steel posts and notched wood blocks used to construct MGS, see Revised Standard Plan RSP A77N2.
4. For additional installation details, see Revised Standard Plan RSP A77N3.
5. MGS post spacing to be 6'-3" center to center, except as otherwise noted.
6. For MGS typical layouts, see the A77P, A77Q and A77R Series of Standard Plans.
7. If railing is connected to terminal system end treatment, use 31" height terminal system end treatment.
8. For MGS end anchor details, see Revised Standard Plans RSP A77S1 and RSP A77T2.
9. For details of MGS transition to bridge railing, see Revised Standard Plan RSP A77U4.
10. For additional details of MGS connection to bridge railings, see Revised Standard Plans RSP A77U1, RSP A77U2 and RSP A77V1.
11. For dike positioning and MGS delineation details, see Revised Standard Plan RSP A77N4.
12. Notched face of block faces steel post.
13. Slotted hole for bolted connection of rail element to block and post. See "Section Thru Rail Element".
14. Slotted holes for splice bolts to overlap ends of rail element. See "Section Thru Rail Element".
15. Install posts in soil.

STATE OF CALIFORNIA
DEPARTMENT OF TRANSPORTATION

MIDWEST GUARDRAIL SYSTEM STANDARD RAILING SECTION (STEEL POST WITH NOTCHED WOOD OR NOTCHED RECYCLED PLASTIC BLOCK)

NO SCALE

RSP A77L2 DATED JULY 19, 2013 SUPPLEMENTS THE STANDARD PLANS BOOK DATED 2010.

REVISED STANDARD PLAN RSP A77L2

2010 REVISED STANDARD PLAN RSP A77L2

7-3-13

Dist	COUNTY	ROUTE	POST MILES TOTAL PROJECT	SHEET No.	TOTAL SHEETS
05	SB	246	33.2/33.5	32	48

Randell D. Hiatt
REGISTERED CIVIL ENGINEER

July 19, 2013
PLANS APPROVAL DATE

REGISTERED PROFESSIONAL ENGINEER
Randell D. Hiatt
No. C50200
Exp. 6-30-15
CIVIL
STATE OF CALIFORNIA

THE STATE OF CALIFORNIA OR ITS OFFICERS OR AGENTS SHALL NOT BE RESPONSIBLE FOR THE ACCURACY OR COMPLETENESS OF SCANNED COPIES OF THIS PLAN SHEET.

TO ACCOMPANY PLANS DATED 7-8-13

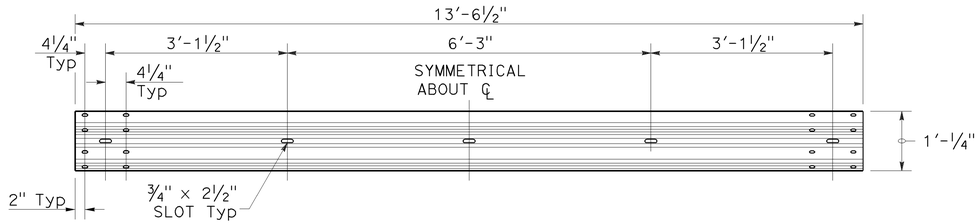

TYPICAL RAIL ELEMENT

NOTE:

1. Slotted holes for splice bolts to overlap ends of rail element.

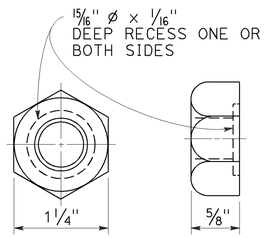

⅝" ø RECESS NUT

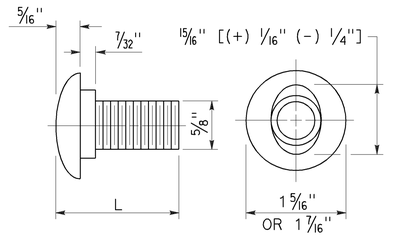

⅝" ø BUTTON HEAD BOLT

BUTTON HEAD BOLT

L	THREAD LENGTH
1⅜"	FULL THREAD LENGTH
2"	FULL THREAD LENGTH
10"	4" Min THREAD LENGTH
18"	4" Min THREAD LENGTH
20"	4" Min THREAD LENGTH
22"	4" Min THREAD LENGTH
26"	4" Min THREAD LENGTH
36"	4" Min THREAD LENGTH
** 2¾"	2" Min THREAD LENGTH
** 19"	4" Min THREAD LENGTH

** For nested rail applications.

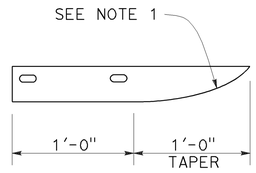

PLAN

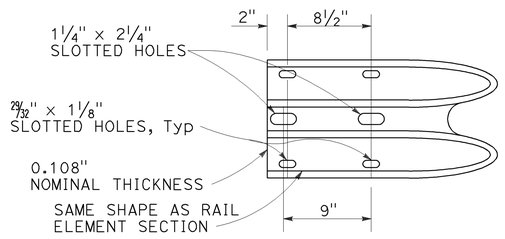

ELEVATION

END CAP (TYPE A)

STATE OF CALIFORNIA
DEPARTMENT OF TRANSPORTATION

MIDWEST GUARDRAIL SYSTEM STANDARD HARDWARE

NO SCALE

RSP A77M1 DATED JULY 19, 2013 SUPPLEMENTS THE STANDARD PLANS BOOK DATED 2010.

REVISED STANDARD PLAN RSP A77M1

2010 REVISED STANDARD PLAN RSP A77M1

7-3-13

Dist	COUNTY	ROUTE	POST MILES TOTAL PROJECT	SHEET No.	TOTAL SHEETS
05	SB	246	33.2/33.5	33	48

Randell D. Hiatt
REGISTERED CIVIL ENGINEER

July 19, 2013
PLANS APPROVAL DATE

REGISTERED PROFESSIONAL ENGINEER
Randell D. Hiatt
No. C50200
Exp. 6-30-15
CIVIL
STATE OF CALIFORNIA

THE STATE OF CALIFORNIA OR ITS OFFICERS OR AGENTS SHALL NOT BE RESPONSIBLE FOR THE ACCURACY OR COMPLETENESS OF SCANNED COPIES OF THIS PLAN SHEET.

TO ACCOMPANY PLANS DATED 7-8-13

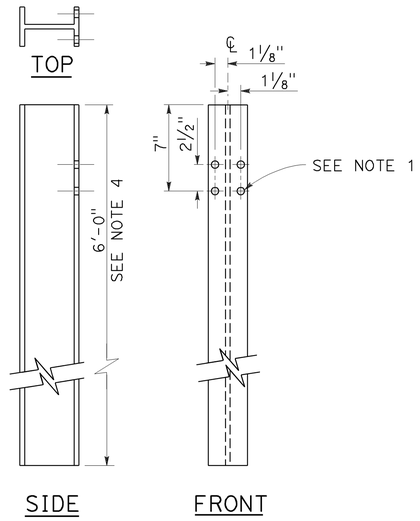

W6 x 9 OR W6 x 8.5 STEEL POST

See Note 4

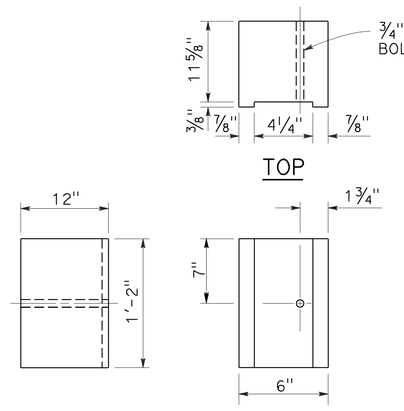

6" x 12" NOTCHED WOOD BLOCK

See Notes 2 and 3

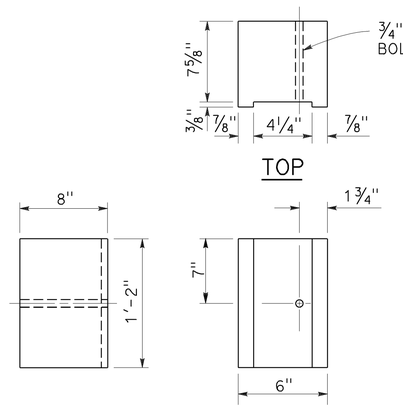

6" x 8" NOTCHED WOOD BLOCK

Only for use with metal beam guard railing. See Note 5

NOTES:

1. All holes in steel post shall be 13/16" Dia maximum.
2. Dimensions shown for wood block are nominal.
3. Notched face of block faces steel post.
4. 6'-0" length posts to be used for typical roadway installation. 7'-0" length posts to be used for narrow roadway installation. See Revised Standard Plan RSP A77N3.
5. See Revised Standard Plan RSP A77L3 for use of 6" x 8" and 8" x 8" notched wood blocks.
6. This post and 8" x 12" block combination to be used for line post sections of MGS on narrow roadways and where strengthened line post sections of MGS are warranted to shield fixed objects.

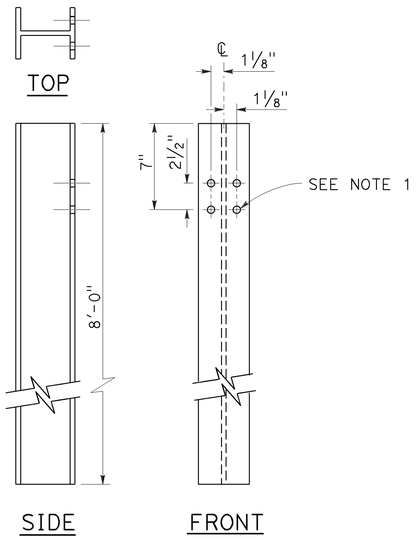

W6 x 15 STEEL POST

See Note 6

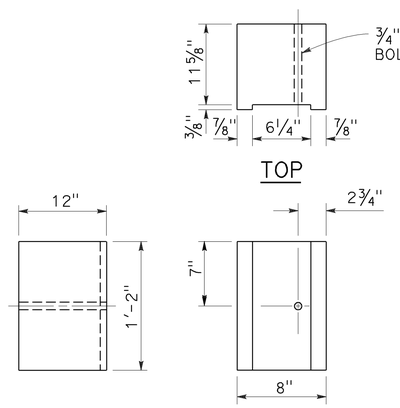

8" x 12" NOTCHED WOOD BLOCK

See Notes 2 and 3

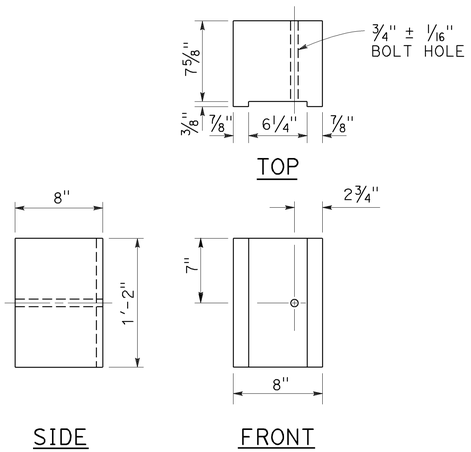

8" x 8" NOTCHED WOOD BLOCK

Only for use with metal beam guard railing. See Note 5

STATE OF CALIFORNIA
DEPARTMENT OF TRANSPORTATION

MIDWEST GUARDRAIL SYSTEM STEEL POST AND NOTCHED WOOD BLOCK DETAILS

NO SCALE

RSP A77N2 DATED JULY 19, 2013 SUPPLEMENTS THE STANDARD PLANS BOOK DATED 2010.

REVISED STANDARD PLAN RSP A77N2

2010 REVISED STANDARD PLAN RSP A77N2

7-3-13

Dist	COUNTY	ROUTE	POST MILES TOTAL PROJECT	SHEET No.	TOTAL SHEETS
05	SB	246	33.2/33.5	34	48

Randell D. Hiatt
REGISTERED CIVIL ENGINEER

July 19, 2013
PLANS APPROVAL DATE

REGISTERED PROFESSIONAL ENGINEER — Randell D. Hiatt — No. C50200 — Exp. 6-30-15 — CIVIL — STATE OF CALIFORNIA

THE STATE OF CALIFORNIA OR ITS OFFICERS OR AGENTS SHALL NOT BE RESPONSIBLE FOR THE ACCURACY OR COMPLETENESS OF SCANNED COPIES OF THIS PLAN SHEET.

TO ACCOMPANY PLANS DATED 7-8-13

2010 REVISED STANDARD PLAN RSP A77N3

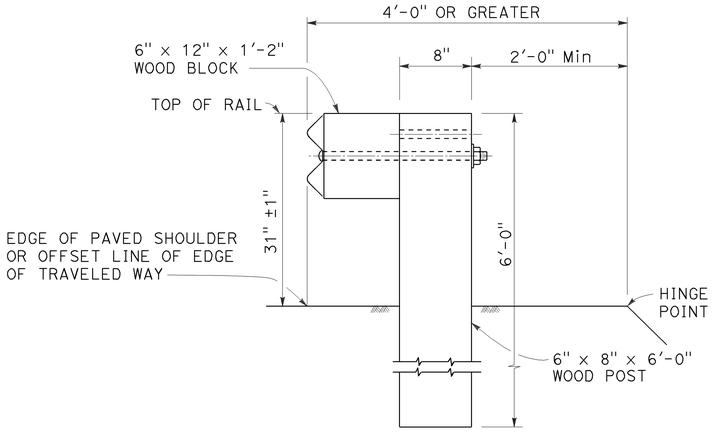

DETAIL A

TYPICAL ROADWAY INSTALLATION

See Note 1

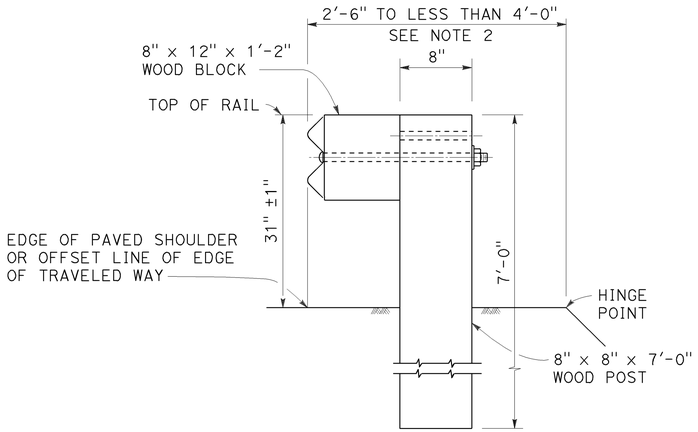

DETAIL B

NARROW ROADWAY INSTALLATION

See Note 1

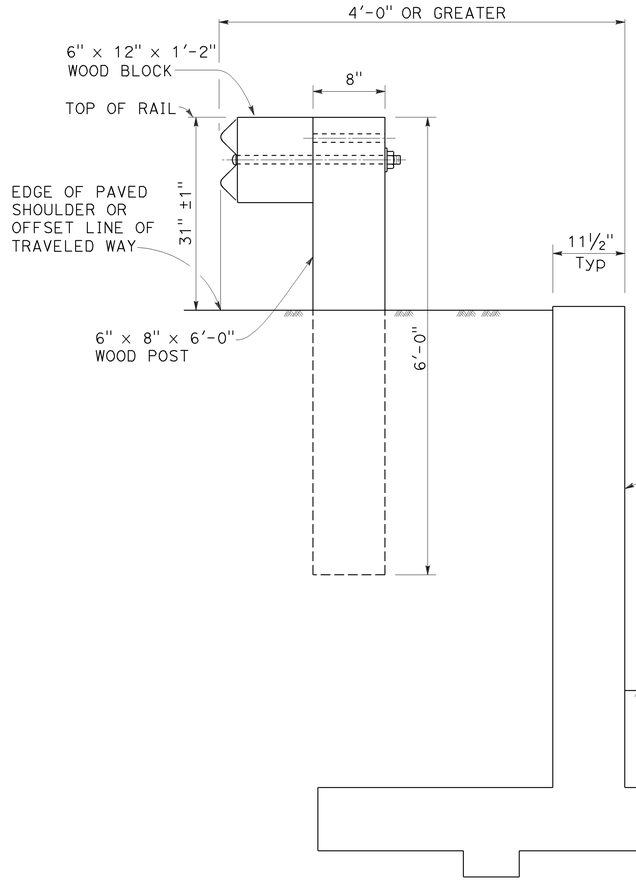

DETAIL C

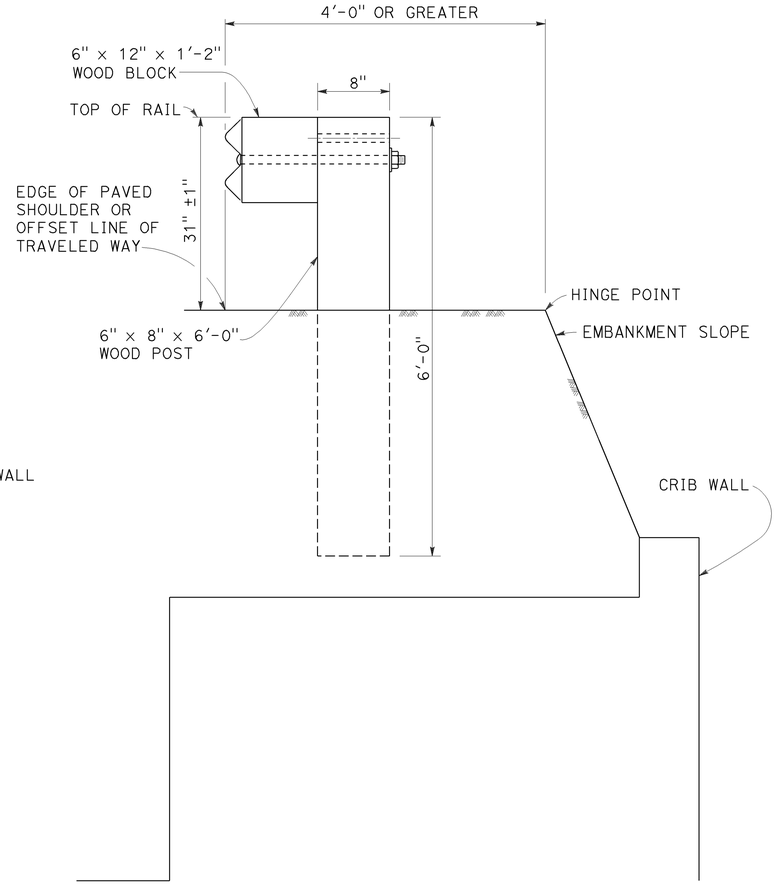

DETAIL D

POST EMBEDMENT

INSTALLATION AT EARTH RETAINING WALLS

NOTES:

1. These installation details also applicable to steel line post installations. For Detail A, C, and D, where steel line post installations are constructed, W6 x 8.5 or W6 x 9 steel post, 6'-0" in length, with 6" x 12" x 1'-2" notched wood blocks or notched recycled plastic blocks are to be used in place of the size of wood post and wood block shown. For Detail B, where steel line post installations are constructed, or W6 x 15 steel post, 8'-0" in length, with 8" x 12" x 1'-2" notched wood blocks or notched recycled plastic blocks are to be used in place of the size of wood post and wood block shown. For additional installation details, see Revised Standard Plan RSP A77L1 and RSP A77L2.
2. Where the distance between the face of the rail and the hinge point is less than 2'-6", see the Project Plans for special details.
3. For dike positioning with MGS installations, see Revised Standard Plan RSP A77N4.

STATE OF CALIFORNIA
DEPARTMENT OF TRANSPORTATION

MIDWEST GUARDRAIL SYSTEM TYPICAL LINE POST EMBEDMENT AND HINGE POINT OFFSET DETAILS

NO SCALE

RSP A77N3 DATED JULY 19, 2013 SUPPLEMENTS THE STANDARD PLANS BOOK DATED 2010.

REVISED STANDARD PLAN RSP A77N3

7-3-13

Dist	COUNTY	ROUTE	POST MILES TOTAL PROJECT	SHEET No.	TOTAL SHEETS
05	SB	246	33.2/33.5	35	48

Randell D. Hiatt
REGISTERED CIVIL ENGINEER

July 19, 2013
PLANS APPROVAL DATE

REGISTERED PROFESSIONAL ENGINEER
Randell D. Hiatt
No. C50200
Exp. 6-30-15
CIVIL
STATE OF CALIFORNIA

THE STATE OF CALIFORNIA OR ITS OFFICERS OR AGENTS SHALL NOT BE RESPONSIBLE FOR THE ACCURACY OR COMPLETENESS OF SCANNED COPIES OF THIS PLAN SHEET.

TO ACCOMPANY PLANS DATED 7-8-13

NOTES:

1. When necessary to place dike more than 7" in front of face of MGS, only Type C dike may be used. For dike details, see Revised Standard Plan RSP A87B.
2. For standard railing post embedment, see Revised Standard Plan RSP A77N3.
3. MGS delineation to be used where shown on the Project Plans.
4. When dike or curb is placed under MGS, the maximum height of the dike or curb shall be 6". Mountable dike should not be used. For dike and curb details, see Revised Standard Plans RSP A87A and RSP A87B.
5. For details of typical distance between the face of rail and hinge point, see Revised Standard Plan RSP A77N3.
6. For steel line posts, use 1/4 - 20 self-tapping screws in 0.22" diameter holes or 1/4" bolts in 9/32" diameter holes.

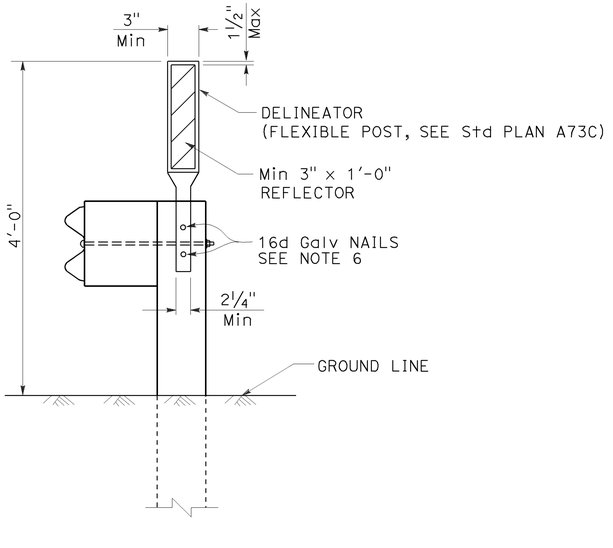

MGS DELINEATION

See Note 3

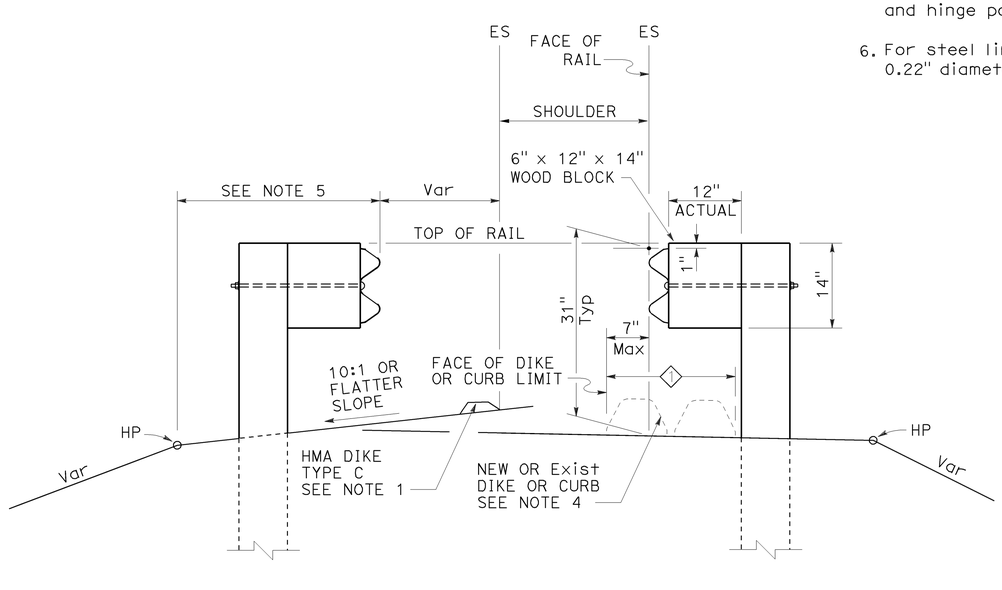

DIKE POSITIONING

See Note 1

◇1 PERMISSIBLE DIKE OR CURB PLACEMENT AREA

STATE OF CALIFORNIA
DEPARTMENT OF TRANSPORTATION

MIDWEST GUARDRAIL SYSTEM TYPICAL RAILING DELINEATION AND DIKE POSITIONING DETAILS

NO SCALE

RSP A77N4 DATED JULY 19, 2013 SUPPLEMENTS THE STANDARD PLANS BOOK DATED 2010.

REVISED STANDARD PLAN RSP A77N4

2010 REVISED STANDARD PLAN RSP A77N4

7-10-13

Dist	COUNTY	ROUTE	POST MILES TOTAL PROJECT	SHEET No.	TOTAL SHEETS
05	SB	246	33.2/33.5	36	48

Randell D. Hiatt
REGISTERED CIVIL ENGINEER

July 19, 2013
PLANS APPROVAL DATE

REGISTERED PROFESSIONAL ENGINEER
Randell D. Hiatt
No. C50200
Exp. 6-30-15
CIVIL
STATE OF CALIFORNIA

THE STATE OF CALIFORNIA OR ITS OFFICERS OR AGENTS SHALL NOT BE RESPONSIBLE FOR THE ACCURACY OR COMPLETENESS OF SCANNED COPIES OF THIS PLAN SHEET.

TO ACCOMPANY PLANS DATED 7-8-13

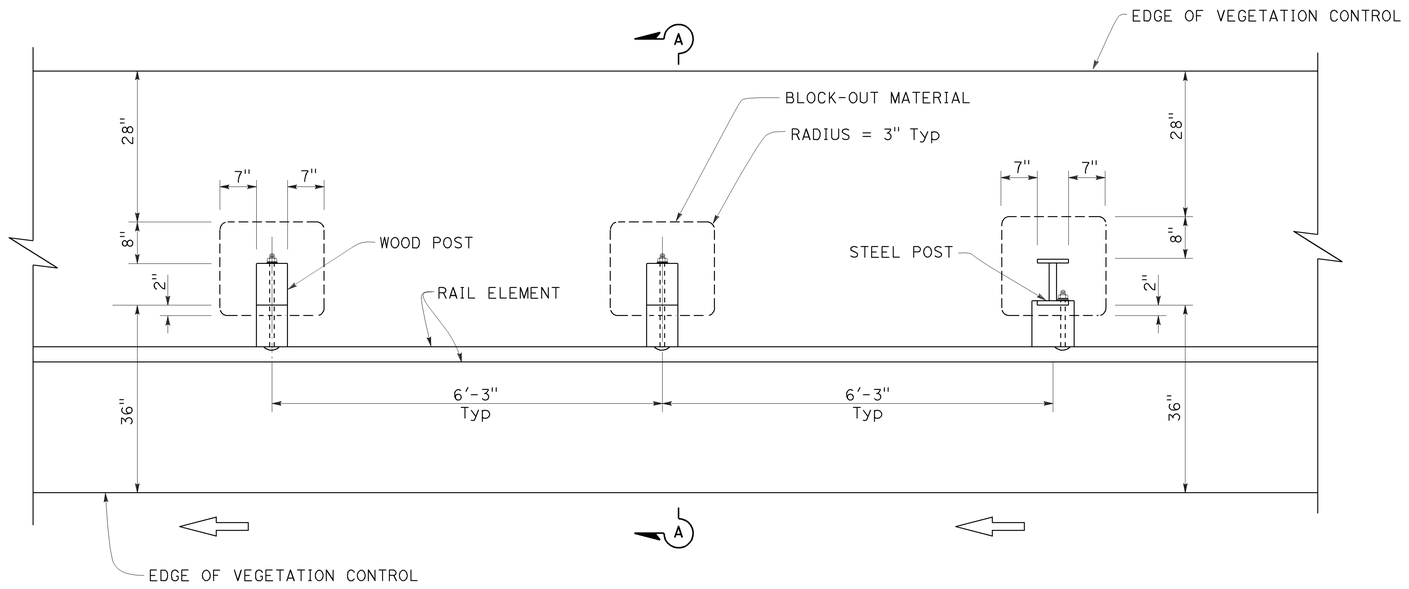

PLAN

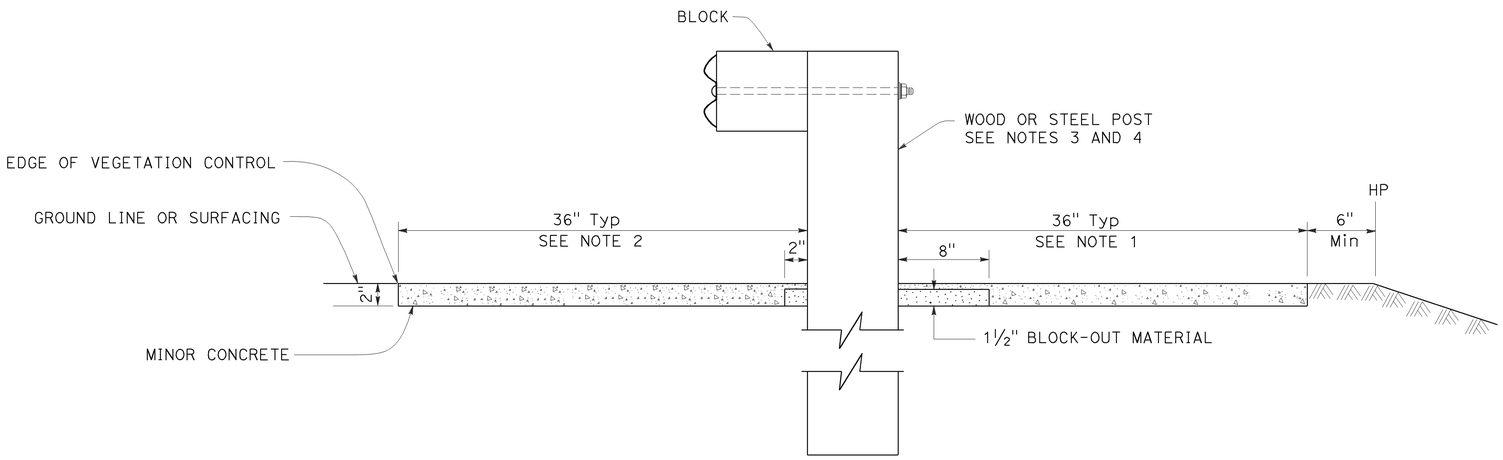

SECTION A-A

NOTES:

1. Where the distance between back of post and hinge point is less than 42", construct vegetation control to 6" from hinge point while maintaining the 8" block-out at back of post. If the 8" block-out at back of post can not be maintained, construct vegetation control flush with the back edge of post.
2. Where dike is constructed under railing, construct vegetation control to back edge of dike. Where paved shoulder is constructed within 36" in front of the post, construct vegetation control to the edge of paved shoulder.
3. For wood post sizes, see Revised Standard Plan RSP A77N1.
4. For steel post sizes, see Revised Standard Plan RSP A77N2.
5. For details not shown, see Revised Standard Plans RSP A77L1 and RSP A77L2.

STATE OF CALIFORNIA
DEPARTMENT OF TRANSPORTATION

MIDWEST GUARDRAIL SYSTEM
TYPICAL VEGETATION CONTROL
STANDARD RAILING SECTION

NO SCALE

RSP A77N5 DATED JULY 19, 2013 SUPPLEMENTS THE STANDARD PLANS BOOK DATED 2010.

REVISED STANDARD PLAN RSP A77N5

2010 REVISED STANDARD PLAN RSP A77N5

7-3-13

Dist	COUNTY	ROUTE	POST MILES TOTAL PROJECT	SHEET No.	TOTAL SHEETS
05	SB	246	33.2/33.5	37	48

Randell D. Hiatt
REGISTERED CIVIL ENGINEER

July 19, 2013
PLANS APPROVAL DATE

REGISTERED PROFESSIONAL ENGINEER
Randell D. Hiatt
No. C50200
Exp. 6-30-15
CIVIL
STATE OF CALIFORNIA

THE STATE OF CALIFORNIA OR ITS OFFICERS OR AGENTS SHALL NOT BE RESPONSIBLE FOR THE ACCURACY OR COMPLETENESS OF SCANNED COPIES OF THIS PLAN SHEET.

TO ACCOMPANY PLANS DATED 7-8-13

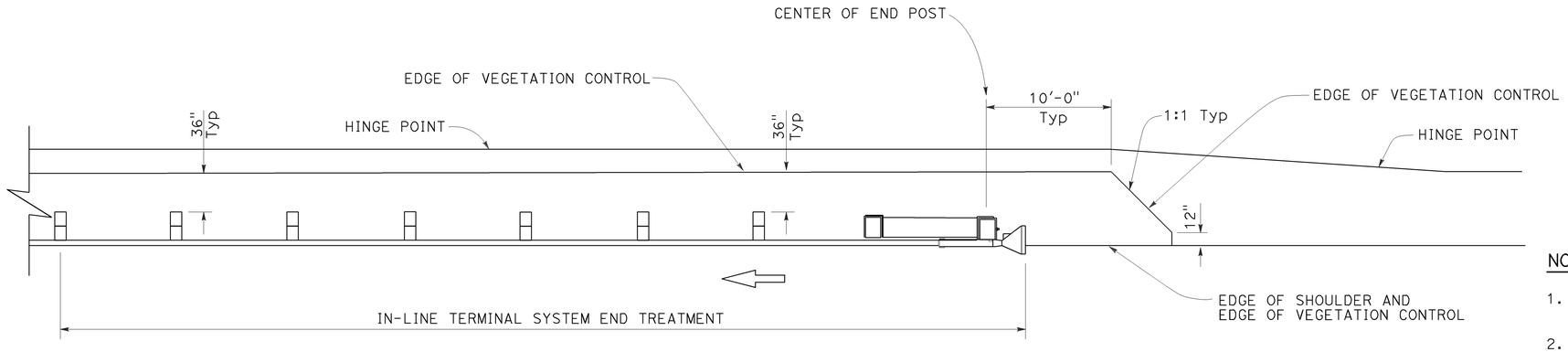

PLAN

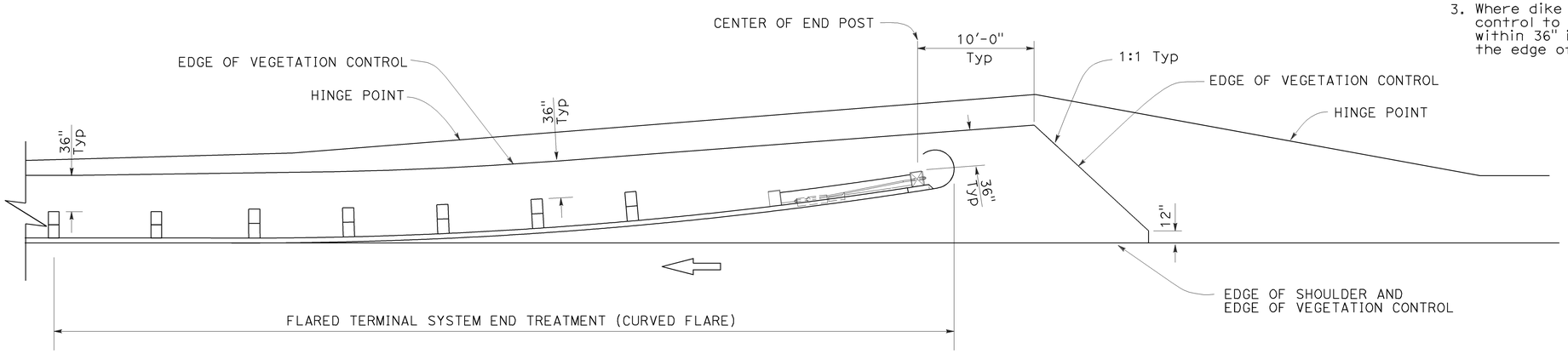

PLAN

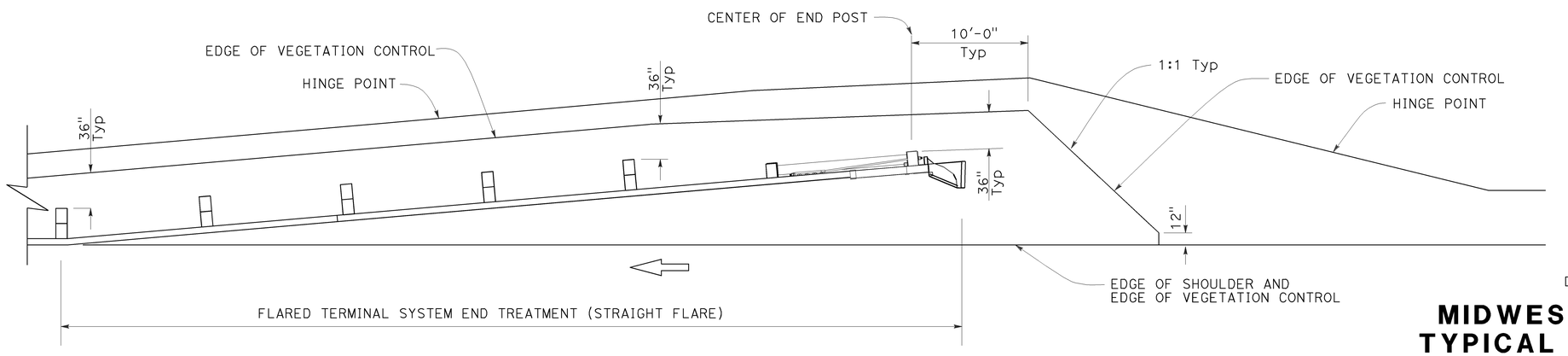

PLAN

NOTES:

1. See Revised Standard Plan RSP A77N5 for additional vegetation control details.
2. Where the distance between back of post and hinge point is less than 42", construct vegetation control to 6" from hinge point while maintaining the 8" block-out at back of post. If the 8" block-out at back of post can not be maintained, construct vegetation control flush with the back edge of post.
3. Where dike is constructed under railing, construct vegetation control to back edge of dike. Where paved shoulder is constructed within 36" in front of the post, construct vegetation control to the edge of paved shoulder.

STATE OF CALIFORNIA
DEPARTMENT OF TRANSPORTATION

MIDWEST GUARDRAIL SYSTEM TYPICAL VEGETATION CONTROL FOR TERMINAL SYSTEM END TREATMENTS

NO SCALE

RSP A77N6 DATED JULY 19, 2013 SUPPLEMENTS THE STANDARD PLANS BOOK DATED 2010.

REVISED STANDARD PLAN RSP A77N6

2010 REVISED STANDARD PLAN RSP A77N6

6-12-13

Dist	COUNTY	ROUTE	POST MILES TOTAL PROJECT	SHEET No.	TOTAL SHEETS
05	SB	246	33.2/33.5	38	48

Randell D. Hiatt
REGISTERED CIVIL ENGINEER

July 19, 2013
PLANS APPROVAL DATE

REGISTERED PROFESSIONAL ENGINEER
Randell D. Hiatt
No. C50200
Exp. 6-30-15
CIVIL
STATE OF CALIFORNIA

THE STATE OF CALIFORNIA OR ITS OFFICERS OR AGENTS SHALL NOT BE RESPONSIBLE FOR THE ACCURACY OR COMPLETENESS OF SCANNED COPIES OF THIS PLAN SHEET.

TO ACCOMPANY PLANS DATED 7-8-13

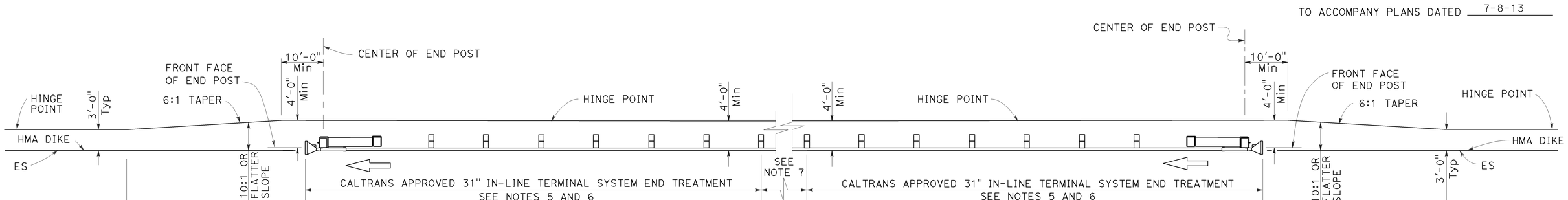

TYPE 11D LAYOUT

(Embankment MGS installation with
31" in-line end treatment at each end of railing)
See Note 4

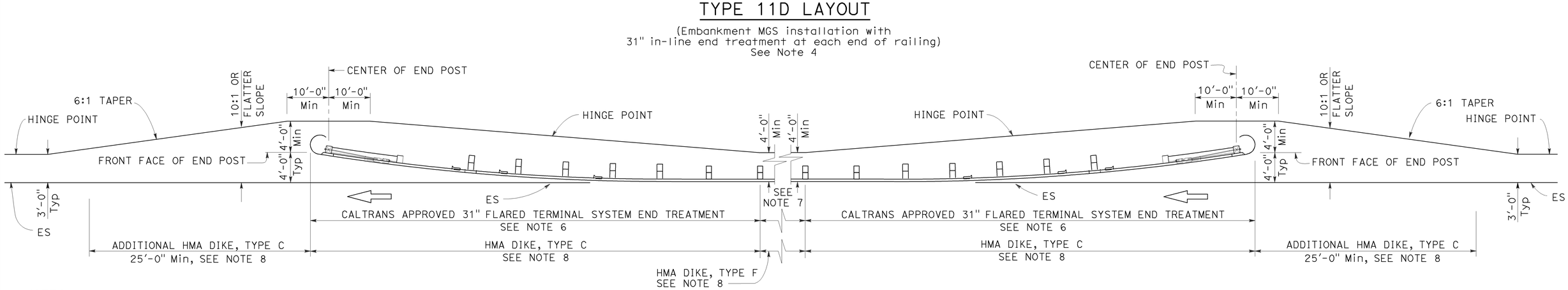

TYPE 11E LAYOUT

(Embankment MGS installation with
31" flared end treatment at each end of railing)
See Note 4

NOTES:

1. Line post, blocks and hardware to be used are shown on Revised Standard Plans RSP A77L1, RSP A77L2, RSP A77M1, RSP A77N1 and RSP A77N2.
2. MGS post spacing to be 6'-3" center to center, except as otherwise noted.
3. Except as noted, line posts are 6" x 8" x 6'-0" wood with 6" x 12" x 1'-2" wood blocks. W6 x 8.5 or W6 x 9 steel posts, 6'-0" in length, with 6" x 12" x 1'-2" notched wood blocks or plastic blocks may be used for 6" x 8" x 6'-0" wood post with 6" x 12" x 1'-2" wood blocks where applicable and when specified.
4. Layout Types 11D through 11L, shown on the A77P Series of Standard Plans, are typically used where MGS is recommended to shield embankment slopes and a crashworthy 31" end treatment is required for both directions of traffic.
5. 31" in-line terminal system end treatments are used where site conditions will not accommodate a flared end treatment.
6. The type of 31" terminal system end treatment to be used will be shown on the Project Plans.
7. Dependent on site conditions (embankment height and side slope), construction of additional MGS (length equal to multiples of 12'-6" with 6'-3" post spacing) may be advisable.
8. Where placement of dike is required with MGS installations, see Revised Standard Plan RSP A77N4 for dike positioning details.

STATE OF CALIFORNIA
DEPARTMENT OF TRANSPORTATION

MIDWEST GUARDRAIL SYSTEM TYPICAL LAYOUTS FOR EMBANKMENTS

NO SCALE

RSP A77P2 DATED JULY 19, 2013 SUPPLEMENTS THE STANDARD PLANS BOOK DATED 2010.

REVISED STANDARD PLAN RSP A77P2

2010 REVISED STANDARD PLAN RSP A77P2

6-19-13

Dist	COUNTY	ROUTE	POST MILES TOTAL PROJECT	SHEET No.	TOTAL SHEETS
05	SB	246	33.2/33.5	39	48

REGISTERED CIVIL ENGINEER

July 19, 2013
PLANS APPROVAL DATE

REGISTERED PROFESSIONAL ENGINEER
Michael Janzen
No. 44788
Exp. 03-31-14
CIVIL
STATE OF CALIFORNIA

THE STATE OF CALIFORNIA OR ITS OFFICERS OR AGENTS SHALL NOT BE RESPONSIBLE FOR THE ACCURACY OR COMPLETENESS OF SCANNED COPIES OF THIS PLAN SHEET.

TO ACCOMPANY PLANS DATED 7-8-13

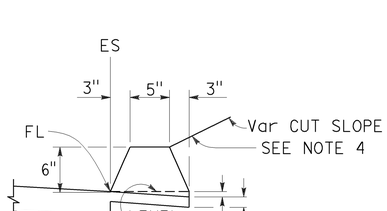

TYPE A
See Note 3

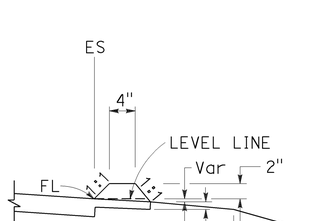

TYPE C

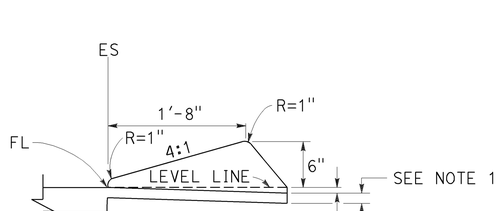

TYPE D

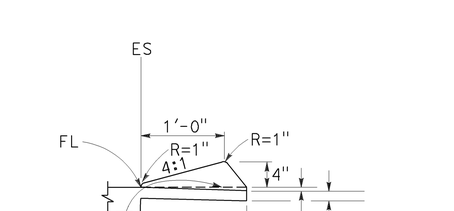

TYPE E

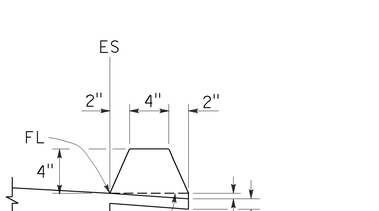

TYPE F
See Note 5

DIKES

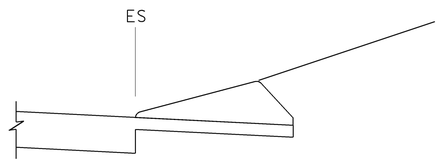

CASE C-1
Cut Slope

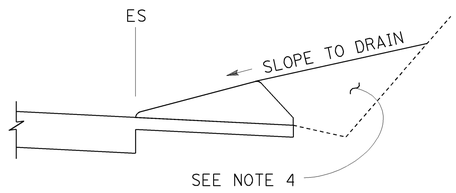

CASE C-2
Cut Slope

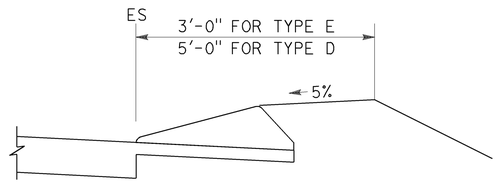

CASE F

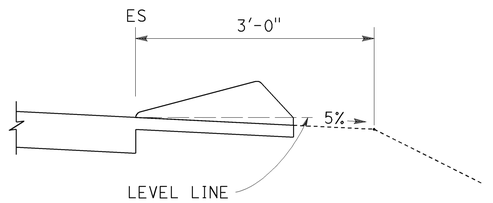

CASE R
See Note 2

TYPE D AND E BACKFILL DETAILS

NOTES:

1. For HMA shoulders only, extend top layer of HMA placed on the shoulder under dike with no joint at the ES. For projects with OGFC shoulders, do not extend OGFC under dike. See project plans for modified dike detail.
2. Case R applies to retrofit only projects where restrictive conditions do not provide enough width for Case F backfill.
3. Type A dike only to be used where restrictive slope conditions do not provide enough width to use Type D or Type E dike.
4. Fill and compact with excavated material to top of dike.
5. Use Type F dike, where dike is required with guard railing installations. See Revised Standard Plan RSP A77N4 for dike positioning details.

DIKE QUANTITIES

TYPE	CUBIC YARDS PER LINEAR FOOT
A	0.0135
C	0.0038
D	0.0293
E	0.0130
F	0.0066

Quantities based on 5% cross slope.

STATE OF CALIFORNIA
DEPARTMENT OF TRANSPORTATION

HOT MIX ASPHALT DIKES

NO SCALE

RSP A87B DATED JULY 19, 2013 SUPERSEDES STANDARD PLAN A87B
DATED MAY 20, 2011 - PAGE 120 OF THE STANDARD PLANS BOOK DATED 2010.

REVISED STANDARD PLAN RSP A87B

2010 REVISED STANDARD PLAN RSP A87B

6-27-13

TO ACCOMPANY PLANS DATED 7-8-13

Dist	COUNTY	ROUTE	POST MILES TOTAL PROJECT	SHEET No.	TOTAL SHEETS
05	SB	246	33.2/33.5	40	48

Glenn DeCou
REGISTERED CIVIL ENGINEER

October 19, 2012
PLANS APPROVAL DATE

REGISTERED PROFESSIONAL ENGINEER — Glenn DeCou — No. C34547 — Exp. 9-30-13 — CIVIL — STATE OF CALIFORNIA

THE STATE OF CALIFORNIA OR ITS OFFICERS OR AGENTS SHALL NOT BE RESPONSIBLE FOR THE ACCURACY OR COMPLETENESS OF SCANNED COPIES OF THIS PLAN SHEET.

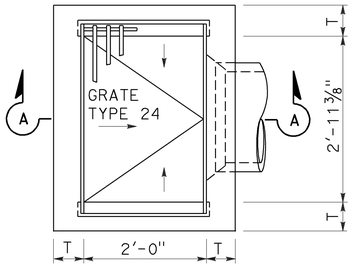

TYPE G1

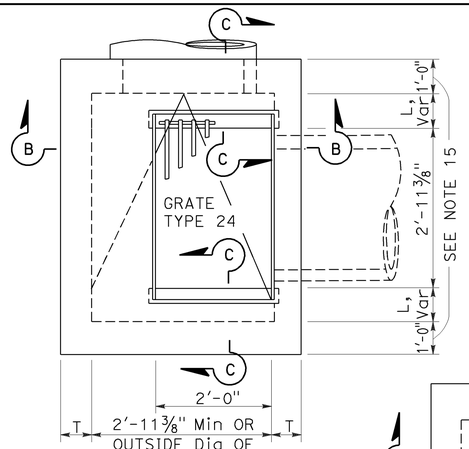

TYPE G2

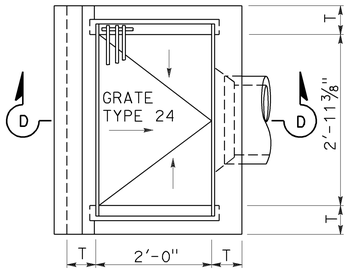

TYPE G3

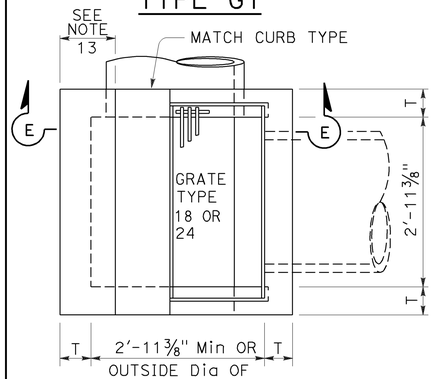

TYPE G4

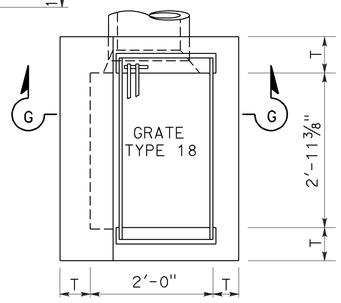

TYPE G6

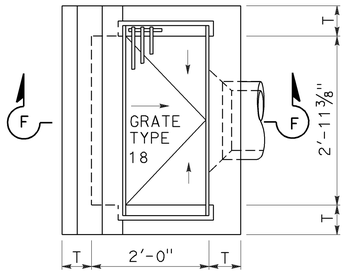

TYPE G5

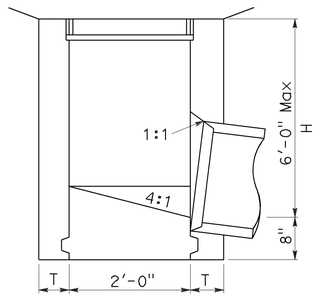

SECTION A-A

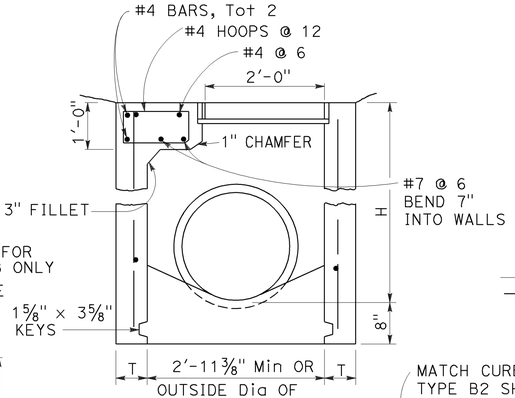

SECTION B-B

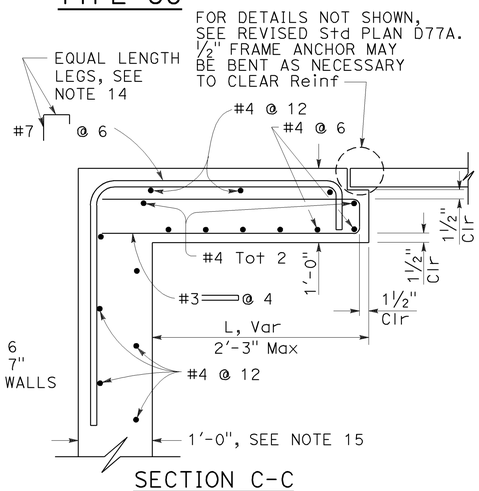

SECTION C-C

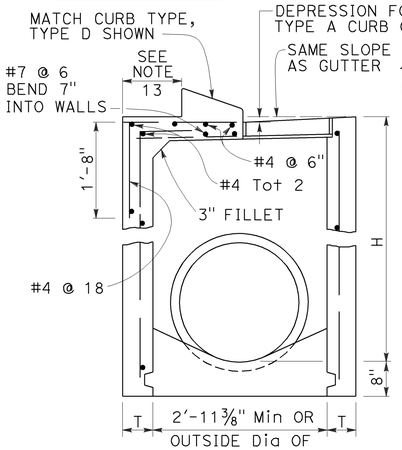

SECTION E-E

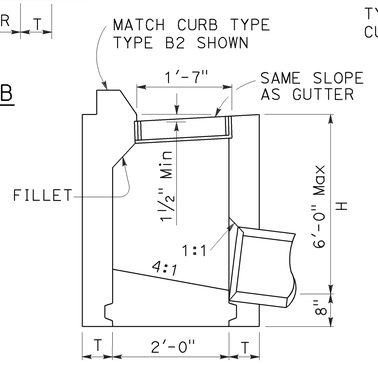

SECTION F-F

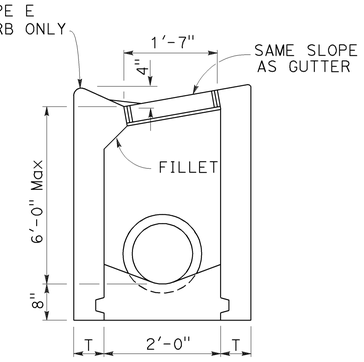

SECTION G-G

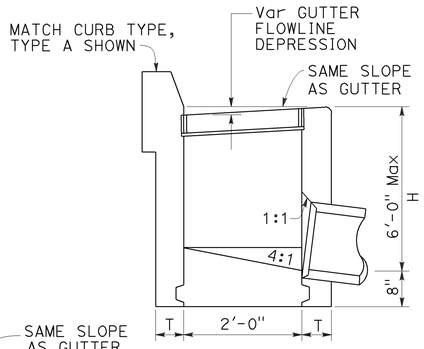

SECTION D-D

NOTES:

1. "H" is the difference in elevation between the outlet pipe flow line and the normal gutter grade line undepressed.
2. For "T" wall thickness, see Table A below.
3. Wall reinforcing not required when "H" is 8'-0" or less and the unsupported width or length is 7'-0" or less. Walls exceeding these limits shall be reinforced with #4 bars @ 1'-6" ± centers placed 1½" clear to inside of box unless otherwise shown.
4. Inlet bottom reinforcing not required. See Standard Plan D74C for alternative reinforced bottom and alternative half round bottom.
5. Steps-None required where "H" is less than 2'-6". Where "H" is 2'-6" or more, install steps with lowest rung 1'-0" above the floor and highest rung not more than 6" below top of inlet. The distance between steps shall not exceed 1'-0" and shall be uniform throughout the length of the wall. Place steps in the wall without an opening. Steps inserts may be substituted for the bar steps. Step inserts shall comply with State Industrial Safety requirements. See Standard Plan D74C for step details.
6. Details shown apply to both metal and concrete pipe.
7. Pipe(s) can be placed in any wall.
8. Curb section shall match adjacent curb.
9. Basin floors shall have wood trowel finish and a minimum slope of 12:3 from all directions toward outlet pipe.
10. Set inlet so that grate bars are parallel to direction of principal surface flow.
11. See Revised Standard Plans D77A and D77B for grate and frame details and weights of miscellaneous iron and steel.
12. See Standard Plan D78A for gutter depression details.
13. This dimenison will vary with different grates, curbs types, box width and wall thickness.
14. Bar may be rotated as necessary to clear opening. Where "L" is 6" or less, bar may be omitted.
15. Where "L" is 6" or less, wall thickness shall be as shown in Table A.
16. Cast-in-place inlets to be formed around all pipes/stubs intersecting the inlet, and concrete poured in one continuous operation. Precast inlets shall have mortared connections conforming to details for Type GCP Inlet shown on Standard Plan D75B. See Standard Specifications for mortar composition.

TABLE A

TYPE	CONCRETE QUANTITIES			
	H=3'-0" TO 8'-0" (T=6")		H=8'-1" TO 20'-0" (T=8")	
	H=3'-0" (CY)	ADDITIONAL PCC PER FOOT (CY)	H=8'-1" (CY)	ADDITIONAL PCC PER FOOT (CY)
G-1	0.95	0.220	See Note A	SEE NOTE A
G-2*	1.31	0.255	3.50	0.357
G-3	1.03	0.220	See Note A	SEE NOTE A
G-4* (TYPE 24)	1.27	0.255	3.48	0.357
G-4* (TYPE 18)	1.30	0.255	3.50	0.357
G-5	1.02	0.220	SEE NOTE A	SEE NOTE A
G-6	1.04	0.220	SEE NOTE A	SEE NOTE A

TABLE BASED ON 8" FLOOR SLAB. NO DEDUCTIONS ARE TO BE MADE TO THESE QUANTITIES BECAUSE OF PIPE OPENINGS, DIFFERENT FLOOR ALTERNATIVES OR DIFFERENT CURB TYPES. * QUANTITIES FOR TYPE G-2 AND G-4 INLETS BASED ON THE MINIMUM INTERIOR DIMENSIONS.

NOTE A:

Maximum allowable height 6'-0".

STATE OF CALIFORNIA
DEPARTMENT OF TRANSPORTATION

DRAINAGE INLETS

NO SCALE

RSP D73 DATED OCTOBER 19, 2012 SUPERSEDES STANDARD PLAN D73 DATED MAY 20, 2011 - PAGE 156 OF THE STANDARD PLANS BOOK DATED 2010.

REVISED STANDARD PLAN RSP D73

2010 REVISED STANDARD PLAN RSP D73

7-19-12

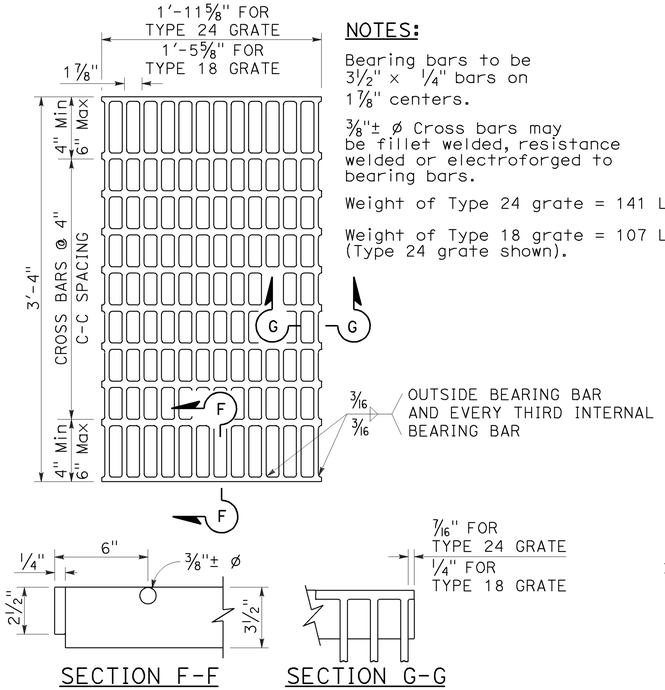

SECTION F-F SECTION G-G

TYPE 18-10 AND 24-13 GRATE

(Welded Steel)

NOTES:

Bearing bars to be 3½" × ¼" bars on 1⅞" centers.

⅜"± ø Cross bars may be fillet welded, resistance welded or electroforged to bearing bars.

Weight of Type 24 grate = 141 LBS.

Weight of Type 18 grate = 107 LBS. (Type 24 grate shown).

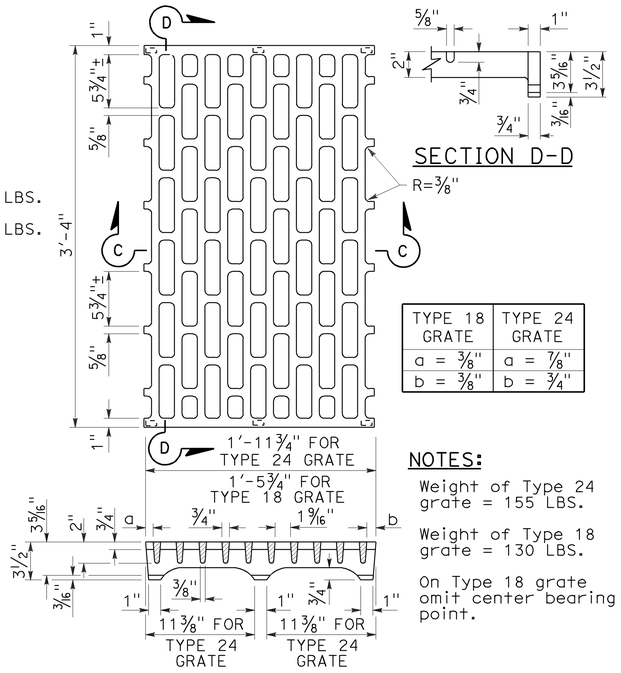

SECTION C-C

SECTION D-D

TYPE 18 GRATE	TYPE 24 GRATE
a = ⅜"	a = ⅞"
b = ⅜"	b = ¾"

NOTES:

Weight of Type 24 grate = 155 LBS.

Weight of Type 18 grate = 130 LBS.

On Type 18 grate omit center bearing point.

TYPE 18-8C AND 24-10C GRATE

(Cast ductile iron)

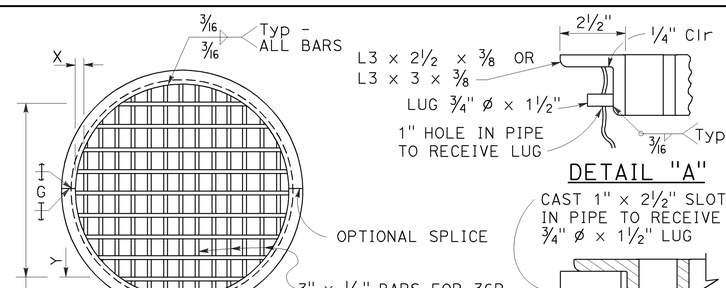

DETAIL "A"

DETAIL "B"

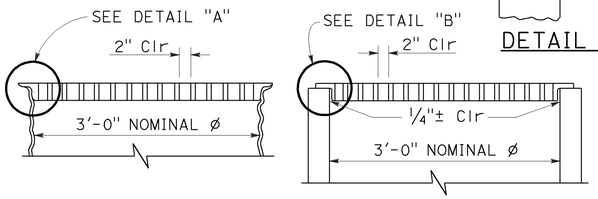

TYPE 36R AND 36RX GRATE DETAILS

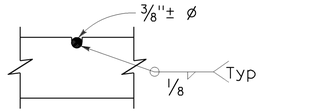

⅜"± ø Cross bars may be fillet welded, resistance welded or electroforged to bearing bars.

CROSS BAR DETAIL TYPE 36RX GRATE (WELDED STEEL)

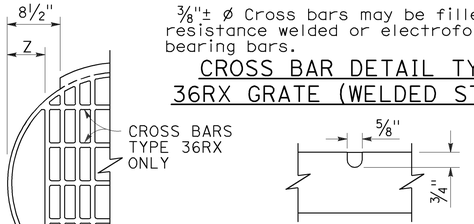

CROSS BAR DETAIL ALTERNATIVE CAST DUCTILE IRON GRATE OR CAST CARBON STEEL GRATE TYPE 36RX

MODIFIED TYPE 36R AND 36RX GRATE FOR ODI INLET

NOTES:

1. When alternative grates are allowed - Final pay based on alternative with the lesser weight.
2. Use frame shown on Standard Plan D74A, D74B or RSP D77A as appropriate.
3. When Type 24-10S, 24-12X or 24-13 grates are used with GDO Inlets, a ¼" × 3½" × 3'-4⅞" steel bar shall be welded across the center of inlet frame to separate the individual grates.
4. See Revised Standard Plan RSP D77A for connecting chain to welded grate and frame. When chain is required, do not use cast ductile iron grate.

GRATE BAR SPACING TABLE

TYPE	No. OF BARS	CLEAR BAR SPACING	X	Y		Z
				4" SPACING	6" SPACING	
36R	13	2"	2⅛"	-	-	-
36RX (STEEL)	15	2"	9/16"	3¾"	5¾"	-
36RX (CAST)	13	2"	2⅛"	3¾"	5¾"	-
36R Mod	12	2"	2⅛"	-	-	5"
36RX Mod (STEEL)	13	2"	9/16"	3¾"	5¾"	5 11/16"
36RX Mod (CAST)	12	2"	2⅛"	3¾"	5¾"	5"

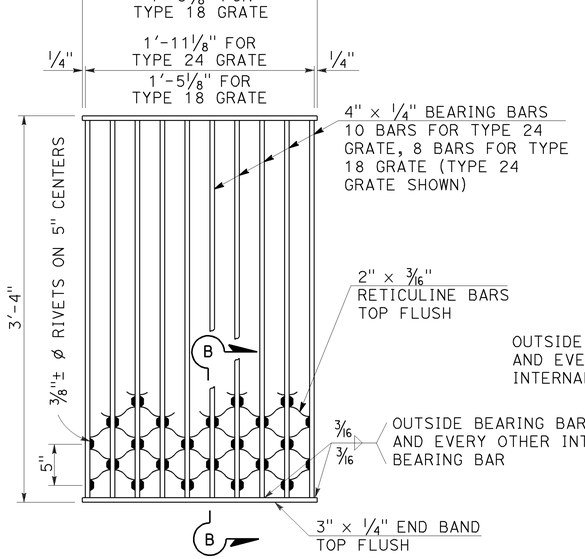

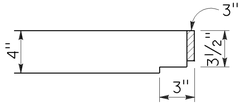

SECTION B-B

NOTES:

Weight of Type 24 grate = 182 LBS.
Weight of Type 18 grate = 145 LBS.

TYPE 18-8S AND 24-10S GRATE

(Welded Steel) Reticuline type

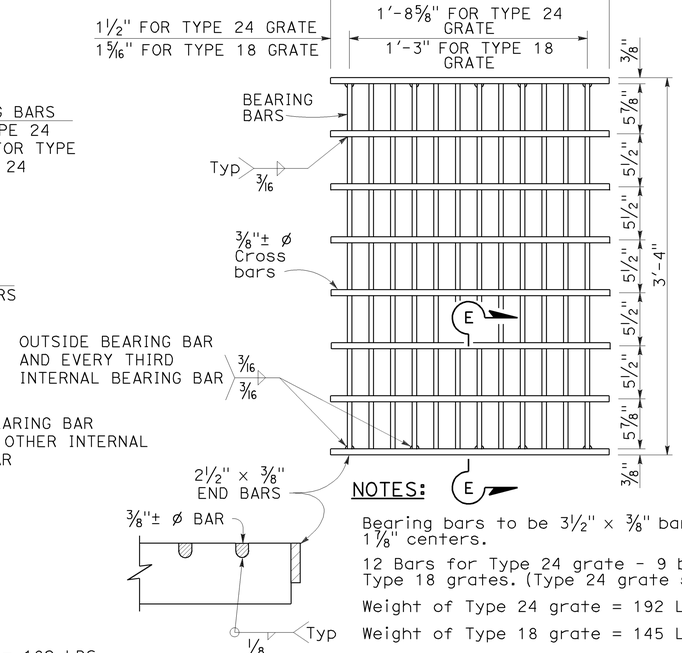

SECTION E-E

NOTES:

Bearing bars to be 3½" × ⅜" bars on 1⅛" centers.

12 Bars for Type 24 grate - 9 bars for Type 18 grates. (Type 24 grate shown).

Weight of Type 24 grate = 192 LBS.

Weight of Type 18 grate = 145 LBS.

⅜"± ø Cross bars may be fillet welded, resistance welded or electroforged to bearing bars.

TYPE 18-9X AND 24-12X GRATE

(Welded Steel)

Dist	COUNTY	ROUTE	POST MILES TOTAL PROJECT	SHEET No.	TOTAL SHEETS
05	SB	246	33.2/33.5	41	48

Raymond Don Tsztoo
REGISTERED CIVIL ENGINEER

April 19, 2013
PLANS APPROVAL DATE

Raymond Don Tsztoo No. C37332 Exp. 6-30-14 CIVIL — REGISTERED PROFESSIONAL ENGINEER — STATE OF CALIFORNIA

THE STATE OF CALIFORNIA OR ITS OFFICERS OR AGENTS SHALL NOT BE RESPONSIBLE FOR THE ACCURACY OR COMPLETENESS OF SCANNED COPIES OF THIS PLAN SHEET.

TO ACCOMPANY PLANS DATED 7-8-13

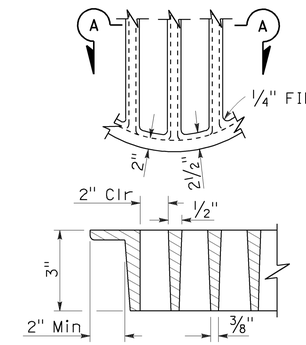

SECTION A-A

ALTERNATIVE CAST DUCTILE IRON GRATE OR CAST CARBON STEEL GRATE TYPE 36R AND 36RX

BASIS FOR Misc IRON AND STEEL FINAL PAY WEIGHTS FOR DRAINAGE INLETS

INLET TYPE	GRATE TYPE	No. OF GRATES	WEIGHT LB
GDO (SEE NOTE 4)	24-10C	2	391
	24-10S	2	456
	24-12X	2	473
	24-13	2	374
G0,G0L,G1,G2, G3,G4 (TYPE 24)	24-10C	1	202
	24-10S	1	229
	24-12X	1	239
	24-13	1	188
G4 (TYPE 18) G5,G6	18-8S	1	187
	18-9X	1	187
	18-10	1	149
GT1,GT2	18-8S	2	374
	18-9X	2	374
	18-10	2	298
GT3,GT4	24-10C	2	404
	24-10S	2	458
	24-12X	2	478
	24-13	2	376
ODI	36RX (Mod)	1	196
GMP,GCP,GCPI	36RX	1	215
ODI	36R (Mod)	1	220
GMP,GCP,GCPI	36R	1	236
TRASH RACK			22
GRATE CHAIN			3

STATE OF CALIFORNIA
DEPARTMENT OF TRANSPORTATION

GRATE DETAILS No. 2

NO SCALE

RSP D77B DATED APRIL 19, 2013 SUPERSEDES RSP D77B DATED JULY 20, 2012 AND STANDARD PLAN D77B DATED MAY 20, 2011 - PAGE 165 OF THE STANDARD PLANS BOOK DATED 2010.

REVISED STANDARD PLAN RSP D77B

2010 REVISED STANDARD PLAN RSP D77B

4-4-13

LEGEND:

AB	ABANDON. IF APPLIED TO CONDUIT, REMOVE CONDUCTORS
BC	INSTALL PULL BOX IN EXISTING CONDUIT RUN
BP	PEDESTRIAN BARRICADE, TYPE AS INDICATED ON PLAN
CB	INSTALL CONDUIT INTO EXISTING PULL BOX
CC	CONNECT NEW AND EXISTING CONDUIT. REMOVE EXISTING CONDUCTORS AND INSTALL CONDUCTORS AS INDICATED
CF	CONDUIT TO REMAIN FOR FUTURE USE. REMOVE CONDUCTORS. INSTALL PULL TAPE
DH	DETECTOR HANDHOLE
FA	FOUNDATION TO BE ABANDONED
IS	INSTALL SIGN ON SIGNAL MAST ARM
NS	NO SLIP BASE ON STANDARD
PEC	PHOTOELECTRIC CONTROL
PEU	PHOTOELECTRIC UNIT
RC	EQUIPMENT OR MATERIAL TO BE REMOVED AND BECOME THE PROPERTY OF THE CONTRACTOR
RE	REMOVE ELECTROLIER, FUSES AND BALLAST. TAPE ENDS OF CONDUCTORS
RL	RELOCATE EQUIPMENT
RR	REMOVE AND REUSE EQUIPMENT
RS	REMOVE AND SALVAGE EQUIPMENT
SC	SPLICE NEW TO EXISTING CONDUCTORS
SD	SERVICE DISCONNECT
TSP	TELEPHONE SERVICE POINT

ABBREVIATIONS

APS	ACCESSIBLE PEDESTRIAN SIGNAL
BBS	BATTERY BACKUP SYSTEM
BC	BOLT CIRCLE
BPB	BICYCLE PUSH BUTTON
C	CONDUIT
CB	CIRCUIT BREAKER
CCTV	CLOSED CIRCUIT TELEVISION
Ckt	CIRCUIT
CMS	CHANGEABLE MESSAGE SIGN
Ctid	CALTRANS IDENTIFICATION
Comm	COMMUNICATION
DLC	LOOP DETECTOR LEAD-IN CABLE
EMS	EXTINGUISHABLE MESSAGE SIGN
EVUC	EMERGENCY VEHICLE UNIT CABLE
EVUD	EMERGENCY VEHICLE UNIT DETECTOR
FB	FLASHING BEACON
FBCA	FLASHING BEACON CONTROL ASSEMBLY
FBS	FLASHING BEACON WITH SLIP BASE
FO	FIBER OPTIC
G	EQUIPMENT GROUNDING CONDUCTOR
GB	GROUND BUS
GFCI	GROUND FAULT CIRCUIT INTERRUPTER
HAR	HIGHWAY ADVISORY RADIO
Hex	HEXAGONAL
HPS	HIGH PRESSURE SODIUM
IISNS	INTERNALLY ILLUMINATED STREET NAME SIGN
ISL	INDUCTION SIGN LIGHTING
LED	LIGHT EMITTING DIODE
LMA	LUMINAIRE MAST ARM
LPS	LOW PRESSURE SODIUM
Ltg	LIGHTING
Lum	LUMINAIRE
M	METERED
MAT	MAST ARM MOUNTING TOP ATTACHMENT
MAS	MAST ARM MOUNTING SIDE ATTACHMENT
M/M	MULTIPLE TO MULTIPLE TRANSFORMER
Mtg	MOUNTING
MV	MERCURY VAPOR LIGHTING FIXTURE
MVDS	MICROWAVE VEHICLE DETECTION SYSTEM
N	NEUTRAL (GROUNDED CONDUCTOR)
NB	NEUTRAL BUS
NC	NORMALLY CLOSE
NO	NORMALLY OPEN
P	CIRCUIT BREAKER'S POLE
PB	PULL BOX
PBA	PUSH BUTTON ASSEMBLY
PEC	PHOTOELECTRIC CONTROL
Ped	PEDESTRIAN
PEU	PHOTOELECTRIC UNIT
PT	CONDUIT WITH PULL TAPE
RE	RELOCATED EQUIPMENT
RM	RAMP METERING
RWIS	ROADSIDE WEATHER INFORMATION SYSTEM
SB	SLIP BASE
SIC	SIGNAL INTERCONNECT CABLE
Sig	SIGNAL
SMA	SIGNAL MAST ARM
SNS	STREET NAME SIGN
SP	SERVICE POINT
TDC	TELEPHONE DEMARCATION CABINET
TMS	TRAFFIC MONITORING STATION
TOS	TRAFFIC OPERATIONS SYSTEM
Veh	VEHICLE
VIVDS	VIDEO IMAGE VEHICLE DETECTION SYSTEM
WIM	WEIGH-IN-MOTION
Xfmr	TRANSFORMER

Dist	COUNTY	ROUTE	POST MILES TOTAL PROJECT	SHEET No.	TOTAL SHEETS
05	SB	246	33.2/33.5	42	48

Theresa Gabriel
REGISTERED ELECTRICAL ENGINEER

Theresa Aziz Gabriel No. E15129 Exp. 6-30-14 ELECTRICAL — REGISTERED PROFESSIONAL ENGINEER — STATE OF CALIFORNIA

July 19, 2013
PLANS APPROVAL DATE

THE STATE OF CALIFORNIA OR ITS OFFICERS OR AGENTS SHALL NOT BE RESPONSIBLE FOR THE ACCURACY OR COMPLETENESS OF SCANNED COPIES OF THIS PLAN SHEET.

TO ACCOMPANY PLANS DATED 7-8-13

SOFFIT AND WALL MOUNTED LUMINAIRES

- PENDANT, 70 W HPS UNLESS OTHERWISE SPECIFIED
- FLUSH, 70 W HPS UNLESS OTHERWISE SPECIFIED
- WALL SURFACE, 70 W HPS UNLESS OTHERWISE SPECIFIED
- EXISTING SOFFIT OR WALL LUMINAIRE TO REMAIN UNMODIFIED
- (M) EXISTING SOFFIT OR WALL LUMINAIRE TO BE MODIFIED AS SPECIFIED

NOTE:
Arrow indicates "street side" of luminaire.

COMMONLY USED SYMBOLS FOR UNITED STATES CUSTOMARY UNITS OF MEASUREMENT:

SYMBOL USED	DEFINITIONS
Ω	OHMS
min	MINUTE
s	SECOND
bps	BITS PER SECOND
Bps	BYTES PER SECOND
A	AMPERE
V	VOLT
V(dc)	VOLT (DIRECT CURRENT)
V(ac)	VOLT (ALTERNATING CURRENT)
FC	FOOT - CANDLE
W	WATTS
VA	VOLT-AMPERE
M	MEGA
k	KILO
m	MILLI
μ	MICRO
p	PICO
Hz	HERTZ

MISCELLANEOUS ELECTROLIERS

NEW	EXISTING	
		LUMINAIRE ON WOOD POLE
		NON-STANDARD ELECTROLIER (SEE PROJECT NOTES OR PROJECT PLANS)
		CITY ELECTROLIER
		ELECTROLIER FOUNDATION (FUTURE INSTALLATION)

NOTES:

1. HPS luminaires shall be 310 W HPS when installed on Type 21, 21D, 30, 31 and 32 Standards, unless otherwise specified. HPS luminaires shall be 200 W when installed on other type standards or poles, unless otherwise specified.
2. LED luminaires shall be 235 W when installed on Type 21, 21D, 30, 31 and 32 Standards, unless otherwise specified. LED luminaires shall be 165 W when installed on other type standards or poles, unless otherwise specified.
3. Luminaires shall be the cutoff type, ANSI Type III medium cutoff lighting distribution, unless otherwise specified.

STANDARD ELECTROLIER

NEW	EXISTING	STANDARD TYPE
		15
		15D
		15 STRUCTURE
		15D STRUCTURE
		21
		21D
		21 STRUCTURE
		21D STRUCTURE
		30
		31
		32

STATE OF CALIFORNIA
DEPARTMENT OF TRANSPORTATION

ELECTRICAL SYSTEMS (LEGEND AND ABBREVIATIONS)

NO SCALE

RSP ES-1A DATED JULY 19, 2013 SUPERSEDES STANDARD PLAN ES-1A DATED MAY 20, 2011 - PAGE 425 OF THE STANDARD PLANS BOOK DATED 2010.

REVISED STANDARD PLAN RSP ES-1A

2010 REVISED STANDARD PLAN RSP ES-1A

7-15-13

Dist	COUNTY	ROUTE	POST MILES TOTAL PROJECT	SHEET No.	TOTAL SHEETS
05	SB	246	33.2/33.5	43	48

Theresa Gabriel
REGISTERED ELECTRICAL ENGINEER

Theresa Aziz Gabriel No. E15129 Exp. 6-30-14 ELECTRICAL — REGISTERED PROFESSIONAL ENGINEER — STATE OF CALIFORNIA

July 19, 2013
PLANS APPROVAL DATE

THE STATE OF CALIFORNIA OR ITS OFFICERS OR AGENTS SHALL NOT BE RESPONSIBLE FOR THE ACCURACY OR COMPLETENESS OF SCANNED COPIES OF THIS PLAN SHEET.

TO ACCOMPANY PLANS DATED 7-8-13

CONDUIT

NEW	EXISTING	
		LIGHTING CONDUIT, UNLESS OTHERWISE INDICATED OR NOTED
		TRAFFIC SIGNAL CONDUIT
C	c	COMMUNICATION CONDUIT
T	t	TELEPHONE CONDUIT
F	f	FIRE ALARM CONDUIT
FO	fo	FIBER OPTIC CONDUIT
		CONDUIT TERMINATION
R	r	CONDUIT RISER ATTACHED TO THE STRUCTURE OR SERVICE POLE

SERVICE EQUIPMENT

NEW	EXISTING	
OH	oh	OVERHEAD LINES
U	U	WOOD POLE, "U" INDICATES UTILITY OWNED
		POLE GUY WITH ANCHOR
		UTILITY TRANSFORMER - GROUND MOUNTED
III	III	SERVICE EQUIPMENT ENCLOSURE TYPE. DOOR INDICATES FRONT OF ENCLOSURE
T	t	TELEPHONE DEMARCATION CABINET

POLE-MOUNTED SERVICE DESIGNATION

TYPE H SERVICE, 28'-10" — TYPE OF INSTALLATION AND POLE HEIGHT ABOVE GRADE

FLASHING BEACON

NEW	EXISTING	
R	R	FLASHING BEACON (ONE VEHICLE SIGNAL HEAD WITH BACKPLATE AND VISOR) "R" INDICATES RED INDICATION, "Y" INDICATES YELLOW INDICATION
Y Y	Y Y	FLASHING BEACON WITH TYPE 15-FBS STANDARD AND A SIGN.
R R	R R	FLASHING BEACON WITH TYPES 9, 9A OR 9B SIGN UNLESS OTHERWISE SPECIFIED OR INDICATED

SIGNAL EQUIPMENT

NEW	EXISTING	
C	C	PEDESTRIAN SIGNAL HEAD "C" INDICATES COUNTDOWN PEDESTRIAN HEAD
		PUSH BUTTON ASSEMBLY POST
		PEDESTRIAN BARRICADE
		VEHICLE SIGNAL HEAD (WITH BACKPLATE AND 3-SECTIONS: RED, YELLOW AND GREEN)
		VEHICLE SIGNAL HEAD WITH ANGLE VISOR
PV	PV	MODIFICATIONS OF BASIC SYMBOL: "L" INDICATES ALL NON-ARROW SECTIONS LOUVERED "LG" INDICATES LOUVERED GREEN SECTION ONLY "PV" INDICATES ALL 12" SECTIONS PROGRAMMED VISIBILITY "8" INDICATES ALL 8" SECTIONS (ONLY WHEN SPECIFIED)
		VEHICLE SIGNAL HEAD CONSISTING OF RED, YELLOW AND GREEN LEFT ARROW SECTIONS
		VEHICLE SIGNAL HEAD CONSISTING OF RED AND YELLOW SECTIONS WITH AN UP GREEN ARROW SECTION
		VEHICLE SIGNAL HEAD (5 SECTION) CONSISTING OF RED, YELLOW AND GREEN SECTIONS WITH YELLOW AND GREEN RIGHT ARROW SECTIONS
		TYPE 15TS STANDARD WITH VEHICLE SIGNAL HEAD AND LUMINAIRE
		TYPE 21TS STANDARD WITH VEHICLE SIGNAL HEAD AND LUMINAIRE
		STANDARD WITH LUMINAIRE AND SIGNAL MAST ARMS AND ATTACHED VEHICLE SIGNAL HEADS
		TYPE 1 STANDARD WITH ATTACHED VEHICLE SIGNAL HEADS
		STANDARD WITH A SIGNAL MAST ARM, ATTACHED VEHICLE SIGNAL HEADS AND INTERNALLY ILLUMINATED STREET NAME SIGN
		CONTROLLER ASSEMBLY. DOOR INDICATES FRONT OF CABINET

SIGNAL EQUIPMENT Cont

NEW	EXISTING	
		GUARD POST
		TYPE 1 STANDARD WITH RAMP METERING SIGN
		OPTICAL DETECTOR FOR THE EMERGENCY VEHICLE DETECTION SYSTEM

NOTES:

1. All signal sections shall be 12" unless shown otherwise.
2. Signal heads shall be provided with backplates unless shown otherwise.

ILLUMINATED OVERHEAD SIGN

NEW	EXISTING	
		SINGLE POST, SINGLE ILLUMINATED SIGN, BALANCED BUTTERFLY
		SINGLE POST, DOUBLE ILLUMINATED SIGN, BALANCED BUTTERFLY
		SINGLE POST, SINGLE ILLUMINATED SIGN, FULL CANTILEVER
		DOUBLE POST, SINGLE ILLUMINATED SIGN
		SINGLE ILLUMINATED SIGN MOUNTED ON STRUCTURE
		DOUBLE POST, SINGLE ILLUMINATED SIGN WITH ELECTROLIER

STATE OF CALIFORNIA
DEPARTMENT OF TRANSPORTATION

ELECTRICAL SYSTEMS (LEGEND AND ABBREVIATIONS)

NO SCALE

RSP ES-1B DATED JULY 19, 2013 SUPERSEDES STANDARD PLAN ES-1B
DATED MAY 20, 2011 - PAGE 426 OF THE STANDARD PLANS BOOK DATED 2010.

REVISED STANDARD PLAN RSP ES-1B

2010 REVISED STANDARD PLAN RSP ES-1B

7-15-13

Dist	COUNTY	ROUTE	POST MILES TOTAL PROJECT	SHEET No.	TOTAL SHEETS
05	SB	246	33.2/33.5	44	48

Theresa Gabriel
REGISTERED ELECTRICAL ENGINEER

Theresa Aziz Gabriel No. E15129 Exp. 6-30-14 ELECTRICAL — REGISTERED PROFESSIONAL ENGINEER — STATE OF CALIFORNIA

July 19, 2013
PLANS APPROVAL DATE

THE STATE OF CALIFORNIA OR ITS OFFICERS OR AGENTS SHALL NOT BE RESPONSIBLE FOR THE ACCURACY OR COMPLETENESS OF SCANNED COPIES OF THIS PLAN SHEET.

TO ACCOMPANY PLANS DATED 7-8-13

EQUIPMENT IDENTIFICATION

ILLUMINATED SIGN IDENTIFICATION NUMBER:

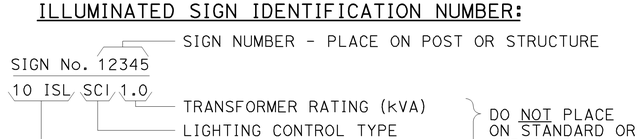

ELECTROLIER OR EQUIPMENT IDENTIFICATION NUMBER:

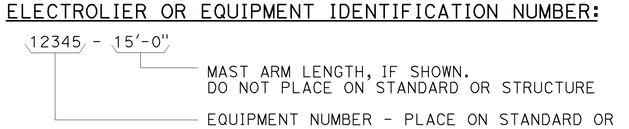

CONDUIT AND CONDUCTOR IDENTIFICATION:

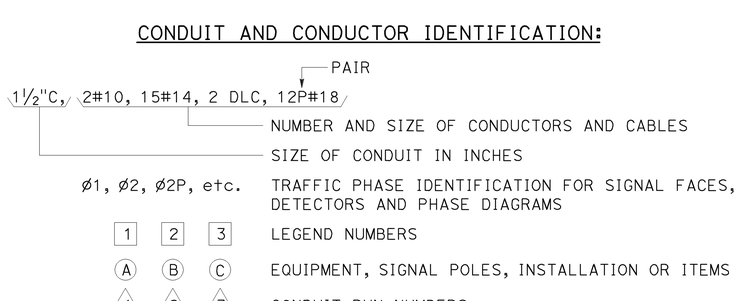

SIGNAL AND LIGHTING STANDARD (TYPICAL DESIGNATION):

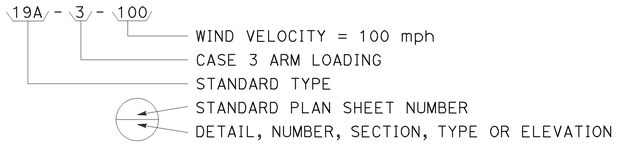

MISCELLANEOUS EQUIPMENT

NEW	EXISTING	
CMS	cms	CHANGEABLE MESSAGE SIGN
		CLOSED CIRCUIT TELEVISION CAMERA
		HIGHWAY ADVISORY RADIO POLE AND ANTENNA
EMS	ems	EXTINGUISHABLE MESSAGE SIGN
M V	m v	DETECTION DEVICE M = MICROWAVE SENSOR V = VIDEO IMAGE SENSOR

WIRING DIAGRAM LEGEND

	EXTERNAL CONDUCTOR
	CONDUCTOR OR BUS
	TIE POINT
	CONTACTOR COIL
	CONTACTOR, NO CONTACT
	TERMINAL BLOCKS
	CONTACTOR, NC CONTACT
	ENCLOSURE BOND
	GROUNDING ELECTRODE
	CIRCUIT BREAKER
	RECEPTACLE

PULL BOXES

NEW	EXISTING	
		PULL BOX, No. 5 UNLESS OTHERWISE INDICATED OR NOTED
3	9A(21)	PULL BOX, ADDITIONAL DESIGNATIONS OR DESCRIPTIONS

3 No. 3½ PULL BOX
5 No. 5 PULL BOX
6 No. 6 PULL BOX
7 No. 7 (CEILING PULL BOX)
8 No. 8 (PENDANT SOFFIT PULL BOX)
9 No. 9 PULL BOX
9A No. 9A PULL BOX

(C) COMMUNICATIONS PULL BOX
(E) PULL BOX WITH EXTENSION
(S) SPRINKLER CONTROL PULL BOX
(21) ANCHOR BOLTS AND CONDUIT FOR FUTURE INSTALLATION OF TYPE 21 STANDARD
(T) TRAFFIC PULL BOX

VEHICLE DETECTORS

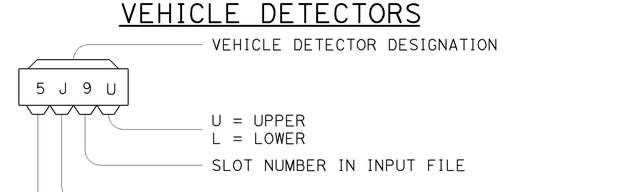

NEW	EXISTING	
		TYPE A DETECTOR LOOP. OUTLINE OF SAWCUT SHOWN
		TYPE B DETECTOR LOOP. OUTLINE OF SAWCUT SHOWN
		TYPE C DETECTOR LOOP. OUTLINE OF SAWCUT SHOWN
		TYPE D DETECTOR LOOP. OUTLINE OF SAWCUT SHOWN
		TYPE E DETECTOR LOOP. OUTLINE OF SAWCUT SHOWN
		TYPE Q DETECTOR LOOP. OUTLINE OF SAWCUT SHOWN
		MAGNETIC DETECTOR
DH	dh	DETECTOR HANDHOLE
		MICROWAVE OR VIDEO DETECTION ZONE

STATE OF CALIFORNIA
DEPARTMENT OF TRANSPORTATION

ELECTRICAL SYSTEMS (LEGEND AND ABBREVIATIONS)

NO SCALE

RSP ES-1C DATED JULY 19, 2013 SUPERSEDES STANDARD PLAN ES-1C DATED MAY 20, 2011 - PAGE 427 OF THE STANDARD PLANS BOOK DATED 2010.

REVISED STANDARD PLAN RSP ES-1C

2010 REVISED STANDARD PLAN RSP ES-1C

7-11-13

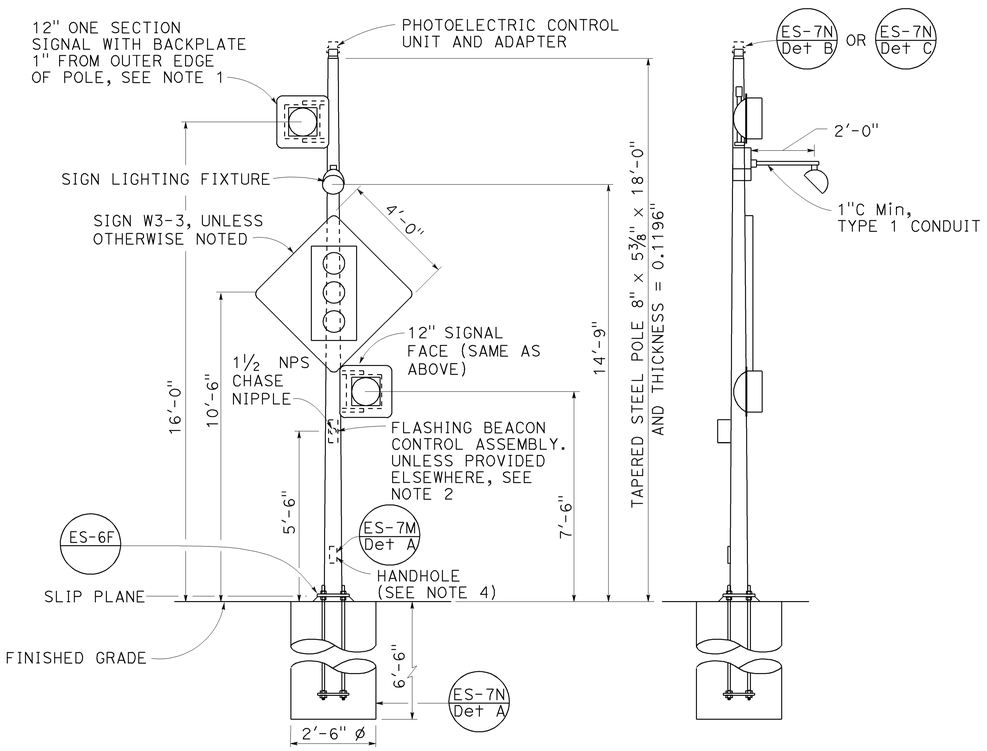

FRONT VIEW

SIDE VIEW

TYPE 15-FBS

ADVANCE FLASHING BEACON WITH SLIP BASE INSTALLATION

DETAIL A

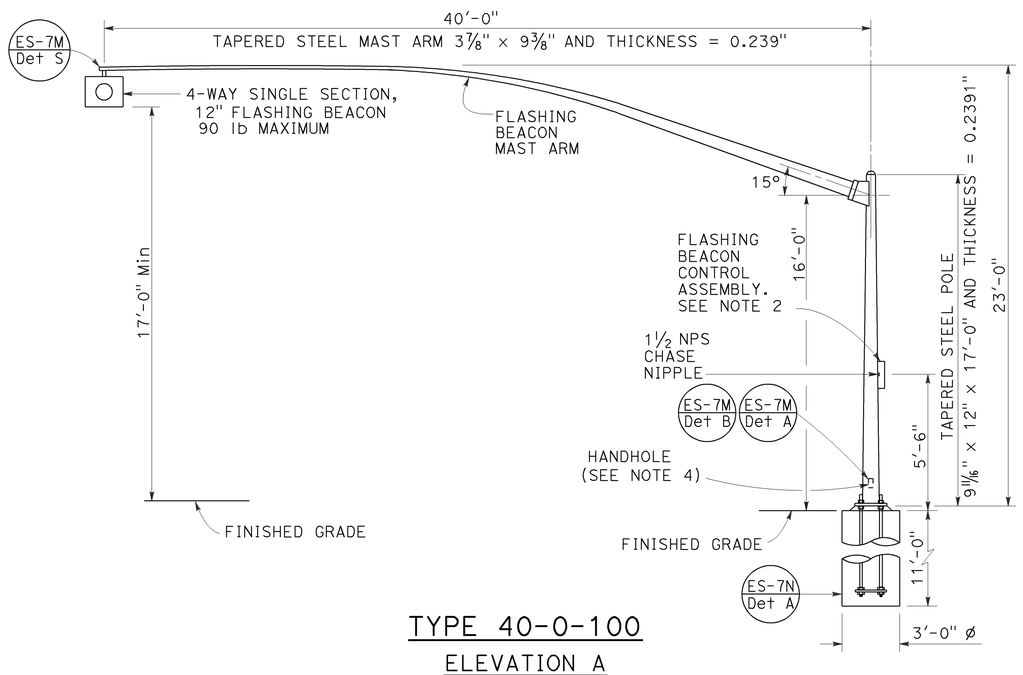

TYPE 40-0-100

ELEVATION A

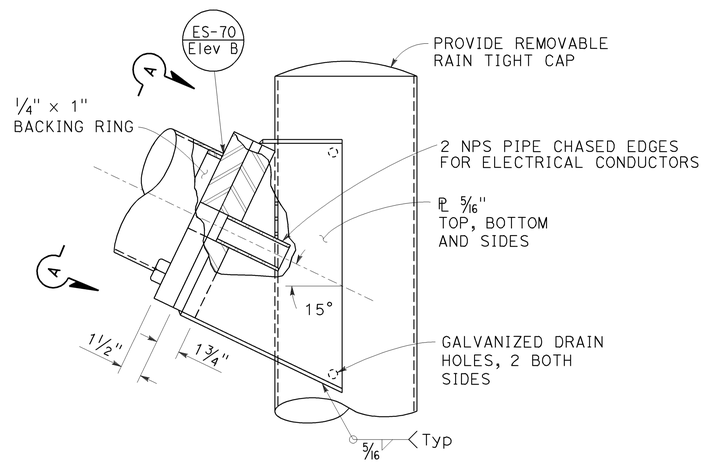

ELEVATION B

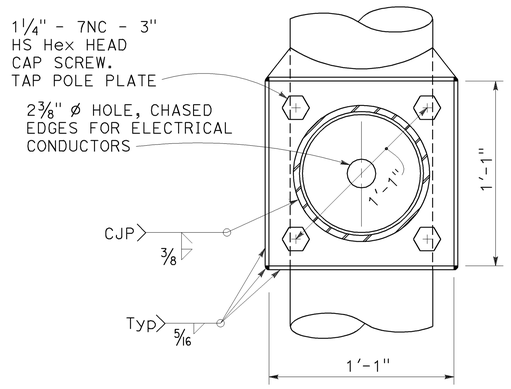

VIEW A-A

FLASHING BEACON MAST ARM CONNECTION DETAIL

DETAIL B

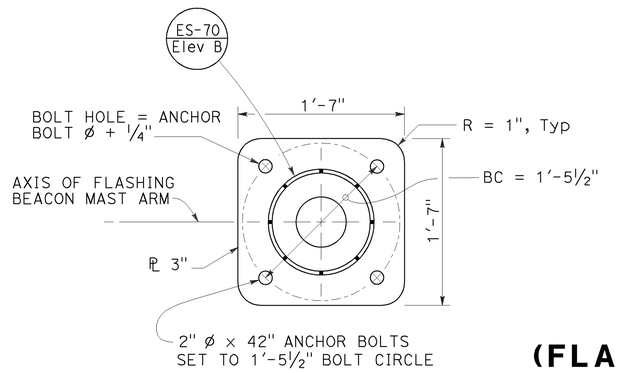

BASE PLATE

DETAIL C

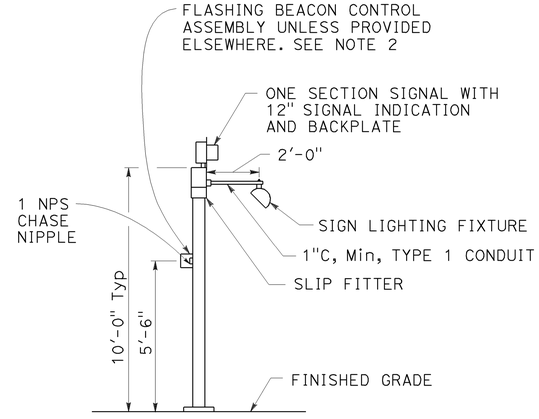

TYPE 1-A, 1-B, 1-C AND 1-D

ADVANCE FLASHING BEACON INSTALLATION

DETAIL D

See Note 5

Dist	COUNTY	ROUTE	POST MILES TOTAL PROJECT	SHEET No.	TOTAL SHEETS
05	SB	246	33.2/33.5	45	48

REGISTERED CIVIL ENGINEER

July 19, 2013

PLANS APPROVAL DATE

REGISTERED PROFESSIONAL ENGINEER — Stanley P. Johnson — No. C57793 — Exp. 3-31-14 — CIVIL — STATE OF CALIFORNIA

THE STATE OF CALIFORNIA OR ITS OFFICERS OR AGENTS SHALL NOT BE RESPONSIBLE FOR THE ACCURACY OR COMPLETENESS OF SCANNED COPIES OF THIS PLAN SHEET.

TO ACCOMPANY PLANS DATED 7-8-13

NOTES:

1. See Revised Standard Plan RSP ES-4A and Standard Plan ES-4D for attachment fitting details.
2. For wiring diagram, see Standard Plan ES-14B.
3. For additional notes and details, see Standard Plans ES-7M and ES-7N.
4. Handhole shall be located on the downstream side of traffic.
5. See project plans for type of standard to be installed.

STATE OF CALIFORNIA
DEPARTMENT OF TRANSPORTATION

ELECTRICAL SYSTEMS (FLASHING BEACON ON A TYPE 1, TYPE 15-FBS AND TYPE 40 STANDARD)

NO SCALE

RSP ES-7J DATED JULY 19, 2013 SUPERSEDES STANDARD PLAN ES-7J DATED MAY 20, 2011 - PAGE 471 OF THE STANDARD PLANS BOOK DATED 2010.

REVISED STANDARD PLAN RSP ES-7J

2010 REVISED STANDARD PLAN RSP ES-7J

6-26-13

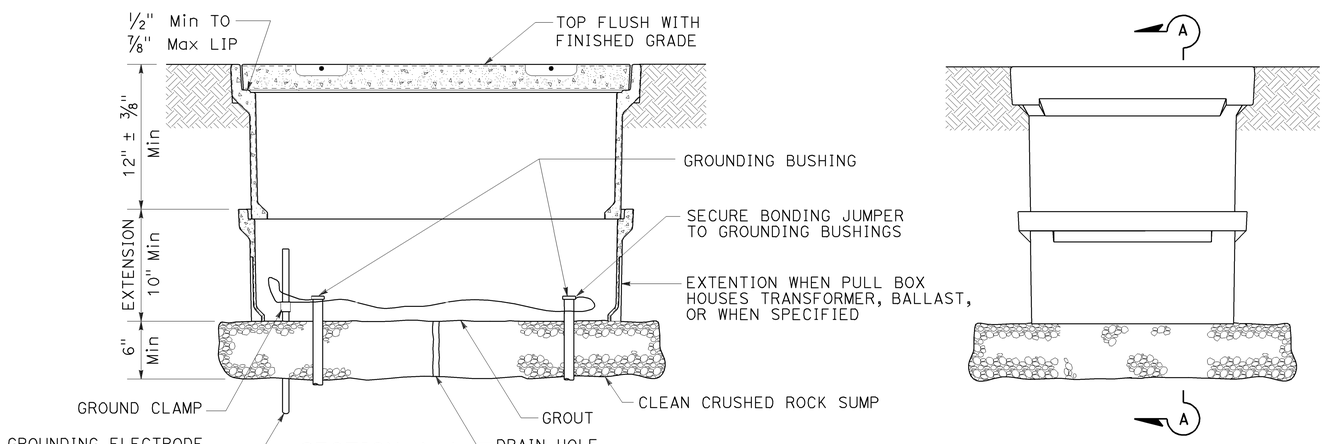

SECTION A-A

SIDE VIEW

INSTALLATION DETAILS

DETAIL A

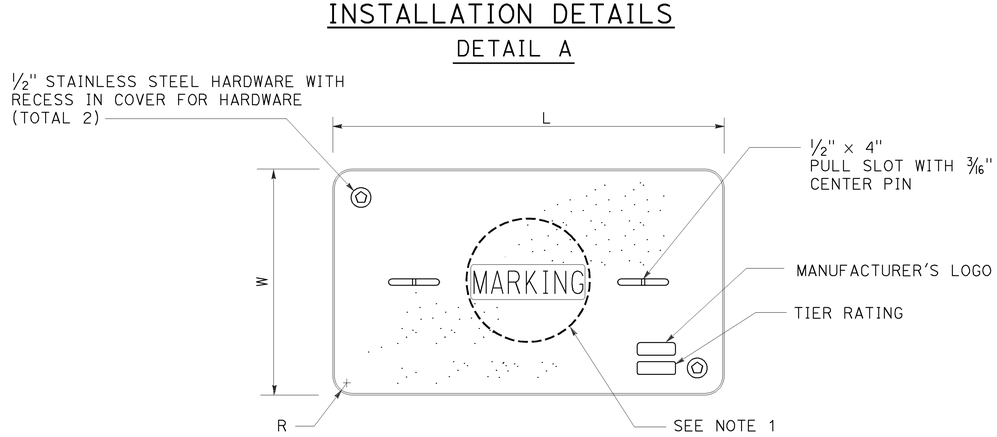

COVER TOP VIEW

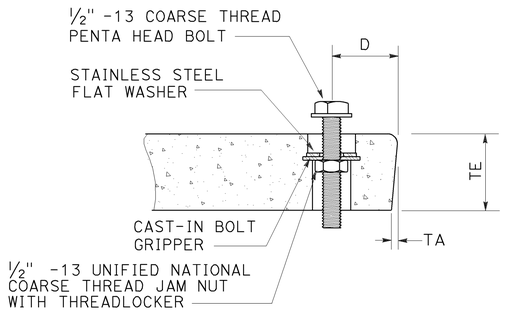

TYPICAL COVER CAPTIVE BOLT
OR SIMILAR

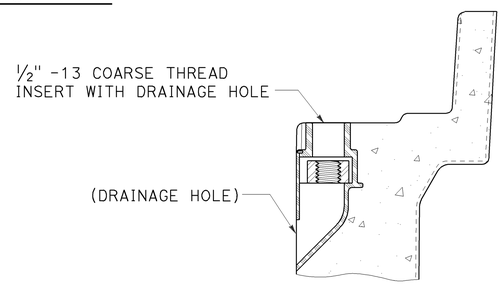

TYPICAL THREADED INSERT
OR SIMILAR

DIMENSION TABLE										
PULL BOX	PULL BOX			COVER						
	MINIMUM DEPTH BOX	MINIMUM DEPTH EXTENSION	MAXIMUM WEIGHT	L	W	R	TE	TA	D	MAXIMUM WEIGHT
No. 3½	12"	N/A	40 lb	1′ - 3⅜"	10⅛"	1⅜"	2"	⅛"	1¾"	30 lb
No. 5	12"	10"	55 lb	1′ - 11¼"	1′ - 1¾"	1⅜"	2"	⅛"	1¾"	60 lb
No. 6	12"	10"	70 lb	2′ - 6½"	1′ - 5½"	1⅜"	2"	⅛"	2"	85 lb

DIST	COUNTY	ROUTE	POST MILES TOTAL PROJECT	SHEET NO.	TOTAL SHEETS
05	SB	246	33.2/33.5	46	48

Theresa Gabriel
REGISTERED ELECTRICAL ENGINEER

Theresa Aziz Gabriel
No. E15129
Exp. 6-30-14
ELECTRICAL
REGISTERED PROFESSIONAL ENGINEER
STATE OF CALIFORNIA

July 19, 2013
PLANS APPROVAL DATE

THE STATE OF CALIFORNIA OR ITS OFFICERS OR AGENTS SHALL NOT BE RESPONSIBLE FOR THE ACCURACY OR COMPLETENESS OF SCANNED COPIES OF THIS PLAN SHEET.

TO ACCOMPANY PLANS DATED 7-8-13

NOTES:

1. Pull box covers shall be marked as follows: "SERVICE" Service circuits between service point and service disconnect; "SPRINKLER-CONTROL" sprinkler control circuits, 50 V or less; "CALTRANS" on all pull boxes, except pull boxes marked "SPRINKLER-CONTROL"; and "TELEPHONE" Telephone service;
   A) No. 3½ pull box.
      1) "SIGNAL" - Traffic signal circuits with or without lighting or sign lighting circuits.
      2) "LIGHTING" - Lighting or sign lighting circuits where voltage is under 600 V.
   B) No. 5, 6, 9 or 9A pull box.
      1) "TRAFFIC SIGNAL" - Traffic signal circuits with or without lighting or sign lighting circuits.
      2) "LIGHTING" - Lighting or sign lighting circuits where voltage is under 600 V.
      3) "LIGHTING-HIGH VOLTAGE" - Lighting or sign lighting circuits where voltage is above 600 V.
      4) "IRRIGATION" - Circuits to irrigation controller 120 V or more.
      5) "RAMP METER" - Ramp meter circuits.
      6) "COUNT STATION" - Count or speed monitor circuits.
      7) "COMMUNICATIONS" - Communication circuits.
      8) "TOS COMMUNICATIONS" - TOS communication line.
      9) "TOS POWER" - TOS power.
      10) "TDC POWER" - Telephone demarcation cabinet power.
      11) "CCTV" - Closed circuit television circuits.
      12) "TMS" - Traffic monitoring station circuits.
      13) "CMS" - Changeable message sign circuits.
      14) "HAR" - Highway advisory radio circuits.
      15) "BOOSTER PUMP" - Booster pump circuit.
2. The nominal dimensions of the opening in which the cover sets shall be the same as the cover dimensions except the length and width dimensions shall be ⅛" greater.
3. Covers and boxes shall be interchangeable with California standard male and female gages. When interchanged with a standard male or female gage, the top surfaces shall be flush within ⅛". Top outside radius of covers and pull boxes shall have a ⅛" radius.
4. Pull box extension may be another pull box as long as the bottom edge of the pull box can fit into the cover opening.
5. All dimensions for the cover for non-traffic pull box are nominal values.

STATE OF CALIFORNIA
DEPARTMENT OF TRANSPORTATION

ELECTRICAL SYSTEMS (NON-TRAFFIC PULL BOX)

NO SCALE

RSP ES-8A DATED JULY 19, 2013 SUPERSEDES RSP ES-8A DATED JANUARY 20, 2012 THAT SUPPLEMENTS THE STANDARD PLANS BOOK DATED 2010.

REVISED STANDARD PLAN RSP ES-8A

2010 REVISED STANDARD PLAN RSP ES-8A

7-15-13

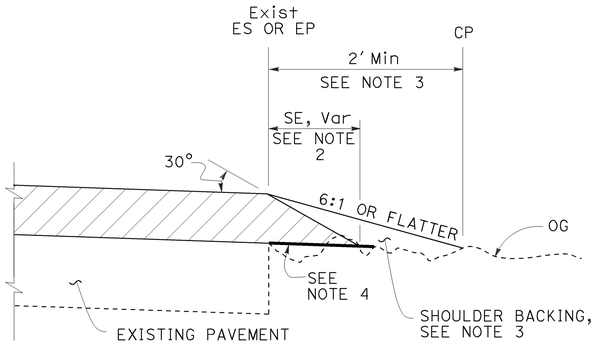

CASE A
Safety Edge

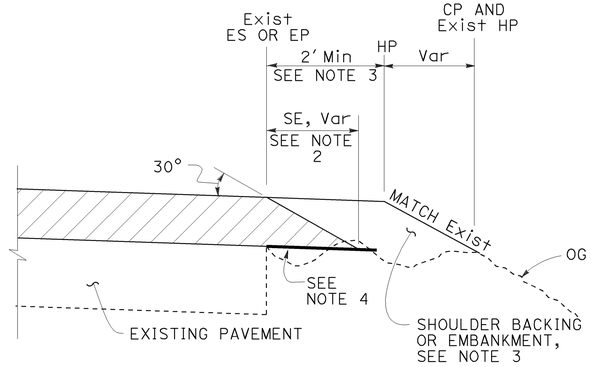

CASE B
Safety Edge

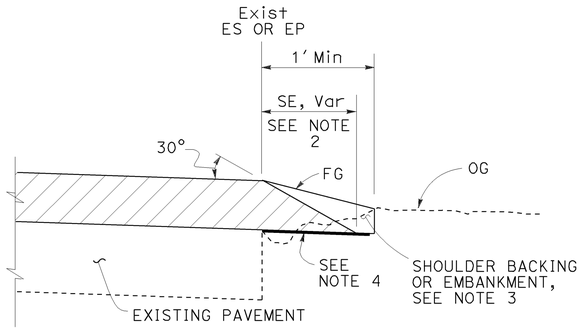

CASE C
Safety Edge

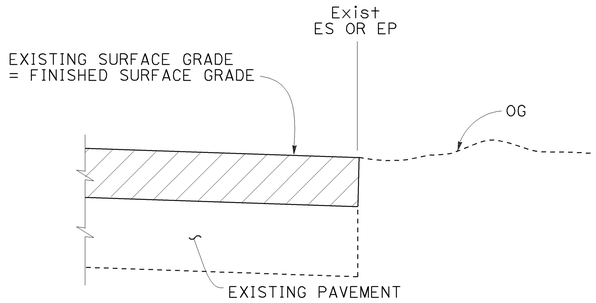

CASE D
Vertical Edge

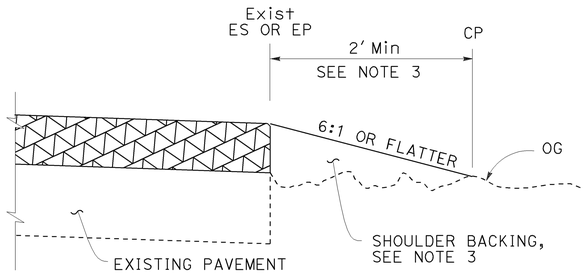

CASE E
Vertical Edge

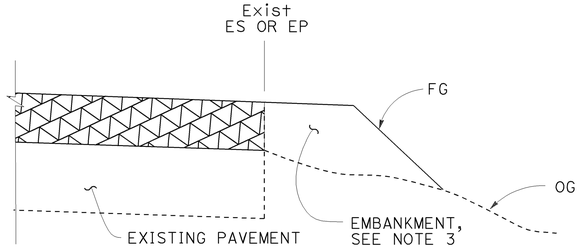

CASE F
Vertical Edge
* See Table A and Revised Std Plan RSP P74

NOTES:

1. For limits of safety edge and vertical edge treatments, see Revised Standard Plan RSP P74.
2. Details shown for HMA overlay thickness less than 0.43'. See Detail "A" for HMA overlay thickness more than 0.43' or concrete overlay.
3. For locations and limits of shoulder backing or embankment see project plans.
4. Grade existing ground to place safety edge. 1' minimum width
5. Safety edge transverse joint must match overlay transverse joint. End of #6 longitudinal bar must be 2" ±½" clear from transverse joint.
6. Safety edge is not needed in the area of MBGR, barrier, right turn lane and acceleration lane. See Revised Standard Plan RSP P74.

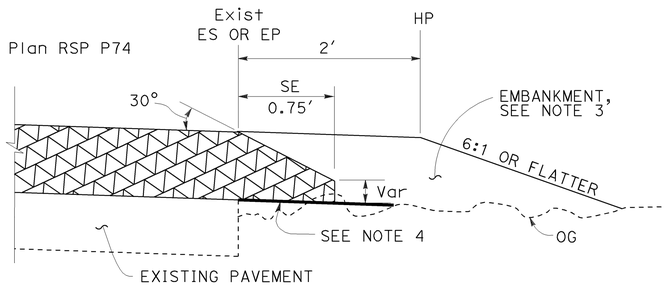

DETAIL "A"
For HMA overlay thickness more than 0.43' or concrete overlay

LEGEND:

HMA OVERLAY

HMA OR CONCRETE OVERLAY

CONCRETE OVERLAY

ABBREVIATIONS:

SE SAFETY EDGE
TT TOTAL THICKNESS OF SE

TABLE A
EDGE TREATMENT FOR VARIOUS OVERLAY THICKNESS AND CONDITIONS

	OVERLAY THICKNESS	
FIELD CONDITION	LESS THAN 0.15'	0.15' OR MORE
Exist SLOPE 6:1 OR FLATTER	CASE E	CASE A
Exist SLOPE 3:1 TO 6:1	CASE E	CASE B
Exist SLOPE STEEPER THAN 3:1	CASE F	CASE F
CUT SECTION (REPLACE, COLD PLANE, MILL PAVEMENT)	CASE D	CASE C

DIST	COUNTY	ROUTE	POST MILES TOTAL PROJECT	SHEET No.	TOTAL SHEETS
05	SB	246	33.2/33.5	47	48

REGISTERED CIVIL ENGINEER

Cornelis M. Hakim
No. C55610
Exp. 12-31-12
CIVIL
REGISTERED PROFESSIONAL ENGINEER
STATE OF CALIFORNIA

January 20, 2012
PLANS APPROVAL DATE

THE STATE OF CALIFORNIA OR ITS OFFICERS OR AGENTS SHALL NOT BE RESPONSIBLE FOR THE ACCURACY OR COMPLETENESS OF SCANNED COPIES OF THIS PLAN SHEET.

TO ACCOMPANY PLANS DATED 7-8-13

ADDITIONAL HMA OR CONCRETE QUANTITIES FOR SE/SIDE/MILE

TYPICAL CROSS SECTION	TT	TOTAL ADDITIONAL MATERIAL FOR SE/SIDE/MILE		
		HMA (TON)	CONCRETE (CY)*	CONCRETE (CY)**
TT	0.15'	NA	NA	NA
	0.20'	13.7	NA	NA
	0.30'	30.9	NA	NA
	0.40'	54.9	NA	NA
	0.45'	69.4	NA	NA
TT, 0.43'	0.50'	84.2	NA	NA
	0.60'	113.9	NA	NA
	0.70'	143.6	70.9	94.2
	0.80'	173.3	85.6	112.2
	0.90'	203.0	100.3	130.2
	1.00'	232.7	114.9	148.2
	1.10'	262.4	129.6	166.2
	1.20'	292.1	144.3	184.2

* For Detail "A"
** For Optional Detail "A"

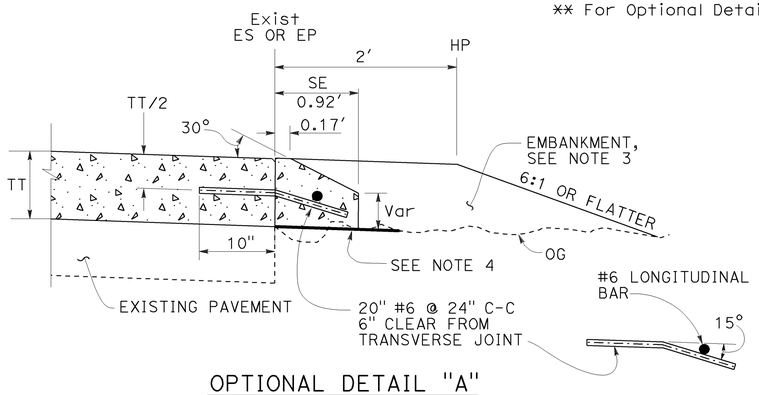

OPTIONAL DETAIL "A"
For concrete overlay
See Note 5

STATE OF CALIFORNIA
DEPARTMENT OF TRANSPORTATION

PAVEMENT EDGE TREATMENTS-OVERLAYS

NO SCALE

RSP P75 DATED JANUARY 20, 2012 SUPPLEMENTS THE STANDARD PLANS BOOK DATED 2010.

REVISED STANDARD PLAN RSP P75

2010 REVISED STANDARD PLAN RSP P75

01-09-12

Dist	COUNTY	ROUTE	POST MILES TOTAL PROJECT	SHEET No.	TOTAL SHEETS
05	SB	246	33.2/33.5	48	48

REGISTERED CIVIL ENGINEER

April 19, 2013
PLANS APPROVAL DATE

REGISTERED PROFESSIONAL ENGINEER
Gurinderpal Bhullar
No. C48815
Exp. 9-30-14
CIVIL
STATE OF CALIFORNIA

THE STATE OF CALIFORNIA OR ITS OFFICERS OR AGENTS SHALL NOT BE RESPONSIBLE FOR THE ACCURACY OR COMPLETENESS OF SCANNED COPIES OF THIS PLAN SHEET.

TO ACCOMPANY PLANS DATED 7-8-13

NOTES:

See Revised Standard Plan RSP T9 for tables.

Use cone spacing X for taper segment, Y for tangent segment or Z for conflict situations, as approriate, per Table 1, unless X, Y, or Z cone spacing is shown on this sheet.

Unless otherwise specified in the special provisions, all temporary warning signs shall have black legend on fluorescent orange background.

California codes are designated by (CA). Otherwise, Federal (MUTCD) codes are shown.

TYPICAL LANE CLOSURE WITH REVERSIBLE CONTROL

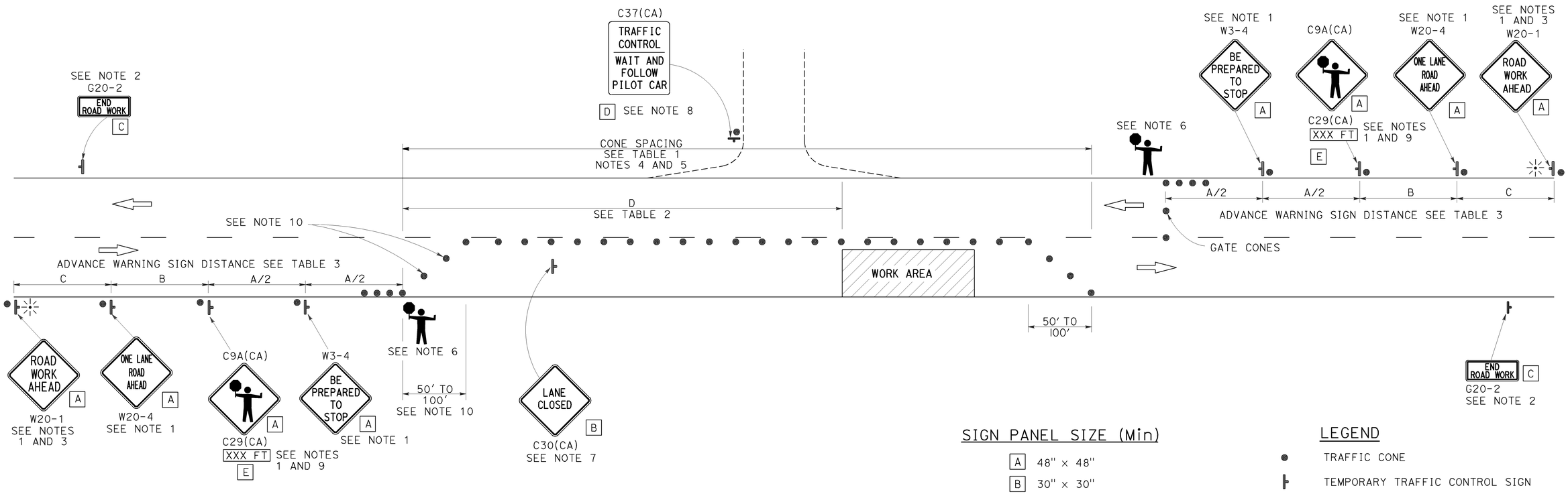

SIGN PANEL SIZE (Min)

A	48" × 48"
B	30" × 30"
C	36" × 18"
D	36" × 42"
E	20" × 7"

LEGEND

- TRAFFIC CONE
- TEMPORARY TRAFFIC CONTROL SIGN
- PORTABLE FLASHING BEACON
- FLAGGER

NOTES:

1. Each advance warning sign in each direction of travel shall be equipped with at least two flags for daytime closure. Each flag shall be at least 16" x 16" in size and shall be orange or fluorescent red-orange in color. Flashing beacons shall be placed at the locations indicated for lane closure during hours of darkness.
2. A G20-2 "END ROAD WORK" sign, as appropriate, shall be placed at the end of the lane control unless the end of work area is obvious, or ends within a larger project's limits.
3. If the W20-1 sign would follow within 2000' of a stationary W20-1 or G20-1 "ROAD WORK NEXT _____ MILES", use a W20-4 sign for the first advance warning sign.
4. All cones used for lane closures during the hours of darkness shall be fitted with retroreflective bands (or sleeves) as specified in the specifications.
5. Portable delineators, placed at one-half the spacing indicated for traffic cones, may be used instead of cones for daytime closures only.
6. Additional advance flaggers may be required. Flagger should stand in a conspicuous place, be visible to approaching traffic as well as approaching vehicles after the first vehicle has stopped. During the hours of darkness, the flagging-station and flagger shall be illuminated and clearly visible to approaching traffic. The illumination footprint of the lighting on the ground shall be at least 20' in diameter. Place a minimum of four cones at 50' intervals in advance of flagger station as shown.
7. Place C30(CA) "LANE CLOSED" sign at 500' to 1000' intervals throughout extended work areas. They are optional if the work area is visible from the flagger station.
8. When a pilot car is used, place a C37(CA) "TRAFFIC CONTROL-WAIT AND FOLLOW PILOT CAR" sign with black legend on white background at all intersections, driveways and alleys without a flagger within traffic control area. Signs shall be clean and visible at all times. Where traffic can not be effectively self-regulated, at least one flagger shall be used at each intersection within traffic control area.
9. An optional C29(CA) sign may be placed below the C9A(CA) sign.
10. Either traffic cones or barricades shall be placed on the taper. Barricades shall be Type I, II, or III.

STATE OF CALIFORNIA
DEPARTMENT OF TRANSPORTATION

TRAFFIC CONTROL SYSTEM FOR LANE CLOSURE ON TWO LANE CONVENTIONAL HIGHWAYS

NO SCALE

RSP T13 DATED APRIL 19, 2013 SUPERSEDES STANDARD PLAN T13 DATED MAY 20, 2011 - PAGE 241 OF THE STANDARD PLANS BOOK DATED 2010.

REVISED STANDARD PLAN RSP T13

2010 REVISED STANDARD PLAN RSP T13

4-2-13