Dist	COUNTY	ROUTE	POST MILES TOTAL PROJECT	SHEET No.	TOTAL SHEETS
05	Mon	1	1.5/T92.0	1	21

INDEX OF PLANS

SHEET No.	DESCRIPTION
1	TITLE AND LOCATION MAP
2	CONSTRUCTION AREA SIGNS
3	PAVEMENT DELINEATION QUANTITIES
4-7	REVISED STANDARD PLANS
STRUCTURE PLANS	
8-21	ROUTE 1 BRIDGES

THE STANDARD PLANS LIST APPLICABLE TO THIS CONTRACT IS INCLUDED IN THE NOTICE TO BIDDERS AND SPECIAL PROVISIONS BOOK.

STATE OF CALIFORNIA

DEPARTMENT OF TRANSPORTATION

PROJECT PLANS FOR CONSTRUCTION ON

STATE HIGHWAY

IN MONTEREY COUNTY FROM FOREST BOUNDARY VIADUCT TO TEMBLADERO SLOUGH

TO BE SUPPLEMENTED BY STANDARD PLANS DATED MAY 2006

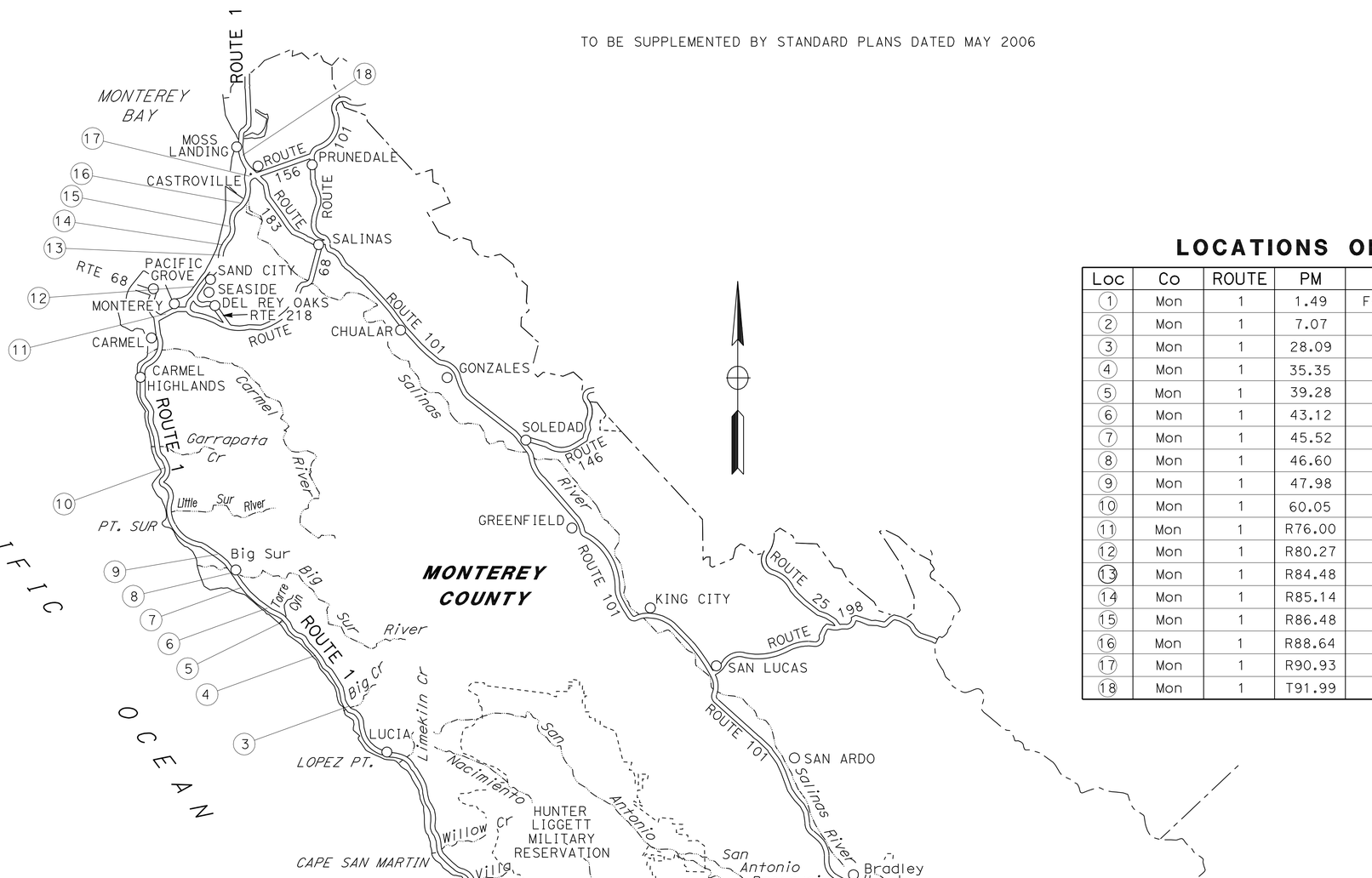

LOCATION MAP

LOCATIONS OF CONSTRUCTION

Loc	Co	ROUTE	PM	BRIDGE NAME	BRIDGE No.
1	Mon	1	1.49	FOREST BOUNDARY VIADUCT	44-0279
2	Mon	1	7.07	VILLA CREEK	44-0028
3	Mon	1	28.09	BIG CREEK	44-0056
4	Mon	1	35.35	ANDERSON CANYON	44-0049
5	Mon	1	39.28	SYCAMORE DRAW	49-0047
6	Mon	1	43.12	CASTRO CANYON	44-0035
7	Mon	1	45.52	PFEIFFER CANYON	44-0060
8	Mon	1	46.60	BIG SUR RIVER	44-0021
9	Mon	1	47.98	JUAN HIGUERA CREEK	44-0068
10	Mon	1	60.05	ROCKY CREEK	44-0036
11	Mon	1	R76.00	SOLEDAD DRIVE UC	44-0191R/L
12	Mon	1	R80.27	SAND CITY UC	44-0188L
13	Mon	1	R84.48	NORTH ENTRANCE OC	44-0203
14	Mon	1	R85.14	SOUTH MARINA OH	44-0211R
15	Mon	1	R86.48	RESERVATION ROAD UC	44-0213R/L
16	Mon	1	R88.64	NEPONSET OC	44-0215
17	Mon	1	R90.93	ROUTE 1/156 Sep	44-0218R
18	Mon	1	T91.99	TEMBLADERO SLOUGH	44-0219

PROJECT MANAGER KELLY J.McCLAIN

DESIGN ENGINEER KELLY J.McCLAIN

10-01-10
PROJECT ENGINEER DATE
REGISTERED CIVIL ENGINEER

November 29, 2010
PLANS APPROVAL DATE

REGISTERED PROFESSIONAL ENGINEER K.L.McKINLEY No. 49413 Exp. 9-30-12 CIVIL STATE OF CALIFORNIA

THE STATE OF CALIFORNIA OR ITS OFFICERS OR AGENTS SHALL NOT BE RESPONSIBLE FOR THE ACCURACY OR COMPLETENESS OF SCANNED COPIES OF THIS PLAN SHEET.

THE CONTRACTOR SHALL POSSESS THE CLASS (OR CLASSES) OF LICENSE AS SPECIFIED IN THE "NOTICE TO BIDDERS."

CONTRACT No.	05-0S9804
PROJECT ID	0500000469

LAST REVISION 10-01-10 DATE PLOTTED => 30-NOV-2010 TIME PLOTTED => 15:10

Dist	COUNTY	ROUTE	POST MILES TOTAL PROJECT	SHEET No.	TOTAL SHEETS
05	Mon	1	1.5/T92.0	2	21

REGISTERED CIVIL ENGINEER 10-01-10 DATE

11-29-10
PLANS APPROVAL DATE

REGISTERED PROFESSIONAL ENGINEER K.L.McKINLEY No. 49413 Exp. 9-30-12 CIVIL STATE OF CALIFORNIA

THE STATE OF CALIFORNIA OR ITS OFFICERS OR AGENTS SHALL NOT BE RESPONSIBLE FOR THE ACCURACY OR COMPLETENESS OF SCANNED COPIES OF THIS PLAN SHEET.

NOTES:

1. EXACT LOCATION OF CONSTRUCTION AREA SIGNS TO BE DETERMINED BY THE ENGINEER.
2. EXISTING UTILITY FACILITIES HAVE NOT BEEN PLOTTED ON THESE PLANS.
3. ONLY WHERE LOCAL ROAD CONTINUES.

LEGEND

CONSTRUCTION AREA SIGN

DIRECTION OF TRAVEL

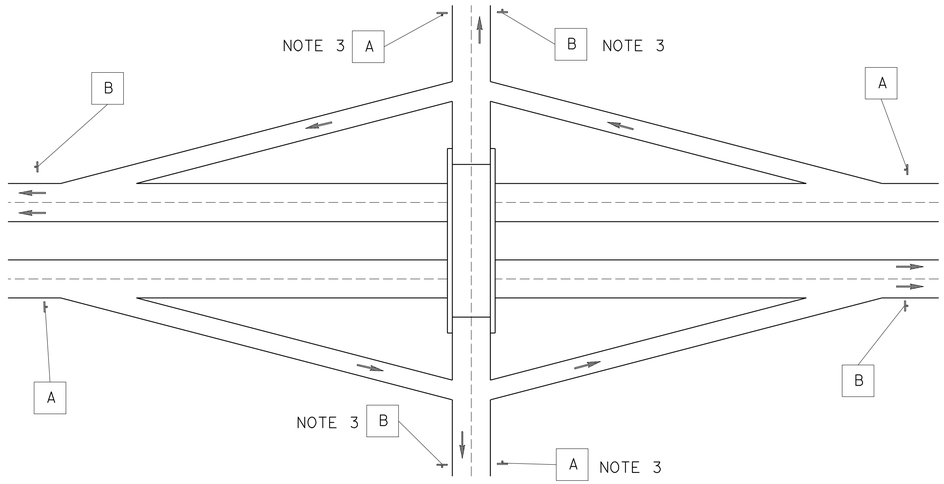

OVERCROSSING WITH RAMPS

Loc	ROUTE	PM	NAME OF BRIDGE	BRIDGE No
13	1	R84.48	NORTH ENTRANCE OC	44-0203
16	1	R88.64	NEPONSET OC	44-0215

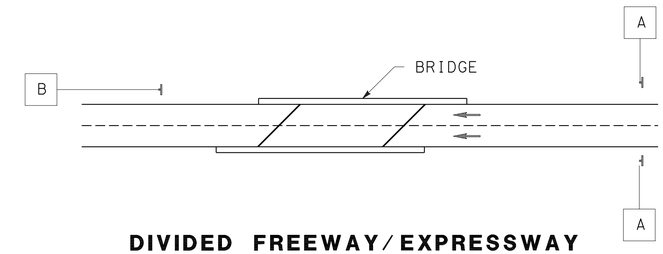

DIVIDED FREEWAY/EXPRESSWAY

Loc	ROUTE	PM	NAME OF BRIDGE	BRIDGE No
12	1	R80.27L	SAND CITY UC	44-0188L
14	1	R85.14	SOUTH MARINA OH	44-0211R
15	1	R86.48	RESERVATION Rd UC	44-0213R/L
17	1	90.93	ROUTE 1/156 Sep	44-0218R

CONSTRUCTION AREA SIGNS

SIGN	CODE	MESSAGE	PANEL SIZE	No. OF SIGNS	No. OF POSTS AND SIZE	REMARKS
A	W20-1	ROAD WORK AHEAD	48"x 48"	43	1 - 4"x 6"	STATIONARY MOUNTED
B	G20-2	END ROAD WORK	48"x 24"	37	1 - 4"x 6"	STATIONARY MOUNTED

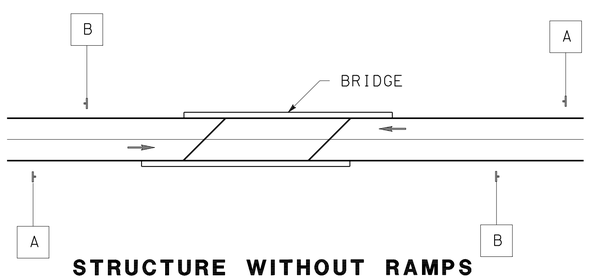

STRUCTURE WITHOUT RAMPS

Loc	ROUTE	PM	NAME OF BRIDGE	BRIDGE No
1	1	1.49	FORREST BOUNDARY VIADUCT	44-0279
2	1	7.07	VILLA CREEK	44-0028
3	1	28.09	BIG CREEK	44-0056
4	1	35.35	ANDERSON CANYON	44-0049
5	1	39.28	SYCAMORE DRAW	44-0047
6	1	43.12	CASTRO CANYON	44-0035
7	1	45.52	PFEIFFER CANYON	44-0060
8	1	46.60	BIG SUR RIVER	44-0021
9	1	47.98	JUAN HIGUERA CREEK	44-0068
10	1	60.05	ROCKY CREEK	44-0036
18	1	T91.99	TEMBLADERO SLOUGH	44-0219

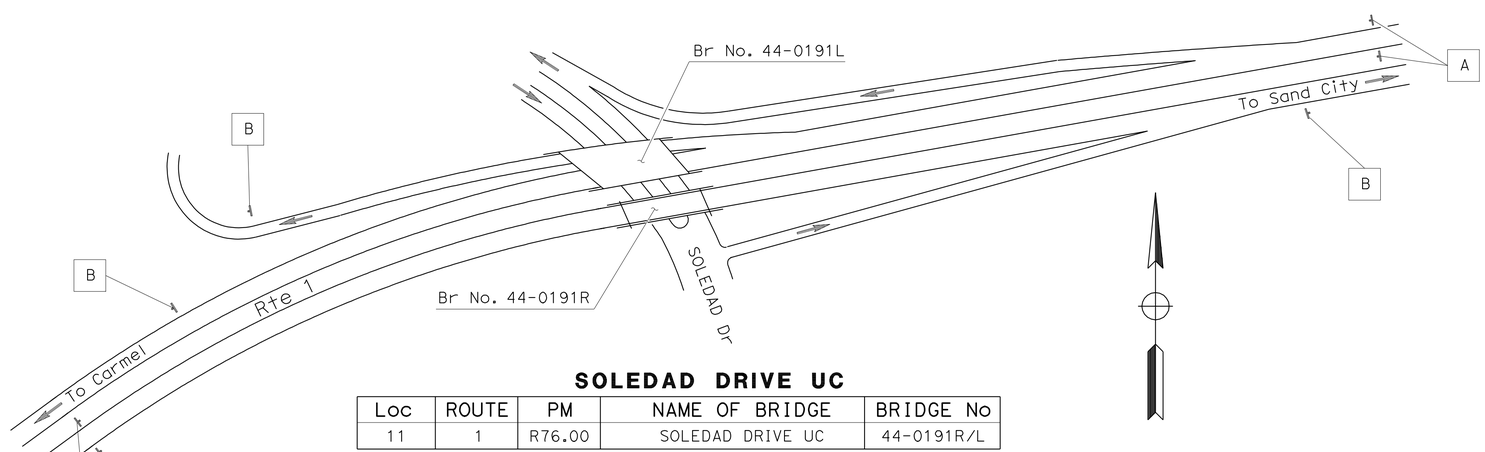

SOLEDAD DRIVE UC

Loc	ROUTE	PM	NAME OF BRIDGE	BRIDGE No
11	1	R76.00	SOLEDAD DRIVE UC	44-0191R/L

CONSTRUCTION AREA SIGNS

NO SCALE

CS-1

REVISED BY | DATE REVISED
KELLY L.McKINLEY
KELLY J.McCLAIN
CALCULATED-DESIGNED BY | CHECKED BY
FUNCTIONAL SUPERVISOR
KELLY J.McCLAIN
STATE OF CALIFORNIA - DEPARTMENT OF TRANSPORTATION
Caltrans® MAINTENANCE DESIGN

LAST REVISION | DATE PLOTTED => 30-NOV-2010 | TIME PLOTTED => 15:50
10-01-10

Dist	COUNTY	ROUTE	POST MILES TOTAL PROJECT	SHEET No.	TOTAL SHEETS
05	Mon	1	1.5/T92.0	3	21

REGISTERED CIVIL ENGINEER 10-01-10 DATE

11-29-10
PLANS APPROVAL DATE

REGISTERED PROFESSIONAL ENGINEER K.L.McKINLEY No. 49413 Exp. 9-30-12 CIVIL STATE OF CALIFORNIA

THE STATE OF CALIFORNIA OR ITS OFFICERS OR AGENTS SHALL NOT BE RESPONSIBLE FOR THE ACCURACY OR COMPLETENESS OF SCANNED COPIES OF THIS PLAN SHEET.

REMOVE PAVEMENT DELINEATION

Loc	Co ROUTE PM	NAME OF BRIDGE	BRIDGE No.	REMOVE THERMOPLASTIC TRAFFIC STRIPE YELLOW	WHITE	BLACK (N)	REMOVE PAVEMENT MARKERS (N)	REMOVE THERMOPLASTIC PAVEMENT MARKING
				LF	LF	LF	EA	SQFT
1	Mon-1-1.49	FOREST BOUNDARY VIADUCT	44-0279	2576	2576	640	54	
3	Mon-1-28.09	BIG CREEK	44-0056	2608	1304	589	50	
4	Mon-1-35.35	ANDERSON CANYON	44-0049	1724	826	431	37	
5	Mon-1-39.28	SYCAMORE DRAW	44-0047	240	360	60	6	
6	Mon-1-43.12	CASTRO CANYON	44-0035	956	956	239	21	
7	Mon-1-45.52	PFEIFFER CANYON	44-0060	1901	1901	317	27	
8	Mon-1-46.60	BIG SUR RIVER	44-0021	880	880	220	19	
9	Mon-1-47.98	JUAN HIGUERA CREEK	44-0068	452	452	113	10	
12	Mon-1-R80.27	SAND CITY UC	44-0188L	95	214	95	14	
13	Mon-1-R84.48	NORTH ENTRANCE OC	44-0203	396	396	198	18	73
14	Mon-1-R85.14	SOUTH MARINA OH	44-0211R	580	1937	580	74	
15	Mon-1-R86.48	RESERVATION ROAD UC	44-0213R/L	298	670	298	42	
16	Mon-1-R88.64	NEPONSET OC	44-0215	694		347		
18	Mon-1-T91.99	TEMBLADERO SLOUGH	44-0219	558	1452		24	
SUBTOTAL				13,958	13,738			
TOTAL				27,696				73

(N) - NOT A SEPARATE PAY ITEM, FOR INFORMATION ONLY

PAVEMENT DELINEATION

Loc	Co ROUTE PM	NAME OF BRIDGE	BRIDGE No.	THERMOPLASTIC TRAFFIC STRIPE (SPRAYABLE) YELLOW			WHITE		TRAFFIC STRIPE (MARKERS ONLY) (N)	PAVEMENT MARKER (NON-REFLECTIVE)	(RETROREFLECTIVE)			THERMOPLASTIC PAVEMENT MARKING	COMMENTS
				DETAIL					DETAIL	DETAILS 10, 13	DETAILS 13, 22, 25A				
				21	22	25A	11	27B	13	TYPE A	TYPE D	TYPE G	TYPE H		
				LF					LF	EACH	EACH			SQFT	
1	Mon-1-1.49	FOREST BOUNDARY VIADUCT	44-0279		644			1288			56				
3	Mon-1-28.09	BIG CREEK	44-0056		652			1304			56				
4	Mon-1-35.35	ANDERSON CANYON	44-0049		431			862			38				
5	Mon-1-39.28	SYCAMORE DRAW	44-0047		60			120			8				
6	Mon-1-43.12	CASTRO CANYON	44-0035		239			478			22				
7	Mon-1-45.52	PFEIFFER CANYON	44-0060		317			634			28				
8	Mon-1-46.60	BIG SUR RIVER	44-0021		440			440			20				
9	Mon-1-47.98	JUAN HIGUERA CREEK	44-0068		113			226			12				
12	Mon-1-R80.27	SAND CITY UC	44-0188L			95	95	95	95	8		3	6		
13	Mon-1-R84.48	NORTH ENTRANCE OC	44-0203		198			396			20			73	TYPE I & III ARROWS
14	Mon-1-R85.14	SOUTH MARINA OH	44-0211R			580	580	1792	580	48		13	13		Det 27B Qty INCLUDES 1212 LF HATCH MARKINGS
15	Mon-1-R86.48	RESERVATION ROAD UC	44-0213R/L			298		596	298	24		8	14		
16	Mon-1-R88.64	NEPONSET OC	44-0215	347											
18	Mon-1-T91.99	TEMBLADERO SLOUGH	44-0219		279			894			26				Det 27B Qty INCLUDES 336 LF HATCH MARKINGS
		SUBTOTAL		347	3373	973	675	9125		80	286	24	33	73	
		TOTAL		14,493						80	343			73	

(N) - NOT A SEPARATE PAY ITEM, FOR INFORMATION ONLY

REMOVE DELINEATOR (N)

Loc	Co ROUTE PM	NAME OF BRIDGE	BRIDGE No.	CLASS 1 TYPE E (N)
				EA
18	Mon-1-T91.99	TEMBLADERO SLOUGH	44-0219	6

(N) - NOT A SEPARATE PAY ITEM, FOR INFORMATION ONLY

DELINEATOR

Loc	Co ROUTE PM	NAME OF BRIDGE	BRIDGE No.	CLASS 1 TYPE E
				EA
18	Mon-1-T91.99	TEMBLADERO SLOUGH	44-0219	6
TOTAL				6

PAVEMENT DELINEATION QUANTITIES PDQ-1

STATE OF CALIFORNIA - DEPARTMENT OF TRANSPORTATION
Caltrans® MAINTENANCE DESIGN

FUNCTIONAL SUPERVISOR: KELLY J.McCLAIN
CALCULATED-DESIGNED BY: KELLY L.McKINLEY
CHECKED BY: KELLY J.McCLAIN
REVISED BY / DATE REVISED

LAST REVISION 10-01-10 | DATE PLOTTED => 30-NOV-2010 | TIME PLOTTED => 15:50

DIST	COUNTY	ROUTE	POST MILES TOTAL PROJECT	SHEET NO.	TOTAL SHEETS
05	Mon	1	1.5/T92.0	4	21

Randell D. Hiatt
REGISTERED CIVIL ENGINEER

June 6, 2008
PLANS APPROVAL DATE

REGISTERED PROFESSIONAL ENGINEER
Randell D. Hiatt
No. C50200
Exp. 6-30-09
CIVIL
STATE OF CALIFORNIA

The State of California or its officers or agents shall not be responsible for the accuracy or completeness of electronic copies of this plan sheet.

To accompany plans dated 11-29-10

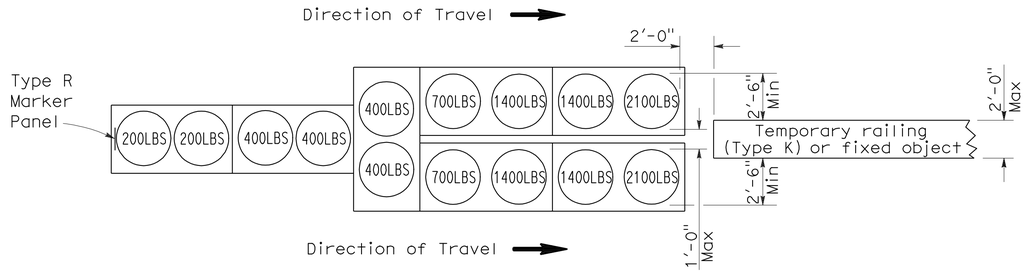

ARRAY 'TU14'

Approach speed 45 mph or more

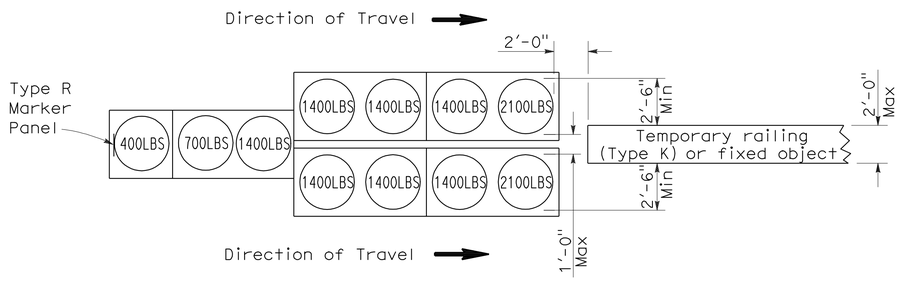

ARRAY 'TU11'

Approach speed less than 45 mph

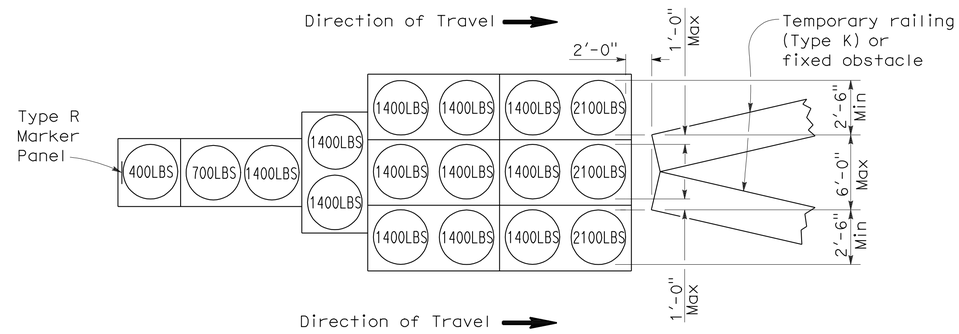

ARRAY 'TU17'

Approach speed less than 45 mph

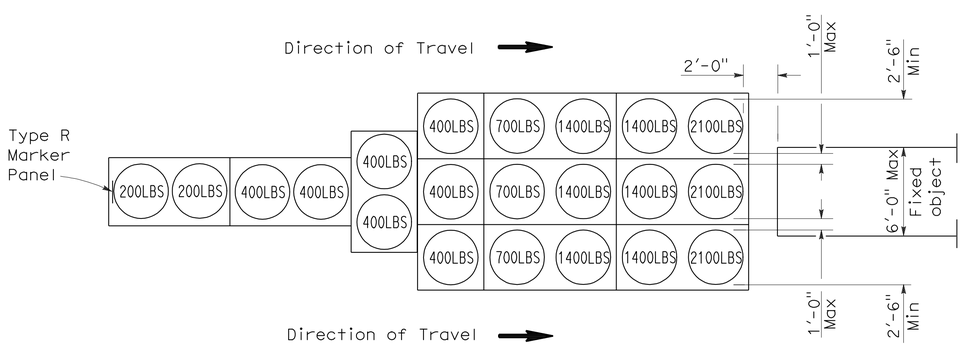

ARRAY 'TU21'

Approach speed 45 mph or more

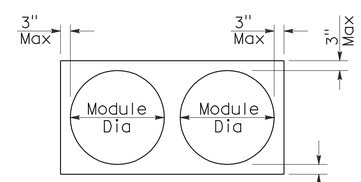

PLAN

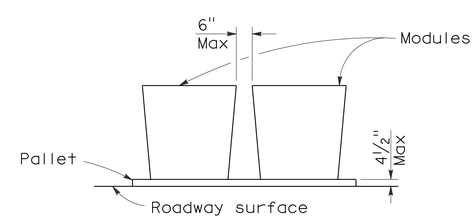

ELEVATION

CRASH CUSHION PALLET DETAIL

See Note 7

NOTES:

1. (XXX) Indicates sand filled module location and weight of sand in pounds for each module. Module spacing is based on the greater diameter of the module.
2. All sand weights are nominal.
3. Temporary crash cushion arrays shall not encroach on the traveled way.
4. Place the top of Type R marker panel 1" below the module lid.
5. Refer to Standard Plan A73B for marker details.
6. Approach speeds indicated conform to NCHRP 350 Report criteria.
7. Use of pallets is optional.

STATE OF CALIFORNIA
DEPARTMENT OF TRANSPORTATION

TEMPORARY CRASH CUSHION, SAND FILLED (UNIDIRECTIONAL)

NO SCALE

RSP T1A DATED JUNE 6, 2008 SUPERSEDES STANDARD PLAN T1A
DATED MAY 1, 2006 - PAGE 211 OF THE STANDARD PLANS BOOK DATED MAY 2006.

REVISED STANDARD PLAN RSP T1A

2006 REVISED STANDARD PLAN RSP T1A

DIST	COUNTY	ROUTE	POST MILES TOTAL PROJECT	SHEET NO.	TOTAL SHEETS
05	Mon	1	1.5/T92.0	5	21

Randell D. Hiatt
REGISTERED CIVIL ENGINEER

June 6, 2008
PLANS APPROVAL DATE

REGISTERED PROFESSIONAL ENGINEER
Randell D. Hiatt
No. C50200
Exp. 6-30-09
CIVIL
STATE OF CALIFORNIA

The State of California or its officers or agents shall not be responsible for the accuracy or completeness of electronic copies of this plan sheet.

To accompany plans dated 11-29-10

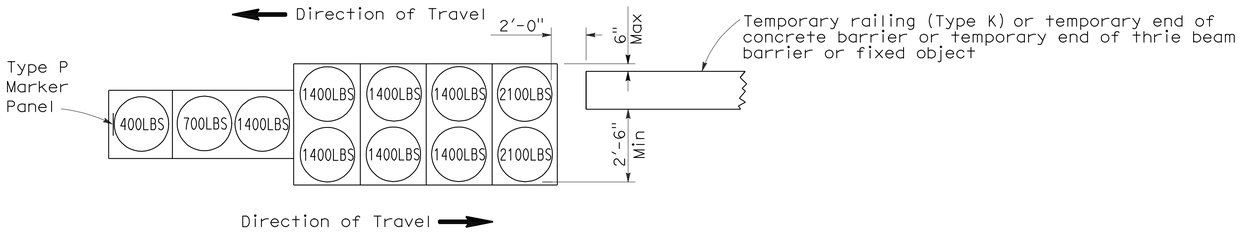

ARRAY 'TB11'

Approach speed less than 45 mph

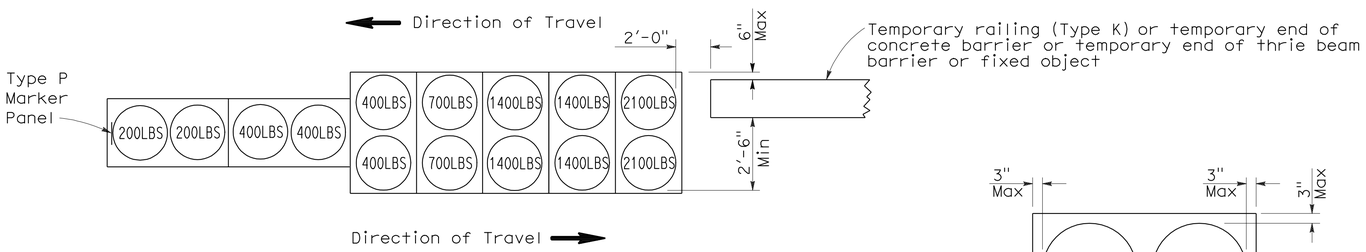

ARRAY 'TB14'

Approach speed 45 mph or more

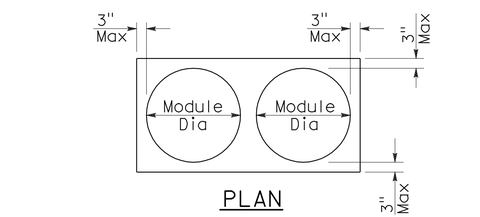

PLAN

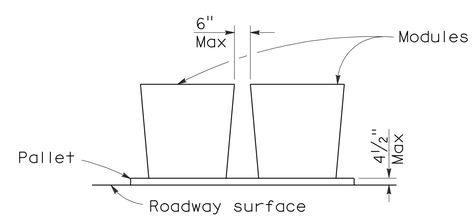

ELEVATION

CRASH CUSHION PALLET DETAIL

See Note 7

NOTES:

1. (XXX) Indicates sand filled module location and weight of sand in pounds for each module. Module spacing is based on the greater diameter of the module.
2. All sand weights are nominal.
3. Temporary crash cushion arrays shall not encroach on the traveled way.
4. Place the Type P marker panel so that the bottom of the panel rests upon the pallet.
5. Refer to Standard Plan A73B for marker details.
6. Approach speeds indicated conform to NCHRP 350 Report criteria.
7. Use of pallets is optional.

STATE OF CALIFORNIA
DEPARTMENT OF TRANSPORTATION

TEMPORARY CRASH CUSHION, SAND FILLED (BIDIRECTIONAL)

NO SCALE

RSP T1B DATED JUNE 6, 2008 SUPERSEDES STANDARD PLAN T1B
DATED MAY 1, 2006 - PAGE 212 OF THE STANDARD PLANS BOOK DATED MAY 2006.

REVISED STANDARD PLAN RSP T1B

2006 REVISED STANDARD PLAN RSP T1B

5-15-08

DIST	COUNTY	ROUTE	POST MILES TOTAL PROJECT	SHEET NO.	TOTAL SHEETS
05	Mon	1	1.5/T92.0	6	21

Randell D. Hiatt
REGISTERED CIVIL ENGINEER

June 6, 2008
PLANS APPROVAL DATE

REGISTERED PROFESSIONAL ENGINEER
Randell D. Hiatt
No. C50200
Exp. 6-30-09
CIVIL
STATE OF CALIFORNIA

The State of California or its officers or agents shall not be responsible for the accuracy or completeness of electronic copies of this plan sheet.

To accompany plans dated 11-29-10

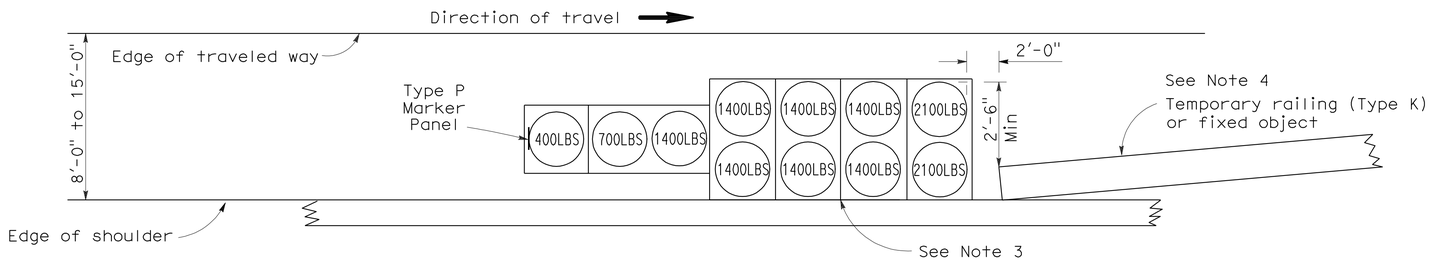

ARRAY 'TS11'

Approach speed less than 45 mph
See Note 9

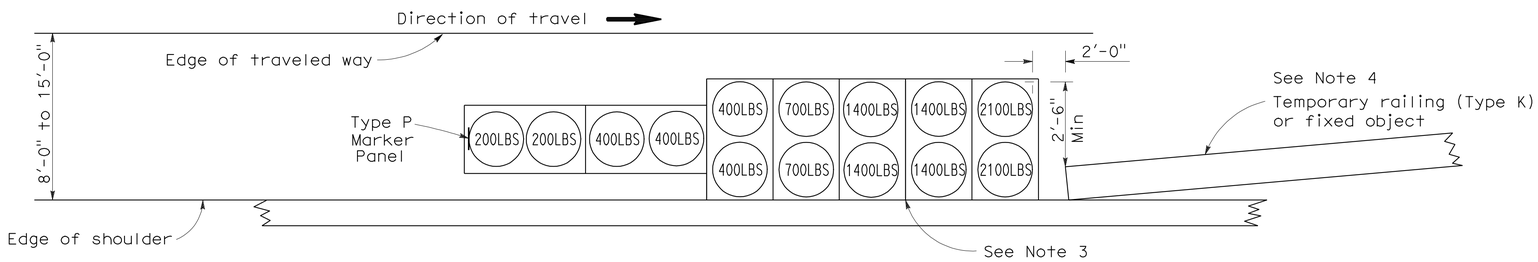

ARRAY 'TS14'

Approach speed 45 mph or more
See Note 9

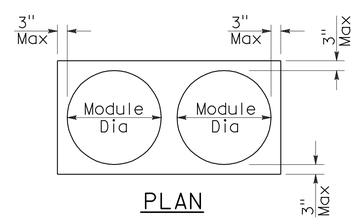

PLAN

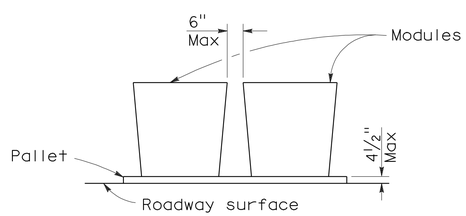

ELEVATION

CRASH CUSHION PALLET DETAIL

See Note 11

NOTES:

1. (XXX) Indicates sand filled module location and weight of sand in pounds for each module. Module spacing is based on the greater diameter of the module.
2. All sand weights are nominal.
3. The temporary crash cushion arrays shown on this plan shall be used only in locations where there will be traffic on one side of the temporary crash cushion array.
4. If the fixed object or approach end of the temporary railing is less than 15'-0" from the edge of traveled way, a temporary crash cushion is required in a construction or work zone.
5. Temporary crash cushion arrays shall not encroach on the traveled way.
6. Arrays for median shoulders shall conform to details shown on this plan for outside shoulders.
7. Place the Type P marker panel so that the bottom of the panel rests upon the pallet and faces traffic.
8. Refer to Standard Plan A73B for marker details.
9. For shoulder widths less than 8'-0", appropriate approved crash cushion protection, other than sand filled modules, shall be provided at fixed objects and at approach ends of temporary railing. The specific type of crash cushion shall be as shown on the project plans or as specified in the Special Provisions, or if not shown on the project plans or specified in the Special Provisions, shall be as approved by the Engineer.
10. Approach speeds indicated conform to NCHRP 350 Report criteria.
11. Use of pallets is optional.

STATE OF CALIFORNIA
DEPARTMENT OF TRANSPORTATION

TEMPORARY CRASH CUSHION, SAND FILLED (SHOULDER INSTALLATIONS)

NO SCALE

RSP T2 DATED JUNE 6, 2008 SUPERSEDES STANDARD PLAN T2
DATED MAY 1, 2006 - PAGE 213 OF THE STANDARD PLANS BOOK DATED MAY 2006.

REVISED STANDARD PLAN RSP T2

2006 REVISED STANDARD PLAN RSP T2

5-15-08

DIST	COUNTY	ROUTE	POST MILES TOTAL PROJECT	SHEET NO.	TOTAL SHEETS
05	Mon	1	1.5/T92.0	7	21

REGISTERED CIVIL ENGINEER

October 5, 2007
PLANS APPROVAL DATE

REGISTERED PROFESSIONAL ENGINEER Efthymios Delis No. C51434 Exp. 6-30-08 CIVIL STATE OF CALIFORNIA

The State of California or its officers or agents shall not be responsible for the accuracy or completeness of electronic copies of this plan sheet.

To accompany plans dated 11-29-10

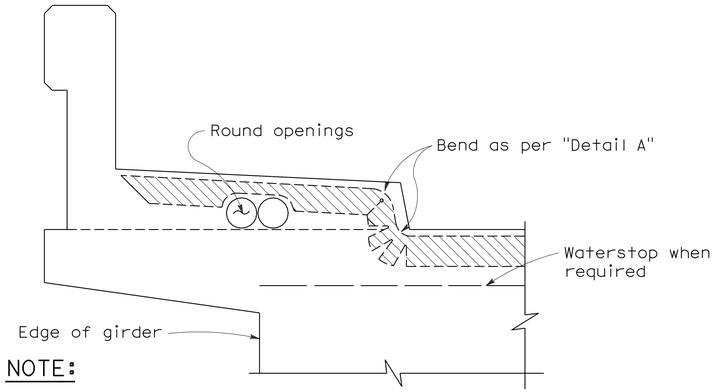

NOTE:

Type "B" seal shown. Type "A" seals to comform to the general path of seal shown, cuts for bending not required. Bend Type "A" seals 3" up into curb or barrier rail on only the low end of the seal.

CONCRETE BARRIER AND SIDEWALK

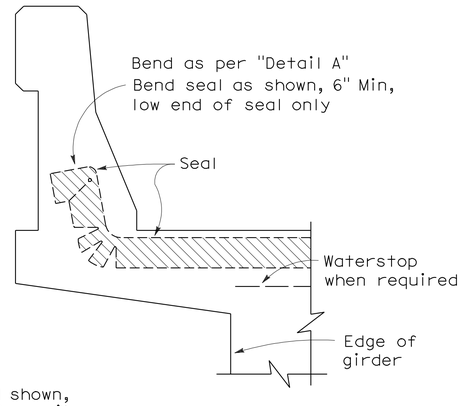

CONCRETE BARRIER

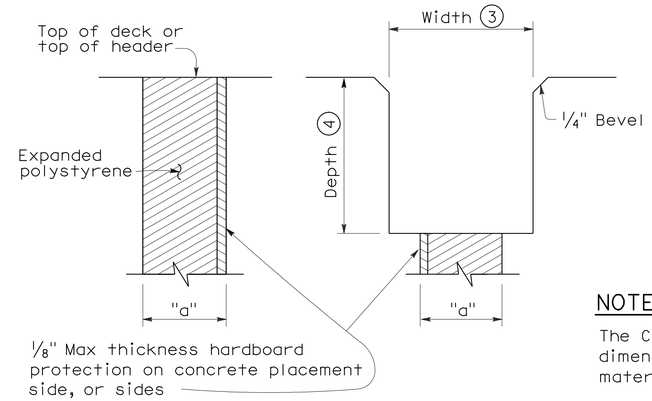

FORMING DETAIL SAWCUT DETAIL

NOTE:

The Contractor shall verify all controlling field dimensions before ordering or fabricatiing any material.

JOINT SEALS DETAILS

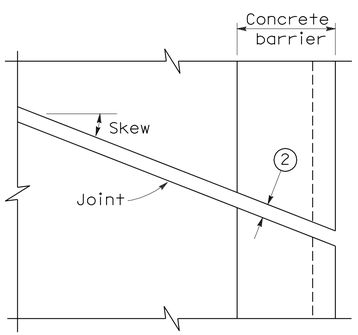

PLAN OF JOINT (SKEW ≤ 20°)

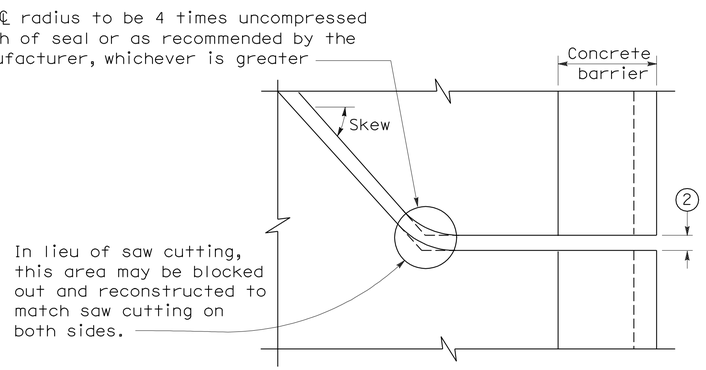

PLAN OF JOINT (SKEW > 20°)

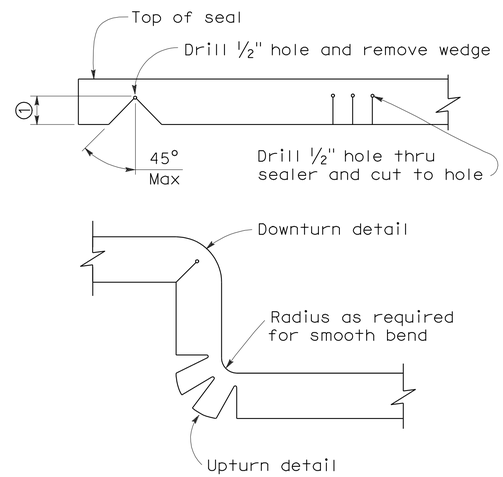

DETAIL A

NOTES:

1. Make smooth cuts from the bottom of seal to 1½" clear of top leaving at least one complete cell between the top of the cut and top of the seal. When necessary cut back of seal to clear conduit and round openings.
2. Opening in barrier to match width of sawn deck joint.
3. Sawcut groove widths shall be as ordered by the Engineer.
4. Depth of sawcut: Type A - Depth to be 2" minimum.
   Type B - Depth to be equal to or greater than the depth of seal measured along the contact surface, when compressed to minimum width position (W_2) plus dimensions shown.
5. MR (movement rating) as shown on other plan sheets.
6. Other depths must be approved by the Engineer.

DIMENSIONS "a" OF JOINT REQUIRED

Movement Rating (MR) (5)	Bridge Type	"a" Dimension Deck Concrete Placed		
		Winter	Fall-Spring	Summer
2"	All except CIP/PS	1½"	1¼"	¾"
	CIP/PS	1¼"	1"	½"
1½"	All except CIP/PS	1¼"	1"	½"
	CIP/PS	1"	¾"	½"
1"	All except CIP/PS	1"	¾"	½"
	CIP/PS	¾"	½"	½"
½"	All except CIP/PS	¾"	¾"	½"
	CIP/PS	½"	½"	½"

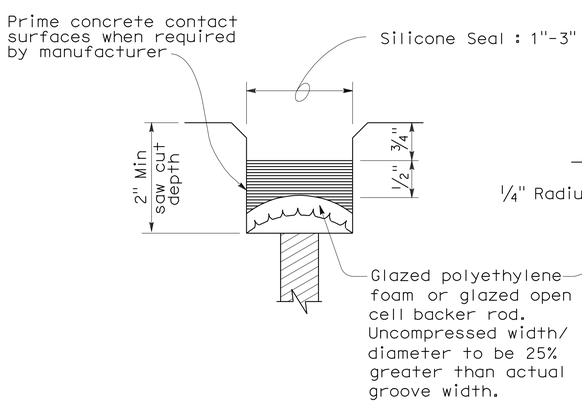

TYPE A SEAL

Movement rating : Silicone = 1" Max

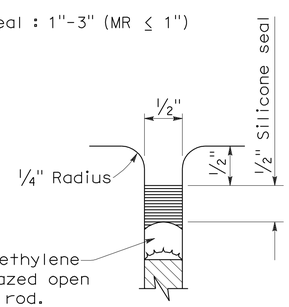

TYPE AL SEAL

Longitudinal joints only

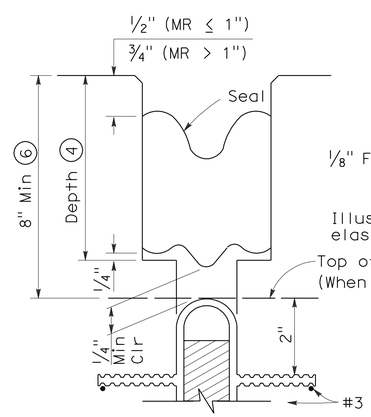

TYPE B JOINT SEAL
IN MINIMUM WIDTH POSITION (W_2)

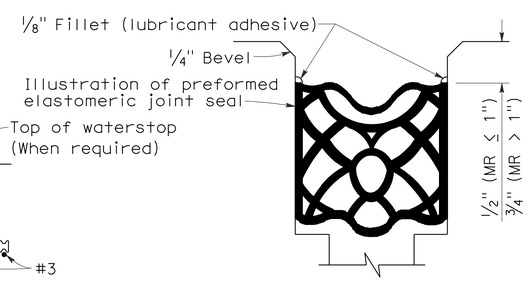

TYPE B SEAL

Movement Rating ≤ 2"

STATE OF CALIFORNIA
DEPARTMENT OF TRANSPORTATION

JOINT SEALS (MAXIMUM MOVEMENT RATING = 2")

NO SCALE

RSP B6-21 DATED OCTOBER 5, 2007 SUPERSEDES STANDARD PLAN B6-21 DATED MAY 1, 2006 - PAGE 258 OF THE STANDARD PLANS BOOK DATED MAY 2006.

REVISED STANDARD PLAN RSP B6-21

2006 REVISED STANDARD PLAN RSP B6-21

5-8-07

DIST	COUNTY	ROUTE	POST MILES TOTAL PROJECT	SHEET NO.	TOTAL SHEETS
05	Mon	1	1.5/T92.0	8	21

REGISTERED CIVIL ENGINEER 8-25-10 DATE

11-29-10
PLANS APPROVAL DATE

REGISTERED PROFESSIONAL ENGINEER TIMOTHY J. POWELL No. C 61037 Exp. 12-31-10 CIVIL STATE OF CALIFORNIA

THE STATE OF CALIFORNIA OR ITS OFFICERS OR AGENTS SHALL NOT BE RESPONSIBLE FOR THE ACCURACY OR COMPLETENESS OF ELECTRONIC COPIES OF THIS PLAN SHEET.

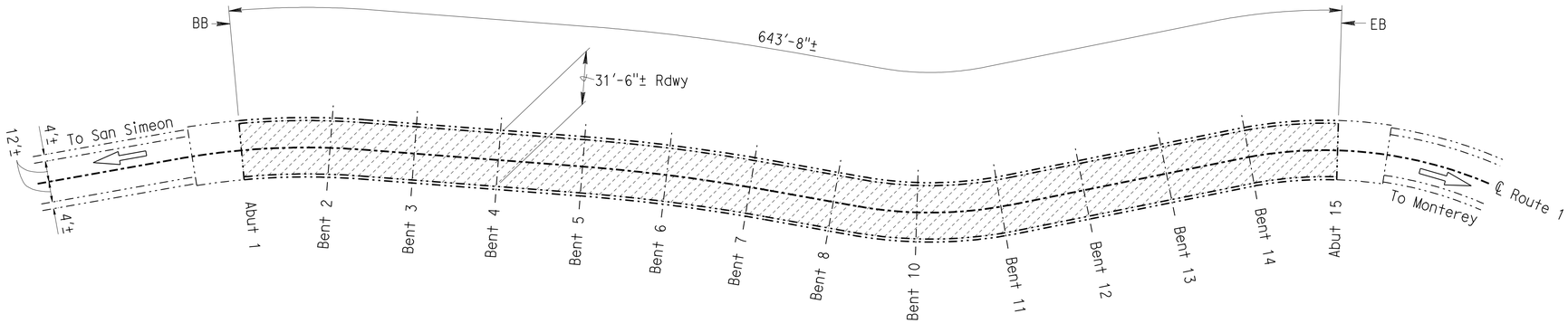

FOREST BOUNDARY VIADUCT

BR NO. 44-0279, Mon, ROUTE 1, PM 1.49
1" = 40'

NOTES: (APPLY TO ALL SHEETS)

Indicates existing.

THE CONTRACTOR SHALL VERIFY ALL CONTROLLING FIELD DIMENSIONS BEFORE ORDERING OR FABRICATING ANY MATERIAL.

STANDARD PLAN SHEET NUMBER
DETAIL NUMBER

NOTES: (APPLY TO THIS SHEET ONLY)

Indicates limits of clean and treat existing bridge deck with high molecular weight methacrylate.

FOREST BOUNDARY VIADUCT BRIDGE NO 44-0279

QUANTITIES

CLEAN BRIDGE DECK	20,286	SQFT
TREAT BRIDGE DECK	20,286	SQFT
FURNISH BRIDGE DECK TREATMENT MATERIAL	226	GAL

BIG CREEK BRIDGE NO 44-0056

QUANTITIES

CLEAN BRIDGE DECK	15,768	SQFT
TREAT BRIDGE DECK	15,768	SQFT
FURNISH BRIDGE DECK TREATMENT MATERIAL	176	GAL

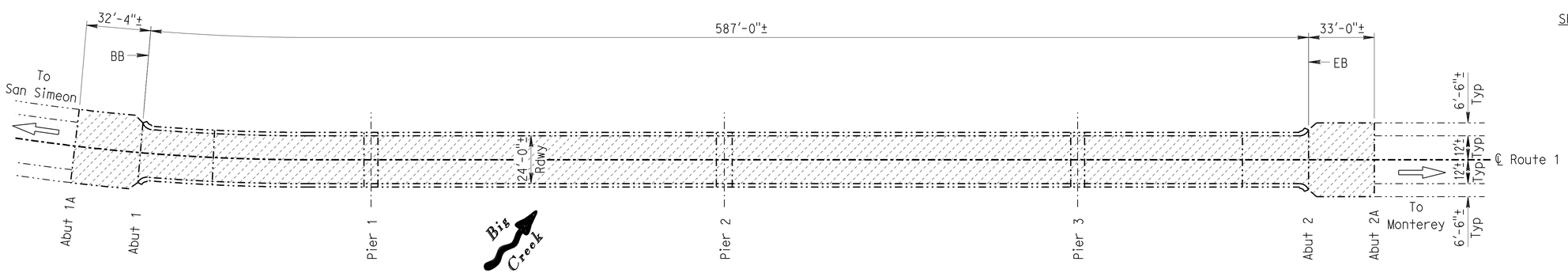

BIG CREEK

BR NO. 44-0056, Mon, ROUTE 1, PM 28.09
1" = 30'

INDEX TO PLANS

SHEET NO.	TITLE
1	GENERAL PLAN NO. 1
2	GENERAL PLAN NO. 2
3	GENERAL PLAN NO. 3
4	GENERAL PLAN NO. 4
5	GENERAL PLAN NO. 5
6	GENERAL PLAN NO. 6
7	GENERAL PLAN NO. 7
8	GENERAL PLAN NO. 8
9	VILLA CREEK RESTRAINER DETAILS NO. 1
10	VILLA CREEK RESTRAINER DETAILS NO. 2
11	VILLA CREEK SPALL LOCATION TABLE
12	ROCKY CREEK SPALL LOCATION TABLE NO. 1
13	ROCKY CREEK SPALL LOCATION TABLE NO. 2
14	MISCELLANEOUS DETAILS

STANDARD PLANS DATED MAY 2006

SHEET NO.	TITLE
A10A	ACRONYMS AND ABBREVIATIONS (SHEET 1 OF 2)
A10B	ACRONYMS AND ABBREVIATIONS (SHEET 2 OF 2)
RSP B6-21	JOINT SEALS (MAXIMUM MOVEMENT RATING = 2")

Michael J. Lee 8-25-10
DESIGN ENGINEER

DESIGN	BY P. Gagnier	CHECKED H. Dang	LAYOUT	BY G.F. Bidwell	CHECKED P. Gagnier
DETAILS	BY G.F. Bidwell	CHECKED H. Dang	SPECIFICATIONS	BY Todd Geerts	PLANS AND SPECIFICATIONS COMPARED Todd Geerts
QUANTITIES	BY P. Gagnier	CHECKED H. Dang			

STATE OF CALIFORNIA
DEPARTMENT OF TRANSPORTATION

DIVISION OF MAINTENANCE
STRUCTURE MAINTENANCE DESIGN

BRIDGE NO. VARIOUS
POST MILE VARIES

ROUTE 1 BRIDGES
GENERAL PLAN NO. 1

STRUCTURES MAINTENANCE GENERAL PLAN & DETAIL SHEET (ENGLISH) (REV. 10/17/07)

ORIGINAL SCALE IN INCHES FOR REDUCED PLANS 0 1 2 3

CU 05
EA 0S9801

DISREGARD PRINTS BEARING EARLIER REVISION DATES

REVISION DATES: 1-11-10 3-16-10 3-23-10 5-10-10 7-7-10 7-20-10 8-24-10

SHEET 1 OF 14

FILE => 05-0s9801001.dgn

USERNAME => s135318 DATE PLOTTED => 30-NOV-2010 TIME PLOTTED => 15:33

DIST	COUNTY	ROUTE	POST MILES TOTAL PROJECT	SHEET NO.	TOTAL SHEETS
05	Mon	1	1.5/T92.0	9	21

REGISTERED CIVIL ENGINEER 8-25-10 DATE

11-29-10
PLANS APPROVAL DATE

REGISTERED PROFESSIONAL ENGINEER TIMOTHY J. POWELL No. C 61037 Exp. 12-31-10 CIVIL STATE OF CALIFORNIA

THE STATE OF CALIFORNIA OR ITS OFFICERS OR AGENTS SHALL NOT BE RESPONSIBLE FOR THE ACCURACY OR COMPLETENESS OF ELECTRONIC COPIES OF THIS PLAN SHEET.

VILLA CREEK BRIDGE NO 44-0028

QUANTITIES

REMOVE UNSOUND CONCRETE	85	CF
REPAIR SPALLED SURFACE	79	CF
RAPID SETTING CONCRETE (PATCH)	85	CF
REPLACE CABLE RESTRAINER	9,170	LB

NOTES: (APPLY TO THIS SHEET ONLY)

(1) Indicates limits of repair areas of spalled concrete on structure. See VILLA CREEK SPALL LOCATION TABLE sheet for loacations. For spall repair details see "CONCRETE SPALL REPAIR DETAIL" on MISCELLANEOUS DETAILS sheet.

(2) Replace existing vertical restrainers (total 2 per pier) at Piers 2, 3, 4 & 5; for details see VILLA CREEK RESTRAINER DETAILS sheet.

1 thru 5 — (3) Indicates girder designation.

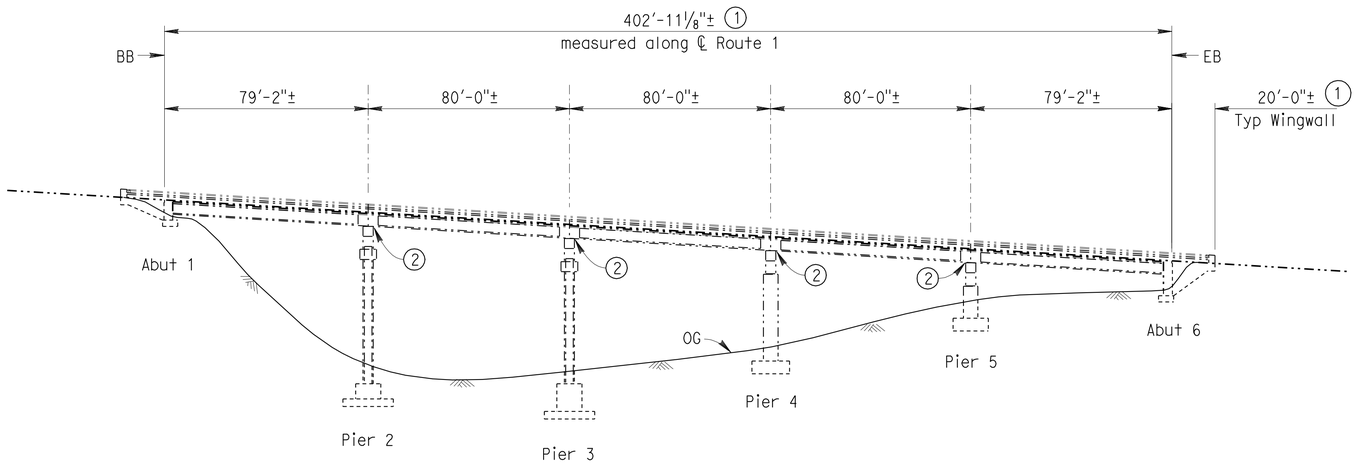

VILLA CREEK - ELEVATION

BR NO. 44-0028, Mon, ROUTE 1, PM 7.07
1" = 30'

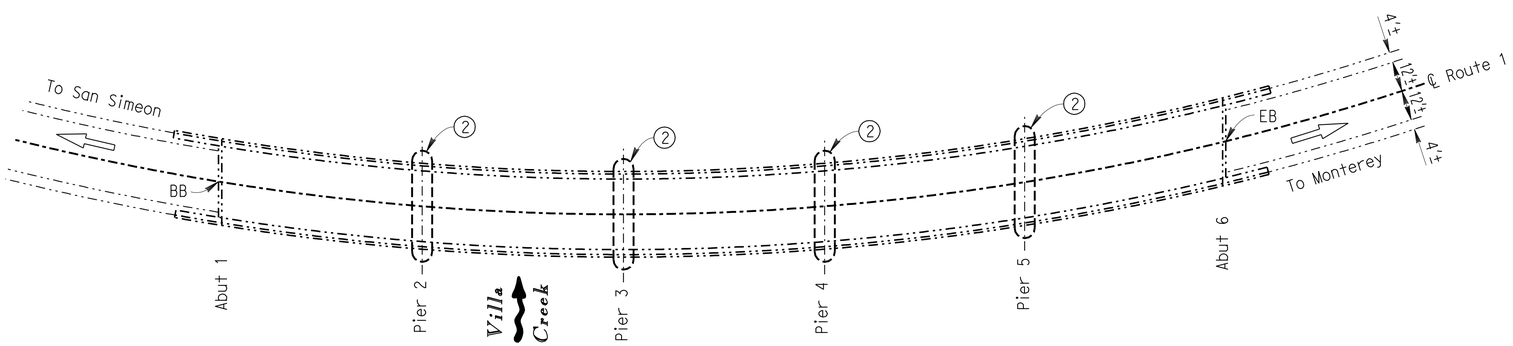

VILLA CREEK - PLAN

BR NO. 44-0028, Mon, ROUTE 1, PM 7.07
1" = 30'

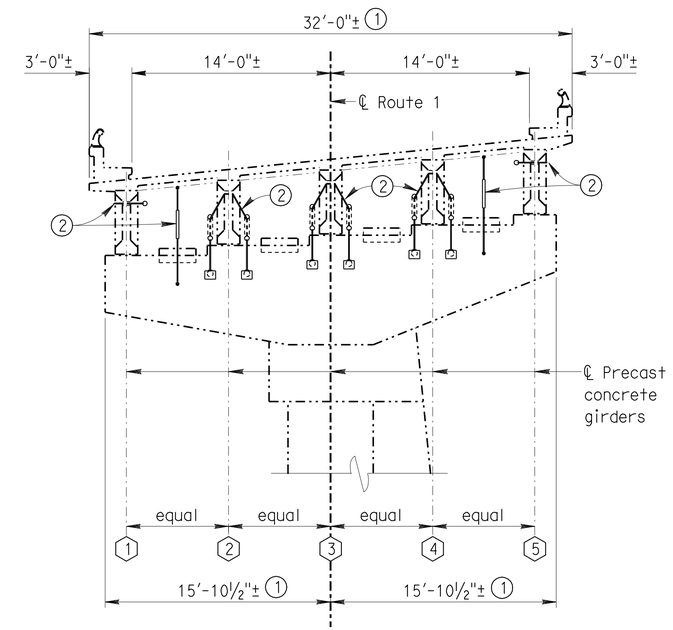

VILLA CREEK TYPICAL SECTION

BR NO. 44-0028, Mon, ROUTE 1, PM 7.07
3/16" = 1'

Michael J. Lee 8-25-10 DESIGN ENGINEER	DESIGN	BY P. Gagnier	CHECKED H. Dang	LAYOUT	BY G.F. Bidwell	CHECKED P. Gagnier	STATE OF CALIFORNIA DEPARTMENT OF TRANSPORTATION
	DETAILS	BY G.F. Bidwell	CHECKED H. Dang	SPECIFICATIONS	BY Todd Geerts	PLANS AND SPECIFICATIONS COMPARED Todd Geerts	
	QUANTITIES	BY P. Gagnier	CHECKED H. Dang				

STRUCTURES MAINTENANCE GENERAL PLAN & DETAIL SHEET (ENGLISH) (REV. 10/17/07)

ORIGINAL SCALE IN INCHES FOR REDUCED PLANS 0 1 2 3

DIVISION OF MAINTENANCE
STRUCTURE MAINTENANCE DESIGN

CU 05
EA 0S9801

BRIDGE NO. VARIOUS
POST MILE VARIES

ROUTE 1 BRIDGES

GENERAL PLAN NO. 2

DISREGARD PRINTS BEARING EARLIER REVISION DATES

REVISION DATES: 1-11-10 3-16-10 3-23-10 5-10-10 7-7-10 7-28-10 8-24-10

SHEET 2 OF 14

FILE => 05-0s9801002.dgn

USERNAME => s135318 DATE PLOTTED => 30-NOV-2010 TIME PLOTTED => 15:40

DIST	COUNTY	ROUTE	POST MILES TOTAL PROJECT	SHEET NO.	TOTAL SHEETS
05	Mon	1	1.5/T92.0	10	21

REGISTERED CIVIL ENGINEER 8-25-10 DATE

11-29-10
PLANS APPROVAL DATE

THE STATE OF CALIFORNIA OR ITS OFFICERS OR AGENTS SHALL NOT BE RESPONSIBLE FOR THE ACCURACY OR COMPLETENESS OF ELECTRONIC COPIES OF THIS PLAN SHEET.

REGISTERED PROFESSIONAL ENGINEER TIMOTHY J. POWELL No. C 61037 Exp. 12-31-10 CIVIL STATE OF CALIFORNIA

NOTES: (APPLY TO THIS SHEET ONLY)

Indicates limits of clean and treat existing bridge deck with high molecular weight methacrylate.

(1) Indicates limits of repair areas of spalled concrete on structure. See "DECK REPAIR TABLE" on MISCELLANEOUS DETAILS sheet.

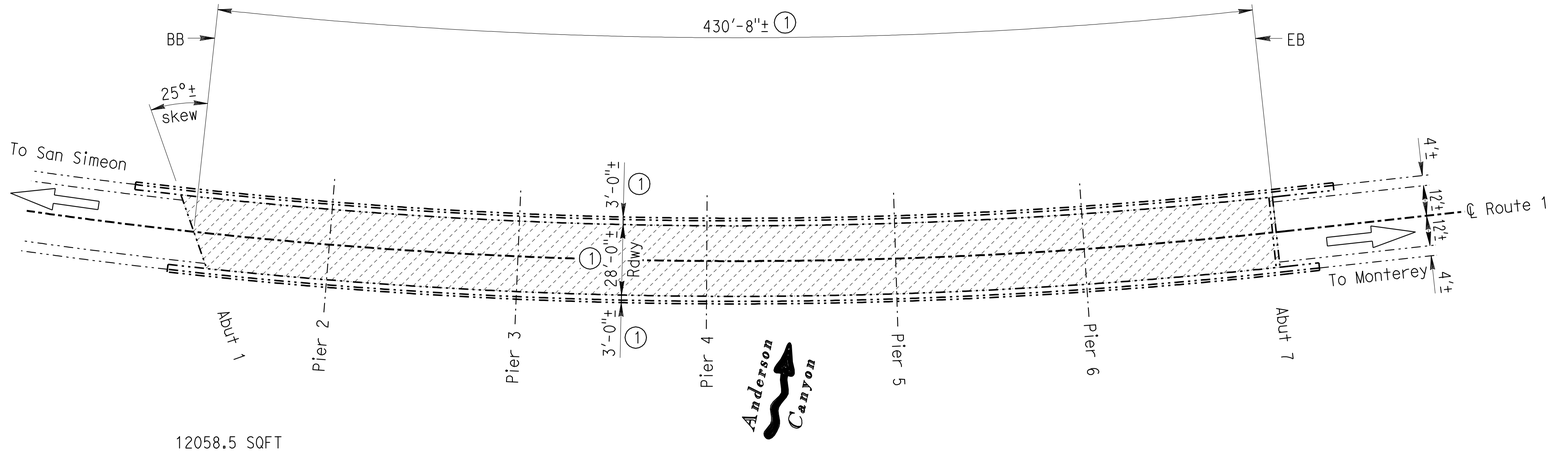

ANDERSON CANYON

BR NO. 44-0049, Mon, ROUTE 1, PM 35.35
1" = 30'

ANDERSON CANYON	BRIDGE NO 44-0049	
QUANTITIES		
REMOVE UNSOUND CONCRETE	41	CF
CLEAN BRIDGE DECK	12,068	SQFT
RAPID SETTING CONCRETE (PATCH)	41	CF
TREAT BRIDGE DECK	12,068	SQFT
FURNISH BRIDGE DECK TREATMENT MATERIAL	135	GAL

SYCAMORE DRAW	BRIDGE NO 44-0047	
QUANTITIES		
CLEAN BRIDGE DECK	1,972	SQFT
TREAT BRIDGE DECK	1,972	SQFT
FURNISH BRIDGE DECK TREATMENT MATERIAL	22	GAL

CASTRO CANYON	BRIDGE NO 44-0035	
QUANTITIES		
REMOVE UNSOUND CONCRETE	23	CF
CLEAN BRIDGE DECK	6,692	SQFT
RAPID SETTING CONCRETE (PATCH)	23	CF
TREAT BRIDGE DECK	6,692	SQFT
PUBLIC SAFETY PLAN	LUMP SUM	
FURNISH BRIDGE DECK TREATMENT MATERIAL	75	GAL

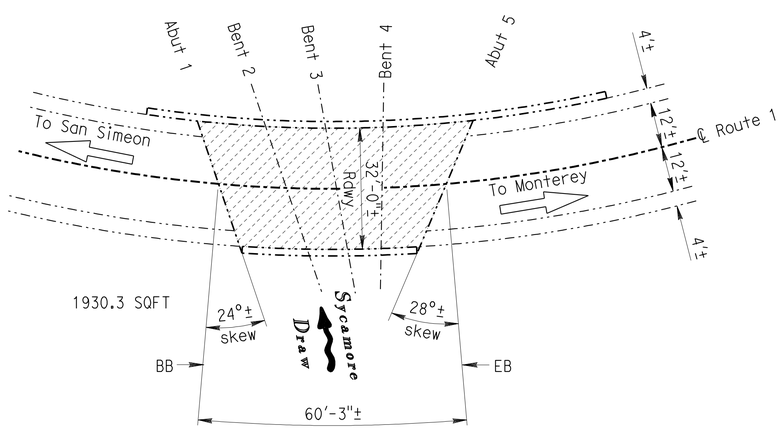

SYCAMORE DRAW

BR NO. 44-0047, Mon, ROUTE 1, PM 39.28
1" = 20'

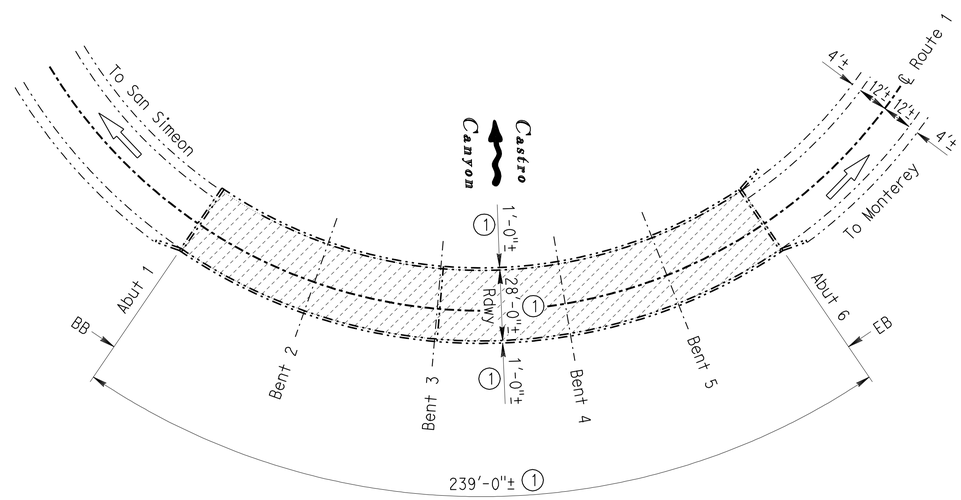

CASTRO CANYON

BR NO. 44-0035, Mon, ROUTE 1, PM 43.12
1" = 30'

Michael J. Lee 8-25-10 DESIGN ENGINEER	DESIGN	BY P. Gagnier	CHECKED H. Dang	LAYOUT	BY G.F. Bidwell	CHECKED P. Gagnier	STATE OF CALIFORNIA DEPARTMENT OF TRANSPORTATION
	DETAILS	BY G.F. Bidwell	CHECKED H. Dang	SPECIFICATIONS	BY Todd Geerts	PLANS AND SPECIFICATIONS COMPARED Todd Geerts	
	QUANTITIES	BY P. Gagnier	CHECKED H. Dang				

DIVISION OF MAINTENANCE
STRUCTURE MAINTENANCE DESIGN

BRIDGE NO. VARIOUS
POST MILE VARIES

ROUTE 1 BRIDGES
GENERAL PLAN NO. 3

STRUCTURES MAINTENANCE GENERAL PLAN & DETAIL SHEET (ENGLISH) (REV. 10/17/07)

ORIGINAL SCALE IN INCHES FOR REDUCED PLANS 0 1 2 3

CU 05
EA 0S9801

DISREGARD PRINTS BEARING EARLIER REVISION DATES

REVISION DATES: ~~1-11-10~~ ~~3-16-10~~ ~~3-23-10~~ ~~5-10-10~~ ~~7-7-10~~ 7-20-10

SHEET 3 OF 14

FILE => 05-0s9801003.dgn

USERNAME => s135318 DATE PLOTTED => 30-NOV-2010 TIME PLOTTED => 15:40

DIST	COUNTY	ROUTE	POST MILES TOTAL PROJECT	SHEET NO.	TOTAL SHEETS
05	Mon	1	1.5/T92.0	11	21

REGISTERED CIVIL ENGINEER 8-25-10 DATE

11-29-10
PLANS APPROVAL DATE

REGISTERED PROFESSIONAL ENGINEER TIMOTHY J. POWELL No. C 61037 Exp. 12-31-10 CIVIL STATE OF CALIFORNIA

THE STATE OF CALIFORNIA OR ITS OFFICERS OR AGENTS SHALL NOT BE RESPONSIBLE FOR THE ACCURACY OR COMPLETENESS OF ELECTRONIC COPIES OF THIS PLAN SHEET.

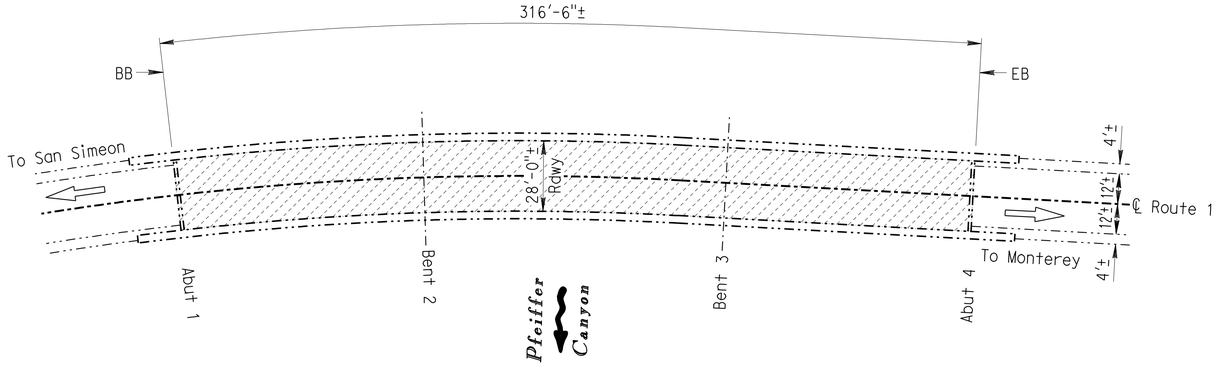

PFEIFFER CANYON

BR NO. 44-0060, Mon, ROUTE 1, PM 45.52
1" = 30'

PFEIFFER CANYON BRIDGE NO 44-0060

QUANTITIES

CLEAN BRIDGE DECK	8,862	SQFT
TREAT BRIDGE DECK	8,862	SQFT
FURNISH BRIDGE DECK TREATMENT MATERIAL	99	GAL

BIG SUR RIVER BRIDGE NO 44-0021

QUANTITIES

CLEAN BRIDGE DECK	5,720	SQFT
TREAT BRIDGE DECK	5,720	SQFT
PUBLIC SAFETY PLAN	LUMP SUM	
FURNISH BRIDGE DECK TREATMENT MATERIAL	64	GAL

JUAN HIGUERA CREEK BRIDGE NO 44-0068

QUANTITIES

CLEAN BRIDGE DECK	4,520	SQFT
TREAT BRIDGE DECK	4,520	SQFT
PUBLIC SAFETY PLAN	LUMP SUM	
FURNISH BRIDGE DECK TREATMENT MATERIAL	50	GAL

NOTES: (APPLY TO THIS SHEET ONLY)

Indicates limits of clean and treat existing bridge deck with high molecular weight methacrylate.

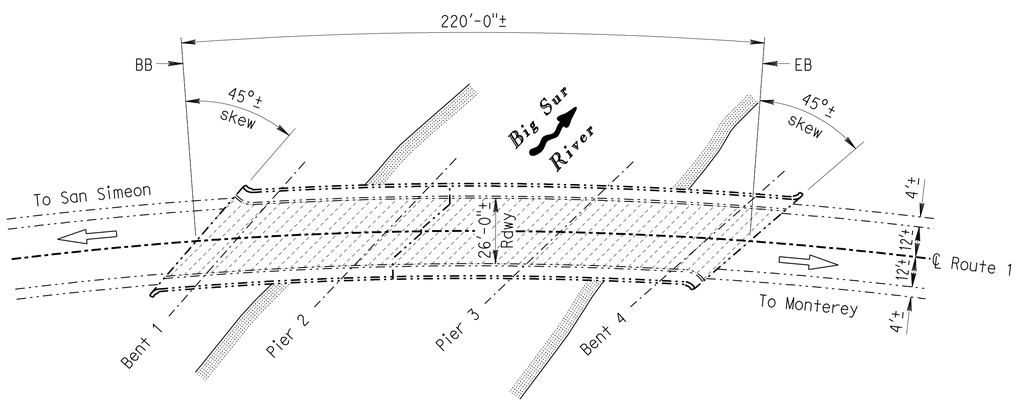

BIG SUR RIVER

BR NO. 44-0021, Mon, ROUTE 1, PM 46.60
1" = 30'

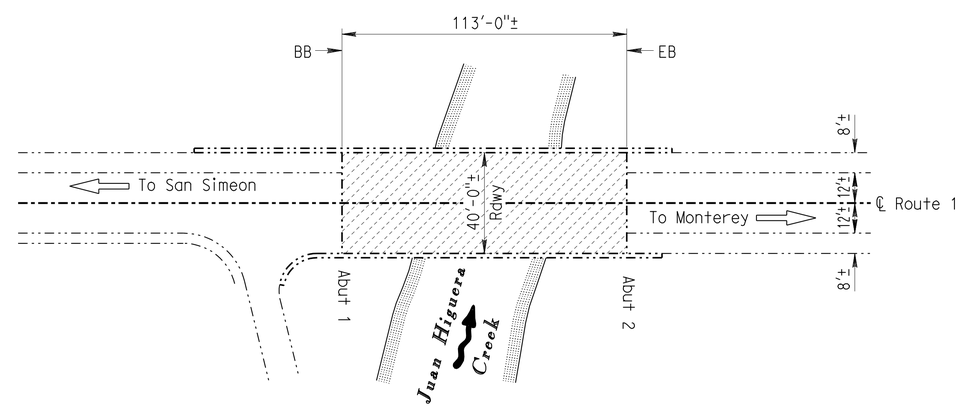

JUAN HIGUERA CREEK

BR NO. 44-0068, Mon, ROUTE 1, PM 47.98
1" = 30'

Michael J. Lee 8-25-10 DESIGN ENGINEER	DESIGN	BY P. Gagnier	CHECKED H. Dang	LAYOUT	BY G.F. Bidwell	CHECKED P. Gagnier	STATE OF CALIFORNIA DEPARTMENT OF TRANSPORTATION	DIVISION OF MAINTENANCE STRUCTURE MAINTENANCE DESIGN	BRIDGE NO. VARIOUS
	DETAILS	BY G.F. Bidwell	CHECKED H. Dang			PLANS AND SPECIFICATIONS COMPARED			POST MILE VARIES
	QUANTITIES	BY P. Gagnier	CHECKED H. Dang	SPECIFICATIONS	BY Todd Geerts	Todd Geerts			

ROUTE 1 BRIDGES
GENERAL PLAN NO. 4

STRUCTURES MAINTENANCE GENERAL PLAN & DETAIL SHEET (ENGLISH) (REV. 10/17/07)

ORIGINAL SCALE IN INCHES FOR REDUCED PLANS 0 1 2 3

CU 05
EA 0S9801

DISREGARD PRINTS BEARING EARLIER REVISION DATES

REVISION DATES: 1-11-10 3-16-10 3-23-10 5-10-10 7-7-10 7-20-10

SHEET 4 OF 14

FILE => 05-0s9801004.dgn

USERNAME => s135318 DATE PLOTTED => 30-NOV-2010 TIME PLOTTED => 15:40

DIST	COUNTY	ROUTE	POST MILES TOTAL PROJECT	SHEET NO.	TOTAL SHEETS
05	Mon	1	1.5/T92.0	12	21

REGISTERED CIVIL ENGINEER 8-25-10 DATE

11-29-10
PLANS APPROVAL DATE

REGISTERED PROFESSIONAL ENGINEER TIMOTHY J. POWELL No. C 61037 Exp. 12-31-10 CIVIL STATE OF CALIFORNIA

THE STATE OF CALIFORNIA OR ITS OFFICERS OR AGENTS SHALL NOT BE RESPONSIBLE FOR THE ACCURACY OR COMPLETENESS OF ELECTRONIC COPIES OF THIS PLAN SHEET.

ROCKY CREEK BRIDGE NO 44-0036

QUANTITIES

REMOVE UNSOUND CONCRETE	149	CF
REPAIR SPALLED SURFACE	127	CF
RAPID SETTING CONCRETE (PATCH)	149	CF

NOTES: (APPLY TO THIS SHEET ONLY)

(1) Indicates limits of repair areas of spalled concrete on structure. See ROCKY CREEK SPALL LOCATION TABLE NO. 1 and ROCKY CREEK SPALL LOCATION TABLE NO. 2 sheets for spall location. For spall repair details see "CONCRETE SPALL REPAIR DETAIL" on MISCELLANEOUS DETAILS sheet.

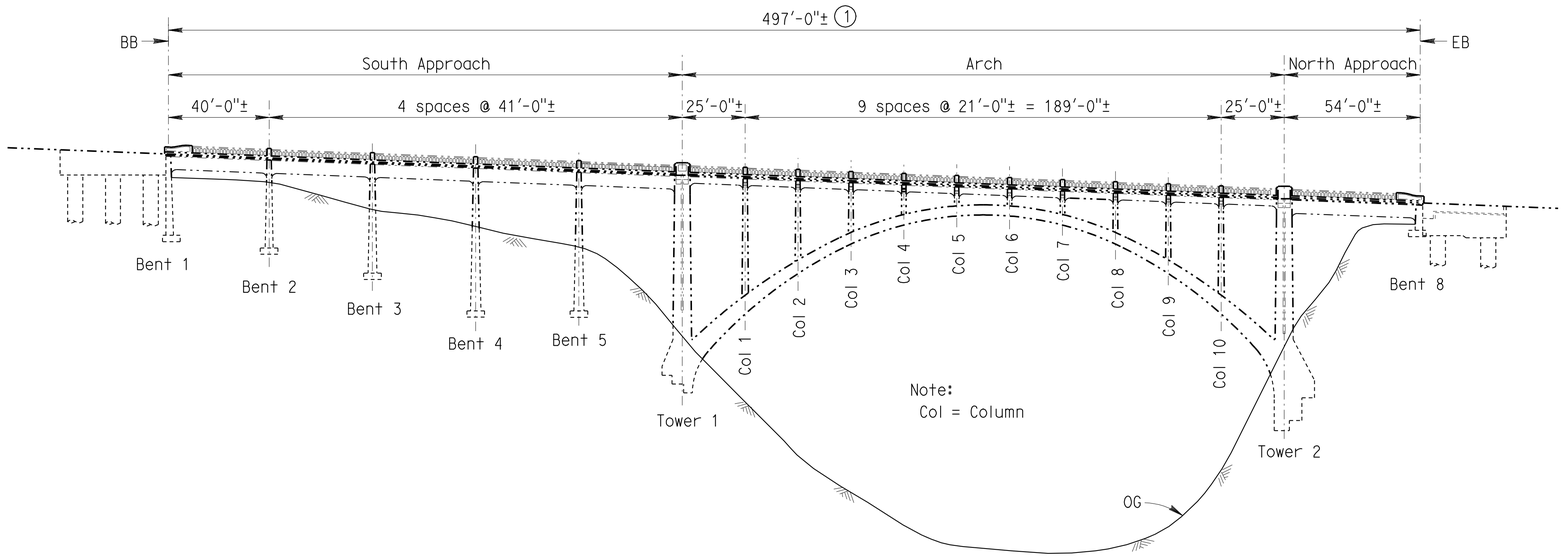

ROCKY CREEK - ELEVATION

BR NO. 44-0036, Mon, ROUTE 1, PM 60.05
1" = 30'

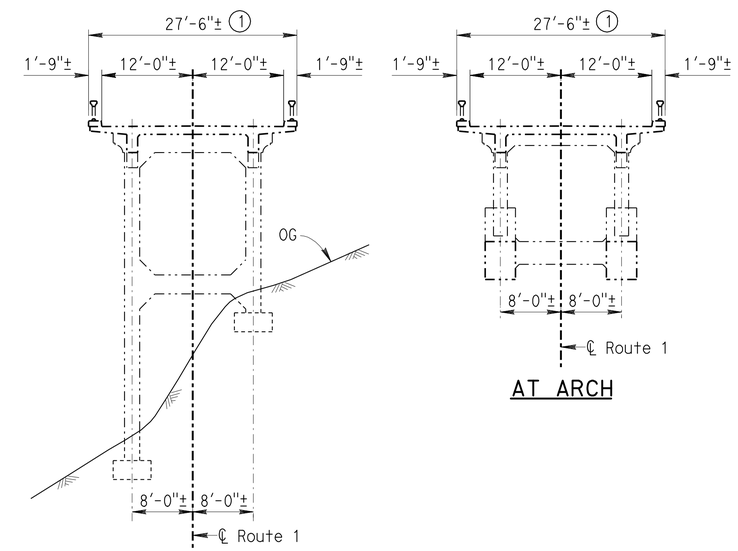

ROCKY CREEK - TYPICAL SECTION

BR NO. 44-0036, Mon, ROUTE 1, PM 60.05
1" = 10'

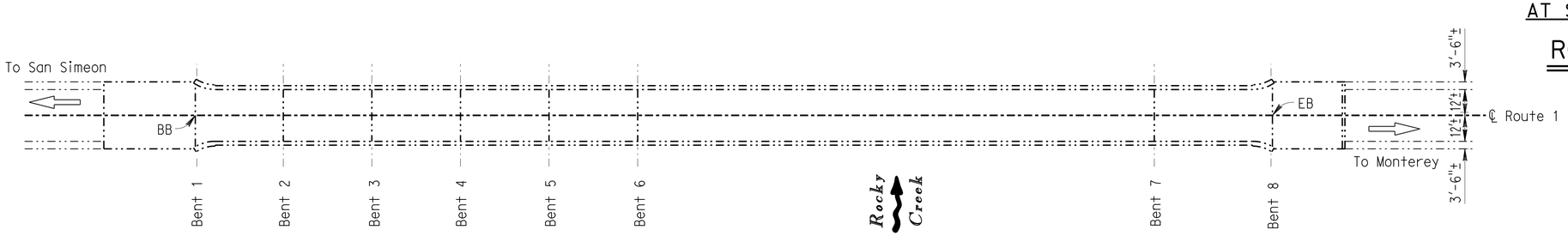

ROCKY CREEK - PLAN

BR NO. 44-0036, Mon, ROUTE 1, PM 60.05
1" = 30'

Michael J. Lee 8-25-10 DESIGN ENGINEER	DESIGN	BY P. Gagnier	CHECKED H. Dang	LAYOUT	BY G.F. Bidwell	CHECKED P. Gagnier	STATE OF CALIFORNIA DEPARTMENT OF TRANSPORTATION
	DETAILS	BY G.F. Bidwell	CHECKED H. Dang	SPECIFICATIONS	BY Todd Geerts	PLANS AND SPECIFICATIONS COMPARED Todd Geerts	
	QUANTITIES	BY P. Gagnier	CHECKED H. Dang				

STRUCTURES MAINTENANCE GENERAL PLAN & DETAIL SHEET (ENGLISH) (REV. 10/17/07)

ORIGINAL SCALE IN INCHES FOR REDUCED PLANS 0 1 2 3

DIVISION OF MAINTENANCE
STRUCTURE MAINTENANCE DESIGN

CU 05
EA 0S9801

BRIDGE NO. VARIOUS
POST MILE VARIES

ROUTE 1 BRIDGES

GENERAL PLAN NO. 5

DISREGARD PRINTS BEARING EARLIER REVISION DATES

REVISION DATES: 1-11-10 3-16-10 3-22-10 5-10-10 7-7-10 7-28-10 8-24-10

SHEET 5 OF 14

FILE => 05-0s9801005.dgn

USERNAME => s135318 DATE PLOTTED => 30-NOV-2010 TIME PLOTTED => 15:40

DIST	COUNTY	ROUTE	POST MILES TOTAL PROJECT	SHEET NO.	TOTAL SHEETS
05	Mon	1	1.5/T92.0	13	21

REGISTERED CIVIL ENGINEER 8-25-10 DATE

11-29-10
PLANS APPROVAL DATE

THE STATE OF CALIFORNIA OR ITS OFFICERS OR AGENTS SHALL NOT BE RESPONSIBLE FOR THE ACCURACY OR COMPLETENESS OF ELECTRONIC COPIES OF THIS PLAN SHEET.

REGISTERED PROFESSIONAL ENGINEER TIMOTHY J. POWELL No. C 61037 Exp. 12-31-10 CIVIL STATE OF CALIFORNIA

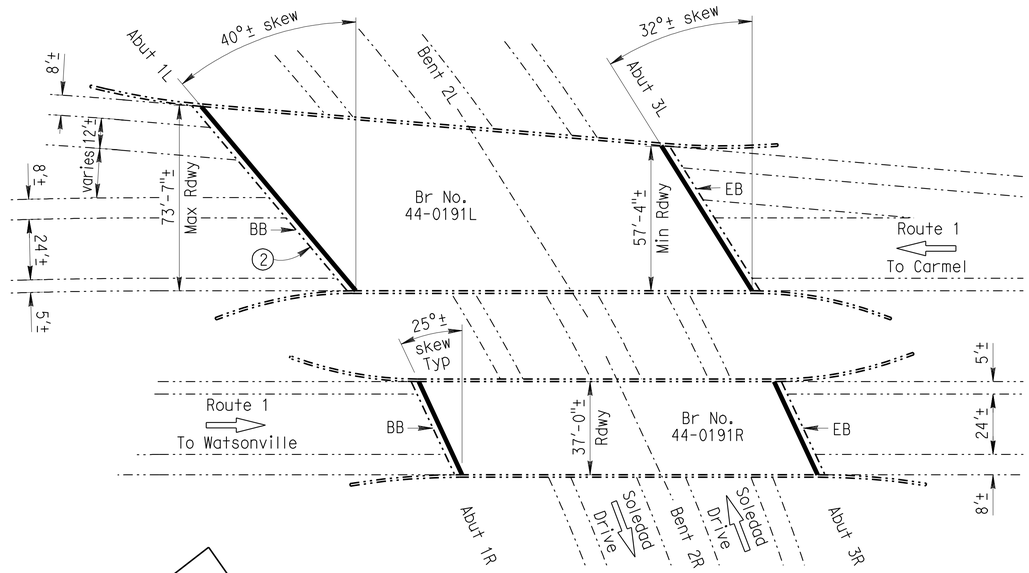

SOLEDAD DRIVE UNDERCROSSING

BR NO. 44-0191R/L, Mon, ROUTE 1, PM R76.00
1" = 30'

SOLEDAD DRIVE UNDERCROSSING BRIDGE NO 44-0191R/L

QUANTITIES		
CLEAN EXPANSION JOINT	251	LF
INJECT CRACK (EPOXY)	18	LF
JOINT SEAL (MR 1")	251	LF

SAND CITY UNDERCROSSING BRIDGE NO 44-0188L

QUANTITIES		
REMOVE CONTRAST TREATMENT	3,515	SQFT
REMOVE UNSOUND CONCRETE	106	CF
CLEAN BRIDGE DECK	3,515	SQFT
RAPID SETTING CONCRETE (PATCH)	106	CF
GALVANIC ANODE	80	EA
TREAT BRIDGE DECK	3,515	SQFT
FURNISH BRIDGE DECK TREATMENT MATERIAL	39	GAL

NORTH ENTRANCE OVERCROSSING BRIDGE NO 44-0203

QUANTITIES		
CLEAN BRIDGE DECK	7,920	SQFT
TREAT BRIDGE DECK	7,920	SQFT
PUBLIC SAFETY PLAN	LUMP SUM	
FURNISH BRIDGE DECK TREATMENT MATERIAL	88	GAL

NOTES: (APPLY TO THIS SHEET ONLY)

Indicates location of remove existing joint seal and place new joint seal. See MISCELLANEOUS DETAILS sheet.

Indicates limits of clean and treat existing bridge deck with high molecular weight methacrylate.

Indicates limits of remove existing contrast treatment and clean and treat existing bridge deck with high molecular weight methacrylate. Repair areas of spalled concrete on deck. See "DECK REPAIR TABLE" on MISCELLANEOUS DETAILS sheet.

(1) Indicates limits of repair areas of spalled concrete on barrier rail. Place galvanic anodes per manufacturer's recommendations at each location and as directed by the Engineer prior to patching with rapid setting concrete, 2 anodes per spalled overlay, approximately 80 anodes total.

(2) Epoxy inject cracks in abutment backwall as directed by the Engineer (approximate length = 18').

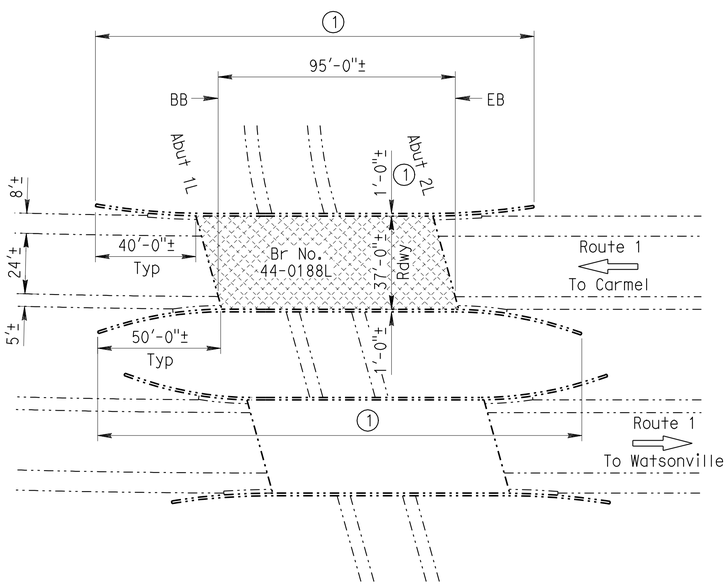

SAND CITY UNDERCROSSING

BR NO. 44-0188L, Mon, ROUTE 1, PM R80.27
1" = 30'

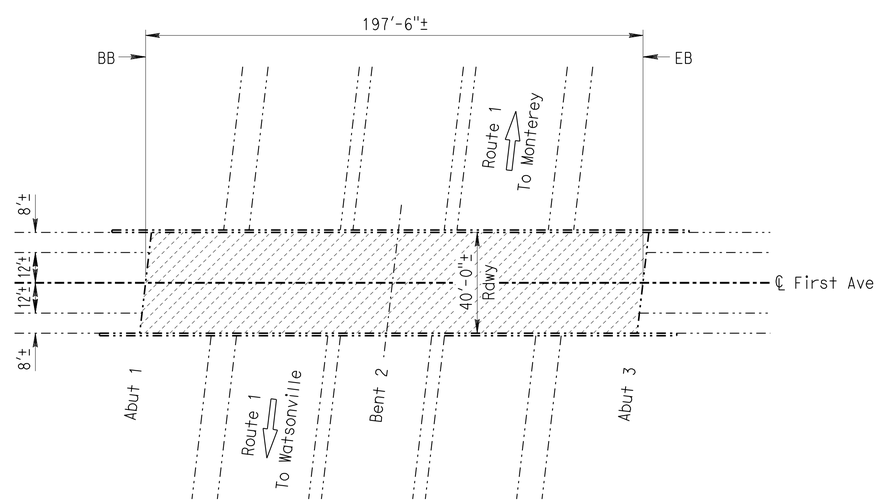

NORTH ENTRANCE OVERCROSSING

BR NO. 44-0203, Mon, ROUTE 1, PM R84.48
1" = 30'

DESIGN ENGINEER 8-25-10	DESIGN	BY P. Gagnier	CHECKED H. Dang	LAYOUT	BY G.F. Bidwell
	DETAILS	BY G.F. Bidwell	CHECKED H. Dang	SPECIFICATIONS	BY Todd Geerts
	QUANTITIES	BY P. Gagnier	CHECKED H. Dang		

CHECKED P. Gagnier
PLANS AND SPECIFICATIONS COMPARED Todd Geerts

STATE OF CALIFORNIA DEPARTMENT OF TRANSPORTATION

DIVISION OF MAINTENANCE STRUCTURE MAINTENANCE DESIGN

BRIDGE NO. VARIOUS
POST MILE VARIES

ROUTE 1 BRIDGES
GENERAL PLAN NO. 6

STRUCTURES MAINTENANCE GENERAL PLAN & DETAIL SHEET (ENGLISH) (REV. 10/17/07)

ORIGINAL SCALE IN INCHES FOR REDUCED PLANS 0 1 2 3

CU 05
EA 0S9801

DISREGARD PRINTS BEARING EARLIER REVISION DATES

REVISION DATES: 1-11-10 3-16-10 3-23-10 5-10-10 7-1-10 7-20-10

SHEET 6 OF 14

FILE => 05-0s9801006.dgn

USERNAME => s135318 DATE PLOTTED => 30-NOV-2010 TIME PLOTTED => 15:40

DIST	COUNTY	ROUTE	POST MILES TOTAL PROJECT	SHEET NO.	TOTAL SHEETS
05	Mon	1	1.5/T92.0	14	21

T J Powell 8-25-10
REGISTERED CIVIL ENGINEER DATE

11-29-10
PLANS APPROVAL DATE

REGISTERED PROFESSIONAL ENGINEER TIMOTHY J. POWELL No. C 61037 Exp. 12-31-10 CIVIL STATE OF CALIFORNIA

THE STATE OF CALIFORNIA OR ITS OFFICERS OR AGENTS SHALL NOT BE RESPONSIBLE FOR THE ACCURACY OR COMPLETENESS OF ELECTRONIC COPIES OF THIS PLAN SHEET.

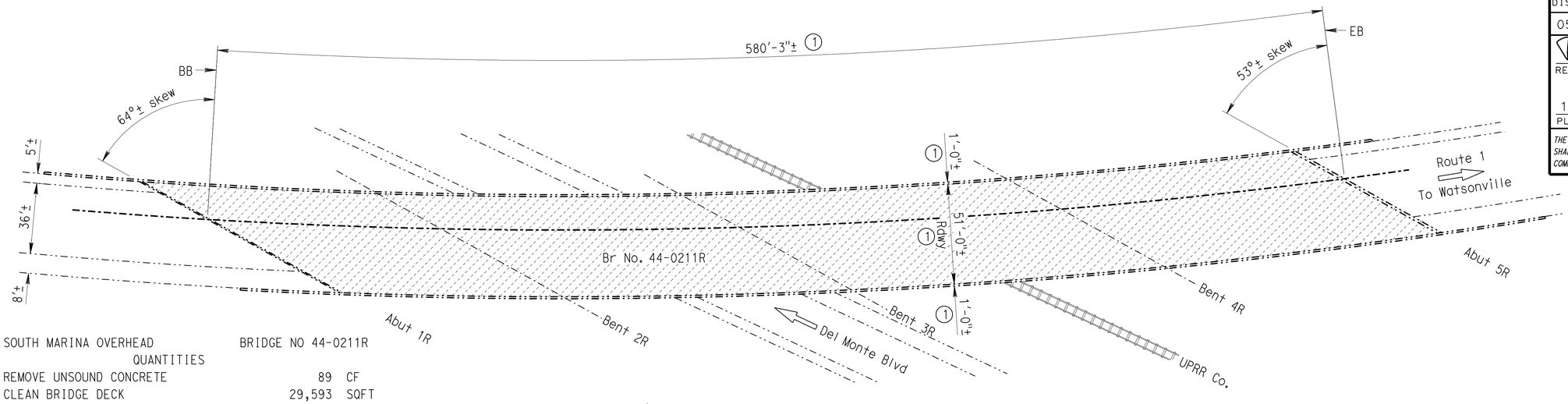

NOTES: (APPLY TO THIS SHEET ONLY)

Indicates limits of clean and treat existing bridge deck with high molecular weight methacrylate.

(1) Indicates limits of repair areas of spalled concrete on structure. See "DECK REPAIR TABLE" on MISCELLANEOUS DETAILS sheet.

SOUTH MARINA OVERHEAD BRIDGE NO 44-0211R

QUANTITIES

REMOVE UNSOUND CONCRETE	89	CF
CLEAN BRIDGE DECK	29,593	SQFT
RAPID SETTING CONCRETE (PATCH)	89	CF
TREAT BRIDGE DECK	29,593	SQFT
FURNISH BRIDGE DECK TREATMENT MATERIAL	329	GAL

SOUTH MARINA OVERHEAD

BR NO. 44-0211R, Mon, ROUTE 1, PM R85.18
1" = 30'

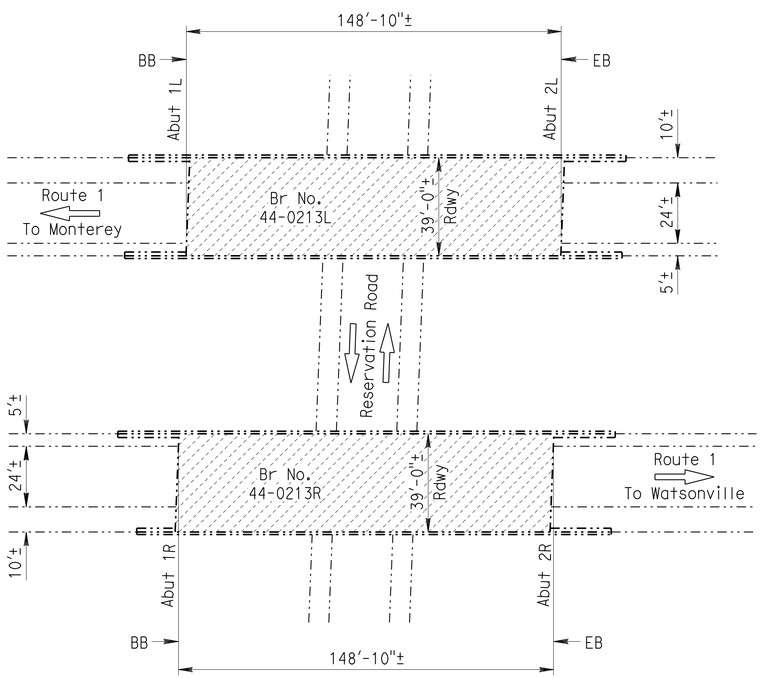

NEPONSET OVERCROSSING BRIDGE NO 44-0215

QUANTITIES

CLEAN BRIDGE DECK	13,880	SQFT
TREAT BRIDGE DECK	13,880	SQFT
FURNISH BRIDGE DECK TREATMENT MATERIAL	155	GAL

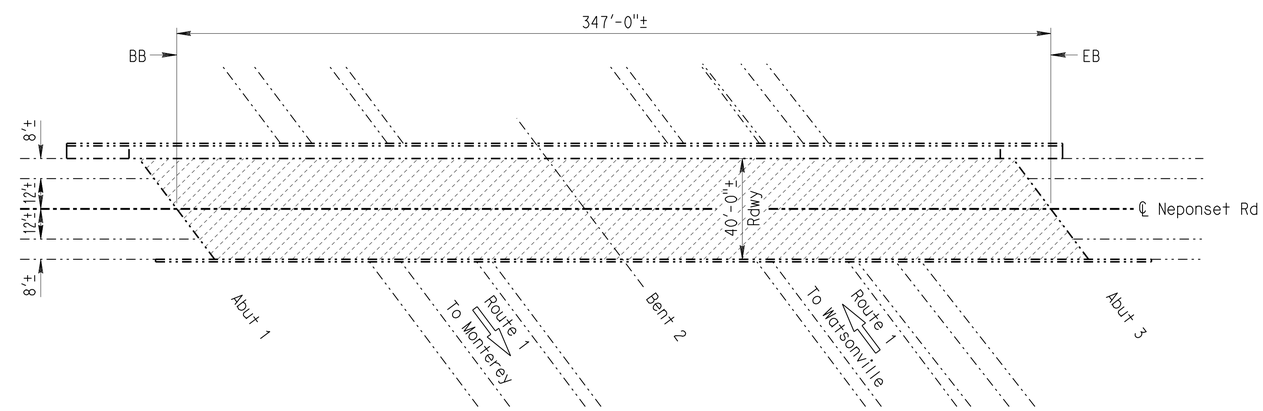

RESERVATION ROAD UNDERCROSSING BRIDGE NO 44-0213R/L

QUANTITIES

CLEAN BRIDGE DECK	11,610	SQFT
TREAT BRIDGE DECK	11,610	SQFT
FURNISH BRIDGE DECK TREATMENT MATERIAL	129	GAL

RESERVATION ROAD UNDERCROSSING

BR NO. 44-0213R/L, Mon, ROUTE 1, PM R86.48
1" = 30'

NEPONSET OVERCROSSING

BR NO. 44-0215, Mon, ROUTE 1, PM R88.64
1" = 30'

Michael J. Lee 8-25-10 DESIGN ENGINEER	DESIGN	BY P. Gagnier	CHECKED H. Dang	LAYOUT	BY G.F. Bidwell	CHECKED P. Gagnier
	DETAILS	BY G.F. Bidwell	CHECKED H. Dang	SPECIFICATIONS	BY Todd Geerts	PLANS AND SPECIFICATIONS COMPARED Todd Geerts
	QUANTITIES	BY P. Gagnier	CHECKED H. Dang			

STRUCTURES MAINTENANCE GENERAL PLAN & DETAIL SHEET (ENGLISH) (REV. 10/17/07)

ORIGINAL SCALE IN INCHES FOR REDUCED PLANS 0 1 2 3

STATE OF CALIFORNIA DEPARTMENT OF TRANSPORTATION

DIVISION OF MAINTENANCE STRUCTURE MAINTENANCE DESIGN

CU 05
EA 0S9801

BRIDGE NO. VARIOUS
POST MILE VARIES

ROUTE 1 BRIDGES

GENERAL PLAN NO. 7

DISREGARD PRINTS BEARING EARLIER REVISION DATES

REVISION DATES: 1-11-10, 3-16-10, 3-23-10, 5-10-10, 7-7-10, 7-20-10

SHEET 7 OF 14

FILE => 05-0s9801007.dgn

USERNAME => s135318 DATE PLOTTED => 30-NOV-2010 TIME PLOTTED => 15:40

DIST	COUNTY	ROUTE	POST MILES TOTAL PROJECT	SHEET NO.	TOTAL SHEETS
05	Mon	1	1.5/T92.0	15	21

REGISTERED CIVIL ENGINEER 8-25-10 DATE

11-29-10
PLANS APPROVAL DATE

REGISTERED PROFESSIONAL ENGINEER TIMOTHY J. POWELL No. C 61037 Exp. 12-31-10 CIVIL STATE OF CALIFORNIA

THE STATE OF CALIFORNIA OR ITS OFFICERS OR AGENTS SHALL NOT BE RESPONSIBLE FOR THE ACCURACY OR COMPLETENESS OF ELECTRONIC COPIES OF THIS PLAN SHEET.

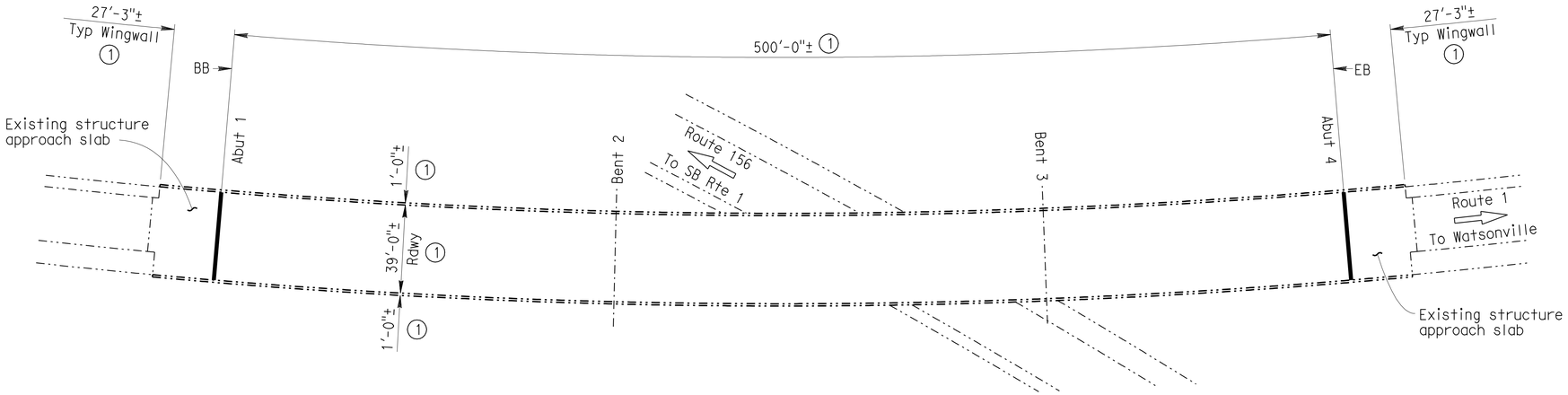

ROUTE 1/156 SEPARATION

BR NO. 44-0218R, Mon, ROUTE 1, PM R90.93
1" = 30'

NOTES: (APPLY TO THIS SHEET ONLY)

Indicates location of remove existing joint seal and place new joint seal. See JOINT SEAL DETAILS NO. 1 sheet.

Indicates limits of clean and treat existing bridge deck with high molecular weight methacrylate.

(1) Indicates limits of repair areas of spalled concrete on deck and railing. See "DECK REPAIR TABLE" on MISCELLANEOUS DETAILS sheet.

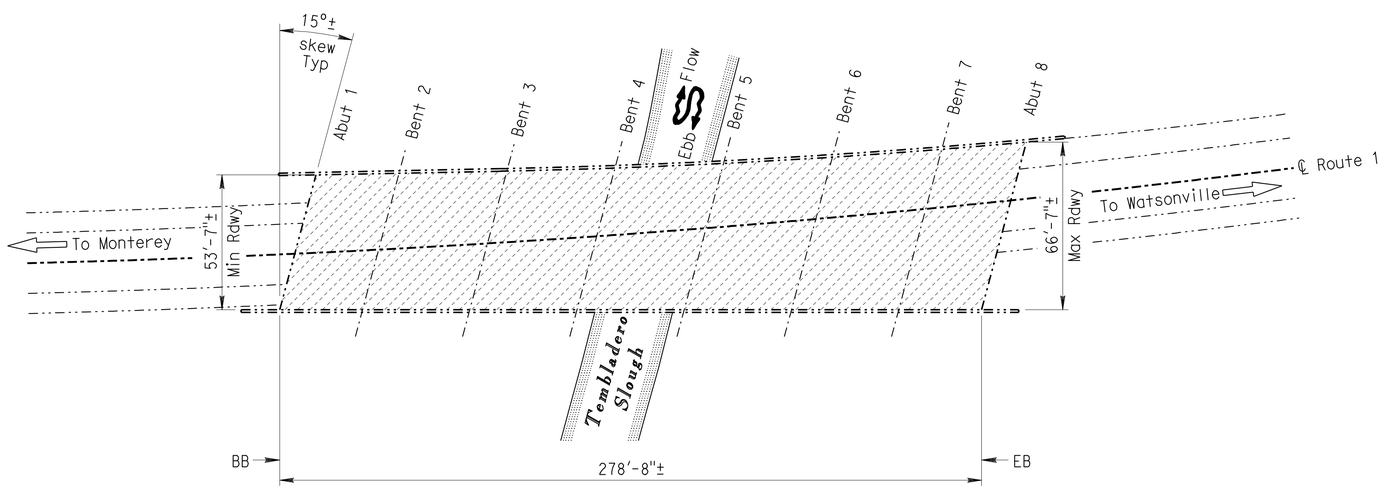

TEMBLADERO SLOUGH

BR NO. 44-0219, Mon, ROUTE 1, PM T91.99
1" = 30'

ROUTE 1/156 SEPARATION — BRIDGE NO 44-0218R

QUANTITIES

REMOVE UNSOUND CONCRETE	293	CF
CLEAN EXPANSION JOINT	80	LF
RAPID SETTING CONCRETE (PATCH)	293	CF
JOINT SEAL (MR 2")	80	LF

TEMBLADERO SLOUGH — BRIDGE NO 44-0219

QUANTITIES

CLEAN BRIDGE DECK	16,740	SQFT
TREAT BRIDGE DECK	16,740	SQFT
FURNISH BRIDGE DECK TREATMENT MATERIAL	187	GAL

Michael J. Lee 8-25-10
DESIGN ENGINEER

	BY	CHECKED		BY	CHECKED
DESIGN	P. Gagnier	H. Dang	LAYOUT	G.F. Bidwell	P. Gagnier
DETAILS	G.F. Bidwell	H. Dang	SPECIFICATIONS	Todd Geerts	PLANS AND SPECIFICATIONS COMPARED: Todd Geerts
QUANTITIES	P. Gagnier	H. Dang			

STATE OF CALIFORNIA
DEPARTMENT OF TRANSPORTATION

DIVISION OF MAINTENANCE
STRUCTURE MAINTENANCE DESIGN

BRIDGE NO. VARIOUS
POST MILE VARIES

ROUTE 1 BRIDGES
GENERAL PLAN NO. 8

STRUCTURES MAINTENANCE GENERAL PLAN & DETAIL SHEET (ENGLISH) (REV. 10/17/07)

ORIGINAL SCALE IN INCHES FOR REDUCED PLANS 0 1 2 3

CU 05
EA 0S9801

DISREGARD PRINTS BEARING EARLIER REVISION DATES

REVISION DATES: 1-11-10 3-16-10 3-23-10 5-10-10 7-7-10 7-20-10

SHEET 8 OF 14

FILE => 05-0s9801008.dgn

USERNAME => trmnguye DATE PLOTTED => 30-NOV-2010 TIME PLOTTED => 15:23

DIST	COUNTY	ROUTE	POST MILES TOTAL PROJECT	SHEET NO.	TOTAL SHEETS
05	Mon	1	1.5/T92.0	16	21

REGISTERED CIVIL ENGINEER 8-25-10 DATE

11-29-10
PLANS APPROVAL DATE

REGISTERED PROFESSIONAL ENGINEER TIMOTHY J. POWELL No. C 61037 Exp. 12-31-10 CIVIL STATE OF CALIFORNIA

THE STATE OF CALIFORNIA OR ITS OFFICERS OR AGENTS SHALL NOT BE RESPONSIBLE FOR THE ACCURACY OR COMPLETENESS OF ELECTRONIC COPIES OF THIS PLAN SHEET.

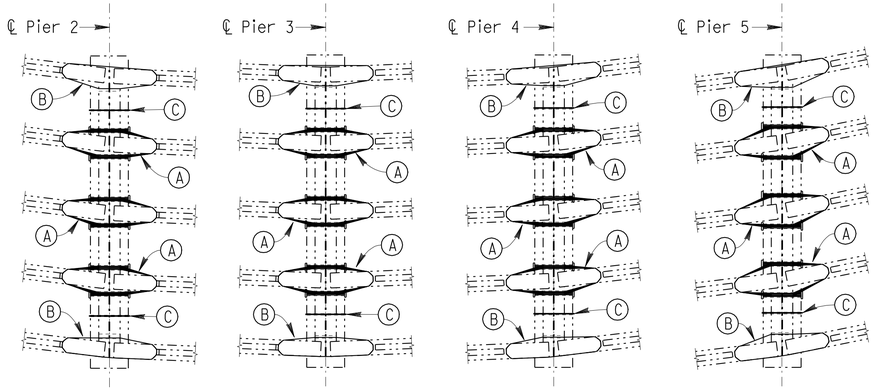

LEGEND:

(A) Remove existing longitudinal restrainers at interior girders and place new longitudinal restainers, see "DETAIL A".

(B) Remove existing longitudinal restrainers at exterior girders and place new longitudinal restainers, see "DETAIL B".

(C) Remove existing vertical restrainer and place new vertical restrainer, see "DETAIL C".

NOTES: (APPLY TO THIS SHEET ONLY)

See VILLA CREEK RESTRAINER DETAILS NO. 2 sheet for "CABLE ANCHORAGE DETAIL" and "TURNBUCKLE DETAIL".

Galvanize all assemblies after fabrication.

CABLE RESTRAINER PLAN AT PIERS 2, 3, 4 & 5

BR NO. 44-0028
1/8" = 1'

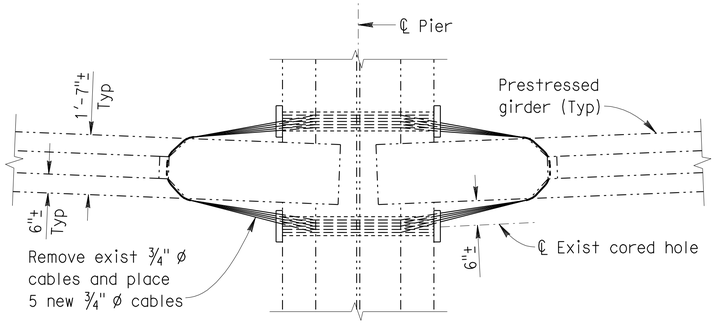

PLAN

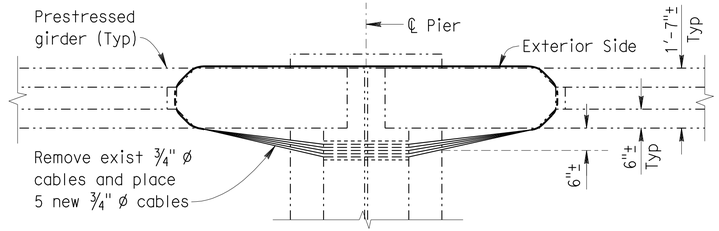

PLAN

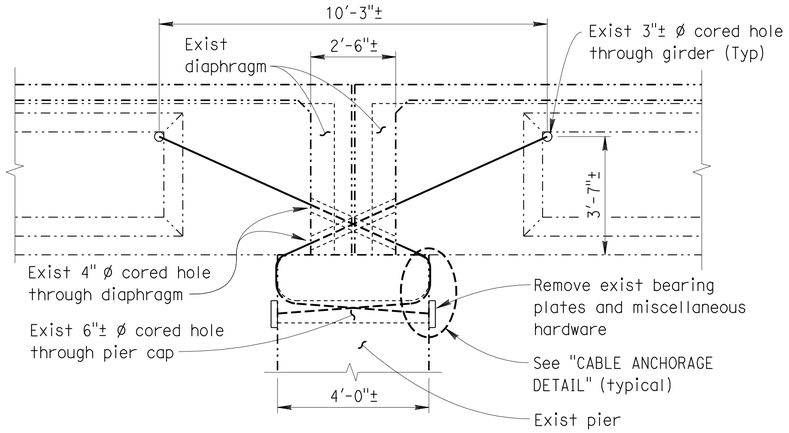

ELEVATION

DETAIL A

1/2" = 1'

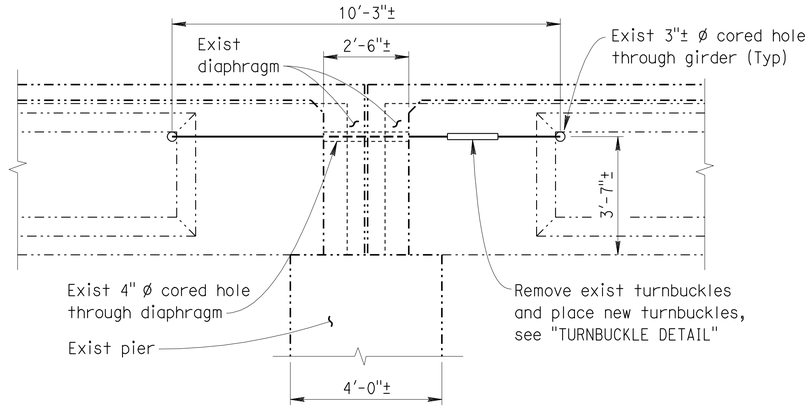

ELEVATION

DETAIL B

1/2" = 1'

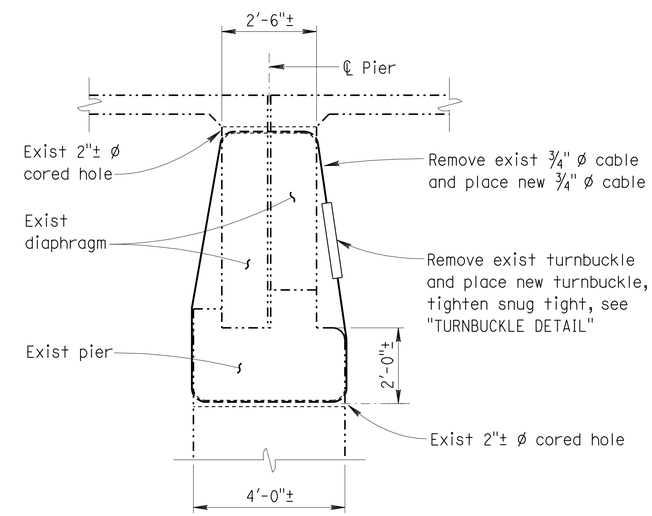

ELEVATION

DETAIL C

NO SCALE

DESIGN	BY Tim Powell	CHECKED H. Dang	
DETAILS	BY G.F. Bidwell	CHECKED H. Dang	
QUANTITIES	BY Tim Powell	CHECKED H. Dang	

STATE OF CALIFORNIA
DEPARTMENT OF TRANSPORTATION

DIVISION OF MAINTENANCE
STRUCTURE MAINTENANCE DESIGN

BRIDGE NO. VARIOUS
POST MILE VARIES

ROUTE 1 BRIDGES

VILLA CREEK RESTRAINER DETAILS NO. 1

STRUCTURES MAINTENANCE GENERAL PLAN & DETAIL SHEET (ENGLISH) (REV. 10/17/07)

ORIGINAL SCALE IN INCHES FOR REDUCED PLANS 0 1 2 3

CU 05
EA 0S9801

DISREGARD PRINTS BEARING EARLIER REVISION DATES → 8-24-10

REVISION DATES

SHEET 9 OF 14

FILE => 05-0s9801009.dgn

USERNAME => trmguye DATE PLOTTED => 30-NOV-2010 TIME PLOTTED => 15:23

DIST	COUNTY	ROUTE	POST MILES TOTAL PROJECT	SHEET NO.	TOTAL SHEETS
05	Mon	1	1.5/T92.0	17	21

REGISTERED CIVIL ENGINEER 8-25-10 DATE

11-29-10
PLANS APPROVAL DATE

REGISTERED PROFESSIONAL ENGINEER TIMOTHY J. POWELL No. C 61037 Exp. 12-31-10 CIVIL STATE OF CALIFORNIA

THE STATE OF CALIFORNIA OR ITS OFFICERS OR AGENTS SHALL NOT BE RESPONSIBLE FOR THE ACCURACY OR COMPLETENESS OF ELECTRONIC COPIES OF THIS PLAN SHEET.

NOTE: (APPLY TO THIS SHEET ONLY)

Galvanize all assemblies after fabrication.

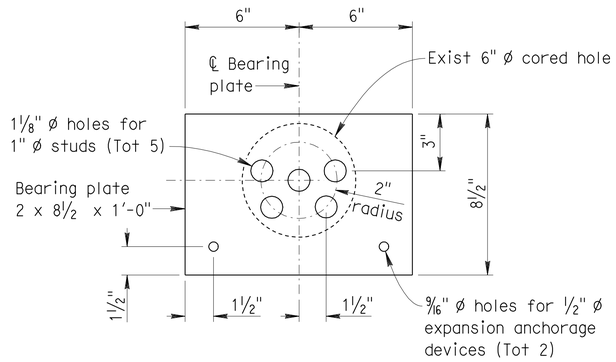

BEARING PLATE DETAIL

NO SCALE

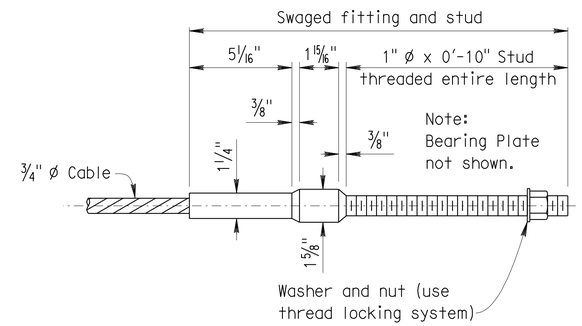

CABLE END ANCHORAGE

NO SCALE

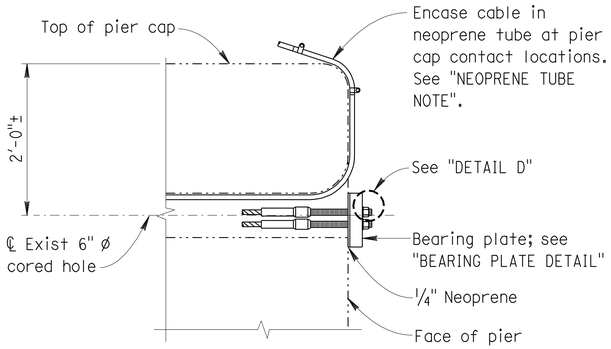

NEOPRENE TUBE NOTE:

Place ¾" ID neoprene tube x 1'-0" long around each cable. Tube may be cut lengthwise with cut away from contact surface. Attach tube to cable with stainless steel hose clamps.

CABLE ANCHORAGE DETAIL

NO SCALE

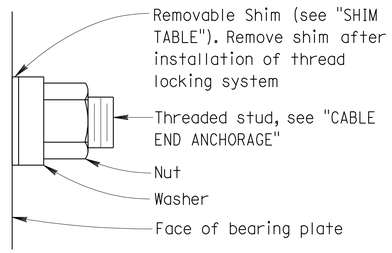

SHIM TABLE	
AMBIENT TEMPERATURE (° F)	SHIM THICKNESS (inches)
0	None
60	¼
120	½

DETAIL D

NO SCALE

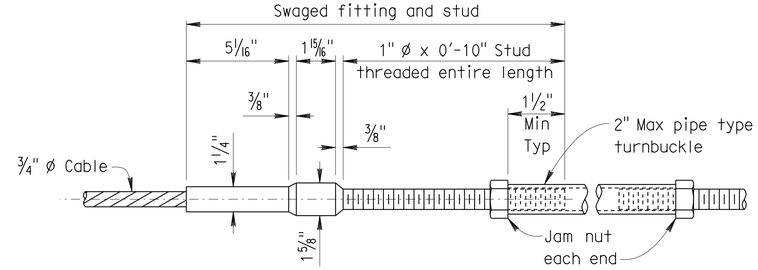

TURNBUCKLE INSTALLATION NOTES:

1. The turnbuckle shall be tightened as required to remove slack.
2. Tighten the turnbuckle one turn per 10 feet of cable length to tension the assembly.
3. Loosen the turnbuckle the number of turns specified in the "TURNBUCKLE TABLE" to allow for thermal contraction of girders.

TURNBUCKLE TABLE	
AMBIENT TEMPERATURE (° F)	NUMBER OF TURNS*
0	0
60	4
120	8

* Number of turns may be adjusted as directed by the Engineer. Interpolate for intermediate temperatures.

TURNBUCKLE DETAIL

NO SCALE

DESIGN	BY Tim Powell	CHECKED H. Dang	
DETAILS	BY G.F. Bidwell	CHECKED H. Dang	
QUANTITIES	BY Tim Powell	CHECKED H. Dang	

STATE OF CALIFORNIA
DEPARTMENT OF TRANSPORTATION

DIVISION OF MAINTENANCE
STRUCTURE MAINTENANCE DESIGN

CU 05
EA 0S9801

BRIDGE NO. VARIOUS
POST MILE VARIES

ROUTE 1 BRIDGES

VILLA CREEK RESTRAINER DETAILS NO. 2

STRUCTURES MAINTENANCE GENERAL PLAN & DETAIL SHEET (ENGLISH) (REV. 10/17/07)

ORIGINAL SCALE IN INCHES FOR REDUCED PLANS 0 1 2 3

DISREGARD PRINTS BEARING EARLIER REVISION DATES 8-24-10

REVISION DATES

SHEET 10 OF 14

FILE => 05-0s9801010.dgn

USERNAME => trmmgoye DATE PLOTTED => 30-NOV-2010 TIME PLOTTED => 15:23

DIST	COUNTY	ROUTE	POST MILES TOTAL PROJECT	SHEET NO.	TOTAL SHEETS
05	Mon	1	1.5/T92.0	18	21

REGISTERED CIVIL ENGINEER 8-25-10 DATE

11-29-10
PLANS APPROVAL DATE

REGISTERED PROFESSIONAL ENGINEER TIMOTHY J. POWELL No. C 61037 Exp. 12-31-10 CIVIL STATE OF CALIFORNIA

THE STATE OF CALIFORNIA OR ITS OFFICERS OR AGENTS SHALL NOT BE RESPONSIBLE FOR THE ACCURACY OR COMPLETENESS OF ELECTRONIC COPIES OF THIS PLAN SHEET.

VILLA CREEK SPALL REPAIR TABLE

SPAN	GIRDER	LOCATION	DESCRIPTION	APPROXIMATE LENGTH (feet)	APPROXIMATE WIDTH (feet)	APPROXIMATE DEPTH (inches)	APPROXIMATE VOLUME (cubic feet)
1	1	Adjacent to Pier 2	Bottom of flange face	1.0	1.00	3.0	0.3
	1	Pier 2 minus 20′	Bottom flange corner	3.0	0.50	3.0	0.4
	3	Pier 2 minus 15′	Rock pocket, no rust staining	3.0	1.00	2.0	0.5
2	1	Pier 3 minus 10′	Bottom flange, entire width face	2.0	2.00	3.0	1.0
	N/A	Left edge of deck	Ocean side corner	4.0	0.42	5.0	0.7
	3	Pier 3 minus 10′	Bottom flange, ocean side corner	6.0	0.50	6.0	1.5
	4	Pier 3 minus 15′	Bottom flange, ocean side corner	10.0	0.50	3.0	1.3
	5	Pier 3 minus 25′	Bottom flange, ocean side corner	8.0	0.50	3.0	1.0
	5	Pier 3 minus 40′	Bottom flange, ocean side corner	3.0	0.50	3.0	0.4
	5	Adjacent to Pier 2	Bottom flange, ocean side corner	6.0	0.50	3.0	0.8
	4	Adjacent to Pier 2	Bottom flange, ocean side corner	3.0	0.50	3.0	0.4
	4	Pier 2 plus 20′	Bottom flange, ocean side corner	2.0	0.50	3.0	0.3
	3	Adjacent to Pier 2	Bottom flange, ocean side corner	3.0	0.50	3.0	0.4
	2	Adjacent to Pier 2	Top flange, land side corner	4.0	0.50	3.0	0.5
	2	Adjacent to Pier 2	Bottom flange surface	1.0	1.00	3.0	0.3
	N/A	end of Pier cap 2	Pier cap surface	1.0	1.00	2.0	0.2
3	1	Near Pier 4	Top flange, land side corner	25.0	0.50	3.0	3.1
	1	Near Pier 4	Exterior girder face surface	1.0	1.00	3.0	0.3
	1	At elastomeric pad	Exterior girder face corner	1.0	2.00	3.0	0.5
	1	Pier 4 minus 25′	Bottom flange corner	2.0	0.50	3.0	0.3
	1	Pier 3 plus 25′	Bottom flange, ocean side corner	2.0	0.50	3.0	0.3
	1	Pier 3 plus 10′	Bottom flange, underside face	1.0	2.00	3.0	0.5
	2	Midspan	Bottom flange, ocean side corner	7.0	0.50	3.0	0.9
	2	Pier 4 minus 40′	Bottom flange, ocean side corner	4.0	0.50	3.0	0.5
	2	Pier 4 minus 40′	Bottom flange, ocean side corner	10.0	0.50	3.0	1.3
	2	Pier 4 minus 40′	Top flange, land side corner	20.0	0.50	3.0	2.5
	3	Pier 3 minus 30′	Bottom flange, ocean side corner	6.0	0.33	4.0	0.7
	3	Pier 3 minus 30′	Bottom flange, ocean side corner	5.0	0.33	4.0	0.6
	4	Midspan	Bottom flange, ocean side corner	15.0	0.33	4.0	1.7
	4	Pier 4 minus 10′	Bottom flange, ocean side corner	20.0	0.33	4.0	2.2
	5	Near Pier 3	Bottom flange, ocean side corner	4.0	0.25	3.0	0.3
	5	Midspan	Bottom flange, ocean side corner	10.0	0.50	3.0	1.3
	5	Midspan	Bottom flange, ocean side corner	10.0	0.25	3.0	0.6
	5	Midspan	Bottom flange, ocean side corner	2.0	0.25	3.0	0.1
	1	Near elastomeric pads	Underside of girder surface	1.0	1.00	3.0	0.3
	2	At Pier 3	Bottom flange, ocean side corner	1.0	0.50	3.0	0.1
	2	Pier 3 plus 15′	Bottom flange, ocean side corner	2.0	0.50	3.0	0.3
	2	Pier 3 plus 20′	Bottom flange, ocean side corner	10.0	0.50	3.0	1.3
	N/A	Bay 2 (between Girder 2 & Girder 3)	end diaphragm at Pier 3 soffit	3.0	2.00	3.0	1.5
	3	Adjacent to Pier 3	Bottom flange, ocean side corner	3.0	0.50	3.0	0.4
	4	Adjacent to Pier 3	Bottom flange, ocean side corner	6.0	0.25	3.0	0.4
	5	At Pier 3	Bottom flange, ocean side corner	5.0	0.50	3.0	0.6
	N/A	Bay 4 (between Girder 4 & Girder 5)	Deck soffit spall, near Pier 3	1.0	0.33	2.0	0.1
4	N/A	Edge of deck	Ocean side corner	80.0	1.00	4.0	26.7
	1	Midspan	Bottom flange, ocean side corner	20.0	0.50	6.0	5.0
	1	Pier 5 minus 10′	Bottom flange, ocean side corner	10.0	0.50	3.0	1.3
	1	At Pier 4	Bottom flange, land side corner at web taper	2.0	1.00	2.0	0.3
	2	At Pier 4	Bottom flange, ocean side corner	3.0	0.50	3.0	0.4
	2	Pier 4 plus 15′	Bottom flange, ocean side corner	5.0	0.50	3.0	0.6
	2	Pier 4 plus 30′	Bottom flange, ocean side corner	5.0	0.50	3.0	0.6
	2	At Pier 5	Bottom flange, ocean side corner	4.0	0.50	3.0	0.5
	3	Pier 5 minus 40′	Bottom flange, ocean side corner	2.0	0.50	3.0	0.3
	4	Pier 4 plus 20′	Bottom flange, ocean side corner	15.0	0.50	3.0	1.9
	4	Midspan	Bottom flange, ocean side corner	3.0	0.50	3.0	0.4
	4	Pier 5 minus 25′	Bottom flange, ocean side corner	5.0	0.50	3.0	0.6
	5	At elastomeric pad	Underside of girder surface	1.0	2.00	3.0	0.5
	5	Pier 4 plus 25′	Bottom flange, ocean side corner	25.0	0.50	3.0	3.1
	5	Pier 4 plus 25′	Bottom flange, ocean side corner	15.0	0.50	3.0	1.9
	5	Pier 5 minus 15′	Bottom flange, ocean side corner	5.0	0.50	3.0	0.6
5	1	At Pier 5 bearing	Bottom flange, underside face	1.0	1.00	2.0	0.2
	2	At Pier 5 bearing	Bottom flange, ocean side corner	20.0	0.50	3.0	2.5

Total Volume = 79.0

NOTES: (APPLY TO THIS SHEET ONLY)

See "CONCRETE SPALL REPAIR DETAIL" on MISCELLANEOUS DETAILS sheet for spall repair details.

1 thru 5 — (S) Indicates girder designation.

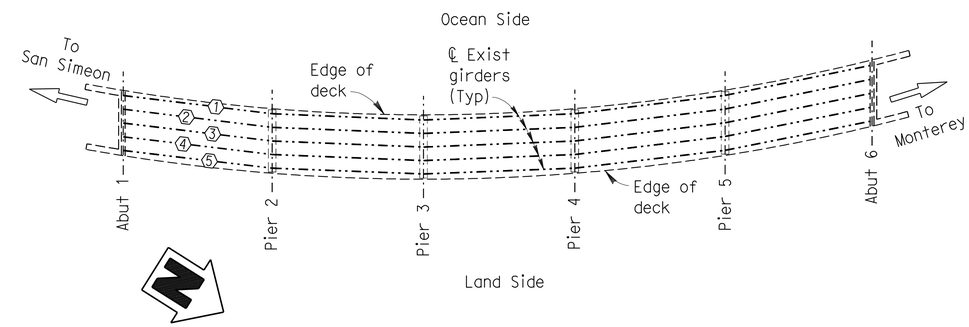

VILLA CREEK GIRDER LAYOUT

BR NO. 44-0028
NO SCALE

DESIGN	BY Tim Powell	CHECKED H. Dang	
DETAILS	BY G.F. Bidwell	CHECKED H. Dang	
QUANTITIES	BY Tim Powell	CHECKED H. Dang	

STATE OF CALIFORNIA
DEPARTMENT OF TRANSPORTATION

DIVISION OF MAINTENANCE
STRUCTURE MAINTENANCE DESIGN

BRIDGE NO. VARIOUS
POST MILE VARIES

ROUTE 1 BRIDGES
VILLA CREEK SPALL REPAIR TABLE

STRUCTURES MAINTENANCE GENERAL PLAN & DETAIL SHEET (ENGLISH) (REV. 10/17/07)

ORIGINAL SCALE IN INCHES FOR REDUCED PLANS 0 1 2 3

CU 05
EA 0S9801

DISREGARD PRINTS BEARING EARLIER REVISION DATES → 8-24-10

REVISION DATES

SHEET 11 OF 14

FILE => 05-0s9801011.dgn

USERNAME => hfriehard DATE PLOTTED => 30-NOV-2010 TIME PLOTTED => 15:23

DIST	COUNTY	ROUTE	POST MILES TOTAL PROJECT	SHEET NO.	TOTAL SHEETS
05	Mon	1	1.5/T92.0	19	21

REGISTERED CIVIL ENGINEER 8-25-10 DATE

11-29-10
PLANS APPROVAL DATE

REGISTERED PROFESSIONAL ENGINEER TIMOTHY J. POWELL No. C 61037 Exp. 12-31-10 CIVIL STATE OF CALIFORNIA

THE STATE OF CALIFORNIA OR ITS OFFICERS OR AGENTS SHALL NOT BE RESPONSIBLE FOR THE ACCURACY OR COMPLETENESS OF ELECTRONIC COPIES OF THIS PLAN SHEET.

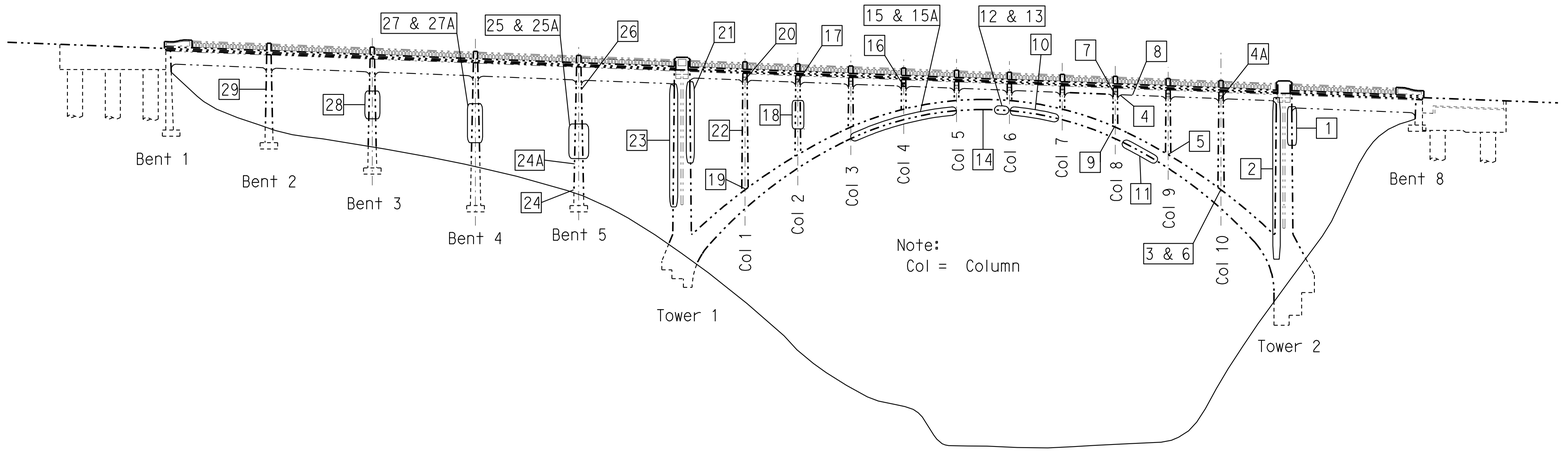

ROCKY CREEK - RIGHT SIDE ELEVATION SPALL MAP

NO SCALE

NOTES: (APPLY TO THIS SHEET ONLY)

See "CONCRETE SPALL REPAIR DETAIL" on MISCELLANEOUS DETAILS sheet for spall repair details.

ROCKY CREEK SPALL REPAIR TABLE (RIGHT SIDE OF BRIDGE)

LOCATION	DESCRIPTION	APPROXIMATE LENGTH (feet)	APPROXIMATE WIDTH (feet)	APPROXIMATE DEPTH (inches)	APPROXIMATE VOLUME (cubic feet)
1	Tower 2, top of tower down, interior corner	15.0	0.25	3.0	0.9
2	Tower 2, top of tower down, creek side, interior corner	100.0	0.25	3.0	6.3
3	Column 10, near top of arch corner	4.0	0.33	4.0	0.4
4	Column 8, underside of girder face	4.0	0.33	4.0	0.4
4A	Column 10, underside of girder face	4.0	0.33	3.0	0.3
5	Column 9, corner	10.0	0.25	3.0	0.6
6	Column 10, corner	25.0	0.33	4.0	2.8
7	Column 8, underside of girder face	2.0	2.00	3.0	1.0
8	Between Columns 8 & 9, girder corner	3.0	0.25	3.0	0.2
9	Column 8, near top of arch rib, corner	2.0	0.25	3.0	0.1
10	Between Columns 6 & 7, underside of arch rib face	5.0	5.00	3.0	6.3
11	Between Columns 8 & 9, underside of arch rib face	5.0	5.00	3.0	6.3
12	Between Columns 5 & 6, near Column 6, underside of arch rib face	2.0	2.00	3.0	1.0
13	Column 6, underside of arch rib face	3.0	3.00	3.0	2.3
14	Between Columns 5 & 6, underside of arch rib corner	10.0	0.50	3.0	1.3
15	Column 5, underside of arch rib face	10.0	3.00	3.0	7.5
15A	Column 3 to Column 5, entire underside of arch rib face	45.0	3.00	3.0	33.8
16	Column 4, top of column, on both sides of girder (2′ x 2′ x 2" x 2-sides)	4.0	2.00	2.0	1.3
17	Column 2, top of column, on both sides of girder (2′ x 2′ x 2" x 2-sides)	4.0	2.00	2.0	1.3
18	Column 2, creek side corner	15.0	1.00	3.0	3.8
19	Column 1, top of arch corner	2.0	0.25	3.0	0.1
20	Column 1, top of column, on both sides of girder (2′ x 2′ x 2" x 2-sides)	4.0	2.00	2.0	1.3
21	Tower 1 corner, (cumulative visual estimate)	10.0	0.33	4.0	1.1
22	Column 1, mountain side below link beam, corner	3.0	1.00	3.0	0.8
23	Tower 1, mountain side corner	40.0	0.50	6.0	10.0
24	Bent 5, lower link beam corner (creek side = 3′, mountain side = 2′)	5.0	0.50	3.0	0.6
24A	Bent 5, 10′ above link beam corner	1.5	0.50	3.0	0.2
25	Bent 5, at upper link beam corner	3.0	1.00	3.0	0.8
25A	Bent 5, upper link beam haunch, corner	2.0	1.0	3.0	0.5
26	Bent 5, link beam haunch corner	5.0	0.5	3.0	0.6
27	Bent 4, mountain side of link beam corner	5.0	1.0	3.0	1.3
27A	Bent 4, mountain side of link beam corner	2.0	1.0	3.0	0.5
28	Bent 3, at link beam corner	3.0	0.5	6.0	0.8
29	Bent 2, at link beam, 10′ from ground, corner	10.0	1.0	3.0	2.5

Total Volume = 98.7

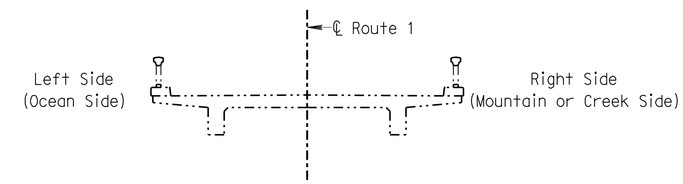

ROCKY CREEK - TYPICAL SECTION

NO SCALE

DESIGN	BY Tim Powell	CHECKED H. Dang	
DETAILS	BY G.F. Bidwell	CHECKED H. Dang	
QUANTITIES	BY Tim Powell	CHECKED H. Dang	

STATE OF CALIFORNIA
DEPARTMENT OF TRANSPORTATION

DIVISION OF MAINTENANCE
STRUCTURE MAINTENANCE DESIGN

CU 05
EA 0S9801

BRIDGE NO. VARIOUS
POST MILE VARIES

ROUTE 1 BRIDGES

ROCKY CREEK SPALL LOCATION TABLE NO. 1

STRUCTURES MAINTENANCE GENERAL PLAN & DETAIL SHEET (ENGLISH) (REV. 10/17/07)

ORIGINAL SCALE IN INCHES FOR REDUCED PLANS 0 1 2 3

DISREGARD PRINTS BEARING EARLIER REVISION DATES 8-24-10

REVISION DATES

SHEET 12 OF 14

FILE => 05-0s9801012.dgn

USERNAME => trlenard DATE PLOTTED => 30-NOV-2010 TIME PLOTTED => 15:23

DIST	COUNTY	ROUTE	POST MILES TOTAL PROJECT	SHEET NO.	TOTAL SHEETS
05	Mon	1	1.5/T92.0	20	21

REGISTERED CIVIL ENGINEER 8-25-10 DATE

11-29-10
PLANS APPROVAL DATE

THE STATE OF CALIFORNIA OR ITS OFFICERS OR AGENTS SHALL NOT BE RESPONSIBLE FOR THE ACCURACY OR COMPLETENESS OF ELECTRONIC COPIES OF THIS PLAN SHEET.

REGISTERED PROFESSIONAL ENGINEER TIMOTHY J. POWELL No. C 61037 Exp. 12-31-10 CIVIL STATE OF CALIFORNIA

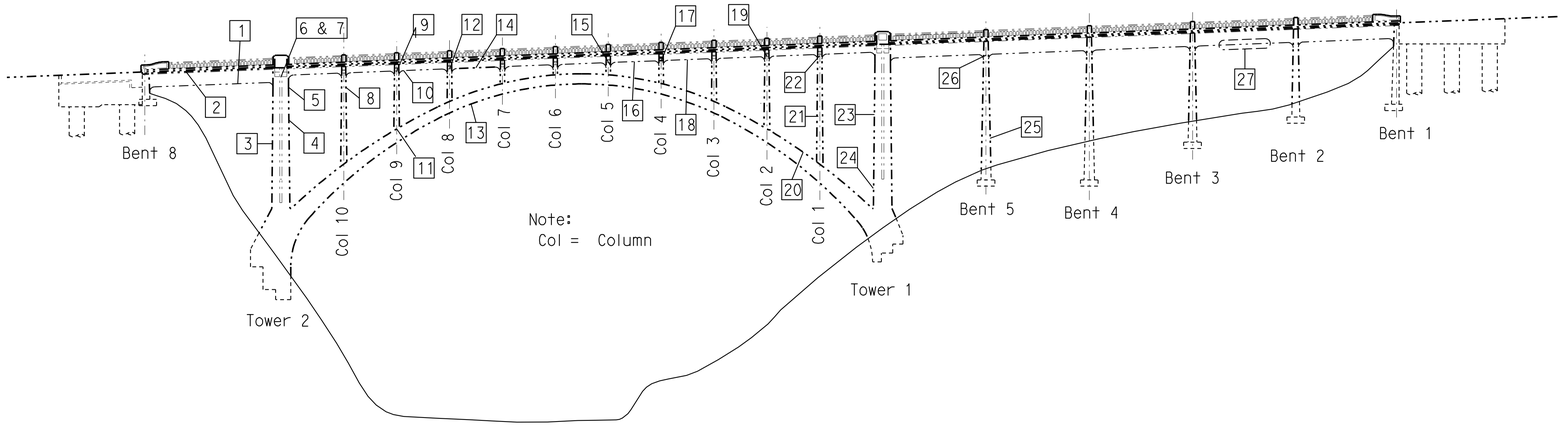

ROCKY CREEK - LEFT SIDE ELEVATION SPALL MAP

NO SCALE

NOTES: (APPLY TO THIS SHEET ONLY)

See "CONCRETE SPALL REPAIR DETAIL" on MISCELLANEOUS DETAILS sheet for spall repair details.

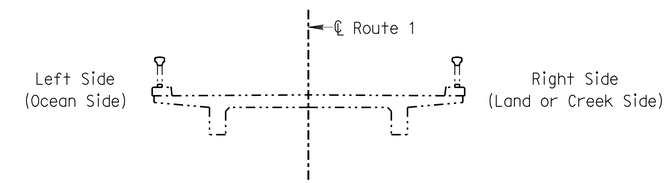

ROCKY CREEK - TYPICAL SECTION

NO SCALE

ROCKY CREEK SPALL REPAIR TABLE (LEFT SIDE OF BRIDGE)

LOCATION	DESCRIPTION	APPROXIMATE LENGTH (feet)	APPROXIMATE WIDTH (feet)	APPROXIMATE DEPTH (inches)	APPROXIMATE VOLUME (cubic feet)
1	Bottom of girder	4.0	3.00	1.0	1.00
2	Decorative haunch	2.0	3.00	2.0	1.00
3	Tower 2, left leg, backside face closest to abutment	2.0	2.00	2.0	0.67
4	Tower 2, inside corner	6.0	2.00	2.0	2.00
5	Tower 2, left leg, front face	3.0	1.50	2.0	0.75
6	Tower 2, left deck overhang	1.5	1.50	2.0	0.38
7	Tower 2, deck overhang	0.8	7.50	2.0	0.94
8	Column 10, outside face (ocean side)	1.0	1.00	1.0	0.08
9	Left exterior girder, inner face	6.0	0.33	3.0	0.50
10	Near Column 9, underside of girder	4.0	1.00	2.0	0.67
11	Column 9, backside, corner	6.0	0.33	4.0	0.66
12	Column 8, top, (prior repair)	4.0	1.00	2.0	0.67
13	Arch haunch	1.0	0.50	6.0	0.25
14	Mid-span, left exterior girder corner	10.0	2.00	0.3	0.42
15	Mid-span, left exterior girder, top of haunch, corner	2.0	0.17	2.0	0.06
16	Between Columns 4 & 5, corner	5.0	0.50	2.0	0.42
17	Between Columns 3 & 4, left exterior girder, corner	2.0	2.00	3.0	1.00
18	Between Columns 3 & 4, left exterior girder, corner	3.0	1.00	2.0	0.50
19	Adjacent to Columns 2, bottom of exterior girder, bottom face	2.0	2.00	2.0	0.67
20	Between Columns 1 & 2, adjacent to Column 1, top of arch rib	2.0	2.00	2.0	0.67
21	Column 1, link beam haunch, bottom face	3.0	1.00	2.0	0.50
22	Column 1, left exterior girder, bottom face	2.0	2.00	2.0	0.67
23	Tower 1, 40′ above the top of the arch, creek side face	3.0	1.00	1.0	0.25
24	Tower 1, inside face (3 at this location)	8.0	1.00	2.0	1.33
25	Bent 5, top of link beam corner	1.0	0.50	6.0	0.25
26	Bent 5, top of column girder intersection, corner (3 at this location)	4.0	0.33	4.0	0.44
27	Span 2, left exterior girder corner (3 at this location)	22.0	1.00	6.0	11.00

Total Volume = 27.71

DESIGN	BY Tim Powell	CHECKED H. Dang	STATE OF CALIFORNIA DEPARTMENT OF TRANSPORTATION
DETAILS	BY G.F. Bidwell	CHECKED H. Dang	
QUANTITIES	BY Tim Powell	CHECKED H. Dang	

DIVISION OF MAINTENANCE
STRUCTURE MAINTENANCE DESIGN

BRIDGE NO. VARIOUS
POST MILE VARIES

ROUTE 1 BRIDGES

ROCKY CREEK SPALL LOCATION TABLE NO. 2

STRUCTURES MAINTENANCE GENERAL PLAN & DETAIL SHEET (ENGLISH) (REV. 10/17/07)

ORIGINAL SCALE IN INCHES FOR REDUCED PLANS 0 1 2 3

CU 05
EA 0S9801

DISREGARD PRINTS BEARING EARLIER REVISION DATES → 8-24-10

REVISION DATES

SHEET 13 OF 14

FILE => 05-0s9801013.dgn

USERNAME => trlenard DATE PLOTTED => 30-NOV-2010 TIME PLOTTED => 15:24

DIST	COUNTY	ROUTE	POST MILES TOTAL PROJECT	SHEET NO.	TOTAL SHEETS
05	Mon	1	1.5/T92.0	21	21

REGISTERED CIVIL ENGINEER 8-25-10 DATE

11-29-10
PLANS APPROVAL DATE

THE STATE OF CALIFORNIA OR ITS OFFICERS OR AGENTS SHALL NOT BE RESPONSIBLE FOR THE ACCURACY OR COMPLETENESS OF ELECTRONIC COPIES OF THIS PLAN SHEET.

REGISTERED PROFESSIONAL ENGINEER TIMOTHY J. POWELL No. C 61037 Exp. 12-31-10 CIVIL STATE OF CALIFORNIA

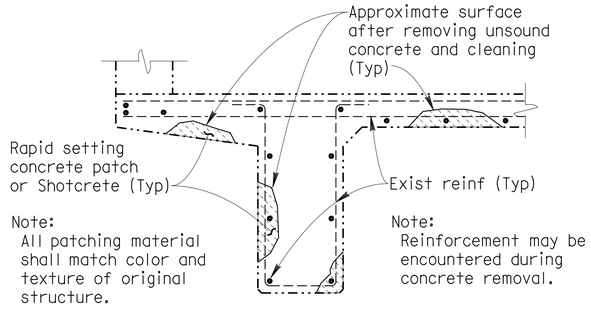

CONCRETE SPALL REPAIR DETAIL

Detail shows generic spall locations and does not represent any specific structure. For spall locations see VILLA CREEK SPALL REPAIR TABLE, ROCKY CREEK SPALL REPAIR TABLE NO. 1 and ROCKY CREEK SPALL REPAIR TABLE NO. 2 sheets.
NO SCALE

JOINT SEAL TABLE

BRIDGE NAME	BRIDGE NUMBER	LOCATION		MINIMUM "MR" (inches)	APPROXIMATE LENGTH (feet)	EXISTING WATERSTOP	APPROX DEPTH TO CLEAN EXPANSION JOINT (inches)
SOLEDAD DRIVE UC	44-0191L	Abut 1	BW	1	98.0	Yes	11.5
		Abut 3	BW	1	70.0	Yes	11.5
	44-0191R	Abut 1	BW	1	41.3	Yes	11.5
		Abut 3	BW	1	41.3	Yes	11.5
ROUTE 1/156 SEPARATION	44-0218R	Abut 1	PN	2	40.0	Yes	12.0
		Abut 4	PN	2	40.0	Yes	12.0

LEGEND:
BW = Backwall
PN = Paving Notch

The following note applies to JOINT SEAL TYPE A:

Install Type A joint seal 3" up into curb or rail on the low side of the deck where joint matches curb or rail joint. For details not shown see RSP B6-21

The following notes apply to JOINT SEAL TYPE B:

1) Seal must satisfy both minimum Movement Rating (MR) and minimum W1 requirements.

2) Minimum W1 is the calculated maximum width of the joint based on field measurements. After the joints have been cleaned, minimum W1 is to be calculated by the Engineer.

3) W1 shall be the smaller of the values determined as follows:

   A) 0.85 times the manufacturer's designed minimum uncompressed width of the seal.

   B) The width of the seal on the third successive test cycle of the pressure deflection test, when compressed to an average pressure of 3 psi.

4) Bend Type B joint seal 6" up into curb or rail on the low side of the deck where deck joint matches curb or rail joint.

5) For details not shown see RSP B6-21

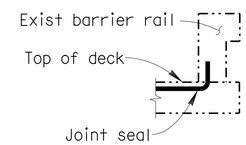

JOINT SEAL AT LOW SIDE OF DECK

Details shown for illustration purposes only. For use only where deck joint matches the barrier rail joint.
NO SCALE

DECK REPAIR TABLE

REMOVE UNSOUND CONCRETE AND PATCH WITH RAPID SETTING CONCRETE

BRIDGE NAME	BRIDGE NUMBER	APPROXIMATE AREA DAMAGED (PERCENT)	APPROXIMATE DEPTH (INCHES)
VILLA CREEK	44-0028	3	3
ANDERSON CANYON	44-0049	1	3
CASTRO CANYON	44-0035	1	3
ROCKY CREEK	44-0036	5	3
SAND CITY UC	44-0188L	10	3
SOUTH MARINA OH	44-0211R	1	3
ROUTE 1/156 SEPARATION	44-0218R	5	3

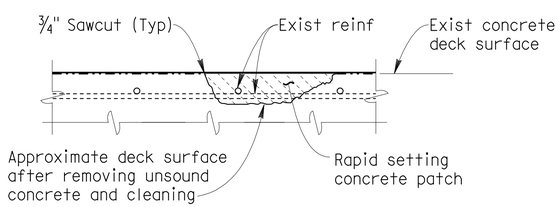

DECK REPAIR DETAIL

Reinforcement may be encountered during deck concrete removal.
NO SCALE

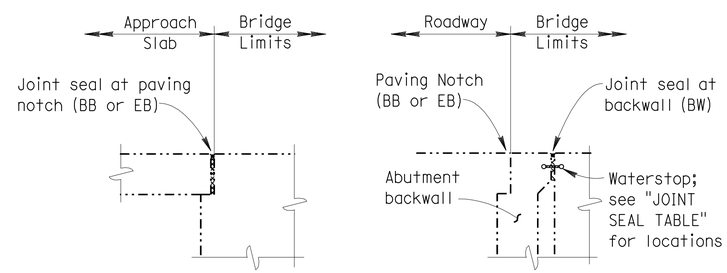

DIAPHRAGM ABUTMENT ABUTMENT WITH BACKWALL

JOINT SEAL LOCATION

NO SCALE

DESIGN	BY P. Gagnier	CHECKED H. Dang	
DETAILS	BY G.F. Bidwell	CHECKED H. Dang	
QUANTITIES	BY P. Gagnier	CHECKED H. Dang	

STATE OF CALIFORNIA
DEPARTMENT OF TRANSPORTATION

DIVISION OF MAINTENANCE
STRUCTURE MAINTENANCE DESIGN

BRIDGE NO. VARIOUS
POST MILE VARIES

ROUTE 1 BRIDGES
MISCELLANEOUS DETAILS

STRUCTURES MAINTENANCE GENERAL PLAN & DETAIL SHEET (ENGLISH) (REV. 10/17/07)

ORIGINAL SCALE IN INCHES FOR REDUCED PLANS 0 1 2 3

CU 05
EA 0S9801

DISREGARD PRINTS BEARING EARLIER REVISION DATES

REVISION DATES: 1-11-10, 3-16-10, 3-23-10, 5-10-10, 7-7-10, 7-28-10, 8-24-10

SHEET 14 OF 14

FILE => 05-0s9801014.dgn

USERNAME => trlenard DATE PLOTTED => 30-NOV-2010 TIME PLOTTED => 15:24