INDEX OF PLANS

SHEET No.	DESCRIPTION
1	TITLE AND LOCATION MAP
2	LOCATIONS OF CONSTRUCTION
3-24	CONSTRUCTION DETAILS
25	CONSTRUCTION AREA SIGNS
26-27	SUMMARY OF QUANTITIES
28-44	IRRIGATION REMOVAL PLAN, PLANTING PLAN AND LANDSCAPE QUANTITIES
45-48	ELECTRICAL PLANS
49-64	REVISED STANDARD PLANS

THE STANDARD PLANS LIST APPLICABLE TO THIS CONTRACT IS INCLUDED IN THE NOTICE TO BIDDERS AND SPECIAL PROVISIONS BOOK.

STATE OF CALIFORNIA

DEPARTMENT OF TRANSPORTATION

ACNHP-Q101(267)E

PROJECT PLANS FOR CONSTRUCTION ON STATE HIGHWAY

IN SANTA BARBARA COUNTY AT VARIOUS LOCATIONS FROM SALSIPUEDES STREET TO 0.3 MILE NORTH OF CATHEDRAL OAKS ROAD

TO BE SUPPLEMENTED BY STANDARD PLANS DATED 2010

NOTE:

THE TABLE OF LOCATIONS OF CONSTRUCTION IS SHOWN ON THE LOCATIONS OF CONSTRUCTION SHEET.

Dist	COUNTY	ROUTE	POST MILES TOTAL PROJECT	SHEET No.	TOTAL SHEETS
05	SB	101	13.2/27.1	1	64

LOCATION MAP

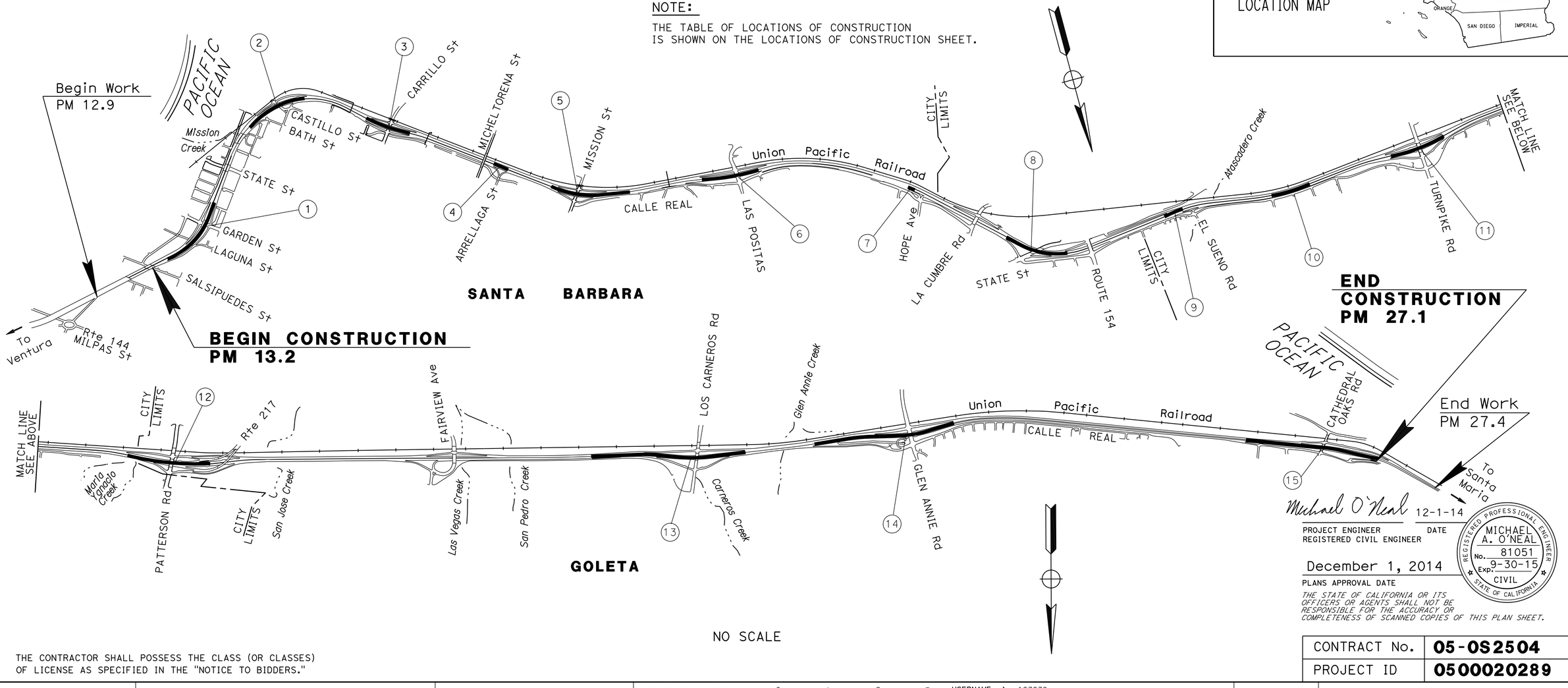

NO SCALE

THE CONTRACTOR SHALL POSSESS THE CLASS (OR CLASSES) OF LICENSE AS SPECIFIED IN THE "NOTICE TO BIDDERS."

Michael O'Neal 12-1-14

PROJECT ENGINEER — DATE
REGISTERED CIVIL ENGINEER

MICHAEL A. O'NEAL No. 81051 Exp. 9-30-15 CIVIL — REGISTERED PROFESSIONAL ENGINEER — STATE OF CALIFORNIA

December 1, 2014

PLANS APPROVAL DATE

THE STATE OF CALIFORNIA OR ITS OFFICERS OR AGENTS SHALL NOT BE RESPONSIBLE FOR THE ACCURACY OR COMPLETENESS OF SCANNED COPIES OF THIS PLAN SHEET.

CONTRACT No.	05-0S2504
PROJECT ID	0500020289

PROJECT MANAGER: DAVID BEARD
DESIGN ENGINEER: STEVEN WYATT

LAST REVISION 12-01-14
DATE PLOTTED => 26-FEB-2015
TIME PLOTTED => 09:56

BORDER LAST REVISED 9/30/2012 | CALTRANS WEB SITE IS: HTTP//WWW.DOT.CA.GOV/ | RELATIVE BORDER SCALE IS IN INCHES 0 1 2 3 | USERNAME => s123239 DGN FILE => 0500020289ab001.dgn | UNIT 1450 | PROJECT NUMBER & PHASE 05000202891

Dist	COUNTY	ROUTE	POST MILES TOTAL PROJECT	SHEET No.	TOTAL SHEETS
05	SB	101	13.2/27.1	2	64

Michael O'Neal 12-1-14
REGISTERED CIVIL ENGINEER DATE

12-1-14
PLANS APPROVAL DATE

REGISTERED PROFESSIONAL ENGINEER
MICHAEL A. O'NEAL
No. 81051
Exp. 9-30-15
CIVIL
STATE OF CALIFORNIA

THE STATE OF CALIFORNIA OR ITS OFFICERS OR AGENTS SHALL NOT BE RESPONSIBLE FOR THE ACCURACY OR COMPLETENESS OF SCANNED COPIES OF THIS PLAN SHEET.

LOCATIONS OF CONSTRUCTION

Loc No.	COUNTY	ROUTE	PM	DESCRIPTION	DIRECTION
1	SB	101	13.24 TO 13.61	GARDEN St ON/OFF RAMPS	NB/SB
2	SB	101	R14.02	BATH St OFF RAMP	NB
	SB	101	R14.09 TO R14.30	CASTILLO ON/OFF RAMPS	NB/SB
3	SB	101	R14.59 TO R14.87	CARRILLO St ON/OFF RAMPS	NB/SB
4	SB	101	R15.32 TO R15.38	ARRELLAGA St ON/OFF RAMPS	NB/SB
5	SB	101	R15.64 TO 16.44	MISSION St ON/OFF RAMPS	NB/SB
6	SB	101	16.37 TO 16.71	LAS POSITAS St ON RAMP	NB/SB
7	SB	101	17.44 TO 17.49	HOPE St ON/OFF RAMPS	NB
8	SB	101	17.96 TO 18.19	STATE St ON/OFF RAMPS	NB/SB
	SB	101	18.24	Rte 154 ON RAMP	SB
9	SB	101	18.78	Rte 154 OFF RAMP	SB
	SB	101	18.86 TO 18.89	EL SUENO ON/OFF RAMPS	NB
10	SB	101	19.23 TO 19.63	BEHIND K-RAIL TO R/W FENCE	NB
11	SB	101	19.90 TO 20.18	TURNPIKE Rd ON/OFF RAMPS	NB/SB
12	SB	101	20.94 TO 21.08	PATTERSON Ave ON/OFF RAMPS	NB/SB
	SB	101	21.23	Rte 101/217 PATTERSON Ave OFF-RAMP	SB
	SB	101	21.28	Rte 217 ON-RAMP	SB
13	SB	101	23.29 TO 23.94	LOS CARNEROS ON/OFF RAMPS	NB/SB
14	SB	101	24.30 TO 24.97	GLEN ANNIE Rd ON/OFF RAMPS	NB/SB
15	SB	101	26.42 TO 26.69	CATHEDRAL OAKS ON/OFF RAMPS	NB/SB

CALCULATED-DESIGNED BY
CHECKED BY
REVISED BY
DATE REVISED
MICHAEL A. O'NEAL
SCOTT D. KIRKISH
FUNCTIONAL SUPERVISOR
STEVEN M. WYATT
STATE OF CALIFORNIA - DEPARTMENT OF TRANSPORTATION
DESIGN

LOCATIONS OF CONSTRUCTION
LC-1

LAST REVISION DATE PLOTTED => 15-DEC-2014
12-01-14 TIME PLOTTED => 09:16

Dist	COUNTY	ROUTE	POST MILES TOTAL PROJECT	SHEET No.	TOTAL SHEETS
05	SB	101	13.2/27.1	3	64

Michael O'Neal 12-1-14
REGISTERED CIVIL ENGINEER DATE

12/11/14
PLANS APPROVAL DATE

MICHAEL A. O'NEAL No. 81051 Exp. 9-30-15 CIVIL — REGISTERED PROFESSIONAL ENGINEER — STATE OF CALIFORNIA

THE STATE OF CALIFORNIA OR ITS OFFICERS OR AGENTS SHALL NOT BE RESPONSIBLE FOR THE ACCURACY OR COMPLETENESS OF SCANNED COPIES OF THIS PLAN SHEET.

NOTES:

1. NEAT LINE SHOWN IS BASED ON 0.1' MINIMUM. EXACT LOCATION WILL BE DETERMINED BY THE ENGINEER.

2. FOR REMOVAL OF EXISTING IRRIGATION FACILITIES;
   a: THE TYPE AND QUANTITY OF SPRINKLERS VARY BY LOCATION.
   b: THE DEPTH, LOCATION AND SIZE OF IRRIGATION LINE MAY VARY BY LOCATION.
   c: ONE OR MORE LATERAL SUPPLY LINES TO BE CAPPED UPSTREAM OF THE REMOVAL.
   d: SALVAGE 40 CONCRETE SPRINKLER PROTECTORS.

LEGEND:

MINOR HOT MIX ASPHALT

CONTRASTING SURFACE TREATMENT

VEGETATION CONTROL (CRUSHED SHALE)

ABBREVIATIONS:

CST = CONTRASTING SURFACE TREATMENT
MVP = MAINTENANCE VEHICLE PULLOUT
TD = TOP OF DIKE
NL = NEAT LINE

STRUCTURAL SECTIONS:

1 EXISTING (TYPICAL)
0.67' AC
1.00' CL 2 AB

2 0.50' MINOR CONCRETE
(EXPOSED AGGREGATE CONCRETE)
0.17' CLASS 2 AGGREGATE BASE

3 0.25' MINOR HOT MIX ASPHALT
0.50' CL 2 AB

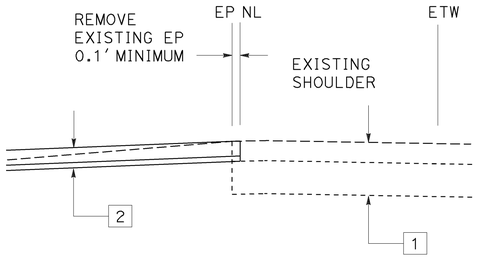

NEAT LINE (TYPICAL)

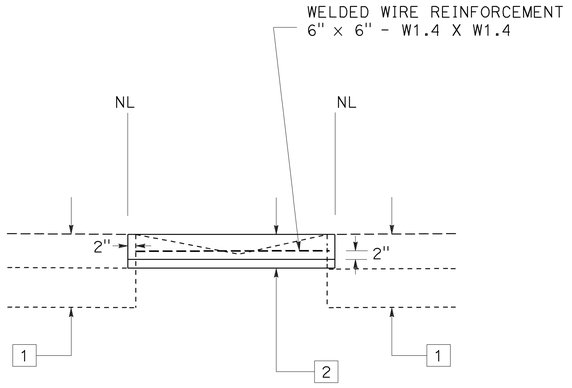

CONTRASTING SURFACE TREATMENT

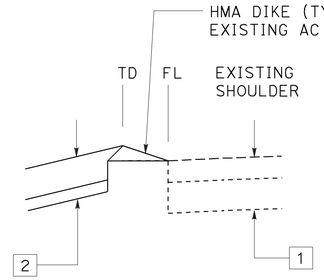

MATCH TOP OF DIKE

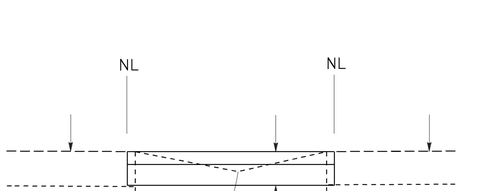

**GORE AREA
MINOR HOT MIX ASPHALT**

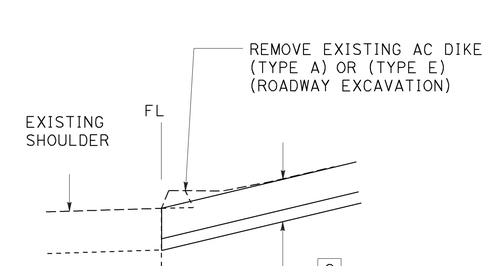

MATCH FLOWLINE

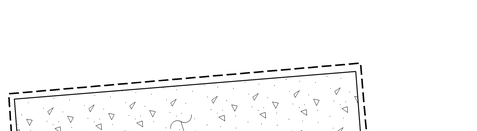

**REMOVE AND CAP
IRRIGATION WITHIN CST**

CONSTRUCTION DETAILS

C-1

NO SCALE

STATE OF CALIFORNIA - DEPARTMENT OF TRANSPORTATION
DESIGN
FUNCTIONAL SUPERVISOR: STEVEN M. WYATT
CALCULATED-DESIGNED BY: MICHAEL A. O'NEAL
CHECKED BY: SCOTT D. KIRKISH
REVISED BY
DATE REVISED

LAST REVISION DATE PLOTTED => 15-DEC-2014
TIME PLOTTED => 09:16
12-01-14

BORDER LAST REVISED 7/2/2010
USERNAME => s123239
DGN FILE => 0500020289ga001.dgn
RELATIVE BORDER SCALE IS IN INCHES 0 1 2 3
UNIT 1450
PROJECT NUMBER & PHASE 05000202891

Dist	COUNTY	ROUTE	POST MILES TOTAL PROJECT	SHEET No.	TOTAL SHEETS
05	SB	101	13.2/27.1	4	64

Michael O'Neal 12-1-14
REGISTERED CIVIL ENGINEER DATE

12-1-14
PLANS APPROVAL DATE

REGISTERED PROFESSIONAL ENGINEER — MICHAEL A. O'NEAL — No. 81051 — Exp. 9-30-15 — CIVIL — STATE OF CALIFORNIA

THE STATE OF CALIFORNIA OR ITS OFFICERS OR AGENTS SHALL NOT BE RESPONSIBLE FOR THE ACCURACY OR COMPLETENESS OF SCANNED COPIES OF THIS PLAN SHEET.

NOTES:

1. FOR WOOD POST INSTALLATION AND POST EMBEDMENT "E" SEE STANDARD PLANS RS2.
2. SLEEVE SIZE TO BE ADEQUATE TO RECEIVE POST +1/4".
3. DIMENSION OF FOOTING TO INCLUDE A MINIMUM 6" OF CONCRETE AROUND OUTSIDE CORNER OF POST.
4. POST SLEEVE TO BE INSTALLED 1" ABOVE FINISH GRADE.
5. AT CST No. 28 THE VEGETATION CONTROL WIDTH IS 3'.
6. WHERE DIKE IS CONSTRUCTED UNDER RAILING, CONSTRUCT VEGETATION CONTROL TO BACK EDGE OF DIKE. WHERE PAVED SHOULDER IS CONSTRUCTED WITHIN 4' IN FRONT OF THE POST, CONSTRUCT VEGETATION CONTROL TO THE EDGE OF PAVED SHOULDER.

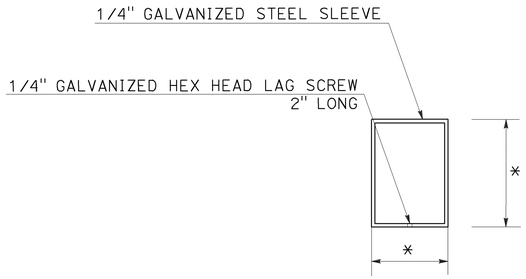

POST SLEEVE
PLAN
*SEE NOTE 2

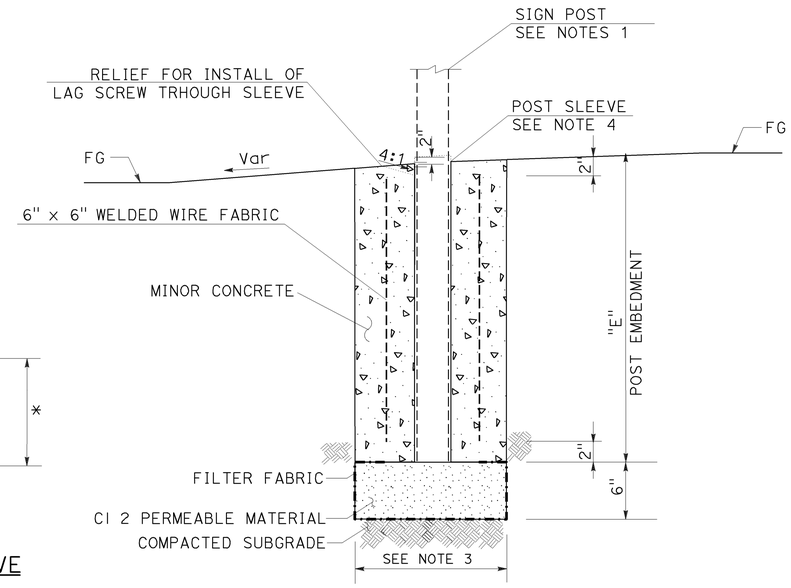

TYPICAL CROSS SECTION

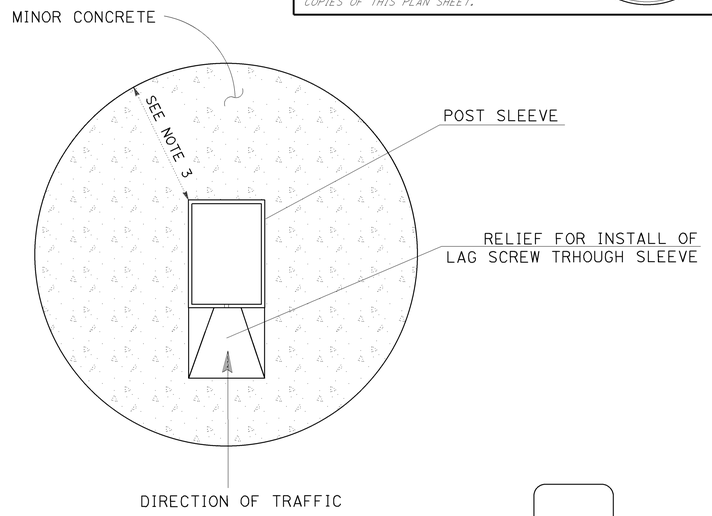

RELIEF DETAIL
PLAN

RESET SIGN
POST SLEEVE

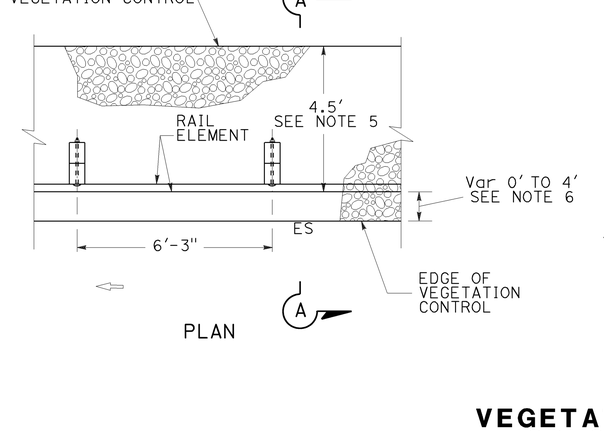

PLAN

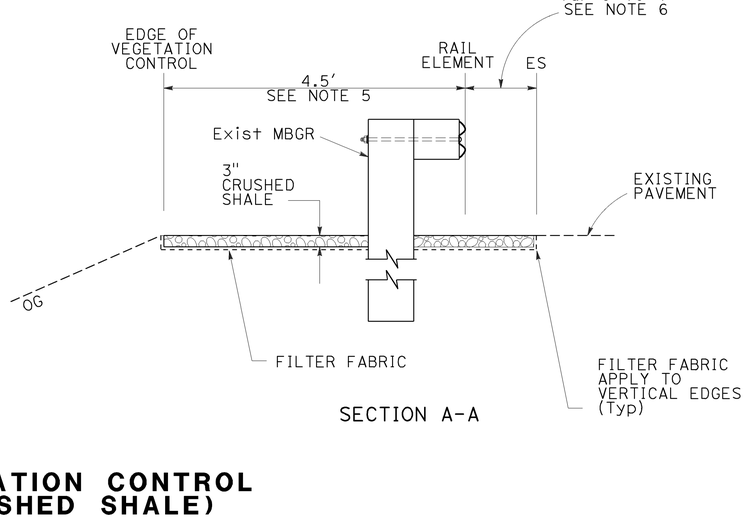

SECTION A-A

VEGETATION CONTROL
(CRUSHED SHALE)

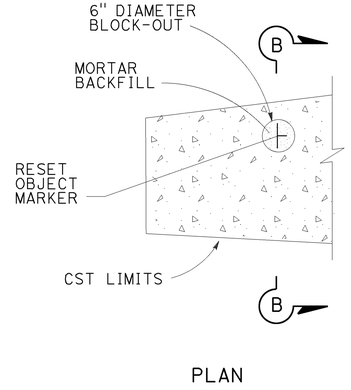

PLAN

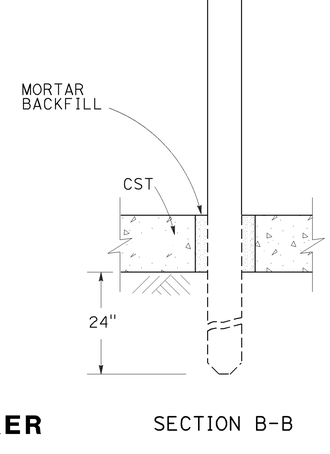

SECTION B-B

RESET OBJECT MARKER

CONSTRUCTION DETAILS

NO SCALE

C-2

STATE OF CALIFORNIA - DEPARTMENT OF TRANSPORTATION
DESIGN
Caltrans
FUNCTIONAL SUPERVISOR: STEVEN M. WYATT
CALCULATED-DESIGNED BY: MICHAEL A. O'NEAL
CHECKED BY: SCOTT D. KIRKISH
REVISED BY
DATE REVISED

LAST REVISION: DATE PLOTTED => 15-DEC-2014
TIME PLOTTED => 09:16

BORDER LAST REVISED 7/2/2010
USERNAME => s123239
DGN FILE => 0500020289ga002.dgn
RELATIVE BORDER SCALE IS IN INCHES 0 1 2 3
UNIT 1450
PROJECT NUMBER & PHASE 05000202891

Dist	COUNTY	ROUTE	POST MILES TOTAL PROJECT	SHEET No.	TOTAL SHEETS
05	SB	101	13.2/27.1	5	64

Michael O'Neal 12-1-14
REGISTERED CIVIL ENGINEER DATE

12-1-14
PLANS APPROVAL DATE

MICHAEL A. O'NEAL No. 81051 Exp. 9-30-15 CIVIL — REGISTERED PROFESSIONAL ENGINEER — STATE OF CALIFORNIA

THE STATE OF CALIFORNIA OR ITS OFFICERS OR AGENTS SHALL NOT BE RESPONSIBLE FOR THE ACCURACY OR COMPLETENESS OF SCANNED COPIES OF THIS PLAN SHEET.

NOTE:
EXISTING UTILITIES HAVE NOT BEEN PLOTTED ON THESE PLANS.

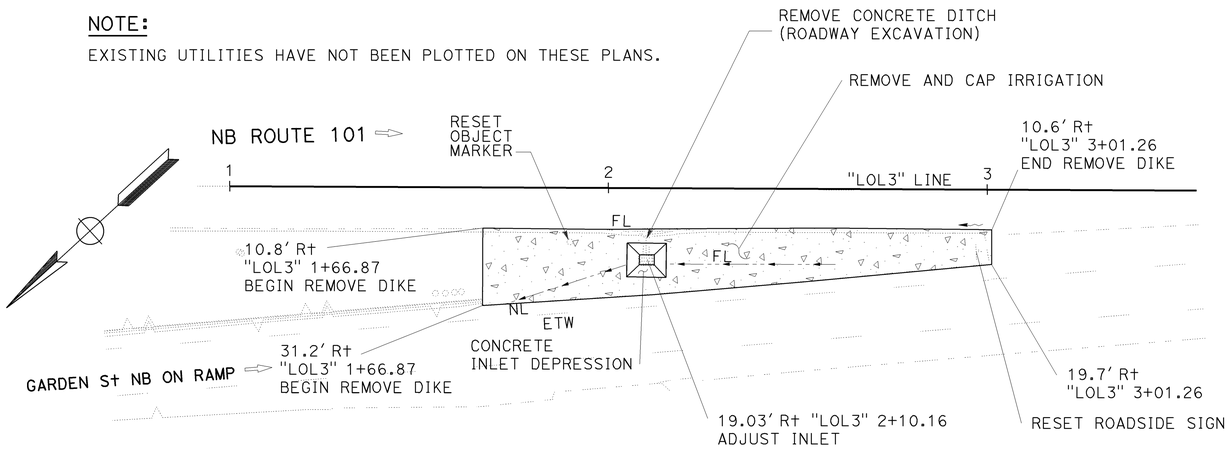

CST No. 3
FLOW LINE ELEVATIONS

STATION	OFFSET	ELEVATION
"LOL3" 1+72.87	30.80′ Rt	14.54
"LOL3" 1+80	28.45′ Rt	14.76
"LOL3" 1+90	25.17′ Rt	15.01
"LOL3" 2+00	21.89′ Rt	15.25
"LOL3" 2+10	19.03′ Rt	15.40
"LOL3" 2+20	20.03′ Rt	15.61
"LOL3" 2+30	20.00′ Rt	15.84
"LOL3" 2+40	19.97′ Rt	16.09
"LOL3" 2+50	19.95′ Rt	16.44
"LOL3" 2+60	19.92′ Rt	16.72

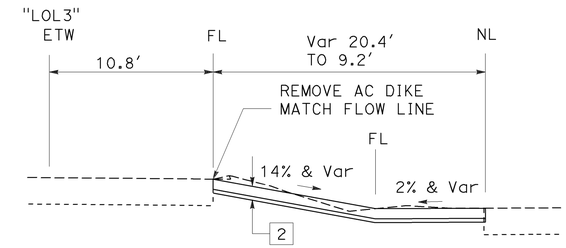

"LOL3" 1+66.87 TO 3+01.26

CONTRASTING SURFACE TREATMENT No. 3
NB ON RAMP FROM GARDEN St
PM 13.61

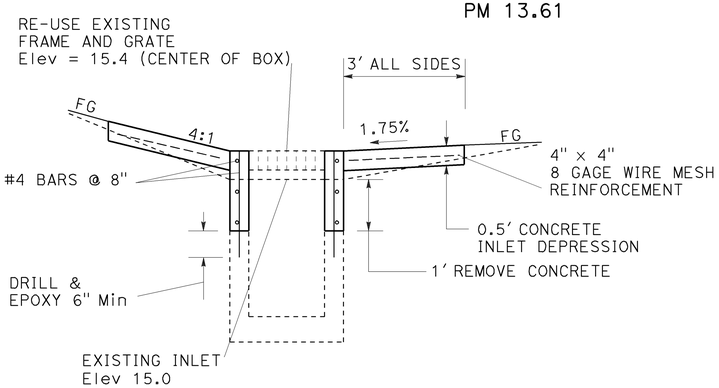

ADJUST INLET AND INLET DEPRESSION

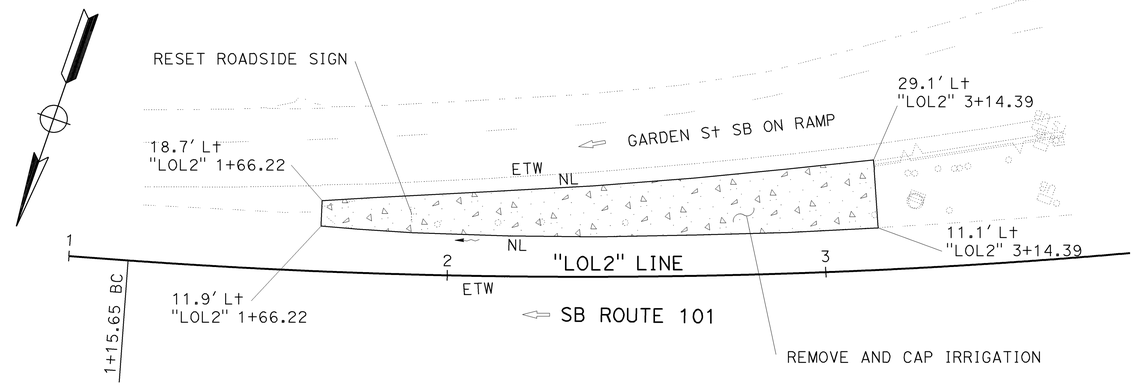

CONTRASTING SURFACE TREATMENT No. 2
SB ON RAMP FROM GARDEN St
PM 13.37

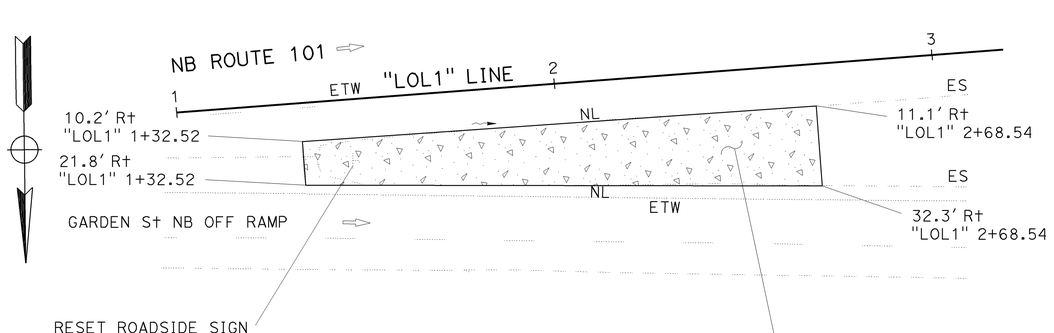

CONTRASTING SURFACE TREATMENT No. 1
NB OFF RAMP TO GARDEN St
PM 13.24

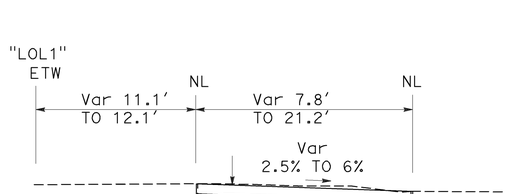

"LOL1" 1+32.52 TO 2+68.54

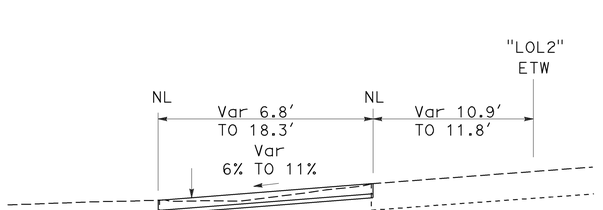

"LOL2" 1+66.22 TO 3+14.39

LOCATION No. 1

CONSTRUCTION DETAILS

NO SCALE

C-3

STATE OF CALIFORNIA - DEPARTMENT OF TRANSPORTATION
DESIGN
FUNCTIONAL SUPERVISOR: STEVEN M. WYATT
CALCULATED-DESIGNED BY
CHECKED BY
REVISED BY
DATE REVISED
MICHAEL A. O'NEAL
SCOTT D. KIRKISH

LAST REVISION DATE PLOTTED => 15-DEC-2014
TIME PLOTTED => 09:17
12-01-14

BORDER LAST REVISED 7/2/2010
USERNAME => s123239
DGN FILE => 0500020289ga003.dgn
RELATIVE BORDER SCALE IS IN INCHES 0 1 2 3
UNIT 1450
PROJECT NUMBER & PHASE 05000202891

Dist	COUNTY	ROUTE	POST MILES TOTAL PROJECT	SHEET No.	TOTAL SHEETS
05	SB	101	13.2/27.1	6	64

Michael O'Neal 12-1-14
REGISTERED CIVIL ENGINEER DATE

12-1-14
PLANS APPROVAL DATE

MICHAEL A. O'NEAL No. 81051 Exp. 9-30-15 CIVIL — REGISTERED PROFESSIONAL ENGINEER — STATE OF CALIFORNIA

THE STATE OF CALIFORNIA OR ITS OFFICERS OR AGENTS SHALL NOT BE RESPONSIBLE FOR THE ACCURACY OR COMPLETENESS OF SCANNED COPIES OF THIS PLAN SHEET.

NOTE:

EXISTING UTILITIES HAVE NOT BEEN PLOTTED ON THESE PLANS.

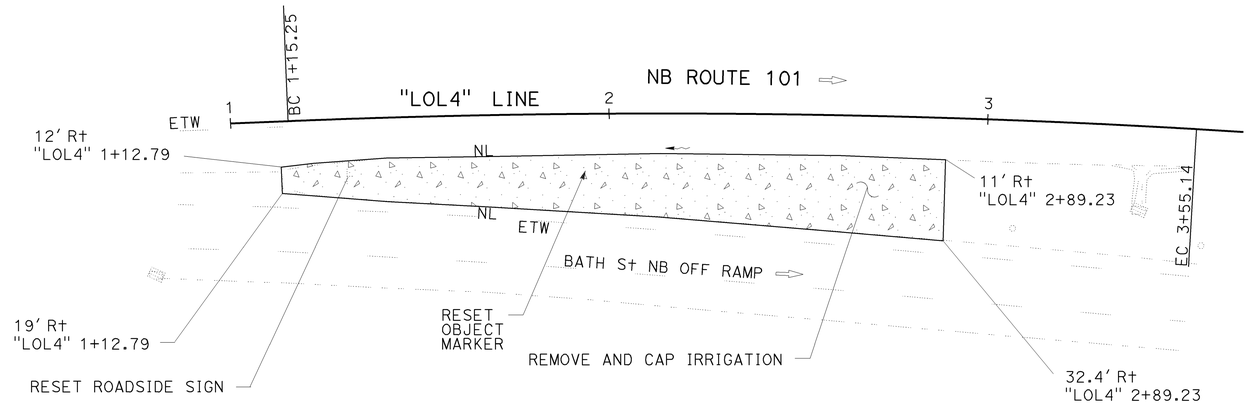

CONTRASTING SURFACE TREATMENT No. 4

NB OFF RAMP TO BATH St
PM R14.02

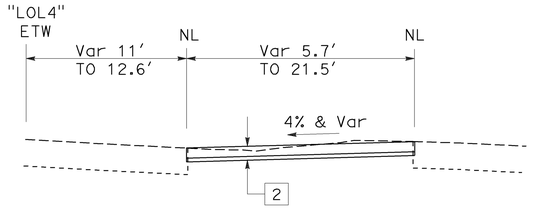

"LOL4" 1+12.79 TO 2+89.23

LOCATION No. 2

CONSTRUCTION DETAILS

NO SCALE

C-4

STATE OF CALIFORNIA - DEPARTMENT OF TRANSPORTATION
DESIGN
FUNCTIONAL SUPERVISOR: STEVEN M. WYATT
CALCULATED-DESIGNED BY: MICHAEL A. O'NEAL
CHECKED BY: SCOTT D. KIRKISH
REVISED BY
DATE REVISED

LAST REVISION DATE PLOTTED => 15-DEC-2014
12-01-14 TIME PLOTTED => 09:17

BORDER LAST REVISED 7/2/2010 | USERNAME => s123239 | DGN FILE => 0500020289ga004.dgn | RELATIVE BORDER SCALE IS IN INCHES 0 1 2 3 | UNIT 1450 | PROJECT NUMBER & PHASE 05000202891

Dist	COUNTY	ROUTE	POST MILES TOTAL PROJECT	SHEET No.	TOTAL SHEETS
05	SB	101	13.2/27.1	7	64

Michael O'Neal 12-1-14
REGISTERED CIVIL ENGINEER DATE

12-1-14
PLANS APPROVAL DATE

MICHAEL A. O'NEAL No. 81051 Exp. 9-30-15 CIVIL — REGISTERED PROFESSIONAL ENGINEER — STATE OF CALIFORNIA

THE STATE OF CALIFORNIA OR ITS OFFICERS OR AGENTS SHALL NOT BE RESPONSIBLE FOR THE ACCURACY OR COMPLETENESS OF SCANNED COPIES OF THIS PLAN SHEET.

NOTE:
EXISTING UTILITIES HAVE NOT BEEN PLOTTED ON THESE PLANS.

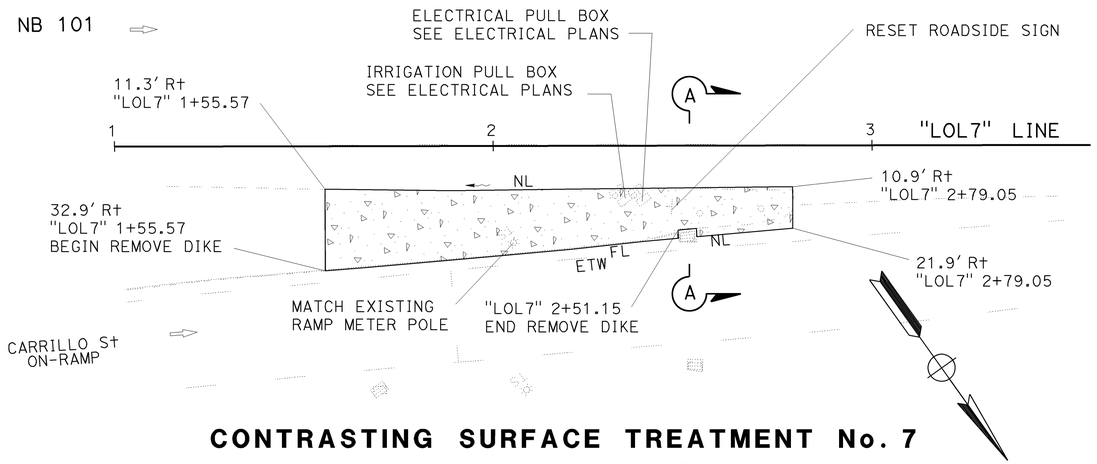

CONTRASTING SURFACE TREATMENT No. 7

NB ON RAMP FROM CARRILLO St
PM R14.87

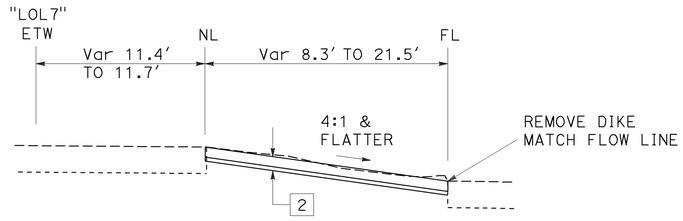

"LOL7" 1+55.57 TO 2+79.05

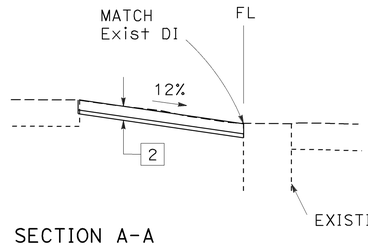

SECTION A-A

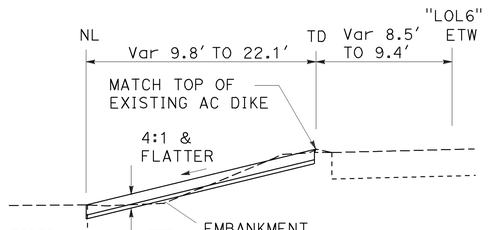

"LOL6" 1+86.74 TO 2+72.43

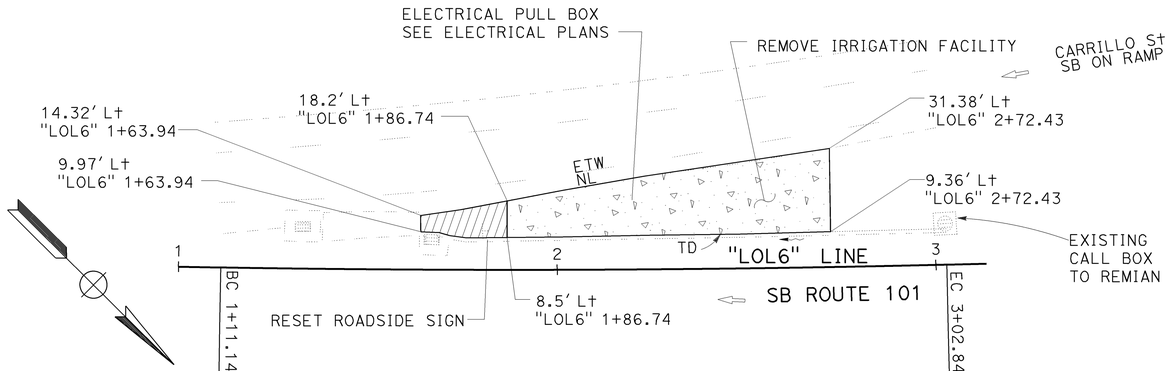

CONTRASTING SURFACE TREATMENT No. 6

SB ON RAMP FROM CARRILLO St
PM R14.69

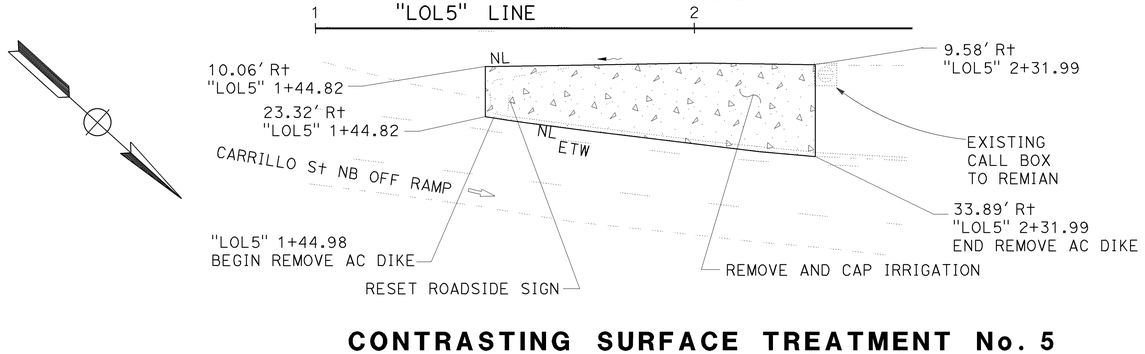

CONTRASTING SURFACE TREATMENT No. 5

NB OFF RAMP TO CARRILLO St
PM R14.66

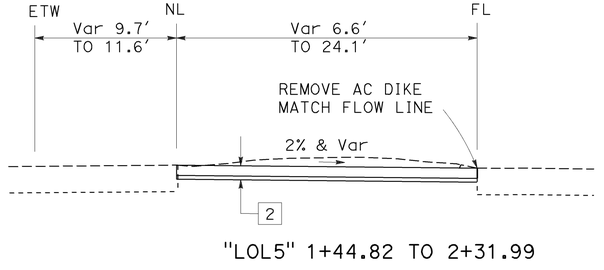

"LOL5" 1+44.82 TO 2+31.99

LOCATION No. 3

CONSTRUCTION DETAILS

NO SCALE

C-5

STATE OF CALIFORNIA - DEPARTMENT OF TRANSPORTATION
DESIGN
FUNCTIONAL SUPERVISOR: STEVEN M. WYATT
CALCULATED-DESIGNED BY: MICHAEL A. O'NEAL
CHECKED BY: SCOTT D. KIRKISH
REVISED BY / DATE REVISED

LAST REVISION: DATE PLOTTED => 15-DEC-2014
TIME PLOTTED => 09:17

Dist	COUNTY	ROUTE	POST MILES TOTAL PROJECT	SHEET No.	TOTAL SHEETS
05	SB	101	13.2/27.1	8	64

Michael O'Neal 12-1-14
REGISTERED CIVIL ENGINEER DATE

12-1-14
PLANS APPROVAL DATE

MICHAEL A. O'NEAL No. 81051 Exp. 9-30-15 CIVIL — REGISTERED PROFESSIONAL ENGINEER — STATE OF CALIFORNIA

THE STATE OF CALIFORNIA OR ITS OFFICERS OR AGENTS SHALL NOT BE RESPONSIBLE FOR THE ACCURACY OR COMPLETENESS OF SCANNED COPIES OF THIS PLAN SHEET.

NOTE:

EXISTING UTILITIES HAVE NOT BEEN PLOTTED ON THESE PLANS.

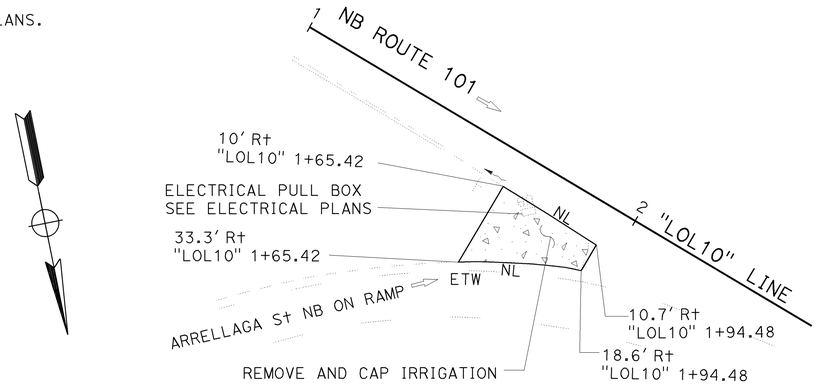

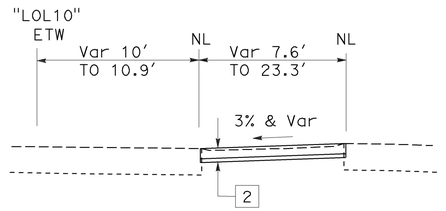

"LOL10" 1+65.42 TO 1+94.48

CONTRASTING SURFACE TREATMENT No. 10

NB ON RAMP FROM ARRELLAGA St
PM R15.38

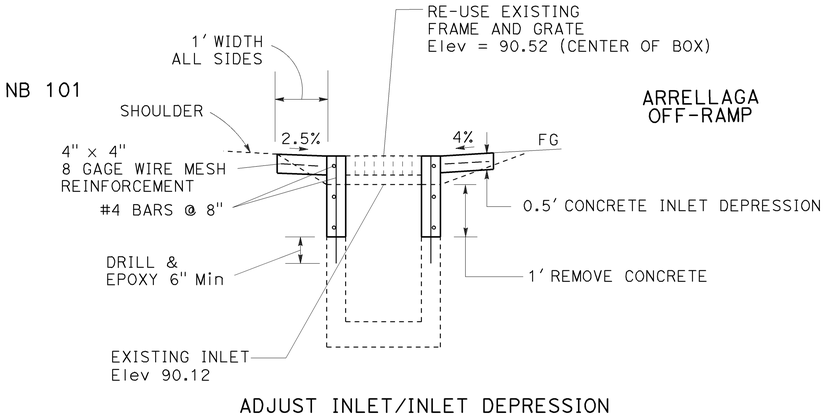

ADJUST INLET/INLET DEPRESSION

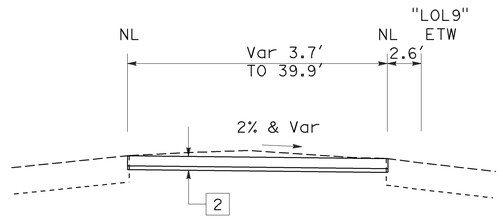

"LOL9" 1+46.84 TO 1+86.20

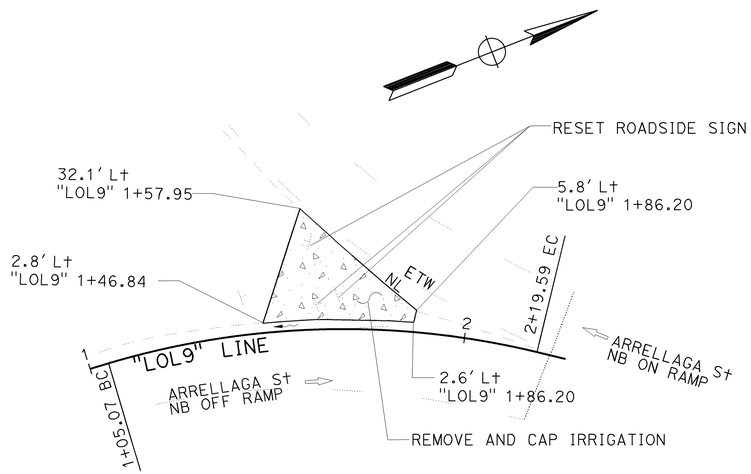

CONTRASTING SURFACE TREATMENT No. 9

ARRELLAGA St
PM R15.36

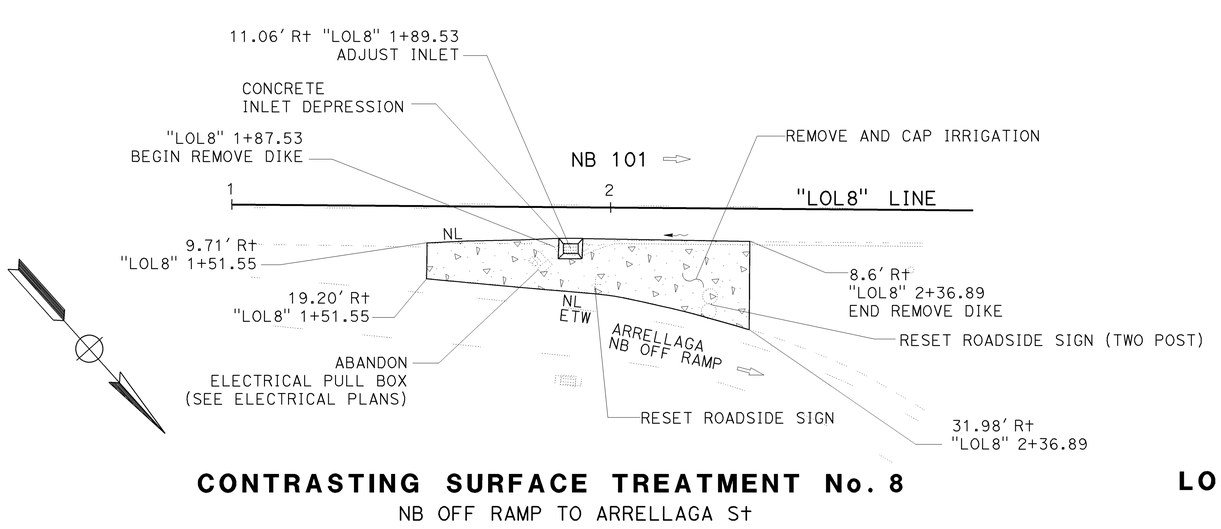

CONTRASTING SURFACE TREATMENT No. 8

NB OFF RAMP TO ARRELLAGA St
PM R15.32

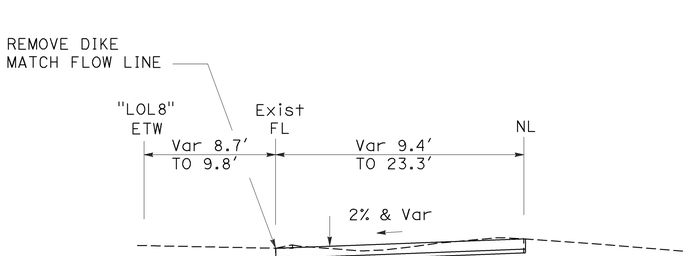

"LOL8" 1+51.55 TO 2+36.89

LOCATION No. 4

CONSTRUCTION DETAILS

NO SCALE

C-6

STATE OF CALIFORNIA - DEPARTMENT OF TRANSPORTATION
DESIGN
FUNCTIONAL SUPERVISOR: STEVEN M. WYATT
CALCULATED-DESIGNED BY: MICHAEL A. O'NEAL
CHECKED BY: SCOTT D. KIRKISH
REVISED BY / DATE REVISED

LAST REVISION DATE PLOTTED => 15-DEC-2014
TIME PLOTTED => 09:17
12-01-14

BORDER LAST REVISED 7/2/2010
USERNAME => s123239
DGN FILE => 0500020289ga006.dgn
RELATIVE BORDER SCALE IS IN INCHES 0 1 2 3
UNIT 1450
PROJECT NUMBER & PHASE 05000202891

Dist	COUNTY	ROUTE	POST MILES TOTAL PROJECT	SHEET No.	TOTAL SHEETS
05	SB	101	13.2/27.1	9	64

Michael O'Neal 12-1-14
REGISTERED CIVIL ENGINEER DATE

12-1-14
PLANS APPROVAL DATE

REGISTERED PROFESSIONAL ENGINEER — MICHAEL A. O'NEAL — No. 81051 — Exp. 9-30-15 — CIVIL — STATE OF CALIFORNIA

THE STATE OF CALIFORNIA OR ITS OFFICERS OR AGENTS SHALL NOT BE RESPONSIBLE FOR THE ACCURACY OR COMPLETENESS OF SCANNED COPIES OF THIS PLAN SHEET.

NOTE:
EXISTING UTILITIES HAVE NOT BEEN PLOTTED ON THESE PLANS.

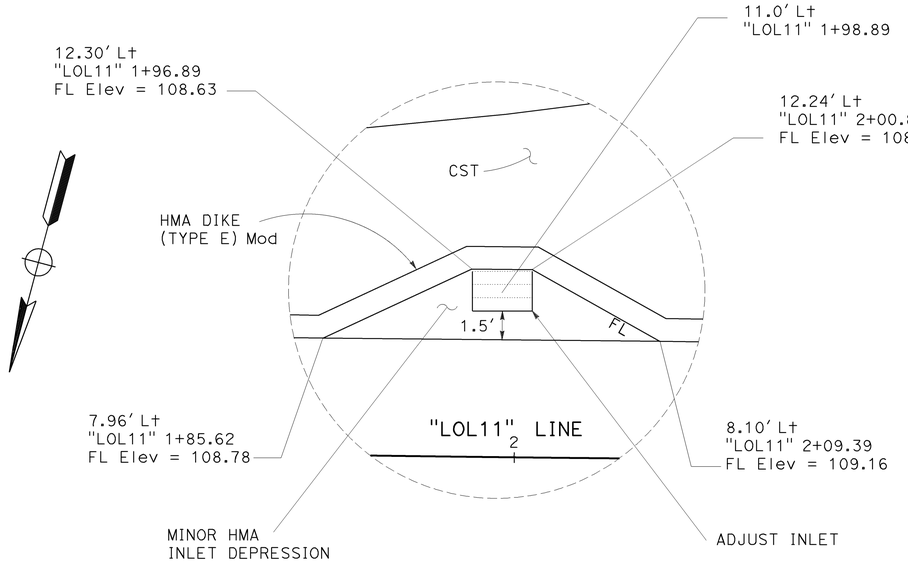

DRAINAGE DETAIL

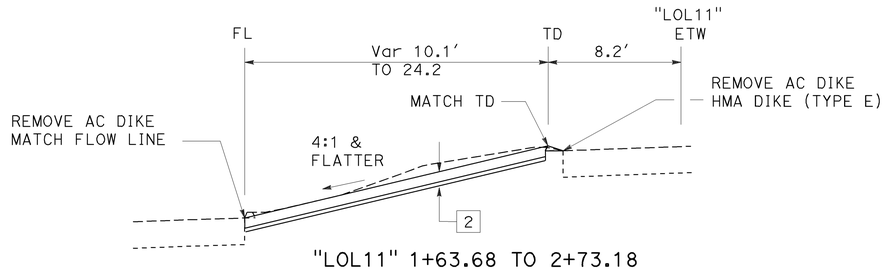

"LOL11" 1+63.68 TO 2+73.18

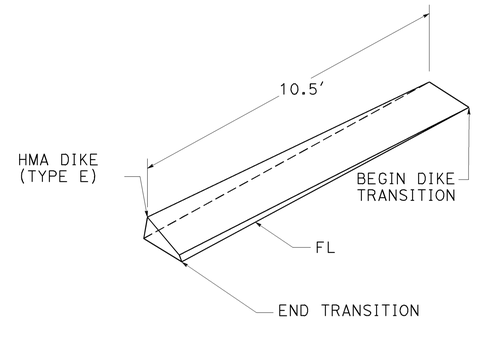

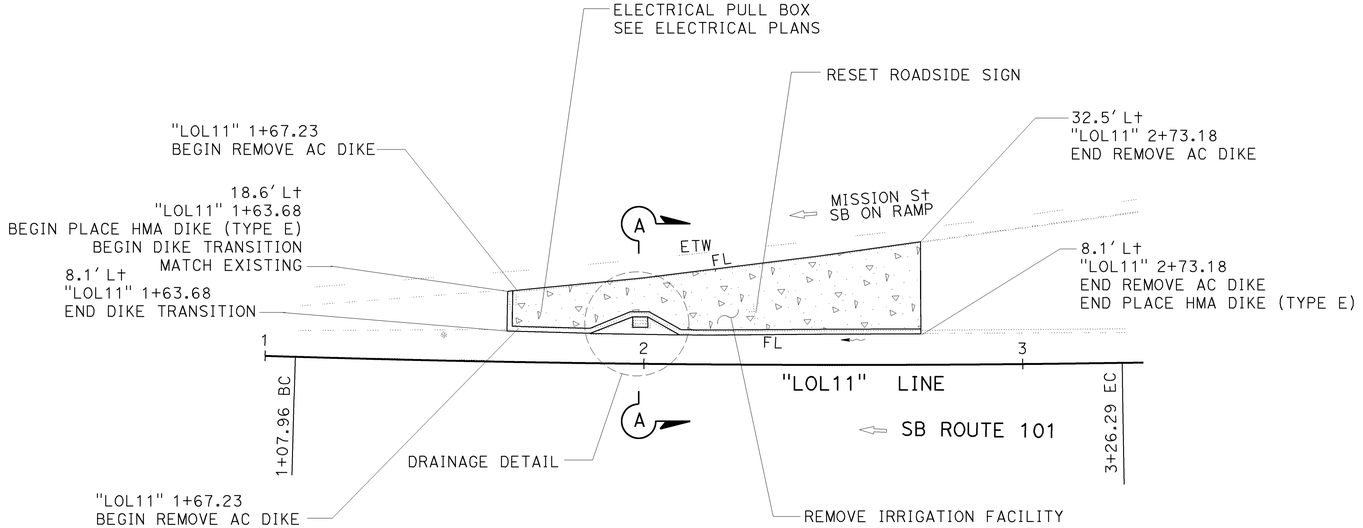

CONTRASTING SURFACE TREATMENT No. 11

SB ON RAMP FROM MISSION St
PM 15.64

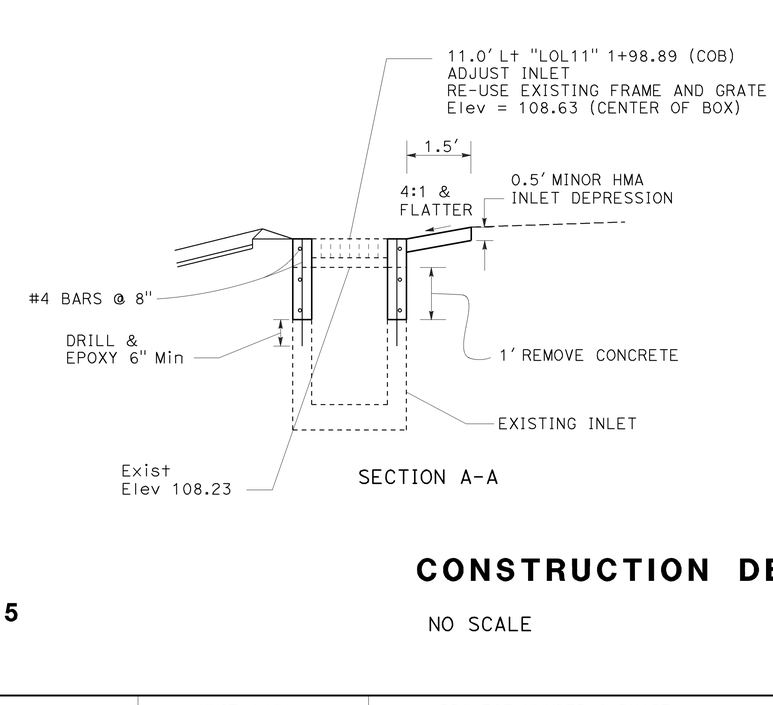

SECTION A-A

LOCATION No. 5

CONSTRUCTION DETAILS

NO SCALE

C-7

STATE OF CALIFORNIA - DEPARTMENT OF TRANSPORTATION
DESIGN
FUNCTIONAL SUPERVISOR: STEVEN M. WYATT
CALCULATED-DESIGNED BY: MICHAEL A. O'NEAL
CHECKED BY: SCOTT D. KIRKISH
REVISED BY | DATE REVISED

LAST REVISION | DATE PLOTTED => 15-DEC-2014
12-01-14 | TIME PLOTTED => 09:17

Dist	COUNTY	ROUTE	POST MILES TOTAL PROJECT	SHEET No.	TOTAL SHEETS
05	SB	101	13.2/27.1	10	64

Michael O'Neal 12-1-14
REGISTERED CIVIL ENGINEER DATE

12-1-14
PLANS APPROVAL DATE

MICHAEL A. O'NEAL No. 81051 Exp. 9-30-15 CIVIL — REGISTERED PROFESSIONAL ENGINEER — STATE OF CALIFORNIA

THE STATE OF CALIFORNIA OR ITS OFFICERS OR AGENTS SHALL NOT BE RESPONSIBLE FOR THE ACCURACY OR COMPLETENESS OF SCANNED COPIES OF THIS PLAN SHEET.

NOTE:

EXISTING UTILITIES HAVE NOT BEEN PLOTTED ON THESE PLANS.

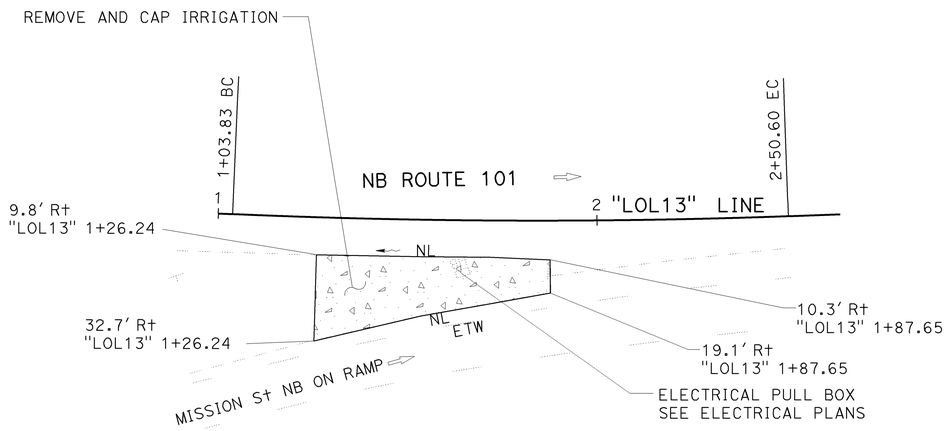

CONTRASTING SURFACE TREATMENT No. 13

NB ON RAMP FROM MISSION St
PM R15.82

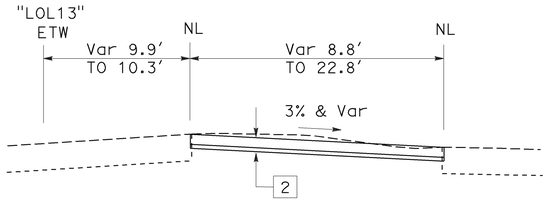

"LOL13" 1+26.24 TO 1+87.65

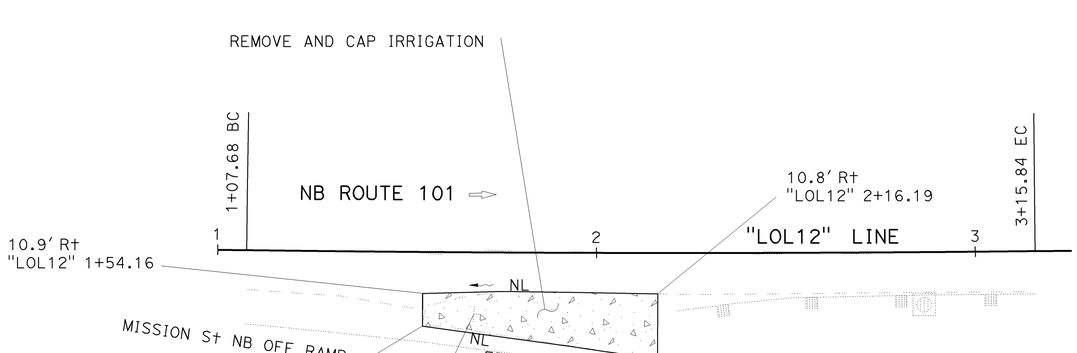

CONTRASTING SURFACE TREATMENT No. 12

NB OFF RAMP TO MISSION St
PM R15.65

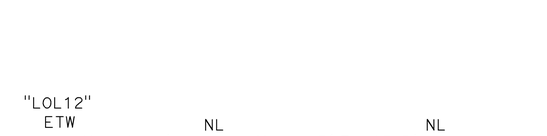

"LOL12" 1+54.16 TO 2+16.19

CONSTRUCTION DETAILS

C-8

NO SCALE

LOCATION No. 5

STATE OF CALIFORNIA - DEPARTMENT OF TRANSPORTATION
DESIGN
FUNCTIONAL SUPERVISOR: STEVEN M. WYATT
CALCULATED-DESIGNED BY
CHECKED BY
MICHAEL A. O'NEAL
SCOTT D. KIRKISH
REVISED BY
DATE REVISED
Caltrans

LAST REVISION DATE PLOTTED => 15-DEC-2014
TIME PLOTTED => 09:17
12-01-14

BORDER LAST REVISED 7/2/2010
USERNAME => s123239
DGN FILE => 05000202891ga008.dgn
RELATIVE BORDER SCALE IS IN INCHES 0 1 2 3
UNIT 1450
PROJECT NUMBER & PHASE 05000202891

Dist	COUNTY	ROUTE	POST MILES TOTAL PROJECT	SHEET No.	TOTAL SHEETS
05	SB	101	13.2/27.1	11	64

Michael O'Neal 12-1-14
REGISTERED CIVIL ENGINEER DATE

12-1-14
PLANS APPROVAL DATE

REGISTERED PROFESSIONAL ENGINEER — MICHAEL A. O'NEAL — No. 81051 — Exp. 9-30-15 — CIVIL — STATE OF CALIFORNIA

THE STATE OF CALIFORNIA OR ITS OFFICERS OR AGENTS SHALL NOT BE RESPONSIBLE FOR THE ACCURACY OR COMPLETENESS OF SCANNED COPIES OF THIS PLAN SHEET.

NOTE:
EXISTING UTILITIES HAVE NOT BEEN PLOTTED ON THESE PLANS.

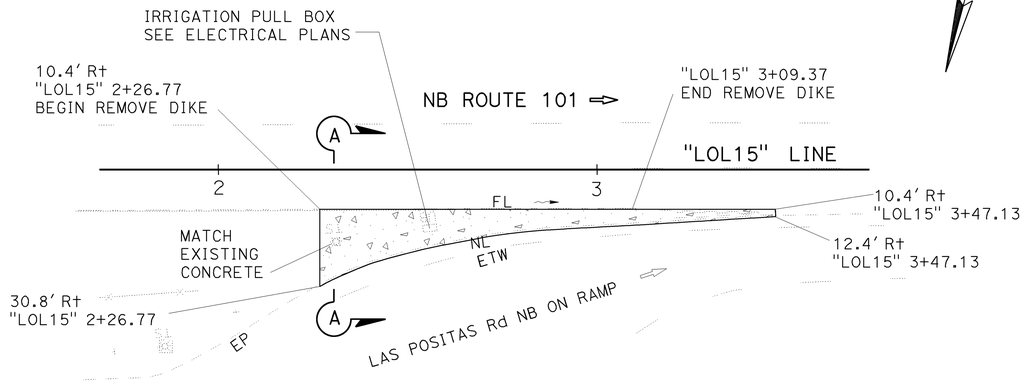

CONTRASTING SURFACE TREATMENT No. 15

NB ON RAMP FROM LAS POSITAS Rd
PM 16.68

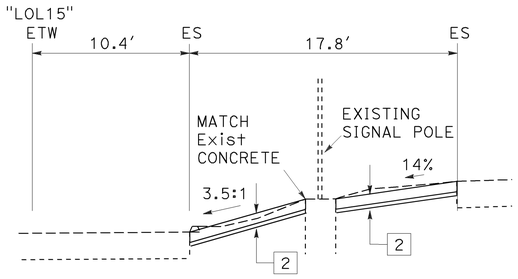

SECTION A-A

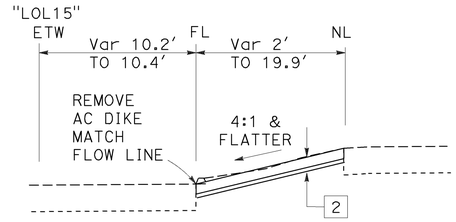

"LOL15" 2+26.77 TO 3+47.13

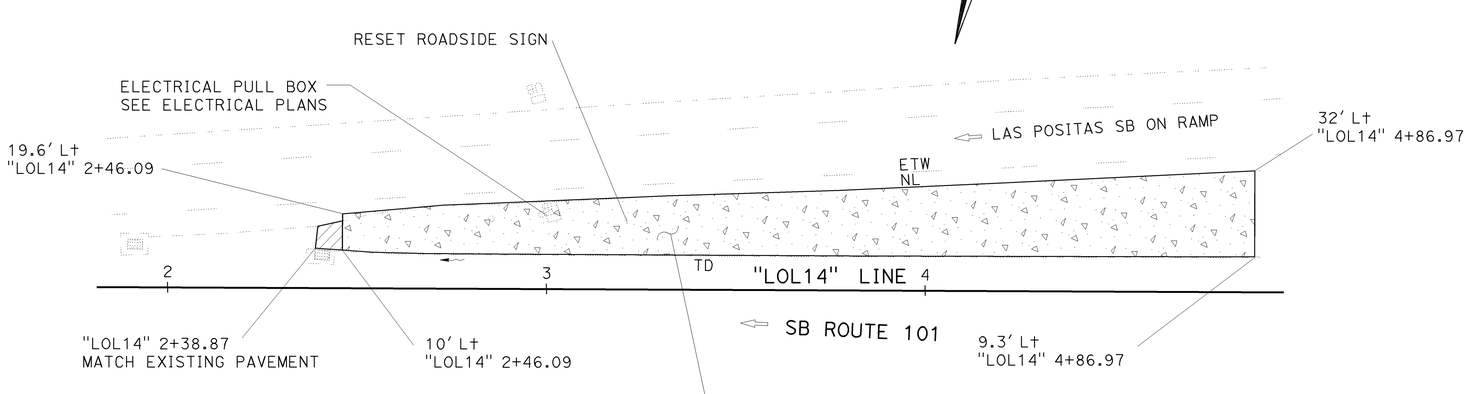

CONTRASTING SURFACE TREATMENT No. 14

SB ON RAMP FROM LAS POSITAS Rd
PM 16.37

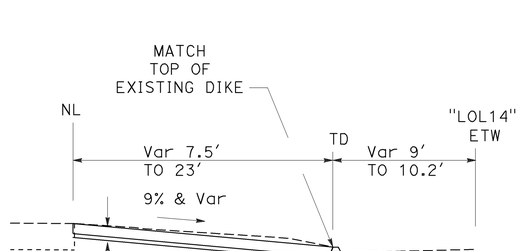

"LOL14" 2+46.09 TO 4+86.97

LOCATION No. 6

CONSTRUCTION DETAILS

NO SCALE

C-9

STATE OF CALIFORNIA - DEPARTMENT OF TRANSPORTATION
DESIGN
FUNCTIONAL SUPERVISOR: STEVEN M. WYATT
CALCULATED-DESIGNED BY: MICHAEL A. O'NEAL
CHECKED BY: SCOTT D. KIRKISH
REVISED BY
DATE REVISED
LAST REVISION DATE PLOTTED => 15-DEC-2014
TIME PLOTTED => 09:17
12-01-14

BORDER LAST REVISED 7/2/2010
USERNAME => s123239
DGN FILE => 0500020289ga009.dgn
RELATIVE BORDER SCALE IS IN INCHES 0 1 2 3
UNIT 1450
PROJECT NUMBER & PHASE 05000202891

Dist	COUNTY	ROUTE	POST MILES TOTAL PROJECT	SHEET No.	TOTAL SHEETS
05	SB	101	13.2/27.1	12	64

Michael O'Neal 12-1-14
REGISTERED CIVIL ENGINEER DATE

12-1-14
PLANS APPROVAL DATE

REGISTERED PROFESSIONAL ENGINEER
MICHAEL A. O'NEAL
No. 81051
Exp. 9-30-15
CIVIL
STATE OF CALIFORNIA

THE STATE OF CALIFORNIA OR ITS OFFICERS OR AGENTS SHALL NOT BE RESPONSIBLE FOR THE ACCURACY OR COMPLETENESS OF SCANNED COPIES OF THIS PLAN SHEET.

NOTE:

EXISTING UTILITIES HAVE NOT BEEN PLOTTED ON THESE PLANS.

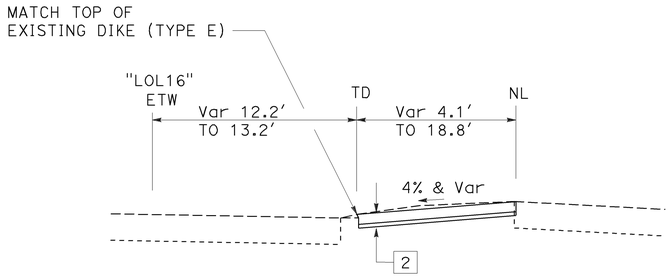

"LOL16" 1+85.48 TO 5+09.87

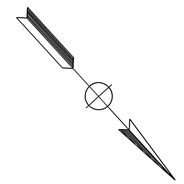

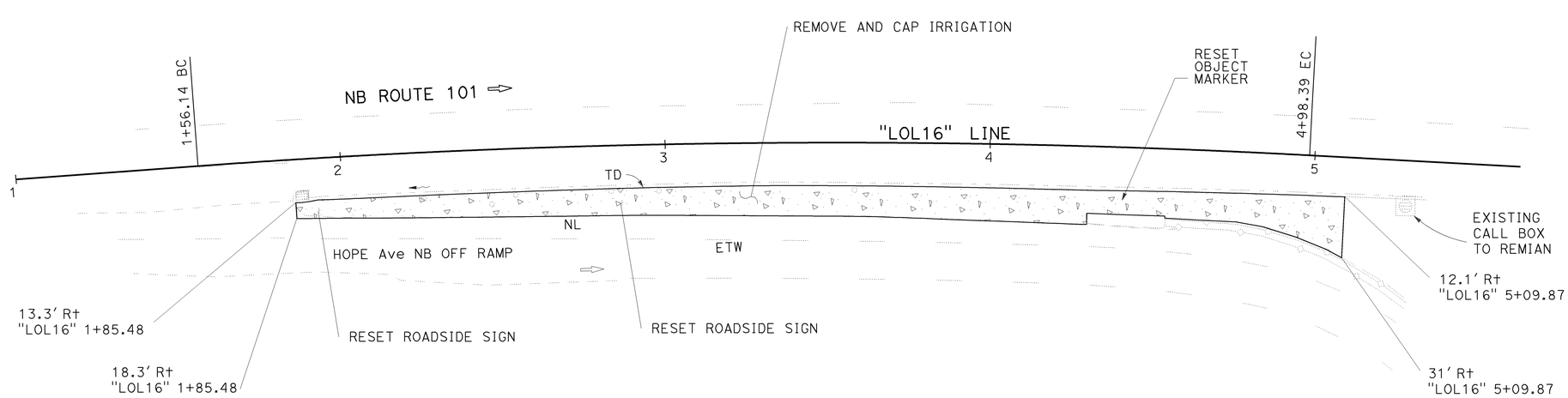

CONTRASTING SURFACE TREATMENT No. 16

NB OFF RAMP TO HOPE Ave
PM 17.44

LOCATION No. 7

CONSTRUCTION DETAILS

NO SCALE

C-10

STATE OF CALIFORNIA - DEPARTMENT OF TRANSPORTATION
DESIGN
FUNCTIONAL SUPERVISOR: STEVEN M. WYATT
CALCULATED-DESIGNED BY: MICHAEL A. O'NEAL
CHECKED BY: SCOTT D. KIRKISH
REVISED BY
DATE REVISED

LAST REVISION DATE PLOTTED => 15-DEC-2014
12-01-14 TIME PLOTTED => 09:17

BORDER LAST REVISED 7/2/2010
USERNAME => s123239
DGN FILE => 05000202891ga010.dgn
RELATIVE BORDER SCALE IS IN INCHES 0 1 2 3
UNIT 1450
PROJECT NUMBER & PHASE 05000202891

Dist	COUNTY	ROUTE	POST MILES TOTAL PROJECT	SHEET No.	TOTAL SHEETS
05	SB	101	13.2/27.1	13	64

Michael O'Neal 12-1-14
REGISTERED CIVIL ENGINEER DATE

12-1-14
PLANS APPROVAL DATE

REGISTERED PROFESSIONAL ENGINEER — MICHAEL A. O'NEAL — No. 81051 — Exp. 9-30-15 — CIVIL — STATE OF CALIFORNIA

THE STATE OF CALIFORNIA OR ITS OFFICERS OR AGENTS SHALL NOT BE RESPONSIBLE FOR THE ACCURACY OR COMPLETENESS OF SCANNED COPIES OF THIS PLAN SHEET.

NOTE:
EXISTING UTILITIES HAVE NOT BEEN PLOTTED ON THESE PLANS.

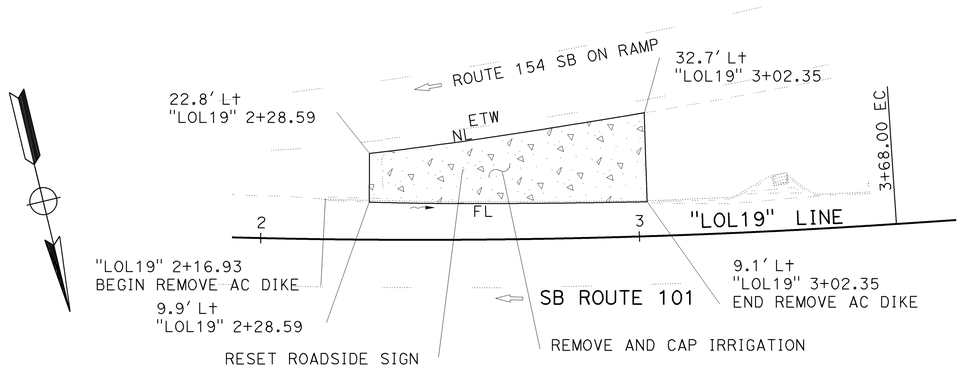

CONTRASTING SURFACE TREATMENT No. 19
SB ON RAMP FROM R†e 154
PM 18.24

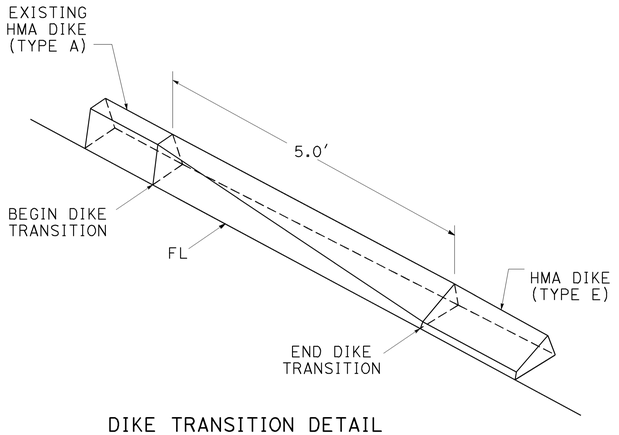

DIKE TRANSITION DETAIL

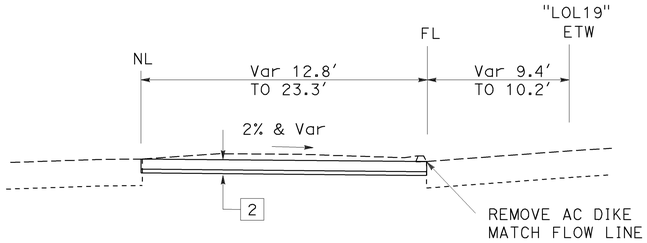

"LOL19" 2+28.59 TO 3+02.35

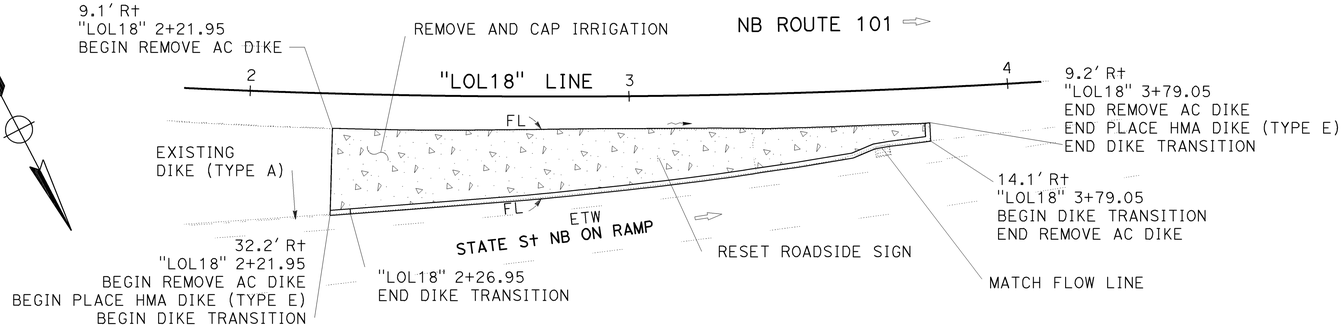

CONTRASTING SURFACE TREATMENT No. 18
NB ON RAMP FROM STATE S†
PM 18.19

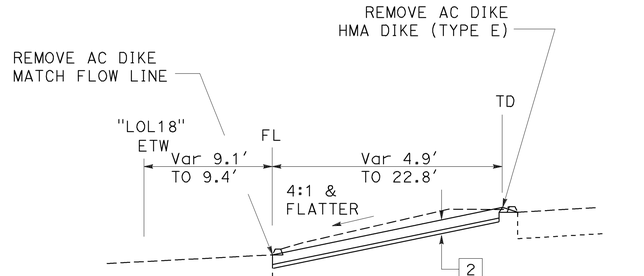

"LOL18" 2+21.95 TO 3+79.05

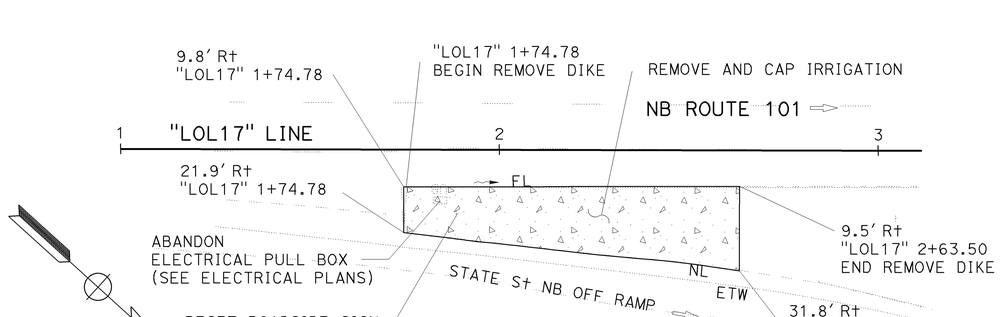

CONTRASTING SURFACE TREATMENT No. 17
NB OFF RAMP TO STATE S†
PM 17.96

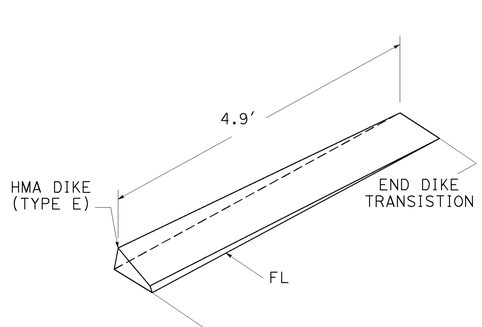

DIKE TRANSITION DETAIL

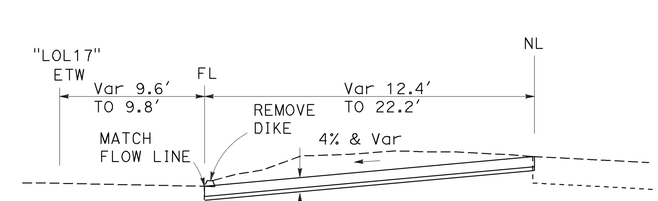

"LOL17" 1+74.78 TO 2+63.50

LOCATION No. 8

CONSTRUCTION DETAILS

NO SCALE

C-11

CALCULATED-DESIGNED BY
CHECKED BY
REVISED BY
DATE REVISED
MICHAEL A. O'NEAL
SCOTT D. KIRKISH
FUNCTIONAL SUPERVISOR
STEVEN M. WYATT
STATE OF CALIFORNIA - DEPARTMENT OF TRANSPORTATION
DESIGN
Caltrans

LAST REVISION DATE PLOTTED => 15-DEC-2014
12-01-14 TIME PLOTTED => 09:17

BORDER LAST REVISED 7/2/2010
USERNAME => s123239
DGN FILE => 05000202891ga011.dgn
RELATIVE BORDER SCALE IS IN INCHES 0 1 2 3
UNIT 1450
PROJECT NUMBER & PHASE 05000202891

Dist	COUNTY	ROUTE	POST MILES TOTAL PROJECT	SHEET No.	TOTAL SHEETS
05	SB	101	13.2/27.1	14	64

Michael O'Neal 12-1-14
REGISTERED CIVIL ENGINEER DATE

12-1-14
PLANS APPROVAL DATE

MICHAEL A. O'NEAL No. 81051 Exp. 9-30-15 CIVIL — REGISTERED PROFESSIONAL ENGINEER — STATE OF CALIFORNIA

THE STATE OF CALIFORNIA OR ITS OFFICERS OR AGENTS SHALL NOT BE RESPONSIBLE FOR THE ACCURACY OR COMPLETENESS OF SCANNED COPIES OF THIS PLAN SHEET.

NOTE:
EXISTING UTILITIES HAVE NOT BEEN PLOTTED ON THESE PLANS.

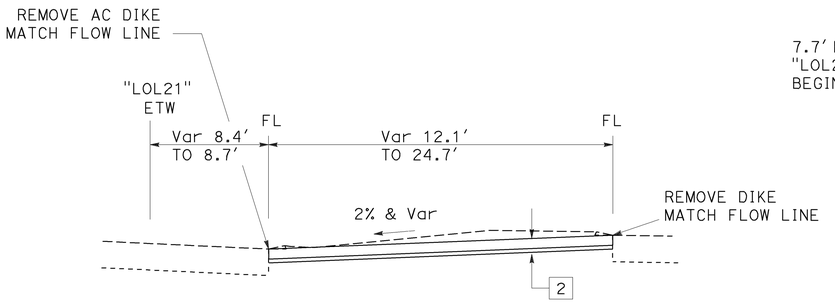

"LOL21" 1+80.81 TO 3+32.91

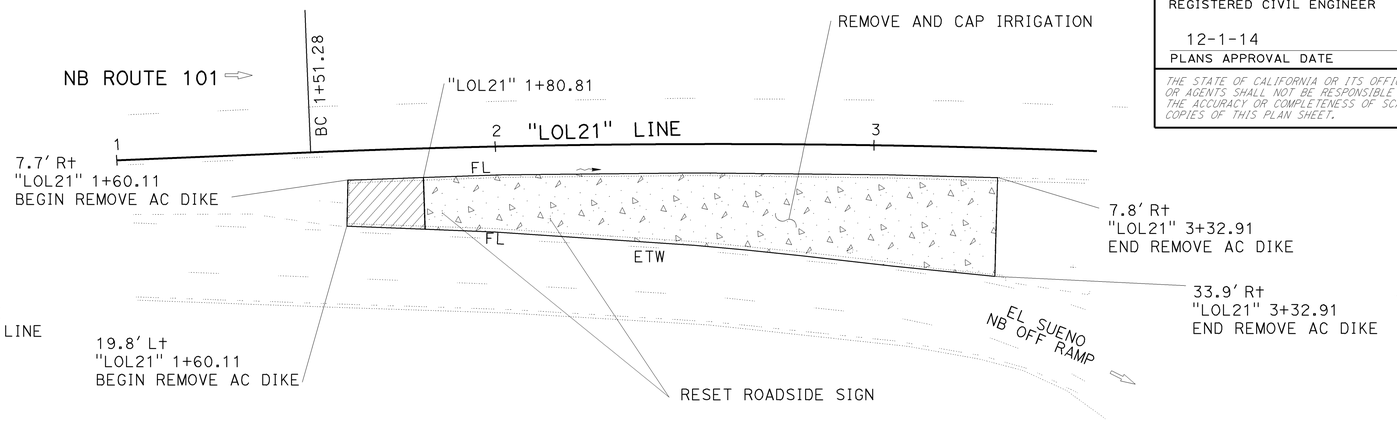

CONTRASTING SURFACE TREATMENT No. 21

NB OFF RAMP TO EL SUENO Rd
PM 18.86

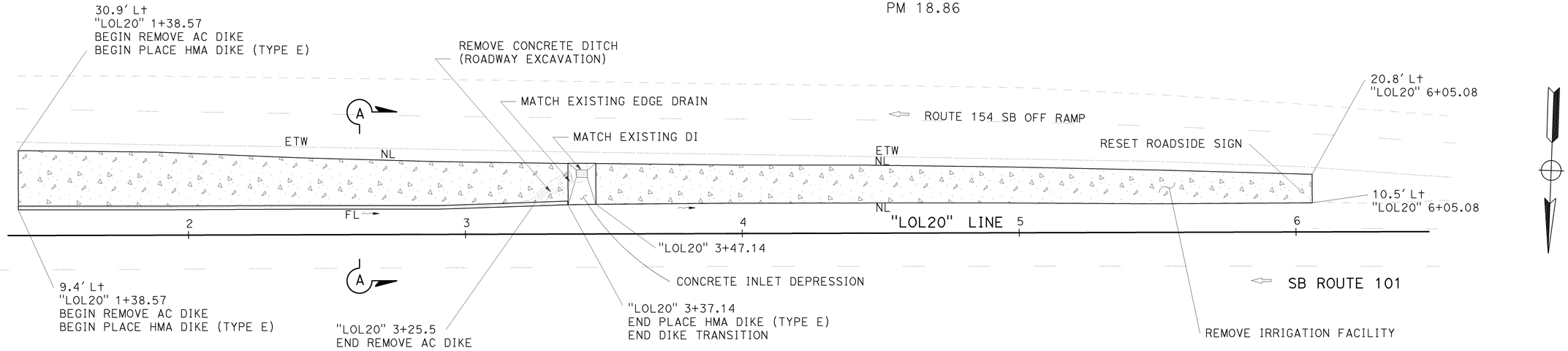

CONTRASTING SURFACE TREATMENT No. 20

SB OFF RAMP TO ROUTE 154
PM 18.78

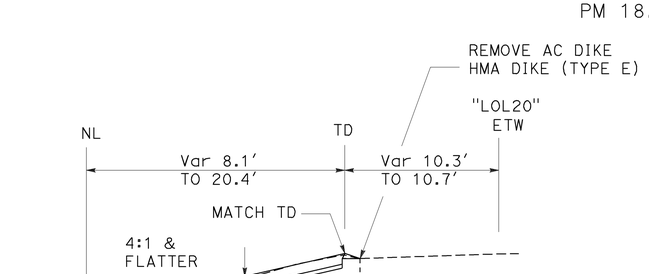

"LOL20" 1+38.57 TO 3+37.14

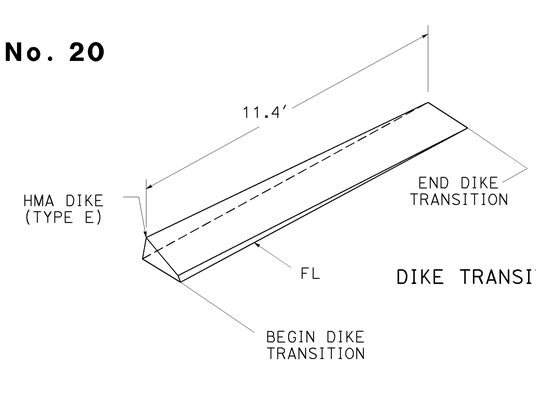

DIKE TRANSITION DETAIL

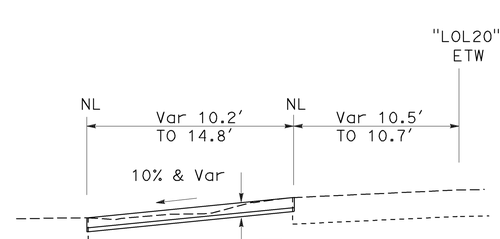

"LOL20" 3+47.14 TO 6+05.08

LOCATION No. 9

CONSTRUCTION DETAILS

NO SCALE

C-12

CALCULATED-DESIGNED BY
CHECKED BY
REVISED BY
DATE REVISED
MICHAEL A. O'NEAL
SCOTT D. KIRKISH
FUNCTIONAL SUPERVISOR
STEVEN M. WYATT
STATE OF CALIFORNIA - DEPARTMENT OF TRANSPORTATION
DESIGN
Caltrans

LAST REVISION DATE PLOTTED => 15-DEC-2014
12-01-14 TIME PLOTTED => 09:17

BORDER LAST REVISED 7/2/2010
USERNAME => s123239
DGN FILE => 0500020289ga012.dgn
RELATIVE BORDER SCALE IS IN INCHES 0 1 2 3
UNIT 1450
PROJECT NUMBER & PHASE 05000202891

Dist	COUNTY	ROUTE	POST MILES TOTAL PROJECT	SHEET No.	TOTAL SHEETS
05	SB	101	13.2/27.1	15	64

Michael O'Neal 12-1-14
REGISTERED CIVIL ENGINEER DATE

MICHAEL A. O'NEAL No. 81051 Exp. 9-30-15 CIVIL — REGISTERED PROFESSIONAL ENGINEER — STATE OF CALIFORNIA

12-1-14
PLANS APPROVAL DATE

THE STATE OF CALIFORNIA OR ITS OFFICERS OR AGENTS SHALL NOT BE RESPONSIBLE FOR THE ACCURACY OR COMPLETENESS OF SCANNED COPIES OF THIS PLAN SHEET.

NOTE:
EXISTING UTILITIES HAVE NOT BEEN PLOTTED ON THESE PLANS.

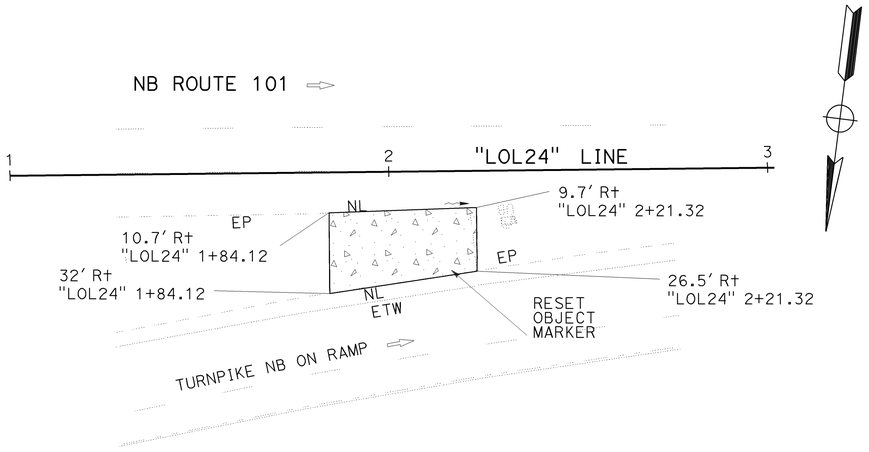

CONTRASTING SURFACE TREATMENT No. 24
NB ON RAMP FROM TURNPIKE Rd
PM 20.20

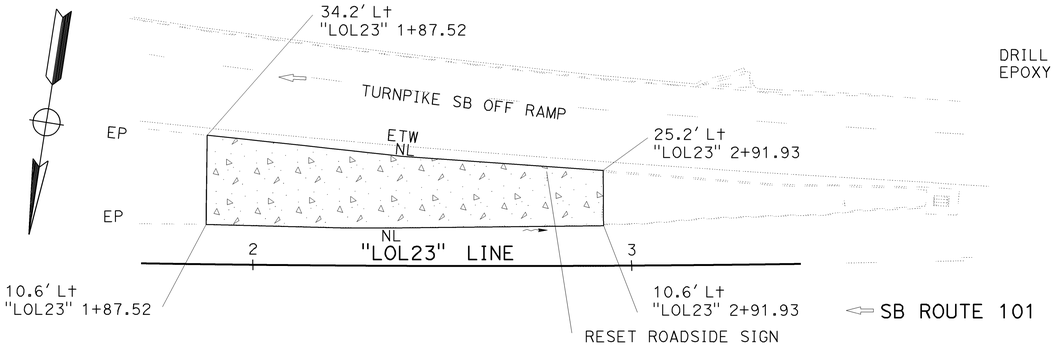

CONTRASTING SURFACE TREATMENT No. 23
SB OFF RAMP TO TURNPIKE Rd
PM 20.20

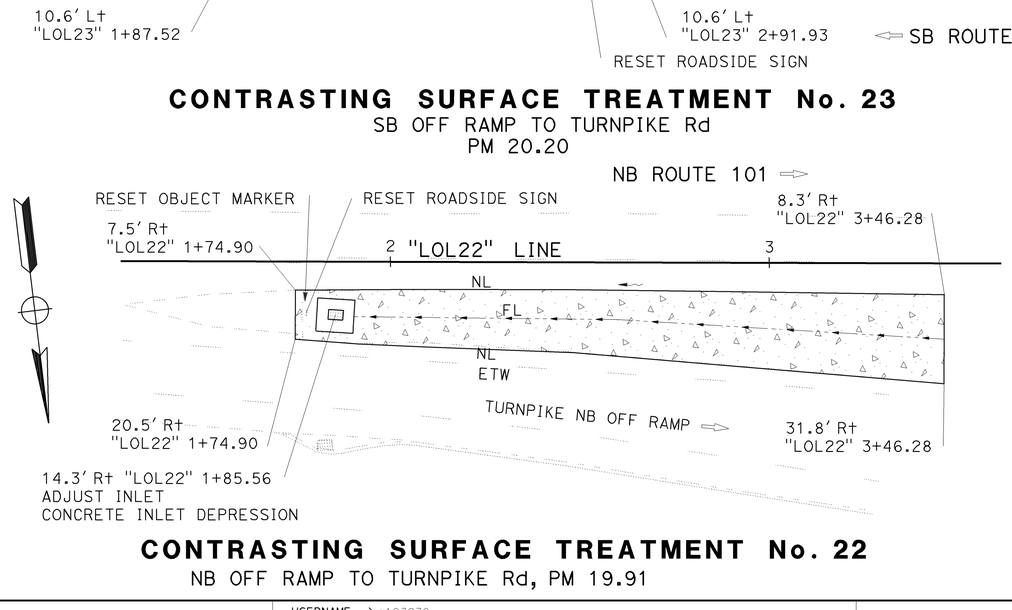

CONTRASTING SURFACE TREATMENT No. 22
NB OFF RAMP TO TURNPIKE Rd, PM 19.91

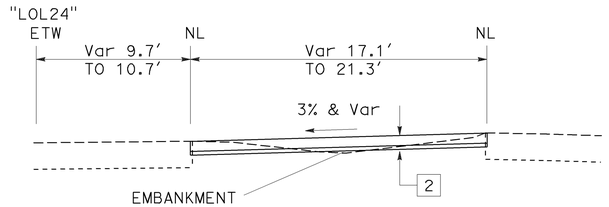

"LOL24' 1+84.12 TO 2+21.32

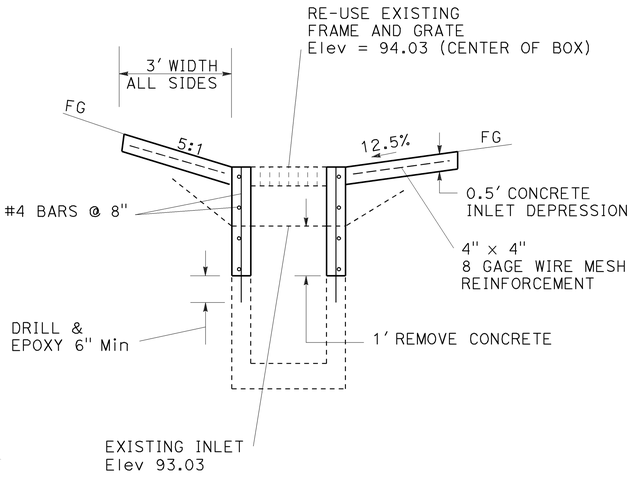

ADJUST INLET
CONCRETE APRON

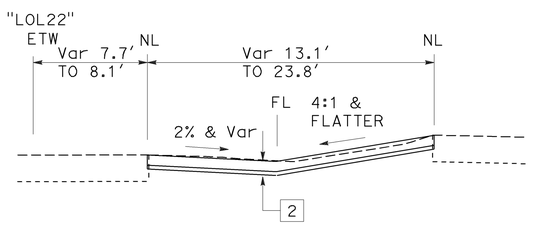

"LOL22" 1+74.90 TO 3+46.28

LOCATION No. 11

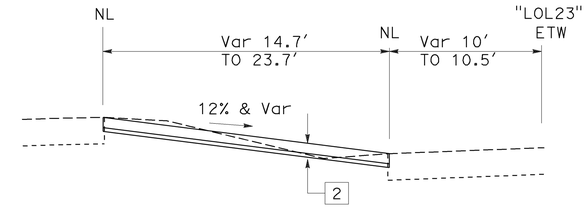

"LOL23" 1+87.52 TO 2+91.93

FLOW LINE ELEVATIONS

STATION	OFFSET	ELEVATION
"LOL22" 1+74.90	MATCH EXISTING	
"LOL22" 1+80	14.46'	Elev = 94.41
"LOL22" 1+85.56	14.50'	Elev = 94.03
"LOL22" 1+90	14.53'	Elev = 94.34
"LOL22" 2+00	14.60'	Elev = 94.56
"LOL22" 2+20	14.73'	Elev = 95.28
"LOL22" 2+40	14.87'	Elev = 95.91
"LOL22" 2+60	15.00'	Elev = 96.25
"LOL22" 2+80	16.17'	Elev = 96.52
"LOL22" 3+00	17.34'	Elev = 96.82
"LOL22" 3+20	18.50'	Elev = 97.15
"LOL22" 3+40	19.70'	Elev = 97.50
"LOL22" 3+46	20.00'	Elev = 97.60

CONSTRUCTION DETAILS

NO SCALE

C-13

REVISED BY | DATE REVISED
MICHAEL A. O'NEAL | SCOTT D. KIRKISH
CALCULATED-DESIGNED BY | CHECKED BY
FUNCTIONAL SUPERVISOR: STEVEN M. WYATT
STATE OF CALIFORNIA - DEPARTMENT OF TRANSPORTATION
DESIGN

LAST REVISION 12-01-14 | DATE PLOTTED => 15-DEC-2014 | TIME PLOTTED => 09:17

Dist	COUNTY	ROUTE	POST MILES TOTAL PROJECT	SHEET No.	TOTAL SHEETS
05	SB	101	13.2/27.1	16	64

Michael O'Neal 12-1-14
REGISTERED CIVIL ENGINEER DATE

12-1-14
PLANS APPROVAL DATE

REGISTERED PROFESSIONAL ENGINEER — MICHAEL A. O'NEAL — No. 81051 — Exp. 9-30-15 — CIVIL — STATE OF CALIFORNIA

THE STATE OF CALIFORNIA OR ITS OFFICERS OR AGENTS SHALL NOT BE RESPONSIBLE FOR THE ACCURACY OR COMPLETENESS OF SCANNED COPIES OF THIS PLAN SHEET.

NOTE:

EXISTING UTILITIES HAVE NOT BEEN PLOTTED ON THESE PLANS.

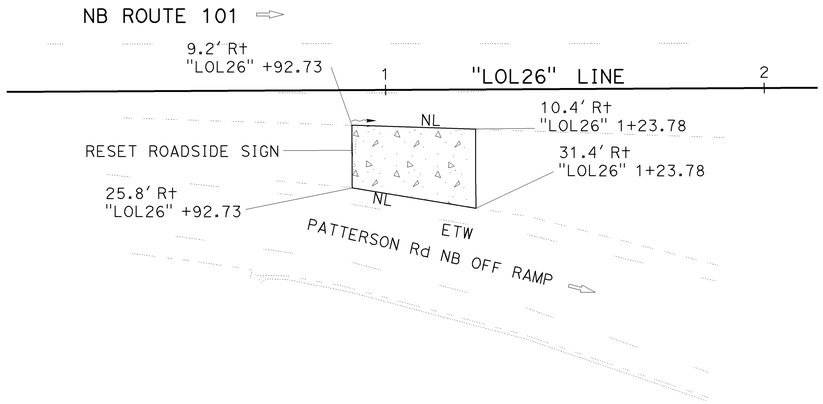

CONTRASTING SURFACE TREATMENT No. 26

NB OFF RAMP TO PATTERSON Ave
PM 21.08

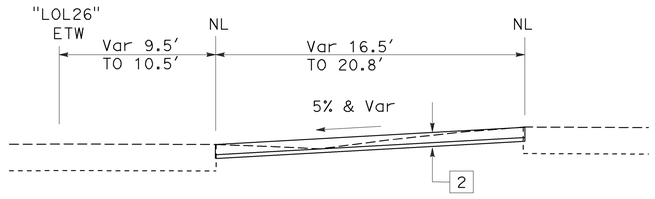

"LOL26" 0+92.73 TO 1+23.78

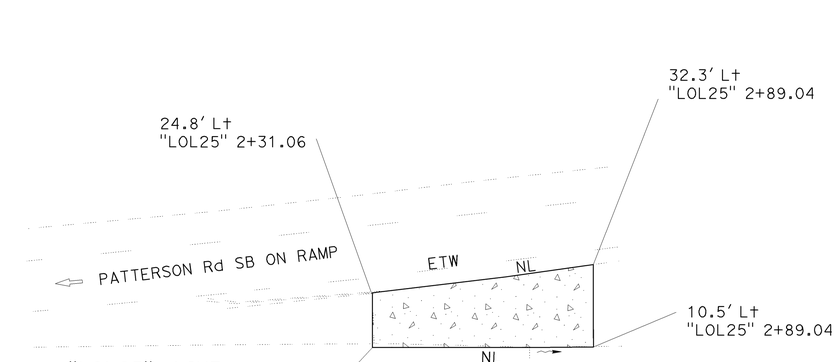

CONTRASTING SURFACE TREATMENT No. 25

SB ON RAMP FROM PATTERSON Ave
PM 20.94

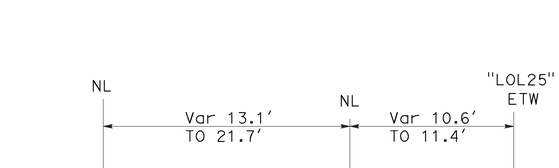

"LOL25" 2+31.06 TO 2+89.04

LOCATION No. 12

CONSTRUCTION DETAILS

NO SCALE

C-14

STATE OF CALIFORNIA - DEPARTMENT OF TRANSPORTATION
DESIGN
FUNCTIONAL SUPERVISOR: STEVEN M. WYATT
CALCULATED-DESIGNED BY
CHECKED BY
MICHAEL A. O'NEAL
SCOTT D. KIRKISH
REVISED BY
DATE REVISED

LAST REVISION 12-01-14
DATE PLOTTED => 15-DEC-2014
TIME PLOTTED => 09:17

BORDER LAST REVISED 7/2/2010
USERNAME => s123239
DGN FILE => 05000202891ga014.dgn
RELATIVE BORDER SCALE IS IN INCHES 0 1 2 3
UNIT 1450
PROJECT NUMBER & PHASE 05000202891

Dist	COUNTY	ROUTE	POST MILES TOTAL PROJECT	SHEET No.	TOTAL SHEETS
05	SB	101	13.2/27.1	17	64

Michael O'Neal 12-1-14
REGISTERED CIVIL ENGINEER DATE

12-1-14
PLANS APPROVAL DATE

MICHAEL A. O'NEAL No. 81051 Exp. 9-30-15 CIVIL — REGISTERED PROFESSIONAL ENGINEER — STATE OF CALIFORNIA

THE STATE OF CALIFORNIA OR ITS OFFICERS OR AGENTS SHALL NOT BE RESPONSIBLE FOR THE ACCURACY OR COMPLETENESS OF SCANNED COPIES OF THIS PLAN SHEET.

NOTE:
EXISTING UTILITIES HAVE NOT BEEN PLOTTED ON THESE PLANS.

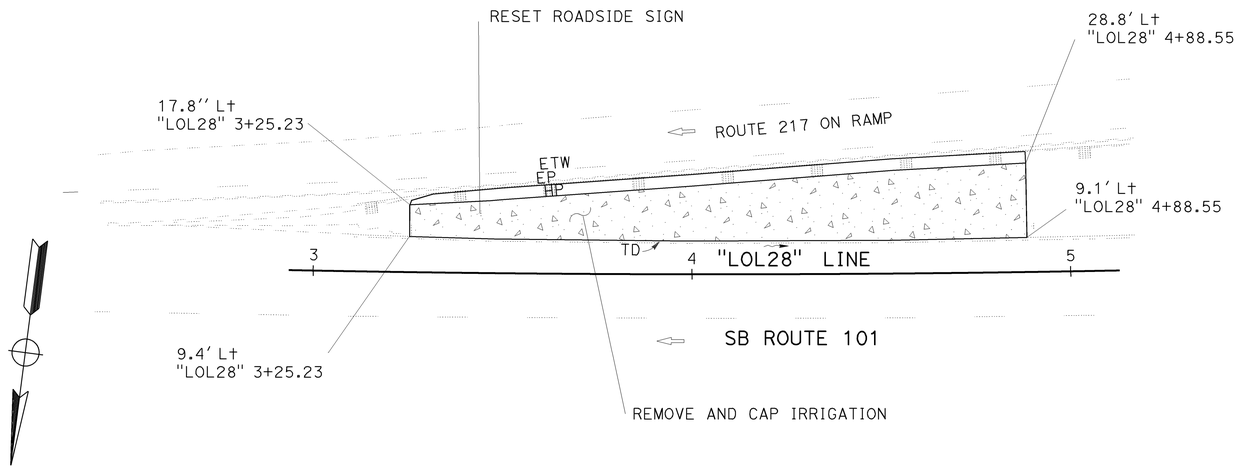

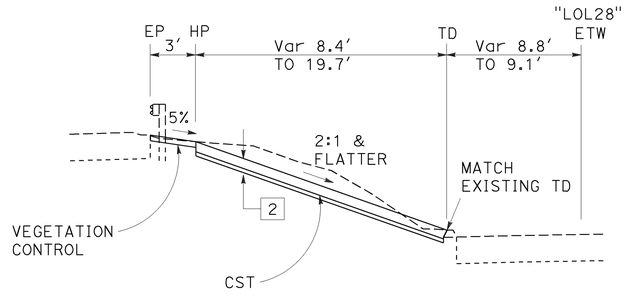

"LOL28" 3+25.23 TO 4+88.55

CONTRASTING SURFACE TREATMENT No. 28

SB ON RAMP FROM ROUTE 217
PM 21.28

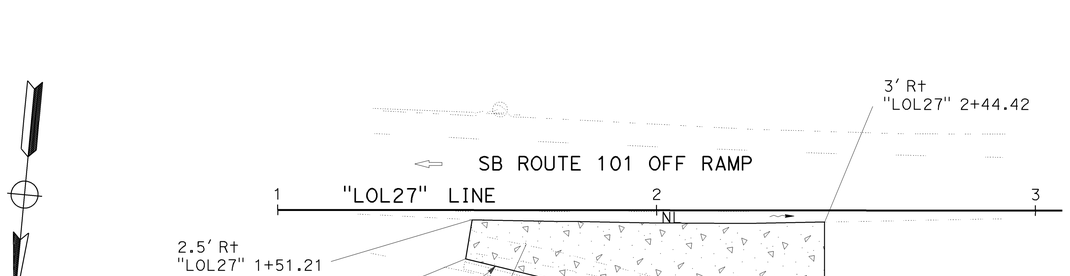

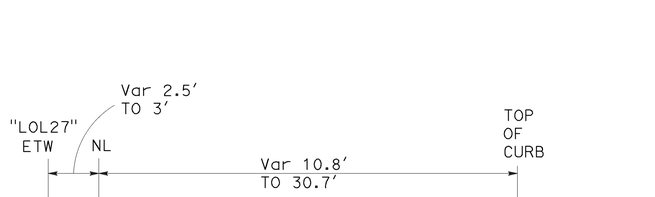

"LOL27" 1+51.21 TO 2+44.42

CONTRASTING SURFACE TREATMENT No. 27

ROUTE 217 SB OFF RAMP TO PATTERSON Ave
PM 21.23

LOCATION No. 12

CONSTRUCTION DETAILS

NO SCALE

C-15

REVISED BY | DATE REVISED
MICHAEL A. O'NEAL | SCOTT D. KIRKISH
CALCULATED-DESIGNED BY | CHECKED BY
FUNCTIONAL SUPERVISOR: STEVEN M. WYATT

STATE OF CALIFORNIA - DEPARTMENT OF TRANSPORTATION
DESIGN

LAST REVISION | DATE PLOTTED => 15-DEC-2014
12-01-14 | TIME PLOTTED => 09:17

Dist	COUNTY	ROUTE	POST MILES TOTAL PROJECT	SHEET No.	TOTAL SHEETS
05	SB	101	13.2/27.1	18	64

Michael O'Neal 12-1-14
REGISTERED CIVIL ENGINEER DATE

12-1-14
PLANS APPROVAL DATE

REGISTERED PROFESSIONAL ENGINEER — MICHAEL A. O'NEAL — No. 81051 — Exp. 9-30-15 — CIVIL — STATE OF CALIFORNIA

THE STATE OF CALIFORNIA OR ITS OFFICERS OR AGENTS SHALL NOT BE RESPONSIBLE FOR THE ACCURACY OR COMPLETENESS OF SCANNED COPIES OF THIS PLAN SHEET.

NOTE:

EXISTING UTILITIES HAVE NOT BEEN PLOTTED ON THESE PLANS.

FLOW LINE ELEVATIONS

STATION	OFFSET	Elev
"LOL30" 0+60	MATCH EXISTING	
"LOL30" 0+80	18.78′	39.50
"LOL30" 0+90	17.44′	39.28
"LOL30" 1+00	18.34′	39.29
"LOL30" 1+20	20.14′	39.29
"LOL30" 1+40	21.65′	39.31
"LOL30" 1+60	22.89′	39.36
"LOL30" 1+80	24.12′	39.40
"LOL30" 1+91.57	24.61′	39.45

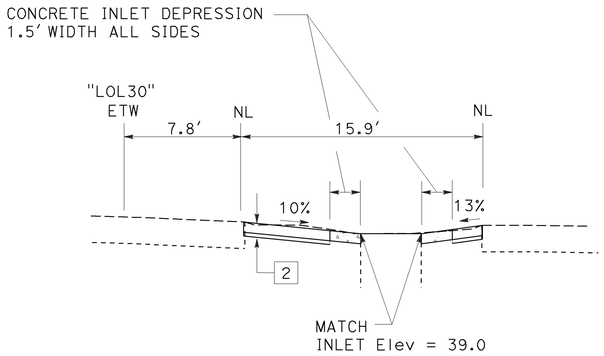

SECTION A-A

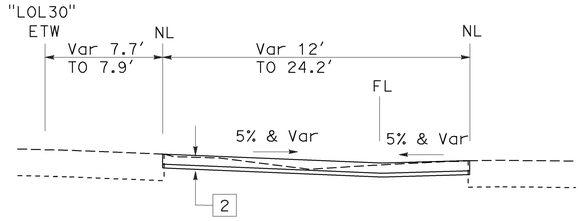

"LOL30" 0+53.33 TO 1+91.57

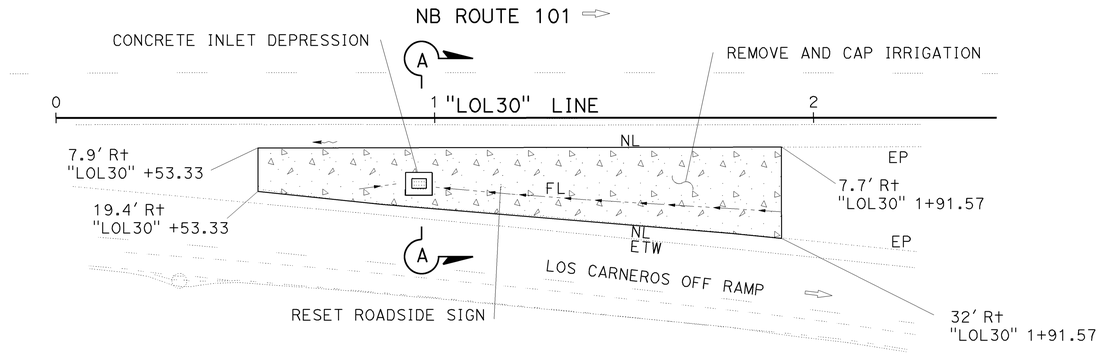

CONTRASTING SURFACE TREATMENT No. 30

NB OFF RAMP TO LOS CARNEROS
PM 23.53

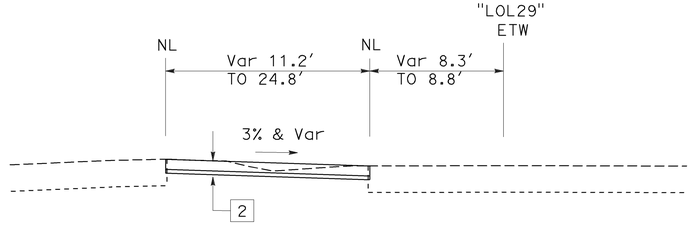

"LOL29" 2+81.44 TO 5+10.22

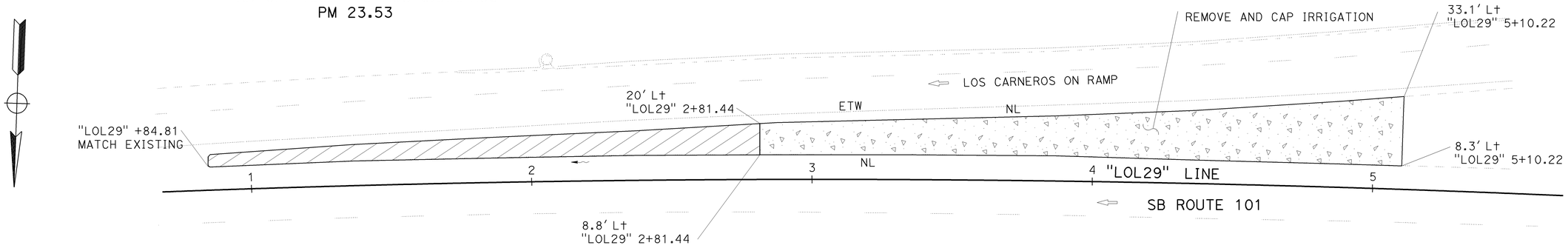

CONTRASTING SURFACE TREATMENT No. 29

SB ON RAMP TO LOS CARNEROS
PM 23.48

LOCATION No. 13

CONSTRUCTION DETAILS

NO SCALE

C-16

REVISED BY | DATE REVISED
MICHAEL A. O'NEAL | SCOTT D. KIRKISH
CALCULATED-DESIGNED BY | CHECKED BY
FUNCTIONAL SUPERVISOR: STEVEN M. WYATT
STATE OF CALIFORNIA - DEPARTMENT OF TRANSPORTATION
DESIGN

LAST REVISION | DATE PLOTTED => 15-DEC-2014
12-01-14 | TIME PLOTTED => 09:17

BORDER LAST REVISED 7/2/2010 | USERNAME => s123239 | DGN FILE => 05000202891ga016.dgn | RELATIVE BORDER SCALE IS IN INCHES 0 1 2 3 | UNIT 1450 | PROJECT NUMBER & PHASE 05000202891

Dist	COUNTY	ROUTE	POST MILES TOTAL PROJECT	SHEET No.	TOTAL SHEETS
05	SB	101	13.2/27.1	19	64

Michael O'Neal 12-1-14
REGISTERED CIVIL ENGINEER DATE

12-1-14
PLANS APPROVAL DATE

REGISTERED PROFESSIONAL ENGINEER
MICHAEL A. O'NEAL
No. 81051
Exp. 9-30-15
CIVIL
STATE OF CALIFORNIA

THE STATE OF CALIFORNIA OR ITS OFFICERS OR AGENTS SHALL NOT BE RESPONSIBLE FOR THE ACCURACY OR COMPLETENESS OF SCANNED COPIES OF THIS PLAN SHEET.

NOTE:

EXISTING UTILITIES HAVE NOT BEEN PLOTTED ON THESE PLANS.

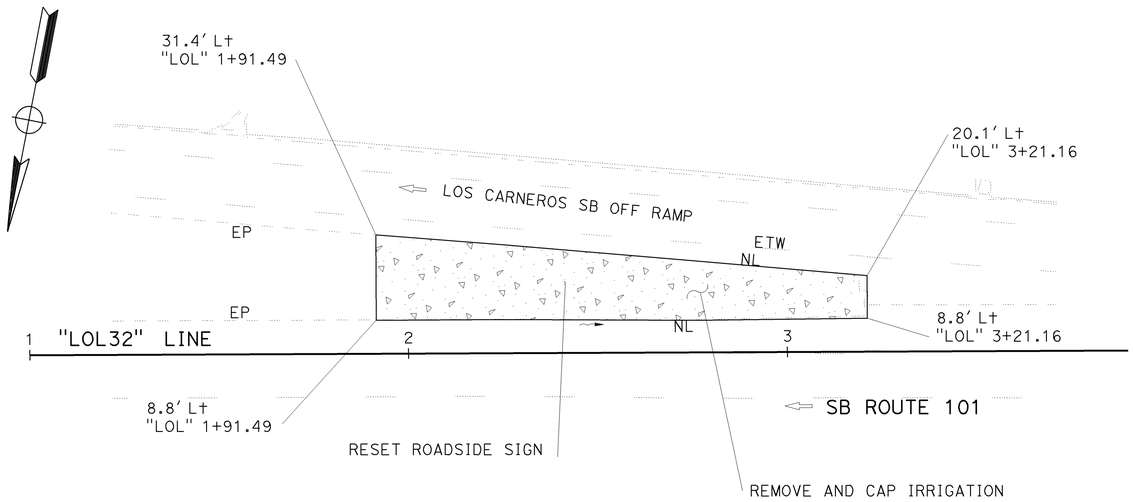

CONTRASTING SURFACE TREATMENT No. 32

SB OFF RAMP TO LOS CARNEROS
PM 23.94

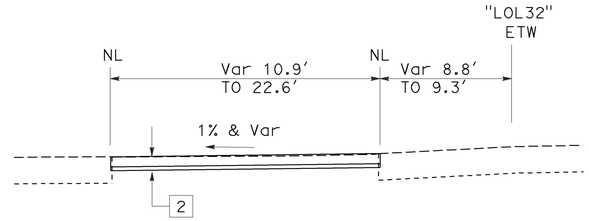

"LOL32" 1+91.49 TO 3+21.16

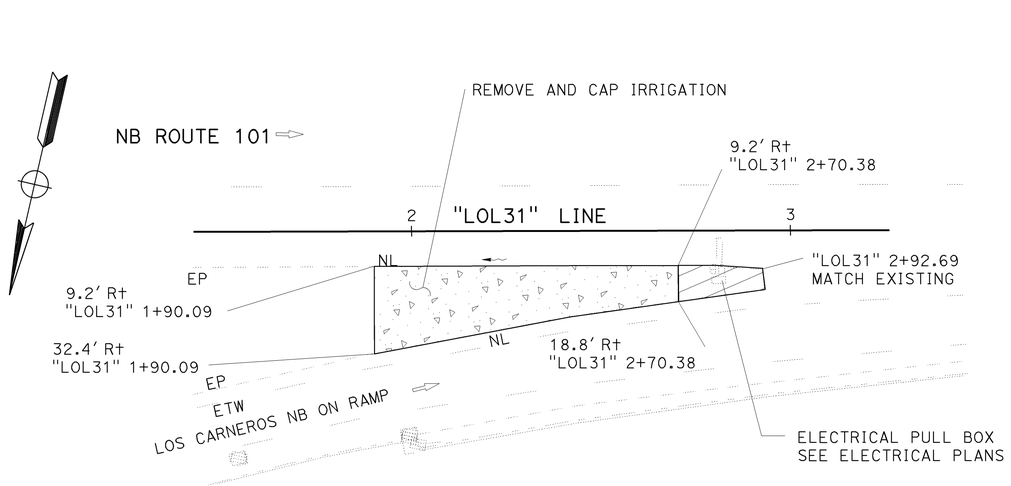

CONTRASTING SURFACE TREATMENT No. 31

NB ON RAMP FROM LOS CARNEROS
PM 23.87

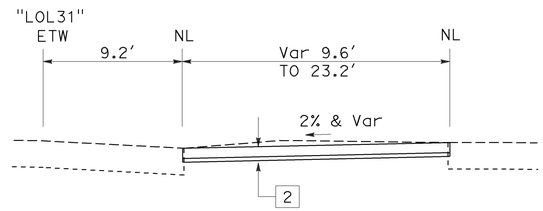

"LOL31" 90.09 TO 2+92.69

LOCATION No. 13

CONSTRUCTION DETAILS

NO SCALE

C-17

STATE OF CALIFORNIA - DEPARTMENT OF TRANSPORTATION
DESIGN
FUNCTIONAL SUPERVISOR: STEVEN M. WYATT
CALCULATED-DESIGNED BY: MICHAEL A. O'NEAL
CHECKED BY: SCOTT D. KIRKISH
REVISED BY
DATE REVISED

LAST REVISION DATE PLOTTED => 15-DEC-2014
TIME PLOTTED => 09:17
12-01-14

BORDER LAST REVISED 7/2/2010
USERNAME => s123239
DGN FILE => 05000020289ga017.dgn
RELATIVE BORDER SCALE IS IN INCHES 0 1 2 3
UNIT 1450
PROJECT NUMBER & PHASE 05000202891

Dist	COUNTY	ROUTE	POST MILES TOTAL PROJECT	SHEET No.	TOTAL SHEETS
05	SB	101	13.2/27.1	20	64

Michael O'Neal 12-1-14
REGISTERED CIVIL ENGINEER DATE

12-1-14
PLANS APPROVAL DATE

REGISTERED PROFESSIONAL ENGINEER
MICHAEL A. O'NEAL
No. 81051
Exp. 9-30-15
CIVIL
STATE OF CALIFORNIA

THE STATE OF CALIFORNIA OR ITS OFFICERS OR AGENTS SHALL NOT BE RESPONSIBLE FOR THE ACCURACY OR COMPLETENESS OF SCANNED COPIES OF THIS PLAN SHEET.

NOTE:

EXISTING UTILITIES HAVE NOT BEEN PLOTTED ON THESE PLANS.

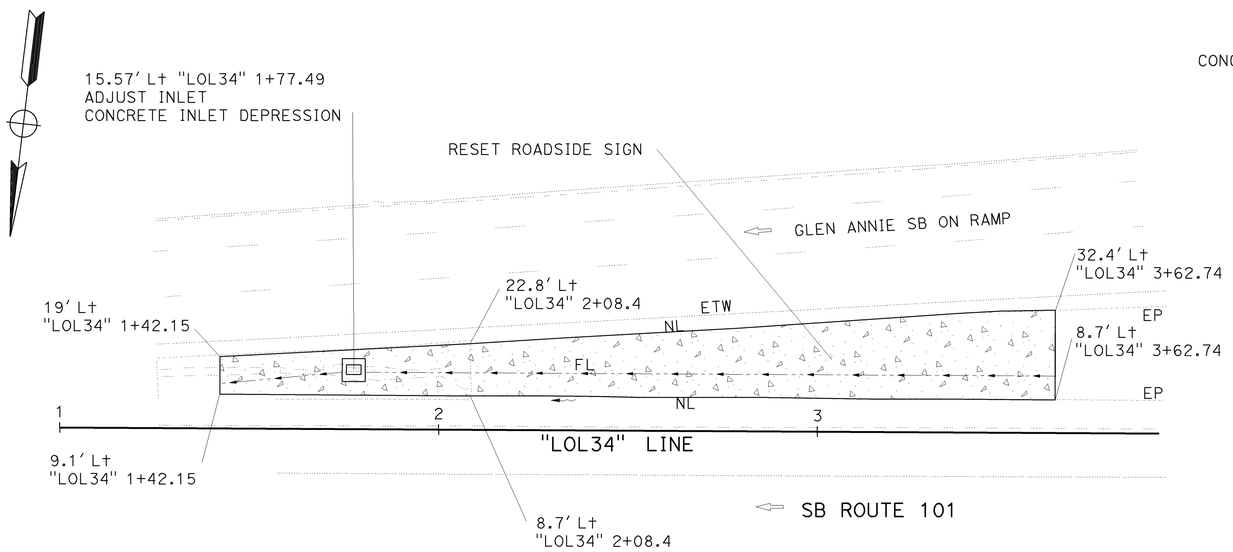

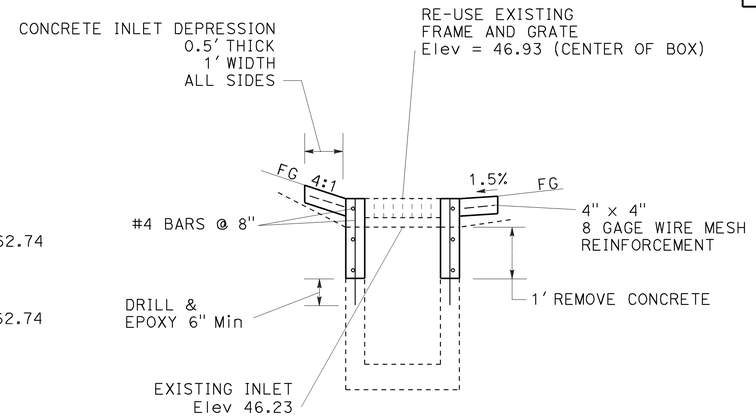

ADJUST INLET/CONCRETE APRON

FLOW LINE ELEVATIONS

STATION	OFFSET	Elev
"LOL34" 1+42.15	11.81' Lt	46.82
"LOL34" 1+60	13.56' Lt	46.96
"LOL34" 1+80	15.57' Lt	46.68
"LOL34" 2+00	15.0' Lt	46.78
"LOL34" 2+20	15.0' Lt	46.88
"LOL34" 2+40	15.0' Lt	46.98
"LOL34" 2+60	15.0' Lt	47.08
"LOL34" 2+80	15.0' Lt	47.18
"LOL34" 3+00	15.0' Lt	47.28
"LOL34" 3+20	15.0' Lt	47.38
"LOL34" 3+40	15.0' Lt	47.48
"LOL34" 3+62	15.0' Lt	47.58

CONTRASTING SURFACE TREATMENT No. 34

SB ON RAMP FROM GLEN ANNIE
PM 24.60

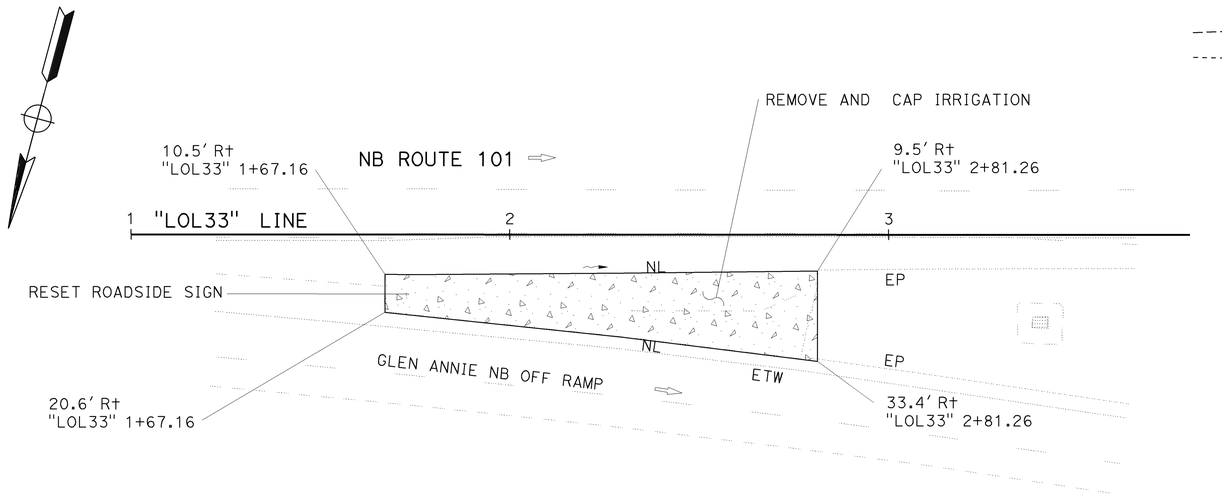

CONTRASTING SURFACE TREATMENT No. 33

NB OFF RAMP TO GLEN ANNIE
PM 24.31

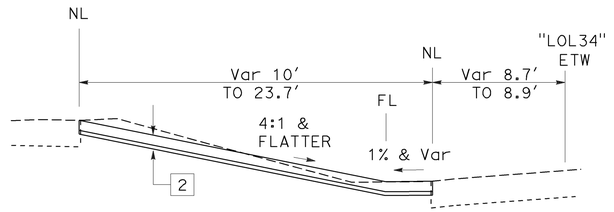

"LOL34" 2+08.40 TO 3+62.74

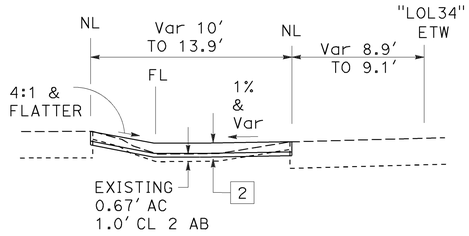

"LOL34" 1+42.15 TO 2+08.40

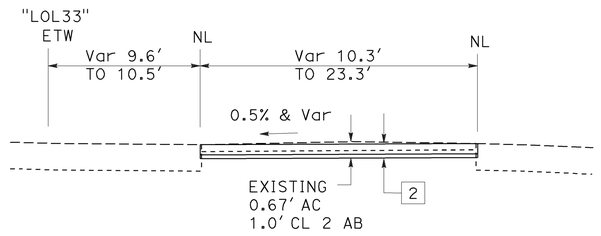

"LOL33" 1+67.16 TO 2+81.26

LOCATION No. 14

CONSTRUCTION DETAILS

NO SCALE

C-18

REVISED BY | DATE REVISED
MICHAEL A. O'NEAL | SCOTT D. KIRKISH
CALCULATED-DESIGNED BY | CHECKED BY
FUNCTIONAL SUPERVISOR: STEVEN M. WYATT

STATE OF CALIFORNIA - DEPARTMENT OF TRANSPORTATION
DESIGN

LAST REVISION | DATE PLOTTED => 15-DEC-2014
12-01-14 | TIME PLOTTED => 09:17

BORDER LAST REVISED 7/2/2010 | USERNAME => s123239 | DGN FILE => 0500020289ga018.dgn | RELATIVE BORDER SCALE IS IN INCHES 0 1 2 3 | UNIT 1450 | PROJECT NUMBER & PHASE 05000202891

Dist	COUNTY	ROUTE	POST MILES TOTAL PROJECT	SHEET No.	TOTAL SHEETS
05	SB	101	13.2/27.1	21	64

Michael O'Neal 12-1-14
REGISTERED CIVIL ENGINEER DATE

12-1-14
PLANS APPROVAL DATE

MICHAEL A. O'NEAL No. 81051 Exp. 9-30-15 CIVIL — REGISTERED PROFESSIONAL ENGINEER — STATE OF CALIFORNIA

THE STATE OF CALIFORNIA OR ITS OFFICERS OR AGENTS SHALL NOT BE RESPONSIBLE FOR THE ACCURACY OR COMPLETENESS OF SCANNED COPIES OF THIS PLAN SHEET.

NOTE:
EXISTING UTILITIES HAVE NOT BEEN PLOTTED ON THESE PLANS.

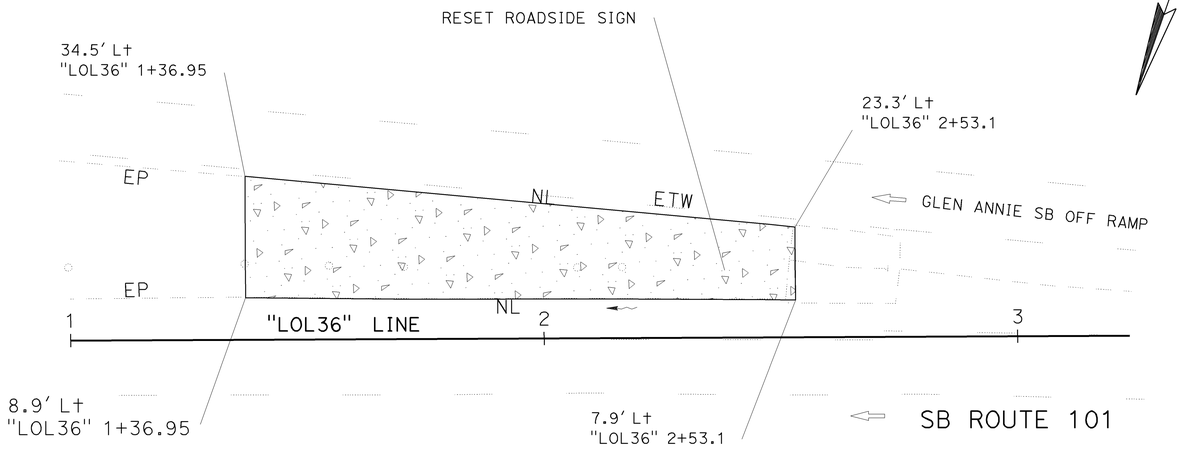

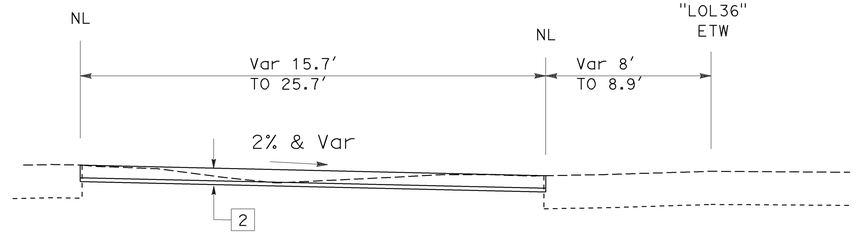

"LOL36" 1+36.95 TO 2+53.1

CONTRASTING SURFACE TREATMENT No. 36

SB OFF RAMP TO GLEN ANNIE
PM 24.97

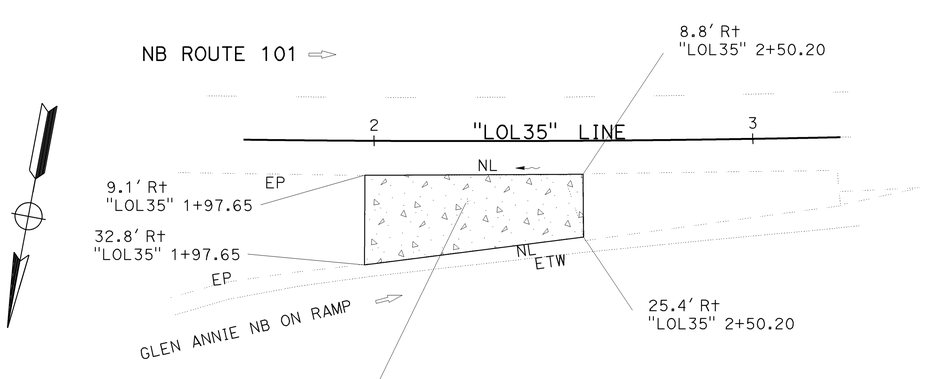

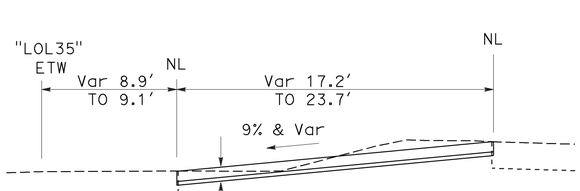

"LOL35" 1+97.65 TO 2+50.2

CONTRASTING SURFACE TREATMENT No. 35

NB ON RAMP FROM GLEN ANNIE
PM 24.73

LOCATION No. 14

CONSTRUCTION DETAILS

NO SCALE

C-19

REVISED BY | DATE REVISED
MICHAEL A. O'NEAL | SCOTT D. KIRKISH
CALCULATED-DESIGNED BY | CHECKED BY
FUNCTIONAL SUPERVISOR: STEVEN M. WYATT
STATE OF CALIFORNIA - DEPARTMENT OF TRANSPORTATION
DESIGN

LAST REVISION DATE PLOTTED => 15-DEC-2014
12-01-14 TIME PLOTTED => 09:17

BORDER LAST REVISED 7/2/2010 | USERNAME => s123239 | DGN FILE => 05000202891ga019.dgn | RELATIVE BORDER SCALE IS IN INCHES 0 1 2 3 | UNIT 1450 | PROJECT NUMBER & PHASE 05000202891

Dist	COUNTY	ROUTE	POST MILES TOTAL PROJECT	SHEET No.	TOTAL SHEETS
05	SB	101	13.2/27.1	22	64

Michael O'Neal 12-1-14
REGISTERED CIVIL ENGINEER DATE

12-1-14
PLANS APPROVAL DATE

MICHAEL A. O'NEAL No. 81051 Exp. 9-30-15 CIVIL — REGISTERED PROFESSIONAL ENGINEER — STATE OF CALIFORNIA

THE STATE OF CALIFORNIA OR ITS OFFICERS OR AGENTS SHALL NOT BE RESPONSIBLE FOR THE ACCURACY OR COMPLETENESS OF SCANNED COPIES OF THIS PLAN SHEET.

NOTE:
EXISTING UTILITIES HAVE NOT BEEN PLOTTED ON THESE PLANS.

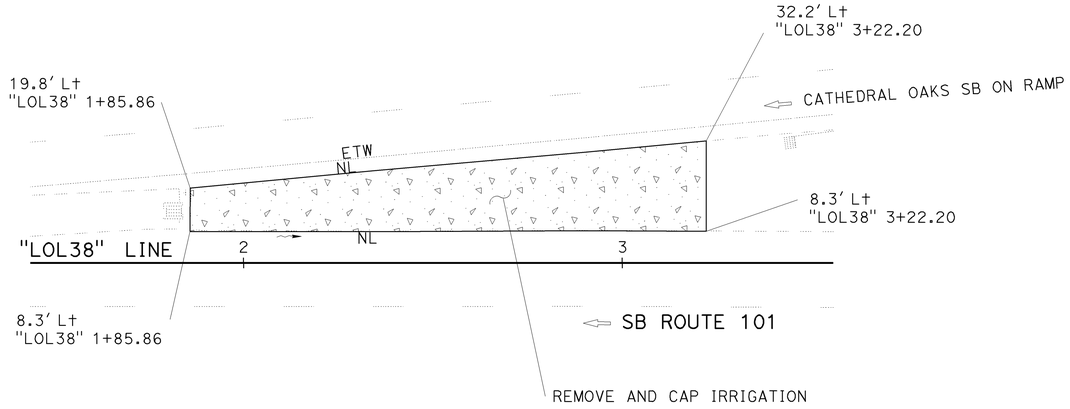

CONTRASTING SURFACE TREATMENT No. 38

SB ON RAMP FROM CATHEDRAL OAKS
PM 26.69

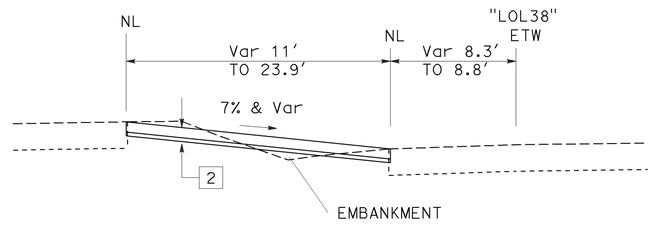

"LOL38" 1+85.86 TO 3+22.20

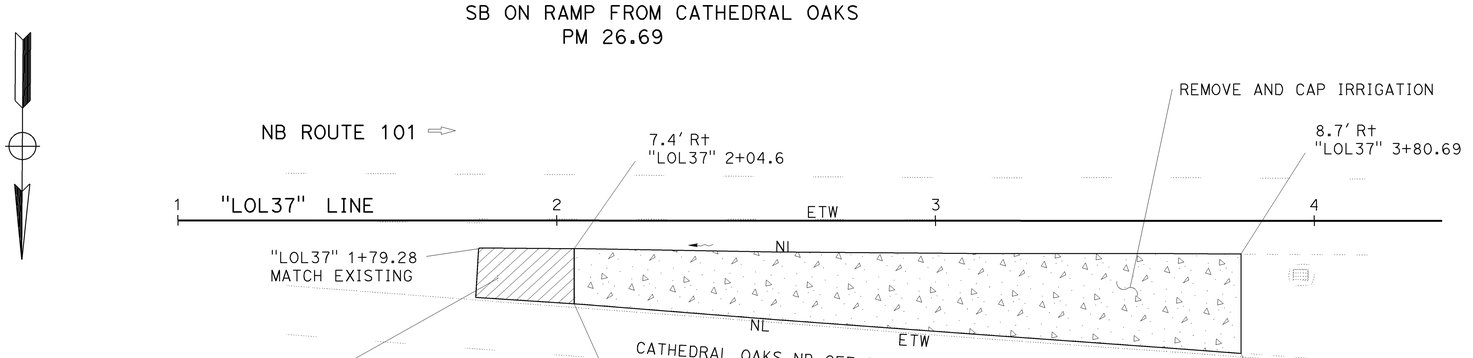

CONTRASTING SURFACE TREATMENT No. 37

NB OFF RAMP TO CATHEDRAL OAKS
PM 26.42

"LOL37" 1+79.28 TO 3+80.69

LOCATION No. 15

CONSTRUCTION DETAILS

NO SCALE

C-20

STATE OF CALIFORNIA - DEPARTMENT OF TRANSPORTATION
DESIGN
FUNCTIONAL SUPERVISOR: STEVEN M. WYATT
CALCULATED-DESIGNED BY
CHECKED BY
MICHAEL A. O'NEAL
SCOTT D. KIRKISH
REVISED BY
DATE REVISED
Gallans

LAST REVISION 12-01-14
DATE PLOTTED => 15-DEC-2014
TIME PLOTTED => 09:17

Dist	COUNTY	ROUTE	POST MILES TOTAL PROJECT	SHEET No.	TOTAL SHEETS
05	SB	101	13.2/27.1	23	64

Michael O'Neal 12-1-14
REGISTERED CIVIL ENGINEER DATE

12-1-14
PLANS APPROVAL DATE

REGISTERED PROFESSIONAL ENGINEER — MICHAEL A. O'NEAL No. 81051 Exp. 9-30-15 CIVIL — STATE OF CALIFORNIA

THE STATE OF CALIFORNIA OR ITS OFFICERS OR AGENTS SHALL NOT BE RESPONSIBLE FOR THE ACCURACY OR COMPLETENESS OF SCANNED COPIES OF THIS PLAN SHEET.

NOTE:
EXISTING UTILITIES HAVE NOT BEEN PLOTED ON THESE PLANS.

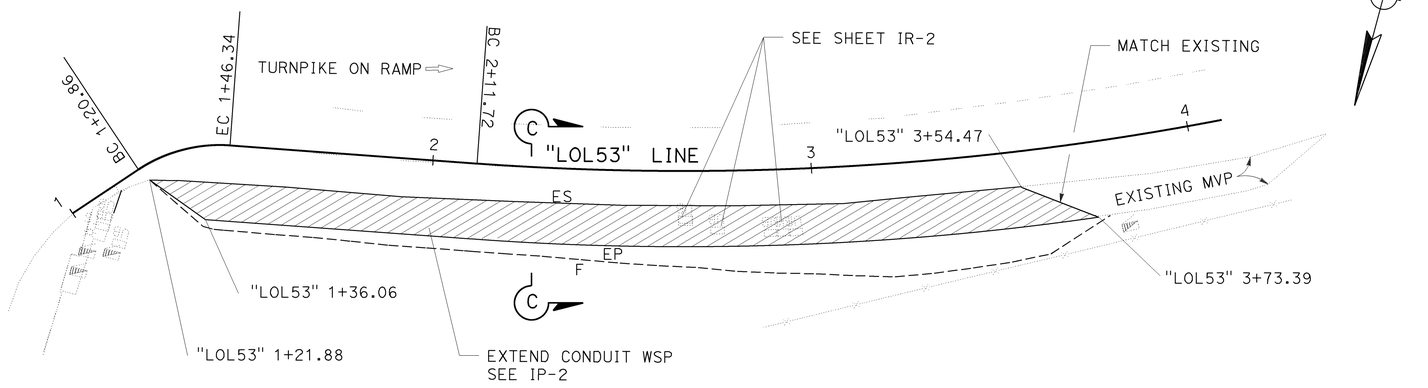

MAINTENANCE VEHICLE PULLOUT No. 3

PM 20.10

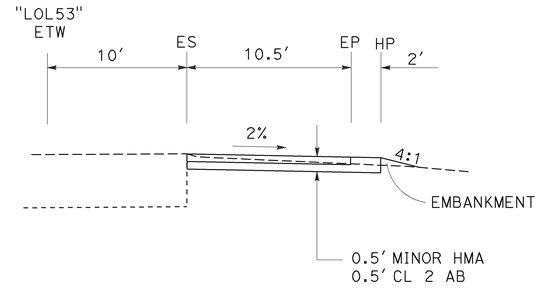

SECTION C-C

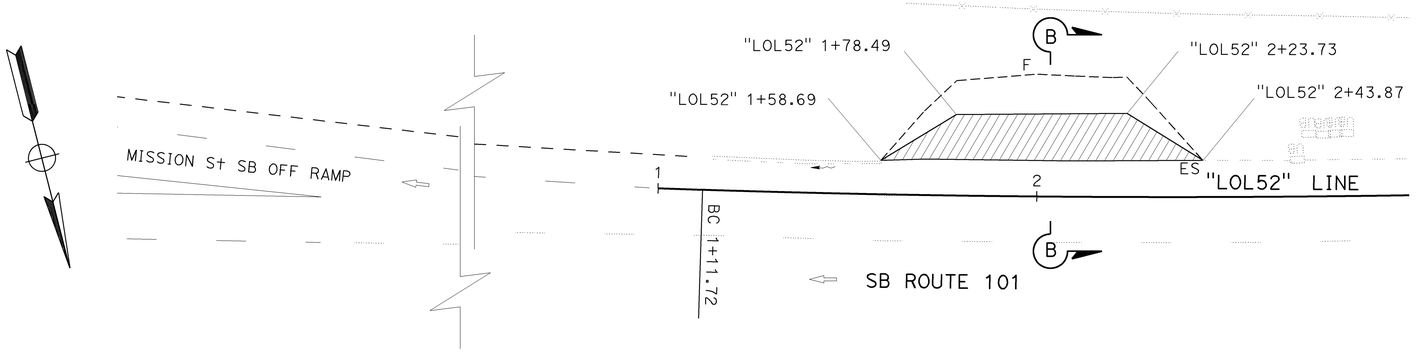

MAINTENANCE VEHICLE PULLOUT No. 2

PM 16.00

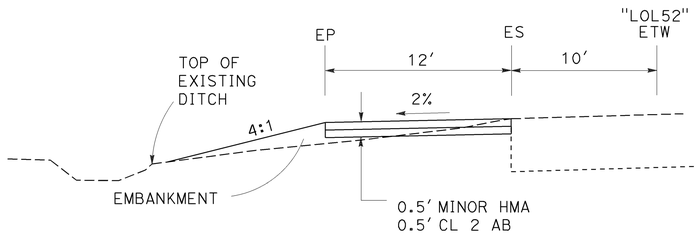

SECTION B-B

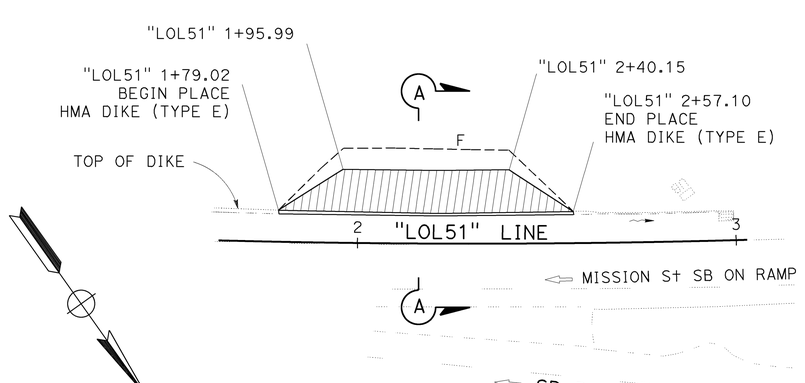

MAINTENANCE VEHICLE PULLOUT No. 1

PM 15.65

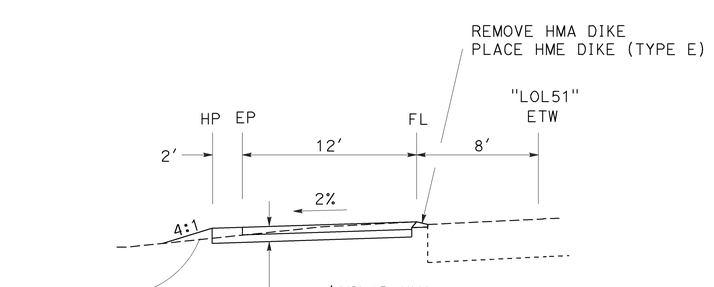

SECTION A-A

CONSTRUCTION DETAILS

NO SCALE

C-21

STATE OF CALIFORNIA - DEPARTMENT OF TRANSPORTATION
DESIGN
FUNCTIONAL SUPERVISOR: STEVEN M. WYATT
CALCULATED-DESIGNED BY: MICHAEL A. O'NEAL
CHECKED BY: SCOTT D. KIRKISH
REVISED BY
DATE REVISED

LAST REVISION DATE PLOTTED => 15-DEC-2014
TIME PLOTTED => 09:17
12-01-14

BORDER LAST REVISED 7/2/2010
USERNAME => s123239
DGN FILE => 05000202891ga021.dgn
RELATIVE BORDER SCALE IS IN INCHES 0 1 2 3
UNIT 1450
PROJECT NUMBER & PHASE 05000202891

Dist	COUNTY	ROUTE	POST MILES TOTAL PROJECT	SHEET No.	TOTAL SHEETS
05	SB	101	13.2/27.1	24	64

Michael O'Neal 12-1-14
REGISTERED CIVIL ENGINEER DATE

12-1-14
PLANS APPROVAL DATE

REGISTERED PROFESSIONAL ENGINEER
MICHAEL A. O'NEAL
No. 81051
Exp. 9-30-15
CIVIL
STATE OF CALIFORNIA

THE STATE OF CALIFORNIA OR ITS OFFICERS OR AGENTS SHALL NOT BE RESPONSIBLE FOR THE ACCURACY OR COMPLETENESS OF SCANNED COPIES OF THIS PLAN SHEET.

NOTE:
EXISTING UTILITIES HAVE NOT BEEN PLOTED ON THESE PLANS.

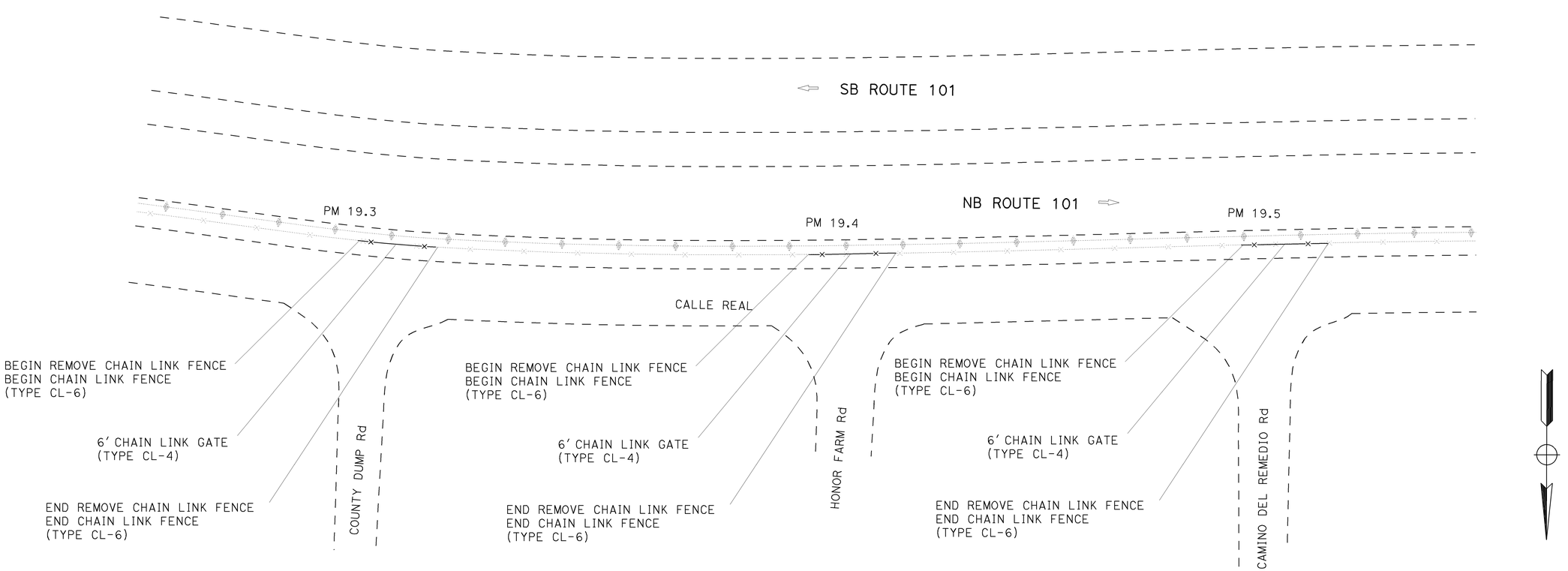

FENCE

CONSTRUCTION DETAILS

NO SCALE

C-22

REVISED BY | DATE REVISED
MICHAEL A. O'NEAL | SCOTT D. KIRKISH
CALCULATED-DESIGNED BY | CHECKED BY
FUNCTIONAL SUPERVISOR: STEVEN M. WYATT

STATE OF CALIFORNIA - DEPARTMENT OF TRANSPORTATION
DESIGN

LAST REVISION | DATE PLOTTED => 15-DEC-2014 | TIME PLOTTED => 09:17
12-01-14

BORDER LAST REVISED 7/2/2010 | USERNAME => s123239 | DGN FILE => 05000202891ga022.dgn | RELATIVE BORDER SCALE IS IN INCHES 0 1 2 3 | UNIT 1450 | PROJECT NUMBER & PHASE 05000202891

Dist	COUNTY	ROUTE	POST MILES TOTAL PROJECT	SHEET No.	TOTAL SHEETS
05	SB	101	13.2/27.1	25	64

Michael O'Neal 12-1-14
REGISTERED CIVIL ENGINEER DATE

12-1-14
PLANS APPROVAL DATE

MICHAEL A. O'NEAL No. 81051 Exp. 9-30-15 CIVIL — REGISTERED PROFESSIONAL ENGINEER — STATE OF CALIFORNIA

THE STATE OF CALIFORNIA OR ITS OFFICERS OR AGENTS SHALL NOT BE RESPONSIBLE FOR THE ACCURACY OR COMPLETENESS OF SCANNED COPIES OF THIS PLAN SHEET.

STATIONARY MOUNTED CONSTRUCTION AREA SIGNS

SIGN No.	SIGN CODE		PANEL SIZE	SIGN MESSAGE	No. OF POSTS PER SIGN AND SIZE	No. OF SIGNS
	FEDERAL	CALIFORNIA				
(A)	W20-1		60" x 60"	ROAD WORK AHEAD	2 - 4" x 6"	2
(B)	W20-1		48" x 48"	ROAD WORK AHEAD	1 - 4" x 6"	28
(C)	G20-2	C14	24" x 48"	END ROAD WORK	1 - 4" x 6"	2

EXACT SIGN LOCATIONS TO BE DETERMINED BY THE ENGINEER

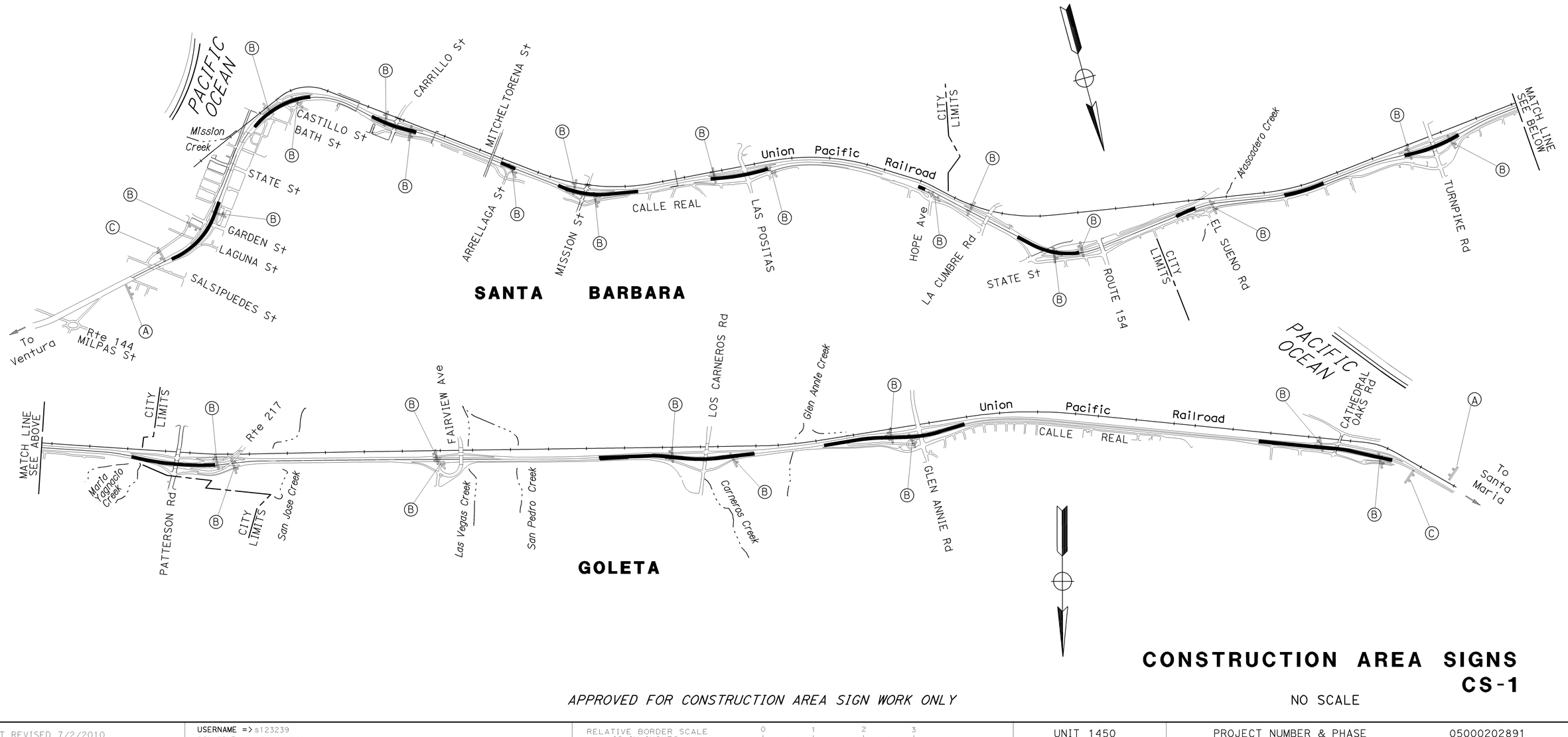

APPROVED FOR CONSTRUCTION AREA SIGN WORK ONLY

CONSTRUCTION AREA SIGNS
CS-1

NO SCALE

STATE OF CALIFORNIA - DEPARTMENT OF TRANSPORTATION
DESIGN
FUNCTIONAL SUPERVISOR: STEVEN M. WYATT
CALCULATED-DESIGNED BY: MICHAEL A. O'NEAL
CHECKED BY: SCOTT D. KIRKISH
REVISED BY
DATE REVISED

LAST REVISION 12-01-14
DATE PLOTTED => 15-DEC-2014
TIME PLOTTED => 09:17

BORDER LAST REVISED 7/2/2010
USERNAME => s123239
DGN FILE => 05000202891a001.dgn
RELATIVE BORDER SCALE IS IN INCHES 0 1 2 3
UNIT 1450
PROJECT NUMBER & PHASE 05000202891

Dist	COUNTY	ROUTE	POST MILES TOTAL PROJECT	SHEET No.	TOTAL SHEETS
05	SB	101	13.2/27.1	26	64

Michael O'Neal 12-1-14
REGISTERED CIVIL ENGINEER DATE

12-1-14
PLANS APPROVAL DATE

REGISTERED PROFESSIONAL ENGINEER
MICHAEL A. O'NEAL
No. 81051
Exp. 9-30-15
CIVIL
STATE OF CALIFORNIA

THE STATE OF CALIFORNIA OR ITS OFFICERS OR AGENTS SHALL NOT BE RESPONSIBLE FOR THE ACCURACY OR COMPLETENESS OF SCANNED COPIES OF THIS PLAN SHEET.

RESET ROADSIDE SIGN (ONE POST)

LOCATION	EA
CST No. 1	1
CST No. 2	1
CST No. 3	1
CST No. 4	1
CST No. 5	1
CST No. 6	1
CST No. 7	1
CST No. 8	1
CST No. 9	3
CST No. 11	1
CST No. 12	1
CST No. 14	1
CST No. 16	2
CST No. 17	1
CST No. 18	1
CST No. 19	1
CST No. 20	1
CST No. 21	2
CST No. 22	1
CST No. 23	1
CST No. 26	1
CST No. 27	1
CST No. 28	1
CST No. 30	1
CST No. 32	1
CST No. 33	1
CST No. 34	1
CST No. 35	1
CST No. 37	1
TOTAL	33

POST SLEEVE

LOCATION	EA
CST No. 1	1
CST No. 2	1
CST No. 3	1
CST No. 4	1
CST No. 5	1
CST No. 6	1
CST No. 7	1
CST No. 8	1
CST No. 9	3
CST No. 11	1
CST No. 12	1
CST No. 14	1
CST No. 16	2
CST No. 17	1
CST No. 18	1
CST No. 19	1
CST No. 20	1
CST No. 21	2
CST No. 22	1
CST No. 23	1
CST No. 26	1
CST No. 27	1
CST No. 28	1
CST No. 30	1
CST No. 32	1
CST No. 33	1
CST No. 34	1
CST No. 35	1
CST No. 37	1
TOTAL	35

RESET OBJECT MARKER

LOCATION	EA
CST No. 3	1
CST No. 4	1
CST No. 16	1
CST No. 22	1
CST No. 24	1
TOTAL	5

DELINEATOR (CLASS 1)

LOCATION	EA
CST No. 8	1
CST No. 9	3
CST No. 11	1
CST No. 12	1
CST No. 13	1
CST No. 14	2
CST No. 15	2
CST No. 16	2
CST No. 17	2
CST No. 18	2
CST No. 19	2
CST No. 20	3
CST No. 21	2
CST No. 23	1
CST No. 24	1
CST No. 26	1
TOTAL	27

VEGETATION CONTROL QUANTITIES

LOCATION	DIRECTION	VEGETATION CONTTROL (CRUSHED SHALE) SQYD	FILTER FABRIC (N) SQYD
PM 13.30 TO 13.48	NB	473.0	525.5
PM 13.59 TO 13.61	SB	89.7	99.7
PM 14.09 TO 14.19	SB	232.5	258.3
PM 14.17 TO 14.20	NB	57.3	63.7
PM 14.22 TO 14.30	SB	224.4	249.4
PM 14.79 TO 14.81	NB	63.8	70.9
PM 15.67 TO 15.73	NB	164.4	182.7
PM 15.76 TO 15.90	SB	480.6	533.9
PM 21.28 TO 21.30	SB	55.0	61.1
PM 23.29 TO 23.41	NB	302.5	336.1
	TOTAL	2,143.2	

RESET ROADSIDE SIGN (TWO POST)

LOCATION	EA
CST No. 8	1

(N) - NOT A SEPARATE PAY ITEM, FOR INFORMATION ONLY

SUMMARY OF QUANTITIES
Q-1

REVISED BY | DATE REVISED
MICHAEL A. O'NEAL | SCOTT D. KIRKISH
CALCULATED-DESIGNED BY | CHECKED BY
FUNCTIONAL SUPERVISOR: STEVEN M. WYATT
STATE OF CALIFORNIA - DEPARTMENT OF TRANSPORTATION
DESIGN

LAST REVISION | DATE PLOTTED => 15-DEC-2014
12-01-14 | TIME PLOTTED => 09:17

BORDER LAST REVISED 7/2/2010
USERNAME => s123239
DGN FILE => 0500020289pa001.dgn
RELATIVE BORDER SCALE IS IN INCHES 0 1 2 3
UNIT 1450
PROJECT NUMBER & PHASE 05000202891

Dist	COUNTY	ROUTE	POST MILES TOTAL PROJECT	SHEET No.	TOTAL SHEETS
05	SB	101	13.2/27.1	27	64

Michael O'Neal 12-1-14
REGISTERED CIVIL ENGINEER DATE

12-11-14
PLANS APPROVAL DATE

REGISTERED PROFESSIONAL ENGINEER — MICHAEL A. O'NEAL — No. 81051 — Exp. 9-30-15 — CIVIL — STATE OF CALIFORNIA

THE STATE OF CALIFORNIA OR ITS OFFICERS OR AGENTS SHALL NOT BE RESPONSIBLE FOR THE ACCURACY OR COMPLETENESS OF SCANNED COPIES OF THIS PLAN SHEET.

PAVEMENT STRUCTURE

LOCATION	CLASS 2 AGGREGATE BASE (CY) CY	MINOR CONCRETE (EXPOSED AGGREGATE CONCRETE) SQFT	MINOR HOT MIX ASPHALT TON
CST No. 1	14	2,231	
CST No. 2	12	1,944	
CST No. 3	13	2,062	
CST No. 4	17	2,735	
CST No. 5	11	1,698	
CST No. 6	9	1,395	3.1
CST No. 7	13	1,980	
CST No. 8	8	1,263	
CST No. 9	4	635	
CST No. 10	3	436	
CST No. 11	11	1,672	
CST No. 12	5	822	
CST No. 13	6	962	
CST No. 14	25	4,090	0.9
CST No. 15	5	880	
CST No. 16	18	2,874	
CST No. 17	9	1,524	
CST No. 18	14	2,187	
CST No. 19	8	1,330	
CST No. 20	45	7,248	
CST No. 21	18	2,986	4.9
CST No. 22	19	3,086	
CST No. 23	12	2,000	
CST No. 24	5	745	
CST No. 25	7	1,054	
CST No. 26	4	615	
CST No. 27	12	1,981	
CST No. 28	15	2,407	
CST No. 29	23	3,712	27.4
CST No. 30	15	2,448	
CST No. 31	8	1,283	3.3
CST No. 32	14	2,225	
CST No. 33	12	1,896	
CST No. 34	23	3,690	
CST No. 35	7	1,165	
CST No. 36	24	3,744	
CST No. 37	22	3,573	6.7
CST No. 38	15	2,416	
MVP No. 1	4		12.8
MVP No. 2	5		14.9
MVP No. 3	15		46
DIKE			7.2
TOTAL	525.0	80,994.0	128.2

EARTHWORK QUANTITIES

LOCATION	ROADWAY EXCAVATION CY	EMBANKMENT (N) CY	ROADWAY EXCAVATION (TYPE Z-2) (AERIALLY DEPOSITED LEAD) CY
CST No. 1	56.6		
CST No. 2	32.6	0.4	
CST No. 3	47.9	1.0	
CST No. 4	52.7	2.6	
CST No. 5			68.2
CST No. 6		4.6	22.1
CST No. 7			39.4
CST No. 8			33.7
CST No. 9	27.6		
CST No. 10			12.7
CST No. 11			51.6
CST No. 12			22.3
CST No. 13			28.3
CST No. 14	98.0		
CST No. 15	23.8		
CST No. 16	82.1		
CST No. 17			69.2
CST No. 18			71.1
CST No. 19	49.2		
CST No. 20		0.3	119.5
CST No. 21			121.2
CST No. 22	51.3	0.6	
CST No. 23	41.1	2.0	
CST No. 24	8.3	2.1	
CST No. 25	14.2	0.3	
CST No. 26			10.9
CST No. 27	31.2	16.3	
CST No. 28			109.9
CST No. 29	90.1	11.4	
CST No. 30	49.4		
CST No. 31			44.6
CST No. 32	49.6		
CST No. 33	48.6		
CST No. 34	142.7		
CST No. 35	30.4		
CST No. 36	49.1	0.1	
CST No. 37	67.1	9.1	
CST No. 38	38.1	18.4	
MVP No. 1	20.9	7.9	
MVP No. 2	17.0	16.4	
MVP No. 3	72.5	21.0	
TOTAL	1,292.1		824.7

(N) NOT A SEPERATE PAY ITEM, FOR INFORMATION ONLY.

ADJUST INLET

LOCATION	EA
CST No. 3	1
CST No. 8	1
CST No. 11	1
CST No. 22	1
CST No. 34	1
TOTAL	5

INLET DEPRESSION

LOCATION	EA
CST No. 3	1
CST No. 8	1
CST No. 11	1
CST No. 20	1
CST No. 22	1
CST No. 30	1
CST No. 34	1
TOTAL	7

FENCE

LOCATION	REMOVE CHAIN LINK FENCE LF	CHAIN LINK FENCE (TYPE CL-6) LF	4' CHAIN LINK GATE (TYPE CL-6) EA
PM 19.3, NB, Rt	24	20	1
PM 19.4, NB, Rt	24	20	1
PM 19.5, NB, Rt	24	20	1
TOTAL	72	60	3

TEMPORARY DRAINAGE INLET PROTECTION

EA
12

PLACE HMA DIKE (TYPE E)

LOCATION	LF
CST No. 11	117.6
CST No. 18	162.0
CST No. 20	198.6
MVP No. 1	78.1
TOTAL	556.3

SUMMARY OF QUANTITIES
Q-2

STATE OF CALIFORNIA - DEPARTMENT OF TRANSPORTATION
DESIGN
FUNCTIONAL SUPERVISOR: STEVEN M. WYATT
CALCULATED-DESIGNED BY: MICHAEL A. O'NEAL
CHECKED BY: SCOTT D. KIRKISH
REVISED BY
DATE REVISED

LAST REVISION DATE PLOTTED => 15-DEC-2014
TIME PLOTTED => 09:17

BORDER LAST REVISED 7/2/2010
USERNAME => s123239
DGN FILE => 0500020289pa002.dgn
RELATIVE BORDER SCALE IS IN INCHES 0 1 2 3
UNIT 1450
PROJECT NUMBER & PHASE 05000202891

Dist	COUNTY	ROUTE	POST MILES TOTAL PROJECT	SHEET No.	TOTAL SHEETS
05	SB	101	13.2/27.1	28	64

12-1-14
LICENSED LANDSCAPE ARCHITECT

12-1-14
PLANS APPROVAL DATE

THE STATE OF CALIFORNIA OR ITS OFFICERS OR AGENTS SHALL NOT BE RESPONSIBLE FOR THE ACCURACY OR COMPLETENESS OF SCANNED COPIES OF THIS PLAN SHEET.

LICENSED LANDSCAPE ARCHITECT
JOSEPH R. ARNOLD NO. 5855
Signature
09/30/15
Renewal Date
12/03/14
Date
STATE OF CALIFORNIA

NOTES:

1. FOR ACCURATE RIGHT OF WAY DATA, CONTACT RIGHT OF WAY ENGINEERING AT THE DISTRICT OFFICE.
2. FOR REMOVE AND CAP IRRIGATION LOCATED IN MINOR CONCRETE (EXPOSED AGGREGATE CONCRETE) AREAS SEE SHEETS C-1 TO C-23.
3. ALL IRRIGATION EQUIPMENT SHOWN AS REMAINING SHALL BE PROTECTED IN PLACE. CAP ALL PIPES TO PREVENT DEBRIS FROM ENTERING IRRIGATION SYSTEM.

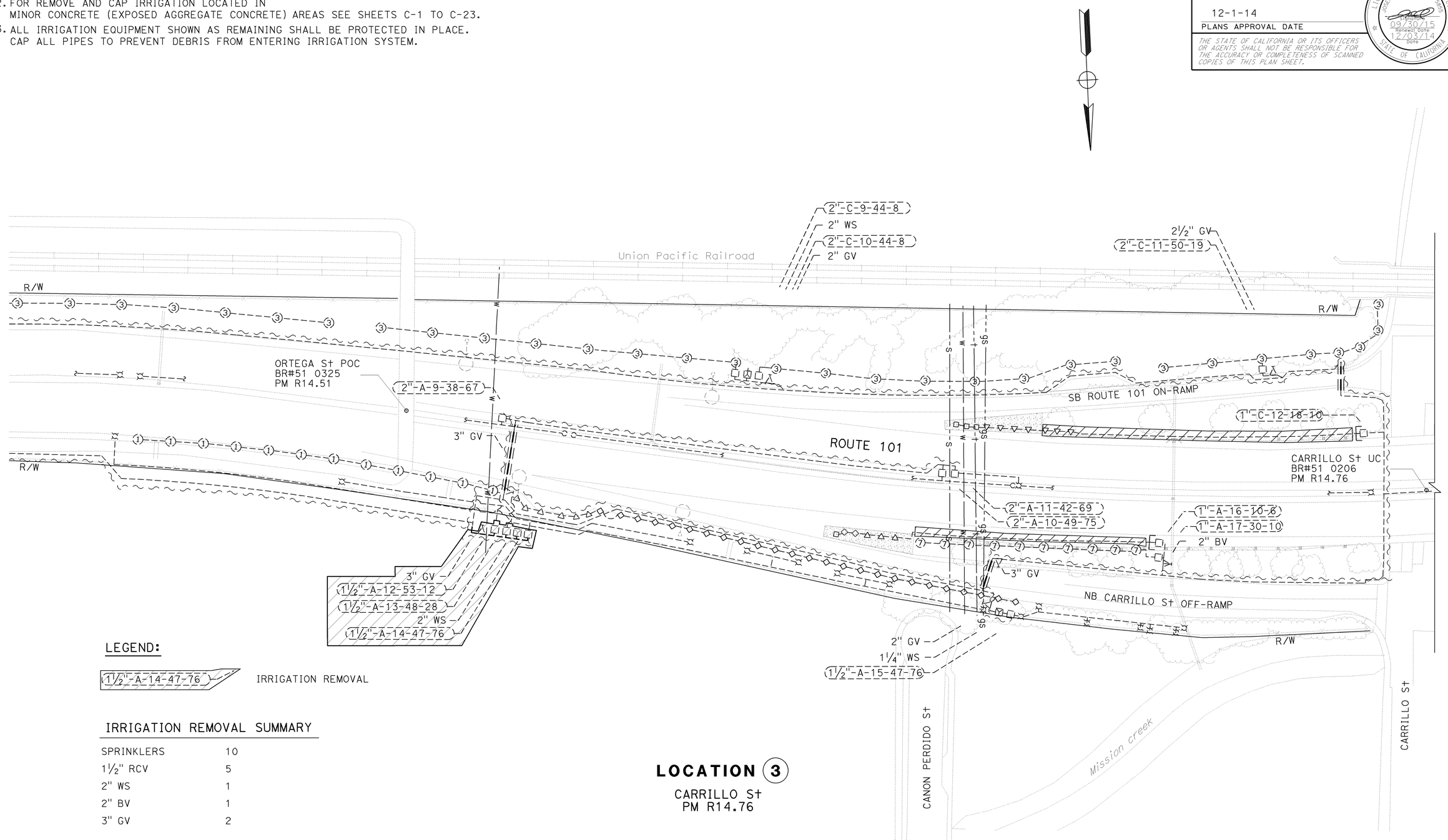

LEGEND:

1½"-A-14-47-76 — IRRIGATION REMOVAL

IRRIGATION REMOVAL SUMMARY

SPRINKLERS	10
1½" RCV	5
2" WS	1
2" BV	1
3" GV	2

LOCATION 3
CARRILLO St
PM R14.76

IRRIGATION REMOVAL PLAN

SCALE: 1" = 50'

IR-1

APPROVED FOR IRRIGATION REMOVAL WORK ONLY

STATE OF CALIFORNIA - DEPARTMENT OF TRANSPORTATION
Caltrans LANDSCAPE ARCHITECTURE
SENIOR LANDSCAPE ARCHITECT: DENNIS REEVES
CALCULATED-DESIGNED BY: JOSEPH ARNOLD
CHECKED BY: JO JACKSON
REVISED BY
DATE REVISED

LAST REVISION 12-01-14
DATE PLOTTED => 15-DEC-2014
TIME PLOTTED => 09:17

Dist	COUNTY	ROUTE	POST MILES TOTAL PROJECT	SHEET No.	TOTAL SHEETS
05	SB	101	13.2/27.1	29	64

12-1-14
LICENSED LANDSCAPE ARCHITECT

12-1-14
PLANS APPROVAL DATE

THE STATE OF CALIFORNIA OR ITS OFFICERS OR AGENTS SHALL NOT BE RESPONSIBLE FOR THE ACCURACY OR COMPLETENESS OF SCANNED COPIES OF THIS PLAN SHEET.

LICENSED LANDSCAPE ARCHITECT
JOSEPH R. ARNOLD No. 2555
Signature
09/30/15
Renewal Date
12/03/14
Date
STATE OF CALIFORNIA

NOTE:

FOR ACCURATE RIGHT OF WAY DATA, CONTACT
RIGHT OF WAY ENGINEERING AT THE DISTRICT OFFICE.

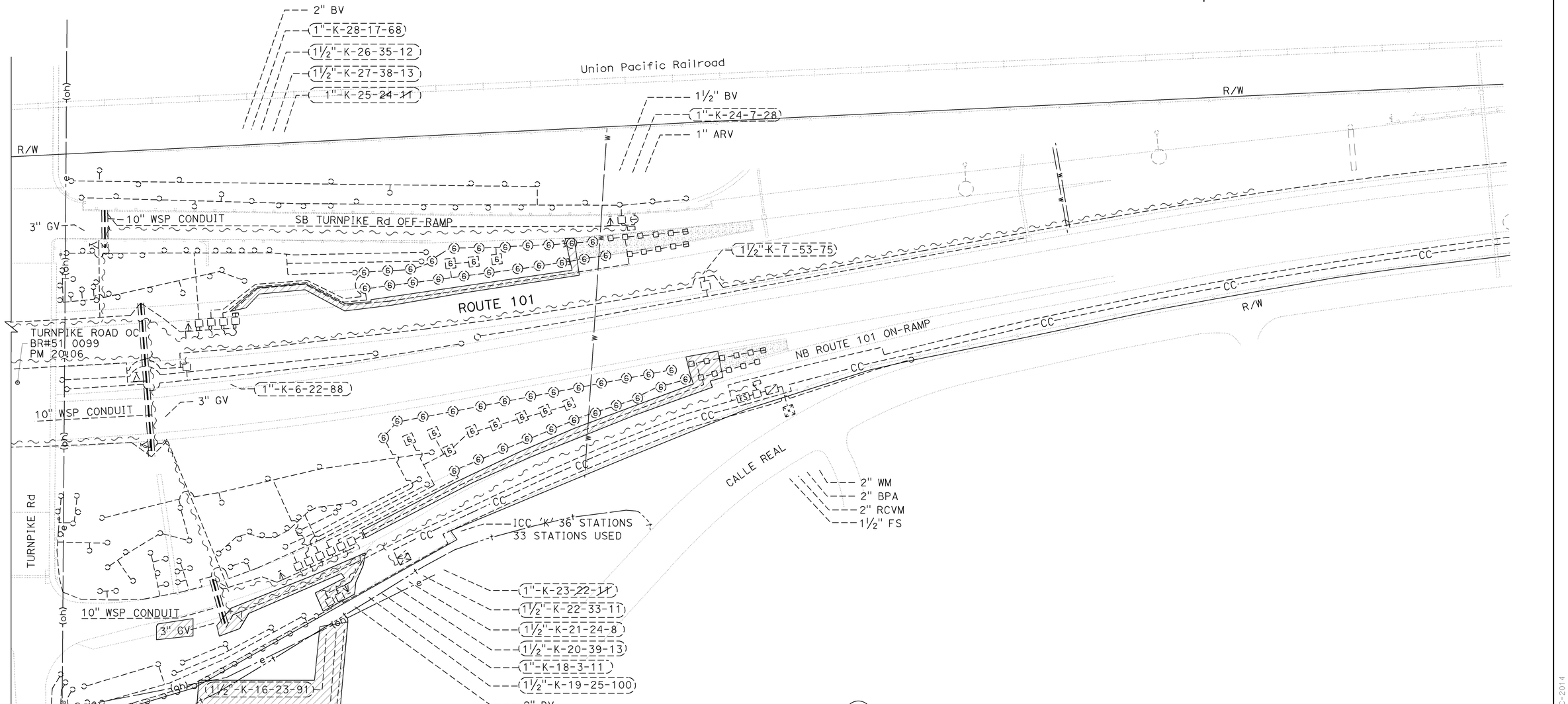

LOCATION (11)

TURNPIKE Rd
PM 20.10

IRRIGATION REMOVAL PLAN

SCALE: 1" = 50'

IR-2

APPROVED FOR IRRIGATION REMOVAL WORK ONLY

STATE OF CALIFORNIA - DEPARTMENT OF TRANSPORTATION
LANDSCAPE ARCHITECTURE
SENIOR LANDSCAPE ARCHITECT: DENNIS REEVES
CHECKED BY: JO JACKSON
CALCULATED-DESIGNED BY: JOSEPH ARNOLD
DATE REVISED
REVISED BY

LAST REVISION
DATE PLOTTED => 15-DEC-2014
TIME PLOTTED => 09:17
12-01-14

BORDER LAST REVISED 7/2/2010
USERNAME => s123239
DGN FILE => 0500020289sn002.dgn
RELATIVE BORDER SCALE IS IN INCHES 0 1 2 3
UNIT 1502
PROJECT NUMBER & PHASE 05000202891

Dist	COUNTY	ROUTE	POST MILES TOTAL PROJECT	SHEET No.	TOTAL SHEETS
05	SB	101	13.2/27.1	30	64

12-1-14
LICENSED LANDSCAPE ARCHITECT

12-1-14
PLANS APPROVAL DATE

LICENSED LANDSCAPE ARCHITECT
JOSEPH R. ARNOLD NO. 5855
Signature
09/30/15
Renewal Date
12/03/14
Date
STATE OF CALIFORNIA

THE STATE OF CALIFORNIA OR ITS OFFICERS OR AGENTS SHALL NOT BE RESPONSIBLE FOR THE ACCURACY OR COMPLETENESS OF SCANNED COPIES OF THIS PLAN SHEET.

NOTE:

FOR ACCURATE RIGHT OF WAY DATA, CONTACT RIGHT OF WAY ENGINEERING AT THE DISTRICT OFFICE.

LEGEND:

- 1½"-A-14-47-76 — EXISTING VALVE & LATERAL SUPPLY SYSTEM
- 2"-A-14-47-76 — NEW VALVE & MODIFIED LATERAL SUPPLY SYSTEM
- IRRIGATION FACILITY DESCRIPTION
- DASHED LEADER LINE DENOTES EXISTING IRRIGAITON FACILITY

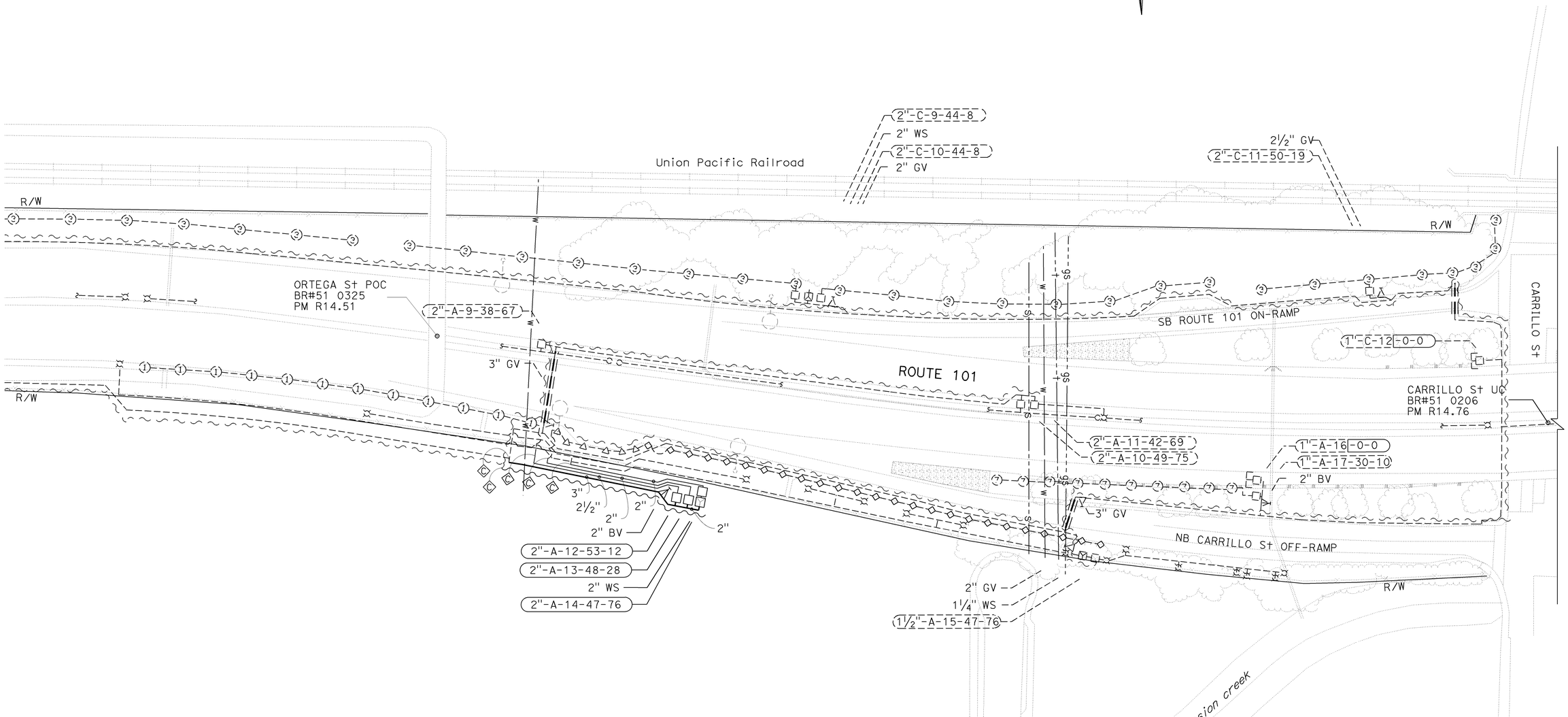

LOCATION 3

CARRILLO St UC
PM 14.76

IRRIGATION PLAN

SCALE: 1" = 50'

IP-1

APPROVED FOR IRRIGATION WORK ONLY

STATE OF CALIFORNIA - DEPARTMENT OF TRANSPORTATION
Caltrans LANDSCAPE ARCHITECTURE

SENIOR LANDSCAPE ARCHITECT: DENNIS REEVES
CALCULATED-DESIGNED BY: JOSEPH ARNOLD
CHECKED BY: JO JACKSON
REVISED BY
DATE REVISED

LAST REVISION 12-03-14
DATE PLOTTED => 15-DEC-2014
TIME PLOTTED => 09:17

Dist	COUNTY	ROUTE	POST MILES TOTAL PROJECT	SHEET No.	TOTAL SHEETS
05	SB	101	13.2/27.1	31	64

12-1-14
LICENSED LANDSCAPE ARCHITECT

12-1-14
PLANS APPROVAL DATE

THE STATE OF CALIFORNIA OR ITS OFFICERS OR AGENTS SHALL NOT BE RESPONSIBLE FOR THE ACCURACY OR COMPLETENESS OF SCANNED COPIES OF THIS PLAN SHEET.

LICENSED LANDSCAPE ARCHITECT
JOSEPH R. ARNOLD No. 3585
Date 09/30/15
Renewal Date 12/03/14
STATE OF CALIFORNIA

NOTE:

FOR ACCURATE RIGHT OF WAY DATA, CONTACT
RIGHT OF WAY ENGINEERING AT THE DISTRICT OFFICE.

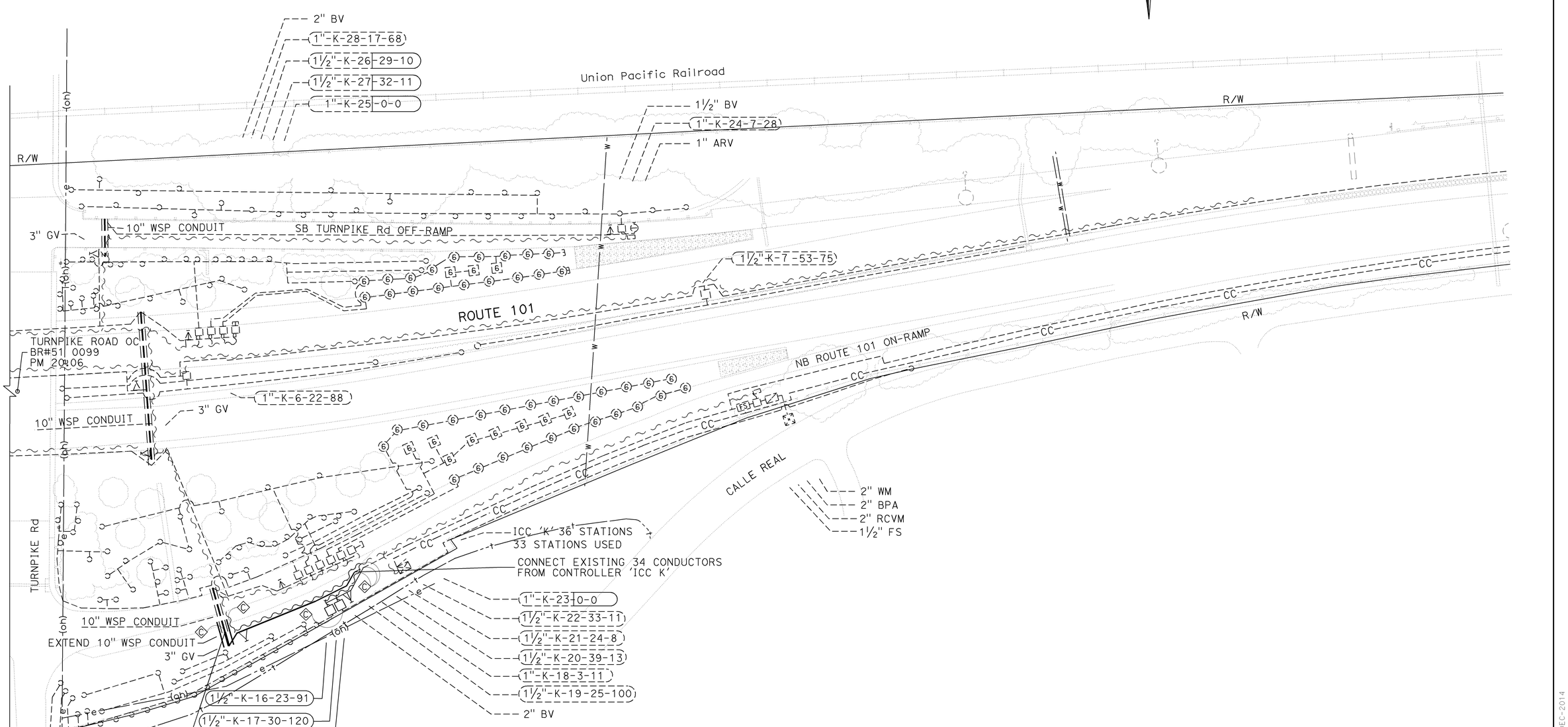

LOCATION (11)
TURNPIKE Rd
PM 20.06

APPROVED FOR IRRIGATION WORK ONLY

IRRIGATION PLAN

SCALE: 1" = 50'

IP-2

LAST REVISION
DATE PLOTTED => 15-DEC-2014
TIME PLOTTED => 09:17
12-01-14

STATE OF CALIFORNIA - DEPARTMENT OF TRANSPORTATION
LANDSCAPE ARCHITECTURE
SENIOR LANDSCAPE ARCHITECT: DENNIS REEVES
JOSEPH ARNOLD
JO JACKSON
CALCULATED-DESIGNED BY
CHECKED BY
DATE REVISED
REVISED BY

Dist	COUNTY	ROUTE	POST MILES TOTAL PROJECT	SHEET No.	TOTAL SHEETS
05	SB	101	13.2/27.1	32	64

12-1-14
LICENSED LANDSCAPE ARCHITECT

12-1-14
PLANS APPROVAL DATE

Joseph R. Arnold — Date 09/30/15 — Renewal Date 12/03/14 — LICENSED LANDSCAPE ARCHITECT — STATE OF CALIFORNIA

THE STATE OF CALIFORNIA OR ITS OFFICERS OR AGENTS SHALL NOT BE RESPONSIBLE FOR THE ACCURACY OR COMPLETENESS OF SCANNED COPIES OF THIS PLAN SHEET.

NOTES:

1. FOR ACCURATE RIGHT OF WAY DATA, CONTACT RIGHT OF WAY ENGINEERING AT THE DISTRICT OFFICE.
2. PLACE MULCH 5 FT FROM EDGE OF PAVING.
3. HOLD MULCH PLACED ON SLOPE AT TOE OF SLOPE.

LEGEND:

WOOD MULCH (WOODCHIP MULCH) 3" DEPTH

ROADSIDE CLEARING LIMITS
DEBRIS INCLUDES THE REMOVAL OF FALLEN BRANCHES AND PALM FRONDS.

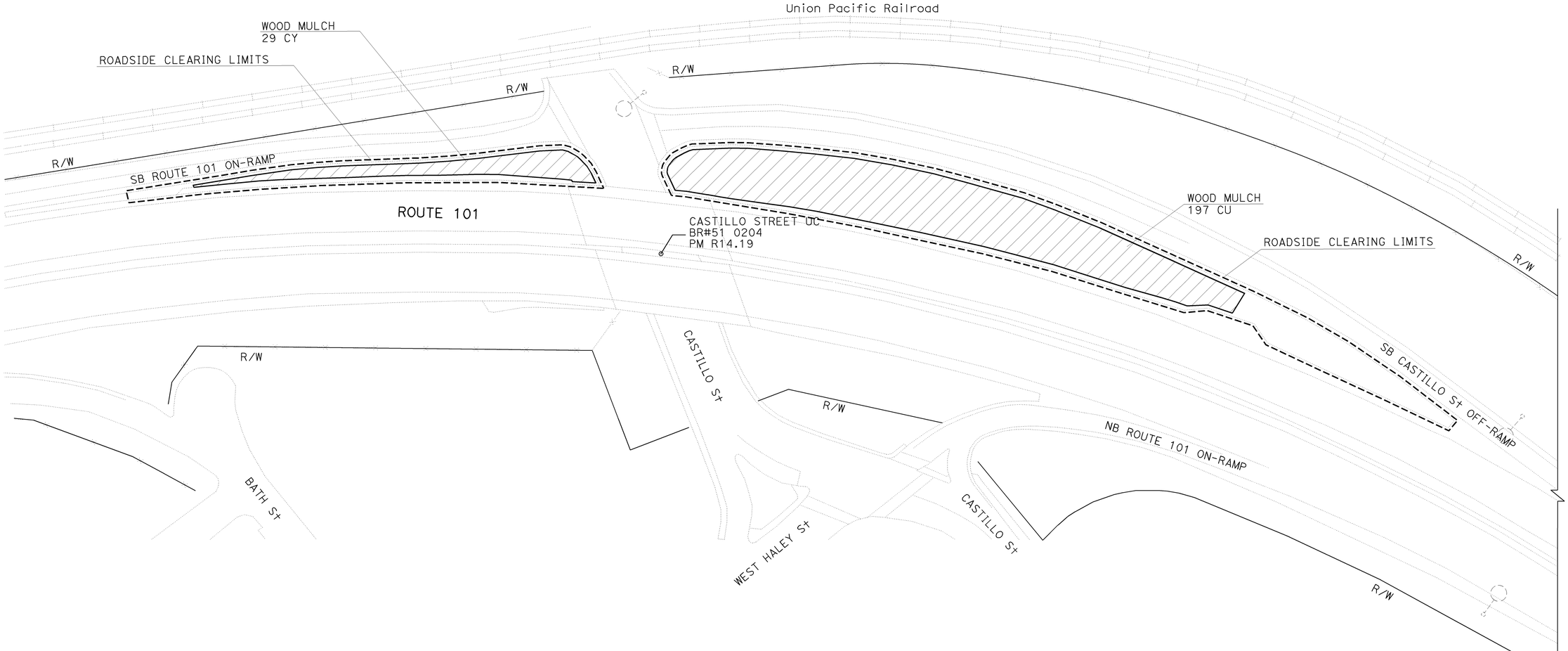

LOCATION (2)

CASTILLO St
PM 14.19

PLANTING PLAN

SCALE: 1"=50'

PP-1

APPROVED FOR PLANTING WORK ONLY

STATE OF CALIFORNIA - DEPARTMENT OF TRANSPORTATION
LANDSCAPE ARCHITECTURE
SENIOR LANDSCAPE ARCHITECT: DENNIS REEVES
CALCULATED-DESIGNED BY: JOSEPH ARNOLD
CHECKED BY: JO JACKSON
REVISED BY
DATE REVISED

LAST REVISION
DATE PLOTTED => 15-DEC-2014
TIME PLOTTED => 09:17
12-03-14

BORDER LAST REVISED 7/2/2010
USERNAME => s123239
DGN FILE => 05000020289su001.dgn
RELATIVE BORDER SCALE IS IN INCHES 0 1 2 3
UNIT 1502
PROJECT NUMBER & PHASE 05000020891

Dist	COUNTY	ROUTE	POST MILES TOTAL PROJECT	SHEET No.	TOTAL SHEETS
05	SB	101	13.2/27.1	33	64

12-1-14
LICENSED LANDSCAPE ARCHITECT

12-1-14
PLANS APPROVAL DATE

THE STATE OF CALIFORNIA OR ITS OFFICERS OR AGENTS SHALL NOT BE RESPONSIBLE FOR THE ACCURACY OR COMPLETENESS OF SCANNED COPIES OF THIS PLAN SHEET.

LICENSED LANDSCAPE ARCHITECT — Joseph R. Arnold — Date 09/30/15 — Renewal Date 12/03/14 — STATE OF CALIFORNIA

NOTE:

FOR ACCURATE RIGHT OF WAY DATA, CONTACT
RIGHT OF WAY ENGINEERING AT THE DISTRICT OFFICE.

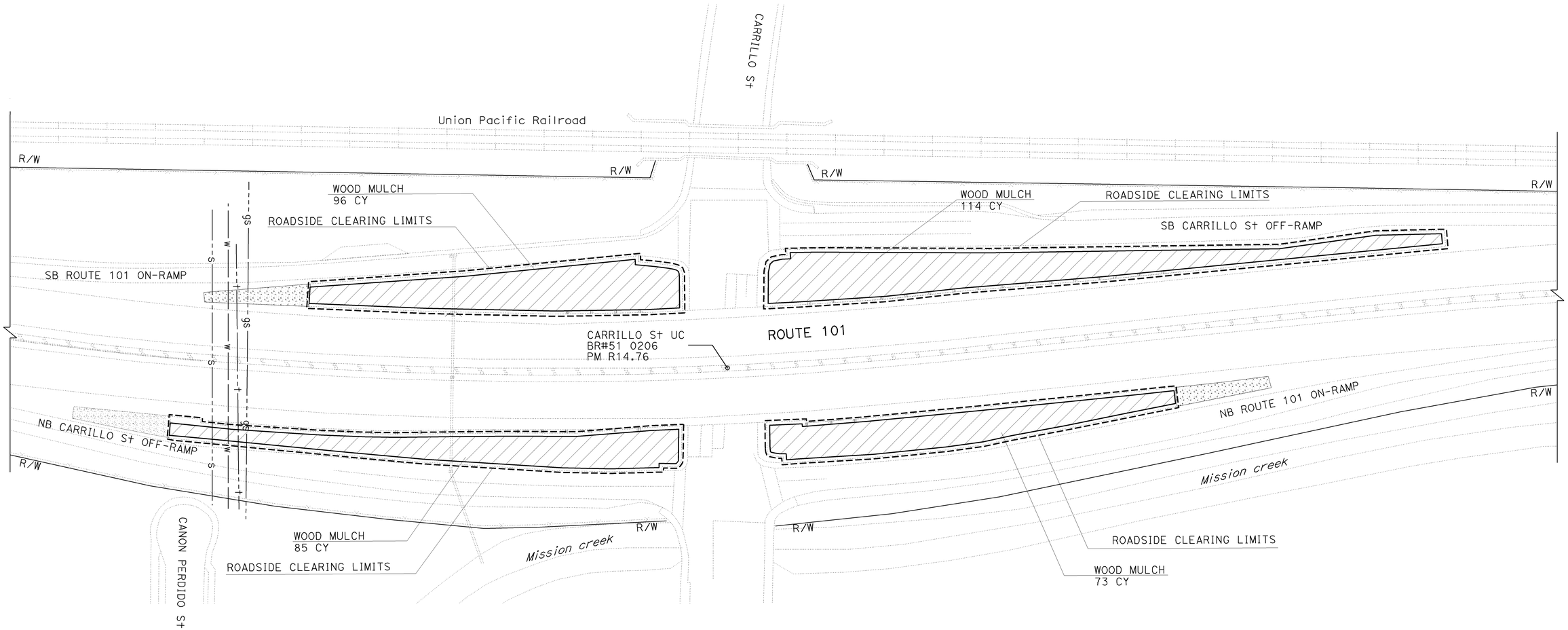

LOCATION (3)

CARRILLO St
PM 14.76

PLANTING PLAN

SCALE: 1"=50'

PP-2

APPROVED FOR PLANTING WORK ONLY

STATE OF CALIFORNIA - DEPARTMENT OF TRANSPORTATION
LANDSCAPE ARCHITECTURE
SENIOR LANDSCAPE ARCHITECT: DENNIS REEVES
CALCULATED-DESIGNED BY: JOSEPH ARNOLD
CHECKED BY: JO JACKSON
REVISED BY
DATE REVISED

LAST REVISION DATE PLOTTED => 15-DEC-2014
TIME PLOTTED => 09:17
12-01-14

BORDER LAST REVISED 7/2/2010
USERNAME => s123239
DGN FILE => 0500020289su002.dgn
RELATIVE BORDER SCALE IS IN INCHES 0 1 2 3
UNIT 1502
PROJECT NUMBER & PHASE 05000020891

NOTE:

FOR ACCURATE RIGHT OF WAY DATA, CONTACT
RIGHT OF WAY ENGINEERING AT THE DISTRICT OFFICE.

Dist	COUNTY	ROUTE	POST MILES TOTAL PROJECT	SHEET No.	TOTAL SHEETS
05	SB	101	13.2/27.1	34	64

12-1-14
LICENSED LANDSCAPE ARCHITECT

12-1-14
PLANS APPROVAL DATE

THE STATE OF CALIFORNIA OR ITS OFFICERS OR AGENTS SHALL NOT BE RESPONSIBLE FOR THE ACCURACY OR COMPLETENESS OF SCANNED COPIES OF THIS PLAN SHEET.

LICENSED LANDSCAPE ARCHITECT — Joseph R. Arnold — Date 09/30/15 — Renewal Date 12/03/14 — STATE OF CALIFORNIA

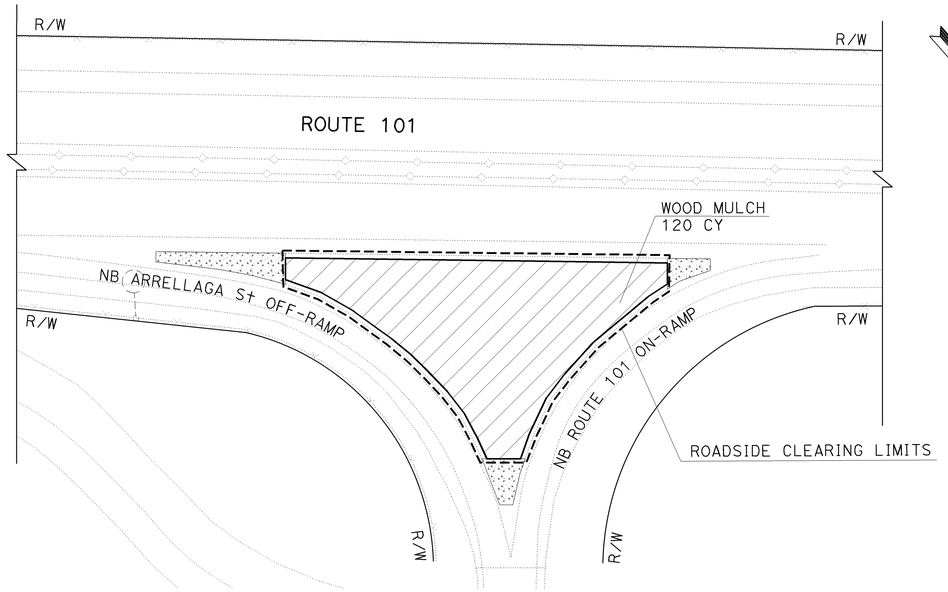

LOCATION (4)

ARRELLAGA St
PM 15.35

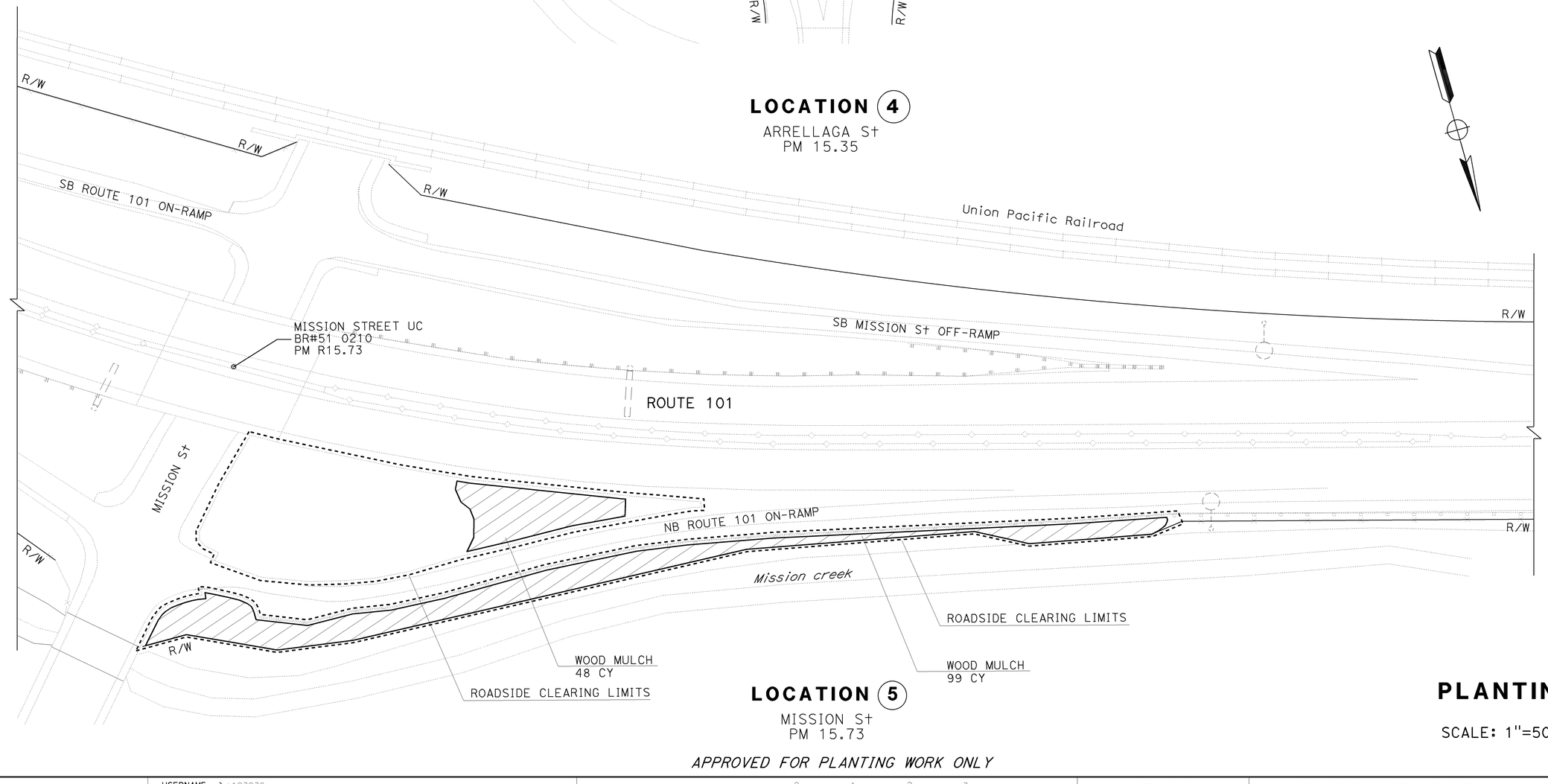

LOCATION (5)

MISSION St
PM 15.73

APPROVED FOR PLANTING WORK ONLY

PLANTING PLAN

SCALE: 1"=50'

PP-3

STATE OF CALIFORNIA - DEPARTMENT OF TRANSPORTATION
LANDSCAPE ARCHITECTURE
SENIOR LANDSCAPE ARCHITECT: DENNIS REEVES
CALCULATED-DESIGNED BY: JOSEPH ARNOLD
CHECKED BY: JO JACKSON
REVISED BY / DATE REVISED

LAST REVISION
DATE PLOTTED => 15-DEC-2014
TIME PLOTTED => 09:17
12-03-14

BORDER LAST REVISED 7/2/2010
USERNAME => s123239
DGN FILE => 0500020289su003.dgn
RELATIVE BORDER SCALE IS IN INCHES 0 1 2 3
UNIT 1502
PROJECT NUMBER & PHASE 05000020891

Dist	COUNTY	ROUTE	POST MILES TOTAL PROJECT	SHEET No.	TOTAL SHEETS
05	SB	101	13.2/27.1	35	64

12-1-14
LICENSED LANDSCAPE ARCHITECT

12-1-14
PLANS APPROVAL DATE

THE STATE OF CALIFORNIA OR ITS OFFICERS OR AGENTS SHALL NOT BE RESPONSIBLE FOR THE ACCURACY OR COMPLETENESS OF SCANNED COPIES OF THIS PLAN SHEET.

LICENSED LANDSCAPE ARCHITECT — Joseph R. Arnold — Date 09/30/15 — Renewal Date 12/03/14 — STATE OF CALIFORNIA

NOTE:

FOR ACCURATE RIGHT OF WAY DATA, CONTACT
RIGHT OF WAY ENGINEERING AT THE DISTRICT OFFICE.

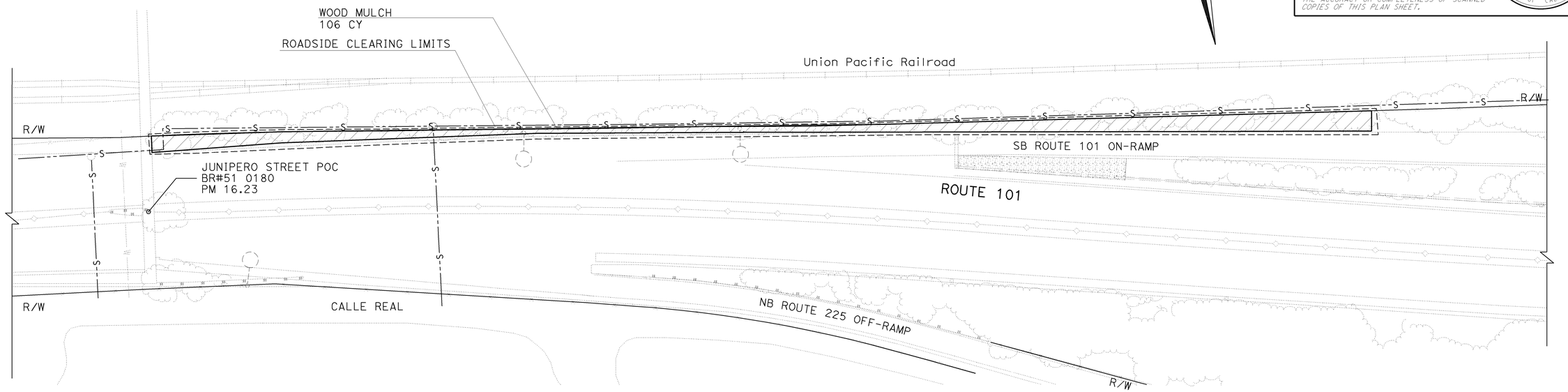

LOCATION (5)

MISSION St
PM 16.23 TO 16.44

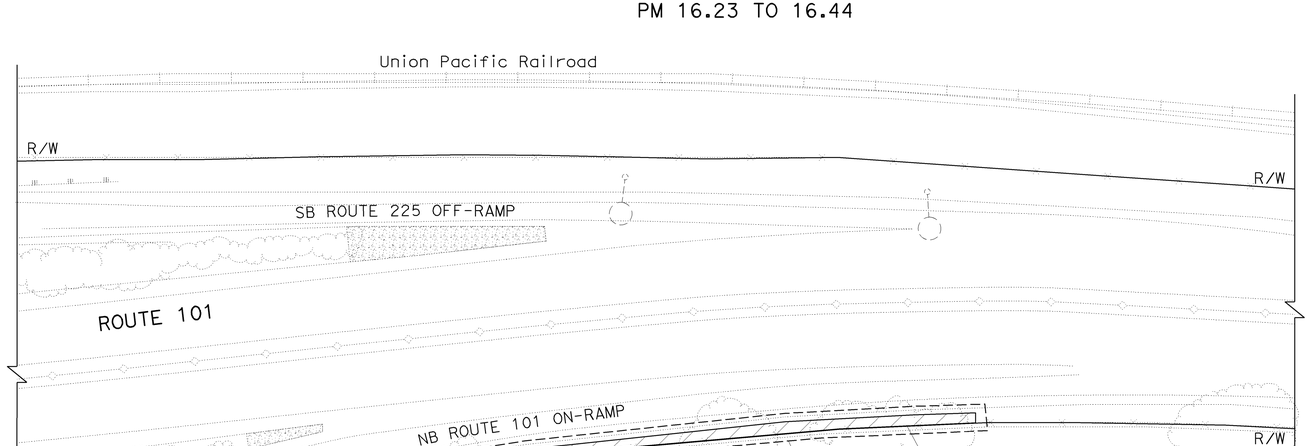

LOCATION (6)

LOS POSITAS St
PM 16.66

APPROVED FOR PLANTING WORK ONLY

PLANTING PLAN

SCALE: 1"=50'

PP-4

STATE OF CALIFORNIA - DEPARTMENT OF TRANSPORTATION
LANDSCAPE ARCHITECTURE
SENIOR LANDSCAPE ARCHITECT: DENNIS REEVES
CALCULATED-DESIGNED BY: JOSEPH ARNOLD
CHECKED BY: JO JACKSON
REVISED BY | DATE REVISED

LAST REVISION 12-01-14
DATE PLOTTED => 15-DEC-2014
TIME PLOTTED => 09:17

BORDER LAST REVISED 7/2/2010
USERNAME => s123239
DGN FILE => 05000020289su004.dgn
RELATIVE BORDER SCALE IS IN INCHES 0 1 2 3
UNIT 1502
PROJECT NUMBER & PHASE 05000020891

Dist	COUNTY	ROUTE	POST MILES TOTAL PROJECT	SHEET No.	TOTAL SHEETS
05	SB	101	13.2/27.1	36	64

12-1-14
LICENSED LANDSCAPE ARCHITECT

12-1-14
PLANS APPROVAL DATE

LICENSED LANDSCAPE ARCHITECT
Joseph H. Arnold No. 5366
Signature
09/30/15
Renewal Date
12/03/14
Date
STATE OF CALIFORNIA

THE STATE OF CALIFORNIA OR ITS OFFICERS OR AGENTS SHALL NOT BE RESPONSIBLE FOR THE ACCURACY OR COMPLETENESS OF SCANNED COPIES OF THIS PLAN SHEET.

NOTE:

FOR ACCURATE RIGHT OF WAY DATA, CONTACT RIGHT OF WAY ENGINEERING AT THE DISTRICT OFFICE.

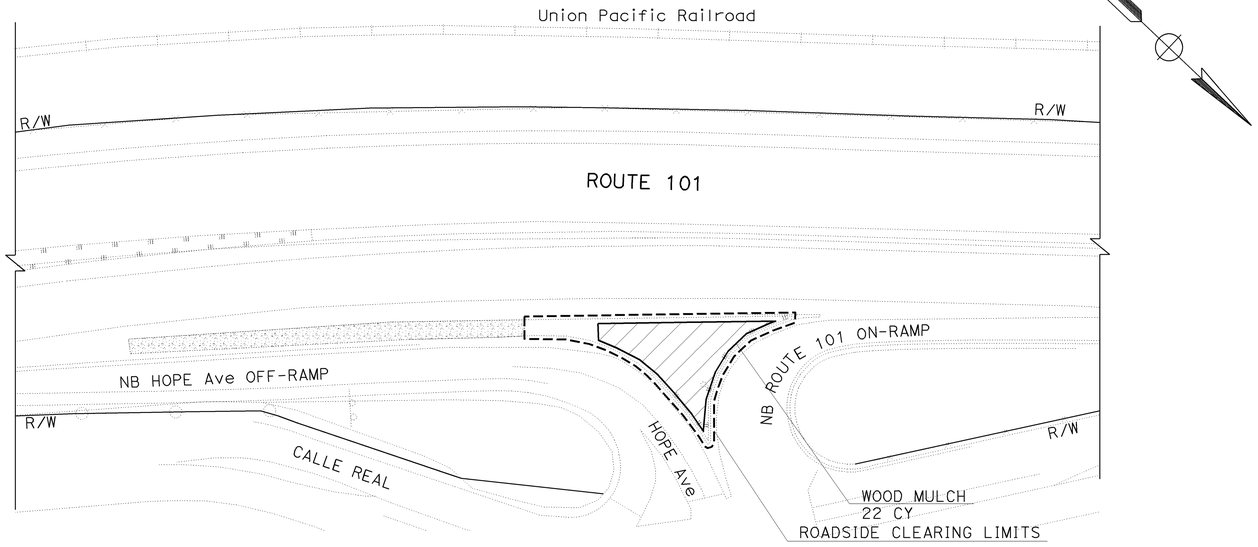

LOCATION 7

HOPE Ave
PM 17.49

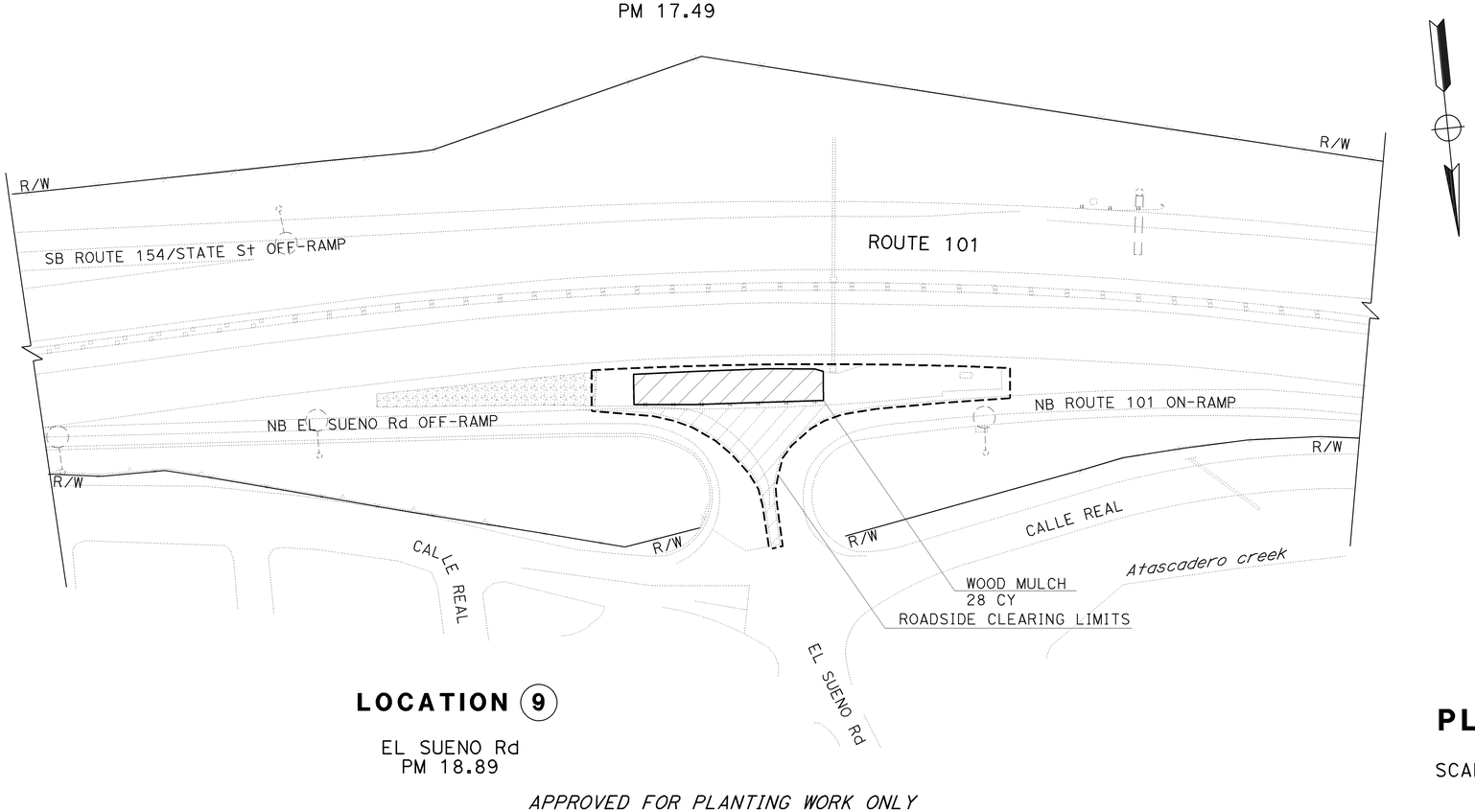

LOCATION 9

EL SUENO Rd
PM 18.89

APPROVED FOR PLANTING WORK ONLY

PLANTING PLAN

SCALE: 1"=50'

PP-5

STATE OF CALIFORNIA - DEPARTMENT OF TRANSPORTATION
Caltrans® LANDSCAPE ARCHITECTURE

SENIOR LANDSCAPE ARCHITECT: DENNIS REEVES
CALCULATED-DESIGNED BY: JOSEPH ARNOLD
CHECKED BY: JO JACKSON
REVISED BY
DATE REVISED

LAST REVISION 12-01-14
DATE PLOTTED => 15-DEC-2014
TIME PLOTTED => 09:17

Dist	COUNTY	ROUTE	POST MILES TOTAL PROJECT	SHEET No.	TOTAL SHEETS
05	SB	101	13.2/27.1	37	64

12-1-14
LICENSED LANDSCAPE ARCHITECT

12-1-14
PLANS APPROVAL DATE

THE STATE OF CALIFORNIA OR ITS OFFICERS OR AGENTS SHALL NOT BE RESPONSIBLE FOR THE ACCURACY OR COMPLETENESS OF SCANNED COPIES OF THIS PLAN SHEET.

LICENSED LANDSCAPE ARCHITECT — Joseph R. Arnold — Date 09/30/15 — Renewal Date 12/03/14 — STATE OF CALIFORNIA

NOTE:

FOR ACCURATE RIGHT OF WAY DATA, CONTACT
RIGHT OF WAY ENGINEERING AT THE DISTRICT OFFICE.

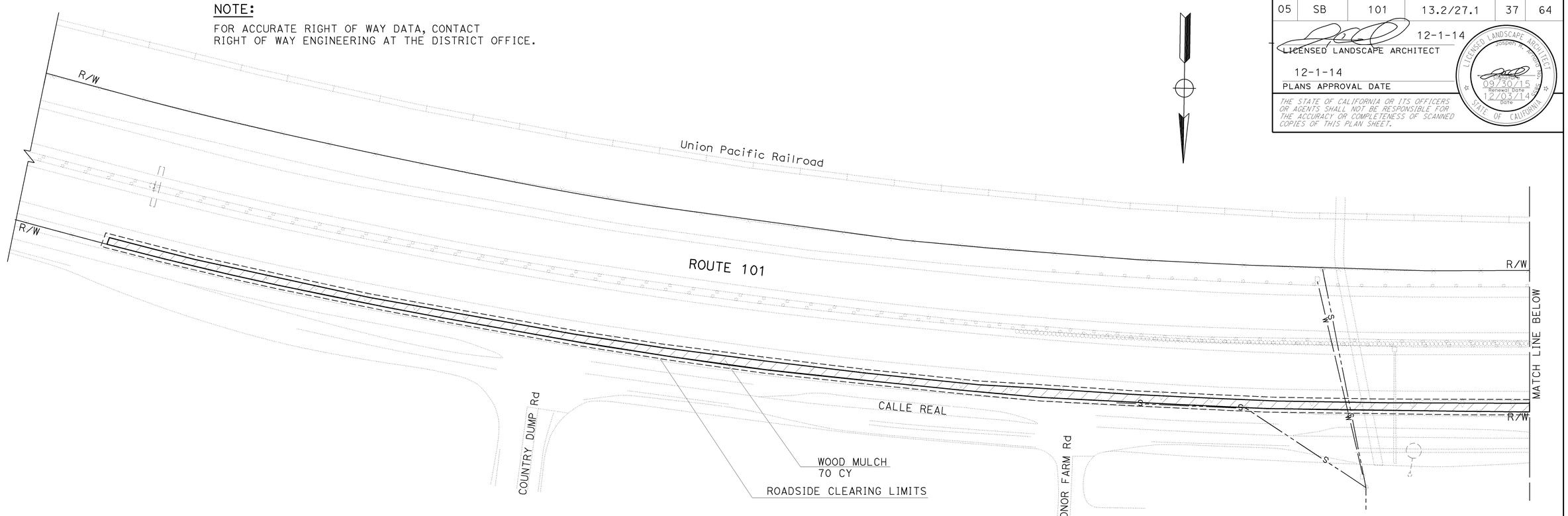

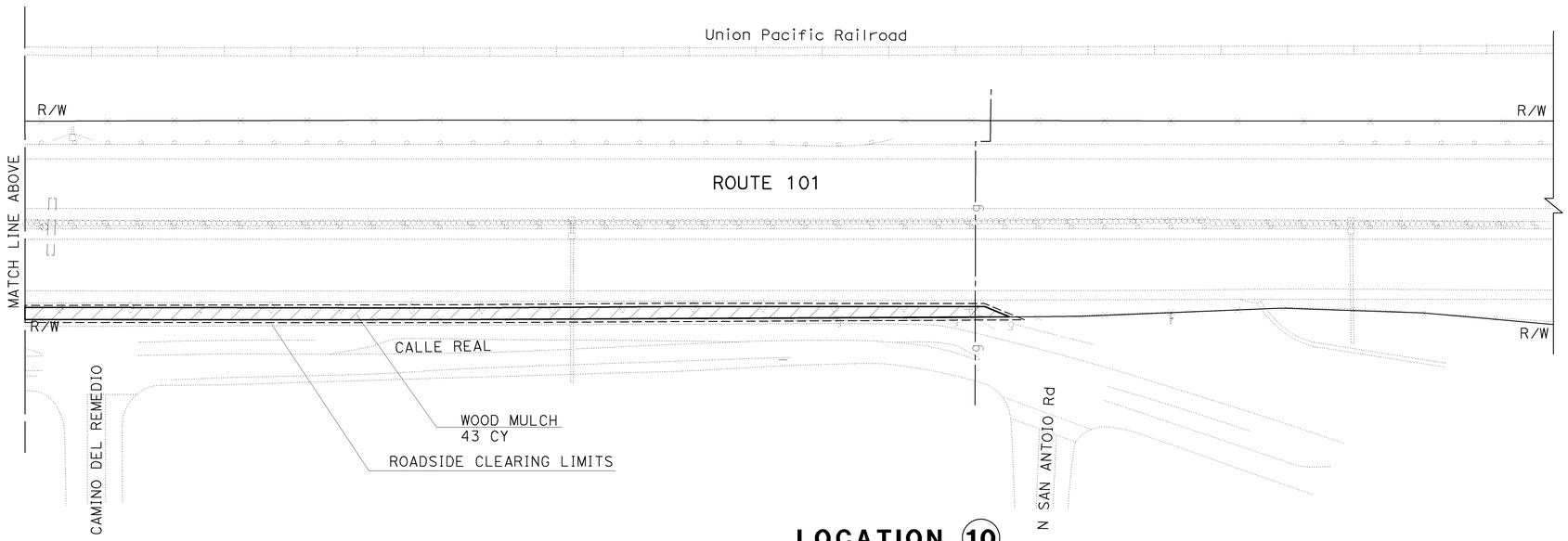

LOCATION (10)

BEHIND K-RAIL TO ROW FENCE
PM 19.23 TO 19.63

APPROVED FOR PLANTING WORK ONLY

PLANTING PLAN

SCALE: 1"=50'

PP-6

STATE OF CALIFORNIA - DEPARTMENT OF TRANSPORTATION
LANDSCAPE ARCHITECTURE
SENIOR LANDSCAPE ARCHITECT: DENNIS REEVES
CALCULATED-DESIGNED BY: JOSEPH ARNOLD
CHECKED BY: JO JACKSON
REVISED BY | DATE REVISED

LAST REVISION DATE PLOTTED => 15-DEC-2014
12-03-14 TIME PLOTTED => 09:17

BORDER LAST REVISED 7/2/2010
USERNAME => s123239
DGN FILE => 0500020289su006.dgn
RELATIVE BORDER SCALE IS IN INCHES 0 1 2 3
UNIT 1502
PROJECT NUMBER & PHASE 05000020891

Dist	COUNTY	ROUTE	POST MILES TOTAL PROJECT	SHEET No.	TOTAL SHEETS
05	SB	101	13.2/27.1	38	64

12-1-14
LICENSED LANDSCAPE ARCHITECT

12-1-14
PLANS APPROVAL DATE

THE STATE OF CALIFORNIA OR ITS OFFICERS OR AGENTS SHALL NOT BE RESPONSIBLE FOR THE ACCURACY OR COMPLETENESS OF SCANNED COPIES OF THIS PLAN SHEET.

LICENSED LANDSCAPE ARCHITECT
Joseph H. Arnold No.
Signature
09/30/15
Renewal Date
12/03/14
Date
STATE OF CALIFORNIA

NOTE:

FOR ACCURATE RIGHT OF WAY DATA, CONTACT RIGHT OF WAY ENGINEERING AT THE DISTRICT OFFICE.

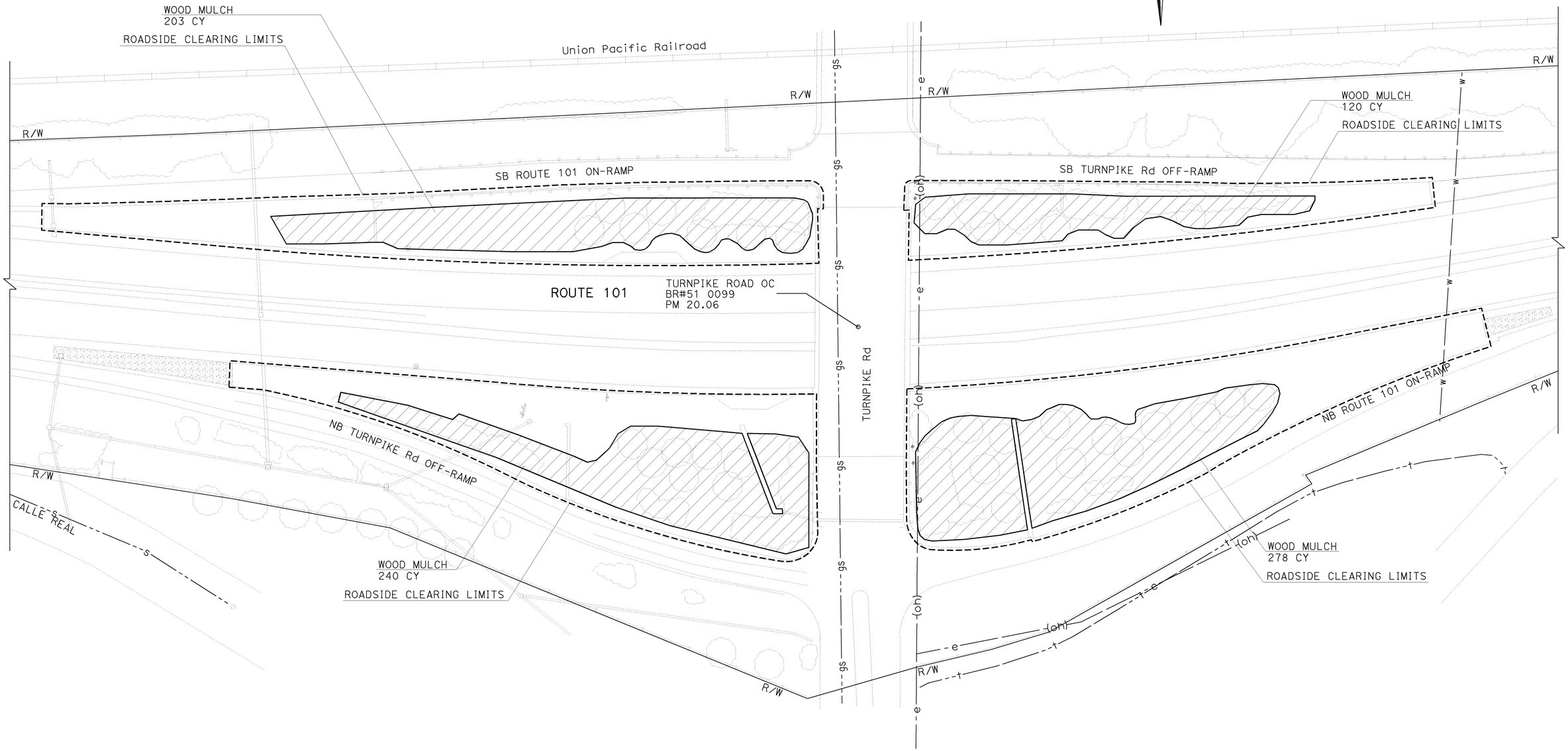

LOCATION 11

TURNPIKE Rd
PM 19.90 to 20.18

PLANTING PLAN

SCALE: 1"=50'

PP-7

APPROVED FOR PLANTING WORK ONLY

STATE OF CALIFORNIA - DEPARTMENT OF TRANSPORTATION
Caltrans® LANDSCAPE ARCHITECTURE

SENIOR LANDSCAPE ARCHITECT: DENNIS REEVES
CALCULATED-DESIGNED BY: JOSEPH ARNOLD
CHECKED BY: JO JACKSON
REVISED BY
DATE REVISED

LAST REVISION 12-01-14
DATE PLOTTED => 15-DEC-2014
TIME PLOTTED => 09:17

NOTE:

FOR ACCURATE RIGHT OF WAY DATA, CONTACT
RIGHT OF WAY ENGINEERING AT THE DISTRICT OFFICE.

Dist	COUNTY	ROUTE	POST MILES TOTAL PROJECT	SHEET No.	TOTAL SHEETS
05	SB	101	13.2/27.1	39	64

12-1-14
LICENSED LANDSCAPE ARCHITECT

12-1-14
PLANS APPROVAL DATE

THE STATE OF CALIFORNIA OR ITS OFFICERS OR AGENTS SHALL NOT BE RESPONSIBLE FOR THE ACCURACY OR COMPLETENESS OF SCANNED COPIES OF THIS PLAN SHEET.

LICENSED LANDSCAPE ARCHITECT — Joseph R. Arnold — Date 09/30/15 — Renewal Date 12/03/14 — STATE OF CALIFORNIA

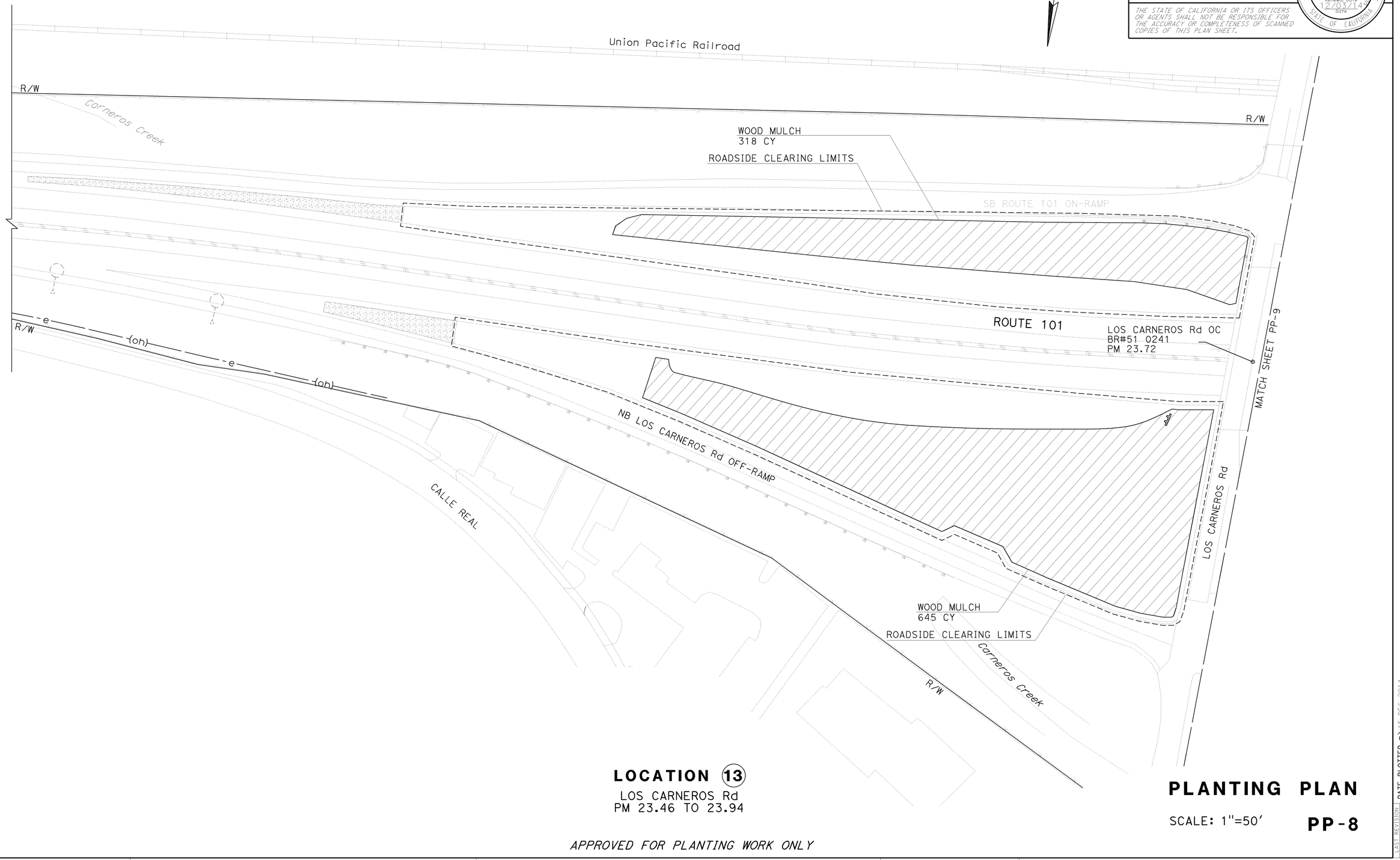

LOCATION (13)
LOS CARNEROS Rd
PM 23.46 TO 23.94

PLANTING PLAN

SCALE: 1"=50'

PP-8

APPROVED FOR PLANTING WORK ONLY

STATE OF CALIFORNIA - DEPARTMENT OF TRANSPORTATION
LANDSCAPE ARCHITECTURE
SENIOR LANDSCAPE ARCHITECT: DENNIS REEVES
CALCULATED-DESIGNED BY: JOSEPH ARNOLD
CHECKED BY: JO JACKSON
REVISED BY
DATE REVISED

LAST REVISION DATE PLOTTED => 15-DEC-2014
TIME PLOTTED => 09:17

BORDER LAST REVISED 7/2/2010
USERNAME => s123239
DGN FILE => 0500020289su008.dgn
RELATIVE BORDER SCALE IS IN INCHES 0 1 2 3
UNIT 1502
PROJECT NUMBER & PHASE 05000020891

NOTE:

FOR ACCURATE RIGHT OF WAY DATA, CONTACT
RIGHT OF WAY ENGINEERING AT THE DISTRICT OFFICE.

Dist	COUNTY	ROUTE	POST MILES TOTAL PROJECT	SHEET No.	TOTAL SHEETS
05	SB	101	13.2/27.1	40	64

12-1-14
LICENSED LANDSCAPE ARCHITECT

12-1-14
PLANS APPROVAL DATE

THE STATE OF CALIFORNIA OR ITS OFFICERS OR AGENTS SHALL NOT BE RESPONSIBLE FOR THE ACCURACY OR COMPLETENESS OF SCANNED COPIES OF THIS PLAN SHEET.

LICENSED LANDSCAPE ARCHITECT
Joseph R. Arnold
Date 09/30/15
Renewal Date 12/03/14
STATE OF CALIFORNIA

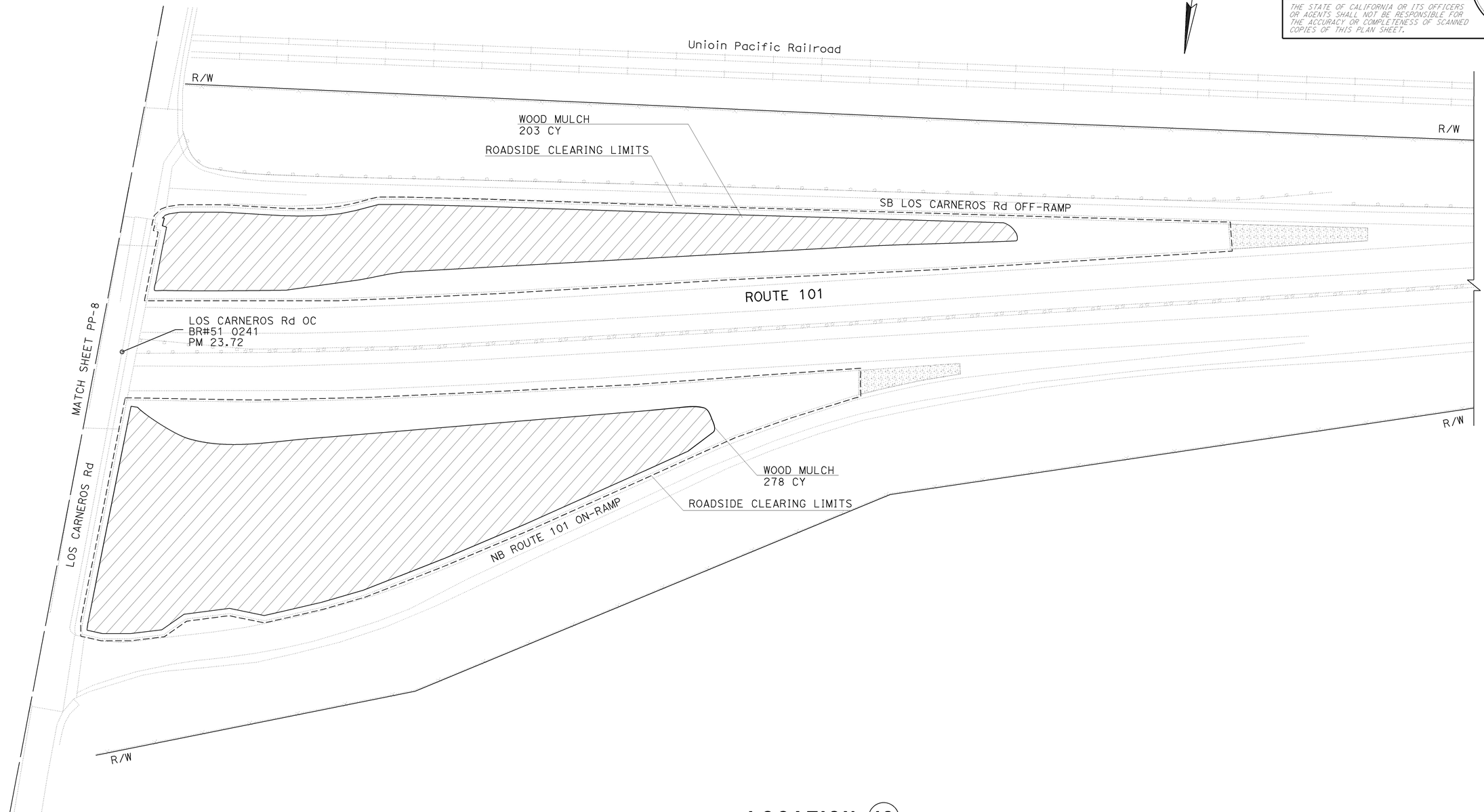

LOCATION (13)
LOS CARNEROS Rd
PM 23.46 TO 23.94

PLANTING PLAN

SCALE: 1"=50'

PP-9

APPROVED FOR PLANTING WORK ONLY

CALCULATED-DESIGNED BY
CHECKED BY
JOSEPH ARNOLD
JO JACKSON
REVISED BY
DATE REVISED
SENIOR LANDSCAPE ARCHITECT
DENNIS REEVES
STATE OF CALIFORNIA - DEPARTMENT OF TRANSPORTATION
LANDSCAPE ARCHITECTURE

LAST REVISION
DATE PLOTTED => 15-DEC-2014
TIME PLOTTED => 09:17
12-01-14

BORDER LAST REVISED 7/2/2010
USERNAME => s123239
DGN FILE => 0500020289su009.dgn
RELATIVE BORDER SCALE IS IN INCHES 0 1 2 3
UNIT 1502
PROJECT NUMBER & PHASE 05000020891

Dist	COUNTY	ROUTE	POST MILES TOTAL PROJECT	SHEET No.	TOTAL SHEETS
05	SB	101	13.2/27.1	41	64

12-1-14
LICENSED LANDSCAPE ARCHITECT

12-1-14
PLANS APPROVAL DATE

LICENSED LANDSCAPE ARCHITECT
Joseph R. Arnold No. 5855
Signature
09/30/15
Renewal Date
12/03/14
Date
STATE OF CALIFORNIA

THE STATE OF CALIFORNIA OR ITS OFFICERS OR AGENTS SHALL NOT BE RESPONSIBLE FOR THE ACCURACY OR COMPLETENESS OF SCANNED COPIES OF THIS PLAN SHEET.

NOTE:

FOR ACCURATE RIGHT OF WAY DATA, CONTACT RIGHT OF WAY ENGINEERING AT THE DISTRICT OFFICE.

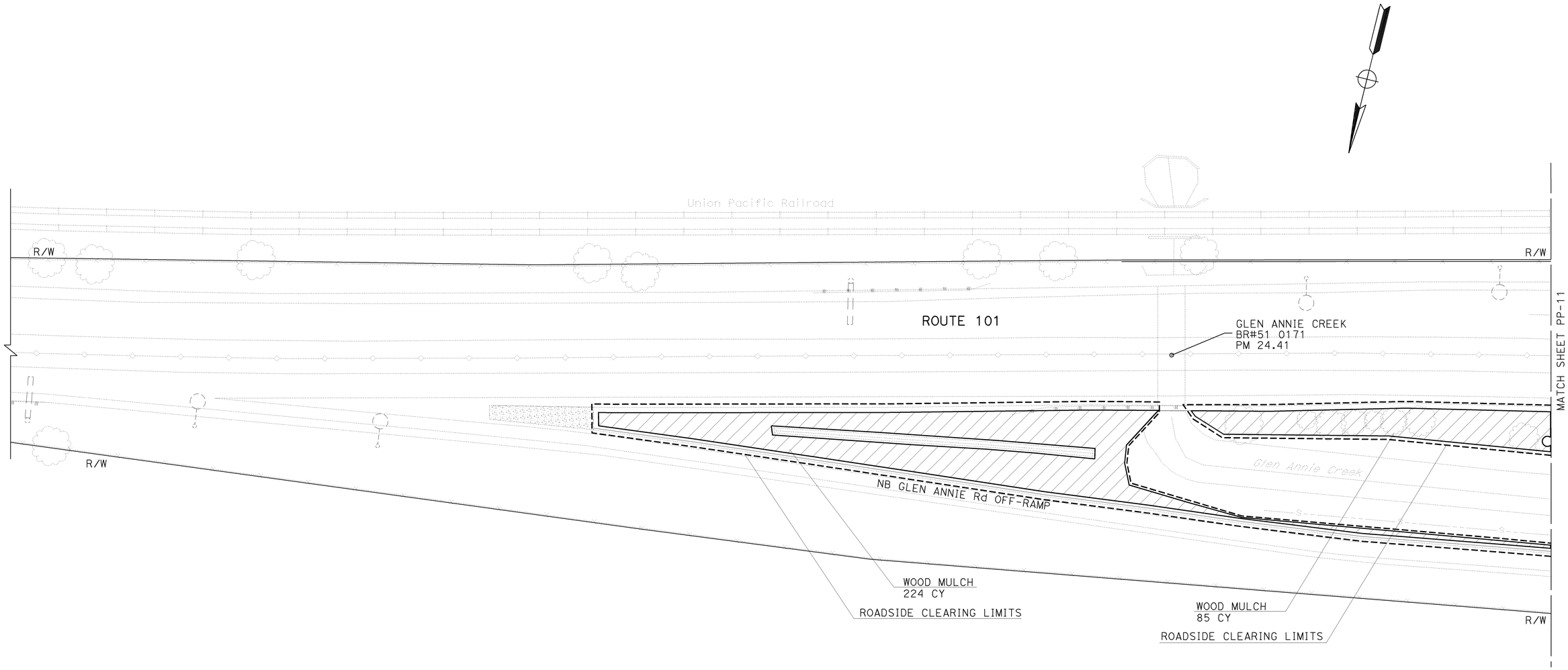

LOCATION 14

GLEN ANNIE Rd
PM 24.30 TO 24.97

PLANTING PLAN

SCALE: 1"=20'

PP-10

APPROVED FOR PLANTING WORK ONLY

STATE OF CALIFORNIA - DEPARTMENT OF TRANSPORTATION
Caltrans® LANDSCAPE ARCHITECTURE

SENIOR LANDSCAPE ARCHITECT: DENNIS REEVES
CALCULATED-DESIGNED BY: JOSEPH ARNOLD
CHECKED BY: JO JACKSON
REVISED BY
DATE REVISED

LAST REVISION 12-01-14
DATE PLOTTED => 15-DEC-2014
TIME PLOTTED => 09:17

Dist	COUNTY	ROUTE	POST MILES TOTAL PROJECT	SHEET No.	TOTAL SHEETS
05	SB	101	13.2/27.1	42	64

12-1-14
LICENSED LANDSCAPE ARCHITECT

12-1-14
PLANS APPROVAL DATE

THE STATE OF CALIFORNIA OR ITS OFFICERS OR AGENTS SHALL NOT BE RESPONSIBLE FOR THE ACCURACY OR COMPLETENESS OF SCANNED COPIES OF THIS PLAN SHEET.

LICENSED LANDSCAPE ARCHITECT
Joseph H. Arnold No. 5636
Signature
09/30/15
Renewal Date
12/03/14
Date
STATE OF CALIFORNIA

NOTE:

FOR ACCURATE RIGHT OF WAY DATA, CONTACT RIGHT OF WAY ENGINEERING AT THE DISTRICT OFFICE.

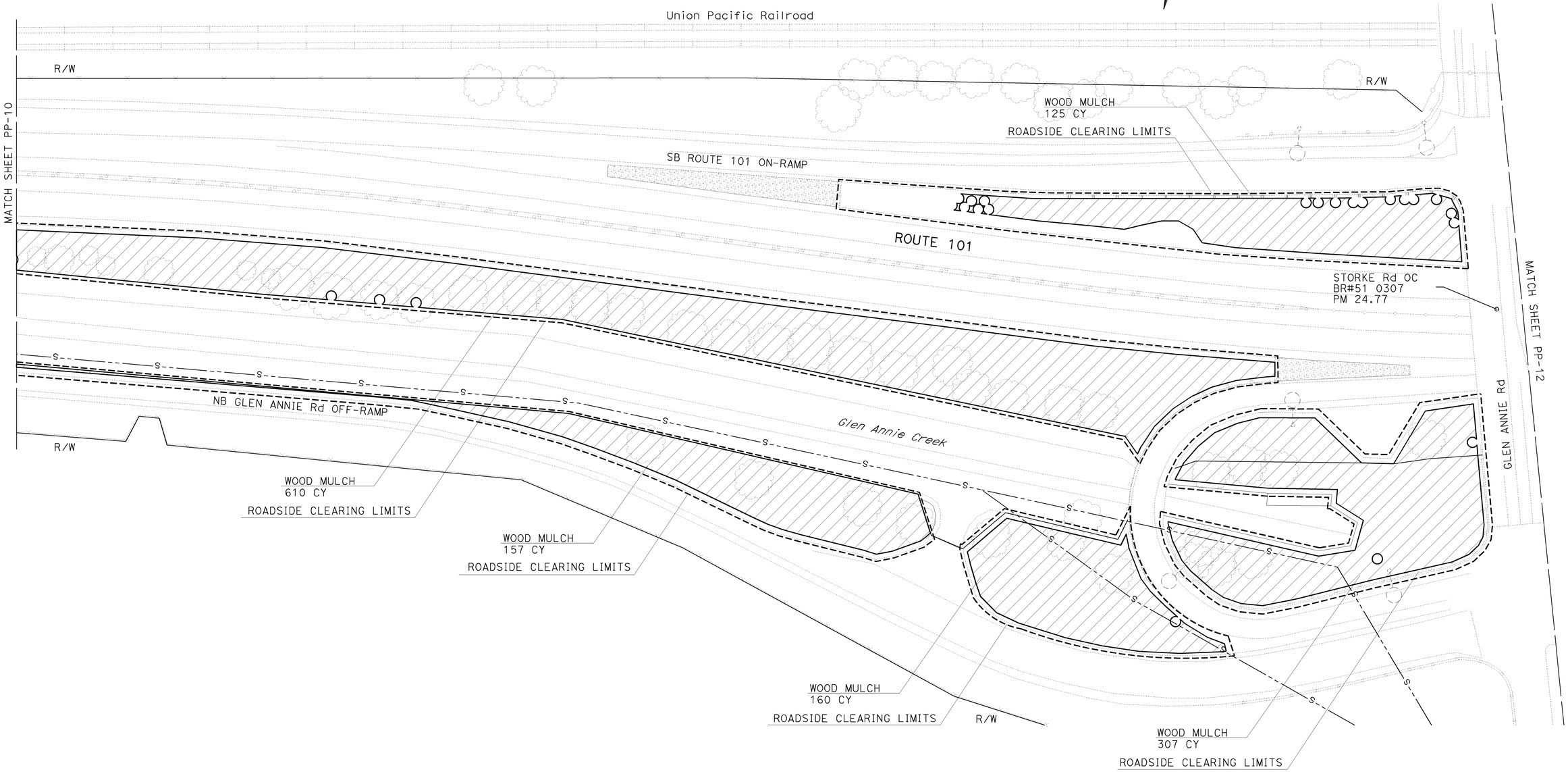

LOCATION 14
GLEN ANNIE Rd
PM 24.30 TO 24.97

PLANTING PLAN

SCALE: 1"=50'

PP-11

APPROVED FOR PLANTING WORK ONLY

STATE OF CALIFORNIA - DEPARTMENT OF TRANSPORTATION
Caltrans® LANDSCAPE ARCHITECTURE

SENIOR LANDSCAPE ARCHITECT: DENNIS REEVES
CALCULATED-DESIGNED BY: JOSEPH ARNOLD
CHECKED BY: JO JACKSON
REVISED BY
DATE REVISED

LAST REVISION 12-1-14
DATE PLOTTED => 15-DEC-2014
TIME PLOTTED => 09:17

Dist	COUNTY	ROUTE	POST MILES TOTAL PROJECT	SHEET No.	TOTAL SHEETS
05	SB	101	13.2/27.1	43	64

12-1-14
LICENSED LANDSCAPE ARCHITECT

12-1-14
PLANS APPROVAL DATE

THE STATE OF CALIFORNIA OR ITS OFFICERS OR AGENTS SHALL NOT BE RESPONSIBLE FOR THE ACCURACY OR COMPLETENESS OF SCANNED COPIES OF THIS PLAN SHEET.

LICENSED LANDSCAPE ARCHITECT
Joseph H. Arnold No. 5
Signature
09/30/15
Renewal Date
12/03/14
Date
STATE OF CALIFORNIA

NOTE:

FOR ACCURATE RIGHT OF WAY DATA, CONTACT RIGHT OF WAY ENGINEERING AT THE DISTRICT OFFICE.

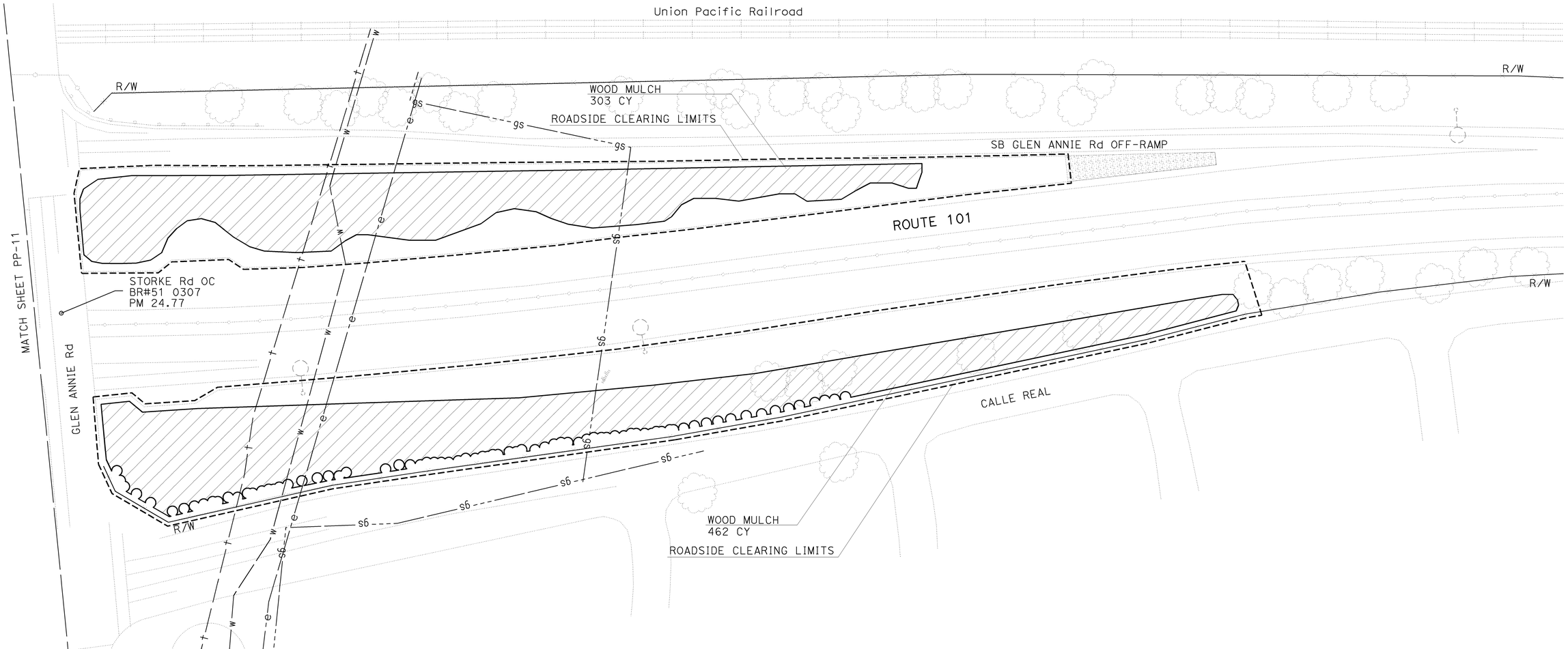

LOCATION 14

GLEN ANNIERd
PM 24.30 TO 24.97

PLANTING PLAN

SCALE: 1"=50'

PP-12

APPROVED FOR PLANTING WORK ONLY

STATE OF CALIFORNIA - DEPARTMENT OF TRANSPORTATION
Caltrans® LANDSCAPE ARCHITECTURE

SENIOR LANDSCAPE ARCHITECT: DENNIS REEVES
CALCULATED-DESIGNED BY: JOSEPH ARNOLD
CHECKED BY: JO JACKSON
REVISED BY
DATE REVISED

LAST REVISION 12-01-14
DATE PLOTTED => 15-DEC-2014
TIME PLOTTED => 09:17

Dist	COUNTY	ROUTE	POST MILES TOTAL PROJECT	SHEET No.	TOTAL SHEETS
05	SB	101	13.2/27.1	44	64

12-1-14
LICENSED LANDSCAPE ARCHITECT

12-1-14
PLANS APPROVAL DATE

LICENSED LANDSCAPE ARCHITECT
JOSEPH R. ARNOLD NO. 5855
Signature
09/30/15
Renewal Date
12/03/14
Date
STATE OF CALIFORNIA

THE STATE OF CALIFORNIA OR ITS OFFICERS OR AGENTS SHALL NOT BE RESPONSIBLE FOR THE ACCURACY OR COMPLETENESS OF SCANNED COPIES OF THIS PLAN SHEET.

IRRIGATION QUANTITIES

SHEET No.	RCV		WS	BV	GV	PLASTIC PIPE (SCHEDULE 40) (SUPPLY LINE)		PLASTIC PIPE (CLASS 315) (SUPPLY LINE)
	1½"	2"	2"	2"	3"	2"	2½"	3"
	EA	EA	EA	EA	EA	LF	LF	LF
IP-1		3	1	1		409	212	225
IP-2	2			1	1			180
TOTAL	2	3	1	2	1	409	212	405

IRRIGATION CONDUIT QUANTITIES

SHEET No.	EXTEND CONDUIT	(N)	(N)
	WELDED STEEL PIPE	PLASTIC PIPE (CLASS 315) (SUPPLY LINE)	CONTROL AND NEUTRAL CONDUCTOR ELECTRICAL CONDUIT
	10"	3"	2½"
	LF		
IP-2	10	12-LF	12-LF
TOTAL	10		

(N) - NOT A SEPARATE PAY ITEM, FOR INFORMATION ONLY

ROADSIDE CLEARING

SHEET No.	QUANTITY
	SQFT (N)
LD-1	45,607
LD-2	39,860
LD-3	36,800
LD-4	14,485
LD-5	5380
LD-6	12,130
LD-7	199,710
LD-8	183,415
LD-9	113,870
LD-10	33,395
LD-11	146,885
LD-12	173,270

(N) - NOT A SEPARATE PAY ITEM, FOR INFORMATION ONLY

WOOD MULCH

SHEET No.	(WOODCHIP MULCH)
	CY
LD-1	226
LD-2	368
LD-3	267
LD-4	134
LD-5	50
LD-6	113
LD-7	841
LD-8	963
LD-9	481
LD-10	309
LD-11	1359
LD-12	765
TOTAL	5876

LANDSCAPE QUANTITIES
LQ-1

STATE OF CALIFORNIA - DEPARTMENT OF TRANSPORTATION
Caltrans® LANDSCAPE ARCHITECTURE

SENIOR LANDSCAPE ARCHITECT: DENNIS REEVES
CALCULATED-DESIGNED BY: JOSEPH ARNOLD
CHECKED BY: JO JACKSON
REVISED BY
DATE REVISED

LAST REVISION 12/03/14
DATE PLOTTED => 15-DEC-2014
TIME PLOTTED => 09:17

Dist	COUNTY	ROUTE	POST MILES TOTAL PROJECT	SHEET No.	TOTAL SHEETS
05	SB	101	13.2/27.1	45	64

Xavier Alfaro 12-1-14
REGISTERED ELECTRICAL ENGINEER

12-1-14
PLANS APPROVAL DATE

REGISTERED PROFESSIONAL ENGINEER
XAVIER I. ALFARO
No. E17488
Exp. 6-30-15
ELECTRICAL
STATE OF CALIFORNIA

THE STATE OF CALIFORNIA OR ITS OFFICERS OR AGENTS SHALL NOT BE RESPONSIBLE FOR THE ACCURACY OR COMPLETENESS OF SCANNED COPIES OF THIS PLAN SHEET.

NOTE:

FOR ACCURATE RIGHT OF WAY DATA, CONTACT
RIGHT OF WAY ENGINEERING AT THE DISTRICT OFFICE.

LEGEND:

[1] Irr PB

ABBREVIATIONS:

CST CONTRASTING SURFACE TREATMENT

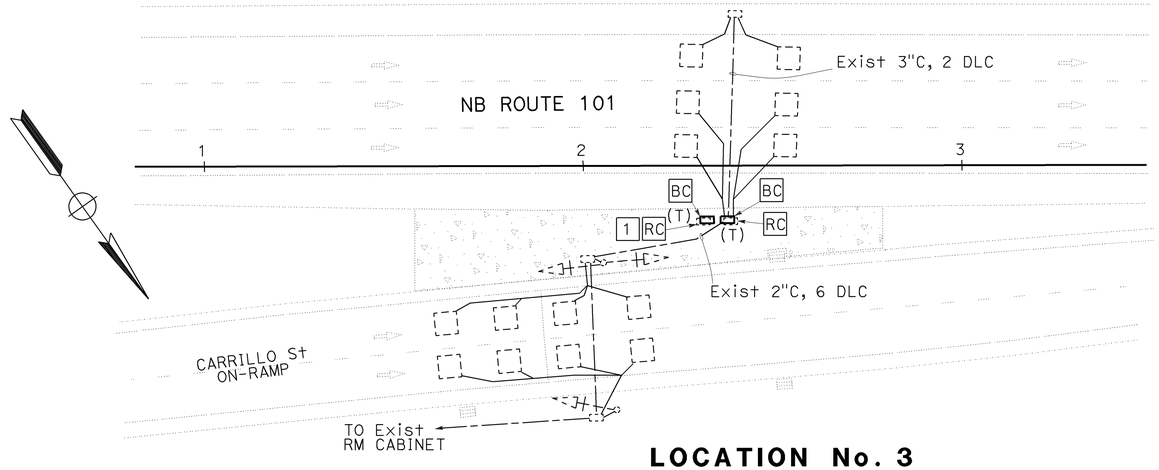

LOCATION No. 3

CST No. 7
PM 14.87

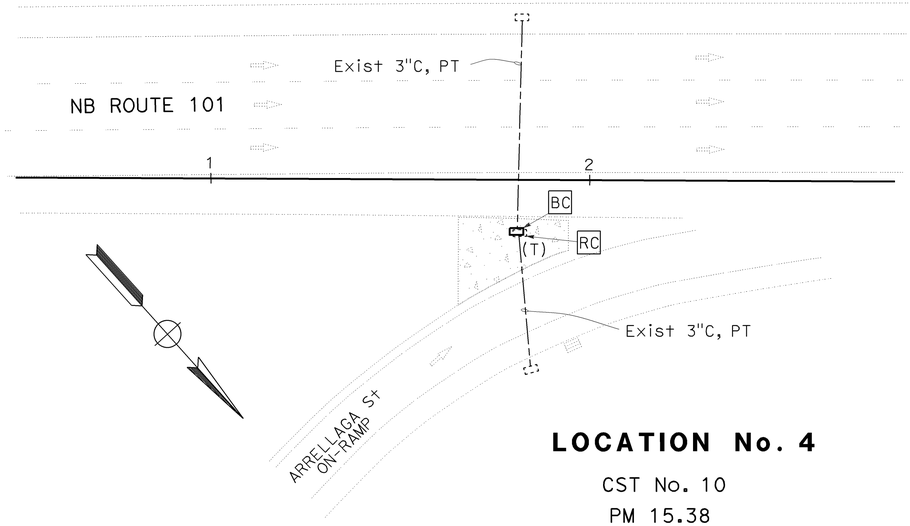

LOCATION No. 4

CST No. 10
PM 15.38

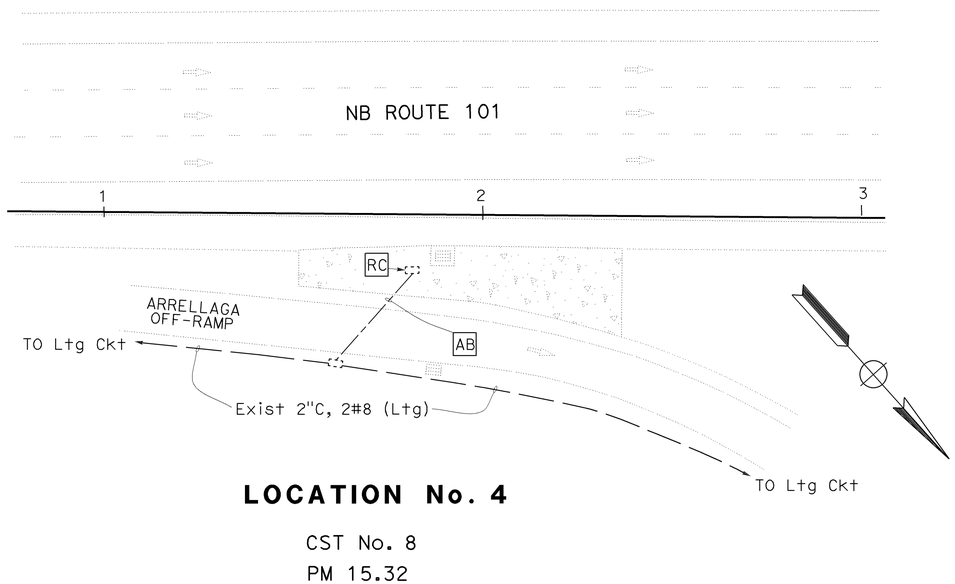

LOCATION No. 4

CST No. 8
PM 15.32

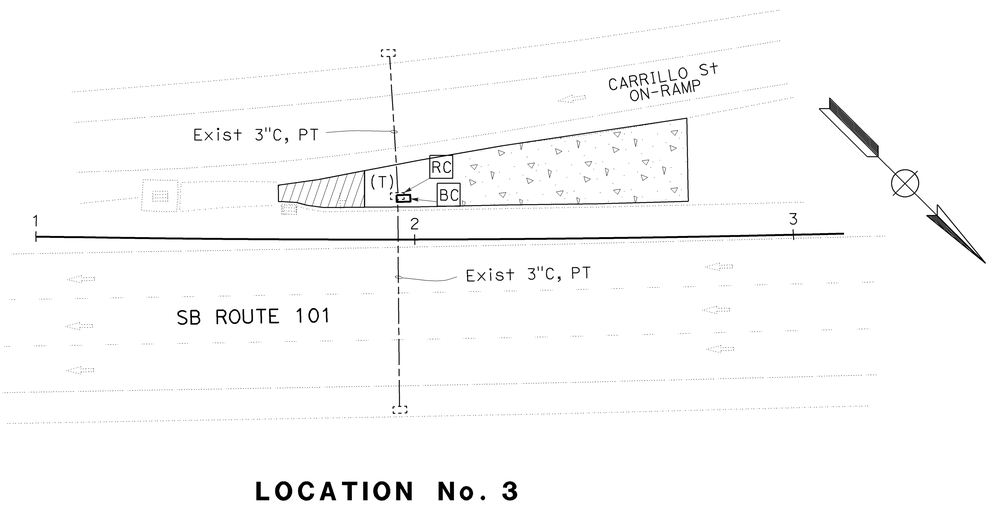

LOCATION No. 3

CST No. 6
PM 14.69

APPROVED FOR ELECTRICAL WORK ONLY

REPLACE PULL BOX

SCALE: 1"=20'

E-1

STATE OF CALIFORNIA - DEPARTMENT OF TRANSPORTATION
ELECTRICAL DESIGN
FUNCTIONAL SUPERVISOR: ALI BAKHDOUD
CALCULATED-DESIGNED BY: XAVIER ALFARO
CHECKED BY: PAUL MATOS
REVISED BY
DATE REVISED

LAST REVISION | DATE PLOTTED => 15-DEC-2014
12-01-14 | TIME PLOTTED => 09:17

BORDER LAST REVISED 7/2/2010
USERNAME => s123239
DGN FILE => 05000202891ua001.dgn
RELATIVE BORDER SCALE IS IN INCHES 0 1 2 3
UNIT 1515
PROJECT NUMBER & PHASE 05000202891

Dist	COUNTY	ROUTE	POST MILES TOTAL PROJECT	SHEET No.	TOTAL SHEETS
05	SB	101	13.2/27.1	46	64

Xavier Alfaro 12-01-14
REGISTERED ELECTRICAL ENGINEER

12-01-14
PLANS APPROVAL DATE

REGISTERED PROFESSIONAL ENGINEER
XAVIER I. ALFARO
No. E17488
Exp. 6-30-15
ELECTRICAL
STATE OF CALIFORNIA

THE STATE OF CALIFORNIA OR ITS OFFICERS OR AGENTS SHALL NOT BE RESPONSIBLE FOR THE ACCURACY OR COMPLETENESS OF SCANNED COPIES OF THIS PLAN SHEET.

NOTE:

FOR ACCURATE RIGHT OF WAY DATA, CONTACT
RIGHT OF WAY ENGINEERING AT THE DISTRICT OFFICE.

LEGEND:

[1] Irr PB

ABBREVIATIONS:

CST CONTRASTING SURFACE TREATMENT

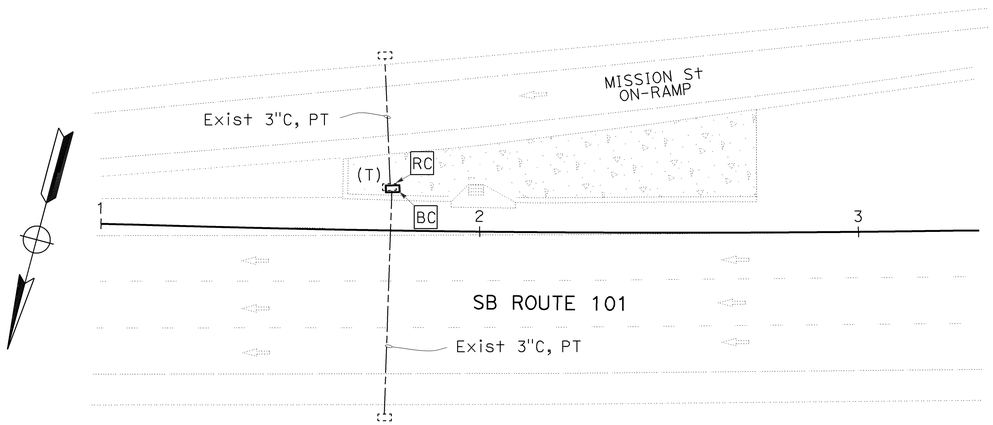

LOCATION No. 5

CST No. 11
PM 15.64

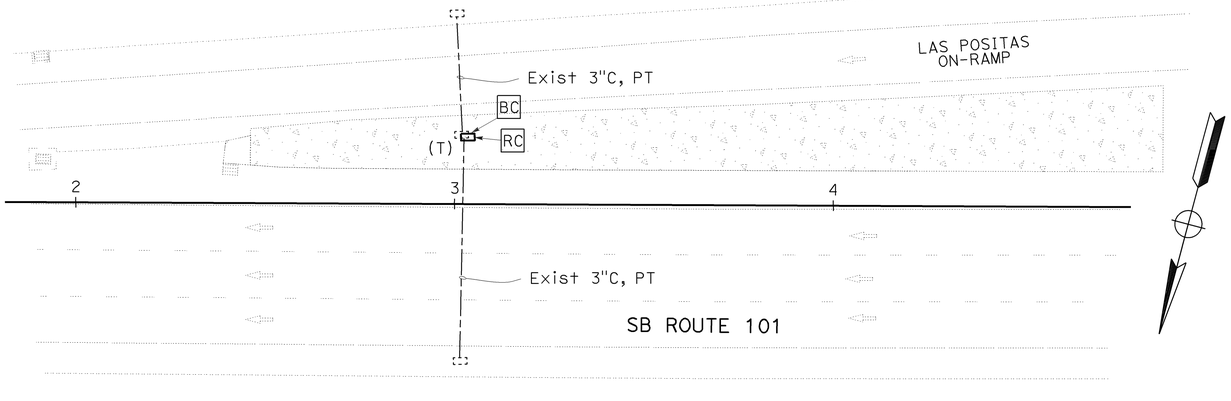

LOCATION No. 6

CST No. 14
PM 16.37

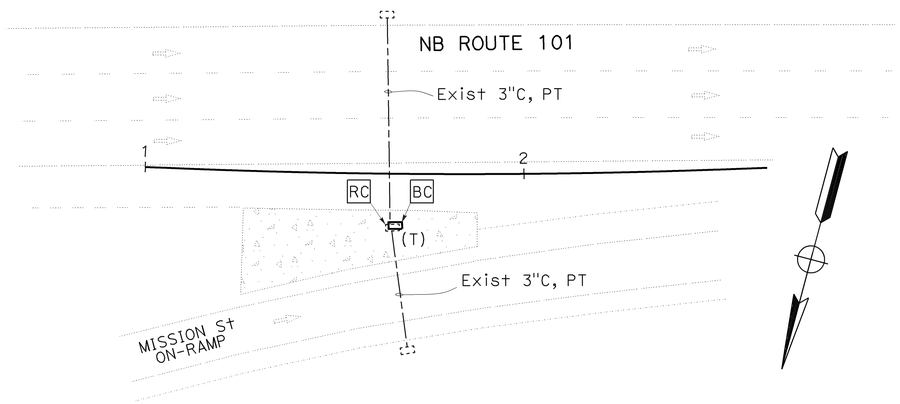

LOCATION No. 5

CST No. 13
PM 15.82

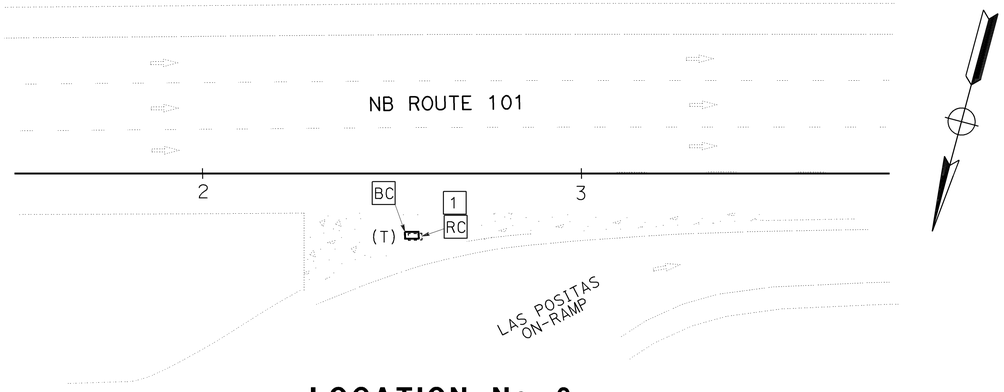

LOCATION No. 6

CST No. 15
PM 16.68

REPLACE PULL BOX
E-2

SCALE: 1"=20'

APPROVED FOR ELECTRICAL WORK ONLY

STATE OF CALIFORNIA - DEPARTMENT OF TRANSPORTATION
ELECTRICAL DESIGN
Caltrans

FUNCTIONAL SUPERVISOR: ALI BAKHDOUD
CALCULATED-DESIGNED BY: XAVIER ALFARO
CHECKED BY: PAUL MATOS
REVISED BY
DATE REVISED

LAST REVISION DATE PLOTTED => 15-DEC-2014
TIME PLOTTED => 09:17
00-00-00

BORDER LAST REVISED 7/2/2010
USERNAME => s123239
DGN FILE => 0500020289ua002.dgn
RELATIVE BORDER SCALE IS IN INCHES 0 1 2 3
UNIT 1515
PROJECT NUMBER & PHASE 05000202891

Dist	COUNTY	ROUTE	POST MILES TOTAL PROJECT	SHEET No.	TOTAL SHEETS
05	SB	101	13.2/27.1	47	64

Xavier Alfaro 12-01-14
REGISTERED ELECTRICAL ENGINEER

12-01-14
PLANS APPROVAL DATE

REGISTERED PROFESSIONAL ENGINEER
XAVIER I. ALFARO
No. E17488
Exp. 6-30-15
ELECTRICAL
STATE OF CALIFORNIA

THE STATE OF CALIFORNIA OR ITS OFFICERS OR AGENTS SHALL NOT BE RESPONSIBLE FOR THE ACCURACY OR COMPLETENESS OF SCANNED COPIES OF THIS PLAN SHEET.

NOTE:

FOR ACCURATE RIGHT OF WAY DATA, CONTACT RIGHT OF WAY ENGINEERING AT THE DISTRICT OFFICE.

ABBREVIATIONS:

CST CONTRASTING SURFACE TREATMENT

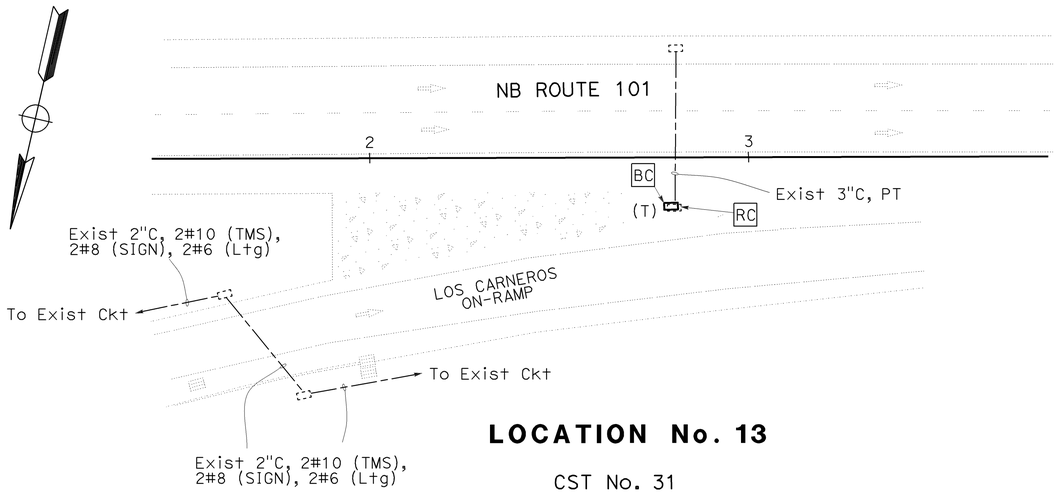

LOCATION No. 13

CST No. 31
PM 23.87

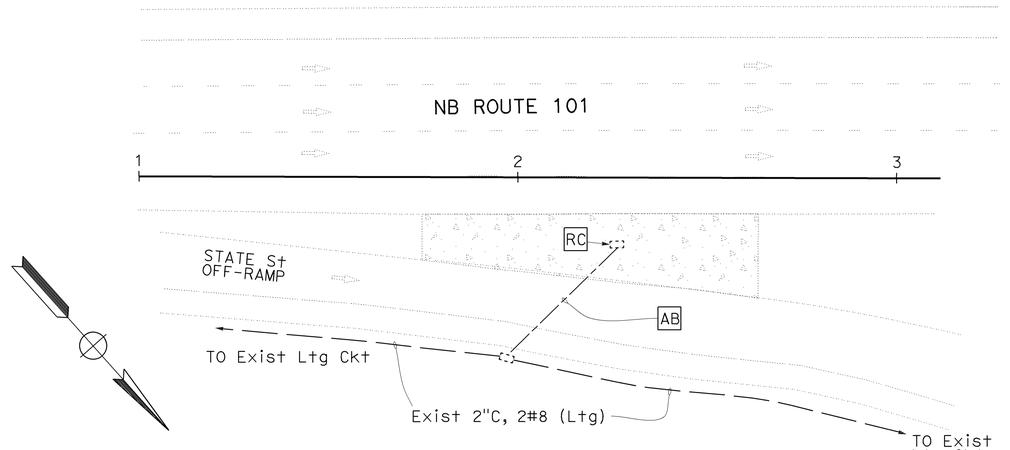

LOCATION No. 8

CST No. 17
PM 17.96

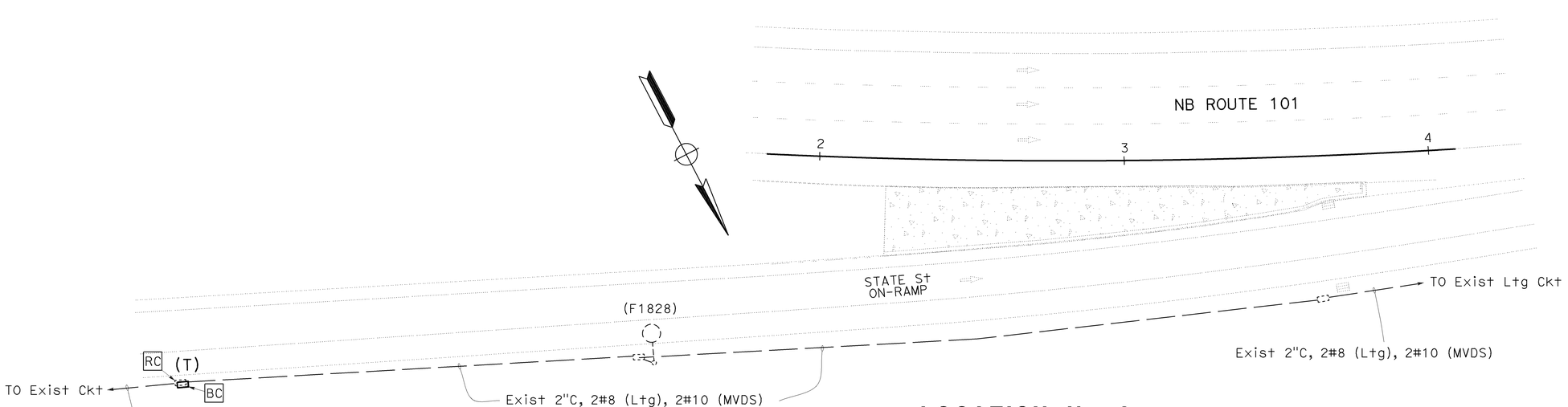

LOCATION No. 8

CST No. 18
PM 18.19

APPROVED FOR ELECTRICAL WORK ONLY

REPLACE PULL BOX E-3

SCALE: 1"=20'

STATE OF CALIFORNIA - DEPARTMENT OF TRANSPORTATION
ELECTRICAL DESIGN
FUNCTIONAL SUPERVISOR: ALI BAKHDOUD
CALCULATED-DESIGNED BY: XAVIER ALFARO
CHECKED BY: PAUL MATOS
REVISED BY
DATE REVISED

LAST REVISION | DATE PLOTTED => 15-DEC-2014
12-01-14 | TIME PLOTTED => 09:17

BORDER LAST REVISED 7/2/2010
USERNAME => s123239
DGN FILE => 05000202891ua003.dgn
RELATIVE BORDER SCALE IS IN INCHES 0 1 2 3
UNIT 1515
PROJECT NUMBER & PHASE 05000202891

Dist	COUNTY	ROUTE	POST MILES TOTAL PROJECT	SHEET No.	TOTAL SHEETS
05	SB	101	13.2/27.1	48	64

Xavier Alfaro 12-01-14
REGISTERED ELECTRICAL ENGINEER

12-01-14
PLANS APPROVAL DATE

REGISTERED PROFESSIONAL ENGINEER
XAVIER I. ALFARO
No. E17488
Exp. 6-30-15
ELECTRICAL
STATE OF CALIFORNIA

THE STATE OF CALIFORNIA OR ITS OFFICERS OR AGENTS SHALL NOT BE RESPONSIBLE FOR THE ACCURACY OR COMPLETENESS OF SCANNED COPIES OF THIS PLAN SHEET.

NOTE:

FOR ACCURATE RIGHT OF WAY DATA, CONTACT RIGHT OF WAY ENGINEERING AT THE DISTRICT OFFICE.

ABBREVIATIONS:

CST CONTRASTING SURFACE TREATMENT

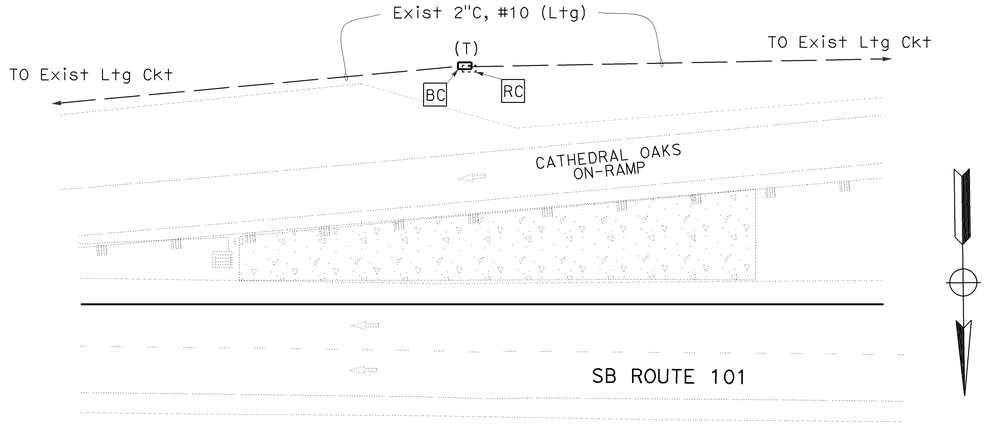

LOCATION No. 15

CST No. 38
PM 26.70

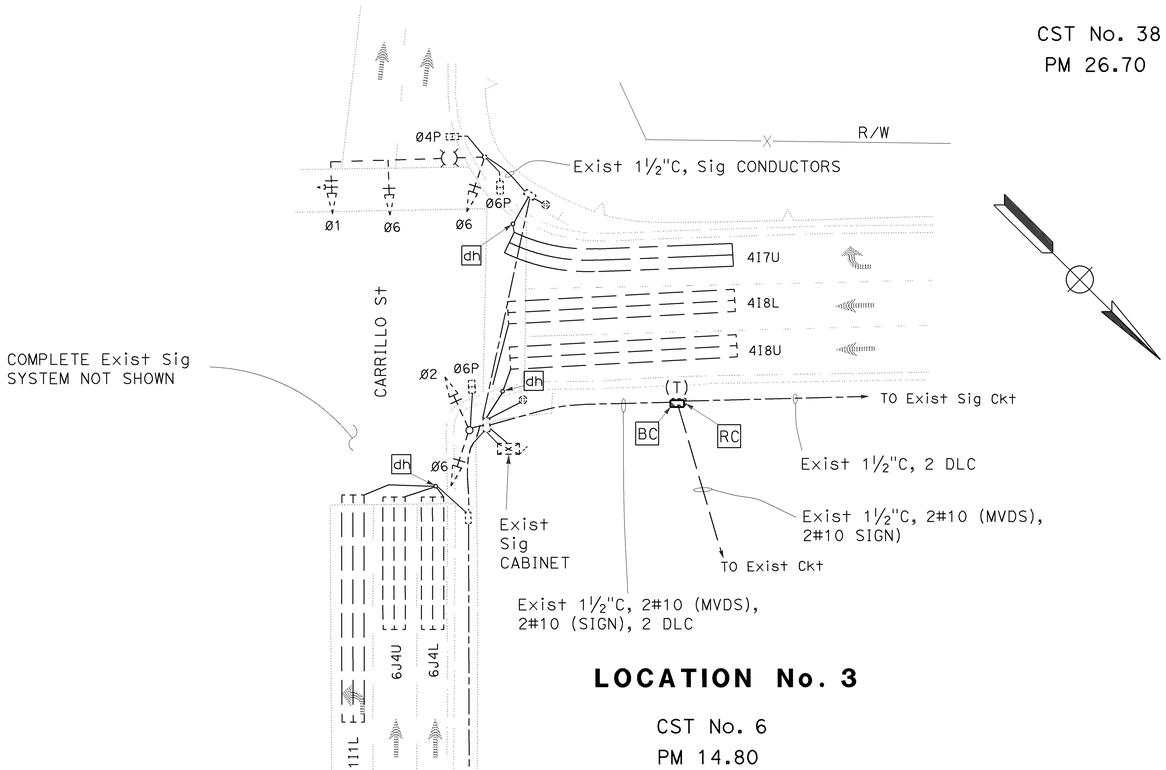

LOCATION No. 3

CST No. 6
PM 14.80

REPLACE PULL BOX

SHEET No.	No. 5 (T) PB
	EA
E-1	4
E-2	4
E-3	2
E-4	2

THE QUANTITIES ON THIS TABLE ARE NOT A SEPARATE PAY ITEM, FOR INFORMATION ONLY. FOR COMPLETE ELECTRICAL WORK, SEE ELECTRICAL SHEETS.

APPROVED FOR ELECTRICAL WORK ONLY

REPLACE PULL BOX E-4

SCALE: 1"=20'

REVISED BY | DATE REVISED
XAVIER ALFARO | PAUL MATOS
CALCULATED-DESIGNED BY | CHECKED BY
FUNCTIONAL SUPERVISOR: ALI BAKHDOUD

STATE OF CALIFORNIA - DEPARTMENT OF TRANSPORTATION
Caltrans® ELECTRICAL DESIGN

LAST REVISION | DATE PLOTTED => 15-DEC-2014 | TIME PLOTTED => 09:17
12-01-14

M

Maint	MAINTENANCE
Max	MAXIMUM
MB	METAL BEAM
MBB	METAL BEAM BARRIER
MBGR	METAL BEAM GUARD RAILING
Med	MEDIAN
MGS	MIDWEST GUARDRAIL SYSTEM
MH	MANHOLE
Min	MINIMUM
Misc	MISCELLANEOUS
Misc I & S	MISCELLANEOUS IRON AND STEEL
Mkr	MARKER
Mod	MODIFIED, MODIFY
Mon	MONUMENT
MP	METAL PLATE
MPGR	METAL PLATE GUARD RAILING
MR	MOVEMENT RATING
MSE	MECHANICALLY STABILIZED EMBANKMENT
Mt	MOUNTAIN, MOUNT
Mtl	MATERIAL
MVP	MAINTENANCE VEHICLE PULLOUT

N

N	NORTH
NB	NORTHBOUND
No.	NUMBER (MUST HAVE PERIOD)
Nos.	NUMBERS (MUST HAVE PERIOD)
NPS	NOMINAL PIPE SIZE
NS	NEAR SIDE
NSP	NEW STANDARD PLAN
NTS	NOT TO SCALE

O

Oblr	OBLITERATE
OC	OVERCROSSING
OD	OUTSIDE DIAMETER
OF	OUTSIDE FACE
OG	ORIGINAL GROUND
OGAC	OPEN GRADED ASPHALT CONCRETE
OGFC	OPEN GRADED FRICTION COURSE
OH	OVERHEAD
OHWM	ORDINARY HIGH WATER MARK
O-O	OUT TO OUT
Opp	OPPOSITE
OSD	OVERSIDE DRAIN

P

P	PAGE
PAP	PERFORATED ALUMINUM PIPE
PB	PULL BOX
PC	POINT OF CURVATURE, PRECAST
PCC	POINT OF COMPOUND CURVE, PORTLAND CEMENT CONCRETE
PCMS	PORTABLE CHANGEABLE MESSAGE SIGN
PCP	PERFORATED CONCRETE PIPE, PRESTRESSED CONCRETE PIPE
PCVC	POINT OF COMPOUND VERTICAL CURVE
PEC	PERMIT TO ENTER AND CONSTRUCT
Ped	PEDESTRIAN
Ped OC	PEDESTRIAN OVERCROSSING
Ped UC	PEDESTRIAN UNDERCROSSING
Perm Mtl	PERMEABLE MATERIAL

P continued

PG	PROFILE GRADE
PI	POINT OF INTERSECTION
PJP	PARTIAL JOINT PENETRATION
Pkwy	PARKWAY
℄,PL	PLATE
P/L	PROPERTY LINE
PM	POST MILE, TIME FROM NOON TO MIDNIGHT
PN	PAVING NOTCH
POC	POINT OF HORIZONTAL CURVE
POT	POINT OF TANGENT
POVC	POINT OF VERTICAL CURVE
PP	PIPE PILE, PLASTIC PIPE, POWER POLE
PPL	PREFORMED PERMEABLE LINER
PPP	PERFORATED PLASTIC PIPE
PRC	POINT OF REVERSE CURVE
PRF	PAVEMENT REINFORCING FABRIC
PRVC	POINT OF REVERSE VERTICAL CURVE
PS&E	PLANS, SPECIFICATIONS AND ESTIMATES
PS, P/S	PRESTRESSED
PSP	PERFORATED STEEL PIPE
PT	POINT OF TANGENCY
PVC	POLYVINYL CHLORIDE
Pvmt	PAVEMENT

Q

Qty	QUANTITY

R

R	RADIUS
R & D	REMOVE AND DISPOSE
R & S	REMOVE AND SALVAGE
R/C	RATE OF CHANGE
RCA	REINFORCED CONCRETE ARCH
RCB	REINFORCED CONCRETE BOX
RCP	REINFORCED CONCRETE PIPE
RCPA	REINFORCED CONCRETE PIPE ARCH
Rd	ROAD
Reinf	REINFORCED, REINFORCEMENT, REINFORCING
Rel	RELOCATE
Repl	REPLACEMENT
Ret	RETAINING
Rev	REVISED, REVISION
Rdwy	ROADWAY
RHMA	RUBBERIZED HOT MIX ASPHALT
Riv	RIVER
RM	ROAD-MIXED
RP	RADIUS POINT, REFERENCE POINT
RR	RAILROAD
RSP	ROCK SLOPE PROTECTION, REVISED STANDARD PLAN
Rt	RIGHT
Rte	ROUTE
RW	REDWOOD, RETAINING WALL
R/W	RIGHT OF WAY
Rwy	RAILWAY

S

S	SOUTH, SUPPLEMENT
SAE	STRUCTURE APPROACH EMBANKMENT
Salv	SALVAGE
SAPP	STRUCTURAL ALUMINUM PLATE PIPE
SB	SOUTHBOUND
SC	SAND CUSHION
SCSP	SLOTTED CORRUGATED STEEL PIPE
SD	STORM DRAIN
Sec	SECOND, SECTION
Sep	SEPARATION
SG	SUBGRADE
Shld	SHOULDER
Sht	SHEET
Sim	SIMILAR
℄	STATION LINE
SM	SELECTED MATERIAL
Spec	SPECIAL, SPECIFICATIONS
SPP	SLOTTED PLASTIC PIPE
SS	SLOPE STAKE
SSBM	STRAP AND SADDLE BRACKET METHOD
SSD	STRUCTURAL SECTION DRAIN
SSPA	STRUCTURAL STEEL PLATE ARCH
SSPP	STRUCTURAL STEEL PLATE PIPE
SSPPA	STRUCTURAL STEEL PLATE PIPE ARCH
SSRP	STEEL SPIRAL RIB PIPE
St	STREET
Sta	STATION
STBB	SINGLE THRIE BEAM BARRIER
Std	STANDARD
Str	STRUCTURE
Surf	SURFACING
SW	SIDEWALK, SOUND WALL
Swr	SEWER
Sym	SYMMETRICAL
S4S	SURFACE 4 SIDES

T

T	SEMI-TANGENT
Tan	TANGENT
TBB	THRIE BEAM BARRIER
Tbr	TIMBER
TC	TOP OF CURB
TCB	TRAFFIC CONTROL BOX
TCE	TEMPORARY CONSTRUCTION EASEMENT
Tel	TELEPHONE
Temp	TEMPORARY
TG	TOP OF GRADE
Tot	TOTAL
TP	TELEPHONE POLE
TPB	TREATED PERMEABLE BASE
TPM	TREATED PERMEABLE MATERIAL
Trans	TRANSITION

T continued

TS	TRANSVERSE, TRAFFIC SIGNAL, TUBULAR STEEL
Typ	TYPICAL

U

UC	UNDERCROSSING
UD	UNDERDRAIN
UG	UNDERGROUND
UON	UNLESS OTHERWISE NOTED
UP	UNDERPASS

V

V	VALVE, DESIGN SPEED
Var	VARIABLE, VARIES
VC	VERTICAL CURVE
VCP	VITRIFIED CLAY PIPE
Vert	VERTICAL
Via	VIADUCT
Vol	VOLUME

W

W	WEST, WIDTH
WB	WESTBOUND
WH	WEEP HOLE
WM	WIRE MESH
WS	WATER SURFACE
WSP	WELDED STEEL PIPE
Wt	WEIGHT
WV	WATER VALVE
WW	WINGWALL
WWLOL	WINGWALL LAYOUT LINE

X

X Sec	CROSS SECTION
Xing	CROSSING

Y

Yr	YEAR
Yrs	YEARS

Dist	COUNTY	ROUTE	POST MILES TOTAL PROJECT	SHEET No.	TOTAL SHEETS
05	SB	101	13.2/27.1	49	64

Grace M. Tsushima
REGISTERED CIVIL ENGINEER

July 19, 2013
PLANS APPROVAL DATE

REGISTERED PROFESSIONAL ENGINEER — Grace M. Tsushima — No. C49814 — Exp. 9-30-14 — CIVIL — STATE OF CALIFORNIA

THE STATE OF CALIFORNIA OR ITS OFFICERS OR AGENTS SHALL NOT BE RESPONSIBLE FOR THE ACCURACY OR COMPLETENESS OF SCANNED COPIES OF THIS PLAN SHEET.

TO ACCOMPANY PLANS DATED 12-1-14

UNIT OF MEASUREMENT SYMBOLS:

Some of the symbols used in the project plan quantity tables and in the Bid Item List are:

TABLE A

SYMBOL USED	DEFINITIONS
ACRE	ACRE
CF	CUBIC FOOT
CY	CUBIC YARD
EA	EACH
GAL	GALLON
LB	POUND
LF	LINEAR FOOT
SQFT	SQUARE FOOT
SQYD	SQUARE YARD
STA	100 FEET
TAB	TABLET
TON	2,000 POUNDS

Some of the symbols used in the plans other than in the project plan quantity tables are:

TABLE B

SYMBOL USED	DEFINITIONS
ksi	KIPS PER SQUARE INCH
ksf	KIPS PER SQUARE FOOT
psi	POUNDS PER SQUARE INCH
psf	POUNDS PER SQUARE FOOT
lb/ft^3, pcf	POUNDS PER CUBIC FOOT
tsf	TONS PER SQUARE FOOT
mph, MPH *	MILES PER HOUR
ø	NOMINAL DIAMETER
oz	OUNCE
lb	POUND
kip	1,000 POUNDS
cal	CALORIE
ft	FOOT OR FEET
gal	GALLON

* For use on a sign panel only

STATE OF CALIFORNIA
DEPARTMENT OF TRANSPORTATION

ABBREVIATIONS (SHEET 2 OF 2)

NO SCALE

RSP A10B DATED JULY 19, 2013 SUPERSEDES STANDARD PLAN A10B DATED MAY 20, 2011 - PAGE 2 OF THE STANDARD PLANS BOOK DATED 2010.

REVISED STANDARD PLAN RSP A10B

2010 REVISED STANDARD PLAN RSP A10B

6-7-13

Dist	COUNTY	ROUTE	POST MILES TOTAL PROJECT	SHEET No.	TOTAL SHEETS
05	SB	101	13.2/27.1	50	64

REGISTERED CIVIL ENGINEER

July 18, 2014
PLANS APPROVAL DATE

Glenn DeCou No. C34547 Exp. 9-30-15 CIVIL — REGISTERED PROFESSIONAL ENGINEER — STATE OF CALIFORNIA

THE STATE OF CALIFORNIA OR ITS OFFICERS OR AGENTS SHALL NOT BE RESPONSIBLE FOR THE ACCURACY OR COMPLETENESS OF SCANNED COPIES OF THIS PLAN SHEET.

TO ACCOMPANY PLANS DATED 12-1-14

2010 REVISED STANDARD PLAN RSP A85

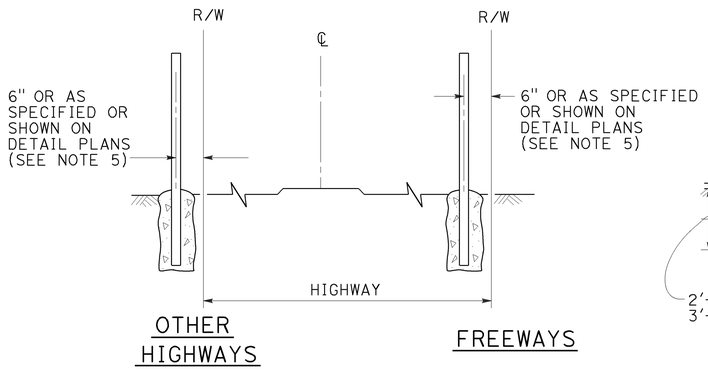

FENCE LOCATION

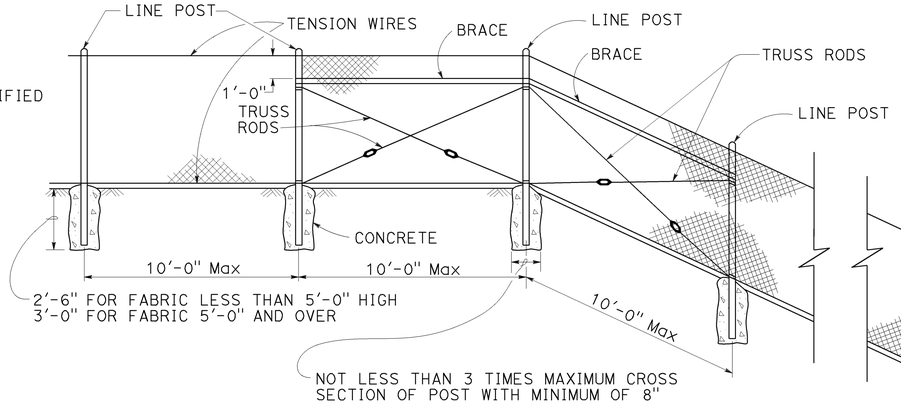

CHAIN LINK FENCE ON SHARP BREAK IN GRADE

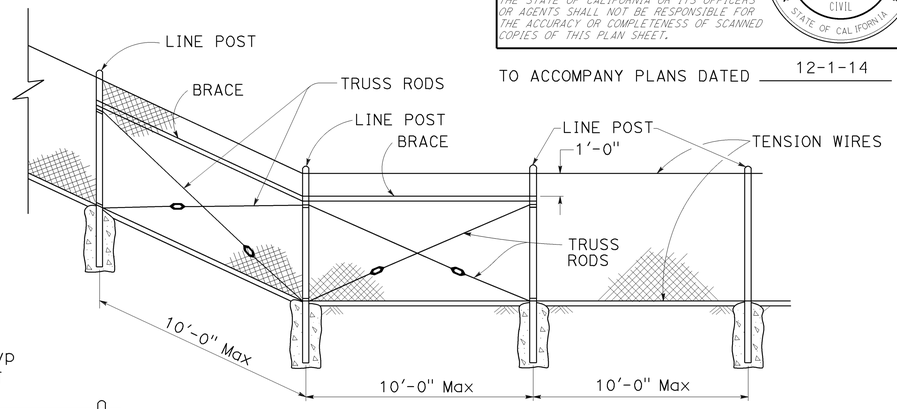

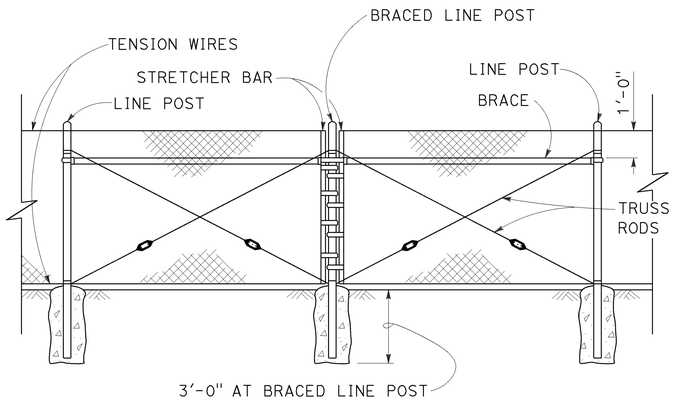

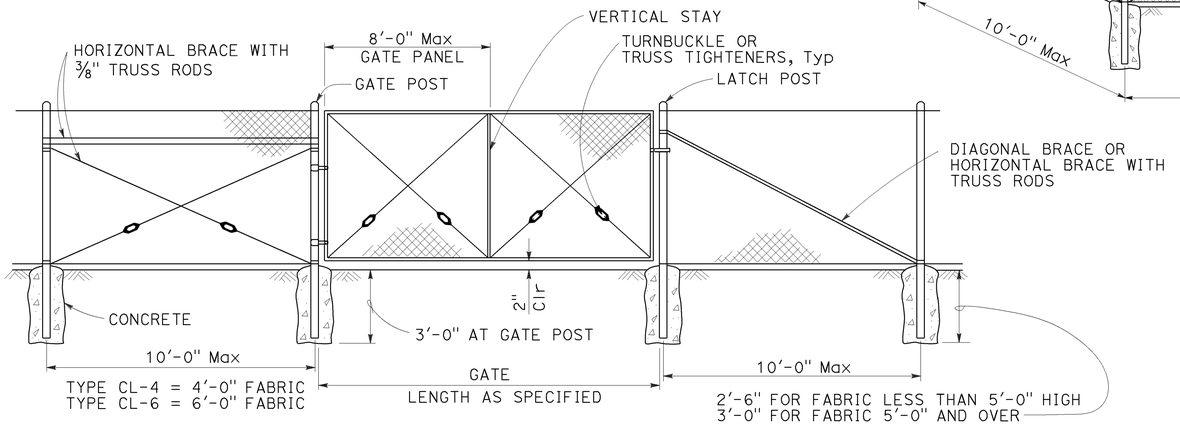

BRACED LINE POST INSTALLATION

Braced line post at intervals not exceeding 1000'

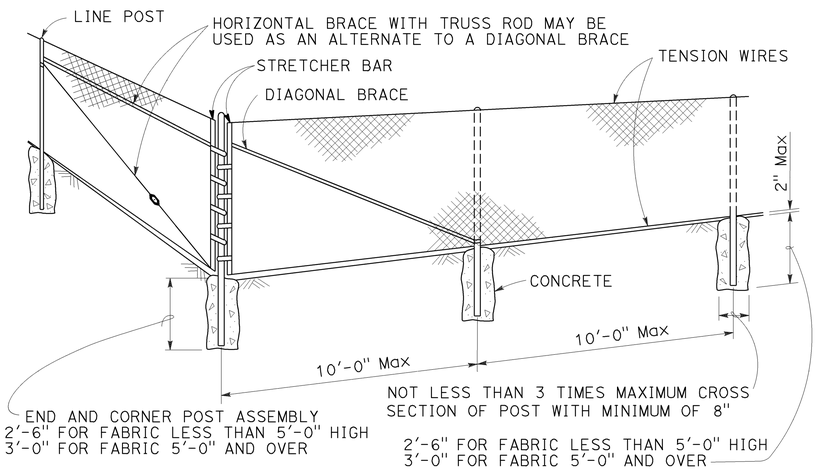

CORNER POST

CHAIN LINK GATE INSTALLATION

NOTES:

1. The table below shows minimum sized posts and braces complying with the specifications. Larger or heavier post and brace sizes may be used upon approval.
2. Sections shown in the tables must also comply with the strength requirements and other provisions of the Specifications.
3. Other sections which comply with the strength requirements and other provisions of the Specifications may be used upon approval.
4. Options exercised shall be uniform on any one project.
5. Offset to be 2'-0" at monument locations, measured at right angles to R/W lines. Taper to achieve offset to be at least 20'-0" long.
6. See Revised Standard Plan RSP A85B for Brace, Stretcher Bar, and Truss Tightener Details.

GATE POST

FENCE HEIGHT	GATE WIDTHS	ROUND OD PIPE	WEIGHT (lb/ft)
6'-0" AND LESS	UP THRU 6'-0"	2.875"	5.80
	OVER 6'-0" THRU 12'-0"	4.500"	10.80
	OVER 12'-0" THRU 18'-0"	5.563"	14.63
	OVER 18'-0" TO 24'-0" Max	6.625"	18.99
OVER 6'-0" TO 8'-0" Max	UP THRU 6'-0"	3.500"	7.58
	OVER 6'-0" THRU 12'-0"	5.563"	14.63
	OVER 12'-0" THRU 18'-0"	6.625"	18.99
	OVER 18'-0" TO 24'-0" Max	8.625"	28.58

Above post dimensions and weights are minimums. Larger sizes may be used upon approval.

TYPICAL MEMBER DIMENSIONS (See Notes)

FENCE HEIGHT	LINE POSTS				END, LATCH AND CORNER POSTS		BRACES			
	ROUND OD PIPE	WEIGHT (lb/ft)	ROLL FORMED SECTION	ROLL FORMED WEIGHT (lb/ft)	ROUND OD PIPE	WEIGHT (lb/ft)	ROUND OD PIPE	WEIGHT (lb/ft)	ROLL FORMED SECTION	ROLL FORMED WEIGHT (lb/ft)
6'-0" AND LESS	1.900"	2.72	1.875" x 1.625"	1.85	2.375"	3.65	1.66"	2.27	1.625" x 1.25"	1.35
OVER 6'-0" TO 8'-0" Max	2.375"	3.65	2.25" x 1.70"	2.78	2.875"	5.80	1.66"	2.27	1.625" x 1.25"	1.35

STATE OF CALIFORNIA
DEPARTMENT OF TRANSPORTATION

CHAIN LINK FENCE

NO SCALE

RSP A85 DATED JULY 18, 2014 SUPERSEDES STANDARD PLAN A85
DATED MAY 20, 2011 - PAGE 112 OF THE STANDARD PLANS BOOK DATED 2010.

REVISED STANDARD PLAN RSP A85

7-1-14

Dist	COUNTY	ROUTE	POST MILES TOTAL PROJECT	SHEET No.	TOTAL SHEETS
05	SB	101	13.2/27.1	51	64

Glenn DeCou
REGISTERED CIVIL ENGINEER

October 19, 2012
PLANS APPROVAL DATE

REGISTERED PROFESSIONAL ENGINEER
Glenn DeCou
No. C34547
Exp. 9-30-13
CIVIL
STATE OF CALIFORNIA

THE STATE OF CALIFORNIA OR ITS OFFICERS OR AGENTS SHALL NOT BE RESPONSIBLE FOR THE ACCURACY OR COMPLETENESS OF SCANNED COPIES OF THIS PLAN SHEET.

TO ACCOMPANY PLANS DATED 12-1-14

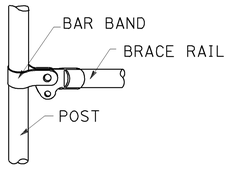

BRACE RAIL

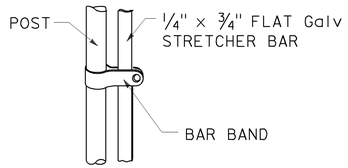

STRETCHER BAR

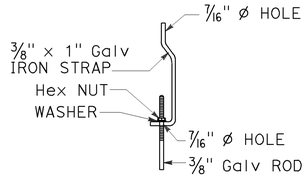

TRUSS TIGHTENER

NOTES:

1. All material for abutment connection to be galvanized.
2. The chain link fabric shall be replaced by barbed wire strands at 12" maximum centers between the double posts.
3. When the width of the culvert makes it necessary to anchor a post to the top of the culvert, a cast iron shoe or other device approved by the Engineer shall be used.
4. Fencing over stream and around headwall may also use Barbed Wire or Wire Mesh fencing with either wood post or steel post installation.
5. See Standard Plan A85 for Chain Link fence dimensions. See Standard Plan A86 for Barbed Wire and Wire Mesh fence dimensions and for wood post and steel post installation.

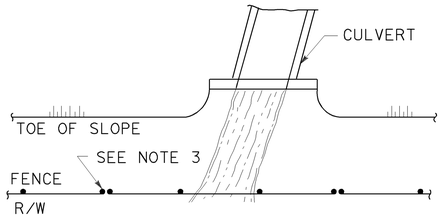

PLAN

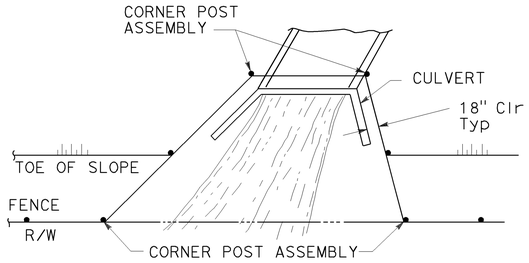

PLAN

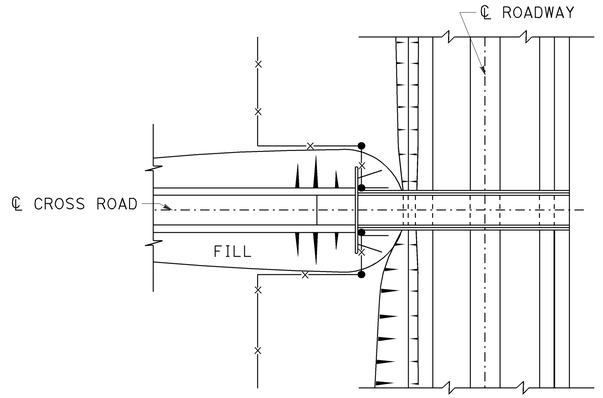

PLAN OF ROADWAY - OVERCROSSING

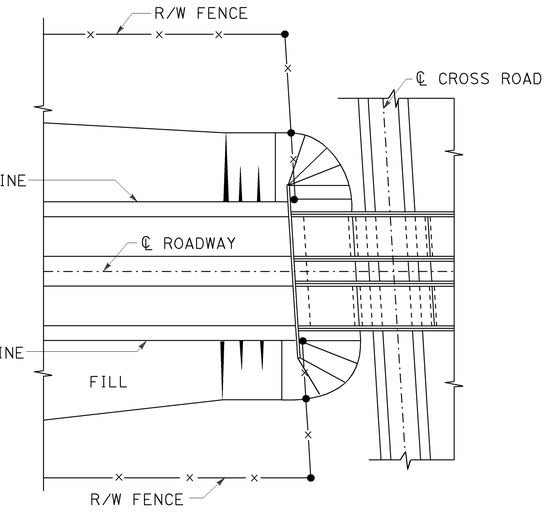

PLAN OF ROADWAY - UNDERCROSSING

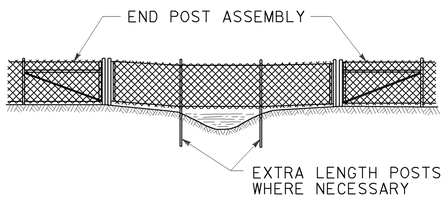

ELEVATION

INSTALLATION OVER STREAM

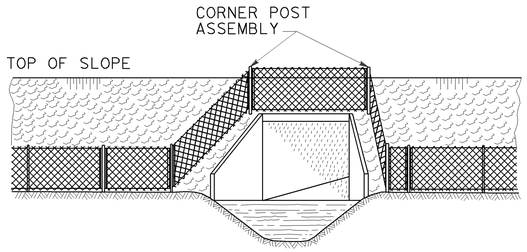

ELEVATION

INSTALLATION AROUND HEADWALL

See Note 4

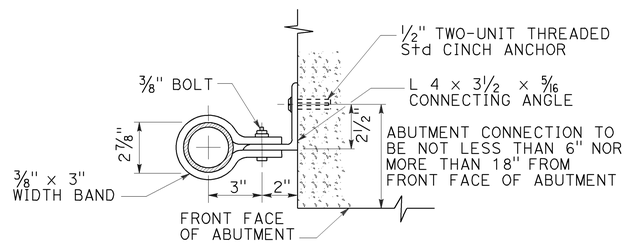

ABUTMENT CONNECTION

TYPICAL INSTALLATION AT BRIDGES

STATE OF CALIFORNIA
DEPARTMENT OF TRANSPORTATION

CHAIN LINK FENCE DETAILS

NO SCALE

RSP A85B DATED OCTOBER 19, 2012 SUPERSEDES STANDARD PLAN A85B DATED MAY 20, 2011 - PAGE 114 OF THE STANDARD PLANS BOOK DATED 2010.

REVISED STANDARD PLAN RSP A85B

2010 REVISED STANDARD PLAN RSP A85B

7-19-12

Dist	COUNTY	ROUTE	POST MILES TOTAL PROJECT	SHEET No.	TOTAL SHEETS
05	SB	101	13.2/27.1	52	64

REGISTERED CIVIL ENGINEER

July 19, 2013
PLANS APPROVAL DATE

REGISTERED PROFESSIONAL ENGINEER
Michael Janzen
No. 44788
Exp. 03-31-14
CIVIL
STATE OF CALIFORNIA

THE STATE OF CALIFORNIA OR ITS OFFICERS OR AGENTS SHALL NOT BE RESPONSIBLE FOR THE ACCURACY OR COMPLETENESS OF SCANNED COPIES OF THIS PLAN SHEET.

TO ACCOMPANY PLANS DATED 12-1-14

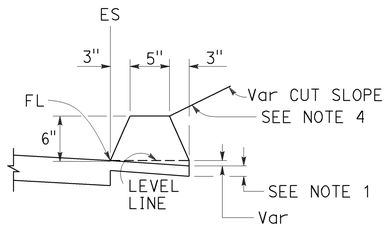

TYPE A
See Note 3

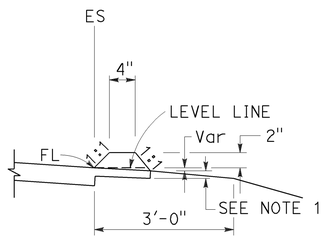

TYPE C

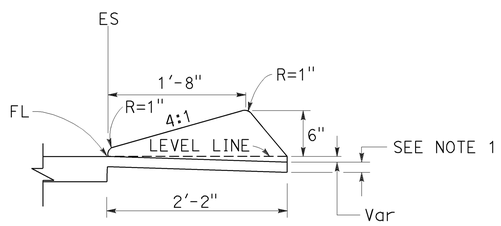

TYPE D

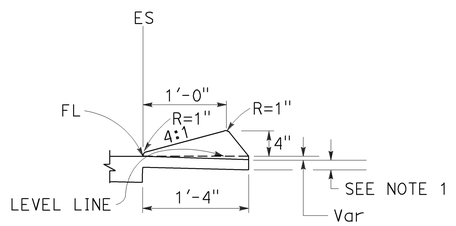

TYPE E

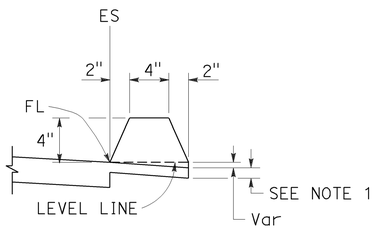

TYPE F
See Note 5

DIKES

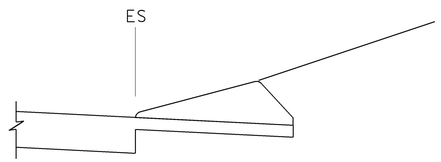

CASE C-1
Cut Slope

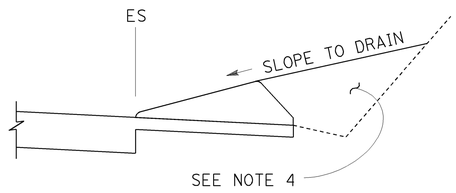

CASE C-2
Cut Slope

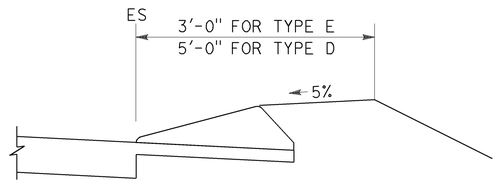

CASE F

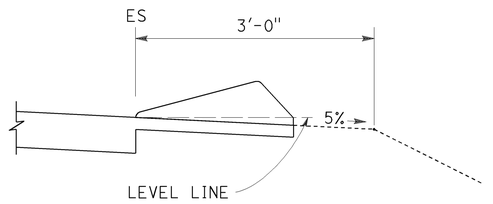

CASE R
See Note 2

TYPE D AND E BACKFILL DETAILS

NOTES:

1. For HMA shoulders only, extend top layer of HMA placed on the shoulder under dike with no joint at the ES. For projects with OGFC shoulders, do not extend OGFC under dike. See project plans for modified dike detail.
2. Case R applies to retrofit only projects where restrictive conditions do not provide enough width for Case F backfill.
3. Type A dike only to be used where restrictive slope conditions do not provide enough width to use Type D or Type E dike.
4. Fill and compact with excavated material to top of dike.
5. Use Type F dike, where dike is required with guard railing installations. See Revised Standard Plan RSP A77N4 for dike positioning details.

DIKE QUANTITIES

TYPE	CUBIC YARDS PER LINEAR FOOT
A	0.0135
C	0.0038
D	0.0293
E	0.0130
F	0.0066

Quantities based on 5% cross slope.

STATE OF CALIFORNIA
DEPARTMENT OF TRANSPORTATION

HOT MIX ASPHALT DIKES

NO SCALE

RSP A87B DATED JULY 19, 2013 SUPERSEDES STANDARD PLAN A87B
DATED MAY 20, 2011 - PAGE 120 OF THE STANDARD PLANS BOOK DATED 2010.

REVISED STANDARD PLAN RSP A87B

Dist	COUNTY	ROUTE	POST MILES TOTAL PROJECT	SHEET No.	TOTAL SHEETS
05	SB	101	13.2/27.1	53	64

Gregory A. Balzer
LICENSED LANDSCAPE ARCHITECT

July 19, 2013
PLANS APPROVAL DATE

LICENSED LANDSCAPE ARCHITECT
Gregory A. Balzer 2516
10
Renewal Date
2-28-15
7-19-13
Date
STATE OF CALIFORNIA

THE STATE OF CALIFORNIA OR ITS OFFICERS OR AGENTS SHALL NOT BE RESPONSIBLE FOR THE ACCURACY OR COMPLETENESS OF SCANNED COPIES OF THIS PLAN SHEET.

TO ACCOMPANY PLANS DATED 12-1-14

A

AB	AGGREGATE BASE
ABS	ACRYLONITRILE-BUTADIENE-STYRENE
AC	ASPHALT CONCRETE
ACC	ARMOR-CLAD CONDUCTORS
Adj	ADJACENT/ADJUSTABLE
AIC	AUXILIARY IRRIGATION CONTROLLER
Alt	ALTERNATIVE
AMEND	AMENDMENT
ARV	AIR RELEASE VALVE
AUTO	AUTOMATIC
AUX	AUXILIARY
AVB	ATMOSPHERIC VACUUM BREAKER

B

B&B	BALLED AND BURLAPPED
B/B	BRASS/BRONZE
B/B/PL	BRASS/BRONZE/PLASTIC
B/PL	BRASS/PLASTIC
BFM	BONDED FIBER MATRIX
Bit Ctd	BITUMINOUS COATED
BP	BOOSTER PUMP
BPA	BACKFLOW PREVENTER ASSEMBLY
BPE	BACKFLOW PREVENTER ENCLOSURE
BV	BALL VALVE

C

C	CONDUIT
CAP	CORRUGATED ALUMINUM PIPE
CARV	COMBINATION AIR RELEASE VALVE
CB	COUPLING BAND
CCA	CAM COUPLER ASSEMBLY
CEC	CONTROLLER ENCLOSURE CABINET
CHDPE	CORRUGATED HIGH DENSITY POLYETHYLENE
CL	CHAIN LINK
CNC	CONTROL AND NEUTRAL CONDUCTORS
Conc	CONCRETE
CP	COPPER PIPE
CS	COMPOST SOCK
CSP	CORRUGATED STEEL PIPE
CST	CENTER STRIP
CV	CHECK VALVE

D

Dia	DIAMETER
DIP	DUCTILE IRON PIPE
DIT	DRIP IRRIGATION TUBING
DG	DECOMPOSED GRANITE
DN	DIAMETER NOMINAL
DVA	DRIP VALVE ASSEMBLY

E

EC	EROSION CONTROL
ECTC	EROSION CONTROL TECHNOLOGY COUNCIL
Elect	ELECTRIC/ELECTRICAL
Elev	ELEVATION
ELL	ELBOW
ENCL	ENCLOSURE
EP	EDGE OF PAVEMENT
ES	EDGE OF SHOULDER
EST	END STRIP
ESTB	ESTABLISHMENT
ETW	EDGE OF TRAVELED WAY

F

F	FULL CIRCLE
F/P	FULL/PART CIRCLE
FCV	FLOW CONTROL VALVE
FERT	FERTILIZER
FG	FINISHED GRADE
FH	FLEXIBLE HOSE
FIPT	FEMALE IRON PIPE THREAD
FIS	FERTILIZER INJECTOR SYSTEM
FL	FLOW LINE
FR	FIBER ROLL
FS	FLOW SENSOR
FSC	FLOW SENSOR CABLE
FV	FLUSH VALVE

G

Galv	GALVANIZED
GARV	GARDEN VALVE
GARVA	GARDEN VALVE ASSEMBLY
GM	GRAVEL MULCH
GPH	GALLONS PER HOUR
GPM	GALLONS PER MINUTE
GSP	GALVANIZED STEEL PIPE
GV	GATE VALVE

H

H	HALF CIRCLE
HDPE	HIGH DENSITY POLYETHYLENE
HP	HORSEPOWER/HINGE POINT
HPL	HIGH PRESSURE LINE
Hwy	HIGHWAY

I

IC	IRRIGATION CONTROLLER
ICC	IRRIGATION CONTROLLER(S) IN CONTROLLER ENCLOSURE CABINET
ID	INSIDE DIAMETER
IFS	IRRIGATION FILTRATION SYSTEM
IPS	IRON PIPE SIZE
IPT	IRON PIPE THREAD
Irr	IRRIGATION

L

L	LENGTH

M

Max	MAXIMUM
MBGR	METAL BEAM GUARD RAILING
MCV	MANUAL CONTROL VALVE
MIC	MASTER IRRIGATION CONTROLLER
Min	MINIMUM
MIPT	MALE IRON PIPE THREAD
Misc	MISCELLANEOUS
Mtl	MATERIAL
MVP	MAINTENANCE VEHICLE PULLOUT

N

NCN	NO COMMON NAME
NL	NOZZLE LINE
No.	NUMBER
NPT	NATIONAL PIPE THREAD

O

O/C	ON CENTER
OD	OUTSIDE DIAMETER
OL	OVERLAP

P

P	PART CIRCLE
PB	PULL BOX
PCC	PORTLAND CEMENT CONCRETE
PE	POLYETHYLENE
Pkt	PACKET
PL	PLASTIC
PLS	PURE LIVE SEED
PLT	PLANT/PLANTING
PLT ESTB	PLANT ESTABLISHMENT
PM	POST MILE
PR	PRESSURE RATED
PRLV	PRESSURE RELIEF VALVE
PRV	PRESSURE REGULATING VALVE
PVC	POLYVINYL CHLORIDE
Pvmt	PAVEMENT

Q

Q	QUARTER CIRCLE
QCV	QUICK COUPLING VALVE

NOTE:
For additional abbreviations, see Standard Plans A10A and A10B.

R

R	RADIUS
RCP	REINFORCED CONCRETE PIPE
RCV	REMOTE CONTROL VALVE
RCVM	REMOTE CONTROL VALVE (MASTER)
RCVMF	REMOTE CONTROL VALVE (MASTER) W/FLOW SENSOR
RCVP	REMOTE CONTROL VALVE W/PRESSURE REGULATOR
RCW	RECYCLED WATER
RECP	ROLLED EROSION CONTROL PRODUCT
REQ	REQUIRED
RICS	REMOTE IRRIGATION CONTROL SYSTEM
R/W	RIGHT OF WAY

S

S	SLIP
SCH	SCHEDULE
SF	STATE-FURNISHED
Shld	SHOULDER
Sq	SQUARE
SST	SIDE STRIP
Sta	STATION
Std	STANDARD
SW	SIDEWALK/SOUND WALL

T

T	THIRD CIRCLE/THREAD
TLS	TRUCK LOADING STANDPIPE
TQ	THREE QUARTER CIRCLE
TRM	TURF REINFORCEMENT MAT
TT	TWO-THIRDS CIRCLE
TWSA	TREE WELL SPRINKLER ASSEMBLY
Typ	TYPICAL

U

UG	UNDERGROUND

W

W	WIDTH
W/	WITH
WM	WATER METER
WS	WYE STRAINER
WSA	WYE STRAINER ASSEMBLY
WSP	WELDED STEEL PIPE
WWM	WELDED WIRE MESH

STATE OF CALIFORNIA
DEPARTMENT OF TRANSPORTATION

LANDSCAPE AND EROSION CONTROL ABBREVIATIONS

NO SCALE

RSP H1 DATED JULY 19, 2013 SUPERSEDES STANDARD PLAN H1
DATED MAY 20, 2011 - PAGE 218 OF THE STANDARD PLANS BOOK DATED 2010.

REVISED STANDARD PLAN RSP H1

2010 REVISED STANDARD PLAN RSP H1

6-28-13

Dist	COUNTY	ROUTE	POST MILES TOTAL PROJECT	SHEET No.	TOTAL SHEETS
05	SB	101	13.2/27.1	54	64

Gregory A. Balzer
LICENSED LANDSCAPE ARCHITECT

November 15, 2013
PLANS APPROVAL DATE

LICENSED LANDSCAPE ARCHITECT
Gregory A. Balzer 2576
Signature
2-28-15
Renewal Date
11-15-13
Date
STATE OF CALIFORNIA

THE STATE OF CALIFORNIA OR ITS OFFICERS OR AGENTS SHALL NOT BE RESPONSIBLE FOR THE ACCURACY OR COMPLETENESS OF SCANNED COPIES OF THIS PLAN SHEET.

TO ACCOMPANY PLANS DATED 12-1-14

EXISTING	NEW	ITEM DESCRIPTION
		WATER METER (WM)
		BACKFLOW PREVENTER ASSEMBLY (BPA)
		BACKFLOW PREVENTER ENCLOSURE (BPE)
		BOOSTER PUMP (BP)
		TRUCK LOADING STANDPIPE (TLS)
FS	FS	FLOW SENSOR (FS)
		MASTER IRRIGATION CONTROLLER (MIC)
		AUXILIARY IRRIGATION CONTROLLER (AIC)
		IRRIGATION CONTROLLER (IC) IRRIGATION CONTROLLER (IC) (BATTERY) IRRIGATION CONTROLLER (IC) (SOLAR) IRRIGATION CONTROLLER (IC) (TWO WIRE) IRRIGATION CONTROLLER(S) IN CONTROLLER ENCLOSURE CABINET (ICC)
acc	ACC	ARMOR-CLAD CONDUCTORS (ACC)
cnc	CNC	CONTROL AND NEUTRAL CONDUCTORS (CNC)
		IRRIGATION CONDUIT
		EXTEND IRRIGATION CONDUIT
dip	DIP	DUCTILE IRON PIPE (SUPPLY LINE) (MAIN) (DIP)
		GALVANIZED STEEL PIPE (SUPPLY LINE) (MAIN) (GSP)
		GALVANIZED STEEL PIPE (SUPPLY LINE) (LATERAL) (GSP)
		PLASTIC PIPE (SUPPLY LINE) (MAIN)
		PLASTIC PIPE (SUPPLY LINE) (LATERAL)
cp	CP	COPPER PIPE (SUPPLY LINE)
dit	DIT	DRIP IRRIGATION TUBING
		REMOTE CONTROL VALVE (RCV) REMOTE CONTROL VALVE (MASTER) (RCVM) REMOTE CONTROL VALVE (MASTER) W/FLOW METER (RCVMF)
P	P	REMOTE CONTROL VALVE W/PRESSURE REGULATOR (RCVP)
		EXISTING MANUAL CONTROL VALVE (MCV)
		DRIP VALVE ASSEMBLY (DVA)
		WYE STRAINER ASSEMBLY (WSA)

EXISTING	NEW	ITEM DESCRIPTION
		GATE VALVE (GV)
		BALL VALVE (BV)
		QUICK COUPLING VALVE (QCV)
		CAM COUPLER ASSEMBLY (CCA)
		GARDEN VALVE ASSEMBLY (GARVA)
		PRESSURE REGULATING VALVE (PRV)
		PRESSURE RELIEF VALVE (PRLV)
		FLOW CONTROL VALVE (FCV)
		COMBINATION AIR RELEASE VALVE (CARV)
		CHECK VALVE (CV)
		FLUSH VALVE (FV)
		EXISTING NOZZLE LINE W/TURNING UNION
		EXISTING IRRIGATION SYSTEM
		EXISTING IRRIGATION SYSTEM TO BE REMOVED
		CHAIN LINK GATE
		QUICK COUPLING VALVE W/SPRINKLER PROTECTOR
3	3	SPRINKLER W/SPRINKLER PROTECTOR
	C	CONNECT TO EXISTING SYSTEM
		CAP
		CAP EXISTING
	\\\FR\\\	FIBER ROLL
	\\\CS\\\	COMPOST SOCK

RCV SIZE
IRRIGATION CONTROLLER
CONTROLLER STATION
VALVE IN PARALLEL (IF APPLICABLE)
GPM
QUANTITY OF SPRINKLERS (WHEN SHOWN)

* 2½"-A-2b-40-60

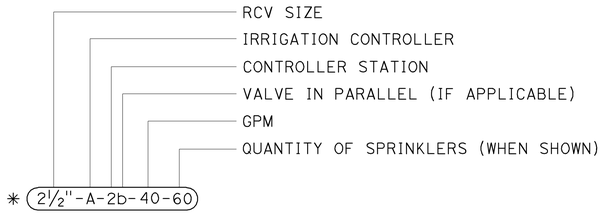

VALVE CODE

* VALVE CODES FOR EXISTING VALVES ARE SHOWN IN A DASHED ENCLOSURE.

STATE OF CALIFORNIA
DEPARTMENT OF TRANSPORTATION

LANDSCAPE AND EROSION CONTROL SYMBOLS

NO SCALE

RSP H2 DATED NOVEMBER 15, 2013 SUPERSEDES RSP H2 DATED JULY 19, 2013 AND STANDARD PLAN H2 DATED MAY 20, 2011 - PAGE 219 OF THE STANDARD PLANS BOOK DATED 2010.

REVISED STANDARD PLAN RSP H2

2010 REVISED STANDARD PLAN RSP H2

10-9-13

Dist	COUNTY	ROUTE	POST MILES TOTAL PROJECT	SHEET No.	TOTAL SHEETS
	SB	101	13.2/27.1	55	64

Gregory A Balzer
LICENSED LANDSCAPE ARCHITECT

July 19, 2013
PLANS APPROVAL DATE

LICENSED LANDSCAPE ARCHITECT
Gregory A. Balzer 2576
Signature
2-28-15
Renewal Date
7-19-13
Date
STATE OF CALIFORNIA

THE STATE OF CALIFORNIA OR ITS OFFICERS OR AGENTS SHALL NOT BE RESPONSIBLE FOR THE ACCURACY OR COMPLETENESS OF SCANNED COPIES OF THIS PLAN SHEET.

TO ACCOMPANY PLANS DATED 12-1-14

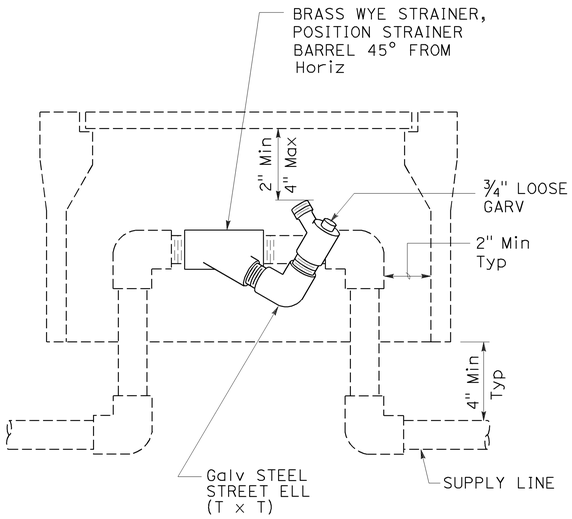

ELEVATION
WYE STRAINER ASSEMBLY

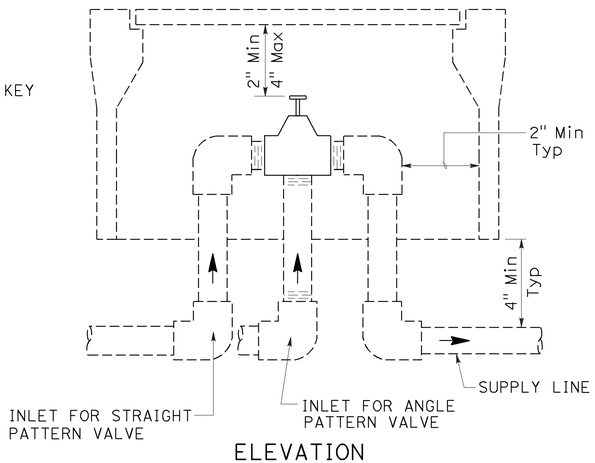

ELEVATION
VALVE

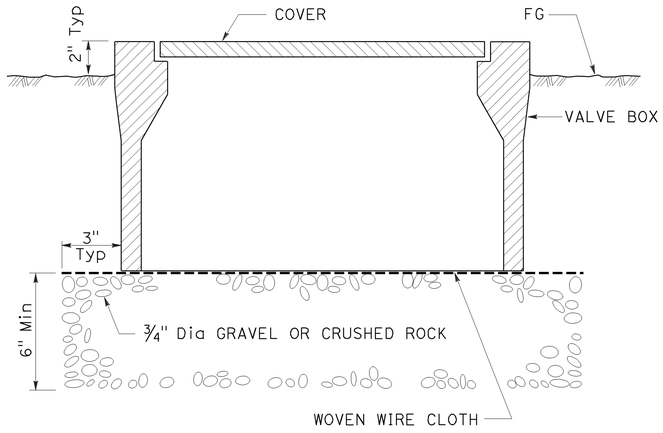

SECTION
VALVE BOX

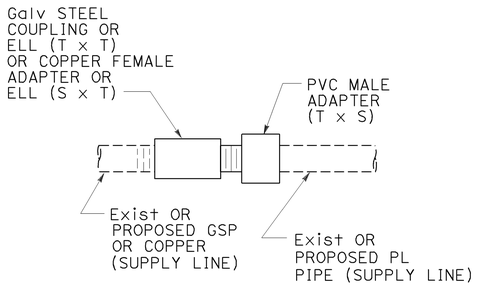

GALVANIZED OR COPPER PIPE
CONNECTION TO PLASTIC PIPE

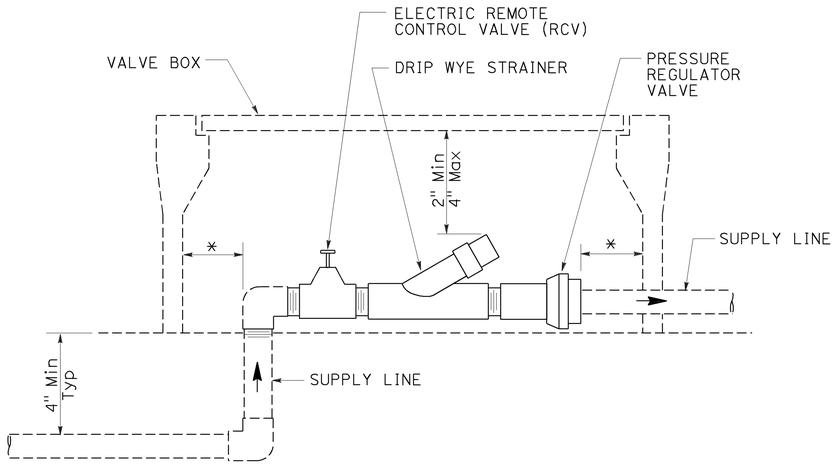

* 2" CLEARANCE ON ALL SIDES

ELEVATION
DRIP VALVE ASSEMBLY

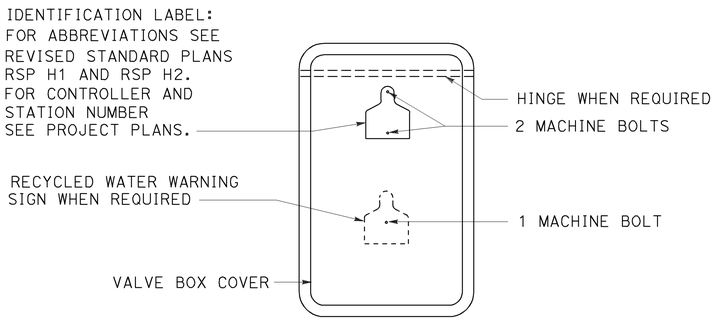

PLAN

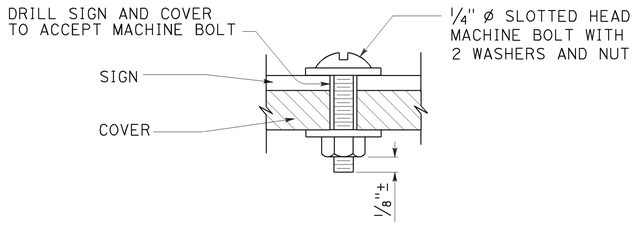

SECTION
VALVE BOX IDENTIFICATION

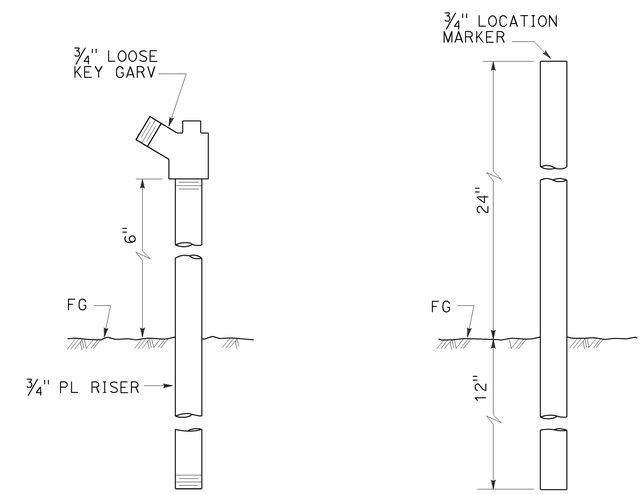

ELEVATION
GARDEN VALVE ASSEMBLY

ELEVATION
LOCATION MARKER

GARDEN VALVE ASSEMBLY

STATE OF CALIFORNIA
DEPARTMENT OF TRANSPORTATION

LANDSCAPE DETAILS

NO SCALE

RSP H7 DATED JULY 19, 2013 SUPERSEDES STANDARD PLAN H7
DATED MAY 20, 2011 - PAGE 224 OF THE STANDARD PLANS BOOK DATED 2010.

REVISED STANDARD PLAN RSP H7

2010 REVISED STANDARD PLAN RSP H7

6-20-13

Dist	COUNTY	ROUTE	POST MILES TOTAL PROJECT	SHEET No.	TOTAL SHEETS
05	SB	101	13.2/27.1	56	64

LICENSED LANDSCAPE ARCHITECT

July 19, 2013
PLANS APPROVAL DATE

Gregory A. Balzer 2516 — LICENSED LANDSCAPE ARCHITECT — STATE OF CALIFORNIA
10-31-14 Renewal Date
2-28-15 Renewal Date
7-19-13 Date

THE STATE OF CALIFORNIA OR ITS OFFICERS OR AGENTS SHALL NOT BE RESPONSIBLE FOR THE ACCURACY OR COMPLETENESS OF SCANNED COPIES OF THIS PLAN SHEET.

TO ACCOMPANY PLANS DATED 12-1-14

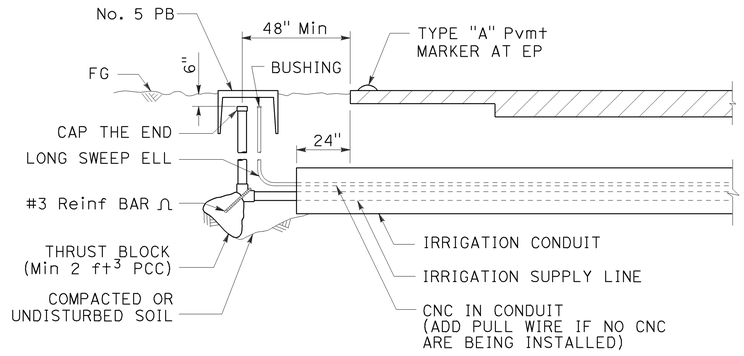

SECTION

IRRIGATION CONDUIT

UNDER TRAVELED WAY

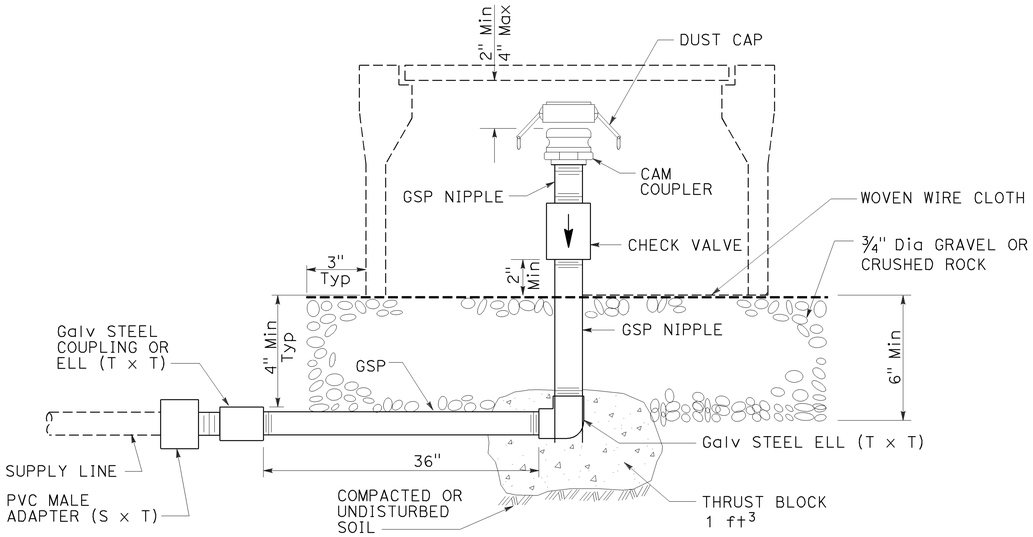

ELEVATION

CAM COUPLER ASSEMBLY

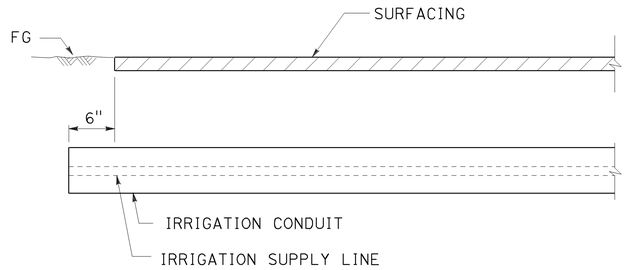

SECTION

IRRIGATION CONDUIT

UNDER SIDEWALKS, DRIVEWAYS AND PATHS

STATE OF CALIFORNIA
DEPARTMENT OF TRANSPORTATION

LANDSCAPE DETAILS

NO SCALE

RSP H9 DATED JULY 19, 2013 SUPERSEDES STANDARD PLAN H9
DATED MAY 20, 2011 - PAGE 226 OF THE STANDARD PLANS BOOK DATED 2010.

REVISED STANDARD PLAN RSP H9

2010 REVISED STANDARD PLAN RSP H9

6-28-13

Dist	COUNTY	ROUTE	POST MILES TOTAL PROJECT	SHEET No.	TOTAL SHEETS
05	SB	101	13.2/27.1	57	64

Gregory A Balzer
LICENSED LANDSCAPE ARCHITECT

July 19, 2013
PLANS APPROVAL DATE

LICENSED LANDSCAPE ARCHITECT
Gregory A. Balzer 2516
10-31-14
Renewal Date
2-28-15
Renewal Date
7-19-13
Date
STATE OF CALIFORNIA

THE STATE OF CALIFORNIA OR ITS OFFICERS OR AGENTS SHALL NOT BE RESPONSIBLE FOR THE ACCURACY OR COMPLETENESS OF SCANNED COPIES OF THIS PLAN SHEET.

TO ACCOMPANY PLANS DATED 12-1-14

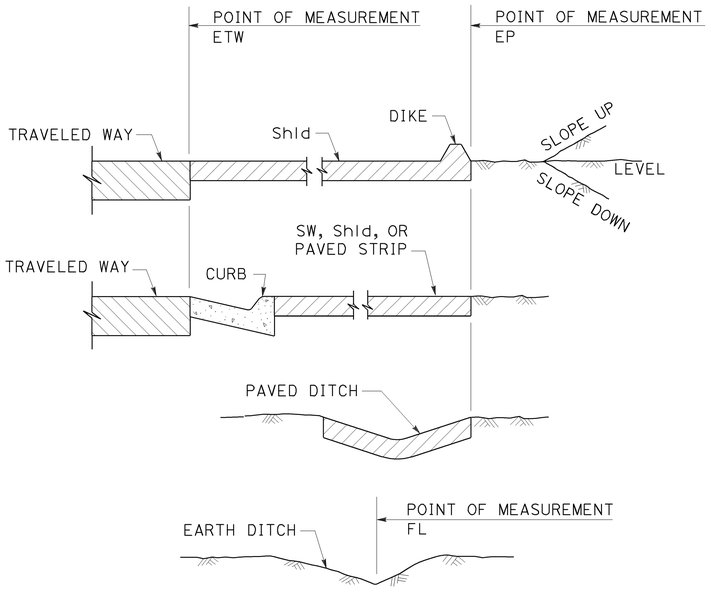

SECTION

POINTS OF MEASUREMENT

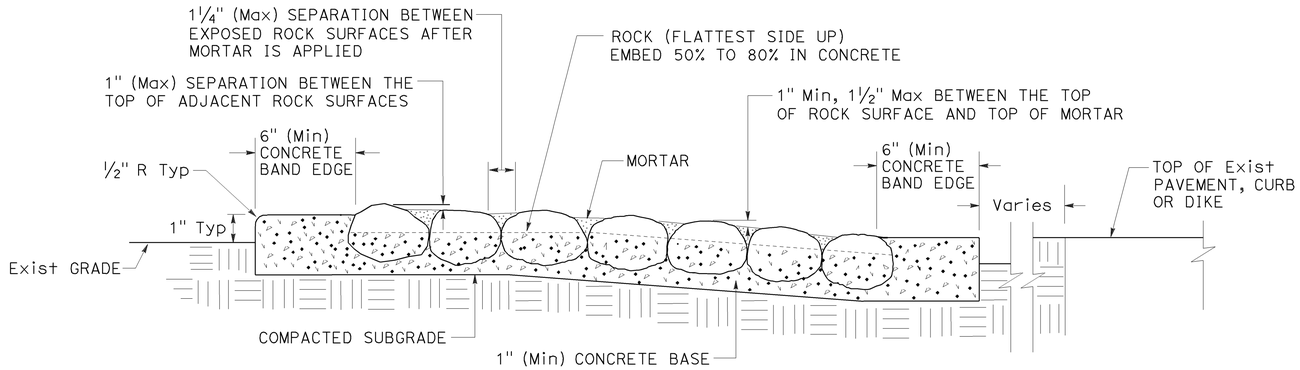

SECTION

ROCK BLANKET

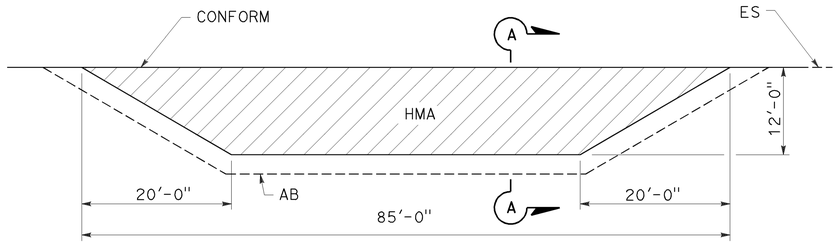

PLAN

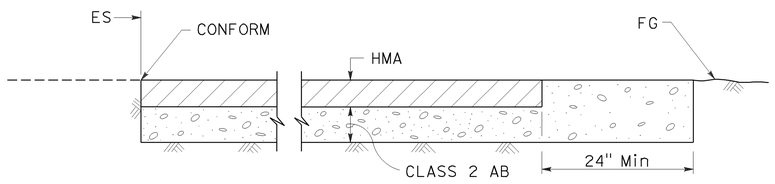

SECTION A-A

MAINTENANCE VEHICLE PULLOUT

STATE OF CALIFORNIA
DEPARTMENT OF TRANSPORTATION

LANDSCAPE DETAILS

NO SCALE

RSP H9A DATED JULY 19, 2013 SUPPLEMENTS THE STANDARD PLANS BOOK DATED 2010.

REVISED STANDARD PLAN RSP H9A

2010 REVISED STANDARD PLAN RSP H9A

6-21-13

Dist	COUNTY	ROUTE	POST MILES TOTAL PROJECT	SHEET No.	TOTAL SHEETS
05	SB	101	13.2/27.1	58	64

REGISTERED CIVIL ENGINEER

July 19, 2013
PLANS APPROVAL DATE

REGISTERED PROFESSIONAL ENGINEER
Gurinderpal Bhullar
No. C48815
Exp. 9-30-14
CIVIL
STATE OF CALIFORNIA

THE STATE OF CALIFORNIA OR ITS OFFICERS OR AGENTS SHALL NOT BE RESPONSIBLE FOR THE ACCURACY OR COMPLETENESS OF SCANNED COPIES OF THIS PLAN SHEET.

TO ACCOMPANY PLANS DATED 12-1-14

TABLE 1

TAPER LENGTH CRITERIA AND CHANNELIZING DEVICE SPACING

SPEED (S)	MINIMUM TAPER LENGTH * FOR WIDTH OF OFFSET 12 FEET (W)				MAXIMUM CHANNELIZING DEVICE SPACING		
					X	Y	Z **
	TANGENT 2L	MERGING L	SHIFTING L/2	SHOULDER L/3	TAPER	TANGENT	CONFLICT
mph	ft	ft	ft	ft	ft	ft	ft
20	160	80	40	27	20	40	10
25	250	125	63	42	25	50	12
30	360	180	90	60	30	60	15
35	490	245	123	82	35	70	17
40	640	320	160	107	40	80	20
45	1080	540	270	180	45	90	22
50	1200	600	300	200	50	100	25
55	1320	660	330	220	55	110	27
60	1440	720	360	240	60	120	30
65	1560	780	390	260	65	130	32
70	1680	840	420	280	70	140	35

* - For other offsets, use the following merging taper length formula for L:
For speed of 40 mph or less, $L = WS^2/60$
For speed of 45 mph or more, $L = WS$

Where: L = Taper length in feet
W = Width of offset in feet
S = Posted speed limit, off-peak 85th-percentile speed prior to work starting, or the anticipated operating speed in mph

** - Use for taper and tangent sections where there are no pavement markings or where there is a conflict between existing pavement markings and channelizers (CA).

TABLE 2

LONGITUDINAL BUFFER SPACE AND FLAGGER STATION SPACING

SPEED *	Min D **	DOWNGRADE Min D ***		
		-3%	-6%	-9%
mph	ft	ft	ft	ft
20	115	116	120	126
25	155	158	165	173
30	200	205	215	227
35	250	257	271	287
40	305	315	333	354
45	360	378	400	427
50	425	446	474	507
55	495	520	553	593
60	570	598	638	686
65	645	682	728	785
70	730	771	825	891

* - Speed is posted speed limit, off-peak 85th-percentile speed prior to work starting, or the anticipated operating speed in mph

** - Longitudinal buffer space or flagger station spacing

*** - Use on sustained downgrade steeper than -3 percent and longer than 1 mile.

TABLE 3

ADVANCE WARNING SIGN SPACING

ROAD TYPE	DISTANCE BETWEEN SIGNS *		
	A	B	C
	ft	ft	ft
URBAN - 25 mph OR LESS	100	100	100
URBAN - MORE THAN 25 mph TO 40 mph	250	250	250
URBAN - MORE THAN 40 mph	350	350	350
RURAL	500	500	500
EXPRESSWAY / FREEWAY	1000	1500	2640

* - The distances are approximate, are intended for guidance purposes only, and should be applied with engineering judgment. These distances should be adjusted by the Engineer for field conditions, if necessary, by increasing or decreasing the recommmended distances.

2010 REVISED STANDARD PLAN RSP T9

STATE OF CALIFORNIA
DEPARTMENT OF TRANSPORTATION

TRAFFIC CONTROL SYSTEM TABLES FOR LANE AND RAMP CLOSURES

NO SCALE

RSP T9 DATED JULY 19, 2013 SUPERSEDES RSP T9 DATED APRIL 19, 2013 THAT SUPPLEMENTS THE STANDARD PLANS BOOK DATED 2010.

REVISED STANDARD PLAN RSP T9

4-30-13

TO ACCOMPANY PLANS DATED 12-1-14

Dist	COUNTY	ROUTE	POST MILES TOTAL PROJECT	SHEET No.	TOTAL SHEETS
05	SB	101	13.2/27.1	59	64

REGISTERED CIVIL ENGINEER

April 19, 2013
PLANS APPROVAL DATE

Gurinderpal Bhullar
No. C48815
Exp. 9-30-14
CIVIL
REGISTERED PROFESSIONAL ENGINEER
STATE OF CALIFORNIA

THE STATE OF CALIFORNIA OR ITS OFFICERS OR AGENTS SHALL NOT BE RESPONSIBLE FOR THE ACCURACY OR COMPLETENESS OF SCANNED COPIES OF THIS PLAN SHEET.

NOTES:

See Revised Standard Plan RSP T9 for tables.

Use cone spacing X for taper segment, Y for tangent segment or Z for conflict situations, as approriate, per Table 1, unless X, Y, or Z cone spacing is shown on this sheet.

Unless otherwise specified in the special provisions, all temporary warning signs shall have black legend on fluorescent orange background.

California codes are designated by (CA). Otherwise, Federal (MUTCD) codes are shown.

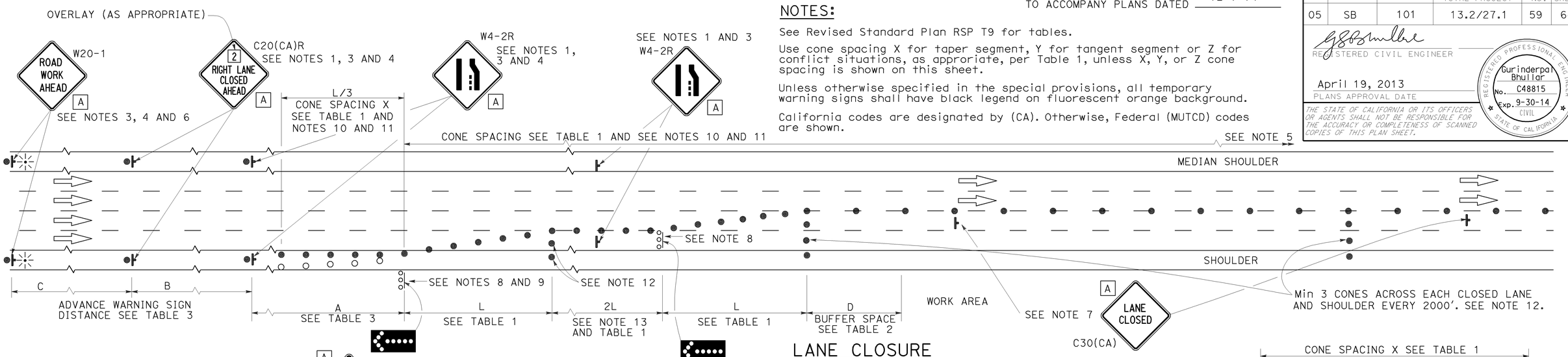

LANE CLOSURE

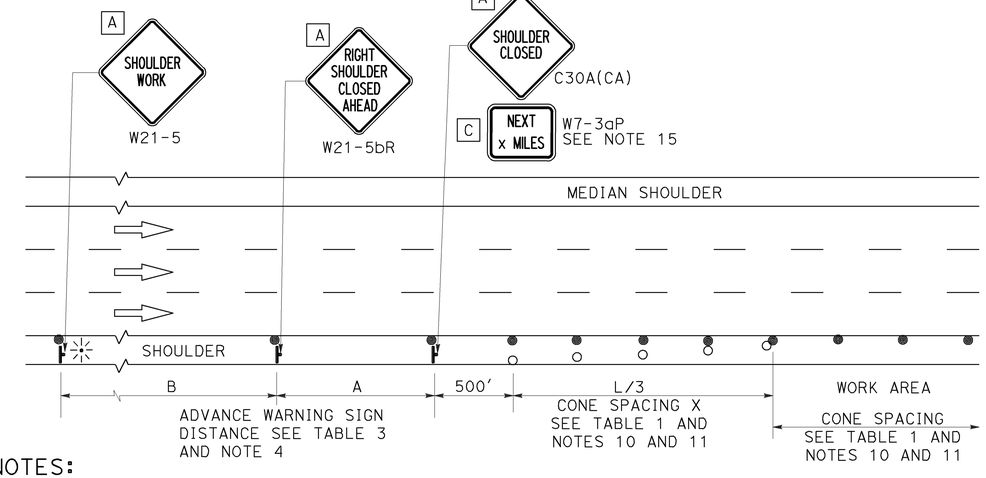

SHOULDER CLOSURE

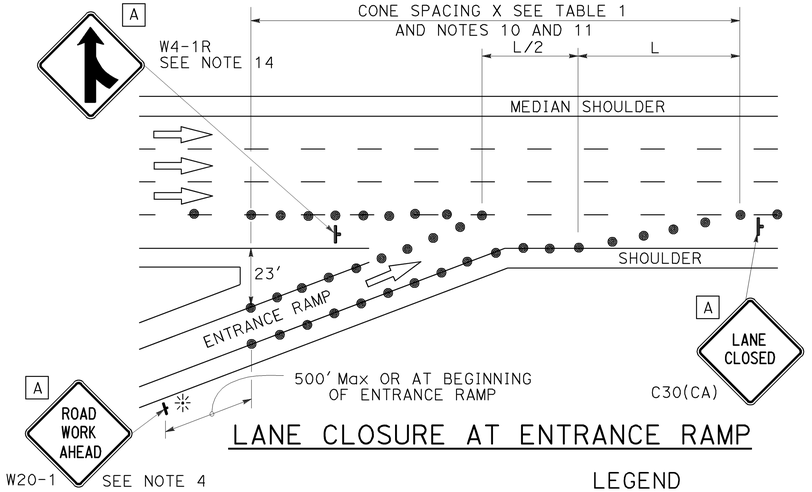

LANE CLOSURE AT ENTRANCE RAMP

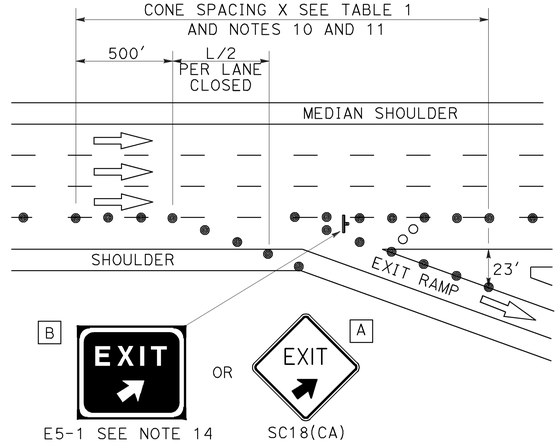

LANE CLOSURE AT EXIT RAMP

NOTES:

1. Median lane closures shall conform to the details as shown except that C20(CA)L and W4-2L signs shall be used.
2. At least one person shall be assigned to provide full time maintenance of traffic control devices for lane closures.
3. Duplicate sign installations are not required:
   a) On opposite shoulder if at least one-half of the available lanes remain open to traffic.
   b) In the median if the width of the median shoulder is less than 8' and the outside lanes are to be closed.
4. Each advance warning sign on each side of the roadway shall be equipped with at least two flags for daytime closure. Each flag shall be at least 16" x 16" in size and shall be orange or fluorescent red-orange in color. Flashing beacons shall be placed at the locations indicated for lane closure during hours of darkness.
5. A G20-2 "END ROAD WORK" sign, with minimum size of 48" x 24" as appropriate, shall be placed at the end of the lane closure unless the end of work area is obvious or ends within a larger project's limits.
6. If the W20-1 sign would follow within 2000' of a stationary W20-1 or G20-1 "ROAD WORK NEXT _____ MILES", use a C20(CA) sign for the first advance warning sign.
7. Place a C30(CA) sign every 2000' throughout length of lane closure.
8. One flashing arrow sign for each lane closed. The flashing arrow signs shall be Type I.
9. A minimum 1500' of sight distance shall be provided where possible for vehicles approaching the first flashing arrow sign. Lane closures shall not begin at top of crest vertical curve or on a horizontal curve.
10. All cones used for lane closures during the hours of darkness shall be fitted with retroreflective bands (or sleeves) as specified in the specifications.
11. Portable delineators, placed at one-half the spacing indicated for traffic cones may be used instead of cones for daytime closures only.
12. Unless otherwise specified in the special provisions, a minimum of 3 cones shall be placed transversely across each closed lane and shoulder at each location where a taper across a traffic lane ends and every 2000' as shown on the "Lane Closure" detail. Two Type II barricades may be used instead of the 3 cones. The transverse alignment of the cones or barricades on the closed shoulder may be shifted from the transverse alignment to provide access to the work.
13. Unless otherwise specified in the special provisions, the 2L tangent shown along lane lines shall be used between the L tapers required for each closed traffic lane.
14. Unless otherwise specified in the special provisions, the E5-1 or SC18(CA) and W4-1 signs shall be used as shown.
15. A W7-3aP "NEXT___MILES" plaque must be used if theshoulder closure extends beyond the distance that can be perceived by road users.

LEGEND

- TRAFFIC CONE
- TRAFFIC CONE (OPTIONAL TAPER)
- TEMPORARY TRAFFIC CONTROL SIGN
- FLASHING ARROW SIGN (FAS)
- FAS SUPPORT OR TRAILER
- PORTABLE FLASHING BEACON

SIGN PANEL SIZE (Min)

A	48" x 48"
B	72" x 60"
C	36" x 30"

STATE OF CALIFORNIA
DEPARTMENT OF TRANSPORTATION

TRAFFIC CONTROL SYSTEM FOR LANE CLOSURE ON FREEWAYS AND EXPRESSWAYS

NO SCALE

RSP T10 DATED APRIL 19, 2013 SUPERSEDES STANDARD PLAN T10 DATED MAY 20, 2011 - PAGE 237 OF THE STANDARD PLANS BOOK DATED 2010.

REVISED STANDARD PLAN RSP T10

2010 REVISED STANDARD PLAN RSP T10

12-18-12

TO ACCOMPANY PLANS DATED 12-1-14

Dist	COUNTY	ROUTE	POST MILES TOTAL PROJECT	SHEET No.	TOTAL SHEETS
05	SB	101	13.2/27.1	60	64

REGISTERED CIVIL ENGINEER

April 19, 2013
PLANS APPROVAL DATE

REGISTERED PROFESSIONAL ENGINEER — Gurinderpal Bhullar — No. C48815 — Exp. 9-30-14 CIVIL — STATE OF CALIFORNIA

THE STATE OF CALIFORNIA OR ITS OFFICERS OR AGENTS SHALL NOT BE RESPONSIBLE FOR THE ACCURACY OR COMPLETENESS OF SCANNED COPIES OF THIS PLAN SHEET.

NOTES:

See Revised Standard Plan RSP T9 for tables.

Use cone spacing X for taper segment, Y for tangent segment or Z for conflict situations, as approriate, per Table 1, unless X, Y, or Z cone spacing is shown on this sheet.

Unless otherwise specified in the special provisions, all temporary warning signs shall have black legend on fluorescent orange background.

California codes are designated by (CA). Otherwise, Federal (MUTCD) codes are shown.

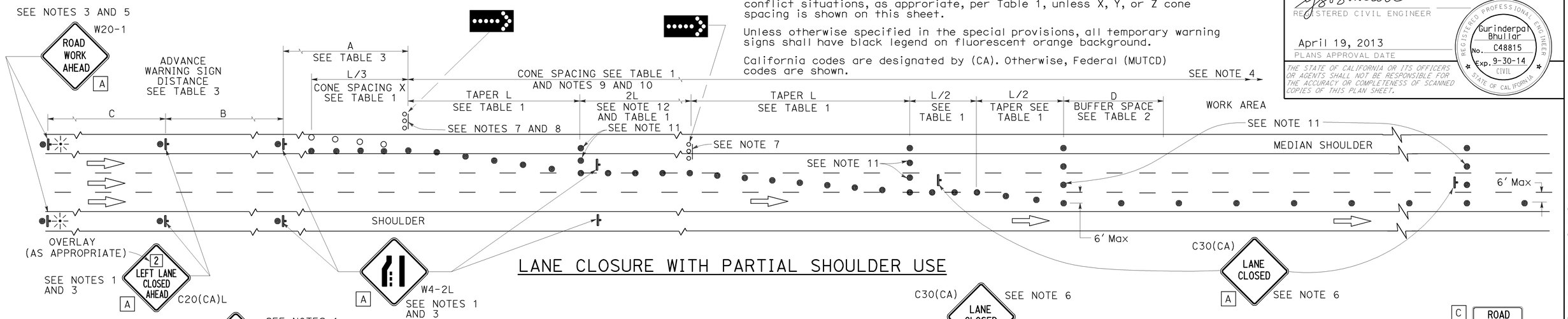

LANE CLOSURE WITH PARTIAL SHOULDER USE

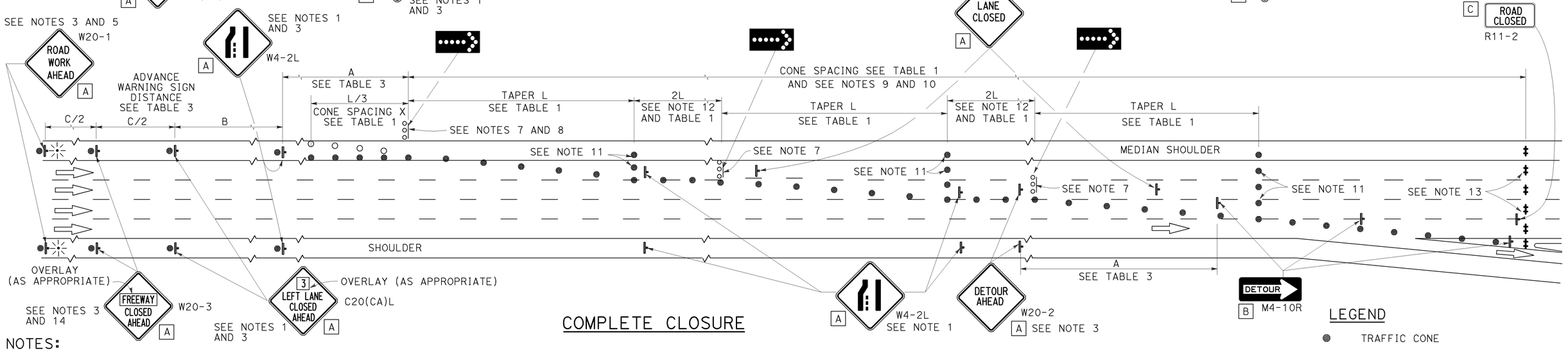

COMPLETE CLOSURE

NOTES:

1. Lane closures on the right side using partial median shoulder as a traffic lane shall conform to the details as shown except that C20(CA)R and W4-2R signs shall be used.
2. At least one person shall be assigned to provide full time maintenance of traffic control devices for lane closures.
3. Each advance warning sign on each side of the roadway shall be equipped with at least two flags for daytime closure. Each flag shall be at least 16" X 16" in size and shall be orange or fluorescent red-orange in color. Flashing beacons shall be placed at the locations indicated for lane closure during hours of darkness.
4. A G20-2 "END ROAD WORK" sign, with minimum size of 48" x 24" as appropriate, shall be placed at the end of the lane closure unless the end of work area is obvious or ends within a larger project's limits.
5. If the W20-1 sign would follow within 2000' of a stationary W20-1 or G20-1 "ROAD WORK NEXT ___ MILES", use a C20(CA) sign for the first advance warning sign.
6. Place a C30(CA) sign every 2000' throughout length of lane closure.
7. One flashing arrow sign for each lane closed. The flashing arrow signs shall be Type I.
8. A minimum 1500' of sight distance shall be provided where possible for vehicles approaching the first flashing arrow sign. Lane closures shall not begin at the top of crest vertical curve or on a horizontal curve.
9. All cones used for lane closures during the hours of darkness shall be fitted with retroreflective bands (or sleeves) as specified in the specifications.
10. Portable delineators, placed at one-half the spacing indicated for traffic cones, may be used instead of cones for daytime closures only.
11. Unless otherwise specified in the special provisions, a minimum of 3 cones shall be placed transversely across each closed lane and shoulder at each location where a taper across a traffic lane ends and every 2000' as shown on the "Lane Closure With Partial Shoulder Use" detail. Two Type II barricades may be used instead of the 3 cones. The transverse alignment of the cones or barricades on the closed shoulder may be shifted from the transverse alignment to provide access to the work.
12. Unless otherwise specified in the special provisions, the 2L tangent shown along lane lines shall be used between the L tapers required for each closed traffic lane.
13. A minimum of Two Type II or III barricades shall be placed across each closed lane and shoulder at the location shown and every 2000' within the complete closure area. Within the complete closure area, the transverse alignment of the barricades on the closed shoulder may be shifted from the transverse alignment to provide access to the work.
14. When specified in the special provisions, a W20-2 "DETOUR AHEAD" sign is to be used in place of the W20-3 "FREEWAY CLOSED AHEAD" sign.

SIGN PANEL SIZE (Min)

- A 48" x 48"
- B 48" x 18"
- C 48" x 30"

LEGEND

- TRAFFIC CONE
- TRAFFIC CONE (OPTIONAL TAPER)
- TEMPORARY TRAFFIC CONTROL SIGN
- FLASHING ARROW SIGN (FAS)
- FAS SUPPORT OR TRAILER
- PORTABLE FLASHING BEACON

STATE OF CALIFORNIA
DEPARTMENT OF TRANSPORTATION

TRAFFIC CONTROL SYSTEM FOR LANE CLOSURES ON FREEWAYS AND EXPRESSWAYS

NO SCALE

RSP T10A DATED APRIL 19, 2013 SUPERSEDES STANDARD PLAN T10A DATED MAY 20, 2011 - PAGE 238 OF THE STANDARD PLANS BOOK DATED 2010.

REVISED STANDARD PLAN RSP T10A

2010 REVISED STANDARD PLAN RSP T10A

12-18-12

LEGEND:

AB	ABANDON. IF APPLIED TO CONDUIT, REMOVE CONDUCTORS
BC	INSTALL PULL BOX IN EXISTING CONDUIT RUN
BP	PEDESTRIAN BARRICADE, TYPE AS INDICATED ON PLAN
CB	INSTALL CONDUIT INTO EXISTING PULL BOX
CC	CONNECT NEW AND EXISTING CONDUIT. REMOVE EXISTING CONDUCTORS AND INSTALL CONDUCTORS AS INDICATED
CF	CONDUIT TO REMAIN FOR FUTURE USE. REMOVE CONDUCTORS. INSTALL PULL TAPE
DH	DETECTOR HANDHOLE
FA	FOUNDATION TO BE ABANDONED
IS	INSTALL SIGN ON SIGNAL MAST ARM
NS	NO SLIP BASE ON STANDARD
PEC	PHOTOELECTRIC CONTROL
PEU	PHOTOELECTRIC UNIT
RC	EQUIPMENT OR MATERIAL TO BE REMOVED AND BECOME THE PROPERTY OF THE CONTRACTOR
RE	REMOVE ELECTROLIER, FUSES AND BALLAST. TAPE ENDS OF CONDUCTORS
RL	RELOCATE EQUIPMENT
RR	REMOVE AND REUSE EQUIPMENT
RS	REMOVE AND SALVAGE EQUIPMENT
SC	SPLICE NEW TO EXISTING CONDUCTORS
SD	SERVICE DISCONNECT
TSP	TELEPHONE SERVICE POINT

ABBREVIATIONS

APS	ACCESSIBLE PEDESTRIAN SIGNAL
BBS	BATTERY BACKUP SYSTEM
BC	BOLT CIRCLE
BPB	BICYCLE PUSH BUTTON
C	CONDUIT
CB	CIRCUIT BREAKER
CCTV	CLOSED CIRCUIT TELEVISION
Ckt	CIRCUIT
CMS	CHANGEABLE MESSAGE SIGN
Ctid	CALTRANS IDENTIFICATION
Comm	COMMUNICATION
DLC	LOOP DETECTOR LEAD-IN CABLE
EMS	EXTINGUISHABLE MESSAGE SIGN
EVUC	EMERGENCY VEHICLE UNIT CABLE
EVUD	EMERGENCY VEHICLE UNIT DETECTOR
FB	FLASHING BEACON
FBCA	FLASHING BEACON CONTROL ASSEMBLY
FBS	FLASHING BEACON WITH SLIP BASE
FO	FIBER OPTIC
G	EQUIPMENT GROUNDING CONDUCTOR
GB	GROUND BUS
GFCI	GROUND FAULT CIRCUIT INTERRUPTER
HAR	HIGHWAY ADVISORY RADIO
Hex	HEXAGONAL
HPS	HIGH PRESSURE SODIUM
IISNS	INTERNALLY ILLUMINATED STREET NAME SIGN
ISL	INDUCTION SIGN LIGHTING
LED	LIGHT EMITTING DIODE
LMA	LUMINAIRE MAST ARM
LPS	LOW PRESSURE SODIUM
Ltg	LIGHTING
Lum	LUMINAIRE
M	METERED
MAT	MAST ARM MOUNTING TOP ATTACHMENT
MAS	MAST ARM MOUNTING SIDE ATTACHMENT
M/M	MULTIPLE TO MULTIPLE TRANSFORMER
Mtg	MOUNTING
MV	MERCURY VAPOR LIGHTING FIXTURE
MVDS	MICROWAVE VEHICLE DETECTION SYSTEM
N	NEUTRAL (GROUNDED CONDUCTOR)
NB	NEUTRAL BUS
NC	NORMALLY CLOSE
NO	NORMALLY OPEN
P	CIRCUIT BREAKER'S POLE
PB	PULL BOX
PBA	PUSH BUTTON ASSEMBLY
PEC	PHOTOELECTRIC CONTROL
Ped	PEDESTRIAN
PEU	PHOTOELECTRIC UNIT
PT	CONDUIT WITH PULL TAPE
RE	RELOCATED EQUIPMENT
RM	RAMP METERING
RWIS	ROADSIDE WEATHER INFORMATION SYSTEM
SB	SLIP BASE
SIC	SIGNAL INTERCONNECT CABLE
Sig	SIGNAL
SMA	SIGNAL MAST ARM
SNS	STREET NAME SIGN
SP	SERVICE POINT
TDC	TELEPHONE DEMARCATION CABINET
TMS	TRAFFIC MONITORING STATION
TOS	TRAFFIC OPERATIONS SYSTEM
Veh	VEHICLE
VIVDS	VIDEO IMAGE VEHICLE DETECTION SYSTEM
WIM	WEIGH-IN-MOTION
Xfmr	TRANSFORMER

Dist	COUNTY	ROUTE	POST MILES TOTAL PROJECT	SHEET No.	TOTAL SHEETS
05	SB	101	13.2/27.1	61	64

Theresa Gabriel
REGISTERED ELECTRICAL ENGINEER

Theresa Aziz Gabriel
No. E15129
Exp. 6-30-14
ELECTRICAL
REGISTERED PROFESSIONAL ENGINEER
STATE OF CALIFORNIA

July 19, 2013
PLANS APPROVAL DATE

THE STATE OF CALIFORNIA OR ITS OFFICERS OR AGENTS SHALL NOT BE RESPONSIBLE FOR THE ACCURACY OR COMPLETENESS OF SCANNED COPIES OF THIS PLAN SHEET.

TO ACCOMPANY PLANS DATED 12-1-14

SOFFIT AND WALL MOUNTED LUMINAIRES

- PENDANT, 70 W HPS UNLESS OTHERWISE SPECIFIED
- FLUSH, 70 W HPS UNLESS OTHERWISE SPECIFIED
- WALL SURFACE, 70 W HPS UNLESS OTHERWISE SPECIFIED
- EXISTING SOFFIT OR WALL LUMINAIRE TO REMAIN UNMODIFIED
- (M) EXISTING SOFFIT OR WALL LUMINAIRE TO BE MODIFIED AS SPECIFIED

NOTE:
Arrow indicates "street side" of luminaire.

COMMONLY USED SYMBOLS FOR UNITED STATES CUSTOMARY UNITS OF MEASUREMENT:

SYMBOL USED	DEFINITIONS
Ω	OHMS
min	MINUTE
s	SECOND
bps	BITS PER SECOND
Bps	BYTES PER SECOND
A	AMPERE
V	VOLT
V(dc)	VOLT (DIRECT CURRENT)
V(ac)	VOLT (ALTERNATING CURRENT)
FC	FOOT - CANDLE
W	WATTS
VA	VOLT-AMPERE
M	MEGA
k	KILO
m	MILLI
μ	MICRO
p	PICO
Hz	HERTZ

MISCELLANEOUS ELECTROLIERS

NEW	EXISTING	
		LUMINAIRE ON WOOD POLE
		NON-STANDARD ELECTROLIER (SEE PROJECT NOTES OR PROJECT PLANS)
		CITY ELECTROLIER
		ELECTROLIER FOUNDATION (FUTURE INSTALLATION)

NOTES:

1. HPS luminaires shall be 310 W HPS when installed on Type 21, 21D, 30, 31 and 32 Standards, unless otherwise specified. HPS luminaires shall be 200 W when installed on other type standards or poles, unless otherwise specified.
2. LED luminaires shall be 235 W when installed on Type 21, 21D, 30, 31 and 32 Standards, unless otherwise specified. LED luminaires shall be 165 W when installed on other type standards or poles, unless otherwise specified.
3. Luminaires shall be the cutoff type, ANSI Type III medium cutoff lighting distribution, unless otherwise specified.

STANDARD ELECTROLIER

NEW	EXISTING	STANDARD TYPE
		15
		15D
		15 STRUCTURE
		15D STRUCTURE
		21
		21D
		21 STRUCTURE
		21D STRUCTURE
		30
		31
		32

STATE OF CALIFORNIA
DEPARTMENT OF TRANSPORTATION

ELECTRICAL SYSTEMS (LEGEND AND ABBREVIATIONS)

NO SCALE

RSP ES-1A DATED JULY 19, 2013 SUPERSEDES STANDARD PLAN ES-1A DATED MAY 20, 2011 - PAGE 425 OF THE STANDARD PLANS BOOK DATED 2010.

REVISED STANDARD PLAN RSP ES-1A

2010 REVISED STANDARD PLAN RSP ES-1A

7-15-13

CONDUIT

NEW	EXISTING	
		LIGHTING CONDUIT, UNLESS OTHERWISE INDICATED OR NOTED
		TRAFFIC SIGNAL CONDUIT
C	c	COMMUNICATION CONDUIT
T	t	TELEPHONE CONDUIT
F	f	FIRE ALARM CONDUIT
FO	fo	FIBER OPTIC CONDUIT
		CONDUIT TERMINATION
R	r	CONDUIT RISER ATTACHED TO THE STRUCTURE OR SERVICE POLE

SERVICE EQUIPMENT

NEW	EXISTING	
OH	oh	OVERHEAD LINES
U	U	WOOD POLE, "U" INDICATES UTILITY OWNED
		POLE GUY WITH ANCHOR
		UTILITY TRANSFORMER - GROUND MOUNTED
III	III	SERVICE EQUIPMENT ENCLOSURE TYPE. DOOR INDICATES FRONT OF ENCLOSURE
T	t	TELEPHONE DEMARCATION CABINET

POLE-MOUNTED SERVICE DESIGNATION

TYPE H SERVICE, 28'-10" — TYPE OF INSTALLATION AND POLE HEIGHT ABOVE GRADE

FLASHING BEACON

NEW	EXISTING	
R	R	FLASHING BEACON (ONE VEHICLE SIGNAL HEAD WITH BACKPLATE AND VISOR) "R" INDICATES RED INDICATION, "Y" INDICATES YELLOW INDICATION
Y Y	Y Y	FLASHING BEACON WITH TYPE 15-FBS STANDARD AND A SIGN.
R R	R R	FLASHING BEACON WITH TYPES 9, 9A OR 9B SIGN UNLESS OTHERWISE SPECIFIED OR INDICATED

SIGNAL EQUIPMENT

NEW	EXISTING	
C	C	PEDESTRIAN SIGNAL HEAD "C" INDICATES COUNTDOWN PEDESTRIAN HEAD
		PUSH BUTTON ASSEMBLY POST
		PEDESTRIAN BARRICADE
		VEHICLE SIGNAL HEAD (WITH BACKPLATE AND 3-SECTIONS: RED, YELLOW AND GREEN)
		VEHICLE SIGNAL HEAD WITH ANGLE VISOR
PV	PV	MODIFICATIONS OF BASIC SYMBOL: "L" INDICATES ALL NON-ARROW SECTIONS LOUVERED "LG" INDICATES LOUVERED GREEN SECTION ONLY "PV" INDICATES ALL 12" SECTIONS PROGRAMMED VISIBILITY "8" INDICATES ALL 8" SECTIONS (ONLY WHEN SPECIFIED)
		VEHICLE SIGNAL HEAD CONSISTING OF RED, YELLOW AND GREEN LEFT ARROW SECTIONS
		VEHICLE SIGNAL HEAD CONSISTING OF RED AND YELLOW SECTIONS WITH AN UP GREEN ARROW SECTION
		VEHICLE SIGNAL HEAD (5 SECTION) CONSISTING OF RED, YELLOW AND GREEN SECTIONS WITH YELLOW AND GREEN RIGHT ARROW SECTIONS
		TYPE 15TS STANDARD WITH VEHICLE SIGNAL HEAD AND LUMINAIRE
		TYPE 21TS STANDARD WITH VEHICLE SIGNAL HEAD AND LUMINAIRE
		STANDARD WITH LUMINAIRE AND SIGNAL MAST ARMS AND ATTACHED VEHICLE SIGNAL HEADS
		TYPE 1 STANDARD WITH ATTACHED VEHICLE SIGNAL HEADS
		STANDARD WITH A SIGNAL MAST ARM, ATTACHED VEHICLE SIGNAL HEADS AND INTERNALLY ILLUMINATED STREET NAME SIGN
		CONTROLLER ASSEMBLY. DOOR INDICATES FRONT OF CABINET

Dist	COUNTY	ROUTE	POST MILES TOTAL PROJECT	SHEET No.	TOTAL SHEETS
05	SB	101	13.2/27.1	62	64

Theresa Gabriel
REGISTERED ELECTRICAL ENGINEER

Theresa Aziz Gabriel No. E15129 Exp. 6-30-14 ELECTRICAL — REGISTERED PROFESSIONAL ENGINEER — STATE OF CALIFORNIA

July 19, 2013
PLANS APPROVAL DATE

THE STATE OF CALIFORNIA OR ITS OFFICERS OR AGENTS SHALL NOT BE RESPONSIBLE FOR THE ACCURACY OR COMPLETENESS OF SCANNED COPIES OF THIS PLAN SHEET.

TO ACCOMPANY PLANS DATED 12-1-14

SIGNAL EQUIPMENT Cont

NEW	EXISTING	
		GUARD POST
		TYPE 1 STANDARD WITH RAMP METERING SIGN
		OPTICAL DETECTOR FOR THE EMERGENCY VEHICLE DETECTION SYSTEM

NOTES:

1. All signal sections shall be 12" unless shown otherwise.
2. Signal heads shall be provided with backplates unless shown otherwise.

ILLUMINATED OVERHEAD SIGN

NEW	EXISTING	
		SINGLE POST, SINGLE ILLUMINATED SIGN, BALANCED BUTTERFLY
		SINGLE POST, DOUBLE ILLUMINATED SIGN, BALANCED BUTTERFLY
		SINGLE POST, SINGLE ILLUMINATED SIGN, FULL CANTILEVER
		DOUBLE POST, SINGLE ILLUMINATED SIGN
		SINGLE ILLUMINATED SIGN MOUNTED ON STRUCTURE
		DOUBLE POST, SINGLE ILLUMINATED SIGN WITH ELECTROLIER

STATE OF CALIFORNIA
DEPARTMENT OF TRANSPORTATION

ELECTRICAL SYSTEMS (LEGEND AND ABBREVIATIONS)

NO SCALE

RSP ES-1B DATED JULY 19, 2013 SUPERSEDES STANDARD PLAN ES-1B
DATED MAY 20, 2011 - PAGE 426 OF THE STANDARD PLANS BOOK DATED 2010.

REVISED STANDARD PLAN RSP ES-1B

2010 REVISED STANDARD PLAN RSP ES-1B

7-15-13

Dist	COUNTY	ROUTE	POST MILES TOTAL PROJECT	SHEET No.	TOTAL SHEETS
05	SB	101	13.2/27.1	63	64

Theresa Gabriel
REGISTERED ELECTRICAL ENGINEER

July 19, 2013
PLANS APPROVAL DATE

Theresa Aziz Gabriel No. E15129 Exp. 6-30-14 ELECTRICAL — REGISTERED PROFESSIONAL ENGINEER — STATE OF CALIFORNIA

THE STATE OF CALIFORNIA OR ITS OFFICERS OR AGENTS SHALL NOT BE RESPONSIBLE FOR THE ACCURACY OR COMPLETENESS OF SCANNED COPIES OF THIS PLAN SHEET.

TO ACCOMPANY PLANS DATED 12-1-14

EQUIPMENT IDENTIFICATION

ILLUMINATED SIGN IDENTIFICATION NUMBER:

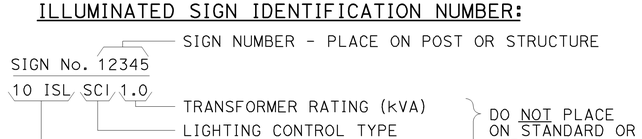

ELECTROLIER OR EQUIPMENT IDENTIFICATION NUMBER:

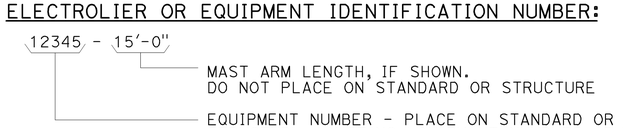

CONDUIT AND CONDUCTOR IDENTIFICATION:

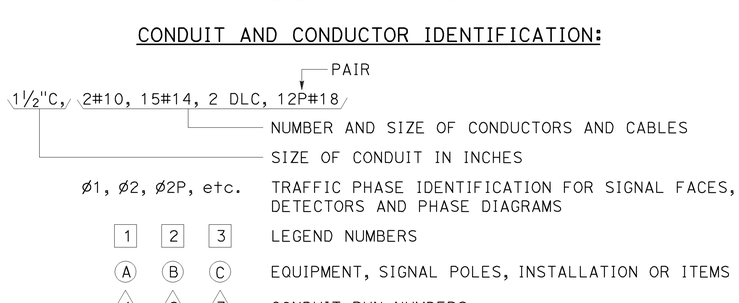

SIGNAL AND LIGHTING STANDARD (TYPICAL DESIGNATION):

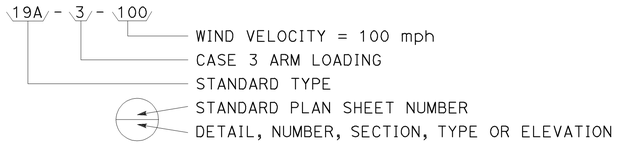

MISCELLANEOUS EQUIPMENT

NEW	EXISTING	
CMS	cms	CHANGEABLE MESSAGE SIGN
		CLOSED CIRCUIT TELEVISION CAMERA
		HIGHWAY ADVISORY RADIO POLE AND ANTENNA
EMS	ems	EXTINGUISHABLE MESSAGE SIGN
M V	m v	DETECTION DEVICE M = MICROWAVE SENSOR V = VIDEO IMAGE SENSOR

WIRING DIAGRAM LEGEND

	EXTERNAL CONDUCTOR
	CONDUCTOR OR BUS
	TIE POINT
	CONTACTOR COIL
	CONTACTOR, NO CONTACT
	TERMINAL BLOCKS
	CONTACTOR, NC CONTACT
	ENCLOSURE BOND
	GROUNDING ELECTRODE
	CIRCUIT BREAKER
	RECEPTACLE

PULL BOXES

NEW	EXISTING	
		PULL BOX, No. 5 UNLESS OTHERWISE INDICATED OR NOTED
3	9A(21)	PULL BOX, ADDITIONAL DESIGNATIONS OR DESCRIPTIONS

3 No. 3½ PULL BOX
5 No. 5 PULL BOX
6 No. 6 PULL BOX
7 No. 7 (CEILING PULL BOX)
8 No. 8 (PENDANT SOFFIT PULL BOX)
9 No. 9 PULL BOX
9A No. 9A PULL BOX

(C) COMMUNICATIONS PULL BOX
(E) PULL BOX WITH EXTENSION
(S) SPRINKLER CONTROL PULL BOX
(21) ANCHOR BOLTS AND CONDUIT FOR FUTURE INSTALLATION OF TYPE 21 STANDARD
(T) TRAFFIC PULL BOX

VEHICLE DETECTORS

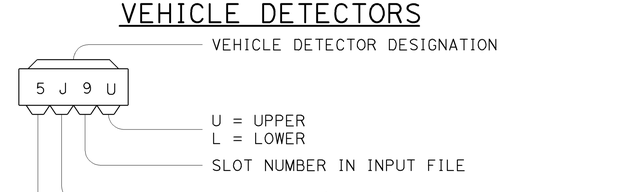

NEW	EXISTING	
		TYPE A DETECTOR LOOP. OUTLINE OF SAWCUT SHOWN
		TYPE B DETECTOR LOOP. OUTLINE OF SAWCUT SHOWN
		TYPE C DETECTOR LOOP. OUTLINE OF SAWCUT SHOWN
		TYPE D DETECTOR LOOP. OUTLINE OF SAWCUT SHOWN
		TYPE E DETECTOR LOOP. OUTLINE OF SAWCUT SHOWN
		TYPE Q DETECTOR LOOP. OUTLINE OF SAWCUT SHOWN
		MAGNETIC DETECTOR
DH	dh	DETECTOR HANDHOLE
		MICROWAVE OR VIDEO DETECTION ZONE

STATE OF CALIFORNIA
DEPARTMENT OF TRANSPORTATION

ELECTRICAL SYSTEMS (LEGEND AND ABBREVIATIONS)

NO SCALE

RSP ES-1C DATED JULY 19, 2013 SUPERSEDES STANDARD PLAN ES-1C DATED MAY 20, 2011 - PAGE 427 OF THE STANDARD PLANS BOOK DATED 2010.

REVISED STANDARD PLAN RSP ES-1C

2010 REVISED STANDARD PLAN RSP ES-1C

7-11-13

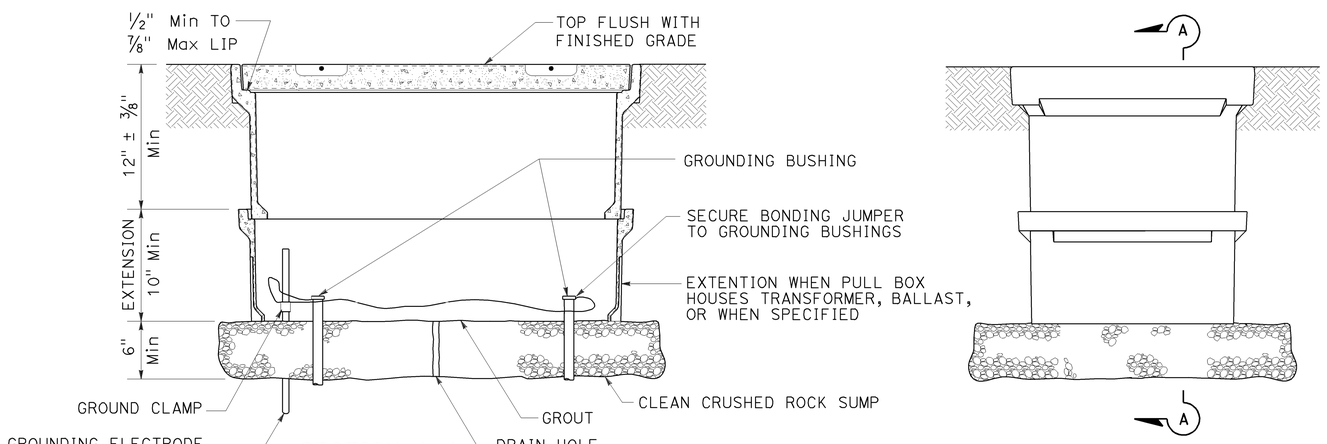

SECTION A-A

SIDE VIEW

INSTALLATION DETAILS

DETAIL A

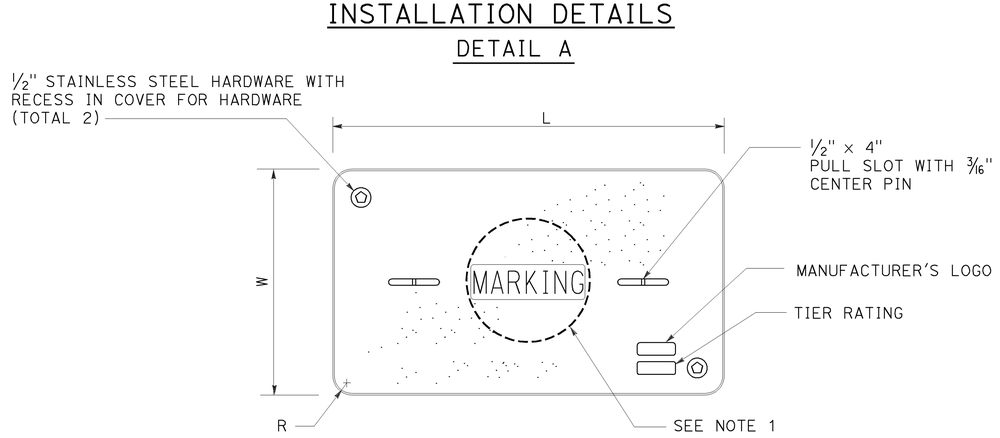

COVER TOP VIEW

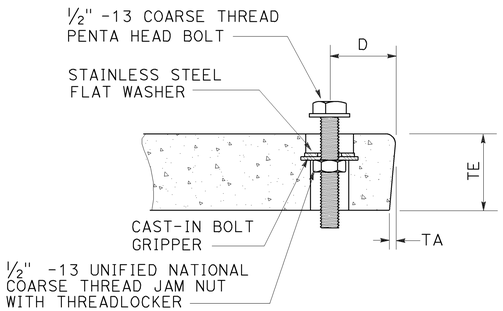

TYPICAL COVER CAPTIVE BOLT
OR SIMILAR

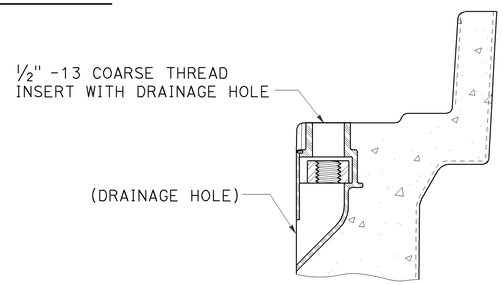

TYPICAL THREADED INSERT
OR SIMILAR

DIMENSION TABLE										
PULL BOX	PULL BOX			COVER						
	MINIMUM DEPTH BOX	MINIMUM DEPTH EXTENSION	MAXIMUM WEIGHT	L	W	R	TE	TA	D	MAXIMUM WEIGHT
No. 3½	12"	N/A	40 lb	1′ - 3⅜"	10⅛"	1⅜"	2"	⅛"	1¾"	30 lb
No. 5	12"	10"	55 lb	1′ - 11¼"	1′ - 1¾"	1⅜"	2"	⅛"	1¾"	60 lb
No. 6	12"	10"	70 lb	2′ - 6½"	1′ - 5½"	1⅜"	2"	⅛"	2"	85 lb

DIST	COUNTY	ROUTE	POST MILES TOTAL PROJECT	SHEET NO.	TOTAL SHEETS
05	SB	101	13.2/27.1	64	64

Theresa Gabriel
REGISTERED ELECTRICAL ENGINEER

Theresa Aziz Gabriel
No. E15129
Exp. 6-30-14
ELECTRICAL
REGISTERED PROFESSIONAL ENGINEER
STATE OF CALIFORNIA

July 19, 2013
PLANS APPROVAL DATE

THE STATE OF CALIFORNIA OR ITS OFFICERS OR AGENTS SHALL NOT BE RESPONSIBLE FOR THE ACCURACY OR COMPLETENESS OF SCANNED COPIES OF THIS PLAN SHEET.

TO ACCOMPANY PLANS DATED 12-1-14

NOTES:

1. Pull box covers shall be marked as follows: "SERVICE" Service circuits between service point and service disconnect; "SPRINKLER-CONTROL" sprinkler control circuits, 50 V or less; "CALTRANS" on all pull boxes, except pull boxes marked "SPRINKLER-CONTROL"; and "TELEPHONE" Telephone service;
   A) No. 3½ pull box.
      1) "SIGNAL" - Traffic signal circuits with or without lighting or sign lighting circuits.
      2) "LIGHTING" - Lighting or sign lighting circuits where voltage is under 600 V.
   B) No. 5, 6, 9 or 9A pull box.
      1) "TRAFFIC SIGNAL" - Traffic signal circuits with or without lighting or sign lighting circuits.
      2) "LIGHTING" - Lighting or sign lighting circuits where voltage is under 600 V.
      3) "LIGHTING-HIGH VOLTAGE" - Lighting or sign lighting circuits where voltage is above 600 V.
      4) "IRRIGATION" - Circuits to irrigation controller 120 V or more.
      5) "RAMP METER" - Ramp meter circuits.
      6) "COUNT STATION" - Count or speed monitor circuits.
      7) "COMMUNICATIONS" - Communication circuits.
      8) "TOS COMMUNICATIONS" - TOS communication line.
      9) "TOS POWER" - TOS power.
      10) "TDC POWER" - Telephone demarcation cabinet power.
      11) "CCTV" - Closed circuit television circuits.
      12) "TMS" - Traffic monitoring station circuits.
      13) "CMS" - Changeable message sign circuits.
      14) "HAR" - Highway advisory radio circuits.
      15) "BOOSTER PUMP" - Booster pump circuit.
2. The nominal dimensions of the opening in which the cover sets shall be the same as the cover dimensions except the length and width dimensions shall be ⅛" greater.
3. Covers and boxes shall be interchangeable with California standard male and female gages. When interchanged with a standard male or female gage, the top surfaces shall be flush within ⅛". Top outside radius of covers and pull boxes shall have a ⅛" radius.
4. Pull box extension may be another pull box as long as the bottom edge of the pull box can fit into the cover opening.
5. All dimensions for the cover for non-traffic pull box are nominal values.

STATE OF CALIFORNIA
DEPARTMENT OF TRANSPORTATION

ELECTRICAL SYSTEMS (NON-TRAFFIC PULL BOX)

NO SCALE

RSP ES-8A DATED JULY 19, 2013 SUPERSEDES RSP ES-8A DATED JANUARY 20, 2012 THAT SUPPLEMENTS THE STANDARD PLANS BOOK DATED 2010.

REVISED STANDARD PLAN RSP ES-8A

2010 REVISED STANDARD PLAN RSP ES-8A

7-15-13