ACHSSTP-P246(016)E

Dist	COUNTY	ROUTE	POST MILES TOTAL PROJECT	SHEET No.	TOTAL SHEETS
05	SB	246	12.2	1	93

STATE OF CALIFORNIA
DEPARTMENT OF TRANSPORTATION

PROJECT PLANS FOR CONSTRUCTION ON
STATE HIGHWAY

IN SANTA BARBARA COUNTY
NEAR LOMPOC
AT PURISIMA ROAD

TO BE SUPPLEMENTED BY STANDARD PLANS DATED MAY 2006

INDEX OF PLANS

SHEET No.	DESCRIPTION
1	TITLE AND LOCATION MAP
2-4	TYPICAL CROSS SECTIONS
5-6	LAYOUTS
7-21	CONSTRUCTION DETAILS
22-23	CONTOUR GRADING PLAN
24-27	DRAINAGE PLANS, DETAILS AND QUANTITIES
28-29	UTILITY PLANS
30	CONSTRUCTION AREA SIGNS
31-39	STAGE CONSTRUCTION AND TRAFFIC HANDLING PLANS AND QUANTITIES
40	DETOUR PLAN
41-45	PAVEMENT DELINEATION PLANS AND QUANTITIES
46-49	SIGN PLANS, DETAILS AND QUANTITIES
50-51	SUMMARY OF QUANTITIES
52-56	HIGHWAY PLANTING PLANS, DETAILS AND QUANTITIES
57-59	SIGNAL, LIGHTING AND ELECTRICAL SYSTEM PLANS AND DETAILS
60-93	REVISED AND NEW STANDARD PLANS

THE STANDARD PLANS LIST APPLICABLE TO THIS CONTRACT IS INCLUDED IN THE NOTICE TO BIDDERS AND SPECIAL PROVISIONS BOOK.

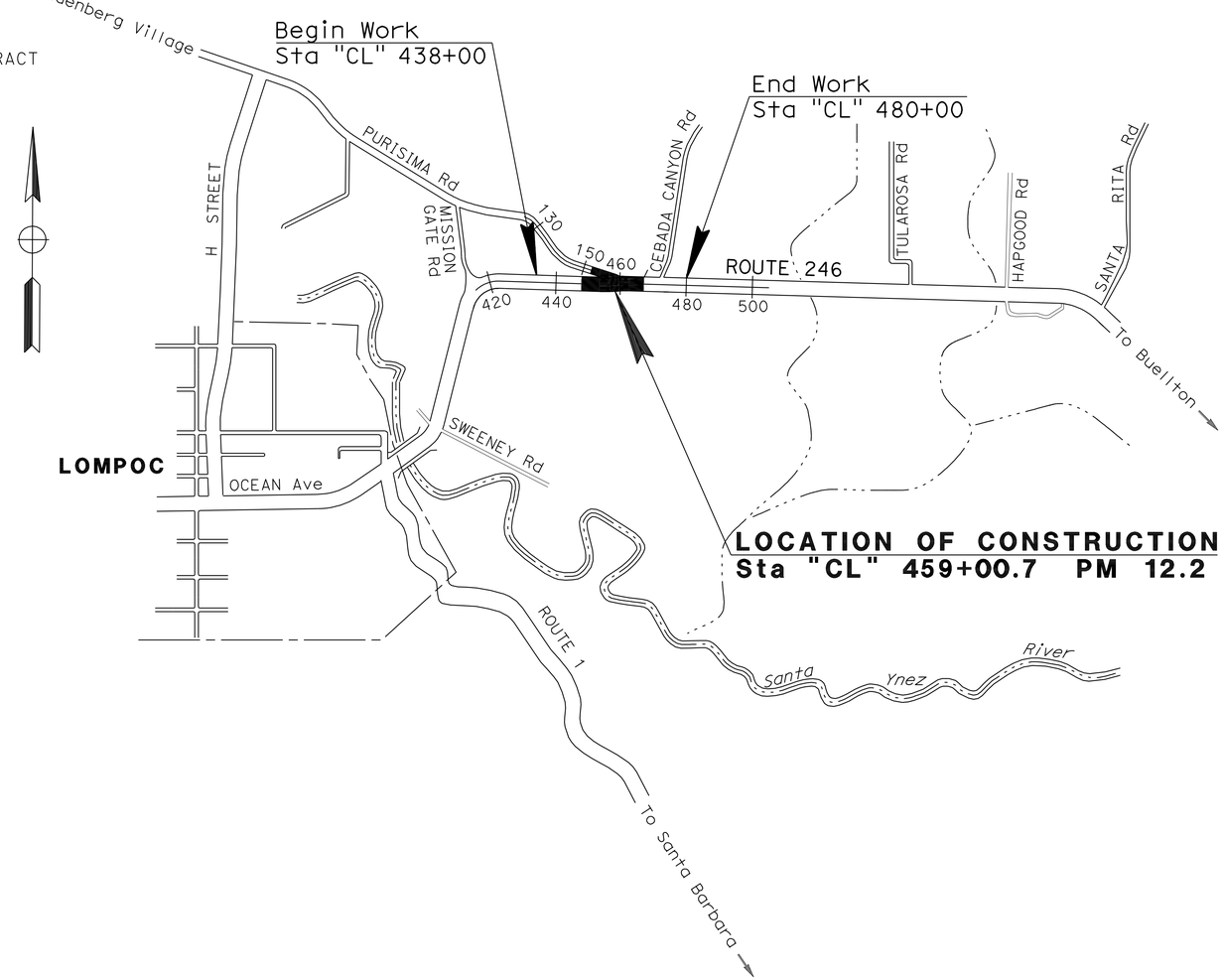

NO SCALE

LOCATION MAP

PROJECT MANAGER: PAUL MARTINEZ

DESIGN ENGINEER: STEVE WYATT

1-13-11
PROJECT ENGINEER DATE
REGISTERED CIVIL ENGINEER

March 28, 2011
PLANS APPROVAL DATE

REGISTERED PROFESSIONAL ENGINEER
P.F.VALADAO
No. 63987
Exp. 9-30-12
CIVIL
STATE OF CALIFORNIA

THE STATE OF CALIFORNIA OR ITS OFFICERS OR AGENTS SHALL NOT BE RESPONSIBLE FOR THE ACCURACY OR COMPLETENESS OF SCANNED COPIES OF THIS PLAN SHEET.

CONTRACT No.	05-0R7504
PROJECT ID	0500000376

LAST REVISION 01-13-11
DATE PLOTTED => 09-MAY-2011
TIME PLOTTED => 05:51

THE CONTRACTOR SHALL POSSESS THE CLASS (OR CLASSES) OF LICENSE AS SPECIFIED IN THE "NOTICE TO BIDDERS."

Dist	COUNTY	ROUTE	POST MILES TOTAL PROJECT	SHEET No.	TOTAL SHEETS
05	SB	246	12.2	2	93

REGISTERED CIVIL ENGINEER 1-13-11 DATE

3-28-11
PLANS APPROVAL DATE

REGISTERED PROFESSIONAL ENGINEER P.F.VALADAO No. 63987 Exp. 9-30-12 CIVIL STATE OF CALIFORNIA

THE STATE OF CALIFORNIA OR ITS OFFICERS OR AGENTS SHALL NOT BE RESPONSIBLE FOR THE ACCURACY OR COMPLETENESS OF SCANNED COPIES OF THIS PLAN SHEET.

NOTES:

1. DIMENSIONS OF THE PAVEMENT STRUCTURES (STRUCTURAL SECTIONS) ARE SUBJECT TO TOLERANCES SPECIFIED IN THE STANDARD SPECIFICATIONS.
2. SUPERELEVATION AS SHOWN OR AS DIRECTED BY THE ENGINEER. SEE "CONSTRUCTION DETAILS" FOR PAVEMENT ELEVATIONS AND "CONTOUR GRADING" FOR FINISHED GRADE CONTOURS.
3. REMOVE EXISTING STRUCTURAL SECTION AS NEEDED TO CONSTRUCT NEW STRUCTURAL SECTION.
4. REMOVE EXISTING STRUCTURAL SECTION UNDER NEWLY CONSTRUCTED SLOPES.
5. EXISTING UTILITIES ARE NOT SHOWN.
6. SEE CONSTRUCTION DETAILS FOR GRADE BREAKS.
7. GUTTER CROSS SLOPE IS 8.33%, UNLESS OTHERWISE NOTED.

STRUCTURAL SECTIONS

1. Exist Pvmt
   0.8' AC
   1.4' AB
2. ROADWAY
   0.55' HMA (TYPE A)
   1.7' CI 2 AB
3. SPLITTER ISLAND
   0.33' Conc
4. TRUCK APRON
   0.8' JPCP
   0.5' LCB
   0.5' CI 1 AS
5. SIDEWALK
   0.33' HMA (TYPE A)
6. 6" ROCK BLANKET
   2" CI 2 AB

DESIGN DESIGNATION

ADT (2009)	10,961
ADT (2029)	16,366
DHV (2009)	956
DHV (2029)	1,395
D	65%
T	3.0%
% TRUCKS	3.8%
TI (20 Yr)	11
V	65 MPH

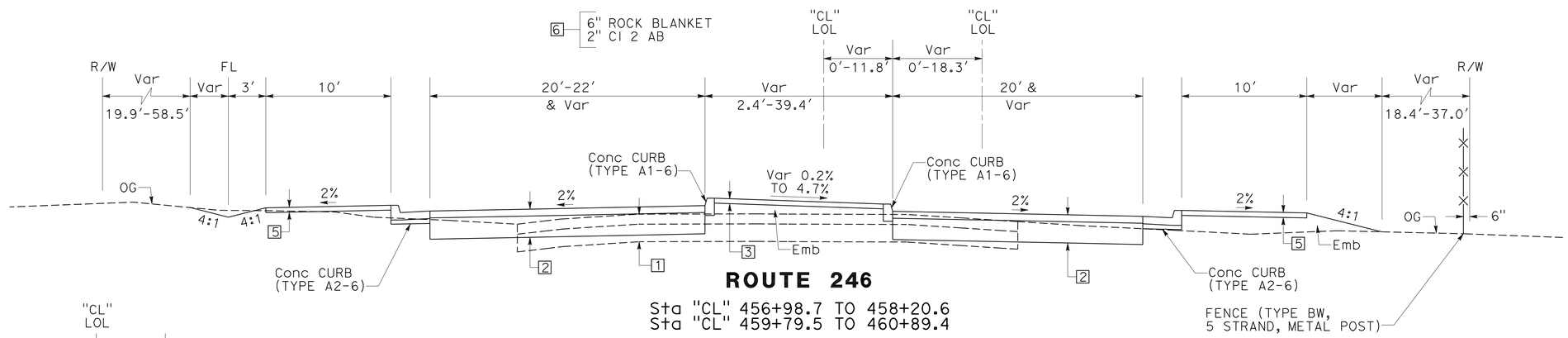

ROUTE 246

Sta "CL" 456+98.7 TO 458+20.6
Sta "CL" 459+79.5 TO 460+89.4

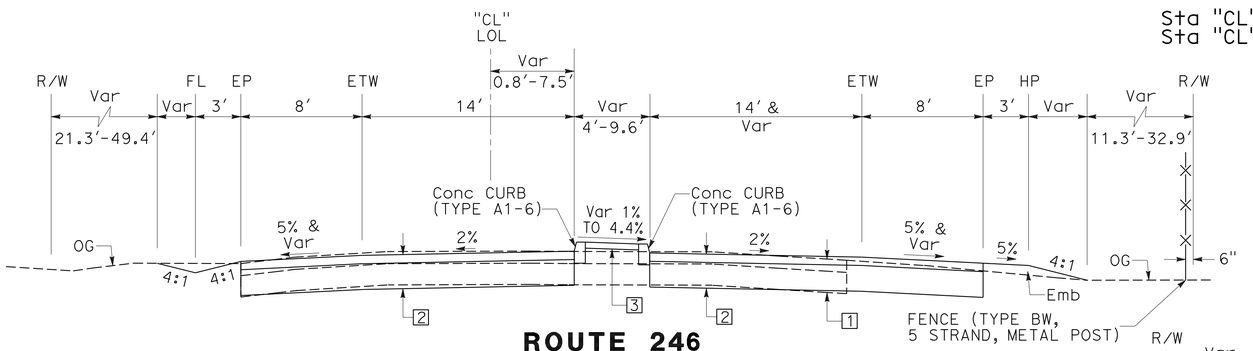

ROUTE 246

Sta "CL" 454+66.8 TO 456+98.7
Sta "CL" 460+89.4 TO 463+25.6

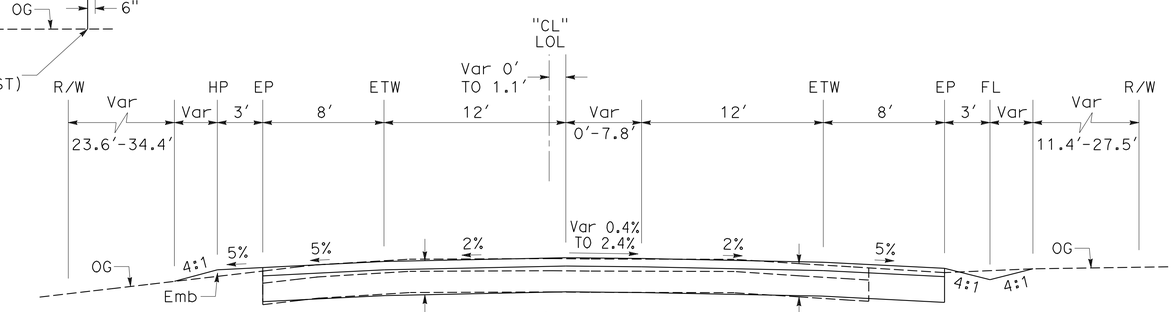

ROUTE 246

Sta "CL" 452+98.1 TO 454+66.8
Sta "CL" 463+25.6 TO 464+20.3

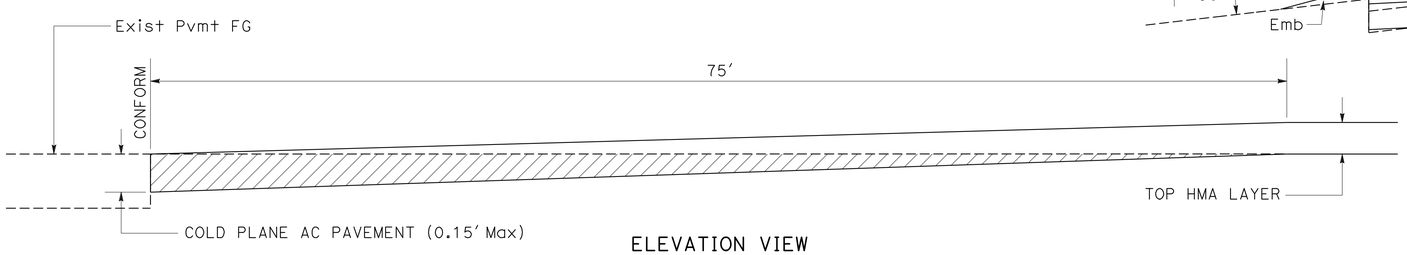

ELEVATION VIEW

LONGITUDINAL AC PAVING CONFORM

Sta "CL" 452+23.1 TO 452+98.1
Sta "CL" 464+20.3 TO 464+95.3
Sta "PR" 155+67.6 TO 156+42.6

TYPICAL CROSS SECTIONS

NO SCALE

X-1

STATE OF CALIFORNIA - DEPARTMENT OF TRANSPORTATION
DESIGN
FUNCTIONAL SUPERVISOR: S. M. WYATT
CALCULATED-DESIGNED BY: PAUL F. VALADAO
CHECKED BY: STEVE M. WYATT
REVISED BY
DATE REVISED

LAST REVISION 01-13-11
DATE PLOTTED => 04-APR-2011
TIME PLOTTED => 06:43

Dist	COUNTY	ROUTE	POST MILES TOTAL PROJECT	SHEET No.	TOTAL SHEETS
05	SB	246	12.2	3	93

REGISTERED CIVIL ENGINEER 1-13-11 DATE

3-28-11
PLANS APPROVAL DATE

REGISTERED PROFESSIONAL ENGINEER
P.F. VALADAO
No. 63987
Exp. 9-30-12
CIVIL
STATE OF CALIFORNIA

THE STATE OF CALIFORNIA OR ITS OFFICERS OR AGENTS SHALL NOT BE RESPONSIBLE FOR THE ACCURACY OR COMPLETENESS OF SCANNED COPIES OF THIS PLAN SHEET.

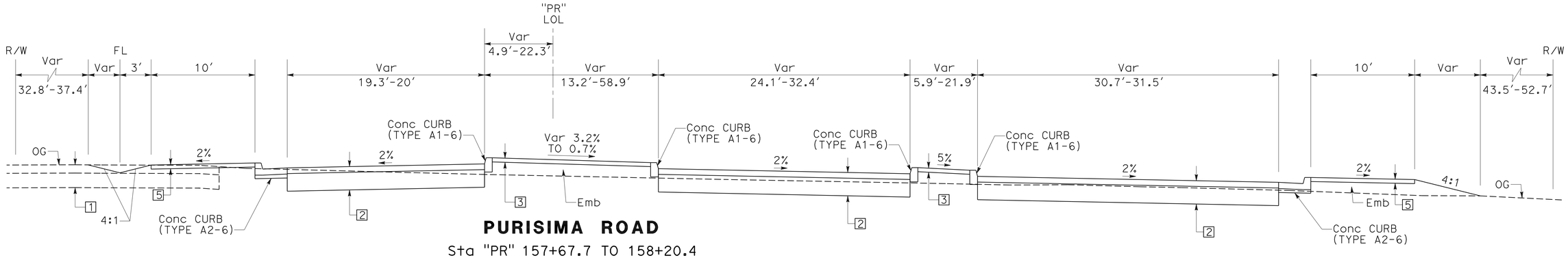

PURISIMA ROAD

Sta "PR" 157+67.7 TO 158+20.4

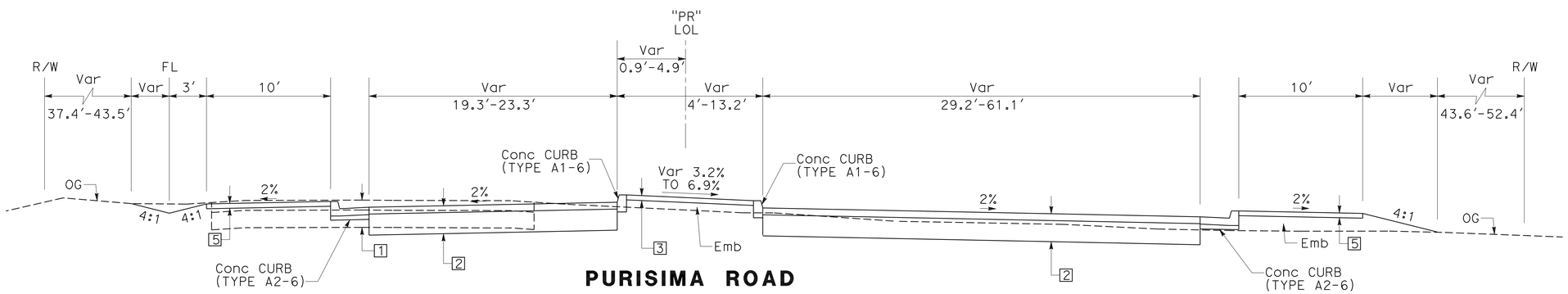

PURISIMA ROAD

Sta "PR" 157+46.2 TO 157+67.7

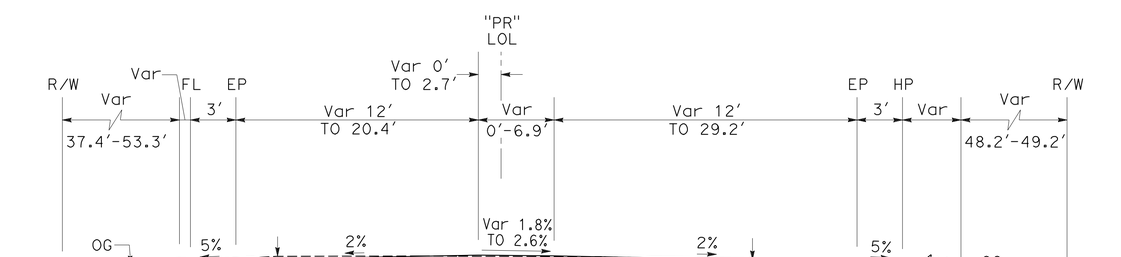

PURISIMA ROAD

Sta "PR" 156+42.6 TO 157+46.2

TYPICAL CROSS SECTIONS

NO SCALE

X-2

STATE OF CALIFORNIA - DEPARTMENT OF TRANSPORTATION
Caltrans®
DESIGN

FUNCTIONAL SUPERVISOR: S. M. WYATT
CALCULATED-DESIGNED BY: PAUL F. VALADAO
CHECKED BY: STEVE M. WYATT
REVISED BY
DATE REVISED

LAST REVISION 01-13-11
DATE PLOTTED => 04-APR-2011
TIME PLOTTED => 06:43

Dist	COUNTY	ROUTE	POST MILES TOTAL PROJECT	SHEET No.	TOTAL SHEETS
05	SB	246	12.2	4	93

REGISTERED CIVIL ENGINEER 1-13-11 DATE

3-28-11
PLANS APPROVAL DATE

REGISTERED PROFESSIONAL ENGINEER
P.F.VALADAO
No. 63987
Exp. 9-30-12
CIVIL
STATE OF CALIFORNIA

THE STATE OF CALIFORNIA OR ITS OFFICERS OR AGENTS SHALL NOT BE RESPONSIBLE FOR THE ACCURACY OR COMPLETENESS OF SCANNED COPIES OF THIS PLAN SHEET.

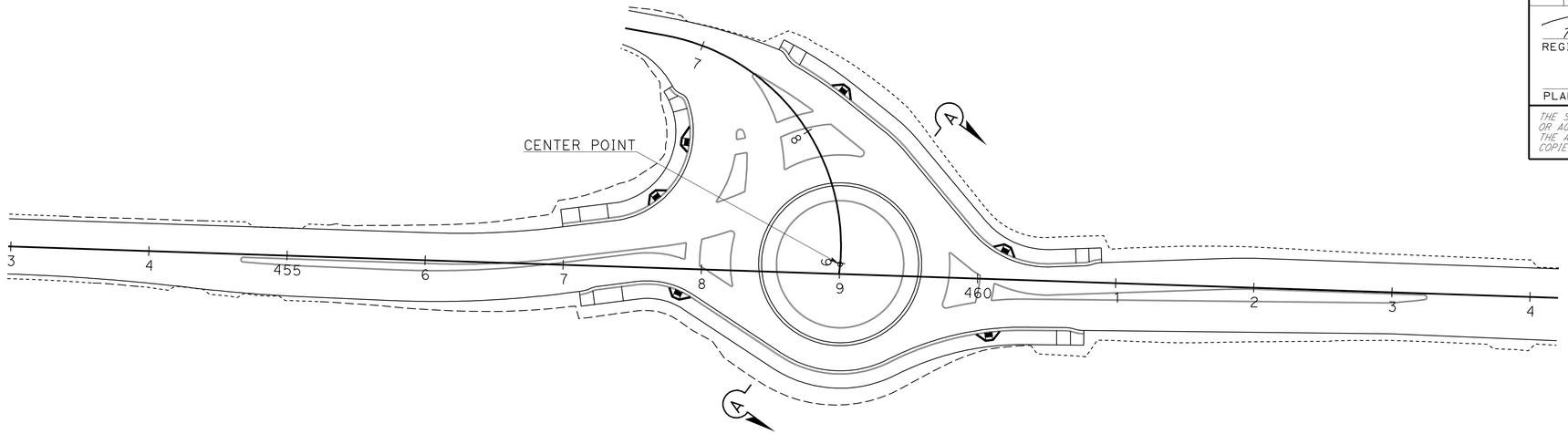

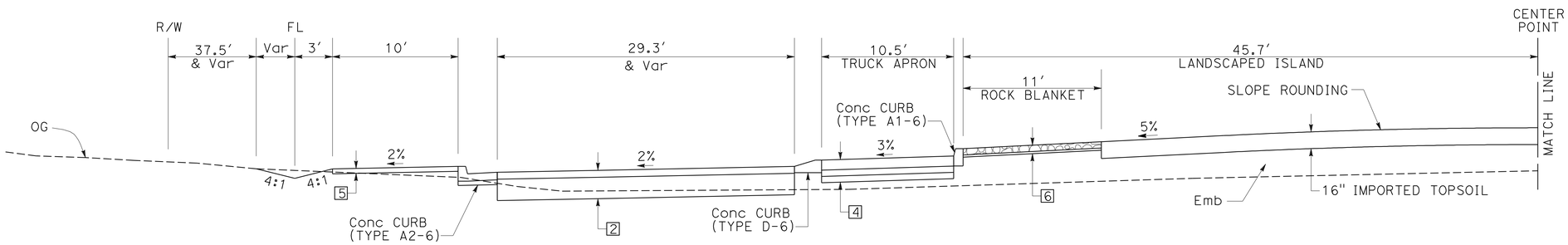

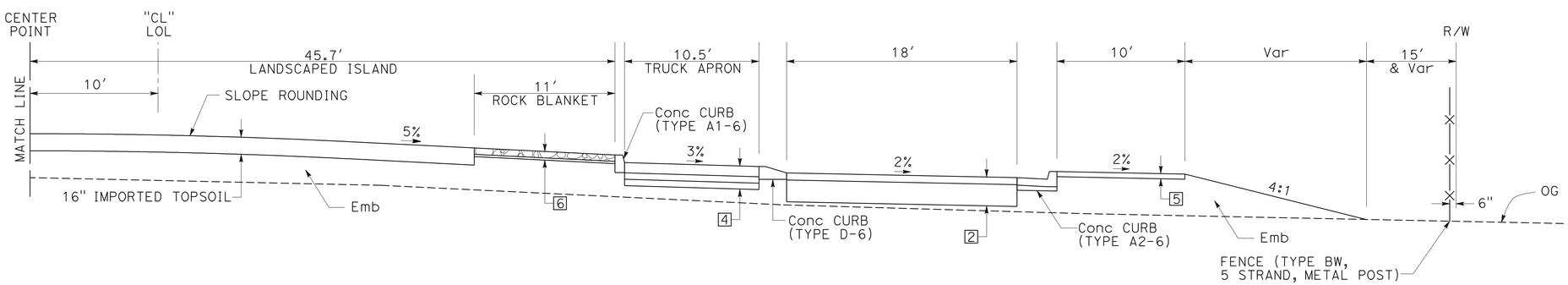

ROUNDABOUT

SECTION A-A

TYPICAL CROSS SECTIONS

NO SCALE

X-3

REVISED BY	DATE REVISED

CALCULATED-DESIGNED BY: PAUL F. VALADAO
CHECKED BY: STEVE M. WYATT
FUNCTIONAL SUPERVISOR: S. M. WYATT

STATE OF CALIFORNIA - DEPARTMENT OF TRANSPORTATION
Caltrans®
DESIGN

LAST REVISION 01-13-11
DATE PLOTTED => 04-APR-2011
TIME PLOTTED => 06:43

Dist	COUNTY	ROUTE	POST MILES TOTAL PROJECT	SHEET No.	TOTAL SHEETS
05	SB	246	12.2	5	93

REGISTERED CIVIL ENGINEER 1-13-11 DATE

3-28-11
PLANS APPROVAL DATE

REGISTERED PROFESSIONAL ENGINEER P.F.VALADAO No. 63987 Exp. 9-30-12 CIVIL STATE OF CALIFORNIA

THE STATE OF CALIFORNIA OR ITS OFFICERS OR AGENTS SHALL NOT BE RESPONSIBLE FOR THE ACCURACY OR COMPLETENESS OF SCANNED COPIES OF THIS PLAN SHEET.

NOTE:

FOR ACCURATE RIGHT OF WAY DATA, CONTACT RIGHT OF WAY ENGINEERING AT THE DISTRICT OFFICE.

LEGEND:

- OBLITERATE SURFACING
- COLD PLANE AC PAVEMENT (0.15′ Max)
- ENVIRONMENTALLY SENSITIVE AREA (ESA)
- DIRECTION OF TRAFFIC
- LG — LIP OF GUTTER

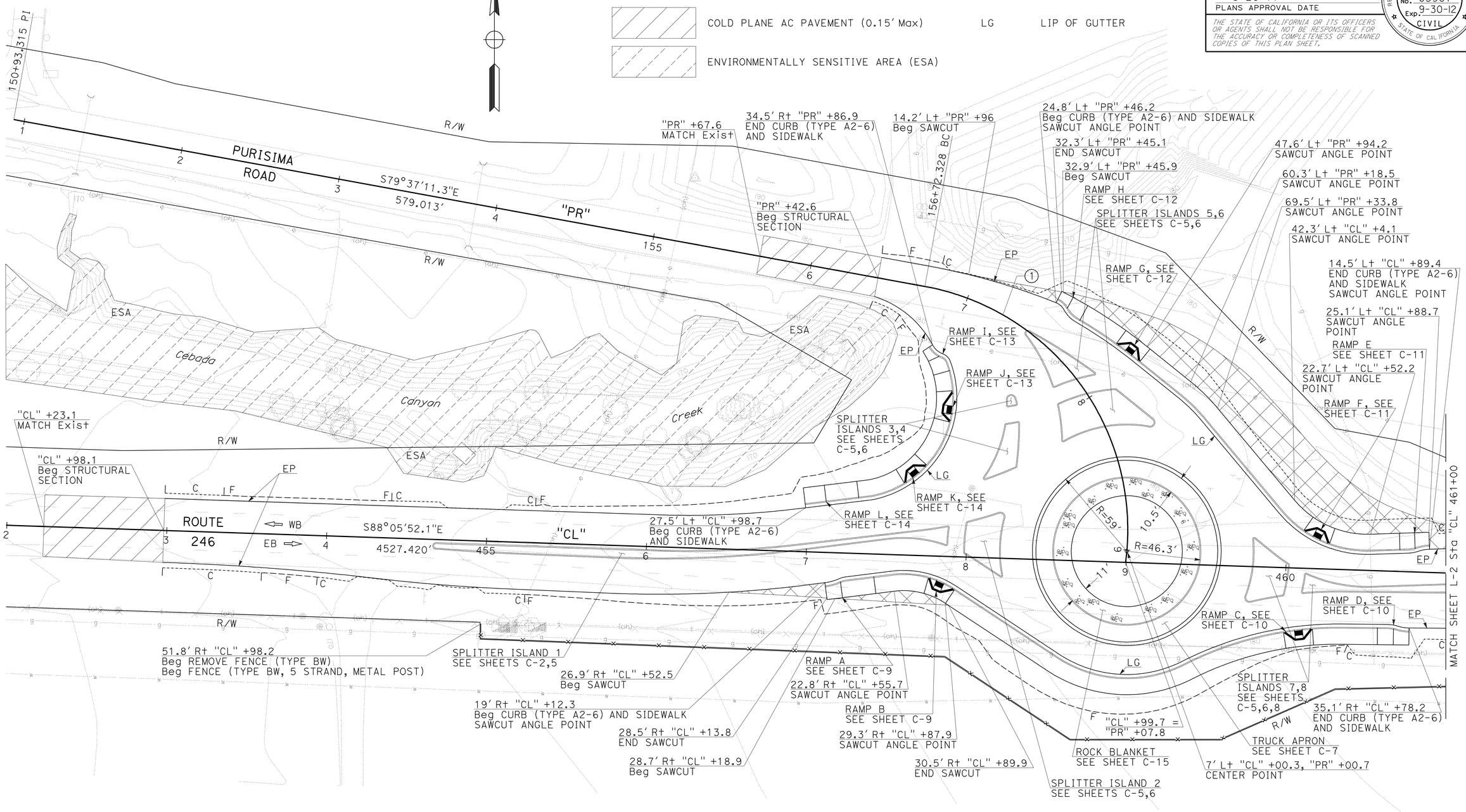

CURVE DATA

No.	R	Δ	T	L
1	154.74′	87°10′14″	147.29′	235.43′

LAYOUT

SCALE: 1″ = 30′ **L-1**

STATE OF CALIFORNIA - DEPARTMENT OF TRANSPORTATION
Caltrans
DESIGN

FUNCTIONAL SUPERVISOR: S. M. WYATT
CALCULATED-DESIGNED BY: PAUL F. VALADAO
CHECKED BY: STEVE M. WYATT
REVISED BY
DATE REVISED

LAST REVISION 01-13-11
DATE PLOTTED => 04-APR-2011
TIME PLOTTED => 06:43

Dist	COUNTY	ROUTE	POST MILES TOTAL PROJECT	SHEET No.	TOTAL SHEETS
05	SB	246	12.2	6	93

1-13-11
REGISTERED CIVIL ENGINEER DATE

3-28-11
PLANS APPROVAL DATE

REGISTERED PROFESSIONAL ENGINEER
P.F.VALADAO
No. 63987
Exp. 9-30-12
CIVIL
STATE OF CALIFORNIA

THE STATE OF CALIFORNIA OR ITS OFFICERS OR AGENTS SHALL NOT BE RESPONSIBLE FOR THE ACCURACY OR COMPLETENESS OF SCANNED COPIES OF THIS PLAN SHEET.

NOTE:

FOR ACCURATE RIGHT OF WAY DATA, CONTACT
RIGHT OF WAY ENGINEERING AT THE DISTRICT OFFICE.

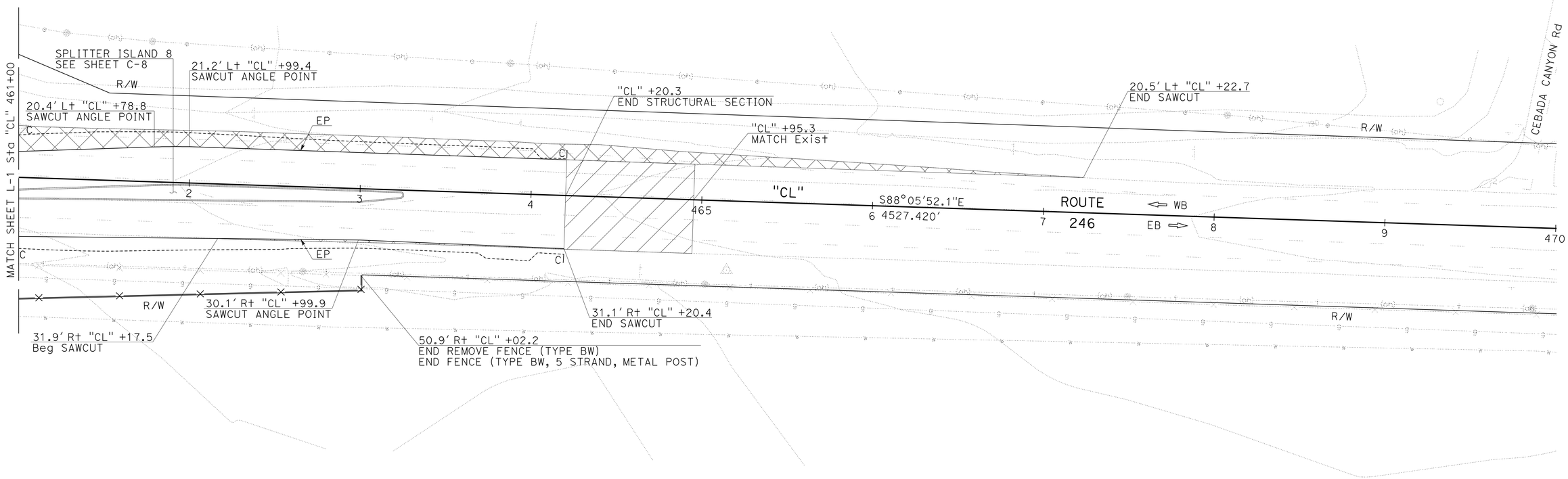

LAYOUT

SCALE: 1" = 30' **L-2**

STATE OF CALIFORNIA - DEPARTMENT OF TRANSPORTATION
Caltrans
DESIGN

FUNCTIONAL SUPERVISOR: S. M. WYATT
CALCULATED-DESIGNED BY: PAUL F. VALADAO
CHECKED BY: STEVE M. WYATT
REVISED BY
DATE REVISED

LAST REVISION 01-13-11
DATE PLOTTED => 04-APR-2011
TIME PLOTTED => 06:44

Dist	COUNTY	ROUTE	POST MILES TOTAL PROJECT	SHEET No.	TOTAL SHEETS
05	SB	246	12.2	7	93

REGISTERED CIVIL ENGINEER 1-13-11 DATE

3-28-11
PLANS APPROVAL DATE

REGISTERED PROFESSIONAL ENGINEER P.F.VALADAO No. 63987 Exp. 9-30-12 CIVIL STATE OF CALIFORNIA

THE STATE OF CALIFORNIA OR ITS OFFICERS OR AGENTS SHALL NOT BE RESPONSIBLE FOR THE ACCURACY OR COMPLETENESS OF SCANNED COPIES OF THIS PLAN SHEET.

NOTES: 1. FOR ACCURATE RIGHT OF WAY DATA, CONTACT RIGHT OF WAY ENGINEERING AT THE DISTRICT OFFICE.
2. ALL ELEVATIONS AND GEOMETRY ARE IN REFERENCE TO EP OR ETW (GRADE BREAK).

POINT DESCRIPTIONS

POINT	ELEVATION	LOCATION / DESCRIPTION	POINT	ELEVATION	LOCATION / DESCRIPTION
1	167.65′	20′ Lt "CL" 452+98.2	43	176.24′	19.1′ Rt "CL" 456+50
2	168.76′	20′ Lt "CL" 453+50	44	167.58′	20′ Rt "CL" 452+98.2
3	169.73′	20′ Lt "CL" 454+00	45	168.74′	20.8′ Rt "CL" 453+50
4	170.74′	20′ Lt "CL" 454+50	46	169.03′	21.4′ Rt "CL" 453+65 / ½
5	171.82′	20′ Lt "CL" 455+00	47	169.68′	23.2′ Rt "CL" 454+00
6	173.06′	20′ Lt "CL" 455+50	48	170.31′	25.6′ Rt "CL" 454+31.7 / PRC
7	174.48′	20′ Lt "CL" 456+00	49	170.63′	26.9′ Rt "CL" 454+50
8	174.69′	20′ Lt "CL" 456+06.9 / BC	50	171.10′	28.3′ Rt "CL" 454+73.2 / ½
9	175.98′	21.6′ Lt "CL" 456+49.1 / ½	51	171.67′	29.2′ Rt "CL" 455+00
10	168.12′	12′ Lt "CL" 452+98.2	52	172.02′	29.4′ Rt "CL" 455+14.7 / EC
11	169.16′	12′ Lt "CL" 453+50	53	172.92′	29.7′ Rt "CL" 455+50
12	170.13′	12′ Lt "CL" 454+00	54	173.68′	30′ Rt "CL 455+77.4 / BC
13	171.14′	12′ Lt "CL" 454+50	55	174.35′	29.9′ Rt "CL" 456+00
14	172.22′	12′ Lt "CL" 455+00	56	175.52′	28′ Rt "CL" 456+39 / ½
15	173.46′	12′ Lt "CL" 455+50	57	175.88′	27.1′ Rt "CL" 456+50
16	174.88′	12′ Lt "CL" 456+00			
17	175.09′	12′ Lt "CL" 456+06.9 / BC			
18	176.36′	13.6′ "CL" 456+49.7 / ½			
19	168.30′	"CL" 452+98.2 / BC			
20	169.40′	"CL" 453+50			
21	170.37′	"CL" 454+00			
22	171.37′	"CL" 454+50			
23	171.70′	"CL" 454+66.6			
24	169.38′	0.8′ Rt "CL" 453+50			
25	169.68′	1.4′ Rt "CL" 453+65.8 / ½			
26	170.32′	3.2′ Rt "CL" 454+00			
27	170.97′	5.6′ Rt "CL" 454+33.4 / PRC			
28	171.27′	6.9′ Rt "CL" 454+49.9 / ½			
29	171.59′	7.9′ Rt "CL" 454+66.4 / EC			
30	167.99′	12′ Rt "CL" 452+98.2 / BC			
31	169.14′	12.8′ Rt "CL" 453+50			
32	169.43′	13.4′ Rt "CL" 453+65.3 / ½			
33	170.08′	15.2′ Rt "CL" 454+00			
34	170.71′	17.6′ Rt "CL" 454+32.4 / PRC			
35	171.03′	18.9′ Rt "CL" 454+50			
36	171.49′	20.3′ Rt "CL" 454+73.5 / ½			
37	172.07′	21.2′ Rt "CL" 455+00			
38	172.42′	21.4′ Rt "CL" 455+14.7 / EC			
39	173.32′	21.7′ Rt "CL" 455+50			
40	174.09′	22′ Rt "CL" 455+77.5 / BC			
41	174.75′	21.9′ Rt "CL" 456+00			
42	175.90′	20′ Rt "CL" 456+38.4 / ½			

LEGEND:

--------- ETW (GRADE BREAK)
[X] POINT NUMBER
½ ½ DELTA OF CURVE
LG LIP OF GUTTER
◇X SPLITTER ISLAND NUMBER

CURVE DATA

No.	R	Δ	T	L	RP
1	567.75′	8°31′39"	42.33′	84.50′	587.9′ Lt "CL" 456+06.9
2	574.19′	8°33′04"	42.93′	85.69′	586.2′ Lt "CL" 456+07
3	1626.51′	4°46′12"	67.74′	135.41′	1626.5′ Rt "CL" 452+98
4	1097.62′	1°43′32"	16.53′	33.05′	1088.2′ Lt "CL" 455+24.8
5	1614.50′	4°46′12"	67.24′	134.41′	1626.5′ Rt "CL" 452+98
6	1109.75′	4°15′24"	41.24′	82.45′	1088.3′ Lt "CL" 455+24.8
7	729.82′	9°34′13"	61.09′	121.90′	707.8′ Lt "CL" 455+84.4
8	1603.79′	4°46′41"	66.91′	133.74′	1623.8′ Rt "CL" 452+98.2
9	1116.06′	4°15′47"	41.54′	83.04′	1086.6′ Lt "CL" 455+25.9
10	739.08′	9°33′13"	61.76′	123.24′	709.1′ Lt "CL" 455+84.3

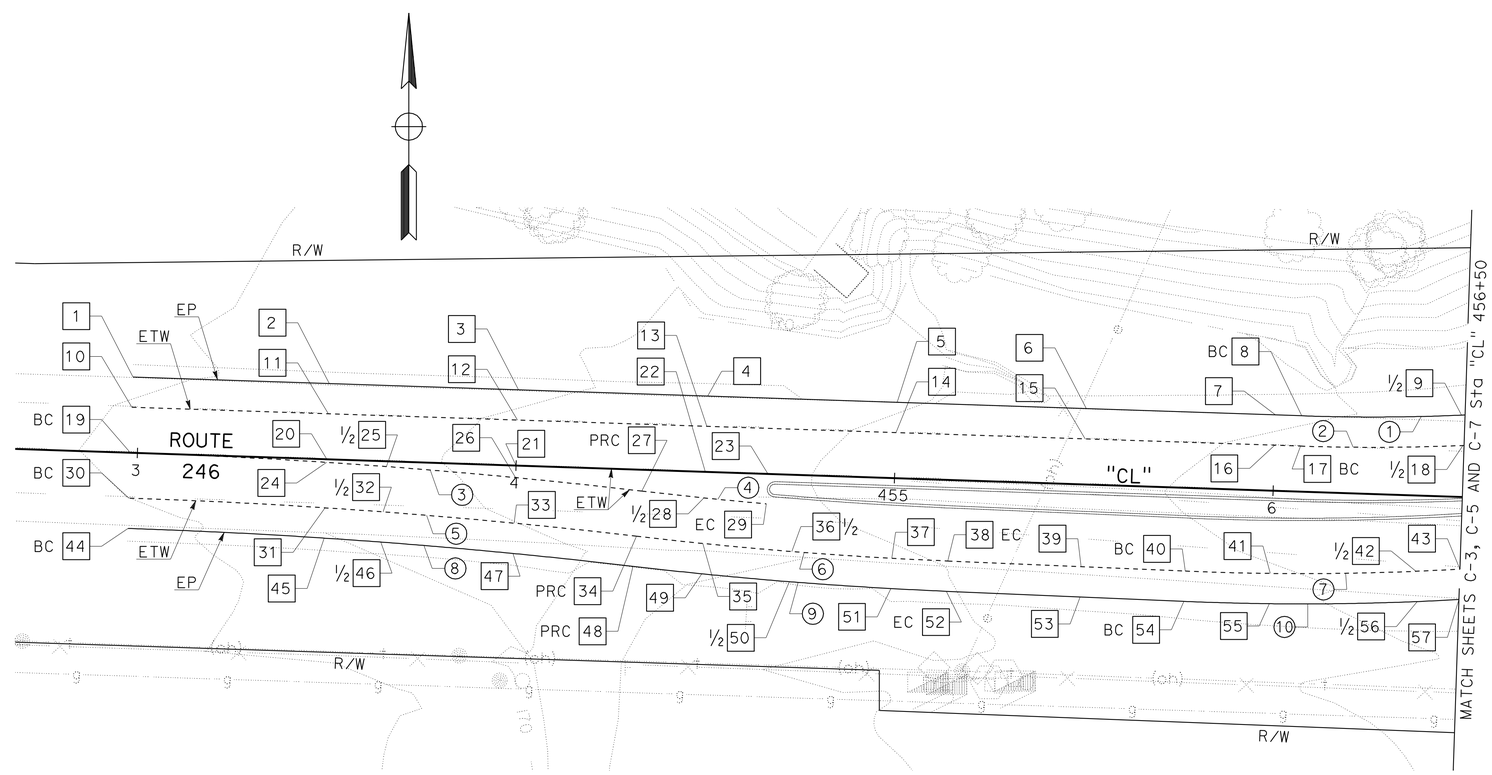

CONSTRUCTION DETAILS
EP AND ETW
SCALE: 1" = 20′

C-1

STATE OF CALIFORNIA - DEPARTMENT OF TRANSPORTATION
Caltrans
DESIGN
FUNCTIONAL SUPERVISOR S. M. WYATT
CALCULATED-DESIGNED BY PAUL F. VALADAO
CHECKED BY STEVE M. WYATT
REVISED BY
DATE REVISED

LAST REVISION 01-13-11
DATE PLOTTED => 04-APR-2011
TIME PLOTTED => 06:44

Dist	COUNTY	ROUTE	POST MILES TOTAL PROJECT	SHEET No.	TOTAL SHEETS
05	SB	246	12.2	8	93

1-13-11
REGISTERED CIVIL ENGINEER DATE

3-28-11
PLANS APPROVAL DATE

REGISTERED PROFESSIONAL ENGINEER
P.F. VALADAO
No. 63987
Exp. 9-30-12
CIVIL
STATE OF CALIFORNIA

THE STATE OF CALIFORNIA OR ITS OFFICERS OR AGENTS SHALL NOT BE RESPONSIBLE FOR THE ACCURACY OR COMPLETENESS OF SCANNED COPIES OF THIS PLAN SHEET.

NOTES: 1. FOR ACCURATE RIGHT OF WAY DATA, CONTACT RIGHT OF WAY ENGINEERING AT THE DISTRICT OFFICE.
2. ALL ELEVATIONS AND GEOMETRY ARE IN REFERENCE TO BOTTOM OF CURB.

POINT DESCRIPTIONS

POINT	ELEVATION	LOCATION / DESCRIPTION
100	171.78′	2′ R+ "CL" 454+68.5 / EC
101	172.50′	2′ R+ "CL" 455+00
102	173.74′	2′ R+ "CL" 455+50
103	175.16′	2′ R+ "CL" 456+00
104	175.38′	2′ R+ "CL" 456+06.9 / BC
105	176.65′	0.4′ R+ "CL" 456+50
106	171.67′	6′ R+ "CL" 454+68.4 / BC
107	172.16′	6.9′ R+ "CL" 454+91.6 / ½
108	172.35′	7.2′ R+ "CL" 455+00
109	172.70′	7.4′ R+ "CL" 455+14.9 / EC
110	173.60′	7.7′ R+ "CL" 455+50
111	174.37′	8′ R+ "CL" 455+77.6 / BC
112	175.04′	7.9′ R+ "CL" 456+00
113	176.15′	6.1′ R+ "CL" 452+37.4 / ½
114	176.52′	5′ R+ "CL" 456+50

CURVE DATA

No.	R	Δ	T	L	RP
11	591.98′	8°29′44"	43.97′	87.77′	590′ L+ "CL" 456+06.7
12	1123.65′	2°22′19"	23.26′	46.52′	1116.2′ L+ "CL" 455+25.9
13	716.82′	9°33′29"	59.93′	119.58′	708.8′ L+ "CL" 455+84.3

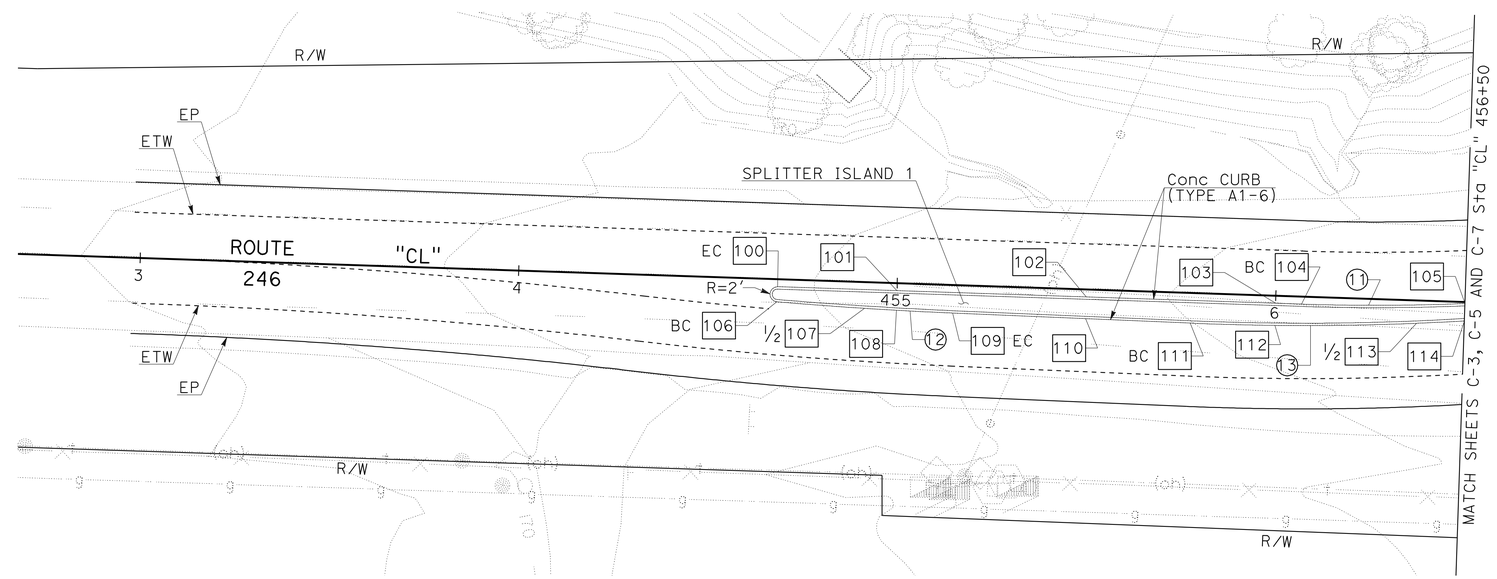

CONSTRUCTION DETAILS
SPLITTER ISLAND
SCALE: 1" = 20′

C-2

STATE OF CALIFORNIA - DEPARTMENT OF TRANSPORTATION
Caltrans
DESIGN

FUNCTIONAL SUPERVISOR: S. M. WYATT
CALCULATED-DESIGNED BY: PAUL F. VALADAO
CHECKED BY: STEVE M. WYATT
REVISED BY
DATE REVISED

LAST REVISION 01-13-11
DATE PLOTTED => 04-APR-2011
TIME PLOTTED => 06:44

Dist	COUNTY	ROUTE	POST MILES TOTAL PROJECT	SHEET No.	TOTAL SHEETS
05	SB	246	12.2	9	93

REGISTERED CIVIL ENGINEER 1-13-11 DATE

3-28-11
PLANS APPROVAL DATE

REGISTERED PROFESSIONAL ENGINEER P.F. VALADAO No. 63987 Exp. 9-30-12 CIVIL STATE OF CALIFORNIA

THE STATE OF CALIFORNIA OR ITS OFFICERS OR AGENTS SHALL NOT BE RESPONSIBLE FOR THE ACCURACY OR COMPLETENESS OF SCANNED COPIES OF THIS PLAN SHEET.

NOTES:
1. FOR ACCURATE RIGHT OF WAY DATA, CONTACT RIGHT OF WAY ENGINEERING AT THE DISTRICT OFFICE.
2. ALL ELEVATIONS AND GEOMETRY ARE IN REFERENCE TO EP, ETW (GRADE BREAK), FL OF GUTTER, OR BACK OF SIDEWALK.
3. SEE SHEET C-4 FOR CURVE DATA, POINT ELEVATIONS, AND POINT LOCATIONS / DESCRIPTIONS.
4. SEE SHEETS C-9 THROUGH C-14 FOR BIKE RAMP AND CURB RAMP CONSTRUCTION DETAILS.

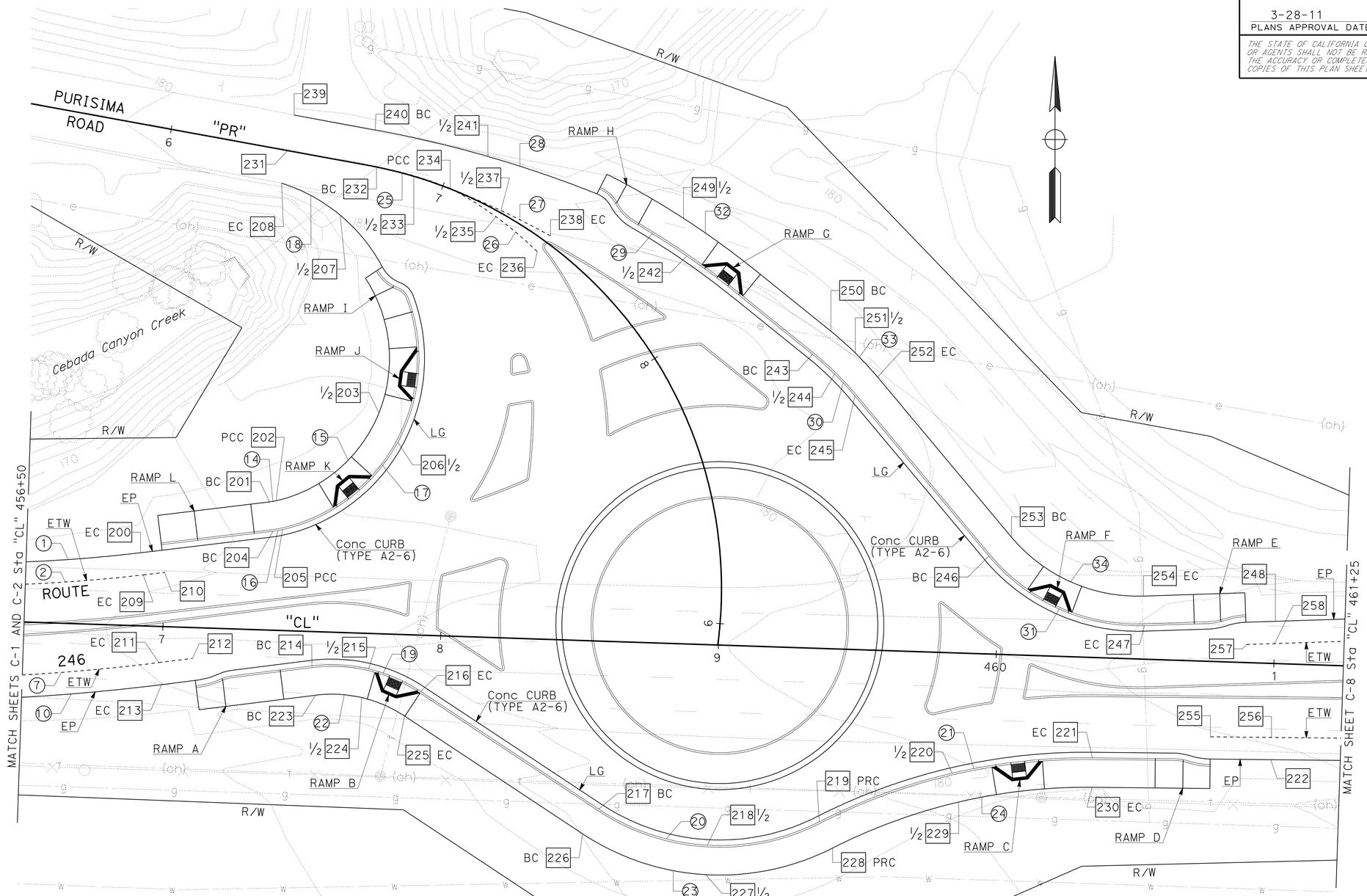

CONSTRUCTION DETAILS
EP, ETW, GUTTER AND SIDEWALK

SCALE: 1" = 20′ **C-3**

STATE OF CALIFORNIA - DEPARTMENT OF TRANSPORTATION
Caltrans
DESIGN

FUNCTIONAL SUPERVISOR: S. M. WYATT
CALCULATED-DESIGNED BY: PAUL F. VALADAO
CHECKED BY: STEVE M. WYATT
REVISED BY
DATE REVISED

LAST REVISION 01-13-11
DATE PLOTTED => 04-APR-2011
TIME PLOTTED => 06:44

Dist	COUNTY	ROUTE	POST MILES TOTAL PROJECT	SHEET No.	TOTAL SHEETS
05	SB	246	12.2	10	93

1-13-11
REGISTERED CIVIL ENGINEER DATE

3-28-11
PLANS APPROVAL DATE

REGISTERED PROFESSIONAL ENGINEER
P.F. VALADAO
No. 63987
Exp. 9-30-12
CIVIL
STATE OF CALIFORNIA

THE STATE OF CALIFORNIA OR ITS OFFICERS OR AGENTS SHALL NOT BE RESPONSIBLE FOR THE ACCURACY OR COMPLETENESS OF SCANNED COPIES OF THIS PLAN SHEET.

NOTE: ALL ELEVATIONS AND GEOMETRY ARE IN REFERENCE TO EP, ETW (GRADE BREAK), FL OF GUTTER, OR BACK OF SIDEWALK.

POINT DESCRIPTIONS

POINT	ELEVATION	LOCATION / DESCRIPTION	POINT	ELEVATION	LOCATION / DESCRIPTION
200	177.33′	26.3′ L+ "CL" 456+91.1 / EC	242	181.15′	31.1′ L+ "PR" 157+79.1 / ½
201	178.74′	46.1′ L+ "CL" 457+36.9 / BC	243	181.22′	50.8′ L+ "PR" 158+22 / BC
202	178.83′	46.6′ L+ "CL" 457+39.2 / PCC	244	181.33′	55.4′ L+ "PR" 158+29.2 / ½
203	179.15′	79.4′ L+ "CL" 457+75.1 / ½	245	181.45′	59.5′ L+ "PR" 158+36.4 / EC
204	178.44′	35.6′ L+ "CL" 457+38.5 / BC	246	181.25′	35.2′ L+ "CL" 459+96.2 / BC
205	178.52′	36.3′ L+ "CL" 457+41.9 / PCC	247	181.03′	12.1′ L+ "CL" 460+52.9 / EC
206	178.85′	69.2′ L+ "CL" 457+82.3 / ½	248	181.29′	15.2′ L+ "CL" 461+00 / ½
207	180.56′	19.4′ R+ "PR" 156+65.4 / ½	249	181.50′	39.3′ L+ "PR" 157+70.3 / ½
208	180.49′	11.9′ R+ "PR" 156+42.6 / EC	250	181.52′	60.3′ L+ "PR" 158+18.5 / BC
209	177.56′	18.4′ L+ "CL" 456+92.3 / EC	251	181.63′	65.1′ L+ "PR" 158+26.1 / ½
210	177.77′	19.5′ L+ "CL" 457+00	252	181.75′	69.5′ L+ "PR" 158+33.8 / EC
211	177.62′	13′ R+ "CL" 456+98.9 / EC	253	181.55′	42.3′ L+ "CL" 460+04.1 / BC
212	177.94′	11.1′ R+ "CL" 457+11	254	181.33′	22.7′ L+ "CL" 460+52.2 / EC
213	177.49′	20.9′ R+ "CL" 457+00.2 / EC	255	181.34′	27.1′ R+ "CL" 460+78
214	178.74′	12.3′ R+ "CL" 457+54 / BC	256	181.47′	26.6′ R+ "CL" 461+00
215	179.25′	12.7′ R+ "CL" 457+74.5 / ½	257	181.44′	6.5′ L+ "CL" 460+89.9
216	179.68′	20.2′ R+ "CL" 457+93.5 / EC	258	181.51′	7.2′ L+ "CL" 461+00
217	181.11′	60.4′ R+ "CL" 458+58.9 / BC			
218	181.43′	72.1′ R+ "CL" 458+98.4 / ½			
219	181.76′	62.3′ R+ "CL" 459+38.4 / PRC			
220	181.41′	43.3′ R+ "CL" 459+85.5 / ½			
221	181.03′	36.1′ R+ "CL" 460+35.8 / EC			
222	181.25′	34.6′ R+ "CL" 461+00			
223	179.05′	22.8′ R+ "CL" 457+55.7 / BC			
224	179.55′	23.2′ R+ "CL" 457+72.4 / ½			
225	179.98′	29.3′ R+ "CL" 457+87.9 / EC			
226	181.42′	69.5′ R+ "CL 458+53.3 / BC			
227	181.73′	82.7′ R+ "CL" 458+98.1 / ½			
228	182.06′	71.6′ R+ "CL" 459+43.5 / PRC			
229	181.71′	53.6′ R+ "CL" 459+88.3 / ½			
230	181.33′	46.7′ R+ "CL" 460+36.1 / EC			
231	180.71′	"PR" 156+42.6			
232	181.04′	0.03′ "PR" 156+75.1 / BC			
233	181.17′	0.18′ L+ "PR" 156+88.9 / ½			
234	181.32′	0.16′ L+ "PR" 157+02.7 / PCC			
235	181.45′	2.1′ R+ "PR" 157+22.1 / ½			
236	181.46′	4.7′ R+ "PR" 157+41.8 / EC			
237	181.52′	0.7′ L+ "PR" 157+22.6 / ½			
238	181.66′	2.8′ L+ "PR" 157+42.3 / EC			
239	180.48′	13′ L+ "PR" 156+42.6			
240	180.76′	13′ L+ "PR" 156+72.3 / BC			
241	181.08′	16′ L+ "PR" 157+10.3 / ½			

CURVE DATA

No.	R	Δ	T	L	RP
1	567.75′	8°31′39"	42.33′	84.50′	587.9′ L+ "CL" 456+06.9
2	574.19′	8°33′04"	42.93′	85.69′	586.2′ L+ "CL" 456+07
7	729.82′	9°34′13"	61.09′	121.90′	707.8′ L+ "CL" 455+84.4
10	739.08′	9°33′13"	61.76′	123.24′	709.1′ L+ "CL" 455+84.3
14	21.79′	6°8′31"	1.17′	2.34′	67.7′ L+ "CL" 457+38
15	52.50′	110°32′10"	75.73′	101.28′	76.4′ R+ "PR" 156+40.5
16	35.21′	5°38′40"	1.74′	3.47′	70.4′ L+ "CL" 457+33
17	63.12′	97°24′06"	71.85′	107.31′	76.5′ R+ "PR" 156+40.5
18	62.35′	44°26′05"	25.47′	48.35′	73.8′ R+ "PR" 156+34.8
19	57.92′	40°39′49"	21.46′	41.10′	69.5′ R+ "CL" 457+63.1
20	79.00′	60°25′10"	46.00′	83.31′	6.9′ L+ "CL" 459+00.3
21	212.00′	27°32′42"	51.96′	101.92′	248′ R+ "CL" 460+40.7
22	47.37′	40°36′30"	17.53′	33.57′	69.6′ R+ "CL" 457+63.1
23	89.65′	60°24′24"	52.18′	94.51′	6.9′ L+ "CL" 459+00.3
24	201.28′	27°33′28"	49.36′	96.81′	247.9′ R+ "CL" 460+40.6
25	135.21′	11°42′04"	13.85′	27.61′	34.1′ L+ "CL" 457+51.4
26	131.14′	16°59′29"	19.59′	38.89′	42.8′ L+ "CL" 457+41.3
27	359.75′	6°22′27"	20.03′	40.02′	176.6′ R+ "CL" 456+73.9
28	416.35′	11°26′09"	41.69′	83.10′	230.7′ R+ "CL" 457+09.1
29	295.74′	8°39′18"	22.38′	44.67′	109.5′ R+ "CL" 457+24.4
30	110.42′	11°8′59"	10.78′	21.49′	17.5′ L+ "CL" 458+63.8
31	70.00′	51°56′49"	34.10′	63.46′	81.9′ L+ "CL" 460+48.3
32	306.74′	11°52′22"	31.90′	63.56′	109.8′ R+ "CL" 457+24.2
33	119.69′	11°17′02"	11.82′	23.57′	18.5′ L+ "CL" 458+64.7
34	59.34′	51°59′22"	28.93′	53.84′	81.9′ L+ "CL" 460+48.3

CONSTRUCTION DETAILS
EP, ETW, GUTTER AND SIDEWALK
C-4

STATE OF CALIFORNIA - DEPARTMENT OF TRANSPORTATION
Caltrans®
DESIGN

FUNCTIONAL SUPERVISOR: S. M. WYATT
CALCULATED-DESIGNED BY: PAUL F. VALADAO
CHECKED BY: STEVE M. WYATT
REVISED BY
DATE REVISED

LAST REVISION 01-13-11
DATE PLOTTED => 04-APR-2011
TIME PLOTTED => 06:44

Dist	COUNTY	ROUTE	POST MILES TOTAL PROJECT	SHEET No.	TOTAL SHEETS
05	SB	246	12.2	11	93

REGISTERED CIVIL ENGINEER 1-13-11 DATE

3-28-11
PLANS APPROVAL DATE

REGISTERED PROFESSIONAL ENGINEER P.F.VALADAO No. 63987 Exp. 9-30-12 CIVIL STATE OF CALIFORNIA

THE STATE OF CALIFORNIA OR ITS OFFICERS OR AGENTS SHALL NOT BE RESPONSIBLE FOR THE ACCURACY OR COMPLETENESS OF SCANNED COPIES OF THIS PLAN SHEET.

NOTES: 1. FOR ACCURATE RIGHT OF WAY DATA, CONTACT RIGHT OF WAY ENGINEERING AT THE DISTRICT OFFICE.
2. ALL ELEVATIONS AND GEOMETRY ARE IN REFERENCE TO BOTTOM OF CURB.
3. SEE SHEET C-6 FOR CURVE DATA, POINT ELEVATIONS, AND POINT LOCATIONS / DESCRIPTIONS.

CONSTRUCTION DETAILS
SPLITTER ISLAND
SCALE: 1" = 20'

C-5

STATE OF CALIFORNIA - DEPARTMENT OF TRANSPORTATION
Caltrans
DESIGN

FUNCTIONAL SUPERVISOR: S. M. WYATT
CALCULATED-DESIGNED BY: PAUL F. VALADAO
CHECKED BY: STEVE M. WYATT
REVISED BY
DATE REVISED

LAST REVISION 01-13-11
DATE PLOTTED => 04-APR-2011
TIME PLOTTED => 06:44

Dist	COUNTY	ROUTE	POST MILES TOTAL PROJECT	SHEET No.	TOTAL SHEETS
05	SB	246	12.2	12	93

REGISTERED CIVIL ENGINEER 1-13-11 DATE

3-28-11
PLANS APPROVAL DATE

REGISTERED PROFESSIONAL ENGINEER P.F. VALADAO No. 63987 Exp. 9-30-12 CIVIL STATE OF CALIFORNIA

THE STATE OF CALIFORNIA OR ITS OFFICERS OR AGENTS SHALL NOT BE RESPONSIBLE FOR THE ACCURACY OR COMPLETENESS OF SCANNED COPIES OF THIS PLAN SHEET.

NOTE:

ALL ELEVATIONS AND GEOMETRY ARE IN REFERENCE TO BOTTOM OF CURB.

POINT DESCRIPTIONS

POINT	ELEVATION	LOCATION / DESCRIPTION
300	176.68′	0.4′ R+ "CL" 456+50.7 / ½
301	177.91′	4.5′ L+ "CL" 456+94.3 / EC
302	178.05′	5.4′ L+ "CL" 457+00
303	179.34′	12.9′ L+ "CL" 457+50
304	179.87′	16.1′ L+ "CL" 457+71.3 / BC
305	180.05′	17.4′ L+ "CL" 457+79.5 / ½
306	180.22′	19.1′ L+ "CL" 457+87.6 / PRC
307	177.84′	0.8′ L+ "CL" 456+96.8 / EC
308	177.93′	1.4′ L+ "CL" 457+00
309	179.23′	9.3′ L+ "CL" 457+50
310	179.30′	9.4′ L+ "CL" 457+50.6 / BC
311	179.68′	10.2′ L+ "CL" 457+68.9 / ½
312	180.11′	6.7′ L+ "CL" 457+87 / PRC
313	180.25′	18′ L+ "CL" 457+88.8 / PRC
314	180.14′	7.7′ L+ "CL" 457+88.3 / PRC
315	180.20′	12.9′ L+ "CL" 457+88.4 / ½
316	180.44′	12.1′ L+ "CL" 457+98.4 / ½
317	180.48′	21.4′ L+ "CL" 457+99.3 / BC
318	180.50′	22.2′ L+ "CL" 458+00 / PRC
319	180.72′	25.2′ L+ "CL" 458+09.8 / ½
320	180.93′	28.6′ L+ "CL" 458+19.4 / PRC
321	181.02′	25.1′ L+ "CL" 458+23.4 / PRC
322	181.01′	7.2′ L+ "CL 458+21.3 / ½
323	181.02′	10.7′ R+ "CL" 458+23.2 / PRC
324	180.94′	11.8′ R+ "CL 458+21.8 / EC
325	180.56′	1.5′ R+ "CL" 458+05 / BC
326	180.48′	0.3′ L+ "CL" 458+02 / ½
327	180.40′	1.9′ L+ "CL" 457+98.9 / PRC
328	180.39′	2.8′ L+ "CL" 457+98.4 / PCC
329	180.56′	43.8′ R+ "PR" 157+69 / BC
330	180.53′	43.9′ R+ "PR" 157+66.9 / EC
331	180.64′	41.3′ R+ "PR" 157+63.3 / BC
332	180.75′	36.4′ R+ "PR" 157+67.7 / EC
333	180.69′	38.2′ R+ "PR" 157+72.3 / BC
334	180.66′	39.6′ R+ "PR" 157+72.8 / EC
335	180.55′	45.3′ R+ "PR" 157+84.2 / BC
336	180.57′	45′ R+ "PR" 157+86.3 / PCC
337	180.77′	53′ R+ "PR" 158+02.4 / ½
338	180.96′	57.6′ L+ "CL" 458+29.9 / PCC
339	180.93′	56.8′ L+ "CL" 458+29.3 / PCC
340	180.47′	52.6′ L+ "CL" 458+19.9 / ½
341	180.26′	48.7′ L+ "CL" 458+10.4 / BC
342	180.00′	50.2′ L+ "CL" 458+09.2 / PRC
343	179.80′	66.1′ L+ "CL" 458+17.1 / ½
344	180.45′	53′ R+ "PR" 157+79 / PRC
345	180.47′	51.8′ R+ "PR" 157+78.8 / EC
346	181.71′	0.9′ L+ "PR" 157+43.8 / BC
347	181.76′	5.4′ L+ "PR" 157+67.2 / ½
348	181.69′	11.8′ L+ "PR" 157+89.5 / PCC
349	181.67′	10.4′ L+ "PR" 157+90.6 / PRC
350	181.44′	1.6′ R+ "PR" 157+85.6 / ½
351	181.20′	13.9′ R+ "PR" 157+81.4 / PRC
352	181.18′	14.6′ R+ "PR" 157+80 / PRC
353	181.30′	9.9′ R+ "PR" 157+66.4 / ½
354	181.43′	5.7′ R+ "PR" 157+53.2 / PCC
355	181.46′	4.3′ R+ "PR" 157+48.4 / ½
356	181.49′	3′ R+ "PR" 157+43.6 / PRC
357	181.61′	16.7′ L+ "PR" 158+03.7 / BC
358	181.62′	17.2′ L+ "PR" 158+04.2 / EC
359	181.69′	29.6′ L+ "PR" 158+27.5 / BC
360	181.71′	25.4′ L+ "PR" 158+30.9 / PRC
361	181.50′′	0.1′ L+ "PR" 158+21 / ½
362	181.29′	27.3′ R+ "PR" 158+18.2 / PRC
363	181.25′	28.3′ R+ "PR" 158+16.4 / PRC
364	181.21′	23.6′ R+ "PR" 158+04.3 / ½
365	181.17′	19.2′ R+ "PR" 157+92.5 / PRC
366	181.18′	18.1′ R+ "PR" 157+91.8 / PCC
367	181.40′	0.3′ R+ "PR" 157+96.8 / ½
368	181.99′	8.4′ L+ "CL" 459+93 / BC
369	181.92′	5.4′ L+ "CL" 459+97.2 / ½
370	181.88′	2.7′ L+ "CL" 460+01.6 / PRC
371	181.88′	1.7′ L+ "CL" 460+02.1 / PCC
372	181.87′	7.7′ R+ "CL" 460+01.2 / ½
373	181.85′	17.1′ R+ "CL" 459+99.4 / PCC
374	181.85′	17.8′ R+ "CL" 459+98.6 / PRC
375	181.96′	19.9′ R+ "CL" 459+88.6 / ½
376	182.06′	22.4′ R+ "CL" 459+78.7 / PRC
377	182.17′	18.5′ R+ "CL" 459+75.1 / PRC
378	182.20′	0.9′ R+ "CL" 459+78.9 / ½
379	182.19′	17.1′ L+ "CL" 459+78.6 / PRC
380	182.18′	18.1′ L+ "CL" 459+80.2 / EC
381	181.75′	3.9′ R+ "CL" 460+11.7 / BC
382	181.76′	3.1′ R+ "CL" 460+13.1 / PRC
383	181.64′	8.8′ R+ "CL" 460+33.4 / ½
384	181.60′	9.9′ R+ "CL" 460+54.4 / EC
385	181.79′	6.8′ R+ "CL" 461+00
386	181.74′	9.3′ R+ "CL" 460+11.1 / ½
387	181.73′	14.7′ R+ "CL" 460+10.2 / PRC
388	181.72′	15.9′ R+ "CL" 460+11.3 / PRC
389	181.66′	14.7′ R+ "CL" 460+23.3 / ½
390	181.60′	14.1′ R+ "CL" 460+35.3 / EC
391	181.57′	13.7′ R+ "CL" 460+50
392	181.75′	12.6′ R+ "CL" 461+00

CURVE DATA

No.	R	Δ	T	L	RP
11	591.98′	8°29′44"	43.97′	87.77′	590′ L+ "CL" 456+06.7
13	716.82′	9°33′29"	59.93′	119.58′	708.8′ L+ "CL" 455+84.3
35	235.48′	4°2′59"	8.33′	16.64′	75′ L+ "PR" 156+28.5
36	79.88′	26°24′31"	18.74′	36.82′	69.5′ R+ "CL" 457+63.1
37	111.55′	5°19′03"	5.18′	10.35′	0.5′ R+ "PR" 159+00.9
38	102.21′	10°28′23"	9.37′	18.68′	0.2′ L+ "PR" 159+00.8
39	236.90′	4°56′19"	10.22′	20.42′	76.2′ L+ "PR" 156+27.7
40	78.96′	26°12′37"	18.38′	36.12′	"PR" 159+00.9
41	77.79′	5°8′58"	3.50′	6.99′	67.7′ R+ "CL" 457+64.2
42	198.39′	7°51′12"	13.62′	27.19′	76.8′ L+ "CL" 456+32.4
43	210.00′	5°36′40"	10.29′	20.57′	71.9′ L+ "PR" 156+30.1
44	80.03′	25°29′35"	18.10′	35.61′	77.7′ R+ "PR" 156+57.1
45	360.59′	7°43′20"	24.34′	48.60′	179.1′ R+ "CL" 456+72.5
46	111.98′	13°17′39"	13.05′	25.98′	"PR" 159+00.8
47	112.23′	13°33′52"	13.35′	26.57′	69.3′ L+ "CL" 457+45.3
48	94.92′	5°52′57"	4.88′	9.74′	78.9′ L+ "CL" 457+59.7
49	78.97′	40°5′19"	28.81′	55.25′	"PR" 159+00.8
50	112.71′	11°18′48"	11.16′	22.26′	69.2′ L+ "CL" 457+44.7
51	102.14′	20°44′32"	18.69′	36.98′	0.1′ L+ "PR" 159+01
52	91.74′	6°29′52"	5.21′	10.40′	81.7′ L+ "CL" 460+48.2
53	102.46′	10°38′41"	9.54′	19.03′	0.5′ R+ "PR" 159+00.8
54	234.24′	4°59′48"	10.22′	20.43′	248.2′ R+ "CL" 460+40.7
55	78.93′	26°13′20"	18.38′	36.12′	0.1′ L+ "PR" 159+00.9
56	92.07′	26°15′27"	21.47′	42.19′	82′ L+ "CL" 460+48.3
57	107.39′	5°48′49"	5.45′	10.90′	4.6′ L+ "PR" 159+01.3
58	238.45′	5°48′02"	12.08′	24.14′	252.4′ R+ "CL" 460+41

CONSTRUCTION DETAILS
SPLITTER ISLAND

C-6

STATE OF CALIFORNIA - DEPARTMENT OF TRANSPORTATION
DESIGN

FUNCTIONAL SUPERVISOR: S. M. WYATT
CALCULATED-DESIGNED BY: PAUL F. VALADAO
CHECKED BY: STEVE M. WYATT
REVISED BY / DATE REVISED

LAST REVISION 01-13-11
DATE PLOTTED => 04-APR-2011
TIME PLOTTED => 06:44

Dist	COUNTY	ROUTE	POST MILES TOTAL PROJECT	SHEET No.	TOTAL SHEETS
05	SB	246	12.2	13	93

REGISTERED CIVIL ENGINEER 1-13-11 DATE

3-28-11
PLANS APPROVAL DATE

REGISTERED PROFESSIONAL ENGINEER P.F.VALADAO No. 63987 Exp. 9-30-12 CIVIL STATE OF CALIFORNIA

THE STATE OF CALIFORNIA OR ITS OFFICERS OR AGENTS SHALL NOT BE RESPONSIBLE FOR THE ACCURACY OR COMPLETENESS OF SCANNED COPIES OF THIS PLAN SHEET.

NOTES: 1. FOR ACCURATE RIGHT OF WAY DATA, CONTACT RIGHT OF WAY ENGINEERING AT THE DISTRICT OFFICE.
2. ALL ELEVATIONS AND GEOMETRY ARE IN REFERENCE TO BOTTOM OF CURB.

POINT DESCRIPTIONS

POINT	ELEVATION	LOCATION / DESCRIPTION
400	181.41′	4.9′ Lt "CL" 458+41.3
401	181.42′	10.3′ Rt "CL" 458+43.8
402	181.47′	24.3′ Rt "CL" 458+50.2
403	181.57′	36.1′ Rt "CL" 458+60
404	181.69′	45.1′ Rt "CL" 458+72.6
405	181.84′	50.5′ Rt "CL" 458+87
406	182.00′	51.9′ Rt "CL" 459+02.3
407	182.16′	49.4′ Rt "CL" 459+17.5
408	182.31′	43′ Rt "CL" 459+31.5
409	182.45′	33.2′ Rt "CL" 459+43.4
410	182.53′	20.7′ Rt "CL" 459+52.4
411	182.58′	6.2′ Rt "CL" 459+57.8
412	182.60′	9.1′ Lt "CL" 459+59.2
413	182.58′	24.3′ Lt "CL" 459+56.7
414	182.53′	38.3′ Lt "CL" 459+50.3
415	182.43′	50.2′ Lt "CL" 459+40.5
416	182.32′	59.1′ Lt "CL" 459+27.9
417	182.16′	64.5′ Lt "CL" 459+13.5
418	182.00′	66′ Lt "CL" 458+98.2
419	181.84′	63.4′ Lt "CL" 458+83
420	181.67′	57′ Lt "CL" 458+69
421	181.55′	47.2′ Lt "CL" 458+57.1
422	181.47′	34.7′ Lt "CL" 458+48.2
423	181.42′	20.3′ Lt "CL" 458+42.8

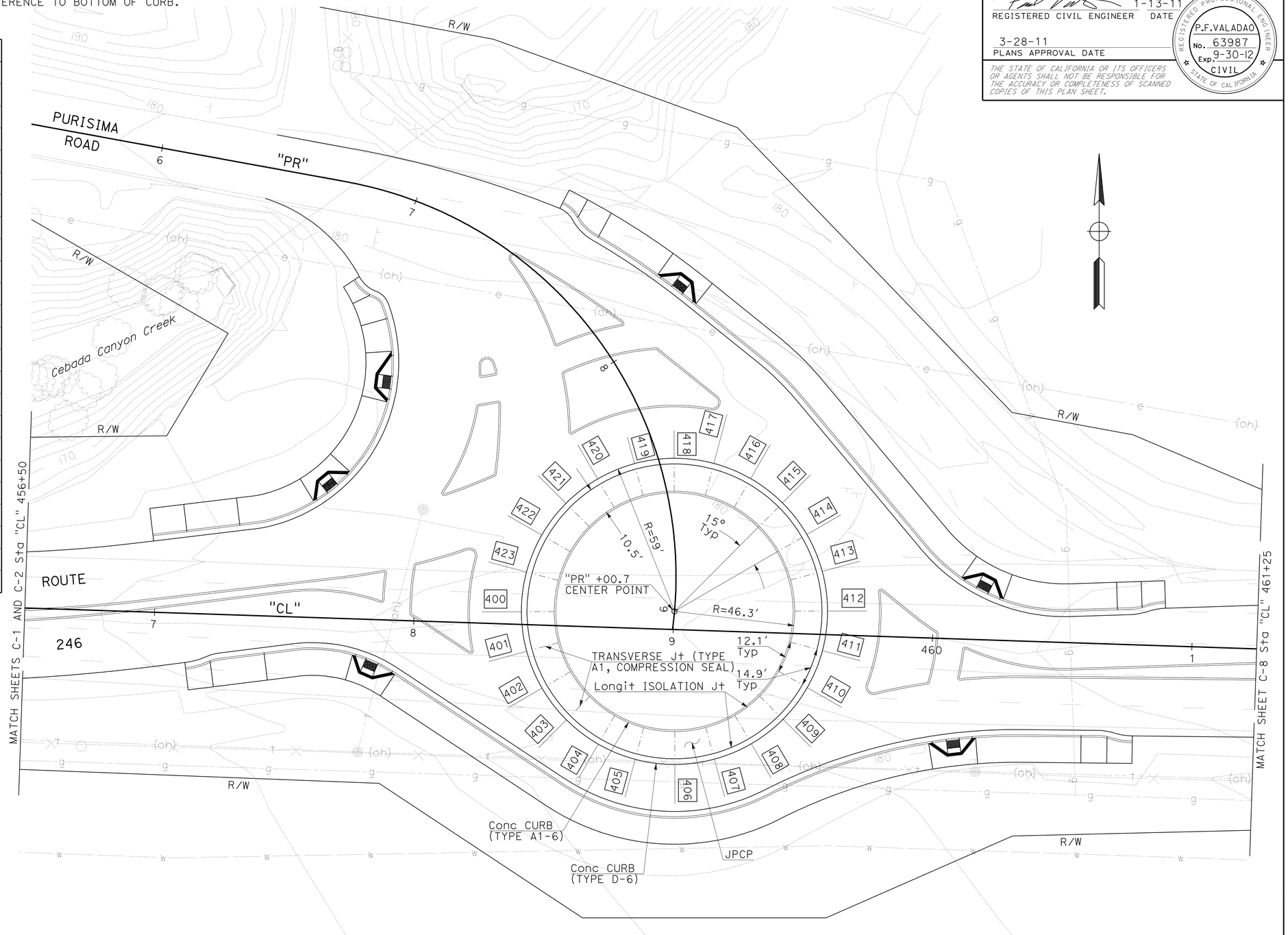

CONSTRUCTION DETAILS
CENTRAL ISLAND
SCALE: 1" = 20′ **C-7**

STATE OF CALIFORNIA - DEPARTMENT OF TRANSPORTATION
Caltrans® DESIGN

FUNCTIONAL SUPERVISOR: S. M. WYATT
CALCULATED-DESIGNED BY: PAUL F. VALADAO
CHECKED BY: STEVE M. WYATT
REVISED BY
DATE REVISED

LAST REVISION 01-13-11
DATE PLOTTED => 04-APR-2011
TIME PLOTTED => 06:45

Dist	COUNTY	ROUTE	POST MILES TOTAL PROJECT	SHEET No.	TOTAL SHEETS
05	SB	246	12.2	14	93

REGISTERED CIVIL ENGINEER 1-13-11 DATE

3-28-11
PLANS APPROVAL DATE

REGISTERED PROFESSIONAL ENGINEER P.F. VALADAO No. 63987 Exp. 9-30-12 CIVIL STATE OF CALIFORNIA

THE STATE OF CALIFORNIA OR ITS OFFICERS OR AGENTS SHALL NOT BE RESPONSIBLE FOR THE ACCURACY OR COMPLETENESS OF SCANNED COPIES OF THIS PLAN SHEET.

NOTES: 1. FOR ACCURATE RIGHT OF WAY DATA, CONTACT RIGHT OF WAY ENGINEERING AT THE DISTRICT OFFICE.
2. ALL ELEVATIONS AND GEOMETRY ARE IN REFERENCE TO EP, ETW (GRADE BREAK), OR BOTTOM OF CURB.

POINT DESCRIPTIONS

POINT	ELEVATION	LOCATION / DESCRIPTION
500	181.75′	18.5′ Lt "CL" 461+50
501	182.33′	20.4′ Lt "CL" 461+78.8 / BC
502	182.53′	21′ Lt "CL" 461+89.1 / ½
503	182.72′	21.2′ Lt "CL" 461+99.4 / EC
504	183.57′	21.2′ Lt "CL" 462+50
505	184.25′	21.1′ Lt "CL" 463+00
506	184.74′	21′ Lt "CL" 463+50
507	185.10′	21′ Lt "CL" 464+00
508	185.37′	20.9′ Lt "CL" 464+20.2
509	182.15′	10.5′ Lt "CL" 461+50
510	182.73′	12.4′ Lt "CL" 461+79.3 / BC
511	182.93′	13′ Lt "CL" 461+89.3 / ½
512	183.12′	13.2′ Lt "CL" 461+99.5 / EC
513	183.97′	13.2′ Lt "CL" 462+50
514	184.65′	13.1′ Lt "CL" 463+00
515	185.14′	13′ Lt "CL" 463+50
516	185.50′	13′ Lt "CL" 464+00
517	185.58′	12.9′ Lt "CL" 464+20.2
518	182.43′	3.5′ Rt "CL" 461+50
519	183.01′	1.5′ Rt "CL" 461+80.2 / BC
520	183.21′	1′ Rt "CL" 461+89.8 / ½
521	183.40′	0.8′ Rt "CL" 461+99.5 / EC
522	184.25′	0.8′ Rt "CL" 462+50
523	184.93′	0.9′ Rt "CL" 463+00
524	185.17′	0.9′ Rt CL" 463+23.6 / EC
525	185.15′	1.1′ Lt "CL" 463+25.5
526	185.38′	1′ Lt "CL" 463+50
527	185.74′	1′ Lt "CL" 464+00
528	185.84′	0.9′ Lt "CL" 464+20.2 / EC
529	182.36′	11.5′ Rt "CL" 461+50
530	183.32′	10.3′ Rt "CL" 462+00
531	184.17′	9.2′ Rt "CL" 462+50
532	184.86′	8.1′ Rt "CL" 462+99.4 / BC
533	185.01′	6.6′ Rt "CL" 463+11.7 / ½
534	185.12′	4.9′ Rt "CL" 463+23.9 / PCC
535	185.11′	6.7′ Rt "CL" 463+25.7 / BC
536	185.35′	3.4′ Rt "CL" 463+50
537	185.53′	1.1′ Rt "CL" 463+72.8 / ½
538	185.73′	0.5′ Lt "CL" 464+00
539	182.08′	25.5′ Rt "CL" 461+50
540	183.04′	24.3′ Rt "CL" 462+00
541	183.89′	23.2′ Rt "CL" 462+50
542	184.58′	22.1′ Rt "CL" 462+99.7 / ANGLE POINT
543	184.97′	22.5′ Rt "CL" 463+50
544	185.27′	22.9′ Rt "CL" 464+00
545	185.42′	23.1′ Rt "CL" 464+20.3
546	181.68′	33.5′ Rt "CL" 461+50
547	182.64′	32.3′ Rt "CL" 462+00
548	183.49′	31.2′ Rt "CL" 462+50
549	184.18′	30.1′ Rt "CL" 461+99.9 / ANGLE POINT
550	184.57′	30.5′ Rt "CL" 463+50
551	184.87′	30.9′ Rt "CL" 464+00
552	184.92′	31.1′ Rt "CL" 464+20.4

CURVE DATA

No.	R	Δ	T	L	RP
59	379.47′	3°6′44"	10.31′	20.61′	358.2′ Rt "CL" 462+03.9
60	374.19′	3°4′09"	10.03′	20.05	360.9′ Rt "CL" 462+04
61	357.62′	3°5′16"	9.64′	19.27′	358.4′ Rt "CL" 462+03.9
62	785.14′	1°48′02"	12.34′	24.67′	772.1′ Lt "CL" 462+11
63	632.19′	8°35′48"	47.52′	94.85′	631.2′ Rt "CL" 464+23.7

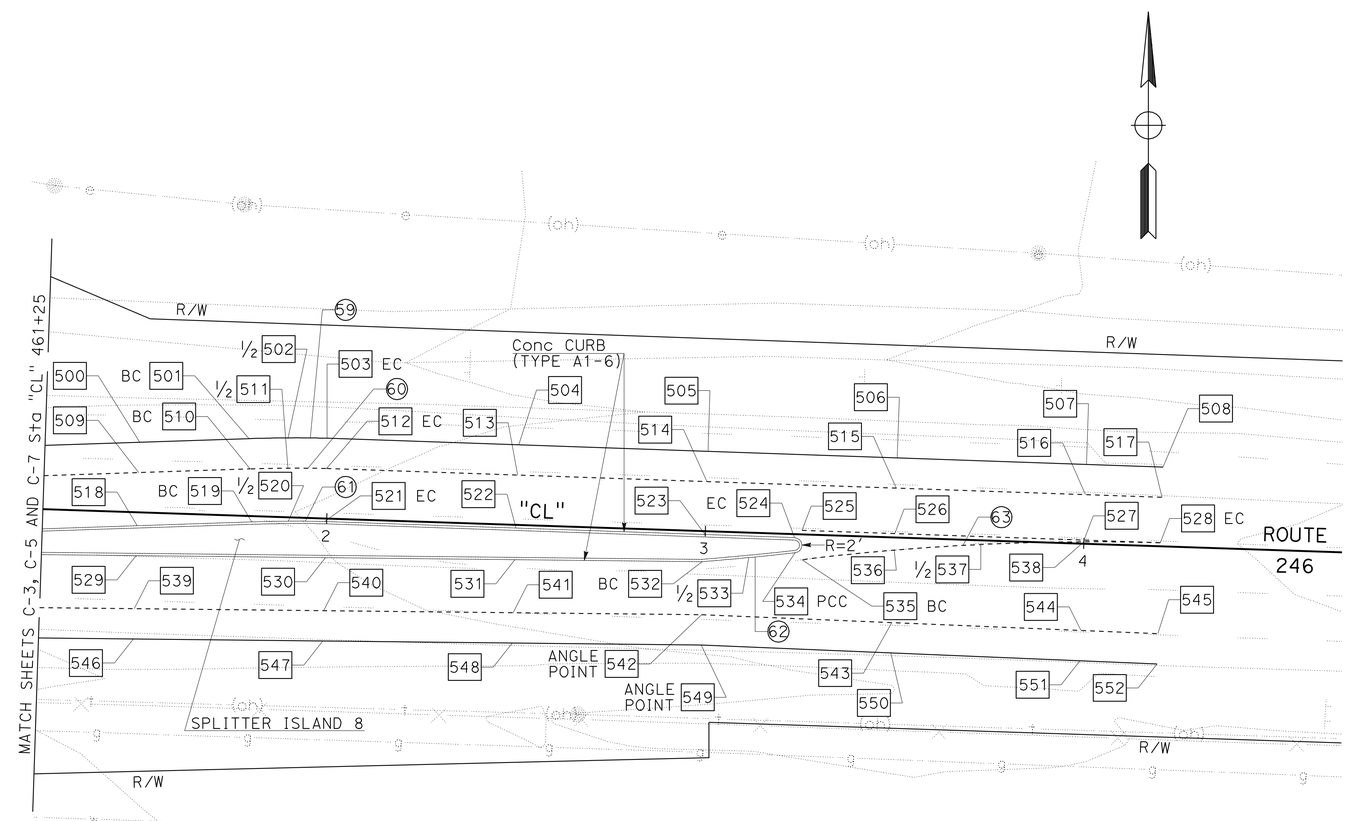

CONSTRUCTION DETAILS
EP, ETW AND SPLITTER ISLAND

SCALE: 1" = 20′

C-8

STATE OF CALIFORNIA - DEPARTMENT OF TRANSPORTATION
Caltrans
DESIGN

FUNCTIONAL SUPERVISOR: S. M. WYATT
CALCULATED-DESIGNED BY: PAUL F. VALADAO
CHECKED BY: STEVE M. WYATT
REVISED BY
DATE REVISED

LAST REVISION 01-13-11
DATE PLOTTED => 04-APR-2011
TIME PLOTTED => 06:45

Dist	COUNTY	ROUTE	POST MILES TOTAL PROJECT	SHEET No.	TOTAL SHEETS
05	SB	246	12.2	15	93

REGISTERED CIVIL ENGINEER 1-13-11 DATE

3-28-11
PLANS APPROVAL DATE

REGISTERED PROFESSIONAL ENGINEER P.F.VALADAO No. 63987 Exp. 9-30-12 CIVIL STATE OF CALIFORNIA

THE STATE OF CALIFORNIA OR ITS OFFICERS OR AGENTS SHALL NOT BE RESPONSIBLE FOR THE ACCURACY OR COMPLETENESS OF SCANNED COPIES OF THIS PLAN SHEET.

NOTE:

SEE SHEETS C-3 AND C-4 FOR FL OF GUTTER CURVE DATA NOT SHOWN.

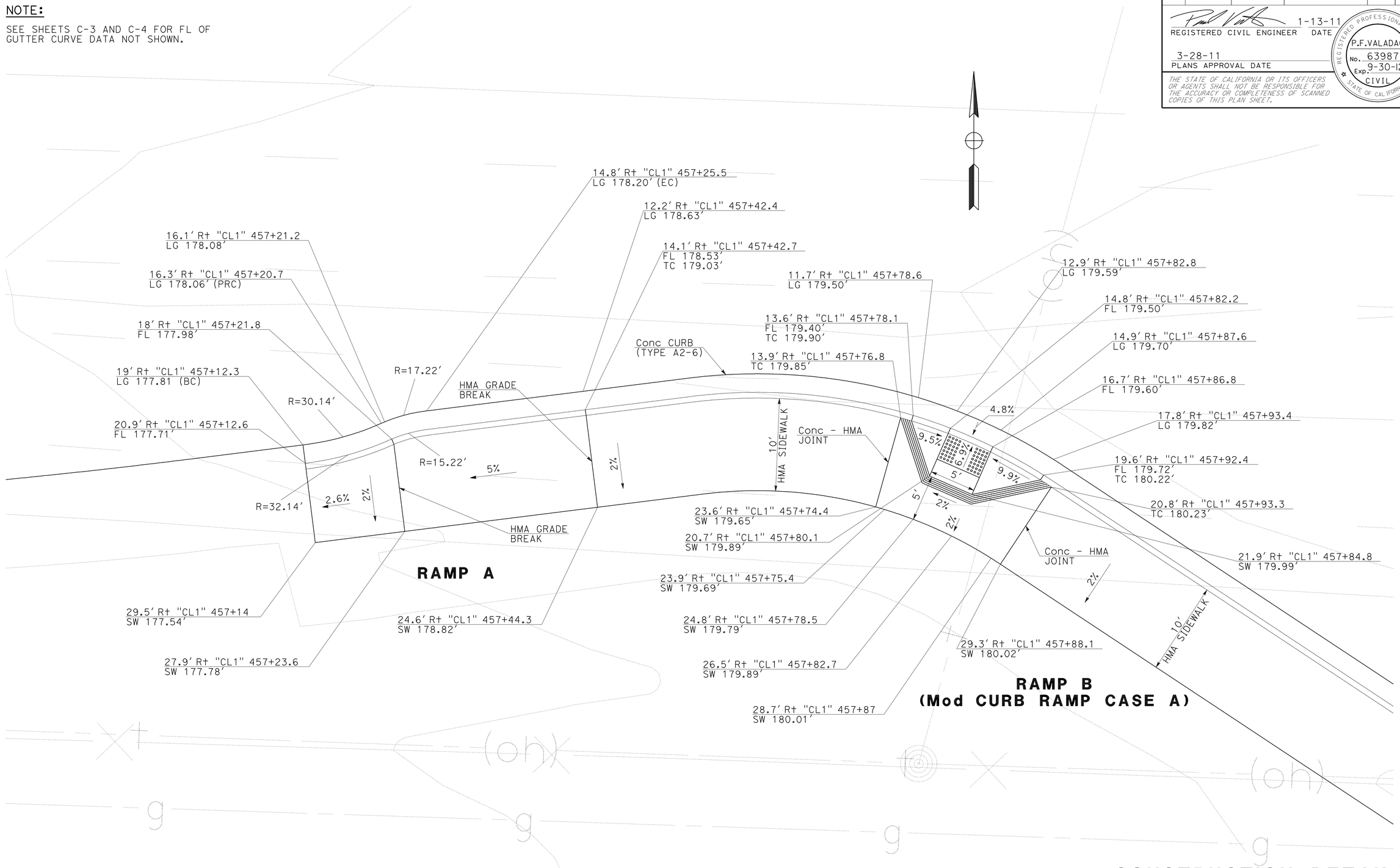

CONSTRUCTION DETAILS

CURB, GUTTER AND RAMPS

SCALE: 1" = 5′

C-9

STATE OF CALIFORNIA - DEPARTMENT OF TRANSPORTATION

Caltrans® **DESIGN**

FUNCTIONAL SUPERVISOR: S. M. WYATT

CALCULATED-DESIGNED BY: PAUL F. VALADAO

CHECKED BY: STEVE M. WYATT

REVISED BY

DATE REVISED

LAST REVISION 01-13-11

DATE PLOTTED => 04-APR-2011
TIME PLOTTED => 06:45

Dist	COUNTY	ROUTE	POST MILES TOTAL PROJECT	SHEET No.	TOTAL SHEETS
05	SB	246	12.2	16	93

REGISTERED CIVIL ENGINEER 1-13-11 DATE

3-28-11
PLANS APPROVAL DATE

REGISTERED PROFESSIONAL ENGINEER P.F.VALADAO No. 63987 Exp. 9-30-12 CIVIL STATE OF CALIFORNIA

THE STATE OF CALIFORNIA OR ITS OFFICERS OR AGENTS SHALL NOT BE RESPONSIBLE FOR THE ACCURACY OR COMPLETENESS OF SCANNED COPIES OF THIS PLAN SHEET.

NOTE:

SEE SHEETS C-3 AND C-4 FOR FL OF GUTTER CURVE DATA NOT SHOWN.

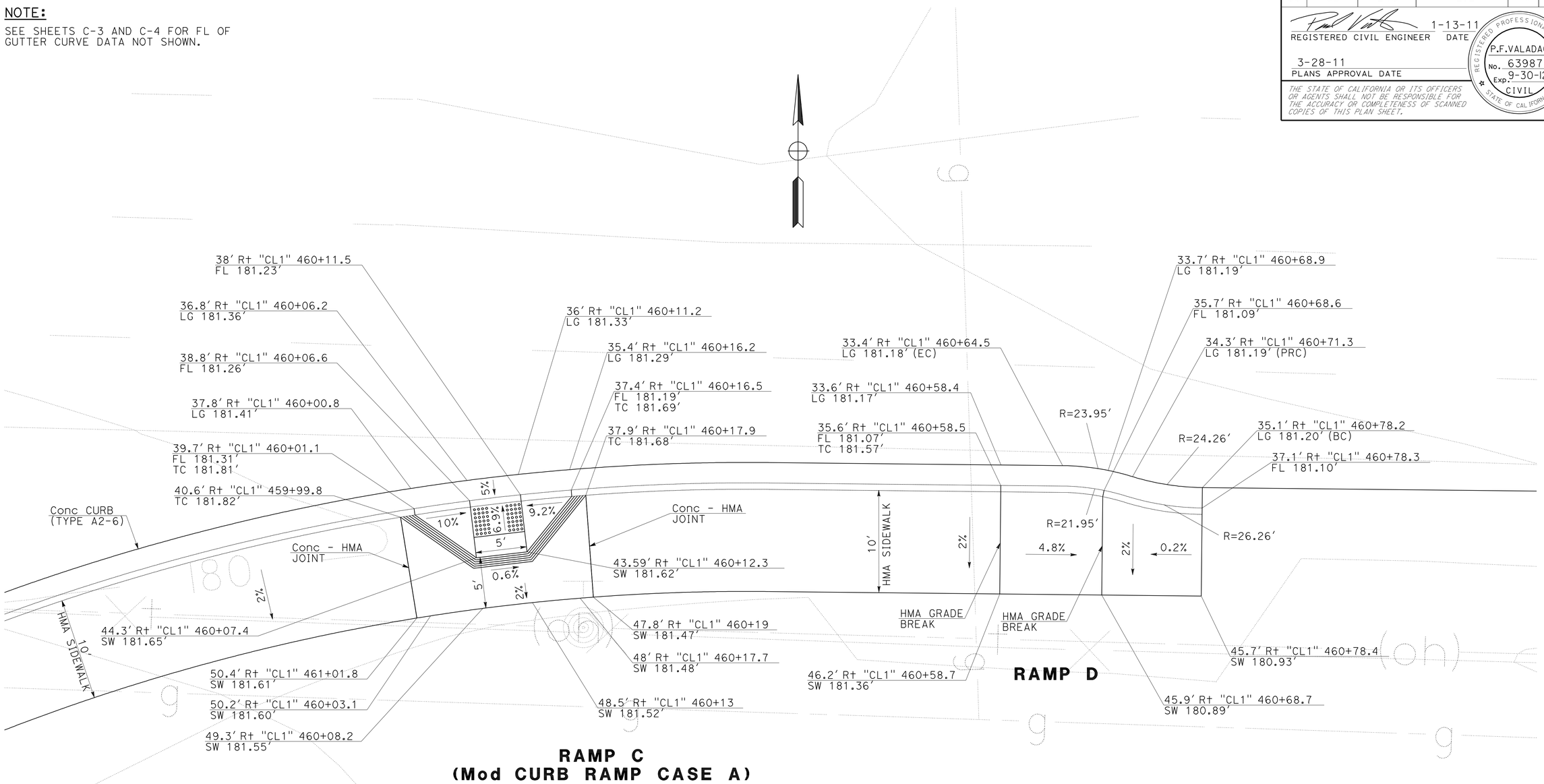

CONSTRUCTION DETAILS

CURB, GUTTER AND RAMPS

SCALE: 1" = 5'

C-10

STATE OF CALIFORNIA - DEPARTMENT OF TRANSPORTATION

Caltrans®

DESIGN

FUNCTIONAL SUPERVISOR: S. M. WYATT

CALCULATED-DESIGNED BY: PAUL F. VALADAO

CHECKED BY: STEVE M. WYATT

REVISED BY

DATE REVISED

LAST REVISION 01-11-13

DATE PLOTTED => 04-APR-2011

TIME PLOTTED => 06:45

Dist	COUNTY	ROUTE	POST MILES TOTAL PROJECT	SHEET No.	TOTAL SHEETS
05	SB	246	12.2	17	93

REGISTERED CIVIL ENGINEER 1-13-11 DATE

3-28-11
PLANS APPROVAL DATE

REGISTERED PROFESSIONAL ENGINEER P.F.VALADAO No. 63987 Exp. 9-30-12 CIVIL STATE OF CALIFORNIA

THE STATE OF CALIFORNIA OR ITS OFFICERS OR AGENTS SHALL NOT BE RESPONSIBLE FOR THE ACCURACY OR COMPLETENESS OF SCANNED COPIES OF THIS PLAN SHEET.

NOTE: SEE SHEETS C-3 AND C-4 FOR FL OF GUTTER CURVE DATA NOT SHOWN.

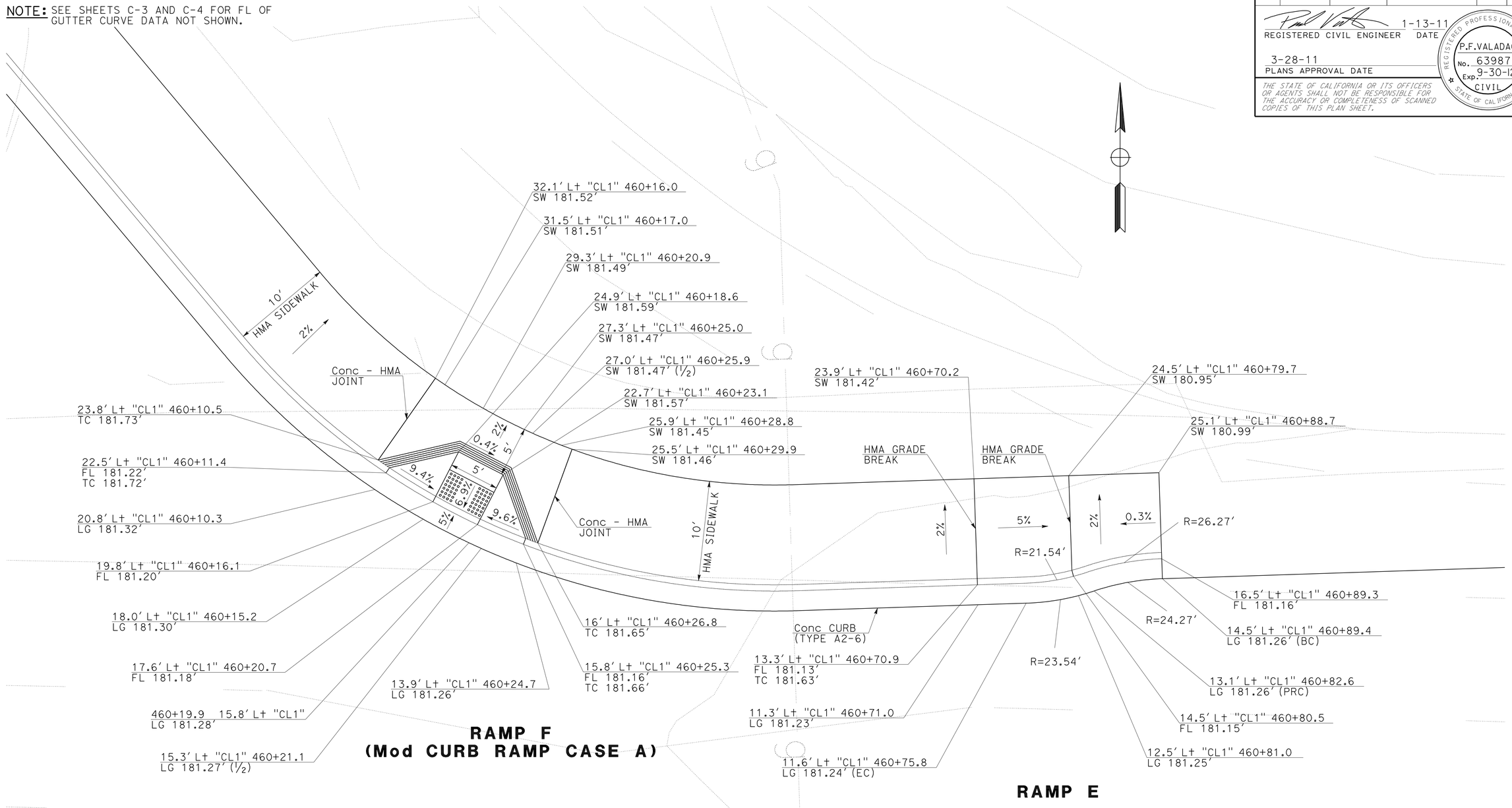

CONSTRUCTION DETAILS
CURB, GUTTER AND RAMPS

SCALE: 1" = 5'

C-11

STATE OF CALIFORNIA - DEPARTMENT OF TRANSPORTATION
Caltrans
DESIGN

FUNCTIONAL SUPERVISOR: S. M. WYATT
CALCULATED-DESIGNED BY: PAUL F. VALADAO
CHECKED BY: STEVE M. WYATT
REVISED BY
DATE REVISED

LAST REVISION 01-13-11
DATE PLOTTED => 04-APR-2011
TIME PLOTTED => 06:45

Dist	COUNTY	ROUTE	POST MILES TOTAL PROJECT	SHEET No.	TOTAL SHEETS
05	SB	246	12.2	18	93

REGISTERED CIVIL ENGINEER 1-13-11 DATE

3-28-11
PLANS APPROVAL DATE

REGISTERED PROFESSIONAL ENGINEER
P.F. VALADAO
No. 63987
Exp. 9-30-12
CIVIL
STATE OF CALIFORNIA

THE STATE OF CALIFORNIA OR ITS OFFICERS OR AGENTS SHALL NOT BE RESPONSIBLE FOR THE ACCURACY OR COMPLETENESS OF SCANNED COPIES OF THIS PLAN SHEET.

NOTE:

SEE SHEETS C-3 AND C-4 FOR FL OF GUTTER CURVE DATA NOT SHOWN.

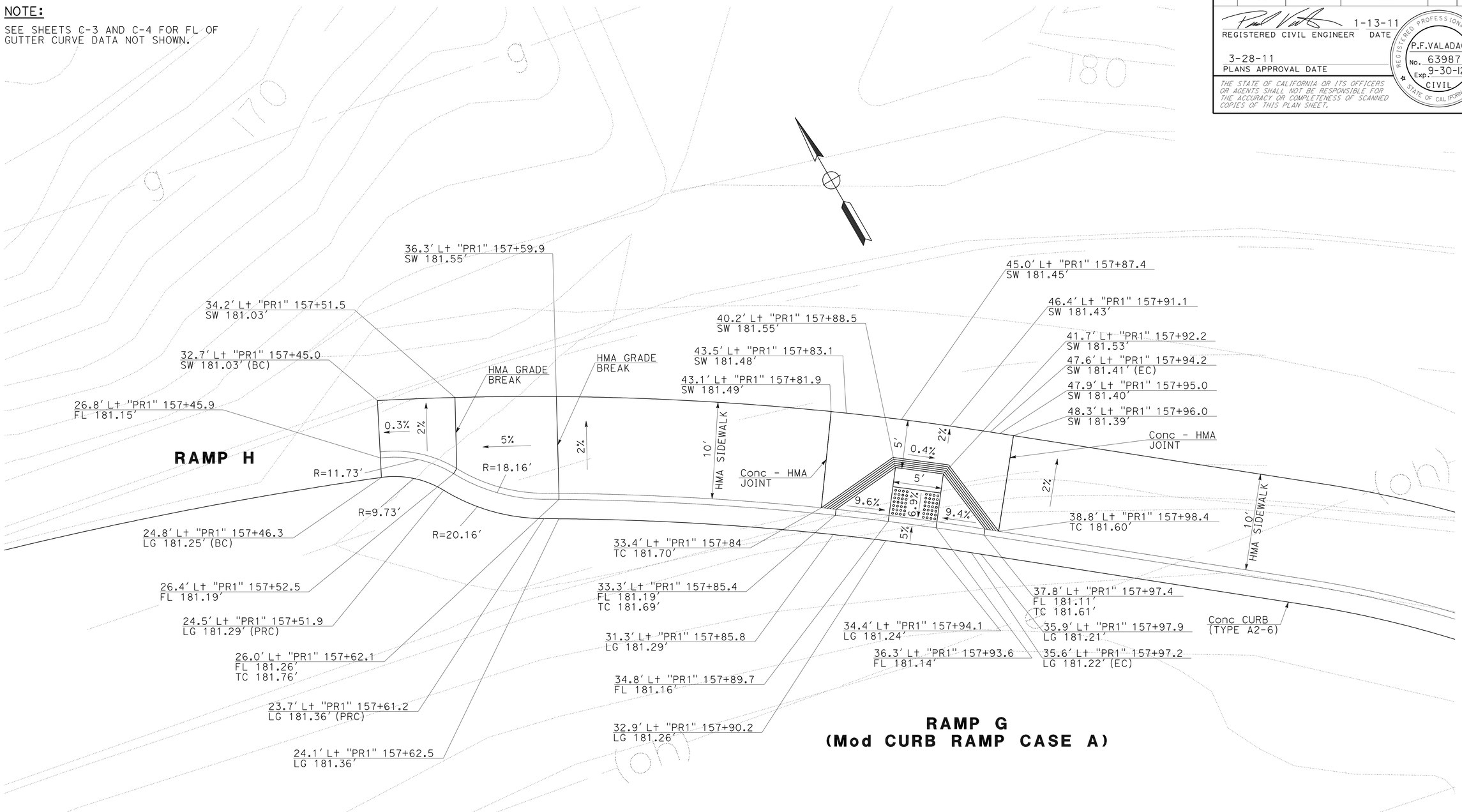

CONSTRUCTION DETAILS

CURB, GUTTER AND RAMPS

SCALE: 1" = 5'

C-12

STATE OF CALIFORNIA - DEPARTMENT OF TRANSPORTATION
Caltrans®
DESIGN

FUNCTIONAL SUPERVISOR: S. M. WYATT

CALCULATED-DESIGNED BY: PAUL F. VALADAO
CHECKED BY: STEVE M. WYATT

REVISED BY
DATE REVISED

LAST REVISION 01-13-11
DATE PLOTTED => 04-APR-2011
TIME PLOTTED => 06:45

Dist	COUNTY	ROUTE	POST MILES TOTAL PROJECT	SHEET No.	TOTAL SHEETS
05	SB	246	12.2	19	93

REGISTERED CIVIL ENGINEER 1-13-11 DATE

3-28-11
PLANS APPROVAL DATE

REGISTERED PROFESSIONAL ENGINEER P.F. VALADAO No. 63987 Exp. 9-30-12 CIVIL STATE OF CALIFORNIA

THE STATE OF CALIFORNIA OR ITS OFFICERS OR AGENTS SHALL NOT BE RESPONSIBLE FOR THE ACCURACY OR COMPLETENESS OF SCANNED COPIES OF THIS PLAN SHEET.

NOTE: SEE SHEETS C-3 AND C-4 FOR FL OF GUTTER CURVE DATA NOT SHOWN.

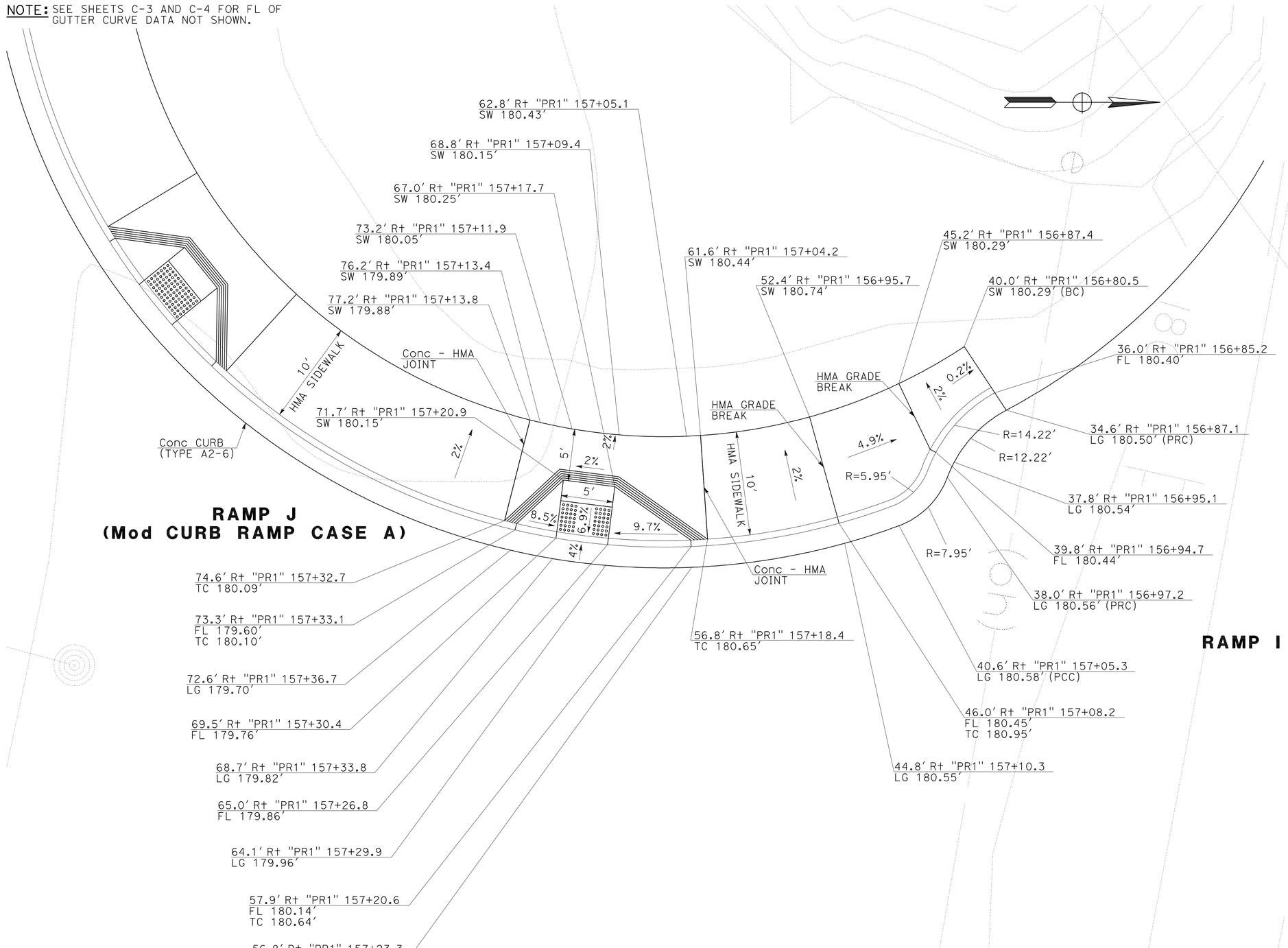

CONSTRUCTION DETAILS

CURB, GUTTER AND RAMPS

SCALE: 1" = 5'

C-13

STATE OF CALIFORNIA - DEPARTMENT OF TRANSPORTATION
Caltrans
DESIGN

FUNCTIONAL SUPERVISOR: S. M. WYATT
CALCULATED-DESIGNED BY: PAUL F. VALADAO
CHECKED BY: STEVE M. WYATT
REVISED BY
DATE REVISED

LAST REVISION 01-13-11
DATE PLOTTED => 04-APR-2011
TIME PLOTTED => 06:45

Dist	COUNTY	ROUTE	POST MILES TOTAL PROJECT	SHEET No.	TOTAL SHEETS
05	SB	246	12.2	20	93

REGISTERED CIVIL ENGINEER 1-13-11 DATE

3-28-11
PLANS APPROVAL DATE

REGISTERED PROFESSIONAL ENGINEER P.F.VALADAO No. 63987 Exp. 9-30-12 CIVIL STATE OF CALIFORNIA

THE STATE OF CALIFORNIA OR ITS OFFICERS OR AGENTS SHALL NOT BE RESPONSIBLE FOR THE ACCURACY OR COMPLETENESS OF SCANNED COPIES OF THIS PLAN SHEET.

NOTE: SEE SHEETS C-3 AND C-4 FOR FL OF GUTTER CURVE DATA NOT SHOWN.

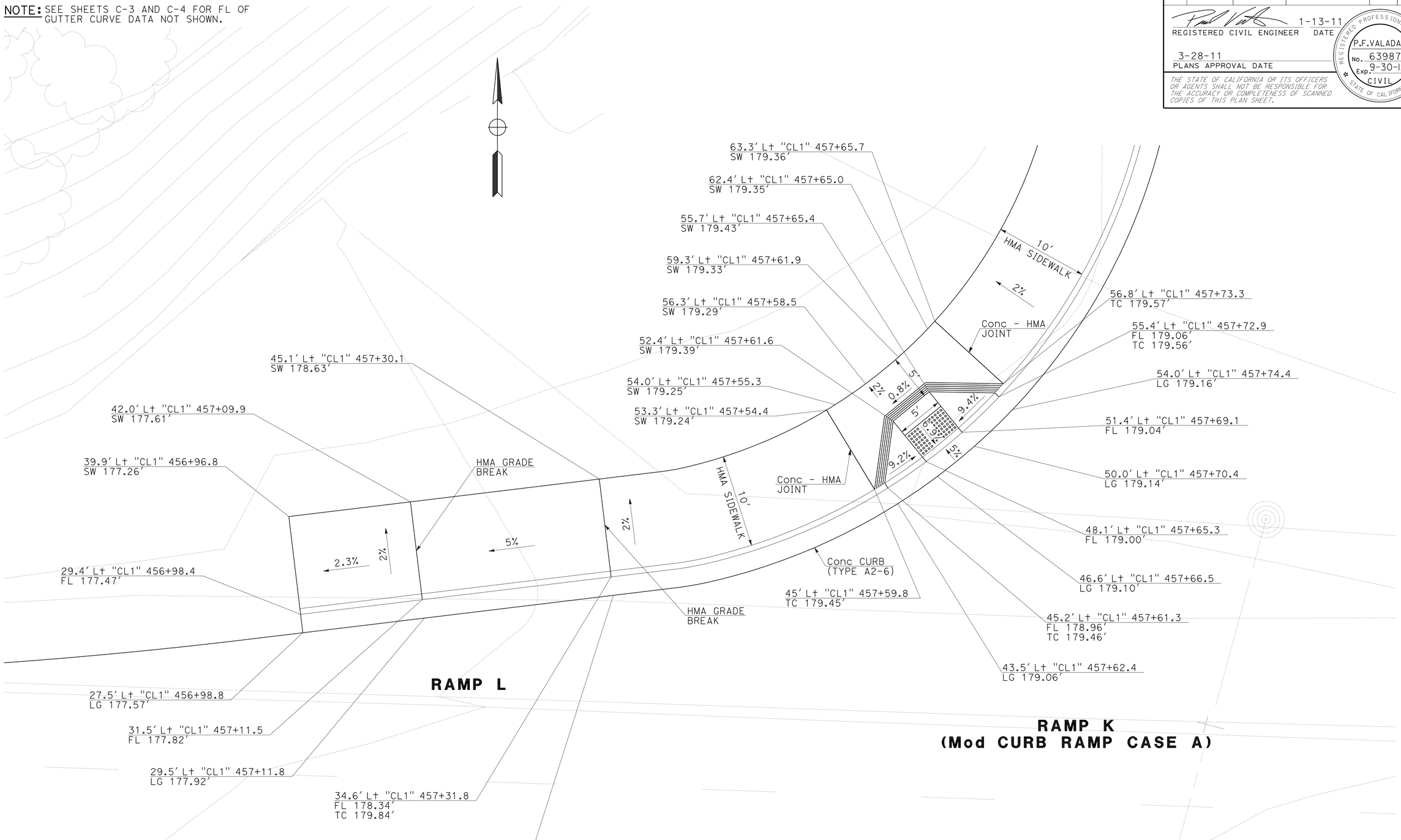

CONSTRUCTION DETAILS
CURB, GUTTER AND RAMPS

SCALE: 1" = 5'

C-14

STATE OF CALIFORNIA - DEPARTMENT OF TRANSPORTATION
Caltrans®
DESIGN

FUNCTIONAL SUPERVISOR: S. M. WYATT

CALCULATED-DESIGNED BY: PAUL F. VALADAO
CHECKED BY: STEVE M. WYATT

REVISED BY
DATE REVISED

LAST REVISION 01-13-11
DATE PLOTTED => 04-APR-2011
TIME PLOTTED => 06:45

Dist	COUNTY	ROUTE	POST MILES TOTAL PROJECT	SHEET No.	TOTAL SHEETS
05	SB	246	12.2	21	93

LICENSED LANDSCAPE ARCHITECT

3-28-11
PLANS APPROVAL DATE

LICENSED LANDSCAPE ARCHITECT
PATRICK K. BOLGER
11-30-2012
1-13-11
STATE OF CALIFORNIA

THE STATE OF CALIFORNIA OR ITS OFFICERS OR AGENTS SHALL NOT BE RESPONSIBLE FOR THE ACCURACY OR COMPLETENESS OF SCANNED COPIES OF THIS PLAN SHEET.

NOTE:

FOR ACCURATE RIGHT OF WAY DATA, CONTACT RIGHT OF WAY ENGINEERING AT THE DISTRICT OFFICE.

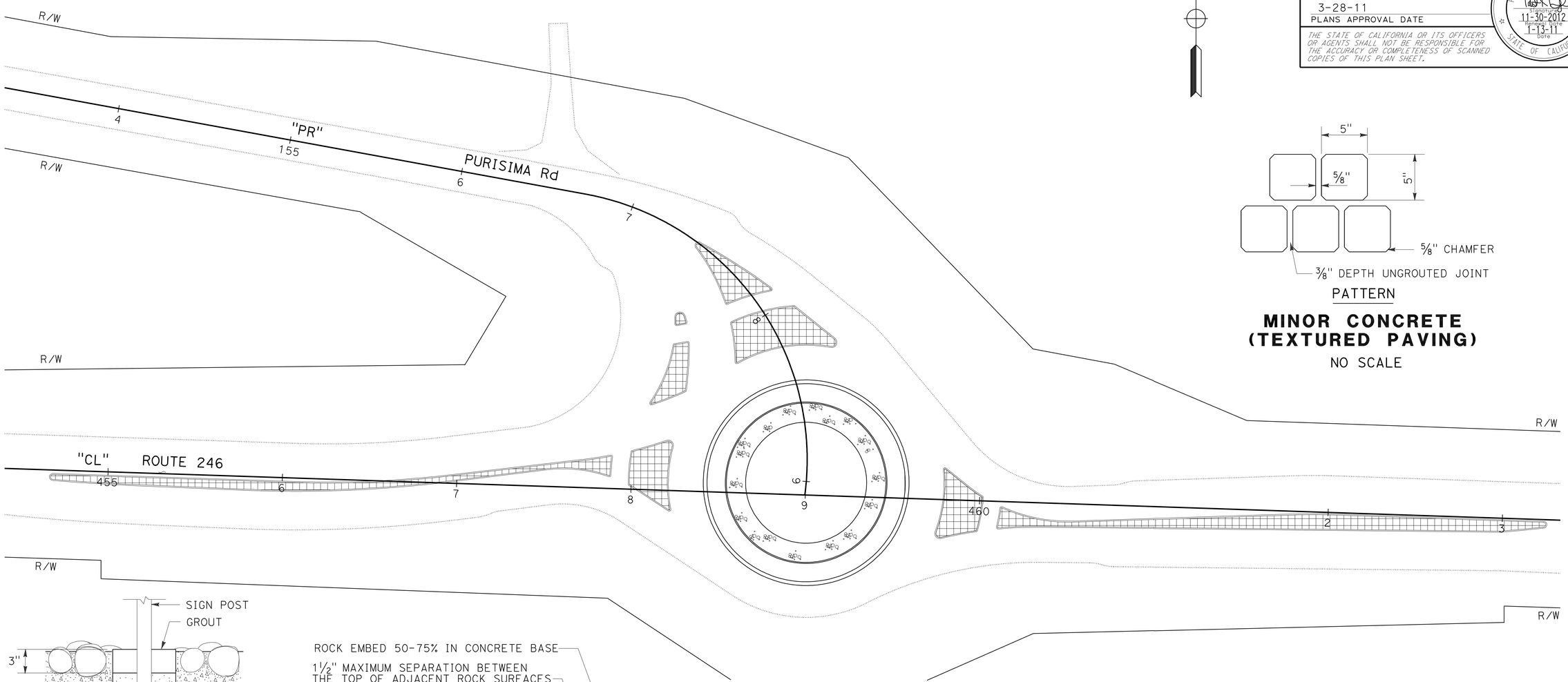

PATTERN

MINOR CONCRETE (TEXTURED PAVING)

NO SCALE

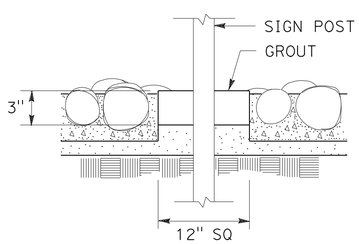

SECTION A-A

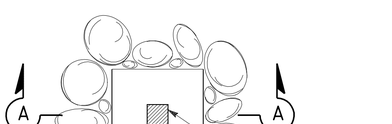

PLAN

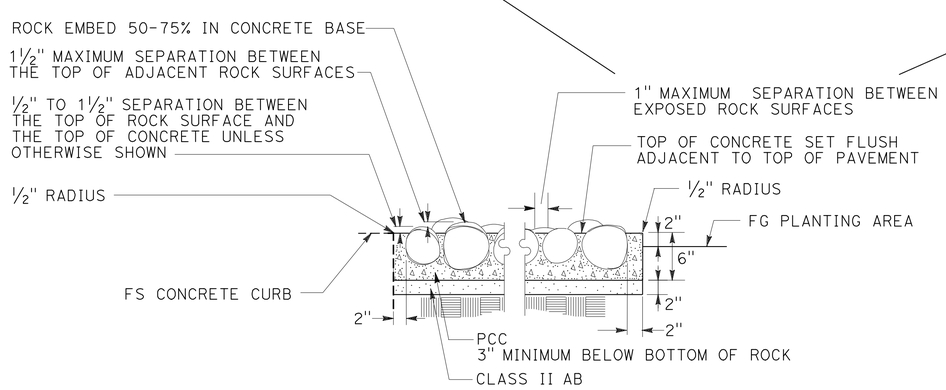

SECTION

ROCK BLANKET

NO SCALE

LEGEND:

MINOR CONCRETE (TEXTURED PAVING)

ROCK BLANKET

CONSTRUCTION DETAILS
AESTHETIC TREATMENT

SCALE: 1" = 30'

C-15

STATE OF CALIFORNIA - DEPARTMENT OF TRANSPORTATION
Caltrans® LANDSCAPE ARCHITECTURE

SENIOR LANDSCAPE ARCHITECT: DENNIS REEVES

CALCULATED-DESIGNED BY: PATRICK BOLGER
CHECKED BY: KRISTEN LANGAGER

REVISED BY
DATE REVISED

LAST REVISION 01-13-11
DATE PLOTTED => 04-APR-2011
TIME PLOTTED => 06:46

Dist	COUNTY	ROUTE	POST MILES TOTAL PROJECT	SHEET No.	TOTAL SHEETS
05	SB	246	12.2	22	93

1-13-11
REGISTERED CIVIL ENGINEER DATE

3-28-11
PLANS APPROVAL DATE

REGISTERED PROFESSIONAL ENGINEER
P.F. VALADAO
No. 63987
Exp. 9-30-12
CIVIL
STATE OF CALIFORNIA

THE STATE OF CALIFORNIA OR ITS OFFICERS OR AGENTS SHALL NOT BE RESPONSIBLE FOR THE ACCURACY OR COMPLETENESS OF SCANNED COPIES OF THIS PLAN SHEET.

NOTE:

FOR ACCURATE RIGHT OF WAY DATA, CONTACT RIGHT OF WAY ENGINEERING AT THE DISTRICT OFFICE.

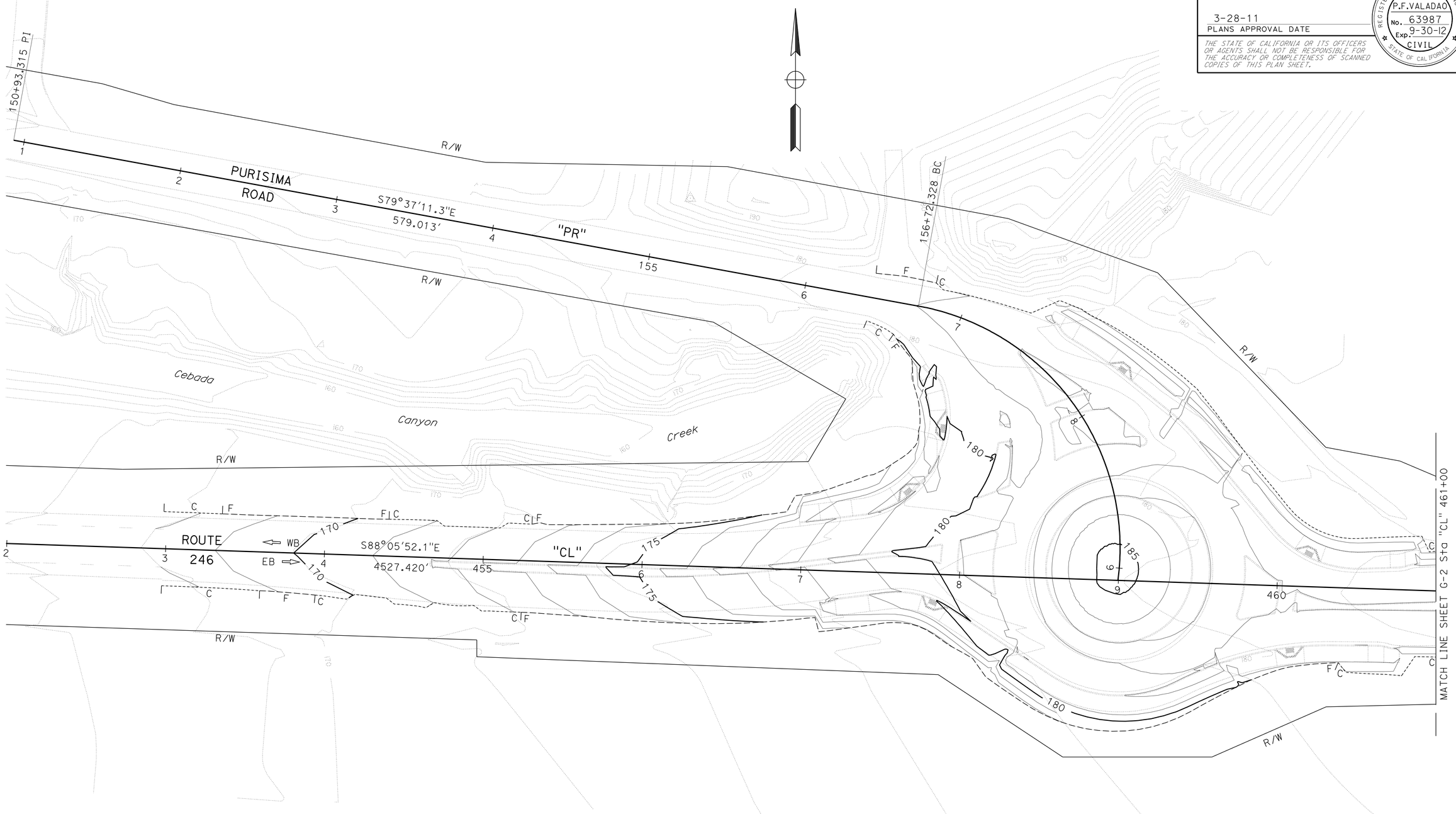

THIS PLAN ACCURATE FOR CONTOUR GRADING WORK ONLY.

CONTOUR GRADING

SCALE: 1" = 30' **G-1**

STATE OF CALIFORNIA - DEPARTMENT OF TRANSPORTATION
Caltrans
DESIGN

FUNCTIONAL SUPERVISOR: S. M. WYATT
CALCULATED-DESIGNED BY: PAUL F. VALADAO
CHECKED BY: STEVE M. WYATT
REVISED BY
DATE REVISED

LAST REVISION 01-13-11
DATE PLOTTED => 04-APR-2011
TIME PLOTTED => 06:46

Dist	COUNTY	ROUTE	POST MILES TOTAL PROJECT	SHEET No.	TOTAL SHEETS
05	SB	246	12.2	23	93

REGISTERED CIVIL ENGINEER 1-13-11 DATE

3-28-11
PLANS APPROVAL DATE

REGISTERED PROFESSIONAL ENGINEER
P.F. VALADAO
No. 63987
Exp. 9-30-12
CIVIL
STATE OF CALIFORNIA

THE STATE OF CALIFORNIA OR ITS OFFICERS OR AGENTS SHALL NOT BE RESPONSIBLE FOR THE ACCURACY OR COMPLETENESS OF SCANNED COPIES OF THIS PLAN SHEET.

NOTE:

FOR ACCURATE RIGHT OF WAY DATA, CONTACT RIGHT OF WAY ENGINEERING AT THE DISTRICT OFFICE.

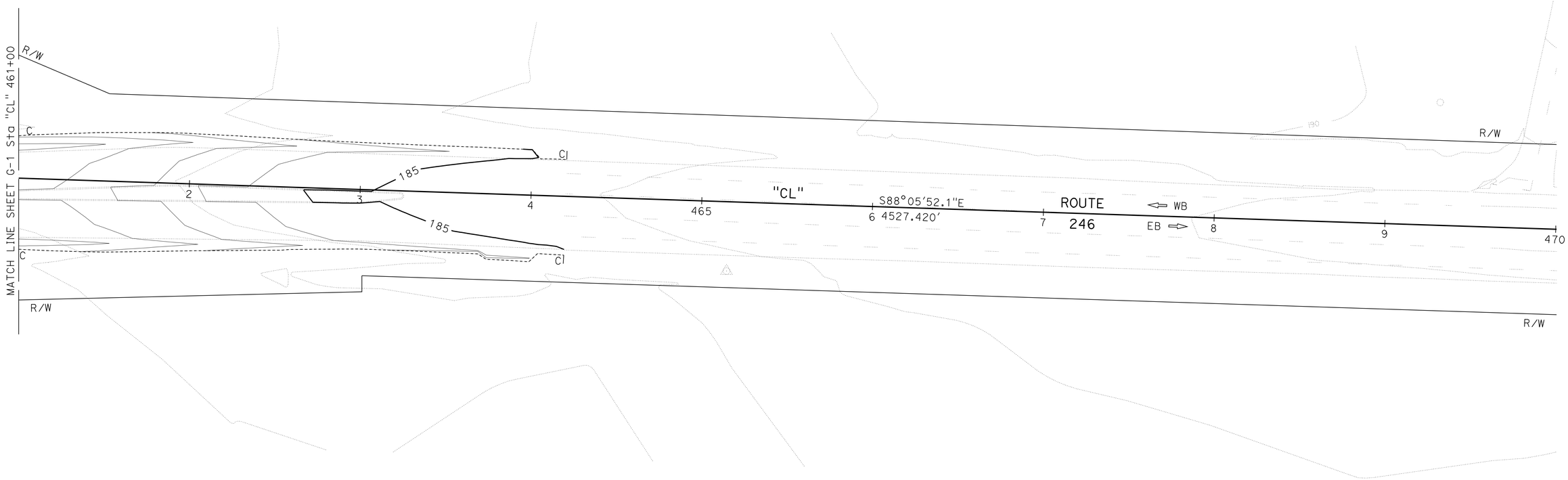

THIS PLAN ACCURATE FOR CONTOUR GRADING ONLY.

CONTOUR GRADING

SCALE: 1" = 30'

G-2

STATE OF CALIFORNIA - DEPARTMENT OF TRANSPORTATION

Caltrans

DESIGN

FUNCTIONAL SUPERVISOR: S. M. WYATT

CALCULATED-DESIGNED BY: PAUL F. VALADAO

CHECKED BY: STEVE M. WYATT

REVISED BY

DATE REVISED

LAST REVISION 01-13-11

DATE PLOTTED => 04-APR-2011

TIME PLOTTED => 06:46

Dist	COUNTY	ROUTE	POST MILES TOTAL PROJECT	SHEET No.	TOTAL SHEETS
05	SB	246	12.2	24	93

REGISTERED CIVIL ENGINEER 1-13-11 DATE

3-28-11
PLANS APPROVAL DATE

REGISTERED PROFESSIONAL ENGINEER P.F. VALADAO No. 63987 Exp. 9-30-12 CIVIL STATE OF CALIFORNIA

THE STATE OF CALIFORNIA OR ITS OFFICERS OR AGENTS SHALL NOT BE RESPONSIBLE FOR THE ACCURACY OR COMPLETENESS OF SCANNED COPIES OF THIS PLAN SHEET.

NOTE:

FOR ACCURATE RIGHT OF WAY DATA, CONTACT RIGHT OF WAY ENGINEERING AT THE DISTRICT OFFICE.

LEGEND:

- (X) DRAINAGE SYSTEM No.
- (X) DRAINAGE UNIT No.
- RSP (FACING, METHOD B)
- LG LIP OF GUTTER

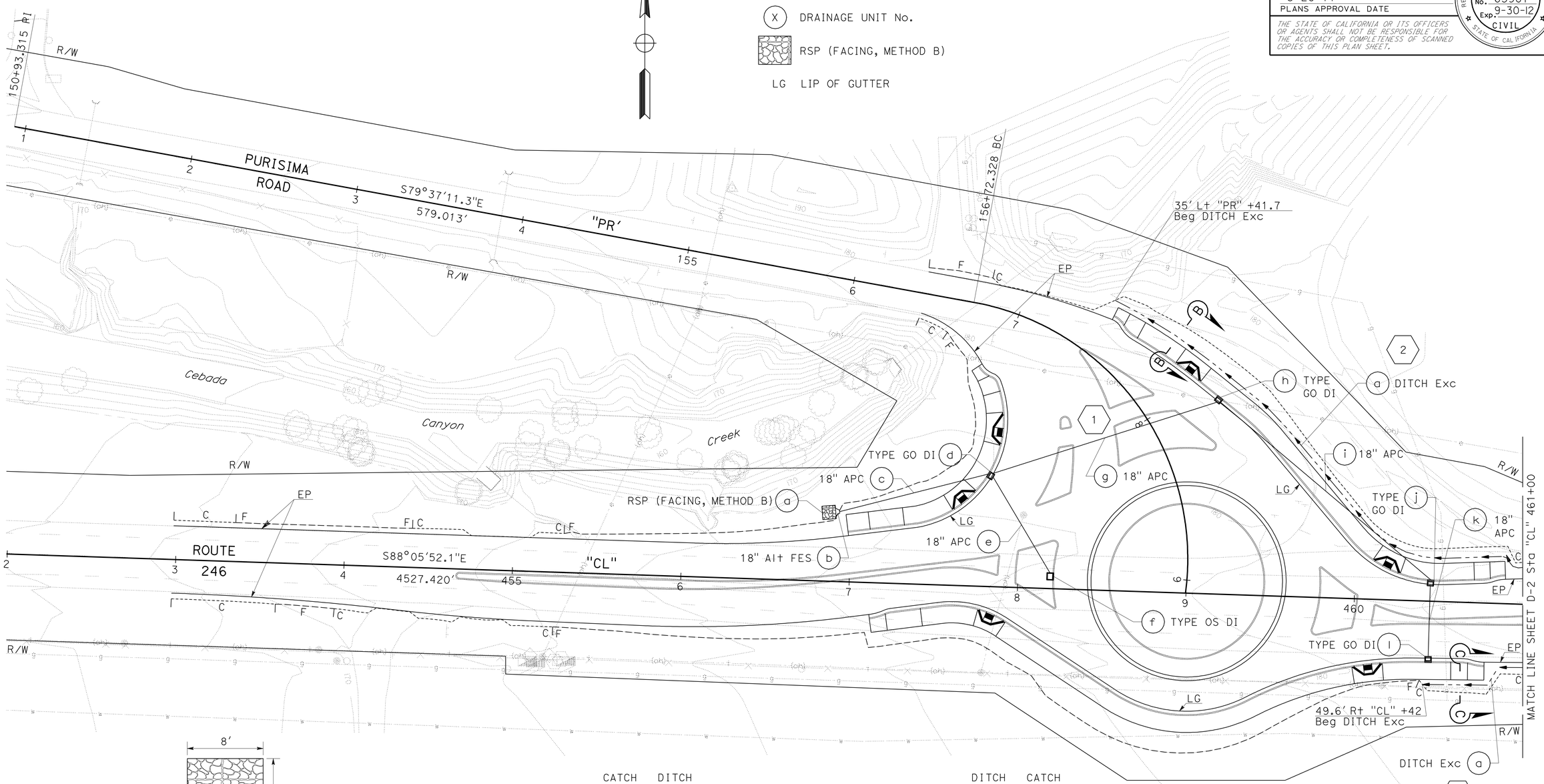

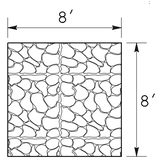

(1) (a)

RSP (FACING, METHOD B)
(NOTE: PLACE RSP 6" THICK WITH RSP FABRIC)
NO SCALE

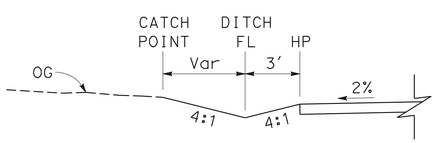

SECTION B-B
NO SCALE

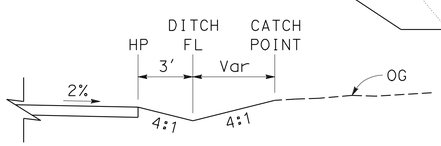

SECTION C-C
NO SCALE

THIS PLAN ACCURATE FOR DRAINAGE WORK ONLY.

DRAINAGE PLAN

SCALE: 1" = 30' **D-1**

STATE OF CALIFORNIA - DEPARTMENT OF TRANSPORTATION
Caltrans® **DESIGN**

FUNCTIONAL SUPERVISOR: S. M. WYATT
CALCULATED-DESIGNED BY: PAUL F. VALADAO
CHECKED BY: STEVE M. WYATT
REVISED BY
DATE REVISED

LAST REVISION 01-13-11
DATE PLOTTED => 04-APR-2011
TIME PLOTTED => 06:46

Dist	COUNTY	ROUTE	POST MILES TOTAL PROJECT	SHEET No.	TOTAL SHEETS
05	SB	246	12.2	25	93

REGISTERED CIVIL ENGINEER 1-13-11 DATE

3-28-11
PLANS APPROVAL DATE

REGISTERED PROFESSIONAL ENGINEER P.F.VALADAO No. 63987 Exp. 9-30-12 CIVIL STATE OF CALIFORNIA

THE STATE OF CALIFORNIA OR ITS OFFICERS OR AGENTS SHALL NOT BE RESPONSIBLE FOR THE ACCURACY OR COMPLETENESS OF SCANNED COPIES OF THIS PLAN SHEET.

NOTE:

FOR ACCURATE RIGHT OF WAY DATA, CONTACT RIGHT OF WAY ENGINEERING AT THE DISTRICT OFFICE.

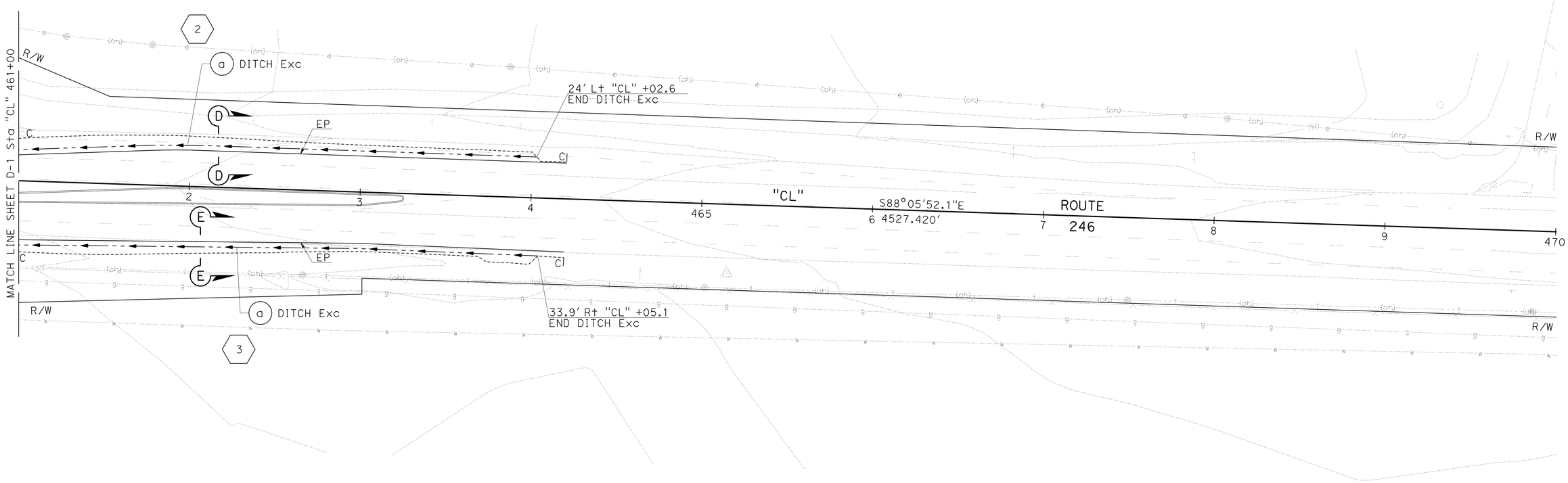

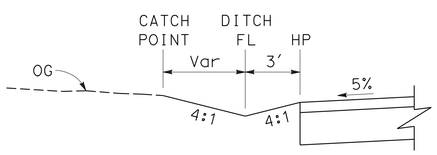

SECTION D-D
NO SCALE

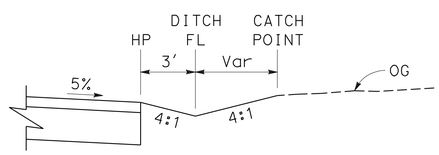

SECTION E-E
NO SCALE

THIS PLAN ACCURATE FOR DRAINAGE WORK ONLY.

DRAINAGE PLAN

SCALE: 1" = 30' **D-2**

STATE OF CALIFORNIA - DEPARTMENT OF TRANSPORTATION
Caltrans
DESIGN

FUNCTIONAL SUPERVISOR: S. M. WYATT
CALCULATED-DESIGNED BY: PAUL F. VALADAO
CHECKED BY: STEVE M. WYATT
REVISED BY
DATE REVISED

LAST REVISION 01-13-11
DATE PLOTTED => 04-APR-2011
TIME PLOTTED => 06:46

Dist	COUNTY	ROUTE	POST MILES TOTAL PROJECT	SHEET No.	TOTAL SHEETS
05	SB	246	12.2	26	93

REGISTERED CIVIL ENGINEER 1-13-11 DATE

3-28-11
PLANS APPROVAL DATE

REGISTERED PROFESSIONAL ENGINEER P.F.VALADAO No. 63987 Exp. 9-30-12 CIVIL STATE OF CALIFORNIA

THE STATE OF CALIFORNIA OR ITS OFFICERS OR AGENTS SHALL NOT BE RESPONSIBLE FOR THE ACCURACY OR COMPLETENESS OF SCANNED COPIES OF THIS PLAN SHEET.

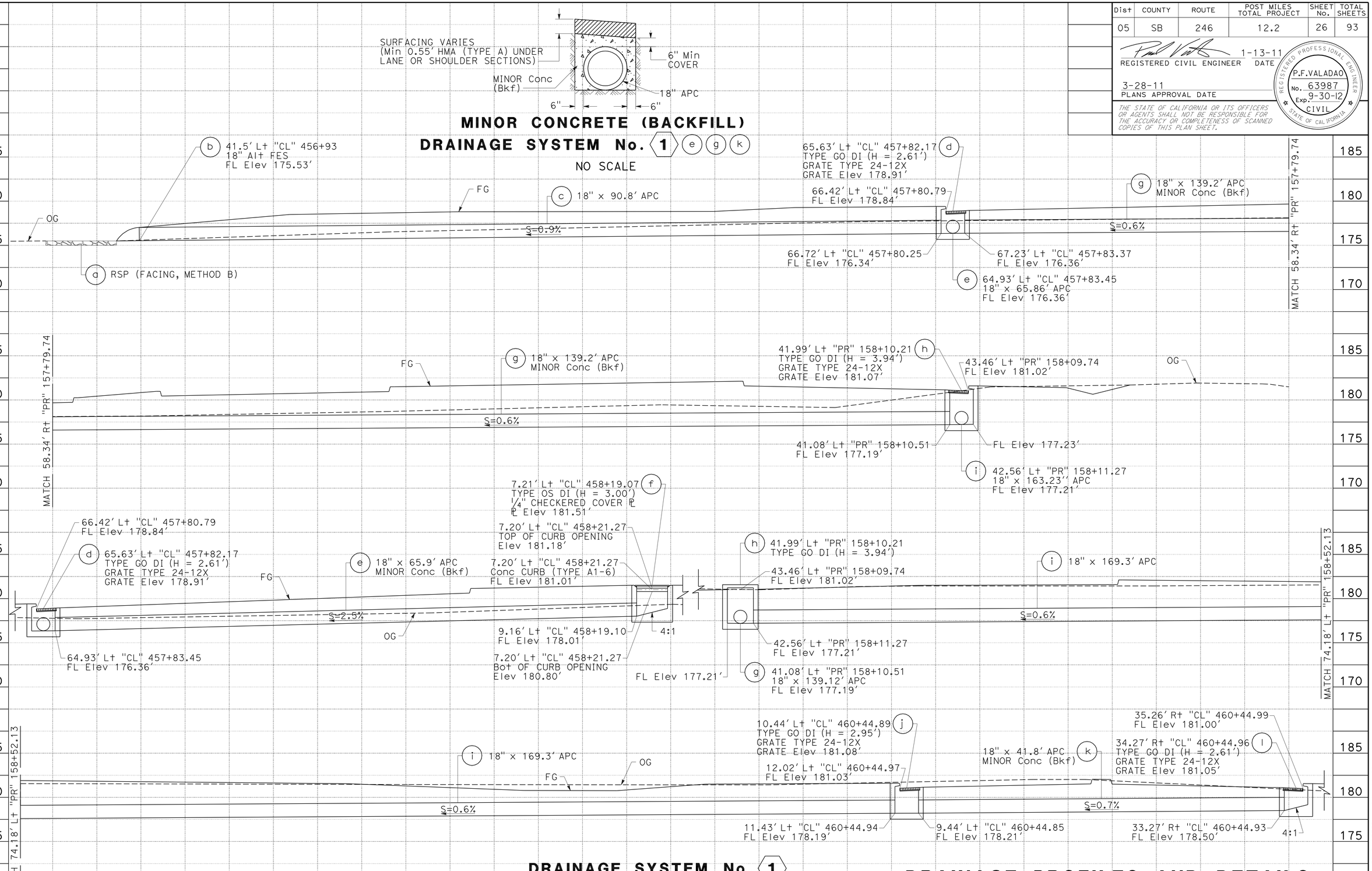

DRAINAGE SYSTEM No. 1

DRAINAGE PROFILES AND DETAILS

SCALE: Horiz 1"=5'
Vert 1"=5'

DP-1

STATE OF CALIFORNIA - DEPARTMENT OF TRANSPORTATION
DESIGN
Caltrans

FUNCTIONAL SUPERVISOR: S. M. WYATT
CALCULATED-DESIGNED BY: PAUL F. VALADAO
CHECKED BY: STEVE M. WYATT
REVISED BY / DATE REVISED

LAST REVISION 01-13-11
DATE PLOTTED => 04-APR-2011
TIME PLOTTED => 06:46

Dist	COUNTY	ROUTE	POST MILES TOTAL PROJECT	SHEET No.	TOTAL SHEETS
05	SB	246	12.2	27	93

1-13-11
REGISTERED CIVIL ENGINEER DATE

3-28-11
PLANS APPROVAL DATE

REGISTERED PROFESSIONAL ENGINEER
P.F. VALADAO
No. 63987
Exp. 9-30-12
CIVIL
STATE OF CALIFORNIA

THE STATE OF CALIFORNIA OR ITS OFFICERS OR AGENTS SHALL NOT BE RESPONSIBLE FOR THE ACCURACY OR COMPLETENESS OF SCANNED COPIES OF THIS PLAN SHEET.

NOTE:
1. ALL JOINTS ARE STANDARD JOINT TYPE.

APC ALLOWABLE PIPE MATERIAL

TYPE	Min THICKNESS/CLASS
CSP	0.064 INCHES
PLASTIC	SMOOTH INTERIOR
RCP	SEE STANDARD Spec

DRAINAGE QUANTITIES

PLAN SHEET No.	DRAINAGE SYSTEM No. ⬡	DRAINAGE UNIT No. ○	DITCH EXCAVATION CY	(N) DRAINAGE INLET EA	(N) HEIGHT OF INLET "H" FT	MINOR CONCRETE (MINOR STRUCTURE) CY	MINOR CONCRETE (BACKFILL) CY	18" ALTERNATIVE PIPE CULVERT LF	DRAINAGE INLET MARKER EA	18" ALTERNATIVE FLARED END SECTION EA	ROCK SLOPE PROTECTION (FACING, METHOD B) CY	(N) COVER PLATE EA	(N) FRAME AND GRATE TYPE 24-12X EA	MISCELLANEOUS IRON AND STEEL LB	DESCRIPTION	STATION	PLAN SHEET No.	DRAINAGE SYSTEM No. ⬡	DRAINAGE UNIT No. ○
D-1	1	a									1.19				RSP (FACING, METHOD B), 8' x 8' x 6"	42.63' Lt "CL" 456+87.97	D-1	1	a
		b								1					18" Alt FES, FL Elev 175.53'	41.5' Lt "CL" 456+93			b
		c						90.8							18" APC	41.5' Lt "CL" 456+93 TO 66.72' Lt "CL" 457+80.25			c
		d		1	2.61	1.24			1				1	239	TYPE GO, GRATE Elev 178.91'	65.63' Lt "CL" 457+82.17			d
		e					8.6	65.9							18" APC WITH MINOR CONCRETE (BACKFILL)	64.93' Lt "CL" 457+83.45 TO 9.16' Lt "CL" 458+19.10			e
		f		1	3.00	1.41			1			1		174	TYPE OS, PLATE Elev 181.51'	7.21' Lt "CL" 458+19.07			f
		g					18.1	139.2							18" APC WITH MINOR CONCRETE (BACKFILL)	67.23' Lt "CL" 457+83.37 TO 41.08' Lt "PR" 158+10.51			g
		h		1	3.94	1.47			1				1	239	TYPE GO, GRATE Elev 181.07'	41.99' Lt "PR" 158+10.21			h
		i						169.3							18" APC	42.56' Lt "PR" 158+11.27 TO 11.43' Lt "CL" 460+44.94			i
		j		1	2.95	1.24			1				1	239	TYPE GO, GRATE Elev 181.08'	10.44' Lt "CL" 460+44.89			j
		k					5.5	41.8							18" APC WITH MINOR CONCRETE (BACKFILL)	9.44' Lt "CL" 460+44.85 TO 33.27' Rt "CL" 460+44.93			k
D-1	1	l		1	2.61	1.24			1				1	239	TYPE GO, GRATE Elev 181.05'	34.27' Rt "CL" 460+44.96	D-1	1	l
D-1,2	2	a	113												GRADED ROADSIDE DITCH	35' Lt "PR" 157+41.7 TO 24' Lt "CL" 464+02.6	D-1,2	2	a
D-1,2	3	a	50												GRADED ROADSIDE DITCH	49.6' Rt "CL" 460+42 TO 33.9' Rt "CL" 464+05.1	D-1,2	3	a
SHEET TOTAL			163	5		6.60	32.2	507	5	1	1.19	1	4	1130					

(N) NOT A SEPARATE PAY ITEM, FOR INFORMATION ONLY.

DRAINAGE QUANTITES
DQ-1

STATE OF CALIFORNIA - DEPARTMENT OF TRANSPORTATION
Caltrans
DESIGN

FUNCTIONAL SUPERVISOR: S. M. WYATT
CALCULATED-DESIGNED BY: PAUL F. VALADAO
CHECKED BY: STEVE M. WYATT
REVISED BY
DATE REVISED

LAST REVISION 01-13-11
DATE PLOTTED => 04-APR-2011
TIME PLOTTED => 06:46

Dist	COUNTY	ROUTE	POST MILES TOTAL PROJECT	SHEET No.	TOTAL SHEETS
05	SB	246	12.2	28	93

1-13-11
REGISTERED CIVIL ENGINEER DATE

3-28-11
PLANS APPROVAL DATE

REGISTERED PROFESSIONAL ENGINEER P.F.VALADAO No. 63987 Exp. 9-30-12 CIVIL STATE OF CALIFORNIA

THE STATE OF CALIFORNIA OR ITS OFFICERS OR AGENTS SHALL NOT BE RESPONSIBLE FOR THE ACCURACY OR COMPLETENESS OF SCANNED COPIES OF THIS PLAN SHEET.

NOTES:
1. FOR ACCURATE RIGHT OF WAY DATA, CONTACT RIGHT OF WAY ENGINEERING AT THE DISTRICT OFFICE.
2. EXACT LOCATIONS OF EXISTING UTILITIES ARE UNKNOWN.
3. ELEVATIONS SHOWN REFER TO THE TOP OF PIPE OR CONDUIT, UNLESS OTHERWISE STATED.
4. EXCEPT WHERE POSITIVELY LOCATED, HIGH PRESSURE GAS LINE DEPTH EXCEEDS 42 INCHES BELOW PLANNED WORK.
5. UTILITY OWNERSHIP ON THIS PROJECT OR AS SHOWN:
   ELECTRICAL - PACIFIC GAS & ELECTRIC (PG&E)
   GAS - SOUTHERN CALIFORNIA GAS COMPANY
   TELEPHONE - VERIZON
   WATER - CENTRAL COAST WATER AUTHORITY

POSITIVE LOCATION INFORMATION

No. ⬠	LOCATION	Elev	METHOD
1	460+49.8 "CL" 52.1' Lt	177.58'	POTHOLING
2	460+55.6 "CL" 36.7' Rt	175.48'	POTHOLING

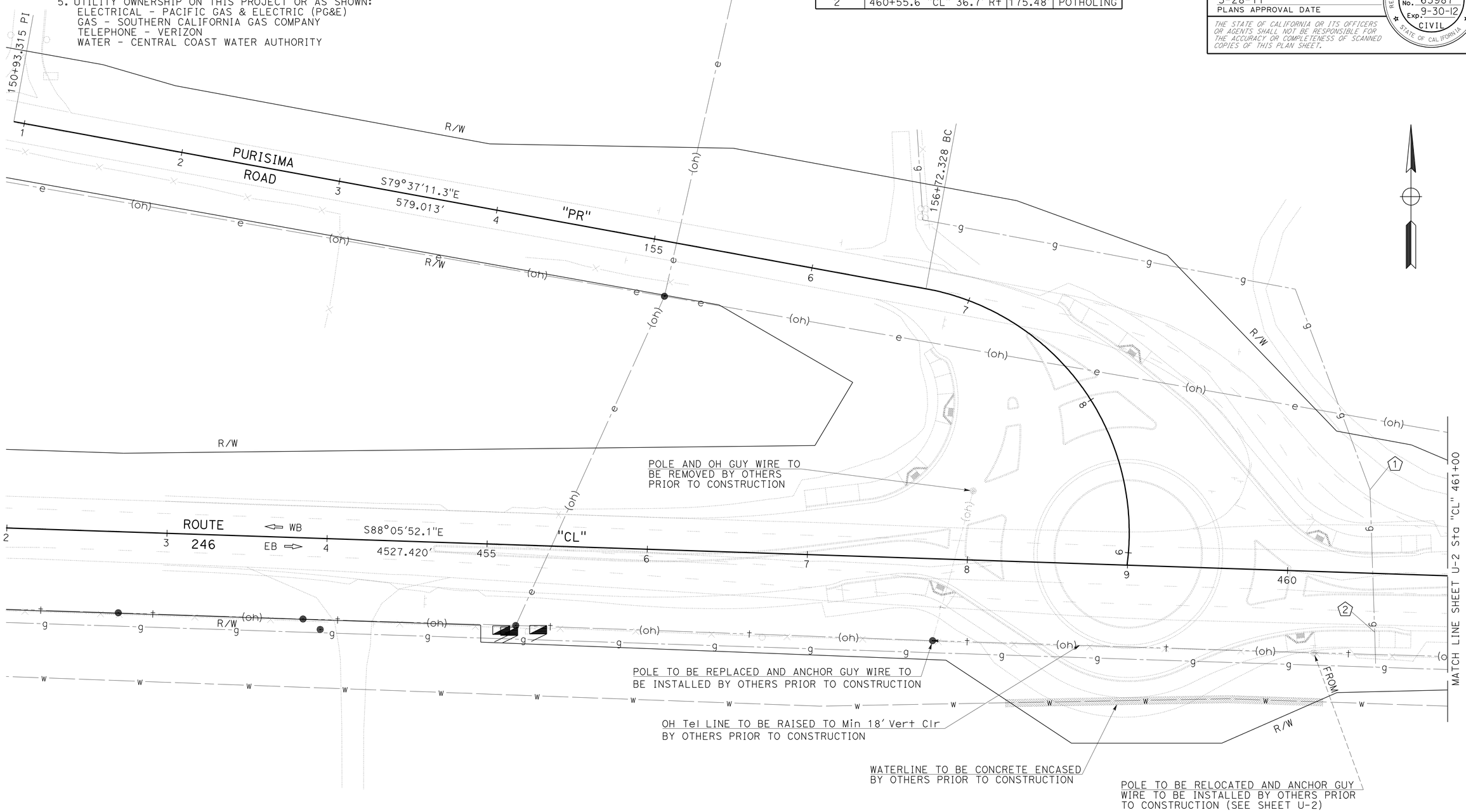

THIS PLAN FOR UTILITY INFORMATION ONLY.

UTILITY PLAN

SCALE: 1" = 30' **U-1**

STATE OF CALIFORNIA - DEPARTMENT OF TRANSPORTATION
DESIGN
Caltrans

FUNCTIONAL SUPERVISOR: S. M. WYATT
CALCULATED-DESIGNED BY: PAUL F. VALADAO
CHECKED BY: STEVE M. WYATT
REVISED BY
DATE REVISED

LAST REVISION 01-13-11
DATE PLOTTED => 04-APR-2011
TIME PLOTTED => 06:46

Dist	COUNTY	ROUTE	POST MILES TOTAL PROJECT	SHEET No.	TOTAL SHEETS
05	SB	246	12.2	29	93

1-13-11
REGISTERED CIVIL ENGINEER DATE

3-28-11
PLANS APPROVAL DATE

REGISTERED PROFESSIONAL ENGINEER
P.F. VALADAO
No. 63987
Exp. 9-30-12
CIVIL
STATE OF CALIFORNIA

THE STATE OF CALIFORNIA OR ITS OFFICERS OR AGENTS SHALL NOT BE RESPONSIBLE FOR THE ACCURACY OR COMPLETENESS OF SCANNED COPIES OF THIS PLAN SHEET.

NOTE:

FOR ACCURATE RIGHT OF WAY DATA, CONTACT RIGHT OF WAY ENGINEERING AT THE DISTRICT OFFICE.

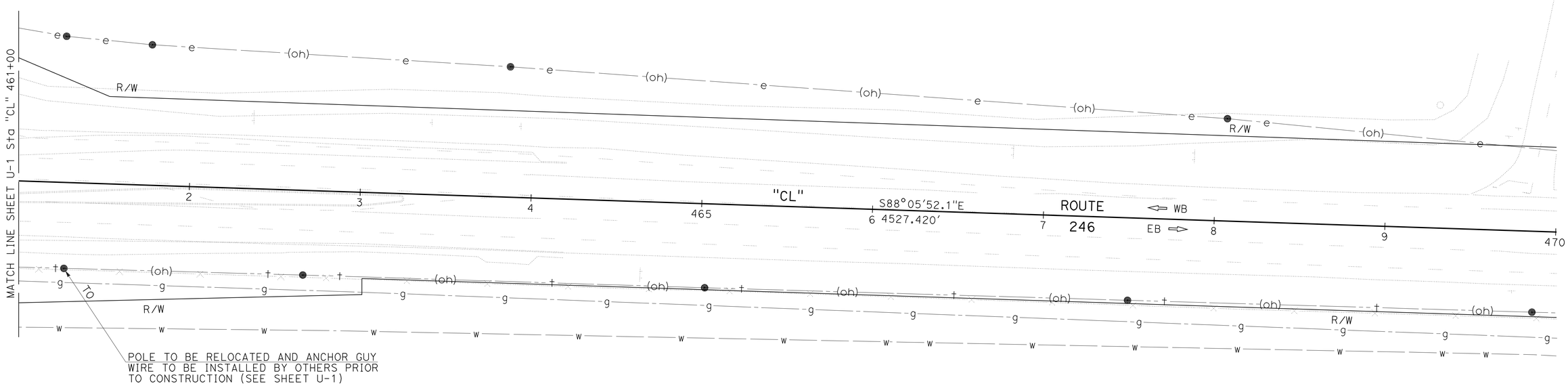

THIS PLAN FOR UTILITY INFORMATION ONLY.

UTILITY PLAN

SCALE: 1" = 30'

U-2

STATE OF CALIFORNIA - DEPARTMENT OF TRANSPORTATION
Caltrans
DESIGN

FUNCTIONAL SUPERVISOR: S. M. WYATT
CALCULATED-DESIGNED BY: PAUL F. VALADAO
CHECKED BY: STEVE M. WYATT
REVISED BY
DATE REVISED

LAST REVISION 01-13-11
DATE PLOTTED => 04-APR-2011
TIME PLOTTED => 06:46

Dist	COUNTY	ROUTE	POST MILES TOTAL PROJECT	SHEET No.	TOTAL SHEETS
05	SB	246	12.2	30	93

1-13-11
REGISTERED CIVIL ENGINEER DATE

3-28-11
PLANS APPROVAL DATE

REGISTERED PROFESSIONAL ENGINEER
P.F.VALADAO
No. 63987
Exp. 9-30-12
CIVIL
STATE OF CALIFORNIA

THE STATE OF CALIFORNIA OR ITS OFFICERS OR AGENTS SHALL NOT BE RESPONSIBLE FOR THE ACCURACY OR COMPLETENESS OF SCANNED COPIES OF THIS PLAN SHEET.

NOTE:

EXACT SIGN LOCATIONS TO BE DETERMINED BY THE ENGINEER.

STATIONARY MOUNTED CONSTRUCTION AREA SIGNS

SIGN No. (X)	SIGN CODE FEDERAL	PANEL SIZE	No. OF POST AND SIZE	SIGN MESSAGE	NUMBER OF SIGNS
(A)	W20-1	60" x 60"	2 - 4" x 6"	ROAD WORK AHEAD	2
(B)	W20-1	48" x 48"	1 - 4" x 6"	ROAD WORK AHEAD	2
(C)	G20-2	60" x 24"	2 - 4" x 4"	END ROAD WORK	2

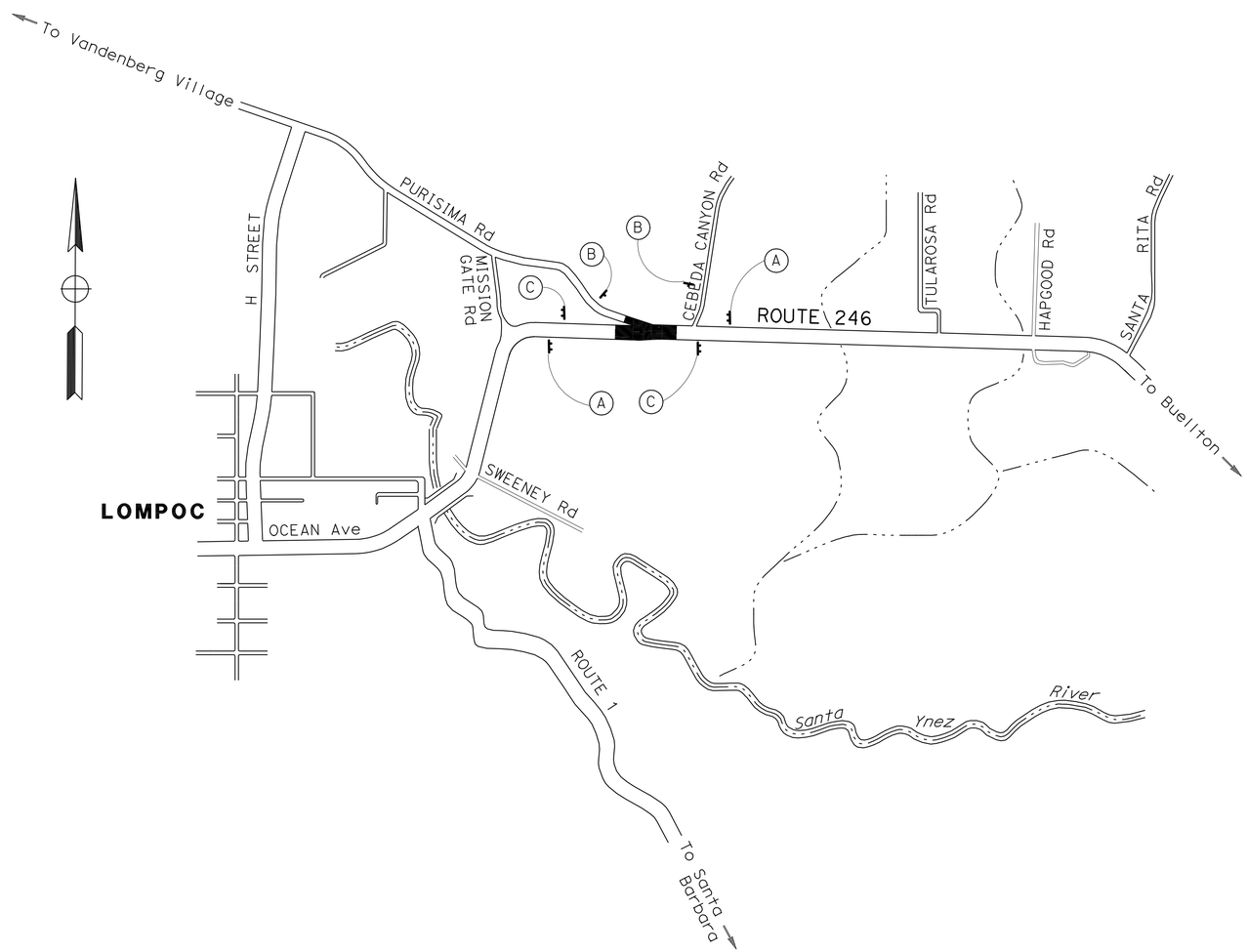

THIS PLAN ACCURATE FOR CONSTRUCTION AREA SIGN WORK ONLY.

CONSTRUCTION AREA SIGNS
NO SCALE
CS-1

STATE OF CALIFORNIA - DEPARTMENT OF TRANSPORTATION
Caltrans
DESIGN

FUNCTIONAL SUPERVISOR: S. M. WYATT
CALCULATED-DESIGNED BY: PAUL F. VALADAO
CHECKED BY: STEVE M. WYATT
REVISED BY
DATE REVISED

LAST REVISION 01-13-11
DATE PLOTTED => 04-APR-2011
TIME PLOTTED => 06:46

Dist	COUNTY	ROUTE	POST MILES TOTAL PROJECT	SHEET No.	TOTAL SHEETS
05	SB	246	12.2	31	93

REGISTERED CIVIL ENGINEER 1-13-11 DATE

3-28-11
PLANS APPROVAL DATE

REGISTERED PROFESSIONAL ENGINEER P.F.VALADAO No. 63987 Exp. 9-30-12 CIVIL STATE OF CALIFORNIA

THE STATE OF CALIFORNIA OR ITS OFFICERS OR AGENTS SHALL NOT BE RESPONSIBLE FOR THE ACCURACY OR COMPLETENESS OF SCANNED COPIES OF THIS PLAN SHEET.

NOTE:

FOR ACCURATE RIGHT OF WAY DATA, CONTACT RIGHT OF WAY ENGINEERING AT THE DISTRICT OFFICE.

STAGE 1:

1. PLACE CURB, GUTTER AND SIDEWALK.
2. CONSTRUCT DRAINAGE INLETS AND STORM DRAINS.
3. CONSTRUCT PAVEMENT STRUCTURAL SECTION TO BOTTOM OF FINAL HMA LAYER.
4. EXACT LENGTH OF TEMPORARY ALTERNATIVE CRASH CUSHION SYSTEM IS BASED ON TYPE SELECTED.

LEGEND:

- CONSTRUCTION THIS STAGE
- TYPE P MARKER
- STATIONARY MOUNTED CONSTRUCTION AREA SIGNS
- PORTABLE DELINEATOR (DOUBLE BASE)
- TYPE III BARRICADE
- DIRECTION OF TRAVEL
- TEMPORARY ALTERNATIVE CRASH CUSHION SYSTEM
- TEMPORARY RAILING (TYPE K)
- TEMPORARY TRAFFIC STRIPE (PAINT)

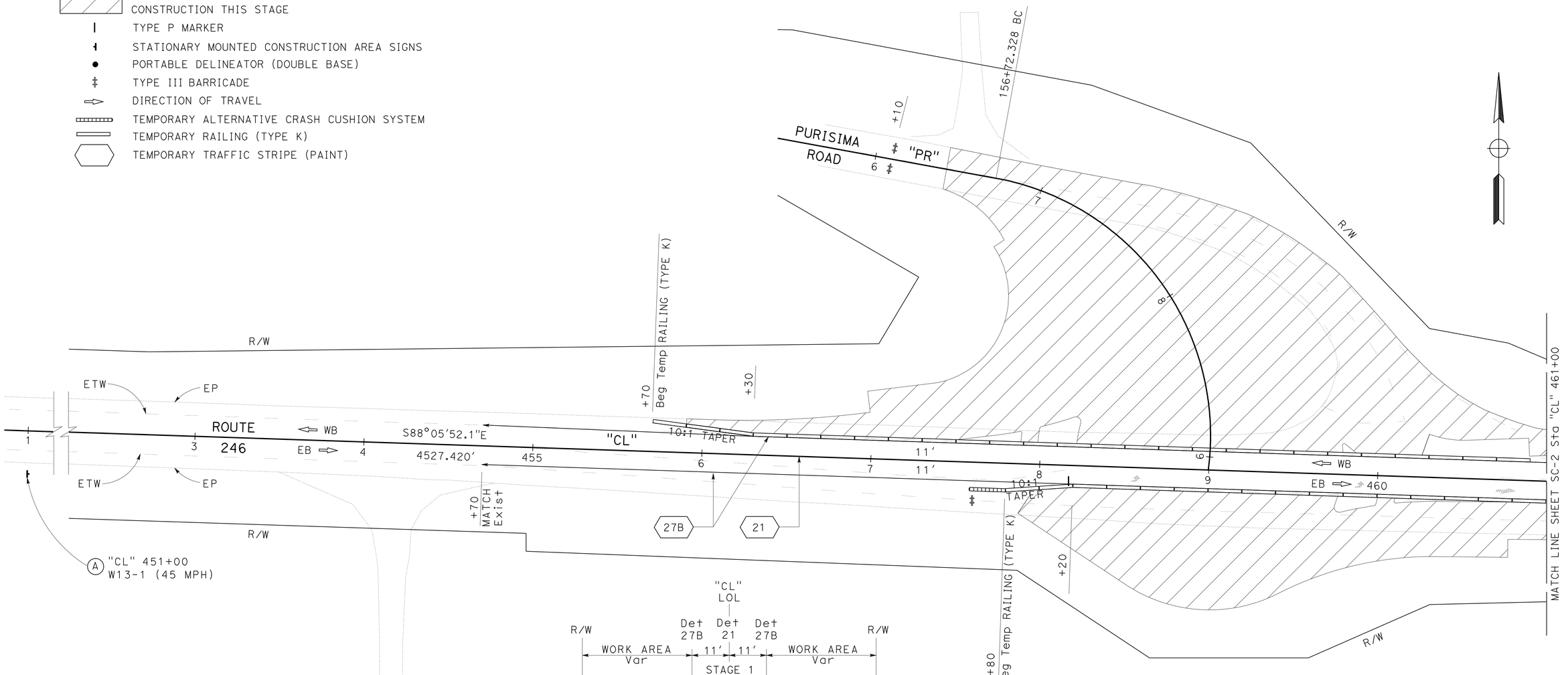

TRAFFIC HANDLING CROSS SECTION
Sta 458+20 TO 461+10
NO SCALE

THIS PLAN ACCURATE FOR STAGE CONSTRUCTION AND TRAFFIC HANDLING WORK ONLY.

STAGE CONSTRUCTION AND TRAFFIC HANDLING PLAN

STAGE 1

SCALE: 1" = 30'

SC-1

STATE OF CALIFORNIA - DEPARTMENT OF TRANSPORTATION
Caltrans
DESIGN

FUNCTIONAL SUPERVISOR: S. M. WYATT
CALCULATED-DESIGNED BY: MICHAEL O'NEAL
CHECKED BY: STEVE M. WYATT
REVISED BY
DATE REVISED

LAST REVISION 01-13-11
DATE PLOTTED => 04-APR-2011
TIME PLOTTED => 06:47

Dist	COUNTY	ROUTE	POST MILES TOTAL PROJECT	SHEET No.	TOTAL SHEETS
05	SB	246	12.2	32	93

REGISTERED CIVIL ENGINEER 1-13-11 DATE

3-28-11
PLANS APPROVAL DATE

REGISTERED PROFESSIONAL ENGINEER P.F.VALADAO No. 63987 Exp. 9-30-12 CIVIL STATE OF CALIFORNIA

THE STATE OF CALIFORNIA OR ITS OFFICERS OR AGENTS SHALL NOT BE RESPONSIBLE FOR THE ACCURACY OR COMPLETENESS OF SCANNED COPIES OF THIS PLAN SHEET.

NOTE:

FOR ACCURATE RIGHT OF WAY DATA, CONTACT RIGHT OF WAY ENGINEERING AT THE DISTRICT OFFICE.

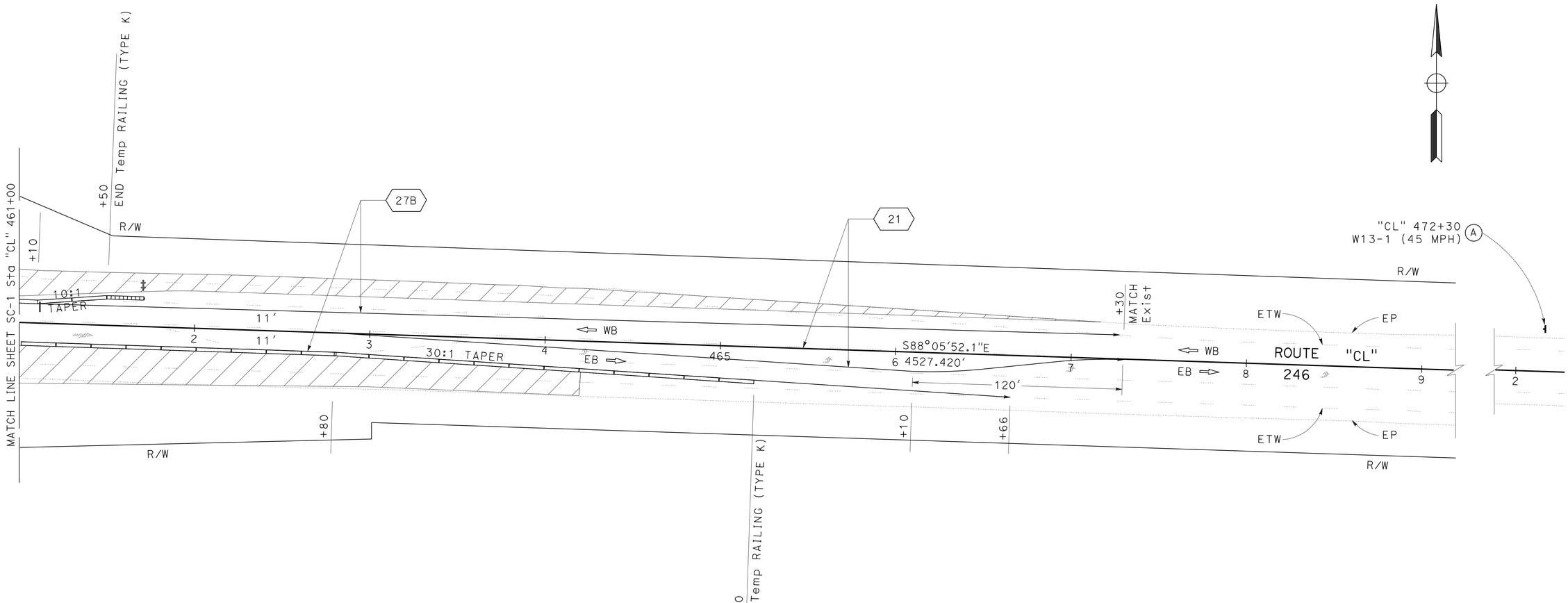

STAGE CONSTRUCTION AND TRAFFIC HANDLING PLAN

STAGE 1

THIS PLAN ACCURATE FOR STAGE CONSTRUCTION AND TRAFFIC HANDLING WORK ONLY.

SCALE: 1" = 30'

SC-2

STATE OF CALIFORNIA - DEPARTMENT OF TRANSPORTATION

Caltrans® DESIGN

FUNCTIONAL SUPERVISOR: S. M. WYATT

CALCULATED-DESIGNED BY: MICHAEL O'NEAL

CHECKED BY: STEVE M. WYATT

REVISED BY

DATE REVISED

LAST REVISION 01-13-11

DATE PLOTTED => 04-APR-2011

TIME PLOTTED => 06:47

Dist	COUNTY	ROUTE	POST MILES TOTAL PROJECT	SHEET No.	TOTAL SHEETS
05	SB	246	12.2	33	93

1-13-11
REGISTERED CIVIL ENGINEER DATE

3-28-11
PLANS APPROVAL DATE

REGISTERED PROFESSIONAL ENGINEER
P.F.VALADAO
No. 63987
Exp. 9-30-12
CIVIL
STATE OF CALIFORNIA

THE STATE OF CALIFORNIA OR ITS OFFICERS OR AGENTS SHALL NOT BE RESPONSIBLE FOR THE ACCURACY OR COMPLETENESS OF SCANNED COPIES OF THIS PLAN SHEET.

NOTE:
FOR ACCURATE RIGHT OF WAY DATA, CONTACT RIGHT OF WAY ENGINEERING AT THE DISTRICT OFFICE.

STAGE 2:

1. PLACE CURB, GUTTER AND SIDEWALK.
2. CONSTRUCT DRAINAGE INLET AND STORM DRAINS.
3. CONSTRUCT PAVEMENT STRUCTURAL SECTION TO BOTTOM OF FINAL HMA LAYER.

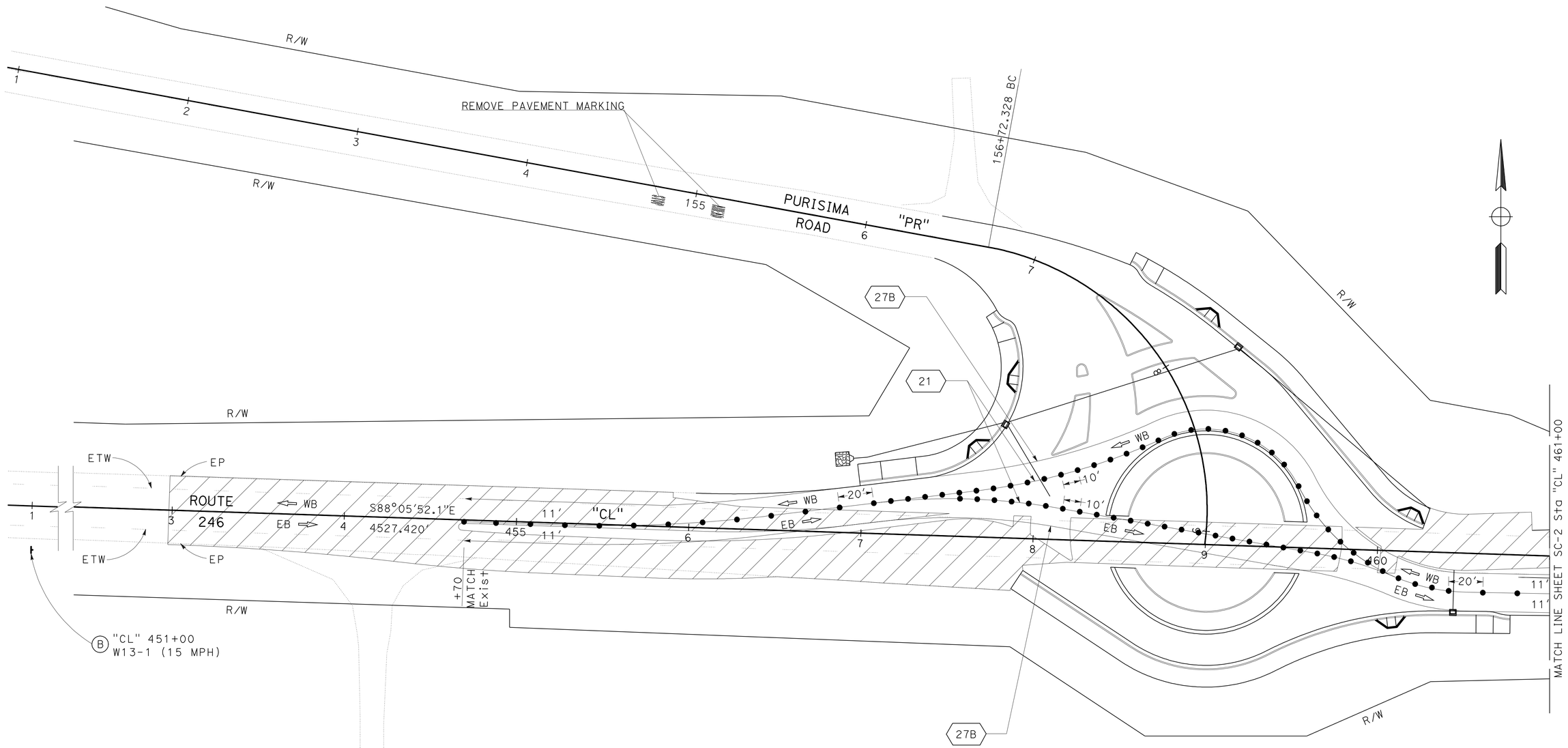

STAGE CONSTRUCTION AND TRAFFIC HANDLING PLAN

STAGE 2

SCALE: 1" = 30'

SC-3

THIS PLAN ACCURATE FOR STAGE CONSTRUCTION AND TRAFFIC HANDLING WORK ONLY.

STATE OF CALIFORNIA - DEPARTMENT OF TRANSPORTATION
Caltrans®
DESIGN

FUNCTIONAL SUPERVISOR: S. M. WYATT
CALCULATED-DESIGNED BY: MICHAEL O'NEAL
CHECKED BY: STEVE M. WYATT
REVISED BY
DATE REVISED

LAST REVISION 01-13-11
DATE PLOTTED => 04-APR-2011
TIME PLOTTED => 06:47

Dist	COUNTY	ROUTE	POST MILES TOTAL PROJECT	SHEET No.	TOTAL SHEETS
05	SB	246	12.2	34	93

REGISTERED CIVIL ENGINEER 1-13-11 DATE

3-28-11
PLANS APPROVAL DATE

REGISTERED PROFESSIONAL ENGINEER
P.F.VALADAO
No. 63987
Exp. 9-30-12
CIVIL
STATE OF CALIFORNIA

THE STATE OF CALIFORNIA OR ITS OFFICERS OR AGENTS SHALL NOT BE RESPONSIBLE FOR THE ACCURACY OR COMPLETENESS OF SCANNED COPIES OF THIS PLAN SHEET.

NOTE:
FOR ACCURATE RIGHT OF WAY DATA, CONTACT RIGHT OF WAY ENGINEERING AT THE DISTRICT OFFICE.

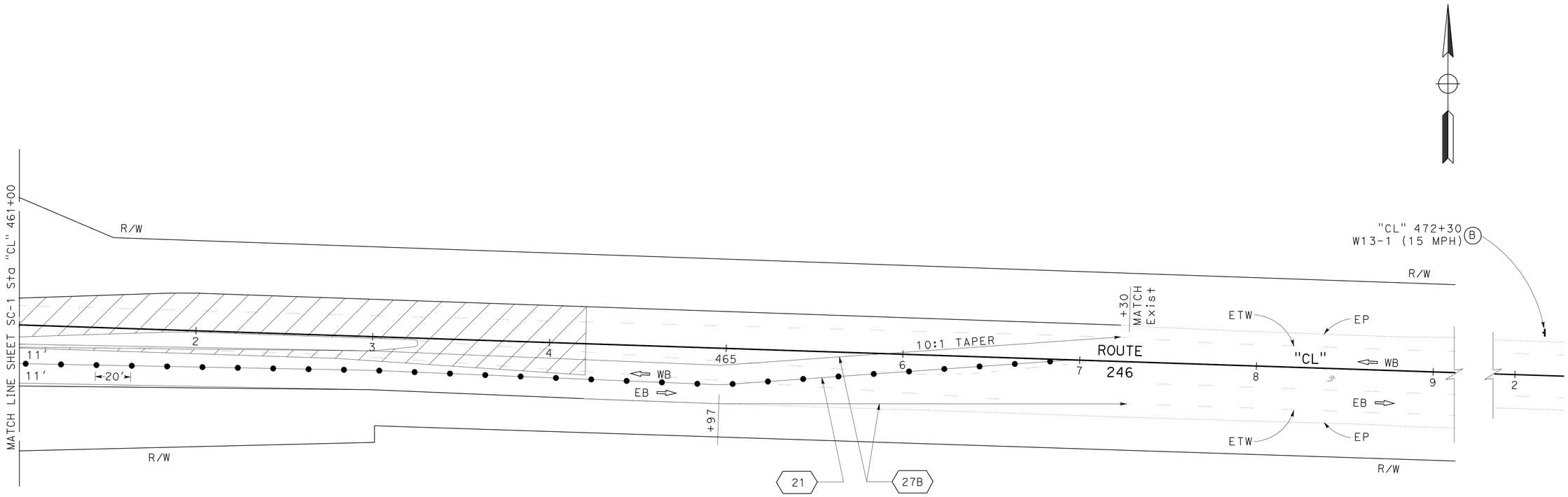

STAGE CONSTRUCTION AND TRAFFIC HANDLING PLAN

STAGE 2

SCALE: 1" = 30'

SC-4

THIS PLAN ACCURATE FOR STAGE CONSTRUCTION AND TRAFFIC HANDLING WORK ONLY.

STATE OF CALIFORNIA - DEPARTMENT OF TRANSPORTATION
Caltrans
DESIGN

FUNCTIONAL SUPERVISOR: S. M. WYATT

CALCULATED-DESIGNED BY: MICHAEL O'NEAL
CHECKED BY: STEVE M. WYATT

REVISED BY
DATE REVISED

LAST REVISION 01-13-11
DATE PLOTTED => 04-APR-2011
TIME PLOTTED => 06:47

Dist	COUNTY	ROUTE	POST MILES TOTAL PROJECT	SHEET No.	TOTAL SHEETS
05	SB	246	12.2	35	93

1-13-11
REGISTERED CIVIL ENGINEER DATE

3-28-11
PLANS APPROVAL DATE

REGISTERED PROFESSIONAL ENGINEER
P.F.VALADAO
No. 63987
Exp. 9-30-12
CIVIL
STATE OF CALIFORNIA

THE STATE OF CALIFORNIA OR ITS OFFICERS OR AGENTS SHALL NOT BE RESPONSIBLE FOR THE ACCURACY OR COMPLETENESS OF SCANNED COPIES OF THIS PLAN SHEET.

NOTE:
FOR ACCURATE RIGHT OF WAY DATA, CONTACT RIGHT OF WAY ENGINEERING AT THE DISTRICT OFFICE.

STAGE 3:
1. PLACE CURB AND SPLITTER ISLAND.
2. CONSTRUCT DRAINAGE INLET AND STORM DRAIN.
3. PAVE FINAL HMA LIFT.

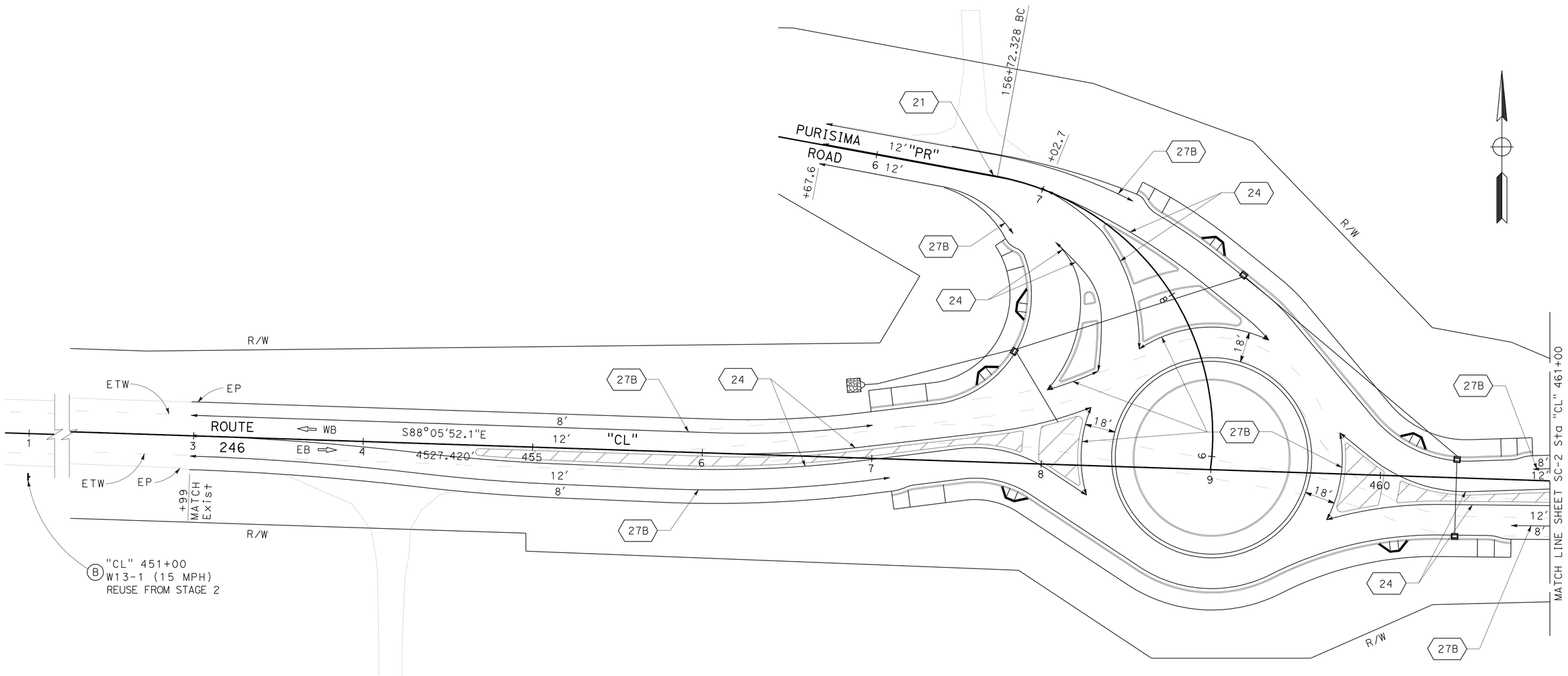

STAGE CONSTRUCTION AND TRAFFIC HANDLING PLAN

STAGE 3

SCALE: 1" = 30'

SC-5

THIS PLAN ACCURATE FOR STAGE CONSTRUCTION AND TRAFFIC HANDLING WORK ONLY.

STATE OF CALIFORNIA - DEPARTMENT OF TRANSPORTATION
Caltrans®
DESIGN

FUNCTIONAL SUPERVISOR: S. M. WYATT
CALCULATED-DESIGNED BY: MICHAEL O'NEAL
CHECKED BY: STEVE M. WYATT
REVISED BY
DATE REVISED

LAST REVISION 01-13-11
DATE PLOTTED => 04-APR-2011
TIME PLOTTED => 06:47

Dist	COUNTY	ROUTE	POST MILES TOTAL PROJECT	SHEET No.	TOTAL SHEETS
05	SB	246	12.2	36	93

1-13-11
REGISTERED CIVIL ENGINEER DATE

3-28-11
PLANS APPROVAL DATE

REGISTERED PROFESSIONAL ENGINEER
P.F.VALADAO
No. 63987
Exp. 9-30-12
CIVIL
STATE OF CALIFORNIA

THE STATE OF CALIFORNIA OR ITS OFFICERS OR AGENTS SHALL NOT BE RESPONSIBLE FOR THE ACCURACY OR COMPLETENESS OF SCANNED COPIES OF THIS PLAN SHEET.

NOTE:

FOR ACCURATE RIGHT OF WAY DATA, CONTACT RIGHT OF WAY ENGINEERING AT THE DISTRICT OFFICE.

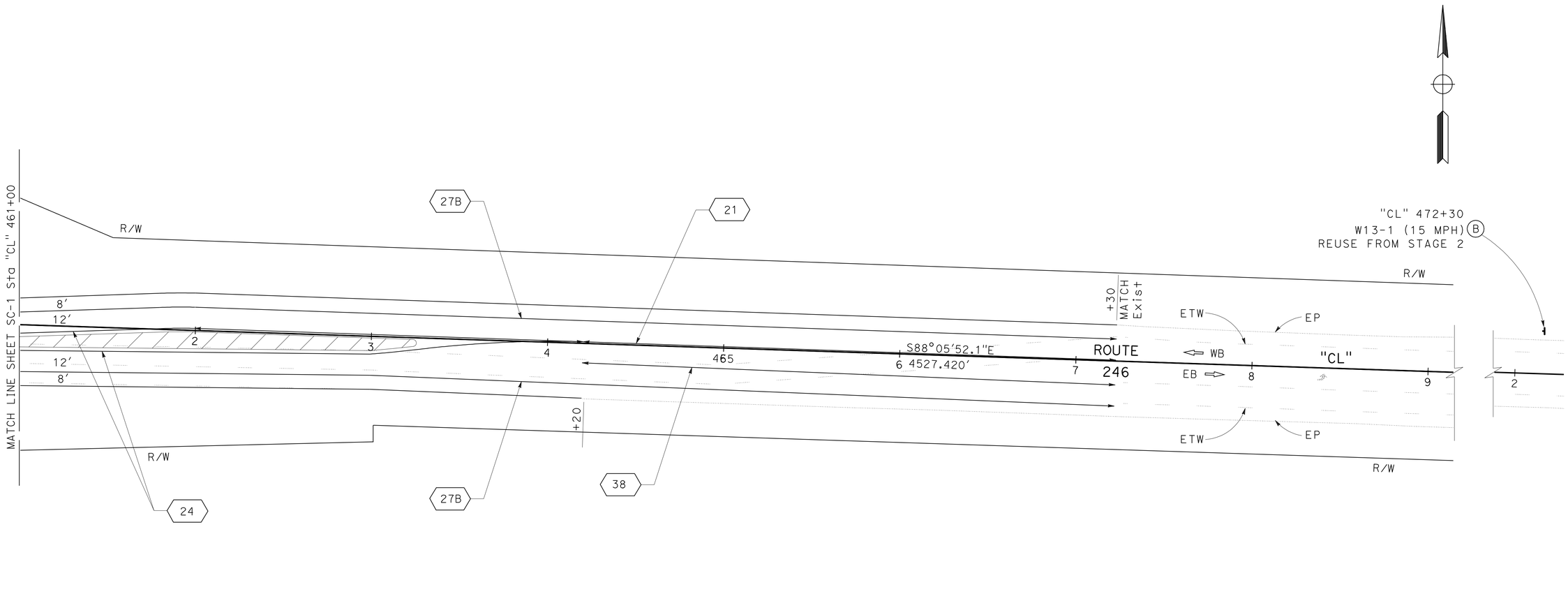

THIS PLAN ACCURATE FOR STAGE CONSTRUCTION AND TRAFFIC HANDLING WORK ONLY.

STAGE CONSTRUCTION AND TRAFFIC HANDLING PLAN

STAGE 3

SCALE: 1" = 30′

SC-6

STATE OF CALIFORNIA - DEPARTMENT OF TRANSPORTATION
Caltrans®
DESIGN

FUNCTIONAL SUPERVISOR: S. M. WYATT

CALCULATED-DESIGNED BY: MICHAEL O'NEAL
CHECKED BY: STEVE M. WYATT

REVISED BY
DATE REVISED

LAST REVISION 01-13-11
DATE PLOTTED => 04-APR-2011
TIME PLOTTED => 06:47

Dist	COUNTY	ROUTE	POST MILES TOTAL PROJECT	SHEET No.	TOTAL SHEETS
05	SB	246	12.2	37	93

1-13-11
REGISTERED CIVIL ENGINEER DATE

3-28-11
PLANS APPROVAL DATE

REGISTERED PROFESSIONAL ENGINEER
P.F. VALADAO
No. 63987
Exp. 9-30-12
CIVIL
STATE OF CALIFORNIA

THE STATE OF CALIFORNIA OR ITS OFFICERS OR AGENTS SHALL NOT BE RESPONSIBLE FOR THE ACCURACY OR COMPLETENESS OF SCANNED COPIES OF THIS PLAN SHEET.

TEMPORARY RAILING (TYPE K)

Sta LIMITS	LF
"CL" 455+70 TO 461+50 Lt	580
"CL" 457+80 TO 465+20 Rt	740
TOTAL	1320

TEMPORARY ALTERNATIVE CRASH CUSHION SYSTEM

Sta	EA
"CL" 457+80 Rt	1
"CL" 461+50 Lt	1
TOTAL	2

TEMPORARY PAVEMENT DELINEATION

Sta LIMITS	Det No. OR Pvmt MARKING	(N) REMOVE PAVEMENT MARKER	REMOVE THERMO-PLASTIC PAVEMENT MARKING	REMOVE THERMOPLASTIC TRAFFIC STRIPE			TEMPORARY TRAFFIC STRIPE (PAINT)	
				4" YELLOW	4" WHITE	8" WHITE	4" WHITE	4" YELLOW
		EA	SQFT	LF				
"CL" 458+60 Rt	IV (L)		15					
"CL" 459+90 Rt	IV (L)		15					
"CL" 460+75 Rt	VI		42					
"CL" 461+40 Rt	VI		42					
"CL" 464+20 Rt	IV (L)		15					
"CL" 465+60 Rt	IV (L)		15					
"CL" 467+00 Rt	IV (L)		15					
"CL" 454+70 TO 460+00	23M	672		895				
"CL" 460+70 TO 467+30	23M	675		900				
"CL" 458+50 TO 460+00 Rt	38	8				144.3		
"CL" 460+68 TO 461+43 Rt	38	5				76.5		
"CL" 460+68 TO 464+00 Lt	38	16				333		
"CL" 464+00 TO 467+30 Rt	38	15				332.3		
"CL" 454+70 TO 459+35 Lt	27B				465.2			
"CL" 454+70 TO 467+30 Rt	27B				1259.5			
"CL" 461+00 TO 467+30 Lt	27B				630.8			
"CL" 454+70 TO 467+30	21							1710
"CL" 454+70 TO 466+66 Rt	27B						1196	
"CL" 454+70 TO 467+30 Lt	27B						1260	
SUBTOTAL				1795	2355.5	886.1	2456	1710
TOTAL SHEET SCQ-1		1391	159	5036.6			4166*	

(N) NOT A SEPARATE PAY ITEM, FOR INFORMATION ONLY.
* SEE SHEET SCQ-3 FOR GRAND TOTAL.

TYPE III BARRICADE

Sta	EA
"CL" 457+60	1
"PR" 156+10	2
"CL" 461+70	1
TOTAL	4

OBJECT MARKER (TYPE P)

Sta	EA
"CL" 458+20 Rt	1
"CL" 461+10 Lt	1
TOTAL	2

STATIONARY MOUNTED CONSTRUCTION AREA SIGNS

SIGN No. (X)	SIGN CODE FEDERAL	PANEL SIZE	No. OF POST AND SIZE	SIGN MESSAGE	NUMBER OF SIGNS
(A)	W13-1 (45 MPH)	30" x 30"	1 - 4" x 4"	45 MPH	2

STAGE CONSTRUCTION AND TRAFFIC HANDLING QUANTITIES

STAGE 1

SCQ-1

STATE OF CALIFORNIA - DEPARTMENT OF TRANSPORTATION
DESIGN
Caltrans
FUNCTIONAL SUPERVISOR: S. M. WYATT
CALCULATED-DESIGNED BY: MICHAEL O'NEAL
CHECKED BY: STEVE M. WYATT
REVISED BY
DATE REVISED

LAST REVISION 01-13-11
DATE PLOTTED => 04-APR-2011
TIME PLOTTED => 06:47

Dist	COUNTY	ROUTE	POST MILES TOTAL PROJECT	SHEET No.	TOTAL SHEETS
05	SB	246	12.2	38	93

1-13-11
REGISTERED CIVIL ENGINEER DATE

3-28-11
PLANS APPROVAL DATE

REGISTERED PROFESSIONAL ENGINEER
P.F.VALADAO
No. 63987
Exp. 9-30-12
CIVIL
STATE OF CALIFORNIA

THE STATE OF CALIFORNIA OR ITS OFFICERS OR AGENTS SHALL NOT BE RESPONSIBLE FOR THE ACCURACY OR COMPLETENESS OF SCANNED COPIES OF THIS PLAN SHEET.

STATIONARY MOUNTED CONSTRUCTION AREA SIGNS

SIGN No. (X)	SIGN CODE FEDERAL	PANEL SIZE	No. OF POST AND SIZE	SIGN MESSAGE	NUMBER OF SIGNS(*)
(B)	W13-1 (15 MPH)	30" x 30"	1 - 4" x 4"	15 MPH	2

(*) NUMBER OF SIGNS PER STAGE CONSTRUCTION

TEMPORARY PAVEMENT DELINEATION

Sta LIMITS	Det No. OR Pvmt MARKING	REMOVE THERMOPLASTIC PAVEMENT MARKING	REMOVE PAINTED TRAFFIC STRIPE		TEMPORARY TRAFFIC STRIPE (PAINT)	
			4" WHITE	4" YELLOW	4" WHITE	4" YELLOW
		SQFT	LF			
"CL" 454+70 TO 467+30	21			1710		
"CL" 454+70 TO 466+66 Rt	27B		1196			
"CL" 454+70 TO 467+30 Lt	27B		1260			
"CL" 454+70 TO 467+30	21					1577
"CL" 454+70 TO 467+30 Rt	27B				1261	
"CL" 454+70 TO 467+30 Lt	27B				1294	
"PR" 154+78.7 Rt	"STOP"	22				
"PR" 155+14.0 Rt	"AHEAD"	31				
SUBTOTAL		53	2456	1710	2555	1577
TOTAL SHEET SCQ-2		53	4166*		4132*	

* SEE SHEET SCQ-3 FOR GRAND TOTAL.

PORTABLE DELINEATOR

Sta	EA
"CL" 454+70 TO 467+30	106

STAGE CONSTRUCTION AND TRAFFIC HANDLING QUANTITIES

STAGE 2

SCQ-2

STATE OF CALIFORNIA - DEPARTMENT OF TRANSPORTATION
Caltrans
DESIGN

FUNCTIONAL SUPERVISOR: S. M. WYATT
CALCULATED-DESIGNED BY: MICHAEL O'NEAL
CHECKED BY: STEVE M. WYATT
REVISED BY
DATE REVISED

LAST REVISION 01-13-11
DATE PLOTTED => 04-APR-2011
TIME PLOTTED => 06:47

Dist	COUNTY	ROUTE	POST MILES TOTAL PROJECT	SHEET No.	TOTAL SHEETS
05	SB	246	12.2	39	93

1-13-11
REGISTERED CIVIL ENGINEER DATE

3-28-11
PLANS APPROVAL DATE

REGISTERED PROFESSIONAL ENGINEER
P.F.VALADAO
No. 63987
Exp. 9-30-12
CIVIL
STATE OF CALIFORNIA

THE STATE OF CALIFORNIA OR ITS OFFICERS OR AGENTS SHALL NOT BE RESPONSIBLE FOR THE ACCURACY OR COMPLETENESS OF SCANNED COPIES OF THIS PLAN SHEET.

TEMPORARY PAVEMENT DELINEATION

Sta LIMITS	Det No. OR Pvmt MARKING	REMOVE PAINTED TRAFFIC STRIPE		TEMPORARY TRAFFIC STRIPE (PAINT)			REMOVE THERMOPLASTIC PAVEMENT MARKING
		4" WHITE	4" YELLOW	4" WHITE	8" WHITE	4" YELLOW	
		LF					SQFT
"CL" 454+70 TO 467+30	21		1577				
"CL" 454+70 TO 467+30 R†	27B	1261					
"CL" 454+70 TO 467+30 L†	27B	1294					
"CL" 452+98.8 TO 458+28.3 L†	24					533.7	
"CL" 452+98.8 TO 458+27.3 R†	24					536.8	
"CL" 452+98.8 TO 457+00 L†	27B			401.2			
"CL" 452+98.8 TO 457+11 R†	27B			412.2			
"CL" 458+27.3 R† TO 458+28.3 L†	27B			52.9			
"CL" 458+01.9 L† TO 459+31.7 L†	27B			32.1			
"CL" 458+55.4 L† TO 459+31.7 L†	27B			80.3			
"CL" 459+69.2 R† TO 459+75.3 L†	27B			52.9			
"CL" 459+69.2 R† TO 461+00.0 R†	24					132.5	
"CL" 459+75.3 L† TO 461+00.0 R†	24					133.7	
"CL" 460+78 TO 467+30 R†	27B			652			
"CL" 460+89.9 TO 467+30 L†	27B			640.1			
"CL" 461+00.0 R† TO 464+20.2 L†	24					640	
"CL" 464+20.2 TO 467+30	21					309.8	
"CL" 464+20.2 TO 467+30	38				309.8		
"PR" 155+67.6 TO 157+02.7 L†	21					135.1	
"PR" 155+67.6 TO 157+47 L†	27B			187.1			
"PR" 155+67.6 TO 156+91.2 R†	27B			123.6			
"PR" 157+02.7 TO 158+21.3 R†	24					114.6	
"PR" 157+02.7 TO 158+42.6 L†	24					158.8	
"PR" 157+21.7 R† TO 158+19.9 R†	24					96.1	
"PR" 157+21.7 R† TO 158+24.3 R†	24					85.3	
SUBTOTAL		2555	1577	2634.4	309.8	2876.4	
TOTAL SHEET SCQ-1							159
TOTAL SHEET SCQ-2							53
TOTAL SHEET SCQ-3		4132		5820.6			
GRAND TOTAL		8298*		14118.6*			212

* GRAND TOTAL FROM SHEETS SCQ-1,2,3.

STAGE CONSTRUCTION AND TRAFFIC HANDLING QUANTITIES
STAGE 3

SCQ-3

STATE OF CALIFORNIA - DEPARTMENT OF TRANSPORTATION
Caltrans®
DESIGN

FUNCTIONAL SUPERVISOR: S. M. WYATT
CALCULATED-DESIGNED BY: MICHAEL O'NEAL
CHECKED BY: STEVE M. WYATT
REVISED BY
DATE REVISED

LAST REVISION 01-13-11
DATE PLOTTED => 04-APR-2011
TIME PLOTTED => 06:47

Dist	COUNTY	ROUTE	POST MILES TOTAL PROJECT	SHEET No.	TOTAL SHEETS
05	SB	246	12.2	40	93

REGISTERED CIVIL ENGINEER 1-13-11 DATE

3-28-11
PLANS APPROVAL DATE

REGISTERED PROFESSIONAL ENGINEER P.F.VALADAO No. 63987 Exp. 9-30-12 CIVIL STATE OF CALIFORNIA

THE STATE OF CALIFORNIA OR ITS OFFICERS OR AGENTS SHALL NOT BE RESPONSIBLE FOR THE ACCURACY OR COMPLETENESS OF SCANNED COPIES OF THIS PLAN SHEET.

NOTES:

1. EXACT SIGN LOCATIONS TO BE DETERMINED BY THE ENGINEER.
2. SEE CONSTRUCTION AREA SIGNS SHEET FOR ADDITIONAL CONSTRUCTION AREA SIGNS.
3. PORTABLE CHANGEABLE MESSAGE SIGN SHALL READ:

PURISIMA RD CLOSED	USE MISSION GATE RD
1ST FRAME	2ND FRAME

LEGEND:

▯ PORTABLE CHANGEABLE MESSAGE SIGN

STATIONARY MOUNTED CONSTRUCTION AREA SIGNS

SIGN No. (X)	SIGN CODE	PANEL SIZE	No. OF POST AND SIZE	SIGN MESSAGE	NUMBER OF SIGNS
(A)	W20-2	36" x 36"	2 - 4" x 4"	DETOUR 1000 FT	4
(B)	M4-10R	48" x 18"	2 - 4" x 4"	DETOUR	2
(C)	M4-10L	48" x 18"	2 - 4" x 4"	DETOUR	2
(D)	M4-8	24" x 12"	1 - 4" x 4"	DETOUR	3
(E)	M4-8a	24" x 18"	1 - 4" x 4"	END DETOUR	2

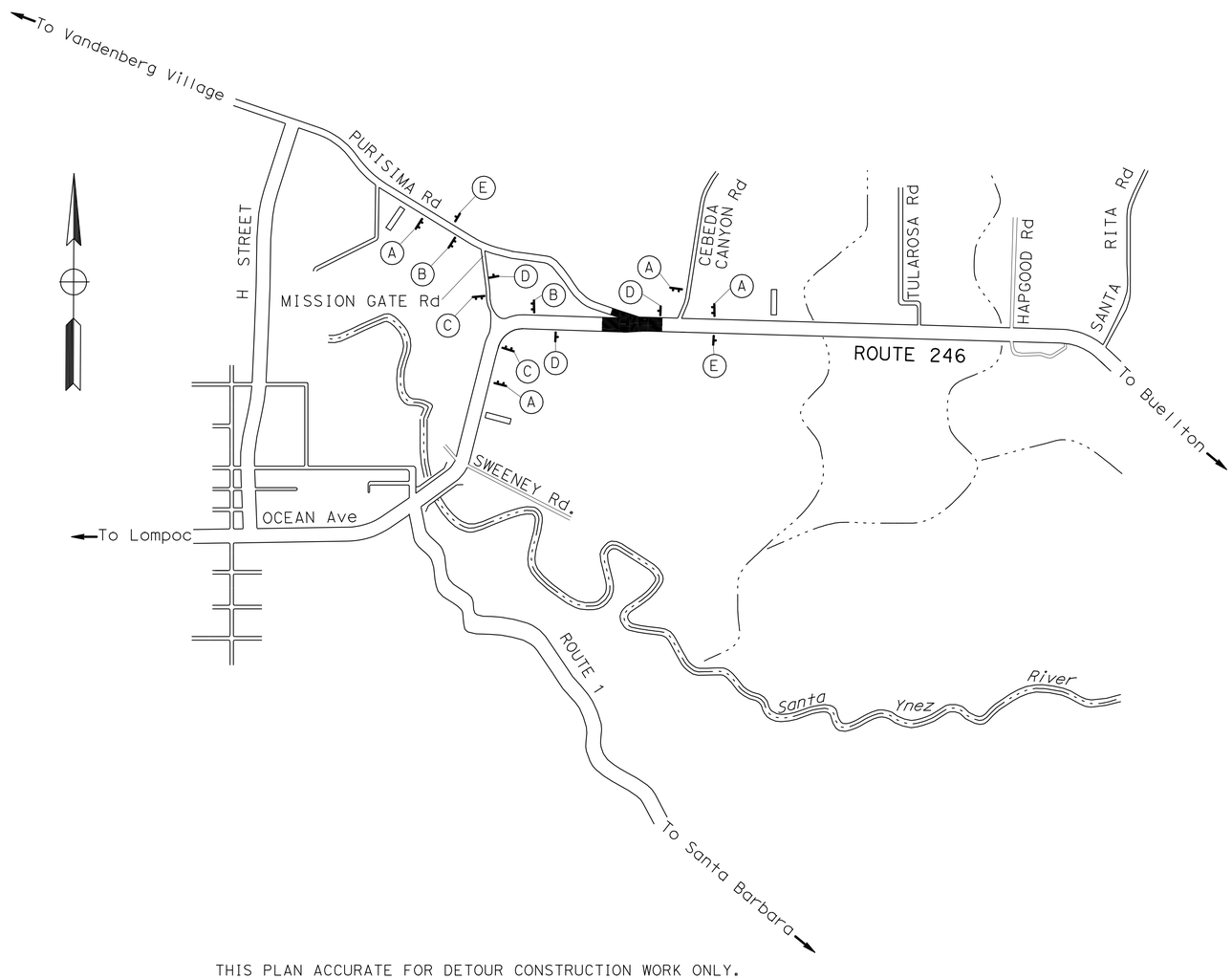

THIS PLAN ACCURATE FOR DETOUR CONSTRUCTION WORK ONLY.

DETOUR PLAN
STAGES 1 AND 2

NO SCALE **DE-1**

STATE OF CALIFORNIA - DEPARTMENT OF TRANSPORTATION
Caltrans® **DESIGN**

FUNCTIONAL SUPERVISOR: S. M. WYATT
CALCULATED-DESIGNED BY: PAUL F. VALADAO
CHECKED BY: STEVE M. WYATT
REVISED BY / DATE REVISED

LAST REVISION 01-13-11 | DATE PLOTTED => 04-APR-2011 | TIME PLOTTED => 06:47

Dist	COUNTY	ROUTE	POST MILES TOTAL PROJECT	SHEET No.	TOTAL SHEETS
05	SB	246	12.2	41	93

REGISTERED CIVIL ENGINEER 1-13-11 DATE

3-28-11
PLANS APPROVAL DATE

REGISTERED PROFESSIONAL ENGINEER P.F. VALADAO No. 63987 Exp. 9-30-12 CIVIL STATE OF CALIFORNIA

THE STATE OF CALIFORNIA OR ITS OFFICERS OR AGENTS SHALL NOT BE RESPONSIBLE FOR THE ACCURACY OR COMPLETENESS OF SCANNED COPIES OF THIS PLAN SHEET.

LEGEND:

- ## PAVEMENT DELINEATION DETAIL NUMBER
- STRIPE CHANGE LOCATION
- LIMIT OF STRIPING DETAIL
- OBJECT MARKER (TYPE L-1)
- TYPE IV ARROW
- TYPE VII ARROW

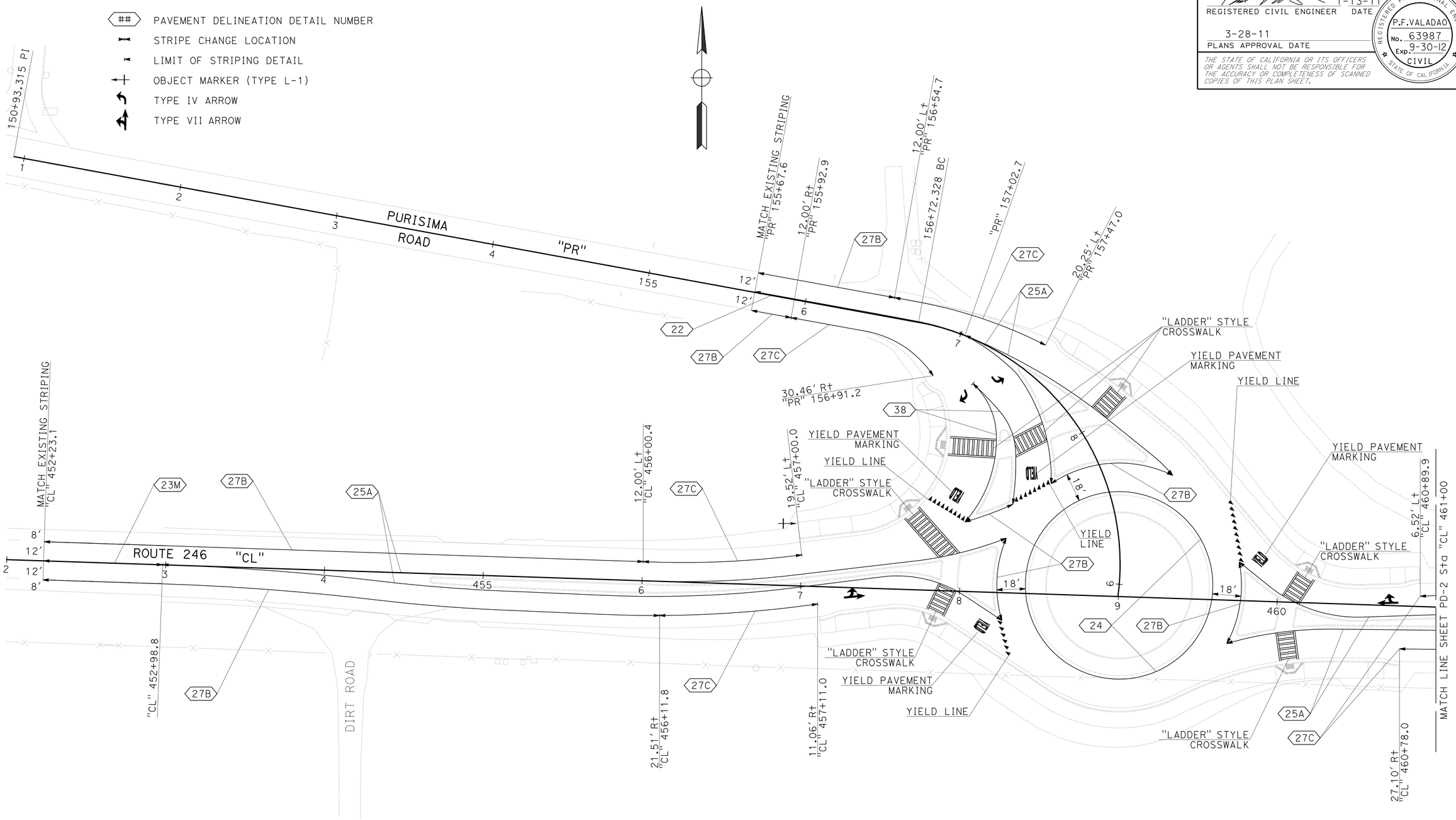

PAVEMENT DELINEATION PLAN

SCALE: 1" = 30'

PD-1

THIS PLAN ACCURATE FOR PAVEMENT DELINEATION WORK ONLY.

STATE OF CALIFORNIA - DEPARTMENT OF TRANSPORTATION

Caltrans

DESIGN

FUNCTIONAL SUPERVISOR: S. M. WYATT

CALCULATED-DESIGNED BY: PAUL F. VALADAO

CHECKED BY: STEVE M. WYATT

REVISED BY

DATE REVISED

LAST REVISION 01-13-11

DATE PLOTTED => 04-APR-2011

TIME PLOTTED => 06:48

Dist	COUNTY	ROUTE	POST MILES TOTAL PROJECT	SHEET No.	TOTAL SHEETS
05	SB	246	12.2	42	93

1-13-11
REGISTERED CIVIL ENGINEER DATE

3-28-11
PLANS APPROVAL DATE

REGISTERED PROFESSIONAL ENGINEER
P.F.VALADAO
No. 63987
Exp. 9-30-12
CIVIL
STATE OF CALIFORNIA

THE STATE OF CALIFORNIA OR ITS OFFICERS OR AGENTS SHALL NOT BE RESPONSIBLE FOR THE ACCURACY OR COMPLETENESS OF SCANNED COPIES OF THIS PLAN SHEET.

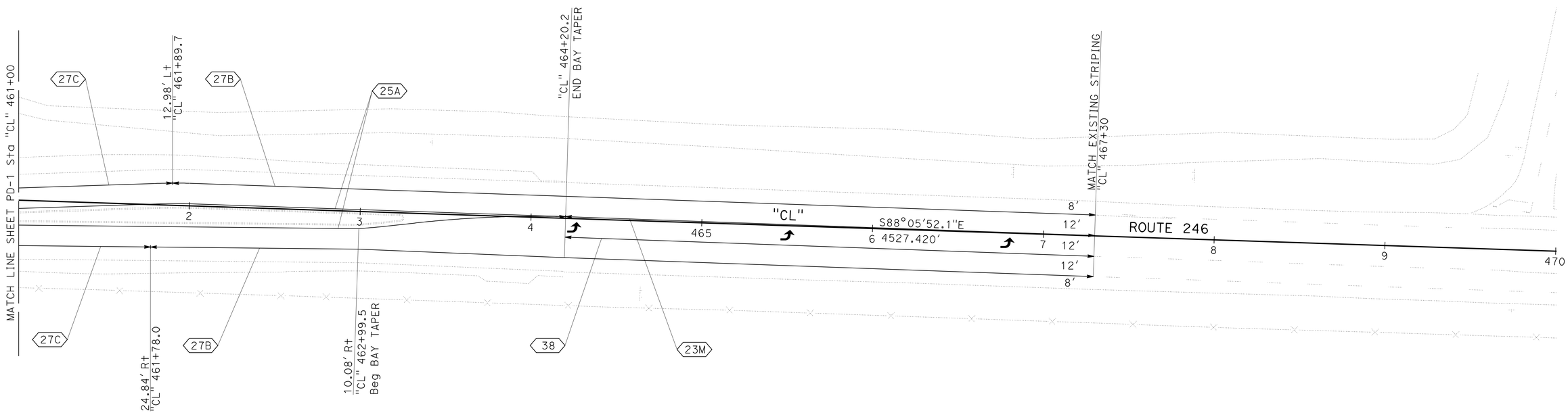

PAVEMENT DELINEATION PLAN

SCALE: 1" = 30'

THIS PLAN ACCURATE FOR PAVEMENT DELINEATION WORK ONLY.

PD-2

STATE OF CALIFORNIA - DEPARTMENT OF TRANSPORTATION
Caltrans®
DESIGN

FUNCTIONAL SUPERVISOR: S. M. WYATT
CALCULATED-DESIGNED BY: PAUL F. VALADAO
CHECKED BY: STEVE M. WYATT
REVISED BY
DATE REVISED

LAST REVISION 01-13-11
DATE PLOTTED => 04-APR-2011
TIME PLOTTED => 06:48

Dist	COUNTY	ROUTE	POST MILES TOTAL PROJECT	SHEET No.	TOTAL SHEETS
05	SB	246	12.2	43	93

REGISTERED CIVIL ENGINEER 1-13-11 DATE

3-28-11
PLANS APPROVAL DATE

REGISTERED PROFESSIONAL ENGINEER P.F. VALADAO No. 63987 Exp. 9-30-12 CIVIL STATE OF CALIFORNIA

THE STATE OF CALIFORNIA OR ITS OFFICERS OR AGENTS SHALL NOT BE RESPONSIBLE FOR THE ACCURACY OR COMPLETENESS OF SCANNED COPIES OF THIS PLAN SHEET.

LEGEND:

- TYPE AY YELLOW NON-REFLECTIVE MARKER
- TYPE D TWO-WAY YELLOW RETROFLECTIVE MARKER
- 4" YELLOW THERMOPLASTIC TRAFFIC STRIPE (SPRAYABLE)

M = MODIFIED

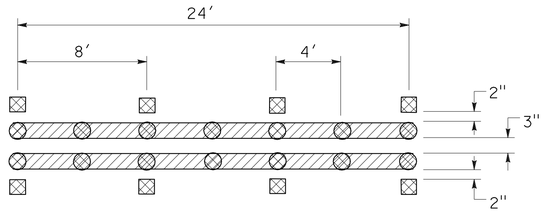

DETAIL 23M

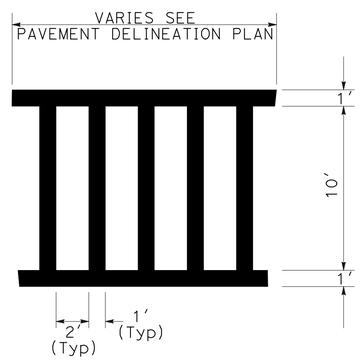

LADDER STYLE CROSSWALK

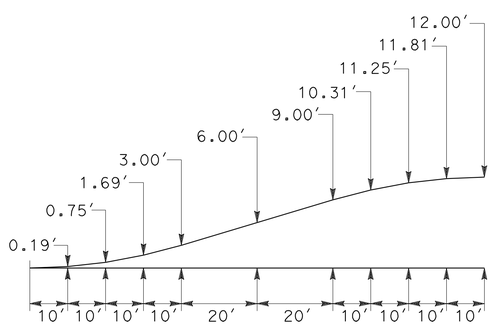

120' BAY TAPER

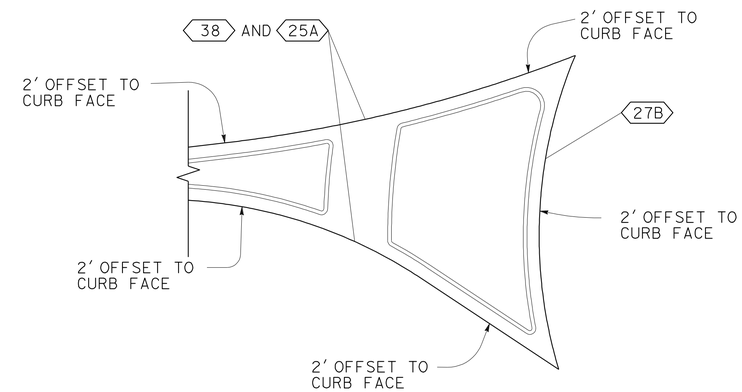

TYPICAL SPLITTER ISLAND STRIPE DETAIL 25A, 27B, AND 38

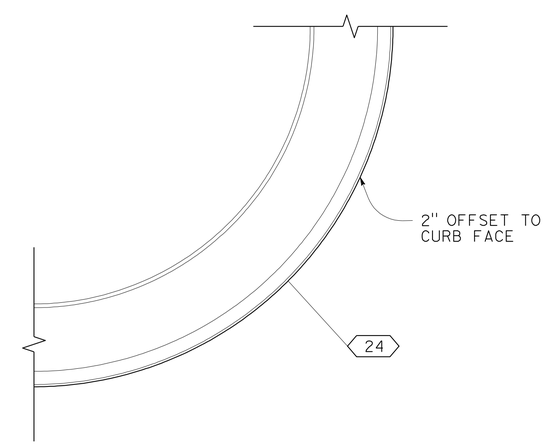

TYPICAL CENTRAL ISLAND STRIPE DETAIL 24

PAVEMENT DELINEATION DETAILS

NO SCALE

PDD-1

STATE OF CALIFORNIA - DEPARTMENT OF TRANSPORTATION
Caltrans® DESIGN

FUNCTIONAL SUPERVISOR: S. M. WYATT
CALCULATED-DESIGNED BY: PAUL F. VALADAO
CHECKED BY: STEVE M. WYATT
REVISED BY / DATE REVISED

LAST REVISION 01-13-11
DATE PLOTTED => 04-APR-2011
TIME PLOTTED => 06:48

Dist	COUNTY	ROUTE	POST MILES TOTAL PROJECT	SHEET No.	TOTAL SHEETS
05	SB	246	12.2	44	93

1-13-11
REGISTERED CIVIL ENGINEER DATE

3-28-11
PLANS APPROVAL DATE

REGISTERED PROFESSIONAL ENGINEER
P.F.VALADAO
No. 63987
Exp. 9-30-12
CIVIL
STATE OF CALIFORNIA

THE STATE OF CALIFORNIA OR ITS OFFICERS OR AGENTS SHALL NOT BE RESPONSIBLE FOR THE ACCURACY OR COMPLETENESS OF SCANNED COPIES OF THIS PLAN SHEET.

PAVEMENT DELINEATION

SHEET No.	STATION LIMITS	DETAIL No. OR PAVEMENT MARKING	OBJECT MARKER (TYPE L-1)	THERMOPLASTIC TRAFFIC STRIPE (SPRAYABLE)			THERMOPLASTIC PAVEMENT MARKING	PAVEMENT MARKERS			
								(NON-REFLECTIVE)	(RETROREFLECTIVE)		
				4" WHITE	4" YELLOW	8" WHITE		TYPE "AY"	TYPE "D"	TYPE "H"	TYPE "G"
			EA	LF	LF	LF	SQFT	EA			
PD-1	"CL" 452+23.1 TO "CL" 452+98.8	23M			150.0			38	19		
	"CL" 452+23.1 L+ TO "CL" 456+00.4 L+	27B		377.2							
	"CL" 452+23.1 R+ TO "CL" 456+11.8 R+	27B		388.9							
	"CL" 452+98.8 TO "CL" 458+28.3 L+	25A			533.7					23	
	"CL" 452+98.8 TO "CL" 458+27.3 R+	25A			536.8					23	
	"CL" 456+00.4 L+ TO "CL" 457+00.0 L+	27C	1	100.0							
	"CL" 456+11.8 R+ TO "CL" 457+11.0 R+	27C		100.0							
	"CL" 458+27.3 R+ TO "CL" 458+28.3 L+	27B		52.9							
	"CL" 458+01.9 L+ TO "CL" 459+31.7 L+	27B		32.1							
	"CL" 458+41.3 TO "CL" 459+59.2	24			370.7						
	"CL" 458+55.4 L+ TO "CL" 459+31.7 L+	27B		80.3							
	"CL" 459+69.2 R+ TO "CL" 459+75.3 L+	27B		52.9							
	"CL" 459+69.2 R+ TO "CL" 461+00.0 R+	25A			132.5					6	
	"CL" 459+75.3 L+ TO "CL" 461+00.0 R+	25A			133.7					6	
	"CL" 460+78.0 R+ TO "CL" 461+00.0 R+	27C		22.9							
	"CL" 460+89.9 L+ TO "CL" 461+00.0 L+	27C		9.9							
	"PR" 155+67.6 TO "PR" 157+02.7	22			270.4				24		
	"PR" 157+02.7 TO "PR" 158+21.3 R+	25A			114.6					5	
	"PR" 157+02.7 TO "PR" 158+42.6 L+	25A			158.8					7	
	"PR" 157+21.7 R+ TO "PR" 158+19.9 R+	38				96.1					4
	"PR" 157+21.7 R+ TO "PR" 158+24.3 R+	38				85.3					4
	"CL" 457+32.0 R+	TYPE VII (L)					27.00				
	"CL" 458+15.1 R+	"YIELD"					24.00				
	"CL" 458+27.6 R+ TO "CL" 458+32.2 R+	YIELD LINE					18.00				
	"CL" 457+92.5 R+ TO "CL" 457+85.2 L+	CROSSWALK					96.03				
	"CL" 457+68.5 L+ TO "CL" 457+92.8 L+	CROSSWALK					186.33				
	"CL" 459+68.5 L+ TO "CL" 459+75.1 L+	YIELD LINE					30.00				
	"CL" 459+88.0 L+	"YIELD"					24.00				
	"CL" 460+05.8 R+ TO "CL" 460+08.7 R+	CROSSWALK					96.01				
	"CL" 460+08.3 L+ TO "CL" 460+17.6 L+	CROSSWALK					96.23				
	"CL" 460+71.4 L+	TYPE VII (R)					27.00				
		SHEET TOTAL	1	1217.1	2401.2	181.4	624.60	38	43	70	8

PAVEMENT DELINEATION QUANTITIES

PDQ-1

STATE OF CALIFORNIA - DEPARTMENT OF TRANSPORTATION
Caltrans®
DESIGN

FUNCTIONAL SUPERVISOR: S. M. WYATT
CALCULATED-DESIGNED BY: PAUL F. VALADAO
CHECKED BY: STEVE M. WYATT
REVISED BY
DATE REVISED

LAST REVISION 00-00-00 | DATE PLOTTED => 04-APR-2011 | TIME PLOTTED => 06:48

Dist	COUNTY	ROUTE	POST MILES TOTAL PROJECT	SHEET No.	TOTAL SHEETS
05	SB	246	12.2	45	93

1-13-11
REGISTERED CIVIL ENGINEER DATE

3-28-11
PLANS APPROVAL DATE

REGISTERED PROFESSIONAL ENGINEER
P.F. VALADAO
No. 63987
Exp. 9-30-12
CIVIL
STATE OF CALIFORNIA

THE STATE OF CALIFORNIA OR ITS OFFICERS OR AGENTS SHALL NOT BE RESPONSIBLE FOR THE ACCURACY OR COMPLETENESS OF SCANNED COPIES OF THIS PLAN SHEET.

PAVEMENT DELINEATION

SHEET No.	STATION LIMITS	DETAIL No. OR PAVEMENT MARKING	OBJECT MARKER (TYPE L-1)	THERMOPLASTIC TRAFFIC STRIPE (SPRAYABLE)			THERMOPLASTIC PAVEMENT MARKING	PAVEMENT MARKER			
								(NON-REFLECTIVE)	(RETROREFLECTIVE)		
				4" WHITE	4" YELLOW	8" WHITE		TYPE "AY"	TYPE "D"	TYPE "H"	TYPE "G"
			EA	LF	LF	LF	SQFT	EA			
PD-1	"PR" 157+21.0 R†	TYPE IV (R) ARROW					15.00				
	"PR" 157+37.0 R†	TYPE IV (L) ARROW					15.00				
	"PR" 157+32.0 R† TO "PR" 157+70.0 R†	CROSSWALK					148.81				
	"PR" 157+80.0 R† TO "PR" 157+85.2 R†	CROSSWALK					110.55				
	"PR" 157+92.2 L† TO "PR" 157+95.8 L†	CROSSWALK					96.04				
	"PR" 157+81.2 R†	"YIELD"					24.00				
	"PR" 157+52.2 R† TO "PR" 158+17.7 R†	YIELD LINE					27.00				
	"PR" 158+06.8 R†	"YIELD"					24.00				
	"PR" 158+21.4 R† TO "PR" 158+22.6 R†	YIELD LINE					24.00				
PD-2	"CL" 464+20.2 TO "CL" 467+30	23M			619.6			155	78		
	"CL" 461+00.0 R† TO "CL" 464+20.2	25A			320.5					14	
	"CL" 461+00.0 R† TO "CL" 464+20.2	25A			320.4					14	
	"CL" 461+89.7 L† TO "CL" 467+30 L†	27B		540.3							
	"CL" 461+78.0 R† TO "CL" 467+30 R†	27B		552.1							
	"CL" 461+00.0 L† TO "CL" 461+89.7 L†	27C		90.1							
	"CL" 461+00.0 R† TO "CL" 461+78.0 R†	27C		77.1							
	"CL" 464+20.2 R† TO "CL" 467+30 R†	38				309.8					14
	"CL" 464+25 R†	TYPE IV (L) ARROW					15				
	"CL" 465+50 R†	TYPE IV (L) ARROW					15				
	"CL" 466+80 R†	TYPE IV (L) ARROW					15				
PDQ-2 SHEET TOTAL			0	1259.6	1260.5	309.8	529.40	155	78	28	14
PDQ-1 SHEET TOTAL			1	1217.1	2401.2	181.4	624.60	38	43	70	8
GRAND TOTAL			1	6629.6			1154	193	241		

PAVEMENT DELINEATION QUANTITIES

PDQ-2

STATE OF CALIFORNIA - DEPARTMENT OF TRANSPORTATION
Caltrans DESIGN
FUNCTIONAL SUPERVISOR: S. M. WYATT
CALCULATED-DESIGNED BY: PAUL F. VALADAO
CHECKED BY: STEVE M. WYATT
REVISED BY
DATE REVISED

LAST REVISION 01-13-11
DATE PLOTTED => 04-APR-2011
TIME PLOTTED => 06:48

Dist	COUNTY	ROUTE	POST MILES TOTAL PROJECT	SHEET No.	TOTAL SHEETS
05	SB	246	12.2	46	93

1-13-11
REGISTERED CIVIL ENGINEER DATE

3-28-11
PLANS APPROVAL DATE

REGISTERED PROFESSIONAL ENGINEER
P.F. VALADAO
No. 63987
Exp. 9-30-12
CIVIL
STATE OF CALIFORNIA

THE STATE OF CALIFORNIA OR ITS OFFICERS OR AGENTS SHALL NOT BE RESPONSIBLE FOR THE ACCURACY OR COMPLETENESS OF SCANNED COPIES OF THIS PLAN SHEET.

NOTE:

ROADSIDE SIGNS 1 AND 11 MOUNTED ON SOLAR FLASHING BEACON METAL POST (SEE SHEET E-1).

LEGEND:

- (##) ROADSIDE SIGN NUMBER
- (CA) CALIFORNIA SIGN CODE
- ■ REMOVE ROADSIDE SIGN
- SIGN - SINGLE POST
- SIGN - TWO POST

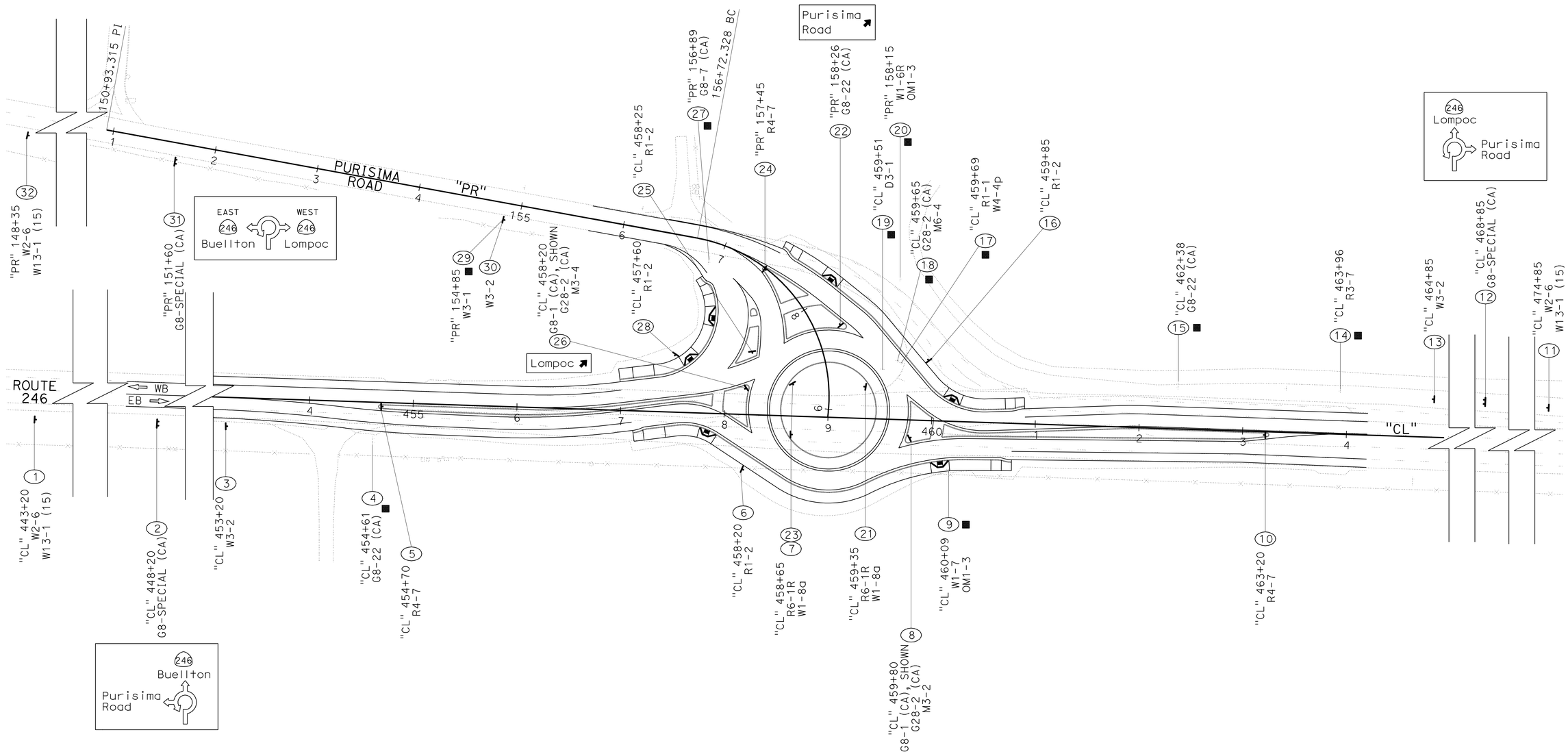

SIGN PLAN

SCALE: 1" = 50'

S-1

THIS PLAN ACCURATE FOR SIGN WORK ONLY.

STATE OF CALIFORNIA - DEPARTMENT OF TRANSPORTATION
Caltrans®
DESIGN

FUNCTIONAL SUPERVISOR: S. M. WYATT
CALCULATED-DESIGNED BY: PAUL F. VALADAO
CHECKED BY: JOSEPH J. ERWIN
REVISED BY
DATE REVISED

LAST REVISION 01-13-11
DATE PLOTTED => 04-APR-2011
TIME PLOTTED => 06:48

Dist	COUNTY	ROUTE	POST MILES TOTAL PROJECT	SHEET No.	TOTAL SHEETS
05	SB	246	12.2	47	93

REGISTERED CIVIL ENGINEER 1-13-11 DATE

3-28-11
PLANS APPROVAL DATE

REGISTERED PROFESSIONAL ENGINEER JOSEPH J. ERWIN No. 74015 Exp. 6-30-11 CIVIL STATE OF CALIFORNIA

THE STATE OF CALIFORNIA OR ITS OFFICERS OR AGENTS SHALL NOT BE RESPONSIBLE FOR THE ACCURACY OR COMPLETENESS OF SCANNED COPIES OF THIS PLAN SHEET.

NOTE:
ALL DIMENSIONS IN INCHES UNLESS OTHERWISE NOTED.

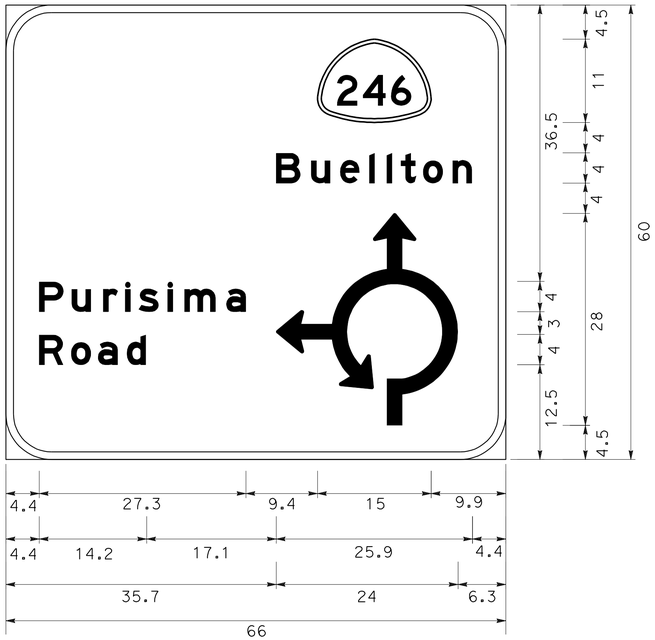

(2) G8-SPECIAL (CA);
6.0" RADIUS, 1.0" BORDER, WHITE ON GREEN;
[PURISIMA] E; [ROAD] E; [BUELLTON] E;
ROUNDABOUT SYMBOL;

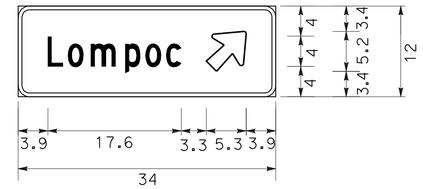

(26) G8-1 (CA);
1.5" RADIUS, 0.5" BORDER, WHITE ON GREEN;
[LOMPOC] C SPECIFIED LENGTH; ARROW 4UC&CAP-1L - 6.4" 45°;

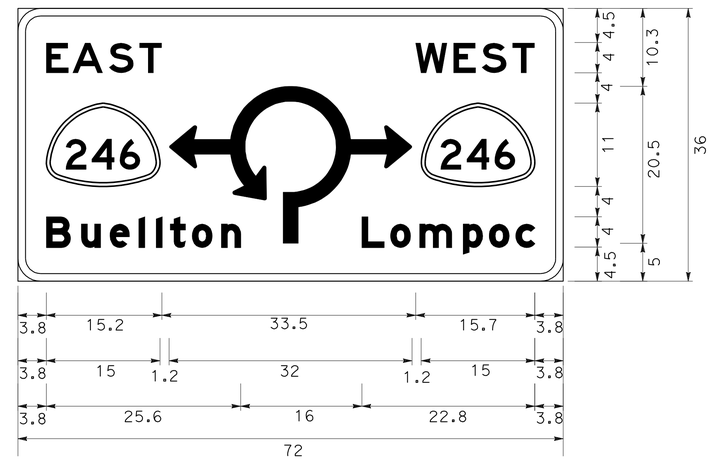

(31) G8-SPECIAL (CA);
3.0" RADIUS, 1.0" BORDER, WHITE ON GREEN;
[EAST] E; [WEST] E; ROUNDABOUT SYMBOL;
[BUELLTON] E Mod; [LOMPOC] E Mod;

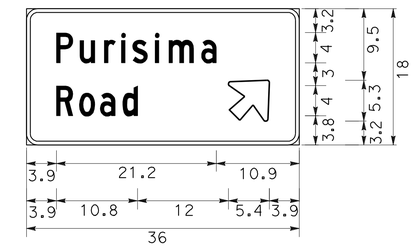

(22) G8-22 (CA);
1.5" RADIUS, 0.5" BORDER, WHITE ON GREEN;
[PURISIMA] C; [ROAD] C; ARROW 4UC&CAP-2LH - 6.4" 45°;

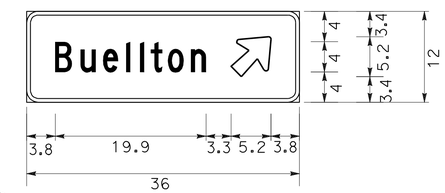

(8) G8-1 (CA);
1.5" RADIUS, 0.5" BORDER, WHITE ON GREEN;
[BUELLTON] C SPECIFIED LENGTH; ARROW 4UC&CAP-1L - 6.4" 45°;

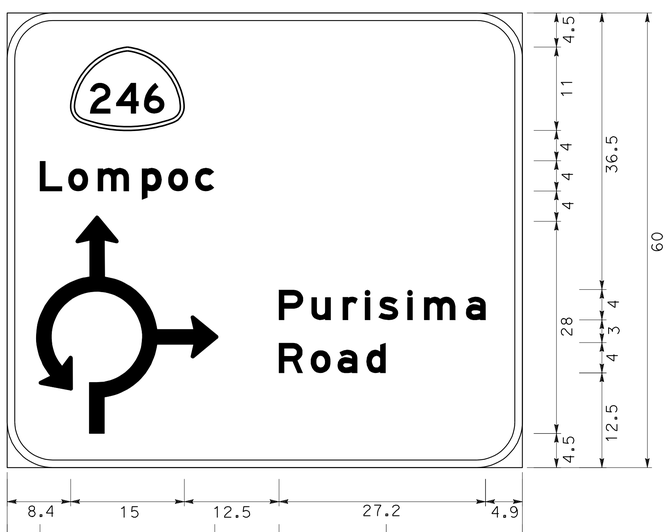

(12) G8-SPECIAL (CA);
6.0" RADIUS, 1.0" BORDER, WHITE ON GREEN;
[LOMPOC] E; ROUNDABOUT SYMBOL;
[PURISIMA] E; [ROAD] E;

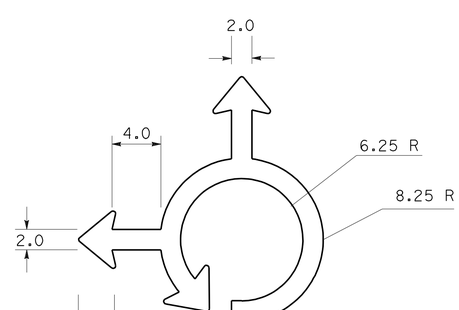

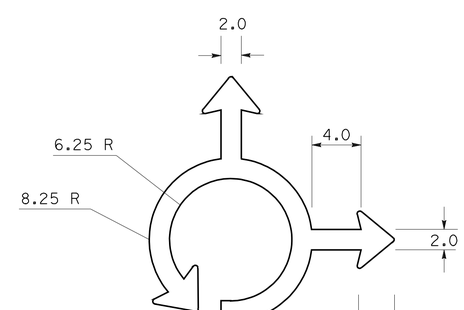

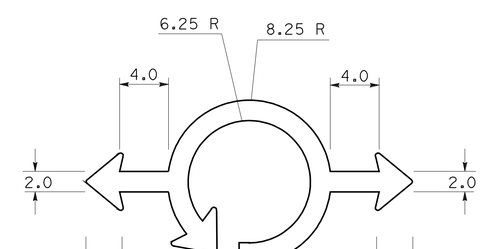

SIGN DETAILS

NO SCALE

SD-1

STATE OF CALIFORNIA - DEPARTMENT OF TRANSPORTATION
Caltrans
DESIGN

FUNCTIONAL SUPERVISOR: S. M. WYATT
CALCULATED-DESIGNED BY: JOSEPH J. ERWIN
CHECKED BY: PAUL F. VALADAO
REVISED BY
DATE REVISED

LAST REVISION 01-13-11
DATE PLOTTED => 21-APR-2011
TIME PLOTTED => 05:51

Dist	COUNTY	ROUTE	POST MILES TOTAL PROJECT	SHEET No.	TOTAL SHEETS
05	SB	246	12.2	48	93

REGISTERED CIVIL ENGINEER 1-13-11 DATE

3-28-11
PLANS APPROVAL DATE

REGISTERED PROFESSIONAL ENGINEER P.F.VALADAO No. 63987 Exp. 9-30-12 CIVIL STATE OF CALIFORNIA

THE STATE OF CALIFORNIA OR ITS OFFICERS OR AGENTS SHALL NOT BE RESPONSIBLE FOR THE ACCURACY OR COMPLETENESS OF SCANNED COPIES OF THIS PLAN SHEET.

NOTES:
1. EXACT LOCATION AND POSITION OF ROADSIDE SIGNS TO BE DETERMINED BY THE ENGINEER.
2. CALIFORNIA SIGN CODES ARE DESIGNATED BY (CA). OTHERWISE FEDERAL SIGN CODES ARE SHOWN.

ROADSIDE SIGN ITEMS

SIGN No. (##)	SIGN CODE	PANEL SIZE (INCH X INCH)	SINGLED FACED	DIRECTION	BACKGROUND		LEGEND		GRAFFITI FILM	FURNISH SINGLE SHEET ALUMINUM SIGN			POST SIZE (INCH X INCH)	ROADSIDE SIGN		REMOVE ROADSIDE SIGN	REMARKS
					SHEETING COLOR	RETROREFLECTIVITY ASTM COLOR	SHEETING COLOR	RETROREFLECTIVITY ASTM COLOR	PREMIUM	0.063" UNFRAMED	0.063" FRAMED	0.080" UNFRAMED		ONE POST	TWO POST		
										SQFT	SQFT	SQFT		EA	EA	EA	
1	W2-6	30 X 30	X	FEBT	YELLOW	IV	BLACK	IV	X	6.25			6 X 6	1			MOUNT ON SOLAR FLASHING BEACON METAL POST, SEE SHEET E-1.
	W13-1 (15)	30 X 30	X	FEBT	YELLOW	IV	BLACK	IV	X	6.25							
2	G8-SPECIAL (CA)	60 X 66	X	FEBT	GREEN	IV	WHITE	IV	X		27.50		2-6 X 6		1		246 BUELLTON, PURISMA ROAD
3	W3-2	36 X 36	X	FEBT	YELLOW	IV	BLACK	IV	X	9.00			4 X 4	1			
4	G8-22 (CA)															1	
5	R4-7	24 X 30	X	FEBT	WHITE	IV	BLACK	IV	X	5.00			4 X 4	1			INSTALL IN SPLITTER ISLAND
6	R1-2	36 X 36 X 36	X	FEBT	WHITE	IV	RED	IV	X	3.90			4 X 4	1			YIELD
7	R6-1R	36 X 12	X	FEBT	WHITE	IV	BLACK	IV	X	3.00			4 X 6	1			ONE WAY
	W1-8a	48 X 12	X	FEBT	YELLOW	IV	BLACK	IV	X			4.00					CHEVRON PLATE
8	G8-1 (CA)	12 X 36	X	FEBT	GREEN	IV	WHITE	IV	X	3.00			4 X 6	1			BUELLTON
	G28-2 (CA)	25 X 28	X	FEBT	GREEN	IV	WHITE	IV	X	4.86							246
	M3-2	12 X 24	X	FEBT	GREEN	IV	WHITE	IV		2.00							EAST
9	W1-7															1	
	OM1-3																
10	R4-7	24 X 30	X	FWBT	WHITE	IV	BLACK	IV	X	5.00			4 X 4	1			INSTALL IN SPLITTER ISLAND
11	W2-6	30 X 30	X	FWBT	YELLOW	IV	BLACK	IV	X	6.25			6 X 6	1			MOUNT ON SOLAR FLASHING BEACON METAL POST, SEE SHEET E-1.
	W13-1 (15)	30 X 30	X	FWBT	YELLOW	IV	BLACK	IV	X	6.25							
12	G8-SPECIAL (CA)	60 X 68	X	FWBT	GREEN	IV	WHITE	IV	X		28.33		2-6 X 6		1		246 LOMPOC, PURISMA ROAD
13	W3-2	36 X 36	X	FWBT	YELLOW	IV	BLACK	IV	X	9.00			4 X 4	1			
14	R3-7															1	
15	G8-22 (CA)															1	
16	R1-2	36 X 36 X 36	X	FWBT	WHITE	IV	RED	IV	X	3.90			4 X 4	1			
17	R1-1															1	
	W4-4P																
18	G28-2 (CA)															1	
	M6-4																
19	D3-1															1	
SHEET SQ-1 TOTAL										73.66	55.83	4.00		10	2	7	

SIGN QUANTITIES

SQ-1

STATE OF CALIFORNIA - DEPARTMENT OF TRANSPORTATION
DESIGN
Caltrans

FUNCTIONAL SUPERVISOR: S. M. WYATT
CALCULATED-DESIGNED BY: PAUL F. VALADAO
CHECKED BY: JOSEPH J. ERWIN
REVISED BY
DATE REVISED

LAST REVISION 01-13-11
DATE PLOTTED => 04-APR-2011
TIME PLOTTED => 06:48

Dist	COUNTY	ROUTE	POST MILES TOTAL PROJECT	SHEET No.	TOTAL SHEETS
05	SB	246	12.2	49	93

REGISTERED CIVIL ENGINEER 1-13-11 DATE

3-28-11
PLANS APPROVAL DATE

REGISTERED PROFESSIONAL ENGINEER P.F.VALADAO No. 63987 Exp. 9-30-12 CIVIL STATE OF CALIFORNIA

THE STATE OF CALIFORNIA OR ITS OFFICERS OR AGENTS SHALL NOT BE RESPONSIBLE FOR THE ACCURACY OR COMPLETENESS OF SCANNED COPIES OF THIS PLAN SHEET.

ROADSIDE SIGN ITEMS

SIGN No. (##)	SIGN CODE	PANEL SIZE (INCH X INCH)	SINGLE FACED	DIRECTION	BACKGROUND SHEETING COLOR	BACKGROUND RETROREFLECTIVITY ASTM COLOR	LEGEND SHEETING COLOR	LEGEND RETROREFLECTIVITY ASTM COLOR	GRAFFITI FILM PREMIUM	FURNISH SINGLE SHEET ALUMINUM SIGN 0.063" UNFRAMED SQFT	FURNISH SINGLE SHEET ALUMINUM SIGN 0.063" FRAMED SQFT	FURNISH SINGLE SHEET ALUMINUM SIGN 0.080" UNFRAMED SQFT	POST SIZE (INCH X INCH)	ROADSIDE SIGN ONE POST EA	ROADSIDE SIGN TWO POST EA	INSTALL ROADSIDE SIGN ON Exist POST EA	REMOVE ROADSIDE SIGN EA	REMARKS
20	W1-6R																1	
	OM1-3																	
21	R6-1R	36 X 12	X	FWBT	WHITE	IV	BLACK	IV	X	3.00			4 X 6	1				ONE WAY
	W1-8a	48 X 12	X	FWBT	YELLOW	IV	BLACK	IV	X			4.00						CHEVRON PLATE
22	G8-22 (CA)	18 X 36	X	FNBT	GREEN	IV	WHITE	IV	X	4.50			4 X 4	1				PURISMA ROAD, INSTALL IN SPLITTER ISLAND
23	R6-1R	36 X 12	X	FSBT	WHITE	IV	BLACK	IV	X	3.00			4 X 6	1				ONE WAY
	W1-8a	48 X 12	X	FSBT	YELLOW	IV	BLACK	IV	X			4.00						CHEVRON PLATE
24	R4-7	24 X 30	X	FSBT	WHITE	IV	BLACK	IV	X	5.00			4 X 4	1				INSTALL IN SPLITTER ISLAND
25	R1-2	36 X 36 X 36	X	FSBT	WHITE	IV	RED	IV	X	3.90			4 X 4	1				INSTALL IN SPLITTER ISLAND
26	G8-1 (CA)	12 X 34	X	FWBT	GREEN	IV	WHITE	IV	X	2.83			4 X 6	1				LOMPOC
	G28-2 (CA)	25 X 28	X	FWBT	GREEN	IV	WHITE	IV	X	4.86								246
	M3-4	12 X 24	X	FWBT	GREEN	IV	WHITE	IV	X	2.00								WEST
27	G8-7 (CA)																1	
28	R1-2	36 X 36 X 36	X	FSBT	WHITE	IV	RED	IV	X	3.90			4 X 4	1				
29	W3-1																1	POST TO REMAIN
30	W3-2	36 X 36	X	FWBT	YELLOW	IV	BLACK	IV	X	9.00						1		INSTALL ON POST FROM SIGN No. 29
31	G-SPECIAL (CA)	36 X 72	X	FWBT	GREEN	IV	WHITE	IV	X		18.00		2-4 X 6		1			EAST 246 BUELLTON 246, WEST 246 LOMPOC
32	W2-6	30 X 30	X	FWBT	YELLOW	IV	BLACK	IV	X	6.25			4 X 6	1				
	W13-1 (15)	30 X 30	X	FWBT	YELLOW	IV	BLACK	IV	X	6.25								
SQ-2 SHEET TOTAL										54.49	18.00	8.00		8	1	1	3	
SQ-1 SHEET TOTAL										73.66	55.83	4.00		10	2	0	7	
GRAND TOTAL										128.15	73.83	12.00		18	3	1	10	

SIGN QUANTITIES
SQ-2

STATE OF CALIFORNIA - DEPARTMENT OF TRANSPORTATION
DESIGN
Caltrans

FUNCTIONAL SUPERVISOR: S. M. WYATT
CALCULATED-DESIGNED BY: PAUL F. VALADAO
CHECKED BY: JOSEPH J. ERWIN
REVISED BY
DATE REVISED

LAST REVISION 01-13-11
DATE PLOTTED => 04-APR-2011
TIME PLOTTED => 06:48

Dist	COUNTY	ROUTE	POST MILES TOTAL PROJECT	SHEET No.	TOTAL SHEETS
05	SB	246	12.2	50	93

REGISTERED CIVIL ENGINEER 1-13-11 DATE

3-28-11
PLANS APPROVAL DATE

REGISTERED PROFESSIONAL ENGINEER P.F.VALADAO No. 63987 Exp. 9-30-12 CIVIL STATE OF CALIFORNIA

THE STATE OF CALIFORNIA OR ITS OFFICERS OR AGENTS SHALL NOT BE RESPONSIBLE FOR THE ACCURACY OR COMPLETENESS OF SCANNED COPIES OF THIS PLAN SHEET.

PAVEMENT STRUCTURES

STATION	OBLITERATE SURFACING	COLD PLANE AC PAVEMENT	ROADWAY EXCAVATION	IMPORTED BORROW	(N) EMBANKMENT	CLASS 1 AGGREGATE SUBBASE	CLASS 2 AGGREGATE BASE	LEAN CONCRETE BASE	HOT MIX ASPHALT (TYPE A)	TACK COAT	JOINTED PLAIN Conc Pvmt	(N) DOWEL BAR		SEAL PAVEMENT JOINT TRANSVERSE JOINT (Type A1, COMPRESSION SEAL)	SEAL ISOLATION JOINT Longit ISOLATION JOINT
	SQYD	SQYD	CY	CY	CY	CY	CY	CY	TON	TON	CY	EA	LF	LF	LF
"CL" 452+23.1 TO "CL" 452+98.1		327.7							33.2	0.04					
"CL" 452+98.1 TO "CL" 458+20.6	65		1268.8	191.7	403.5		1470.8		1006.7	0.70					
"PR" 155+67.6 TO "PR" 156+42.6		206.1							20.9	0.03					
"PR" 156+42.6 TO "PR" 158+20.4	323.9		541.2	104.5	220.1		715.2		524.1	0.38					
"CL" 458+20.6 TO "CL" 459+79.5 (ROUNDABOUT)			57.1	1428.1	3006.9	63	598.7	63	421.2	0.29	100.9	264	396	252	648.2
"CL" 459+79.5 TO "CL" 464+20.3	768.7		2149.2	20.4	42.9		1299.9		901	0.63					
"CL" 464+20.3 TO "CL" 467+22.7	167.3	435.9							44.9	0.06					
TOTAL	1324.9	969.7	4016.3	1744.7	3673.4	63	4084.6	63	2952	2.13	100.9	264	396	252	648.2

(N) NOT A SEPARATE PAY ITEM, FOR INFORMATION ONLY.

MINOR CONCRETE

STATION	MINOR CONCRETE (TEXTURED PAVING)		MINOR CONCRETE (CURB AND CURB RAMP)			
			CURB		CURB RAMP	
	SQFT	(N) CY	TYPE	CY	CASE	CY
Rt "CL" 454+67.1 TO Lt "CL" 457+88.2 (SPLITTER ISLAND 1)	1221.4	14.9	A1-6	17.1		
27.5' Lt "CL" 456+98.7 TO 34.5' Rt "PR" 156+86.9			A2-6	7.9		
19' Rt "CL" 457+12.3 TO 35.1' Rt "CL" 460+78.2			A2-6	20.7		
Lt "CL" 457+70 (RAMP K)					Mod A	2.6
Rt "CL" 457+85 (RAMP B)					Mod A	2.6
Lt "CL" 457+99 TO "CL" 457+22.7 (SPLITTER ISLAND 2)	641.6	7.8	A1-6	2.9		
Rt "PR" 157+30 (RAMP J)					Mod A	2.9
"PR" 157+42.7 TO "PR" 157+90.1 (SPLITTER ISLAND 5)	535.9	6.5	A1-6	3.1		
24.8' Lt "PR" 157+46.2 TO 14.5' Lt "CL" 460+89.4			A2-6	15.3		
Rt "PR" 157+63.5 TO Rt "PR" 157+72.2 (SPLITTER ISLAND 3)	29.2	0.4	A1-6	0.7		
Rt "PR" 157+82.2 TO Rt "PR" 158+20 (SPLITTER ISLAND 4)	362.7	4.4	A1-6	2.5		
Lt "PR" 157+90 (RAMP G)					Mod A	2.9
"PR" 157+95.6 TO "PR" 158+30.6 (SPLITTER ISLAND 6)	1069.2	13.1	A1-6	4.1		
"CL" 458+21.3 TO "CL" 459+78.9 (ROUNDABOUT)			D-6	25.2		
"CL" 458+54 TO "CL" 459+46.6 (ROUNDABOUT)			A1-6	7.5		
"CL" 459+75.6 TO "CL" 460+01.6 (SPLITTER ISLAND 7)	643.1	7.9	A1-6	3.0		
Rt "CL" 460+10.8 TO Rt "CL" 463+25 (SPLITTER ISLAND 8)	1862	22.8	A1-6	16.7		
Rt "CL" 460+11 (RAMP C)					Mod A	2.8
Lt "CL" 460+20 (RAMP F)					Mod A	2.6
SUB-TOTAL	6365.1	77.8		126.7		16.4
TOTAL	6365.1	77.8	143.1			

(N) NOT A SEPARATE PAY ITEM, FOR INFORMATION ONLY.

OBJECT MARKER

STATION	OBJECT MARKER (TYPE L-1)
	EA
Lt "CL" 456+90	1
TOTAL	1

FENCE

STATION	REMOVE FENCE (TYPE BW)	FENCE (TYPE BW, 5 STRAND, METAL POST)
	LF	LF
51.8' Rt "CL" 454+98.2 TO 31.1' Rt "CL" 463+20.4	805	844
TOTAL	805	844

WATER POLLUTION CONTROL

STATION	TEMPORARY MULCH	TEMPORARY CONSTRUCTION ENTRANCE	TEMPORARY CHECK DAM	TEMPORARY DRAINAGE INLET PROTECTION	STORM WATER ANNUAL REPORT
	SQYD	EA	LF	EA	EA
"CL" 452+23.1 TO "CL" 467+22.7	6900	2	75	5	2

SUMMARY OF QUANTITIES

Q-1

STATE OF CALIFORNIA - DEPARTMENT OF TRANSPORTATION
Caltrans DESIGN

FUNCTIONAL SUPERVISOR S. M. WYATT
CALCULATED-DESIGNED BY PAUL F. VALADAO
CHECKED BY STEVE M. WYATT
REVISED BY
DATE REVISED

LAST REVISION 01-13-11
DATE PLOTTED => 04-APR-2011
TIME PLOTTED => 06:48

Dist	COUNTY	ROUTE	POST MILES TOTAL PROJECT	SHEET No.	TOTAL SHEETS
05	SB	246	12.2	51	93

LICENSED LANDSCAPE ARCHITECT

3-28-11
PLANS APPROVAL DATE

LICENSED LANDSCAPE ARCHITECT
PATRICK K. BOLGER
No. 1852
11-30-12
Renewal Date
1-13-11
Date
STATE OF CALIFORNIA

THE STATE OF CALIFORNIA OR ITS OFFICERS OR AGENTS SHALL NOT BE RESPONSIBLE FOR THE ACCURACY OR COMPLETENESS OF SCANNED COPIES OF THIS PLAN SHEET.

ROCK BLANKET

SHEET	(N) CLASS II AB	(N) CONCRETE	(N) COBBLE	AREA
	CY	CY	TON	SQYD
L-1	17	25	55	304

(N) - NOTE A SEPARATE PAY ITEM, FOR INFORMATION ONLY.

EROSION CONTROL

SHEET	EROSION CONTROL (COMPOST BLANKET)	EROSION CONTROL (HYDROSEED)	COMPOST (INCORPORATE)	(N) PURE LIVE SEED	(N) FIBER	(N) TACKIFIER
	CY	SQFT	SQYD	LB	LB	LB
PP-1	-	-	900	-	-	-
	144	46,800	-	32.2	1,074	161
PP-2	47	15,300	-	10.5	351	53
TOTAL	191	62,100	900	42.7	1,425	214

(N) - NOTE A SEPARATE PAY ITEM, FOR INFORMATION ONLY.

IMPORTED TOPSOIL

SHEET	REMARKS	CY
X-3	LANDSCAPED ISLAND	198

IRRIGATION CROSSOVERS

SHEET	LOCATION		SIDE		CHDPE PIPE CONDUIT	(N) WATER LINE CROSSOVER	(N) SPRINKLER CONTROL CROSSOVER
	ROUTE	STATION	L†	R†	SIZE (INCH) 8" LENGTH (LF)	SIZE (INCH)	SIZE (INCH)
IP-1	246	458+00	X		120	1½"	-
	246	459+60	X		75	1 @ 2", 1 @ 1½"	-
TOTAL					195		

(N) - NOTE A SEPARATE PAY ITEM, FOR INFORMATION ONLY.

SUMMARY OF QUANTITIES
Q-2

STATE OF CALIFORNIA - DEPARTMENT OF TRANSPORTATION
Caltrans® LANDSCAPE ARCHITECTURE

SENIOR LANDSCAPE ARCHITECT: DENNIS REEVES
CALCULATED-DESIGNED BY: PATRICK BOLGER
CHECKED BY: KRISTEN LANGAGER
REVISED BY
DATE REVISED

LAST REVISION 01-13-11
DATE PLOTTED => 04-APR-2011
TIME PLOTTED => 06:49

Dist	COUNTY	ROUTE	POST MILES TOTAL PROJECT	SHEET No.	TOTAL SHEETS
05	SB	246	12.2	52	93

LICENSED LANDSCAPE ARCHITECT

3-28-11
PLANS APPROVAL DATE

LICENSED LANDSCAPE ARCHITECT — PATRICK K. BOLGER — 11-30-12 — Signature — Renewal Date — 1-13-11 — Date — STATE OF CALIFORNIA

THE STATE OF CALIFORNIA OR ITS OFFICERS OR AGENTS SHALL NOT BE RESPONSIBLE FOR THE ACCURACY OR COMPLETENESS OF SCANNED COPIES OF THIS PLAN SHEET.

ABBREVIATIONS:

AMEND — amendment
B & B — balled and burlapped
Dia — diameter
EA — each
LB — pound
Oz — ounce
Ft — foot/feet
SQFT — square feet
SQYD — square yard
CF — cubic feet
CY — cubic yard
Max — maximum
Min — minimum
NCN — no common name
No. — number
Pkt — packet
PLT ESTB — plant establishment
Pvmt — pavement
R/W — right of way
SF — state furnished
TRVD — traveled

PLANT LIST AND PLANTING SPECIFICATIONS

PLANT GROUP	PLANT No.	SYMBOL	BOTANICAL NAME	COMMON NAME	SIZE	QUANTITY EACH	HOLE SIZE (INCH) Dia	HOLE SIZE (INCH) DEPTH	BASIN TYPE	IRON SULFATE	AMEND	COMMERCIAL FERTILIZER ① PLANTING	COMMERCIAL FERTILIZER ① PLT ESTB	BASIN MULCH ①	STAKING	PLANTING LIMITS MINIMUM DISTANCE (Ft) FROM TRVD WAY	PVMT	FENCE	WALL	PAVED DITCH	EARTH DITCH	ON CENTER (Ft)	REMARKS
A	1		ARCTOSTAPHYLOS 'PACIFIC MIST'	NCN	No. 1	75	8	6	I I	-	-	2 Pkt	7 Oz	2 CF	-	-	3	-	-	8	10	3.5	SHRUB
	2		BACCHARIS PILULARIS 'TWIN PEAKS'	NCN	No. 1	145	8	6	I I	-	-	2 Pkt	7 Oz	2 CF	-	-	3	-	-	8	10	3	SHRUB
	3		CEANOTHUS GRISEUS 'ANCHOR BAY'	NCN	No. 1	145	8	6	I I	-	-	2 Pkt	7 Oz	2 CF	-	-	3	-	-	8	10	3	SHRUB
	4		ERIGERON KARVINSKIANUS	SANTA BARBARA DAISY	No. 1	35	8	6	I I	-	-	2 Pkt	7 Oz	2 CF	-	-	3	-	-	8	10	3	SHRUB
	5		HETEROMELES ARBUTIFOLIA	TOYON	No. 1	20	20	12	I I	-	-	2 Pkt	7 Oz	2 CF	-	-	20	-	-	10	12	4	SHRUB 6
	6		SAMBUCUS MEXICANA	MEXICAN ELDERBERRY	No. 1	30	20	12	I I	-	-	2 Pkt	7 Oz	2 CF	-	-	20	-	-	15	17	4	SHRUB 6
B	7		PLATANUS RACEMOSA	CALIFORNIA SYCAMORE	No. 5	3	30	24	I I	-	-	3 Pkt	21 Oz	4 CF	5	40	20	-	-	10	12	4	TREE 6
	8		POPULUS TRICHOCARPUS	BLACK COTTONWOOD	No. 5	3	30	24	I I	-	-	3 Pkt	21 Oz	4 CF	5	40	20	-	-	20	22	4	TREE 6
	9		QUERCUS AGRIFOLIA	COAST LIVE OAK	No. 5	15	30	24	I I	-	-	3 Pkt	21 Oz	4 CF	5	30	20	-	-	15	17	4	TREE 6

APPLICABLE WHEN CIRCLED:

1 - QUANTITIES SHOWN ARE "PER PLANT" UNLESS SHOWN AS SQFT OR SQYD APPLICATION RATES
2 - SUFFICIENT TO RECEIVE ROOT BALL AND ROOT PROTECTOR
3 - DOES NOT APPLY TO MULCH AREAS.
4 - AS SHOWN ON PLANS.
5 - REQUIRED
6 - ROOT PROTECTOR REQUIRED

NOTE:

UNDERLINED PORTIONS OF BOTANICAL NAME INDICATE ABBREVIATIONS USED ON PLANTING PLANS.

LEGEND:

ROADSIDE CLEARING LIMITS
EROSION CONTROL (COMPOST BLANKET)
EROSION CONTROL (HYDROSEED)
COMPOST (INCORPORATE)
AREA MULCH
EXISTING VEGETATION

PLANT LIST
PL-1

REVISED BY | DATE REVISED
PATRICK BOLGER | KRISTEN LANGAGER
CALCULATED-DESIGNED BY | CHECKED BY
SENIOR LANDSCAPE ARCHITECT | DENNIS REEVES

STATE OF CALIFORNIA - DEPARTMENT OF TRANSPORTATION
Caltrans LANDSCAPE ARCHITECTURE

LAST REVISION 01-13-11 | DATE PLOTTED => 04-APR-2011 | TIME PLOTTED => 06:49

Dist	COUNTY	ROUTE	POST MILES TOTAL PROJECT	SHEET No.	TOTAL SHEETS
05	SB	246	12.2	53	93

LICENSED LANDSCAPE ARCHITECT

3-28-11
PLANS APPROVAL DATE

LICENSED LANDSCAPE ARCHITECT
PATRICK K. BOLGER
11-30-12
Renewal Date
1-13-11
Date
STATE OF CALIFORNIA

THE STATE OF CALIFORNIA OR ITS OFFICERS OR AGENTS SHALL NOT BE RESPONSIBLE FOR THE ACCURACY OR COMPLETENESS OF SCANNED COPIES OF THIS PLAN SHEET.

NOTE:

FOR ACCURATE RIGHT OF WAY DATA, CONTACT RIGHT OF WAY ENGINEERING AT THE DISTRICT OFFICE.

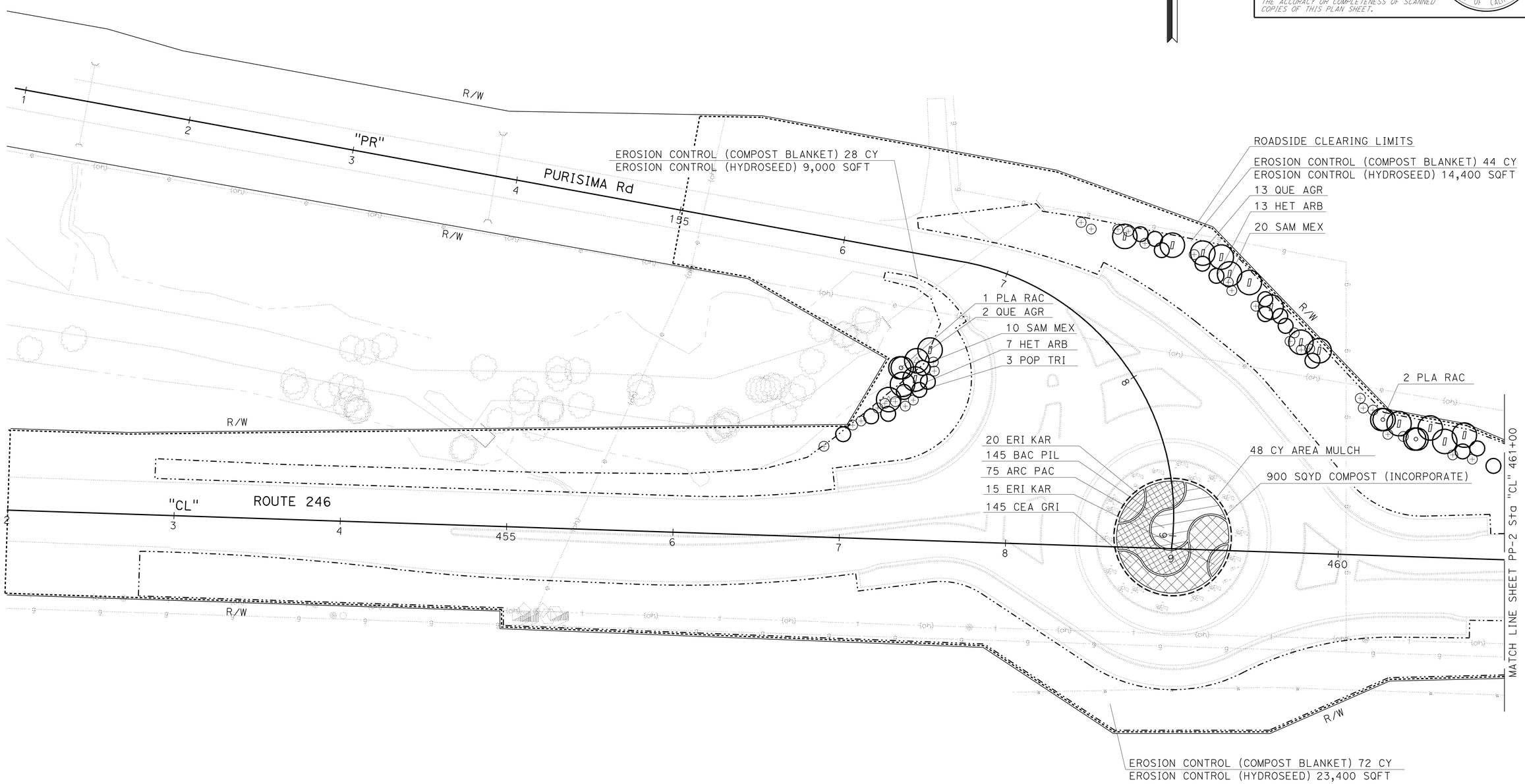

THIS PLAN ACCURATE FOR PLANTING WORK ONLY.

PLANTING PLAN

SCALE: 1" = 30′ **PP-1**

STATE OF CALIFORNIA - DEPARTMENT OF TRANSPORTATION
Caltrans® LANDSCAPE ARCHITECTURE

SENIOR LANDSCAPE ARCHITECT: DENNIS REEVES

CALCULATED-DESIGNED BY: PATRICK BOLGER
CHECKED BY: KRISTEN LANGAGER

REVISED BY | DATE REVISED

LAST REVISION 01-13-11
DATE PLOTTED => 04-APR-2011
TIME PLOTTED => 06:49

Dist	COUNTY	ROUTE	POST MILES TOTAL PROJECT	SHEET No.	TOTAL SHEETS
05	SB	246	12.2	54	93

LICENSED LANDSCAPE ARCHITECT

3-28-11
PLANS APPROVAL DATE

LICENSED LANDSCAPE ARCHITECT
Patrick K. Bolger
Signature
11-30-12
Renewal Date
8-09-10
Date
STATE OF CALIFORNIA

THE STATE OF CALIFORNIA OR ITS OFFICERS OR AGENTS SHALL NOT BE RESPONSIBLE FOR THE ACCURACY OR COMPLETENESS OF SCANNED COPIES OF THIS PLAN SHEET.

NOTE:

FOR ACCURATE RIGHT OF WAY DATA, CONTACT RIGHT OF WAY ENGINEERING AT THE DISTRICT OFFICE.

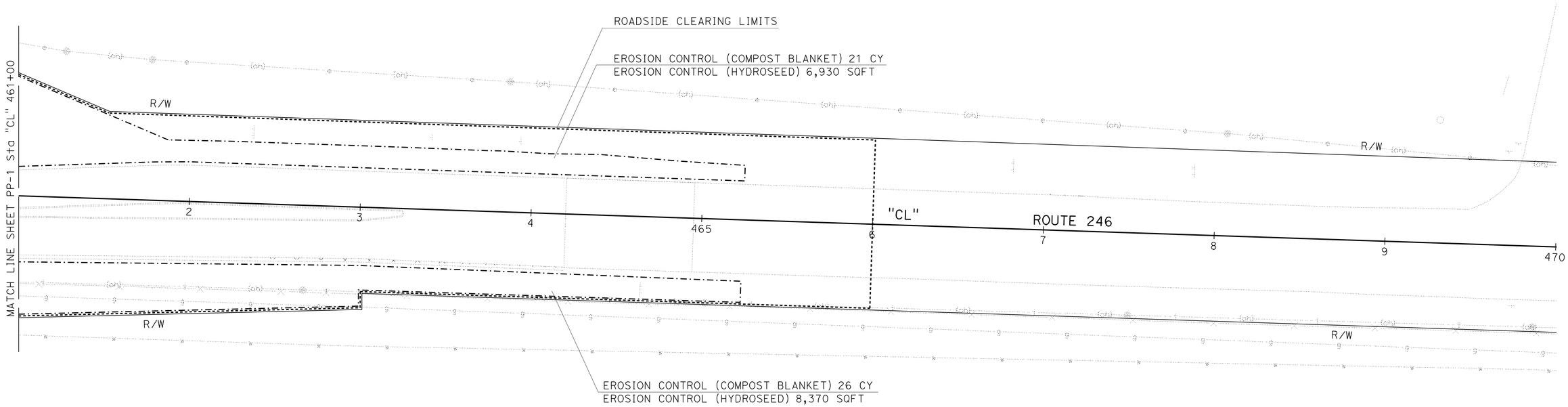

THIS PLAN ACCURATE FOR PLANTING WORK ONLY.

PLANTING PLAN

SCALE: 1" = 30′ **PP-2**

STATE OF CALIFORNIA - DEPARTMENT OF TRANSPORTATION
Caltrans® LANDSCAPE ARCHITECTURE

SENIOR LANDSCAPE ARCHITECT: DENNIS REEVES
CALCULATED-DESIGNED BY: PATRICK BOLGER
CHECKED BY: KRISTEN LANGAGER
REVISED BY
DATE REVISED

LAST REVISION 01-13-11
DATE PLOTTED => 04-APR-2011
TIME PLOTTED => 06:49

Dist	COUNTY	ROUTE	POST MILES TOTAL PROJECT	SHEET No.	TOTAL SHEETS
05	SB	246	12.2	55	93

LICENSED LANDSCAPE ARCHITECT

3-28-11
PLANS APPROVAL DATE

LICENSED LANDSCAPE ARCHITECT
PATRICK K. BOLGER
11-30-12
Renewal Date
1-13-11
Date
STATE OF CALIFORNIA

THE STATE OF CALIFORNIA OR ITS OFFICERS OR AGENTS SHALL NOT BE RESPONSIBLE FOR THE ACCURACY OR COMPLETENESS OF SCANNED COPIES OF THIS PLAN SHEET.

NOTES:

1. FOR ACCURATE RIGHT OF WAY DATA, CONTACT RIGHT OF WAY ENGINEERING AT THE DISTRICT OFFICE.
2. SEE IRRIGATION PLANS FOR IRRIGATION CROSSOVERS.

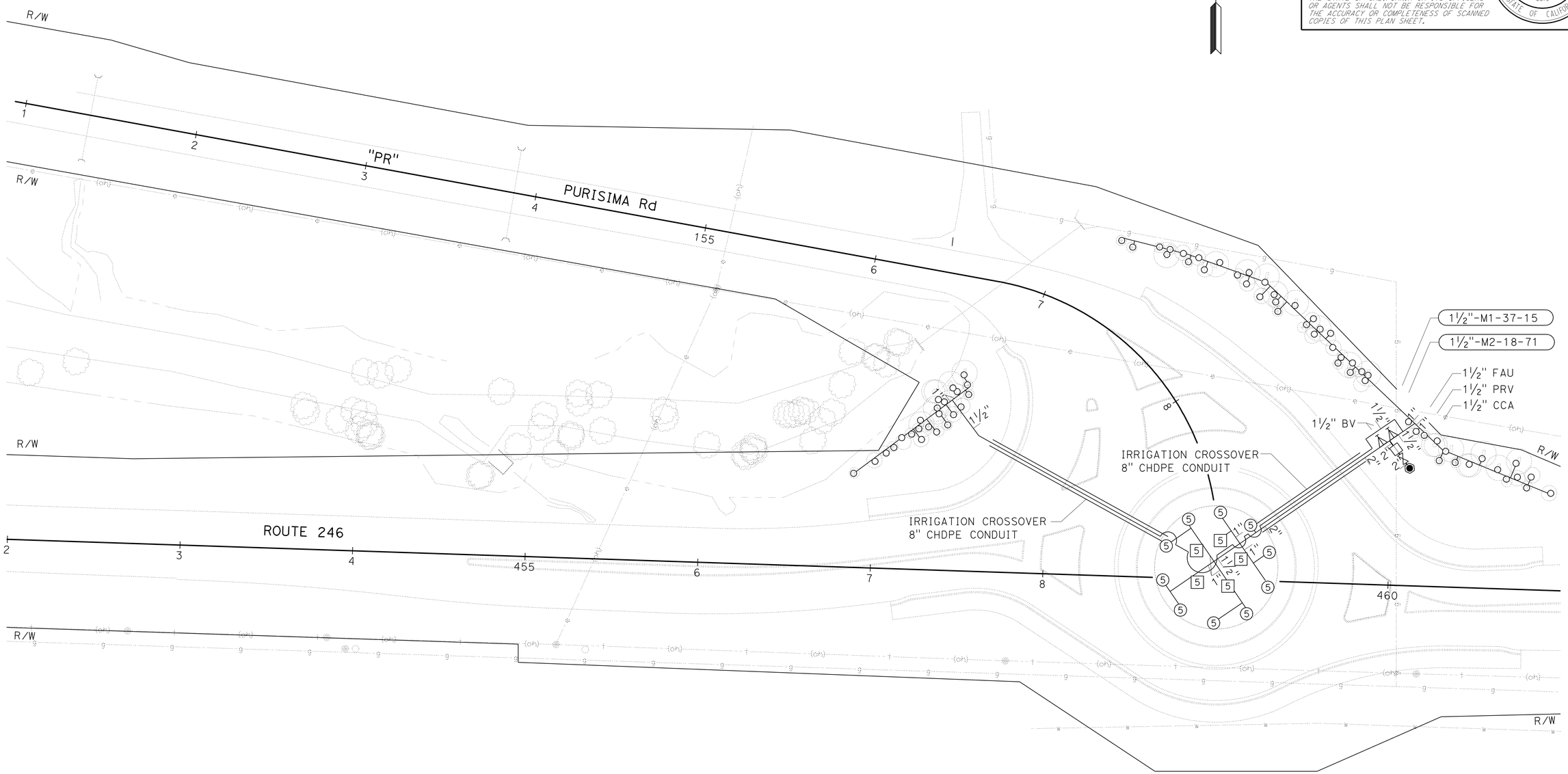

THIS PLAN ACCURATE FOR IRRIGATION WORK ONLY.

IRRIGATION PLAN

SCALE: 1" = 30' **IP-1**

REVISED BY	DATE REVISED

CALCULATED-DESIGNED BY	CHECKED BY
PATRICK BOLGER	KRISTEN LANGAGER

SENIOR LANDSCAPE ARCHITECT: DENNIS REEVES

STATE OF CALIFORNIA - DEPARTMENT OF TRANSPORTATION
Caltrans LANDSCAPE ARCHITECTURE

LAST REVISION 01-13-11 | DATE PLOTTED => 04-APR-2011 | TIME PLOTTED => 06:49

Dist	COUNTY	ROUTE	POST MILES TOTAL PROJECT	SHEET No.	TOTAL SHEETS
05	SB	246	12.2	56	93

LICENSED LANDSCAPE ARCHITECT

3-28-11
PLANS APPROVAL DATE

LICENSED LANDSCAPE ARCHITECT
PATRICK K. BOLGER
No. 2522
Expiration Date
11-30-12
Renewal Date
1-13-11
Date
STATE OF CALIFORNIA

THE STATE OF CALIFORNIA OR ITS OFFICERS OR AGENTS SHALL NOT BE RESPONSIBLE FOR THE ACCURACY OR COMPLETENESS OF SCANNED COPIES OF THIS PLAN SHEET.

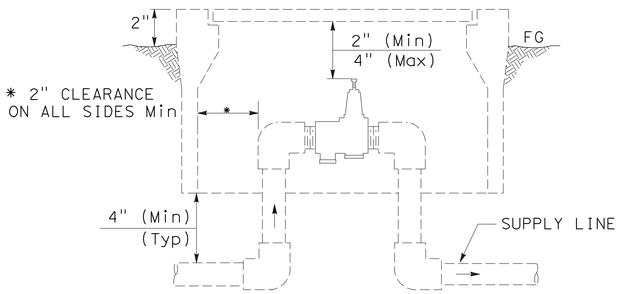

ELEVATION

PRESSURE REDUCING VALVE

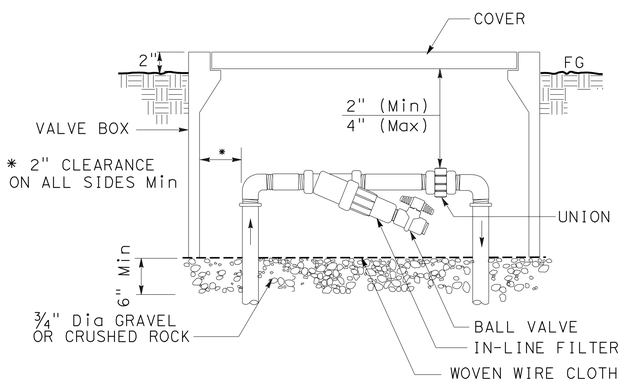

ELEVATION

FILTER ASSEMBLY UNIT

SPRINKLER SCHEDULE

SYMBOL	TYPE	DESCRIPTION	SPRAY PATTERN	OPERATING PRESSURE (PSI)	PRESSURE COMPENSATING	PLUS/MINUS 5% DISCHARGE: GALLONS PER MINUTE (GPM)	GALLONS PER HOUR (GPH)	RADIUS (Ft)	WIDTH x LENGTH (Ft)	MATERIAL	INLET CONNECTION (NPT INCH)	POSITIVE-LOCKING Adj ARC STOP	BACKSPLASH PREVENTER	DIFFUSER PIN	DISTANCE CONTROL FLAP	ADJ DISCHARGE	RISER: TYPE	RISER MATERIAL: PLASTIC	GALVANIZED	RISER: SIZE (IPS INCH)	HEIGHT (INCH)	FLOW SHUTOFF DEVICE	SWING JOINT (TYPE)	RISER SUPPORT	SPRINKLER PROTECTOR (TYPE)	REMARKS
(5)	A-5	GEAR DRIVEN	P	55	X	1.53	-	25	-	PL	¾	-	-	X	-	-	VI	-	-	¾	-	-	-	-	I	(1) (2)
[5]	A-5	GEAR DRIVEN	F	55	X	4.25	-	25	-	PL	¾	-	-	X	-	-	VI	-	-	¾	-	-	-	-	I	(1) (2)
O	C-2	BUBBLER	-	55	X	0.25	-	-	-	PL	½	-	-	-	-	-	V	-	-	½	-	-	-	-	-	(3) (4) (5)

X IN BOX DENOTES REQUIREMENT

APPLICABLE WHEN CIRCLED BELOW:

(1) - 12" POP-UP
(2) - CHECK VALVE REQUIRED.
(3) - ONE BUBBLER REQUIRED PER PLANT.
(4) - BUBBLER TO BE INSTALLED ON THE UPHILL SIDE OF PLANT.
(5) - ADJUSTABLE FLOW REQUIRED.

ABBREVIATIONS:

F — full circle
P — part circle
Ft — feet/foot
GPM — gallons per minute
GPH — gallons per hour
Adj — adjustable
PL — plastic
B/B — brass/bronze
B/PL — brass/plastic
B/B/PL — brass/bronze/plastic
PSI — pounds per square inch

LEGEND:

——— PLASTIC PIPE (SCH 40)(SUPPLY LINE)(LATERAL)

LANDSCAPE DETAILS AND SPRINKLER SCHEDULE

NO SCALE

LD-1

STATE OF CALIFORNIA - DEPARTMENT OF TRANSPORTATION
Caltrans® LANDSCAPE ARCHITECTURE
SENIOR LANDSCAPE ARCHITECT: DENNIS REEVES
CALCULATED-DESIGNED BY: PATRICK BOLGER
CHECKED BY: KRISTEN LANGAGER
REVISED BY
DATE REVISED

LAST REVISION 01-13-11
DATE PLOTTED => 04-APR-2011
TIME PLOTTED => 06:49

Dist	COUNTY	ROUTE	POST MILES TOTAL PROJECT	SHEET No.	TOTAL SHEETS
05	SB	246	12.2	57	93

REGISTERED ELECTRICAL ENGINEER 1-13-11 DATE

3-28-11
PLANS APPROVAL DATE

REGISTERED PROFESSIONAL ENGINEER XAVIER I. ALFARO No. E17488 Exp. 6-30-11 ELECTRICAL STATE OF CALIFORNIA

THE STATE OF CALIFORNIA OR ITS OFFICERS OR AGENTS SHALL NOT BE RESPONSIBLE FOR THE ACCURACY OR COMPLETENESS OF SCANNED COPIES OF THIS PLAN SHEET.

LEGEND:

1 120/240 V, 1Ø, 3-WIRE TYPE III-BF SERVICE EQUIPMENT ENCLOSURE WITH THE FOLLOWING CIRCUIT BREAKERS:

CTID No. 05512460012200

AMPERES	VOLTS	POLES	NAMEPLATE	METER	PHOTOELECTRIC CONTROL TYPE
100	240	2	MAIN BREAKER	YES	——
30	240	2	ROUNDABOUT LIGHTING	YES	V
15	120	1	LIGHTING CONTROL	YES	——
20	120	1	SPARE	YES	——

2 FOR EXACT LOCATION OF FLASHING BEACON, SEE SIGN PLANS.

3 INSTALL SOLAR FLASHING BEACON, SIGN LIGHTING FIXTURE, W2-6 AND W13-1 SIGN PANELS ON TYPE 15-FBS (MODIFIED) SLIP BASE POLE (SEE STRUCTURES SHEET SES-2).

4 INSTALL PHOTOVOLTIAC PANELS AND NEMA 3R ENCLOSURE ON TYPE VDS 25 (MODIFIED) FIXED BASE POLE (SEE STRUCTURES SHEET SES-1). SEE DETAIL A FOR NEMA ENCLOSURE WIRING DETAILS.

5 INSTALL GROUNDING ELECTRODE ROD IN PULL BOX.

ABBREVIATIONS:

CTID CALTRANS IDENTIFICATION
PG&E PACIFIC GAS AND ELECTRIC
PV PHOTOVOLTAIC

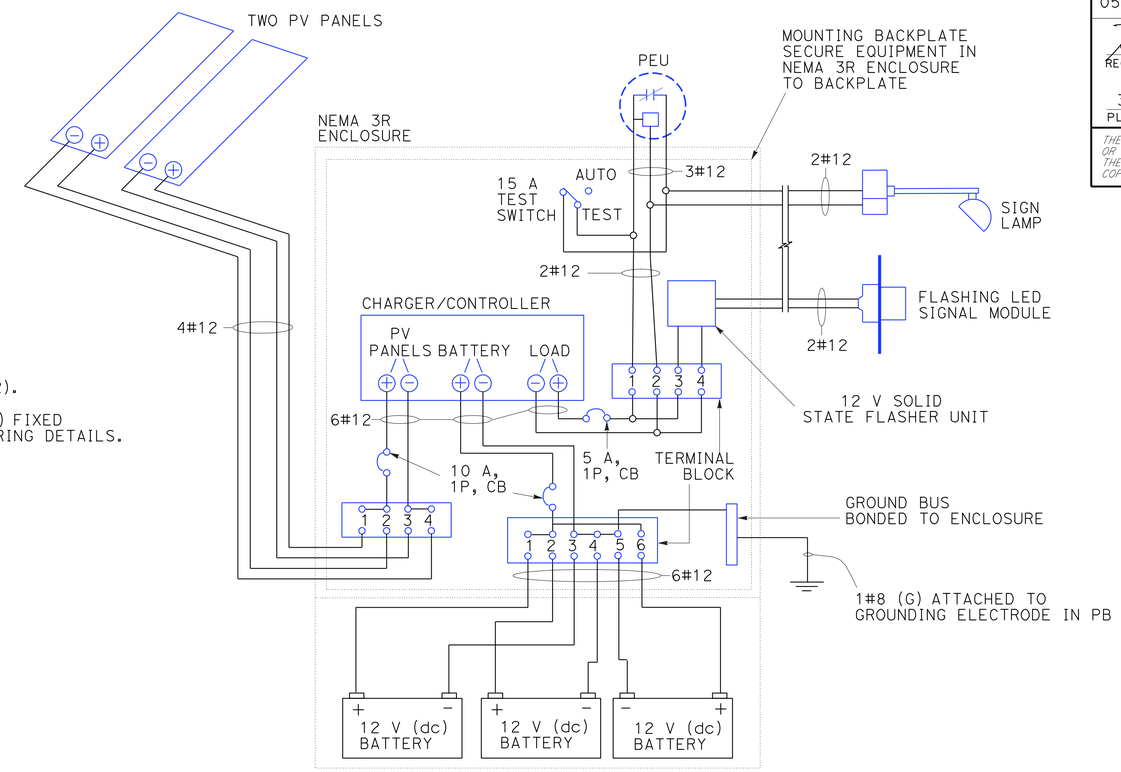

DETAIL A

WIRING DIAGRAM FOR SOLAR FLASHING BEACON SYSTEM
NO SCALE

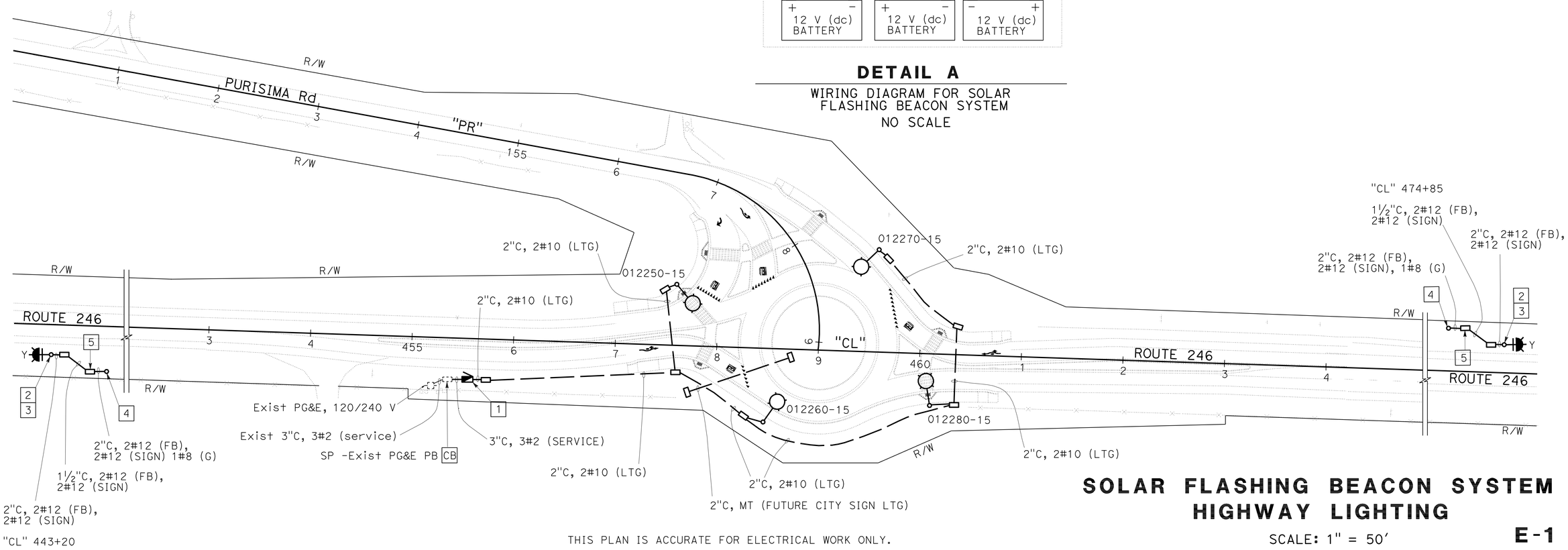

THIS PLAN IS ACCURATE FOR ELECTRICAL WORK ONLY.

SOLAR FLASHING BEACON SYSTEM HIGHWAY LIGHTING

SCALE: 1" = 50'

E-1

STATE OF CALIFORNIA - DEPARTMENT OF TRANSPORTATION
Caltrans® ELECTRICAL DESIGN

FUNCTIONAL SUPERVISOR: ALI BAKHDOUD
CALCULATED-DESIGNED BY: XAVIER ALFARO
CHECKED BY: PAUL MATOS
REVISED BY
DATE REVISED

LAST REVISION 01-13-11
DATE PLOTTED => 04-APR-2011
TIME PLOTTED => 06:49

DIST	COUNTY	ROUTE	POST MILES TOTAL PROJECT	SHEET No	TOTAL SHEETS
05	SB	246	12.2	58	93

Eliseo Lopez 10/27/10
REGISTERED CIVIL ENGINEER DATE

3-28-11
PLANS APPROVAL DATE

REGISTERED PROFESSIONAL ENGINEER ELISEO LOPEZ No. C72910 Exp. 12/31/10 CIVIL STATE OF CALIFORNIA

The State of California or its officers or agents shall not be responsible for the accuracy or completeness of electronic copies of this plan sheet.

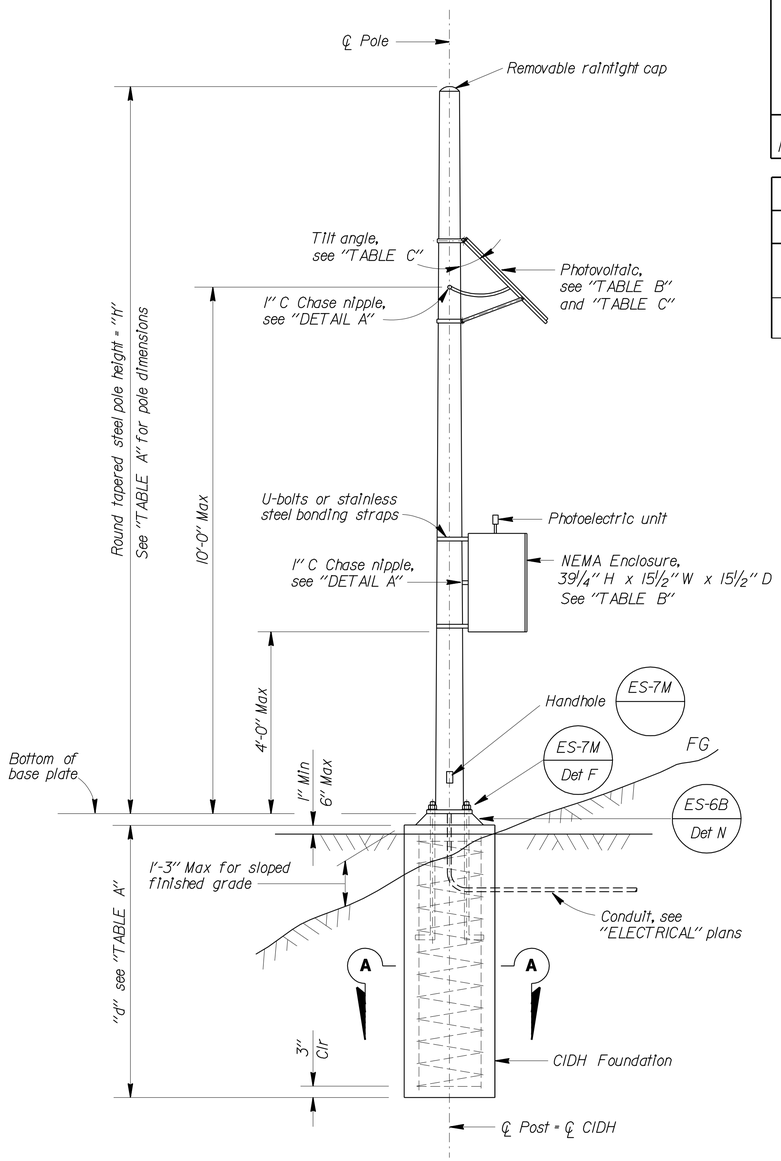

ELEVATION

VDS 25 Pole Type (Modified)

TABLE A

POLE TYPE	POLE DATA				BASE PLATE DATA				"d" 2'-0" Ø CIDH Pile		STRUCTURAL STEEL LBS PLUS 3.5% GALVANIZING
	HEIGHT "H"	Min OD		THICKNESS	"C"	THICKNESS	ANCHOR BOLTS				
		BASE	TOP				SIZE	BC = BOLT CIRCLE	LEVEL GROUND	SLOPING GROUND	
VDS 25 MODIFIED	16'	7⅜"	5¼"	0.1793"	1'-0"	1"	1" x 3'-0" x 4"	10½"	7'-0"	9'-0"	282

TABLE B

ATTACHMENT	MOUNTING HEIGHT	WEIGHT LIMITS (Max)
NEMA ENCLOSURE	4'-0" Max bottom Clr	220 lbs
PHOTOVOLTAIC	10'-0" Max.	103 lbs

TABLE C

PHOTOVOLTAIC PANEL LIMITS	
PANEL SIZE	TILT ANGLE
22 ft^2 Max	45° Min

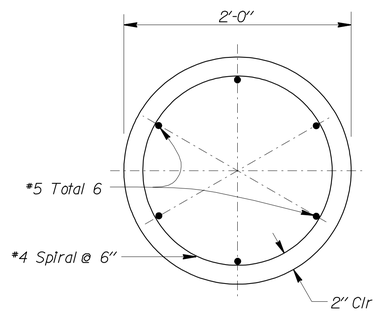

SECTION A-A

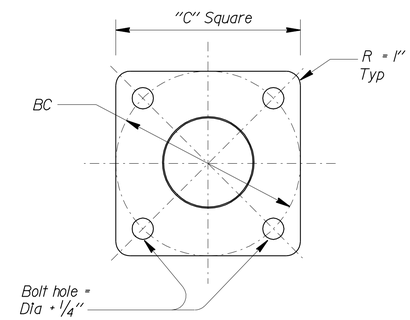

BASE PLATE

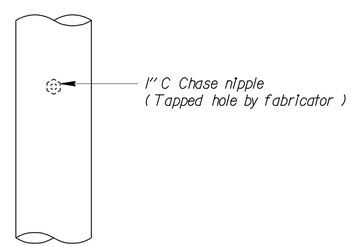

DETAIL A
CHASE NIPPLE DETAIL

STANDARD PLAN SHEET No.
DETAIL No.

GENERAL NOTES:

ABBREVIATIONS:

VDS = Vehicle Detection System

SPECIFICATIONS

Design: AASHTO Standard Specifications for Structural Supports for Highway Signs, Luminaires and Traffic Signals dated 2001.

LOADING

Wind Loadings: 100 mph

UNIT STRESSES

Structural steel: fy = 48,000 psi tapered steel pole
fy = 36,000 psi unless otherwise noted

Anchor bolts = A307

Reinforced concrete: f'_c = 3,600 psi
fy = 60,000 psi

NOTES:

1. For pole locations, see sheet E-1.
2. All steel shall be galvanized after fabrication.
3. During pole erection, the pole shall be raked as necessary with the use of leveling nuts to provide a plumb pole axis.
4. The foundation shall be treated as level ground condition if the slope inclination is flatter than 4H:1V.
5. Chase nipples shall have a raintight plug. Plug should only be removed if chase nipple is used.
6. Foundation design is based on AASHTO 2001 article 13.6 Broms' approximate procedure assuming a cohesionless material. The angle of internal friction used is 30 degrees and unit weight of soil is 120 lb/ft^3.
7. All attachments, unless otherwise noted, shall be mounted to pole with stainless steel straps or other method without drilling holes in pole. Enclosure may require drilling through post for mounting. Method of mounting enclosure will require the Engineer's approval.
8. For details not shown, see 2006 "STANDARD PLANS" and 2006 "REVISED STANDARD PLANS".
9. The Contractor shall verify all controlling field dimensions before ordering or fabricating any material.

NO SCALE

BRANCH CHIEF Jeffrey B Woody

	BY	CHECKED
DESIGN	ELISEO LOPEZ	DEVANG VORA
DETAILS	R. YEE	ELISEO LOPEZ
QUANTITIES	ELISEO LOPEZ	DEVANG VORA

STATE OF CALIFORNIA
DEPARTMENT OF TRANSPORTATION

DIVISION OF ENGINEERING SERVICES
DESIGN AND TECHNICAL SERVICES
SPECIAL DESIGNS BRANCH A

BRIDGE NO.
POST MILE

SOLAR PHOTOVOLTAIC POLE DETAILS

SES-1

(ENGLISH) SPECIAL DESIGNS BRANCH BORDER SHEET (REV. 7-1-09)

ORIGINAL SCALE IN INCHES FOR REDUCED PLANS 0 1 2 3

UNIT 3620
PROJECT NUMBER & PHASE 0500000376-1

DISREGARD PRINTS BEARING EARLIER REVISION DATES

REVISION DATES 9/16/10 9/29/10 9/30/10 10/1/10 10/13/10 10/27/10

SHEET OF

EA 05-0R7501

FILE => 2010sd/05-0R7501/ses1.dgn

ses-1.dgn

USERNAME => ttmirkes1 DATE PLOTTED => 04-APR-2011 TIME PLOTTED => 06:41

DIST	COUNTY	ROUTE	POST MILES TOTAL PROJECT	SHEET No	TOTAL SHEETS
05	SB	246	12.2	59	93

Eliseo Lopez 10/27/10
REGISTERED CIVIL ENGINEER DATE

3-28-11
PLANS APPROVAL DATE

REGISTERED PROFESSIONAL ENGINEER ELISEO LOPEZ No. C72910 Exp. 12/31/10 CIVIL STATE OF CALIFORNIA

The State of California or its officers or agents shall not be responsible for the accuracy or completeness of electronic copies of this plan sheet.

TABLE A

POLE TYPE	POLE DATA				BASE PLATE DATA - SEE STANDARD PLAN ES-6F				"d" 2'-6" Ø CIDH Pile		STRUCTURAL STEEL LBS PLUS 3.5% GALVANIZING
	HEIGHT "H"	Min OD		THICKNESS	"C"	THICKNESS	H.S. ANCHOR BOLTS (A325)				
		BASE	TOP				SIZE	BC = BOLT CIRCLE	LEVEL GROUND	SLOPING GROUND	
15-FBS MODIFIED	18'	8"	5½"	0.1196"	—	—	1" x 3'-0" x 4"	1'-2"	7'-0"	9'-0"	376

TABLE B

ATTACHMENT	MOUNTING HEIGHT	WEIGHT LIMITS (Max)
W13-1 Sign 30" H x 30" W	7'-0" Max bottom Clr	12 lbs
W2-6 Sign 30" H x 30" W	11'-4" Max	12 lbs
Sign lighting fixture	14'-9" Max	10 lbs
12" Flashing beacon	16'-0" Max	10 lbs

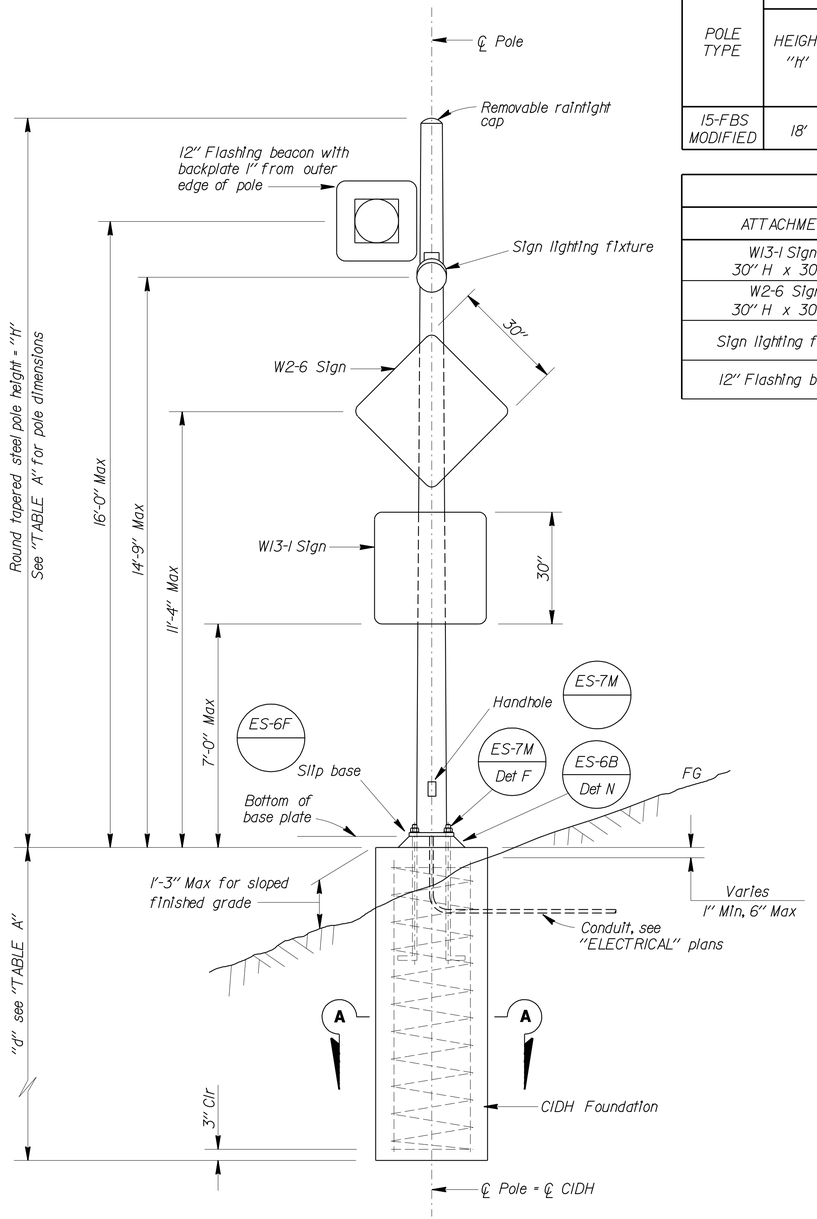

ELEVATION

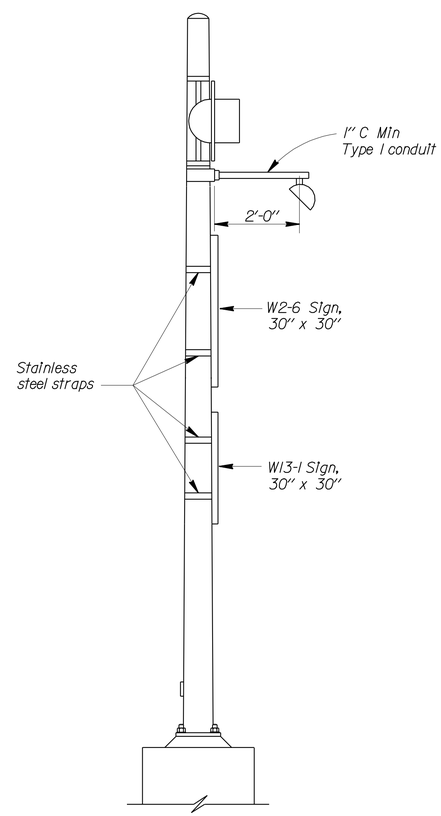

SIDE VIEW

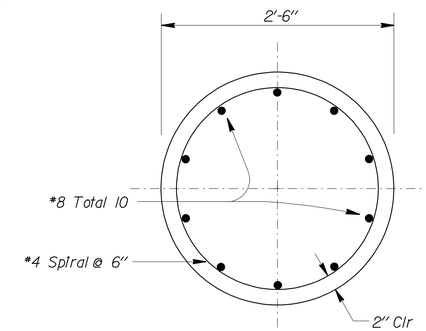

SECTION A-A

GENERAL NOTES:

SPECIFICATIONS

Design: AASHTO Standard Specifications for Structural Supports for Highway Signs, Luminaires and Traffic Signals dated 2001.

LOADING

Wind Loadings: 100 mph

UNIT STRESSES

Structural steel: fy = 48,000 psi tapered steel pole
fy = 36,000 psi unless otherwise noted

H.S. Anchor bolts = A325

Reinforced concrete: f'_c = 3,600 psi
fy = 60,000 psi

NOTES:

1. For pole locations, see sheet E-1.
2. All steel shall be galvanized after fabrication.
3. During pole erection, the pole shall be raked as necessary with the use of leveling nuts to provide a plumb pole axis.
4. The foundation shall be treated as level ground condition if the slope inclination is flatter than 4H:1V.
5. Foundation design is based on AASHTO 2001 article 13.6 Broms' approximate procedure assuming a cohesionless material. The angle of internal friction used is 30 degrees and unit weight of soil is 120 lb/ft³.
6. All attachments, unless otherwise noted, shall be mounted to pole with stainless steel straps or other method without drilling holes in pole.
7. For Type 15-FBS pole, see 2006 Standard Plan ES-7J.
8. For Type 15-FBS slip base plate details, see 2006 Standard Plan ES-6F.
9. For details not shown, see 2006 "STANDARD PLANS" and 2006 "REVISED STANDARD PLANS".
10. The Contractor shall verify all controlling field dimensions before ordering or fabricating any material.

STANDARD PLAN SHEET No.
DETAIL No.

NO SCALE

BRANCH CHIEF Jeffrey B Woody

	BY	CHECKED
DESIGN	ELISEO LOPEZ	DEVANG VORA
DETAILS	R. YEE	ELISEO LOPEZ
QUANTITIES	ELISEO LOPEZ	DEVANG VORA

STATE OF CALIFORNIA
DEPARTMENT OF TRANSPORTATION

DIVISION OF ENGINEERING SERVICES
DESIGN AND TECHNICAL SERVICES
SPECIAL DESIGNS BRANCH A

BRIDGE NO.
POST MILE

TYPE 15 FBS (MODIFIED)
POLE DETAILS

SES-2

(ENGLISH) SPECIAL DESIGNS BRANCH BORDER SHEET (REV. 7-1-09)

ORIGINAL SCALE IN INCHES FOR REDUCED PLANS 0 1 2 3

UNIT 3620
PROJECT NUMBER & PHASE 0500000376-1

DISREGARD PRINTS BEARING EARLIER REVISION DATES

REVISION DATES 9/15/10 9/21/10 9/28/10 10/27/10

SHEET OF

EA 05-0R7501

FILE => REVISION DATES ses-2.dgn

USERNAME => ttmitkes DATE PLOTTED => 04-APR-2011 TIME PLOTTED => 06:41

DIST	COUNTY	ROUTE	POST MILES TOTAL PROJECT	SHEET NO.	TOTAL SHEETS
05	SB	246	12.2	60	93

REGISTERED CIVIL ENGINEER

November 17, 2006
PLANS APPROVAL DATE

REGISTERED PROFESSIONAL ENGINEER Dallas Forester No. C37765 Exp. 12-31-06 CIVIL STATE OF CALIFORNIA

The State of California or its officers or agents shall not be responsible for the accuracy or completeness of electronic copies of this plan sheet.

To accompany plans dated 3-28-11

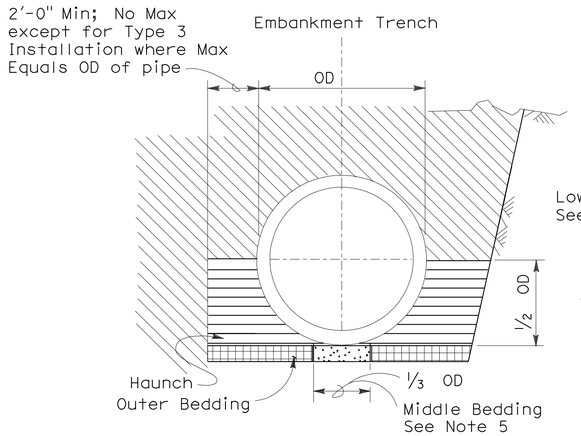

BACKFILL

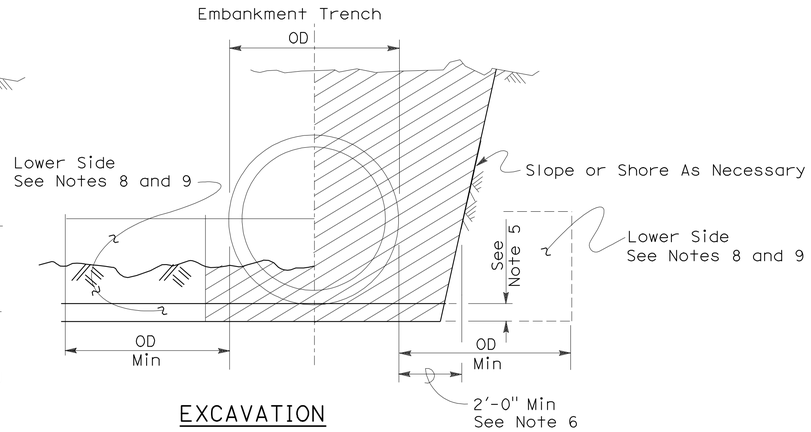

EXCAVATION

Roadway Embankment

Structure Backfill (Culvert) See Note 6

Structure Backfill (Culvert) See Note 6

Loose Backfill

Excavation Structure (Culvert)

TYPE 1 INSTALLATION:

The haunch and outer bedding shall be compacted to a minimum 90 percent relative compaction. In addition, the minimum sand equivalent in these areas shall be 30 and the maximum percentage passing the 75 μm sieve size shall be 12.

TYPE 2 INSTALLATION:

The haunch and outer bedding shall be compacted to a minimum 90 percent relative compaction. In addition, the minimum sand equivalent in these areas shall be 25.

TYPE 3 INSTALLATION:

The haunch and outer bedding shall be compacted to a minimum 85 percent relative compaction. 90 percent relative compaction will be required where the fill over the pipe is less than 4'-0" or 1/2 OD.

NOTES:

1. Unless otherwise shown on the plans or specified in the special provision, the Contractor shall have the option of selecting the class of RCP and the type of installation to be used, provided the height of cover does not exceed the value shown for the RCP selected.
   Example: 24" RCP culvert with maximum cover of 19'-0" the options are:
   a) Class II or stronger with Installation Type 1.
   b) Class III Special or stronger with Installation Type 2.
   c) Class IV Special or stronger with Installation Type 3.
   Cover is defined as the maximum vertical distance from top of the pipe to finished grade within the length of any given culvert.
2. The class of RCP and Installation Type selected shall be the same throughout the length of any given culvert.
3. The "length of any culvert" is defined as the culvert between:
   a) Successive drainage structure (inlets, junction boxes, headwalls, etc.).
   b) A drainage structure and the inlet or outlet end of the culvert.
   c) The inlet and outlet end of the culvert when there are no intervening drainage structures.
4. Oval and arch shaped RCP shall not be used.
5. 1/25 OD Min, not less than 3".
6. Slurry cement backfill may be substituted for backfill in the outer bedding and haunch areas. If slurry is used the outer and middle beddings shall be omitted. Prior to installation the soil under the middle 1/3 of the outside diameter of the pipe shall be softened by scarifying or other means to a minimum depth of 1/25 OD, but not less than 3". Where slurry cement backfill is used clear distance to trench wall may be reduced as set forth in Section 19-3.062 of the Standard Specifications.
7. Backfill shall be placed full width of excavation except where dimensions are shown for backfill width or thickness. Dimensions shown are minimums.
8. Lower side shall be suitable material as determined by the Engineer. Otherwise it shall be considered unsuitable as set forth in Section 19-2.02 of the Standard Specifications. See Note 9.
9. Where the pipe is placed in a trench, if the trench walls are sloped at 5 vertical to 1 horizontal or steeper for at least 90 percent of the trench height or up to not less than 12" from the grading plane, the firmness of the soil in the lower side need not be considered.
10. Non-reinforced precast concrete pipe sizes 3'-0" or smaller may be placed under installation Types 1, 2 or 3.

INSTALLATION TYPE 1

MINIMUM CLASS AND D-LOAD	COVER	
	108" Dia AND SMALLER	OVER 108" Dia
Class II 1000D	14.9'	12.9'
Class III 1350D	15.0' - 20.9'	13.0' - 18.9'
Class III Special 1700D	21.0' - 26.9'	19.0' - 24.9'
Class IV 2000D	27.0' - 31.9'	25.0' - 29.9'
Class IV Special 2500D	32.0' - 40.9'	30.0' - 38.9'
Class V 3000D	41.0' - 49.9'	39.0' - 46.9'
Class V Special 3600D	50.0' - 59.0'	47.0' - 58.0'

INSTALLATION TYPE 2

MINIMUM CLASS AND D-LOAD	COVER
Class II 1000D	9.9'
Class III 1350D	10.0'- 14.9'
Class III Special 1700D	15.0' - 19.9'
Class IV 2000D	20.0' - 24.9'
Class IV Special 2500D	25.0' - 31.9'
Class V 3000D	32.0' - 38.9'
Class V Special 3600D	39.0' - 47.0'

INSTALLATION TYPE 3

MINIMUM CLASS AND D-LOAD	COVER	
	48" Dia AND SMALLER	OVER 48" Dia
Class II 1000D	7.9'	5.9'
Class III 1350D	8.0' - 10.9'	6.0' - 8.9'
Class III Special 1700D	11.0' - 14.9'	9.0' - 12.9'
Class IV 2000D	15.0' - 17.9'	13.0' - 15.9'
Class IV Special 2500D	18.0' - 21.9'	16.0' - 19.9'
Class V 3000D	22.0' - 26.9'	20.0' - 24.9'
Class V Special 3600D	30.0' - 33.0'	25.0' - 31.0'

STATE OF CALIFORNIA
DEPARTMENT OF TRANSPORTATION

EXCAVATION AND BACKFILL CONCRETE PIPE CULVERTS

NO SCALE

RSP A62DA DATED NOVEMBER 17, 2006 SUPERSEDES STANDARD PLAN A62DA DATED MAY 1, 2006 - PAGE 20 OF THE STANDARD PLANS BOOK DATED MAY 2006.

REVISED STANDARD PLAN RSP A62DA

2006 REVISED STANDARD PLAN RSP A62DA

10-26-06

DIST	COUNTY	ROUTE	POST MILES TOTAL PROJECT	SHEET NO.	TOTAL SHEETS
05	SB	246	12.2	61	93

REGISTERED CIVIL ENGINEER

November 17, 2006
PLANS APPROVAL DATE

REGISTERED PROFESSIONAL ENGINEER Michael Janzen No. 44788 Exp. 03-31-08 CIVIL STATE OF CALIFORNIA

The State of California or its officers or agents shall not be responsible for the accuracy or completeness of electronic copies of this plan sheet.

To accompany plans dated 3-28-11

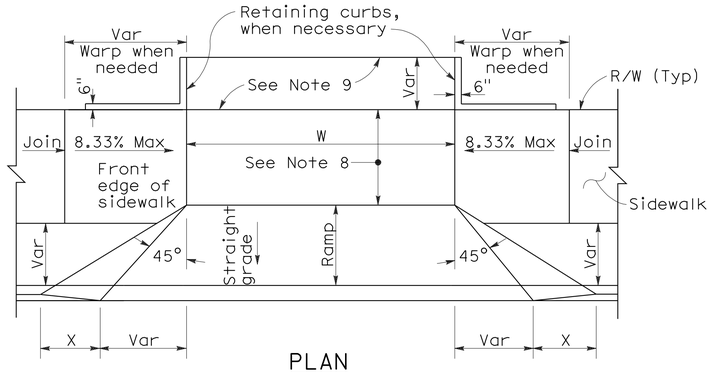

PLAN

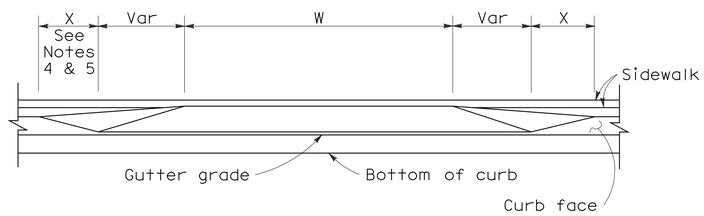

ELEVATION

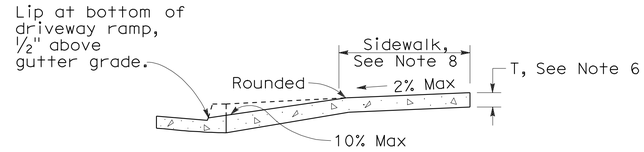

CASE A

Typical driveway, sidewalk not depressed

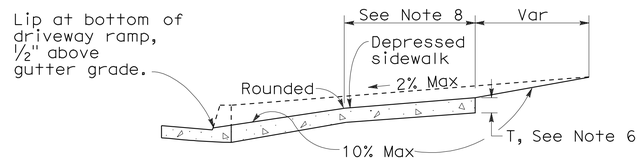

CASE B

Driveway with depressed sidewalk

SECTIONS

DRIVEWAYS

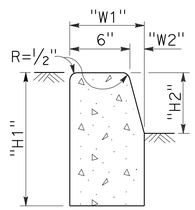

TYPE A1 CURBS

See Table A

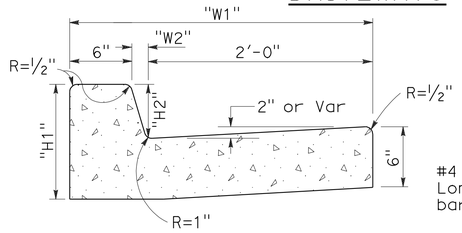

TYPE A2 CURBS

See Table A

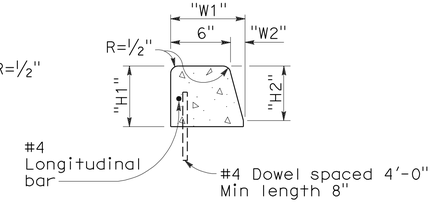

TYPE A3 CURBS

Superimposed on existing pavement
See Table A

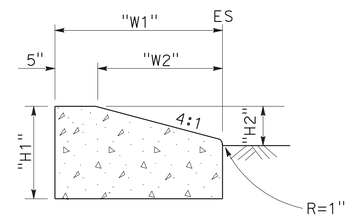

TYPE D CURBS

See Table A

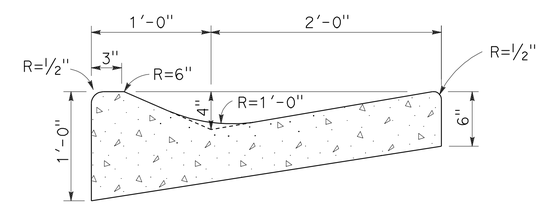

TYPE E CURB

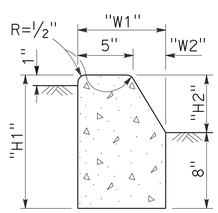

TYPE B1 CURBS

See Table A

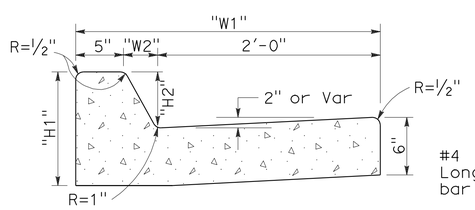

TYPE B2 CURBS

See Table A

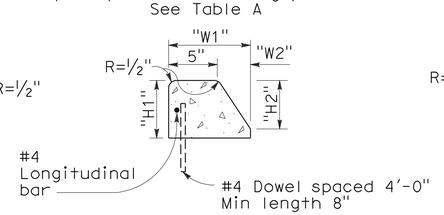

TYPE B3 CURBS

Superimposed on existing pavement
See Table A

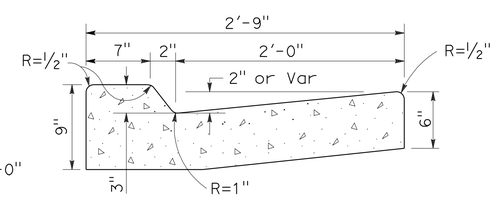

TYPE B4 CURBS

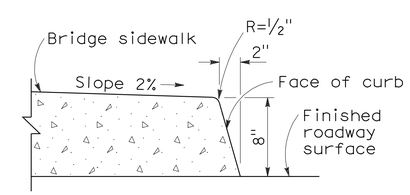

TYPE H CURB

On Bridges

CURBS

CURB QUANTITIES

TYPE	CUBIC YARDS PER LINEAR FOOT
A1-6	0.02585
A1-8	0.03084
A2-6	0.05903
A2-8	0.06379
A3-6	0.01036
A3-8	0.01435
B1-4	0.02185
B1-6	0.02930
B2-4	0.05515
B2-6	0.06171
B3-4	0.00641
B3-6	0.01074
B4	0.05709
D-4	0.04083
D-6	0.06804
E	0.06661

TABLE A

CURB TYPE	DIMENSIONS "H1"	"H2"	"W1"	"W2"
A1-6	1'-2"	6"	7½"	1½"
A1-8	1'-4"	8"	8"	2"
A2-6	1'-0"	6"	2'-7½"	1½"
A2-8	1'-2"	8"	2'-8"	2"
A3-6	6"	5"	7¼"	1¼"
A3-8	8"	7"	7¾"	1¾"
B1-4	1'-0"	4"	7½"	2½"
B1-6	1'-2"	6"	9"	4"
B2-4	10"	4"	2'-7½"	2½"
B2-6	1'-0"	6"	2'-9"	4"
B3-4	4"	3"	7"	2"
B3-6	6"	5"	8½"	3½"
D-4	10"	4"	1'-6"	1'-1"
D-6	1'-0"	6"	2'-2"	1'-8"

NOTES:

1. Case A driveway section typically applies.
2. Use Case B driveway section when ramp slopes would exceed 10% in Case A.
3. Use Case B driveway section when sidewalk cross slope would exceed 2% in Case A.
4. X=3'-0" except for curb heights over 10" where 4:1 slopes shall be used on curb slope.
5. X is a variable when sidewalk is located where wheelchairs may traverse the surface. Slopes shall not exceed 8.33%.
6. Sidewalk and ramp thickness "T" at driveway shall be 4" for residental and 6" for commercial.
7. Difference in slope of the driveway ramp and the slope of a line between the gutter and a point on the roadway 5'-0" from gutter line shall not exceed 15%. Reduce driveway ramp slope, not gutter slope, where required.
8. Minimum width of clear passageway for sidewalk shall be 4'-0".
9. Retaining curbs and acquisition of construction easement may be necessary for narrow sidewalks or curb heights in excess of 6".
10. Across the pedestrian route at curb ramp locations, the gutter pan slope shall not exceed 1" of depth for each 2'-0" of width.

STATE OF CALIFORNIA
DEPARTMENT OF TRANSPORTATION

CURBS AND DRIVEWAYS

NO SCALE

RSP A87A DATED NOVEMBER 17, 2006 SUPERSEDES STANDARD PLAN A87A DATED MAY 1, 2006 - PAGE 113 OF THE STANDARD PLANS BOOK DATED MAY 2006.

REVISED STANDARD PLAN RSP A87A

2006 REVISED STANDARD PLAN RSP A87A

10-25-06

DIST	COUNTY	ROUTE	POST MILES TOTAL PROJECT	SHEET NO.	TOTAL SHEETS
05	SB	246	12.2	62	93

REGISTERED CIVIL ENGINEER

September 1, 2006
PLANS APPROVAL DATE

REGISTERED PROFESSIONAL ENGINEER Hector David Cordova No. C41957 Exp. 3-31-08 CIVIL STATE OF CALIFORNIA

The State of California or its officers or agents shall not be responsible for the accuracy or completeness of electronic copies of this plan sheet.

To accompany plans dated 3-28-11

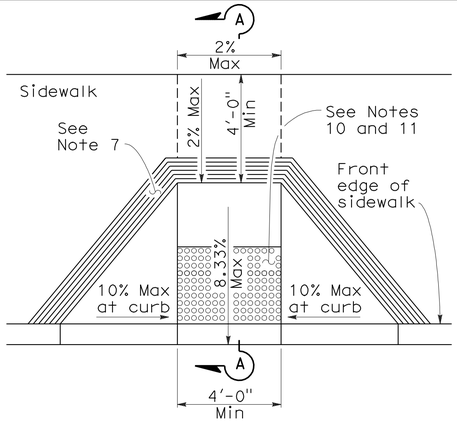

CASE A

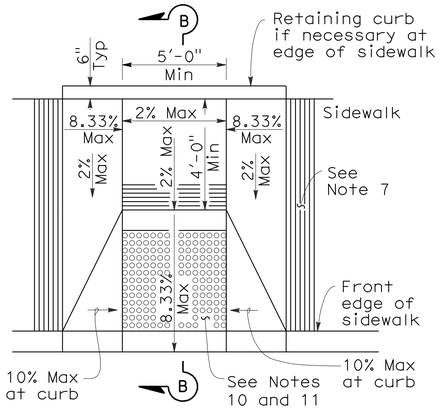

CASE B

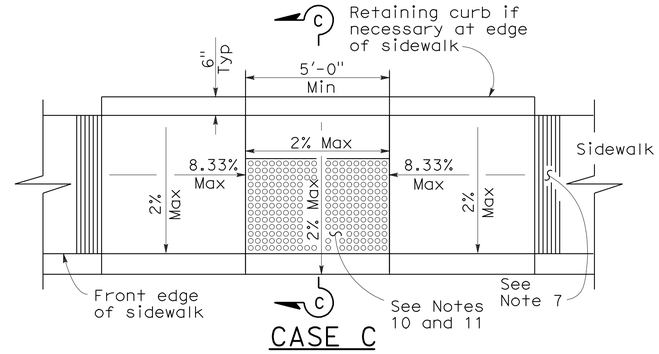

CASE C

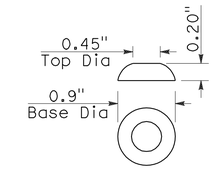

RAISED TRUNCATED DOME

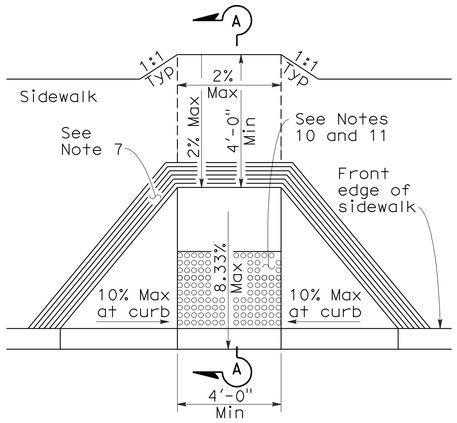

CASE D

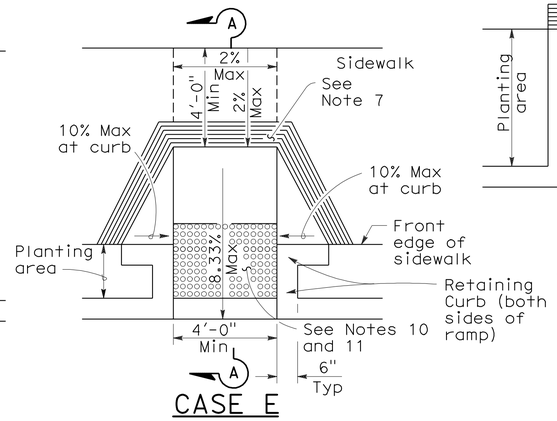

CASE E

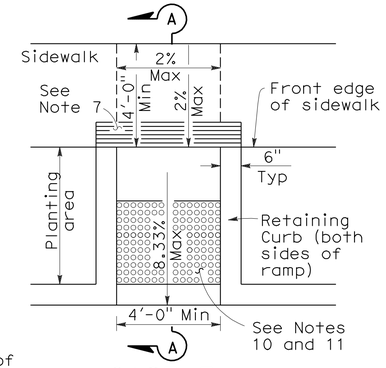

CASE F

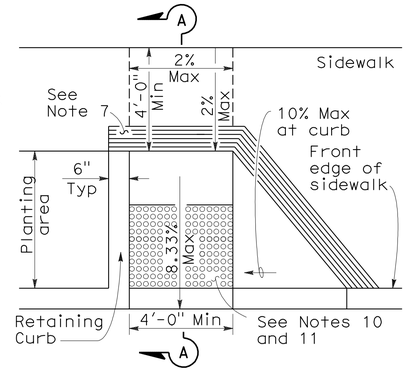

CASE G

See Note 4

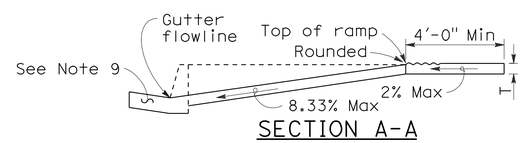

SECTION A-A

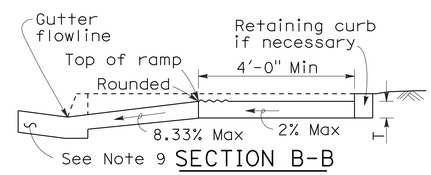

SECTION B-B

Depress entire sidewalk as required

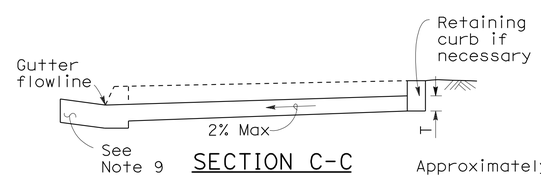

SECTION C-C

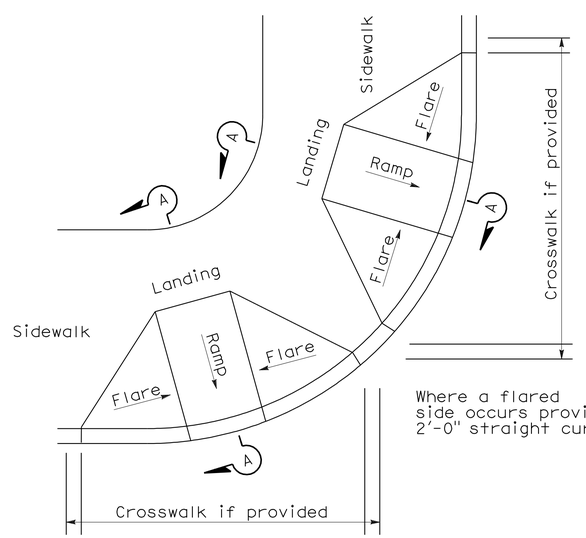

DETAIL A

TYPICAL TWO-RAMP CORNER INSTALLATION

See Note 1

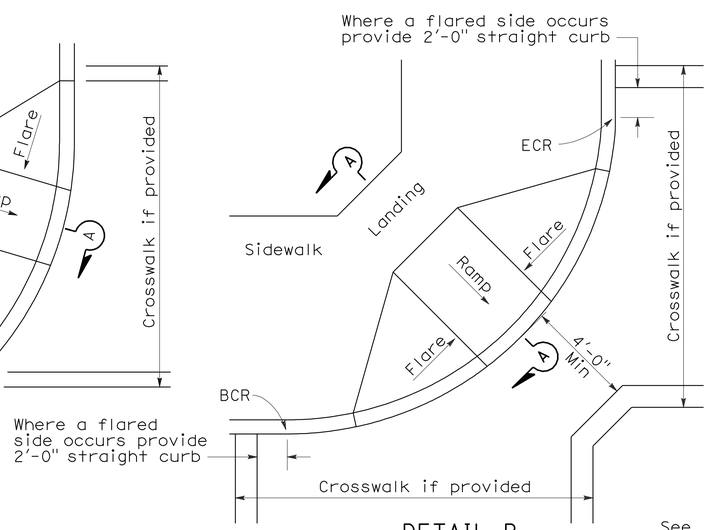

DETAIL B

TYPICAL ONE-RAMP CORNER INSTALLATION

See Notes 1 and 3

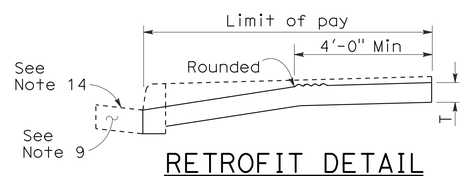

RETROFIT DETAIL

Existing curb and sidewalk

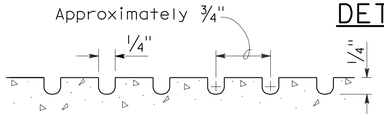

GROOVING DETAIL

NOTES:

1. As site conditions dictate, Case A through Case G curb ramps may be used for corner installations similar to those shown in Detail A and Detail B. The case of curb ramps used in Detail A do not have to be the same. Case A through Case G curb ramps also may be used at mid block locations, as site conditions dictate.
2. If distance from curb to back of sidewalk is too short to accommodate ramp and 4'-0" platform (landing) as shown in Case A, the sidewalk may be depressed longitudinally as in Case B, or C or may be widened as in Case D.
3. When ramp is located in center of curb return, crosswalk configuration must be similar to that shown for Detail B.
4. As site conditions dictate, the retaining curb side and the flared side of the Case G ramp shall be constructed in reversed position.
5. If located on a curve, the sides of the ramp need not be parallel, but the minimum width of the ramp shall be 4'-0".
6. Side slope of ramp flares vary uniformly from a maximum of 10% at curb to conform with longitudinal sidewalk slope adjacent to top of the ramp, except in Case C and Case F.
7. The curb ramp shall be outlined, as shown, with a 1'-0" wide border with 1/4" grooves approximately 3/4" on center. See grooving detail.
8. Transitions from ramps and landing to walks, gutters or streets shall be flush and free of abrupt changes.
9. Maximum slopes of adjoining gutters, the road surface immediately adjacent to the curb ramp or accessible route shall not exceed 5 percent within 4'-0" of the top and bottom of the curb ramp.
10. Curb ramps shall have a detectable warning surface that extends the full width and 3'-0" depth of the ramp. Detectable Warning Surfaces shall conform to the details on this plan and the requirements in the Special Provisions.
11. The edge of the detectable warning surface nearest the street shall be between 6" and 8" from the gutter flowline.
12. Sidewalk and ramp thickness, "T", shall be 3 1/2" minimum.
13. Utility pull boxes, manholes, vaults and all other utility facilities within the boundaries of the curb ramp will be relocated or adjusted to grade by the owner prior to, or in conjunction with, curb ramp construction.
14. For retrofit conditions, removal and replacement of curb apron will be at the Contractor's option, unless otherwise shown on project plans.

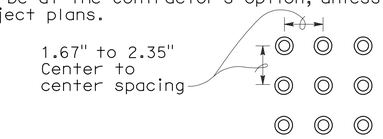

RAISED TRUNCATED DOME PATTERN (IN-LINE)

DETECTABLE WARNING SURFACE

See Note 10

STATE OF CALIFORNIA
DEPARTMENT OF TRANSPORTATION

CURB RAMP DETAILS

NO SCALE

RSP A88A DATED SEPTEMBER 1, 2006 SUPERSEDES STANDARD PLAN A88A DATED MAY 1, 2006 - PAGE 115 OF THE STANDARD PLANS BOOK DATED MAY 2006.

REVISED STANDARD PLAN RSP A88A

2006 REVISED STANDARD PLAN RSP A88A

8-3-06

DIST	COUNTY	ROUTE	POST MILES TOTAL PROJECT	SHEET NO.	TOTAL SHEETS
05	SB	246	12.2	63	93

REGISTERED CIVIL ENGINEER

May 15, 2009
PLANS APPROVAL DATE

REGISTERED PROFESSIONAL ENGINEER William K. Farnbach No. C49042 Exp. 9-30-10 CIVIL STATE OF CALIFORNIA

The State of California or its officers or agents shall not be responsible for the accuracy or completeness of electronic copies of this plan sheet.

To accompany plans dated 3-28-11

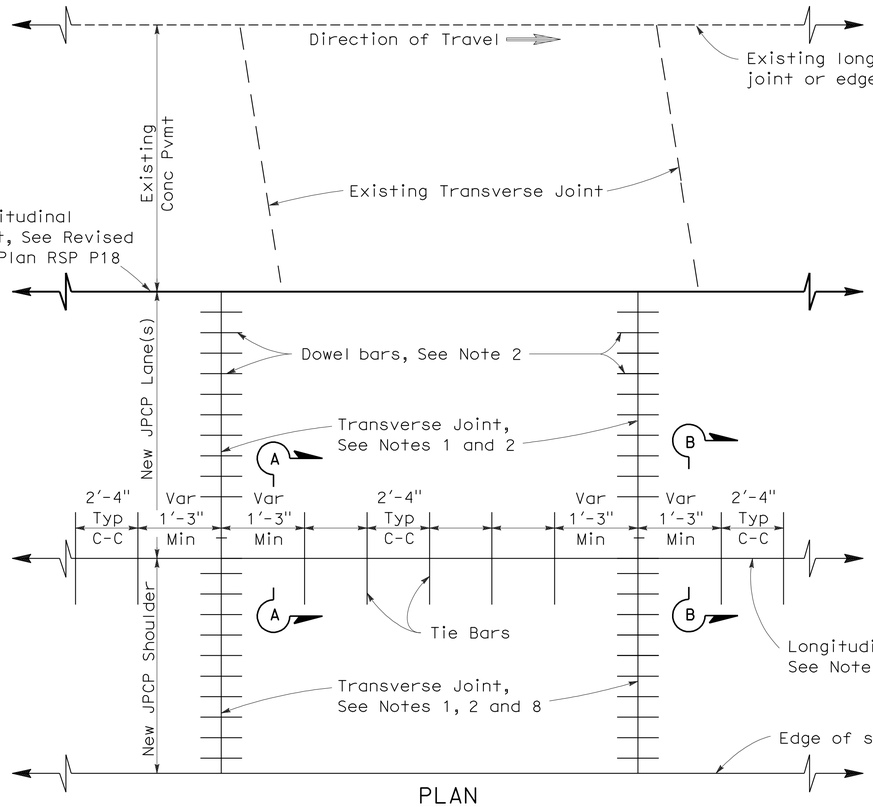

PLAN

LANE/SHOULDER ADDITION OR RECONSTRUCTION

See Notes 6 and 7

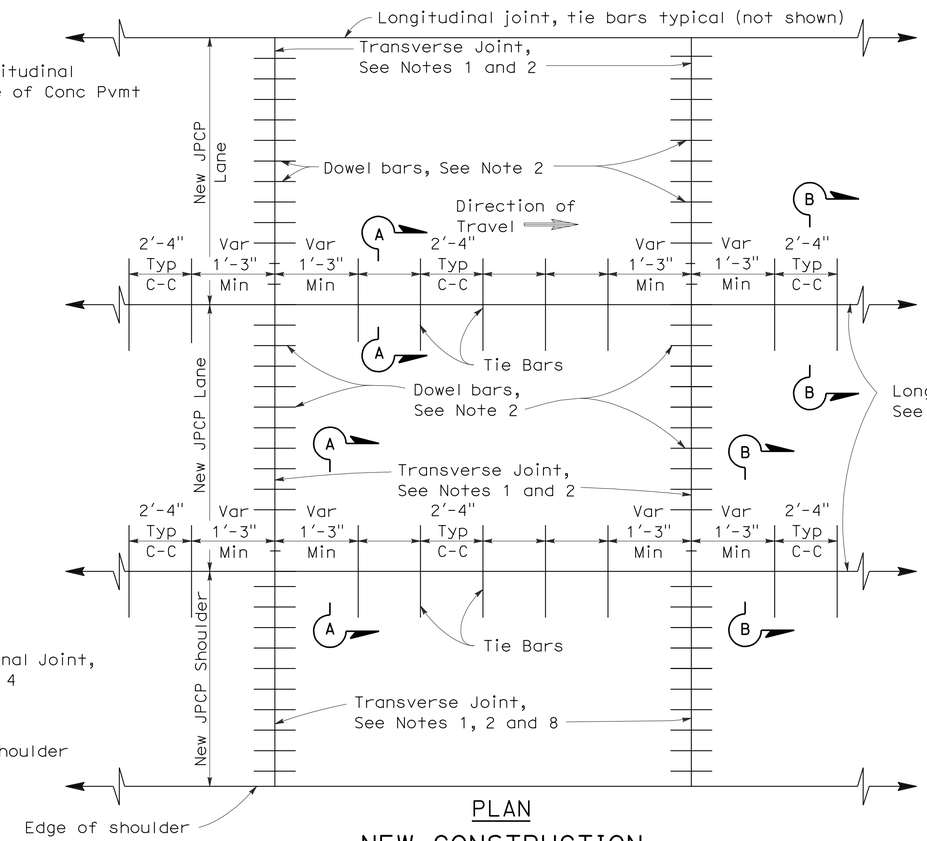

PLAN

NEW CONSTRUCTION

See Notes 6 and 7

NOTES:

1. Transverse joints shall be constructed at right angles to the longitudinal pavement joints in new jointed plain concrete pavement and spaced at successive repeated intervals of 12', 15', 13' and 14'.
2. For transverse joint and dowel bar details not shown, See Revised Standard Plan RSP P10.
3. Construct longitudinal contraction joints as shown in Section A-A when more than one lane or shoulder widths are placed at one time. If constructing one lane at a time, use longitudinal construction joint, as shown in Section B-B.
4. For additional longitudinal joint details, see Revised Standard Plan RSP P18.
5. If fresh concrete is placed adjacent to existing concrete, the top corner of the new hardened concrete does not need to be rounded to the 1/4" radius as shown.
6. Joint spacing patterns do not apply to intersections.
7. Details can also apply to inside widening.
8. Dowel bars may be omitted from shoulders when the shoulder cross slope is not the same as the adjacent traffic lane.

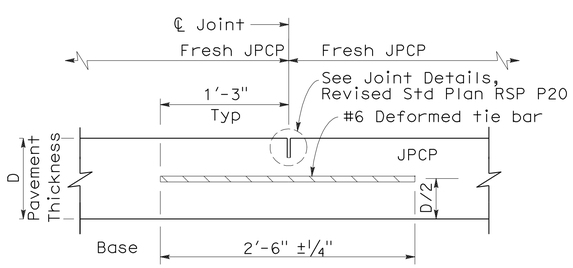

SECTION A-A

LONGITUDINAL CONTRACTION JOINT

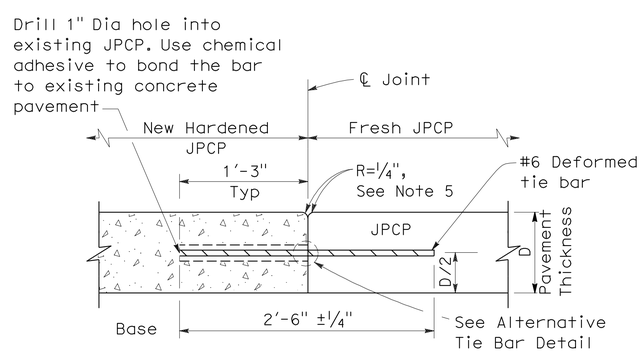

SECTION B-B

LONGITUDINAL CONSTRUCTION JOINT

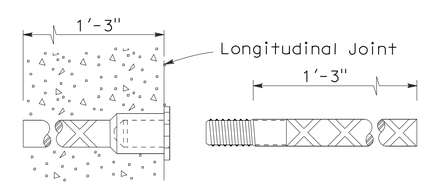

ALTERNATIVE TIE BAR SPLICE DETAIL

(Splice Coupler)

TIE BAR DETAILS

STATE OF CALIFORNIA
DEPARTMENT OF TRANSPORTATION

JOINTED PLAIN CONCRETE PAVEMENT

NO SCALE

RSP P1 DATED MAY 15, 2009 SUPERSEDES STANDARD PLAN P1
DATED MAY 1, 2006 - PAGE 119 OF THE STANDARD PLANS BOOK DATED MAY 2006.

REVISED STANDARD PLAN RSP P1

2006 REVISED STANDARD PLAN RSP P1

5-8-09

DIST	COUNTY	ROUTE	POST MILES TOTAL PROJECT	SHEET NO.	TOTAL SHEETS
05	SB	246	12.2	64	93

REGISTERED CIVIL ENGINEER

May 15, 2009
PLANS APPROVAL DATE

REGISTERED PROFESSIONAL ENGINEER William K. Farnbach No. C49042 Exp. 9-30-10 CIVIL STATE OF CALIFORNIA

The State of California or its officers or agents shall not be responsible for the accuracy or completeness of electronic copies of this plan sheet.

To accompany plans dated 3-28-11

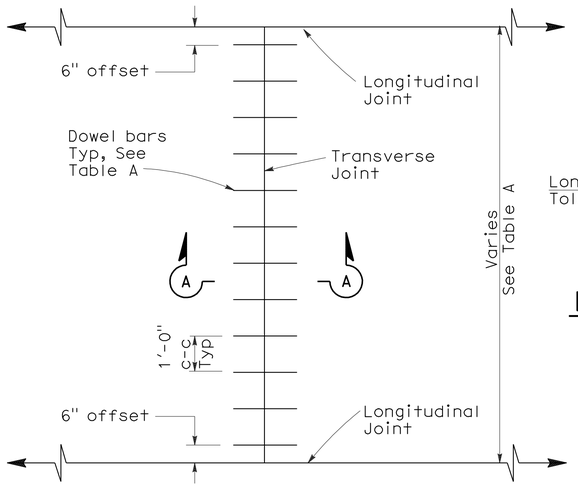

TRANSVERSE JOINT DOWEL BAR LAYOUT

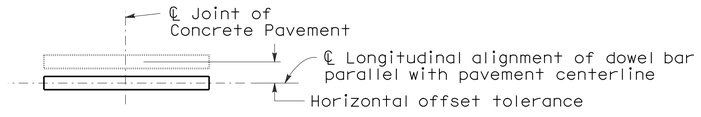

PLAN

HORIZONTAL OFFSET TOLERANCE

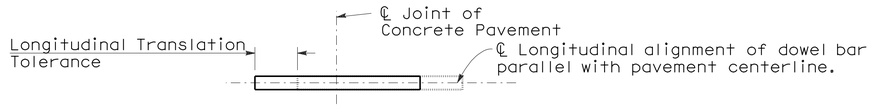

PLAN

LONGITUDINAL TRANSLATION TOLERANCE

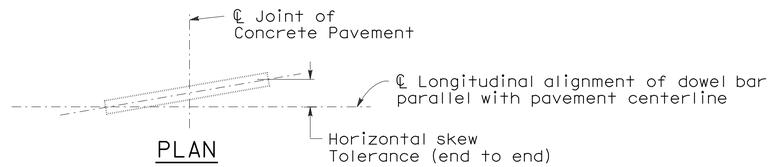

PLAN

HORIZONTAL SKEW TOLERANCE

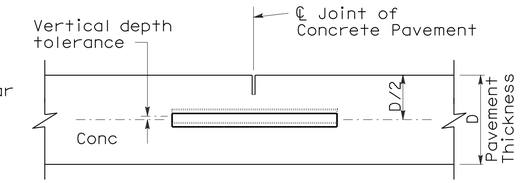

ELEVATION

VERTICAL DEPTH TOLERANCE

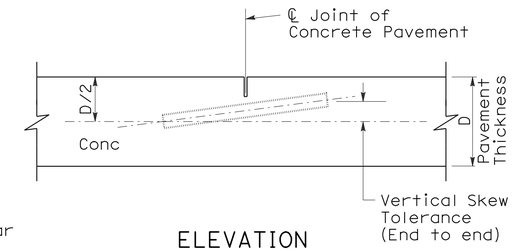

ELEVATION

VERTICAL SKEW TOLERANCE

NOTES:

1. See Revised Standard Plan RSP P1 for typical dowel bar placement and locations.
2. 1½" Dia smooth dowel bars are to be used with a pavement thickness, D, equal to or greater than 0.70 feet. For pavement thickness, D, less than 0.70 feet, use 1¼" Dia smooth dowel bars.
3. For widths not shown, see Project Plans.
4. If fresh concrete pavement is placed adjacent to existing concrete pavement, the top corner of the existing concrete pavement does not need to be rounded to the ¼" radius, as shown.

TABLE A (See Note 3)

Dowel Bar Transverse Spacing Table	
Width between Longitudinal Joints	Number of Dowels between Longitudinal Joints
14'-0"	14
13'-0"	13
12'-0"	12
11'-0"	11
10'-0"	10
8'-0"	8
5'-0"	5
4'-0"	4

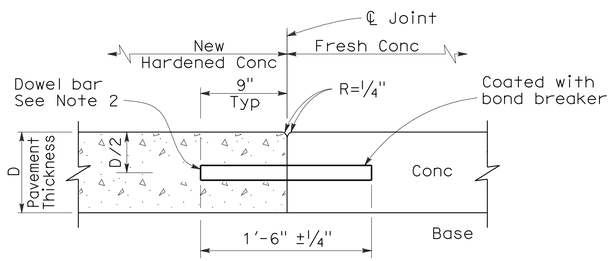

SECTION A-A

TRANSVERSE CONSTRUCTION JOINT DETAIL

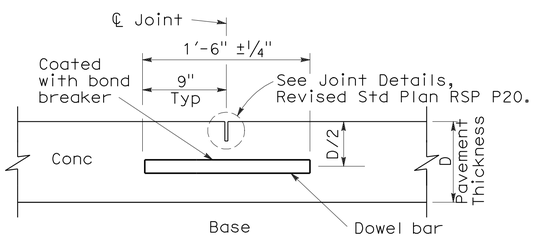

TRANSVERSE CONTRACTION JOINT

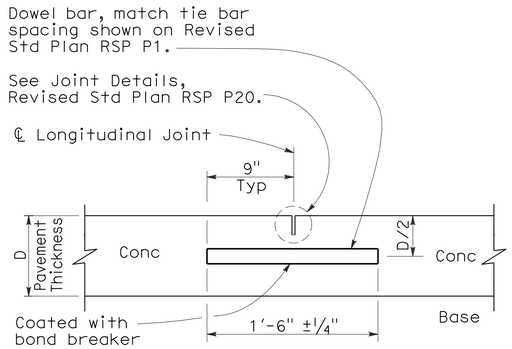

LONGITUDINAL CONTRACTION JOINT WITH DOWEL BARS

(See Revised Std Plan RSP P18)

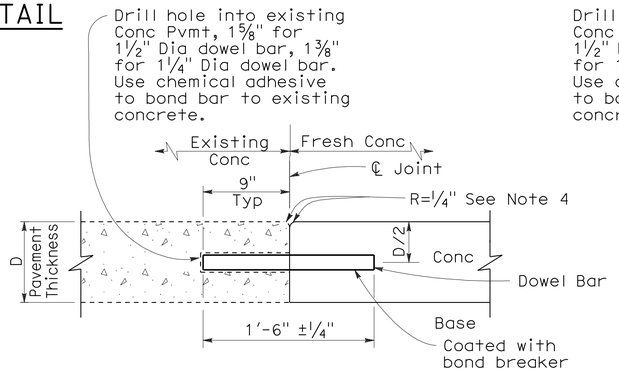

TRANSVERSE CONSTRUCTION JOINT FOR EXISTING CONCRETE PAVEMENT

(Drill and bond locations)

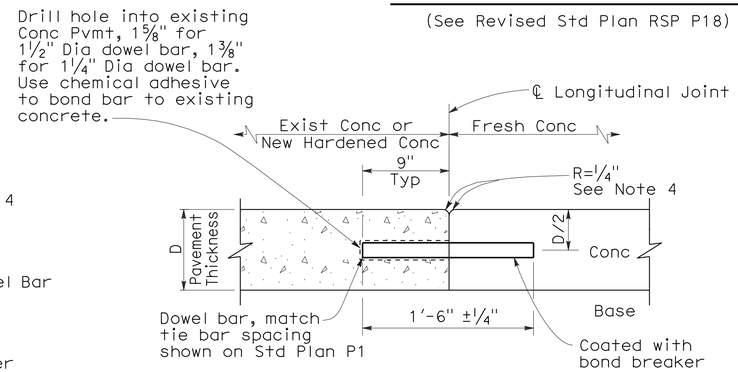

LONGITUDINAL CONSTRUCTION JOINT WITH DOWEL BARS

(See Revised Std Plan RSP P18)

STATE OF CALIFORNIA
DEPARTMENT OF TRANSPORTATION

CONCRETE PAVEMENT-DOWEL BAR DETAILS

NO SCALE

RSP P10 DATED MAY 15, 2009 SUPERSEDES STANDARD PLAN P10 DATED MAY 1, 2006 - PAGE 124 OF THE STANDARD PLANS BOOK DATED MAY 2006.

REVISED STANDARD PLAN RSP P10

2006 REVISED STANDARD PLAN RSP P10

5-8-09

DIST	COUNTY	ROUTE	POST MILES TOTAL PROJECT	SHEET NO.	TOTAL SHEETS
05	SB	246	12.2	65	93

William K. Farnbach
REGISTERED CIVIL ENGINEER

May 15, 2009
PLANS APPROVAL DATE

REGISTERED PROFESSIONAL ENGINEER
William K. Farnbach
No. C49042
Exp. 9-30-10
CIVIL
STATE OF CALIFORNIA

The State of California or its officers or agents shall not be responsible for the accuracy or completeness of electronic copies of this plan sheet.

To accompany plans dated 3-28-11

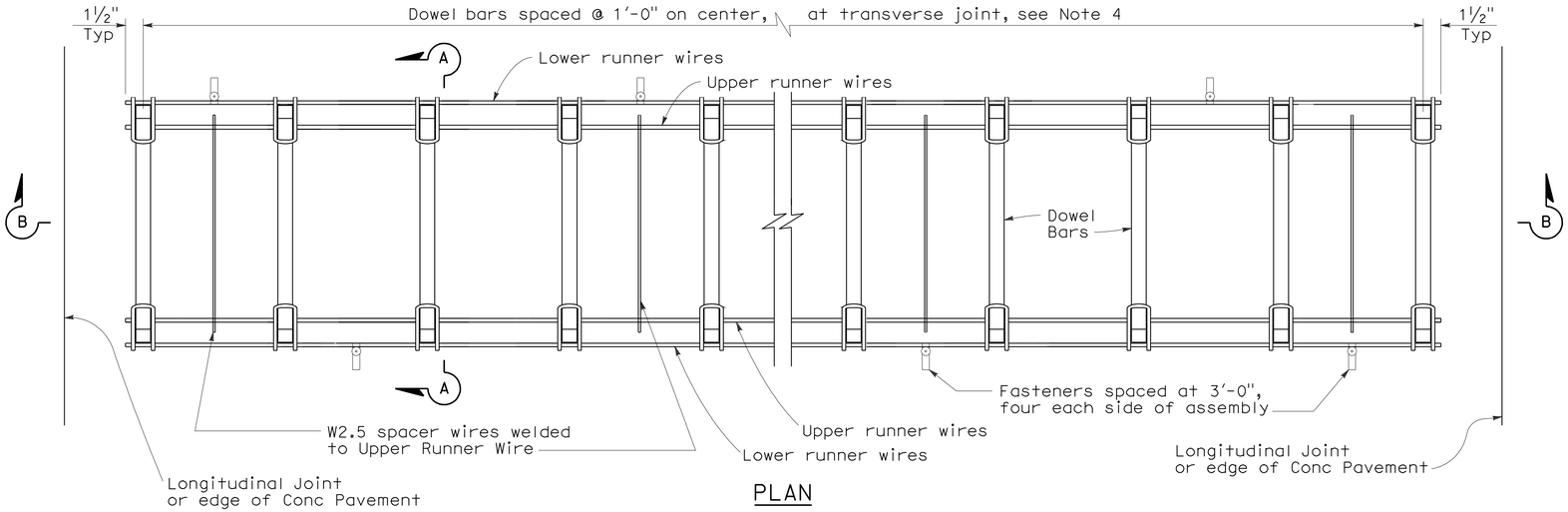

PLAN

DOWEL BAR BASKET (TRANSVERSE JOINT)

See Note 1

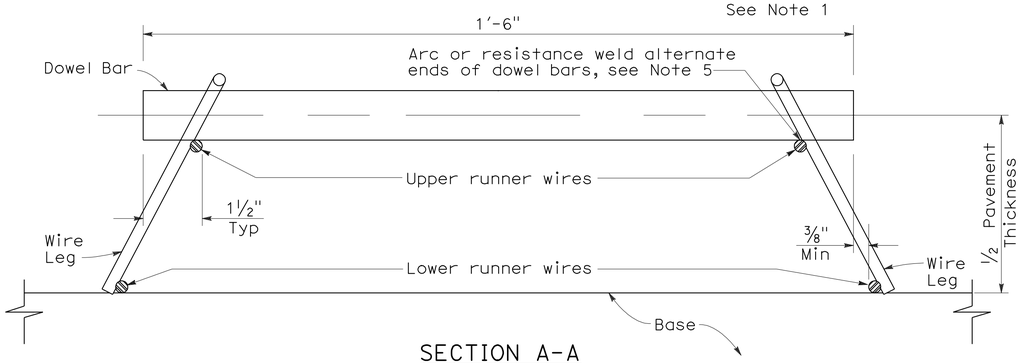

SECTION A-A

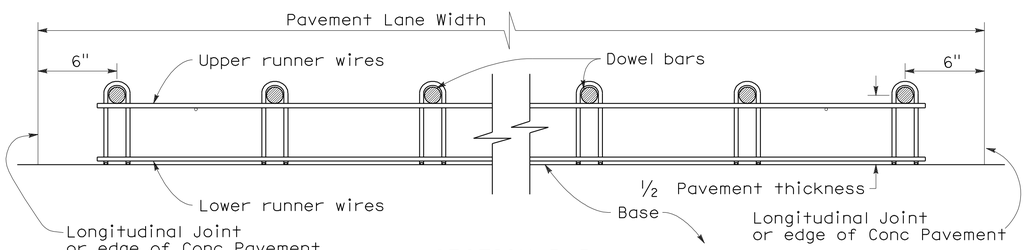

SECTION B-B

See Note 1

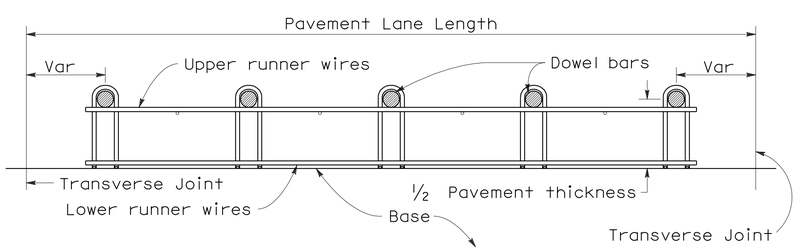

SECTION C-C

See Notes 1 and 4

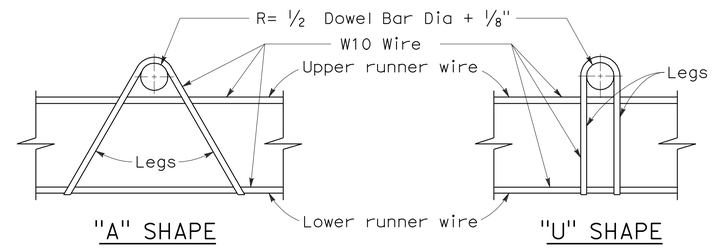

ASSEMBLY FRAME DETAILS

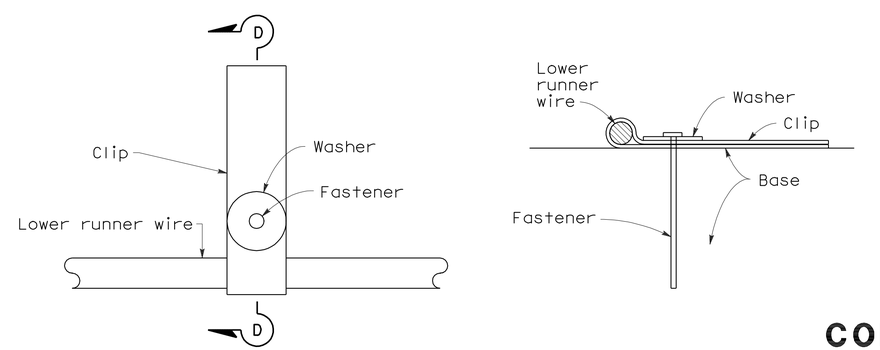

PLAN

SECTION D-D

FASTENER DETAIL

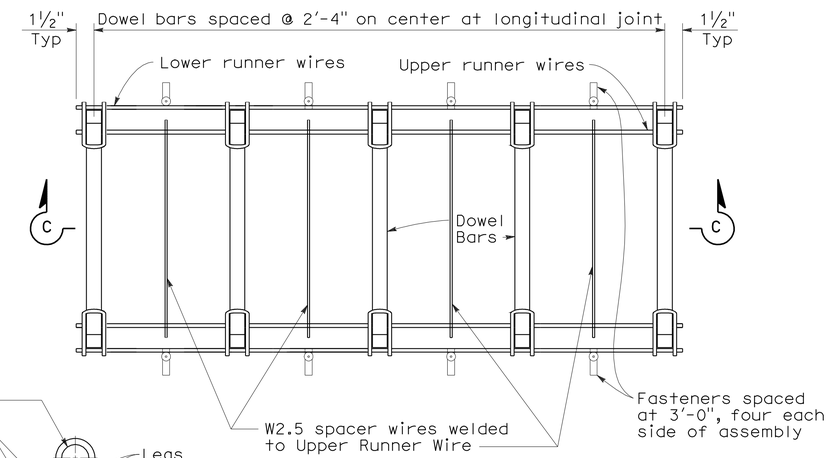

PLAN

DOWEL BAR BASKET (LONGITUDINAL JOINT)

See Note 1

NOTES:

1. "U" frame shape assembly shown. "U" frame shape or "A" frame shape are acceptable.
2. Wire sizes shown are minimum required.
3. All wire intersections are to be resistance welded.
4. Use tie bar spacing for longitudinal dowel bar locations. See Revised Std Plans RSPs P1, P2, and P3 for tie bar requirements.
5. Weld may be at top or bottom of dowel bar.

STATE OF CALIFORNIA
DEPARTMENT OF TRANSPORTATION

CONCRETE PAVEMENT-DOWEL BAR BASKET DETAILS

NO SCALE

RSP P12 DATED MAY 15, 2009 SUPERSEDES RSP P12 DATED NOVEMBER 17, 2006 AND STANDARD PLAN P12 DATED MAY 1, 2006 - PAGE 125 OF THE STANDARD PLANS BOOK DATED MAY 2006.

REVISED STANDARD PLAN RSP P12

2006 REVISED STANDARD PLAN RSP P12

5-8-09

DIST	COUNTY	ROUTE	POST MILES TOTAL PROJECT	SHEET NO.	TOTAL SHEETS
05	SB	246	12.2	66	93

REGISTERED CIVIL ENGINEER

June 5, 2009
PLANS APPROVAL DATE

REGISTERED PROFESSIONAL ENGINEER William K. Farnbach No. C49042 Exp. 9-30-10 CIVIL STATE OF CALIFORNIA

The State of California or its officers or agents shall not be responsible for the accuracy or completeness of electronic copies of this plan sheet.

To accompany plans dated 3-28-11

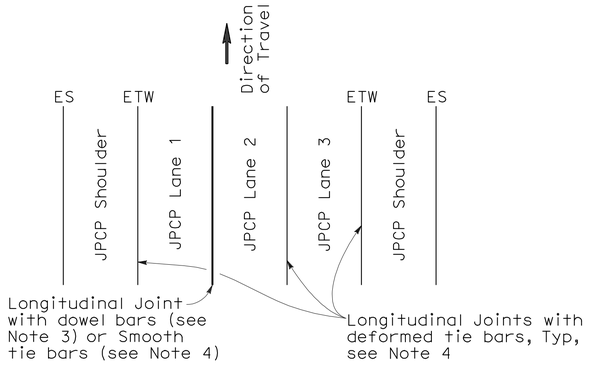

3 LANES WITH TIED CONCRETE SHOULDERS
PLAN

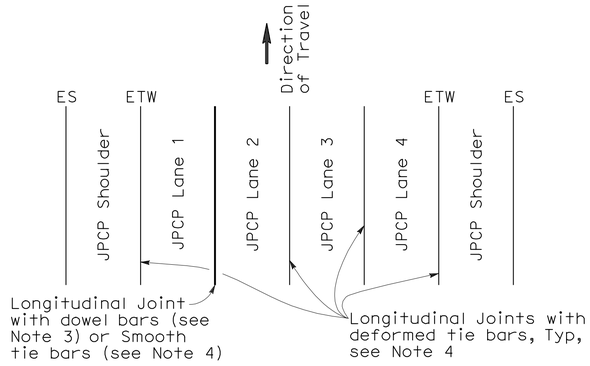

4 LANES WITH TIED CONCRETE SHOULDERS
PLAN

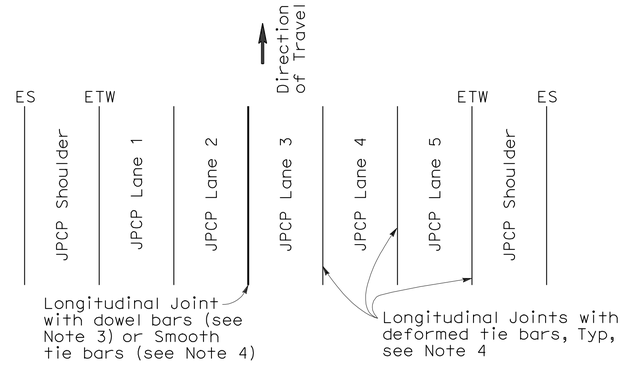

5 LANES WITH TIED CONCRETE SHOULDERS
PLAN

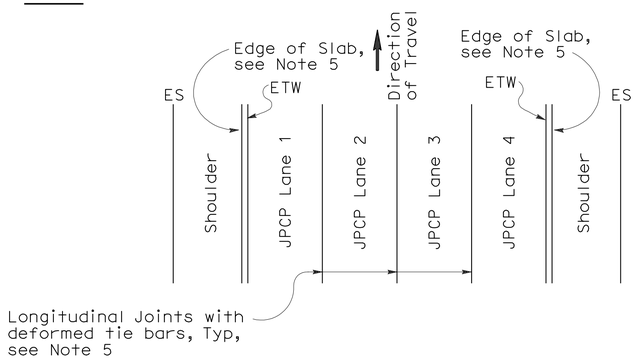

4 LANES OR LESS WITH WIDENED SLAB
PLAN

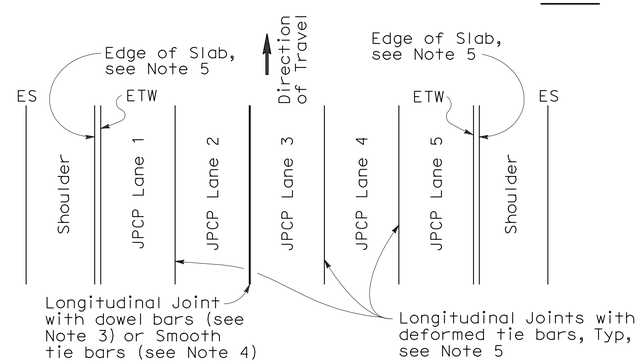

5 LANES WITH WIDENED SLAB
PLAN

NEW CONSTRUCTION

Location of Longitudinal Joints
(For JPCP)

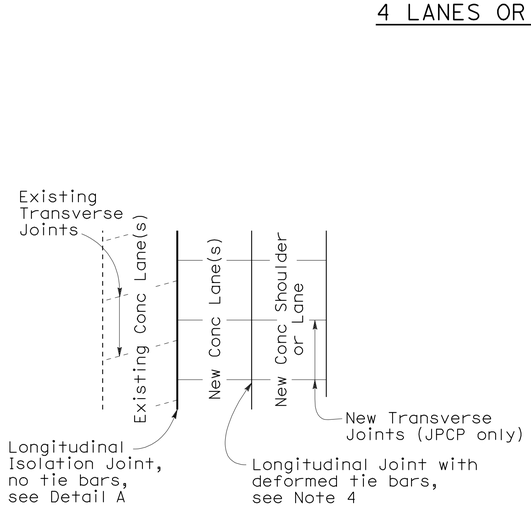

CASE 1
PLAN

Transverse Joints do not align between new and existing

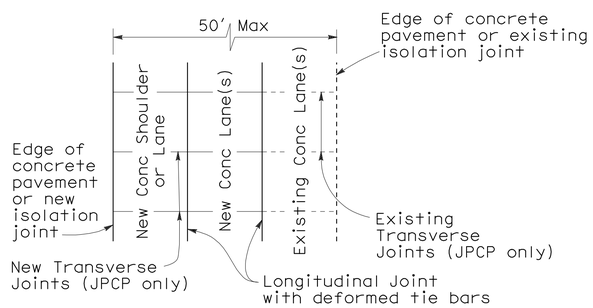

CASE 2
PLAN

Transverse Joints align between new and existing

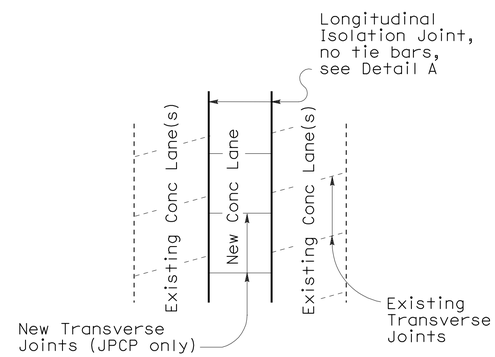

CASE 3 (INTERIOR LANE REPLACEMENT)
PLAN

Transverse Joints do not align between new and existing

LANE/SHOULDER ADDITION OR RECONSTRUCTION

(For JPCP and CRCP)

NOTES:

1. Where Lean Concrete Base is not used as base material, the joint filler material used for the longitudinal isolation joint shall only extend to the bottom of the new concrete slab. See Detail A.
2. Use 5/8" ±1/16" dimension for silicone sealant.
3. See Revised Standard Plan RSP P10 for longitudinal joint with dowel bars.
4. See Revised Standard Plan RSP P1.
5. See Revised Standard Plan RSP P2.

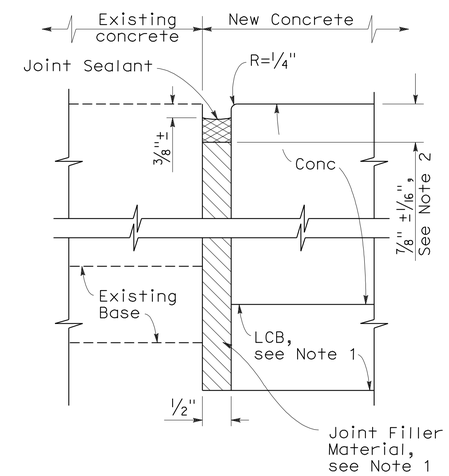

DETAIL A

ISOLATION JOINT

STATE OF CALIFORNIA
DEPARTMENT OF TRANSPORTATION

CONCRETE PAVEMENT-LANE SCHEMATICS AND ISOLATION JOINT DETAIL

NO SCALE

RSP P18 DATED JUNE 5, 2009 SUPERSEDES RSP P18 DATED MAY 15, 2009, RSP P18 DATED NOVEMBER 17, 2006 AND STANDARD PLAN P18 DATED MAY 1, 2006 - PAGE 127 OF THE STANDARD PLANS BOOK DATED MAY 2006.

REVISED STANDARD PLAN RSP P18

2006 REVISED STANDARD PLAN RSP P18

5-14-09

NOTE:

1. Tie bars, dowel bars, and reinforcement are not shown in joint seal details, see Revised Standard Plans RSP P1, RSP P3, RSP P10, RSP P35, RSP P45, or RSP P46 as applicable.

DIST	COUNTY	ROUTE	POST MILES TOTAL PROJECT	SHEET NO.	TOTAL SHEETS
05	SB	246	12.2	67	93

William K. Farnbach
REGISTERED CIVIL ENGINEER

May 15, 2009
PLANS APPROVAL DATE

REGISTERED PROFESSIONAL ENGINEER William K. Farnbach No. C49042 Exp. 9-30-10 CIVIL STATE OF CALIFORNIA

The State of California or its officers or agents shall not be responsible for the accuracy or completeness of electronic copies of this plan sheet.

To accompany plans dated 3-28-11

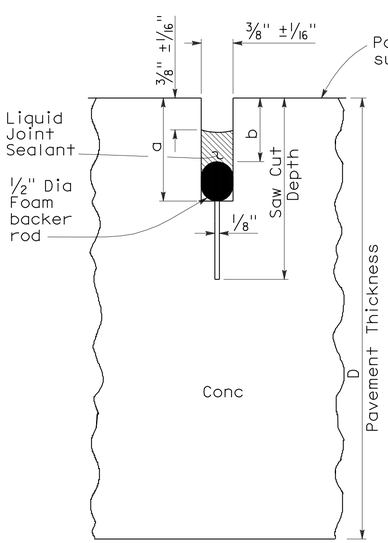

LIQUID SEALANT

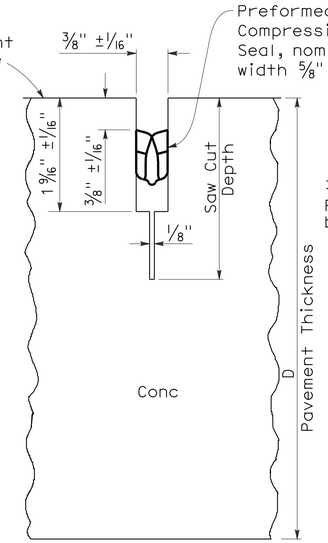

COMPRESSION SEAL

TYPE A1

Transverse Contraction Joints

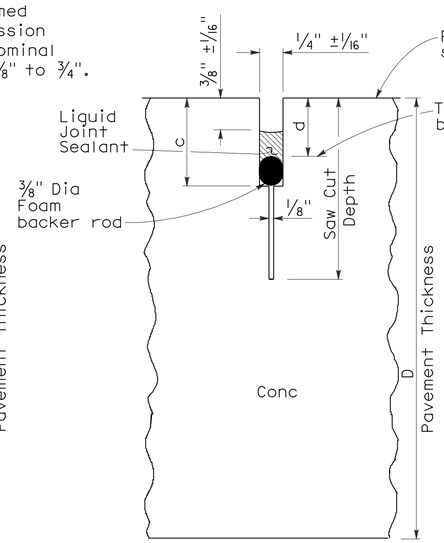

LIQUID SEALANT

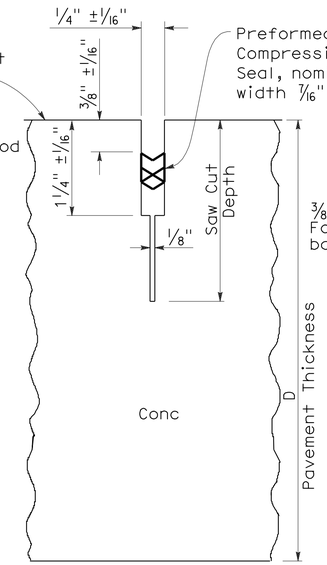

COMPRESSION SEAL

TYPE A2

Longitudinal Contraction Joints

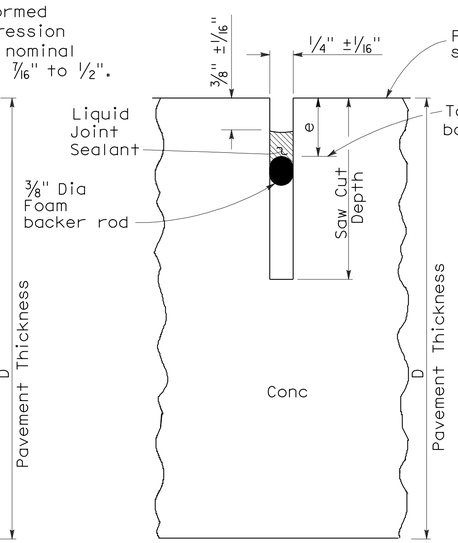

LIQUID SEALANT

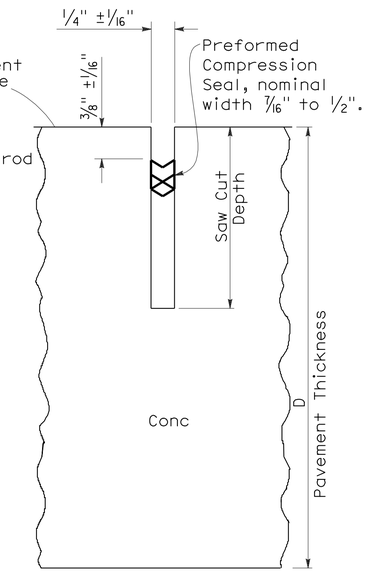

COMPRESSION SEAL

TYPE B

Longitudinal or Transverse Contraction Joint

LIQUID SEALANT RESERVOIR DEPTH

LIQUID SEALANT MATERIAL	3/8" Joint Width Type A1		1/4" Joint Width Type A2		1/4" Joint Width Type B
	DIMENSION		DIMENSION		DIMENSION
	a	b	c	d	e
SILCONE	1" ±1/16"	5/8" ±1/16"	15/16" ±1/16"	9/16" ±1/16"	9/16" ±1/16"
ASPHALT RUBBER	1 3/16" ±1/16"	3/4" ±1/16"	1 1/16" ±1/16"	11/16" ±1/16"	11/16" ±1/16"

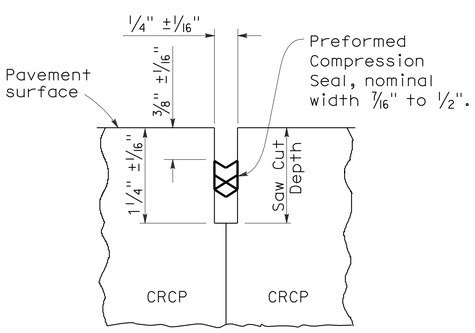

COMPRESSION SEAL

TYPE C

Transverse and Longitudinal Construction Joints (For CRCP)

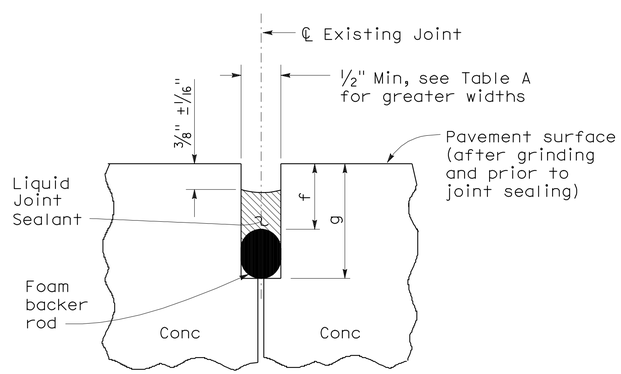

LIQUID SEALANT

TYPE R

Retrofit Transverse and Longitudinal Joints

TABLE A (TYPE R JOINT)

Sawn Joint Width	Backer Rod Diameter ± 1/16"	DIMENSION "f"	DIMENSION "g"
1"	1 5/16"	7/8"	2 1/4"
7/8"	1 3/16"	13/16"	2"
3/4"	1"	3/4"	1 3/4"
5/8"	7/8"	11/16"	1 1/2"
1/2"	11/16"	5/8"	1 1/4"

STATE OF CALIFORNIA
DEPARTMENT OF TRANSPORTATION

CONCRETE PAVEMENT-JOINT DETAILS

NO SCALE

RSP P20 DATED MAY 15, 2009 SUPERSEDES STANDARD PLAN P20
DATED MAY 1, 2006 - PAGE 128 OF THE STANDARD PLANS BOOK DATED MAY 2006.

REVISED STANDARD PLAN RSP P20

2006 REVISED STANDARD PLAN RSP P20

5-8-09

DIST	COUNTY	ROUTE	POST MILES TOTAL PROJECT	SHEET NO.	TOTAL SHEETS
05	SB	246	12.2	68	93

Robert B Schott
LICENSED LANDSCAPE ARCHITECT

April 3, 2009
PLANS APPROVAL DATE

The State of California or its officers or agents shall not be responsible for the accuracy or completeness of electronic copies of this plan sheet.

LICENSED LANDSCAPE ARCHITECT — Robert B. Schott — 3025 — Signature — 11-30-10 Renewal Date — 2-25-09 Date — STATE OF CALIFORNIA

To accompany plans dated 3-28-11

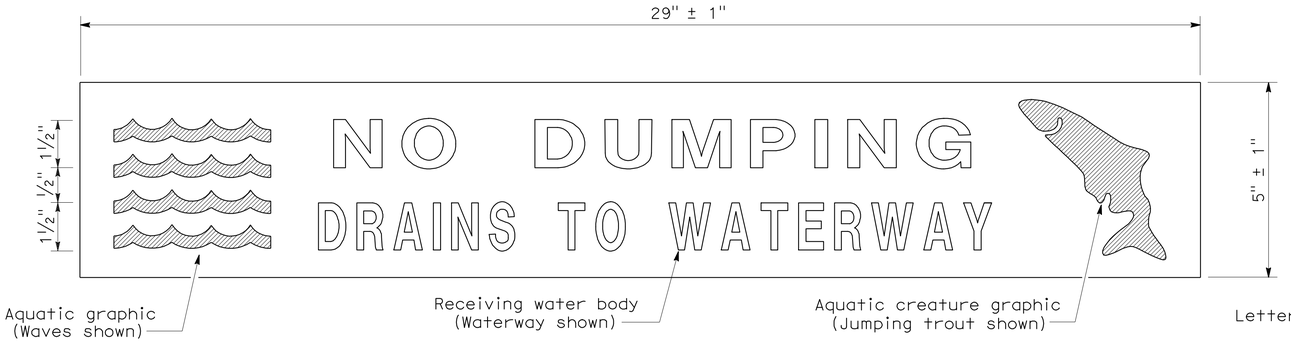

PLAN
DRAINAGE INLET MARKER
(PREFABRICATED THERMOPLASTIC)

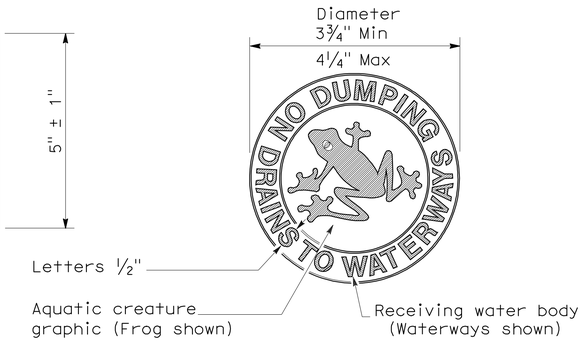

PLAN
DRAINAGE INLET MARKER
(MEDALLION)

PLAN
DRAINAGE INLET MARKER
(STAMPED CONCRETE IMPRINT)

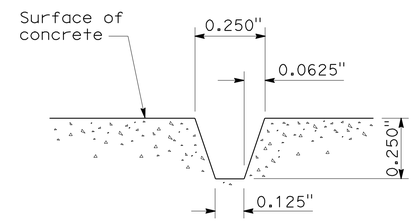

SECTION A-A
STAMPED CONCRETE
IMPRINT DETAIL

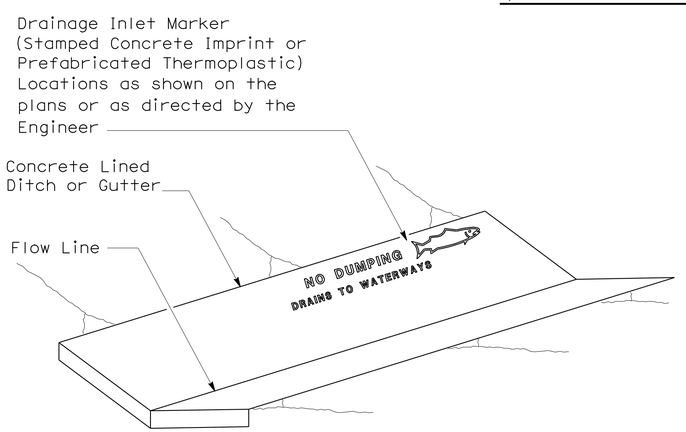

PERSPECTIVE
DRAINAGE INLET MARKER ON
CONCRETE LINED DITCH

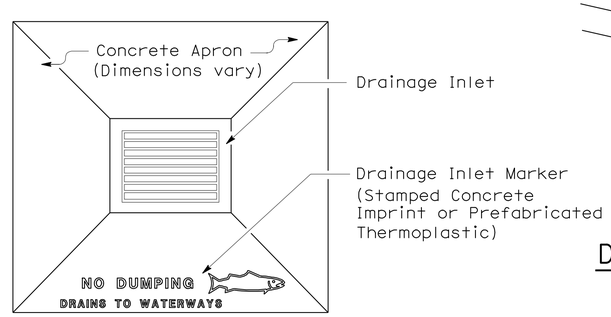

PLAN
DRAINAGE INLET MARKER ON
DRAINAGE INLET APRON

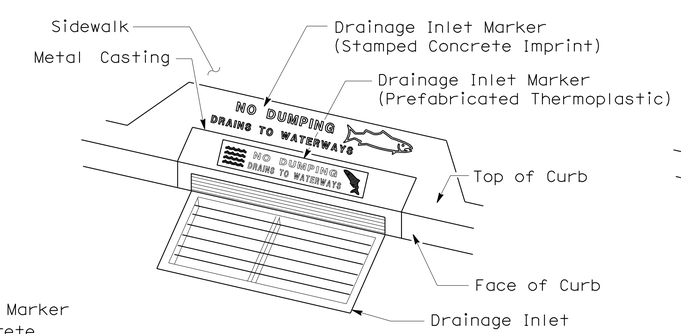

PERSPECTIVE
DRAINAGE INLET MARKER ON
DRAINAGE INLET

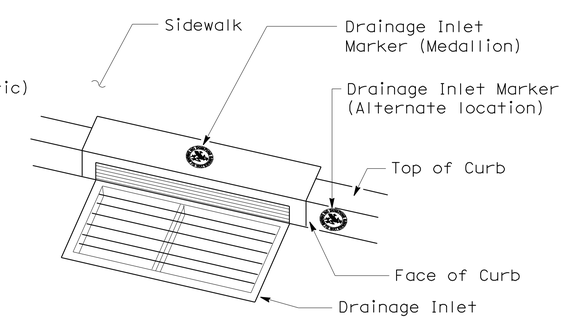

PERSPECTIVE
DRAINAGE INLET MARKER (MEDALLION)
ON DRAINAGE INLET

STATE OF CALIFORNIA
DEPARTMENT OF TRANSPORTATION

DRAINAGE INLET MARKERS

NO SCALE

NSP D71 DATED APRIL 3, 2009 SUPPLEMENTS
THE STANDARD PLANS BOOK DATED MAY 2006.

NEW STANDARD PLAN NSP D71

2006 NEW STANDARD PLAN NSP D71

7-24-08

DIST	COUNTY	ROUTE	POST MILES TOTAL PROJECT	SHEET NO.	TOTAL SHEETS
05	SB	246	12.2	69	93

REGISTERED CIVIL ENGINEER

June 15, 2007
PLANS APPROVAL DATE

REGISTERED PROFESSIONAL ENGINEER Glenn DeCou No. C34547 Exp. 9-30-07 CIVIL STATE OF CALIFORNIA

The State of California or its officers or agents shall not be responsible for the accuracy or completeness of electronic copies of this plan sheet.

To accompany plans dated 3-28-11

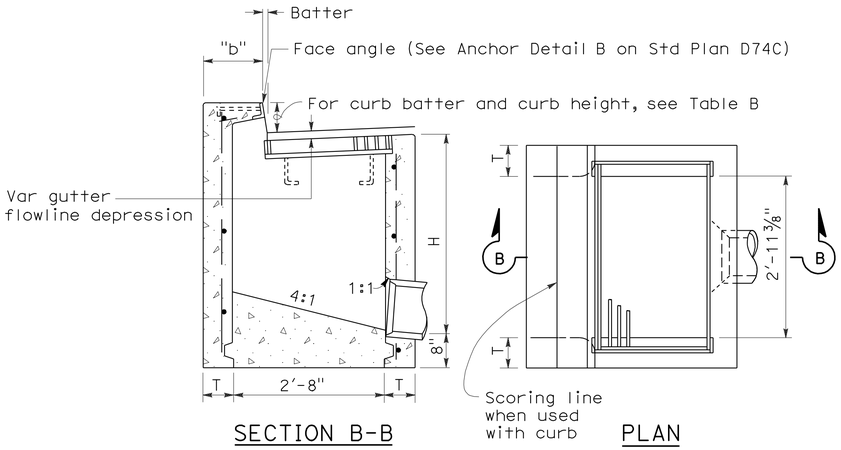

SECTION B-B PLAN

TYPE GO

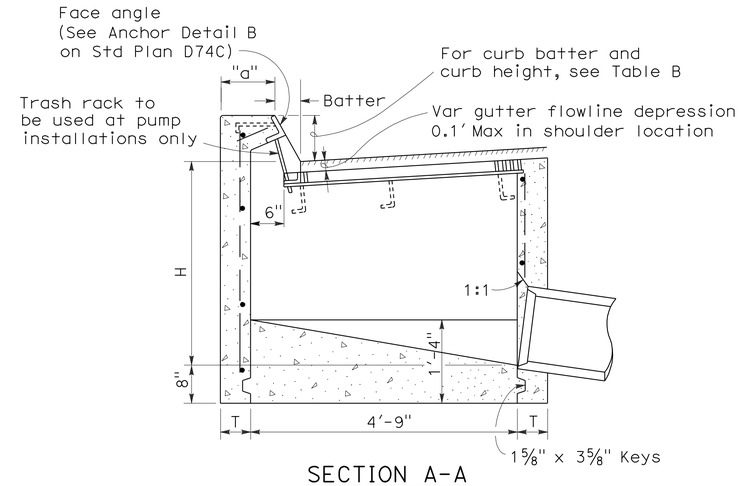

SECTION A-A

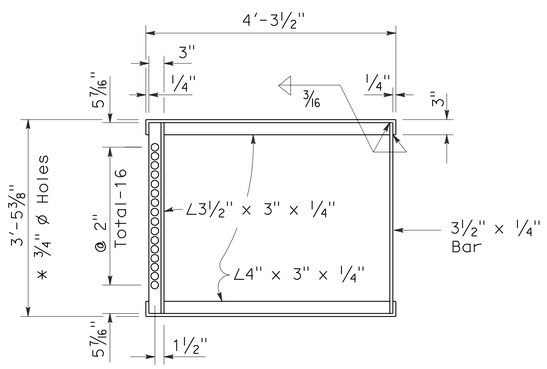

* 3/4" ø Holes required only with trash rack

GRATE FRAME FOR TYPE GDO INLET

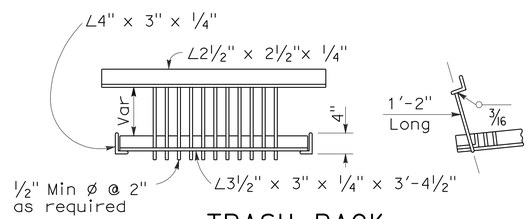

TRASH RACK

(For use with pump installation)

TABLE A

CONCRETE QUANTITIES				
	H=3'-0" TO 8'-0" (T=6")		H=8'-1" TO 20'-0" (T=8")	
TYPE	H=3'-0" (CY)	ADDITIONAL PCC PER FOOT (CY)	H=8'-1" (CY)	ADDITIONAL PCC PER FOOT (CY)
GO	1.24	0.245	3.39	0.346
GDO	1.62	0.322	4.36	0.446

Table based on 8" floor slab, no deduction for pipe openings, and curb type giving highest quantity of concrete. No deductions or adjustments are to be made to these quantities because of pipe openings, different floor alternatives or different curb type.

TABLE B

CURB TYPE	NORMAL CURB HEIGHT	CURB BATTER	"a" DIMENSION	"b" DIMENSION
A1-6	6"	1 1/2"	T+7 1/2"	T+6 1/2"
A1-8	8"	2"	T+7"	T+6"
B1-6	6"	4"	T+5"	T+4"
Type A Dike	6"	3"	T+6"	T+5"

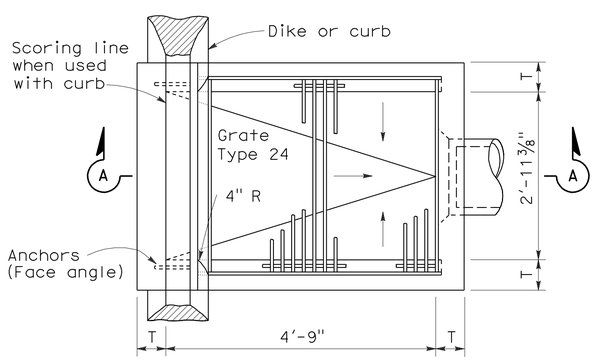

PLAN

TYPE GDO

NOTES:

1. "H" is the difference in elevation between the outlet pipe flow line and the normal gutter grade line undepressed.
2. For "T" wall thickness, see Table A below.
3. Wall reinforcing not required when "H" is 8'-0" or less and the unsupported width or length is 7'-0" or less. Walls exceeding these limits shall be reinforced with #4 @ 18"± centers placed 1 1/2" clear to inside of box unless otherwise shown.
4. Inlet bottom reinforcing not required. See Standard Plan D74C for alternative reinforced bottom.
5. Steps - None required where "H" is less than 2'-6" Where "H" is 2'-6" or more, install steps with lowest rung 1'-0" above the floor and highest rung not more than 6" below top of inlet. The distance between steps shall not exceed 1'-0" and shall be uniform throughout the length of the wall. Place steps in the wall without an opening. Step inserts may be substituted for the bar steps. Step Inserts shall comply with State Industrial Safety requirements. See Standard Plan D74C for step details.
6. When shown on the project plans, place a 3/4" plain round protection bar horizontally across the length of the opening and bend back 4" into the inlet wall on each side.
7. Pipe(s) can be placed in any wall.
8. Curb section shall match adjacent curb.
9. Basin floors shall have wood trowel finish and shall slope toward the outlet pipe as shown.
10. Galvanizing - See Standard Specifications or Special Provisions.
11. See Standard Plan D77A and D77B for grate and frame details and weights of miscellaneous iron and Steel.
12. See Standard Plan D78A for gutter depression details.
13. Full penetration butt welds may be substituted for the fillet welds on all anchors.
14. Standard square, hexagon, round or equivalent headed anchors may be substituted for the right angle hooks on the anchors shown on this plan.
15. Cast-in-place or precast alternative is optional with contractor. See Standard Specifications.
16. Cast-in-place inlets to be formed around all pipes/stubs intersecing the inlet and concrete poured in one continuous operation. Precast inlets shall have mortared pipe connections conforming to details for Type GCP inlets on Standard Plan D75B. See Standard Specifications for mortar composition.

STATE OF CALIFORNIA
DEPARTMENT OF TRANSPORTATION

DRAINAGE INLETS

NO SCALE

RSP D74B DATED JUNE 15, 2007 SUPERSEDES STANDARD PLAN D74B DATED MAY 1, 2006 - PAGE 150 OF THE STANDARD PLANS BOOK DATED MAY 2006.

REVISED STANDARD PLAN RSP D74B

2006 REVISED STANDARD PLAN RSP D74B

4-16-07

DIST	COUNTY	ROUTE	POST MILES TOTAL PROJECT	SHEET NO.	TOTAL SHEETS
05	SB	246	12.2	70	93

Raymond Don Tsztoo
REGISTERED CIVIL ENGINEER

June 6, 2008
PLANS APPROVAL DATE

REGISTERED PROFESSIONAL ENGINEER
Raymond Don Tsztoo
No. C37332
Exp. 6-30-08
CIVIL
STATE OF CALIFORNIA

The State of California or its officers or agents shall not be responsible for the accuracy or completeness of electronic copies of this plan sheet.

To accompany plans dated 3-28-11

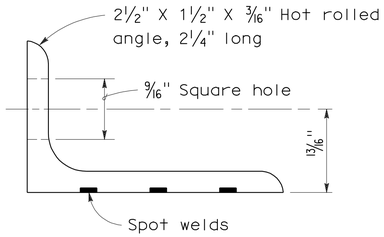

ANGLE

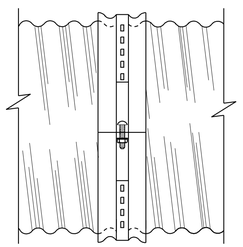

SIDE VIEW
ANGLE

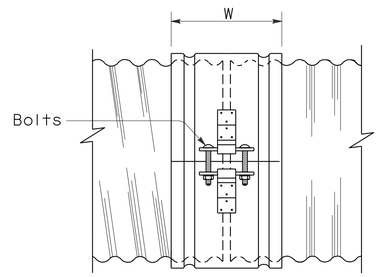

SIDE VIEW
SINGLE BAR AND STRAP

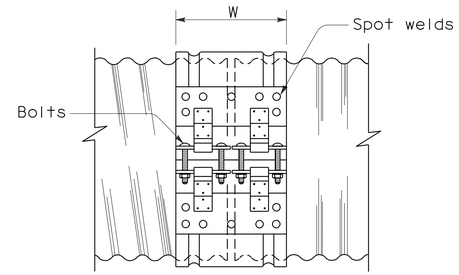

SIDE VIEW
DOUBLE BAR AND STRAP

NOTES:

1. All ferrous metal coupling band connection hardware shall be galvanized or electroplated in accordance with the Standard Specifications.
2. Dimensions and thicknesses shown are minimum.
3. Spot welds shall develop minimum required strength of strap.
4. Fillet welds of equivalent strength may be substituted for spot welds or rivets.
5. Dimension depends upon whether end condition is lips up or lips down.

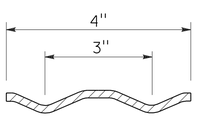

SECTION

H-4 HUGGER BAND

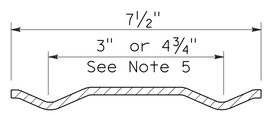

SECTION

H-7 HUGGER BAND

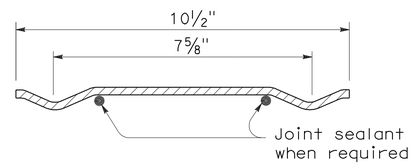

SECTION

H-10 HUGGER BAND

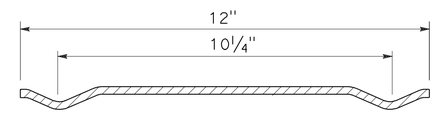

SECTION

H-12 HUGGER BAND

HUGGER COUPLING BANDS

STATE OF CALIFORNIA
DEPARTMENT OF TRANSPORTATION

CORRUGATED METAL PIPE COUPLING DETAILS No. 4 HUGGER COUPLING BANDS

NO SCALE

RSP D97D DATED JUNE 6, 2008 SUPERSEDES STANDARD PLAN D97D
DATED MAY 1, 2006 - PAGE 186 OF THE STANDARD PLANS BOOK DATED MAY 2006.

REVISED STANDARD PLAN RSP D97D

2006 REVISED STANDARD PLAN RSP D97D

3-24-08

DIST	COUNTY	ROUTE	POST MILES TOTAL PROJECT	SHEET NO.	TOTAL SHEETS
05	SB	246	12.2	71	93

Raymond Don Tsztoo
REGISTERED CIVIL ENGINEER

June 6, 2008
PLANS APPROVAL DATE

REGISTERED PROFESSIONAL ENGINEER Raymond Don Tsztoo No. C37332 Exp. 6-30-08 CIVIL STATE OF CALIFORNIA

The State of California or its officers or agents shall not be responsible for the accuracy or completeness of electronic copies of this plan sheet.

ANNULAR AND HELICAL PROFILE

COUPLING TYPE	PIPE CORRUGATION	PIPE SIZE	W OR A	PIPE WALL THICKNESS CSP	PIPE WALL THICKNESS CAP	BAND THICKNESS CSP	BAND THICKNESS CAP	BAR AND STRAP (CSP ONLY) STRAP THICKNESS	BOLTS Dia	BAR Dia	BAR YIELD STRENGTH	ANGLE DIMENSIONS CSP	ANGLE DIMENSIONS CAP	BOLTS (No.- Dia) CSP	BOLTS (No.- Dia) CAP	RIVETS ANGLE TO BAND CSP	RIVETS ANGLE TO BAND CAP	SPOT WELDS ANGLE TO BAND CSP
TWO PIECE INTEGRAL FLANGE	1½′ × ¼"	6"-10"	7"	0.052"-0.079"	0.048"-0.060"	0.052"	0.060"							2-⅜"	2-⅜"			
		12"-18"	7"	0.052"-0.079"		0.064"								2-½"				
	2⅔" × ½"	12"-24"	7"	0.052"-0.079"	0.060"-0.105"	0.064"	0.060"							2-½"	2-½"			
UNIVERSAL	2⅔" × ½"	THROUGH 36"	12"	0.052"-0.138"	0.060"-0.135"	0.052"	0.060"					2" × 2" × 3/16"	2" × 2" × 3/16"	3-½"	3-½"	3-⅜"	3-⅜"	3-½"
		42"-60"	12"	0.052"-0.168"	0.075"-0.164"	0.052"	0.060"					2" × 2" × 3/16"	2" × 2" × 3/16"	3-½"	3-½"	3-⅜"	3-⅜"	5-½"
		THROUGH 72"	12"	0.052"-0.168"	0.164"	0.052"	0.105"	0.079"	½"	⅞"	32 ksi	2" × 2" × 3/16"	2" × 2" × 3/16"	3-½"	3-½"	3-⅜"	3-⅜"	5-½"
		78"-84"	16¼"	0.168"		0.079"		DOUBLE 0.079"	½"	⅞"	32 ksi							
ANNULAR	2⅔" × ½"	THROUGH 36"	7"	0.064"-0.138"	0.060"-0.135"	0.052"	0.060"	0.079"	½"	⅞"	32 ksi	2" × 2" × 3/16"	2" × 2" × 3/16"	2-½"	2-½"	3-⅜"	3-⅜"	3-½"
		42"-72"	12"	0.064"-0.168"	0.075"-0.164"	0.052"	0.105"	0.079"	½"	⅞"	32 ksi	2" × 2" × 3/16"	2" × 2" × 3/16"	3-½"	3-½"	3-⅜"	3-⅜"	5-½"
		78"-84"	12"	0.168"		0.079"		0.109"	½"	⅞"	45 ksi	2" × 2" × 3/16"		3-½"		3-⅜"		5-½"
	3" × 1"	48"-90"	14"	0.064"-0.109"		0.052"		0.079"	½"	⅞"	32 ksi	2" × 2" × 3/16"		3-½"		3-⅜"		5-½"
		96"-120"	14"	0.079"-0.109"		0.052"		0.109"	½"	⅞"	45 ksi	2" × 2" × 3/16"		3-½"		4-⅜"		
		42"-108"	14"		0.060"-0.135"		0.060"						2" × 2" × 3/16"		3-½"		3-⅜"	
HELICAL	2⅔" × ½"	THROUGH 36"	12"	0.052"-0.138"	0.060"-0.135"	0.052"	0.060"	0.079"	½"	⅞"	32 ksi	2" × 2" × 3/16"	2" × 2" × 3/16"	3-½"	3-½"	3-⅜"	3-⅜"	3-½"
		42"-72"	12"	0.052"-0.168"	0.075"-0.164"	0.052"	0.060"	0.079"	½"	⅞"	32 ksi	2" × 2" × 3/16"	2" × 2" × 3/16"	3-½"	3-½"	3-⅜"	3-⅜"	5-½"
		78"-84"	12"	0.168"		0.079"		0.109"	½"	⅞"	45 ksi	2" × 2" × 3/16"		3-½"		3-⅜"		5-½"
	3" × 1"	48"-90"	14"	0.064"-0.109"		0.052"		0.079"	½"	⅞"	32 ksi	2" × 2" × 3/16"		3-½"		3-⅜"		5-½"
		96"-120"	14"	0.079"-0.109"		0.052"		0.109"	½"	⅞"	45 ksi	2" × 2" × 3/16"		3-½"		4-⅜"		
		42"-108"	14"		0.060"-0.135"		0.060"						2" × 2" × 3/16"		3-½"		3-⅜"	
HUGGER	2⅔" × ½" REROLLED END	12"-54"	4"	0.052"-0.109"		0.052"						2½" × 1½" × 3/16"	2½" × 1½" × 3/16"	1-½"				3-½"
		60"-66"	4"	0.109"		0.064"						2½" × 1½" × 3/16"	2½" × 1½" × 3/16"	1-½"				3-½"
		36"-48"	4"	0.138"		0.064"						2½" × 1½" × 3/16"	2½" × 1½" × 3/16"	1-½"				3-½"
		THROUGH 72"	10½"	0.052"-0.168"		0.052"		0.079"	½"	⅞"	32 ksi							
		78"-84"	10½"	0.168"		0.079"		0.109"	½"	⅞"	45 ksi							
	3" × 1" REROLLED END	48"-90"	10½"	0.064"-0.109"		0.052"		0.079"	½"	⅞"	32 ksi							
		96"-120"	10½"	0.079"-0.109"		0.052"		0.109"	½"	⅞"	45 ksi							
	5" × 1" REROLLED END	48"-66"	7½"	0.064"-0.109"		0.064"		0.079"	½"	⅞"	32 ksi	2½" × 1½" × 3/16"	2½" × 1½" × 3/16"	1-½"				3-½"
		72"-90"	7½"	0.064"-0.079"		0.064"		0.079"	½"	⅞"	32 ksi	2½" × 1½" × 3/16"	2½" × 1½" × 3/16"	1-½"				3-½"
		48"-90"	7½"	0.064"-0.138"		0.064"		0.079"	½"	⅞"	32 ksi							
		48"-120"	12" SEE	0.064"-0.109"		0.064"		0.079"	½"	⅞"	32 ksi							
		48"-84"	12" NOTE	0.138"		0.064"		0.079"	½"	⅞"	32 ksi							
		90"-120"	12" 11	0.138"		0.064"		DOUBLE 0.079"	½"	⅞"	32 ksi							

SPIRAL RIB PROFILE

COUPLING TYPE	PIPE CORRUGATION	PIPE SIZE	W	PIPE WALL THICKNESS SSRP	PIPE WALL THICKNESS ASRP	BAND THICKNESS SSRP	BAND THICKNESS ASRP	BAR AND STRAP (SSRP ONLY) STRAP THICKNESS	BOLTS Dia	BAR Dia	BAR YIELD STRENGTH	ANGLE DIMENSIONS SSRP	ANGLE DIMENSIONS ASRP	BOLTS (No.- Dia) SSRP	BOLTS (No.- Dia) ASRP	RIVETS ANGLE TO BAND SSRP	RIVETS ANGLE TO BAND ASRP	SPOT WELDS ANGLE TO BAND SSRP
ANNULAR	2⅔" × ½" * REROLLED END	24"-36"	12"	0.064"-0.109"	0.060"-0.105"	0.052"	0.060"	0.079"	½"	⅞"	32 ksi	2" × 2" × 3/16"	2" × 2" × 3/16"	3-½"	3-½"	3-⅜"	3-⅜"	5-½"
		42"-60"	12"	0.064"-0.109"	0.075"-0.105"	0.052"	0.105"	0.079"	½"	⅞"	32 ksi	2" × 2" × 3/16"	2" × 2" × 3/16"	3-½"	3-½"	3-⅜"	3-⅜"	5-½"
		66"-72"	12"	0.064"-0.109"		0.052"		0.079"	½"	⅞"	32 ksi	2" × 2" × 3/16"	2" × 2" × 3/16"	3-½"	3-½"	3-⅜"	3-⅜"	5-½"
		78"-114"	12"	0.079"-0.109"		0.079"		0.109"	½"	⅞"	45 ksi	2" × 2" × 3/16"	2" × 2" × 3/16"	3-½"	3-½"	3-⅜"	3-⅜"	5-½"
HUGGER	2⅔" × ½" * REROLLED END	24"-72"	10½"	0.064"-0.109"		0.052"		0.079"	½"	⅞"	32 ksi							
		78"-84"	10½"	0.109"		0.079"		0.109"	½"	⅞"	45 ksi							

* See Note 14.

14. All profiles of Spiral Rib Pipe (¾" × ¾" ribs at 7½" pitch and ¾" × 1" ribs at 11½" pitch in both steel and aluminum and ¾" × 1" ribs at 8½" pitch in steel only) shall be manufactured with rerolled ends. Corrugation profile of the rerolled ends shall be 2⅔" × ½" annual corrugations with a minimum of two full corrugations at each end.

NOTES:

To accompany plans dated 3-28-11

1. All ferrous metal coupling band connection hardware shall be galvanized or electroplated in accordance with the Standard Specifications.
2. For helically corrugated coupling bands, the connection angles may be oriented parallel to the pipe axis, provided connecting holes are slotted lengthwise sufficiently to allow adjustment for the helix angle.
3. Tension strap may be connected to band with either spot welds or fillet welds that develop minimum required strength of strap.
4. Use 1¼" gage line dimension on attached angle leg for rivets and spot welds.
5. Band thickness shall not be less than:
   a. 3 standard thicknesses lighter than the thickness of the pipe for Corrugated Steel Pipe.
   b. 2 standard thicknesses lighter than the thickness of the pipe and in no case lighter than 0.060" for Corrugated Aluminum Pipe.
6. Dimensions, thicknesses and strengths shown are minimum.
7. For pipe arches use same width band as for round pipe of equal periphery.
8. Fillet welds of equivalent strenght may be substituted for spot welds or rivets.
9. Spot welds shall develop minimum required strength of strap.
10. Pipe with rerolled ends having at least two 2⅔" × ½" annular corrugations at each end with or without an upturned flange may be connected with any of the annular coupling bands shown for pipe of the same diameter and wall thickness and having 2⅔" × ½" corrugations.
11. In the case of H-12 huggerbands, two piece bands are required for diameters through 96" and three piece bands are required for diameters 102" through 120".
12. Two piece bands are required for pipes greater than 42" diameter.
13. The 2¼" × 2" × 0.109" thick galvanized die-formed angle connector may be used in lieu of the 2" × 2" × 3/16" angle connector for standard joints only on pipes through 72" diameter.

STATE OF CALIFORNIA
DEPARTMENT OF TRANSPORTATION

CORRUGATED METAL PIPE COUPLING DETAILS No. 5 STANDARD JOINT

NO SCALE

RSP D97E DATED JUNE 6, 2008 SUPERSEDES STANDARD PLAN D97E
DATED MAY 1, 2006 - PAGE 187 OF THE STANDARD PLANS BOOK DATED MAY 2006.

REVISED STANDARD PLAN RSP D97E

2006 REVISED STANDARD PLAN RSP D97E

4-2-08

DIST	COUNTY	ROUTE	POST MILES TOTAL PROJECT	SHEET NO.	TOTAL SHEETS
05	SB	246	12.2	72	93

Raymond Don Tsztoo
REGISTERED CIVIL ENGINEER

June 6, 2008
PLANS APPROVAL DATE

REGISTERED PROFESSIONAL ENGINEER Raymond Don Tsztoo No. C37332 Exp. 6-30-08 CIVIL STATE OF CALIFORNIA

The State of California or its officers or agents shall not be responsible for the accuracy or completeness of electronic copies of this plan sheet.

To accompany plans dated 3-28-11

ANNULAR AND HELICAL PROFILE

COUPLING TYPE	PIPE CORRUGATION	PIPE SIZE	W OR A	PIPE WALL THICKNESS CSP	PIPE WALL THICKNESS CAP	BAND THICKNESS CSP	BAND THICKNESS CAP	BAR AND STRAP (CSP ONLY) STRAP THICKNESS	BOLTS Dia	BAR Dia	BAR YIELD STRENGTH	ANGLE DIMENSIONS CSP	ANGLE DIMENSIONS CAP	BOLTS (No. - Dia) CSP	BOLTS (No. - Dia) CAP	RIVETS ANGLE TO BAND CSP	RIVETS ANGLE TO BAND CAP	SPOT WELDS ANGLE TO BAND CSP
TWO PIECE INTEGRAL FLANGE	1½" × ¼"	6"-10"	7"	0.064"-0.079"	0.060"	0.064"	0.060"							2-⅜"	2-⅜"			
	2⅔" × ½"	12"-24"	12"		0.060"-0.105"		0.060"								3-½"			
UNIVERSAL	2⅔" × ½"	THROUGH 36"	12"	0.064"-0.138"	0.060"-0.135"	0.064"	0.060"	0.079"	½"	⅞"	32 ksi	2" × 2" × 3/16"	2" × 2" × 3/16"	3-½"	3-½"	3-⅜"	3-⅜"	5-½"
		42"-60"	16¼"	0.064"-0.168"	0.060"-0.164"	0.064"	0.060"	DOUBLE 0.079"	½"	⅞"	32 ksi	2" × 2" × ¼"	2" × 2" × ¼"	4-½"	4-½"	5-⅜"	5-⅜"	
ANNULAR	2⅔" × ½"	THROUGH 36"	12"	0.064"-0.138"	0.060"-0.135"	0.064"	0.060"					2" × 2" × 3/16"	2" × 2" × 3/16"	3-½"	3-½"	3-⅜"	3-⅜"	5-½"
		42"-60"	12"	0.064"-0.079"		0.064"						2" × 2" × 3/16"		3-½"		3-⅜"		5-½"
		42"-60"	12"	0.109"-0.168"	0.135"-0.164"	0.064"	0.075"					2" × 2" × ¼"	2" × 2" × ¼"	3-½"	3-½"	5-⅜"	5-⅜"	
		66"-72"	24"		0.164"		0.105"						2" × 2" × ¼"		5-½"		5-½"	
		66"-84"	24"	0.109"-0.168"		0.064"						2" × 2" × ¼"		5-½"		7-⅜"		
		42"-54"	12"		0.060"-0.105"		0.060"						2" × 2" × 3/16"		3-½"		3-⅜"	
	3" × 1"	48"-60"	14"	0.064"-0.079"		0.064"						2" × 2" × 3/16"		3-½"		3-⅜"		5-½"
		48"-60"	14"	0.109"		0.064"						2" × 2" × 3/16"		3-½"		5-⅜"		
		66"-120"	25"	0.064"-0.109"		0.064"						2" × 2" × 3/16"		5-½"		9-⅜"		
		42"-60"	14"		0.060"-0.105"		0.060"						2" × 2" × 3/16"		3-½"		5-⅜"	
		42"-60"	14"		0.135"		0.075"						2" × 2" × ¼"		3-½"		5-⅜"	
		66"-96"	25"		0.060"-0.135"		0.060"						2" × 2" × ¼"		5-½"		7-⅜"	
		96"-108"	25"		0.135"		0.075"						2" × 2" × ¼"		5-½"		7-⅜"	
HELICAL	2⅔" × ½"	THROUGH 36"	12"	0.064"-0.138"	0.060"-0.135"	0.064"	0.060"					2" × 2" × 3/16"	2" × 2" × 3/16"	3-½"	3-½"	3-⅜"	3-⅜"	5-½"
		42"-54"	12"		0.060"-0.105"		0.060"						2" × 2" × 3/16"		3-½"		3-⅜"	
		42"-60"	12"	0.064"-0.079"		0.064"						2" × 2" × 3/16"		3-½"		3-⅜"		5-½"
		42"-60"	12"	0.109"-0.168"	0.135"-0.164"	0.064"	0.075"					2" × 2" × ¼"	2" × 2" × ¼"	3-½"	3-½"	5-⅜"	5-⅜"	
		66'-84"	24"	0.109"-0.168"		0.064"						2" × 2" × ¼"		5-½"		7-⅜"		
		66"-72"	24"		0.164"		0.105"						2" × 2" × ¼"		5-½"		5-⅜"	
	3" × 1"	48"-60"	14"	0.064"-0.079"		0.064"						2" × 2" × 3/16"		3-½"		3-⅜"		5-½"
		48"-60"	14"	0.109"		0.064"						2" × 2" × 3/16"		3-½"		5-⅜"		
		66"-120"	25"	0.064"-0.109"		0.064"						2" × 2" × 3/16"		5-½"		9-⅜"		
		42"-60"	14"		0.060"-0.105"		0.060"						2" × 2" × 3/16"		3-½"		5-⅜"	
		42"-60"	14"		0.135"		0.075"						2" × 2" × ¼"		3-½"		5-⅜"	
		66"-96"	25"		0.060"-0.135"		0.060"						2" × 2" × ¼"		5-½"		7-⅜"	
		96"-108"	25"		0.135"		0.075"						2" × 2" × ¼"		5-½"		7-⅜"	
HUGGER	2⅔" × ½" REROLLED END	THROUGH 48"	10½"	0.109"		0.064"		0.079"	½"	⅞"	32 ksi							
		54"- 66"	10½"	0.109"		0.064"		DOUBLE 0.079"	½"	⅞"	32 ksi							
		THROUGH 54"	10½"	0.064"-0.079"		0.064"		0.079"	½"	⅞"	32 ksi							
		THROUGH 60"	10½"	0.138"		0.079"		DOUBLE 0.079"	½"	⅞"	32 ksi							
		66"-72"	10½"	0.138"		0.109"		DOUBLE 0.079"	½"	⅞"	32 ksi							
		THROUGH 72"	10½"	0.168"		0.109"		DOUBLE 0.109"	½"	⅞"	45 ksi							
	3" × 1" REROLLED END	48"-84"	10½"	0.109"		0.079"		DOUBLE 0.079"	½"	⅞"	32 ksi							
		48"-90"	10½"	0.064"-0.079"		0.064"		DOUBLE 0.079"	½"	⅞"	32 ksi							
		96"-102"	10½"	0.079"		0.079"		DOUBLE 0.079"	½"	⅞"	32 ksi							
		90"-120"	10½"	0.109"		0.109"		DOUBLE 0.109"	½"	⅞"	45 ksi							

SPIRAL RIB PROFILE

COUPLING TYPE	PIPE CORRUGATION	PIPE SIZE	W	PIPE WALL THICKNESS SSRP	PIPE WALL THICKNESS ASRP	BAND THICKNESS SSRP	BAND THICKNESS ASRP	BAR AND STRAP (SSRP ONLY) STRAP THICKNESS	BOLTS Dia	BAR Dia	BAR YIELD STRENGTH	ANGLE DIMENSIONS SSRP	ANGLE DIMENSIONS ASRP	BOLTS (No.- Dia) SSRP	BOLTS (No.- Dia) ASRP	RIVETS ANGLE TO BAND SSRP	RIVETS ANGLE TO BAND ASRP	SPOT WELDS ANGLE TO BAND SSRP
ANNULAR	2⅔" × ½" * REROLLED END	24"-36"	12"	0.064"-0.109"	0.060"-0.105"	0.064"	0.060"	0.079"	½"	⅞"	32 ksi	2" × 2" × 3/16"	2" × 2" × 3/16"	3-½"	3-½"	3-⅜"	3-⅜"	5-½"
		42"-60"	12"	0.064"-0.079"	0.075"-0.105"	0.064"	0.075"	0.079"	½"	⅞"	32 ksi	2" × 2" × 3/16"	2" × 2" × 3/16"	3-½"	3-½"	3-⅜"	3-⅜"	5-½"
		42"-60"	12"	0.109"		0.064"		0.079"	½"	⅞"	32 ksi	2" × 2" × ¼"		3-½"		5-⅜"		
		66"-84"	24"	0.109"		0.064"		0.079"	½"	⅞"	32 ksi	2" × 2" × ¼"		5-½"		7-⅜"		
HUGGER	2⅔" × ½" * REROLLED END	24"-54"	10½"	0.064"-0.079"		0.064"		0.079"	½"	⅞"	32 ksi							
		24"-48"	10½"	0.109"		0.064"		0.079"	½"	⅞"	32 ksi							
		54"-66"	10½"	0.109"		0.064"		Double 0.079"	½"	⅞"	32 ksi							

* See Note 13.

NOTES:

1. All ferrous metal coupling band connection hardware shall be galvanized or electroplated in accordance with the Standard Specifications.
2. For helically corrugated coupling bands, the connection angles may be oriented parallel to the pipe axis, provided connecting holes are slotted lengthwise sufficiently to allow adjustment for the helix angle.
3. Tension strap may be connected to band with either spot welds or fillet welds that develop minimum required strength of strap.
4. Use 1¼" gage line dimension on attached angle leg for rivets and spot welds.
5. Band thickness shall not be less than:
   a. 3 standard thicknesses lighter than the thickness of the pipe for Corrugated Steel Pipe.
   b. 2 standard thicknesses lighter than the thickness of the pipe and in no case lighter than 0.060" for Corrugated Aluminum Pipe.
6. Dimensions, thicknesses and strengths shown are minimum.
7. For pipe arches use same width band as for round pipe of equal periphery.
8. Fillet welds of equivalent strength may be substituted for spot welds or rivets.
9. Spot welds shall develop minimum required strength of strap.
10. Pipe with rerolled ends having at least two 2⅔" × ½" annular corrugations at each end with or without an upturned flange may be connected with any of the annular coupling bands shown for pipe of the same diameter and wall thickness and having 2⅔" × ½" corrugations.
11. In the case of H-12 huggerbands, two piece bands are required for diameters through 96" and three piece bands are required for diameters 102" through 120".
12. Two piece bands are required for pipes greater than 42" diameter.
13. All profiles of Spiral Rib Pipe (¾" × ¾" ribs at 7½" pitch and ¾" × 1" ribs at 11½" pitch in both steel and aluminum and ¾" × 1" ribs at 8½" pitch in steel only) shall be manufactured with rerolled ends. Corrugation profile of the rerolled ends shall be 2⅔" × ½" annual corrugations with a minimum of two full corrugations at each end.

STATE OF CALIFORNIA
DEPARTMENT OF TRANSPORTATION

CORRUGATED METAL PIPE COUPLING DETAILS No. 6 POSITIVE JOINT

NO SCALE

RSP D97F DATED JUNE 6, 2008 SUPERSEDES STANDARD PLAN D97F
DATED MAY 1, 2006 - PAGE 188 OF THE STANDARD PLANS BOOK DATED MAY 2006.

REVISED STANDARD PLAN RSP D97F

2006 REVISED STANDARD PLAN RSP D97F

4-2-08

DIST	COUNTY	ROUTE	POST MILES TOTAL PROJECT	SHEET NO.	TOTAL SHEETS
05	SB	246	12.2	73	93

Raymond Don Tsztoo
REGISTERED CIVIL ENGINEER

June 6, 2008
PLANS APPROVAL DATE

REGISTERED PROFESSIONAL ENGINEER
Raymond Don Tsztoo
No. C37332
Exp. 6-30-08
CIVIL
STATE OF CALIFORNIA

The State of California or its officers or agents shall not be responsible for the accuracy or completeness of electronic copies of this plan sheet.

To accompany plans dated 3-28-11

ANNULAR AND HELICAL PROFILE

COUPLING TYPE	PIPE CORRUGATION	PIPE SIZE	W OR A	PIPE WALL THICKNESS		BAND THICKNESS		BAR AND STRAP (CSP ONLY)			ANGLE						
											DIMENSIONS		BOLTS (No.- Dia)		RIVETS ANGLE TO BAND		SPOT WELDS ANGLE TO BAND
				CSP	CAP	CSP	CAP	STRAP THICKNESS	BOLTS Dia	BAR Dia	CSP	CAP	CSP	CAP	CSP	CAP	CSP
TWO PIECE INTEGRAL FLANGE	1½′ × ¼"	6"	7"	0.064"-0.168"		0.052"							3-⅜"				
	1½′ × ¼"	8"-10"	7"	0.064"-0.168"	0.060"-0.164"	0.064"	0.060"						3-⅜"	3-⅜"			
ANNULAR	2⅔" × ½"	THROUGH 24"	12"	0.064"-0.168"	0.060"-0.164"	0.064"	0.060"				2" × 2" × 3/16"	2" × 2" × 3/16"	3-½"	3-½"	3-⅜"	3-⅜"	3-½"
HUGGER	2⅔" × ½" REROLLED END	THROUGH 24"	10½"	0.064"-0.168"		0.064"		0.079"	½"	⅞"							

SPIRAL RIB PROFILE

COUPLING TYPE	PIPE CORRUGATION	PIPE SIZE	W	PIPE WALL THICKNESS		BAND THICKNESS		BAR AND STRAP (SSRP ONLY)			ANGLE						
											DIMENSIONS		BOLTS (No.- Dia)		RIVETS ANGLE TO BAND		SPOT WELDS ANGLE TO BAND
				SSRP	ASRP	SSRP	ASRP	STRAP THICKNESS	BOLTS Dia	BAR Dia	SSRP	ASRP	SSRP	ASRP	SSRP	ASRP	SSRP
ANNULAR	2⅔" × ½" * REROLLED END	24"	12"	0.064"-0.168"	0.060"-0.164"	0.064"	0.060"				2" × 2" × 3/16"	2" × 2" × 3/16"	3-½"	3-½"	3-⅜"	3-⅜"	3-½"
HUGGER	2⅔" × ½" * REROLLED END	24"	10½"	0.064"-0.168"		0.064"		0.079"	½"	⅞"							

* See Note 12.

12. All profiles of Spiral Rib Pipe (¾" × ¾" ribs at 7½" pitch and ¾" × 1" ribs at 11½" pitch in both steel and aluminum and ¾" × 1" ribs at 8½" pitch in steel only) shall be manufactured with rerolled ends. Corrugation profile of the rerolled ends shall be 2⅔" × ½" annual corrugations with a minimum of two full corrugations at each end.

NOTES:

1. All ferrous metal coupling band connection hardware shall be galvanized or electro-plated in accordance with the Standard Specifications.
2. For helically corrugated coupling bands, the connection angles may be oriented parallel to the pipe axis, provided connecting holes are slotted lengthwise sufficiently to allow adjustment for the helix angle.
3. Tension strap may be connected to band with either spot welds or fillet welds that develop minimum required strength of strap.
4. Use 1¼" gage line dimension on attached angle leg for rivets and spot welds.
5. Band thickness shall not be less than:
   a. 3 standard thicknesses lighter than the thickness of the pipe for Corrugated Steel Pipe.
   b. 2 standard thicknesses lighter than the thickness of the pipe and in no case lighter than 0.060" for Corrugated Aluminum Pipe.
6. Dimensions, thicknesses and strengths shown are minimum.
7. For pipe arches use same width band as for round pipe of equal periphery.
8. Fillet welds of equivalent strenght may be substituted for spot welds or rivets.
9. Spot welds shall develop minimum required strength of strap.
10. Pipe with rerolled ends having at least two 2⅔" × ½" annular corrugations at each end with or without an upturned flange may be connected with any of the annular coupling bands shown for pipe of the same diameter and wall thickness and having 2⅔" × ½" corrugations.
11. For downdrain applications, two piece integral flange couplers shall have factory applied sleeve type rubber gaskets with a minimum length of 7" measured along the length of the pipe.

STATE OF CALIFORNIA
DEPARTMENT OF TRANSPORTATION

CORRUGATED METAL PIPE COUPLING DETAILS No. 7 DOWNDRAIN

NO SCALE

RSP D97G DATED JUNE 6, 2008 SUPERSEDES STANDARD PLAN D97G
DATED MAY 1, 2006 - PAGE 189 OF THE STANDARD PLANS BOOK DATED MAY 2006.

REVISED STANDARD PLAN RSP D97G

2006 REVISED STANDARD PLAN RSP D97G

4-4-08

DIST	COUNTY	ROUTE	POST MILES TOTAL PROJECT	SHEET NO.	TOTAL SHEETS
05	SB	246	12.2	74	93

Gregory A. Balzer
LICENSED LANDSCAPE ARCHITECT

June 5, 2009
PLANS APPROVAL DATE

LICENSED LANDSCAPE ARCHITECT — Gregory A. Balzer — 2516 — 10 January — 2-28-11 (Renewal Date) — 5-14-09 (Date) — STATE OF CALIFORNIA

The State of California or its officers or agents shall not be responsible for the accuracy or completeness of electronic copies of this plan sheet.

To accompany plans dated 3-28-11

A

AB	aggregate base
ABS	acrylonitrile-butadiene-styrene
AC	asphalt concrete
Adj	adjacent/adjustable
AIC	auxiliary irrigation controller
Alt	alternative
AMEND	amendment
ARV	air release valve
AUTO	automatic
AUX	auxiliary
AVB	atmospheric vacuum breaker

B

B&B	balled and burlapped
B/B	brass/bronze
B/B/PL	brass/bronze/plastic
B/PL	brass/plastic
BFM	bonded fiber matrix
Bit Ctd	bituminous coated
BP	booster pump
BPA	backflow preventer assembly
BPAE	backflow preventer assembly in enclosure
BPE	backflow preventer enclosure
BV	ball valve

C

CAP	corrugated aluminum pipe
CARV	combination air release valve
CCA	cam coupler assembly
CEC	controller enclosure cabinet
CHDPE	corrugated high density polyethylene
CL	chain link
CNC	control and neutral conductors
Conc	concrete
Cond	conduit
CSP	corrugated steel pipe
CST	center strip
CV	check valve

D

Dia	diameter
DIP	ductile iron pipe
DN	diameter nominal

E

EA	each
Elect	electric/electrical
Elev	elevation
ENCL	enclosure
EP	edge of pavement
ES	edge of shoulder
EST	end strip
ESTB	establishment
ETW	edge of traveled way

F

F	full circle
F/P	full/part circle
FAU	filter assembly unit
FCV	flow control valve
FERT	fertilizer
FG	finished grade
FIPT	female iron pipe thread
FIS	fertilizer injector system
FL	flow line
FM	flow monitor
FS	flow sensor
Ft	foot/feet
FV	flush valve

G

GAL	Gallon(s)
Galv	galvanized
GARV	garden valve
GPH	gallons per hour
GPM	gallons per minute
GSP	galvanized steel pipe
GV	gate valve

H

H	half circle
HB	hose bib
HDPE	high density polyethylene
HP	horsepower/hinge point
HPL	high pressure line
Hwy	highway

I

IC	irrigation controller
ICC	irrigation controller(s) in controller enclosure cabinet
ID	inside diameter
In	inches
IFS	irrigation filtration system
IPS	iron pipe size
IPT	iron pipe thread
Irr	irrigation

L

L	length
LF	linear foot

M

Max	maximum
MBGR	metal beam guard railing
MCV	manual control valve
MIC	master irrigation controller
Min	minimum
MIPT	male iron pipe thread
Misc	miscellaneous
Mtl	material
MVP	maintenance vehicle pullout

N

NCN	no common name
NL	nozzle line
No.	number
NPT	national pipe thread

O

O/C	on center
OD	outside diameter
Oz	ounce

P

P	part circle
PB	pull box
PCC	portland cement concrete
PE	polyethylene
Pkt	packet
PL	plastic
PLT	plant/planting
PLT ESTB	plant establishment
PM	post mile
PR	pressure rated
PRLV	pressure relief valve
PSFM	polymer stabilized fiber matrix
PSI	pounds per square inch
PRV	pressure reducing valve
PVC	polyvinyl chloride
Pvmt	pavement

Q

Q	quarter circle
QCV	quick coupling valve

R

R	radius
RCP	reinforced concrete pipe
RCV	remote control valve
RCVM	remote control valve (master)
RCVMF	remote control valve (master) w/ flow meter
RCW	recycled/reclaimed water
RECP	rolled erosion control product
REQ	required
R/W	right of way

S

S	slip
SCC	sprinkler control conduit
SCH	schedule
SF	state-furnished
Shld	shoulder
SQFT	square foot/feet
SQYD	square yard(s)
SST	side strip
Sta	station
Std	standard
SW	sidewalk/sound wall

T

T	third circle/thread
TLS	truck loading standpipe
TQ	three quarter circle
TRM	turf reinforcement mat
TRVD	traveled
TT	two third circle
Typ	typical

U

UG	underground

V

VAU	valve assembly unit

W

W	width
W/	with
WM	water meter
WS	wye strainer
WSP	welded steel pipe
WWM	welded wire mesh

NOTE:

FOR ADDITIONAL ABBREVIATIONS, SEE STANDARD PLANS A10A AND A10B.

STATE OF CALIFORNIA
DEPARTMENT OF TRANSPORTATION

PLANTING AND IRRIGATION ABBREVIATIONS

NO SCALE

RSP H1 DATED JUNE 5, 2009 SUPERSEDES STANDARD PLAN H1
DATED MAY 1, 2006 - PAGE 201 OF THE STANDARD PLANS BOOK DATED MAY 2006.

REVISED STANDARD PLAN RSP H1

2006 REVISED STANDARD PLAN RSP H1

DIST	COUNTY	ROUTE	POST MILES TOTAL PROJECT	SHEET NO.	TOTAL SHEETS
05	SB	246	12.2	75	93

LICENSED LANDSCAPE ARCHITECT

June 5, 2009
PLANS APPROVAL DATE

The State of California or its officers or agents shall not be responsible for the accuracy or completeness of electronic copies of this plan sheet.

LICENSED LANDSCAPE ARCHITECT — Gregory A. Balzer — 2516 — 10 January 2-28-11 Renewal Date — 5-14-09 Date — STATE OF CALIFORNIA

To accompany plans dated 3-28-11

EXISTING	PROPOSED	ITEM DESCRIPTION
		WATER METER (WM)
		BACKFLOW PREVENTER ASSEMBLY (BPA)
		BACKFLOW PREVENTER ASSEMBLY IN ENCLOSURE (BPAE)
		BACKFLOW PREVENTER ENCLOSURE (BPE)
		BOOSTER PUMP (BP)
		TRUCK LOADING STANDPIPE (TLS)
FS	FS	FLOW SENSOR (FS)
X	X	MASTER IRRIGATION CONTROLLER (MIC)
		AUXILIARY IRRIGATION CONTROLLER (AIC)
		IRRIGATION CONTROLLER (IC)/ IRRIGATION CONTROLLER (IC) (BATTERY) IRRIGATION CONTROLLER (IC) (SOLAR)
		IRRIGATION CONTROLLER(S) IN CONTROLLER ENCLOSURE CABINET (ICC)
		CONTROL AND NEUTRAL CONDUCTORS (CNC)
SCC	SCC	SPRINKLER CONTROL CONDUIT (SCC)
		IRRIGATION CROSSOVER
		EXTEND IRRIGATION CROSSOVER
		IRRIGATION SLEEVE
dip	DIP	DUCTILE IRON PIPE (SUPPLY LINE) (MAIN) (DIP)
		GALVANIZED STEEL PIPE (SUPPLY LINE) (MAIN) (GSP)
		GALVANIZED STEEL PIPE (SUPPLY LINE) (LATERAL) (GSP)
		PLASTIC PIPE (PR 200) (SUPPLY LINE) (MAIN)
		PLASTIC PIPE (PR 200) (SUPPLY LINE) (LATERAL)
		PLASTIC PIPE (IRRIGATION LINE)
		REMOTE CONTROL VALVE (RCV) REMOTE CONTROL VALVE (MASTER) (RCVM) REMOTE CONTROL VALVE (MASTER) W/FLOW METER (RCVMF)
		MANUAL CONTROL VALVE (MCV)
		VALVE ASSEMBLY UNIT (VAU)
		WYE STRAINER (WS)
		FILTER ASSEMBLY UNIT (FAU)
		GATE VALVE (GV)
		BALL VALVE (BV)

EXISTING	PROPOSED	ITEM DESCRIPTION
		QUICK COUPLING VALVE (QCV)
		CAM COUPLER ASSEMBLY (CCA)
		PRESSURE REDUCING VALVE (PRV)
		PRESSURE RELIEF VALVE (PRLV)
		FLOW CONTROL VALVE (FCV)
		COMBINATION AIR RELEASE VALVE (CARV)
		CHECK VALVE (CV)
		FLUSH VALVE (FV)
		NOZZLE LINE W/TURNING UNION
		IRRIGATION SYSTEM
		IRRIGATION SYSTEM TO BE REMOVED
		CHAIN LINK GATE
		QUICK COUPLING VALVE W/SPRINKLER PROTECTOR
3	3	SPRINKLER W/SPRINKLER PROTECTOR
	C	CONNECT TO EXISTING SYSTEM
		CAP
		CAP EXISTING

VALVE CODE

RCV SIZE
IRRIGATION CONTROLLER
CONTROLLER STATION
VALVE IN PARALLEL (IF APPLICABLE)
GPM
QUANTITY OF SPRINKLERS (WHEN SHOWN)

* 2½"-A-2b-40 -60

MCV SIZE
VALVE NUMBER
GPM
QUANTITY OF TYPE SPRINKLERS (WHEN SHOWN)

* 2"-3-30 -50

* VALVE CODES FOR EXISTING VALVES ARE SHOWN IN A DASHED ENCLOSURE.

STATE OF CALIFORNIA
DEPARTMENT OF TRANSPORTATION

PLANTING AND IRRIGATION SYMBOLS

NO SCALE

RSP H2 DATED JUNE 5, 2009 SUPERSEDES RSP H2 DATED MARCH 7, 2008 AND STANDARD PLAN H2 DATED MAY 1, 2006 - PAGE 202 OF THE STANDARD PLANS BOOK DATED MAY 2006.

REVISED STANDARD PLAN RSP H2

2006 REVISED STANDARD PLAN RSP H2

5-11-09

DIST	COUNTY	ROUTE	POST MILES TOTAL PROJECT	SHEET NO.	TOTAL SHEETS
05	SB	246	12.2	76	93

LICENSED LANDSCAPE ARCHITECT

June 5, 2009
PLANS APPROVAL DATE

The State of California or its officers or agents shall not be responsible for the accuracy or completeness of electronic copies of this plan sheet.

LICENSED LANDSCAPE ARCHITECT — Gregory A. Balzer 2516 — 10 Expiration — 2-28-11 Renewal Date — 5-14-09 Date — STATE OF CALIFORNIA

To accompany plans dated 3-28-11

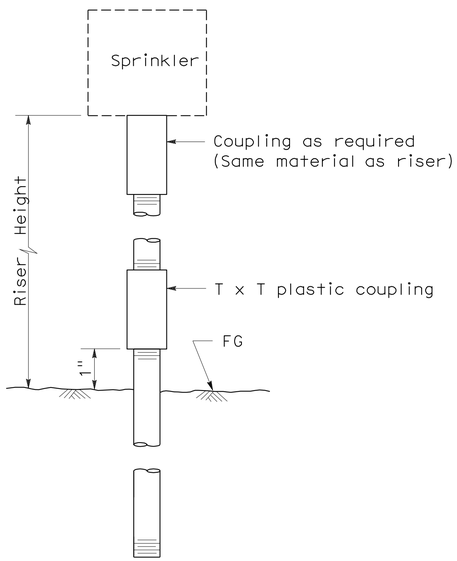

ELEVATION
RISER TYPE I

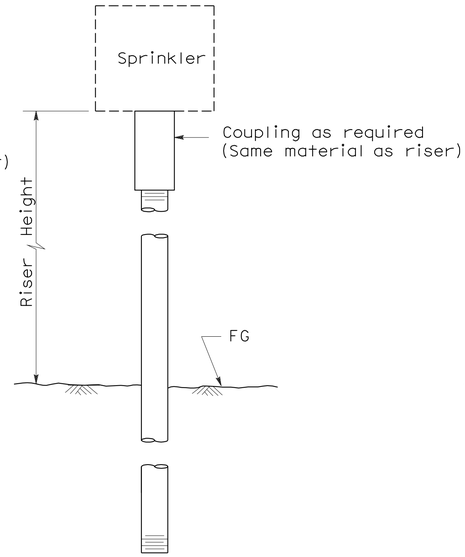

ELEVATION
RISER TYPE II

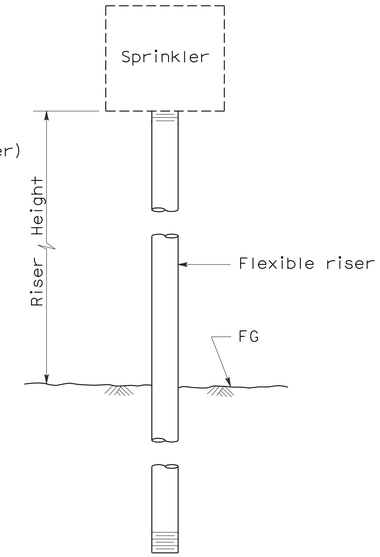

ELEVATION
RISER TYPE III

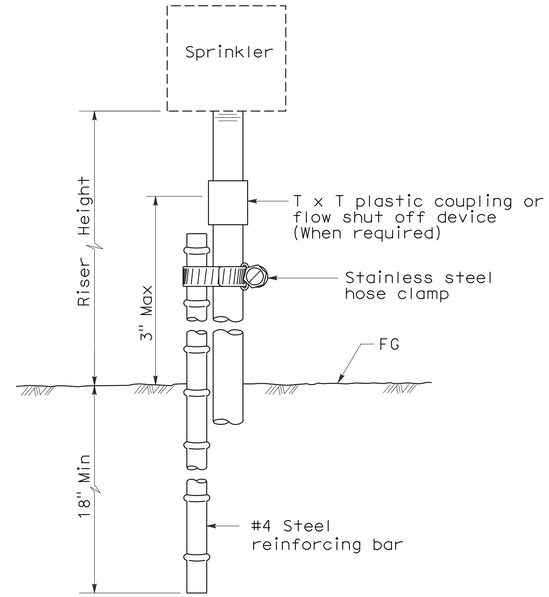

ELEVATION
RISER TYPE IV

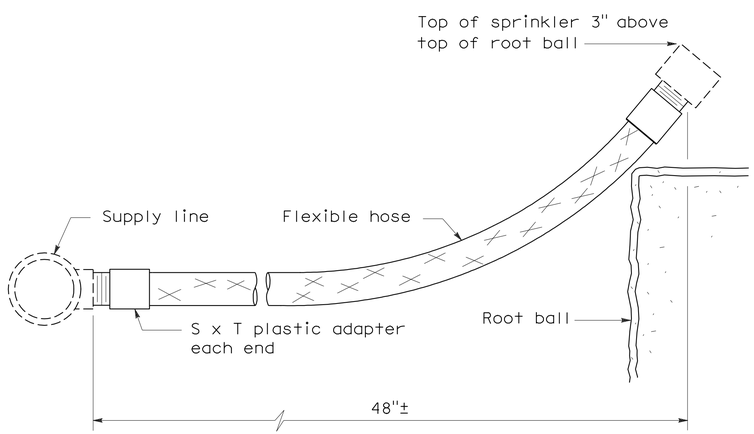

ELEVATION
RISER TYPE V

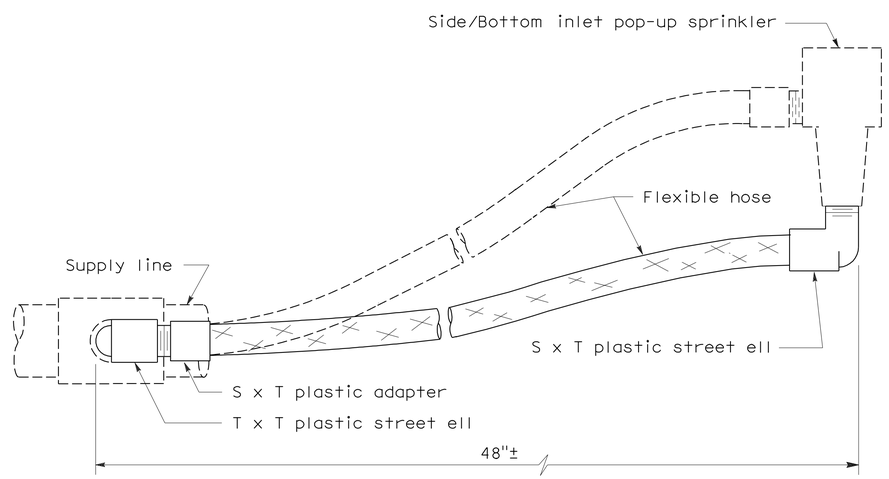

ELEVATION
RISER TYPE VI

STATE OF CALIFORNIA
DEPARTMENT OF TRANSPORTATION

PLANTING AND IRRIGATION DETAILS

NO SCALE

RSP H5 DATED JUNE 5, 2009 SUPERSEDES STANDARD PLAN H5
DATED MAY 1, 2006 - PAGE 205 OF THE STANDARD PLANS BOOK DATED MAY 2006.

REVISED STANDARD PLAN RSP H5

2006 REVISED STANDARD PLAN RSP H5

5-28-09

DIST	COUNTY	ROUTE	POST MILES TOTAL PROJECT	SHEET NO.	TOTAL SHEETS
05	SB	246	12.2	77	93

LICENSED LANDSCAPE ARCHITECT

June 5, 2009
PLANS APPROVAL DATE

The State of California or its officers or agents shall not be responsible for the accuracy or completeness of electronic copies of this plan sheet.

LICENSED LANDSCAPE ARCHITECT Gregory A. Balzer 2576 STATE OF CALIFORNIA
10-01-09 Renewal Date
2-28-11 Renewal Date
5-14-09 Date

To accompany plans dated 3-28-11

2006 REVISED STANDARD PLAN RSP H7

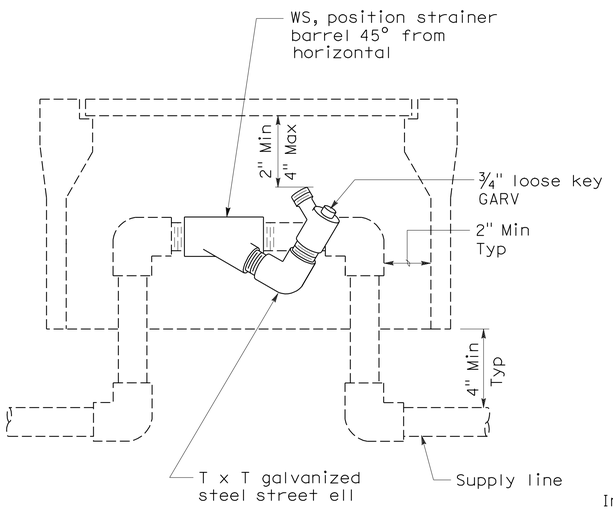

ELEVATION
WYE STRAINER

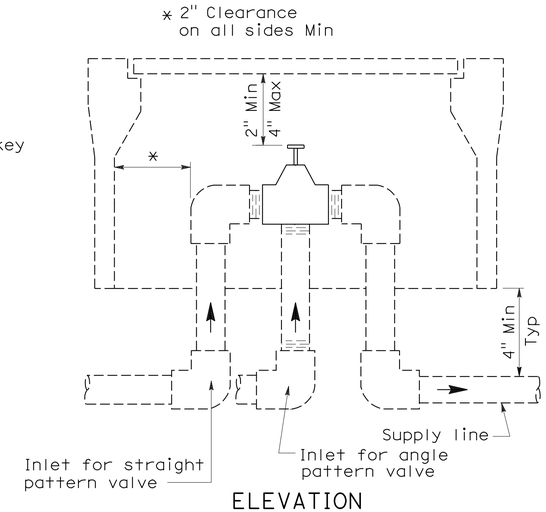

ELEVATION
VALVE

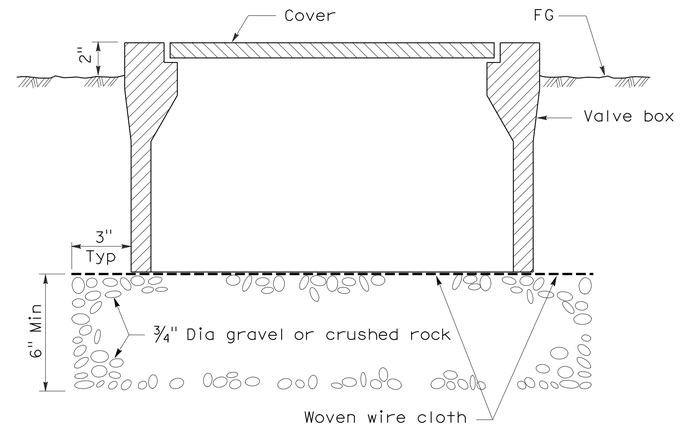

SECTION
VALVE BOX

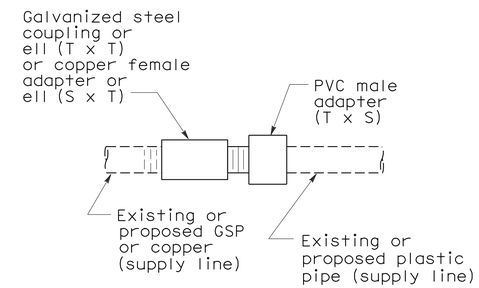

PLAN
GALVANIZED OR COPPER PIPE CONNECTION TO PLASTIC PIPE

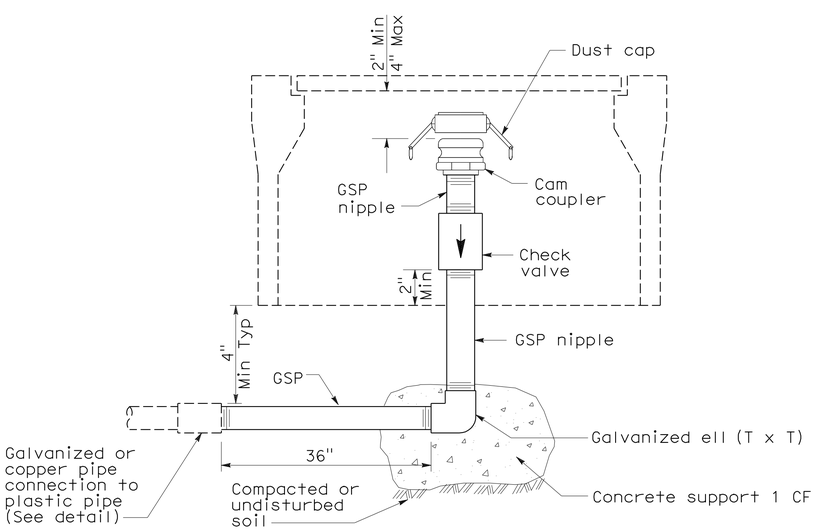

ELEVATION
CAM COUPLER ASSEMBLY

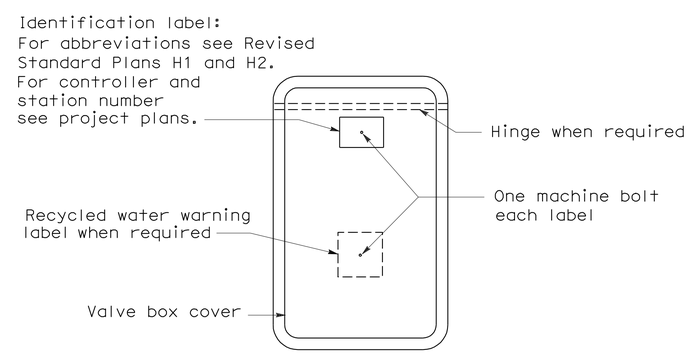

PLAN

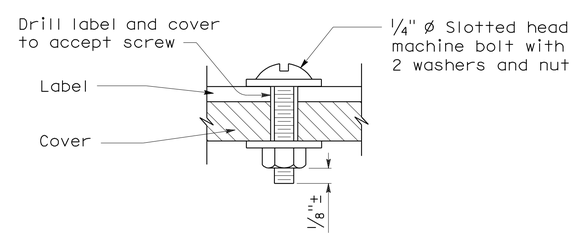

SECTION
VALVE BOX IDENTIFICATION

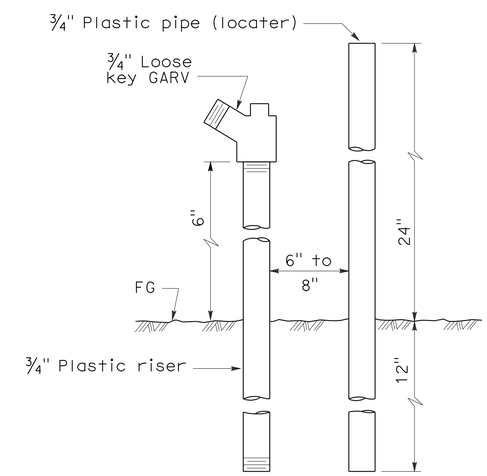

ELEVATION
FLUSH VALVE

STATE OF CALIFORNIA
DEPARTMENT OF TRANSPORTATION

PLANTING AND IRRIGATION DETAILS

NO SCALE

RSP H7 DATED JUNE 5, 2009 SUPERSEDES STANDARD PLAN H7
DATED MAY 1, 2006 - PAGE 207 OF THE STANDARD PLANS BOOK DATED MAY 2006.

REVISED STANDARD PLAN RSP H7

5-28-09

DIST	COUNTY	ROUTE	POST MILES TOTAL PROJECT	SHEET NO.	TOTAL SHEETS
05	SB	246	12.2	78	93

Randell D. Hiatt
REGISTERED CIVIL ENGINEER

June 6, 2008
PLANS APPROVAL DATE

REGISTERED PROFESSIONAL ENGINEER
Randell D. Hiatt
No. C50200
Exp. 6-30-09
CIVIL
STATE OF CALIFORNIA

The State of California or its officers or agents shall not be responsible for the accuracy or completeness of electronic copies of this plan sheet.

To accompany plans dated 3-28-11

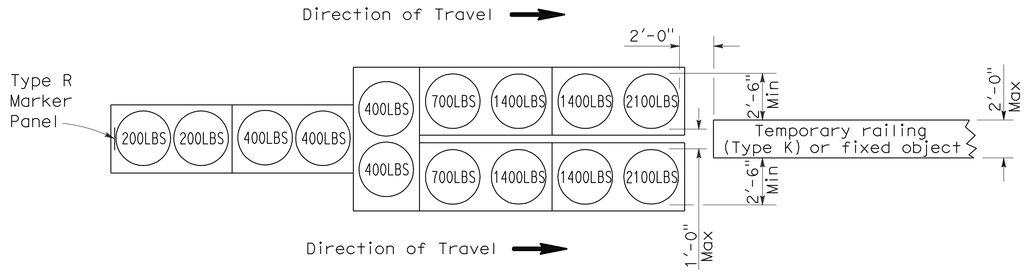

ARRAY 'TU14'

Approach speed 45 mph or more

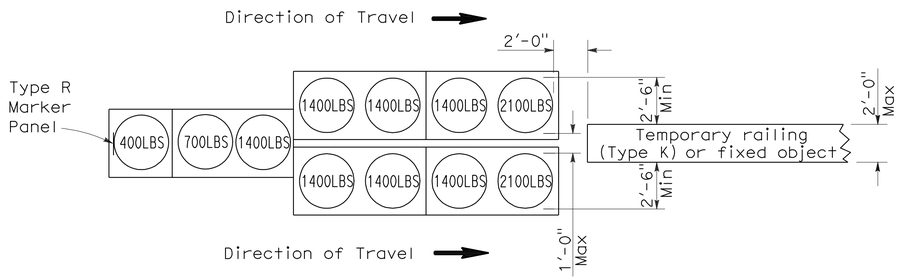

ARRAY 'TU11'

Approach speed less than 45 mph

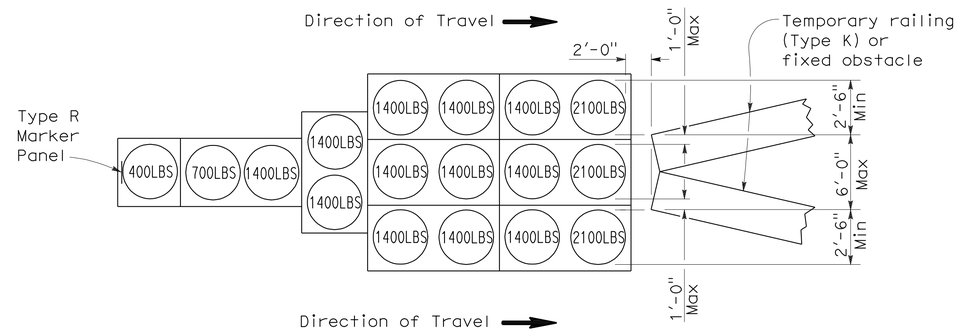

ARRAY 'TU17'

Approach speed less than 45 mph

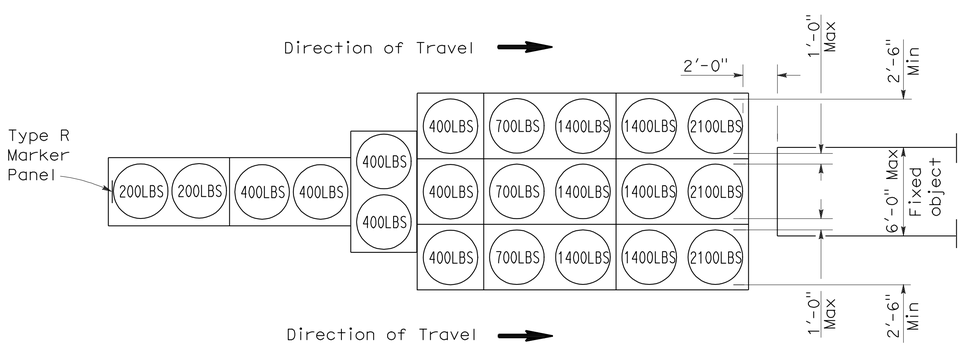

ARRAY 'TU21'

Approach speed 45 mph or more

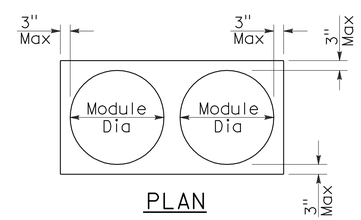

PLAN

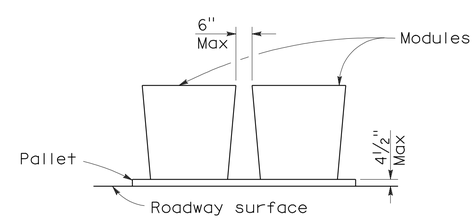

ELEVATION

CRASH CUSHION PALLET DETAIL

See Note 7

NOTES:

1. (XXX) Indicates sand filled module location and weight of sand in pounds for each module. Module spacing is based on the greater diameter of the module.
2. All sand weights are nominal.
3. Temporary crash cushion arrays shall not encroach on the traveled way.
4. Place the top of Type R marker panel 1" below the module lid.
5. Refer to Standard Plan A73B for marker details.
6. Approach speeds indicated conform to NCHRP 350 Report criteria.
7. Use of pallets is optional.

STATE OF CALIFORNIA
DEPARTMENT OF TRANSPORTATION

TEMPORARY CRASH CUSHION, SAND FILLED (UNIDIRECTIONAL)

NO SCALE

RSP T1A DATED JUNE 6, 2008 SUPERSEDES STANDARD PLAN T1A
DATED MAY 1, 2006 - PAGE 211 OF THE STANDARD PLANS BOOK DATED MAY 2006.

REVISED STANDARD PLAN RSP T1A

2006 REVISED STANDARD PLAN RSP T1A

DIST	COUNTY	ROUTE	POST MILES TOTAL PROJECT	SHEET NO.	TOTAL SHEETS
05	SB	246	12.2	79	93

Randell D. Hiatt
REGISTERED CIVIL ENGINEER

June 6, 2008
PLANS APPROVAL DATE

REGISTERED PROFESSIONAL ENGINEER
Randell D. Hiatt
No. C50200
Exp. 6-30-09
CIVIL
STATE OF CALIFORNIA

The State of California or its officers or agents shall not be responsible for the accuracy or completeness of electronic copies of this plan sheet.

To accompany plans dated 3-28-11

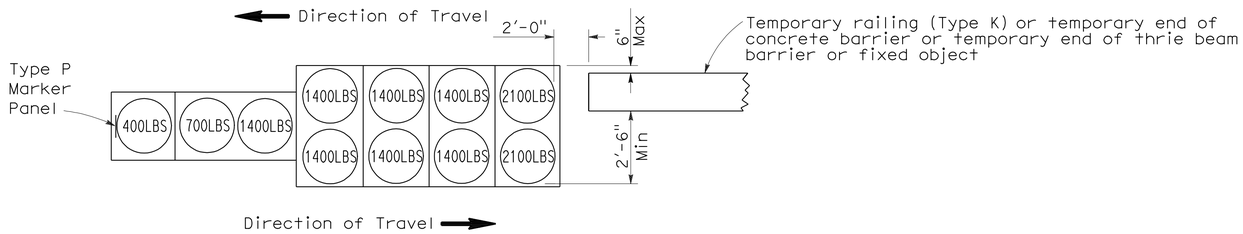

ARRAY 'TB11'

Approach speed less than 45 mph

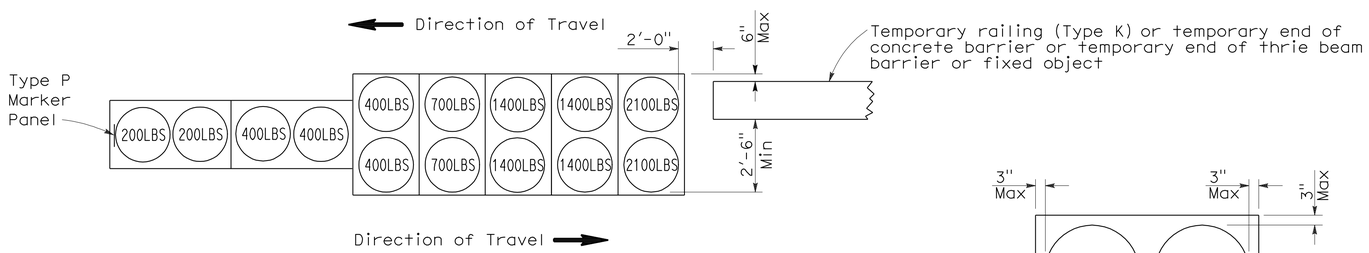

ARRAY 'TB14'

Approach speed 45 mph or more

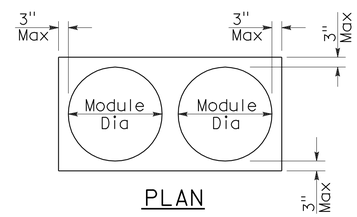

PLAN

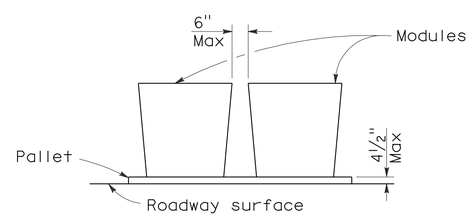

ELEVATION

CRASH CUSHION PALLET DETAIL

See Note 7

NOTES:

1. (XXX) Indicates sand filled module location and weight of sand in pounds for each module. Module spacing is based on the greater diameter of the module.
2. All sand weights are nominal.
3. Temporary crash cushion arrays shall not encroach on the traveled way.
4. Place the Type P marker panel so that the bottom of the panel rests upon the pallet.
5. Refer to Standard Plan A73B for marker details.
6. Approach speeds indicated conform to NCHRP 350 Report criteria.
7. Use of pallets is optional.

STATE OF CALIFORNIA
DEPARTMENT OF TRANSPORTATION

TEMPORARY CRASH CUSHION, SAND FILLED (BIDIRECTIONAL)

NO SCALE

RSP T1B DATED JUNE 6, 2008 SUPERSEDES STANDARD PLAN T1B
DATED MAY 1, 2006 - PAGE 212 OF THE STANDARD PLANS BOOK DATED MAY 2006.

REVISED STANDARD PLAN RSP T1B

2006 REVISED STANDARD PLAN RSP T1B

5-15-08

DIST	COUNTY	ROUTE	POST MILES TOTAL PROJECT	SHEET NO.	TOTAL SHEETS
05	SB	246	12.2	80	93

Randell D. Hiatt
REGISTERED CIVIL ENGINEER

June 6, 2008
PLANS APPROVAL DATE

REGISTERED PROFESSIONAL ENGINEER
Randell D. Hiatt
No. C50200
Exp. 6-30-09
CIVIL
STATE OF CALIFORNIA

The State of California or its officers or agents shall not be responsible for the accuracy or completeness of electronic copies of this plan sheet.

To accompany plans dated 3-28-11

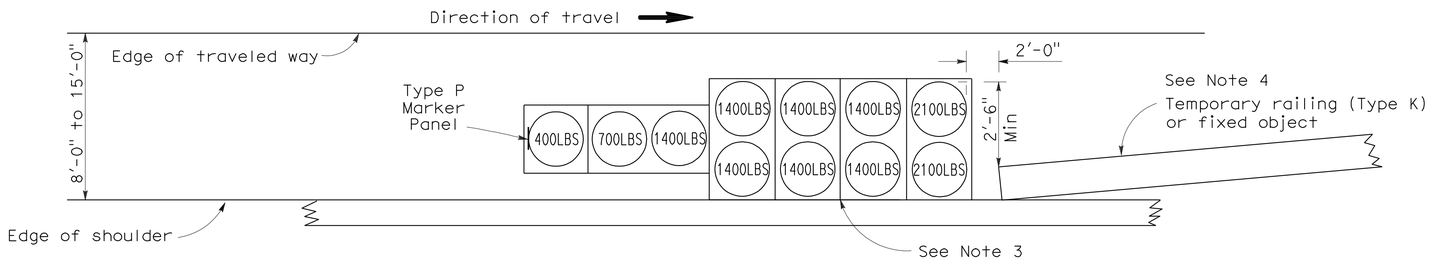

ARRAY 'TS11'

Approach speed less than 45 mph
See Note 9

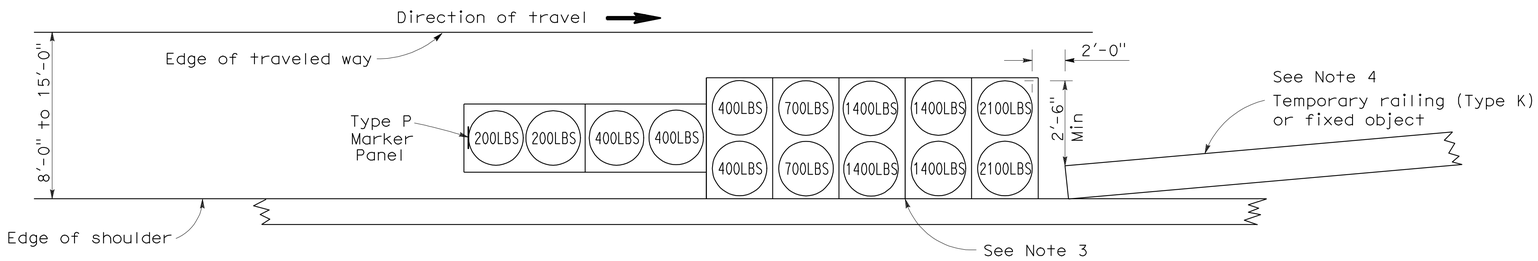

ARRAY 'TS14'

Approach speed 45 mph or more
See Note 9

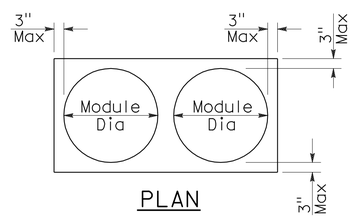

PLAN

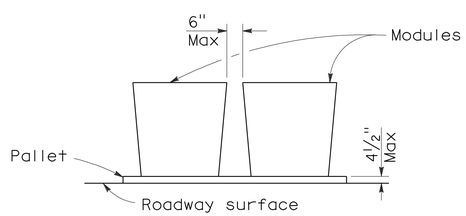

ELEVATION

CRASH CUSHION PALLET DETAIL

See Note 11

NOTES:

1. (XXX) Indicates sand filled module location and weight of sand in pounds for each module. Module spacing is based on the greater diameter of the module.
2. All sand weights are nominal.
3. The temporary crash cushion arrays shown on this plan shall be used only in locations where there will be traffic on one side of the temporary crash cushion array.
4. If the fixed object or approach end of the temporary railing is less than 15'-0" from the edge of traveled way, a temporary crash cushion is required in a construction or work zone.
5. Temporary crash cushion arrays shall not encroach on the traveled way.
6. Arrays for median shoulders shall conform to details shown on this plan for outside shoulders.
7. Place the Type P marker panel so that the bottom of the panel rests upon the pallet and faces traffic.
8. Refer to Standard Plan A73B for marker details.
9. For shoulder widths less than 8'-0", appropriate approved crash cushion protection, other than sand filled modules, shall be provided at fixed objects and at approach ends of temporary railing. The specific type of crash cushion shall be as shown on the project plans or as specified in the Special Provisions, or if not shown on the project plans or specified in the Special Provisions, shall be as approved by the Engineer.
10. Approach speeds indicated conform to NCHRP 350 Report criteria.
11. Use of pallets is optional.

STATE OF CALIFORNIA
DEPARTMENT OF TRANSPORTATION

TEMPORARY CRASH CUSHION, SAND FILLED (SHOULDER INSTALLATIONS)

NO SCALE

RSP T2 DATED JUNE 6, 2008 SUPERSEDES STANDARD PLAN T2
DATED MAY 1, 2006 - PAGE 213 OF THE STANDARD PLANS BOOK DATED MAY 2006.

REVISED STANDARD PLAN RSP T2

2006 REVISED STANDARD PLAN RSP T2

DIST	COUNTY	ROUTE	POST MILES TOTAL PROJECT	SHEET NO.	TOTAL SHEETS
05	SB	246	12.2	81	93

REGISTERED CIVIL ENGINEER

November 17, 2006
PLANS APPROVAL DATE

REGISTERED PROFESSIONAL ENGINEER
Greg W. Edwards
No. C36386
Exp. 6-30-08
CIVIL
STATE OF CALIFORNIA

The State of California or its officers or agents shall not be responsible for the accuracy or completeness of electronic copies of this plan sheet.

To accompany plans dated 3-28-11

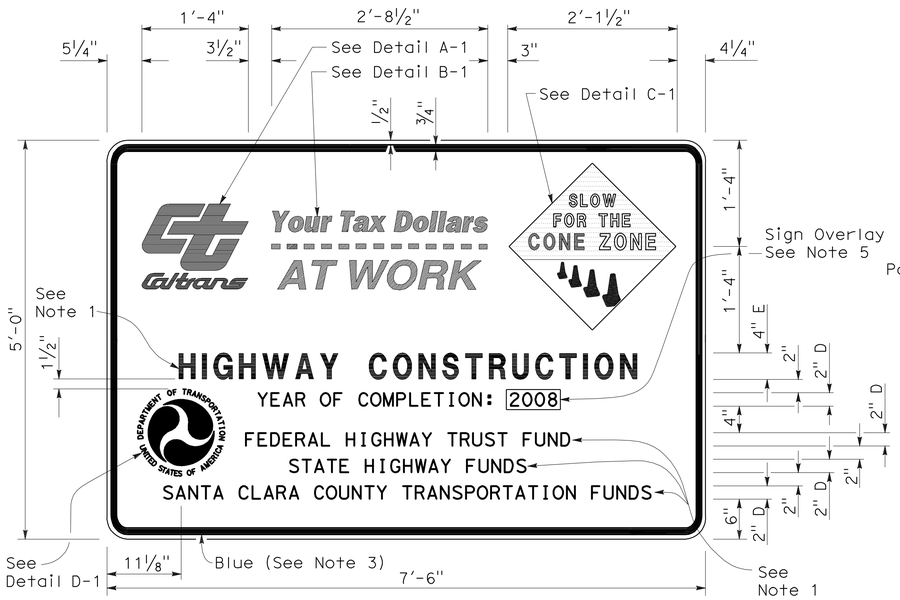

TYPE 1

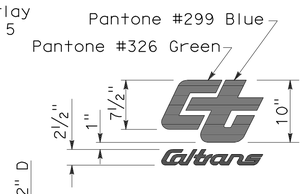

DETAIL A-1

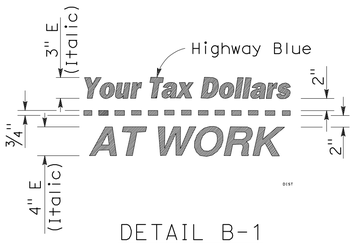

DETAIL B-1
(See Note 3)

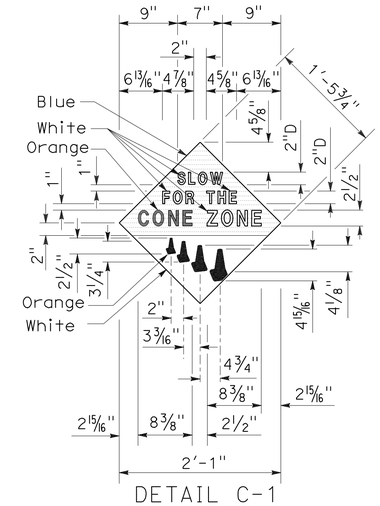

DETAIL C-1
(See Note 4)

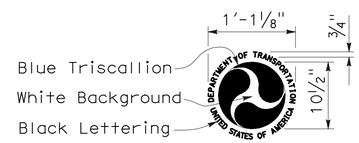

DETAIL D-1
(See Note 6)

NOTES:

1. The sign messages shown for type of project and fund types are examples only. See the Special Provisions for the applicable type of project and fund type messages to be used.
2. Except as otherwise shown, the legend of sign shall be black on a white background (non-reflective).
3. The border of the signs and details "B-1" and "B-2" shall be blue (non-reflective).
4. The diamond in details "C-1" and "C-2" shall be blue for the background of message, " SLOW FOR THE CONE ZONE", and white background for the orange cones. The color and type of font for the "SLOW FOR THE CONE ZONE" message shall be: "SLOW" white D; "FOR THE" white D; "CONE" orange Arial font; "ZONE" white Arial font.
5. Year of completion of project construction shown on the overlay is an example only. See the Special Provisions.
6. Use when the Project involves Federal Highway Trust Fund.

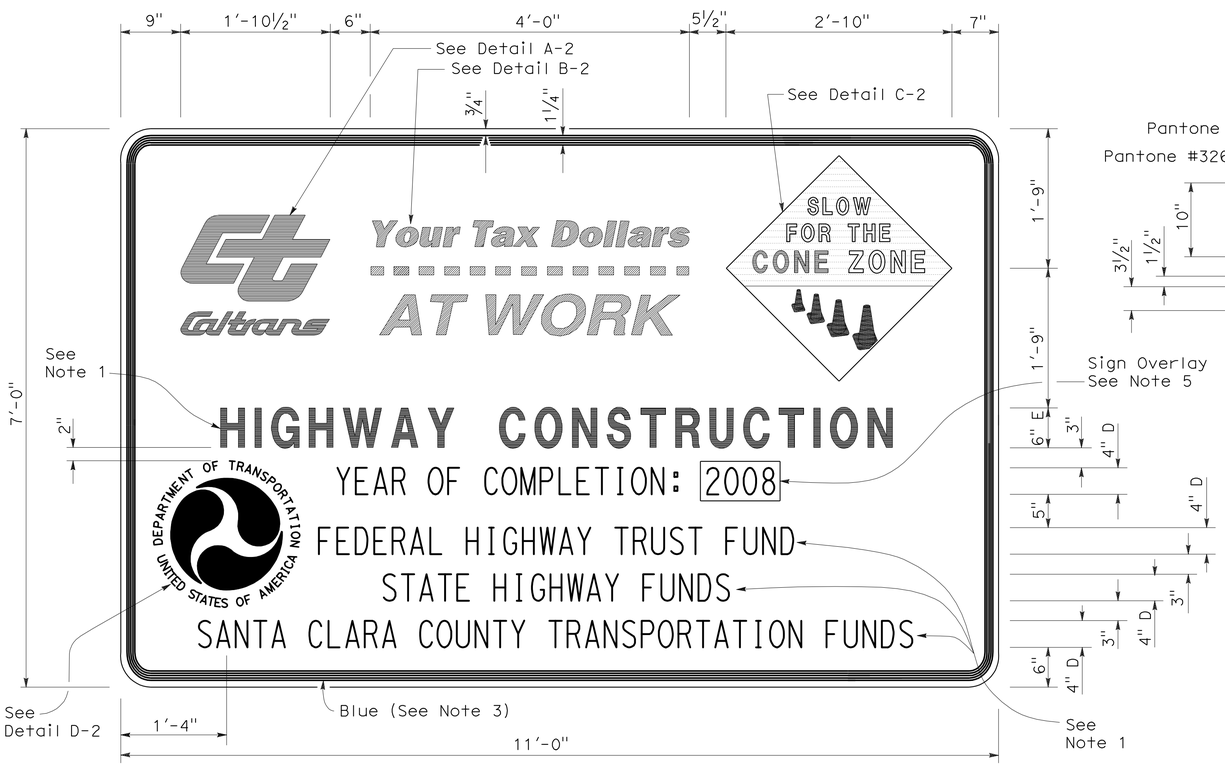

TYPE 2

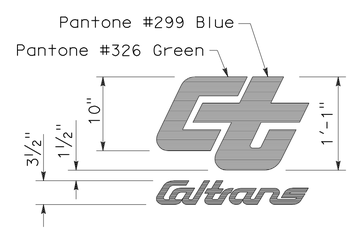

DETAIL A-2

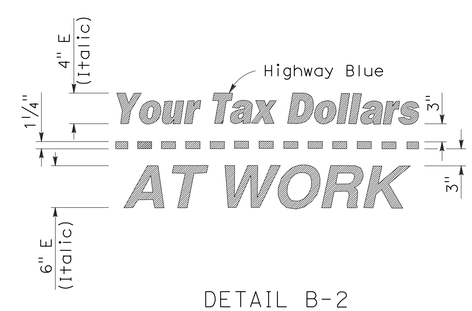

DETAIL B-2
(See Note 3)

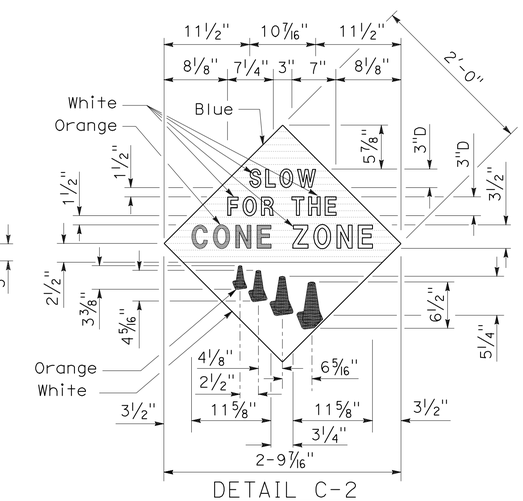

DETAIL C-2
(See Note 4)

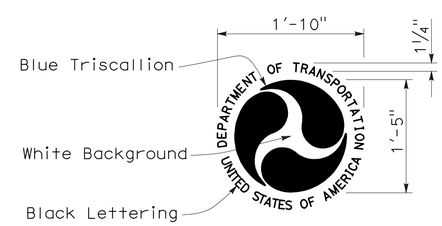

DETAIL D-2
(See Note 6)

STATE OF CALIFORNIA
DEPARTMENT OF TRANSPORTATION

CONSTRUCTION PROJECT FUNDING IDENTIFICATION SIGNS

NO SCALE

RSP T7 DATED NOVEMBER 17, 2006 SUPERSEDES STANDARD PLAN T7
DATED MAY 1, 2006 - PAGE 217 OF THE STANDARD PLANS BOOK DATED MAY 2006.

REVISED STANDARD PLAN RSP T7

2006 REVISED STANDARD PLAN RSP T7

9-7-06

DIST	COUNTY	ROUTE	POST MILES TOTAL PROJECT	SHEET NO.	TOTAL SHEETS
05	SB	246	12.2	82	93

LICENSED LANDSCAPE ARCHITECT

August 15, 2008
PLANS Approval DATE

The State of California or its officers or agents shall not be responsible for the accuracy or completeness of electronic copies of this plan sheet.

LICENSED LANDSCAPE ARCHITECT — Robert B. Schott — Signature — 11-04-08 Renewal Date — 08-11-08 Date — STATE OF CALIFORNIA

To accompany plans dated 3-28-11

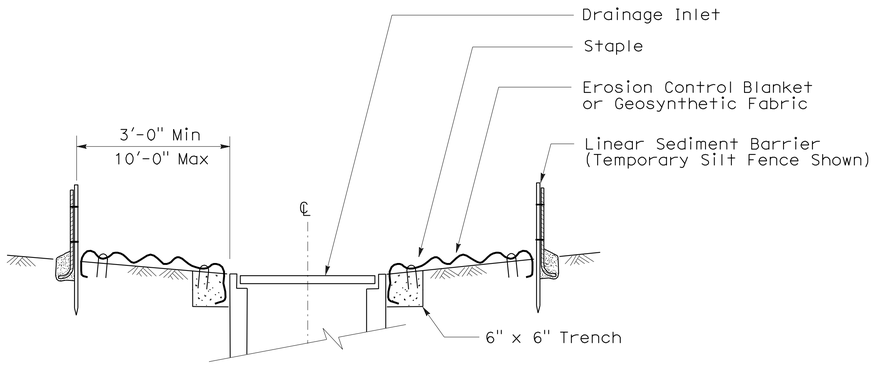

SECTION A-A

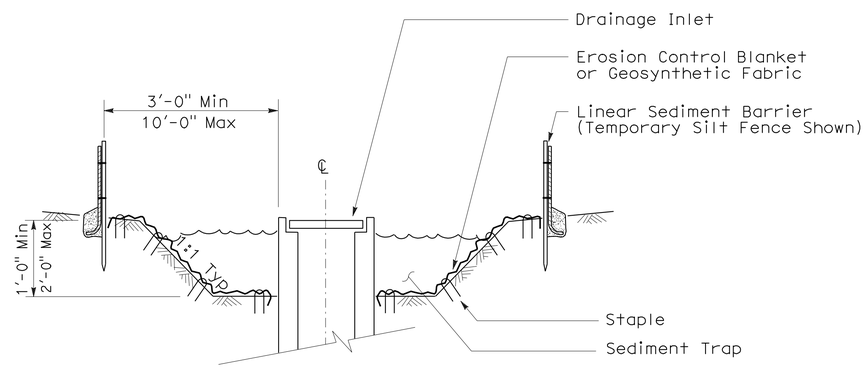

SECTION B-B

NOTES:

1. See Standard Plan T51 for Temporary Silt Fence.
2. Dimensions may vary to fit field conditions.

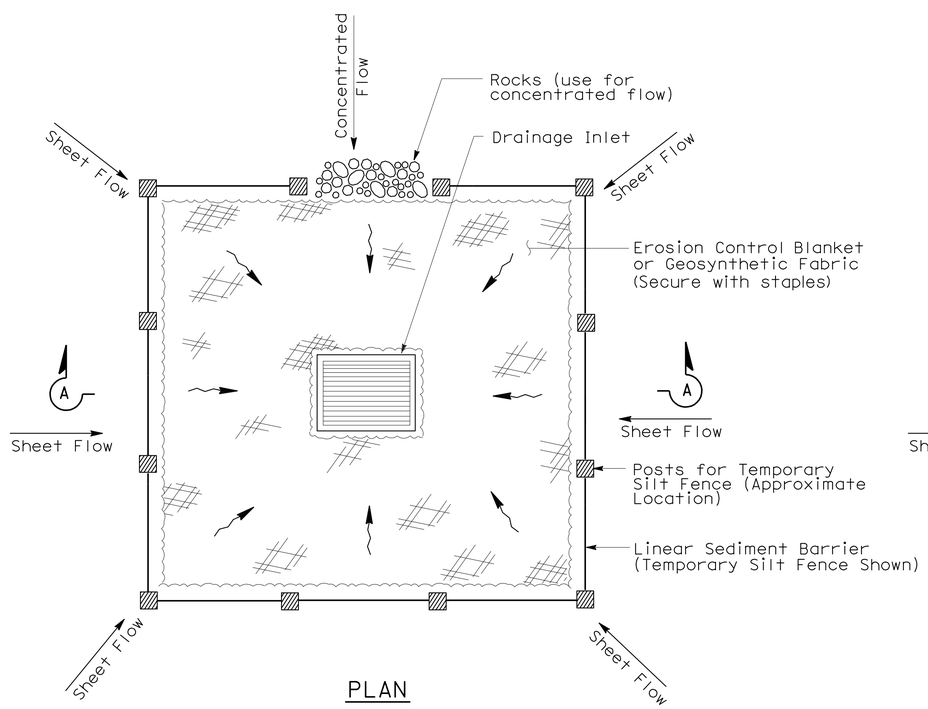

PLAN

TEMPORARY DRAINAGE INLET PROTECTION (TYPE 1)

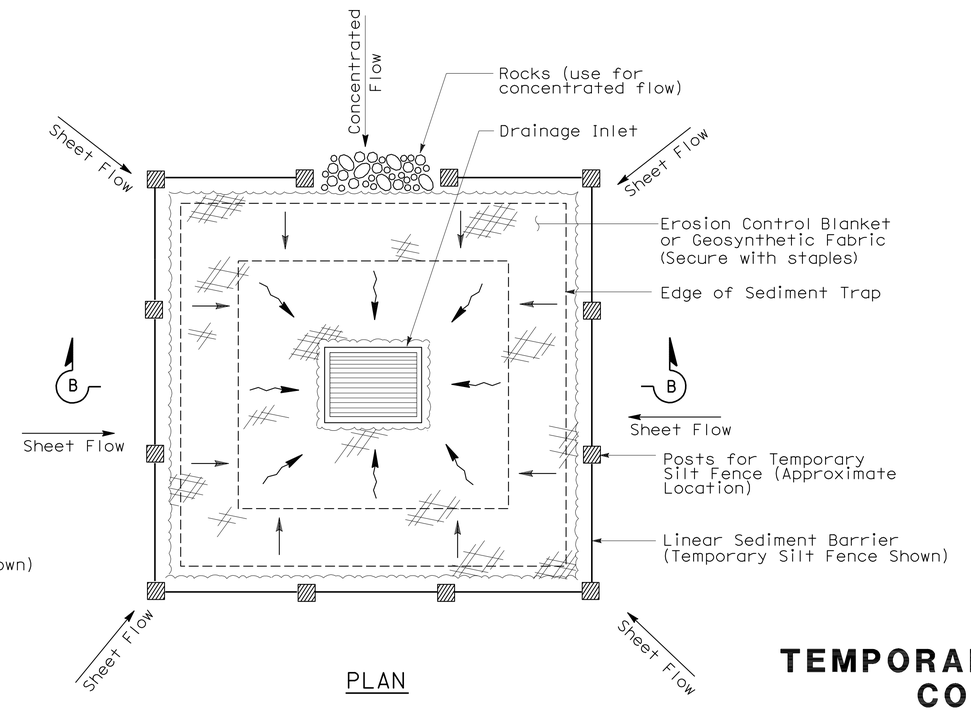

PLAN

TEMPORARY DRAINAGE INLET PROTECTION (TYPE 2) (EXCAVATED SEDIMENT TRAP)

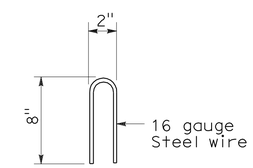

STAPLE DETAIL

STATE OF CALIFORNIA
DEPARTMENT OF TRANSPORTATION

TEMPORARY WATER POLLUTION CONTROL DETAILS (TEMPORARY DRAINAGE INLET PROTECTION)

NO SCALE

NSP T61 DATED AUGUST 15, 2008 SUPPLEMENTS THE STANDARD PLANS BOOK DATED MAY 2006.

NEW STANDARD PLAN NSP T61

2006 NEW STANDARD PLAN NSP T61

7-11-08

DIST	COUNTY	ROUTE	POST MILES TOTAL PROJECT	SHEET NO.	TOTAL SHEETS
05	SB	246	12.2	83	93

LICENSED LANDSCAPE ARCHITECT

August 15, 2008
PLANS APPROVAL DATE

The State of California or its officers or agents shall not be responsible for the accuracy or completeness of electronic copies of this plan sheet.

LICENSED LANDSCAPE ARCHITECT — Robert B. Schott — Signature — 11-04-08 Renewal Date — 08-11-08 Date — STATE OF CALIFORNIA

To accompany plans dated 3-28-11

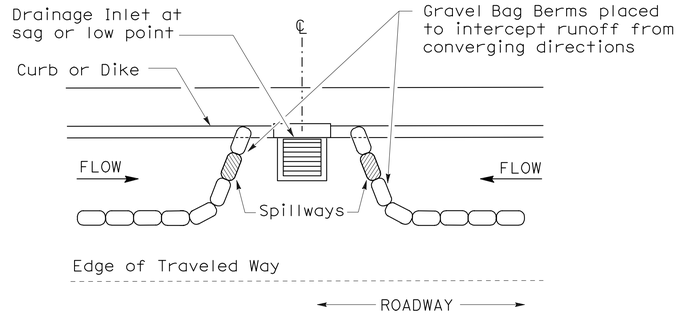

PLAN

CONFIGURATION FOR SAG POINT INLET (GRAVEL BAG BERM)

GRAVEL BAG BERM (TYPE 3A) SPACING TABLE

SLOPE OF ROADWAY (PERCENT)	1 to 3.9	4 to 5.9	6 to 7.9	8 to 10	10+
INTERVAL BETWEEN BERM	100′	75′	50′	25′	12′

For slope of less than 1%, install barriers only if erosion/sediment is prevalent

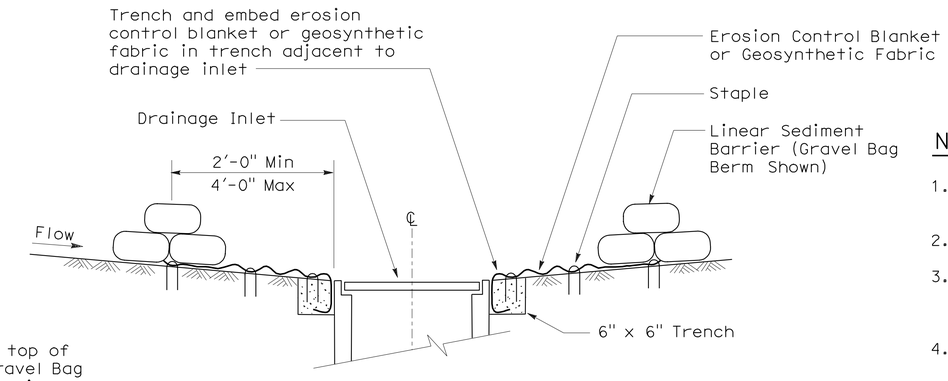

SECTION A-A

NOTES:

1. Place safety cones adjacent to drainage inlet protection.
2. Dimensions may vary to fit field conditions.
3. Install a minimum of 3 gravel bag berms upstream of each drainage inlet to be protected.
4. Position erosion control blanket or geosynthetic fabric at edge of concrete apron and secure in trench.
5. Erosion control blanket or geosynthetic fabric is not required if the area adjacent to the drainage inlet is vegetated or paved.

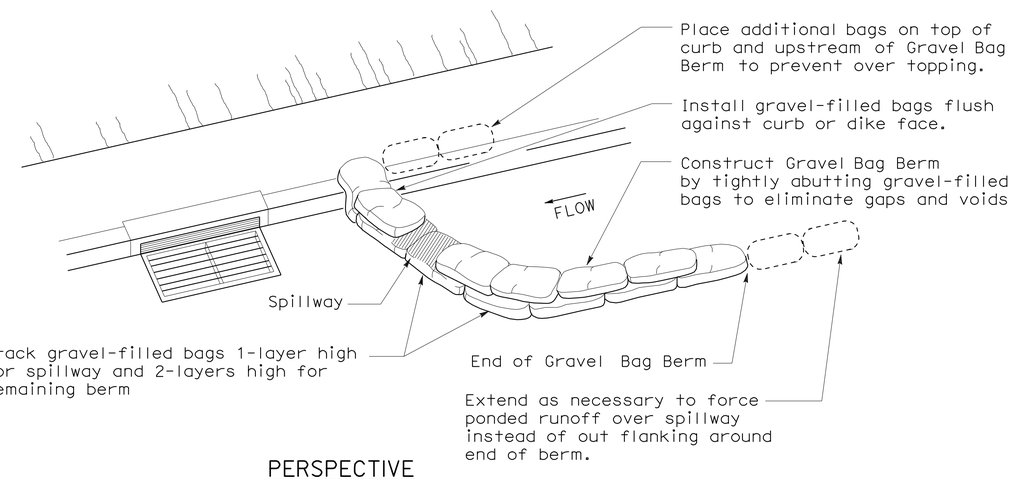

PERSPECTIVE

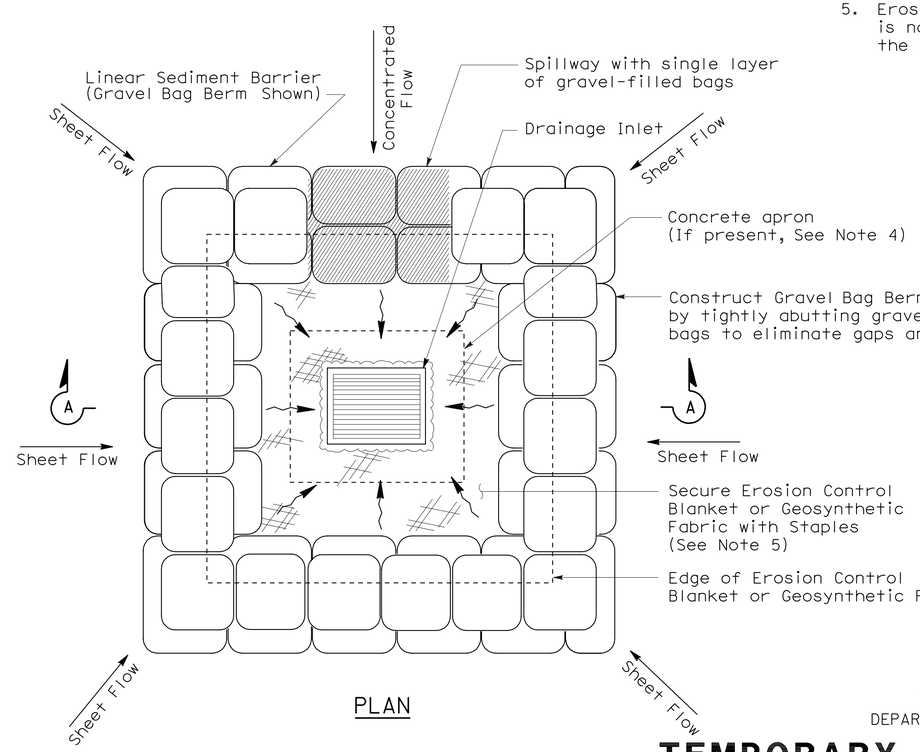

PLAN

TEMPORARY DRAINAGE INLET PROTECTION (TYPE 3B)

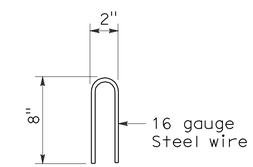

STAPLE DETAIL

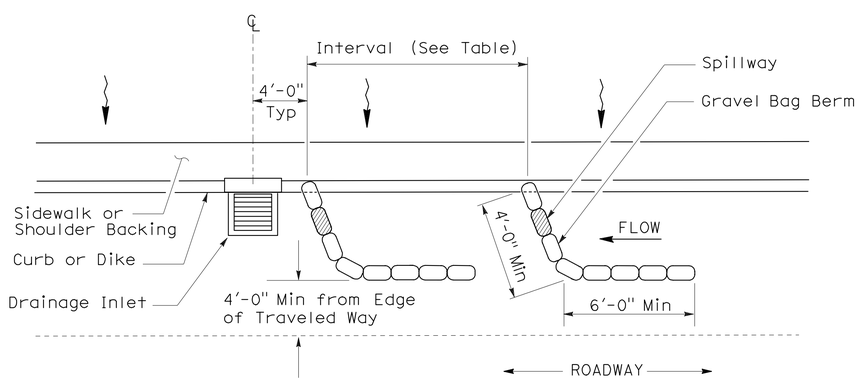

PLAN

TEMPORARY DRAINAGE INLET PROTECTION (TYPE 3A) (GRAVEL BAG BERM)

STATE OF CALIFORNIA
DEPARTMENT OF TRANSPORTATION

TEMPORARY WATER POLLUTION CONTROL DETAILS (TEMPORARY DRAINAGE INLET PROTECTION)

NO SCALE

NSP T62 DATED AUGUST 15, 2008 SUPPLEMENTS THE STANDARD PLANS BOOK DATED MAY 2006.

NEW STANDARD PLAN NSP T62

2006 NEW STANDARD PLAN NSP T62

7-11-08

DIST	COUNTY	ROUTE	POST MILES TOTAL PROJECT	SHEET NO.	TOTAL SHEETS
05	SB	246	12.2	84	93

LICENSED LANDSCAPE ARCHITECT

August 15, 2008
PLANS APPROVAL DATE

The State of California or its officers or agents shall not be responsible for the accuracy or completeness of electronic copies of this plan sheet.

LICENSED LANDSCAPE ARCHITECT — Robert B. Schott — Signature — 11-04-08 Renewal Date — 08-11-08 Date — STATE OF CALIFORNIA

To accompany plans dated 3-28-11

FLEXIBLE SEDIMENT BARRIER SPACING TABLE

SLOPE OF ROADWAY (PERCENT)	0 to 0.9	1 to 1.9	2 to 2.9	3 to 4	5+
INTERVAL BETWEEN BARRIERS	50′	35′	30′	25′	20′
ANGLE FROM FACE OF CURB	70°	70°	70°	45°	45°
SUGGESTED BARRIER LENGTH	6′	6′	6′	6′	6′

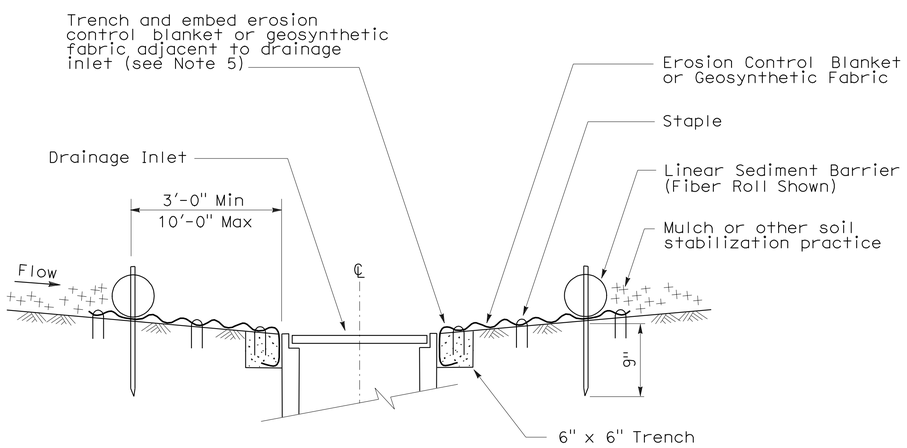

SECTION A-A

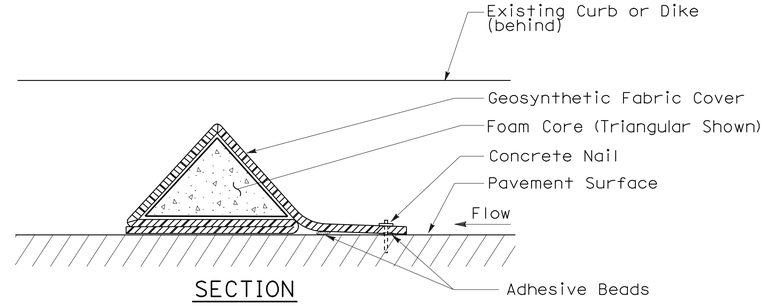

SECTION

FLEXIBLE SEDIMENT BARRIER DETAIL (FOAM BARRIER SHOWN)

NOTES:

1. See Standard Plan T51 for Temporary Silt Fence.
2. Dimensions may vary to fit field conditions.
3. Install a minimum of 3 flexible sediment barriers upstream of each drainage inlet to be protected.
4. Position erosion control blanket or geosynthetic fabric at edge of concrete apron and secure in trench.
5. Erosion control blanket or geosynthetic fabric is not required if the area adjacent to the drainage inlet is vegetated.

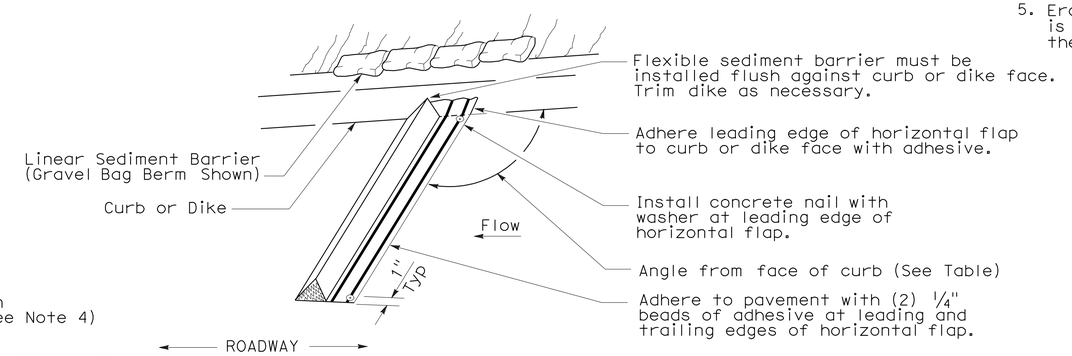

PERSPECTIVE

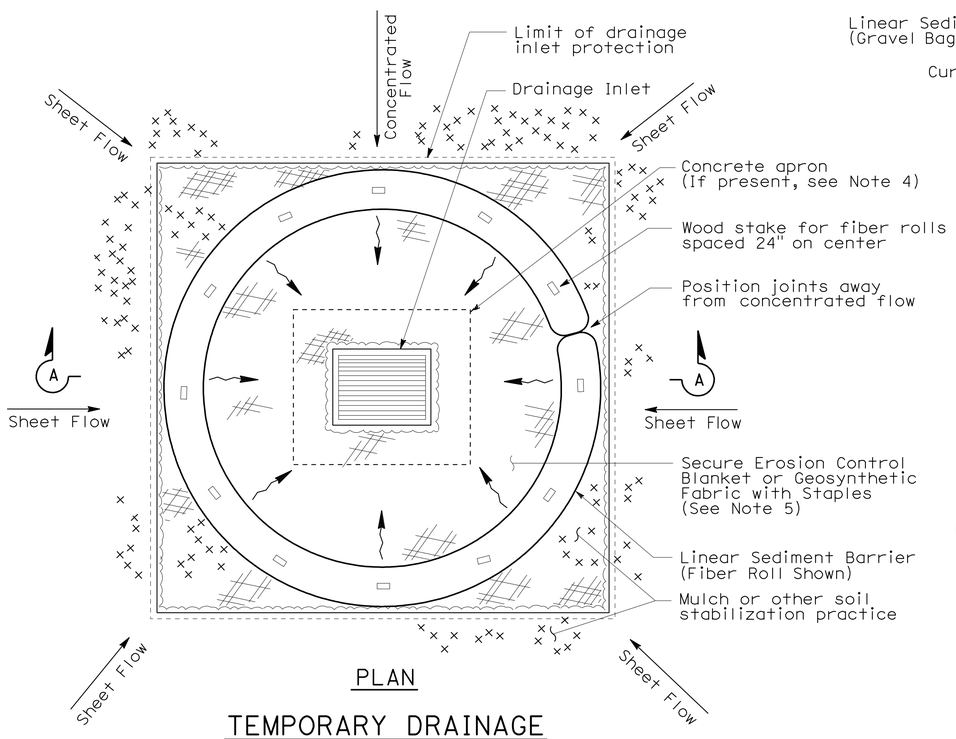

PLAN

TEMPORARY DRAINAGE INLET PROTECTION (TYPE 4A)

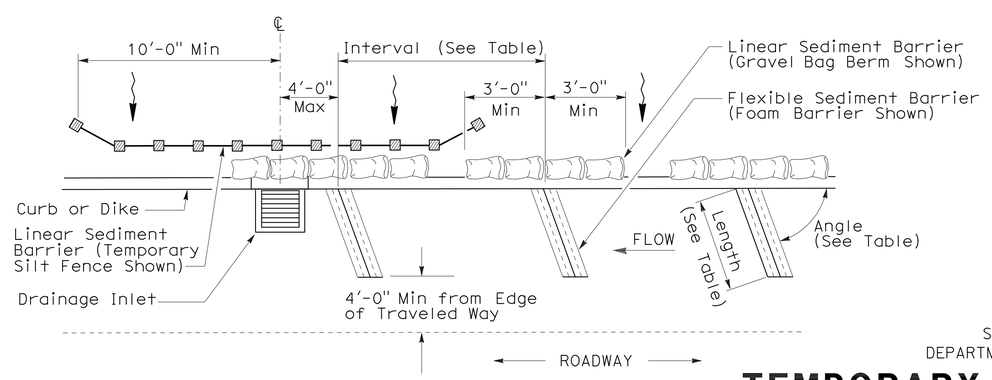

PLAN

TEMPORARY DRAINAGE INLET PROTECTION (TYPE 4B) FLEXIBLE SEDIMENT BARRIER

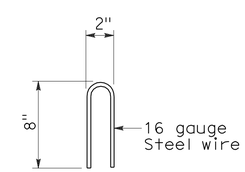

STAPLE DETAIL

STATE OF CALIFORNIA
DEPARTMENT OF TRANSPORTATION

TEMPORARY WATER POLLUTION CONTROL DETAILS (TEMPORARY DRAINAGE INLET PROTECTION)

NO SCALE

NSP T63 DATED AUGUST 15, 2008 SUPPLEMENTS THE STANDARD PLANS BOOK DATED MAY 2006.

NEW STANDARD PLAN NSP T63

2006 NEW STANDARD PLAN NSP T63

7-11-08

DIST	COUNTY	ROUTE	POST MILES TOTAL PROJECT	SHEET NO.	TOTAL SHEETS
05	SB	246	12.2	85	93

Robert B Schott
LICENSED LANDSCAPE ARCHITECT

August 15, 2008
PLANS APPROVAL DATE

LICENSED LANDSCAPE ARCHITECT
Robert B. Schott 3625
Robert B Schott
Signature
11-04-08
Renewal Date
08-11-08
Date
STATE OF CALIFORNIA

The State of California or its officers or agents shall not be responsible for the accuracy or completeness of electronic copies of this plan sheet.

To accompany plans dated 3-28-11

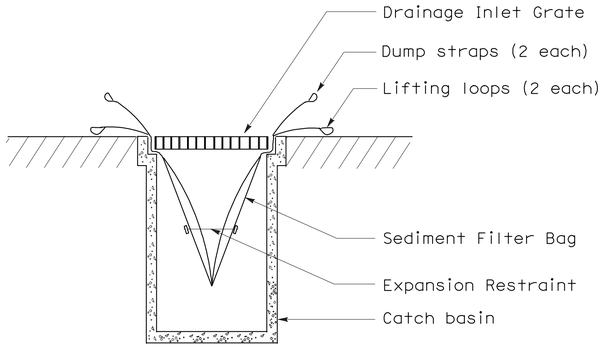

SECTION B-B

SEDIMENT FILTER BAG DETAIL

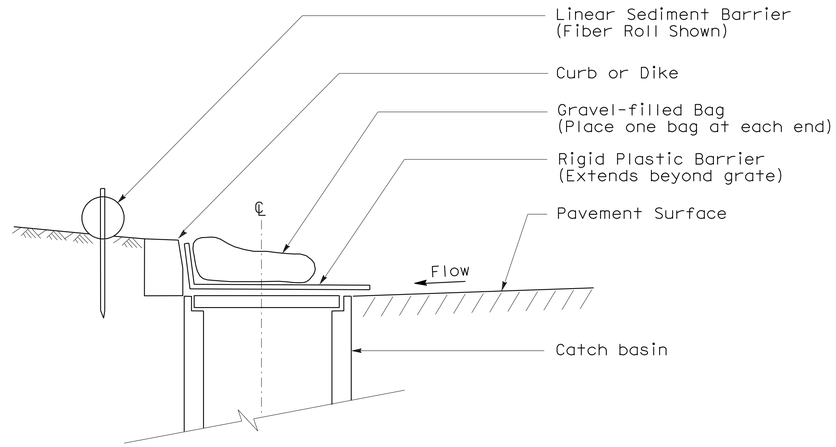

SECTION

TEMPORARY DRAINAGE INLET PROTECTION (TYPE 6A) (CATCH BASIN WITH GRATE)

NOTES:

1. See Standard Plan T51 for Temporary Silt Fence.
2. Dimensions may vary to fit field conditions.

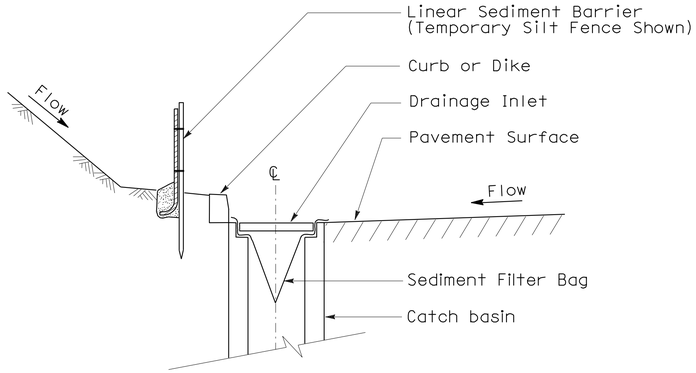

SECTION A-A

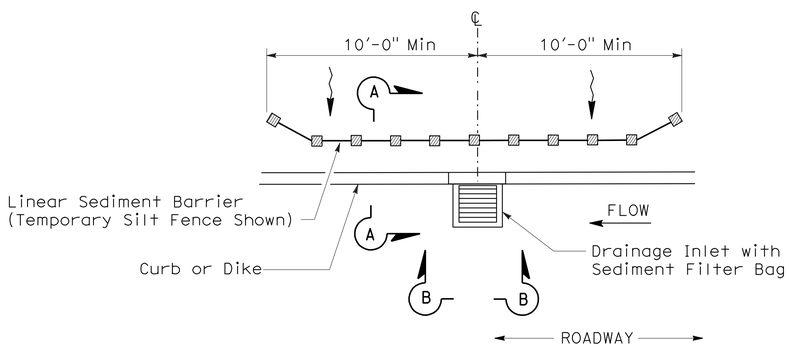

PLAN

TEMPORARY DRAINAGE INLET PROTECTION (TYPE 5) (SEDIMENT FILTER BAG)

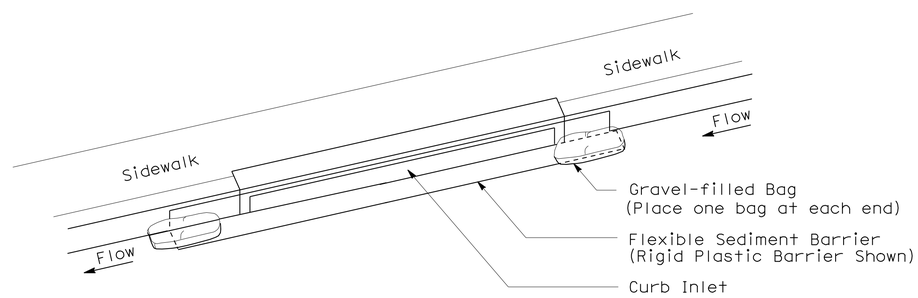

PERSPECTIVE

TEMPORARY DRAINAGE INLET PROTECTION (TYPE 6B) (CURB INLET WITHOUT GRATE)

STATE OF CALIFORNIA
DEPARTMENT OF TRANSPORTATION

TEMPORARY WATER POLLUTION CONTROL DETAILS (TEMPORARY DRAINAGE INLET PROTECTION)

NO SCALE

NSP T64 DATED AUGUST 15, 2008 SUPPLEMENTS
THE STANDARD PLANS BOOK DATED MAY 2006.

NEW STANDARD PLAN NSP T64

2006 NEW STANDARD PLAN NSP T64

7-11-08

DIST	COUNTY	ROUTE	POST MILES TOTAL PROJECT	SHEET NO.	TOTAL SHEETS
05	SB	246	12.2	86	93

REGISTERED ELECTRICAL ENGINEER

October 5, 2007
PLANS APPROVAL DATE

REGISTERED PROFESSIONAL ENGINEER Jeffery G. McRae No. E14512 Exp. 6-30-08 ELECTRICAL STATE OF CALIFORNIA

The State of California or its officers or agents shall not be responsible for the accuracy or completeness of electronic copies of this plan sheet.

To accompany plans dated 3-28-11

2006 REVISED STANDARD PLAN RSP ES-1A

ELECTROLIERS

STANDARD TYPES
15, 15D
15 STRUCTURE
21, 21D STRUCTURE
30
31
32
35
36-20A

High mast light pole

Double Arm lighting standard

Existing electrolier

Electrolier foundation (Future installation)

NOTES:

1. Luminaires shall be 310 W HPS when installed on Type 21, 21D, 30, 31, 32, 35 and 36-20A Standards, unless otherwise specified. Luminaires shall be 200 W HPS when installed on other type standards or poles, unless otherwise specified.
2. Luminaires shall be the cutoff type, ANSI Type Ⅲ medium cutoff lighting distribution, unless otherwise specified.
3. Variations noted adjacent to symbol on project plans.

Electrolier (see project notes or project plans)

Luminaire on wood pole

STANDARD NOTES:

- AB Abandon. If applied to conduit, remove conductors.
- BC Install pull box in existing conduit run.
- BP Pedestrian barricade, type as indicated on plan.
- CB Install conduit into existing pull box.
- CC Connect new and existing conduit. Remove existing conductors and install conductors as indicated.
- CF Conduit to remain for future use. Remove conductors. Install pull wire or rope.
- DH Detector handhole.
- FA Foundation to be abandoned.
- IS Install sign on signal mast arm.
- NS No slip base on standard.
- PEC Photoelectric control.
- PEU Photoelectric unit.
- RC Equipment or material to be removed and become the property of the Contractor.
- RE Remove electrolier, fuses and ballast. Tape ends of conductors.
- RL Relocate equipment.
- RR Remove and reuse equipment.
- RS Remove and salvage equipment.
- SC Splice new to existing conductors.
- SD Service disconnect.
- SF Standard to remain for future use. Remove luminaire, pole conductors, fuses and ballast.
- TSP Telephone service point.

ABBREVIATIONS AND EQUIPMENT DESIGNATIONS

PROPOSED	EXISTING	
BBS	bbs	Battery backup system
BC	bc	Bolt circle
C	C	Conduit
CCTV	cctv	Closed circuit television
CKT	ckt	Circuit
CMS	cms	Changeable message sign
DLC	dlc	Loop detector lead-in cable
EMS	ems	Extinguishable message sign
EVC	evc	Emergency vehicle cable
EVD	evd	Emergency vehicle detector
FB	fb	Flashing beacon
FBCA	fbca	Flashing beacon control assembly
FBS	fbs	Flashing beacon with slip base
FO	fo	Fiber optic
G	G	Ground (Equipment Grounding Conductor)
GFCI	GFCI	Ground fault circuit interrupt
HAR	har	Highway advisory radio
HEX	hex	Hexagonal
HPS	hps	High pressure sodium
IISNS	iisns	Internally illuminated street name sign
ISL	isl	Induction sign lighting
LED	led	Light emitting diode
LMA	lma	Luminaire mast arm
LPS	lps	Low pressure sodium
LTG	ltg	Lighting
LUM	lum	Luminaire
MAT	mat	Mast arm mounting vehicle signal faces, top attachment
MAS	mas	Mast arm mounting vehicle signal faces, side attachment
MAS-4A	mas-4A	Mast arm mounting vehicle signal faces, side attachment - 4 signal section
MAS-4B	mas-4B	
MAS-4C	mas-4C	
MAS-5A	mas-5A	Mast arm mounting vehicle signal faces, side attachment - 5 signal section
MAS-5B	mas-5B	
MC	mc	Mercury contactor
M/M	m/m	Multiple to multiple transformer
MT	mt	Conduit with pull wire or rope only
MTG	mtg	Mounting
	mv	Mercury vapor lighting fixture
N	N	Neutral (Grounded Conductor)
NC	NC	Normally closed
NO	NO	Normally open
PB	pb	Pull box
PEC	pec	Photoelectric control (Type Ⅰ, Ⅱ, Ⅲ, Ⅳ or Ⅴ as shown)
PED	ped	Pedestrian
PEU	peu	Photoelectric unit
PPB	ppb	Pedestrian push button
RL		Relocated equipment
RM	rm	Ramp metering
SB	sb	Slip base
SIC	sic	Signal interconnect cable
SIG	sig	Signal
SMA	sma	Signal mast arm
SNS	sns	Street name sign
SP	sp	Service point
TDC	tdc	Telephone demarcation cabinet
TMS	tms	Traffic monitoring station
TOS	tos	Traffic Operations System
VEH	veh	Vehicle
XFMR	xfmr	Transformer
COMM	comm	Communication
RWIS	rwis	Roadway weather information system

SOFFIT AND WALL MOUNTED LUMINAIRES

Pendant, 70 W HPS unless otherwise specified.

Flush, 70 W HPS unless otherwise specified.

Wall surface, 70 W HPS unless otherwise specified.

Existing soffit or wall luminaire to remain unmodified.

Existing soffit or wall luminaire to be modified as specified.

NOTE:

Arrow indicates "street side" of luminaire.

STATE OF CALIFORNIA
DEPARTMENT OF TRANSPORTATION

ELECTRICAL SYSTEMS (SYMBOLS AND ABBREVIATIONS)

NO SCALE

RSP ES-1A DATED OCTOBER 5, 2007 SUPERSEDES STANDARD PLAN ES-1A DATED MAY 1, 2006 - PAGE 400 OF THE STANDARD PLANS BOOK DATED MAY 2006.

REVISED STANDARD PLAN RSP ES-1A

DIST	COUNTY	ROUTE	POST MILES TOTAL PROJECT	SHEET NO.	TOTAL SHEETS
05	SB	246	12.2	87	93

REGISTERED ELECTRICAL ENGINEER

October 5, 2007
PLANS APPROVAL DATE

REGISTERED PROFESSIONAL ENGINEER
Jeffery G. McRae
No. E14512
Exp. 6-30-08
ELECTRICAL
STATE OF CALIFORNIA

The State of California or its officers or agents shall not be responsible for the accuracy or completeness of electronic copies of this plan sheet.

To accompany plans dated 3-28-11

CONDUIT

PROPOSED	EXISTING	
		Lighting Conduit, unless otherwise indicated or noted
		Traffic signal conduit
C	c	Communication conduit
T	t	Telephone conduit
F	f	Fire alarm conduit
FO	fo	Fiber optic conduit
		Conduit termination (RSP ES-9A C)
R	r	Conduit riser in/on structure or service pole

SERVICE EQUIPMENT

PROPOSED	EXISTING	
OH	oh	Overhead lines
U	U	Wood pole "U" indicates utility owned
		Pole guy with anchor
		Utility transformer - ground mounted
III		Service equipment enclosure type
		Service equipment enclosure door indicates front of enclosure
T	t	Telephone demarcation cabinet

POLE-MOUNTED SERVICE DESIGNATION

Type of installation

TYPE H SERVICE - 28'-10" ← Pole height above grade

ILLUMINATED OVERHEAD SIGN

PROPOSED	EXISTING	
		Overhead sign - Single post
		Overhead sign - Two post
		Overhead sign - Mounted on structure
		Overhead sign with electrolier

SIGNAL EQUIPMENT

PROPOSED	EXISTING	
		Pedestrian signal face
		Pedestrian push button post
		Pedestrian barricade
		Vehicle signal face (with backplate, 3-Section: red, yellow and green)
		Vehicle signal face with angle visors
PV	PV	Modifications of basic symbols: "L" indicates all non-arrow sections louvered "LG" indicates louvered green section only "PV" indicates 12" programmed visibility sections "8" indicates all 8" sections (only when specified)
		Type 15TS and Vehicle signal face
		Vehicle signal face with red, yellow and green left arrow sections
		Vehicle signal face with red and yellow sections and up green arrow
		Vehicle signal face (5 Section) with red, yellow and green sections and yellow and green right arrows
		Type 1 Standard and attached vehicle signal faces
		Standard with signal mast arm only and attached vehicle signal faces and internally illuminated street name sign
		Type 33 Standard, Left-turn vehicle signal face and sign
		Standard with luminaire and signal mast arms and attached vehicle signal faces
		Cantilever flashing beacon Type 9 Frame, with a sign unless otherwise specified or indicated
		Type 15-FBS Standard with two vehicle signal face sections with lens, backplate and visor with a sign
R	Y	Flashing beacon. One vehicle signal face section with lens, backplate and visor. "R" indicates red indication, "Y" indicates yellow indication
		Controller assembly. Door indicates front of cabinet

SIGNAL EQUIPMENT Cont

PROPOSED	EXISTING	
		Guard post
		Type 1 Standard with "Meter On" sign
		Emergency Vehicle detector

NOTES:

1. All signal sections shall be 12" unless shown otherwise.
2. Signal heads shall be provided with backplates unless shown otherwise.
3. Signal indication shall be LED.

STATE OF CALIFORNIA
DEPARTMENT OF TRANSPORTATION

ELECTRICAL SYSTEMS (SYMBOLS AND ABBREVIATIONS)

NO SCALE

RSP ES-1B DATED OCTOBER 5, 2007 SUPERCEDES STANDARD PLAN ES-1B DATED MAY 1, 2006 - PAGE 401 OF THE STANDARD PLANS BOOK DATED MAY 2006.

REVISED STANDARD PLAN RSP ES-1B

2006 REVISED STANDARD PLAN RSP ES-1B

DIST	COUNTY	ROUTE	POST MILES TOTAL PROJECT	SHEET NO.	TOTAL SHEETS
05	SB	246	12.2	88	93

REGISTERED ELECTRICAL ENGINEER

October 5, 2007
PLANS APPROVAL DATE

REGISTERED PROFESSIONAL ENGINEER Jeffery G. McRae No. E14512 Exp. 6-30-08 ELECTRICAL STATE OF CALIFORNIA

The State of California or its officers or agents shall not be responsible for the accuracy or completeness of electronic copies of this plan sheet.

To accompany plans dated 3-28-11

EQUIPMENT IDENTIFICATION

ILLUMINATED SIGN IDENTIFICATION NUMBER:

Sign No. 12345 — Sign number - Place on post or structure

10 ISL SCI 1.0

- 1.0 — Transformer rating (kVA)
- SCI — Lighting control type
- ISL — Number and type of fixtures

Do NOT place on standard or structure

ELECTROLIER OR EQUIPMENT IDENTIFICATION NUMBER:

12345 - 15'-0"

- 15'-0" — Mast arm length, if shown. Do not place on standard or structure.
- 12345 — Equipment number - Place on standard or structure. Existing equipment numbers are shown in parenthesis

CONDUIT AND CONDUCTOR IDENTIFICATION:

1½"C, 2#10, 15#14, 2 DLC

- 2#10, 15#14, 2 DLC — Number and size of conductors and cables
- 1½"C — Size of conduit in inches

Ø1, Ø2, Ø2P, etc.	Traffic phase identification for signal faces, detectors and phase diagrams
1 2 3	Project note numbers
A B C	Equipment description, installation or item numbers
1 2 3	Conduit run numbers

SIGNAL AND LIGHTING STANDARD (TYPICAL DESIGNATION):

19A - 3 - 100

- 100 — Wind velocity = 100 mph
- 3 — Case 3 arm loading
- 19A — Standard type
- Standard Plan sheet number
- Detail number or letter

MISCELLANEOUS EQUIPMENT

PROPOSED	EXISTING	
CMS	cms	Changeable message sign
		Closed circuit television camera
		Highway advisory radio pole and antenna
EMS	ems	Extinguishable message sign
M V	m v	Detection device M = Microwave sensor V = Video image sensor

WIRING DIAGRAM LEGEND

P	Pole
CB	Circuit breaker
A	Ampere
V	Volt
M	Metered
UM	Unmetered
NB	Neutral bus
GB	Ground bus
G	Equipment grounding conductor
N	Grounded conductor (Neutral)

- External conductor
- Conductor or bus
- Tie point
- Contactor coil
- Contactor, Contact NO
- Terminal blocks
- Contactor, Contact NC
- Enclosure bond
- Grounding electrode
- Circuit breaker
- Receptacle

PULL BOXES

PROPOSED EXISTING

Pull box-No. 5 unless otherwise indicated or noted.

3 — 9A(21)

Pull box-Additional designations or descriptions

3	= No. 3½ pull box
5	= No. 5 pull box
6	= No. 6 pull box
7	= No. 7 (Ceiling pull box)
8	= No. 8 (Pendant soffit pull box)
9	= No. 9 pull box
9A	= No. 9A pull box

(C) = Communications pull box
(E) = Pull box with extension
(S) = Sprinkler control pull box
(21) = Anchor bolts and conduit for future installation of Type 21 Standard
(T) = Traffic pull box

VEHICLE DETECTORS

5 J 9 U

- U = Upper
- L = Lower
- Slot number in input file
- Input file (I or J)
- Phase

PROPOSED	EXISTING	
		Type A detector loop. Outline of sawcut shown.
		Type B detector loop. Outline of sawcut shown.
		Type C detector loop. Outline of sawcut shown.
		Type D detector loop. Outline of sawcut shown.
		Type E detector loop. Outline of sawcut shown.
		Type Q detector loop. Outline of sawcut shown.
		Magnetic detector
DH	dh	Detector handhole
		Microwave or video detection zone

STATE OF CALIFORNIA
DEPARTMENT OF TRANSPORTATION

ELECTRICAL SYSTEMS (SYMBOLS AND ABBREVIATIONS)

NO SCALE

RSP ES-1C DATED OCTOBER 5, 2007 SUPERCEDES STANDARD PLAN ES-1C DATED MAY 1, 2006 - PAGE 402 OF THE STANDARD PLANS BOOK DATED MAY 2006.

REVISED STANDARD PLAN RSP ES-1C

2006 REVISED STANDARD PLAN RSP ES-1C

DIST	COUNTY	ROUTE	POST MILES TOTAL PROJECT	SHEET NO.	TOTAL SHEETS
05	SB	246	12.2	89	93

REGISTERED ELECTRICAL ENGINEER

October 5, 2007
PLANS APPROVAL DATE

REGISTERED PROFESSIONAL ENGINEER
Jeffery G. McRae
No. E14512
Exp. 6-30-08
ELECTRICAL
STATE OF CALIFORNIA

The State of California or its officers or agents shall not be responsible for the accuracy or completeness of electronic copies of this plan sheet.

To accompany plans dated 3-28-11

2006 REVISED STANDARD PLAN RSP ES-2C

NOTES-TYPE III SERVICE EQUIPMENT ENCLOSURES:

1. Service equipment enclosure and metering equipment shall meet the requirements of the service utility. The meter area shall have a sealable, lockable, weathertight cover that can be removed without the use of tools.

2. Service equipment enclosures shall be factory wired and conform to NEMA standards.

3. Dimensions of service equipment enclosures shall meet the requirements of the service utility.

4. The dead front panels on Type III service equipment enclosures shall have a continuous stainless steel or aluminum piano hinge. The panel in front of the breakers shall be secured with a latch or captive screws. No live parts shall be mounted on the dead front panel.

5. The exterior door shall have provisions for padlocking. The padlock hole shall be a minimum diameter of 7/16".

6. Enclosures housing transformers of more than one kVA shall have effective screened ventilation louver of not less than 50 square inches. Screen shall be stainless steel No. 304, with a No. 10 size mesh. Framed screen shall be secured with at least four bolts.

7. Fasteners on the exterior of the enclosure shall be vandal-resistant and shall not be removable from the exterior. Exterior screws, nuts, bolts and washers shall be stainless steel.

8. Landing lugs for incoming service conductors shall be compatible with either copper or aluminum conductors sized to suit the conductors shown on the plan. Landing lugs shall be copper or tin-plated aluminum. Neutral bus shall be rated for 125 A and be suitable for copper or aluminum conductors unless otherwise specified. The terminal shall include but not be limited to:

   a) Incoming terminals (landing lugs)
   b) Neutral lugs
   c) Solid neutral terminal strip

9. At least 6 standard single pole circuit breaker spaces, 3/4" nominal, shall be provided for branch circuits. Circuit breaker interiors shall be copper. Interiors of enclosure shall accept plug-in or cable-in/cable-out circuit breakers.

10. Control wiring shall be 600 V, 14 stranded machine tool wire. Where subject to flexing, 19 strand wire shall be used.

11. Main bus shall be rated for 125 A and shall be tin-plated copper.

12. A plastic laminated wiring diagram shall be provided with brass mounting eyelets and attached to the inside of the enclosure and the wiring diagram shall be affixed to the interior with a UL or ETL approved method.

13. An engraved phenolic nameplate on the dead front panel indicating the function of each circuit or device shall be installed with stainless steel rivets or stainless steel screws:

    a) Adjacent to the breaker or device with character size a minimum of 1/8".

    b) At the top of the exterior door panel indicating State system number, voltage level and number of phases with character size a minimum of 3/16".

14. The plan shows the approximate location of devices within the enclosure. Components may be rearranged, however, the "working" clearances within the service equipment enclosure shall be maintained.

15. In unpaved areas a raised portland cement concrete pad 2'-0" x 4" x width of foundation shall be constructed in front of new service equipment enclosure installation. Pad shall be set to elevation of foundation.

16. Foundation shall extend 2" minimum beyond edge of service equipment enclosure.

17. Internal bus, where shown, is typical only. Alternative design of proposed service equipment enclosure shall be submitted to the Engineer for approval.

18. Plug-in circuit breakers may be mounted in the vertical or horizontal position. Cable-in/cable-out circuit breakers shall be mounted in the vertical position.

19. Type III-AF and Type III-BF service equipment enclosures shall have the meter viewing windows located on the front side of the service equipment enclosures.

20. Type III-AR and Type III-BR service equipment enclosures shall be similarly constructed as Type III-AF and Type III-BF respectively, except the meter viewing windows shall be located on the back side of the service equipment enclosures.

21. Minimum clearance shall be required for front and back of service equipment enclosure per National Electrical Code, Article 110.26, "Spaces About Electric Equipment (600 Volts, Nominal, or Less)."

STATE OF CALIFORNIA
DEPARTMENT OF TRANSPORTATION

ELECTRICAL SYSTEMS (SERVICE EQUIPMENT NOTES TYPE III SERIES)

NO SCALE

RSP ES-2C DATED OCTOBER 5, 2007 SUPERCEDES STANDARD PLAN ES-2C
DATED MAY 1, 2006 - PAGE 405 OF THE STANDARD PLANS BOOK DATED MAY 2006.

REVISED STANDARD PLAN RSP ES-2C

DIST	COUNTY	ROUTE	POST MILES TOTAL PROJECT	SHEET NO.	TOTAL SHEETS
05	SB	246	12.2	90	93

REGISTERED ELECTRICAL ENGINEER

October 5, 2007
PLANS APPROVAL DATE

REGISTERED PROFESSIONAL ENGINEER Jeffery G. McRae No. E14512 Exp. 6-30-08 ELECTRICAL STATE OF CALIFORNIA

The State of California or its officers or agents shall not be responsible for the accuracy or completeness of electronic copies of this plan sheet.

To accompany plans dated 3-28-11

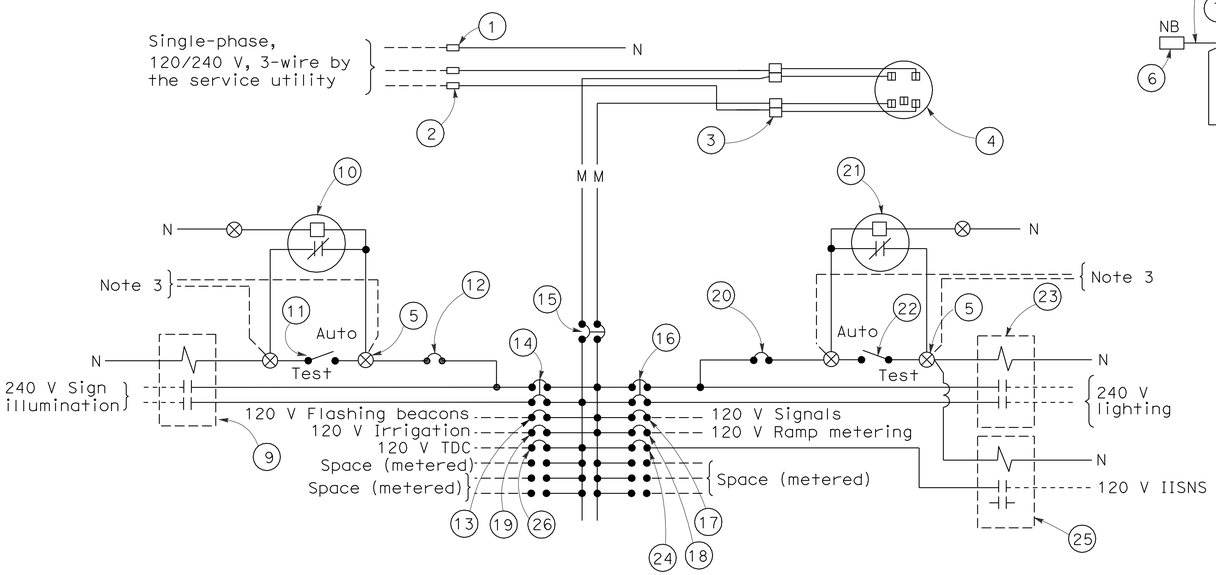

120/240 V SERVICE WIRING DIAGRAM (TYPICAL)

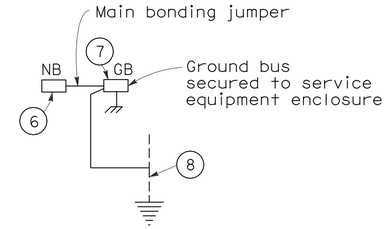

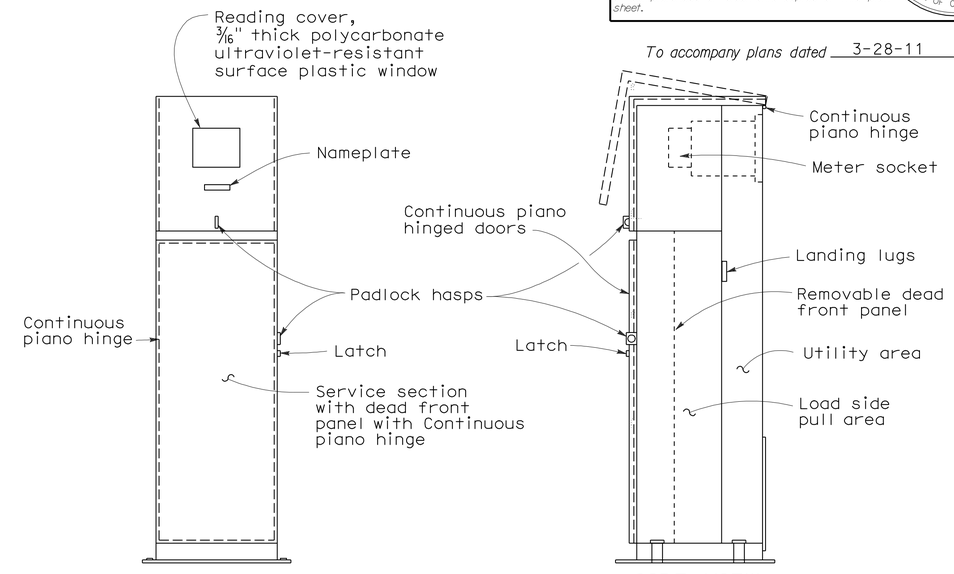

FRONT VIEW SIDE VIEW

TYPE III-BF SERVICE EQUIPMENT ENCLOSURE WITH PROVISIONS FOR ONE 100 A METER (TYPICAL)

TYPE III-B SERVICE (120/240 V) EQUIPMENT LEGEND		
ITEM No.	COMPONENT	NAME PLATE DESCRIPTION
1	Neutral lug	
2	Landing lug (Note 6)	
3	Test bypass facility	
4	Meter socket and support	
5	Terminal blocks	
6	Neutral bus	
7	Ground bus	
8	Grounding electrode	
9	30 A, 2PNO Contactor	Sign Illumination
10	Photoelectric unit (Note 7)	
11	15 A, 1P, Test switch	Sign Illumination Test Switch
12	15 A, 120 V, 1P, CB	Sign Illumination Control
13	15 A, 120 V, 1P, CB	Flashing Beacon
14	30 A, 240 V, 2P, CB	Sign Illumination
15	100 A, 240 V, 2P, CB	Main Breaker
16	30 A, 240 V, 2P, CB	Lighting
17	50 A, 120 V, 1P, CB	Signals
18	30 A, 120 V, 1P, CB	Ramp Metering
19	20 A, 120 V, 1P, CB	Irrigation
20	15 A, 120 V, 1P, CB	Lighting Control
21	Photoelectric unit (Note 7)	
22	15 A, 1P, Test switch	Lighting Test Switch
23	60 A, 2PNO Contactor	Lighting
24	15 A, 120 V, 1P, CB	IISNS
25	30 A, 2PNO Contactor	IISNS
26	20 A, 120 V, IP, CB	Telephone Demarcation Cabinet

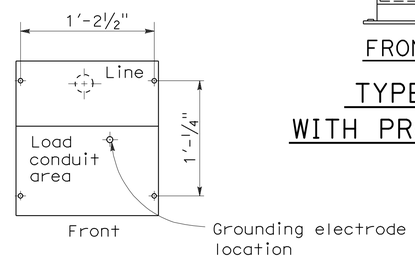

BASE FOR TYPE III-B SERVICE EQUIPMENT ENCLOSURE

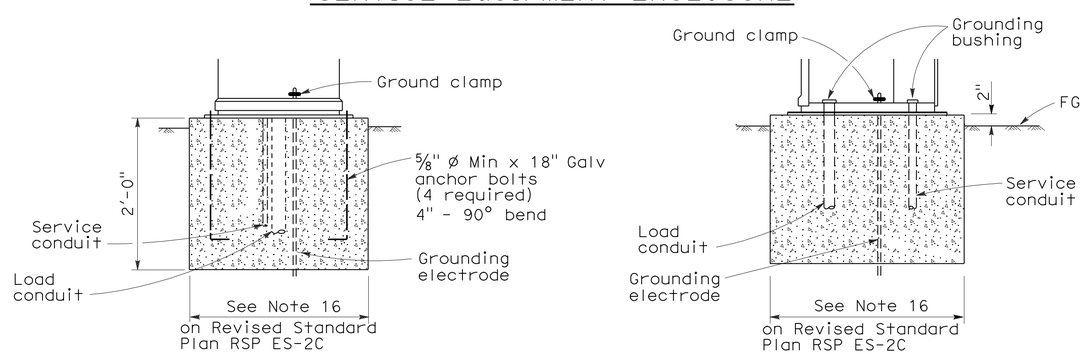

FRONT VIEW SIDE VIEW

TYPE III-B SERVICE EQUIPMENT ENCLOSURE FOUNDATION DETAILS

NOTES: (FOR SERVICE EQUIPMENT ENCLOSURE)

1. Voltage ratings of service equipment shall conform to the service voltages indicated on the plans.
2. Unless otherwise indicated on the plans, service equipment items shall be provided for each service equipment enclosure as shown.
3. Connect to remote test switch mounted on lighting standards, sign post or structure when required.
4. Items No. 1 and 6 shall be isolated from the service equipment enclosure.
5. Meter sockets shall be 5 clip type.
6. The landing lug shall be suitable for multiple conductors.
7. Type V photoelectric control shall be used unless otherwise indicated on the plans.

STATE OF CALIFORNIA
DEPARTMENT OF TRANSPORTATION

ELECTRICAL SYSTEMS (SERVICE EQUIPMENT AND TYPICAL WIRING DIAGRAM, TYPE III-B SERIES)

NO SCALE

RSP ES-2E DATED OCTOBER 5, 2007 SUPERCEDES STANDARD PLAN ES-2E DATED MAY 1, 2006 - PAGE 407 OF THE STANDARD PLANS BOOK DATED MAY 2006.

REVISED STANDARD PLAN RSP ES-2E

2006 REVISED STANDARD PLAN RSP ES-2E

7-10-07

DIST	COUNTY	ROUTE	POST MILES TOTAL PROJECT	SHEET NO.	TOTAL SHEETS
05	SB	246	12.2	91	93

REGISTERED ELECTRICAL ENGINEER

June 6, 2008
PLANS APPROVAL DATE

REGISTERED PROFESSIONAL ENGINEER
Jeffery G. McRae
No. E14512
Exp. 6-30-10
ELECTRICAL
STATE OF CALIFORNIA

The State of California or its officers or agents shall not be responsible for the accuracy or completeness of electronic copies of this plan sheet.

To accompany plans dated 3-28-11

2006 REVISED STANDARD PLAN RSP ES-4C

VISORS

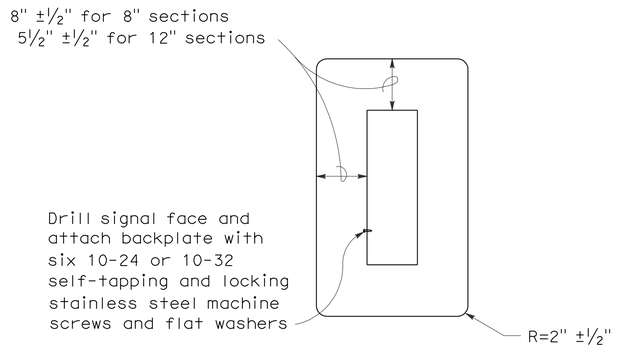

8" AND 12" SECTIONS

BACKPLATE

1/16" minimum thickness
3001-14 aluminum, or plastic when specified

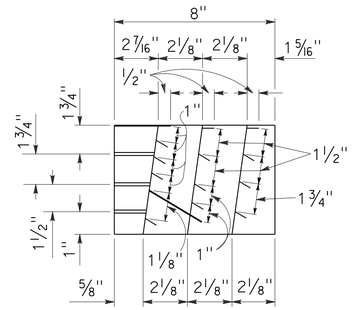

SECTION A-A

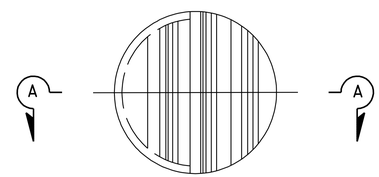

FRONT VIEW

DIRECTIONAL LOUVER

Directional louvers shall be oriented as directed by the Engineer and secured in place with one plated brass machine screw and nut.

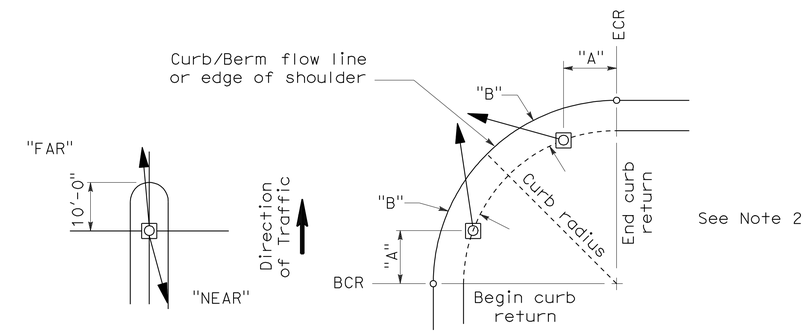

NOTES:

1. Typical signal pole placement unless dimensioned on plans.
2. For "A" and "B" dimensions, see Pole Schedule, or as directed by the Engineer.

SIGNAL STANDARD PLACEMENT DIMENSIONS AND EQUIPMENT LOCATIONS

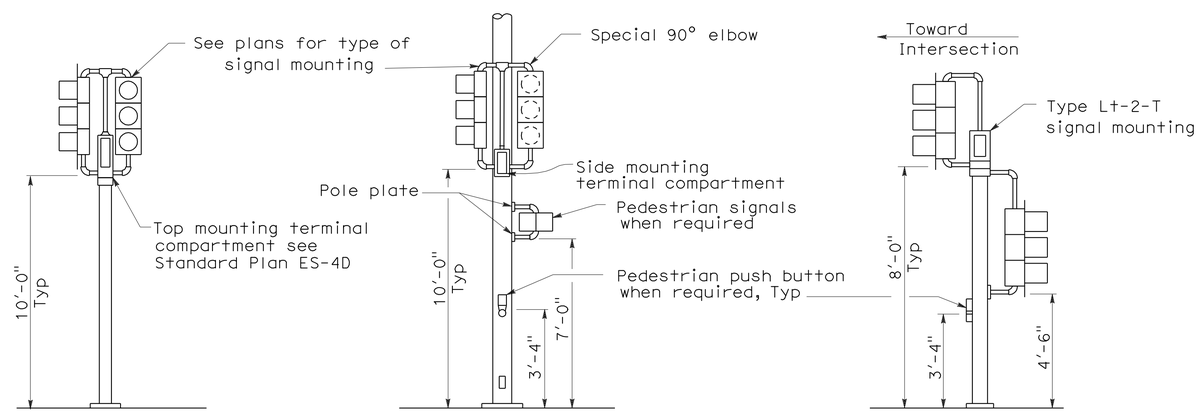

TOP MOUNTED SIGNALS (TV)

Type 1-A, 1-B, 1-C and 1-D standard as indicated on the plans

SIDE MOUNTED SIGNALS (SV AND SP)

Normally used on standards with luminaire or signal mast arm

LEFT TURN LANE SIGNAL

Type 1-A, 1-B, 1-C and 1-D standard as indicated on plans

TYPICAL SIGNAL INSTALLATIONS

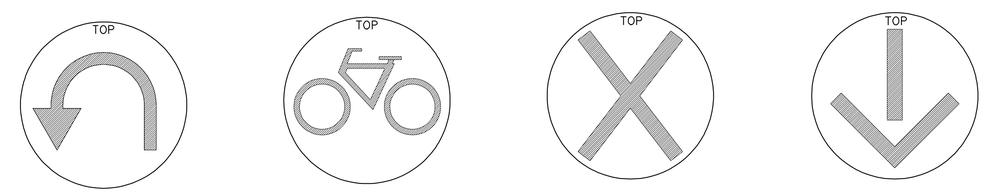

U-TURN SIGNAL FACE | BICYCLE SIGNAL FACE | LANE CONTROL SIGNAL FACE | LANE CONTROL SIGNAL FACE

STATE OF CALIFORNIA
DEPARTMENT OF TRANSPORTATION

ELECTRICAL SYSTEMS (SIGNAL HEADS AND MOUNTINGS)

NO SCALE

RSP ES-4C DATED JUNE 6, 2008 SUPERSEDES STANDARD PLAN ES-4C DATED MAY 1, 2006 - PAGE 420 OF THE STANDARD PLANS BOOK DATED MAY 2006.

REVISED STANDARD PLAN RSP ES-4C

5-19-08

DIST	COUNTY	ROUTE	POST MILES TOTAL PROJECT	SHEET NO.	TOTAL SHEETS
05	SB	246	12.2	92	93

REGISTERED ELECTRICAL ENGINEER

June 6, 2008
PLANS APPROVAL DATE

REGISTERED PROFESSIONAL ENGINEER Jeffery G. McRae No. E14512 Exp. 6-30-10 ELECTRICAL STATE OF CALIFORNIA

The State of California or its officers or agents shall not be responsible for the accuracy or completeness of electronic copies of this plan sheet.

To accompany plans dated 3-28-11

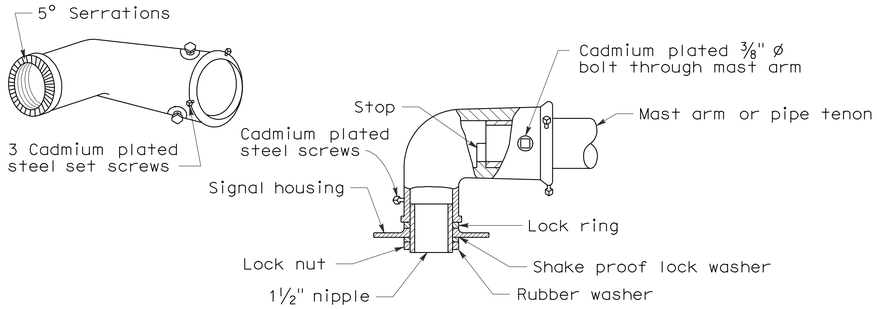

MAST ARM MOUNTING - TYPE "MAT"

For 2 NPS pipe, see Note 1.

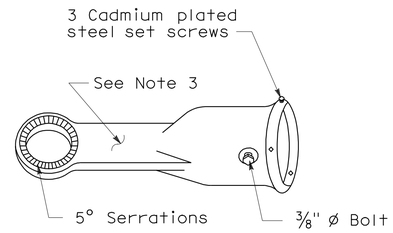

MAST ARM MOUNTING - TYPE "MAS"

For 2 NPS pipe. See Note 1.

SIGNAL SLIP FITTERS

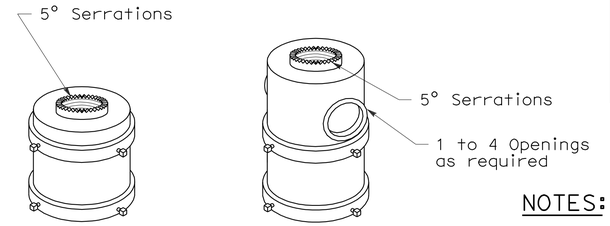

For one mounting For mulitiple mountings

TOP MOUNTINGS

For 4 NPS pipe, see Note 2.

NOTES:

1. After mast arm signal has been plumbed and secured, drill 7/16" hole through mast arm tenon in line with slip fitter hole. Place a cadmium plated 3/8" ø galvanized bolt with washer under bolt head through hole and secure with washer, nut, and locknut. Seal openings between mast arm mountings and mast arm with mastic.
2. (a) Threaded top mounted slip fitter openings shall be 1½ NPS.
   (b) Serrations in fittings shall match those on bottom of signal heads or in lock ring.
   (c) Top opening shall be offset when backplate is used.
3. Wireway shall have a cross section area of 0.95 square inch minimum. Minimum width of ½".

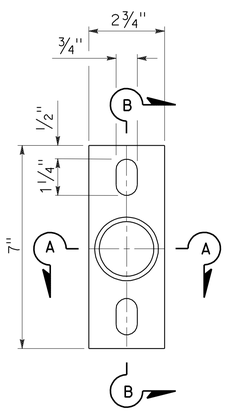

POLE PLATE

For side mountings

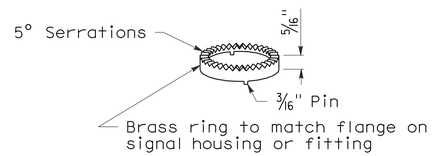

LOCK RING

Use where locking ring is not integral with signal housing or fitting.

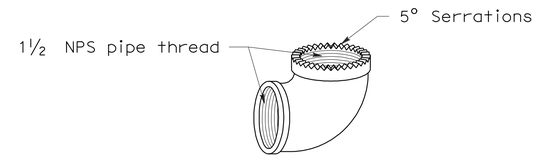

SPECIAL 90° ELBOW

One for each signal head, except those with special slip fitter mounting

MISCELLANEOUS MOUNTING HARDWARE

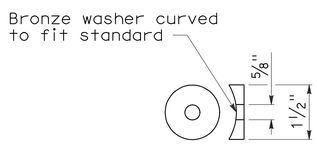

DETAIL "C"

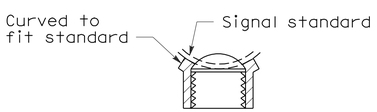

SECTION A-A

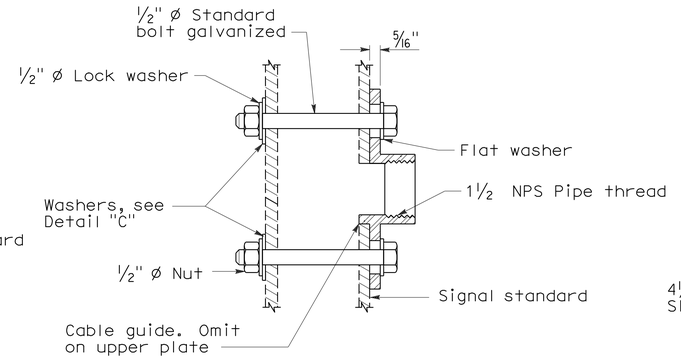

SECTION B-B

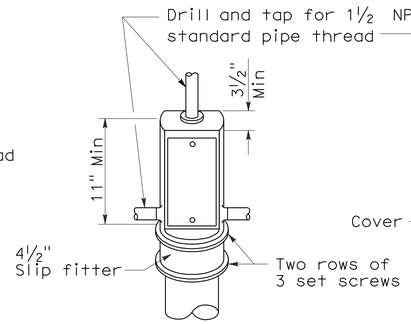

TOP MOUNTING

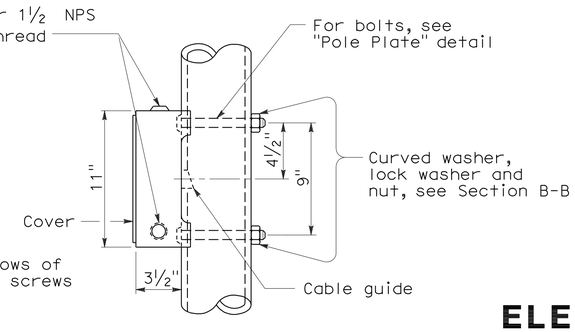

SIDE MOUNTING

TERMINAL COMPARTMENTS

STATE OF CALIFORNIA
DEPARTMENT OF TRANSPORTATION

ELECTRICAL SYSTEMS (SIGNAL HEADS AND MOUNTINGS)

NO SCALE

RSP ES-4D DATED June 6, 2008 SUPERSEDES STANDARD PLAN ES-4D
DATED MAY 1, 2006 - PAGE 421 OF THE STANDARD PLANS BOOK DATED MAY 2006.

REVISED STANDARD PLAN RSP ES-4D

2006 REVISED STANDARD PLAN RSP ES-4D

5-19-08

DIST	COUNTY	ROUTE	POST MILES TOTAL PROJECT	SHEET NO.	TOTAL SHEETS
05	SB	246	12.2	93	93

REGISTERED CIVIL ENGINEER

October 5, 2007
PLANS APPROVAL DATE

REGISTERED PROFESSIONAL ENGINEER
Stanley P. Johnson
No. C57793
Exp. 3-31-08
CIVIL
STATE OF CALIFORNIA

The State of California or its officers or agents shall not be responsible for the accuracy or completeness of electronic copies of this plan sheet.

To accompany plans dated 3-28-11

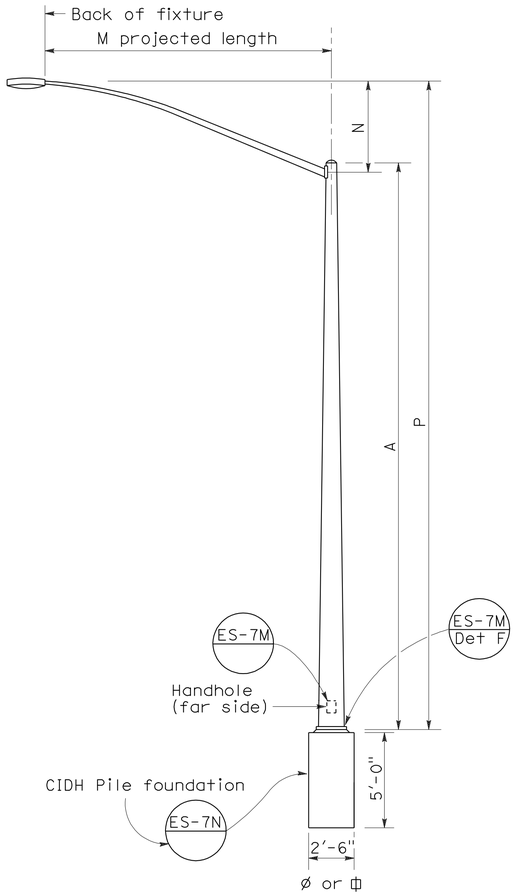

ELEVATION
TYPE 15 AND TYPE 21

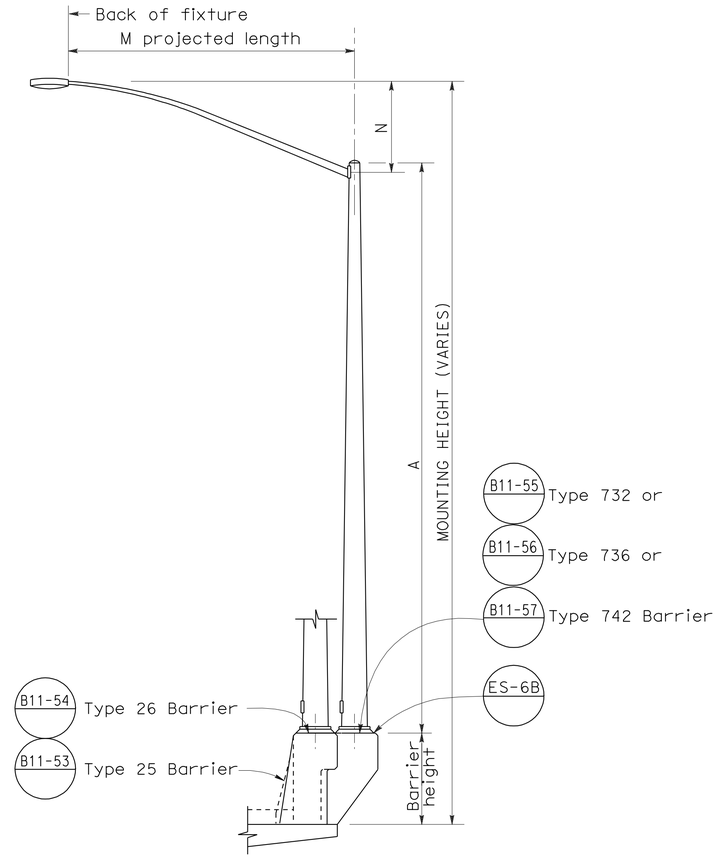

ELEVATION
TYPE 15 AND TYPE 21 BARRIER RAIL MOUNTED

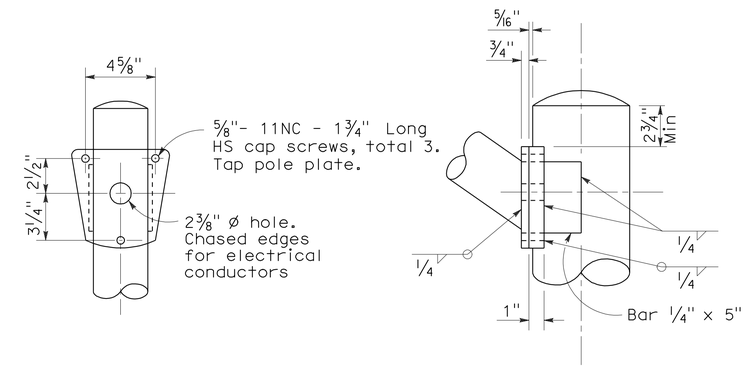

DETAIL R
LUMINAIRE ARM CONNECTION

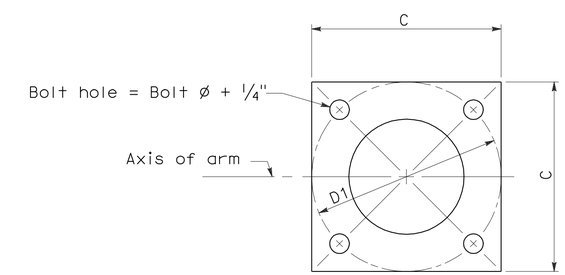

BASE PLATE

POLE TYPE	POLE DATA				BASE PLATE DATA				LUMINAIRE ARM
	A Height	Min OD Base	Min OD Top	Wall Thickness	C	D1 Bolt Circle	Thickness	Anchor Bolts Size	
15	30'	8"	3 7/8"	0.1196"	1'-0"	1'-0"	1"	1" ø x 3'-0" x 4"*	6' - 15' [12']
21	35'	8 5/8"	3 7/8"	0.1196"	1'-0"	1'-0"	1"	1 1/4"ø x 3'-0" x 4"*	6' - 15' [12']

* For barrier rail bolts, see Standard Plan ES-6B.

LUMINAIRE ARM DATA					
M Projected Length	N Rise	Min OD At Pole	Nominal Thickness	P Type 15	P Type 21
6'-0"	2'-0"±	3 1/4"	0.1196"	31'-6"±	36'-6"±
8'-0"	2'-6"±	3 1/2"	0.1196"	32'-0"±	37'-0"±
10'-0"	3'-3"±	3 7/8"	0.1196"	32'-9"±	37'-9"±
12'-0"	4'-3"±	3 7/8"	0.1196"	33'-9"±	38'-9"±
15'-0"	4'-9"±	4 1/4"	0.1196"	34'-3"±	39'-3"±

NOTES:

1. ☐ Indicates arm length to be used unless otherwise noted on the plans.
2. For Type 15-SB, use Type 15 standard with Type 30 slip base plate details, see Standard Plan ES-6F.
3. For additional notes, see Standard Plan ES-7M and ES-7N.

STATE OF CALIFORNIA
DEPARTMENT OF TRANSPORTATION

ELECTRICAL SYSTEMS (LIGHTING STANDARD TYPES 15 AND 21)

NO SCALE

RSP ES-6A DATED OCTOBER 5, 2007 SUPERCEDES STANDARD PLAN ES-6A DATED MAY 1, 2006 - PAGE 427 OF THE STANDARD PLANS BOOK DATED MAY 2006.

REVISED STANDARD PLAN RSP ES-6A

2006 REVISED STANDARD PLAN RSP ES-6A

7-10-07