Dist	COUNTY	ROUTE	POST MILES TOTAL PROJECT	SHEET No.	TOTAL SHEETS
05	SB	101	82.2/84.3	1	42

STATE OF CALIFORNIA

DEPARTMENT OF TRANSPORTATION

ACHSNHG-Q101(163)E

PROJECT PLANS FOR CONSTRUCTION ON

STATE HIGHWAY

IN SANTA BARBARA COUNTY
NEAR SANTA MARIA
FROM CLARK AVE OVERCROSSING
TO SOUTH SANTA MARIA UNDERCROSSING

TO BE SUPPLEMENTED BY STANDARD PLANS DATED MAY 2006

INDEX OF PLANS

SHEET No.	DESCRIPTION
1	TITLE AND LOCATION MAP
2-3	TYPICAL CROSS SECTIONS
4-13	LAYOUTS
14	CONSTRUCTION DETAILS
15-22	DRAINAGE, PROFILES, DETAILS AND QUANTITIES
23	CONSTRUCTION AREA SIGNS
24	SUMMARY OF QUANTITIES
27	HIGHWAY PLANTING
28-42	REVISED AND NEW STANDARD PLANS

THE STANDARD PLANS LIST APPLICABLE TO THIS CONTRACT IS INCLUDED IN THE NOTICE TO BIDDERS AND SPECIAL PROVISIONS BOOK.

LOCATION MAP

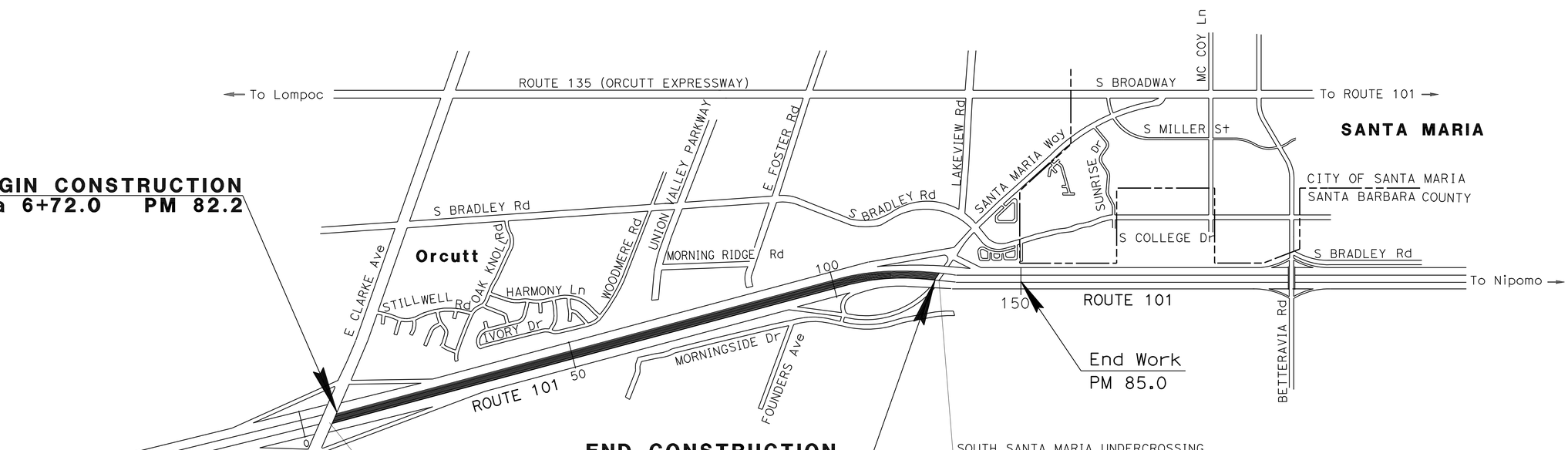

NO SCALE

THE CONTRACTOR SHALL POSSESS THE CLASS (OR CLASSES) OF LICENSE AS SPECIFIED IN THE "NOTICE TO BIDDERS."

PROJECT MANAGER D. BEARD

DESIGN ENGINEER S. WYATT

10-06-2009
PROJECT ENGINEER DATE
REGISTERED CIVIL ENGINEER

November 9, 2009
PLANS APPROVAL DATE

REGISTERED PROFESSIONAL ENGINEER P.F. Valadao No. 63987 Exp. 9-30-10 CIVIL STATE OF CALIFORNIA

THE STATE OF CALIFORNIA OR ITS OFFICERS OR AGENTS SHALL NOT BE RESPONSIBLE FOR THE ACCURACY OR COMPLETENESS OF SCANNED COPIES OF THIS PLAN SHEET.

CONTRACT No. 05-0Q6504

LAST REVISION 10-06-09 DATE PLOTTED => 29-DEC-2009 TIME PLOTTED => 11:34

Dist	COUNTY	ROUTE	POST MILES TOTAL PROJECT	SHEET No.	TOTAL SHEETS
05	SB	101	82.2/84.3	2	42

10-06-2009
REGISTERED CIVIL ENGINEER DATE

11-9-09
PLANS APPROVAL DATE

REGISTERED PROFESSIONAL ENGINEER P.F. Valadao No. 63987 Exp. 9-30-10 CIVIL STATE OF CALIFORNIA

THE STATE OF CALIFORNIA OR ITS OFFICERS OR AGENTS SHALL NOT BE RESPONSIBLE FOR THE ACCURACY OR COMPLETENESS OF SCANNED COPIES OF THIS PLAN SHEET.

NOTES:

1. DIMENSIONS OF THE PAVEMENT STRUCTURES (STRUCTURAL SECTIONS) ARE SUBJECT TO TOLERANCES SPECIFIED IN THE STANDARD SPECIFICATIONS.
2. SUPERELEVATIONS ARE SHOWN ON THE SUPERELEVATION DIAGRAMS.
3. SOUTHBOUND SHOULDER WIDENING BEGINS AT Sta 7+00.

STRUCTURAL SECTIONS

1 — Exist Pvmt
0.68′ AC
0.50′ CL 2 AB
0.33′ CTB
0.17′ AB

2 — Exist Pvmt
0.76′ AC
0.67′ CTB

3 — 0.3′ HMA (TYPE A)
0.8′ CL 2 AB

DESIGN DESIGNATION

ADT (2009)	44,563
ADT (2029)	74,980
DHV (2009)	3,655
DHV (2029)	5,685
D	55%
T	4.0%
% TRUCKS	9.9%
TI (20 YR)	13
V	80 MPH

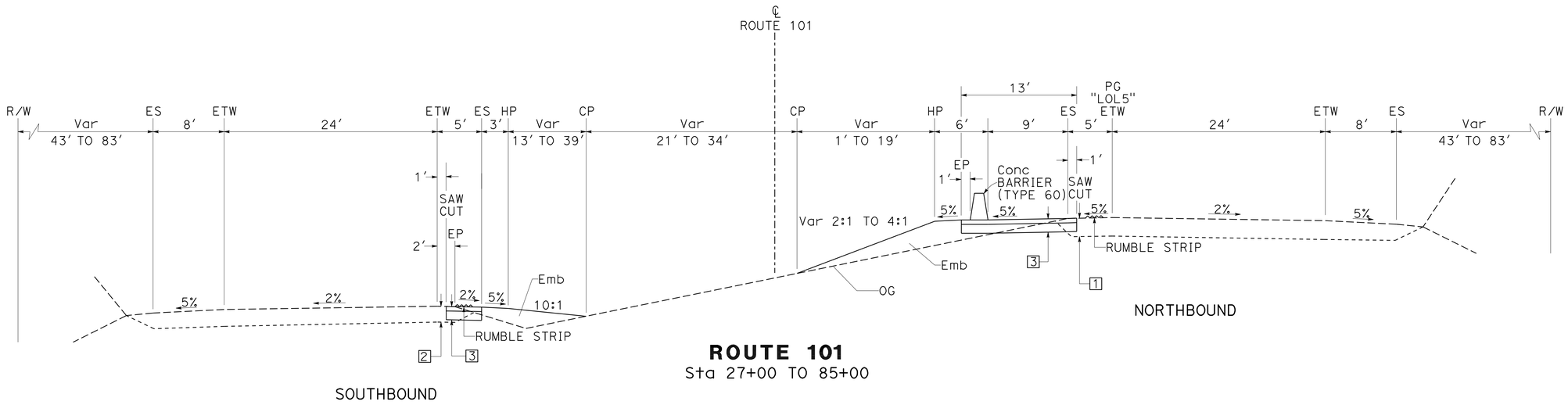

SOUTHBOUND

ROUTE 101
Sta 27+00 TO 85+00

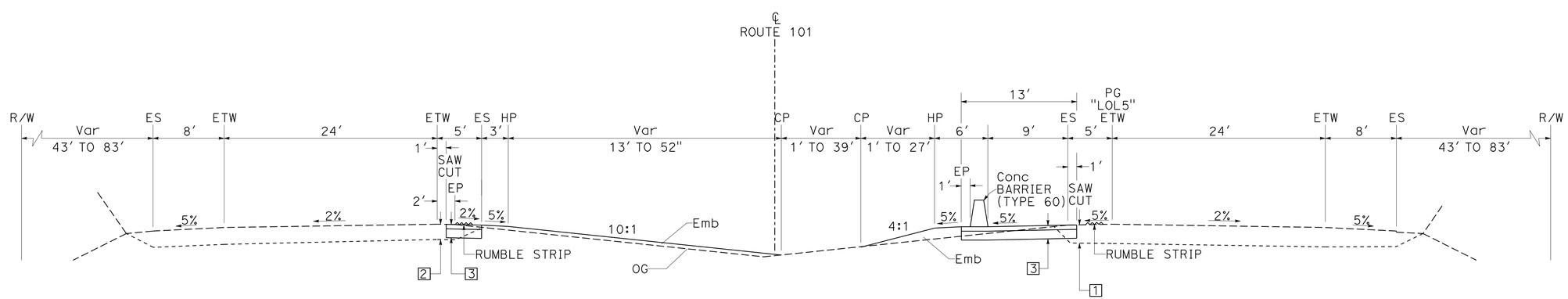

SOUTHBOUND

ROUTE 101
Sta 6+97 TO 27+00
Sta 85+00 TO 107+82

TYPICAL CROSS SECTIONS

NO SCALE

X-1

STATE OF CALIFORNIA - DEPARTMENT OF TRANSPORTATION
Caltrans
DESIGN
FUNCTIONAL SUPERVISOR: S. M. WYATT
CALCULATED-DESIGNED BY: S. KIRKISH
CHECKED BY: P. VALADAO
REVISED BY
DATE REVISED

LAST REVISION DATE PLOTTED => 16-NOV-2009
10-06-09 TIME PLOTTED => 07:13

Dist	COUNTY	ROUTE	POST MILES TOTAL PROJECT	SHEET No.	TOTAL SHEETS
05	SB	101	82.2/84.3	3	42

10-06-2009
REGISTERED CIVIL ENGINEER DATE

11-9-09
PLANS APPROVAL DATE

REGISTERED PROFESSIONAL ENGINEER P.F. Valadao No. 63987 Exp. 9-30-10 CIVIL STATE OF CALIFORNIA

THE STATE OF CALIFORNIA OR ITS OFFICERS OR AGENTS SHALL NOT BE RESPONSIBLE FOR THE ACCURACY OR COMPLETENESS OF SCANNED COPIES OF THIS PLAN SHEET.

NOTE:

NORTHBOUND SHOULDER WIDENING AND CONCRETE BARRIER END AT Sta 119+08.4

STRUCTURAL SECTIONS

[2] Exist Pvmt
0.76' AC
0.67' CTB

[3] 0.3' HMA (TYPE A)
0.8' CL 2 AB

[4] Exist Pvmt
0.20' AC
0.40' CL 2 AB

DESIGN DESIGNATION

ADT (2009)	44,563
ADT (2029)	74,980
DHV (2009)	3,655
DHV (2029)	5,685
D	55%
T	4.0%
% TRUCKS	9.9%
TI (20 YR)	13
V	80 MPH

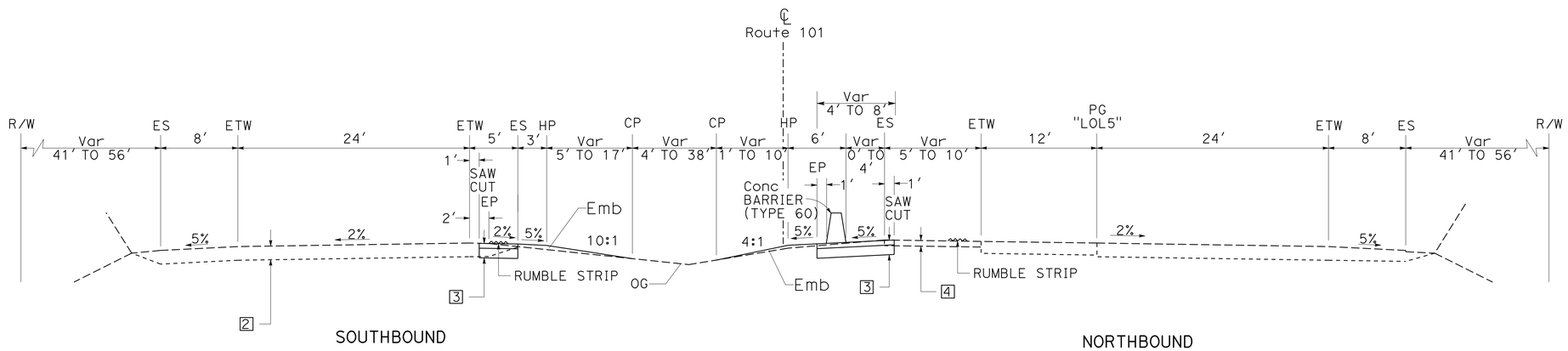

ROUTE 101
Sta 107+82 TO 119+43.7

TYPICAL CROSS SECTIONS

NO SCALE

X-2

STATE OF CALIFORNIA - DEPARTMENT OF TRANSPORTATION
Caltrans® DESIGN

FUNCTIONAL SUPERVISOR: S. M. WYATT
CALCULATED-DESIGNED BY: S. KIRKISH
CHECKED BY: P. VALADAO
REVISED BY
DATE REVISED

LAST REVISION DATE PLOTTED => 16-NOV-2009
10-06-09 TIME PLOTTED => 07:13

BORDER LAST REVISED 4/11/2008
RELATIVE BORDER SCALE IS IN INCHES 0 1 2 3
USERNAME => trmikesl
DGN FILE => 500650ca002.dgn
CU 06235
EA 0Q6501

Dist	COUNTY	ROUTE	POST MILES TOTAL PROJECT	SHEET No.	TOTAL SHEETS
05	SB	101	82.2/84.3	4	42

10-06-2009
REGISTERED CIVIL ENGINEER DATE

11-9-09
PLANS APPROVAL DATE

REGISTERED PROFESSIONAL ENGINEER P.F. Valadao No. 63987 Exp. 9-30-10 CIVIL STATE OF CALIFORNIA

THE STATE OF CALIFORNIA OR ITS OFFICERS OR AGENTS SHALL NOT BE RESPONSIBLE FOR THE ACCURACY OR COMPLETENESS OF SCANNED COPIES OF THIS PLAN SHEET.

NOTE: FOR COMPLETE RIGHT OF WAY AND ACCURATE ACCESS DATA, SEE RIGHT OF WAY RECORD MAPS AT DISTRICT OFFICE.

UTILITY LOCATION DATA

	"LOL5" STATION	OFFSET	DEPTH FROM OG
1	9+48.9	57.4′ Lt	3.5′
2	9+40.1	17.1′ Lt	5.0′

LEGEND

PG Profile Grade at NB ETW
TB Profile Grade at Top of Barrier
RBB Profile Grade at Right Bottom of Barrier
LBB Profile Grade at Left Bottom of Barrier

(X) DRAINAGE SYSTEM No.

(X) DRAINAGE UNIT No.

(o) 12¾" Dia GAS LINE POTHOLE LOCATION (SOUTHERN CALIFORNIA GAS COMPANY)

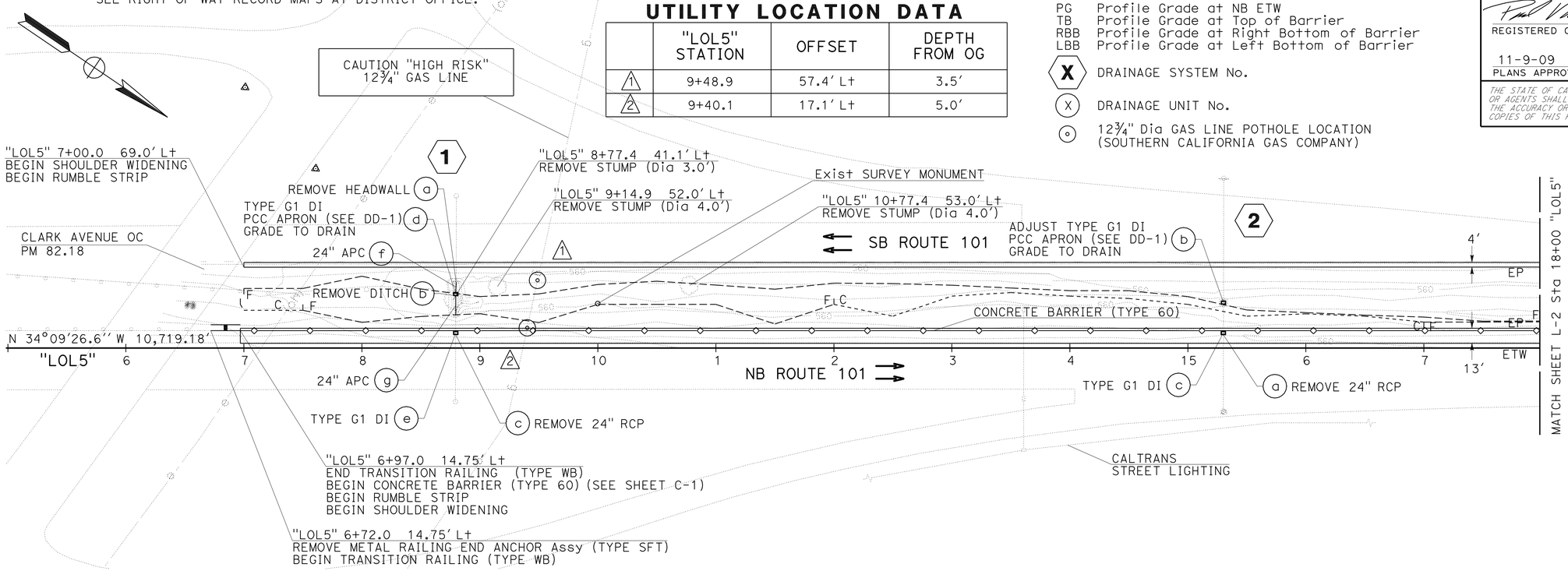

SCALE: 1"=50′

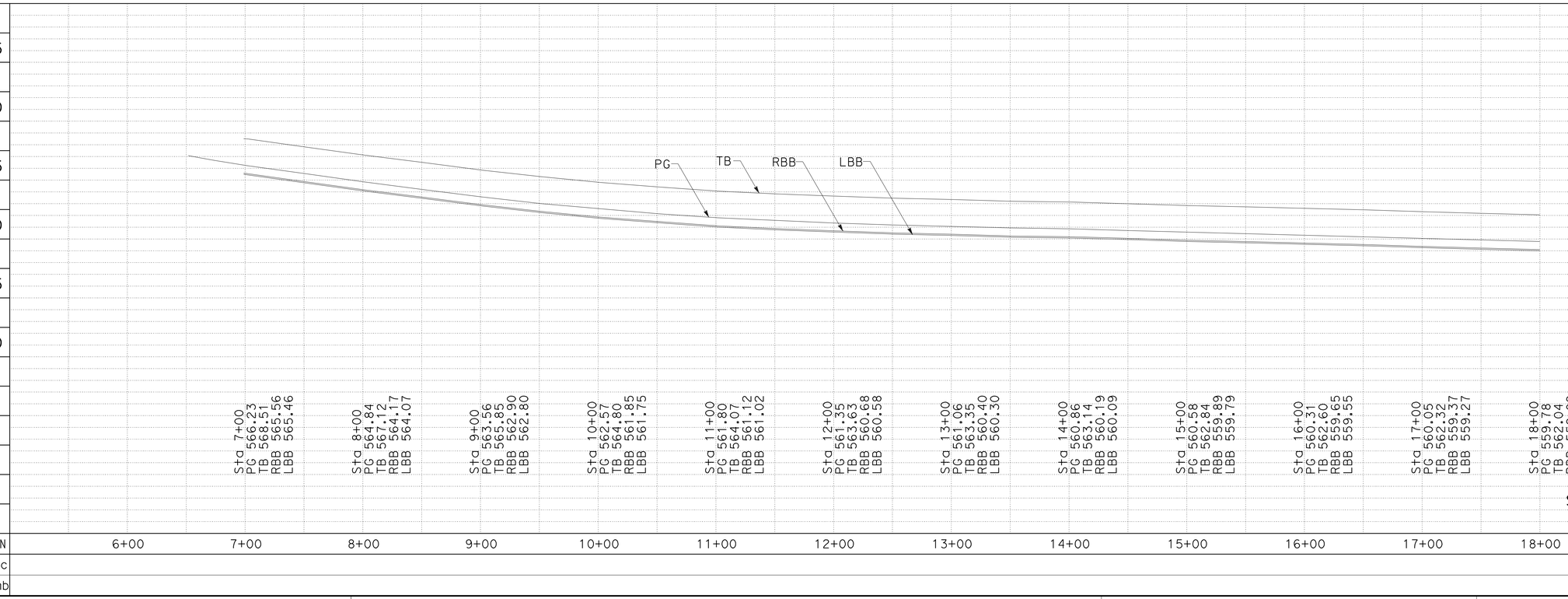

LAYOUT L-1

SCALE: Horiz 1" = 50′
Vert 1" = 10′

REVISED BY	
DATE REVISED	
S. KIRKISH	P. VALADAO
CALCULATED-DESIGNED BY	CHECKED BY
FUNCTIONAL SUPERVISOR	S. M. WYATT

STATE OF CALIFORNIA - DEPARTMENT OF TRANSPORTATION
Caltrans
DESIGN

LAST REVISION 10-06-09 DATE PLOTTED => 16-NOV-2009 TIME PLOTTED => 07:13

Dist	COUNTY	ROUTE	POST MILES TOTAL PROJECT	SHEET No.	TOTAL SHEETS
05	SB	101	82.2/84.3	5	42

REGISTERED CIVIL ENGINEER 10-06-2009 DATE

11-9-09
PLANS APPROVAL DATE

REGISTERED PROFESSIONAL ENGINEER P.F. Valadao No. 63987 Exp. 9-30-10 CIVIL STATE OF CALIFORNIA

THE STATE OF CALIFORNIA OR ITS OFFICERS OR AGENTS SHALL NOT BE RESPONSIBLE FOR THE ACCURACY OR COMPLETENESS OF SCANNED COPIES OF THIS PLAN SHEET.

NOTE:

FOR COMPLETE RIGHT OF WAY AND ACCURATE ACCESS DATA, SEE RIGHT OF WAY RECORD MAPS AT DISTRICT OFFICE.

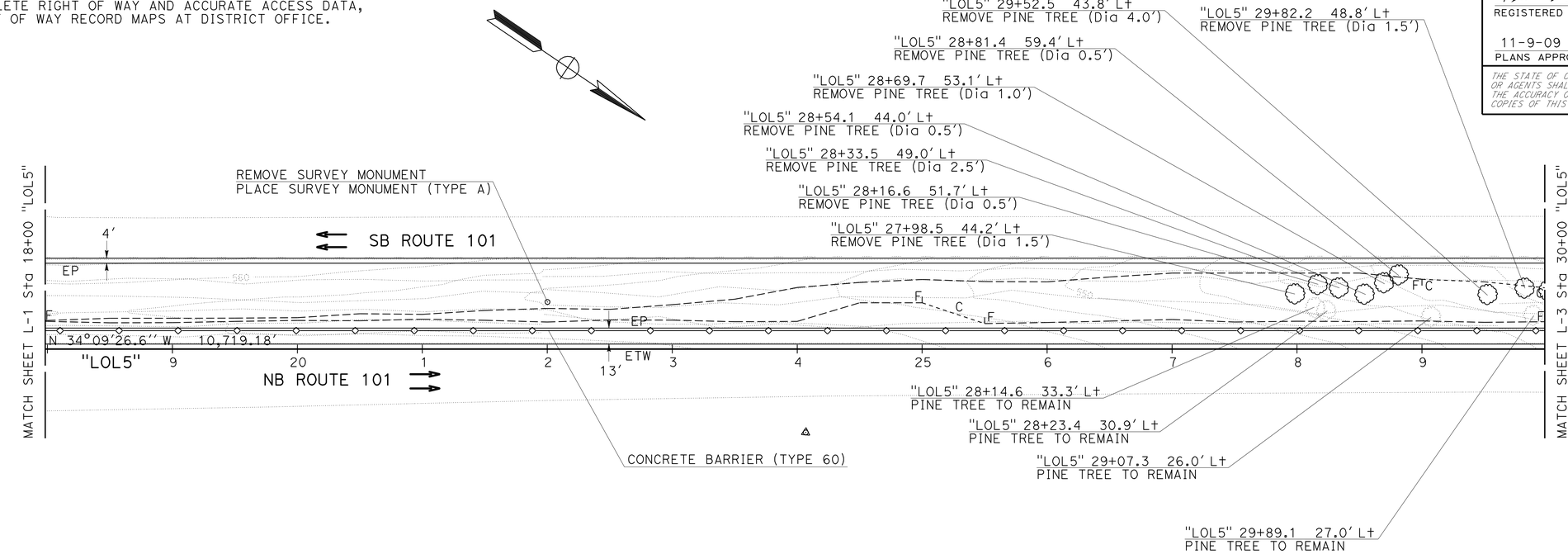

SCALE: 1"=50'

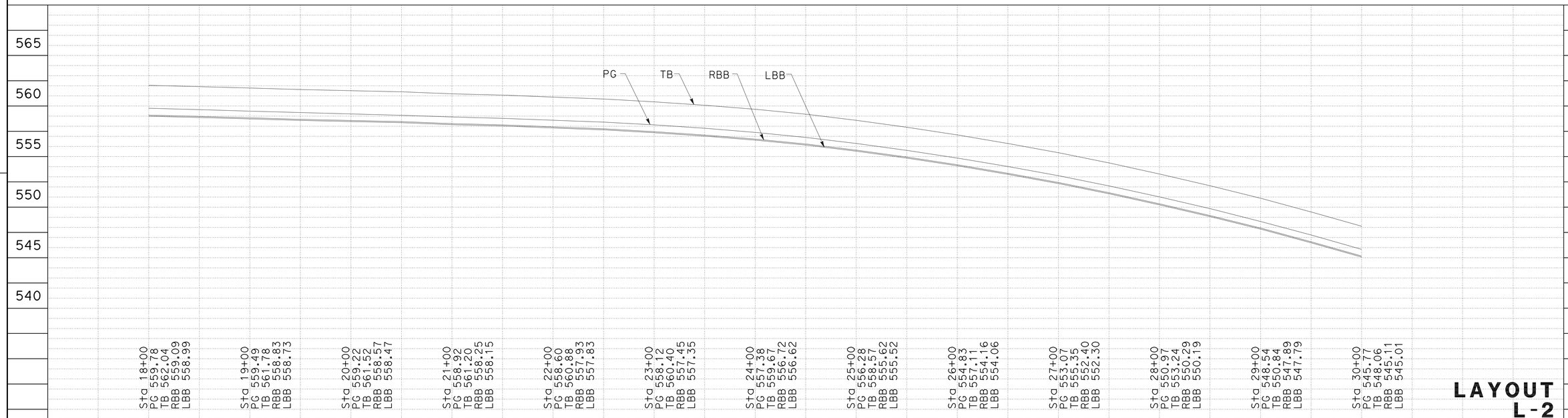

LAYOUT L-2

SCALE: Horiz 1" = 50'
Vert 1" = 10'

STATE OF CALIFORNIA - DEPARTMENT OF TRANSPORTATION
Caltrans®
DESIGN

FUNCTIONAL SUPERVISOR: S. M. WYATT

CALCULATED-DESIGNED BY: S. KIRKISH
CHECKED BY: P. VALADAO

REVISED BY
DATE REVISED

LAST REVISION DATE PLOTTED => 16-NOV-2009
TIME PLOTTED => 07:14
10-06-09

BORDER LAST REVISED 4/11/2008

RELATIVE BORDER SCALE IS IN INCHES 0 1 2 3

USERNAME => trmikesl
DGN FILE => 500650ea002.dgn

CU 06235

EA 006501

Dist	COUNTY	ROUTE	POST MILES TOTAL PROJECT	SHEET No.	TOTAL SHEETS
05	SB	101	82.2/84.3	6	42

REGISTERED CIVIL ENGINEER 10-06-2009 DATE

11-9-09
PLANS APPROVAL DATE

REGISTERED PROFESSIONAL ENGINEER P.F. Valadao No. 63987 Exp. 9-30-10 CIVIL STATE OF CALIFORNIA

THE STATE OF CALIFORNIA OR ITS OFFICERS OR AGENTS SHALL NOT BE RESPONSIBLE FOR THE ACCURACY OR COMPLETENESS OF SCANNED COPIES OF THIS PLAN SHEET.

NOTE:

FOR COMPLETE RIGHT OF WAY AND ACCURATE ACCESS DATA, SEE RIGHT OF WAY RECORD MAPS AT DISTRICT OFFICE.

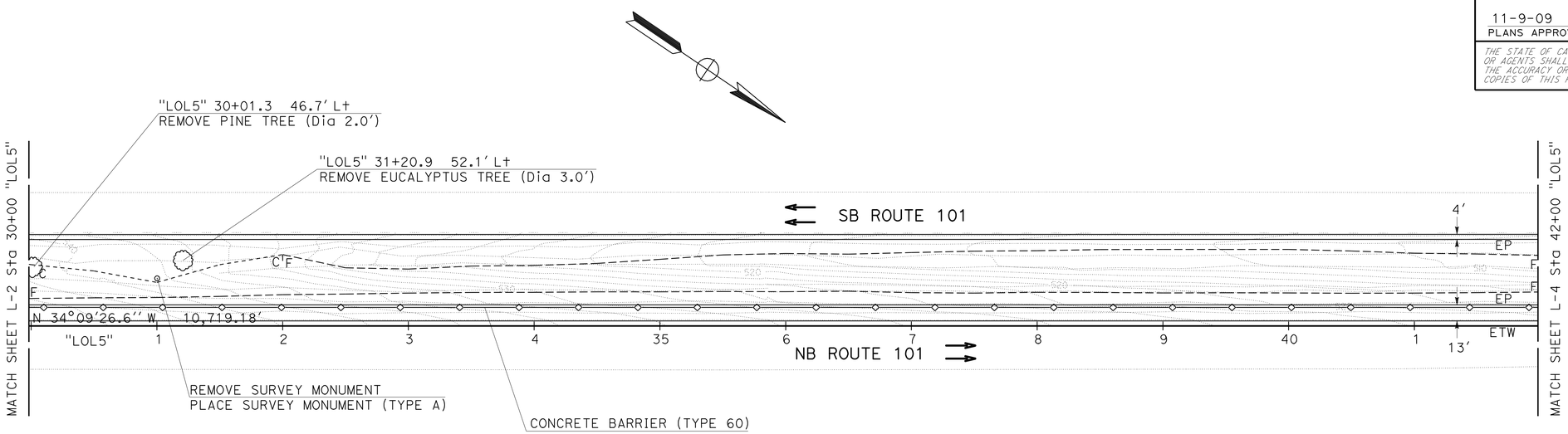

SCALE: 1"=50'

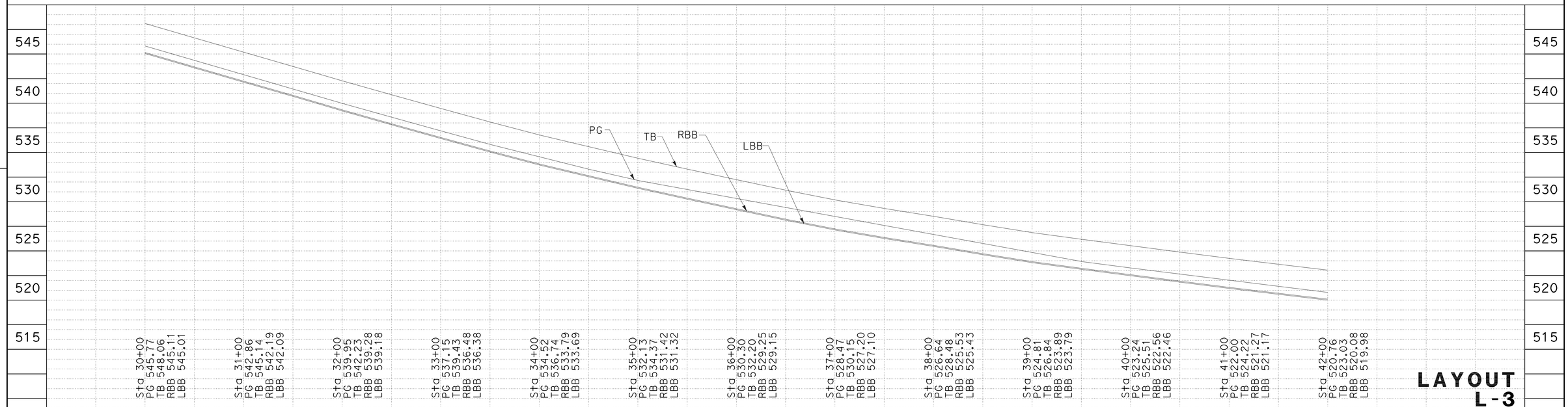

LAYOUT L-3

SCALE: Horiz 1" = 50'
Vert 1" = 10'

REVISED BY	DATE REVISED
S. KIRKISH	P. VALADAO
CALCULATED-DESIGNED BY	CHECKED BY
FUNCTIONAL SUPERVISOR	S. M. WYATT

STATE OF CALIFORNIA - DEPARTMENT OF TRANSPORTATION
Caltrans®
DESIGN

LAST REVISION 10-06-09 DATE PLOTTED => 16-NOV-2009 TIME PLOTTED => 07:14

Dist	COUNTY	ROUTE	POST MILES TOTAL PROJECT	SHEET No.	TOTAL SHEETS
05	SB	101	82.2/84.3	7	42

10-06-2009
REGISTERED CIVIL ENGINEER DATE

11-9-09
PLANS APPROVAL DATE

REGISTERED PROFESSIONAL ENGINEER P.F. Valadao No. 63987 Exp. 9-30-10 CIVIL STATE OF CALIFORNIA

THE STATE OF CALIFORNIA OR ITS OFFICERS OR AGENTS SHALL NOT BE RESPONSIBLE FOR THE ACCURACY OR COMPLETENESS OF SCANNED COPIES OF THIS PLAN SHEET.

NOTE:

FOR COMPLETE RIGHT OF WAY AND ACCURATE ACCESS DATA, SEE RIGHT OF WAY RECORD MAPS AT DISTRICT OFFICE.

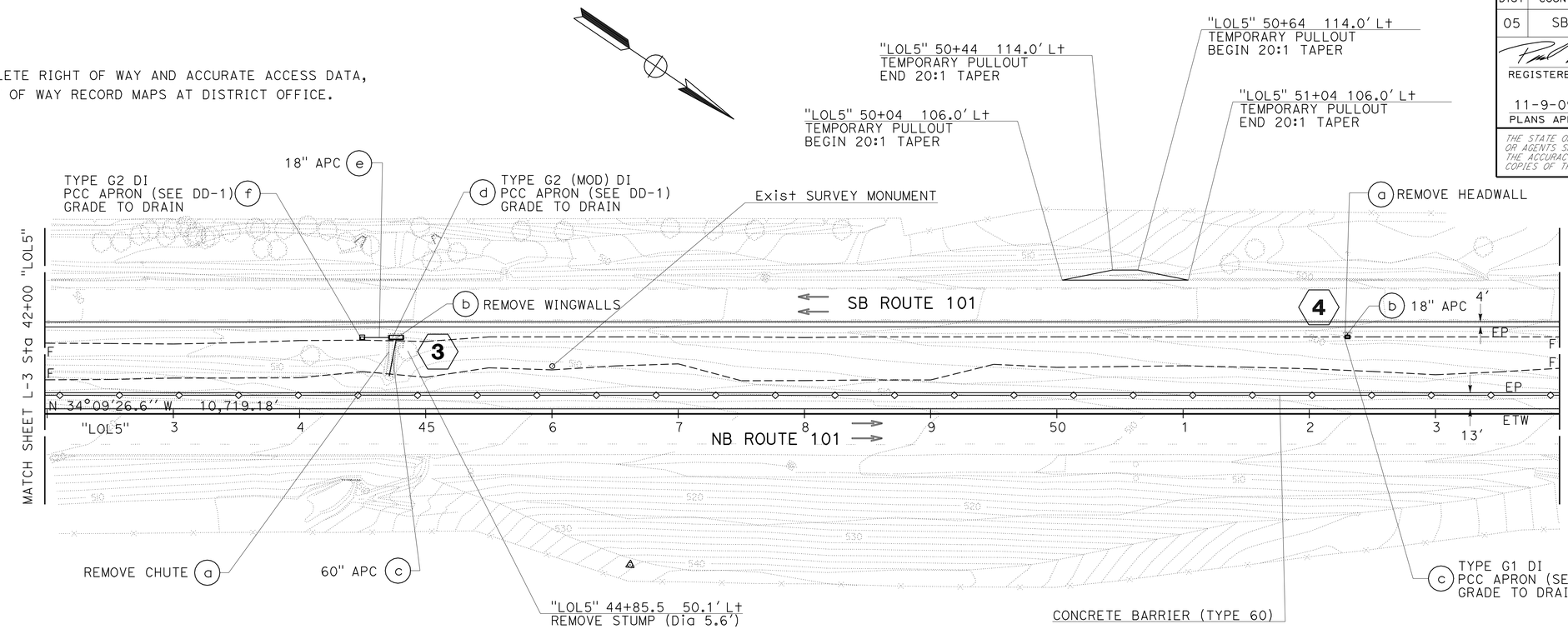

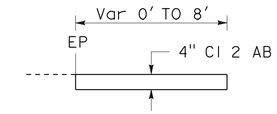

TEMPORARY PULLOUT
Sta 50+04 TO 51+04

SCALE: 1"=50'

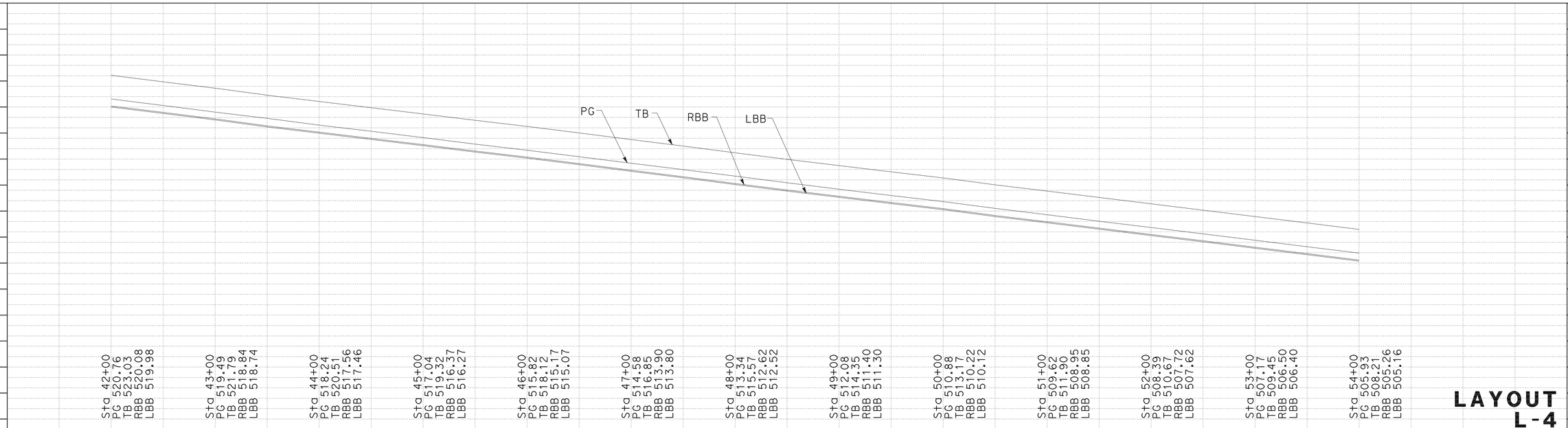

LAYOUT L-4

SCALE: Horiz 1" = 50'
Vert 1" = 10'

REVISED BY	DATE REVISED		
S. KIRKISH	P. VALADAO	CALCULATED-DESIGNED BY	CHECKED BY
FUNCTIONAL SUPERVISOR	S. M. WYATT		

STATE OF CALIFORNIA - DEPARTMENT OF TRANSPORTATION
Caltrans®
DESIGN

LAST REVISION 10-06-09 DATE PLOTTED => 16-NOV-2009 TIME PLOTTED => 07:14

Dist	COUNTY	ROUTE	POST MILES TOTAL PROJECT	SHEET No.	TOTAL SHEETS
05	SB	101	82.2/84.3	8	42

10-06-2009
REGISTERED CIVIL ENGINEER DATE

11-9-09
PLANS APPROVAL DATE

REGISTERED PROFESSIONAL ENGINEER P.F. Valadao No. 63987 Exp. 9-30-10 CIVIL STATE OF CALIFORNIA

THE STATE OF CALIFORNIA OR ITS OFFICERS OR AGENTS SHALL NOT BE RESPONSIBLE FOR THE ACCURACY OR COMPLETENESS OF SCANNED COPIES OF THIS PLAN SHEET.

NOTE:

FOR COMPLETE RIGHT OF WAY AND ACCURATE ACCESS DATA, SEE RIGHT OF WAY RECORD MAPS AT DISTRICT OFFICE.

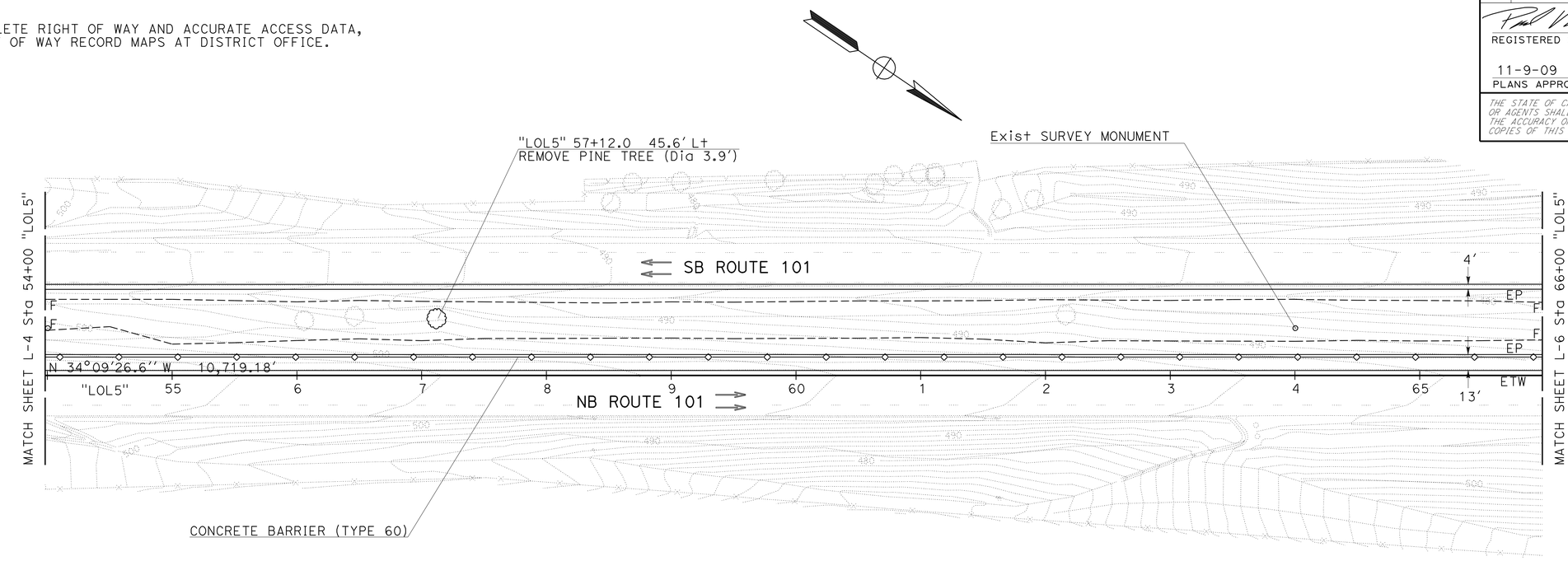

SCALE: 1"=50'

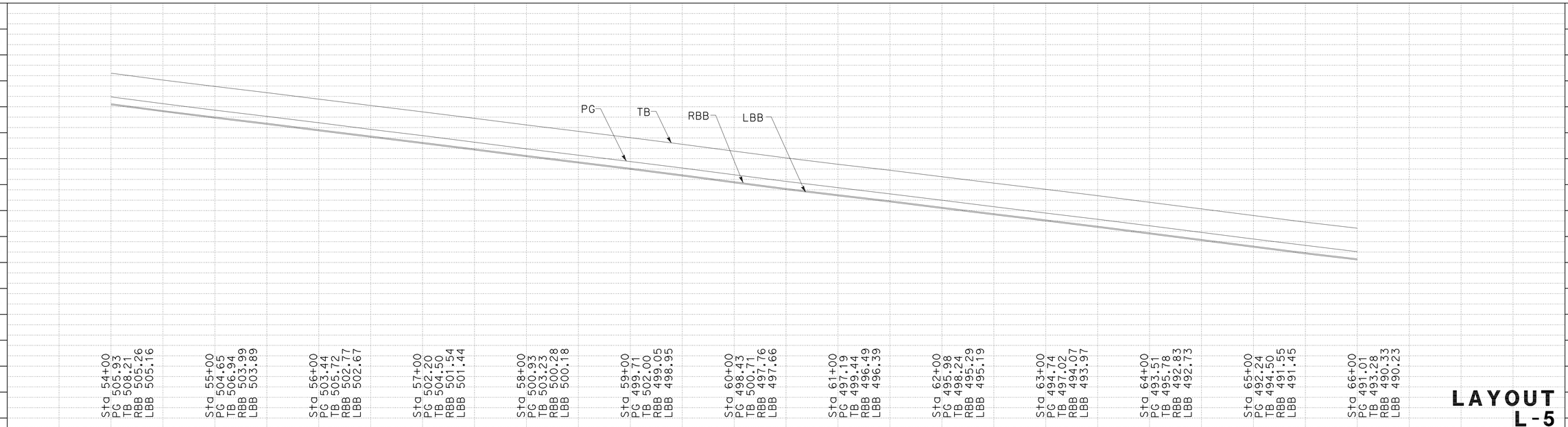

LAYOUT L-5

SCALE: Horiz 1" = 50'
Vert 1" = 10'

STATE OF CALIFORNIA - DEPARTMENT OF TRANSPORTATION
Caltrans®
DESIGN

FUNCTIONAL SUPERVISOR: S. M. WYATT
CALCULATED-DESIGNED BY: S. KIRKISH
CHECKED BY: P. VALADAO
REVISED BY
DATE REVISED

LAST REVISION DATE PLOTTED => 16-NOV-2009
TIME PLOTTED => 07:14
10-06-09

BORDER LAST REVISED 4/11/2008
RELATIVE BORDER SCALE IS IN INCHES 0 1 2 3
USERNAME => trmikesl
DGN FILE => 500650ea005.dgn
CU 06235
EA 006501

Dist	COUNTY	ROUTE	POST MILES TOTAL PROJECT	SHEET No.	TOTAL SHEETS
05	SB	101	82.2/84.3	9	42

REGISTERED CIVIL ENGINEER 10-06-2009 DATE

11-9-09
PLANS APPROVAL DATE

REGISTERED PROFESSIONAL ENGINEER P.F. Valadao No. 63987 Exp. 9-30-10 CIVIL STATE OF CALIFORNIA

THE STATE OF CALIFORNIA OR ITS OFFICERS OR AGENTS SHALL NOT BE RESPONSIBLE FOR THE ACCURACY OR COMPLETENESS OF SCANNED COPIES OF THIS PLAN SHEET.

NOTE:

FOR COMPLETE RIGHT OF WAY AND ACCURATE ACCESS DATA, SEE RIGHT OF WAY RECORD MAPS AT DISTRICT OFFICE.

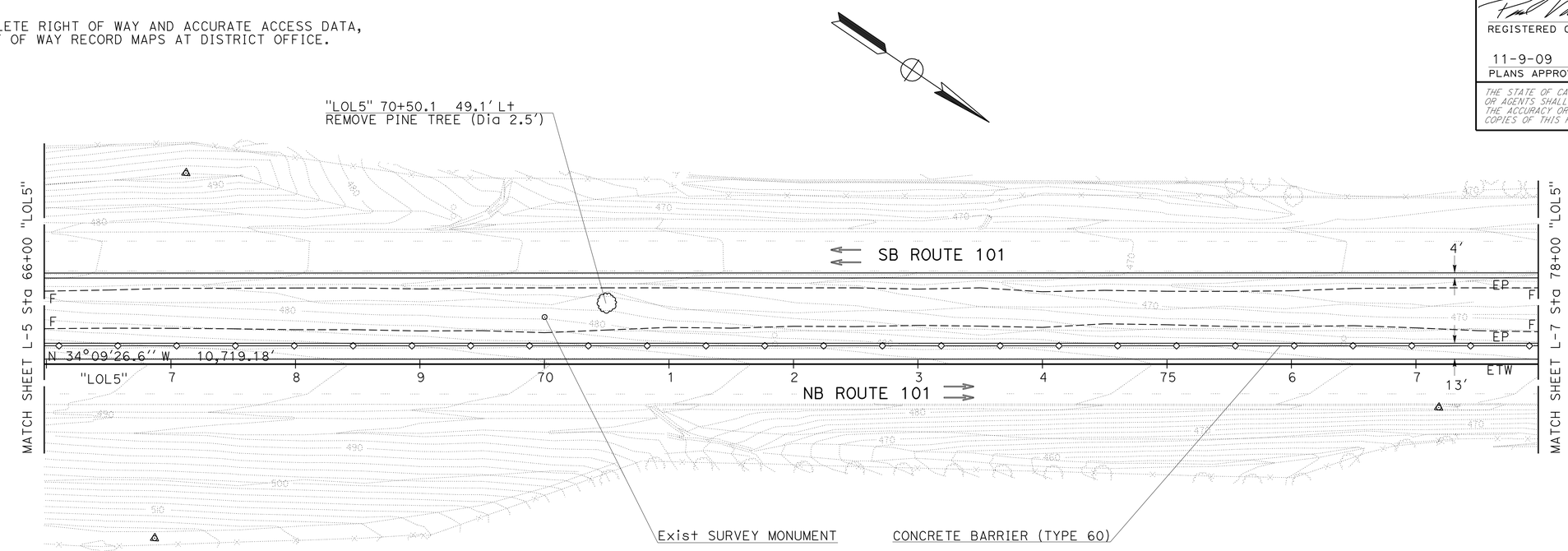

SCALE: 1"=50'

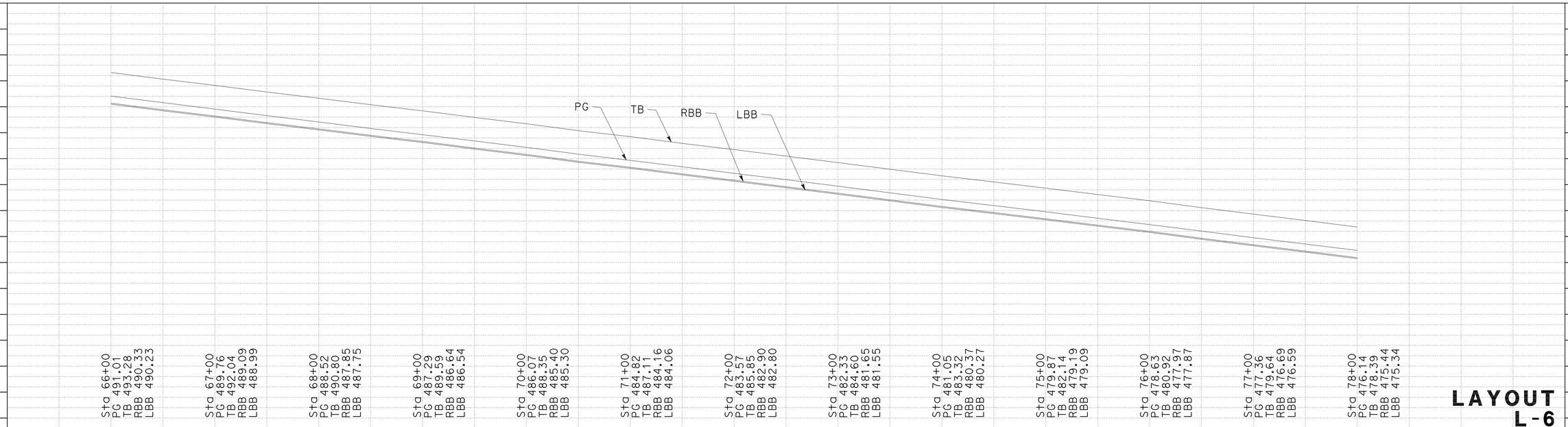

LAYOUT L-6

SCALE: Horiz 1" = 50'
Vert 1" = 10'

REVISED BY	S. KIRKISH
DATE REVISED	P. VALADAO
CALCULATED-DESIGNED BY	
CHECKED BY	
FUNCTIONAL SUPERVISOR	S. M. WYATT

STATE OF CALIFORNIA - DEPARTMENT OF TRANSPORTATION
Caltrans® DESIGN

LAST REVISION 10-06-09 DATE PLOTTED => 16-NOV-2009 TIME PLOTTED => 07:14

Dist	COUNTY	ROUTE	POST MILES TOTAL PROJECT	SHEET No.	TOTAL SHEETS
05	SB	101	82.2/84.3	10	42

10-06-2009
REGISTERED CIVIL ENGINEER DATE

11-9-09
PLANS APPROVAL DATE

REGISTERED PROFESSIONAL ENGINEER P.F. Valadao No. 63987 Exp. 9-30-10 CIVIL STATE OF CALIFORNIA

THE STATE OF CALIFORNIA OR ITS OFFICERS OR AGENTS SHALL NOT BE RESPONSIBLE FOR THE ACCURACY OR COMPLETENESS OF SCANNED COPIES OF THIS PLAN SHEET.

NOTE:

FOR COMPLETE RIGHT OF WAY AND ACCURATE ACCESS DATA, SEE RIGHT OF WAY RECORD MAPS AT DISTRICT OFFICE.

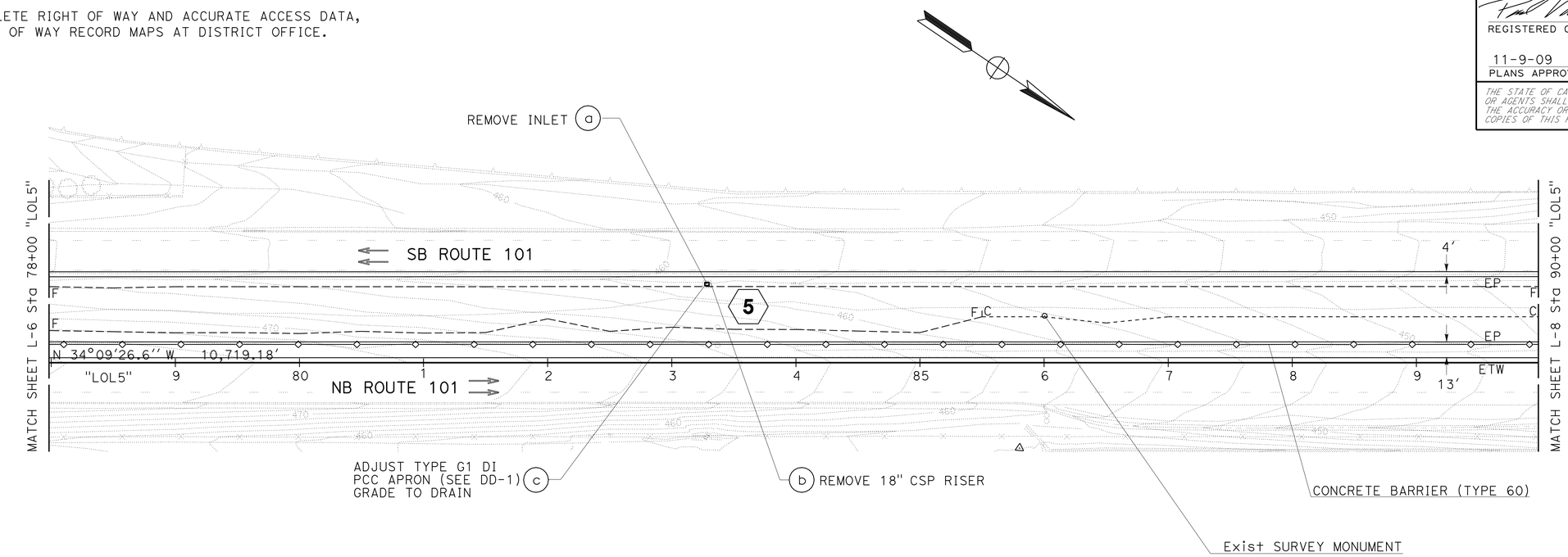

SCALE: 1"=50'

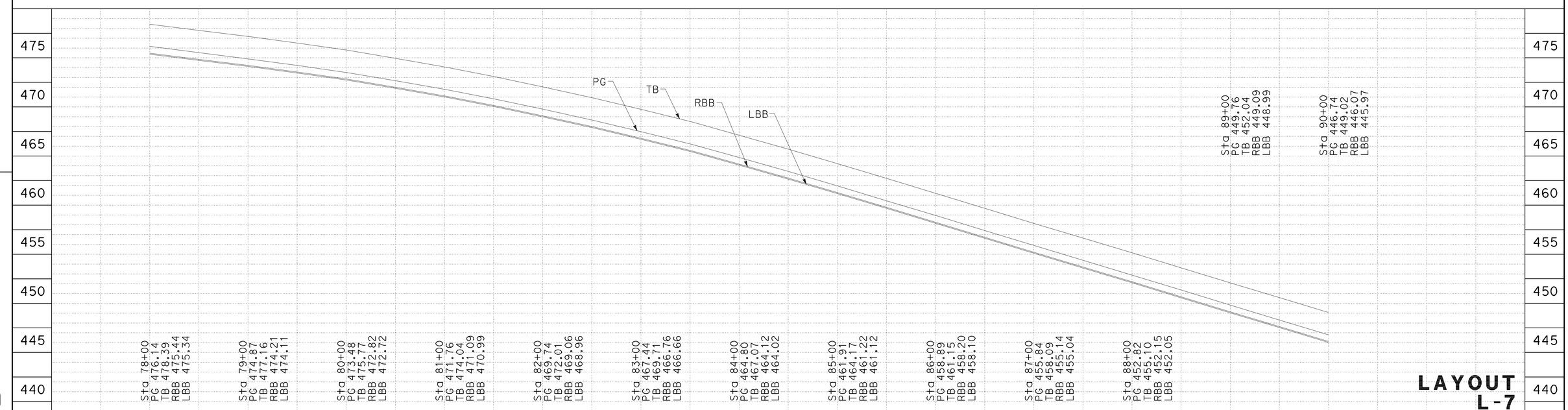

LAYOUT L-7

SCALE: Horiz 1" = 50'
Vert 1" = 10'

REVISED BY	DATE REVISED		
S. KIRKISH	P. VALADAO	CALCULATED-DESIGNED BY	CHECKED BY
FUNCTIONAL SUPERVISOR	S. M. WYATT		

STATE OF CALIFORNIA - DEPARTMENT OF TRANSPORTATION
Caltrans®
DESIGN

LAST REVISION 10-06-09 DATE PLOTTED => 16-NOV-2009 TIME PLOTTED => 07:14

Dist	COUNTY	ROUTE	POST MILES TOTAL PROJECT	SHEET No.	TOTAL SHEETS
05	SB	101	82.2/84.3	11	42

REGISTERED CIVIL ENGINEER DATE 10-06-2009

11-9-09
PLANS APPROVAL DATE

REGISTERED PROFESSIONAL ENGINEER P.F. Valadao No. 63987 Exp. 9-30-10 CIVIL STATE OF CALIFORNIA

THE STATE OF CALIFORNIA OR ITS OFFICERS OR AGENTS SHALL NOT BE RESPONSIBLE FOR THE ACCURACY OR COMPLETENESS OF SCANNED COPIES OF THIS PLAN SHEET.

NOTE:

FOR COMPLETE RIGHT OF WAY AND ACCURATE ACCESS DATA, SEE RIGHT OF WAY RECORD MAPS AT DISTRICT OFFICE.

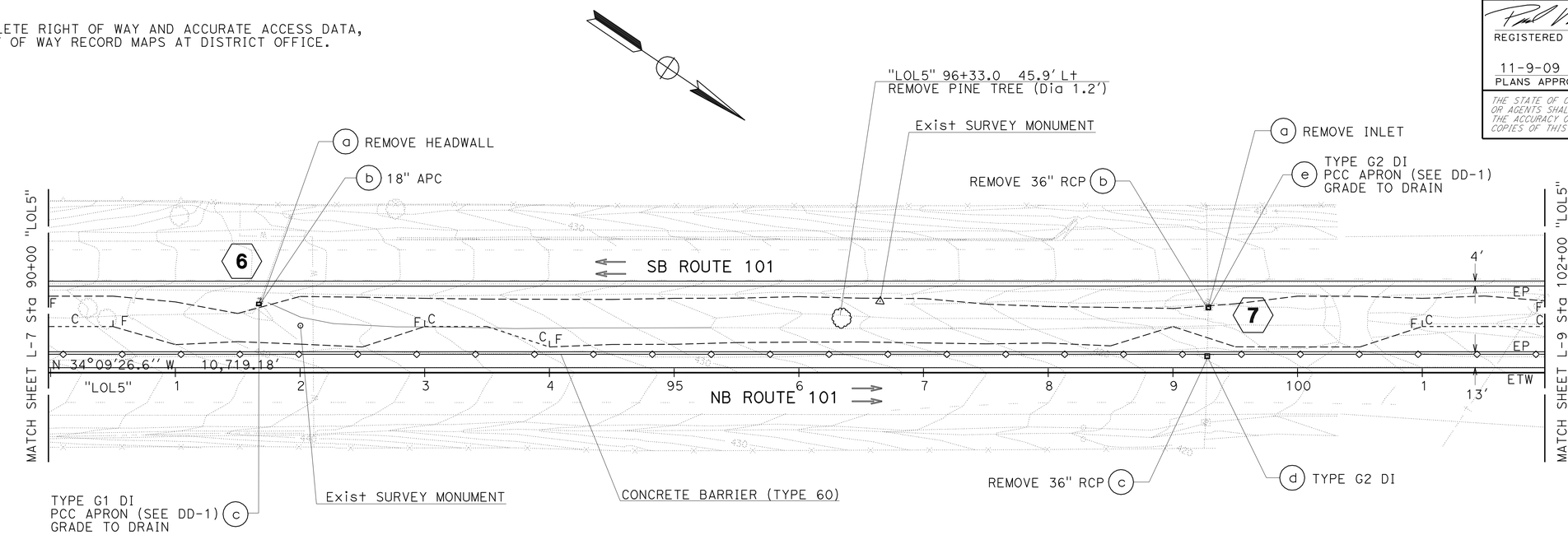

SCALE: 1"=50'

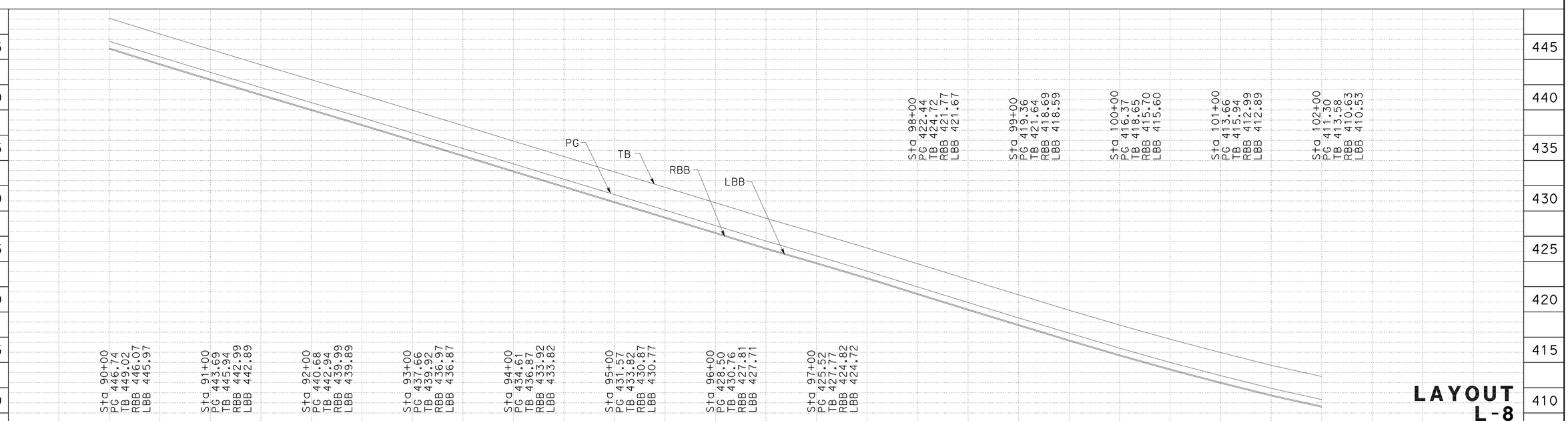

LAYOUT L-8

SCALE: Horiz 1" = 50'
Vert 1" = 10'

STATE OF CALIFORNIA - DEPARTMENT OF TRANSPORTATION
Caltrans®
DESIGN

FUNCTIONAL SUPERVISOR: S. M. WYATT
CALCULATED-DESIGNED BY: S. KIRKISH
CHECKED BY: P. VALADAO
REVISED BY
DATE REVISED

LAST REVISION 10-06-09
DATE PLOTTED => 16-NOV-2009
TIME PLOTTED => 07:15

Dist	COUNTY	ROUTE	POST MILES TOTAL PROJECT	SHEET No.	TOTAL SHEETS
05	SB	101	82.2/84.3	12	42

10-06-2009
REGISTERED CIVIL ENGINEER DATE

11-9-09
PLANS APPROVAL DATE

REGISTERED PROFESSIONAL ENGINEER P.F. Valadao No. 63987 Exp. 9-30-10 CIVIL STATE OF CALIFORNIA

THE STATE OF CALIFORNIA OR ITS OFFICERS OR AGENTS SHALL NOT BE RESPONSIBLE FOR THE ACCURACY OR COMPLETENESS OF SCANNED COPIES OF THIS PLAN SHEET.

NOTE:

FOR COMPLETE RIGHT OF WAY AND ACCURATE ACCESS DATA, SEE RIGHT OF WAY RECORD MAPS AT DISTRICT OFFICE.

CURVE DATA

No.	R	Δ	T	L
1	4012.25′	36°2′45″	1305.44′	2524.19′

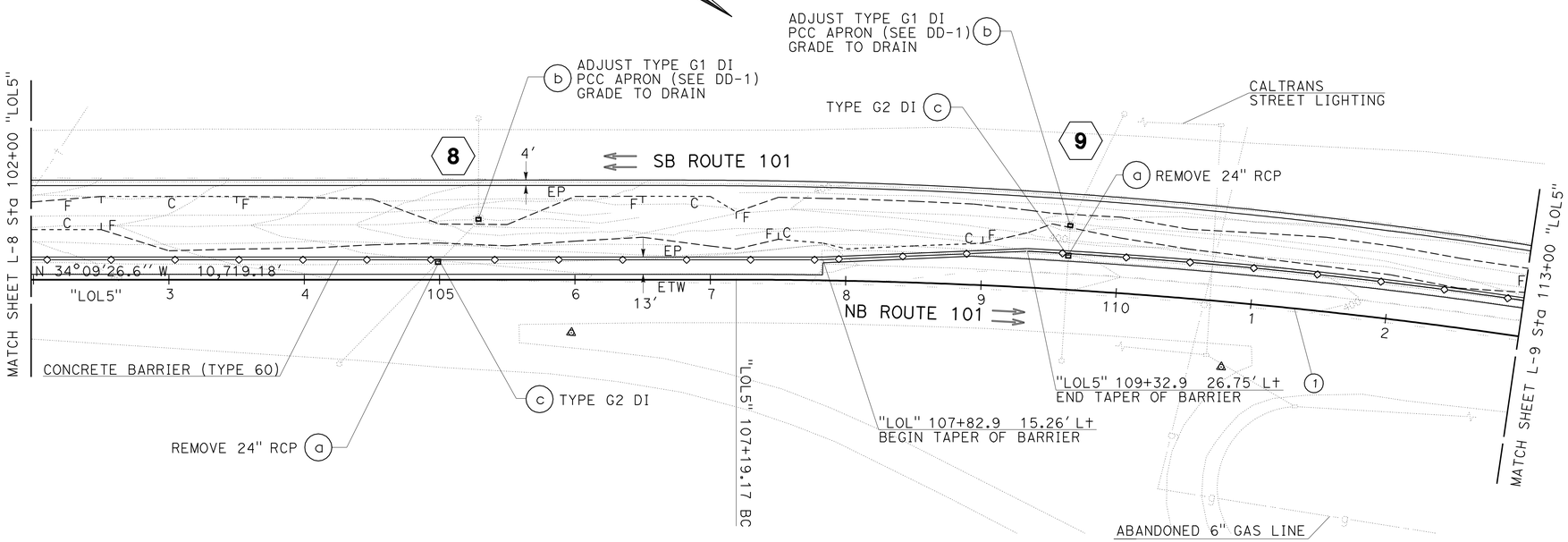

SCALE: 1"=50′

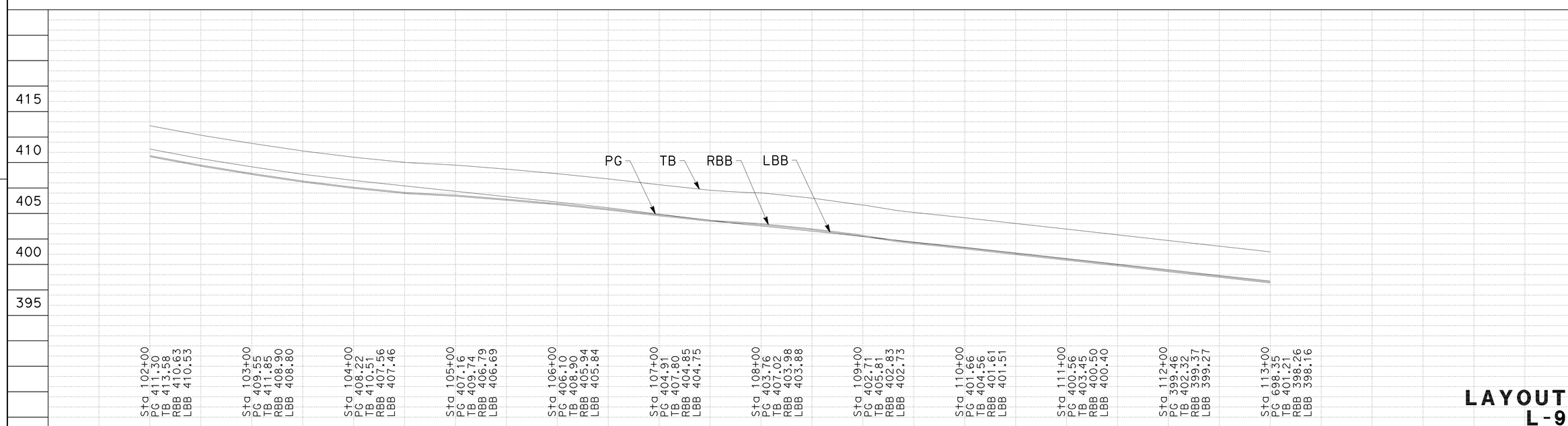

LAYOUT L-9

SCALE: Horiz 1" = 50′
Vert 1" = 10′

STATE OF CALIFORNIA - DEPARTMENT OF TRANSPORTATION
Caltrans
DESIGN

FUNCTIONAL SUPERVISOR: S. M. WYATT
CALCULATED-DESIGNED BY: S. KIRKISH
CHECKED BY: P. VALADAO
REVISED BY
DATE REVISED

LAST REVISION DATE PLOTTED => 16-NOV-2009
10-06-09 TIME PLOTTED => 07:15

Dist	COUNTY	ROUTE	POST MILES TOTAL PROJECT	SHEET No.	TOTAL SHEETS
05	SB	101	82.2/84.3	13	42

10-06-2009
REGISTERED CIVIL ENGINEER DATE

11-9-09
PLANS APPROVAL DATE

REGISTERED PROFESSIONAL ENGINEER P.F. Valadao No. 63987 Exp. 9-30-10 CIVIL STATE OF CALIFORNIA

THE STATE OF CALIFORNIA OR ITS OFFICERS OR AGENTS SHALL NOT BE RESPONSIBLE FOR THE ACCURACY OR COMPLETENESS OF SCANNED COPIES OF THIS PLAN SHEET.

NOTE:

FOR COMPLETE RIGHT OF WAY AND ACCURATE ACCESS DATA, SEE RIGHT OF WAY RECORD MAPS AT DISTRICT OFFICE.

CURVE DATA

No.	R	Δ	T	L
1	4012.25′	36°2′45″	1305.44′	2524.19′

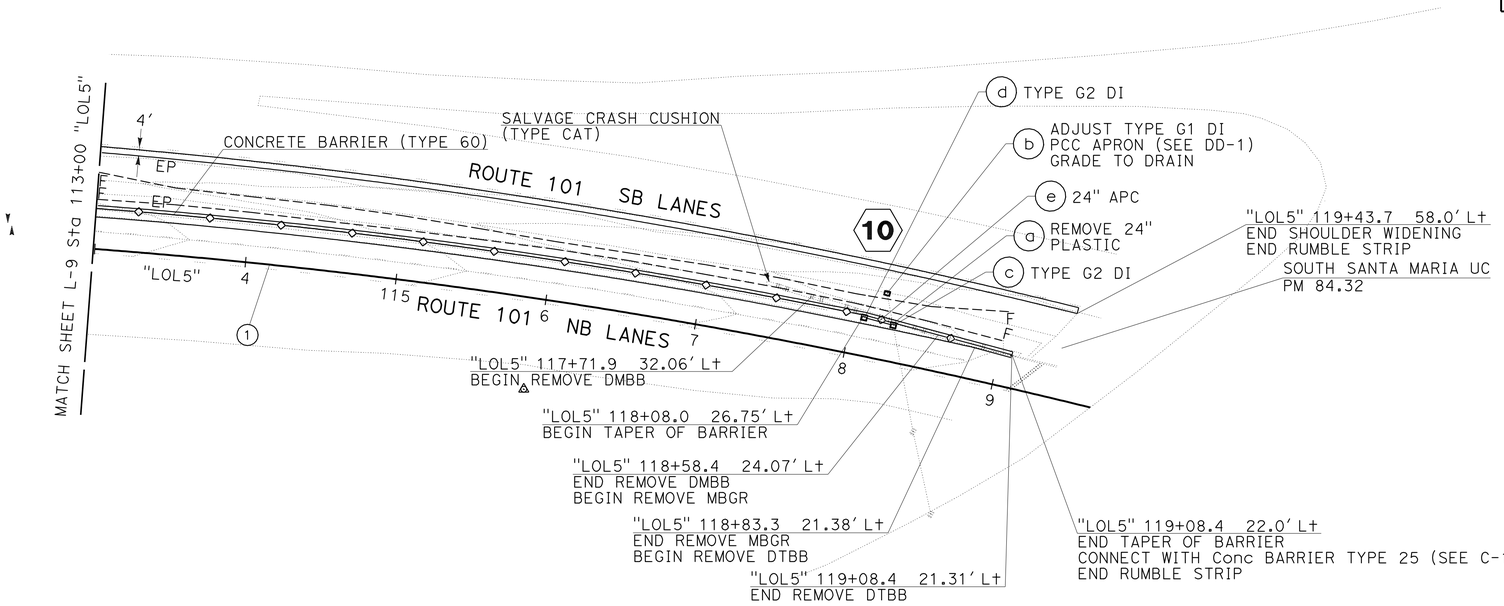

SCALE: 1"=50′

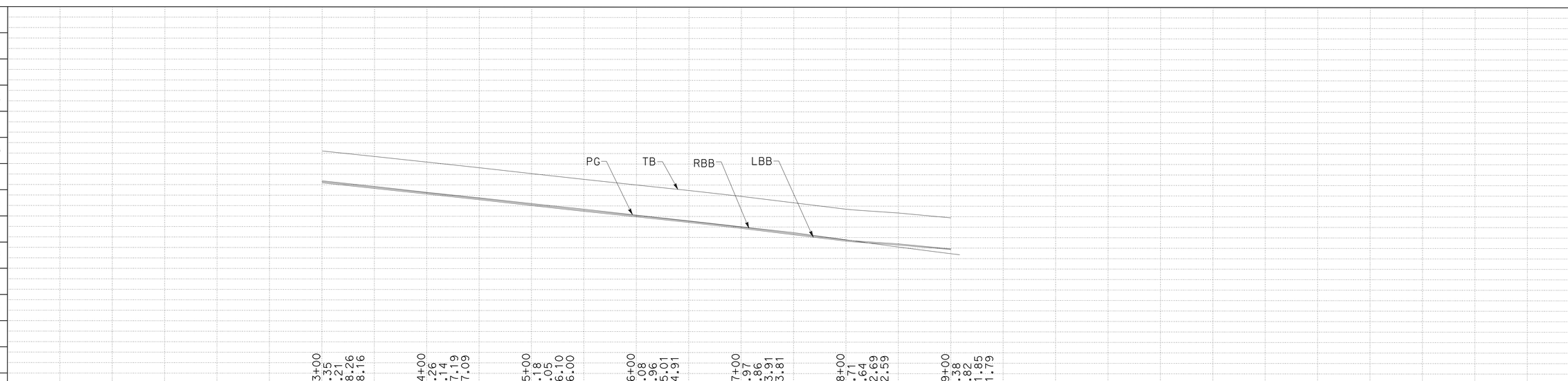

LAYOUT L-10

SCALE: Horiz 1" = 50′
Vert 1" = 10′

REVISED BY	DATE REVISED

CALCULATED-DESIGNED BY: S. KIRKISH
CHECKED BY: P. VALADAO
FUNCTIONAL SUPERVISOR: S. M. WYATT

STATE OF CALIFORNIA - DEPARTMENT OF TRANSPORTATION
Caltrans
DESIGN

LAST REVISION 10-06-09
DATE PLOTTED => 16-NOV-2009
TIME PLOTTED => 07:15

Dist	COUNTY	ROUTE	POST MILES TOTAL PROJECT	SHEET No.	TOTAL SHEETS
05	SB	101	82.2/84.3	14	42

REGISTERED CIVIL ENGINEER 10-06-2009 DATE

PLANS APPROVAL DATE 11-9-09

REGISTERED PROFESSIONAL ENGINEER P.F. Valadao No. 63987 Exp. 9-30-10 CIVIL STATE OF CALIFORNIA

THE STATE OF CALIFORNIA OR ITS OFFICERS OR AGENTS SHALL NOT BE RESPONSIBLE FOR THE ACCURACY OR COMPLETENESS OF SCANNED COPIES OF THIS PLAN SHEET.

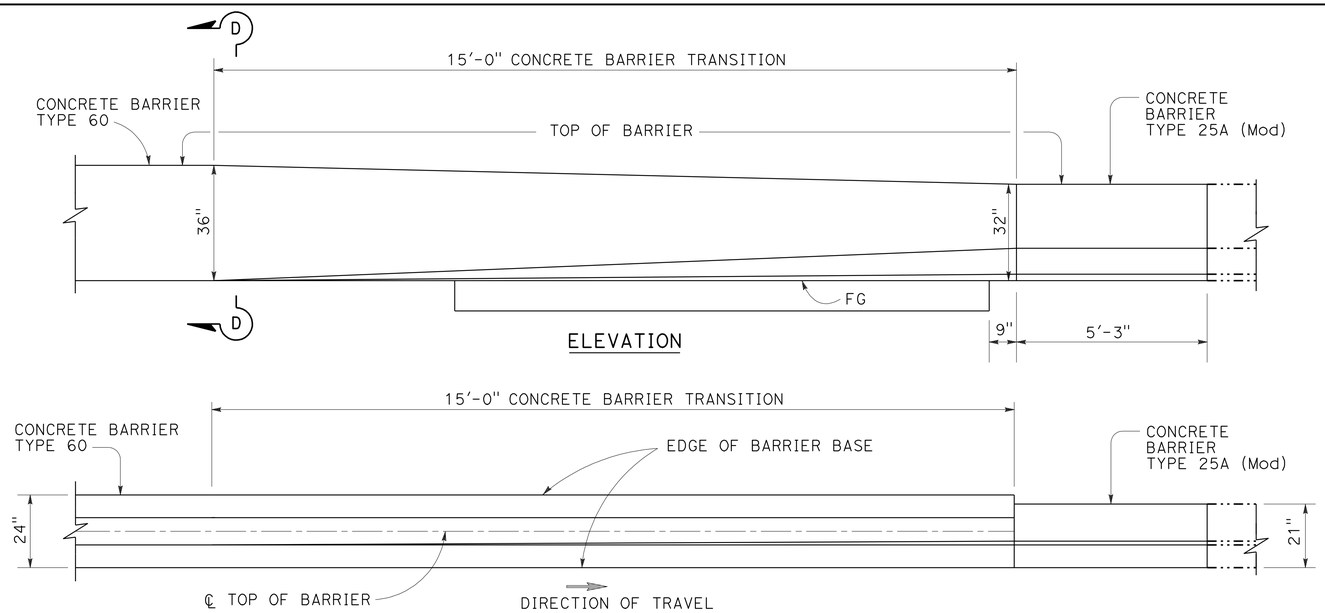

TRANSITION CONCRETE BARRIER TYPE 60 TO CONCRETE BARRIER TYPE 25

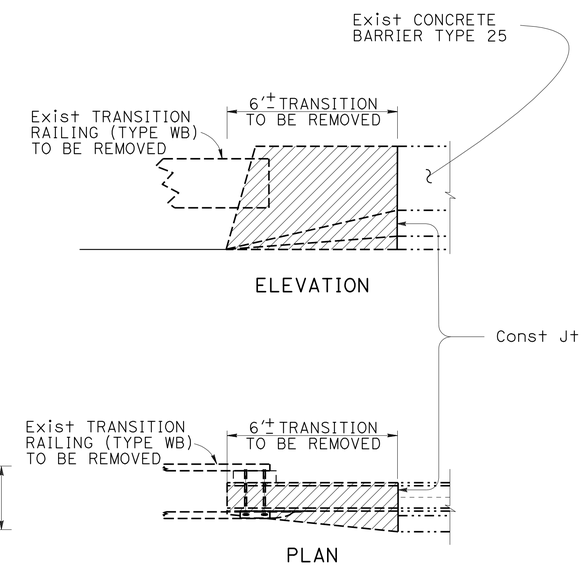

BARRIER REMOVAL

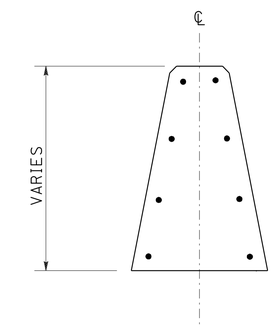

SECTION D-D

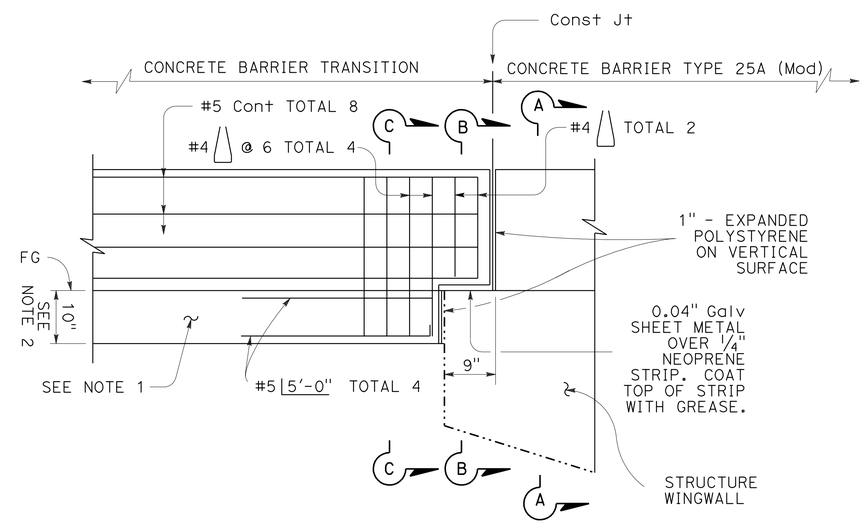

CONCRETE BARRIER TYPE 60 CONNECTION TO STRUCTURE

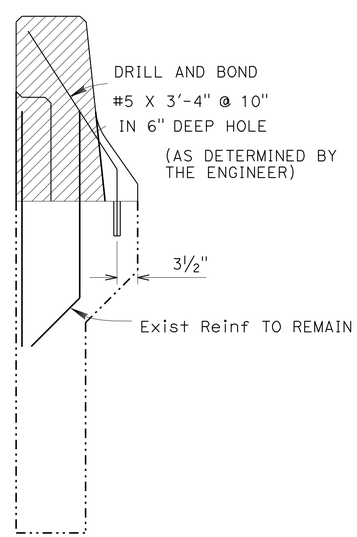

SECTION A-A

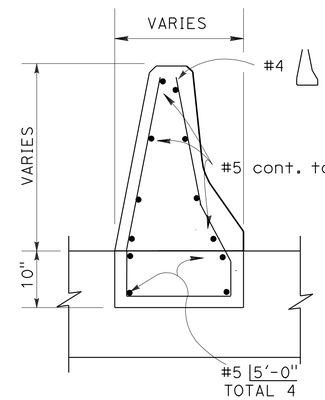

SECTION C-C

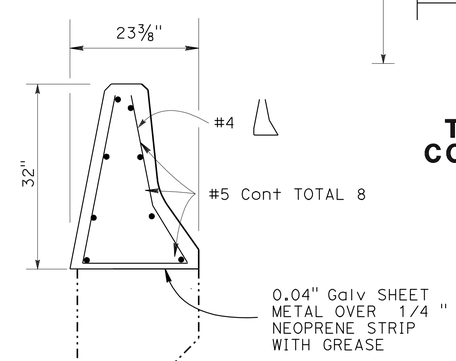

SECTION B-B

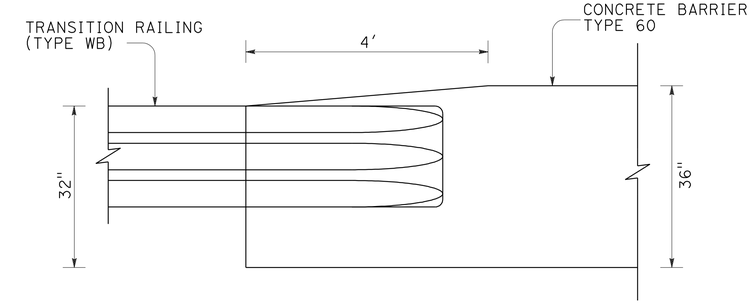

TRANSITION RAILING (TYPE WB) TO CONCRETE BARRIER (TYPE 60) DETAIL

NOTES:

1. FOOTING MONOLITHIC OR DOWELED WITH 2-#8 x 8" @ 2'-0".
2. 10" CONCRETE BARRIER FOOTING EXTENDS 10' BACK FROM STRUCTURE.
3. FOR DETAILS NOT SHOWN SEE STANDARD PLAN B11-53 AND A76A.
4. SOUTH SANTA MARIA UC Br No. 51-0071R.

LEGEND

CONCRETE REMOVAL

CONSTRUCTION DETAILS

NO SCALE

C-1

STATE OF CALIFORNIA - DEPARTMENT OF TRANSPORTATION

DESIGN

FUNCTIONAL SUPERVISOR S. M. WYATT

CALCULATED-DESIGNED BY S. KIRKISH

CHECKED BY P. VALADAO

REVISED BY

DATE REVISED

LAST REVISION 10-06-09

DATE PLOTTED => 16-NOV-2009

TIME PLOTTED => 07:15

Dist	COUNTY	ROUTE	POST MILES TOTAL PROJECT	SHEET No.	TOTAL SHEETS
05	SB	101	82.2/84.3	15	42

REGISTERED CIVIL ENGINEER 10-06-2009 DATE

11-9-09
PLANS APPROVAL DATE

REGISTERED PROFESSIONAL ENGINEER P.F. Valadao No. 63987 Exp. 9-30-10 CIVIL STATE OF CALIFORNIA

THE STATE OF CALIFORNIA OR ITS OFFICERS OR AGENTS SHALL NOT BE RESPONSIBLE FOR THE ACCURACY OR COMPLETENESS OF SCANNED COPIES OF THIS PLAN SHEET.

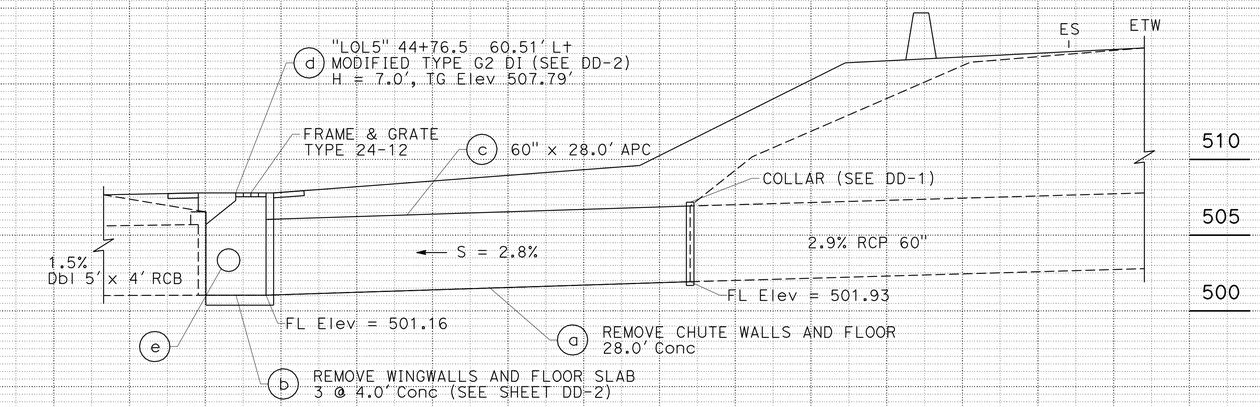

DRAINAGE SYSTEM No. 3
Sta "LOL5" 44+49.6 TO 44+76.5

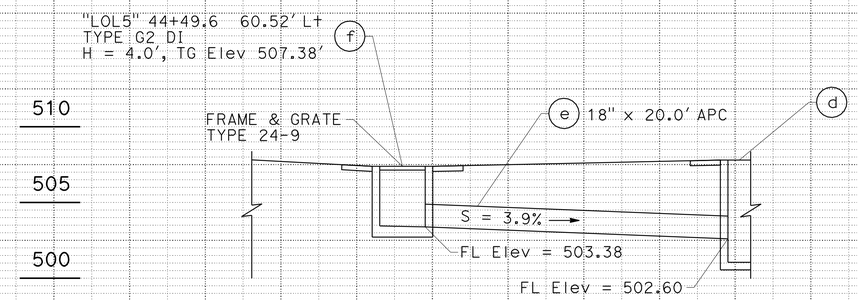

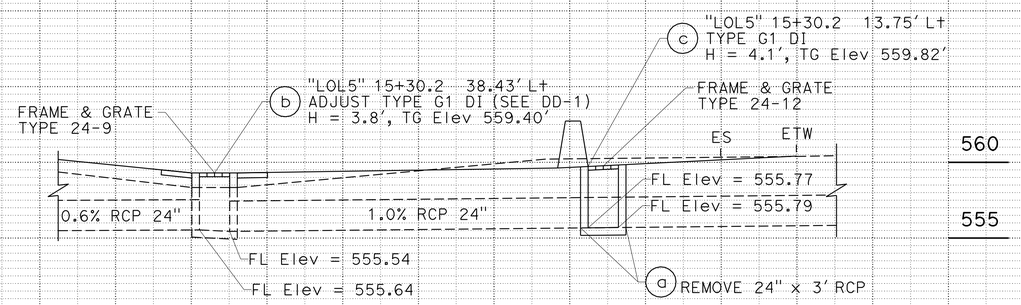

DRAINAGE SYSTEM No. 2
Sta "LOL5" 15+30.2

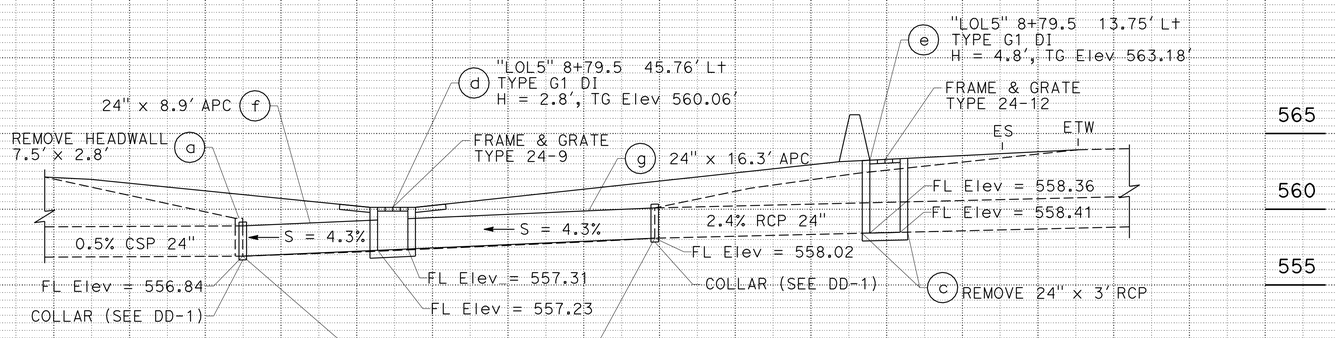

DRAINAGE SYSTEM No. 1
Sta "LOL5" 8+79.5

THIS PLAN ACCURATE FOR DRAINAGE WORK ONLY

DRAINAGE PROFILES
DP-1

SCALE: Horiz 1" = 20'
Vert 1" = 20'

REVISED BY | DATE REVISED
S. KIRKISH | P. VALADAO
CALCULATED-DESIGNED BY | CHECKED BY
FUNCTIONAL SUPERVISOR: S. M. WYATT

STATE OF CALIFORNIA - DEPARTMENT OF TRANSPORTATION
Caltrans
DESIGN

LAST REVISION | DATE PLOTTED => 16-NOV-2009 | TIME PLOTTED => 07:15
10-06-09

Dist	COUNTY	ROUTE	POST MILES TOTAL PROJECT	SHEET No.	TOTAL SHEETS
05	SB	101	82.2/84.3	16	42

REGISTERED CIVIL ENGINEER DATE 10-06-2009

PLANS APPROVAL DATE 11-9-09

REGISTERED PROFESSIONAL ENGINEER P.F. Valadao No. 63987 Exp. 9-30-10 CIVIL STATE OF CALIFORNIA

THE STATE OF CALIFORNIA OR ITS OFFICERS OR AGENTS SHALL NOT BE RESPONSIBLE FOR THE ACCURACY OR COMPLETENESS OF SCANNED COPIES OF THIS PLAN SHEET.

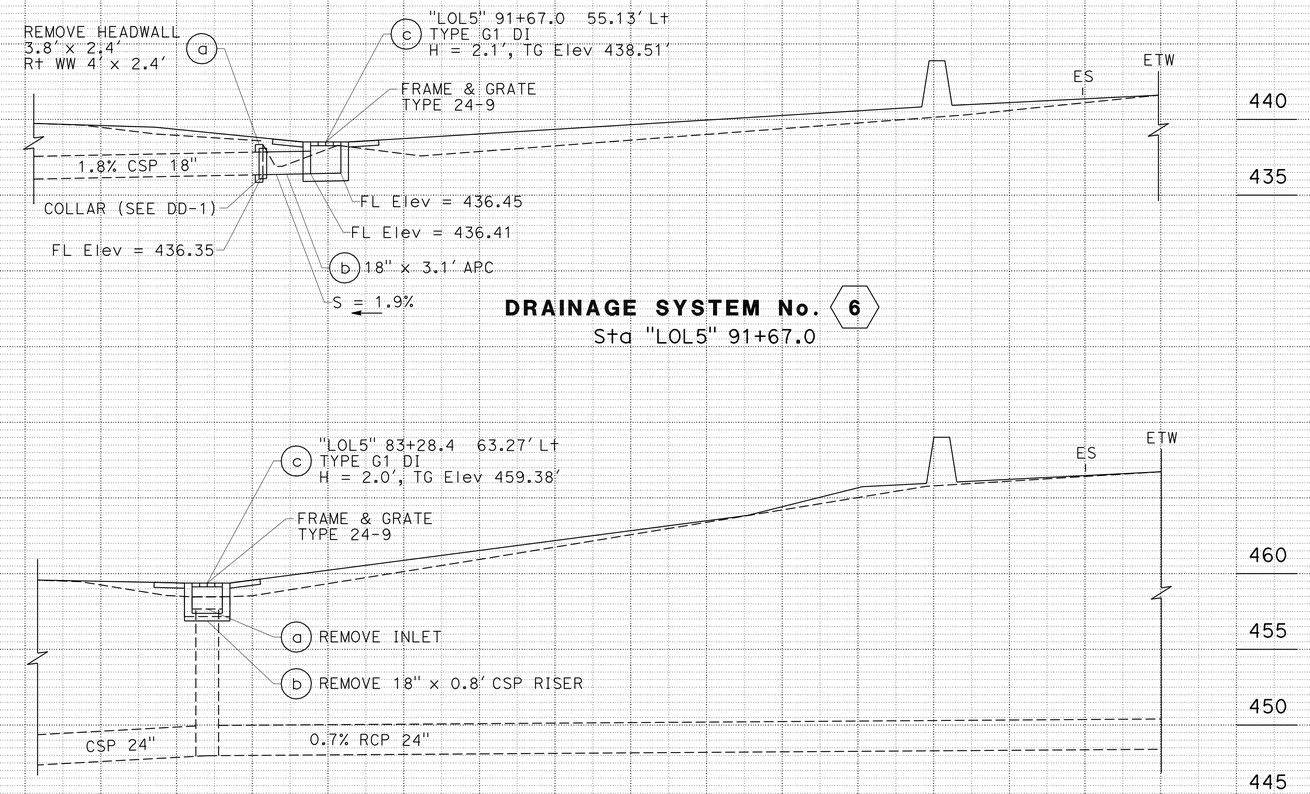

DRAINAGE SYSTEM No. 6
Sta "LOL5" 91+67.0

DRAINAGE SYSTEM No. 5
Sta "LOL5" 83+28.4

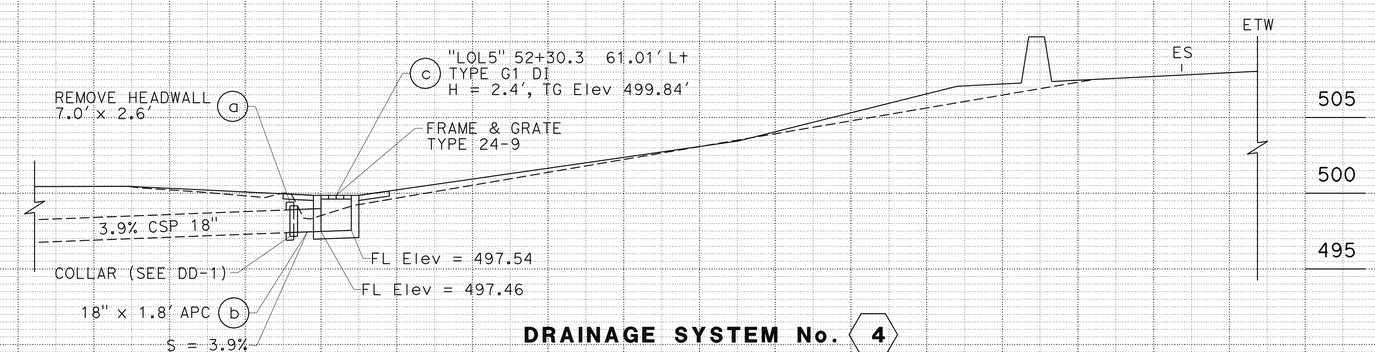

DRAINAGE SYSTEM No. 4
Sta "LOL5" 52+30.3

THIS PLAN ACCURATE FOR DRAINAGE WORK ONLY

DRAINAGE PROFILES
DP-2

SCALE: Horiz 1" = 20'
Vert 1" = 20'

STATE OF CALIFORNIA - DEPARTMENT OF TRANSPORTATION
Caltrans
DESIGN

FUNCTIONAL SUPERVISOR: S. M. WYATT
CALCULATED-DESIGNED BY: S. KIRKISH
CHECKED BY: P. VALADAO
REVISED BY
DATE REVISED

LAST REVISION 10-06-09
DATE PLOTTED => 16-NOV-2009
TIME PLOTTED => 07:15

Dist	COUNTY	ROUTE	POST MILES TOTAL PROJECT	SHEET No.	TOTAL SHEETS
05	SB	101	82.2/84.3	17	42

REGISTERED CIVIL ENGINEER 10-06-2009 DATE

11-9-09
PLANS APPROVAL DATE

REGISTERED PROFESSIONAL ENGINEER P.F. Valadao No. 63987 Exp. 9-30-10 CIVIL STATE OF CALIFORNIA

THE STATE OF CALIFORNIA OR ITS OFFICERS OR AGENTS SHALL NOT BE RESPONSIBLE FOR THE ACCURACY OR COMPLETENESS OF SCANNED COPIES OF THIS PLAN SHEET.

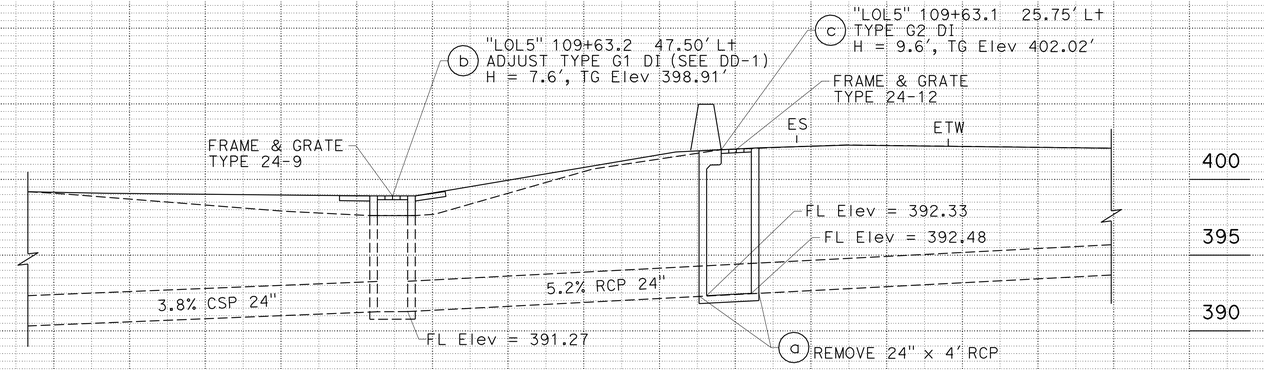

DRAINAGE SYSTEM No. 9

Sta "LOL5" 109+63.1 TO 109+63.2

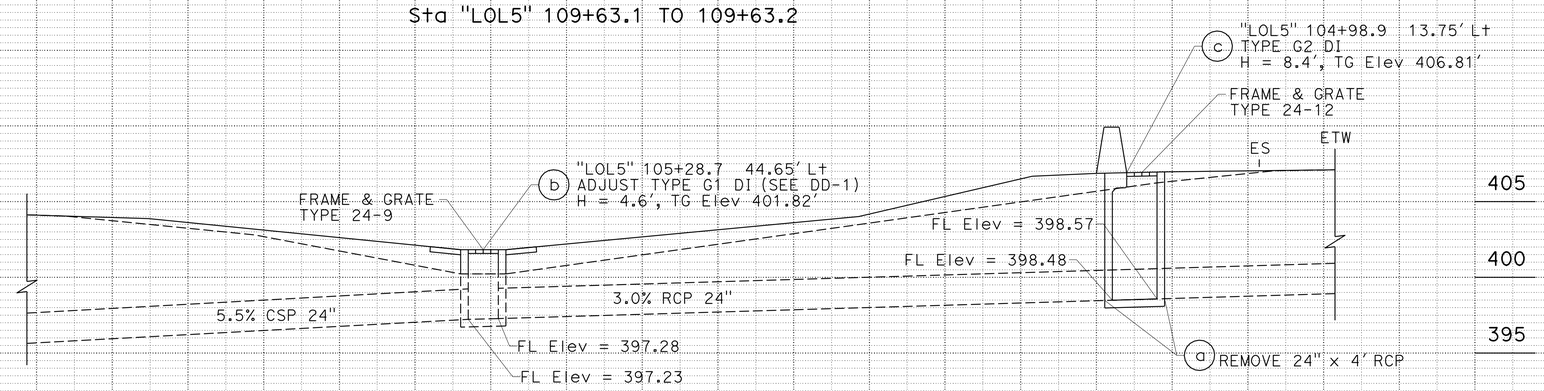

DRAINAGE SYSTEM No. 8

Sta "LOL5" 104+98.9 TO 105+28.7

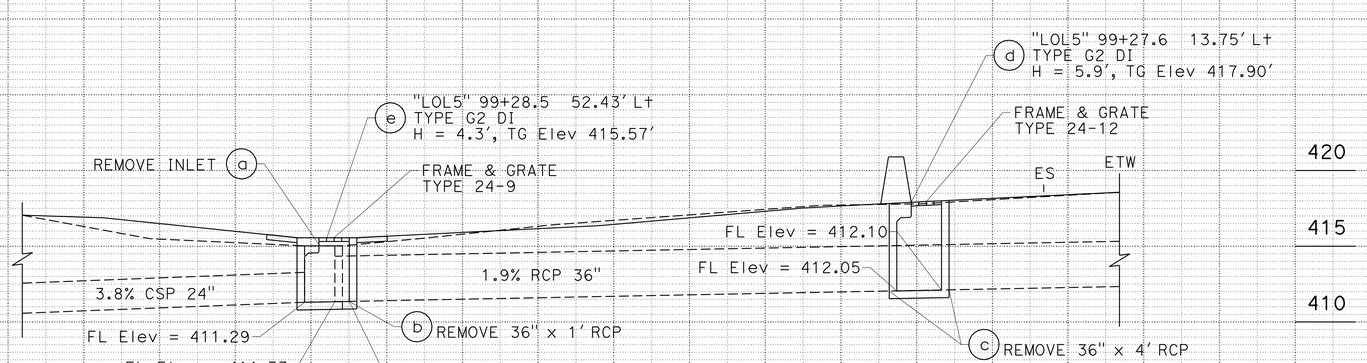

DRAINAGE SYSTEM No. 7

Sta "LOL5" 99+27.6 to 99+28.5

THIS PLAN ACCURATE FOR DRAINAGE WORK ONLY

DRAINAGE PROFILES

SCALE: Horiz 1" = 20'
Vert 1" = 20'

DP-3

STATE OF CALIFORNIA - DEPARTMENT OF TRANSPORTATION
Caltrans
DESIGN

FUNCTIONAL SUPERVISOR: S. M. WYATT
CALCULATED-DESIGNED BY: S. KIRKISH
CHECKED BY: P. VALADAO
REVISED BY
DATE REVISED

LAST REVISION DATE PLOTTED => 16-NOV-2009
TIME PLOTTED => 07:16
10-06-09

Dist	COUNTY	ROUTE	POST MILES TOTAL PROJECT	SHEET No.	TOTAL SHEETS
05	SB	101	82.2/84.3	18	42

10-06-2009
REGISTERED CIVIL ENGINEER DATE

11-9-09
PLANS APPROVAL DATE

REGISTERED PROFESSIONAL ENGINEER P.F. Valadao No. 63987 Exp. 9-30-10 CIVIL STATE OF CALIFORNIA

THE STATE OF CALIFORNIA OR ITS OFFICERS OR AGENTS SHALL NOT BE RESPONSIBLE FOR THE ACCURACY OR COMPLETENESS OF SCANNED COPIES OF THIS PLAN SHEET.

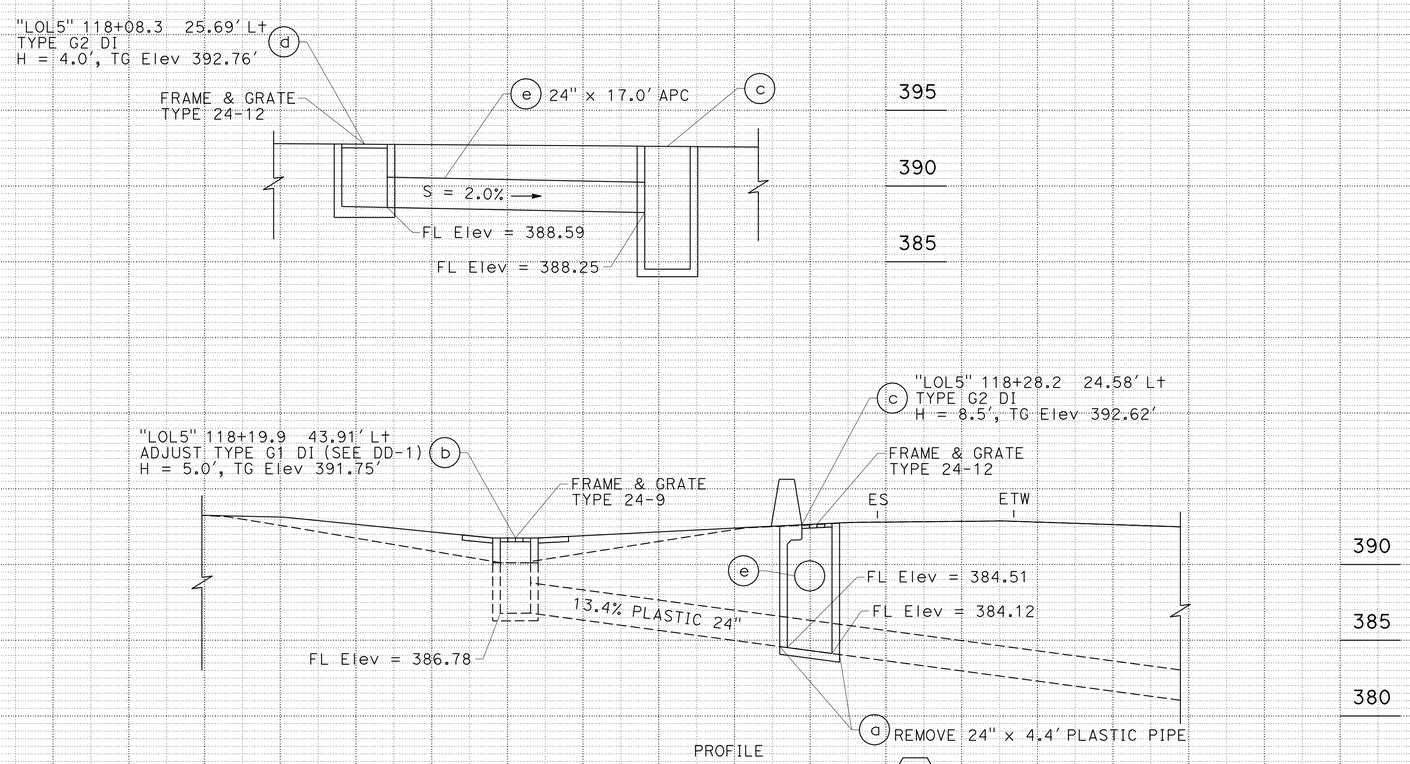

PROFILE

DRAINAGE SYSTEM No. 10

Sta "LOL5" 118+19.9 to 118+28.2

THIS PLAN ACCURATE FOR DRAINAGE WORK ONLY

DRAINAGE PROFILES

SCALE: Horiz 1" = 20'
Vert 1" = 20'

DP-4

STATE OF CALIFORNIA - DEPARTMENT OF TRANSPORTATION
DESIGN
Caltrans

FUNCTIONAL SUPERVISOR: S. M. WYATT
CALCULATED-DESIGNED BY: S. KIRKISH
CHECKED BY: P. VALADAO
REVISED BY
DATE REVISED

LAST REVISION DATE PLOTTED => 16-NOV-2009
TIME PLOTTED => 07:16
10-06-09

Dist	COUNTY	ROUTE	POST MILES TOTAL PROJECT	SHEET No.	TOTAL SHEETS
05	SB	101	82.2/84.3	19	42

10-06-2009
REGISTERED CIVIL ENGINEER DATE

11-9-09
PLANS APPROVAL DATE

REGISTERED PROFESSIONAL ENGINEER
P.F. Valadao
No. 63987
Exp. 9-30-10
CIVIL
STATE OF CALIFORNIA

THE STATE OF CALIFORNIA OR ITS OFFICERS OR AGENTS SHALL NOT BE RESPONSIBLE FOR THE ACCURACY OR COMPLETENESS OF SCANNED COPIES OF THIS PLAN SHEET.

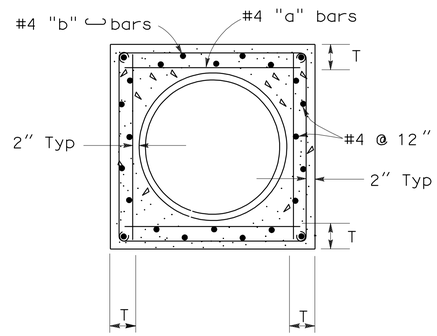

SECTION B-B

NOTES:

1. WHERE PIPE OF DIFFERENT DIAMETERS ARE JOINED WITH A CONCRETE COLLAR. "L" SHALL BE THOSE OF THE LARGER PIPE. D=D1 OR D2 WHICHEVER IS GREATER.
2. JOIN PIPES AT INVERTS WHERE THE SLOPE OF THE DOWNSTREAM PIPE. AND JOIN PIPES AT SOFFIT WHERE THE SLOPE OF THE UPSTREAM PIPE IS GREATER THAN THE SLOPE OF THE DOWNSTREAM PIPE.
3. "B" BARS TO BE LOCKED AROUND LONGITUDUNAL REINFORCEMENT. ROTATE BARS AS NECESSARY.
4. CONCRETE COLLAR SHOWN IS ADEQUATE FOR UP TO 40 FEET OF FILL.
5. FOR PIPE SIZE NOT LISTED USE NEXT LARGER.

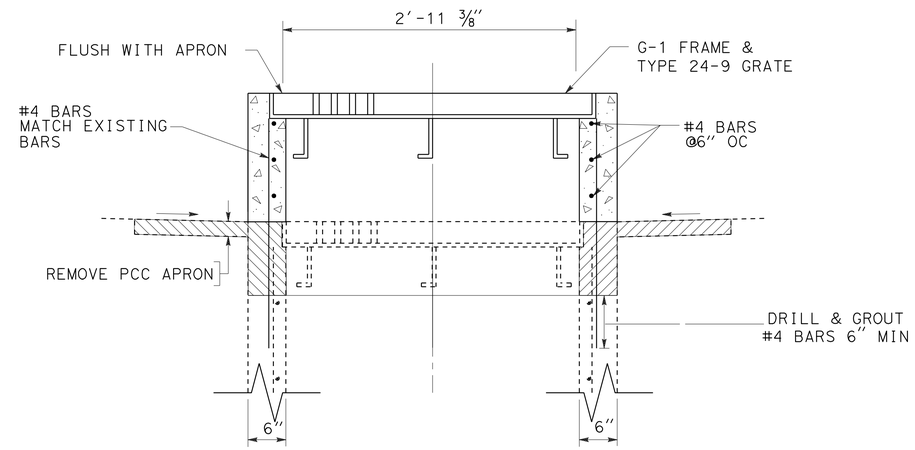

ADJUST G-1 INLET TO GRADE

2 b, 8 b, 9 b, 10 b

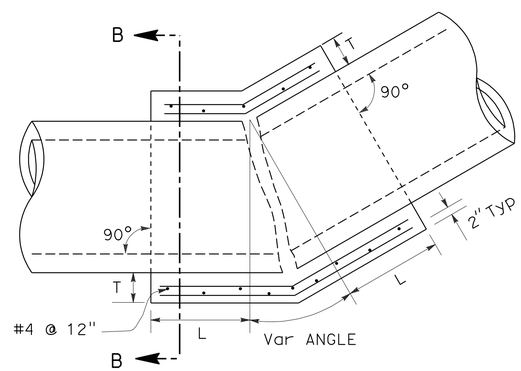

TYPICAL CONCRETE COLLAR FIELD BEND

D	L	T	"a"	"b"
18"	1.0'	5"	@12"	
24"	1.0'	6"	@12"	
60"	1.75'	11"	@12"	

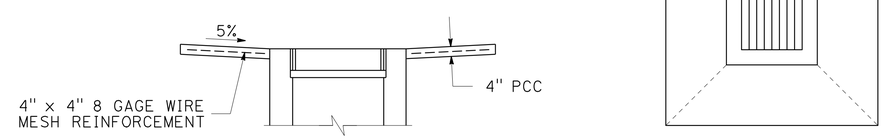

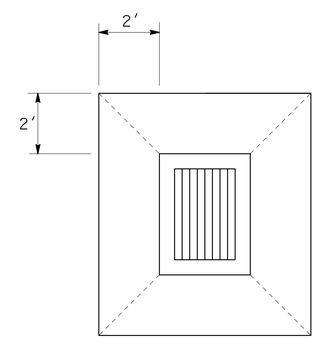

TYPICAL PCC APRON

MINOR CONCRETE (Misc Const)

1 d, 2 b, 3 d f, 4 c, 5 c, 6 c, 7 e, 8 b, 9 b, 10 b

THIS PLAN ACCURATE FOR DRAINAGE WORK ONLY

DRAINAGE DETAILS
DD-1

NO SCALE

REVISED BY	DATE REVISED
S. KIRKISH	P. VALADAO

CALCULATED-DESIGNED BY
CHECKED BY
FUNCTIONAL SUPERVISOR S. M. WYATT

STATE OF CALIFORNIA - DEPARTMENT OF TRANSPORTATION
DESIGN
Caltrans

LAST REVISION 10-06-09 | DATE PLOTTED => 16-NOV-2009 | TIME PLOTTED => 07:16

Dist	COUNTY	ROUTE	POST MILES TOTAL PROJECT	SHEET No.	TOTAL SHEETS
05	SB	101	82.2/84.3	20	42

REGISTERED CIVIL ENGINEER 10-06-2009 DATE

PLANS APPROVAL 11-9-09 DATE

REGISTERED PROFESSIONAL ENGINEER P.F. Valadao No. 63987 Exp. 9-30-10 CIVIL STATE OF CALIFORNIA

THE STATE OF CALIFORNIA OR ITS OFFICERS OR AGENTS SHALL NOT BE RESPONSIBLE FOR THE ACCURACY OR COMPLETENESS OF SCANNED COPIES OF THIS PLAN SHEET.

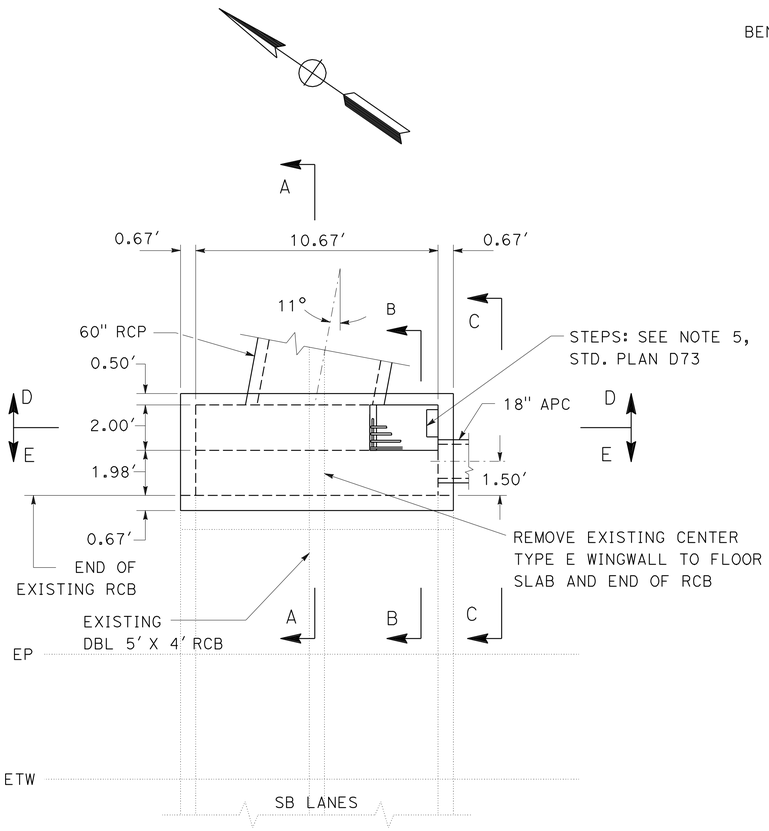

PLAN VIEW

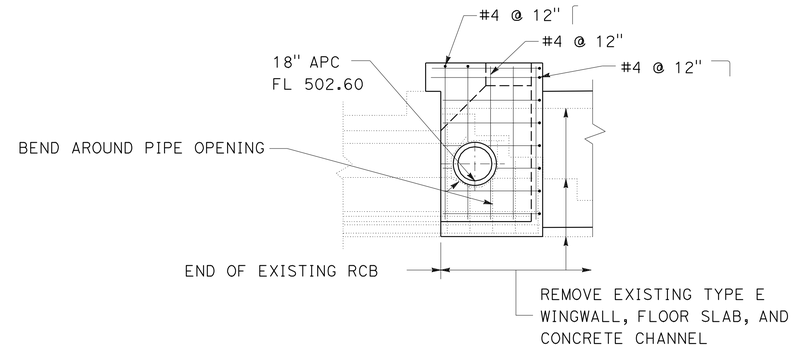

SECTION C-C

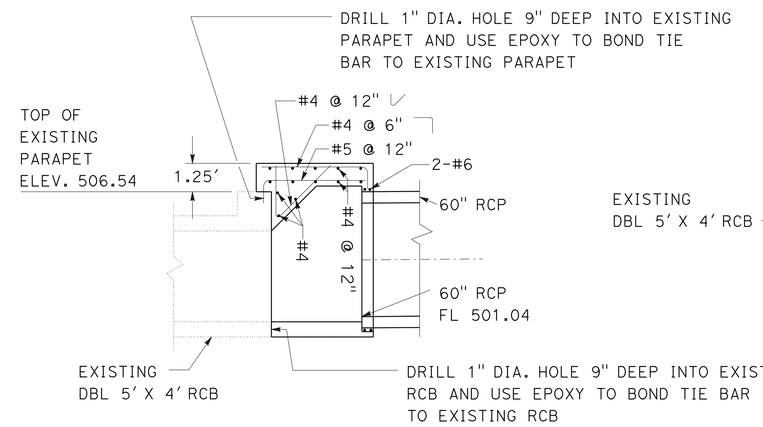

SECTION A-A

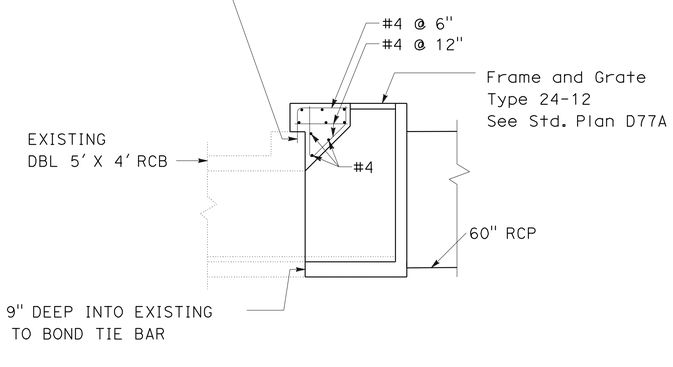

SECTION B-B

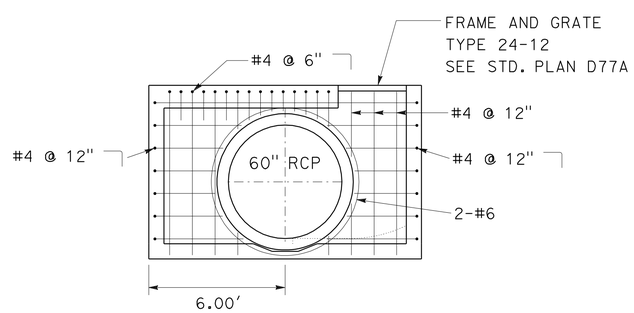

SECTION D-D

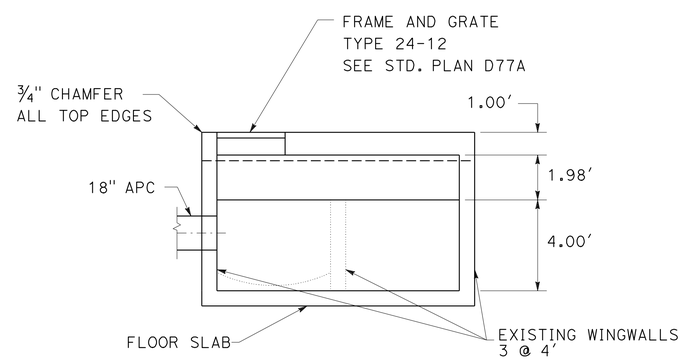

SECTION E-E

DRAINAGE SYSTEM No. 3

STA "LOL5" 44+72.6

THIS PLAN ACCURATE FOR DRAINAGE WORK ONLY

DRAINAGE DETAILS DD-2

NO SCALE

STATE OF CALIFORNIA - DEPARTMENT OF TRANSPORTATION

Caltrans

DESIGN

FUNCTIONAL SUPERVISOR S. M. WYATT

CALCULATED-DESIGNED BY S. KIRKISH

CHECKED BY P. VALADAO

REVISED BY

DATE REVISED

LAST REVISION 10-06-09

DATE PLOTTED => 16-NOV-2009

TIME PLOTTED => 07:16

Dist	COUNTY	ROUTE	POST MILES TOTAL PROJECT	SHEET No.	TOTAL SHEETS
05	SB	101	82.2/84.3	21	42

10-06-2009
REGISTERED CIVIL ENGINEER DATE

11-9-09
PLANS APPROVAL DATE

REGISTERED PROFESSIONAL ENGINEER P.F. Valadao No. 63987 Exp. 9-30-10 CIVIL STATE OF CALIFORNIA

THE STATE OF CALIFORNIA OR ITS OFFICERS OR AGENTS SHALL NOT BE RESPONSIBLE FOR THE ACCURACY OR COMPLETENESS OF SCANNED COPIES OF THIS PLAN SHEET.

APC ALLOWABLE PIPE MATERIAL

TYPE	Min THICKNESS/CLASS
CSP	0.064 INCHES
PLASTIC	SMOOTH INTERIOR
RCP	SEE STANDARD Specs

DRAINAGE QUANTITIES

PLAN SHEET No.	DRAINAGE SYSTEM No. ⬡	DRAINAGE UNIT No. ○	REMOVE CULVERT	REMOVE INLET	REMOVE HEADWALL	(N) REMOVE CONCRETE	ADJUST INLET	MINOR CONCRETE (MINOR STRUCTURE)	18" APC	24" APC	60" APC	MINOR CONCRETE (Misc Const)	MISCELLANEOUS IRON AND STEEL	(N) FRAME AND GRATE TYPE 24-9	(N) FRAME AND GRATE TYPE 24-12	(N) HEIGHT OF INLET "H"	DESCRIPTION	STATION	DRAINAGE SYSTEM No. ⬡	DRAINAGE UNIT No. ○	PLAN SHEET No.
			LF	EA	EA	LF	EA	CY	LF	LF	LF	CY	LB	EA	EA	FT					
L-1	1	a			1												REMOVE HEADWALL 7.5′ x 2.8′	8+79.5 "LOL5" 56.36′ Lt	a	1	L-1
		b				28.2											REMOVE CONC DITCH	8+79.5 "LOL5" 28.01′ TO 56.36′ Lt	b		
		c	3.0														REMOVE 24" RCP	8+79.5 "LOL5" 11.25′ TO 14.25′ Lt	c		
		d						0.95				0.54	263	1		2.8	TYPE G1, TG Elev = 560.06′, PPC APRON	8+79.5 "LOL5" 45.76′ Lt	d		
		e						1.35					326		1	4.8	TYPE G1, TG Elev = 563.18′	8+79.5 "LOL5" 13.75′ Lt	e		
		f								8.9							24" APC, CONCRETE COLLAR	8+79.5 "LOL5" 46.76′ TO 56.36′ Lt	f		
		g								16.3							24" APC, CONCRETE COLLAR	8+79.5 "LOL5" 28.01′ TO 44.76′ Lt	g		
L-1	2	a	3.0														REMOVE 24" RCP	15+30.2 "LOL5" 11.25′ TO 14.25′ Lt	a	2	L-1
		b					1					0.54	263	1		3.8	TYPE G1, TG Elev = 559.40′, PCC APRON	15+30.2 "LOL5" 38.43′ Lt	b		
		c						1.19					326		1	4.1	TYPE G1, TG Elev = 559.82′	15+30.2 "LOL5" 13.75′ Lt	c		
L-4	3	a				28.0											REMOVE CONC CHUTE	44+71.1 "LOL5" 30.00′ TO 44+73.8 "LOL5" 58.78′ Lt	a	3	L-4
		b				12.0											REMOVE CONC WINGWALLS AND FLOOR SLAB	44+76.5 "LOL5" 58.78′ TO 62.29′ Lt	b		
		c									28.0						60" APC. CONCRETE COLLAR	44+71.1 "LOL5" 30.00′ TO 44+73.8 58.78′ Lt	c		
		d						5.85				1.03	326		1	7.0	MOD TYPE G2, TG Elev = 507.79′, PCC APRON	44+76.5 "LOL5" 60.51′ Lt	d		
		e							20.0								18" APC	44+51.1 "LOL5" 60.52′ TO 44+71.2 "LOL5" 60.52′ Lt	e		
		f						1.57				0.59	263	1		4.0	TYPE G2, TG Elev = 507.38′, PCC APRON	44+49.6 "LOL5" 60.52′ Lt	f		
L-4	4	a			1												REMOVE HEADWALL 7.0′ x 2.6′	52+30.3 "LOL5" 63.81′ Lt	a	4	L-4
		b							1.8								18" APC, CONCRETE COLLAR	52+30.3 "LOL5" 62.00′ TO 63.81′ Lt	b		
		c						0.95				0.54	263	1		2.4	TYPE G1, TG Elev = 499.84′, PCC APRON	52+30.3 "LOL5" 61.01′ Lt	c		
L-7	5	a		1													REMOVE INLET	83+28.4 "LOL5" 63.27′ Lt	a	5	L-7
		b	0.8														REMOVE 18" CSP RISER	83+28.4 "LOL5" 63.27′ Lt	b		
		c						0.95				0.54	263	1		2.0	TYPE G1, TG Elev = 459.38′, PCC APRON	83+28.4 "LOL5" 63.27′ Lt	c		
SHEET TOTAL			6.8	1	2	68.2	1	12.81	21.8	25.2	28.0	3.78	2293	5	3						

(N) FOR INFORMATION ONLY. NOT A PAY ITEM

DRAINAGE QUANTITIES
DQ-1

REVISED BY | DATE REVISED
S. KIRKISH | P. VALADAO
CALCULATED-DESIGNED BY | CHECKED BY
FUNCTIONAL SUPERVISOR: S. M. WYATT

STATE OF CALIFORNIA - DEPARTMENT OF TRANSPORTATION
Caltrans®
DESIGN

LAST REVISION 10-06-09 | DATE PLOTTED => 16-NOV-2009 | TIME PLOTTED => 07:16

Dist	COUNTY	ROUTE	POST MILES TOTAL PROJECT	SHEET No.	TOTAL SHEETS
05	SB	101	82.2/84.3	22	42

REGISTERED CIVIL ENGINEER 10-06-2009 DATE

11-9-09
PLANS APPROVAL DATE

REGISTERED PROFESSIONAL ENGINEER P.F. Valadao No. 63987 Exp. 9-30-10 CIVIL STATE OF CALIFORNIA

THE STATE OF CALIFORNIA OR ITS OFFICERS OR AGENTS SHALL NOT BE RESPONSIBLE FOR THE ACCURACY OR COMPLETENESS OF SCANNED COPIES OF THIS PLAN SHEET.

DRAINAGE QUANTITIES

PLAN SHEET No.	DRAINAGE SYSTEM No. ⬡	DRAINAGE UNIT No. ○	REMOVE CULVERT LF	REMOVE INLET EA	REMOVE HEADWALL EA	(N) REMOVE CONCRETE LF	ADJUST INLET EA	MINOR CONCRETE (MINOR STRUCTURE) CY	18" APC LF	24" APC LF	60" APC LF	MINOR CONCRETE (Misc Const) CY	MISCELLANEOUS IRON AND STEEL LB	(N) FRAME AND GRATE TYPE 24-9 EA	(N) FRAME AND GRATE TYPE 24-12 EA	(N) HEIGHT OF INLET "H" FT	DESCRIPTION	STATION	DRAINAGE SYSTEM No. ⬡	DRAINAGE UNIT No. ○	PLAN SHEET No.
L-8	6	a			1												REMOVE HEADWALL 3.8′ x 2.4′ Rt WW 2.4′	91+68.5 "LOL5" 59.27′ Lt	a	6	L-8
		b							3.1								18" APC, CONCRETE COLLAR	91+67.4 "LOL5" 56.10′ Lt TO 91+68.5 "LOL5" 59.27′ Lt	b		
		c						0.95				0.54	263	1		2.1	TYPE G1, TG Elev = 438.51′, PCC APRON	91+67.0 "LOL5" 55.13′ Lt	c		
L-8	7	a		1													REMOVE INLET	99+28.5 "LOL5" 52.90′ Lt	a	7	L-8
		b	1.0														REMOVE 36" RCP	99+28.5 "LOL5" 50.40′ TO 51.40′ Lt	b		
		c	4.0														REMOVE 36" RCP	99+27.6 "LOL5" 10.75′ TO 14.75′ Lt	c		
		d						2.02					326		1	5.9	TYPE G2, TG Elev = 417.90′	99+27.6 "LOL5" 13.75′ Lt	d		
		e						1.64				0.59	263	1		4.3	TYPE G2, TG Elev = 415.57′, PCC APRON	99+28.5 "LOL5" 52.43′ Lt	e		
L-9	8	a	4.0														REMOVE 24" RCP	104+97.4 "LOL5" 11.25′ Lt TO 105+00.9 "LOL5" 14.80′ Lt	a	8	L-9
		b					1					0.54	263	1		4.6	TYPE G1, TG Elev = 401.82′, PCC APRON	105+28.7 "LOL5" 44.65′ Lt	b		
		c						3.61					326		1	8.4	TYPE G2, TG Elev = 406.91′	104+98.9 "LOL5" 13.75′ Lt	c		
L-9	9	a	4.0														REMOVE 24" RCP	109+63.1 "LOL5" 16.06′ TO 20.06′ Lt	a	9	L-9
		b					1					0.54	263	1		7.6	TYPE G1, TG Elev = 398.91′, PCC APRON	109+63.2 "LOL5" 47.50′ Lt	b		
		c						4.04					326		1	9.6	TYPE G2, TG Elev = 402.31′	109+63.1 "LOL5" 25.75′ Lt	c		
L-10	10	a	4.4														REMOVE 24" PLASTIC PIPE	118+27.1 "LOL5" 26.10′ Lt TO 118+28.8 "LOL5" 22.06′ Lt	a	5	L-7
		b					1					0.54	263	1		5.0	TYPE G1, TG Elev = 391.75′, PCC APRON	118+19.9 "LOL5" 43.91′ Lt	b		
		c						3.65					326		1	8.5	TYPE G2, TG Elev = 392.62′	118+28.2 "LOL5" 24.58′ Lt	c		
		d						1.57					326		1	4.0	TYPE G2, TG Elev = 392.76′	118+08.3 "LOL5" 25.69′ Lt	d		
		e								17.0							24" APC	118+10.8 "LOL5" 25.13′ Lt TO 118+26.7 "LOL5" 24.13′ Lt	e		
	DQ - 2 TOTAL		18.3	1	1	0	3	17.48	3.1	17.0	0	2.75	2945	5	5						
	DQ - 1 TOTAL		6.8	1	2	68.2	1	12.81	21.8	25.2	28.0	3.78	2293	5	3						
	GRAND TOTAL		25.1	2	3	68.2	4	30.29	24.9	42.2	28.0	6.53	5238	10	8						

(N) FOR INFORMATION ONLY. NOT A PAY ITEM

DRAINAGE QUANTITIES
DQ-2

STATE OF CALIFORNIA - DEPARTMENT OF TRANSPORTATION
Caltrans® DESIGN

FUNCTIONAL SUPERVISOR: S. M. WYATT
CALCULATED-DESIGNED BY: S. KIRKISH
CHECKED BY: P. VALADAO
REVISED BY
DATE REVISED

LAST REVISION 10-06-09
DATE PLOTTED => 16-NOV-2009
TIME PLOTTED => 07:16

Dist	COUNTY	ROUTE	POST MILES TOTAL PROJECT	SHEET No.	TOTAL SHEETS
05	SB	101	82.2/84.3	23	42

10-06-2009
REGISTERED CIVIL ENGINEER DATE

11-9-09
PLANS APPROVAL DATE

REGISTERED PROFESSIONAL ENGINEER P.F. Valadao No. 63987 Exp. 9-30-10 CIVIL STATE OF CALIFORNIA

THE STATE OF CALIFORNIA OR ITS OFFICERS OR AGENTS SHALL NOT BE RESPONSIBLE FOR THE ACCURACY OR COMPLETENESS OF SCANNED COPIES OF THIS PLAN SHEET.

STATIONARY MOUNTED CONSTRUCTION AREA SIGNS

SIGN No.	SIGN CODE	SIGN MESSAGE	PANEL SIZE	No. OF POST AND SIZE	No. OF SIGNS (EA)
A	W20-1	ROAD WORK AHEAD	60" x 60"	2-4" x 6"	4
B	W20-1	ROAD WORK AHEAD	36" x 36"	1-4" x 4"	3
C	G20-2	END ROAD WORK	36" x 18"	1-4" x 4"	4

NOTES: EXACT LOCATIONS TO BE DETERMINED BY THE ENGINEER.

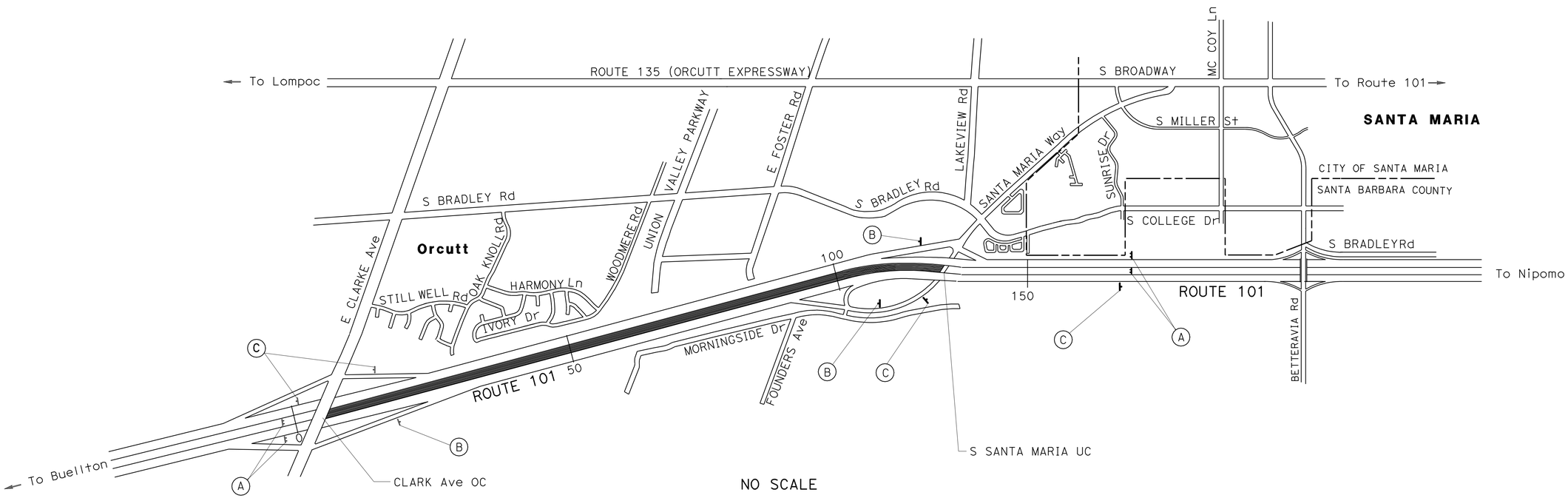

NO SCALE

CONSTRUCTION AREA SIGNS
CS-1

THIS PLAN IS ACCURATE FOR CONSTRUCTION AREA SIGN WORK ONLY.

STATE OF CALIFORNIA - DEPARTMENT OF TRANSPORTATION
DESIGN

FUNCTIONAL SUPERVISOR: S. M. WYATT
CALCULATED-DESIGNED BY: S. KIRKISH
CHECKED BY: P. VALADAO
REVISED BY
DATE REVISED

LAST REVISION 10-06-09 | DATE PLOTTED => 16-NOV-2009 | TIME PLOTTED => 07:17

Dist	COUNTY	ROUTE	POST MILES TOTAL PROJECT	SHEET No.	TOTAL SHEETS
05	SB	101	82.2/84.3	24	42

REGISTERED CIVIL ENGINEER 10-06-2009 DATE

9-11-09
PLANS APPROVAL DATE

REGISTERED PROFESSIONAL ENGINEER P.F. Valadao No. 63987 Exp. 9-30-10 CIVIL STATE OF CALIFORNIA

THE STATE OF CALIFORNIA OR ITS OFFICERS OR AGENTS SHALL NOT BE RESPONSIBLE FOR THE ACCURACY OR COMPLETENESS OF SCANNED COPIES OF THIS PLAN SHEET.

ROADWAY QUANTITIES

STATION	RUMBLE STRIPS	CLASS 2 AGGREGATE BASE	HOT MIX ASPHALT (TYPE A)	TACK COAT	ROADWAY EXCAVATION	IMPORTED BORROW	(N) EMBANKMENT
	STA	CY	TON	TON	CY	CY	CY
Sta 6+97.0 TO Sta 119+43.7	224.6	5463.0	4141.7	5.4	6375	763	5460
TEMPORARY PULLOUT		9.9					
TOTAL	224.6	5472.9	4141.7	5.4	6375	763	5460

(N) NOT A SEPARATE PAY ITEM, FOR INFORMATION ONLY.

CONCRETE BARRIER

STATION	CONCRETE BARRIER (TYPE 60)
	LF
STA 6+97.0 TO STA 119+08.4	11,219.0
TOTAL	11,219.0

METAL BEAM GUARD RAILING

STATION	LOCATION	REMOVE DOUBLE METAL BEAM BARRIER	REMOVE METAL BEAM GUARD RAILING	REMOVE DOUBLE THRIE BEAM BARRIER	TRANSITION RAILING (TYPE WB)
		LF	LF	LF	EA
STA 6+72.0 TO STA 6+97.0	LEFT OF LOL				1
STA 117+71.9 TO STA 118+58.4	LEFT OF LOL	87.5			
STA 118+58.4 TO STA 118+83.3	LEFT OF LOL		25.0		
STA 119+04.9 TO STA 118+08.4	LEFT OF LOL			25.0	
TOTAL		87.5	25.0	25.0	1

TREE REMOVAL

STATION	OFFSET "LOL5"	(N) REMOVE TREE	(N) REMOVE TREE STUMP
		EA	EA
Sta 8+77.4	41.1		1
Sta 9+14.9	52.0		1
Sta 10+77.4	53.0		1
Sta 27+98.5	44.2	1	
Sta 28+16.6	51.7	1	
Sta 28+33.5	49.0	1	
Sta 28+54.1	44.0	1	
Sta 28+69.7	53.1	1	
Sta 28+81.4	59.4	1	
Sta 29+52.5	43.8	1	
Sta 29+82.2	48.8	1	
Sta 30+01.3	48.7	1	
Sta 31+20.9	52.1	1	
Sta 44+85.5	50.1		1
Sta 57+12.0	45.6	1	
Sta 70+50.1	49.1	1	
Sta 96+33.0	45.9	1	
TOTAL		13	4

CRASH CUSHIONS

STATION	SALVAGE CRASH CUSHION (TYPE CAT)
	EA
Sta 117+43.0 TO Sta 117+71.9	1
TOTAL	1

WATER POLLUTION CONTROL

STATION	TEMPORARY DRAINAGE INLET PROTECTION	TEMPORARY CONSTRUCTION ENTRANCE	TEMPORARY CONCRETE WASHOUT FACILITY
	EA	EA	EA
Sta 8+79.5	1		
Sta 15+30.2 TO Sta 15+30.5	2		
Sta 44+53.6 TO Sta 44+76.5	2		
Sta 52+30.3	1		
Sta 83+28.4	1		
Sta 91+67.0	1		
Sta 99+27.6 TO Sta 99+28.5	2		
Sta 104+98.9 TO Sta 105+28.7	2		
Sta 109+63.1 TO Sta 109+63.2	2		
Sta 118+08.3 TO Sta 118+28.2	3		
TOTAL	18	2	2

SURVEY MONUMENT

STATION	OFFSET "LOL5"	REMOVE SURVEY MONUMENT	SURVEY MONUMENT (TYPE A)
		EA	EA
Sta 22+00.1	37.6	1	1
Sta 31+00.2	37.8	1	1
TOTAL		2	2

SUMMARY OF QUANTITIES
Q-1

REVISED BY	DATE REVISED

CALCULATED-DESIGNED BY	CHECKED BY
S. KIRKISH	P. VALADAO

FUNCTIONAL SUPERVISOR: S. M. WYATT

STATE OF CALIFORNIA - DEPARTMENT OF TRANSPORTATION
Caltrans
DESIGN

LAST REVISION 10-06-09
DATE PLOTTED => 16-NOV-2009
TIME PLOTTED => 07:17

Dist	COUNTY	ROUTE	POST MILES TOTAL PROJECT	SHEET No.	TOTAL SHEETS
05	SB	101	82.2/84.3	25	42

10-06-2009
LICENSED LANDSCAPE ARCHITECT

9-11-09
PLANS APPROVAL DATE

LICENSED LANDSCAPE ARCHITECT
PATRICK K. BOLGER
Signature
11-30-2010
Renewal Date
8-10-09
Date
STATE OF CALIFORNIA

THE STATE OF CALIFORNIA OR ITS OFFICERS OR AGENTS SHALL NOT BE RESPONSIBLE FOR THE ACCURACY OR COMPLETENESS OF SCANNED COPIES OF THIS PLAN SHEET.

PLANT LIST AND PLANTING SPECIFICATIONS

PLANT GROUP	PLANT No.	SYMBOL	BOTANICAL NAME	COMMON NAME	SIZE	QUANTITY EACH	HOLE SIZE (INCH) Dia	HOLE SIZE (INCH) DEPTH	BASIN TYPE	IRON SULFATE	① AMEND	COMMERCIAL FERTILIZER ① PLANTING	COMMERCIAL FERTILIZER ① PLT ESTB	BASIN MULCH ①	STAKING	PLANTING LIMITS MINIMUM DISTANCE (Ft) FROM TRVD WAY	Pvmt	FENCE	WALL	PAVED DITCH	EARTH DITCH	ON CENTER (Ft)	REMARKS
A	1	⊕	FREMONTODENDRON 'CALIFORNIA GLORY'	FLANNEL BUSH	No. 1	10	20	12	I I	-	0.08 CY	2 Pkt	7 Oz	4 CF	-	15	-	5	-	10	10	6	SHRUB ⑥
	2	△	QUERCUS AGRIFOLIA	COAST LIVE OAK	No. 1	100	20	12	I I	-	0.08 CY	2 Pkt	7 Oz	4 CF	-	30	-	5	-	15	17	10	TREE ⑥
	3	□	QUERCUS SUBER	CORK OAK	No. 1	10	20	12	I I	-	0.08 CY	2 Pkt	7 Oz	4 CF	-	30	-	5	-	8	10	10	TREE ⑥

APPLICABLE WHEN CIRCLED

① - Quantities shown are "per plant" unless shown as SQFT or SQYD application rates.
2 - Sufficient to receive root ball.
3 - Does not apply to mulch areas.
④ - As shown on plans.
5 - Required
⑥ - Foliage and root protector required.

NOTE:
Underlined portions of botanical name indicate abbreviations used on Planting Plans.

LEGEND

Existing Tree/Shrub Planting

SPRINKLER SCHEDULE

SYMBOL	TYPE	DESCRIPTION	SPRAY PATTERN	OPERATING PRESSURE (PSI)	PRESSURE COMPENSATING	PLUS/MINUS 5% DISCHARGE GALLONS PER MINUTE (GPM)	PLUS/MINUS 5% DISCHARGE GALLONS PER HOUR (GPH)	PLUS/MINUS 5% RADIUS (Ft)	PLUS/MINUS 5% WIDTH x LENGTH (Ft)	MATERIAL	INLET CONNECTION (NPT INCH)	POSITIVE-LOCKING ADJ ARC STOP	BACKSPLASH PREVENTER	DIFFUSER PIN	DISTANCE CONTROL FLAP	ADJ DISCHARGE	RISER TYPE	RISER MATERIAL PLASTIC	RISER MATERIAL GALVANIZED	RISER SIZE (IPS INCH)	RISER HEIGHT (INCH)	RISER FLOW SHUTOFF DEVICE	RISER SWING JOINT (TYPE)	RISER RISER SUPPORT	RISER SPRINKLER PROTECTOR (TYPE)	REMARKS
-	D-1	EMITTER	-	30	X	-	4.0	-	-	PL	-	-	-	-	-	-	-	-	-	-	-	-	-	-	-	① ②

X IN BOX DENOTES REQUIREMENT

APPLICABLE WHEN CIRCLED BELOW

① - Two per plant. Emitters to be installed on opposite sides of plant.

② - Emitters to be installed within planting basin at edge of rootball.

ABBREVIATIONS

Ft — feet/foot
GPM — gallons per minute
GPH — gallons per hour
Adj — adjustable
PL — plastic
B/B — brass/bronze
B/PL — brass/plastic
B/B/PL — brass/bronze/plastic
NPT — national pipe thread
IPS — iron pipe size
PSI — pounds per square inch

EROSION CONTROL (TYPE 1)

DESIGNATED AREA	(N) PURE LIVE SEED	(N) FIBER	(N) TACKIFIER	EROSION CONTROL (COMPOST BLANKET) 1/4" DEPTH	EROSION CONTROL (HYDROSEED)
	LBS	LBS	LBS	CY	ACRE
* MEDIAN	520	13,000	1950	437	13

* NOT SHOWN ON PLANS. INCLUDES EMBANKMENT AND EXCAVATION SLOPES AND OTHER AREAS DISTURBED BY CONSTRUCTION ACTIVITIES.

(N) NOT A SEPARATE PAY ITEM. FOR INFORMATION ONLY.

PLANT LIST, SPRINKLER SCHEDULE AND EROSION CONTROL QUANTITIES

PL-1

REVISED BY | DATE REVISED
PATRICK BOLGER | DAVID EMERSON
CALCULATED-DESIGNED BY | CHECKED BY
SENIOR LANDSCAPE ARCHITECT | DENNIS REEVES
STATE OF CALIFORNIA - DEPARTMENT OF TRANSPORTATION
Caltrans LANDSCAPE ARCHITECTURE

LAST REVISION 10-06-09 | DATE PLOTTED => 16-NOV-2009 | TIME PLOTTED => 07:17

Dist	COUNTY	ROUTE	POST MILES TOTAL PROJECT	SHEET No.	TOTAL SHEETS
05	SB	101	82.2/84.3	26	42

10-06-2009
LICENSED LANDSCAPE ARCHITECT

9-11-09
PLANS APPROVAL DATE

LICENSED LANDSCAPE ARCHITECT
PATRICK K. BOLGER
Signature
11-30-2010
Renewal Date
8-10-09
Date
STATE OF CALIFORNIA

THE STATE OF CALIFORNIA OR ITS OFFICERS OR AGENTS SHALL NOT BE RESPONSIBLE FOR THE ACCURACY OR COMPLETENESS OF SCANNED COPIES OF THIS PLAN SHEET.

NOTE:

FOR ACCURATE RIGHT OF WAY AND ACCESS DATE, CONTACT RIGHT OF WAY ENGINEERING AT THE DISTRICT OFFICE.

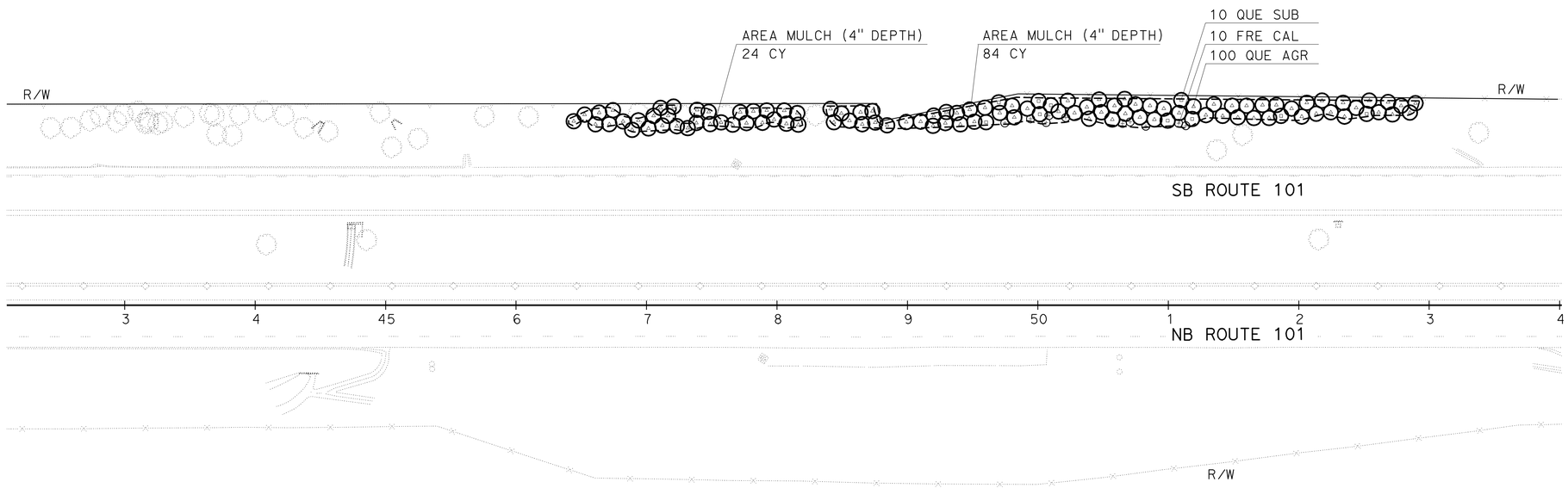

THIS PLAN ACCURATE FOR PLANTING WORK ONLY.

PLANTING PLAN

SCALE: 1"=50'

PP-1

REVISED BY | DATE REVISED
PATRICK BOLGER | DAVID EMERSON
CALCULATED-DESIGNED BY | CHECKED BY
SENIOR LANDSCAPE ARCHITECT
DENNIS REEVES

STATE OF CALIFORNIA - DEPARTMENT OF TRANSPORTATION
Caltrans LANDSCAPE ARCHITECTURE

LAST REVISION 10-06-09 | DATE PLOTTED => 16-NOV-2009 | TIME PLOTTED => 07:17

Dist	COUNTY	ROUTE	POST MILES TOTAL PROJECT	SHEET No.	TOTAL SHEETS
05	SB	101	82.2/84.3	27	42

10-06-2009
LICENSED LANDSCAPE ARCHITECT

11-9-09
PLANS APPROVAL DATE

LICENSED LANDSCAPE ARCHITECT
Patrick K. Bolger
Signature
11-30-2010
Renewal Date
8-10-09
Date
STATE OF CALIFORNIA

THE STATE OF CALIFORNIA OR ITS OFFICERS OR AGENTS SHALL NOT BE RESPONSIBLE FOR THE ACCURACY OR COMPLETENESS OF SCANNED COPIES OF THIS PLAN SHEET.

NOTE: FOR ACCURATE RIGHT OF WAY AND ACCESS DATA, CONTACT RIGHT OF WAY ENGINEERING AT THE DISTRICT OFFICE.

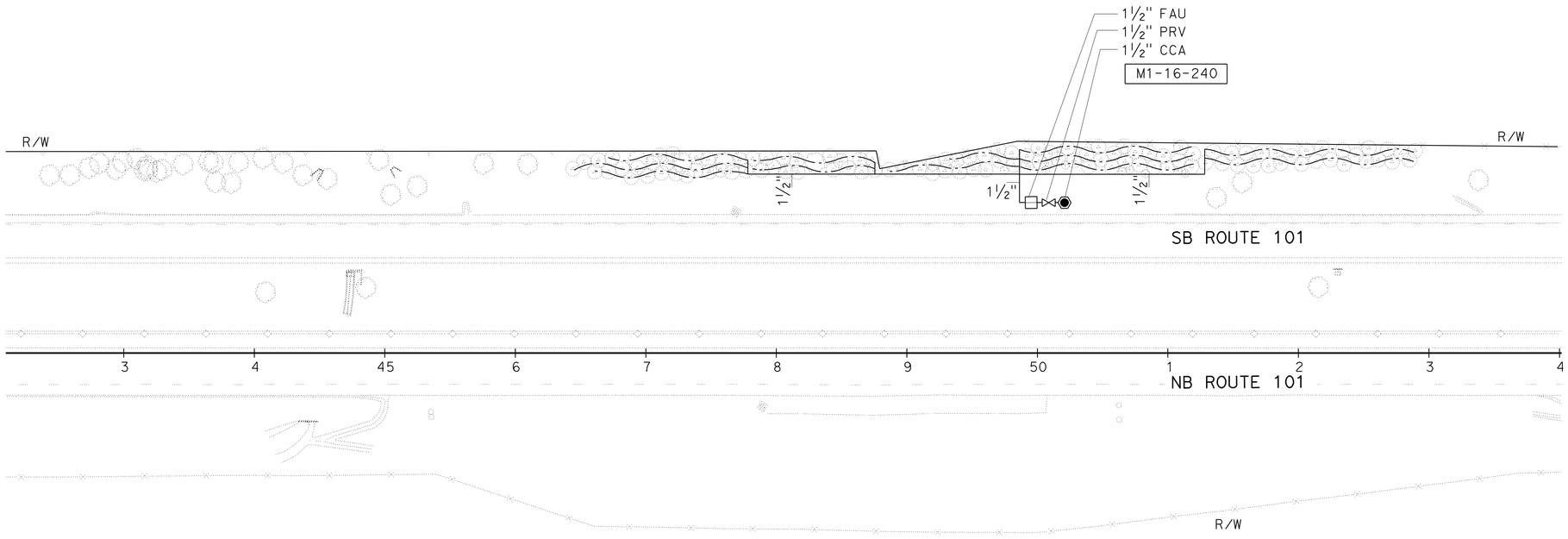

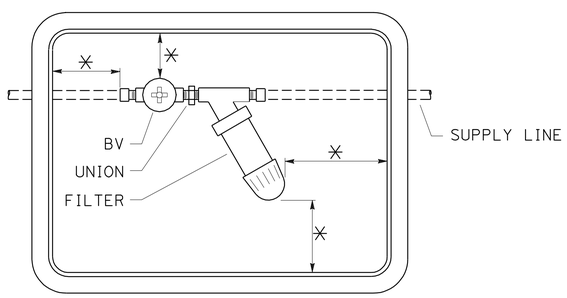

PLAN

FILTER ASSEMBLY UNIT

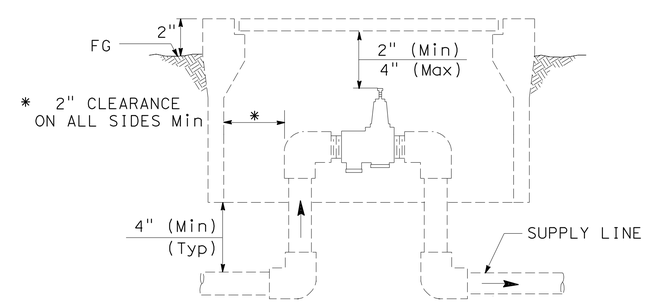

ELEVATION

PRESSURE REDUCING VALVE

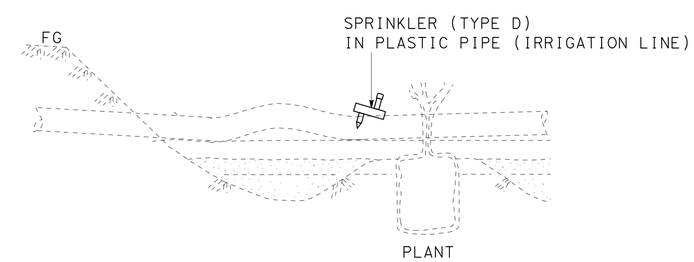

SPRINKLER (TYPE D)

THIS PLAN ACCURATE FOR IRRIGATION WORK ONLY.

IRRIGATION PLAN AND DETAILS

SCALE: 1"=50'

IP-1

STATE OF CALIFORNIA - DEPARTMENT OF TRANSPORTATION
Caltrans LANDSCAPE ARCHITECTURE

SENIOR LANDSCAPE ARCHITECT: DENNIS REEVES
CALCULATED-DESIGNED BY: PATRICK BOLGER
CHECKED BY: DAVID EMERSON
REVISED BY

LAST REVISION 10-06-09
DATE PLOTTED => 16-NOV-2009
TIME PLOTTED => 07:17

DIST	COUNTY	ROUTE	POST MILES TOTAL PROJECT	SHEET NO.	TOTAL SHEETS
05	SB	101	82.2/84.3	28	42

REGISTERED CIVIL ENGINEER

November 17, 2006
PLANS APPROVAL DATE

REGISTERED PROFESSIONAL ENGINEER Dallas Forester No. C37765 Exp. 12-31-06 CIVIL STATE OF CALIFORNIA

The State of California or its officers or agents shall not be responsible for the accuracy or completeness of electronic copies of this plan sheet.

To accompany plans dated 11-9-09

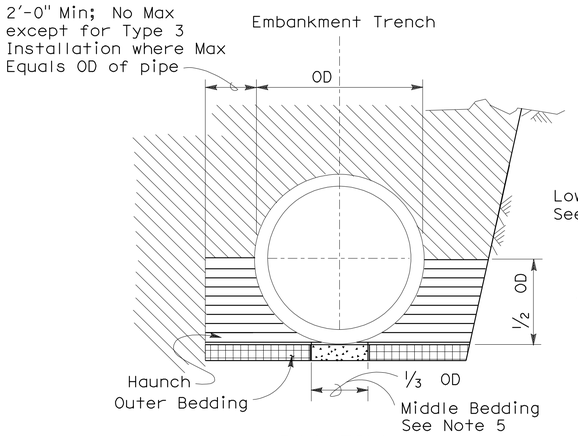

BACKFILL

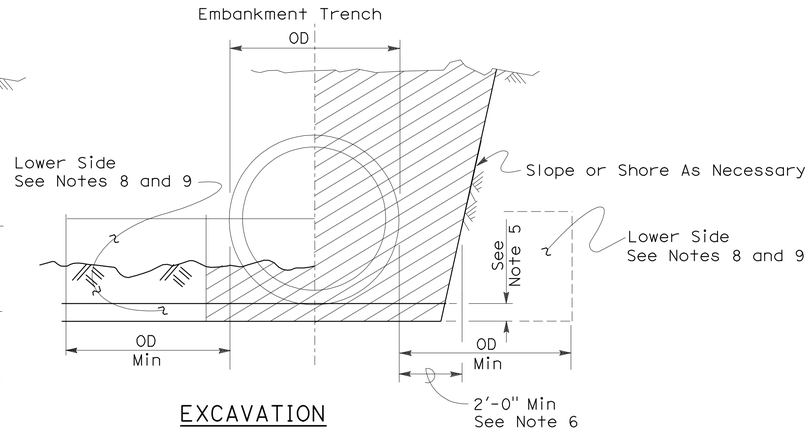

EXCAVATION

Roadway Embankment

Structure Backfill (Culvert) See Note 6

Structure Backfill (Culvert) See Note 6

Loose Backfill

Excavation Structure (Culvert)

TYPE 1 INSTALLATION:

The haunch and outer bedding shall be compacted to a minimum 90 percent relative compaction. In addition, the minimum sand equivalent in these areas shall be 30 and the maximum percentage passing the 75 μm sieve size shall be 12.

TYPE 2 INSTALLATION:

The haunch and outer bedding shall be compacted to a minimum 90 percent relative compaction. In addition, the minimum sand equivalent in these areas shall be 25.

TYPE 3 INSTALLATION:

The haunch and outer bedding shall be compacted to a minimum 85 percent relative compaction. 90 percent relative compaction will be required where the fill over the pipe is less than 4'-0" or 1/2 OD.

NOTES:

1. Unless otherwise shown on the plans or specified in the special provision, the Contractor shall have the option of selecting the class of RCP and the type of installation to be used, provided the height of cover does not exceed the value shown for the RCP selected.
   Example: 24" RCP culvert with maximum cover of 19'-0" the options are:
   a) Class III or stronger with Installation Type 1.
   b) Class III Special or stronger with Installation Type 2.
   c) Class IV Special or stronger with Installation Type 3.
   Cover is defined as the maximum vertical distance from top of the pipe to finished grade within the length of any given culvert.
2. The class of RCP and Installation Type selected shall be the same throughout the length of any given culvert.
3. The "length of any culvert" is defined as the culvert between:
   a) Successive drainage structure (inlets, junction boxes, headwalls, etc.).
   b) A drainage structure and the inlet or outlet end of the culvert.
   c) The inlet and outlet end of the culvert when there are no intervening drainage structures.
4. Oval and arch shaped RCP shall not be used.
5. 1/25 OD Min, not less than 3".
6. Slurry cement backfill may be substituted for backfill in the outer bedding and haunch areas. If slurry is used the outer and middle beddings shall be omitted. Prior to installation the soil under the middle 1/3 of the outside diameter of the pipe shall be softened by scarifying or other means to a minimum depth of 1/25 OD, but not less than 3". Where slurry cement backfill is used clear distance to trench wall may be reduced as set forth in Section 19-3.062 of the Standard Specifications.
7. Backfill shall be placed full width of excavation except where dimensions are shown for backfill width or thickness. Dimensions shown are minimums.
8. Lower side shall be suitable material as determined by the Engineer. Otherwise it shall be considered unsuitable as set forth in Section 19-2.02 of the Standard Specifications. See Note 9.
9. Where the pipe is placed in a trench, if the trench walls are sloped at 5 vertical to 1 horizontal or steeper for at least 90 percent of the trench height or up to not less than 12" from the grading plane, the firmness of the soil in the lower side need not be considered.
10. Non-reinforced precast concrete pipe sizes 3'-0" or smaller may be placed under installation Types 1, 2 or 3.

INSTALLATION TYPE 1

MINIMUM CLASS AND D-LOAD	COVER	
	108" Dia AND SMALLER	OVER 108" Dia
Class II 1000D	14.9'	12.9'
Class III 1350D	15.0' - 20.9'	13.0' - 18.9'
Class III Special 1700D	21.0' - 26.9'	19.0' - 24.9'
Class IV 2000D	27.0' - 31.9'	25.0' - 29.9'
Class IV Special 2500D	32.0' - 40.9'	30.0' - 38.9'
Class V 3000D	41.0' - 49.9'	39.0' - 46.9'
Class V Special 3600D	50.0' - 59.0'	47.0' - 58.0'

INSTALLATION TYPE 2

MINIMUM CLASS AND D-LOAD	COVER
Class II 1000D	9.9'
Class III 1350D	10.0'- 14.9'
Class III Special 1700D	15.0' - 19.9'
Class IV 2000D	20.0' - 24.9'
Class IV Special 2500D	25.0' - 31.9'
Class V 3000D	32.0' - 38.9'
Class V Special 3600D	39.0' - 47.0'

INSTALLATION TYPE 3

MINIMUM CLASS AND D-LOAD	COVER	
	48" Dia AND SMALLER	OVER 48" Dia
Class II 1000D	7.9'	5.9'
Class III 1350D	8.0' - 10.9'	6.0' - 8.9'
Class III Special 1700D	11.0' - 14.9'	9.0' - 12.9'
Class IV 2000D	15.0' - 17.9'	13.0' - 15.9'
Class IV Special 2500D	18.0' - 21.9'	16.0' - 19.9'
Class V 3000D	22.0' - 26.9'	20.0' - 24.9'
Class V Special 3600D	30.0' - 33.0'	25.0' - 31.0'

STATE OF CALIFORNIA
DEPARTMENT OF TRANSPORTATION

EXCAVATION AND BACKFILL CONCRETE PIPE CULVERTS

NO SCALE

RSP A62DA DATED NOVEMBER 17, 2006 SUPERSEDES STANDARD PLAN A62DA DATED MAY 1, 2006 - PAGE 20 OF THE STANDARD PLANS BOOK DATED MAY 2006.

REVISED STANDARD PLAN RSP A62DA

2006 REVISED STANDARD PLAN RSP A62DA

10-26-06

DIST	COUNTY	ROUTE	POST MILES TOTAL PROJECT	SHEET NO.	TOTAL SHEETS
05	SB	101	82.2/84.3	29	42

Randell D. Hiatt
REGISTERED CIVIL ENGINEER

June 6, 2008
PLANS APPROVAL DATE

REGISTERED PROFESSIONAL ENGINEER
Randell D. Hiatt
No. C50200
Exp. 6-30-09
CIVIL
STATE OF CALIFORNIA

The State of California or its officers or agents shall not be responsible for the accuracy or completeness of electronic copies of this plan sheet.

To accompany plans dated 11-9-09

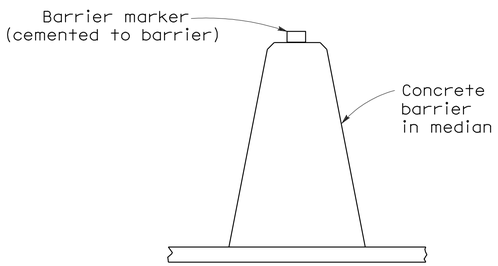

CONCRETE BARRIER TYPE 60 DELINEATION

See Notes 7 and 8

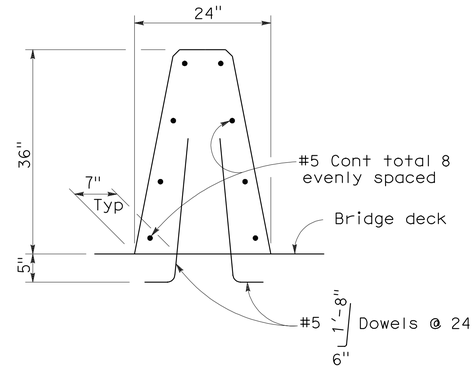

CONCRETE BARRIER TYPE 60A

Details similar to Type 60 except as noted.

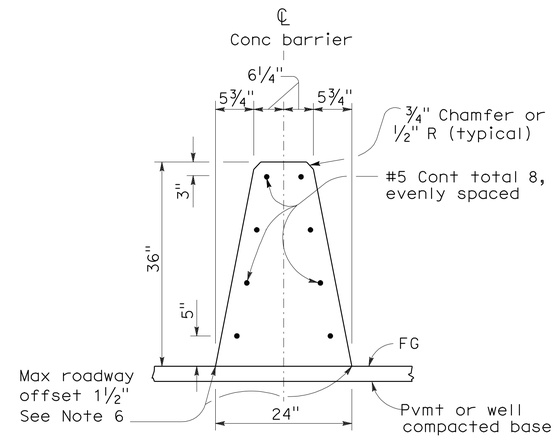

CONCRETE BARRIER TYPE 60

NOTES:

1. See Standard Plan A76B for details of Concrete Barrier Type 60 end anchors, connection to structures and transitions to Concrete Barrier Type 50 and Concrete Barrier Type 60S.
2. See Standard Plan A76C for Concrete Barrier Type 60 transitions at bridge column and sign pedestals.
3. Where glare screen is required on Concrete Barrier Type 60, use Concrete Barrier Type 60G.
4. Where the concrete barrier is added to the face of existing concrete structure, match existing weep holes.
5. Expansion joints in concrete barrier shall be located at all deck, pavement and principal wall joints. Expansion joint filler material shall be the same size as joint or ½" minimum.
6. Where roadway offset is greater than 1½", see Concrete Barrier Type 60C.
7. Barrier delineation to be used when required by the Special Provisions.
8. Spacing of barrier markers to match spacing of raised pavement markers on the adjacent median edgeline pavement delineation.
9. Reinforcing stirrup not required for roadway offsets less than 1'-0".
10. For roadway surfaces offset greater than 1½" to 3", no rebars required. For roadway surfaces offset greater than 3" to 8" use two #4 rebars at 3" above the lower roadway surface. For roadway surfaces offset greater than 8" to 12", use two #4 rebars at 3" above the lower roadway surface and two #4 rebars at 8" above the lower roadway surface. For roadway surfaces offset greater than 12" to 36", use two #4 rebars at 3" above the lower roadway surface and two #4 rebars at every 8" increment vertical spacing above the first two #4 rebars.

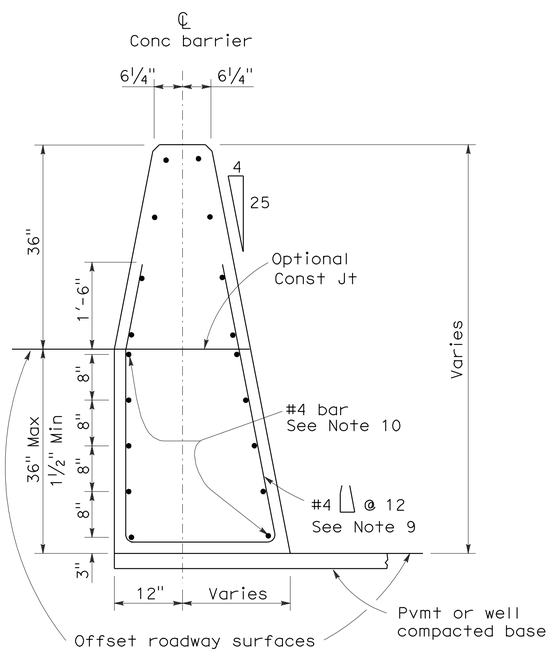

CONCRETE BARRIER TYPE 60C

Details similar to Type 60 except as noted.
Concrete barrier end anchor when necessary.
36" roadway surfaces offset shown.

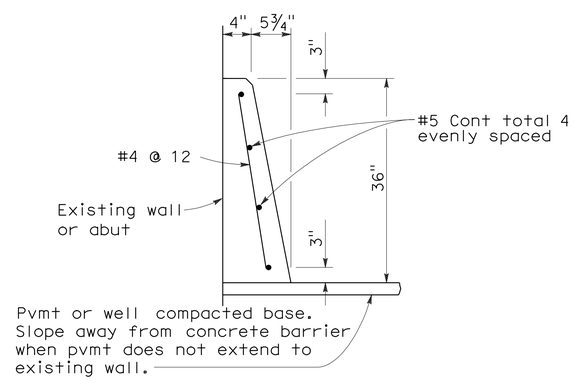

CONCRETE BARRIER TYPE 60D

STATE OF CALIFORNIA
DEPARTMENT OF TRANSPORTATION

CONCRETE BARRIER TYPE 60

NO SCALE

RSP A76A DATED JUNE 6, 2008 SUPERSEDES STANDARD PLAN A76A
DATED MAY 1, 2006 - PAGE 29 OF THE STANDARD PLANS BOOK DATED MAY 2006.

REVISED STANDARD PLAN RSP A76A

2006 REVISED STANDARD PLAN RSP A76A

5-21-08

DIST	COUNTY	ROUTE	POST MILES TOTAL PROJECT	SHEET NO.	TOTAL SHEETS
05	SB	101	82.2/84.3	30	42

Randell D. Hiatt
REGISTERED CIVIL ENGINEER

June 5, 2009
PLANS APPROVAL DATE

REGISTERED PROFESSIONAL ENGINEER Randell D. Hiatt No. C50200 Exp. 6-30-09 CIVIL STATE OF CALIFORNIA

The State of California or its officers or agents shall not be responsible for the accuracy or completeness of electronic copies of this plan sheet.

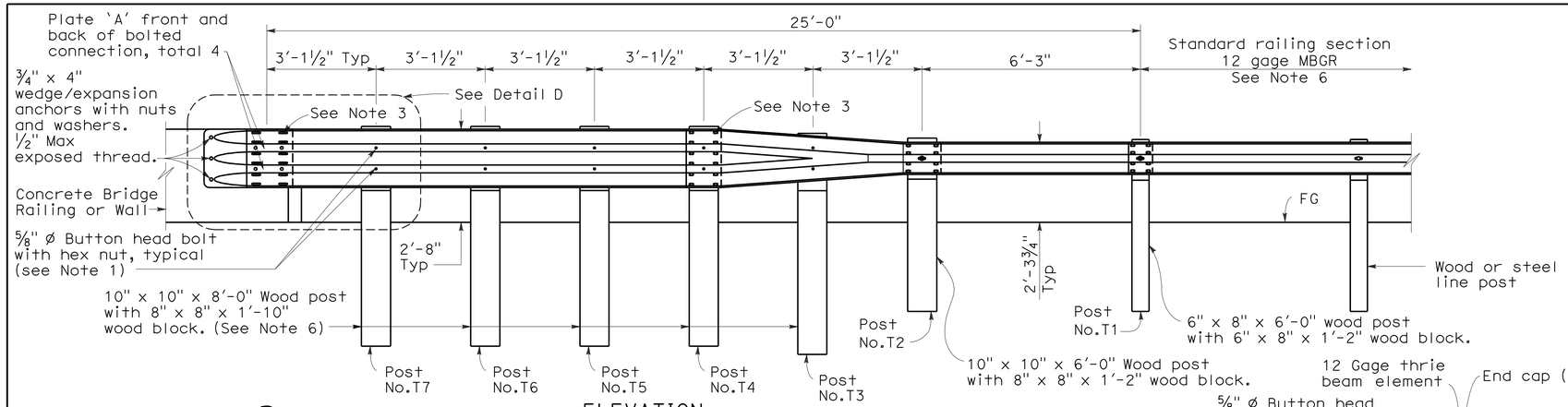

ELEVATION

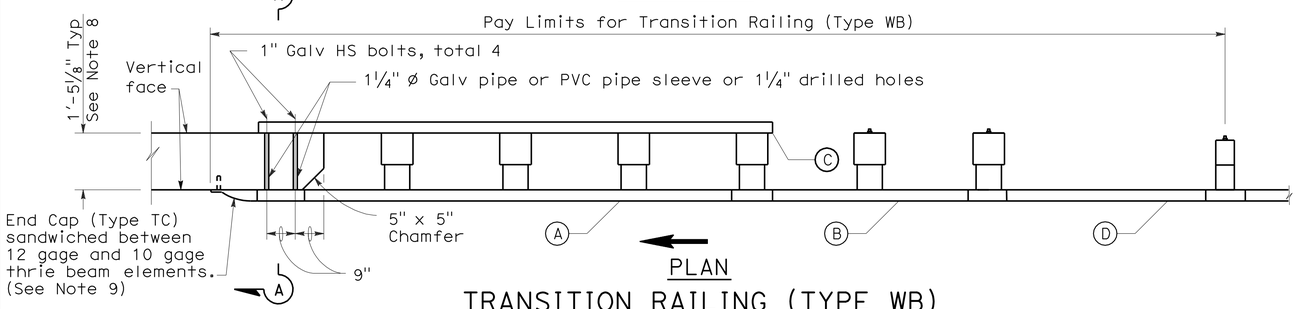

PLAN

TRANSITION RAILING (TYPE WB)

(No Blockout Attachment)

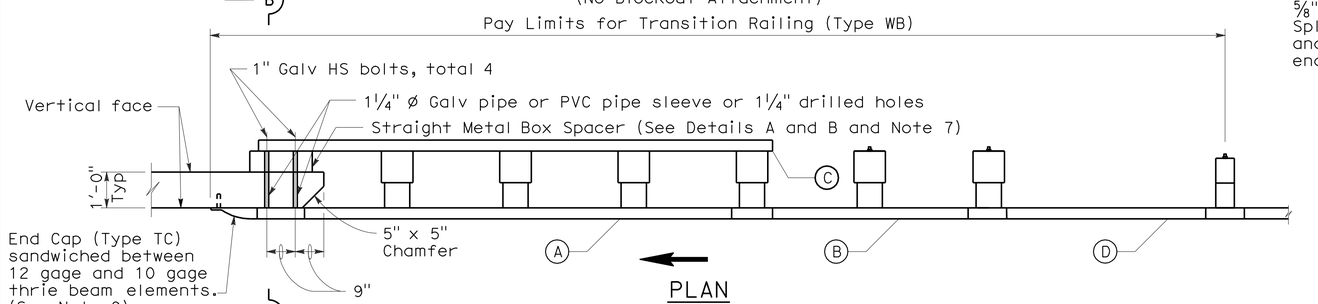

PLAN

TRANSITION RAILING (TYPE WB)

(Blockout Attachment)

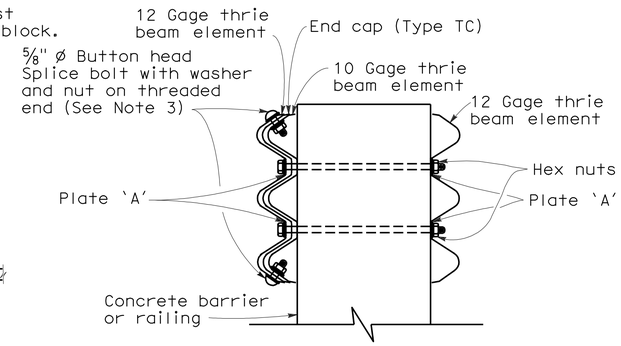

SECTION A-A

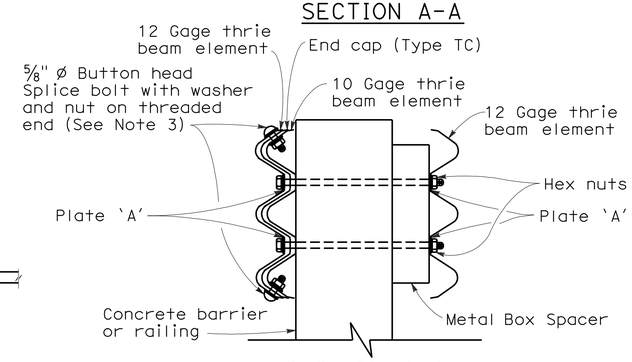

SECTION B-B

LEGEND

(A) Nested thrie beam elements (one 12 gage element nested over one 10 gage element).

(B) One 10 gage "W" beam to thrie beam element.

(C) One 12 gage thrie beam element.

(D) One 10 gage "W" beam rail element (7'-3½" length)

10 gage = 0.135" thick

12 gage = 0.108" thick

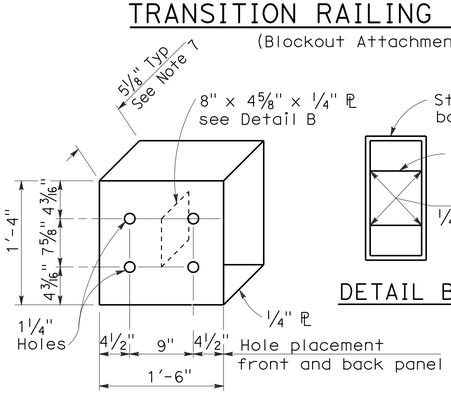

DETAIL A

STRAIGHT METAL BOX SPACER

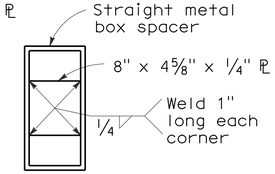

DETAIL B

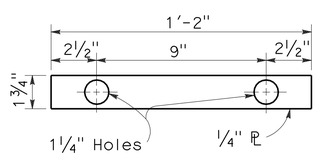

DETAIL C

PLATE 'A'

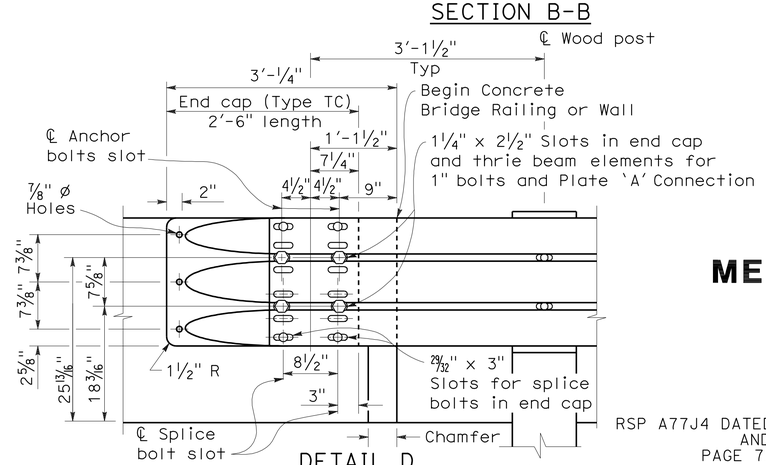

DETAIL D

NOTES:

To accompany plans dated 11-9-09

1. Use 5/8 " Ø Button head bolts and hex nuts for connections to posts. No washer on rail face for bolted connections to post.
2. The nested rail elements, end cap, and 'W' beam to thrie beam element may be spliced together prior to bolting the elements to the wood post and concrete barrier or railing.
3. Exterior splice bolt holes for rail element splices at Post No.T4 and the connection to the concrete barrier or railing shall be the standard 29/32 " x 1 1/8 " slot size. Interior splice bolt holes at these locations may be increased up to 1 1/4 " Ø. Only the top 2 and the bottom 2 splice bolts with washers and nuts are required for rail splices at Post No.T4 and the connection to the concrete barrier or railing.
4. Direction of adjacent traffic indicated by →.
5. The top elevation of Post Nos.T2 through T7 shall not project more than 1" above the top elevation of the rail element.
6. Typically, the railing connected to Transition Railing (Type WB) will be either standard railing section of metal beam guard railing or an approved Caltrans end treatment attached to Post No.T1.
7. The depth of the metal box spacer varies from the 5 1/8 " to 1 1/2 " and is dependent on the width of the concrete railing or wall. The combined dimension for the depth of the metal box spacer plus the width of railing or wall is typically 17 1/8 ". Where the space between the backside of the concrete railing or wall and the rear thrie beam element is less than 1 1/2 ", metal plates similar to Plate 'A' are to be used as spacers.
8. Where the width of the concrete railing or wall is greater than 17 1/8 ", wood blocks are to be used to fill the space created between the backside of Posts No.4 through No.7 and the rear thrie beam element. These wood blocks shall be 8" in width and 1'-2" in length. The dimension between the front thrie beam element and the rear thrie beam element is to match the width of the concrete railing or wall.
9. End cap may be installed over 12 gage and 10 gage thrie beam elements where transition railing is installed on the departure end of bridge railing.

STATE OF CALIFORNIA
DEPARTMENT OF TRANSPORTATION

METAL BEAM GUARD RAILING TRANSITION RAILING (TYPE WB)

NO SCALE

RSP A77J4 DATED JUNE 5, 2009 SUPERSEDES RSP A77J4 DATED JUNE 6, 2008 AND STANDARD PLAN A77J4 DATED MAY 1, 2006 - PAGE 75 OF THE STANDARD PLANS BOOK DATED MAY 2006.

REVISED STANDARD PLAN RSP A77J4

2006 REVISED STANDARD PLAN RSP A77J4

5-14-09

DIST	COUNTY	ROUTE	POST MILES TOTAL PROJECT	SHEET NO.	TOTAL SHEETS
05	SB	101	82.2/84.3	31	42

REGISTERED CIVIL ENGINEER

June 5, 2009
PLANS APPROVAL DATE

REGISTERED PROFESSIONAL ENGINEER Glenn DeCou No. C34547 Exp. 9-30-09 CIVIL STATE OF CALIFORNIA

The State of California or its officers or agents shall not be responsible for the accuracy or completeness of electronic copies of this plan sheet.

To accompany plans dated 11-9-09

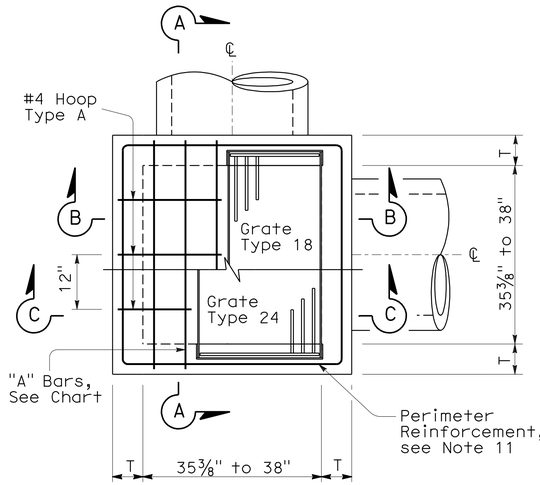

STANDARD TYPE G2 OR G4

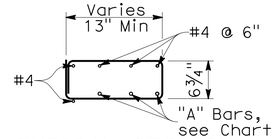

TYPICAL SECTION
(HOOP TYPE A)

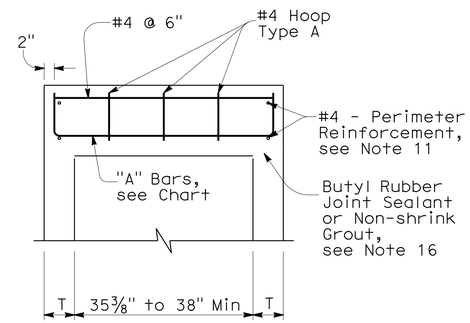

SECTION A-A

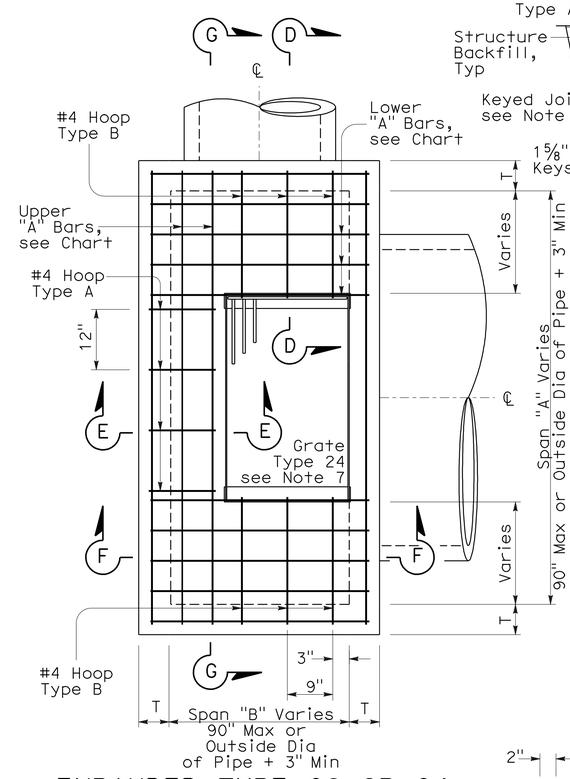

EXPANDED TYPE G2 OR G4
(Top Rebar Not Shown)

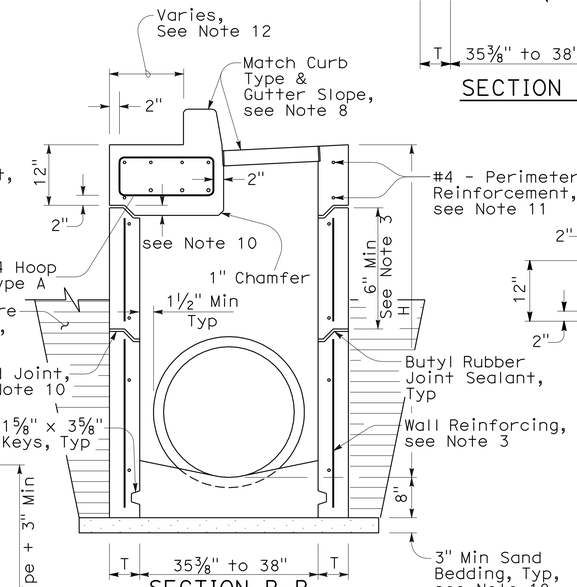

SECTION B-B
(with G4 Top)

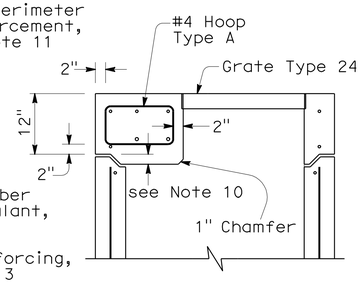

SECTION C-C
(with G2 Top)

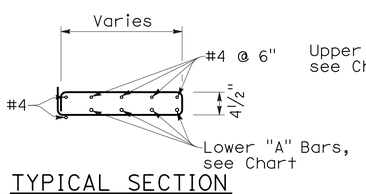

TYPICAL SECTION
(HOOP TYPE B)

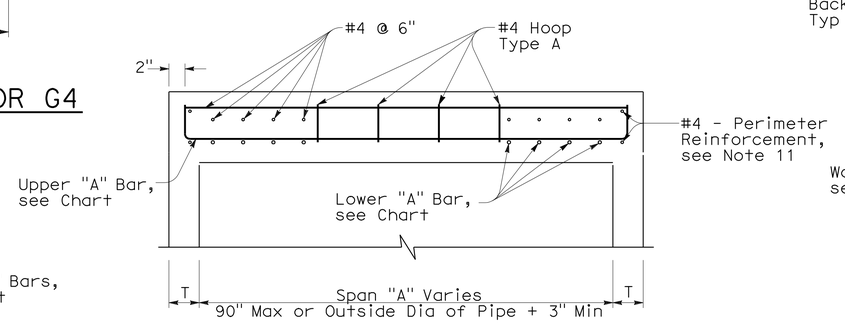

SECTION G-G

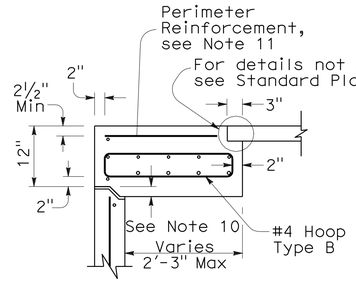

SECTION D-D

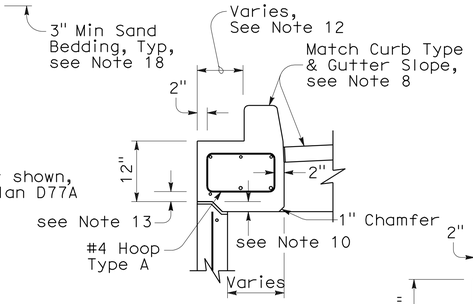

SECTION E-E
(with G4 Top)

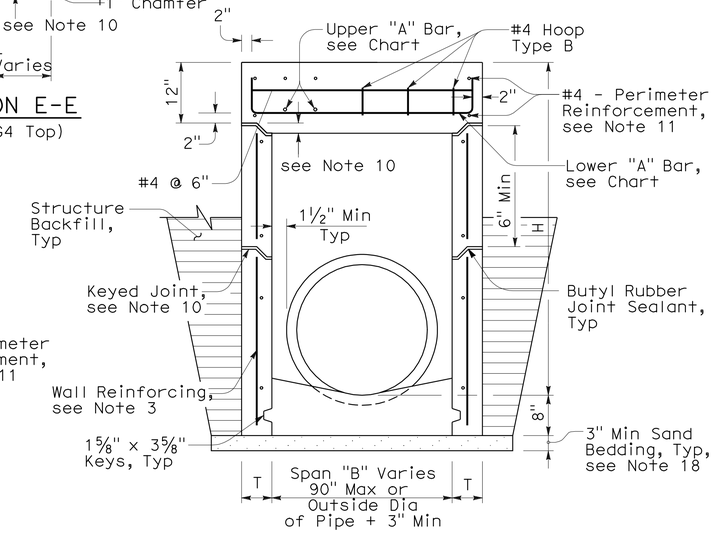

SECTION F-F
(with G2 Top)

NOTES:

1. "H" is the difference in elevation between the outlet pipe flow line and the normal gutter grade line undepressed.
2. For "T" wall thickness: T=6" when "H" is 8' or less. T=8" when "H" is over 8'.
3. Wall reinforcing not required when "H" is 8' or less and the unsupported width or length is 6'-0" or less. Reinforce wall exceeding these limits with #4 bars @ 1'-6" ± centers placed 2" clear to the inside of inlet unless otherwise shown. Short independent wall sections or height adjustment rings 6" to 24" high must have a minimum of two #4 horizontal bars.
4. Seal pre-cast inlets connection openings between wall and pipe with non-shrink grout or resilient connectors as specified in the Special Provisions.
5. Steps - None required where "H" is less than 2'-6". Where "H" is 2'-6" or more, install steps with lowest rung 1'-0" above the floor and highest rung not more than 6" below bottom of lid. The distance between steps must not exceed 1'-0" and be uniform throughout the length of the wall. Place steps in the wall without an opening. Steps inserts may be substituted for the bar steps. Step inserts must comply with State Industrial Safety Requirements. See Standard Plan D74C for step details.
6. Pipe(s) can be placed in any wall.
7. Set inlet so that grate bars are parallel to direction of principal surface flow.
8. Type G4 inlet can use Grate Type 18 or 24. Type G2 inlet uses Grate Type 24. See Revised Standard Plan RSP D77A and Standard Plan D77B for grate and frame details and weights of miscellaneous Iron and Steel.
9. G4 inlet details are the same as the G2 with the addition of a curb and sloped grate that matches the adjacent curb and gutter depression. See Standard Plans D78A & D78B for gutter and inlet depresssion details. See Revised Standard Plan RSP A87A & Standard Plan A87B for Curb and Dike Details.
10. Provide pre-cast inlets with separate top sections for final grade adjustment under Standard Specifcation Section 51-1.02. Provide keyed joints between the top and wall and multiple wall sections. Joint design may vary but must be 1" to 3" in depth.
11. Perimeter reinforcement serves as a rigid frame to position and attach the required structural reinforcement and may be tack welded at outer corners when using ASTM A706 weldable bars.
12. This dimension will vary with different grates, curbs types, box width and wall thickness.
13. 2" unless inlet is expanded in the Span "A" direction, then clearance is 2" plus the diameter of the lower "A" bar.
14. Place "A" Bars at an angle so hooked ends will maintain 2" clear coverage.
15. Refer to Standard Plan D73, Table A for concrete quantities.
16. Non-shrink grout can be used for upper most joint to facilitate final top grade adjustment.
17. Slope inlet floors 4:1 towards the outlet pipe. Pre-cast inlets may have monolithic sloped floors, flat floors, or no floors in which case a sloped floor must be cast in the field. Inlet floors do not require reinforcing.
18. Extend sand bedding under all structure backfill.

TOP REINFORCEMENT CHART

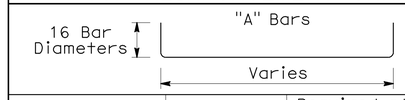

Span	"A" Bars	Required steel area per foot (in^2/ft)
Under 38" with Type 24 Grate	#5 @ 7" C-C 2-#5 Min	0.525
Under 38" with Type 18 Grate	#5 @ 7" C-C 3-#5 Min	0.525
38"-60"	#5 @ 6" C-C	0.621
61"-72"	#5 @ 5" C-C	0.744
73"-90"	#6 @ 6" C-C	0.811

STATE OF CALIFORNIA
DEPARTMENT OF TRANSPORTATION

DRAINAGE INLETS (PRECAST)

NO SCALE

NSP D73A DATED JUNE 5, 2009 SUPPLEMENTS THE STANDARD PLANS BOOK DATED MAY 2006.

NEW STANDARD PLAN NSP D73A

2006 NEW STANDARD PLAN NSP D73A

3-16-09

DIST	COUNTY	ROUTE	POST MILES TOTAL PROJECT	SHEET NO.	TOTAL SHEETS
05	SB	101	82.2/84.3	32	42

Raymond Don Tsztoo
REGISTERED CIVIL ENGINEER

January 18, 2008
PLANS APPROVAL DATE

REGISTERED PROFESSIONAL ENGINEER Raymond Don Tsztoo No. C37332 Exp. 6-30-08 CIVIL STATE OF CALIFORNIA

The State of California or its officers or agents shall not be responsible for the accuracy or completeness of electronic copies of this plan sheet.

To accompany plans dated 11-9-09

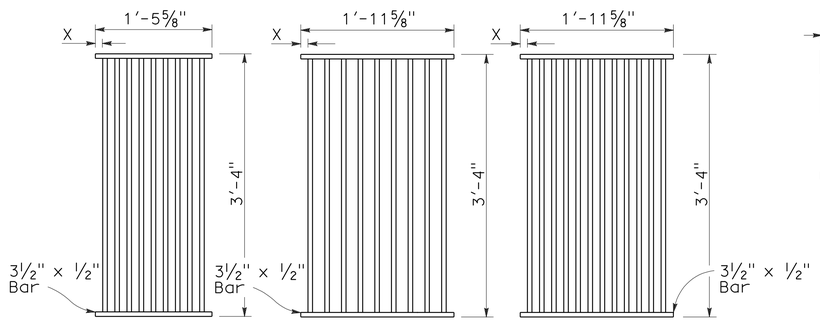

TYPE 18-9

1⅜" Clear spacing. Use within the roadbed on highways where bicycles and pedestrians are excluded.

TYPE 24-9

2" Clear spacing. Use in locations off the roadbed on all types of highways.

TYPE 24-12

1⅜" Clear spacing. Use within the roadbed on highways where bicycles and pedestrians are excluded.

RECTANGULAR GRATE DETAILS

(See table below)

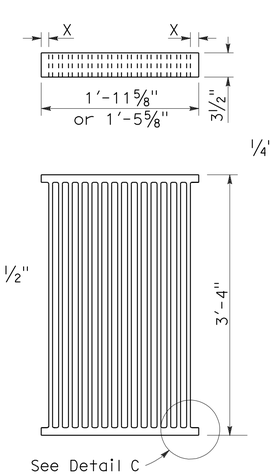

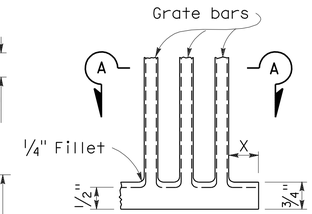

DETAIL C

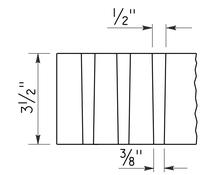

SECTION A-A

ALTERNATIVE CAST NODULAR IRON GRATE OR CAST STEEL GRATE

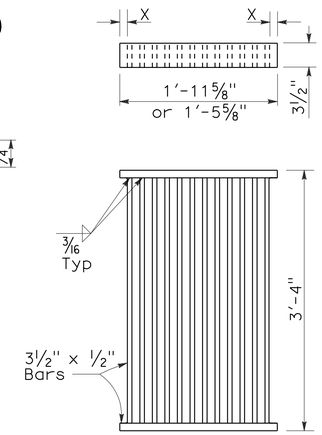

ALTERNATIVE WELDED GRATE

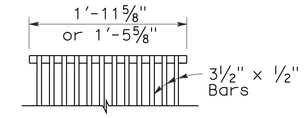

CAST END BLOCK

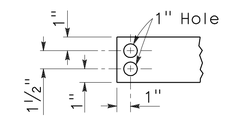

END OF BAR

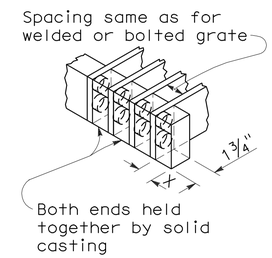

ALTERNATIVE CAST NODULAR IRON OR CAST STEEL END BLOCK GRATE

NOTES:

1. Grate type numbers refer to approximate width of grate in inches and number of bars, respectively.
2. Contractor has the option of using cast nodular iron, cast steel, welded, bolted, or cast end block grate.
3. See Special Provisions for requirements pertaining to galvanizing or asphalt dipping of grates and frames.
4. Rounded top of bars optional on all grates.
5. Pipe inlets with a grate shall be placed so that bars parallel direction of principle surface flow.
6. Full penetration butt welds may be substituted for the fillet welds on all anchors.
7. Standard square, hexagon, round or equivalent headed anchors may be substituted for the right angle hooks on the anchors shown on this plan.
8. Grate and frame weights are based on welded grates (weights of face angles, steps, protection bars, etc. are not included).

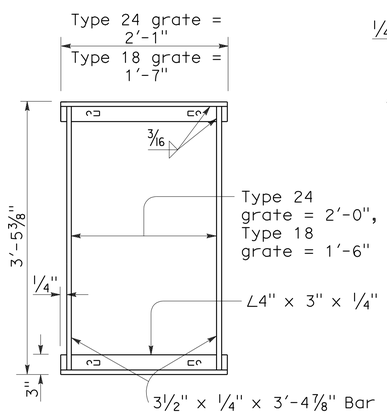

TYPICAL FRAME

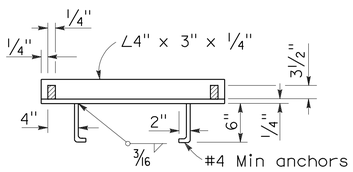

CROSS SECTION

(Thru frame)

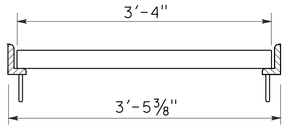

LONGITUDINAL SECTION

(Thru frame and grate)

RECTANGULAR FRAME DETAILS

(For all rectangular grates)

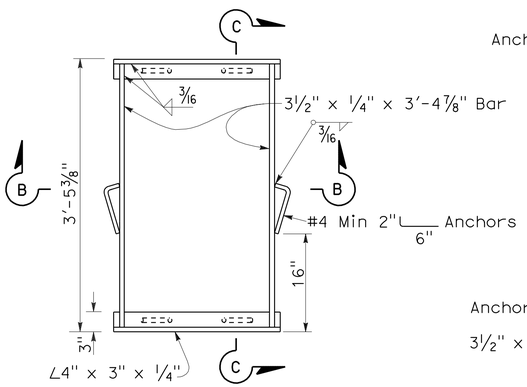

TYPICAL FRAME

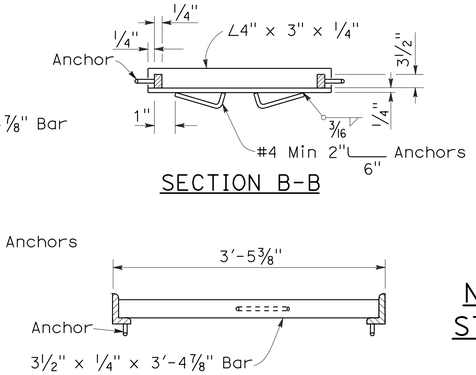

SECTION B-B

SECTION C-C

ALTERNATIVE ANCHOR FOR RECTANGULAR FRAME

(For details not shown, See Rectangular Frame Details)

INLET TYPE	GRATE TYPE	No. OF GRATES	WEIGHT LB
GDO	24-12	2	634
GOL-7	24-12	1	326
GOL-10	24-12	1	326
GO,G1,G2,G3,G4 (TYPE 24)	24-9	1	263
	24-12	1	326
G4 (TYPE 18),G5,G6	18-9	1	249
GT1	18-9	2	498
GT2	18-9	2	498
GT3	24-12	2	652
GT4	24-12	2	652
TRASH RACK			22

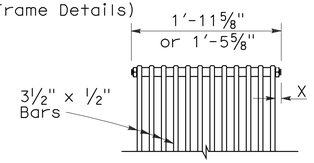

BOLTED END BLOCK

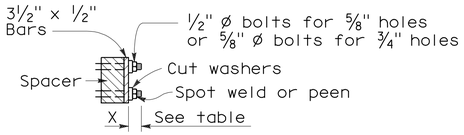

BOLTING DETAIL

ALTERNATIVE BOLTED GRATE

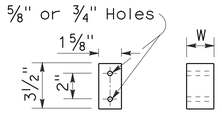

BAR SPACER

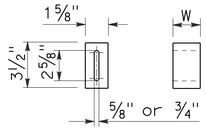

ALTERNATIVE SPACER

W = 1⅜" or 2"

GRATE BAR SPACING TABLE

TYPE	No. OF BARS	CLEAR BAR SPACING	X
18-9	9	1⅜"	1 1/16"
24-9	9	2"	1 9/16"
24-12	12	1⅜"	1¼"

INLET TYPE	COVER TYPE	WEIGHT LB
OS	PLATE	174
OL-7	PLATE	170
OL-10	PLATE	170
OL-14	PLATE	170
OL-21	PLATE	170
OCP	PLATE	112
OCPI	PLATE	112
OCPI	REDWOOD	42
OMP	PLATE	177
OMPI	PLATE	177

BASIS FOR MISC IRON & STEEL FINAL PAY WEIGHTS FOR DRAINAGE INLETS

(See General Notes, No 8)

STATE OF CALIFORNIA
DEPARTMENT OF TRANSPORTATION

GRATE DETAILS

NO SCALE

RSP D77A DATED JANUARY 18, 2008 SUPERSEDES STANDARD PLAN D77A DATED MAY 1, 2006 - PAGE 155 OF THE STANDARD PLANS BOOK DATED MAY 2006.

REVISED STANDARD PLAN RSP D77A

2006 REVISED STANDARD PLAN RSP D77A

12-14-07

DIST	COUNTY	ROUTE	POST MILES TOTAL PROJECT	SHEET NO.	TOTAL SHEETS
05	SB	101	82.2/84.3	33	42

LICENSED LANDSCAPE ARCHITECT

June 5, 2009
PLANS APPROVAL DATE

The State of California or its officers or agents shall not be responsible for the accuracy or completeness of electronic copies of this plan sheet.

LICENSED LANDSCAPE ARCHITECT — Gregory A. Balzer — 2576 — 10 (renewal) 2-28-11 (renewal) date 5-14-09 date — STATE OF CALIFORNIA

To accompany plans dated 11-9-09

A

AB	aggregate base
ABS	acrylonitrile-butadiene-styrene
AC	asphalt concrete
Adj	adjacent/adjustable
AIC	auxiliary irrigation controller
Alt	alternative
AMEND	amendment
ARV	air release valve
AUTO	automatic
AUX	auxiliary
AVB	atmospheric vacuum breaker

B

B&B	balled and burlapped
B/B	brass/bronze
B/B/PL	brass/bronze/plastic
B/PL	brass/plastic
BFM	bonded fiber matrix
Bit Ctd	bituminous coated
BP	booster pump
BPA	backflow preventer assembly
BPAE	backflow preventer assembly in enclosure
BPE	backflow preventer enclosure
BV	ball valve

C

CAP	corrugated aluminum pipe
CARV	combination air release valve
CCA	cam coupler assembly
CEC	controller enclosure cabinet
CHDPE	corrugated high density polyethylene
CL	chain link
CNC	control and neutral conductors
Conc	concrete
Cond	conduit
CSP	corrugated steel pipe
CST	center strip
CV	check valve

D

Dia	diameter
DIP	ductile iron pipe
DN	diameter nominal

E

EA	each
Elect	electric/electrical
Elev	elevation
ENCL	enclosure
EP	edge of pavement
ES	edge of shoulder
EST	end strip
ESTB	establishment
ETW	edge of traveled way

F

F	full circle
F/P	full/part circle
FAU	filter assembly unit
FCV	flow control valve
FERT	fertilizer
FG	finished grade
FIPT	female iron pipe thread
FIS	fertilizer injector system
FL	flow line
FM	flow monitor
FS	flow sensor
Ft	foot/feet
FV	flush valve

G

GAL	Gallon(s)
Galv	galvanized
GARV	garden valve
GPH	gallons per hour
GPM	gallons per minute
GSP	galvanized steel pipe
GV	gate valve

H

H	half circle
HB	hose bib
HDPE	high density polyethylene
HP	horsepower/hinge point
HPL	high pressure line
Hwy	highway

I

IC	irrigation controller
ICC	irrigation controller(s) in controller enclosure cabinet
ID	inside diameter
In	inches
IFS	irrigation filtration system
IPS	iron pipe size
IPT	iron pipe thread
Irr	irrigation

L

L	length
LF	linear foot

M

Max	maximum
MBGR	metal beam guard railing
MCV	manual control valve
MIC	master irrigation controller
Min	minimum
MIPT	male iron pipe thread
Misc	miscellaneous
Mtl	material
MVP	maintenance vehicle pullout

N

NCN	no common name
NL	nozzle line
No.	number
NPT	national pipe thread

O

O/C	on center
OD	outside diameter
Oz	ounce

P

P	part circle
PB	pull box
PCC	portland cement concrete
PE	polyethylene
Pkt	packet
PL	plastic
PLT	plant/planting
PLT ESTB	plant establishment
PM	post mile
PR	pressure rated
PRLV	pressure relief valve
PSFM	polymer stabilized fiber matrix
PSI	pounds per square inch
PRV	pressure reducing valve
PVC	polyvinyl chloride
Pvmt	pavement

Q

Q	quarter circle
QCV	quick coupling valve

R

R	radius
RCP	reinforced concrete pipe
RCV	remote control valve
RCVM	remote control valve (master)
RCVMF	remote control valve (master) w/ flow meter
RCW	recycled/reclaimed water
RECP	rolled erosion control product
REQ	required
R/W	right of way

S

S	slip
SCC	sprinkler control conduit
SCH	schedule
SF	state-furnished
Shld	shoulder
SQFT	square foot/feet
SQYD	square yard(s)
SST	side strip
Sta	station
Std	standard
SW	sidewalk/sound wall

T

T	third circle/thread
TLS	truck loading standpipe
TQ	three quarter circle
TRM	turf reinforcement mat
TRVD	traveled
TT	two third circle
Typ	typical

U

UG	underground

V

VAU	valve assembly unit

W

W	width
W/	with
WM	water meter
WS	wye strainer
WSP	welded steel pipe
WWM	welded wire mesh

NOTE:

FOR ADDITIONAL ABBREVIATIONS, SEE STANDARD PLANS A10A AND A10B.

STATE OF CALIFORNIA
DEPARTMENT OF TRANSPORTATION

PLANTING AND IRRIGATION ABBREVIATIONS

NO SCALE

RSP H1 DATED JUNE 5, 2009 SUPERSEDES STANDARD PLAN H1
DATED MAY 1, 2006 - PAGE 201 OF THE STANDARD PLANS BOOK DATED MAY 2006.

REVISED STANDARD PLAN RSP H1

2006 REVISED STANDARD PLAN RSP H1

5-28-09

DIST	COUNTY	ROUTE	POST MILES TOTAL PROJECT	SHEET NO.	TOTAL SHEETS
05	SB	101	82.2/84.3	34	42

LICENSED LANDSCAPE ARCHITECT

June 5, 2009
PLANS APPROVAL DATE

The State of California or its officers or agents shall not be responsible for the accuracy or completeness of electronic copies of this plan sheet.

LICENSED LANDSCAPE ARCHITECT — Gregory A. Bolzer — 2516 — 10 (expiration) 2-28-11 (renewal date) 5-14-09 (date) — STATE OF CALIFORNIA

To accompany plans dated 11-9-09

EXISTING	PROPOSED	ITEM DESCRIPTION
		WATER METER (WM)
		BACKFLOW PREVENTER ASSEMBLY (BPA)
		BACKFLOW PREVENTER ASSEMBLY IN ENCLOSURE (BPAE)
		BACKFLOW PREVENTER ENCLOSURE (BPE)
		BOOSTER PUMP (BP)
		TRUCK LOADING STANDPIPE (TLS)
FS	FS	FLOW SENSOR (FS)
X	X	MASTER IRRIGATION CONTROLLER (MIC)
		AUXILIARY IRRIGATION CONTROLLER (AIC)
		IRRIGATION CONTROLLER (IC)/ IRRIGATION CONTROLLER (IC) (BATTERY) IRRIGATION CONTROLLER (IC) (SOLAR)
		IRRIGATION CONTROLLER(S) IN CONTROLLER ENCLOSURE CABINET (ICC)
		CONTROL AND NEUTRAL CONDUCTORS (CNC)
SCC	SCC	SPRINKLER CONTROL CONDUIT (SCC)
		IRRIGATION CROSSOVER
		EXTEND IRRIGATION CROSSOVER
		IRRIGATION SLEEVE
dip	DIP	DUCTILE IRON PIPE (SUPPLY LINE) (MAIN) (DIP)
		GALVANIZED STEEL PIPE (SUPPLY LINE) (MAIN) (GSP)
		GALVANIZED STEEL PIPE (SUPPLY LINE) (LATERAL) (GSP)
		PLASTIC PIPE (PR 200) (SUPPLY LINE) (MAIN)
		PLASTIC PIPE (PR 200) (SUPPLY LINE) (LATERAL)
		PLASTIC PIPE (IRRIGATION LINE)
		REMOTE CONTROL VALVE (RCV) REMOTE CONTROL VALVE (MASTER) (RCVM) REMOTE CONTROL VALVE (MASTER) W/FLOW METER (RCVMF)
		MANUAL CONTROL VALVE (MCV)
		VALVE ASSEMBLY UNIT (VAU)
		WYE STRAINER (WS)
		FILTER ASSEMBLY UNIT (FAU)
		GATE VALVE (GV)
		BALL VALVE (BV)

EXISTING	PROPOSED	ITEM DESCRIPTION
		QUICK COUPLING VALVE (QCV)
		CAM COUPLER ASSEMBLY (CCA)
		PRESSURE REDUCING VALVE (PRV)
		PRESSURE RELIEF VALVE (PRLV)
		FLOW CONTROL VALVE (FCV)
		COMBINATION AIR RELEASE VALVE (CARV)
		CHECK VALVE (CV)
		FLUSH VALVE (FV)
		NOZZLE LINE W/TURNING UNION
		IRRIGATION SYSTEM
		IRRIGATION SYSTEM TO BE REMOVED
		CHAIN LINK GATE
		QUICK COUPLING VALVE W/SPRINKLER PROTECTOR
3	3	SPRINKLER W/SPRINKLER PROTECTOR
	C	CONNECT TO EXISTING SYSTEM
		CAP
		CAP EXISTING

VALVE CODE

RCV SIZE
IRRIGATION CONTROLLER
CONTROLLER STATION
VALVE IN PARALLEL (IF APPLICABLE)
GPM
QUANTITY OF SPRINKLERS (WHEN SHOWN)

* 2½"-A-2b-40 -60

MCV SIZE
VALVE NUMBER
GPM
QUANTITY OF TYPE SPRINKLERS (WHEN SHOWN)

* 2"-3-30 -50

* VALVE CODES FOR EXISTING VALVES ARE SHOWN IN A DASHED ENCLOSURE.

STATE OF CALIFORNIA
DEPARTMENT OF TRANSPORTATION

PLANTING AND IRRIGATION SYMBOLS

NO SCALE

RSP H2 DATED JUNE 5, 2009 SUPERSEDES RSP H2 DATED MARCH 7, 2008 AND STANDARD PLAN H2 DATED MAY 1, 2006 - PAGE 202 OF THE STANDARD PLANS BOOK DATED MAY 2006.

REVISED STANDARD PLAN RSP H2

2006 REVISED STANDARD PLAN RSP H2

5-11-09

DIST	COUNTY	ROUTE	POST MILES TOTAL PROJECT	SHEET NO.	TOTAL SHEETS
05	SB	101	82.2/84.3	35	42

LICENSED LANDSCAPE ARCHITECT

June 5, 2009
PLANS APPROVAL DATE

Gregory A. Balzer 2576 LICENSED LANDSCAPE ARCHITECT STATE OF CALIFORNIA
10 (prefix) 2-28-11 (renewal date) 5-14-09 (date)

The State of California or its officers or agents shall not be responsible for the accuracy or completeness of electronic copies of this plan sheet.

To accompany plans dated 11-9-09

2006 REVISED STANDARD PLAN RSP H7

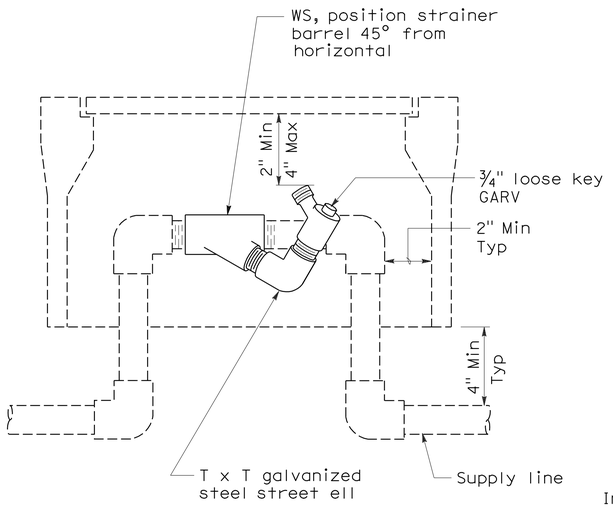

ELEVATION
WYE STRAINER

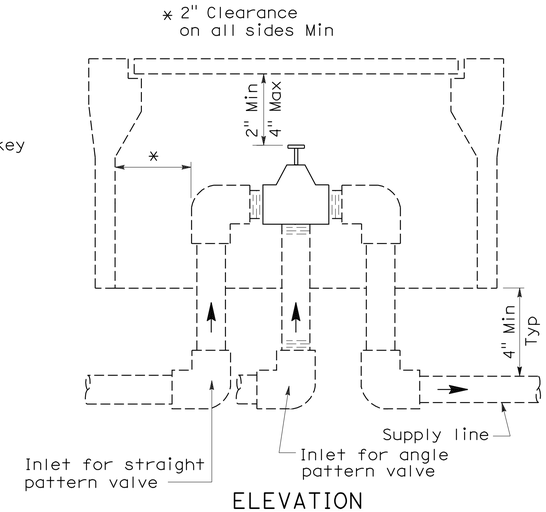

ELEVATION
VALVE

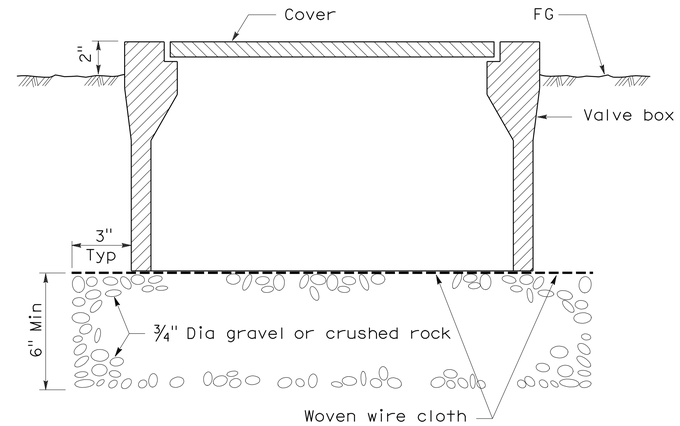

SECTION
VALVE BOX

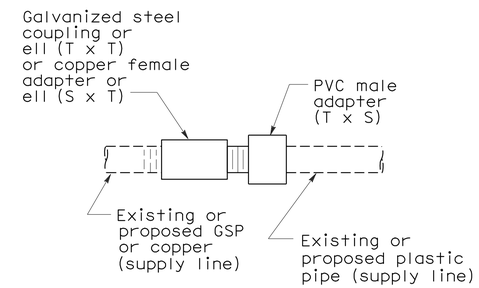

PLAN
GALVANIZED OR COPPER PIPE CONNECTION TO PLASTIC PIPE

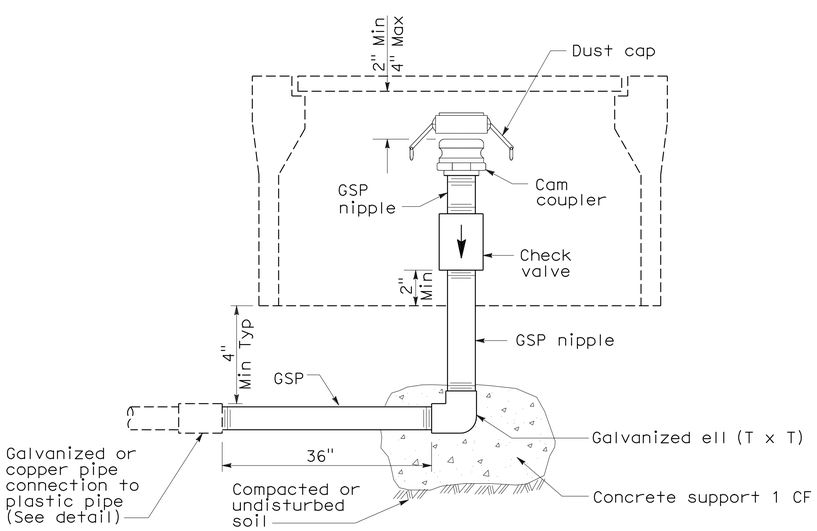

ELEVATION
CAM COUPLER ASSEMBLY

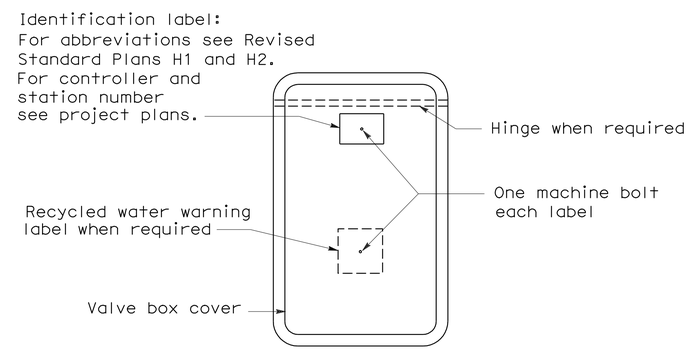

PLAN

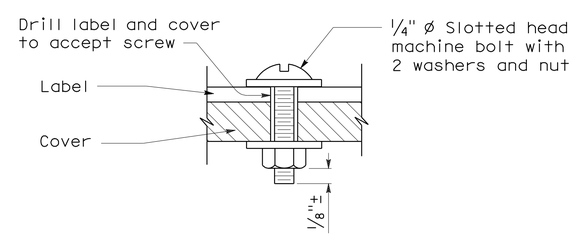

SECTION
VALVE BOX IDENTIFICATION

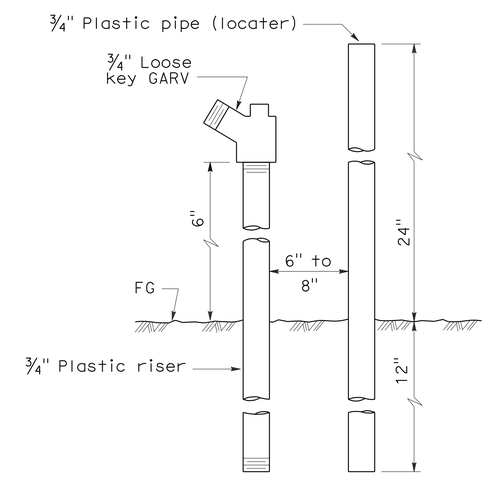

ELEVATION
FLUSH VALVE

STATE OF CALIFORNIA
DEPARTMENT OF TRANSPORTATION

PLANTING AND IRRIGATION DETAILS

NO SCALE

RSP H7 DATED JUNE 5, 2009 SUPERSEDES STANDARD PLAN H7
DATED MAY 1, 2006 - PAGE 207 OF THE STANDARD PLANS BOOK DATED MAY 2006.

REVISED STANDARD PLAN RSP H7

5-28-09

DIST	COUNTY	ROUTE	POST MILES TOTAL PROJECT	SHEET NO.	TOTAL SHEETS
05	SB	101	82.2/84.3	36	42

Randell D. Hiatt
REGISTERED CIVIL ENGINEER

June 6, 2008
PLANS APPROVAL DATE

REGISTERED PROFESSIONAL ENGINEER
Randell D. Hiatt
No. C50200
Exp. 6-30-09
CIVIL
STATE OF CALIFORNIA

The State of California or its officers or agents shall not be responsible for the accuracy or completeness of electronic copies of this plan sheet.

To accompany plans dated 11-9-09

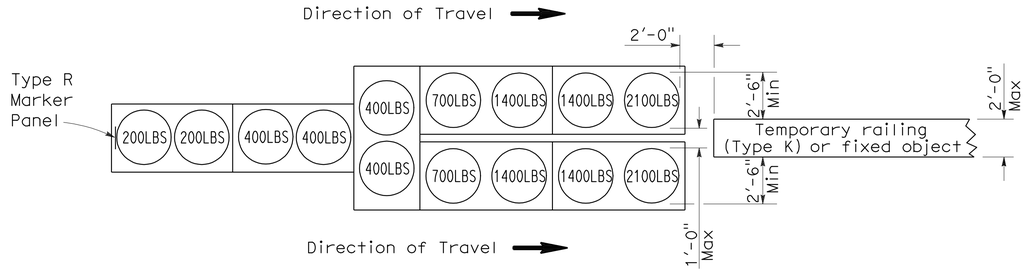

ARRAY 'TU14'

Approach speed 45 mph or more

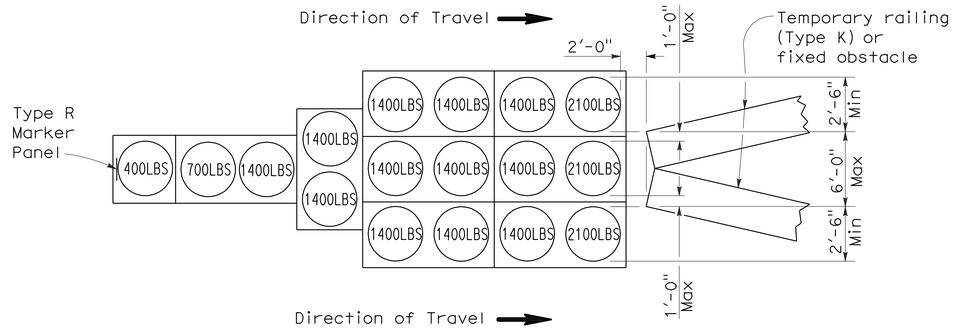

ARRAY 'TU17'

Approach speed less than 45 mph

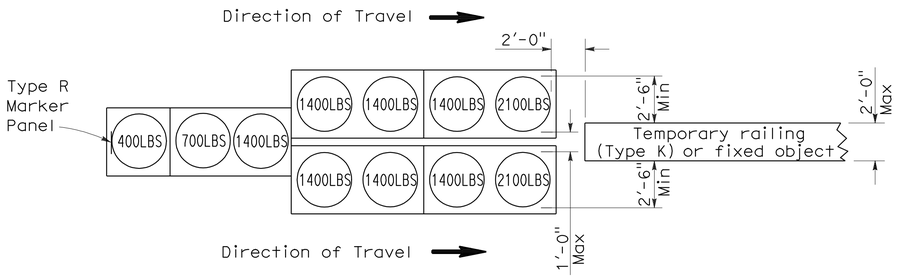

ARRAY 'TU11'

Approach speed less than 45 mph

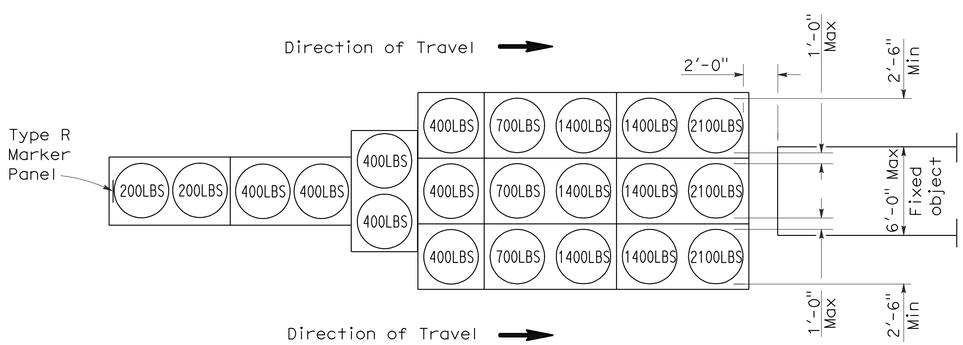

ARRAY 'TU21'

Approach speed 45 mph or more

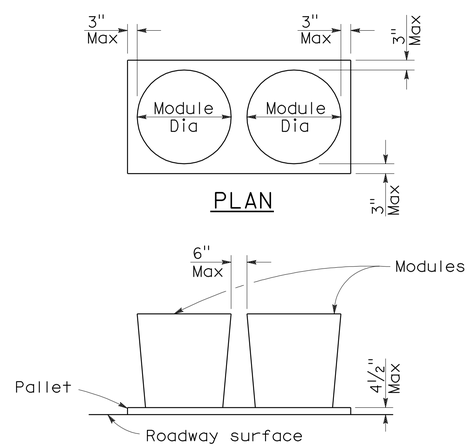

ELEVATION

CRASH CUSHION PALLET DETAIL

See Note 7

NOTES:

1. (XXX) Indicates sand filled module location and weight of sand in pounds for each module. Module spacing is based on the greater diameter of the module.
2. All sand weights are nominal.
3. Temporary crash cushion arrays shall not encroach on the traveled way.
4. Place the top of Type R marker panel 1" below the module lid.
5. Refer to Standard Plan A73B for marker details.
6. Approach speeds indicated conform to NCHRP 350 Report criteria.
7. Use of pallets is optional.

STATE OF CALIFORNIA
DEPARTMENT OF TRANSPORTATION

TEMPORARY CRASH CUSHION, SAND FILLED (UNIDIRECTIONAL)

NO SCALE

RSP T1A DATED JUNE 6, 2008 SUPERSEDES STANDARD PLAN T1A
DATED MAY 1, 2006 - PAGE 211 OF THE STANDARD PLANS BOOK DATED MAY 2006.

REVISED STANDARD PLAN RSP T1A

2006 REVISED STANDARD PLAN RSP T1A

5-15-08

DIST	COUNTY	ROUTE	POST MILES TOTAL PROJECT	SHEET NO.	TOTAL SHEETS
05	SB	101	82.2/84.3	37	42

Randell D. Hiatt
REGISTERED CIVIL ENGINEER

June 6, 2008
PLANS APPROVAL DATE

REGISTERED PROFESSIONAL ENGINEER
Randell D. Hiatt
No. C50200
Exp. 6-30-09
CIVIL
STATE OF CALIFORNIA

The State of California or its officers or agents shall not be responsible for the accuracy or completeness of electronic copies of this plan sheet.

To accompany plans dated 11-9-09

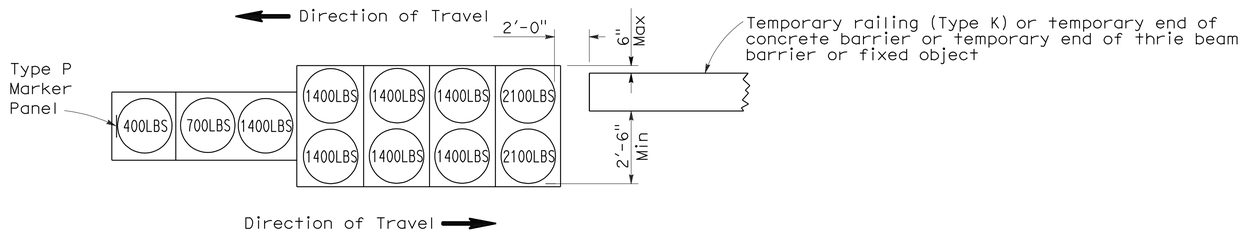

ARRAY 'TB11'

Approach speed less than 45 mph

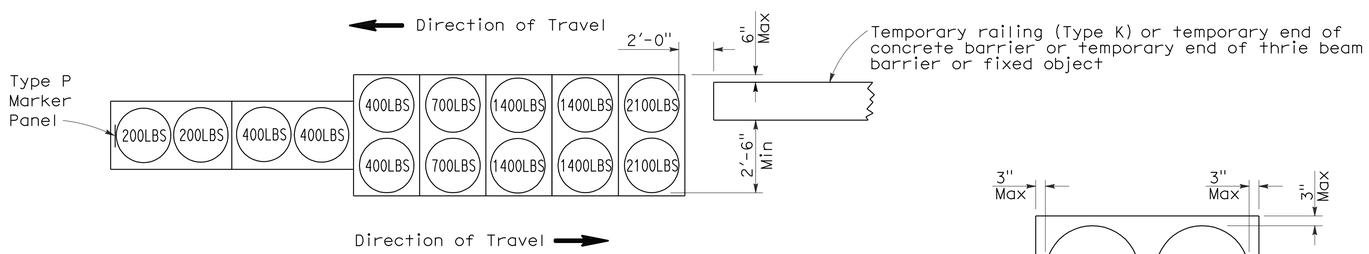

ARRAY 'TB14'

Approach speed 45 mph or more

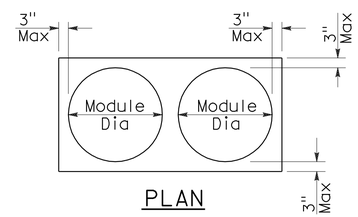

PLAN

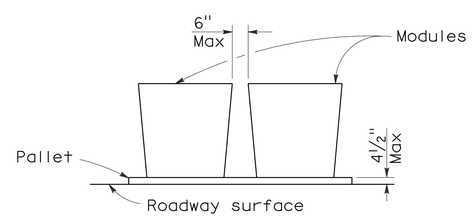

ELEVATION

CRASH CUSHION PALLET DETAIL

See Note 7

NOTES:

1. (XXX) Indicates sand filled module location and weight of sand in pounds for each module. Module spacing is based on the greater diameter of the module.
2. All sand weights are nominal.
3. Temporary crash cushion arrays shall not encroach on the traveled way.
4. Place the Type P marker panel so that the bottom of the panel rests upon the pallet.
5. Refer to Standard Plan A73B for marker details.
6. Approach speeds indicated conform to NCHRP 350 Report criteria.
7. Use of pallets is optional.

STATE OF CALIFORNIA
DEPARTMENT OF TRANSPORTATION

TEMPORARY CRASH CUSHION, SAND FILLED (BIDIRECTIONAL)

NO SCALE

RSP T1B DATED JUNE 6, 2008 SUPERSEDES STANDARD PLAN T1B
DATED MAY 1, 2006 - PAGE 212 OF THE STANDARD PLANS BOOK DATED MAY 2006.

REVISED STANDARD PLAN RSP T1B

2006 REVISED STANDARD PLAN RSP T1B

5-15-08

DIST	COUNTY	ROUTE	POST MILES TOTAL PROJECT	SHEET NO.	TOTAL SHEETS
05	SB	101	82.2/84.3	38	42

Randell D. Hiatt
REGISTERED CIVIL ENGINEER

June 6, 2008
PLANS APPROVAL DATE

REGISTERED PROFESSIONAL ENGINEER
Randell D. Hiatt
No. C50200
Exp. 6-30-09
CIVIL
STATE OF CALIFORNIA

The State of California or its officers or agents shall not be responsible for the accuracy or completeness of electronic copies of this plan sheet.

To accompany plans dated 11-9-09

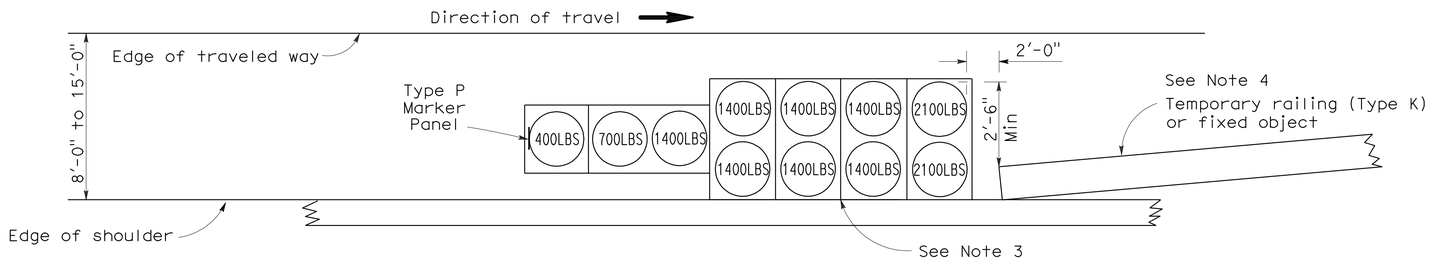

ARRAY 'TS11'

Approach speed less than 45 mph
See Note 9

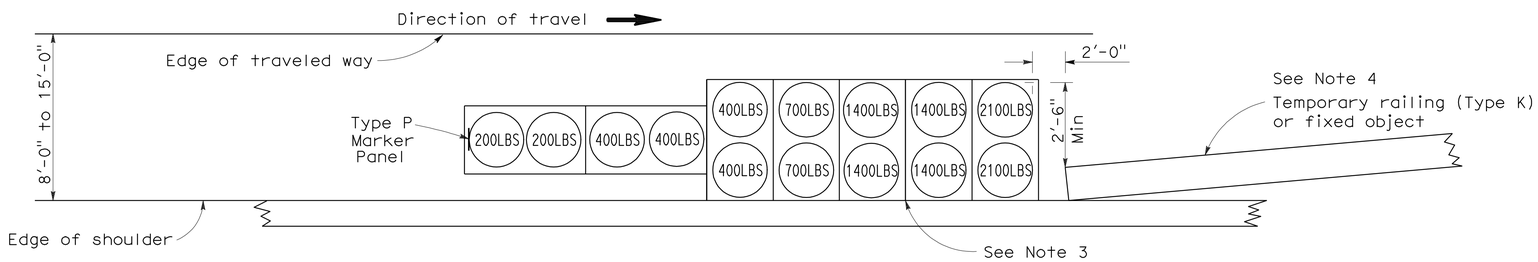

ARRAY 'TS14'

Approach speed 45 mph or more
See Note 9

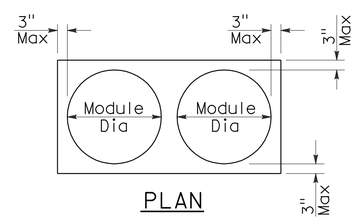

PLAN

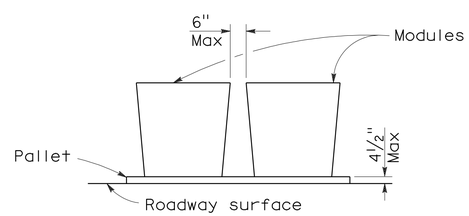

ELEVATION

CRASH CUSHION PALLET DETAIL

See Note 11

NOTES:

1. (XXX) Indicates sand filled module location and weight of sand in pounds for each module. Module spacing is based on the greater diameter of the module.
2. All sand weights are nominal.
3. The temporary crash cushion arrays shown on this plan shall be used only in locations where there will be traffic on one side of the temporary crash cushion array.
4. If the fixed object or approach end of the temporary railing is less than 15'-0" from the edge of traveled way, a temporary crash cushion is required in a construction or work zone.
5. Temporary crash cushion arrays shall not encroach on the traveled way.
6. Arrays for median shoulders shall conform to details shown on this plan for outside shoulders.
7. Place the Type P marker panel so that the bottom of the panel rests upon the pallet and faces traffic.
8. Refer to Standard Plan A73B for marker details.
9. For shoulder widths less than 8'-0", appropriate approved crash cushion protection, other than sand filled modules, shall be provided at fixed objects and at approach ends of temporary railing. The specific type of crash cushion shall be as shown on the project plans or as specified in the Special Provisions, or if not shown on the project plans or specified in the Special Provisions, shall be as approved by the Engineer.
10. Approach speeds indicated conform to NCHRP 350 Report criteria.
11. Use of pallets is optional.

STATE OF CALIFORNIA
DEPARTMENT OF TRANSPORTATION

TEMPORARY CRASH CUSHION, SAND FILLED (SHOULDER INSTALLATIONS)

NO SCALE

RSP T2 DATED JUNE 6, 2008 SUPERSEDES STANDARD PLAN T2
DATED MAY 1, 2006 - PAGE 213 OF THE STANDARD PLANS BOOK DATED MAY 2006.

REVISED STANDARD PLAN RSP T2

2006 REVISED STANDARD PLAN RSP T2

5-15-08

DIST	COUNTY	ROUTE	POST MILES TOTAL PROJECT	SHEET NO.	TOTAL SHEETS
05	SB	101	82.2/84.3	39	42

LICENSED LANDSCAPE ARCHITECT

August 15, 2008
PLANS Approval DATE

LICENSED LANDSCAPE ARCHITECT
Robert B. Schott 3625
Signature
11-04-08
Renewal Date
08-11-08
Date
STATE OF CALIFORNIA

The State of California or its officers or agents shall not be responsible for the accuracy or completeness of electronic copies of this plan sheet.

To accompany plans dated 11-9-09

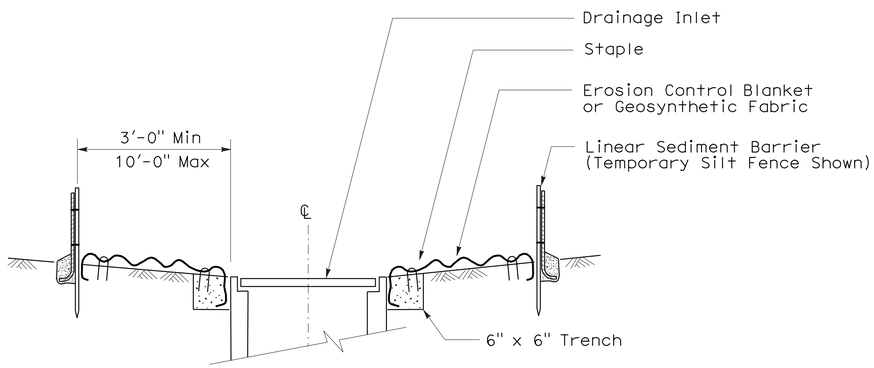

SECTION A-A

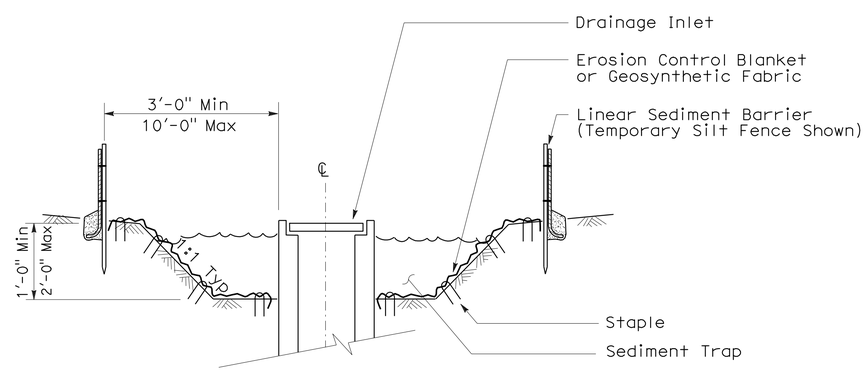

SECTION B-B

NOTES:

1. See Standard Plan T51 for Temporary Silt Fence.
2. Dimensions may vary to fit field conditions.

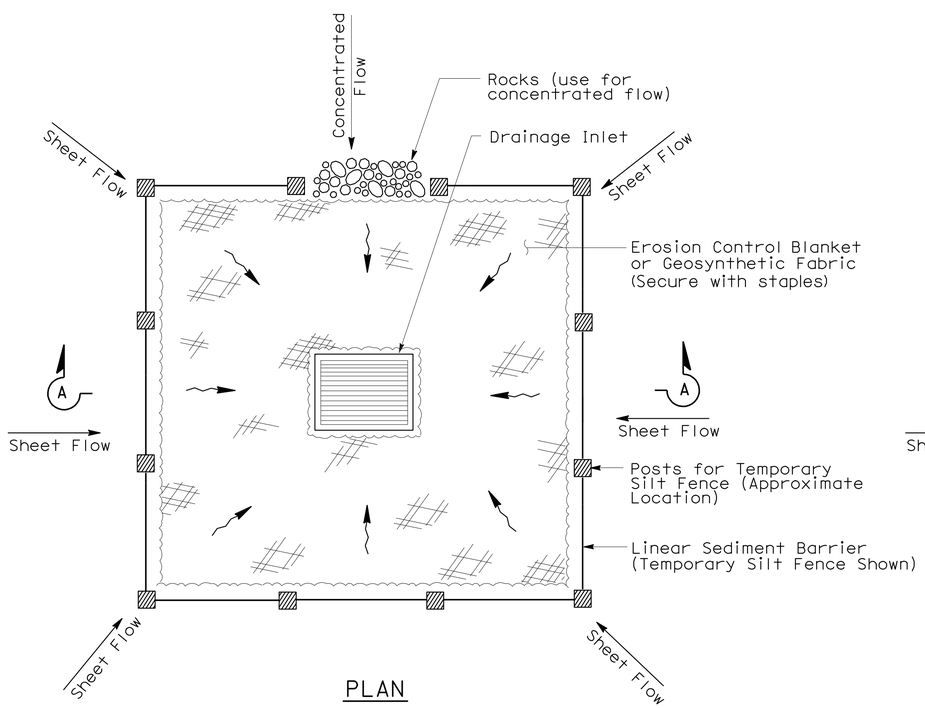

PLAN

TEMPORARY DRAINAGE INLET PROTECTION (TYPE 1)

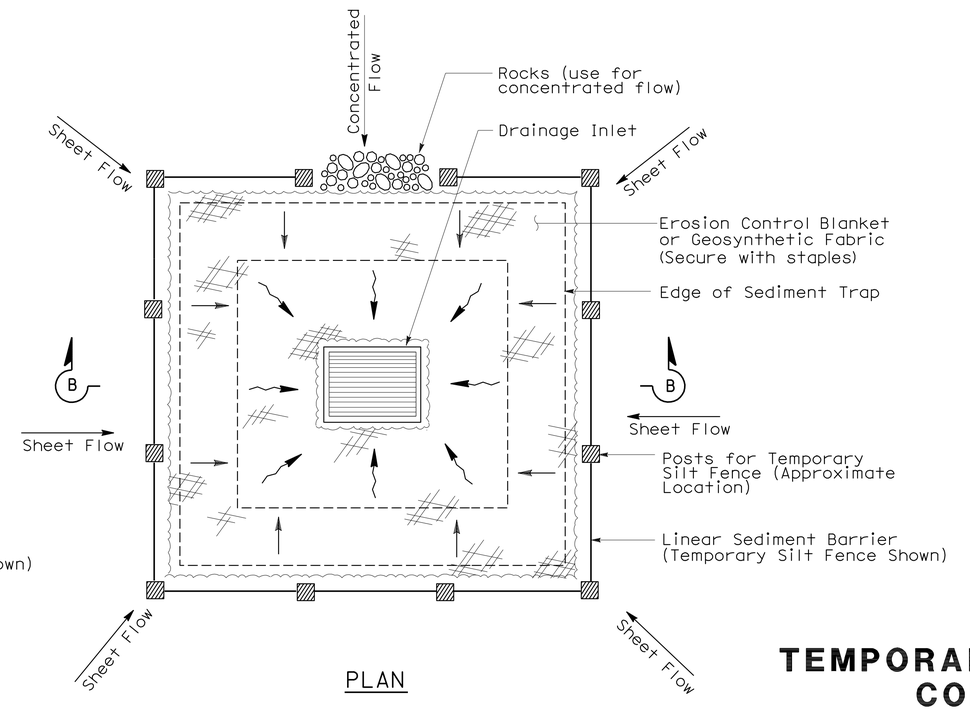

PLAN

TEMPORARY DRAINAGE INLET PROTECTION (TYPE 2) (EXCAVATED SEDIMENT TRAP)

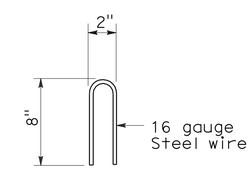

STAPLE DETAIL

STATE OF CALIFORNIA
DEPARTMENT OF TRANSPORTATION

TEMPORARY WATER POLLUTION CONTROL DETAILS (TEMPORARY DRAINAGE INLET PROTECTION)

NO SCALE

NSP T61 DATED AUGUST 15, 2008 SUPPLEMENTS THE STANDARD PLANS BOOK DATED MAY 2006.

NEW STANDARD PLAN NSP T61

2006 NEW STANDARD PLAN NSP T61

7-11-08

DIST	COUNTY	ROUTE	POST MILES TOTAL PROJECT	SHEET NO.	TOTAL SHEETS
05	SB	101	82.2/84.3	40	42

LICENSED LANDSCAPE ARCHITECT

August 15, 2008
PLANS APPROVAL DATE

The State of California or its officers or agents shall not be responsible for the accuracy or completeness of electronic copies of this plan sheet.

LICENSED LANDSCAPE ARCHITECT — Robert B. Schott — Signature — 11-04-08 Renewal Date — 08-11-08 Date — STATE OF CALIFORNIA

To accompany plans dated 11-9-09

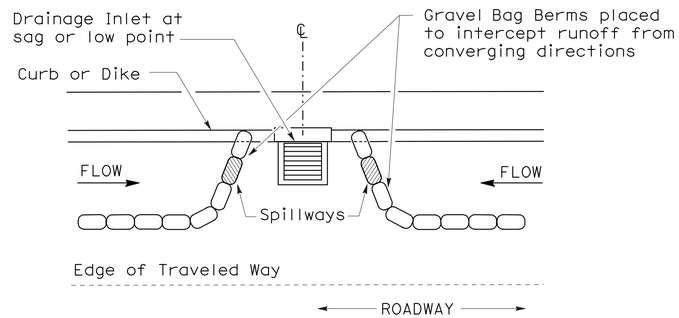

PLAN

CONFIGURATION FOR SAG POINT INLET (GRAVEL BAG BERM)

GRAVEL BAG BERM (TYPE 3A) SPACING TABLE

SLOPE OF ROADWAY (PERCENT)	1 to 3.9	4 to 5.9	6 to 7.9	8 to 10	10+
INTERVAL BETWEEN BERM	100′	75′	50′	25′	12′

For slope of less than 1%, install barriers only if erosion/sediment is prevalent

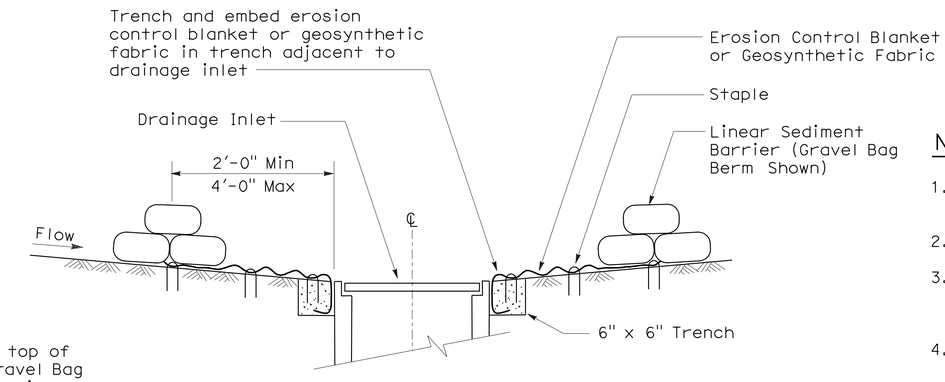

SECTION A-A

NOTES:

1. Place safety cones adjacent to drainage inlet protection.
2. Dimensions may vary to fit field conditions.
3. Install a minimum of 3 gravel bag berms upstream of each drainage inlet to be protected.
4. Position erosion control blanket or geosynthetic fabric at edge of concrete apron and secure in trench.
5. Erosion control blanket or geosynthetic fabric is not required if the area adjacent to the drainage inlet is vegetated or paved.

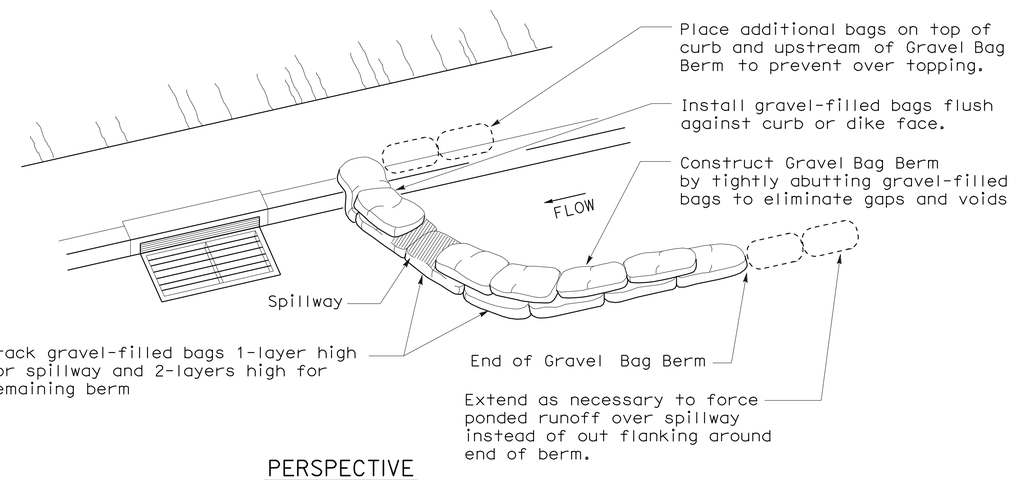

PERSPECTIVE

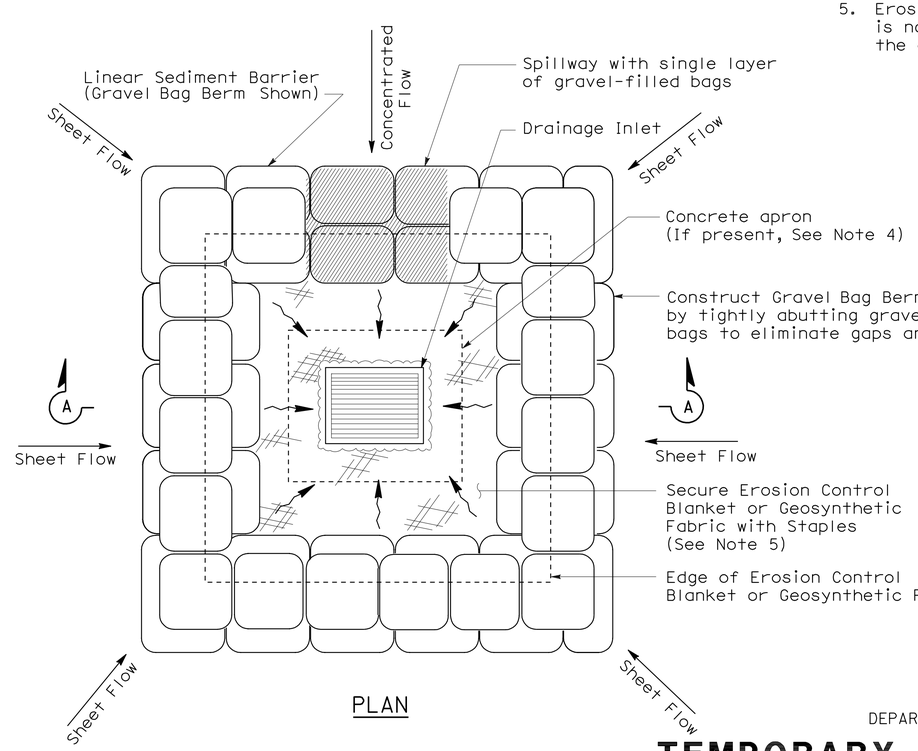

PLAN

TEMPORARY DRAINAGE INLET PROTECTION (TYPE 3B)

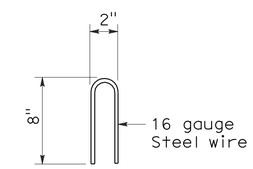

STAPLE DETAIL

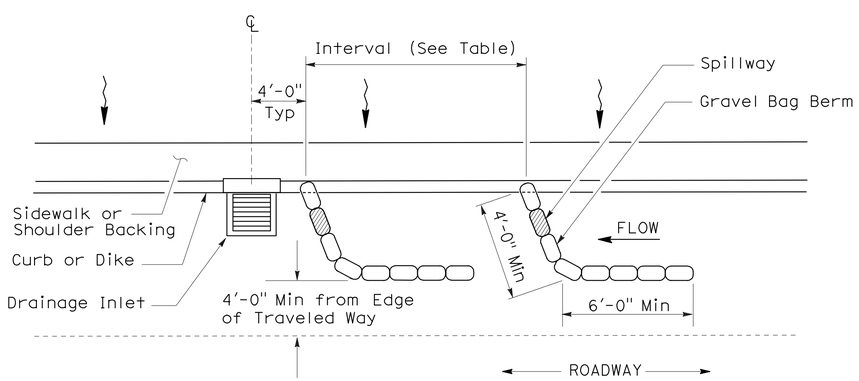

PLAN

TEMPORARY DRAINAGE INLET PROTECTION (TYPE 3A) (GRAVEL BAG BERM)

STATE OF CALIFORNIA
DEPARTMENT OF TRANSPORTATION

TEMPORARY WATER POLLUTION CONTROL DETAILS (TEMPORARY DRAINAGE INLET PROTECTION)

NO SCALE

NSP T62 DATED AUGUST 15, 2008 SUPPLEMENTS THE STANDARD PLANS BOOK DATED MAY 2006.

NEW STANDARD PLAN NSP T62

2006 NEW STANDARD PLAN NSP T62

DIST	COUNTY	ROUTE	POST MILES TOTAL PROJECT	SHEET NO.	TOTAL SHEETS
05	SB	101	82.2/84.3	41	42

LICENSED LANDSCAPE ARCHITECT

August 15, 2008
PLANS APPROVAL DATE

The State of California or its officers or agents shall not be responsible for the accuracy or completeness of electronic copies of this plan sheet.

LICENSED LANDSCAPE ARCHITECT — Robert B. Schott — Signature — 11-04-08 Renewal Date — 08-11-08 Date — STATE OF CALIFORNIA

To accompany plans dated 11-9-09

FLEXIBLE SEDIMENT BARRIER SPACING TABLE

SLOPE OF ROADWAY (PERCENT)	0 to 0.9	1 to 1.9	2 to 2.9	3 to 4	5+
INTERVAL BETWEEN BARRIERS	50′	35′	30′	25′	20′
ANGLE FROM FACE OF CURB	70°	70°	70°	45°	45°
SUGGESTED BARRIER LENGTH	6′	6′	6′	6′	6′

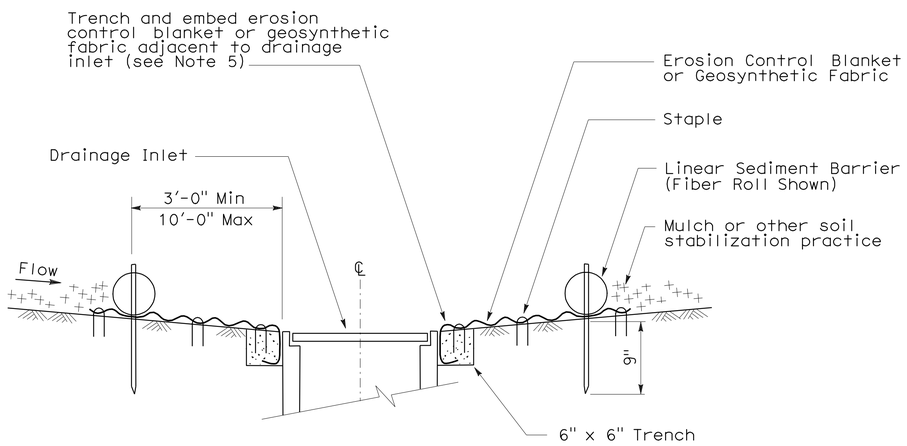

SECTION A-A

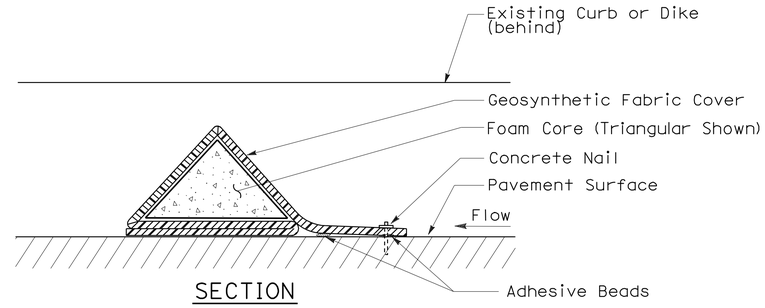

SECTION

FLEXIBLE SEDIMENT BARRIER DETAIL (FOAM BARRIER SHOWN)

NOTES:

1. See Standard Plan T51 for Temporary Silt Fence.
2. Dimensions may vary to fit field conditions.
3. Install a minimum of 3 flexible sediment barriers upstream of each drainage inlet to be protected.
4. Position erosion control blanket or geosynthetic fabric at edge of concrete apron and secure in trench.
5. Erosion control blanket or geosynthetic fabric is not required if the area adjacent to the drainage inlet is vegetated.

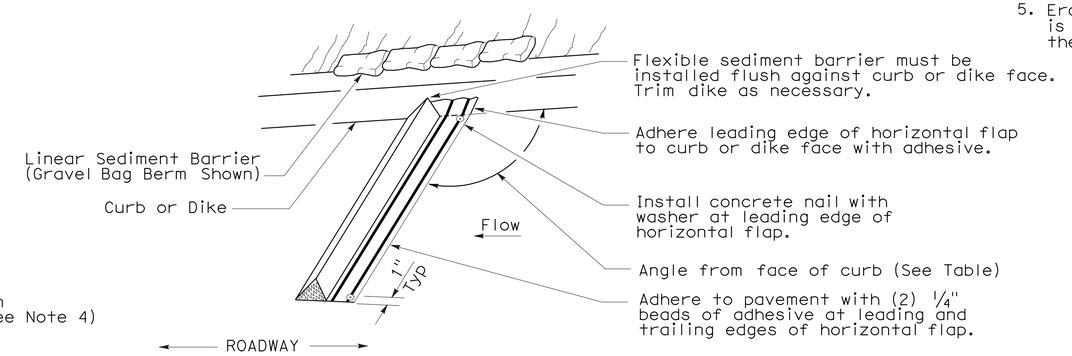

PERSPECTIVE

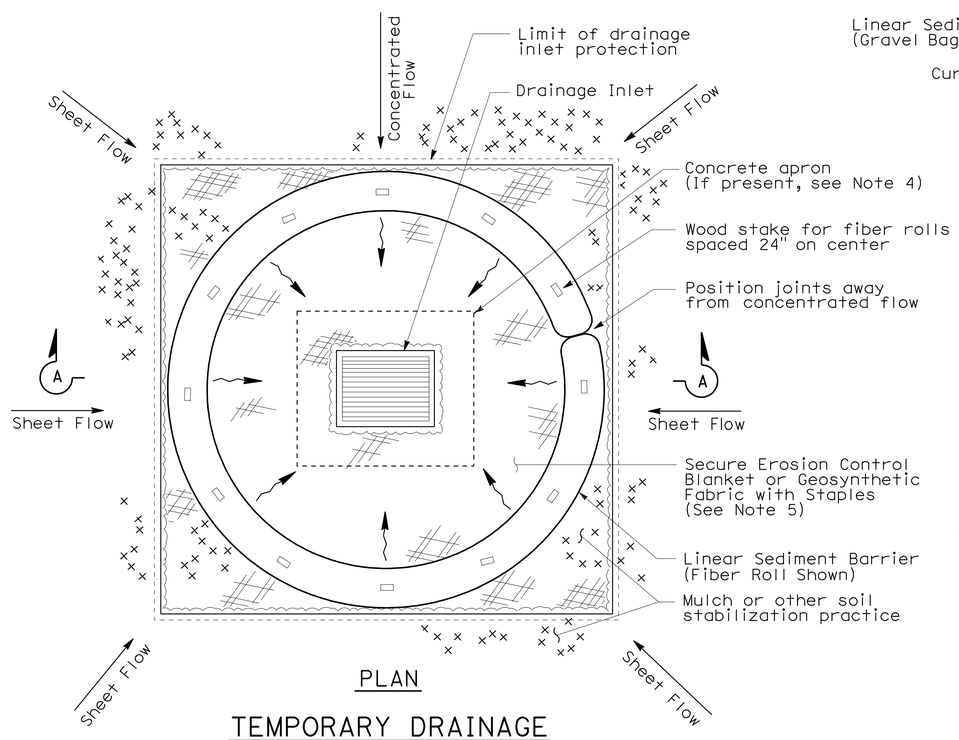

PLAN

TEMPORARY DRAINAGE INLET PROTECTION (TYPE 4A)

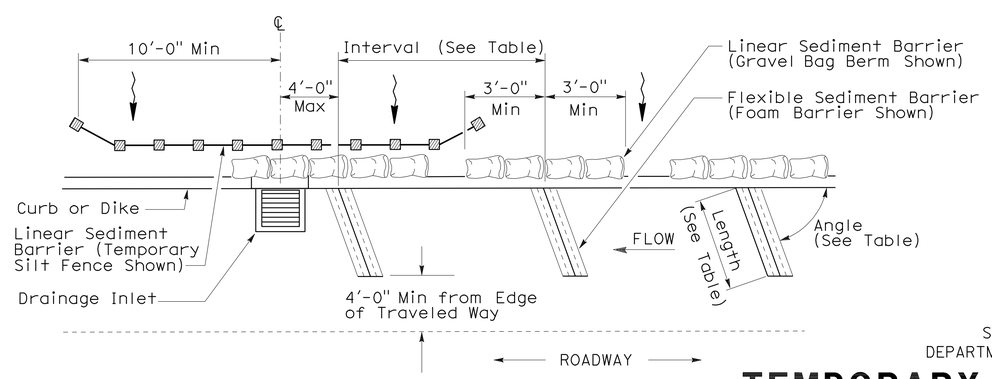

PLAN

TEMPORARY DRAINAGE INLET PROTECTION (TYPE 4B) FLEXIBLE SEDIMENT BARRIER

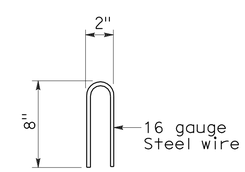

STAPLE DETAIL

STATE OF CALIFORNIA
DEPARTMENT OF TRANSPORTATION

TEMPORARY WATER POLLUTION CONTROL DETAILS (TEMPORARY DRAINAGE INLET PROTECTION)

NO SCALE

NSP T63 DATED AUGUST 15, 2008 SUPPLEMENTS THE STANDARD PLANS BOOK DATED MAY 2006.

NEW STANDARD PLAN NSP T63

2006 NEW STANDARD PLAN NSP T63

DIST	COUNTY	ROUTE	POST MILES TOTAL PROJECT	SHEET NO.	TOTAL SHEETS
05	SB	101	82.2/84.3	42	42

LICENSED LANDSCAPE ARCHITECT

August 15, 2008
PLANS APPROVAL DATE

LICENSED LANDSCAPE ARCHITECT
Robert B. Schott 3625
Signature
11-04-08
Renewal Date
08-11-08
Date
STATE OF CALIFORNIA

The State of California or its officers or agents shall not be responsible for the accuracy or completeness of electronic copies of this plan sheet.

To accompany plans dated 11-9-09

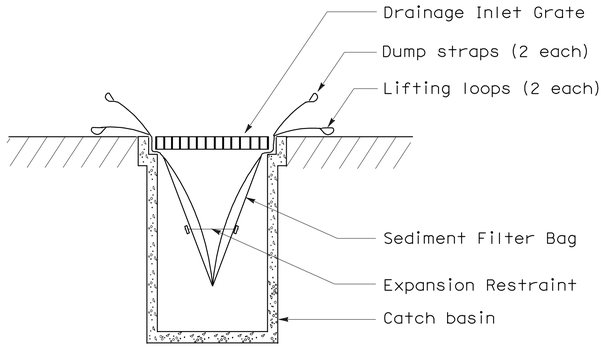

SECTION B-B

SEDIMENT FILTER BAG DETAIL

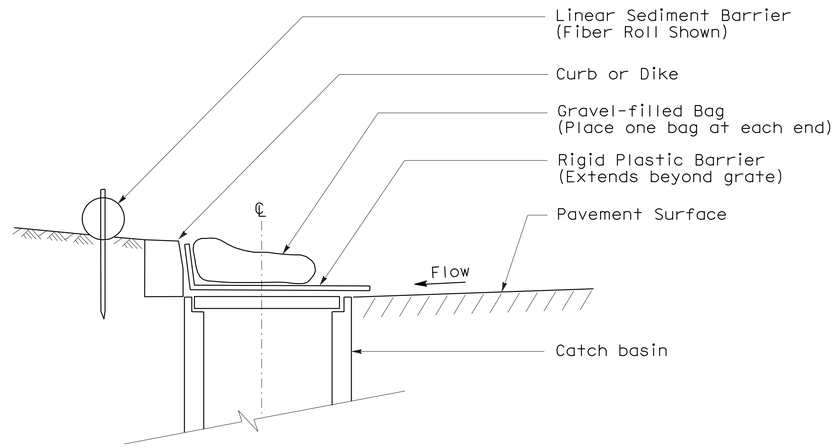

SECTION

TEMPORARY DRAINAGE INLET PROTECTION (TYPE 6A) (CATCH BASIN WITH GRATE)

NOTES:

1. See Standard Plan T51 for Temporary Silt Fence.
2. Dimensions may vary to fit field conditions.

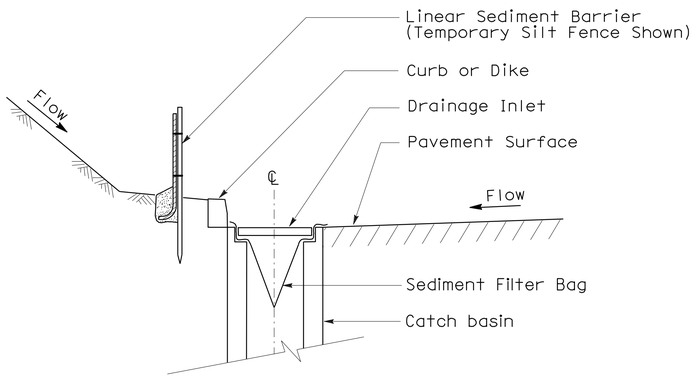

SECTION A-A

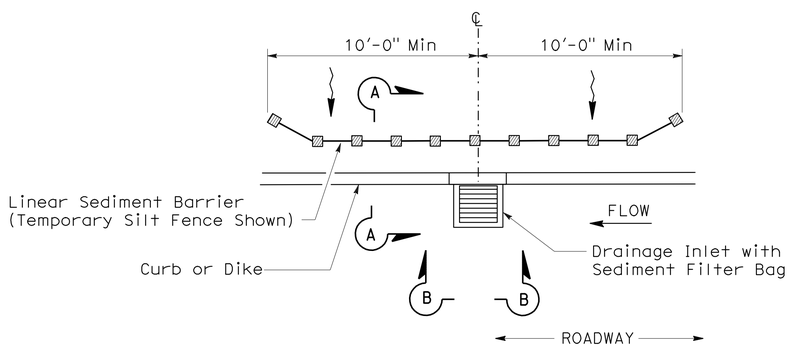

PLAN

TEMPORARY DRAINAGE INLET PROTECTION (TYPE 5) (SEDIMENT FILTER BAG)

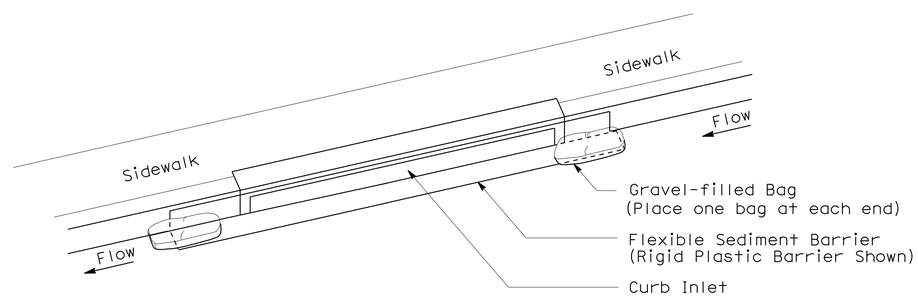

PERSPECTIVE

TEMPORARY DRAINAGE INLET PROTECTION (TYPE 6B) (CURB INLET WITHOUT GRATE)

STATE OF CALIFORNIA
DEPARTMENT OF TRANSPORTATION

TEMPORARY WATER POLLUTION CONTROL DETAILS (TEMPORARY DRAINAGE INLET PROTECTION)

NO SCALE

NSP T64 DATED AUGUST 15, 2008 SUPPLEMENTS
THE STANDARD PLANS BOOK DATED MAY 2006.

NEW STANDARD PLAN NSP T64

2006 NEW STANDARD PLAN NSP T64

7-11-08