ACNHG-Q101(221)E

Dist	COUNTY	ROUTE	POST MILES TOTAL PROJECT	SHEET No.	TOTAL SHEETS
05	SLO	101	7.8/12.5	1	69

STATE OF CALIFORNIA
DEPARTMENT OF TRANSPORTATION

PROJECT PLANS FOR CONSTRUCTION ON
STATE HIGHWAY

IN SAN LUIS OBISPO COUNTY
IN AND NEAR ARROYO GRANDE
FROM LOS BERROS ROAD UNDERCROSSING
TO BRIDGE STREET UNDERCROSSING

TO BE SUPPLEMENTED BY STANDARD PLANS DATED MAY 2006

INDEX OF PLANS

SHEET No.	DESCRIPTION
1	TITLE
2-6	TYPICAL CROSS SECTIONS
7-22	LAYOUTS
23-25	CONSTRUCTION DETAILS
26-34	EROSION CONTROL PLANS
35-39	DRAINAGE PROFILES
40-41	DRAINAGE DETAILS
42	DRAINAGE QUANTITIES
43	CONSTRUCTION AREA SIGNS
44	PAVEMENT DELINEATION PLANS AND SIGN QUANTITIES
45-46	SUMMARY OF QUANTITIES
47-69	REVISED AND NEW STANDARD PLANS

THE STANDARD PLANS LIST APPLICABLE TO THIS CONTRACT IS INCLUDED IN THE NOTICE TO BIDDERS AND SPECIAL PROVISIONS BOOK.

LOCATION MAP

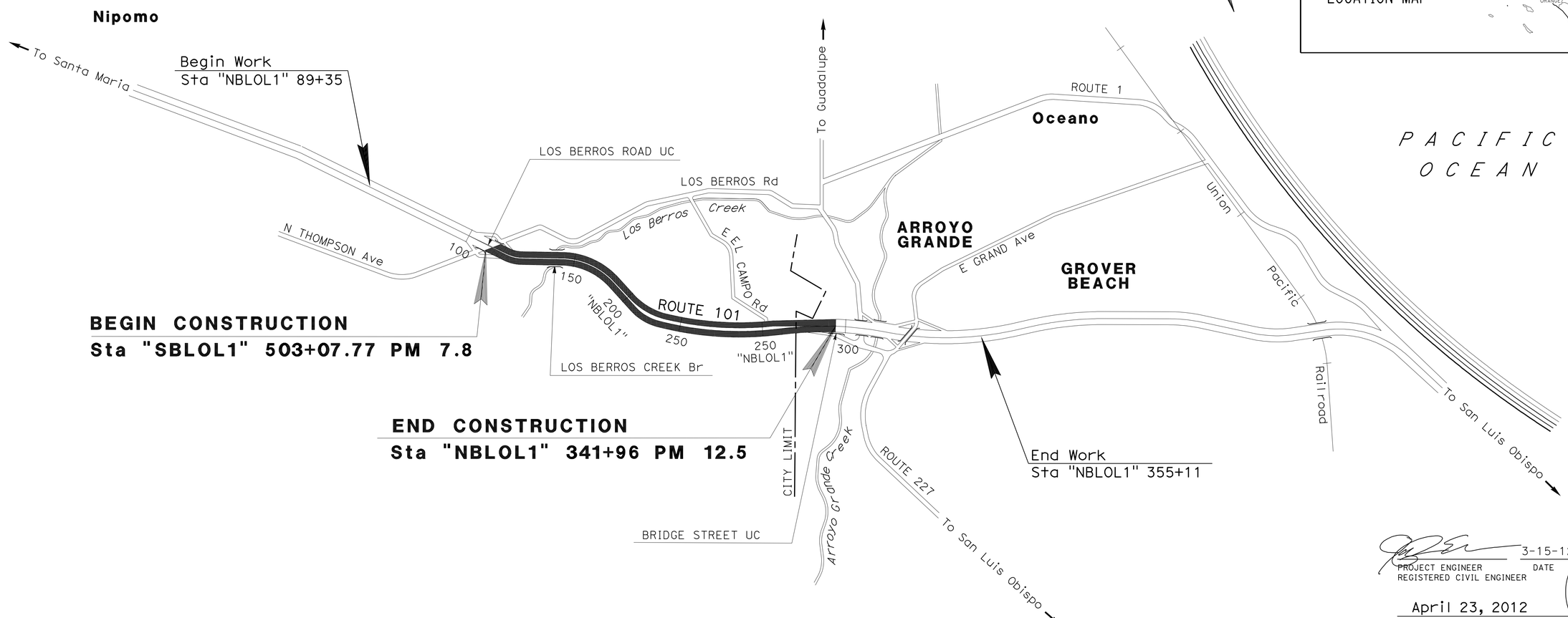

PROJECT MANAGER: AMY DONATELLO

DESIGN ENGINEER: STEVE WYATT

THE CONTRACTOR SHALL POSSESS THE CLASS (OR CLASSES) OF LICENSE AS SPECIFIED IN THE "NOTICE TO BIDDERS."

3-15-12
PROJECT ENGINEER REGISTERED CIVIL ENGINEER — DATE

April 23, 2012
PLANS APPROVAL DATE

REGISTERED PROFESSIONAL ENGINEER — J. ERWIN — No. 74015 — Exp. 06-30-13 — CIVIL — STATE OF CALIFORNIA

THE STATE OF CALIFORNIA OR ITS OFFICERS OR AGENTS SHALL NOT BE RESPONSIBLE FOR THE ACCURACY OR COMPLETENESS OF SCANNED COPIES OF THIS PLAN SHEET.

CONTRACT No.	05-0Q6204
PROJECT ID	0500000319

LAST REVISION 03-15-12 — DATE PLOTTED => 15-MAY-2012 — TIME PLOTTED => 15:21

Dist	COUNTY	ROUTE	POST MILES TOTAL PROJECT	SHEET No.	TOTAL SHEETS
05	SLO	101	7.8/12.5	2	69

REGISTERED CIVIL ENGINEER 3-15-12 DATE

4-23-12
PLANS APPROVAL DATE

REGISTERED PROFESSIONAL ENGINEER J. ERWIN No. 74015 Exp. 06-30-13 CIVIL STATE OF CALIFORNIA

THE STATE OF CALIFORNIA OR ITS OFFICERS OR AGENTS SHALL NOT BE RESPONSIBLE FOR THE ACCURACY OR COMPLETENESS OF SCANNED COPIES OF THIS PLAN SHEET.

NOTE:

1. DIMENSIONS OF THE PAVEMENT STRUCTURES (STRUCTURAL SECTIONS) ARE SUBJECT TO TOLERANCES SPECIFIED IN THE STANDARD SPECIFICATIONS.

ABBREVIATIONS

BB PROFILE GRADE AT BOTTOM OF BARRIER
LL LANELINE

DESIGN DESIGNATION (Rte 101)

2009 ADT = 58,605 D = 55%
2019 ADT = 70,623 T = 4.0%
DHV = 6,891 V = 70 MPH

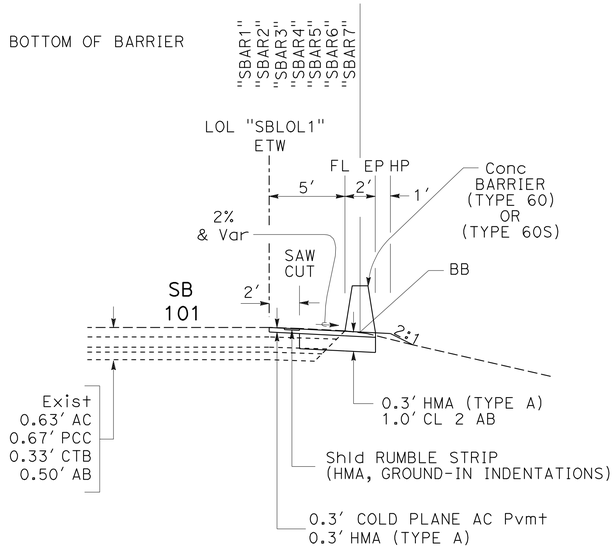

"SBLOL1" Sta 640+10.00 TO 646+10.00
"SBLOL1" Sta 597+00.00 TO 612+20.00
"SBLOL1" Sta 586+00.00 TO 588+70.00
"SBLOL1" Sta 576+00.00 TO 582+50.00
"SBLOL1" Sta 518+50.00 TO 524+30.00
"SBLOL1" Sta 673+25.00 TO 678+00.00
"SBLOL1" Sta 662+00.00 TO 663+90.00
"SBLOL1" Sta 651+50.00 TO 653+70.00
"SBLOL1" Sta 650+00.00 TO 651+00.00

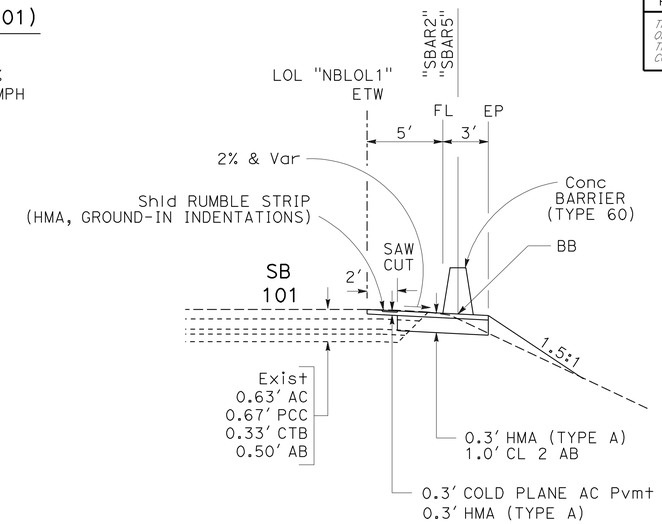

"SBLOL1" Sta 651+00.00 TO 651+50.00
"SBLOL1" Sta 582+50.00 TO 586+00.00

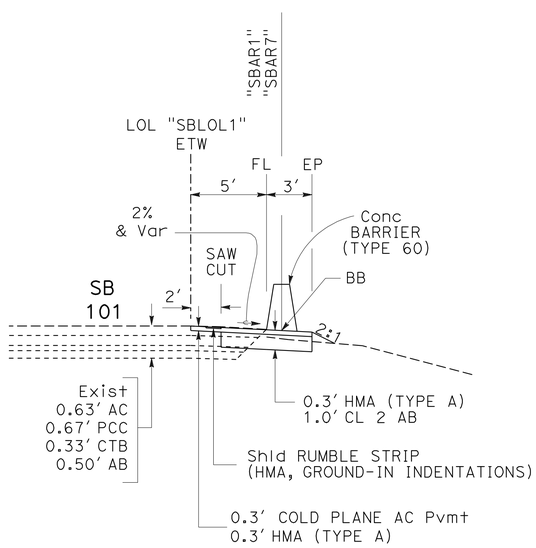

"SBLOL1" Sta 678+00.00 TO 682+25.00
"SBLOL1" Sta 503+07.77 TO 518+50.00

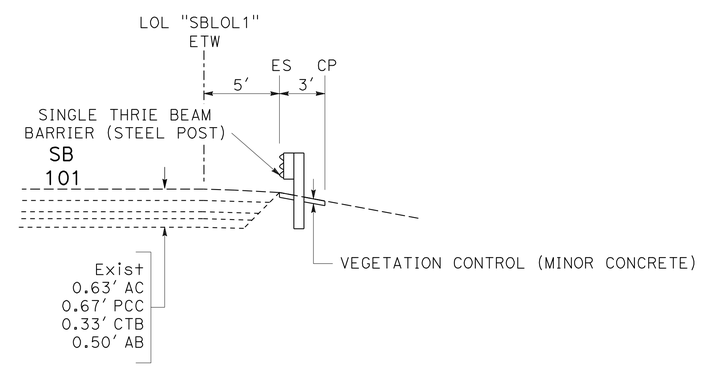

"SBLOL1" Sta 533+41.06 TO 536+50.00
"SBLOL1" Sta 524+30.00 TO 532+28.56

SB ROUTE 101

TYPICAL CROSS SECTIONS

NO SCALE

X-1

STATE OF CALIFORNIA - DEPARTMENT OF TRANSPORTATION
Caltrans
DESIGN
FUNCTIONAL SUPERVISOR STEVE WYATT
CALCULATED-DESIGNED BY MICHAEL O'NEAL
CHECKED BY JOSEPH ERWIN
REVISED BY
DATE REVISED

LAST REVISION 03-15-12
DATE PLOTTED => 24-APR-2012
TIME PLOTTED => 09:20

Dist	COUNTY	ROUTE	POST MILES TOTAL PROJECT	SHEET No.	TOTAL SHEETS
05	SLO	101	7.8/12.5	3	69

REGISTERED CIVIL ENGINEER 3-15-12 DATE

4-23-12
PLANS APPROVAL DATE

REGISTERED PROFESSIONAL ENGINEER J. ERWIN No. 74015 Exp. 06-30-13 CIVIL STATE OF CALIFORNIA

THE STATE OF CALIFORNIA OR ITS OFFICERS OR AGENTS SHALL NOT BE RESPONSIBLE FOR THE ACCURACY OR COMPLETENESS OF SCANNED COPIES OF THIS PLAN SHEET.

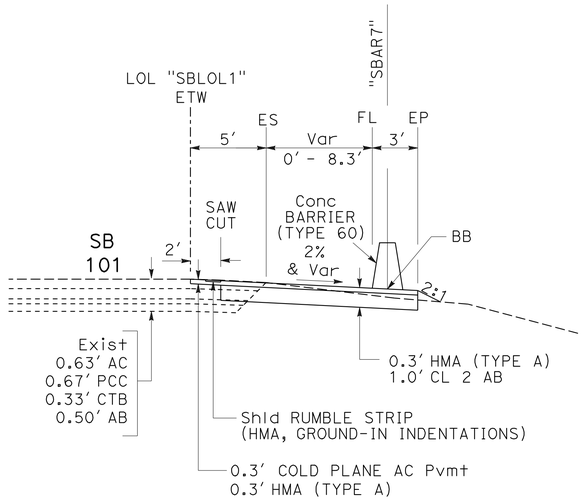

"SBLOL1" Sta 682+25.00 TO 685+00.00

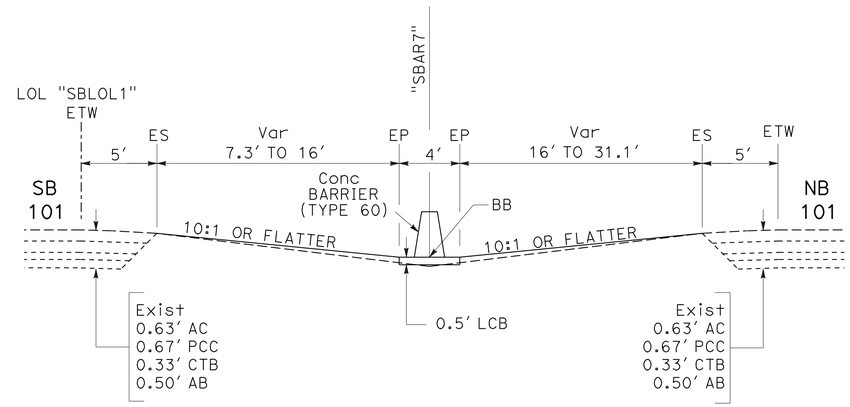

"SBLOL1" Sta 685+00.00 TO 700+50.00

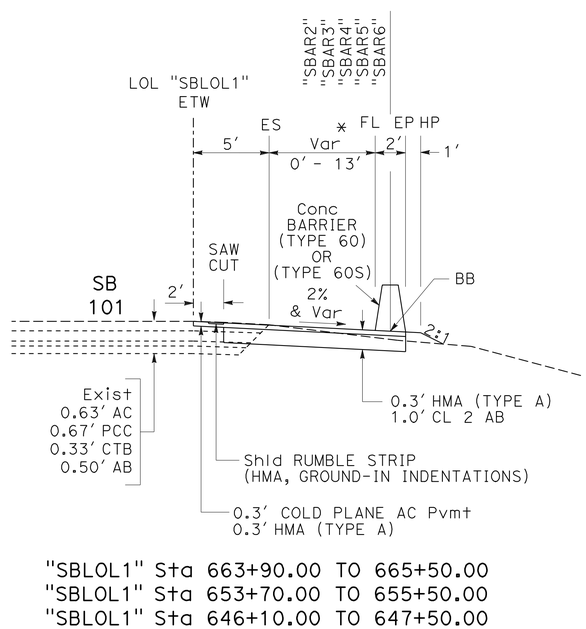

"SBLOL1" Sta 663+90.00 TO 665+50.00
"SBLOL1" Sta 653+70.00 TO 655+50.00
"SBLOL1" Sta 646+10.00 TO 647+50.00
"SBLOL1" Sta 612+20.00 TO 614+00.00
"SBLOL1" Sta 588+70.00 TO 591+30.00

* SEE L-SHEETS FOR Max OFFSET OF BARRIER

SB ROUTE 101

TYPICAL CROSS SECTIONS

NO SCALE

X-2

STATE OF CALIFORNIA - DEPARTMENT OF TRANSPORTATION
Caltrans®
DESIGN

FUNCTIONAL SUPERVISOR: STEVE WYATT
CALCULATED-DESIGNED BY: MICHAEL O'NEAL
CHECKED BY: JOSEPH ERWIN
REVISED BY
DATE REVISED

LAST REVISION 03-15-12
DATE PLOTTED => 23-APR-2012
TIME PLOTTED => 17:42

Dist	COUNTY	ROUTE	POST MILES TOTAL PROJECT	SHEET No.	TOTAL SHEETS
05	SLO	101	7.8/12.5	4	69

REGISTERED CIVIL ENGINEER 3-15-12 DATE

4-23-12
PLANS APPROVAL DATE

REGISTERED PROFESSIONAL ENGINEER J. ERWIN No. 74015 Exp. 06-30-13 CIVIL STATE OF CALIFORNIA

THE STATE OF CALIFORNIA OR ITS OFFICERS OR AGENTS SHALL NOT BE RESPONSIBLE FOR THE ACCURACY OR COMPLETENESS OF SCANNED COPIES OF THIS PLAN SHEET.

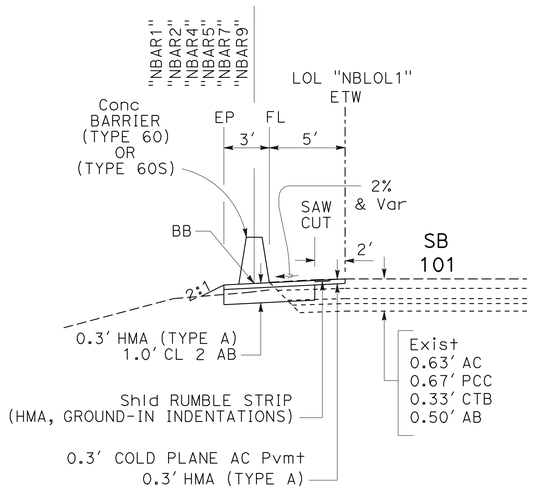

"NBLOL1" Sta 222+00.00 TO 235+30.00
"NBLOL1" Sta 194+40.00 TO 207+00.00 "NBLOL1" Sta 313+50.00 TO 341+96.25
"NBLOL1" Sta 145+00.00 TO 159+50.00 "NBLOL1" Sta 264+00.00 TO 270+50.00
"NBLOL1" Sta 113+30.00 TO 115+00.00 "NBLOL1" Sta 238+30.00 TO 245+00.00

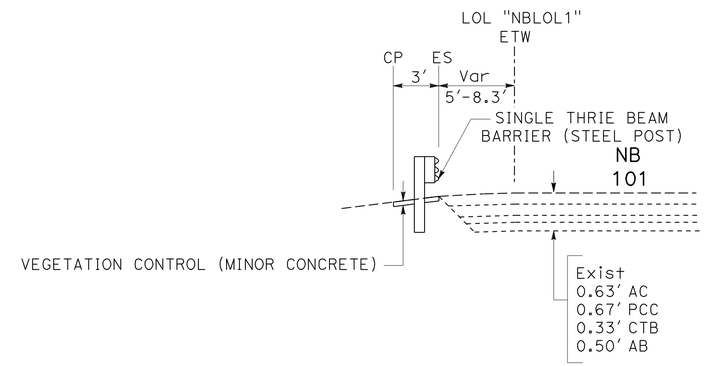

"NBLOL1" Sta 123+95.00 TO 124+70.00

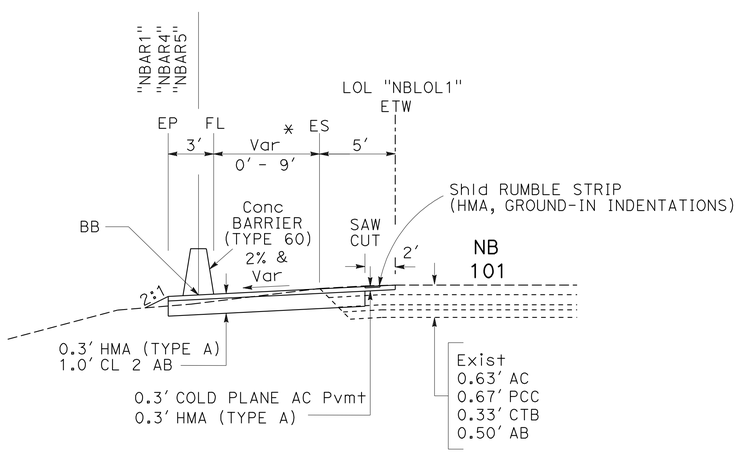

"NBLOL1" Sta 237+50.00 TO 238+30.00
"NBLOL1" Sta 193+00.00 TO 194+40.00
"NBLOL1" Sta 111+50.00 TO 113+30.00

* SEE L-SHEETS FOR Max OFFSET OF BARRIER

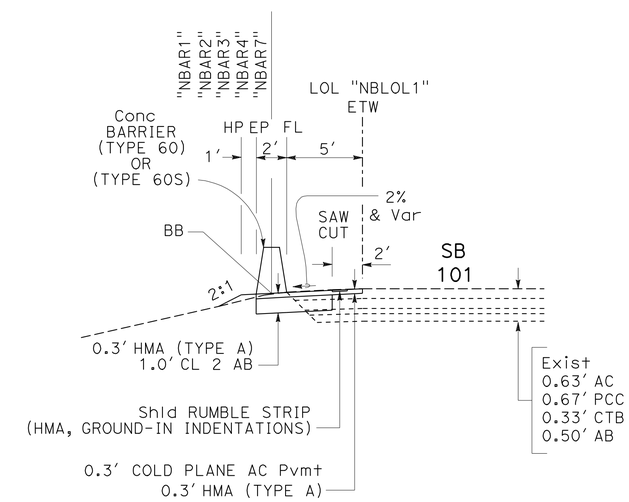

"NBLOL1" Sta 261+80.00 TO 264+00.00
"NBLOL1" Sta 207+00.00 TO 222+00.00
"NBLOL1" Sta 176+40.00 TO 190+00.00
"NBLOL1" Sta 141+30.00 TO 145+00.00
"NBLOL1" Sta 115+00.00 TO 121+50.00

NB ROUTE 101

TYPICAL CROSS SECTIONS

NO SCALE

X-3

STATE OF CALIFORNIA - DEPARTMENT OF TRANSPORTATION
Caltrans®
DESIGN

FUNCTIONAL SUPERVISOR: STEVE WYATT
CALCULATED-DESIGNED BY: MICHAEL O'NEAL
CHECKED BY: JOSEPH ERWIN
REVISED BY
DATE REVISED

LAST REVISION 03-15-12
DATE PLOTTED => 23-APR-2012
TIME PLOTTED => 17:42

Dist	COUNTY	ROUTE	POST MILES TOTAL PROJECT	SHEET No.	TOTAL SHEETS
05	SLO	101	7.8/12.5	5	69

REGISTERED CIVIL ENGINEER 3-15-12 DATE

4-23-12
PLANS APPROVAL DATE

REGISTERED PROFESSIONAL ENGINEER J. ERWIN No. 74015 Exp. 06-30-13 CIVIL STATE OF CALIFORNIA

THE STATE OF CALIFORNIA OR ITS OFFICERS OR AGENTS SHALL NOT BE RESPONSIBLE FOR THE ACCURACY OR COMPLETENESS OF SCANNED COPIES OF THIS PLAN SHEET.

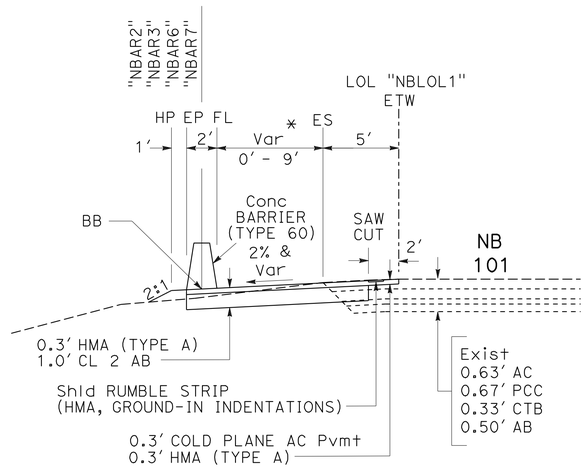

"NBLOL1" Sta 260+00.00 TO 261+80.00
"NBLOL1" Sta 248+20.00 TO 249+08.00
"NBLOL1" Sta 175+00.00 TO 176+40.00
"NBLOL1" Sta 139+50.00 TO 141+30.00

* SEE L-SHEETS FOR Max OFFSET OF BARRIER

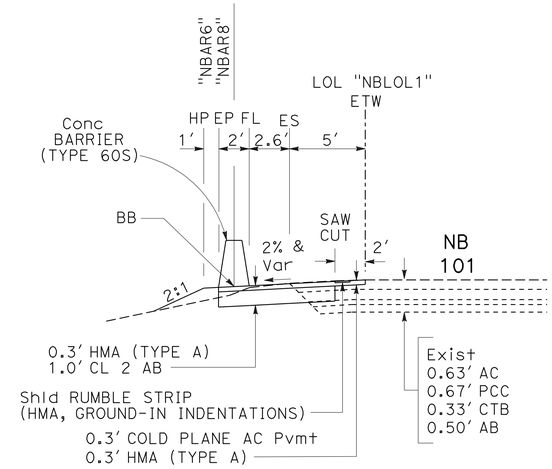

"NBLOL1" Sta 272+00.00 TO 273+50.00
"NBLOL1" Sta 253+00.00 TO 254+00.00
"NBLOL1" Sta 249+08.00 TO 250+00.00

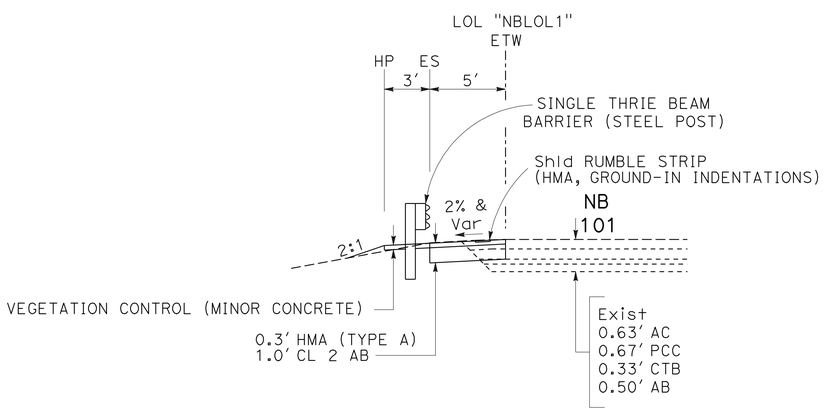

"NBLOL1" Sta 132+66.63 TO 136+00.00
"NBLOL1" Sta 124+70.00 TO 132+14.88

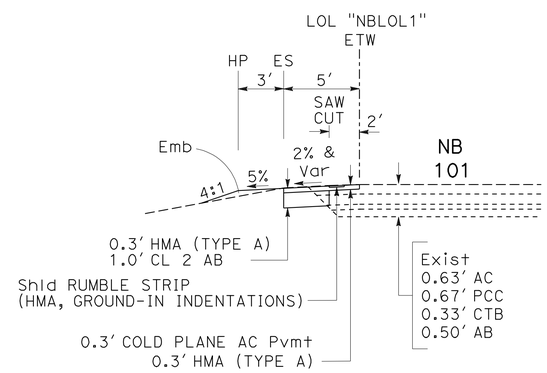

"NBLOL1" Sta 254+00.00 TO 260+00.00
"NBLOL1" Sta 159+50.00 TO 162+27.00

NB ROUTE 101

TYPICAL CROSS SECTIONS

NO SCALE

X-4

STATE OF CALIFORNIA - DEPARTMENT OF TRANSPORTATION
Caltrans®
DESIGN

FUNCTIONAL SUPERVISOR: STEVE WYATT
CALCULATED-DESIGNED BY: MICHAEL O'NEAL
CHECKED BY: JOSEPH ERWIN
REVISED BY
DATE REVISED

LAST REVISION 03-15-12
DATE PLOTTED => 23-APR-2012
TIME PLOTTED => 17:42

Dist	COUNTY	ROUTE	POST MILES TOTAL PROJECT	SHEET No.	TOTAL SHEETS
05	SLO	101	7.8/12.5	6	69

REGISTERED CIVIL ENGINEER 3-15-12 DATE

4-23-12
PLANS APPROVAL DATE

REGISTERED PROFESSIONAL ENGINEER J. ERWIN No. 74015 Exp. 06-30-13 CIVIL STATE OF CALIFORNIA

THE STATE OF CALIFORNIA OR ITS OFFICERS OR AGENTS SHALL NOT BE RESPONSIBLE FOR THE ACCURACY OR COMPLETENESS OF SCANNED COPIES OF THIS PLAN SHEET.

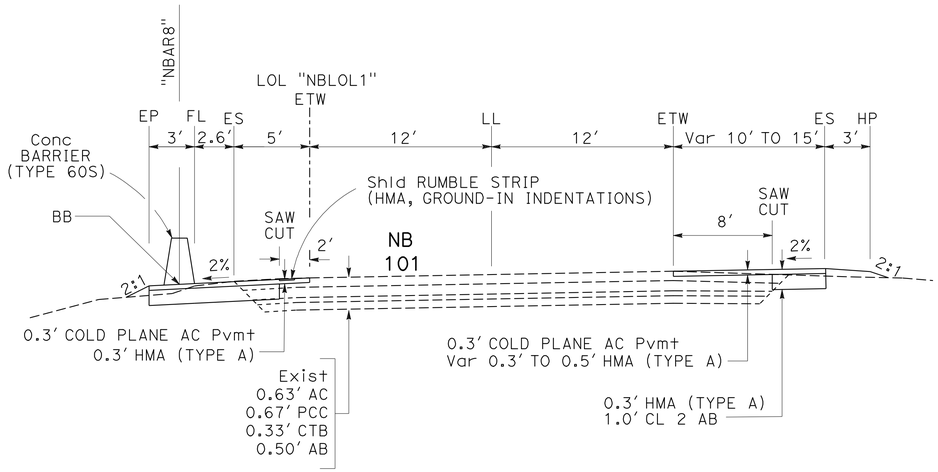

"NBLOL1" Sta 278+50.00 TO 279+00.00
"NBLOL1" Sta 276+00.00 TO 277+50.00

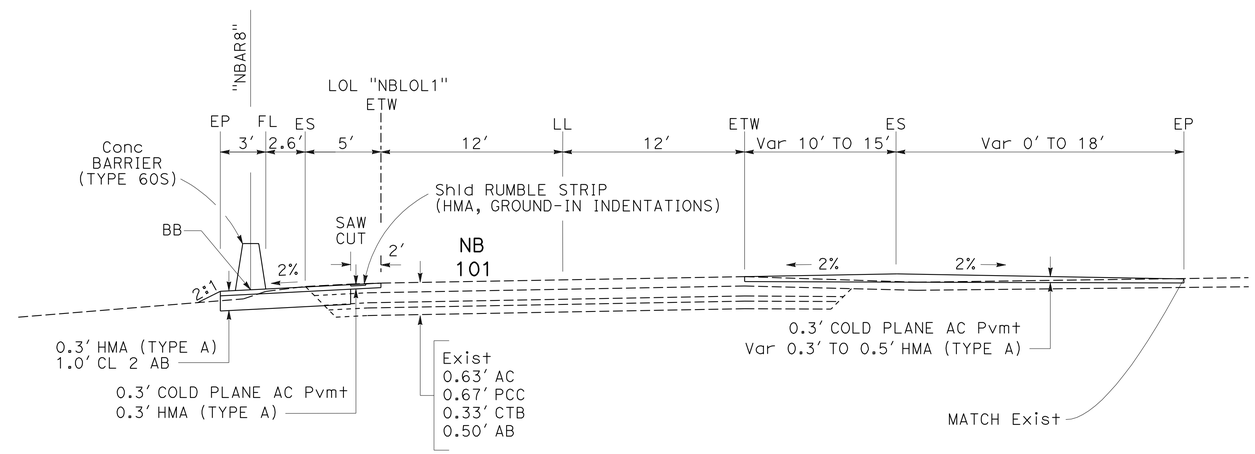

"NBLOL1" Sta 277+50.00 TO 278+50.00

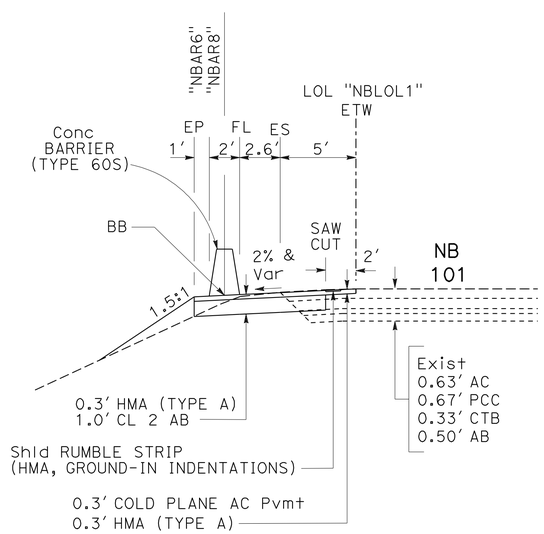

"NBLOL1" Sta 273+50.00 TO 276+00.00
"NBLOL1" Sta 250+00.00 TO 253+00.00

NB ROUTE 101

TYPICAL CROSS SECTIONS

NO SCALE

X-5

STATE OF CALIFORNIA - DEPARTMENT OF TRANSPORTATION
Caltrans
DESIGN

FUNCTIONAL SUPERVISOR: STEVE WYATT
CALCULATED-DESIGNED BY: JOSEPH ERWIN
CHECKED BY: MICHAEL O'NEAL
REVISED BY
DATE REVISED

LAST REVISION 03-15-12
DATE PLOTTED => 23-APR-2012
TIME PLOTTED => 17:42

Dist	COUNTY	ROUTE	POST MILES TOTAL PROJECT	SHEET No.	TOTAL SHEETS
05	SLO	101	7.8/12.5	7	69

REGISTERED CIVIL ENGINEER 3-15-12 DATE

4-23-12
PLANS APPROVAL DATE

REGISTERED PROFESSIONAL ENGINEER J. ERWIN No. 74015 Exp. 06-30-13 CIVIL STATE OF CALIFORNIA

THE STATE OF CALIFORNIA OR ITS OFFICERS OR AGENTS SHALL NOT BE RESPONSIBLE FOR THE ACCURACY OR COMPLETENESS OF SCANNED COPIES OF THIS PLAN SHEET.

NOTE: 1. FOR ACCURATE RIGHT OF WAY DATA, CONTACT RIGHT OF WAY ENGINEERING AT THE DISTRICT OFFICE.

LEGEND

- Conc BARRIER
- LIMITS OF PAVING
- OBLITERATE SURFACING
- DRAINAGE SYSTEM No.
- DRAINAGE UNIT No.
- ALTERNATIVE CRASH CUSHION SYSTEM
- ROADSIDE SIGN - ONE POST

ABBREVIATIONS

BB	PROFILE GRADE AT BOTTOM OF BARRIER
COB	CENTER OF BOX
FLB	FLOW LINE OF CONCRETE BARRIER
LL	LANELINE

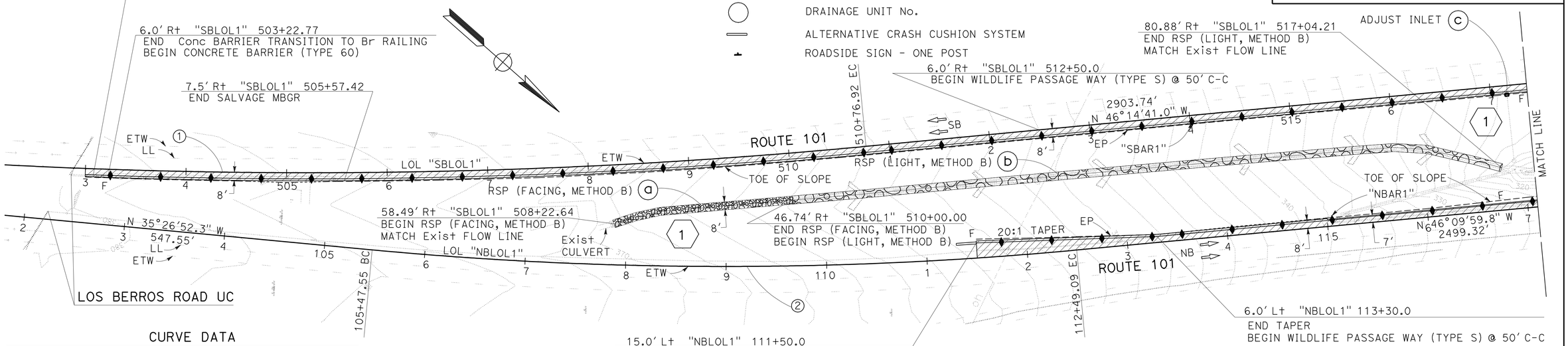

SCALE: 1" = 50'

CURVE DATA

No.	R	Δ	T	L
1	5850'	9°53'10.2"	505.95'	1009.40'
2	3750'	10°43'07.5"	351.80'	701.54'

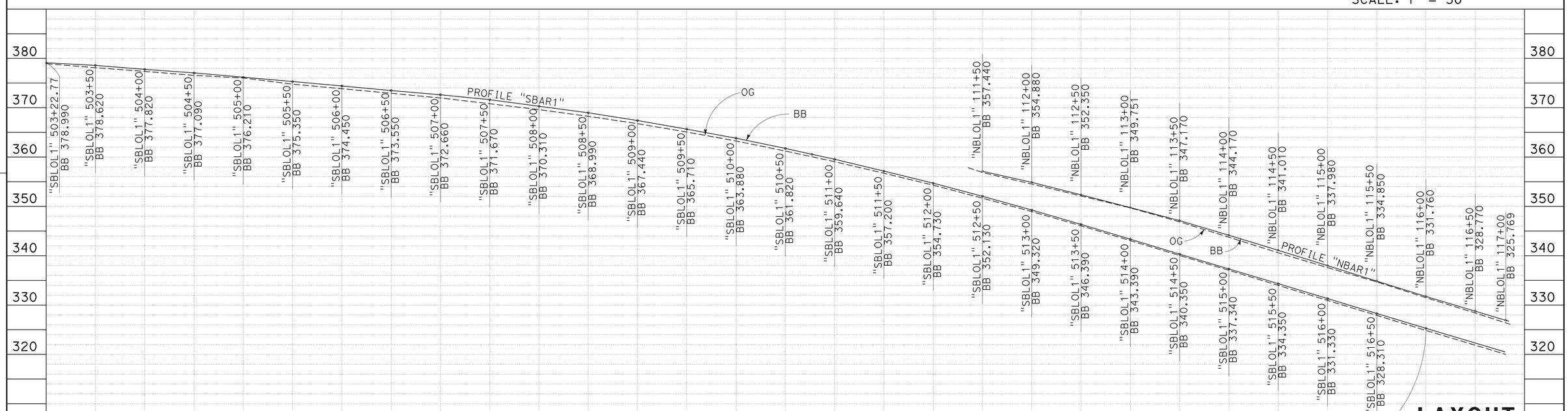

SCALE: Horiz 1" = 50'
Vert 1" = 10'

LAYOUT L-1

STATE OF CALIFORNIA - DEPARTMENT OF TRANSPORTATION
Caltrans DESIGN
FUNCTIONAL SUPERVISOR STEVE WYATT
CALCULATED-DESIGNED BY MICHAEL O'NEAL
CHECKED BY JOSEPH ERWIN
REVISED BY
DATE REVISED
LAST REVISION 03-15-12
DATE PLOTTED => 24-APR-2012
TIME PLOTTED => 09:20

Dist	COUNTY	ROUTE	POST MILES TOTAL PROJECT	SHEET No.	TOTAL SHEETS
05	SLO	101	7.8/12.5	8	69

REGISTERED CIVIL ENGINEER 3-15-12 DATE

4-23-12
PLANS APPROVAL DATE

REGISTERED PROFESSIONAL ENGINEER J. ERWIN No. 74015 Exp. 06-30-13 CIVIL STATE OF CALIFORNIA

THE STATE OF CALIFORNIA OR ITS OFFICERS OR AGENTS SHALL NOT BE RESPONSIBLE FOR THE ACCURACY OR COMPLETENESS OF SCANNED COPIES OF THIS PLAN SHEET.

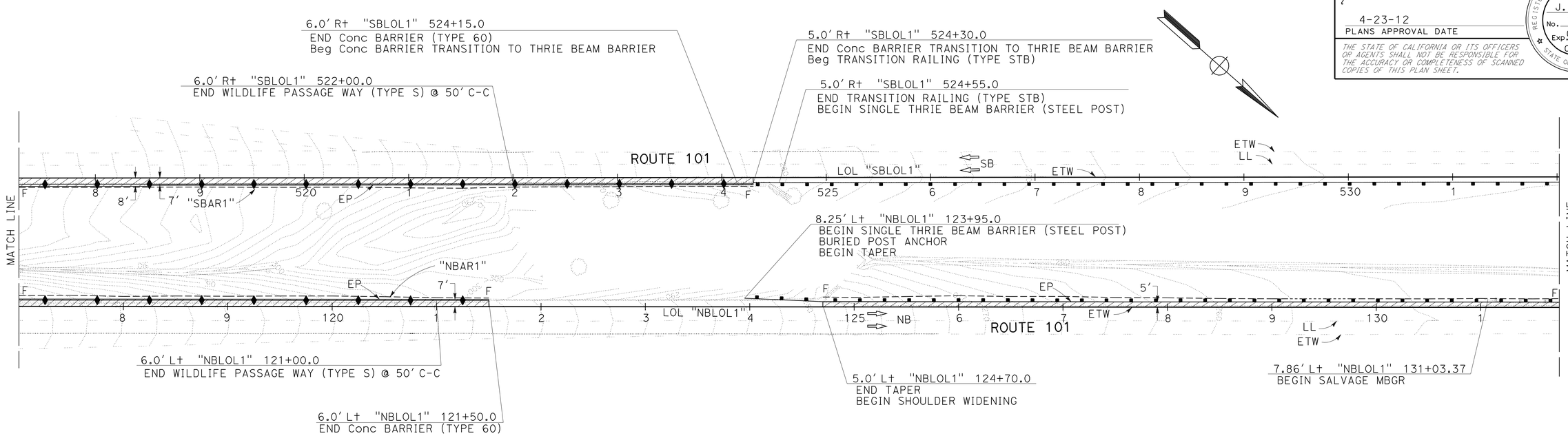

SCALE: 1" = 50'

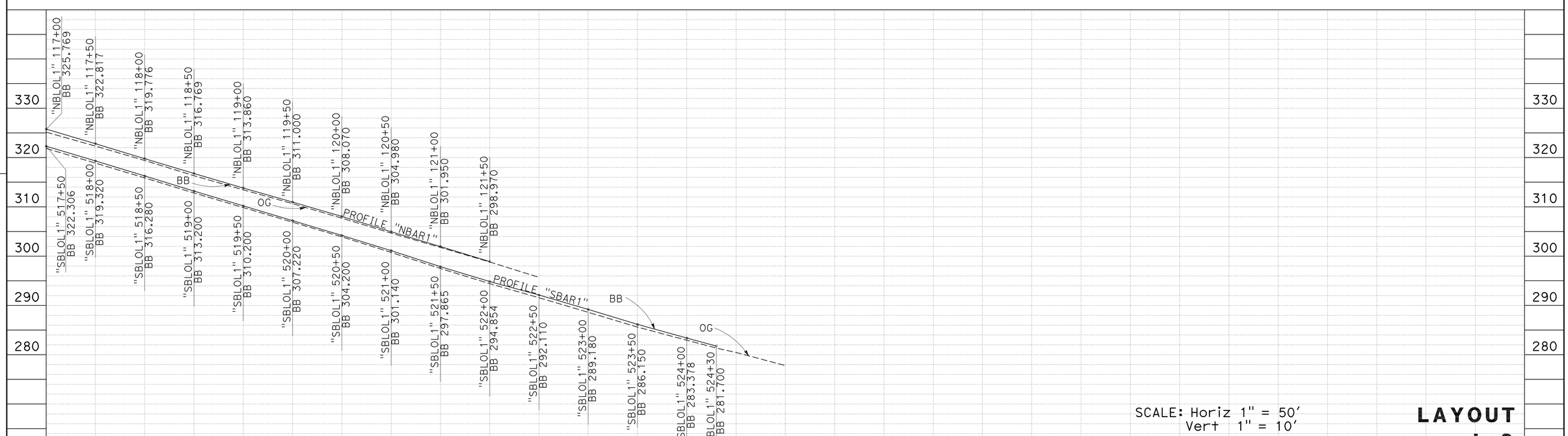

SCALE: Horiz 1" = 50'
Vert 1" = 10'

LAYOUT L-2

STATE OF CALIFORNIA - DEPARTMENT OF TRANSPORTATION
Caltrans DESIGN

FUNCTIONAL SUPERVISOR: STEVE WYATT
CALCULATED-DESIGNED BY: MICHAEL O'NEAL
CHECKED BY: JOSEPH ERWIN
REVISED BY / DATE REVISED

LAST REVISION 03-15-12
DATE PLOTTED => 23-APR-2012
TIME PLOTTED => 17:42

Dist	COUNTY	ROUTE	POST MILES TOTAL PROJECT	SHEET No.	TOTAL SHEETS
05	SLO	101	7.8/12.5	9	69

REGISTERED CIVIL ENGINEER 3-15-12 DATE

4-23-12
PLANS APPROVAL DATE

REGISTERED PROFESSIONAL ENGINEER J. ERWIN No. 74015 Exp. 06-30-13 CIVIL STATE OF CALIFORNIA

THE STATE OF CALIFORNIA OR ITS OFFICERS OR AGENTS SHALL NOT BE RESPONSIBLE FOR THE ACCURACY OR COMPLETENESS OF SCANNED COPIES OF THIS PLAN SHEET.

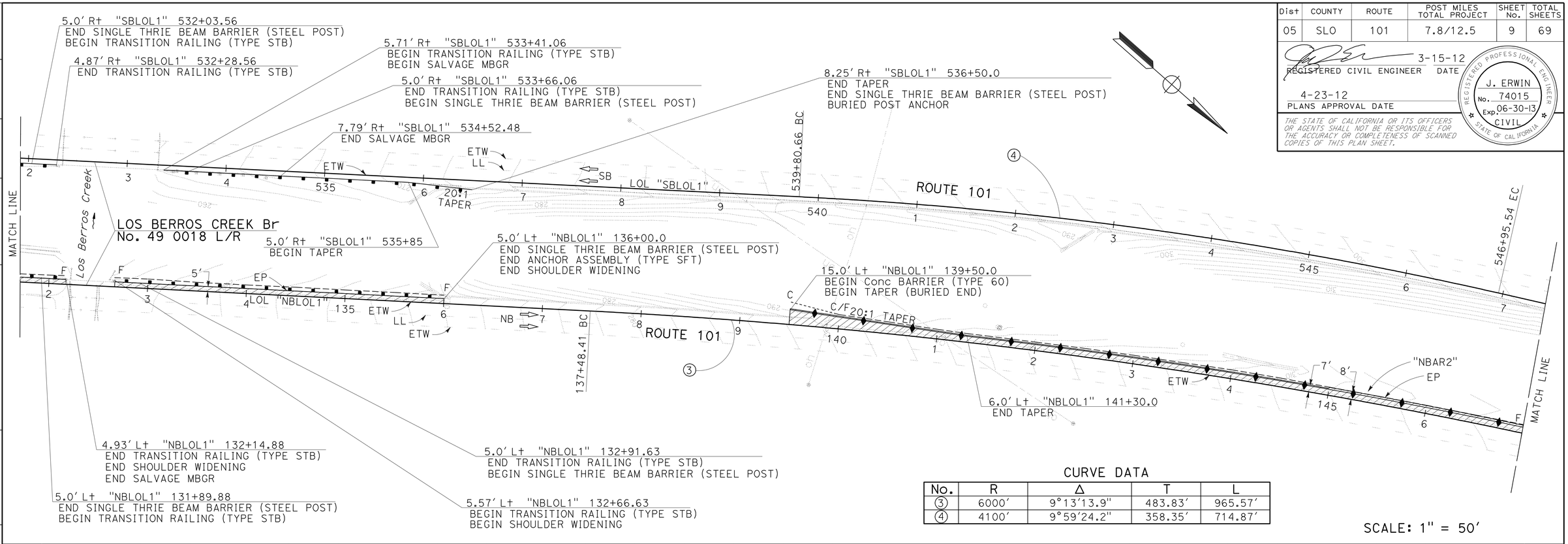

CURVE DATA

No.	R	Δ	T	L
3	6000'	9°13'13.9"	483.83'	965.57'
4	4100'	9°59'24.2"	358.35'	714.87'

SCALE: 1" = 50'

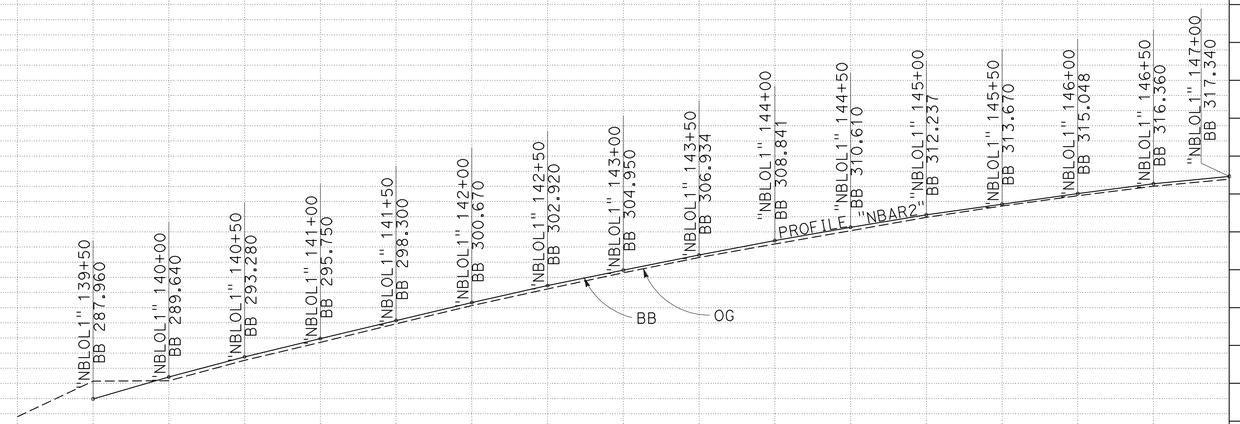

SCALE: Horiz 1" = 50'
Vert 1" = 10'

LAYOUT L-3

STATION		TOTAL
CY	Exc	
	Emb	

STATE OF CALIFORNIA - DEPARTMENT OF TRANSPORTATION
Caltrans DESIGN

FUNCTIONAL SUPERVISOR: STEVE WYATT
CALCULATED-DESIGNED BY: MICHAEL O'NEAL
CHECKED BY: JOSEPH ERWIN
REVISED BY / DATE REVISED

LAST REVISION 03-15-12
DATE PLOTTED => 23-APR-2012
TIME PLOTTED => 17:42

Dist	COUNTY	ROUTE	POST MILES TOTAL PROJECT	SHEET No.	TOTAL SHEETS
05	SLO	101	7.8/12.5	10	69

REGISTERED CIVIL ENGINEER 3-15-12 DATE

4-23-12
PLANS APPROVAL DATE

REGISTERED PROFESSIONAL ENGINEER J. ERWIN No. 74015 Exp. 06-30-13 CIVIL STATE OF CALIFORNIA

THE STATE OF CALIFORNIA OR ITS OFFICERS OR AGENTS SHALL NOT BE RESPONSIBLE FOR THE ACCURACY OR COMPLETENESS OF SCANNED COPIES OF THIS PLAN SHEET.

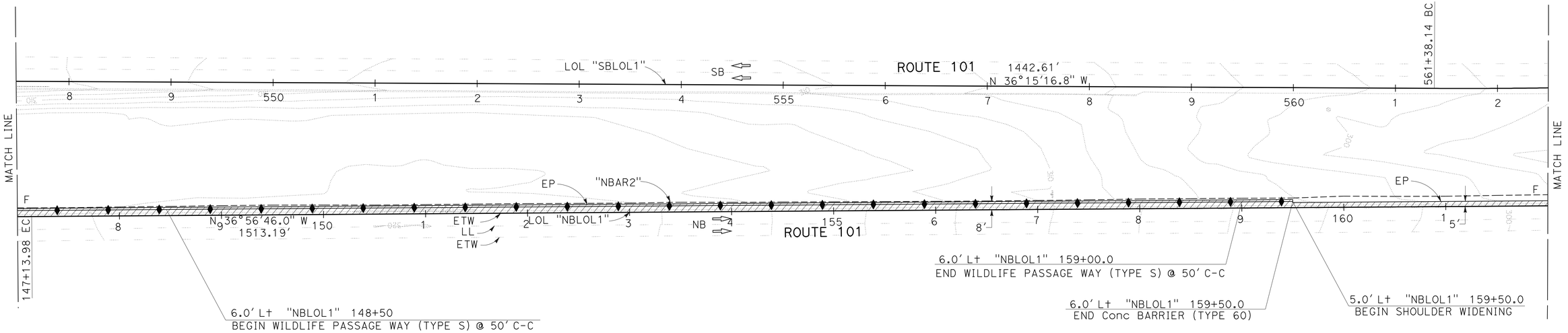

SCALE: 1" = 50'

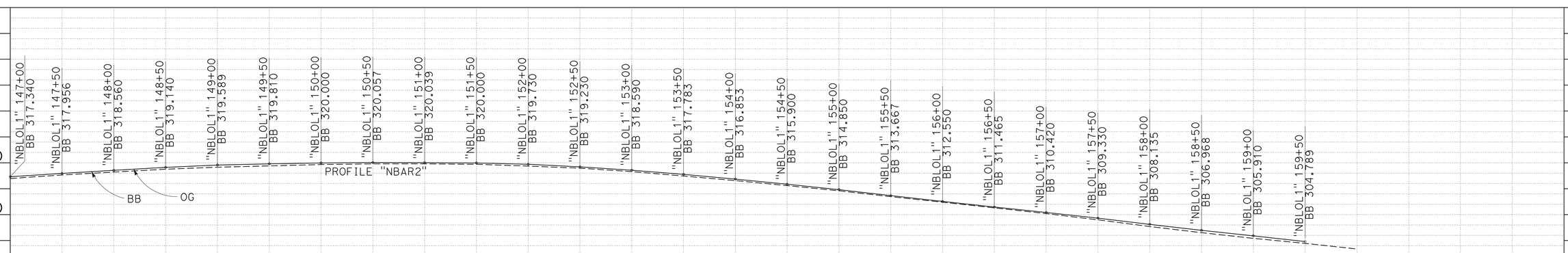

SCALE: Horiz 1" = 50'
Vert 1" = 10'

LAYOUT L-4

STATION		TOTAL
CY	Exc	
	Emb	

STATE OF CALIFORNIA - DEPARTMENT OF TRANSPORTATION
Caltrans DESIGN

FUNCTIONAL SUPERVISOR: STEVE WYATT
CALCULATED-DESIGNED BY: JOSEPH ERWIN
CHECKED BY: MICHAEL O'NEAL
REVISED BY / DATE REVISED

LAST REVISION 03-15-12
DATE PLOTTED => 23-APR-2012
TIME PLOTTED => 17:42

Dist	COUNTY	ROUTE	POST MILES TOTAL PROJECT	SHEET No.	TOTAL SHEETS
05	SLO	101	7.8/12.5	11	69

REGISTERED CIVIL ENGINEER 3-15-12 DATE

4-23-12
PLANS APPROVAL DATE

REGISTERED PROFESSIONAL ENGINEER J. ERWIN No. 74015 Exp. 06-30-13 CIVIL STATE OF CALIFORNIA

THE STATE OF CALIFORNIA OR ITS OFFICERS OR AGENTS SHALL NOT BE RESPONSIBLE FOR THE ACCURACY OR COMPLETENESS OF SCANNED COPIES OF THIS PLAN SHEET.

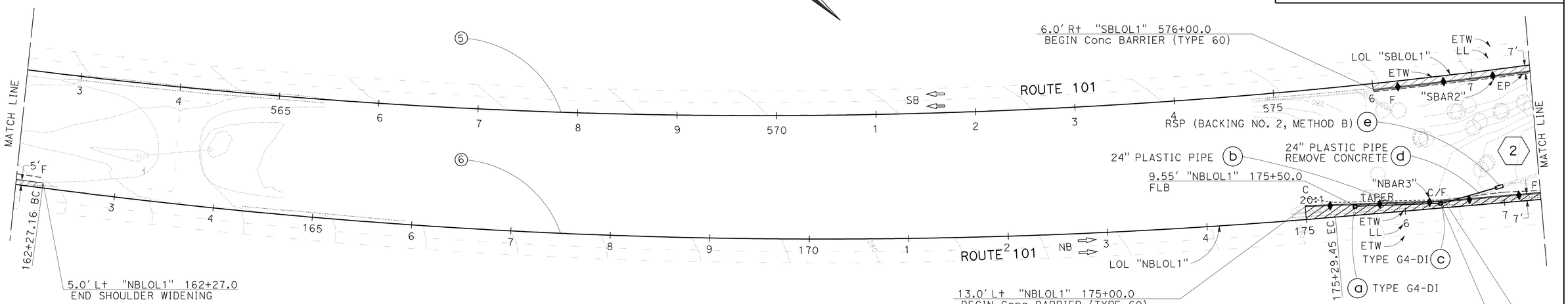

CURVE DATA

No.	R	Δ	T	L
5	5910′	16°49′59.2"	874.46′	1736.32′
6	6010′	12°24′54.8"	653.70′	1302.29′

SCALE: 1" = 50′

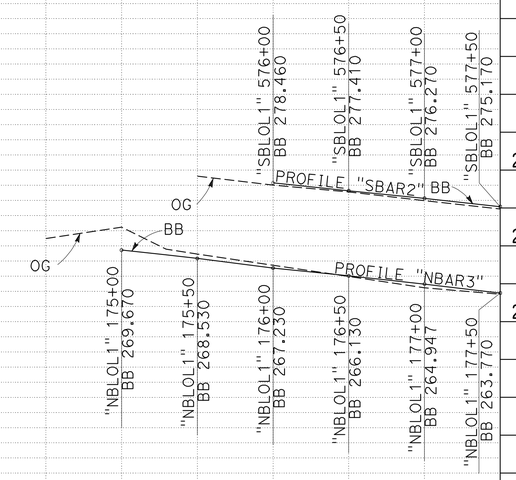

SCALE: Horiz 1" = 50′
Vert 1" = 10′

LAYOUT
L-5

STATION	
CY	Exc
	Emb

TOTAL

REVISED BY | DATE REVISED
MICHAEL O'NEAL | JOSEPH ERWIN
CALCULATED-DESIGNED BY | CHECKED BY
FUNCTIONAL SUPERVISOR: STEVE WYATT

STATE OF CALIFORNIA - DEPARTMENT OF TRANSPORTATION
Caltrans
DESIGN

LAST REVISION 03-15-12
DATE PLOTTED => 23-APR-2012
TIME PLOTTED => 17:43

Dist	COUNTY	ROUTE	POST MILES TOTAL PROJECT	SHEET No.	TOTAL SHEETS
05	SLO	101	7.8/12.5	12	69

REGISTERED CIVIL ENGINEER 3-15-12 DATE

4-23-12
PLANS APPROVAL DATE

REGISTERED PROFESSIONAL ENGINEER J. ERWIN No. 74015 Exp. 06-30-13 CIVIL STATE OF CALIFORNIA

THE STATE OF CALIFORNIA OR ITS OFFICERS OR AGENTS SHALL NOT BE RESPONSIBLE FOR THE ACCURACY OR COMPLETENESS OF SCANNED COPIES OF THIS PLAN SHEET.

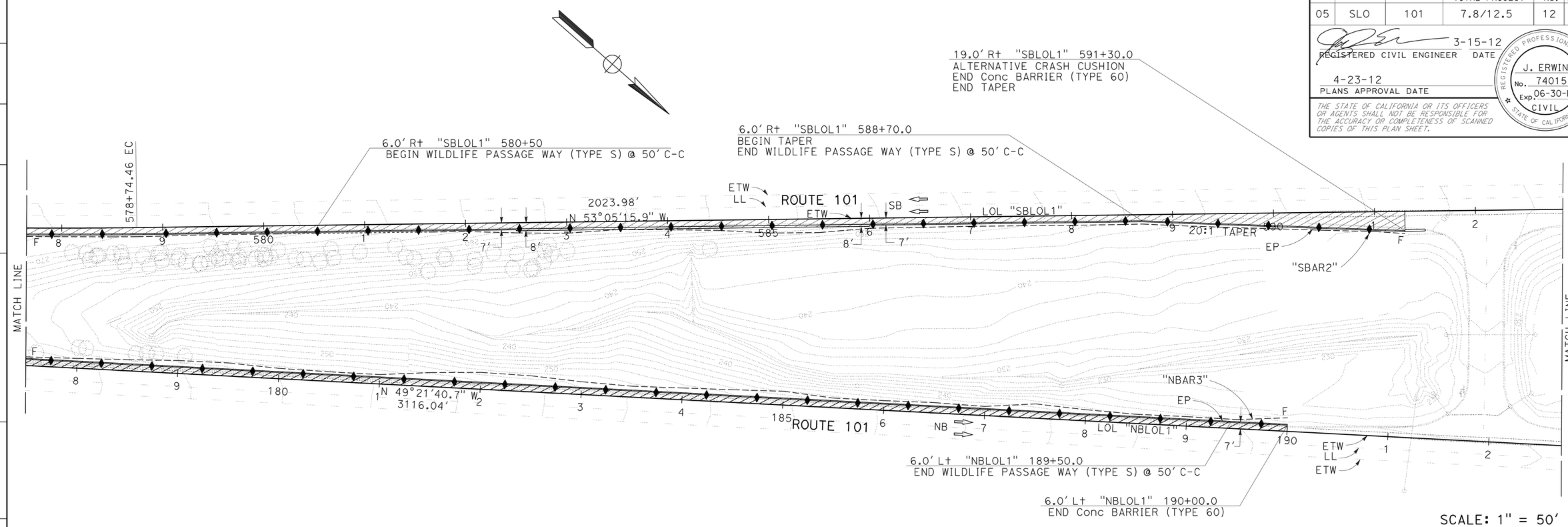

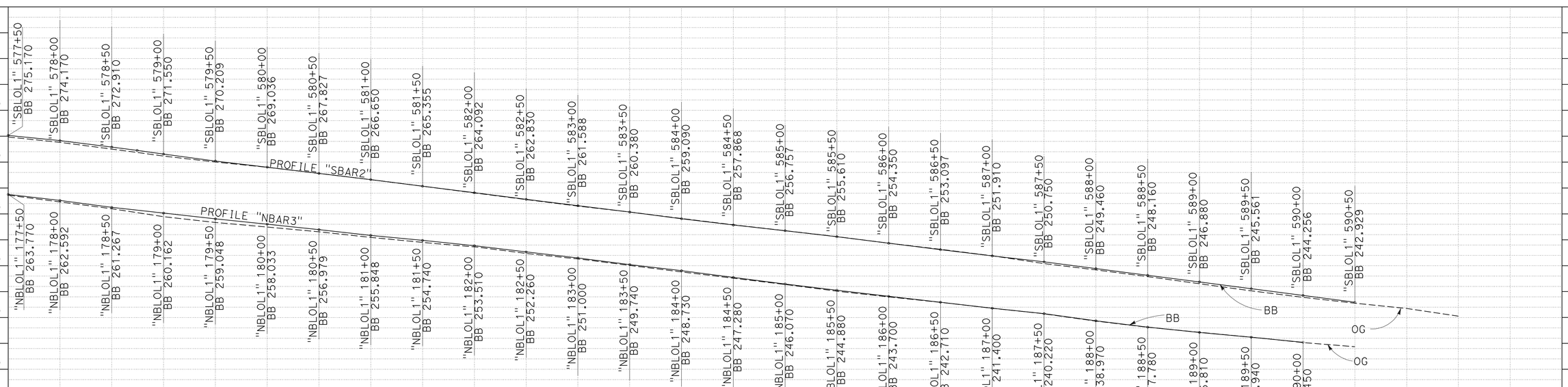

LAYOUT L-6

STATION		TOTAL
CY	Exc	
	Emb	

STATE OF CALIFORNIA - DEPARTMENT OF TRANSPORTATION
Caltrans
DESIGN

FUNCTIONAL SUPERVISOR: STEVE WYATT
CALCULATED-DESIGNED BY: JOSEPH ERWIN
CHECKED BY: MICHAEL O'NEAL
REVISED BY
DATE REVISED

LAST REVISION 03-15-12
DATE PLOTTED => 23-APR-2012
TIME PLOTTED => 17:43

Dist	COUNTY	ROUTE	POST MILES TOTAL PROJECT	SHEET No.	TOTAL SHEETS
05	SLO	101	7.8/12.5	13	69

REGISTERED CIVIL ENGINEER 3-15-12 DATE

4-23-12
PLANS APPROVAL DATE

REGISTERED PROFESSIONAL ENGINEER J. ERWIN No. 74015 Exp. 06-30-13 CIVIL STATE OF CALIFORNIA

THE STATE OF CALIFORNIA OR ITS OFFICERS OR AGENTS SHALL NOT BE RESPONSIBLE FOR THE ACCURACY OR COMPLETENESS OF SCANNED COPIES OF THIS PLAN SHEET.

CURVE DATA

No.	R	Δ	T	L
7	4030′	26°56′49.4"	965.55′	1895.37′

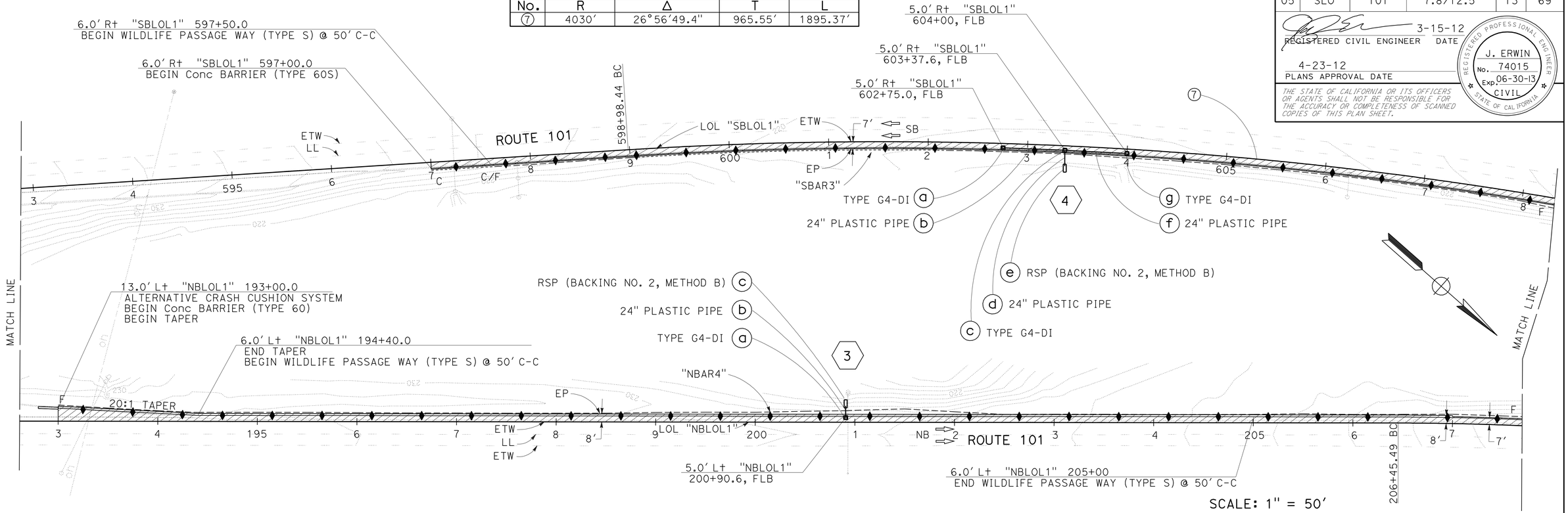

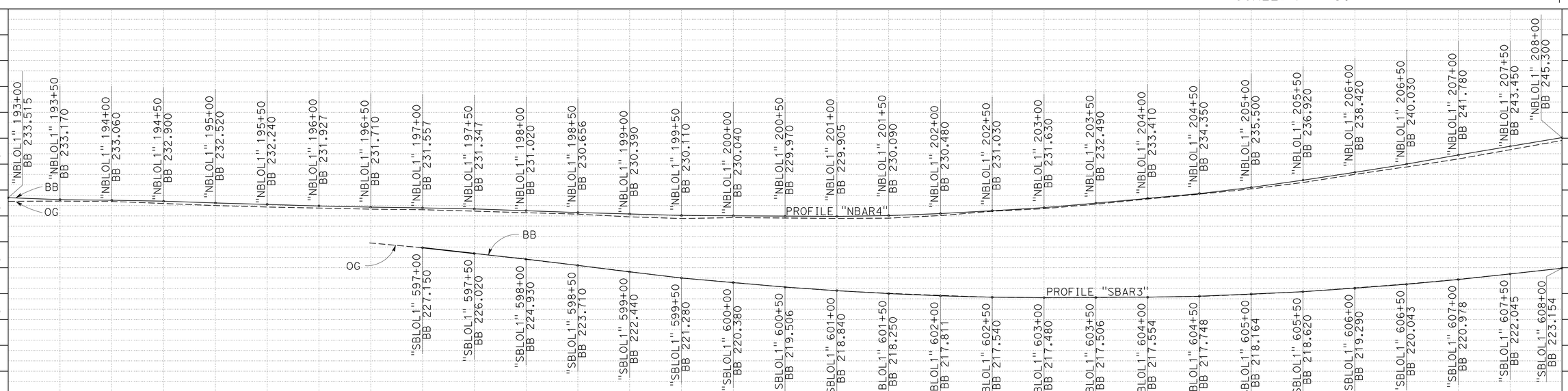

LAYOUT
L-7

STATION		TOTAL
CY	Exc	
	Emb	

STATE OF CALIFORNIA - DEPARTMENT OF TRANSPORTATION
DESIGN
Caltrans

FUNCTIONAL SUPERVISOR: STEVE WYATT
CALCULATED-DESIGNED BY: JOSEPH ERWIN
CHECKED BY: MICHAEL O'NEAL
REVISED BY / DATE REVISED

LAST REVISION 03-15-12
DATE PLOTTED => 23-APR-2012
TIME PLOTTED => 17:43

Dist	COUNTY	ROUTE	POST MILES TOTAL PROJECT	SHEET No.	TOTAL SHEETS
05	SLO	101	7.8/12.5	14	69

REGISTERED CIVIL ENGINEER 3-15-12 DATE

4-23-12
PLANS APPROVAL DATE

REGISTERED PROFESSIONAL ENGINEER J. ERWIN No. 74015 Exp. 06-30-13 CIVIL STATE OF CALIFORNIA

THE STATE OF CALIFORNIA OR ITS OFFICERS OR AGENTS SHALL NOT BE RESPONSIBLE FOR THE ACCURACY OR COMPLETENESS OF SCANNED COPIES OF THIS PLAN SHEET.

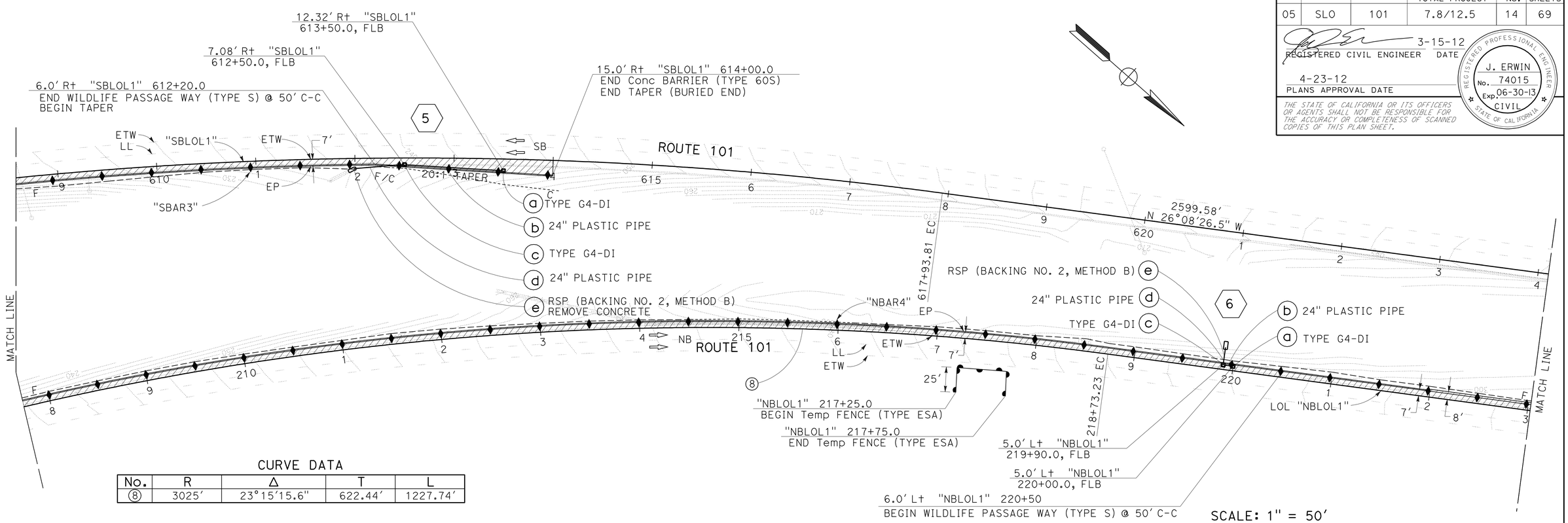

SCALE: 1" = 50'

CURVE DATA

No.	R	Δ	T	L
8	3025'	23°15'15.6"	622.44'	1227.74'

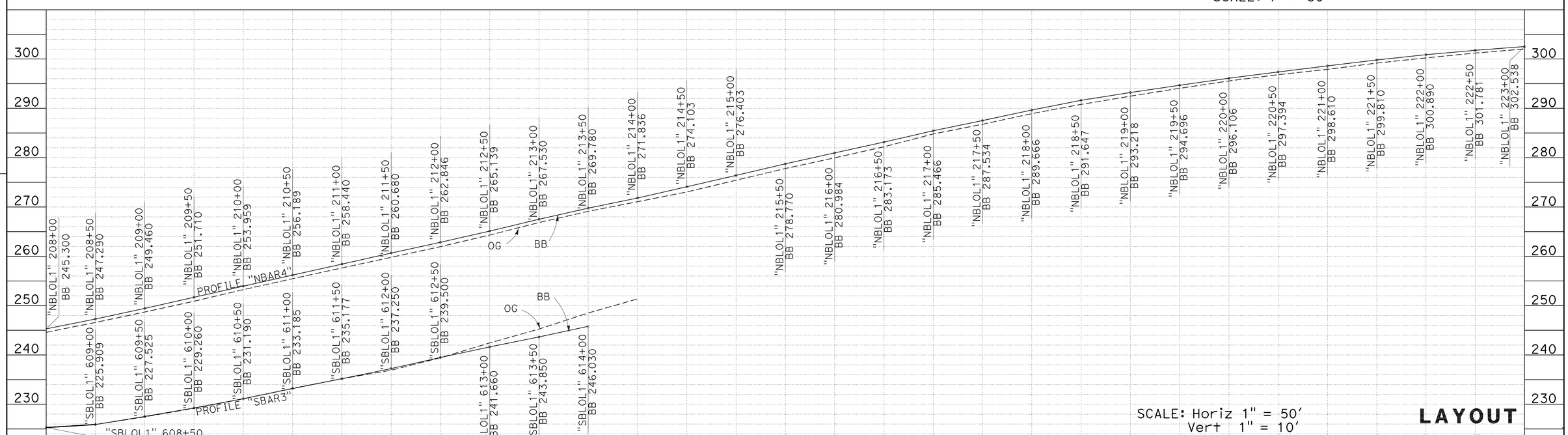

SCALE: Horiz 1" = 50'
Vert 1" = 10'

LAYOUT L-8

STATE OF CALIFORNIA - DEPARTMENT OF TRANSPORTATION
Caltrans DESIGN

FUNCTIONAL SUPERVISOR: STEVE WYATT
CALCULATED-DESIGNED BY: JOSEPH ERWIN
CHECKED BY: MICHAEL O'NEAL
REVISED BY / DATE REVISED

LAST REVISION 03-15-12
DATE PLOTTED => 23-APR-2012
TIME PLOTTED => 17:43

Dist	COUNTY	ROUTE	POST MILES TOTAL PROJECT	SHEET No.	TOTAL SHEETS
05	SLO	101	7.8/12.5	15	69

REGISTERED CIVIL ENGINEER 3-15-12 DATE

4-23-12
PLANS APPROVAL DATE

REGISTERED PROFESSIONAL ENGINEER
J. ERWIN
No. 74015
Exp. 06-30-13
CIVIL
STATE OF CALIFORNIA

THE STATE OF CALIFORNIA OR ITS OFFICERS OR AGENTS SHALL NOT BE RESPONSIBLE FOR THE ACCURACY OR COMPLETENESS OF SCANNED COPIES OF THIS PLAN SHEET.

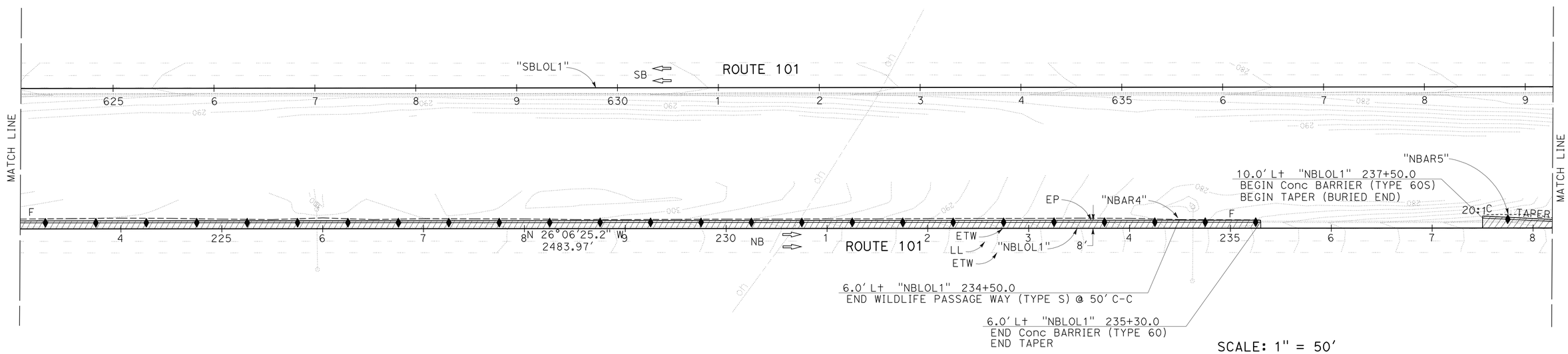

SCALE: 1" = 50'

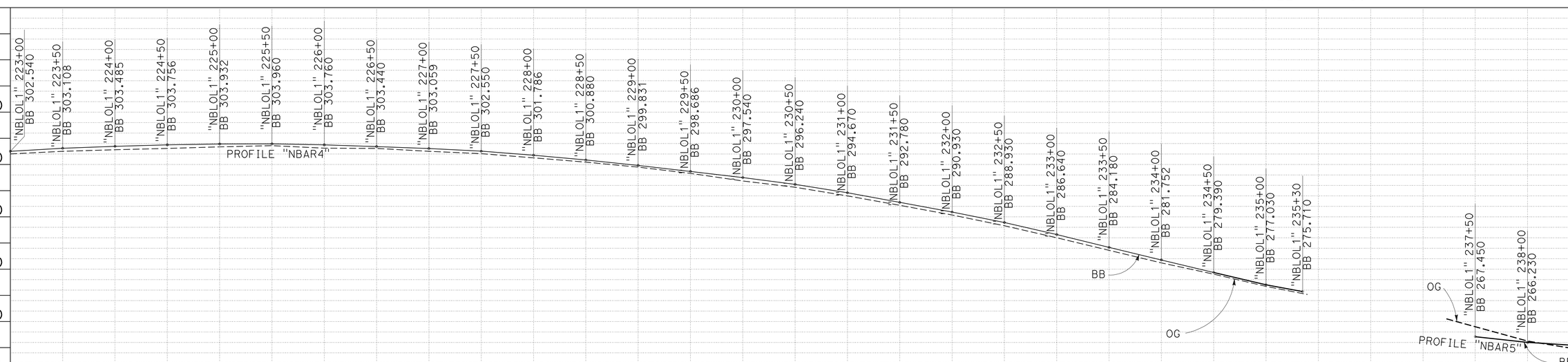

SCALE: Horiz 1" = 50'
Vert 1" = 10'

LAYOUT L-9

STATION		TOTAL
CY	Exc	
	Emb	

REVISED BY | DATE REVISED
MICHAEL O'NEAL | JOSEPH ERWIN
CALCULATED-DESIGNED BY | CHECKED BY
FUNCTIONAL SUPERVISOR: STEVE WYATT

STATE OF CALIFORNIA - DEPARTMENT OF TRANSPORTATION
Caltrans
DESIGN

LAST REVISION 03-15-12
DATE PLOTTED => 23-APR-2012
TIME PLOTTED => 17:43

Dist	COUNTY	ROUTE	POST MILES TOTAL PROJECT	SHEET No.	TOTAL SHEETS
05	SLO	101	7.8/12.5	16	69

REGISTERED CIVIL ENGINEER 3-15-12 DATE

4-23-12
PLANS APPROVAL DATE

REGISTERED PROFESSIONAL ENGINEER J. ERWIN No. 74015 Exp. 06-30-13 CIVIL STATE OF CALIFORNIA

THE STATE OF CALIFORNIA OR ITS OFFICERS OR AGENTS SHALL NOT BE RESPONSIBLE FOR THE ACCURACY OR COMPLETENESS OF SCANNED COPIES OF THIS PLAN SHEET.

CURVE DATA

No.	R	Δ	T	L
9	5000′	16°14′07.4″	713.18′	1416.81′
10	5000′	17°17′41.5″	760.41′	1509.26′

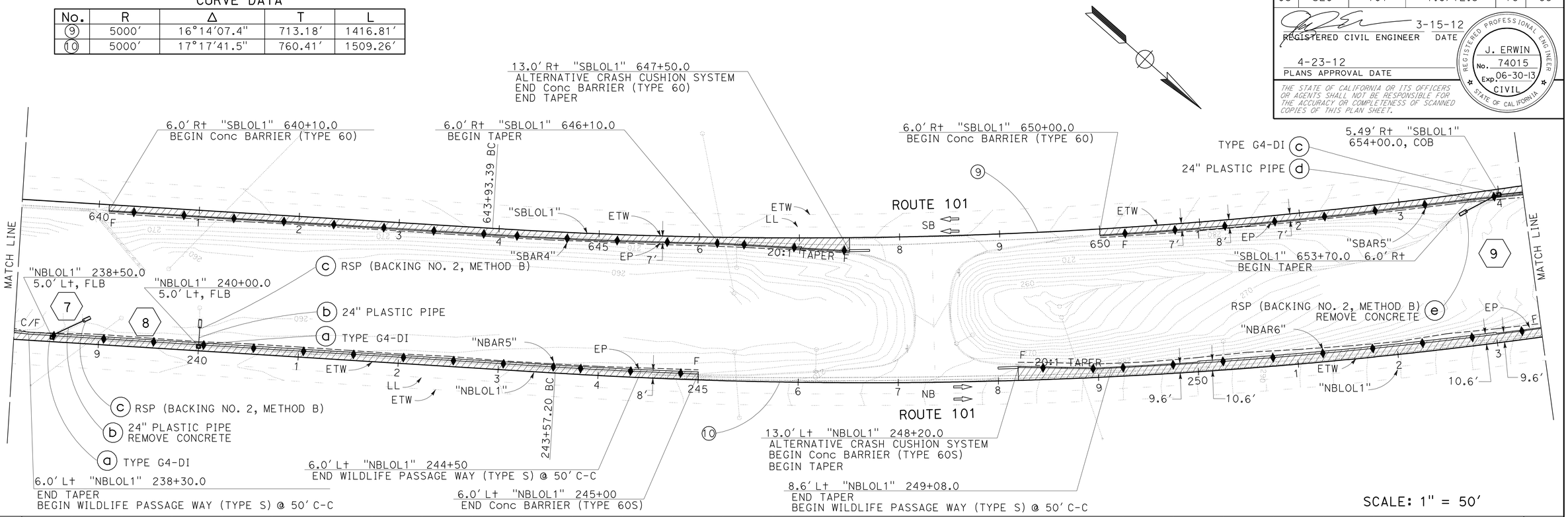

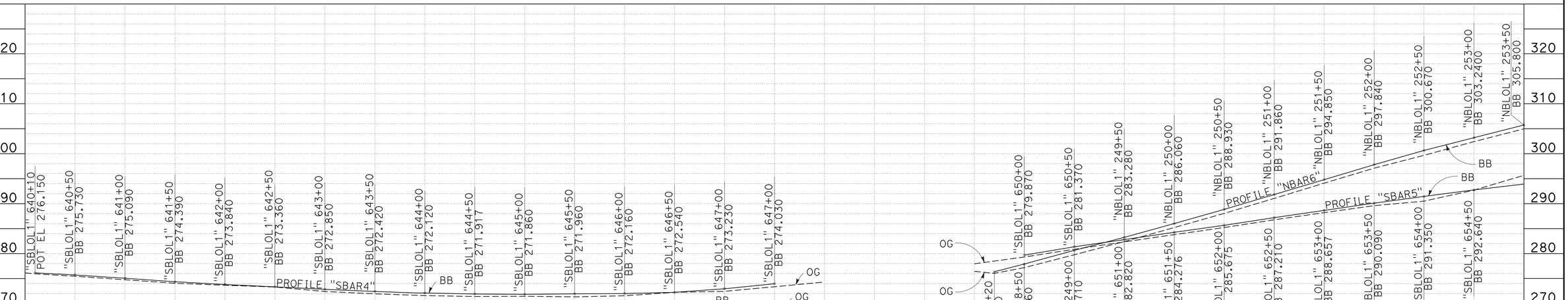

LAYOUT L-10

REVISED BY	DATE REVISED
MICHAEL O'NEAL	JOSEPH ERWIN
CALCULATED-DESIGNED BY	CHECKED BY
FUNCTIONAL SUPERVISOR	STEVE WYATT

STATE OF CALIFORNIA - DEPARTMENT OF TRANSPORTATION
Caltrans® DESIGN

LAST REVISION 03-15-12
DATE PLOTTED => 23-APR-2012
TIME PLOTTED => 17:43

Dist	COUNTY	ROUTE	POST MILES TOTAL PROJECT	SHEET No.	TOTAL SHEETS
05	SLO	101	7.8/12.5	17	69

REGISTERED CIVIL ENGINEER 3-15-12 DATE

4-23-12
PLANS APPROVAL DATE

REGISTERED PROFESSIONAL ENGINEER J. ERWIN No. 74015 Exp. 06-30-13 CIVIL STATE OF CALIFORNIA

THE STATE OF CALIFORNIA OR ITS OFFICERS OR AGENTS SHALL NOT BE RESPONSIBLE FOR THE ACCURACY OR COMPLETENESS OF SCANNED COPIES OF THIS PLAN SHEET.

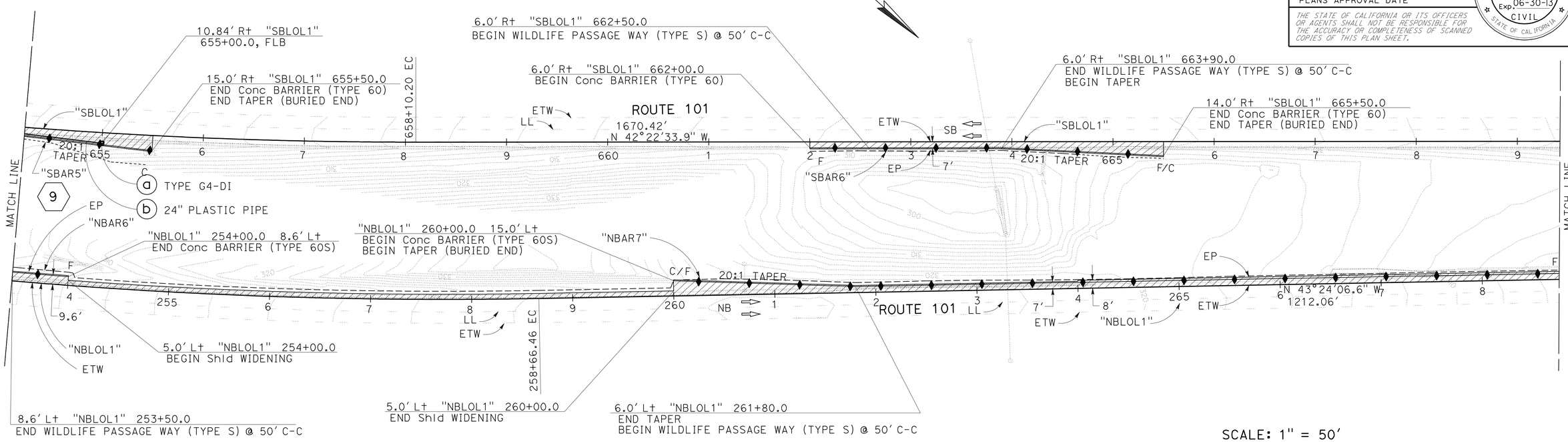

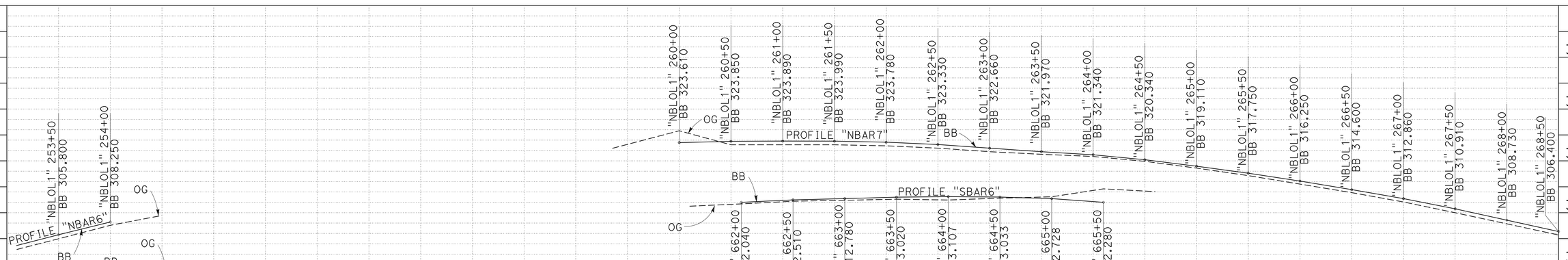

LAYOUT L-11

STATION		TOTAL
CY	Exc	
	Emb	

REVISED BY | DATE REVISED
MICHAEL O'NEAL | JOSEPH ERWIN
CALCULATED-DESIGNED BY | CHECKED BY
FUNCTIONAL SUPERVISOR | STEVE WYATT

STATE OF CALIFORNIA - DEPARTMENT OF TRANSPORTATION
Caltrans
DESIGN

LAST REVISION 03-15-12 | DATE PLOTTED => 23-APR-2012 | TIME PLOTTED => 17:43

Dist	COUNTY	ROUTE	POST MILES TOTAL PROJECT	SHEET No.	TOTAL SHEETS
05	SLO	101	7.8/12.5	18	69

3-15-12
REGISTERED CIVIL ENGINEER DATE

4-23-12
PLANS APPROVAL DATE

REGISTERED PROFESSIONAL ENGINEER
J. ERWIN
No. 74015
Exp. 06-30-13
CIVIL
STATE OF CALIFORNIA

THE STATE OF CALIFORNIA OR ITS OFFICERS OR AGENTS SHALL NOT BE RESPONSIBLE FOR THE ACCURACY OR COMPLETENESS OF SCANNED COPIES OF THIS PLAN SHEET.

CURVE DATA

No.	R	Δ	T	L
11	5000′	17°11′07.7″	755.53′	1499.72′
12	4000′	18°17′56.9″	644.25′	1277.52′

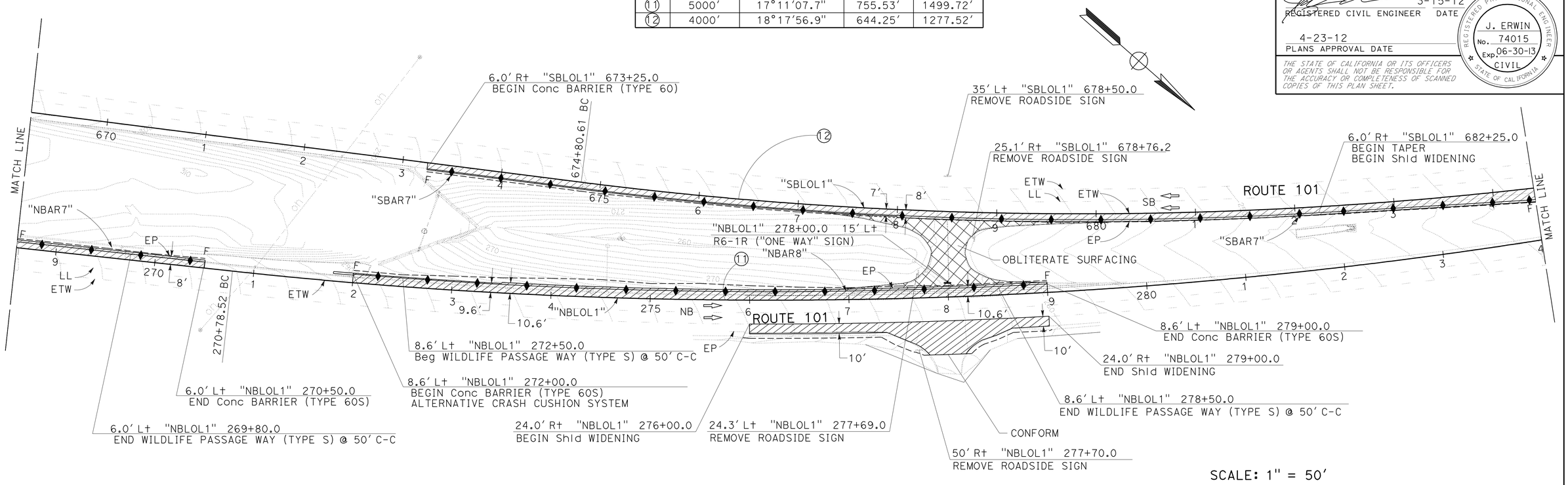

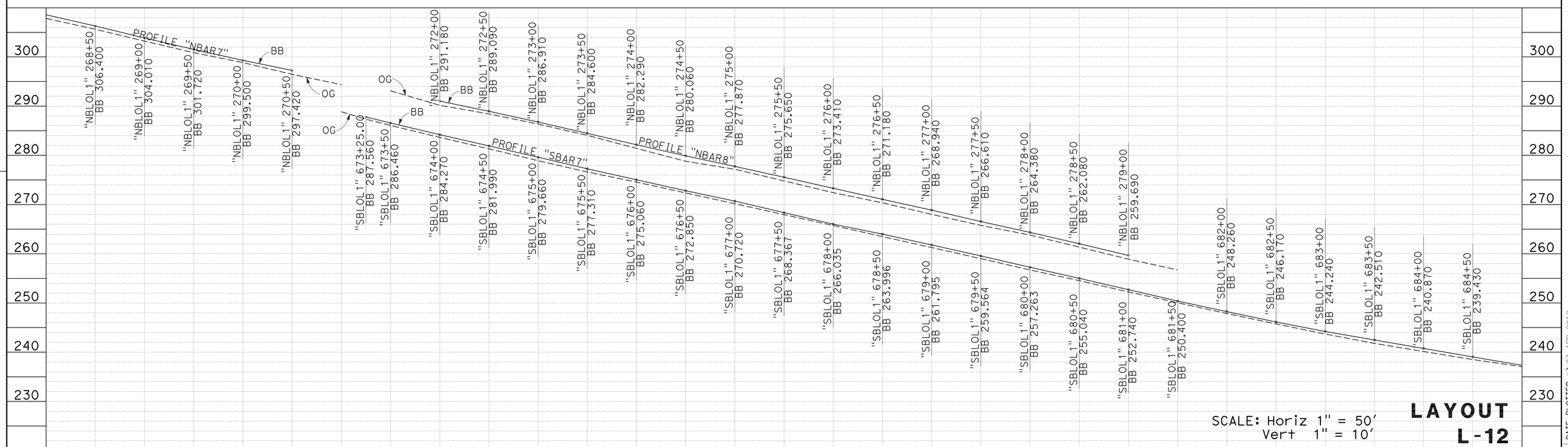

LAYOUT L-12

STATE OF CALIFORNIA - DEPARTMENT OF TRANSPORTATION
Caltrans
DESIGN

FUNCTIONAL SUPERVISOR: STEVE WYATT
CALCULATED-DESIGNED BY: JOSEPH ERWIN
CHECKED BY: MICHAEL O'NEAL
REVISED BY
DATE REVISED

LAST REVISION 03-15-12
DATE PLOTTED => 23-APR-2012
TIME PLOTTED => 17:43

Dist	COUNTY	ROUTE	POST MILES TOTAL PROJECT	SHEET No.	TOTAL SHEETS
05	SLO	101	7.8/12.5	19	69

REGISTERED CIVIL ENGINEER 3-15-12 DATE

4-23-12
PLANS APPROVAL DATE

REGISTERED PROFESSIONAL ENGINEER J. ERWIN No. 74015 Exp. 06-30-13 CIVIL STATE OF CALIFORNIA

THE STATE OF CALIFORNIA OR ITS OFFICERS OR AGENTS SHALL NOT BE RESPONSIBLE FOR THE ACCURACY OR COMPLETENESS OF SCANNED COPIES OF THIS PLAN SHEET.

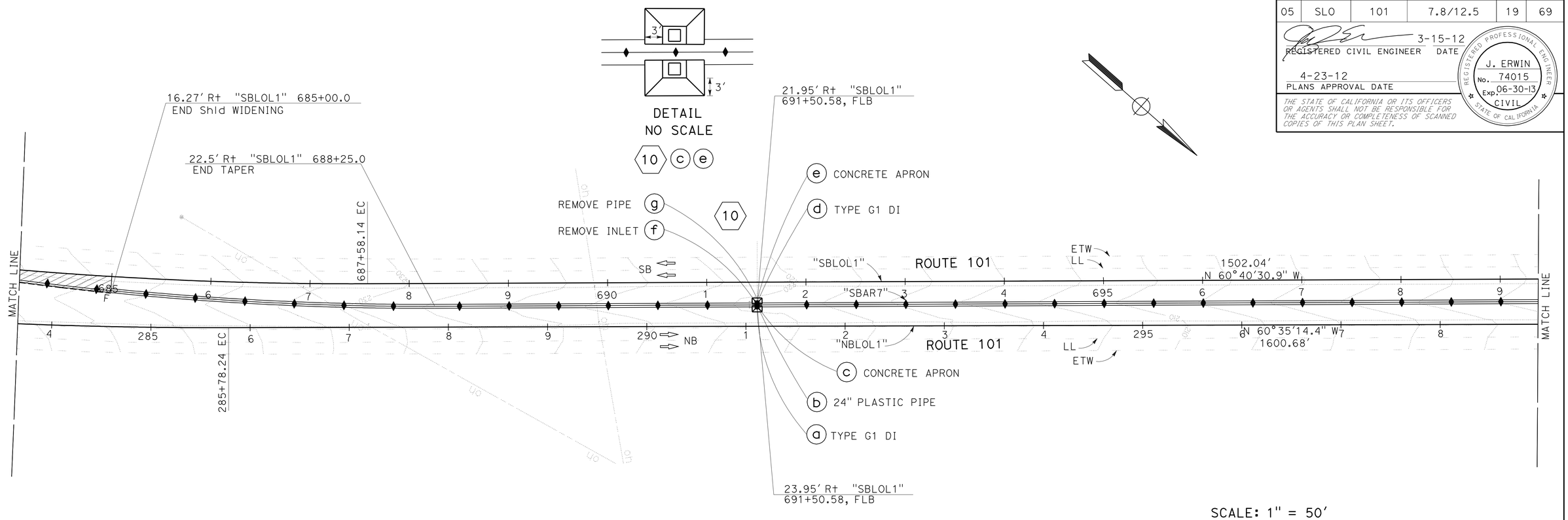

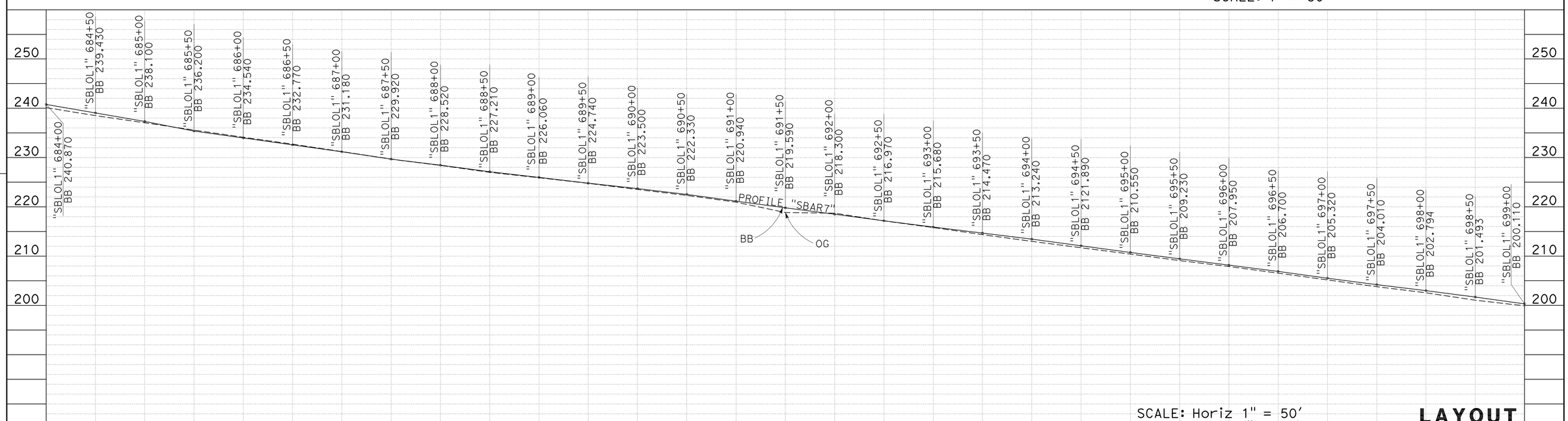

LAYOUT
L-13

STATION		TOTAL
CY	Exc	
	Emb	

STATE OF CALIFORNIA - DEPARTMENT OF TRANSPORTATION
Caltrans DESIGN

FUNCTIONAL SUPERVISOR: STEVE WYATT
CALCULATED-DESIGNED BY: MICHAEL O'NEAL
CHECKED BY: JOSEPH ERWIN
REVISED BY
DATE REVISED

LAST REVISION 03-15-12
DATE PLOTTED => 23-APR-2012
TIME PLOTTED => 17:44

Dist	COUNTY	ROUTE	POST MILES TOTAL PROJECT	SHEET No.	TOTAL SHEETS
05	SLO	101	7.8/12.5	20	69

REGISTERED CIVIL ENGINEER 3-15-12 DATE

4-23-12
PLANS APPROVAL DATE

REGISTERED PROFESSIONAL ENGINEER J. ERWIN No. 74015 Exp. 06-30-13 CIVIL STATE OF CALIFORNIA

THE STATE OF CALIFORNIA OR ITS OFFICERS OR AGENTS SHALL NOT BE RESPONSIBLE FOR THE ACCURACY OR COMPLETENESS OF SCANNED COPIES OF THIS PLAN SHEET.

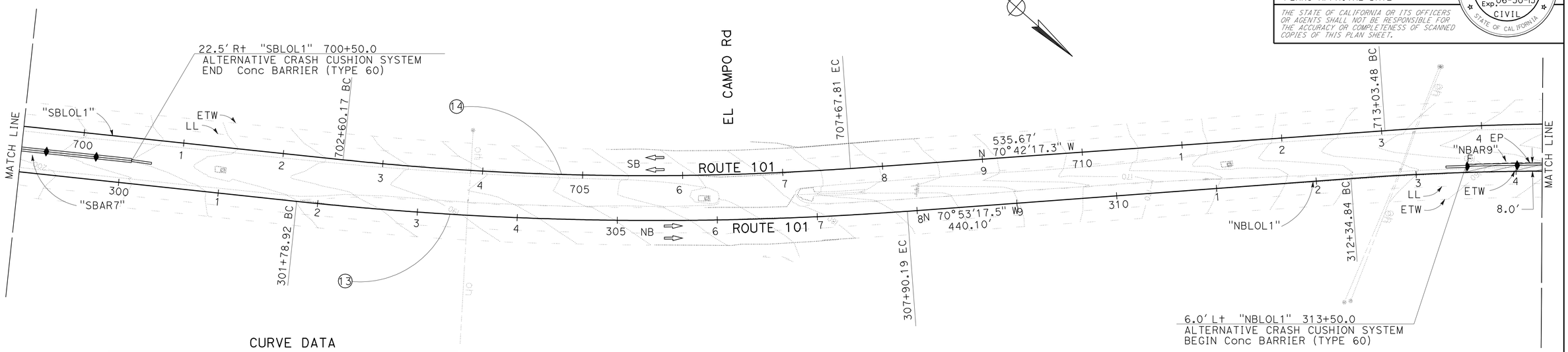

SCALE: 1" = 50'

CURVE DATA

No.	R	Δ	T	L
13	3400'	10°18'03.1"	306.46'	611.27'
14	2900'	18°17'56.9"	254.47'	507.64'

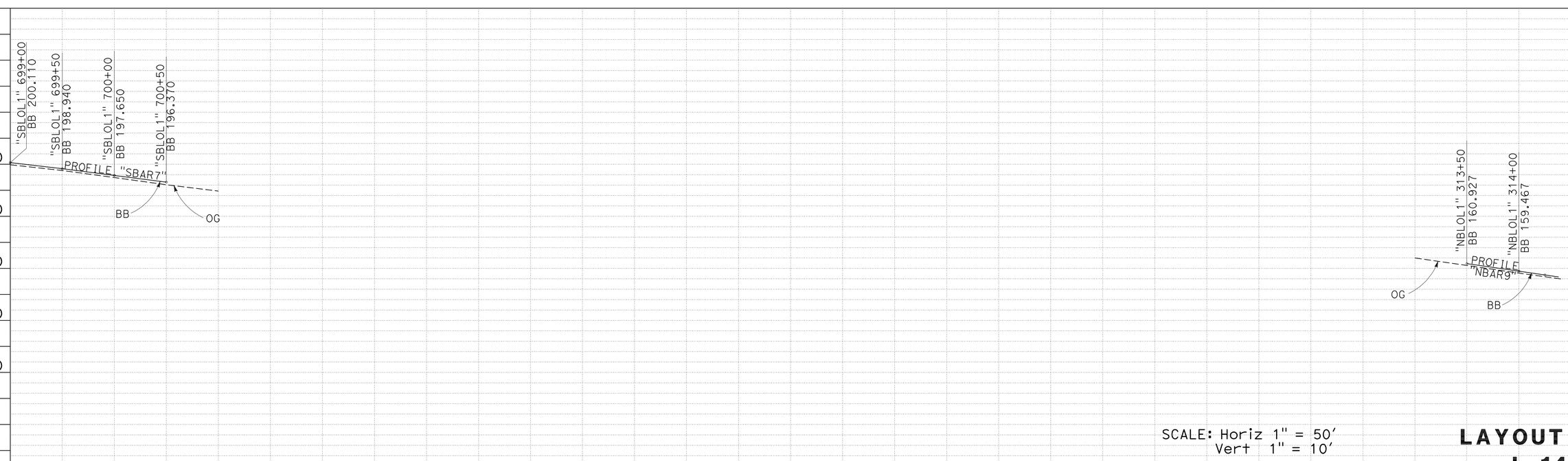

SCALE: Horiz 1" = 50'
Vert 1" = 10'

LAYOUT L-14

STATION		TOTAL
CY	Exc	
	Emb	

STATE OF CALIFORNIA - DEPARTMENT OF TRANSPORTATION
Caltrans DESIGN

FUNCTIONAL SUPERVISOR: STEVE WYATT
CALCULATED-DESIGNED BY: MICHAEL O'NEAL
CHECKED BY: JOSEPH ERWIN
REVISED BY
DATE REVISED

LAST REVISION 03-15-12
DATE PLOTTED => 23-APR-2012
TIME PLOTTED => 17:44

Dist	COUNTY	ROUTE	POST MILES TOTAL PROJECT	SHEET No.	TOTAL SHEETS
05	SLO	101	7.8/12.5	21	69

3-15-12
REGISTERED CIVIL ENGINEER DATE

4-23-12
PLANS APPROVAL DATE

REGISTERED PROFESSIONAL ENGINEER
J. ERWIN
No. 74015
Exp. 06-30-13
CIVIL
STATE OF CALIFORNIA

THE STATE OF CALIFORNIA OR ITS OFFICERS OR AGENTS SHALL NOT BE RESPONSIBLE FOR THE ACCURACY OR COMPLETENESS OF SCANNED COPIES OF THIS PLAN SHEET.

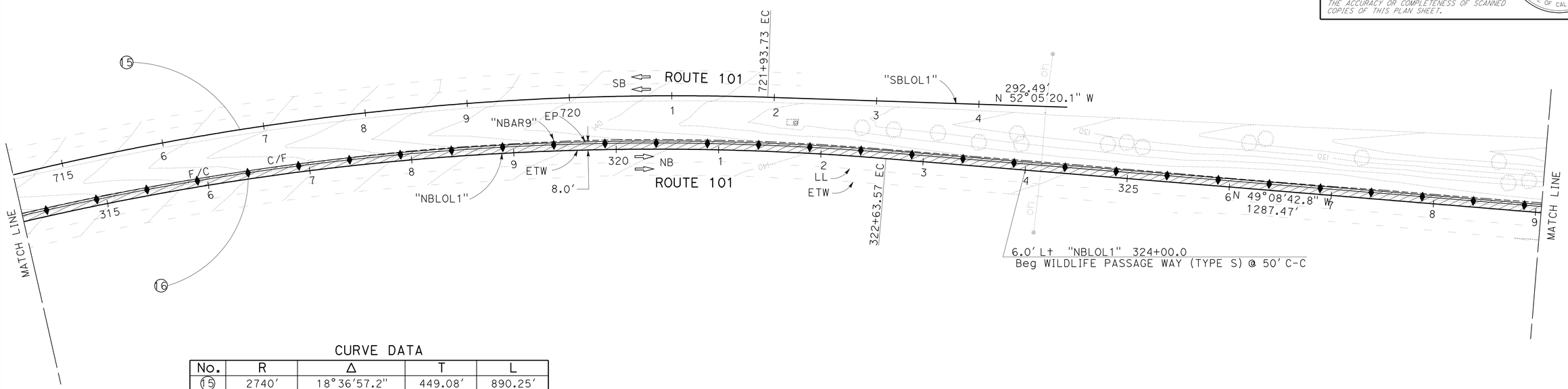

CURVE DATA

No.	R	Δ	T	L
15	2740'	18°36'57.2"	449.08'	890.25'
16	2750'	21°44'34.7"	528.15'	1043.59'

SCALE: 1" = 50'

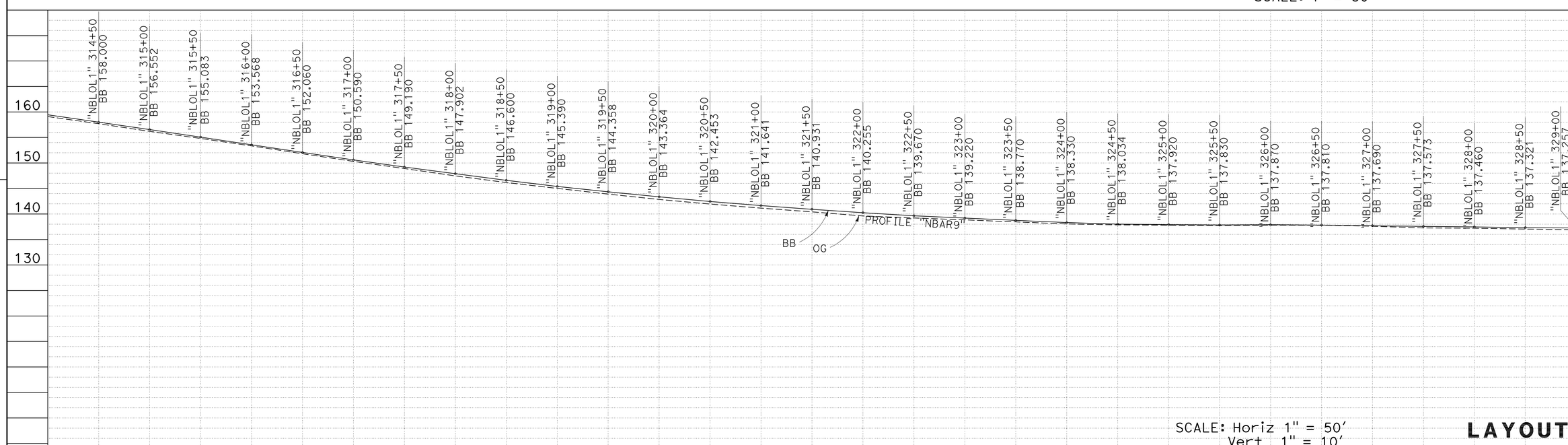

SCALE: Horiz 1" = 50'
Vert 1" = 10'

LAYOUT L-15

STATION		TOTAL
CY	Exc	
	Emb	

STATE OF CALIFORNIA - DEPARTMENT OF TRANSPORTATION
Caltrans
DESIGN

FUNCTIONAL SUPERVISOR: STEVE WYATT
CALCULATED-DESIGNED BY: MICHAEL O'NEAL
CHECKED BY: JOSEPH ERWIN
REVISED BY
DATE REVISED

LAST REVISION 03-15-12
DATE PLOTTED => 23-APR-2012
TIME PLOTTED => 17:44

Dist	COUNTY	ROUTE	POST MILES TOTAL PROJECT	SHEET No.	TOTAL SHEETS
05	SLO	101	7.8/12.5	22	69

3-15-12
REGISTERED CIVIL ENGINEER DATE

4-23-12
PLANS APPROVAL DATE

REGISTERED PROFESSIONAL ENGINEER
J. ERWIN
No. 74015
Exp. 06-30-13
CIVIL
STATE OF CALIFORNIA

THE STATE OF CALIFORNIA OR ITS OFFICERS OR AGENTS SHALL NOT BE RESPONSIBLE FOR THE ACCURACY OR COMPLETENESS OF SCANNED COPIES OF THIS PLAN SHEET.

CURVE DATA

No.	R	Δ	T	L
17	7500′	5°13′50.4"	342.58′	684.69′

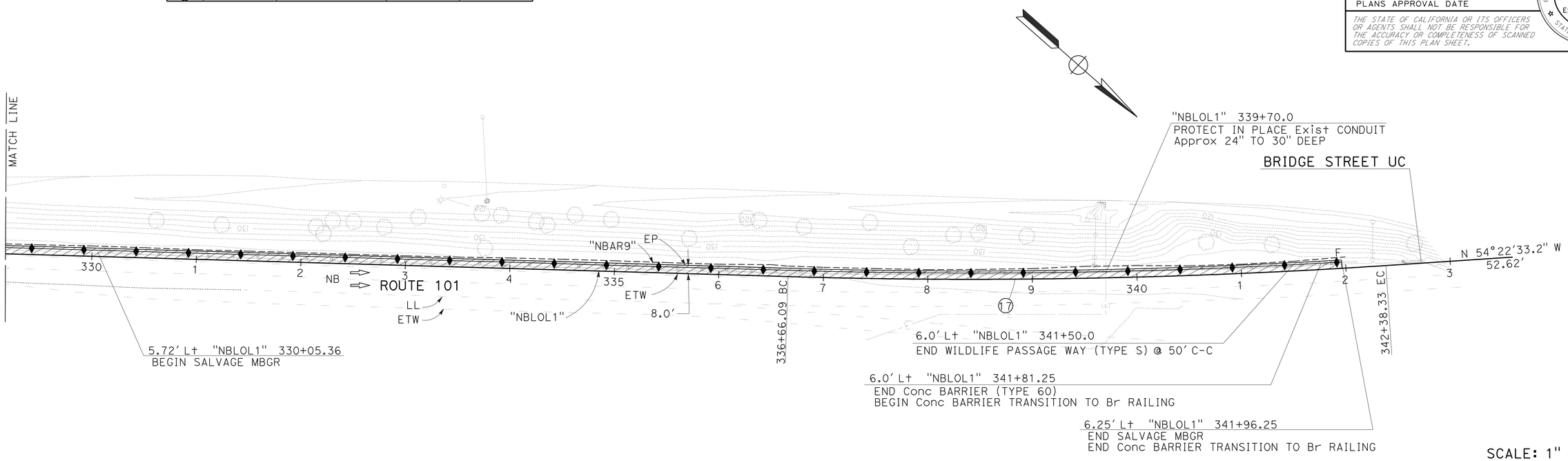

SCALE: 1" = 50′

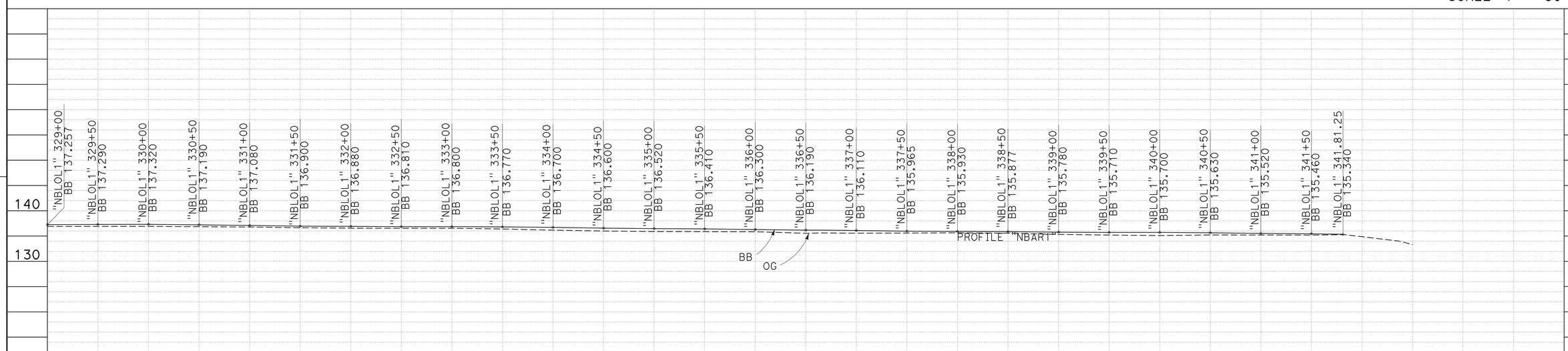

SCALE: Horiz 1" = 50′
Vert 1" = 10′

LAYOUT L-16

STATION	
CY	Exc
	Emb

TOTAL

REVISED BY | DATE REVISED
MICHAEL O'NEAL | JOSEPH ERWIN
CALCULATED-DESIGNED BY | CHECKED BY
FUNCTIONAL SUPERVISOR: STEVE WYATT

STATE OF CALIFORNIA - DEPARTMENT OF TRANSPORTATION
Caltrans
DESIGN

LAST REVISION 03-15-12 | DATE PLOTTED => 23-APR-2012 | TIME PLOTTED => 17:44

Dist	COUNTY	ROUTE	POST MILES TOTAL PROJECT	SHEET No.	TOTAL SHEETS
05	SLO	101	7.8/12.5	23	69

REGISTERED CIVIL ENGINEER 3-15-12 DATE

4-23-12
PLANS APPROVAL DATE

REGISTERED PROFESSIONAL ENGINEER J. ERWIN No. 74015 Exp. 06-30-13 CIVIL STATE OF CALIFORNIA

THE STATE OF CALIFORNIA OR ITS OFFICERS OR AGENTS SHALL NOT BE RESPONSIBLE FOR THE ACCURACY OR COMPLETENESS OF SCANNED COPIES OF THIS PLAN SHEET.

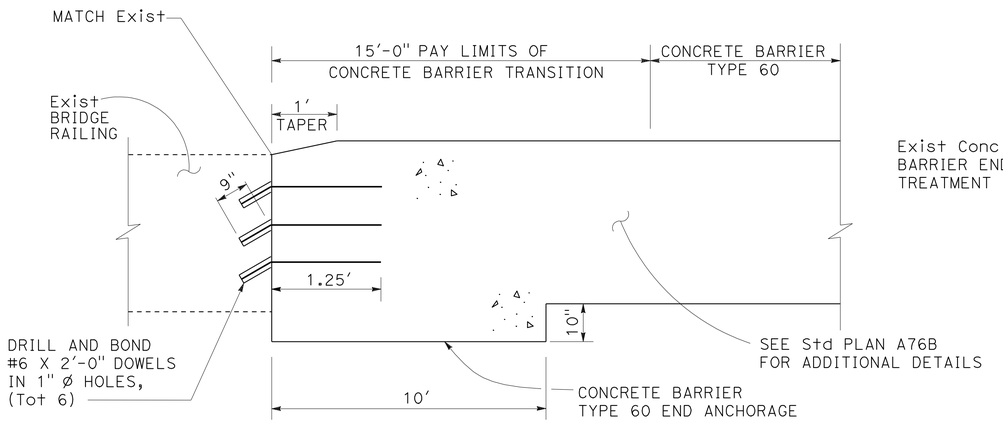

ELEVATION

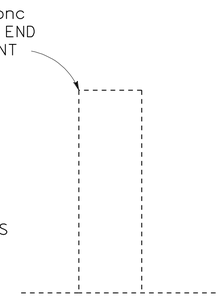

SECTION A-A

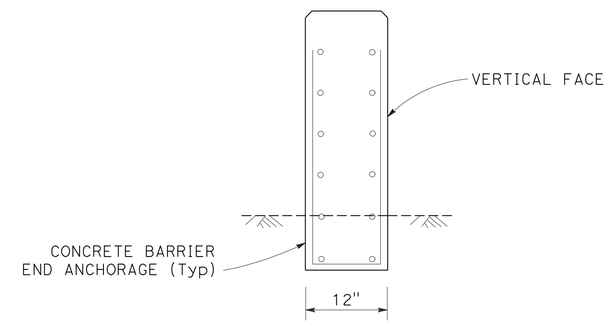

SECTION B-B

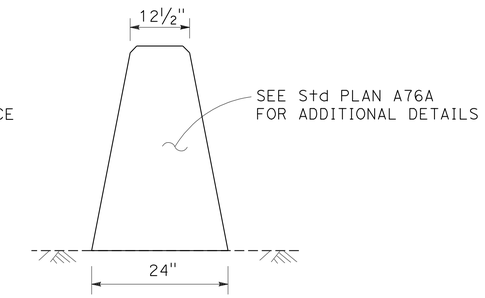

SECTION C-C

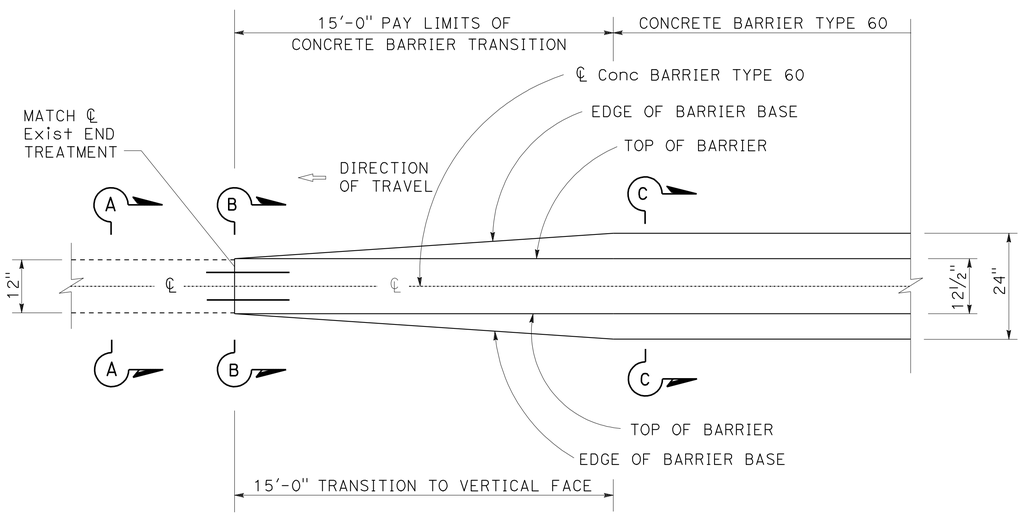

PLAN

CONCRETE BARRIER TRANSITION TO BRIDGE RAILING

"NBLOL1" 341+81.25 TO 341+96.25
"SBLOL1" 503+07.77 TO 503+22.77

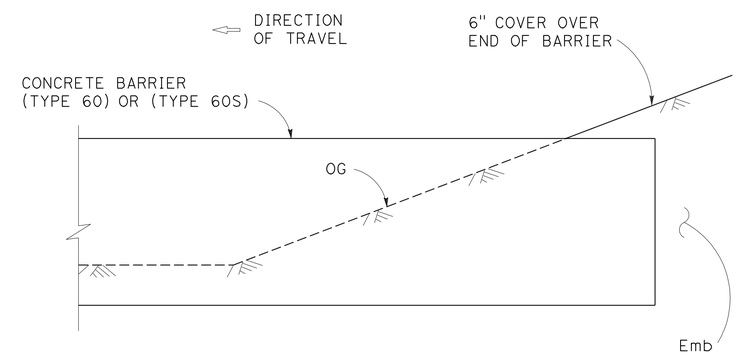

ELEVATION

CONCRETE BARRIER BURIED END

"NBLOL1" 139+50 "SBLOL1" 614+00
"NBLOL1" 175+00 "SBLOL1" 655+50
"NBLOL1" 237+50 "SBLOL1" 663+90
"NBLOL1" 260+00

CONSTRUCTION DETAILS

NO SCALE

C-1

STATE OF CALIFORNIA - DEPARTMENT OF TRANSPORTATION
Caltrans®
DESIGN
FUNCTIONAL SUPERVISOR: STEVE WYATT
CALCULATED-DESIGNED BY: MICHAEL O'NEAL
CHECKED BY: JOSEPH ERWIN
REVISED BY
DATE REVISED

LAST REVISION 03-15-12
DATE PLOTTED => 23-APR-2012
TIME PLOTTED => 17:44

Dist	COUNTY	ROUTE	POST MILES TOTAL PROJECT	SHEET No.	TOTAL SHEETS
05	SLO	101	7.8/12.5	24	69

REGISTERED CIVIL ENGINEER 3-15-12 DATE

4-23-12
PLANS APPROVAL DATE

REGISTERED PROFESSIONAL ENGINEER
J. ERWIN
No. 74015
Exp. 06-30-13
CIVIL
STATE OF CALIFORNIA

THE STATE OF CALIFORNIA OR ITS OFFICERS OR AGENTS SHALL NOT BE RESPONSIBLE FOR THE ACCURACY OR COMPLETENESS OF SCANNED COPIES OF THIS PLAN SHEET.

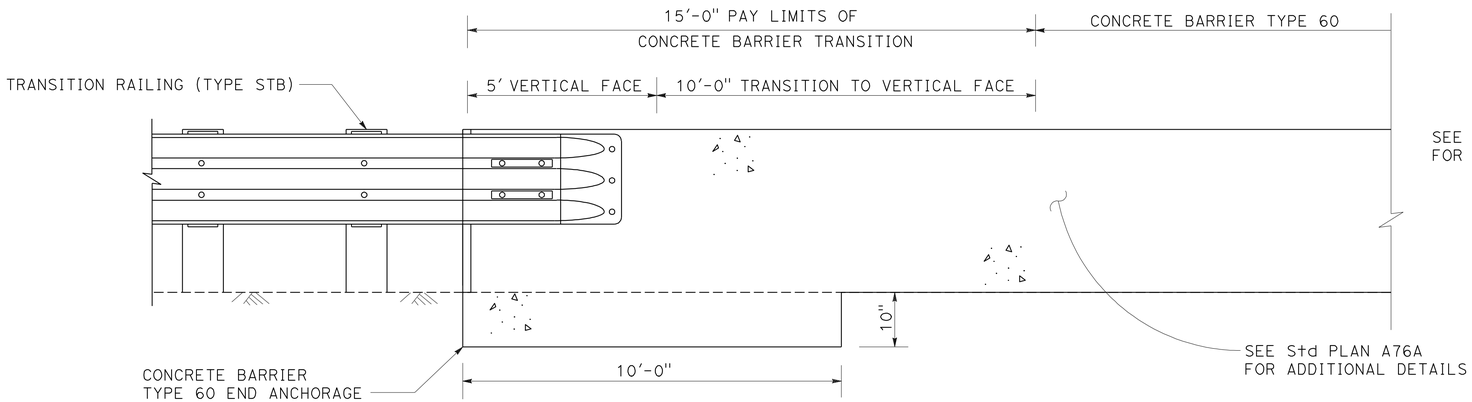

ELEVATION

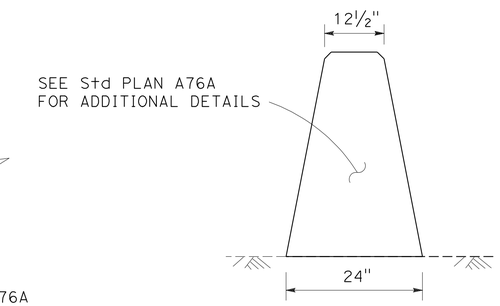

SECTION B-B

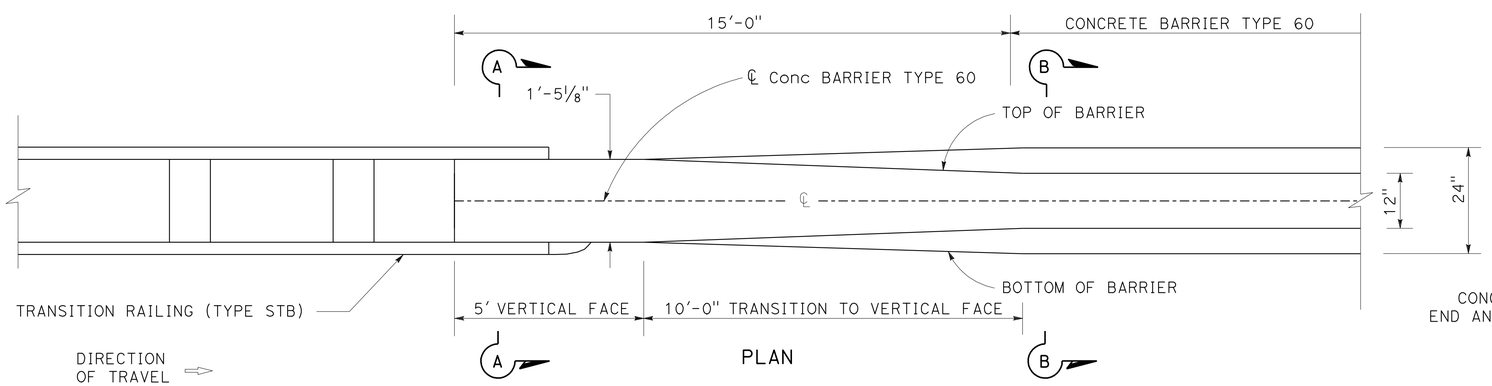

PLAN

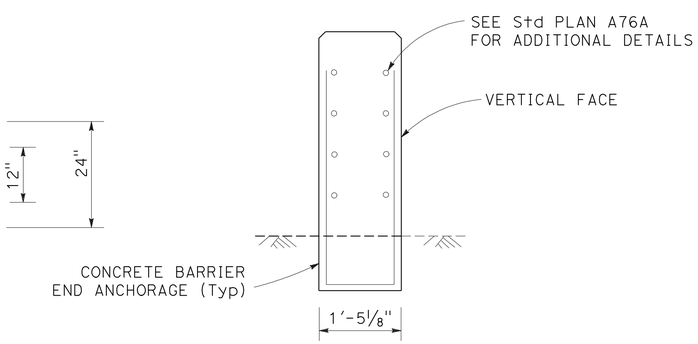

SECTION A-A

CONCRETE BARRIER TRANSITION TO THRIE BEAM BARRIER

"SBLOL1" 524+15.00 TO 524+30.00

CONSTRUCTION DETAILS

NO SCALE

C-2

STATE OF CALIFORNIA - DEPARTMENT OF TRANSPORTATION
Caltrans®
DESIGN

FUNCTIONAL SUPERVISOR: STEVE WYATT
CALCULATED-DESIGNED BY: MICHAEL O'NEAL
CHECKED BY: JOSEPH ERWIN
REVISED BY
DATE REVISED

LAST REVISION 03-15-12
DATE PLOTTED => 23-APR-2012
TIME PLOTTED => 17:44

Dist	COUNTY	ROUTE	POST MILES TOTAL PROJECT	SHEET No.	TOTAL SHEETS
05	SLO	101	7.8/12.5	25	69

REGISTERED CIVIL ENGINEER 3-15-12 DATE

4-23-12
PLANS APPROVAL DATE

REGISTERED PROFESSIONAL ENGINEER
J. ERWIN
No. 74015
Exp. 06-30-13
CIVIL
STATE OF CALIFORNIA

THE STATE OF CALIFORNIA OR ITS OFFICERS OR AGENTS SHALL NOT BE RESPONSIBLE FOR THE ACCURACY OR COMPLETENESS OF SCANNED COPIES OF THIS PLAN SHEET.

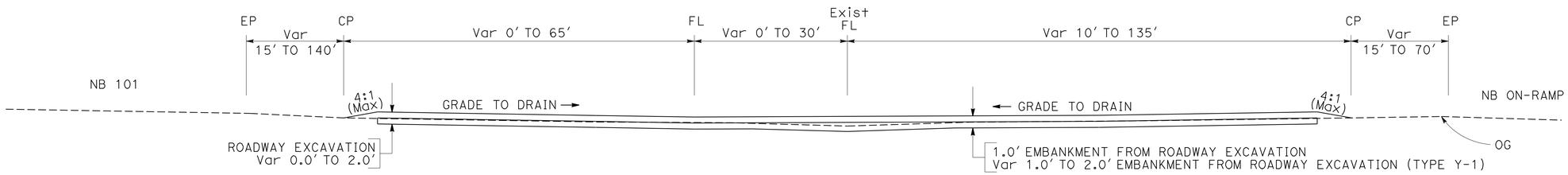

SECTION A-A
NO SCALE

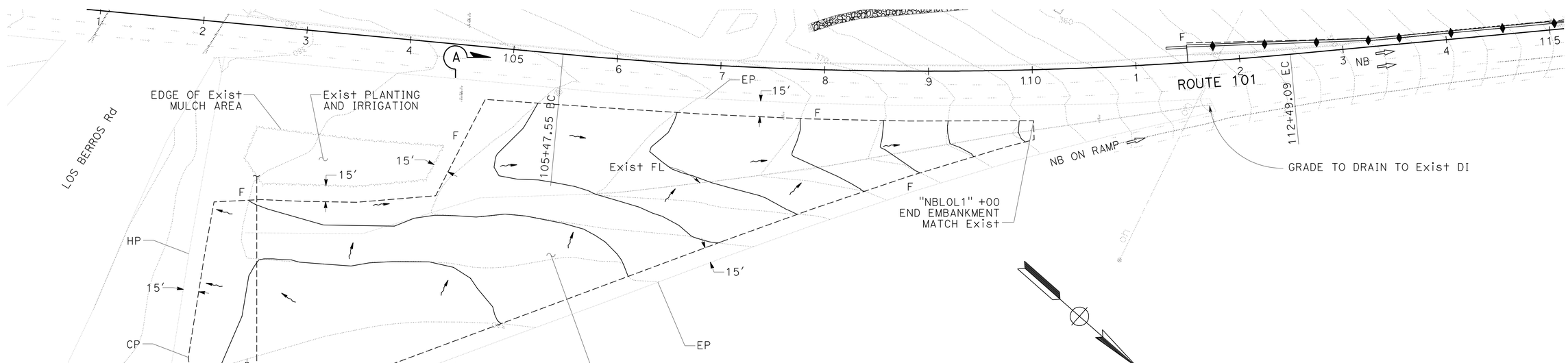

CONSTRUCTION DETAIL AND GRADING PLAN

SCALE: 1" = 50'

C-3

STATE OF CALIFORNIA - DEPARTMENT OF TRANSPORTATION
Caltrans®
DESIGN

FUNCTIONAL SUPERVISOR: STEVE WYATT
CALCULATED-DESIGNED BY: MICHAEL O'NEAL
CHECKED BY: JOSEPH ERWIN
REVISED BY
DATE REVISED

LAST REVISION 03-15-12
DATE PLOTTED => 23-APR-2012
TIME PLOTTED => 17:44

Dist	COUNTY	ROUTE	POST MILES TOTAL PROJECT	SHEET No.	TOTAL SHEETS
05	SLO	101	7.8/12.5	26	69

LICENSED LANDSCAPE ARCHITECT

4-23-12
PLANS APPROVAL DATE

LICENSED LANDSCAPE ARCHITECT
Patrick K. Bolger 3642
Expiration Date 11-30-12
Renewal Date 3-15-12
DATE
STATE OF CALIFORNIA

THE STATE OF CALIFORNIA OR ITS OFFICERS OR AGENTS SHALL NOT BE RESPONSIBLE FOR THE ACCURACY OR COMPLETENESS OF SCANNED COPIES OF THIS PLAN SHEET.

NOTE:

FOR ACCURATE RIGHT OF WAY AND ACCESS DATA,
CONTACT RIGHT OF WAY ENGINEERING AT THE DISTRICT OFFICE.

LEGEND

EROSION CONTROL (COMPOST BLANKET) 1/4" DEPTH
EROSION CONTROL (HYDROSEED)

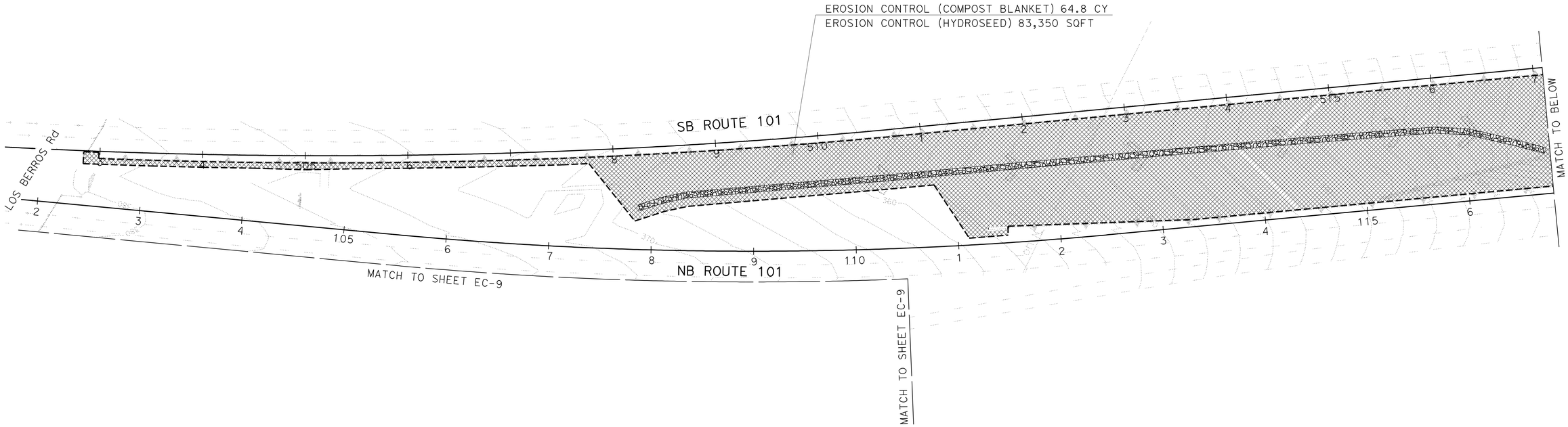

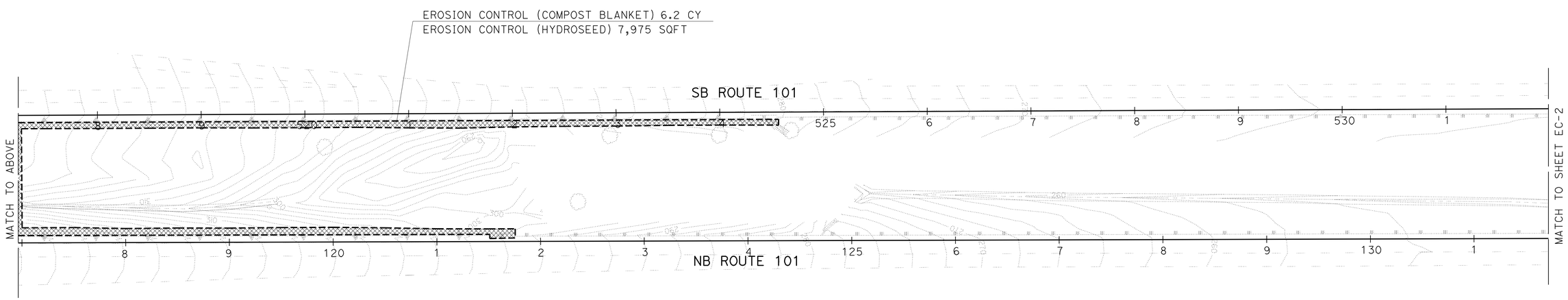

EROSION CONTROL PLAN

SCALE: 1" = 50'

EC-1

APPROVED FOR EROSION CONTROL WORK ONLY

STATE OF CALIFORNIA - DEPARTMENT OF TRANSPORTATION
Caltrans® LANDSCAPE ARCHITECTURE

FUNCTIONAL SUPERVISOR: DENNIS REEVES
CALCULATED-DESIGNED BY: PATRICK BOLGER
CHECKED BY: KRISTEN LANGAGER
REVISED BY
DATE REVISED

LAST REVISION 03-15-12
DATE PLOTTED => 23-APR-2012
TIME PLOTTED => 17:44

Dist	COUNTY	ROUTE	POST MILES TOTAL PROJECT	SHEET No.	TOTAL SHEETS
05	SLO	101	7.8/12.5	27	69

LICENSED LANDSCAPE ARCHITECT

4-23-12
PLANS APPROVAL DATE

LICENSED LANDSCAPE ARCHITECT
Patrick K. Bolger 3632
STATE OF CALIFORNIA
expiration date 11-30-12
renewal date 3-15-12
date

THE STATE OF CALIFORNIA OR ITS OFFICERS OR AGENTS SHALL NOT BE RESPONSIBLE FOR THE ACCURACY OR COMPLETENESS OF SCANNED COPIES OF THIS PLAN SHEET.

NOTE:

FOR ACCURATE RIGHT OF WAY AND ACCESS DATA,
CONTACT RIGHT OF WAY ENGINEERING AT THE DISTRICT OFFICE.

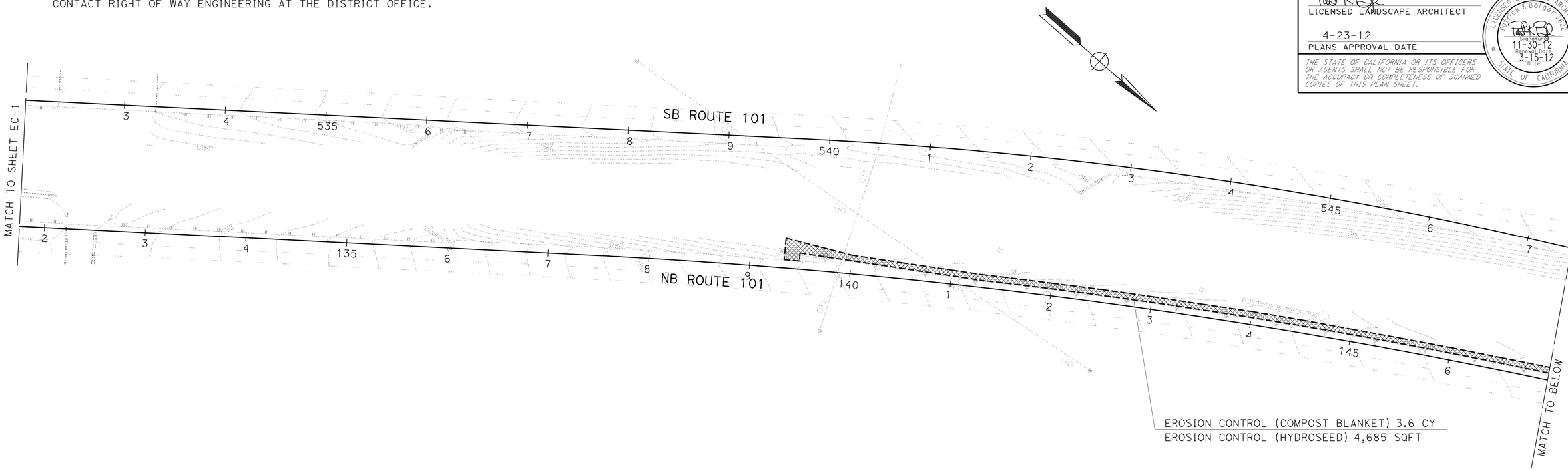

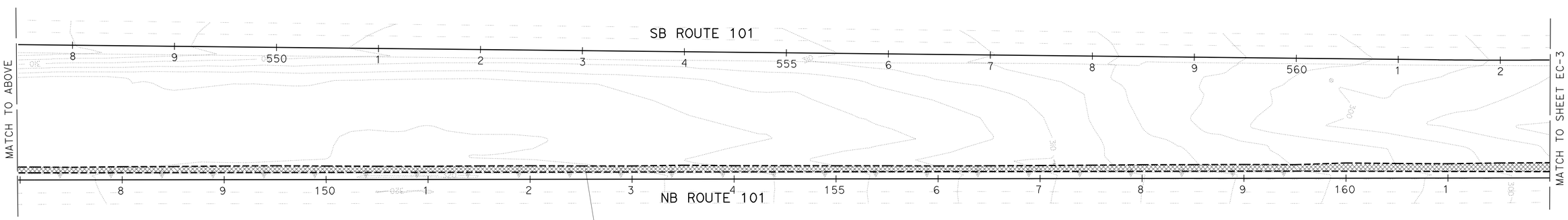

EROSION CONTROL PLAN

SCALE: 1" = 50'

EC-2

APPROVED FOR EROSION CONTROL WORK ONLY

STATE OF CALIFORNIA - DEPARTMENT OF TRANSPORTATION
Caltrans® LANDSCAPE ARCHITECTURE

FUNCTIONAL SUPERVISOR: DENNIS REEVES
CALCULATED-DESIGNED BY: PATRICK BOLGER
CHECKED BY: KRISTEN LANGAGER
REVISED BY / DATE REVISED

LAST REVISION 03-15-12
DATE PLOTTED => 23-APR-2012
TIME PLOTTED => 17:44

Dist	COUNTY	ROUTE	POST MILES TOTAL PROJECT	SHEET No.	TOTAL SHEETS
05	SLO	101	7.8/12.5	28	69

LICENSED LANDSCAPE ARCHITECT

4-23-12
PLANS APPROVAL DATE

LICENSED LANDSCAPE ARCHITECT
Patrick K. Bolger 3622
11-30-12
Renewal Date
3-15-12
Date
STATE OF CALIFORNIA

THE STATE OF CALIFORNIA OR ITS OFFICERS OR AGENTS SHALL NOT BE RESPONSIBLE FOR THE ACCURACY OR COMPLETENESS OF SCANNED COPIES OF THIS PLAN SHEET.

NOTE:

FOR ACCURATE RIGHT OF WAY AND ACCESS DATA,
CONTACT RIGHT OF WAY ENGINEERING AT THE DISTRICT OFFICE.

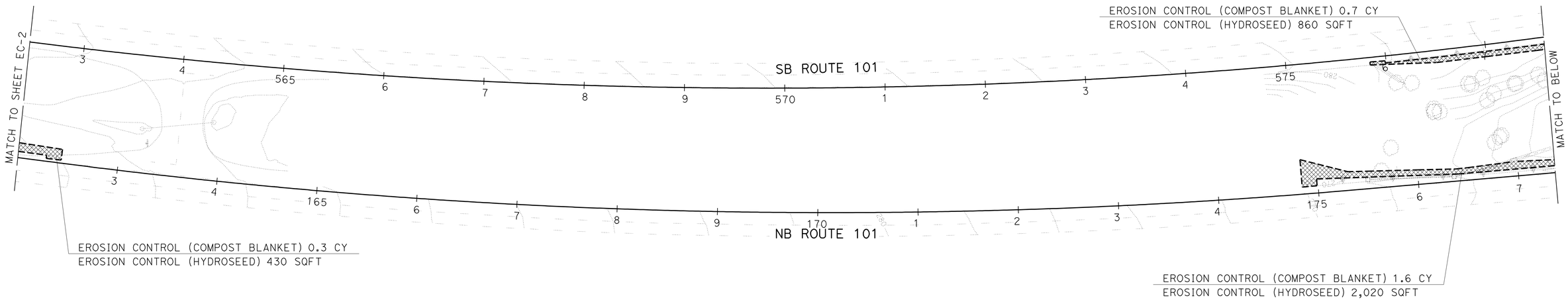

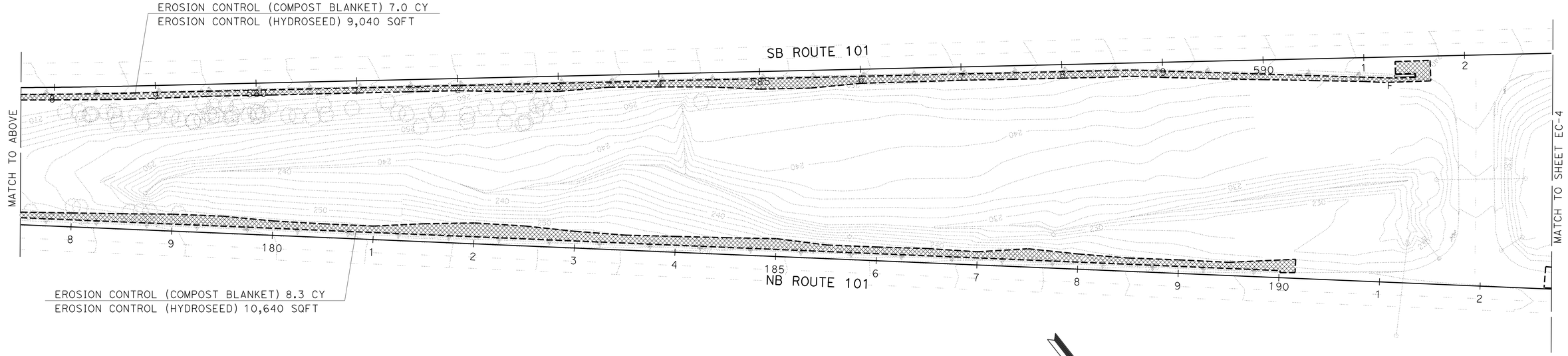

EROSION CONTROL PLAN

SCALE: 1" = 50'

EC-3

APPROVED FOR EROSION CONTROL WORK ONLY

STATE OF CALIFORNIA - DEPARTMENT OF TRANSPORTATION
Caltrans® LANDSCAPE ARCHITECTURE

FUNCTIONAL SUPERVISOR: DENNIS REEVES
CALCULATED-DESIGNED BY: PATRICK BOLGER
CHECKED BY: KRISTEN LANGAGER
REVISED BY / DATE REVISED

LAST REVISION 03-15-12
DATE PLOTTED => 23-APR-2012
TIME PLOTTED => 17:44

Dist	COUNTY	ROUTE	POST MILES TOTAL PROJECT	SHEET No.	TOTAL SHEETS
05	SLO	101	7.8/12.5	29	69

LICENSED LANDSCAPE ARCHITECT

4-23-12
PLANS APPROVAL DATE

LICENSED LANDSCAPE ARCHITECT
Patrick K. Bolger 3622
11-30-12
Renewal Date
3-15-12
Date
STATE OF CALIFORNIA

THE STATE OF CALIFORNIA OR ITS OFFICERS OR AGENTS SHALL NOT BE RESPONSIBLE FOR THE ACCURACY OR COMPLETENESS OF SCANNED COPIES OF THIS PLAN SHEET.

NOTE:

FOR ACCURATE RIGHT OF WAY AND ACCESS DATA,
CONTACT RIGHT OF WAY ENGINEERING AT THE DISTRICT OFFICE.

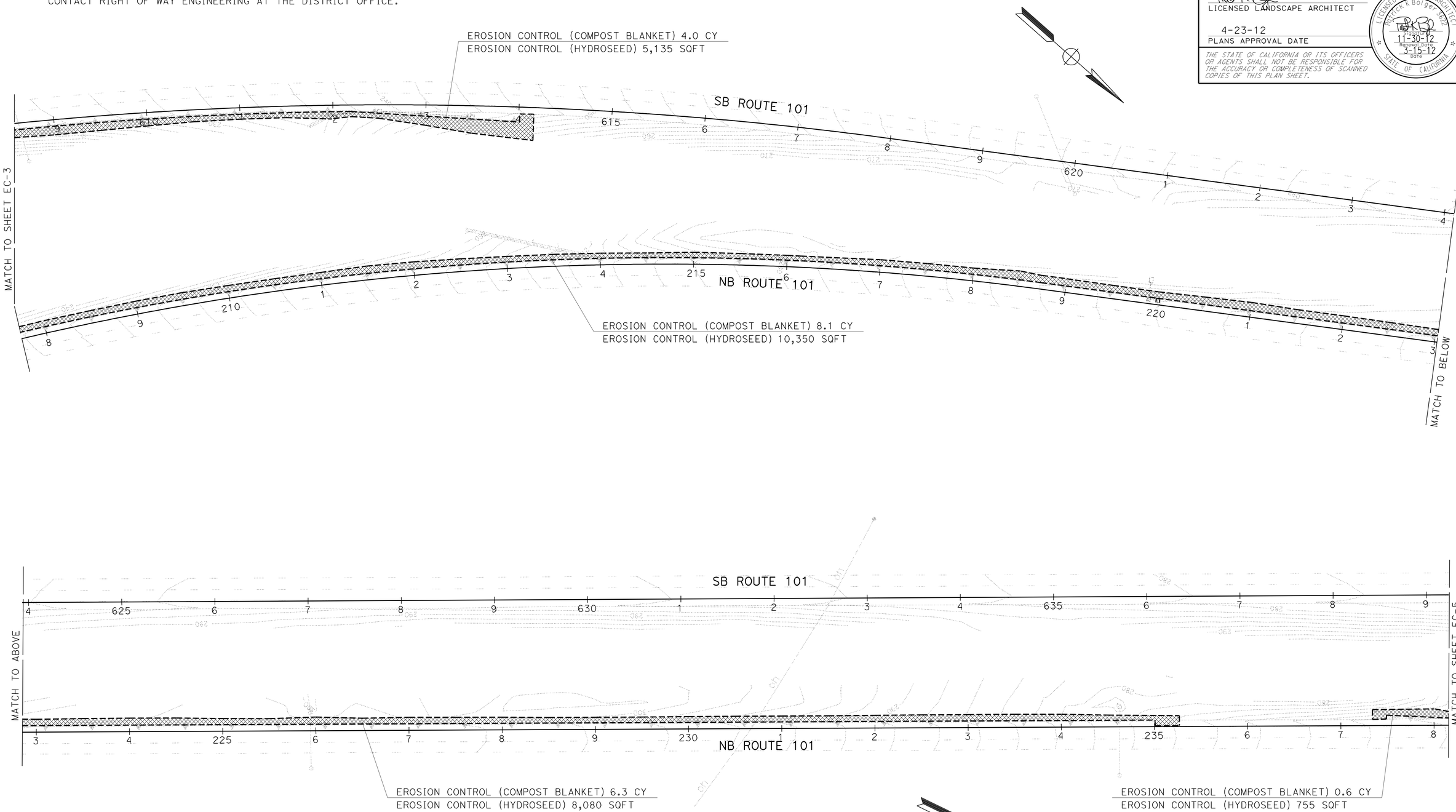

EROSION CONTROL PLAN

SCALE: 1" = 50'

EC-4

APPROVED FOR EROSION CONTROL WORK ONLY

STATE OF CALIFORNIA - DEPARTMENT OF TRANSPORTATION
Caltrans® LANDSCAPE ARCHITECTURE

FUNCTIONAL SUPERVISOR: DENNIS REEVES
CALCULATED-DESIGNED BY: PATRICK BOLGER
CHECKED BY: KRISTEN LANGAGER
REVISED BY / DATE REVISED

LAST REVISION 03-15-12
DATE PLOTTED => 23-APR-2012
TIME PLOTTED => 17:45

Dist	COUNTY	ROUTE	POST MILES TOTAL PROJECT	SHEET No.	TOTAL SHEETS
05	SLO	101	7.8/12.5	30	69

LICENSED LANDSCAPE ARCHITECT

4-23-12
PLANS APPROVAL DATE

LICENSED LANDSCAPE ARCHITECT
Patrick K. Bolger 3652
Date 11-30-12
Renewal Date 3-15-12
STATE OF CALIFORNIA

THE STATE OF CALIFORNIA OR ITS OFFICERS OR AGENTS SHALL NOT BE RESPONSIBLE FOR THE ACCURACY OR COMPLETENESS OF SCANNED COPIES OF THIS PLAN SHEET.

NOTE:

FOR ACCURATE RIGHT OF WAY AND ACCESS DATA,
CONTACT RIGHT OF WAY ENGINEERING AT THE DISTRICT OFFICE.

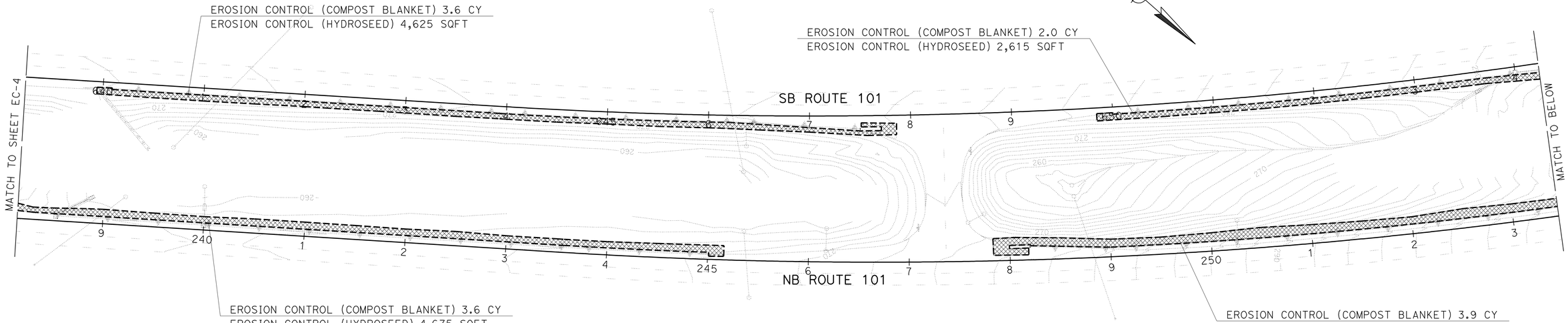

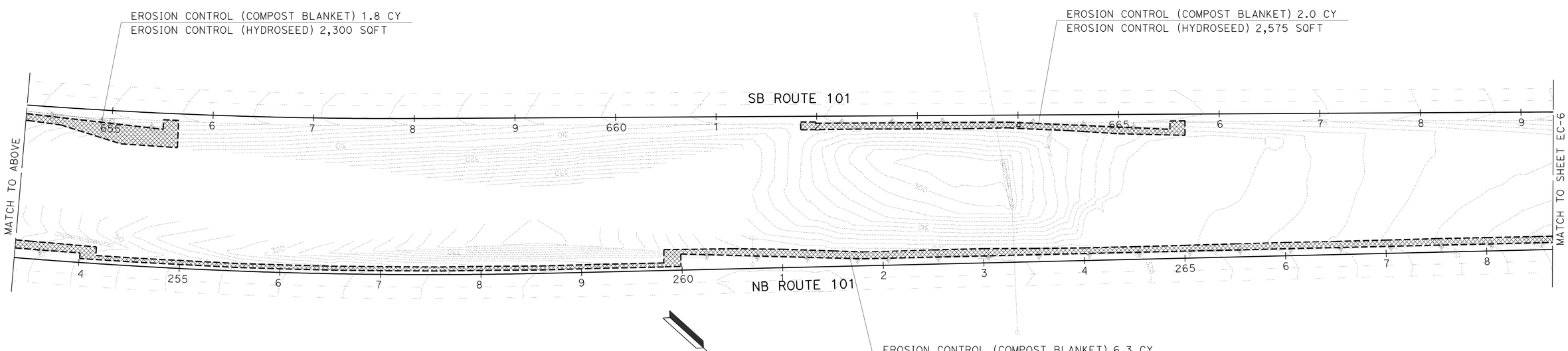

EROSION CONTROL PLAN

SCALE: 1" = 50'

EC-5

APPROVED FOR EROSION CONTROL WORK ONLY

STATE OF CALIFORNIA - DEPARTMENT OF TRANSPORTATION
Caltrans® LANDSCAPE ARCHITECTURE

FUNCTIONAL SUPERVISOR: DENNIS REEVES
CALCULATED-DESIGNED BY: PATRICK BOLGER
CHECKED BY: KRISTEN LANGAGER
REVISED BY / DATE REVISED

LAST REVISION 03-15-12
DATE PLOTTED => 23-APR-2012
TIME PLOTTED => 17:45

Dist	COUNTY	ROUTE	POST MILES TOTAL PROJECT	SHEET No.	TOTAL SHEETS
05	SLO	101	7.8/12.5	31	69

LICENSED LANDSCAPE ARCHITECT

4-23-12
PLANS APPROVAL DATE

LICENSED LANDSCAPE ARCHITECT
Patrick K. Bolger 3642
11-30-12
RENEWAL DATE
3-15-12
DATE
STATE OF CALIFORNIA

THE STATE OF CALIFORNIA OR ITS OFFICERS OR AGENTS SHALL NOT BE RESPONSIBLE FOR THE ACCURACY OR COMPLETENESS OF SCANNED COPIES OF THIS PLAN SHEET.

NOTE:

FOR ACCURATE RIGHT OF WAY AND ACCESS DATA,
CONTACT RIGHT OF WAY ENGINEERING AT THE DISTRICT OFFICE.

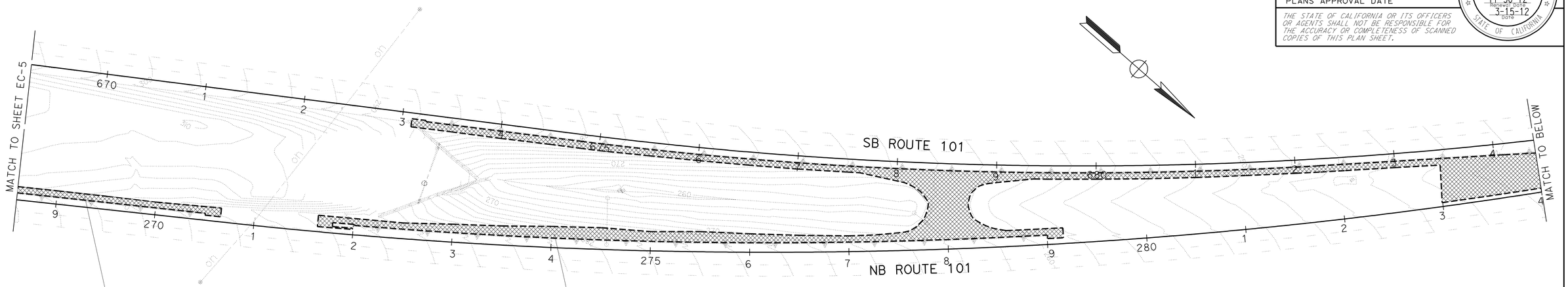

EROSION CONTROL (COMPOST BLANKET) 1.1 CY
EROSION CONTROL (HYDROSEED) 1,400 SQFT

EROSION CONTROL (COMPOST BLANKET) 16.3 CY
EROSION CONTROL (HYDROSEED) 21,100 SQFT

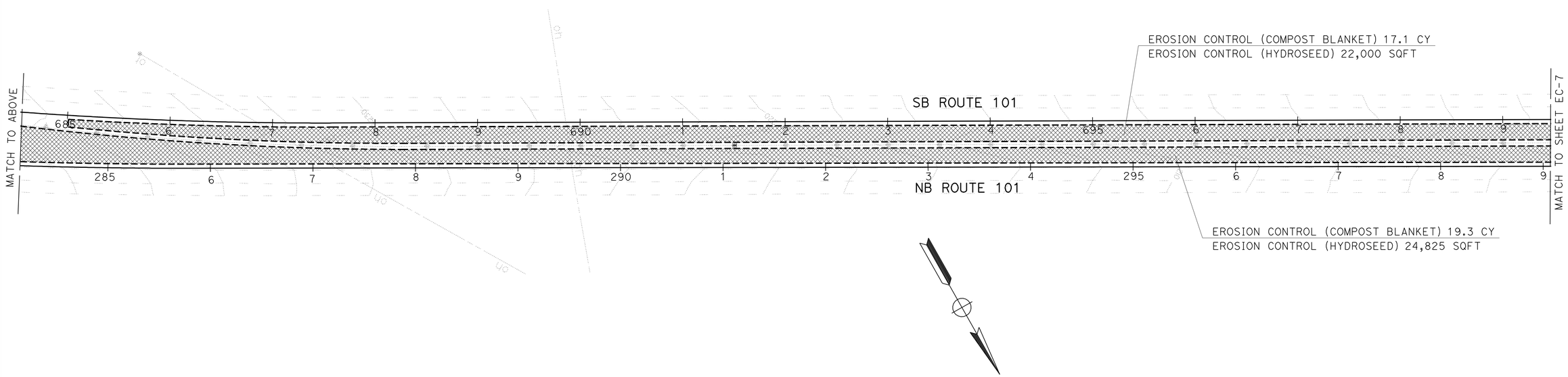

EROSION CONTROL (COMPOST BLANKET) 17.1 CY
EROSION CONTROL (HYDROSEED) 22,000 SQFT

EROSION CONTROL (COMPOST BLANKET) 19.3 CY
EROSION CONTROL (HYDROSEED) 24,825 SQFT

EROSION CONTROL PLAN

SCALE: 1" = 50'

EC-6

APPROVED FOR EROSION CONTROL WORK ONLY

STATE OF CALIFORNIA - DEPARTMENT OF TRANSPORTATION
Caltrans® LANDSCAPE ARCHITECTURE

FUNCTIONAL SUPERVISOR: DENNIS REEVES
CALCULATED-DESIGNED BY: PATRICK BOLGER
CHECKED BY: KRISTEN LANGAGER
REVISED BY / DATE REVISED

LAST REVISION 03-15-12
DATE PLOTTED => 23-APR-2012
TIME PLOTTED => 17:45

Dist	COUNTY	ROUTE	POST MILES TOTAL PROJECT	SHEET No.	TOTAL SHEETS
05	SLO	101	7.8/12.5	32	69

LICENSED LANDSCAPE ARCHITECT

4-23-12
PLANS APPROVAL DATE

LICENSED LANDSCAPE ARCHITECT
Patrick K. Bolger 3622
Expiration Date 11-30-12
Renewal Date 3-15-12
Date
STATE OF CALIFORNIA

THE STATE OF CALIFORNIA OR ITS OFFICERS OR AGENTS SHALL NOT BE RESPONSIBLE FOR THE ACCURACY OR COMPLETENESS OF SCANNED COPIES OF THIS PLAN SHEET.

NOTE:

FOR ACCURATE RIGHT OF WAY AND ACCESS DATA,
CONTACT RIGHT OF WAY ENGINEERING AT THE DISTRICT OFFICE.

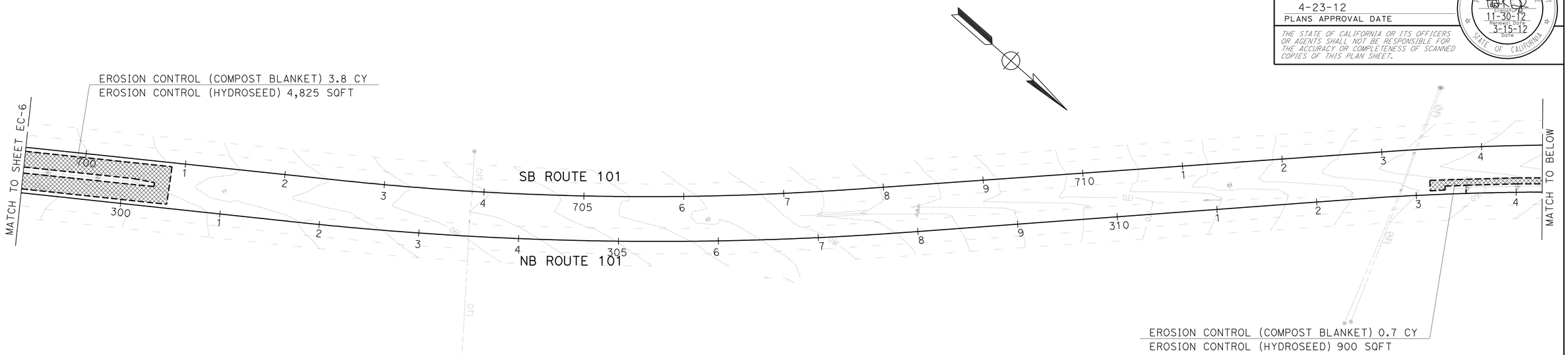

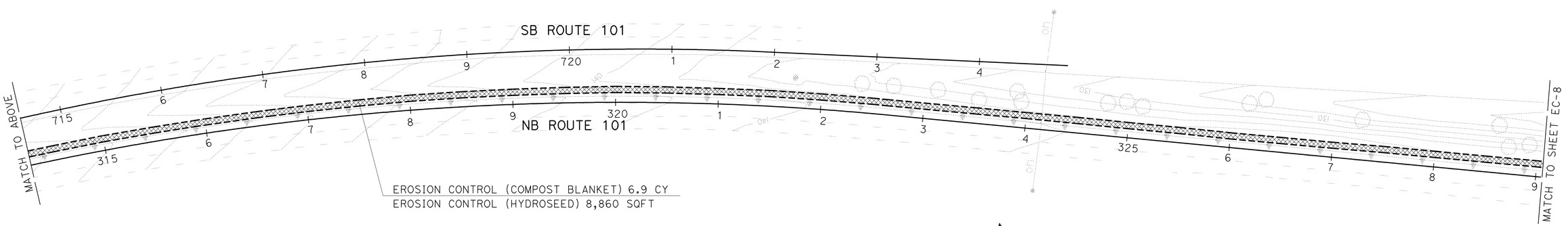

EROSION CONTROL PLAN

SCALE: 1" = 50'

EC-7

APPROVED FOR EROSION CONTROL WORK ONLY

STATE OF CALIFORNIA - DEPARTMENT OF TRANSPORTATION
Caltrans® LANDSCAPE ARCHITECTURE

FUNCTIONAL SUPERVISOR: DENNIS REEVES
CALCULATED-DESIGNED BY: PATRICK BOLGER
CHECKED BY: KRISTEN LANGAGER
REVISED BY / DATE REVISED

LAST REVISION 03-15-12
DATE PLOTTED => 23-APR-2012
TIME PLOTTED => 17:45

Dist	COUNTY	ROUTE	POST MILES TOTAL PROJECT	SHEET No.	TOTAL SHEETS
05	SLO	101	7.8/12.5	33	69

LICENSED LANDSCAPE ARCHITECT

4-23-12
PLANS APPROVAL DATE

LICENSED LANDSCAPE ARCHITECT
Patrick K. Bolger 3642
11-30-12
REGISTRATION DATE
3-15-12
DATE
STATE OF CALIFORNIA

THE STATE OF CALIFORNIA OR ITS OFFICERS OR AGENTS SHALL NOT BE RESPONSIBLE FOR THE ACCURACY OR COMPLETENESS OF SCANNED COPIES OF THIS PLAN SHEET.

NOTE:

FOR ACCURATE RIGHT OF WAY AND ACCESS DATA,
CONTACT RIGHT OF WAY ENGINEERING AT THE DISTRICT OFFICE.

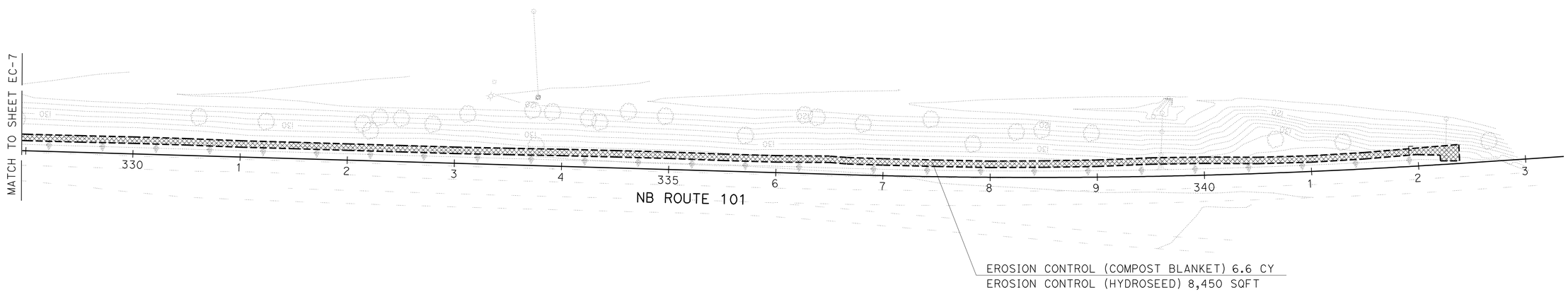

EROSION CONTROL PLAN

SCALE: 1" = 50'

EC-8

APPROVED FOR EROSION CONTROL WORK ONLY

REVISED BY	DATE REVISED

CALCULATED-DESIGNED BY	CHECKED BY
PATRICK BOLGER	KRISTEN LANGAGER

FUNCTIONAL SUPERVISOR: DENNIS REEVES

STATE OF CALIFORNIA - DEPARTMENT OF TRANSPORTATION
Caltrans® LANDSCAPE ARCHITECTURE

LAST REVISION 03-15-12 | DATE PLOTTED => 23-APR-2012 | TIME PLOTTED => 17:45

Dist	COUNTY	ROUTE	POST MILES TOTAL PROJECT	SHEET No.	TOTAL SHEETS
05	SLO	101	7.8/12.5	34	69

LICENSED LANDSCAPE ARCHITECT

4-23-12
PLANS APPROVAL DATE

LICENSED LANDSCAPE ARCHITECT Patrick K. Bolger 3632 STATE OF CALIFORNIA
Date Signed 11-30-12
Renewal Date 3-15-12
Date

THE STATE OF CALIFORNIA OR ITS OFFICERS OR AGENTS SHALL NOT BE RESPONSIBLE FOR THE ACCURACY OR COMPLETENESS OF SCANNED COPIES OF THIS PLAN SHEET.

NOTE:

FOR ACCURATE RIGHT OF WAY AND ACCESS DATA,
CONTACT RIGHT OF WAY ENGINEERING AT THE DISTRICT OFFICE.

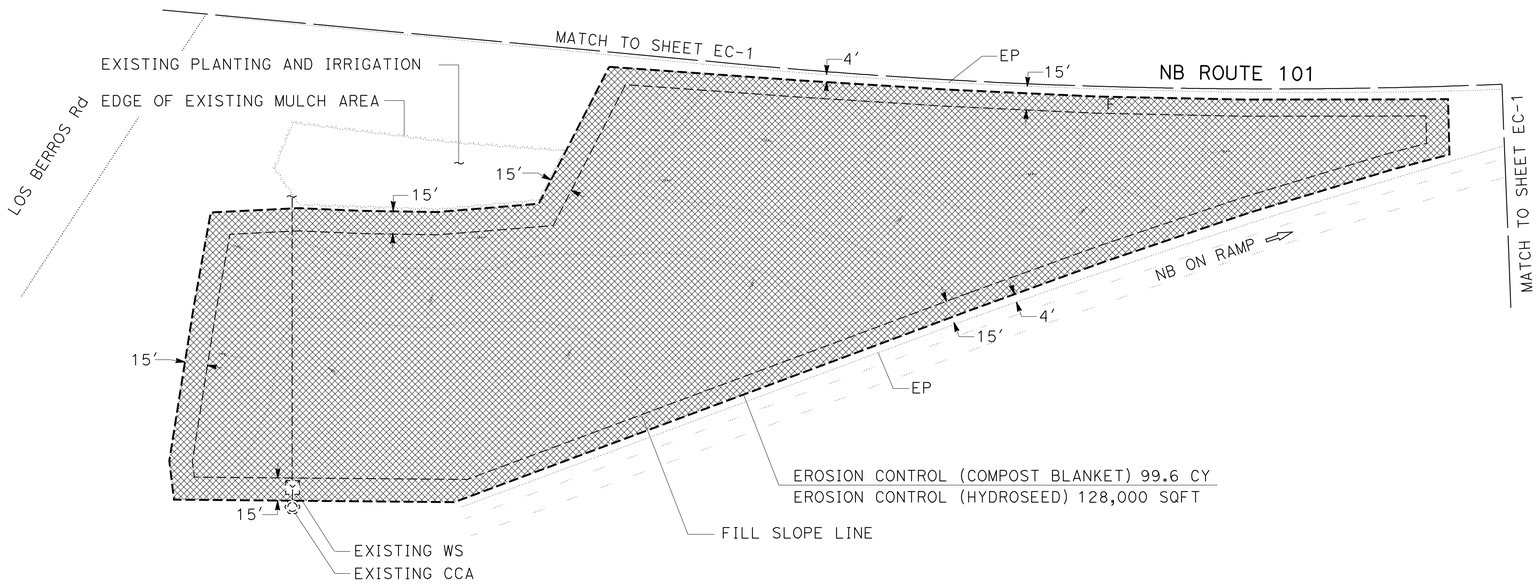

EROSION CONTROL

SHEET	EROSION CONTROL (COMPOST BLANKET)	EROSION CONTROL (HYDROSEED)
	CY	SQFT
EC-1	71.0	91,325
EC-2	11.0	14,225
EC-3	17.9	22,990
EC-4	19.0	24,320
EC-5	23.2	30,465
EC-6	53.8	69,325
EC-7	11.4	14,585
EC-8	6.6	8,450
EC-9	99.6	128,000
TOTAL	313.5	403,685

EROSION CONTROL PLAN AND QUANTITIES

SCALE: 1" = 50'

EC-9

APPROVED FOR EROSION CONTROL WORK ONLY

STATE OF CALIFORNIA - DEPARTMENT OF TRANSPORTATION
Caltrans® LANDSCAPE ARCHITECTURE

FUNCTIONAL SUPERVISOR: DENNIS REEVES
CALCULATED-DESIGNED BY: PATRICK BOLGER
CHECKED BY: KRISTEN LANGAGER
REVISED BY
DATE REVISED

LAST REVISION 03-15-12
DATE PLOTTED => 23-APR-2012
TIME PLOTTED => 17:45

Dist	COUNTY	ROUTE	POST MILES TOTAL PROJECT	SHEET No.	TOTAL SHEETS
05	SLO	101	7.8/12.5	35	69

REGISTERED CIVIL ENGINEER 3-15-12 DATE

4-23-12
PLANS APPROVAL DATE

REGISTERED PROFESSIONAL ENGINEER J. ERWIN No. 74015 Exp. 06-30-13 CIVIL STATE OF CALIFORNIA

THE STATE OF CALIFORNIA OR ITS OFFICERS OR AGENTS SHALL NOT BE RESPONSIBLE FOR THE ACCURACY OR COMPLETENESS OF SCANNED COPIES OF THIS PLAN SHEET.

LEGEND

MINOR CONCRETE (BACKFILL)

ABBREVIATIONS

COB CENTER OF BOX
FLB FLOW LINE OF CONCRETE BARRIER

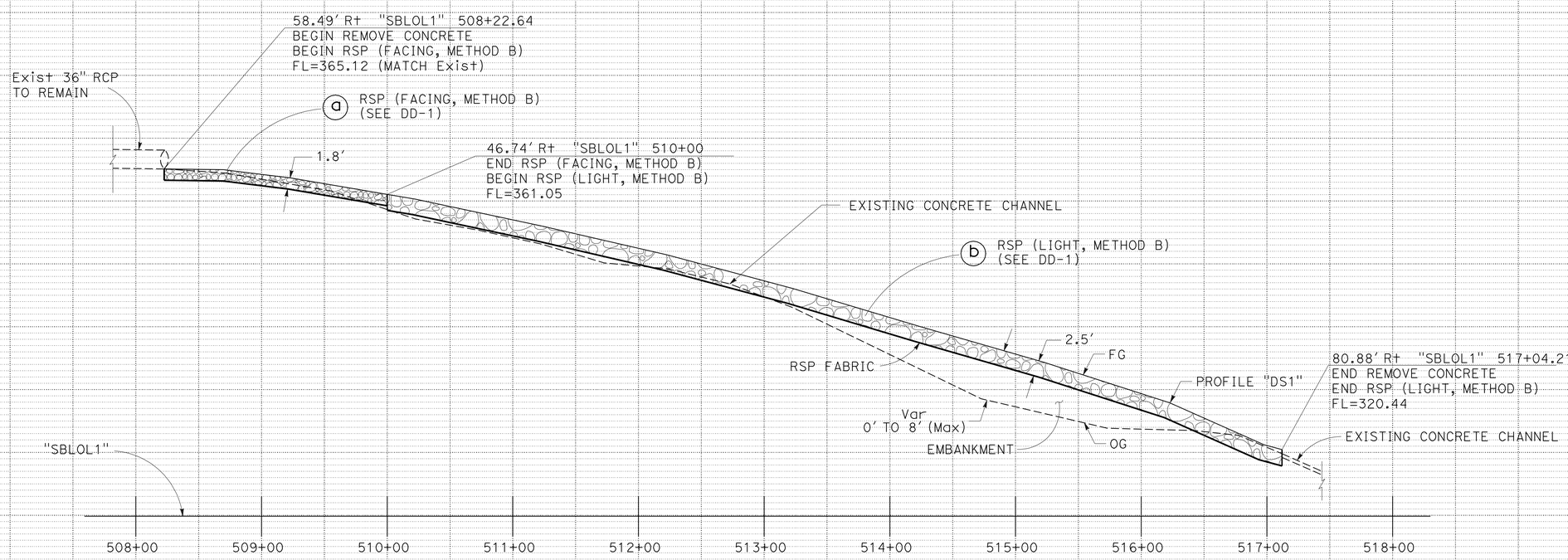

DRAINAGE SYSTEM No. 1

DRAINAGE PROFILES

SCALE: Horiz 1" = 50'
Vert 1" = 10'

DP-1

APPROVED FOR DRAINAGE WORK ONLY

REVISED BY | DATE REVISED
MICHAEL O'NEAL | JOSEPH ERWIN
CALCULATED-DESIGNED BY | CHECKED BY
FUNCTIONAL SUPERVISOR: STEVE WYATT
STATE OF CALIFORNIA - DEPARTMENT OF TRANSPORTATION
Caltrans
DESIGN

LAST REVISION 03-15-12 | DATE PLOTTED => 23-APR-2012 | TIME PLOTTED => 17:45

Dist	COUNTY	ROUTE	POST MILES TOTAL PROJECT	SHEET No.	TOTAL SHEETS
05	SLO	101	7.8/12.5	36	69

REGISTERED CIVIL ENGINEER 3-15-12 DATE

4-23-12
PLANS APPROVAL DATE

REGISTERED PROFESSIONAL ENGINEER J. ERWIN No. 74015 Exp. 06-30-13 CIVIL STATE OF CALIFORNIA

THE STATE OF CALIFORNIA OR ITS OFFICERS OR AGENTS SHALL NOT BE RESPONSIBLE FOR THE ACCURACY OR COMPLETENESS OF SCANNED COPIES OF THIS PLAN SHEET.

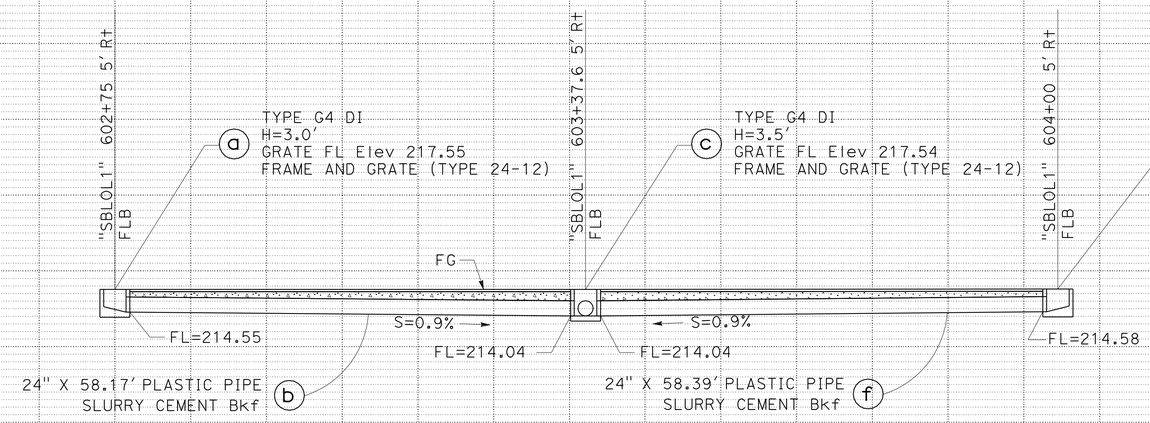

DRAINAGE SYSTEM No. 4

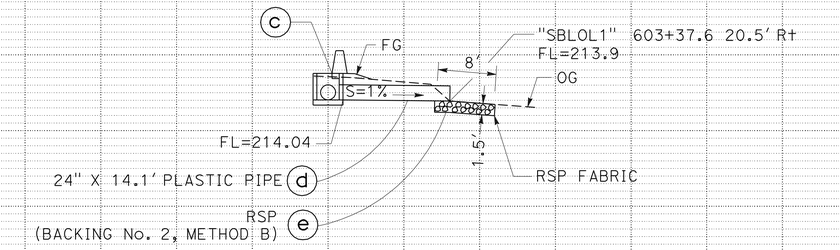

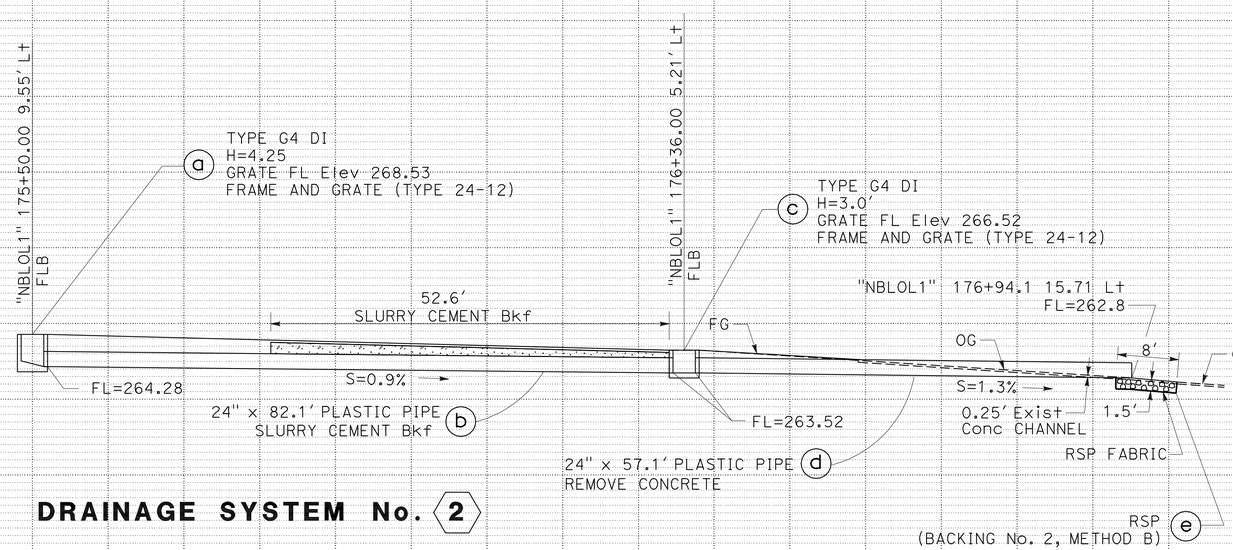

DRAINAGE SYSTEM No. 2

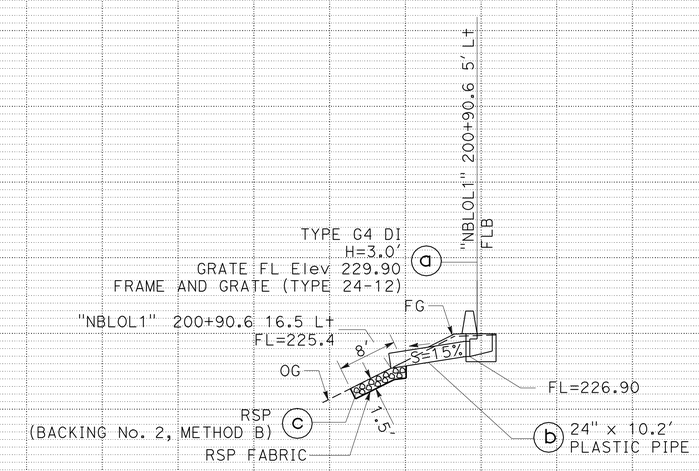

DRAINAGE SYSTEM No. 3

DRAINAGE PROFILES

SCALE: Horiz 1" = 10'
Vert 1" = 10'

DP-2

APPROVED FOR DRAINAGE WORK ONLY

STATE OF CALIFORNIA - DEPARTMENT OF TRANSPORTATION
Caltrans
DESIGN
FUNCTIONAL SUPERVISOR: STEVE WYATT
CALCULATED-DESIGNED BY: JOSEPH ERWIN
CHECKED BY: MICHAEL O'NEAL
REVISED BY
DATE REVISED

LAST REVISION 03-15-12
DATE PLOTTED => 23-APR-2012
TIME PLOTTED => 17:45

Dist	COUNTY	ROUTE	POST MILES TOTAL PROJECT	SHEET No.	TOTAL SHEETS
05	SLO	101	7.8/12.5	37	69

REGISTERED CIVIL ENGINEER 3-15-12 DATE

4-23-12
PLANS APPROVAL DATE

REGISTERED PROFESSIONAL ENGINEER J. ERWIN No. 74015 Exp. 06-30-13 CIVIL STATE OF CALIFORNIA

THE STATE OF CALIFORNIA OR ITS OFFICERS OR AGENTS SHALL NOT BE RESPONSIBLE FOR THE ACCURACY OR COMPLETENESS OF SCANNED COPIES OF THIS PLAN SHEET.

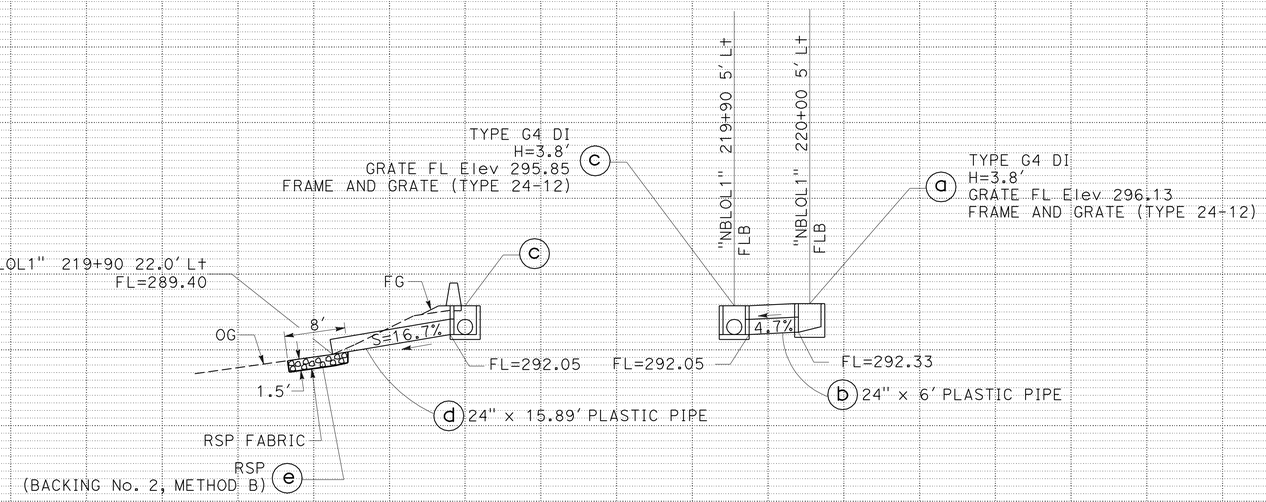

DRAINAGE SYSTEM No. 6

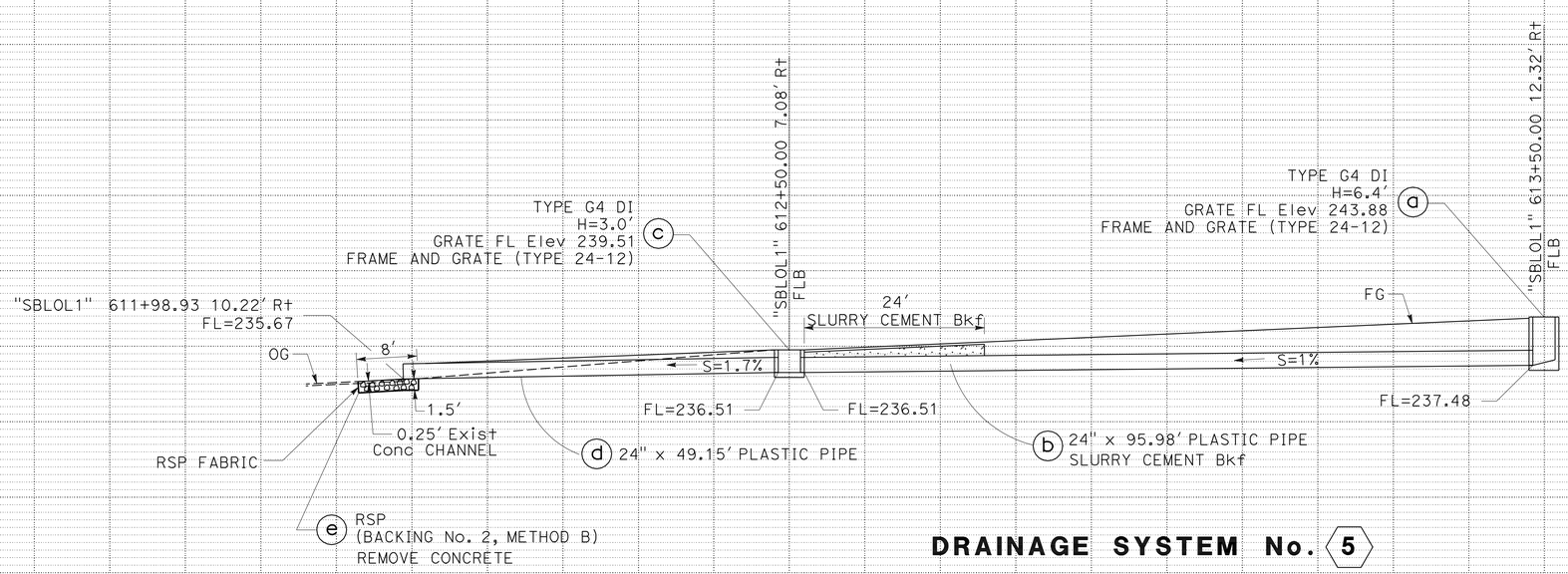

DRAINAGE SYSTEM No. 5

APPROVED FOR DRAINAGE WORK ONLY

DRAINAGE PROFILES

SCALE: Horiz 1" = 10'
Vert 1" = 10'

DP-3

STATE OF CALIFORNIA - DEPARTMENT OF TRANSPORTATION
Caltrans
DESIGN

FUNCTIONAL SUPERVISOR: STEVE WYATT
CALCULATED-DESIGNED BY: JOSEPH ERWIN
CHECKED BY: MICHAEL O'NEAL
REVISED BY
DATE REVISED

LAST REVISION 03-15-12
DATE PLOTTED => 23-APR-2012
TIME PLOTTED => 17:45

Dist	COUNTY	ROUTE	POST MILES TOTAL PROJECT	SHEET No.	TOTAL SHEETS
05	SLO	101	7.8/12.5	38	69

REGISTERED CIVIL ENGINEER 3-15-12 DATE

4-23-12
PLANS APPROVAL DATE

REGISTERED PROFESSIONAL ENGINEER J. ERWIN No. 74015 Exp. 06-30-13 CIVIL STATE OF CALIFORNIA

THE STATE OF CALIFORNIA OR ITS OFFICERS OR AGENTS SHALL NOT BE RESPONSIBLE FOR THE ACCURACY OR COMPLETENESS OF SCANNED COPIES OF THIS PLAN SHEET.

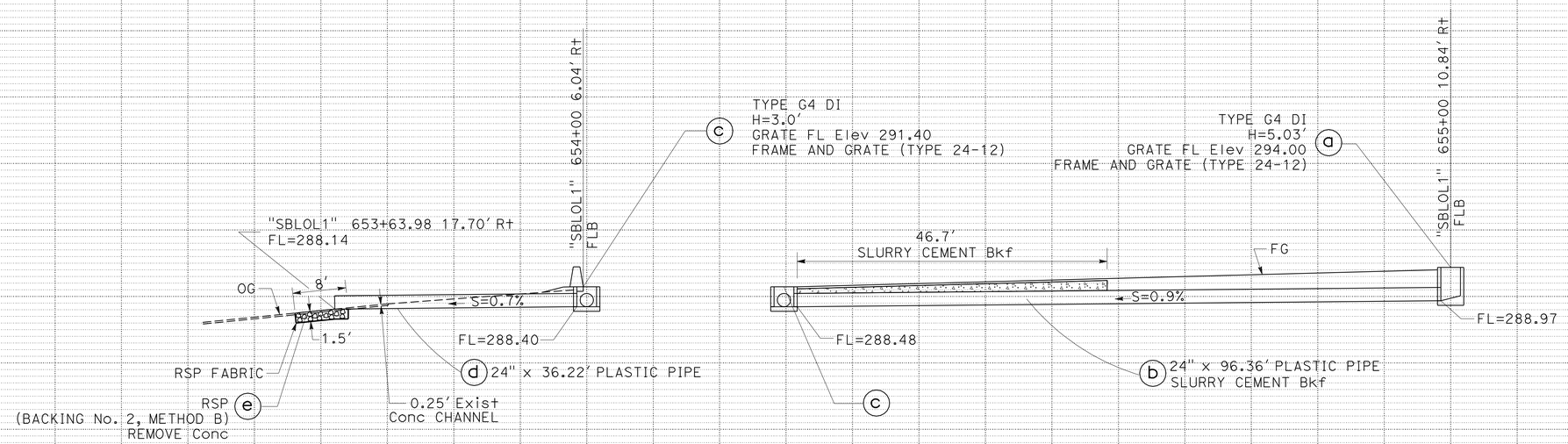

DRAINAGE SYSTEM No. 9

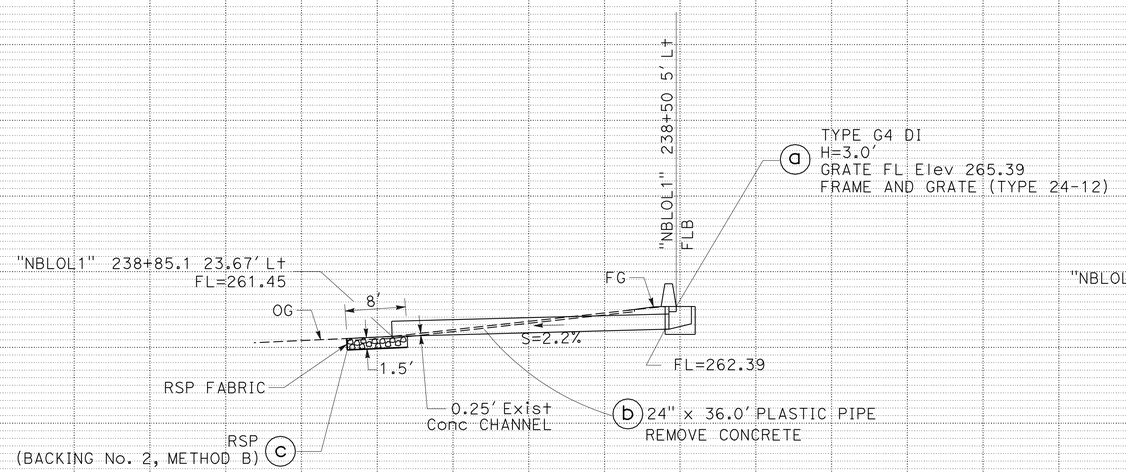

DRAINAGE SYSTEM No. 7

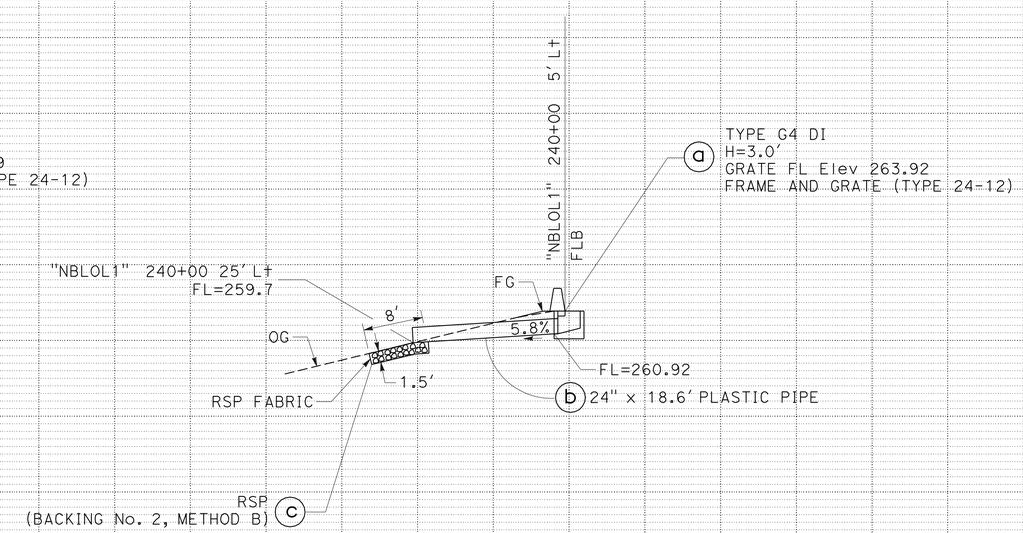

DRAINAGE SYSTEM No. 8

DRAINAGE PROFILES

SCALE: Horiz 1" = 10'
Vert 1" = 10'

DP-4

APPROVED FOR DRAINAGE WORK ONLY

STATE OF CALIFORNIA - DEPARTMENT OF TRANSPORTATION
Caltrans
DESIGN
FUNCTIONAL SUPERVISOR: STEVE WYATT
CALCULATED-DESIGNED BY: JOSEPH ERWIN
CHECKED BY: MICHAEL O'NEAL
REVISED BY
DATE REVISED

LAST REVISION 03-15-12
DATE PLOTTED => 23-APR-2012
TIME PLOTTED => 17:46

Dist	COUNTY	ROUTE	POST MILES TOTAL PROJECT	SHEET No.	TOTAL SHEETS
05	SLO	101	7.8/12.5	39	69

REGISTERED CIVIL ENGINEER 3-15-12 DATE

4-23-12
PLANS APPROVAL DATE

REGISTERED PROFESSIONAL ENGINEER
J. ERWIN
No. 74015
Exp. 06-30-13
CIVIL
STATE OF CALIFORNIA

THE STATE OF CALIFORNIA OR ITS OFFICERS OR AGENTS SHALL NOT BE RESPONSIBLE FOR THE ACCURACY OR COMPLETENESS OF SCANNED COPIES OF THIS PLAN SHEET.

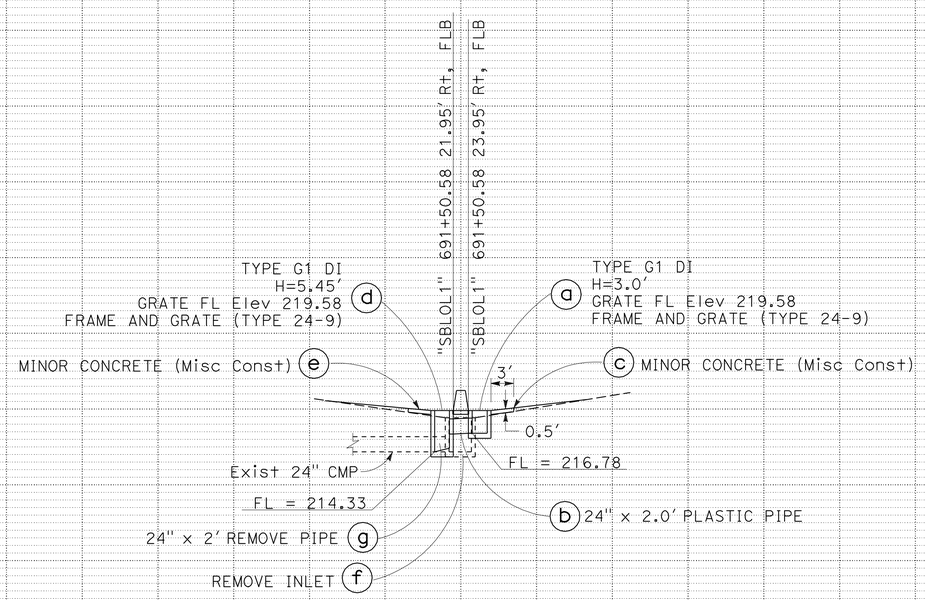

DRAINAGE SYSTEM No. 10

APPROVED FOR DRAINAGE WORK ONLY

DRAINAGE PROFILES

SCALE: Horiz 1" = 10'
Vert 1" = 10'

DP-5

STATE OF CALIFORNIA - DEPARTMENT OF TRANSPORTATION
Caltrans
DESIGN

FUNCTIONAL SUPERVISOR: STEVE WYATT
CALCULATED-DESIGNED BY: JOSEPH ERWIN
CHECKED BY: MICHAEL O'NEAL
REVISED BY
DATE REVISED

LAST REVISION 03-15-12
DATE PLOTTED => 23-APR-2012
TIME PLOTTED => 17:46

Dist	COUNTY	ROUTE	POST MILES TOTAL PROJECT	SHEET No.	TOTAL SHEETS
05	SLO	101	7.8/12.5	40	69

REGISTERED CIVIL ENGINEER 3-15-12 DATE

4-23-12
PLANS APPROVAL DATE

REGISTERED PROFESSIONAL ENGINEER J. ERWIN No. 74015 Exp. 06-30-13 CIVIL STATE OF CALIFORNIA

THE STATE OF CALIFORNIA OR ITS OFFICERS OR AGENTS SHALL NOT BE RESPONSIBLE FOR THE ACCURACY OR COMPLETENESS OF SCANNED COPIES OF THIS PLAN SHEET.

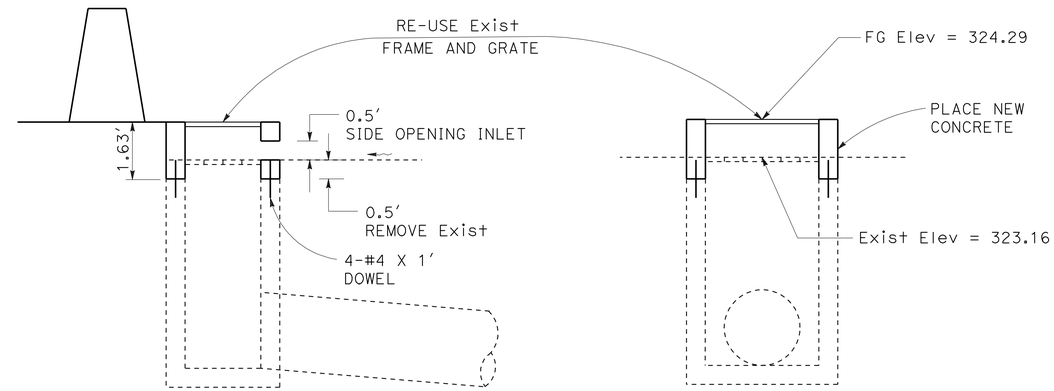

SECTION A-A

SECTION B-B

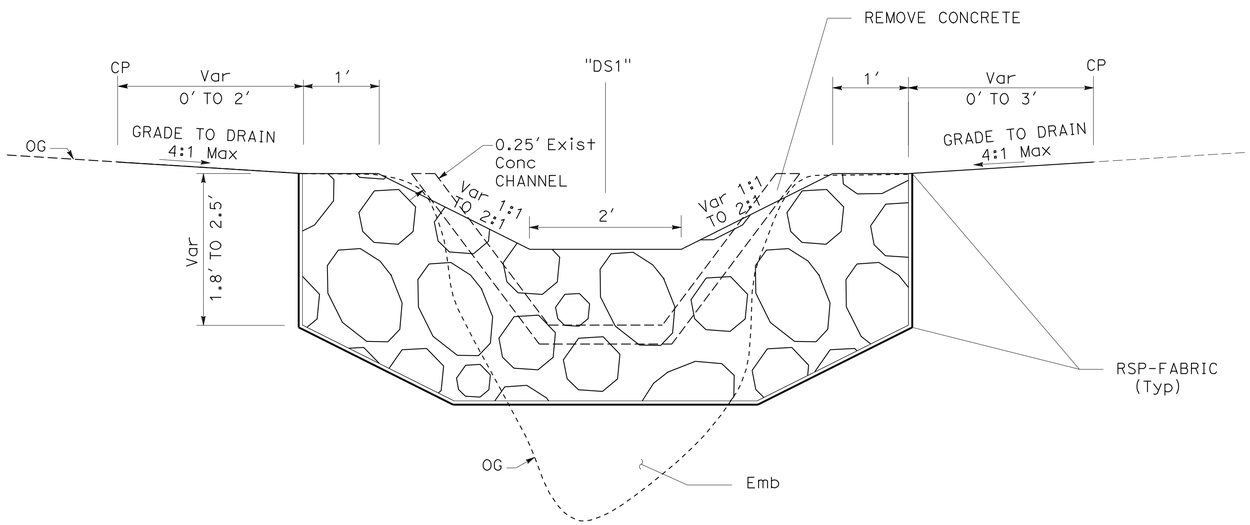

RSP (FACING, METHOD B) 1 a

"SBLOL1" 508+22.64 TO "SBLOL1" 510+00

RSP (LIGHT, METHOD B) 1 b

"SBLOL1" 510+00 TO "SBLOL1" 517+04.21

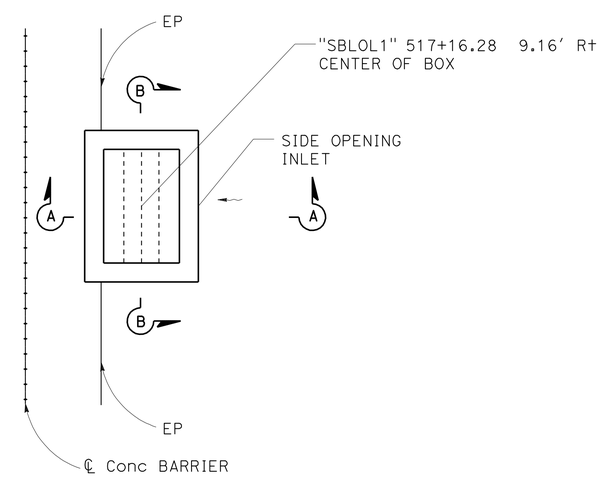

ADJUST INLET 1 c

DRAINAGE DETAILS

NO SCALE

DD-1

STATE OF CALIFORNIA - DEPARTMENT OF TRANSPORTATION
Caltrans
DESIGN

FUNCTIONAL SUPERVISOR: STEVE WYATT
CALCULATED-DESIGNED BY: MICHAEL O'NEAL
CHECKED BY: JOSEPH ERWIN
REVISED BY
DATE REVISED

LAST REVISION 03-15-12 | DATE PLOTTED => 23-APR-2012 | TIME PLOTTED => 17:46

Dist	COUNTY	ROUTE	POST MILES TOTAL PROJECT	SHEET No.	TOTAL SHEETS
05	SLO	101	7.8/12.5	41	69

REGISTERED CIVIL ENGINEER 3-15-12 DATE

4-23-12
PLANS APPROVAL DATE

REGISTERED PROFESSIONAL ENGINEER J. ERWIN No. 74015 Exp. 06-30-13 CIVIL STATE OF CALIFORNIA

THE STATE OF CALIFORNIA OR ITS OFFICERS OR AGENTS SHALL NOT BE RESPONSIBLE FOR THE ACCURACY OR COMPLETENESS OF SCANNED COPIES OF THIS PLAN SHEET.

NOTES:

1. EXCAVATE AND/OR FILL DISSIPATER TRENCH TO DIMENSIONS AS SHOWN. SQUARED EDGES NOT REQUIRED.
2. PLACE RSP-FABRIC LOOSELY ON BOTTOM & ALL SIDES OF TRENCH. PIN RSP-FABRIC TO SIDES OF TRENCH AS REQUIRED.
3. PLACE RSP CLASS DISSIPATER ROCK IN TRENCH SO THAT ROCK DOES NOT PROTRUDE ABOVE CULVERT FLOW-LINE OR ADJACENT GROUND.
4. MATCH DISSIPATER GRADE WITH DOWNSTREAM FLOW-LINE AND ADJACENT GROUND.
5. RSP-FABRIC SHALL NOT BE EXPOSED ABOVE GROUND.

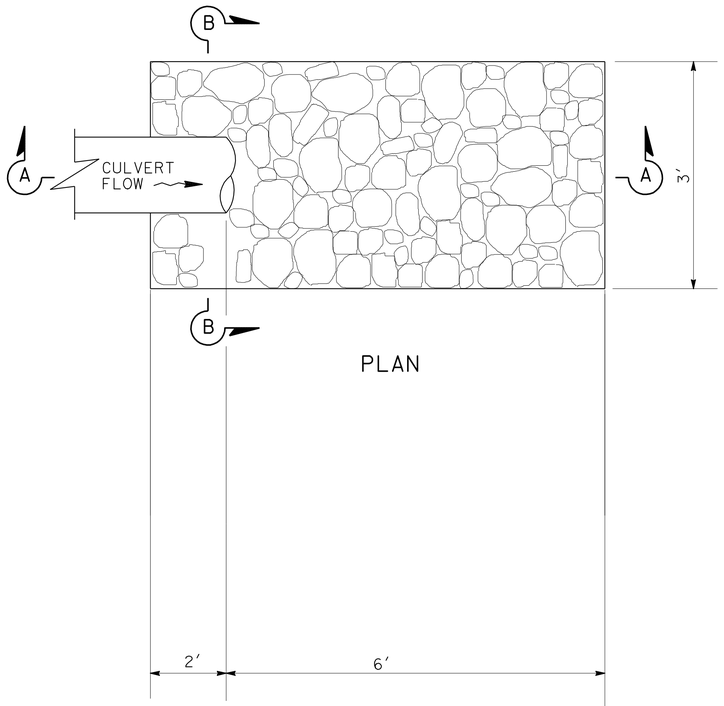

PLAN

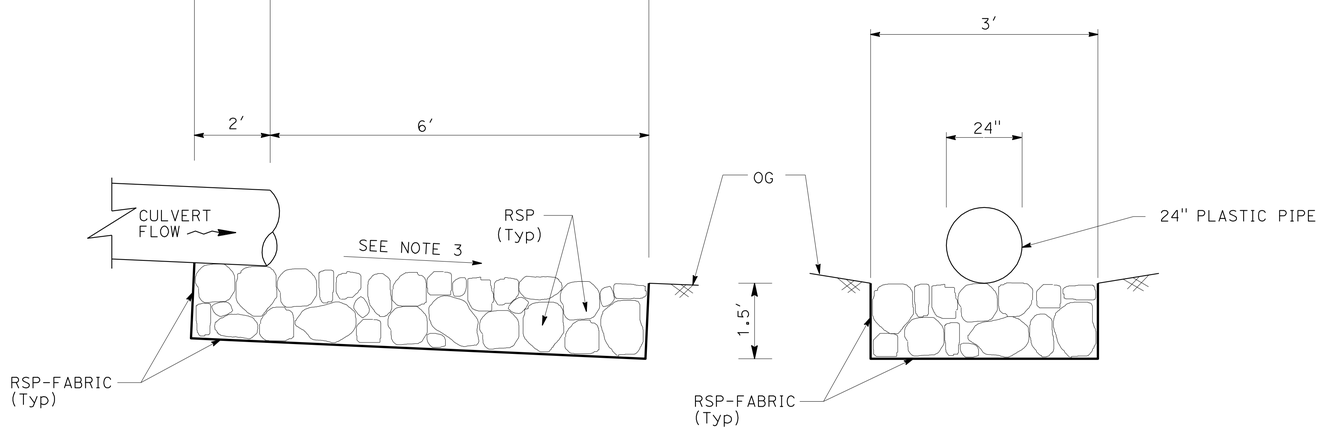

SECTION A-A

SECTION B-B

RSP (BACKING, METHOD B)

2 e 3 c 4 e 5 e 6 e 7 c 8 c 9 e

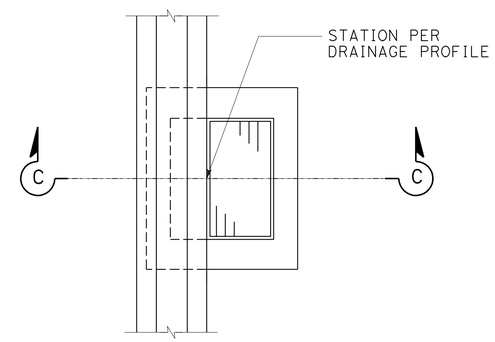

PLAN

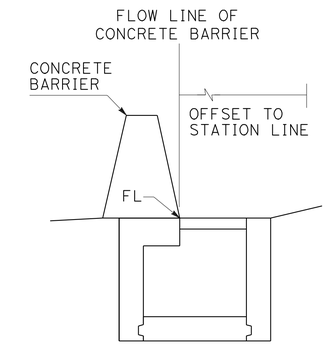

SECTION C-C

INLET ADJACENT TO CONCRETE BARRIER

2 a c 3 a 4 a c g 5 a c
6 a c 7 a 8 a 9 a c

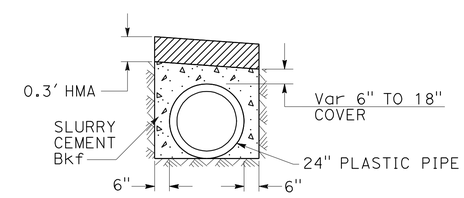

SLURRY CEMENT BACKFILL

2 b 4 b f 5 b 9 b

DRAINAGE DETAILS

NO SCALE

DD-2

STATE OF CALIFORNIA - DEPARTMENT OF TRANSPORTATION
Caltrans
DESIGN

FUNCTIONAL SUPERVISOR: STEVE WYATT
CALCULATED-DESIGNED BY: MICHAEL O'NEAL
CHECKED BY: JOSEPH ERWIN
REVISED BY
DATE REVISED

LAST REVISION 03-15-12
DATE PLOTTED => 23-APR-2012
TIME PLOTTED => 17:46

Dist	COUNTY	ROUTE	POST MILES TOTAL PROJECT	SHEET No.	TOTAL SHEETS
05	SLO	101	7.8/12.5	42	69

REGISTERED CIVIL ENGINEER 3-15-12 DATE

4-23-12
PLANS APPROVAL DATE

REGISTERED PROFESSIONAL ENGINEER J. ERWIN No. 74015 Exp. 06-30-13 CIVIL STATE OF CALIFORNIA

THE STATE OF CALIFORNIA OR ITS OFFICERS OR AGENTS SHALL NOT BE RESPONSIBLE FOR THE ACCURACY OR COMPLETENESS OF SCANNED COPIES OF THIS PLAN SHEET.

DRAINAGE QUANTITIES

DRAINAGE PLAN SHEET No.	DRAINAGE SYSTEM No. ⬡	DRAINAGE UNIT ○	ADJUST INLET	REMOVE PIPE	REMOVE INLET	REMOVE CONCRETE	24" PLASTIC PIPE	RSP (No. 2, METHOD B)	RSP (FACING, METHOD B)	RSP (LIGHT, METHOD B)	RSP FABRIC (CLASS 8)	(N) SLURRY CEMENT BACKFILL	MINOR Conc (MINOR Str)	MINOR Conc (Misc Const)	(N) HEIGHT OF INLET "H"	(N) FRAME AND GRATE (TYPE 24-9)	(N) FRAME AND GRATE (TYPE 24-12)	Misc IRON & STEEL	DESCRIPTION	LOCATION	DRAINAGE UNIT ○	DS No. ⬡	DRAINAGE PLAN SHEET No.
			EA	LF	EA	CY	LF	CY			SQYD	CY			LF	EA		LB					
DP-1	1	a				11.7			147		268								RSP, REMOVE Conc CHANNEL	"SBLOL1" 508+22.64 TO "510+00	a	1	DP-1
		b				46				578	1056								RSP, REMOVE Conc CHANNEL	"SBLOL1" 510+00 TO "517+04.21	b		
		c	1																ADJUST INLET, RE-USE FRAME AND GRATE	"SBLOL1" 517+16.28 9.16' R+	c		
DP-2	2	a											1.6		4.3		1	326	TYPE G4	"NBLOL1" 175+50.00 9.55' L+	a	2	DP-2
		b					82.1					12							24" PLASTIC PIPE		b		
		c											1.3		3.0		1	326	TYPE G4	"NBLOL1" 176+36.00 5.21' L+	c		
		d				1.3	57.1												24" PLASTIC PIPE, REMOVE Conc CHANNEL		d		
		e						1.3			7.3								RSP	"NBLOL1" 176+94.10 15.71' L+	e		
DP-2	3	a											1.3		3.0		1	326	TYPE G4	"NBLOL1" 200+90.6 5.0' L+	a	3	DP-2
		b					12.0												24" PLASTIC PIPE		b		
		c						1.3			7.3								RSP	"NBLOL1" 200+90.6 16.50' L+	c		
DP-2	4	a											1.3		3.0		1	326	TYPE G4	"SBLOL1" 602+75 5.0' R+	a	4	DP-2
		b					58.2					12.3							24" PLASTIC PIPE		b		
		c											1.4		3.5		1	326	TYPE G4	"SBLOL1" 603+37.6 5.0' R+	c		
		d					58.4												24" PLASTIC PIPE		d		
		e						1.3			7.3								RSP	"SBLOL1" 603+37.6 20.50' R+	e		
		f					12.0					12.4							24" PLASTIC PIPE		f		
		g											1.3		3.0		1	326	TYPE G4	"SBLOL1" 604+00 5.0' R+	g		
DP-3	5	a											2.1		6.4		1	326	TYPE G4	"SBLOL1" 613+50 12.32' R+	a	5	DP-3
		b					96.0					5.5							24" PLASTIC PIPE		b		
		c											1.3		3.0		1	326	TYPE G4	"SBLOL1" 612+50 7.08' R+	c		
		d					49.2												24" PLASTIC PIPE		d		
		e				0.3		1.3			7.3								RSP, REMOVE Conc CHANNEL	"SBLOL1" 611+98.93 10.22' R+	e		
DP-3	6	a											1.5		3.8		1	326	TYPE G4	"NBLOL1" 220+00 5.0' L+	a	6	DP-3
		b					6.0												24" PLASTIC PIPE		b		
		c											1.5		3.8		1	326	TYPE G4	"NBLOL1" 219+90 5.0' L+	c		
		d					15.9												24" PLASTIC PIPE		d		
		e						1.3			7.3								RSP	"NBLOL1" 219+90 22.0' L+	e		
DP-4	7	a											1.3		3.0		1	326	TYPE G4	"NBLOL1" 238+50 5.0' L+	a	7	DP-4
		b				1.6	36.0												24" PLASTIC PIPE, REMOVE Conc CHANNEL		b		
		c						1.3			7.3								RSP	"NBLOL1" 238+85.1 23.67' L+	c		
DP-4	8	a											1.3		3.0		1	326	TYPE G4	"NBLOL1" 240+00 5.0' L+	a	8	DP-4
		b					36.0												24" PLASTIC PIPE		b		
		c						1.3			7.3								RSP	"NBLOL1" 240+00 25.0' L+	c		
DP-4	9	a											1.9		5.0		1	326	TYPE G4	"SBLOL1" 655+00 10.84' R+	a	9	DP-4
		b					96.4					10.7							24" PLASTIC PIPE		b		
		c											1.3		3.0		1	326	TYPE G4	"SBLOL1" 654+00 6.04' R+	c		
		d					36.2												24" PLASTIC PIPE		d		
		e				0.5		1.3			7.3								RSP, REMOVE Conc CHANNEL	"SBLOL1" 653+63.98 17.70' R+	e		
DP-5	10	a											1.0		3.0	1		263	TYPE G1	"SBLOL1" 691+50.58 23.95' R+, FLB	a	10	DP-5
		b					2.0												24" PLASTIC PIPE		b		
		c												0.9					CONCRETE APRON	"SBLOL1" 691+50.58 23.95' R+	c		
		d											1.6		5.5	1		263	TYPE G1	"SBLOL1" 691+50.58 21.95' R+, FLB	d		
		e												0.9					CONCRETE APRON	"SBLOL1" 691+50.58 21.95' R+	e		
		f			1														REMOVE INLET	"SBLOL1" 691+50.58 R+	f		
		g		2															REMOVE PIPE	"SBLOL1" 691+50.58 R+	g		
TOTAL			1	2	1	61.4	653.5	10.4	147	578	1382	52.9	23.0	1.8		2	14	5090					

(N) NOT A SEPARATE PAY ITEM, FOR INFORMATION ONLY.

DRAINAGE QUANTITIES
DQ-1

STATE OF CALIFORNIA - DEPARTMENT OF TRANSPORTATION
Caltrans® DESIGN

FUNCTIONAL SUPERVISOR: STEVE WYATT
CALCULATED-DESIGNED BY: MICHAEL O'NEAL
CHECKED BY: JOSEPH ERWIN
REVISED BY
DATE REVISED

LAST REVISION 03-15-12
DATE PLOTTED => 24-APR-2012
TIME PLOTTED => 09:20

Dist	COUNTY	ROUTE	POST MILES TOTAL PROJECT	SHEET No.	TOTAL SHEETS
05	SLO	101	7.8/12.5	43	69

REGISTERED CIVIL ENGINEER 3-15-12 DATE

4-23-12
PLANS APPROVAL DATE

REGISTERED PROFESSIONAL ENGINEER
J. ERWIN
No. 74015
Exp. 06-30-13
CIVIL
STATE OF CALIFORNIA

THE STATE OF CALIFORNIA OR ITS OFFICERS OR AGENTS SHALL NOT BE RESPONSIBLE FOR THE ACCURACY OR COMPLETENESS OF SCANNED COPIES OF THIS PLAN SHEET.

STATIONARY MOUNTED CONSTRUCTION AREA SIGNS

SIGN No.	SIGN CODE FEDERAL	SIGN CODE CALIFORNIA	PANEL SIZE	SIGN MESSAGE	No. OF POSTS PER SIGN AND SIZE	No. OF SIGNS
A	W20-1		60" x 60"	ROAD WORK AHEAD	2 - 4" x 6"	4
B	W20-1		48" x 48"	ROAD WORK AHEAD	2 - 4" x 4"	4
C	G20-2		24" x 48"	END ROAD WORK	2 - 4" x 4"	5
D		CPIS	84" x 132"	CPIS	2 - 4" x 6"	2

EXACT SIGN LOCATIONS TO BE DETERMINED BY THE ENGINEER

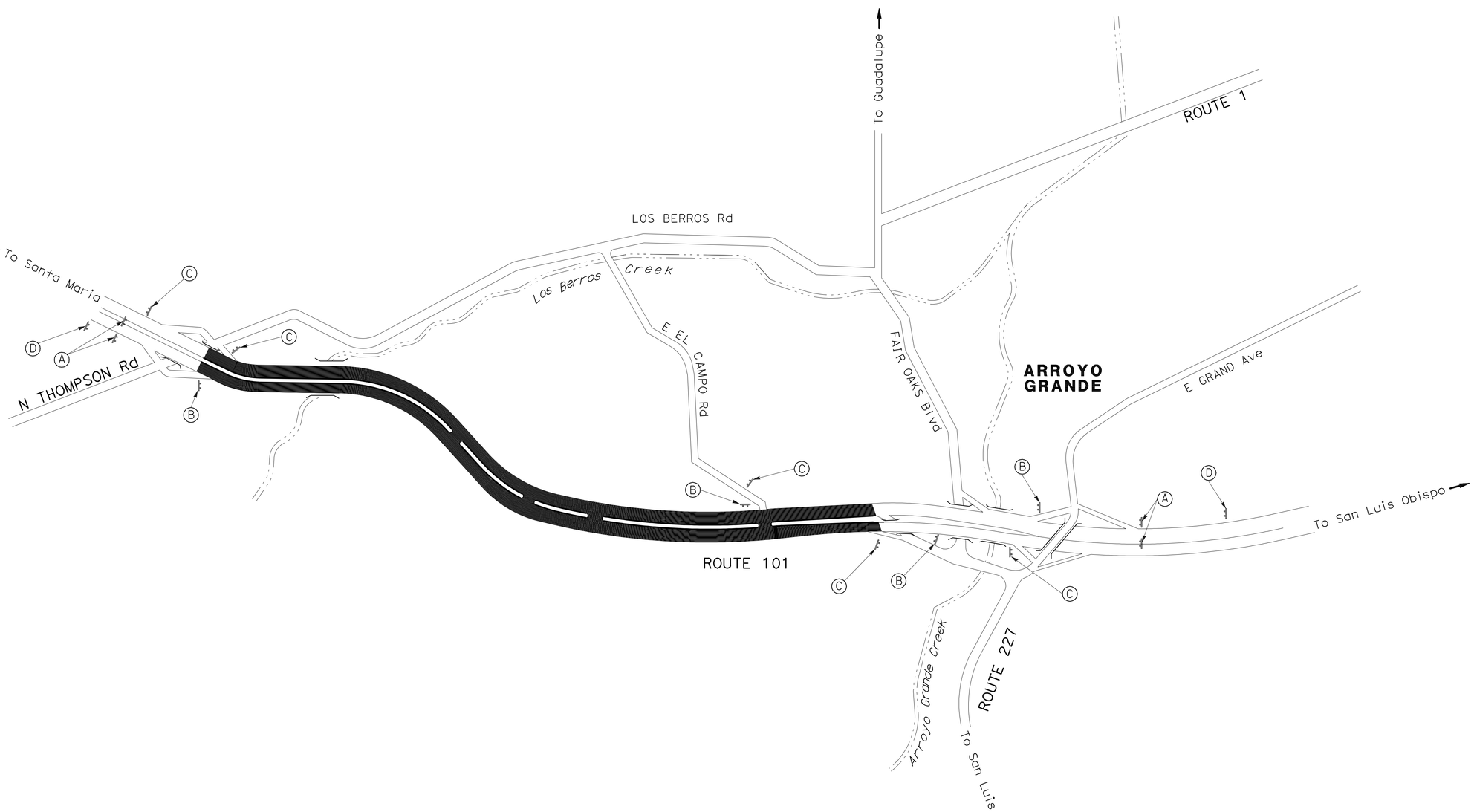

CONSTRUCTION AREA SIGNS

NO SCALE

CS-1

APPROVED FOR CONSTRUCTION AREA SIGN WORK ONLY

STATE OF CALIFORNIA - DEPARTMENT OF TRANSPORTATION
Caltrans
DESIGN

FUNCTIONAL SUPERVISOR: STEVE WYATT
CALCULATED-DESIGNED BY: MICHAEL O'NEAL
CHECKED BY: JOSEPH ERWIN
REVISED BY
DATE REVISED

LAST REVISION 03-15-12
DATE PLOTTED => 23-APR-2012
TIME PLOTTED => 17:46

Dist	COUNTY	ROUTE	POST MILES TOTAL PROJECT	SHEET No.	TOTAL SHEETS
05	SLO	101	7.8/12.5	44	69

3-15-12
REGISTERED CIVIL ENGINEER DATE

4-23-12
PLANS APPROVAL DATE

REGISTERED PROFESSIONAL ENGINEER
J. ERWIN
No. 74015
Exp. 06-30-13
CIVIL
STATE OF CALIFORNIA

THE STATE OF CALIFORNIA OR ITS OFFICERS OR AGENTS SHALL NOT BE RESPONSIBLE FOR THE ACCURACY OR COMPLETENESS OF SCANNED COPIES OF THIS PLAN SHEET.

PAVEMENT DELINEATION QUANTITIES

LOCATION	REMOVE PAVEMENT MARKER (N)	4" THERMOPLASTIC TRAFFIC STRIPE	THERMOPLASTIC TRAFFIC STRIPE (SPRAYABLE)	PAVEMENT MARKER (RETROREFLECTIVE)
		DETAIL 27B	DETAIL 25	TYPE H
	EA	LF		EA
"NBLOL1" 111+50 TO 121+50	22		1000	22
"NBLOL1" 124+70 TO 136+00	25		1130	25
"NBLOL1" 139+50 TO 159+50	43		2000	43
"NBLOL1" 159+50 TO 162+27	7		277	7
"NBLOL1" 175+00 TO 190+00	33		1500	33
"NBLOL1" 193+00 TO 235+00	89		4200	89
"NBLOL1" 237+50 TO 245+00	17		750	17
"NBLOL1" 248+20 TO 254+00	14		580	14
"NBLOL1" 260+00 TO 270+50	23		1050	23
"NBLOL1" 272+00 TO 279+00	16	300	700	16
"NBLOL1" 313+50 TO 342+20	61		2870	61
SUB TOTAL	350	300	16,057	350
"SBLOL1" 503+00 TO 524+30	46		2130	46
"SBLOL1" 576+00 TO 591+30	33		1530	33
"SBLOL1" 597+00 TO 614+00	37		1700	37
"SBLOL1" 640+10 TO 647+50	17		740	17
"SBLOL1" 650+00 TO 655+50	13		550	13
"SBLOL1" 662+00 TO 665+50	9		350	9
"SBLOL1" 673+25 TO 685+00	26		1175	26
SUB TOTAL	181		8175	181
TOTAL	531	300	24,232	531

(N) NOT A SEPARATE PAY ITEM, FOR INFORMATION ONLY.

ROADSIDE SIGNS

LOCATION	REMOVE ROADSIDE SIGN	CODE	PANEL SIZE	BACKGROUND		LEGEND		FURNISH SINGLE SHEET ALUMINUM SIGN	POST SIZE	ROADSIDE SIGN
				SHEETING COLOR	RETROREFLECTIVITY ASTM COLOR	SHEETING COLOR	RETROREFLECTIVITY ASTM COLOR	UN-FRAMED 0.063" SQFT		ONE POST
	EA									EA
"NBLOL1" 277+69	1									
"NBLOL1" 277+70	1									
"NBLOL1" 278+00		R6-1R	36" x 12"	WHITE	III	BLACK		3	4" x 4"	1
"SBLOL1" 678+50	1									
"SBLOL1" 678+76	1									
TOTAL	4							3		1

PAVEMENT DELINEATION AND SIGN QUANTITIES

PDQ-1

STATE OF CALIFORNIA - DEPARTMENT OF TRANSPORTATION
Caltrans®
DESIGN
FUNCTIONAL SUPERVISOR: STEVE WYATT
CALCULATED-DESIGNED BY: MICHAEL O'NEAL
CHECKED BY: JOSEPH ERWIN
REVISED BY
DATE REVISED

LAST REVISION 03-15-12
DATE PLOTTED => 23-APR-2012
TIME PLOTTED => 17:46

Dist	COUNTY	ROUTE	POST MILES TOTAL PROJECT	SHEET No.	TOTAL SHEETS
05	SLO	101	7.8/12.5	45	69

REGISTERED CIVIL ENGINEER 3-15-12 DATE

4-23-12
PLANS APPROVAL DATE

REGISTERED PROFESSIONAL ENGINEER J. ERWIN No. 74015 Exp. 06-30-13 CIVIL STATE OF CALIFORNIA

THE STATE OF CALIFORNIA OR ITS OFFICERS OR AGENTS SHALL NOT BE RESPONSIBLE FOR THE ACCURACY OR COMPLETENESS OF SCANNED COPIES OF THIS PLAN SHEET.

NOTE:
EXACT LOCATION OF TEMPORARY BMPS WILL BE DETERMINED BY THE ENGINEER.

EARTHWORK

LOCATION	ROADWAY EXCAVATION	ROADWAY EXCAVATION (TYPE Y-1)	EMBANKMENT (N)	OBLITERATE SURFACING
	CY			SQYD
"NBLOL1" 102+15 TO 110+00	1533		5729	
"NBLOL1" 111+50 TO 121+50	84	159	11	
"NBLOL1" 124+70 TO 136+00		121	63	
"NBLOL1" 139+50 TO 159+50		511	40	
"NBLOL1" 159+50 TO 162+27		23		
"NBLOL1" 175+00 TO 190+00	166	159	130	
"NBLOL1" 193+00 TO 235+30	146	688	195	
"NBLOL1" 237+50 TO 245+00	117	71	10	
"NBLOL1" 248+20 TO 260+00	170	6	97	
"NBLOL1" 260+00 TO 270+50	192	37	36	
"NBLOL1" 272+00 TO 279+00	189		41	538
"NBLOL1" 313+50 TO 341+96	395	316	120	
SUB TOTAL	2992	2091	6472	538
"SBLOL1" 503+03 TO 524+30	278	182	553	
"SBLOL1" 576+00 TO 591+30	250	192	22	
"SBLOL1" 597+00 TO 614+00	362	97	8	
"SBLOL1" 640+10 TO 647+50	115	79	18	
"SBLOL1" 650+00 TO 655+50	90	81	13	
"SBLOL1" 662+00 TO 665+50	65	77	7	
"SBLOL1" 673+25 TO 700+50	163	204	184	
SUB TOTAL	1323	912	805	
TOTAL	4315	3003	7277	538

(N) NOT A SEPARATE PAY ITEM, FOR INFORMATION ONLY.

WATER POLLUTION CONTROL

LOCATION	Temp SOIL BINDER	Temp CHECK DAM	Temp DI PROTECTION	Temp Const ENTRANCE
	SQYD	LF	EA	EA
"NBLOL1" 111+50 TO 342+20	10,981		12	3
"SBLOL1" 503+00 TO 700+50	10,262	500	8	4
TOTAL	21,243	500	20	7

TEMPORARY FENCE (TYPE ESA)

LOCATION	LF
"NBLOL1" 217+25 TO 217+75	100

ALTERNATIVE CRASH CUSHION SYSTEM

LOCATION	EA
"NBETW1" 111+50	1
"NBETW1" 193+00	1
"NBETW1" 248+20	1
"NBETW1" 272+00	1
"NBETW1" 313+50	1
"SBETW1" 591+30	1
"SBETW1" 647+50	1
"SBETW1" 700+50	1
TOTAL	8

METAL BEAM GUARD RAILING

LOCATION	SALVAGE MBGR	SINGLE THRIE BEAM BARRIER (STEEL POST)	TRANSITION RAILING (TYPE STB)	END ANCHOR ASSEMBLY (TYPE SFT)	VEGETATION CONTROL (MINOR CONCRETE)
	LF		EA	EA	SQYD
"NBLOL1" 123+95 TO 131+90		795			265
"NBLOL1" 131+03 TO 132+15	112				
"NBLOL1" 131+90 TO 132+15			1		
"NBLOL1" 132+66 TO 132+91			1		
"NBLOL1" 132+91 TO 136+00		309		1	103
"NBLOL1" 330+05 TO 341+96	1191				
SUB TOTAL	1303	1104	2	1	368
"SBLOL1" 503+08 TO 503+57	49				
"SBLOL1" 524+30 TO 524+55			1		
"SBLOL1" 524+55 TO 532+03		748			250
"SBLOL1" 532+03 TO 532+28			1		
"SBLOL1" 533+41 TO 533+66			1		
"SBLOL1" 533+41 TO 534+53	112				
"SBLOL1" 533+66 TO 536+50		284			96
SUB TOTAL	161	1032	3		346
TOTAL	1464	2136	5	1	714

TEMPORARY FIBER ROLL

LOCATION	LF
"NBLOL1" 115+00 TO 121+00	600
"NBLOL1" 177+00 TO 190+00	1300
"NBLOL1" 199+00 TO 203+00	400
"NBLOL1" 206+00 TO 214+00	800
"NBLOL1" 218+00 TO 222+00	400
"NBLOL1" 239+00 TO 245+00	600
"NBLOL1" 248+00 TO 254+00	600
"NBLOL1" 260+50 TO 264+50	400
"NBLOL1" 272+00 TO 278+00	600
"NBLOL1" 322+00 TO 342+00	2000
SUB TOTAL	7700
"SBLOL1" 520+00 TO 522+00	200
"SBLOL1" 578+00 TO 591+00	1300
"SBLOL1" 597+00 TO 600+00	300
"SBLOL1" 603+00 TO 611+00	800
"SBLOL1" 640+00 TO 647+00	700
"SBLOL1" 650+00 TO 655+00	500
"SBLOL1" 662+00 TO 665+00	300
"SBLOL1" 673+00 TO 678+00	500
SUB TOTAL	4600
TOTAL	12,300

REMOVE EXISTING DOWNDRAINS

LOCATION	(N) EA
"NBLOL1" 120+30	1
"NBLOL1" 179+78	1
"NBLOL1" 185+80	1
"NBLOL1" 200+91	1
"NBLOL1" 240+00	1
"NBLOL1" 250+28	1
"NBLOL1" 260+70	1
"NBLOL1" 274+55	1
"NBLOL1" 339+60	1
"SBLOL1" 597+82	1
"SBLOL1" 606+20	1
"SBLOL1" 609+30	1
"SBLOL1" 646+37	1
TOTAL	13

SUMMARY OF QUANTITIES
Q-1

STATE OF CALIFORNIA - DEPARTMENT OF TRANSPORTATION
Caltrans DESIGN

FUNCTIONAL SUPERVISOR: STEVE WYATT
CALCULATED-DESIGNED BY: MICHAEL O'NEAL
CHECKED BY: JOSEPH ERWIN
REVISED BY / DATE REVISED

LAST REVISION 03-15-12 | DATE PLOTTED => 23-APR-2012 | TIME PLOTTED => 17:46

Dist	COUNTY	ROUTE	POST MILES TOTAL PROJECT	SHEET No.	TOTAL SHEETS
05	SLO	101	7.8/12.5	46	69

REGISTERED CIVIL ENGINEER 3-15-12 DATE

4-23-12
PLANS APPROVAL DATE

REGISTERED PROFESSIONAL ENGINEER J. ERWIN No. 74015 Exp. 06-30-13 CIVIL STATE OF CALIFORNIA

THE STATE OF CALIFORNIA OR ITS OFFICERS OR AGENTS SHALL NOT BE RESPONSIBLE FOR THE ACCURACY OR COMPLETENESS OF SCANNED COPIES OF THIS PLAN SHEET.

PAVEMENT STRUCTURE

LOCATION	COLD PLANE AC Pvmt	CI 2 AB	LEAN CONCRETE BASE	HOT MIX ASPHALT (TYPE A)	TACK COAT
	SQYD	CY		TON	
"NBLOL1" 111+50 TO 121+50	222	230		175	0.2
"NBLOL1" 124+70 TO 136+00		108		81	0.1
"NBLOL1" 139+50 TO 159+50	444	463		353	0.3
"NBLOL1" 159+50 TO 162+27	62	20		22	0.1
"NBLOL1" 175+00 TO 190+00	333	308		243	0.2
"NBLOL1" 193+00 TO 235+30	933	915		706	0.6
"NBLOL1" 237+50 TO 245+00	167	191		144	0.1
"NBLOL1" 248+20 TO 260+00	129	244		190	0.1
"NBLOL1" 260+00 TO 270+50	233	248		187	0.2
"NBLOL1" 272+00 TO 279+00	668	230		281	0.4
"NBLOL1" 313+50 TO 341+96	638	643		492	0.4
SUB TOTAL	3829	3598		2874	2.7
"SBLOL1" 503+00 TO 524+30	251	450		349	0.3
"SBLOL1" 576+00 TO 591+30	340	372		280	0.2
"SBLOL1" 597+00 TO 614+00	378	371		288	0.2
"SBLOL1" 640+10 TO 647+50	164	165		128	0.1
"SBLOL1" 650+00 TO 655+50	56	150		112	0.1
"SBLOL1" 662+00 TO 665+50	78	105		78	0.1
"SBLOL1" 673+25 TO 685+00	261	278		211	0.2
"SBLOL1" 685+00 TO 700+50			293		
SUB TOTAL	1528	1891		1446	1.2
TOTAL	5357	5489	293	4320	3.9

SHOULDER RUMBLE STRIP (HMA, GROUND-IN INDENTATIONS)

LOCATION	STA
"NBLOL1" 111+50 TO 131+64.88	20.15
"NBLOL1" 133+16.63 TO 136+00	2.83
"NBLOL1" 139+50 TO 161+77.16	22.27
"NBLOL1" 175+00 TO 190+00	15.00
"NBLOL1" 193+00 TO 235+30	42.30
"NBLOL1" 237+50 TO 245+00	7.50
"NBLOL1" 248+20 TO 270+50	22.30
"NBLOL1" 272+00 TO 280+50	8.50
"NBLOL1" 313+50 TO 341+96	28.46
SUB TOTAL	169.31
"SBLOL1" 503+57.77 TO 524+30	20.72
"SBLOL1" 576+00 TO 591+30	15.30
"SBLOL1" 597+00 TO 614+00	17.00
"SBLOL1" 640+10 TO 647+50	7.40
"SBLOL1" 650+00 TO 655+50	5.50
"SBLOL1" 662+00 TO 665+50	3.50
"SBLOL1" 673+25 TO 685+00	11.75
SUB TOTAL	81.17
TOTAL	250.48

CONCRETE BARRIER

LOCATION	Conc BARRIER TRANSITION TO Br RAILING	Conc BARRIER TRANSITION TO THRIE BEAM BARRIER	Conc BARRIER TYPE 60S	Conc BARRIER TYPE 60	(N) BARRIER MARKERS	WILDLIFE PASSAGE WAY (TYPE S)
	LF				EA	
"NBLOL1" 111+50 TO 121+50				1000	21	21
"NBLOL1" 139+50 TO 159+50				2000	41	22
"NBLOL1" 175+00 TO 190+00				1500	31	27
"NBLOL1" 193+00 TO 235+30				4230	86	51
"NBLOL1" 237+50 TO 245+00			750		16	13
"NBLOL1" 248+20 TO 254+00			580		13	10
"NBLOL1" 260+00 TO 270+50			1050		22	17
"NBLOL1" 272+00 TO 279+00			700		15	13
"NBLOL1" 313+50 TO 341+81				2831	58	36
"NBLOL1" 341+81 TO 341+96	15					
SUB TOTAL	15		3080	11,561	302	206
"SBLOL1" 503+08 TO 503+23	15					
"SBLOL1" 503+23 TO 524+15				2092	43	20
"SBLOL1" 524+15 TO 524+30		15				
"SBLOL1" 576+00 TO 591+30				1530	32	17
"SBLOL1" 597+00 TO 614+00			1700		35	31
"SBLOL1" 640+10 TO 647+50				740	46	
"SBLOL1" 650+00 TO 655+50				550	12	
"SBLOL1" 662+00 TO 665+50				350	8	4
"SBLOL1" 673+25 TO 700+50				2725	56	
SUB TOTAL	15	15	1700	7987	201	72
TOTAL	30	15	4780	19,548	503	278

(N) NOT A SEPARATE PAY ITEM, FOR INFORMATION ONLY.

SUMMARY OF QUANTITIES
Q-2

STATE OF CALIFORNIA - DEPARTMENT OF TRANSPORTATION
Caltrans® DESIGN

FUNCTIONAL SUPERVISOR: STEVE WYATT
CALCULATED-DESIGNED BY: MICHAEL O'NEAL
CHECKED BY: JOSEPH ERWIN
REVISED BY / DATE REVISED

LAST REVISION 03-15-12
DATE PLOTTED => 23-APR-2012
TIME PLOTTED => 17:46

DIST	COUNTY	ROUTE	POST MILES TOTAL PROJECT	SHEET NO.	TOTAL SHEETS
05	SLO	101	7.8/12.5	47	69

Randell D. Hiatt
REGISTERED CIVIL ENGINEER

June 6, 2008
PLANS APPROVAL DATE

REGISTERED PROFESSIONAL ENGINEER
Randell D. Hiatt
No. C50200
Exp. 6-30-09
CIVIL
STATE OF CALIFORNIA

The State of California or its officers or agents shall not be responsible for the accuracy or completeness of electronic copies of this plan sheet.

To accompany plans dated 4-23-12

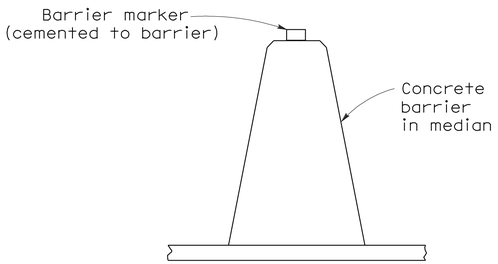

CONCRETE BARRIER TYPE 60 DELINEATION

See Notes 7 and 8

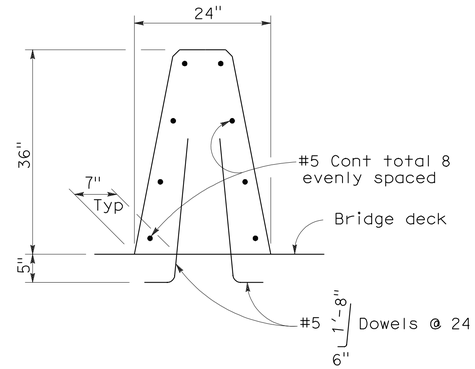

CONCRETE BARRIER TYPE 60A

Details similar to Type 60 except as noted.

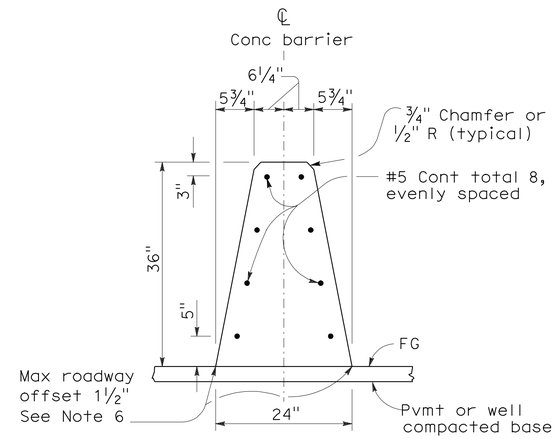

CONCRETE BARRIER TYPE 60

NOTES:

1. See Standard Plan A76B for details of Concrete Barrier Type 60 end anchors, connection to structures and transitions to Concrete Barrier Type 50 and Concrete Barrier Type 60S.
2. See Standard Plan A76C for Concrete Barrier Type 60 transitions at bridge column and sign pedestals.
3. Where glare screen is required on Concrete Barrier Type 60, use Concrete Barrier Type 60G.
4. Where the concrete barrier is added to the face of existing concrete structure, match existing weep holes.
5. Expansion joints in concrete barrier shall be located at all deck, pavement and principal wall joints. Expansion joint filler material shall be the same size as joint or ½" minimum.
6. Where roadway offset is greater than 1½", see Concrete Barrier Type 60C.
7. Barrier delineation to be used when required by the Special Provisions.
8. Spacing of barrier markers to match spacing of raised pavement markers on the adjacent median edgeline pavement delineation.
9. Reinforcing stirrup not required for roadway offsets less than 1'-0".
10. For roadway surfaces offset greater than 1½" to 3", no rebars required. For roadway surfaces offset greater than 3" to 8" use two #4 rebars at 3" above the lower roadway surface. For roadway surfaces offset greater than 8" to 12", use two #4 rebars at 3" above the lower roadway surface and two #4 rebars at 8" above the lower roadway surface. For roadway surfaces offset greater than 12" to 36", use two #4 rebars at 3" above the lower roadway surface and two #4 rebars at every 8" increment vertical spacing above the first two #4 rebars.

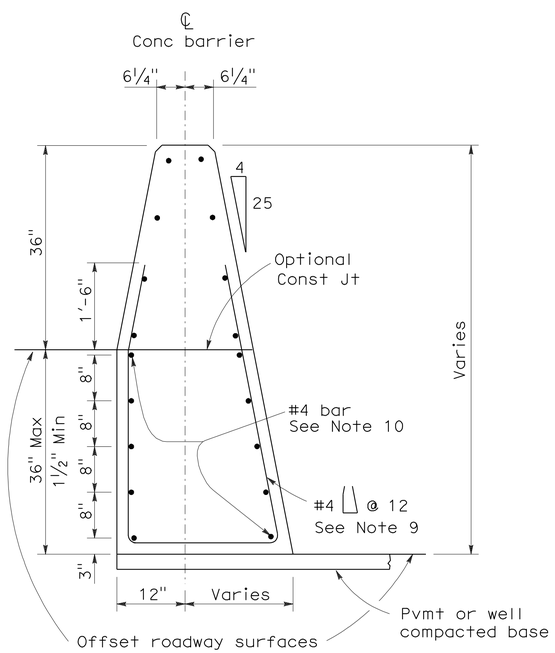

CONCRETE BARRIER TYPE 60C

Details similar to Type 60 except as noted.
Concrete barrier end anchor when necessary.
36" roadway surfaces offset shown.

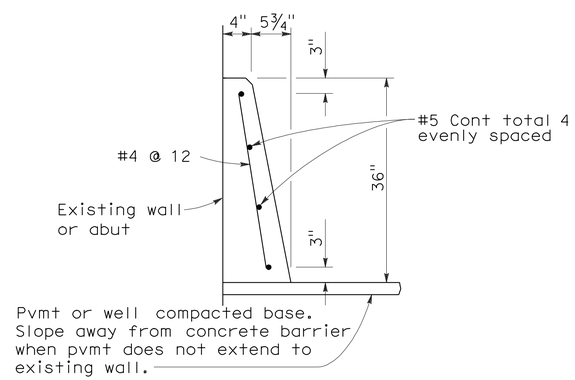

CONCRETE BARRIER TYPE 60D

STATE OF CALIFORNIA
DEPARTMENT OF TRANSPORTATION

CONCRETE BARRIER TYPE 60

NO SCALE

RSP A76A DATED JUNE 6, 2008 SUPERSEDES STANDARD PLAN A76A
DATED MAY 1, 2006 - PAGE 29 OF THE STANDARD PLANS BOOK DATED MAY 2006.

REVISED STANDARD PLAN RSP A76A

2006 REVISED STANDARD PLAN RSP A76A

5-21-08

DIST	COUNTY	ROUTE	POST MILES TOTAL PROJECT	SHEET NO.	TOTAL SHEETS
05	SLO	101	7.8/12.5	48	69

Randell D. Hiatt
REGISTERED CIVIL ENGINEER

June 6, 2008
PLANS APPROVAL DATE

REGISTERED PROFESSIONAL ENGINEER
Randell D. Hiatt
No. C50200
Exp. 6-30-09
CIVIL
STATE OF CALIFORNIA

The State of California or its officers or agents shall not be responsible for the accuracy or completeness of electronic copies of this plan sheet.

To accompany plans dated 4-23-12

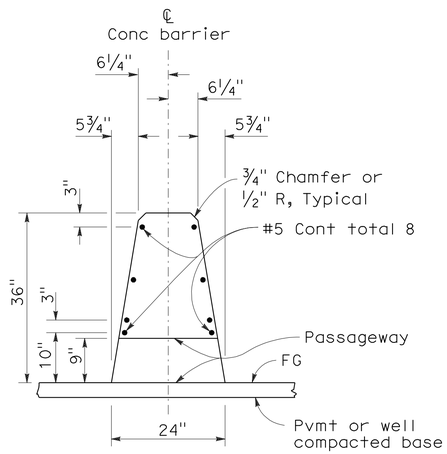

SECTION A-A
(Concrete Barrier Type 60 shown)

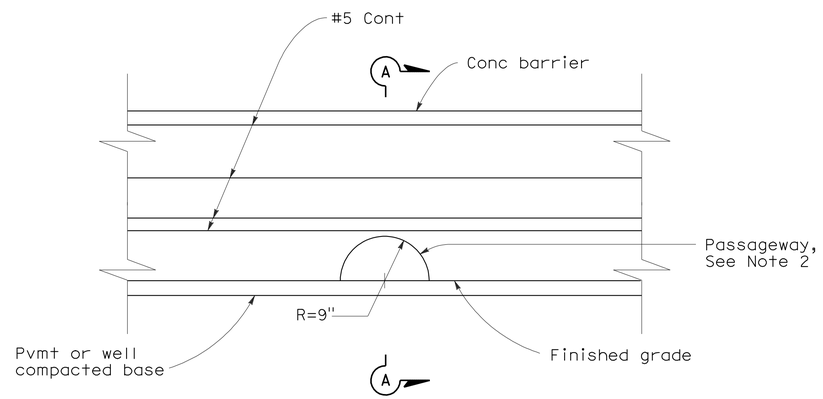

ELEVATION
(See Notes 1 and 3)

NOTES:

1. Type S Passageway typically used for crossing of small size animals.

2. At the option of the Contractor, the passageway opening shall be constructed by using either the cast-in-place method, with the allowance of the form to be left in place, or once the barrier is constructed, drilling through the barrier to create the opening.

3. See Revised Standard Plan RSP A76A for typical details of Concrete Barrier Type 60.

STATE OF CALIFORNIA
DEPARTMENT OF TRANSPORTATION

CONCRETE BARRIER WILDLIFE PASSAGEWAY (TYPE S)

NO SCALE

RSP A76J DATED JUNE 6, 2008 SUPERSEDES STANDARD PLAN A76J
DATED MAY 1, 2006 - PAGE 38 OF THE STANDARD PLANS BOOK DATED MAY 2006.

REVISED STANDARD PLAN RSP A76J

2006 REVISED STANDARD PLAN RSP A76J

5-15-08

Dist	COUNTY	ROUTE	POST MILES TOTAL PROJECT	SHEET No.	TOTAL SHEETS
05	SLO	101	7.8/12.5	49	69

Randell D. Hiatt
REGISTERED CIVIL ENGINEER

May 20, 2011
PLANS APPROVAL DATE

REGISTERED PROFESSIONAL ENGINEER
Randell D. Hiatt
No. C50200
Exp. 6-30-11
CIVIL
STATE OF CALIFORNIA

The State of California or its officers or agents shall not be responsible for the accuracy or completeness of electronic copies of this plan sheet.

To accompany plans dated 4-23-12

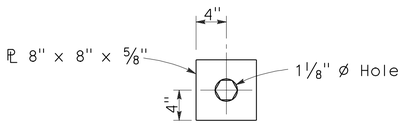

DETAIL A
CABLE CONNECTION
END PLATE

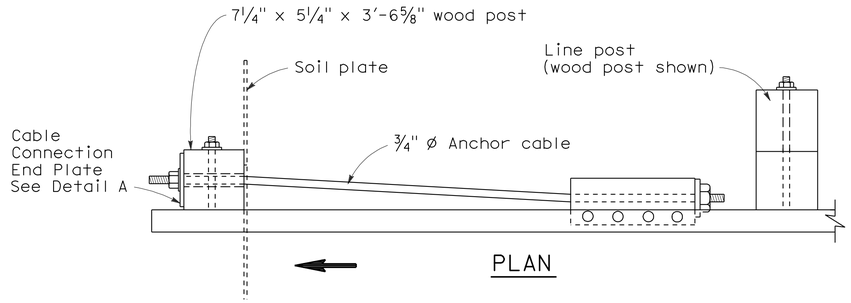

PLAN

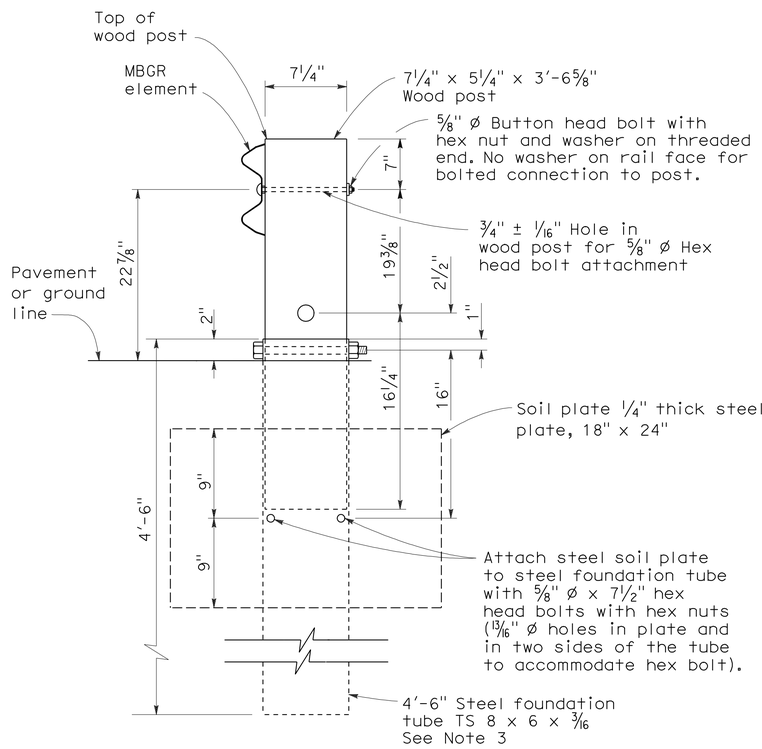

SECTION A-A

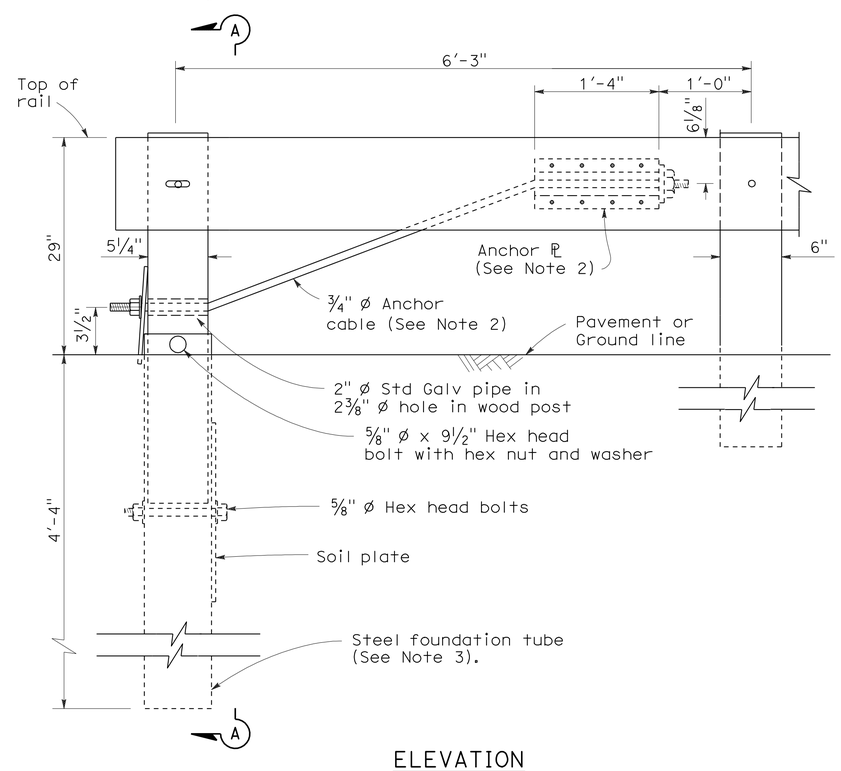

ELEVATION
END ANCHOR
ASSEMBLY (TYPE SFT)
See Note 1

NOTES:

1. See the A77E, A77F and A77G series of Standard Plans for typical use of End Anchor Assembly (Type SFT).
2. For details of the anchor plate and 3/4" cable, see Standard Plan A77H3.
3. A 6'-0" length steel foundation tube, TS 8 x 6 x 3/16, without a soil plate, may be furnished and installed in place of the 4'-6" length steel foundation tube and soil plate shown. Minimum embedment of the 6'-0" length tube shall be 5'-9". A 5/8" Ø hex head bolt and nut shall be installed in the hole in the 6'-0" length tube to keep the wood post from dropping into the tube.
4. Direction of traffic indicated by ⟹.
5. Install line post, steel foundation tube and soil plate in soil.

STATE OF CALIFORNIA
DEPARTMENT OF TRANSPORTATION

METAL RAILING END ANCHOR ASSEMBLY (TYPE SFT)

NO SCALE

RSP A77H1 DATED MAY 20, 2011 SUPERSEDES STANDARD PLAN A77H1
DATED MAY 1, 2006 - PAGE 67 OF THE STANDARD PLANS BOOK DATED MAY 2006.

REVISED STANDARD PLAN RSP A77H1

2006 REVISED STANDARD PLAN RSP A77H1

2-10-07

DIST	COUNTY	ROUTE	POST MILES TOTAL PROJECT	SHEET NO.	TOTAL SHEETS
05	SLO	101	7.8/12.5	50	69

Randell D. Hiatt
REGISTERED CIVIL ENGINEER

June 6, 2008
PLANS APPROVAL DATE

REGISTERED PROFESSIONAL ENGINEER
Randell D. Hiatt
No. C50200
Exp. 6-30-09
CIVIL
STATE OF CALIFORNIA

The State of California or its officers or agents shall not be responsible for the accuracy or completeness of electronic copies of this plan sheet.

To accompany plans dated 4-23-12

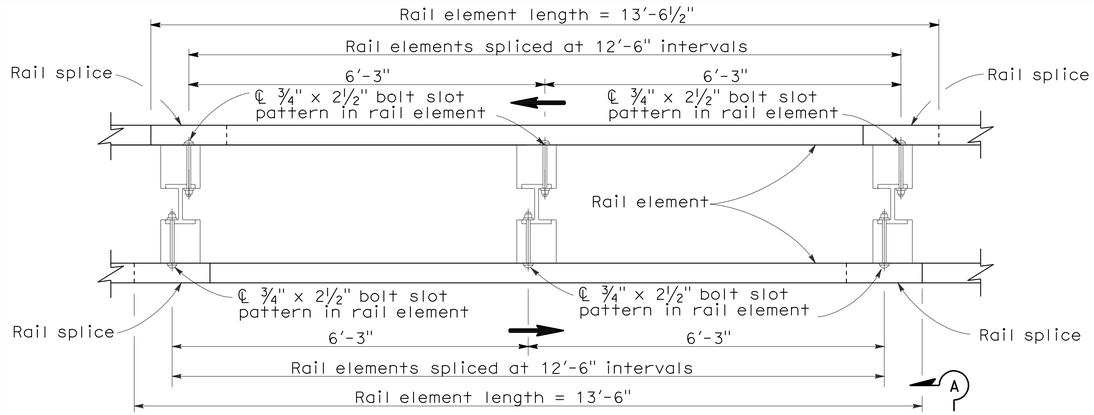

PLAN

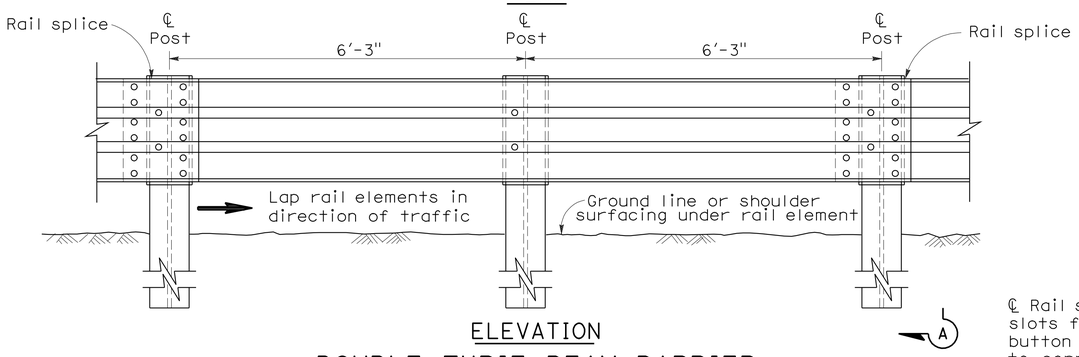

ELEVATION

DOUBLE THRIE BEAM BARRIER

(Steel post with notched wood or notched plastic blocks)
See Note 1

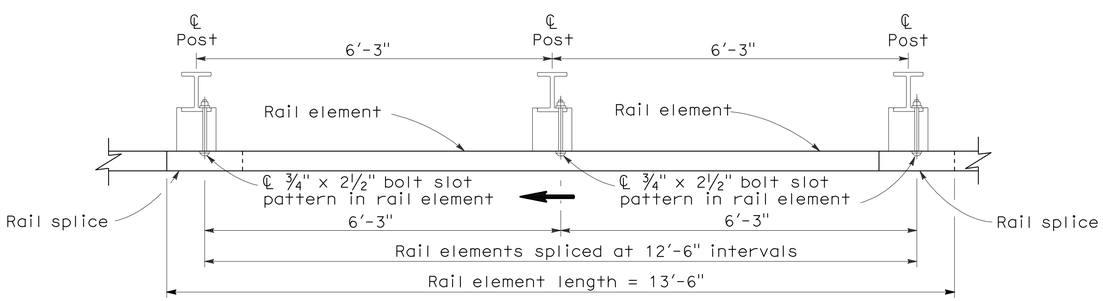

PLAN

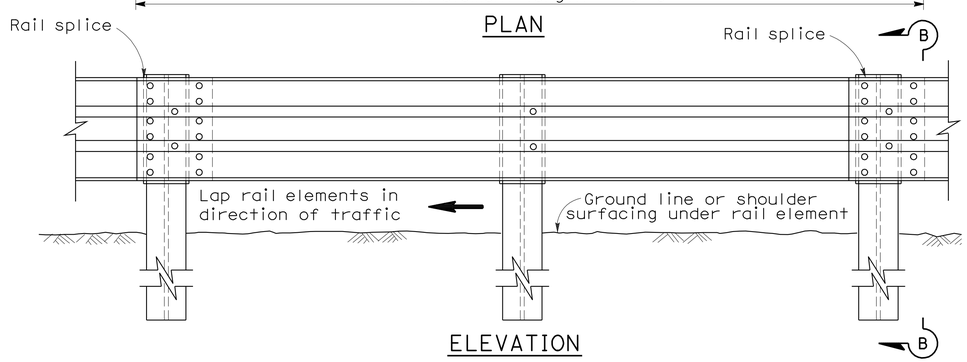

ELEVATION

SINGLE THRIE BEAM BARRIER

(Steel post with notched wood or notched plastic blocks)
See Note 1

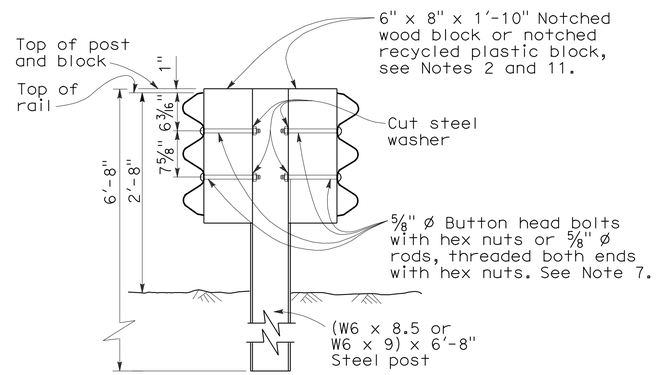

SECTION A-A

TYPICAL STEEL LINE POST INSTALLATION

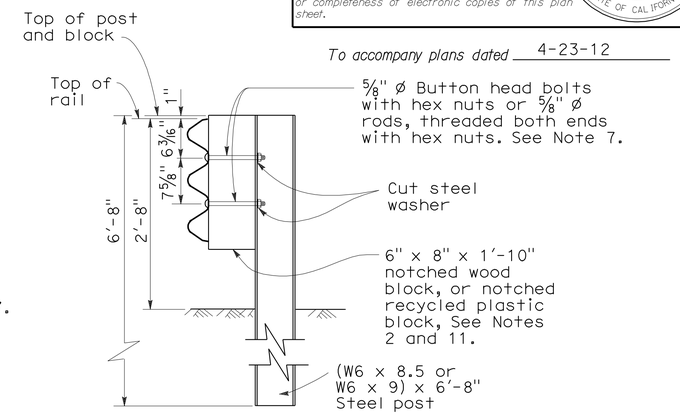

SECTION B-B

TYPICAL STEEL LINE POST INSTALLATION

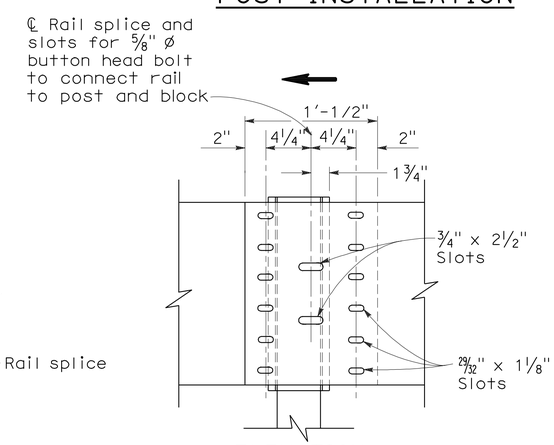

ELEVATION

RAIL ELEMENT SPLICE DETAIL

a) Connect the overlapped ends of the thrie beam rail elements with ⅝" ø x 1⅛" button head oval shoulder bolts inserted into the 29/32" x 1⅛" slots and bolted together with ⅝" ø x 1⅛" recessed hex nuts. Recess of hex nut points toward rail element. A total of 12 bolts and nuts are to be used at each rail splice connection.

b) The ends of the rail elements are to be overlapped in the direction of traffic (see details).

c) Where end cap is to be attached to the end of a rail element, a total of 4 of the above described splice bolts and nuts are to be used. Where a return cap is to be attached to the ends of rail elements, a total of 8 of the above described splice bolts and nuts are to be used.

NOTES:

1. For details of the cross section of the thrie beam rail element and details for wood post with wood block installations, see Standard Plan A78A.
2. For details of standard hardware, posts and blocks used to construct thrie beam barrier, see Revised Standard Plan RSP A78C1 and Standard Plan A78C2.
3. Thrie beam barrier post spacing to be 6'-3" center to center, except as otherwise noted.
4. Top of barrier rail to be 2'-8" above ground line or shoulder surfacing under the rail element.
5. For barrier end treatments and barrier connections, see Standard Plans A78E1, A78E2 and A78E3, Revised Standard Plans RSPs A78F1 and A78F2, Standard Plan A78G and Revised Standard Plan RSP A78H.
6. For connection to Concrete Barrier, see Revised Standard Plan RSP A78I.
7. Attach rail element to block and steel post with 2 bolts or rods on approaching traffic side of block and post web. No washer on rail face for rod or bolted connections to line post.
8. For details of thrie beam barrier on bridges, see Standard Plan A78D2. For details of thrie beam barrier at fixed objects, see Standard Plan A78D1.
9. Direction of traffic indicated by ⟶.
10. Notched face of block faces steel post.

STATE OF CALIFORNIA
DEPARTMENT OF TRANSPORTATION

THRIE BEAM BARRIER STANDARD BARRIER RAILING SECTION (STEEL POST WITH NOTCHED WOOD BLOCK OR NOTCHED RECYCLED PLASTIC BLOCK)

NO SCALE

RSP A78B DATED JUNE 6, 2008 SUPERSEDES STANDARD PLAN A78B DATED MAY 1, 2006 - PAGE 84 OF THE STANDARD PLANS BOOK DATED MAY 2006.

REVISED STANDARD PLAN RSP A78B

2006 REVISED STANDARD PLAN RSP A78B

5-14-08

DIST	COUNTY	ROUTE	POST MILES TOTAL PROJECT	SHEET No.	TOTAL SHEETS
05	SLO	101	7.8/12.5	51	69

Randell D. Hiatt
REGISTERED CIVIL ENGINEER

June 6, 2008
PLANS APPROVAL DATE

REGISTERED PROFESSIONAL ENGINEER
Randell D. Hiatt
No. C50200
Exp. 6-30-09
CIVIL
STATE OF CALIFORNIA

The State of California or its officers or agents shall not be responsible for the accuracy or completeness of electronic copies of this plan sheet.

To accompany plans dated 4-23-12

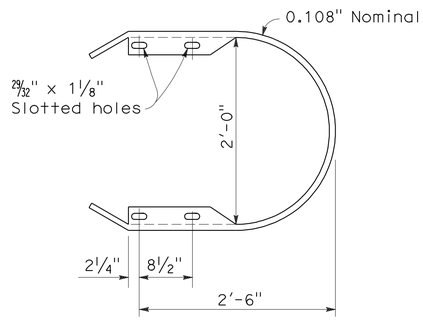

RETURN CAP
(TYPE TA)

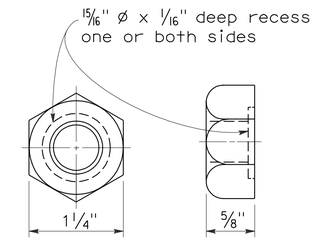

5/8" ø RECESS NUT

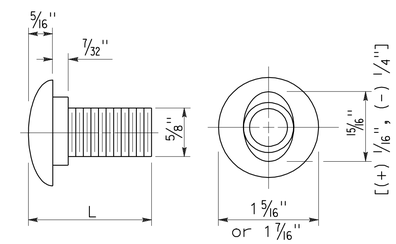

5/8" ø BUTTON HEAD BOLT

L	THREAD LENGTH
1 1/4"	full thread length
2"	full thread length
9 1/2"	4" Min thread length
18"	4" Min thread length

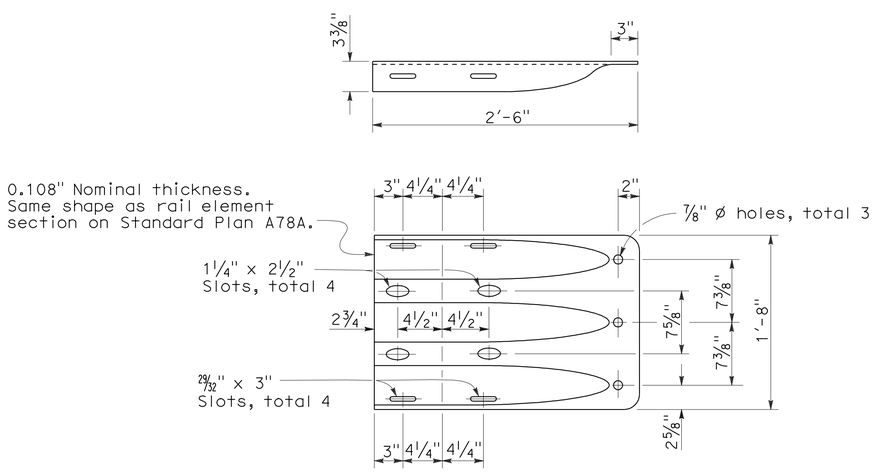

END CAP
(TYPE TC)

STATE OF CALIFORNIA
DEPARTMENT OF TRANSPORTATION

THRIE BEAM BARRIER STANDARD HARDWARE DETAILS

NO SCALE

RSP A78C1 DATED JUNE 6, 2008 SUPERSEDES STANDARD PLAN A78C1
DATED MAY 1, 2006 - PAGE 85 OF THE STANDARD PLANS BOOK DATED MAY 2006.

REVISED STANDARD PLAN RSP A78C1

2006 REVISED STANDARD PLAN RSP A78C1

4-21-08

DIST	COUNTY	ROUTE	POST MILES TOTAL PROJECT	SHEET NO.	TOTAL SHEETS
05	SLO	101	7.8/12.5	52	69

Randell D. Hiatt
REGISTERED CIVIL ENGINEER

October 20, 2006
PLANS APPROVAL DATE

REGISTERED PROFESSIONAL ENGINEER
Randell D. Hiatt
No. C50200
Exp. 6-30-07
CIVIL
STATE OF CALIFORNIA

The State of California or its officers or agents shall not be responsible for the accuracy or completeness of electronic copies of this plan sheet.

To accompany plans dated 4-23-12

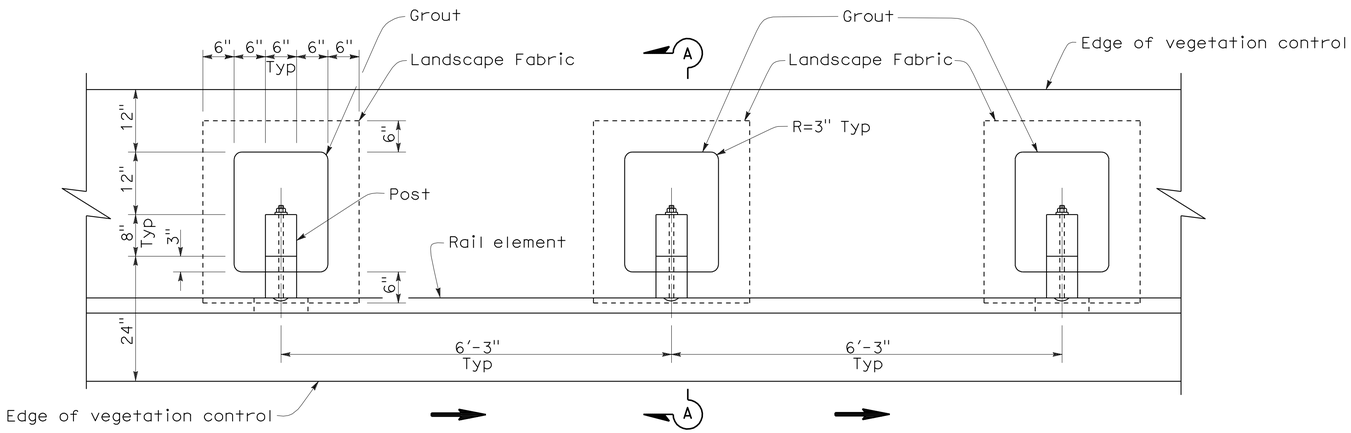

PLAN

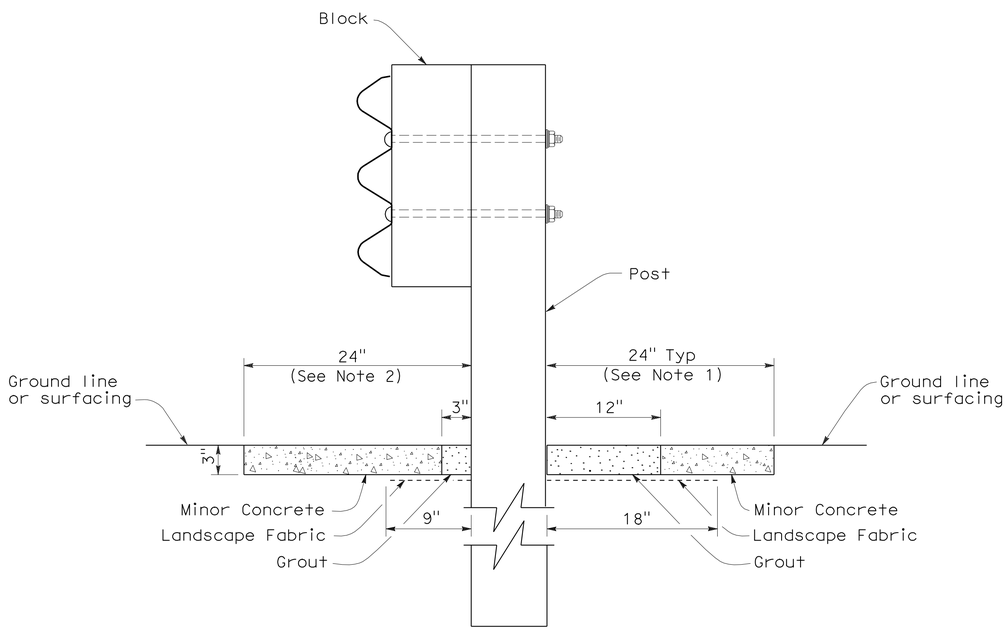

SECTION A-A

NOTES:

1. Where the distance between back of post and hinge point is less than 24", vegetation control to be constructed flush with the back edge of the post.
2. Where dike is constructed under barrier, construct vegetation control to back edge of dike. Where paved shoulder is constructed within 24" in front of the post, construct vegetation control to the edge of paved shoulder.
3. Direction of adjacent traffic indicated by ⟶.

STATE OF CALIFORNIA
DEPARTMENT OF TRANSPORTATION

SINGLE THRIE BEAM BARRIER TYPICAL VEGETATION CONTROL STANDARD BARRIER RAILING SECTION

NO SCALE

NSP A78C3 DATED OCTOBER 20, 2006 SUPPLEMENTS THE STANDARD PLANS BOOK DATED MAY 2006.

NEW STANDARD PLAN NSP A78C3

2006 NEW STANDARD PLAN NSP A78C3

7-17-06

DIST	COUNTY	ROUTE	POST MILES TOTAL PROJECT	SHEET NO.	TOTAL SHEETS
05	SLO	101	7.8/12.5	53	69

Randell D. Hiatt
REGISTERED CIVIL ENGINEER

October 20, 2006
PLANS APPROVAL DATE

REGISTERED PROFESSIONAL ENGINEER
Randell D. Hiatt
No. C50200
Exp. 6-30-07
CIVIL
STATE OF CALIFORNIA

The State of California or its officers or agents shall not be responsible for the accuracy or completeness of electronic copies of this plan sheet.

To accompany plans dated 4-23-12

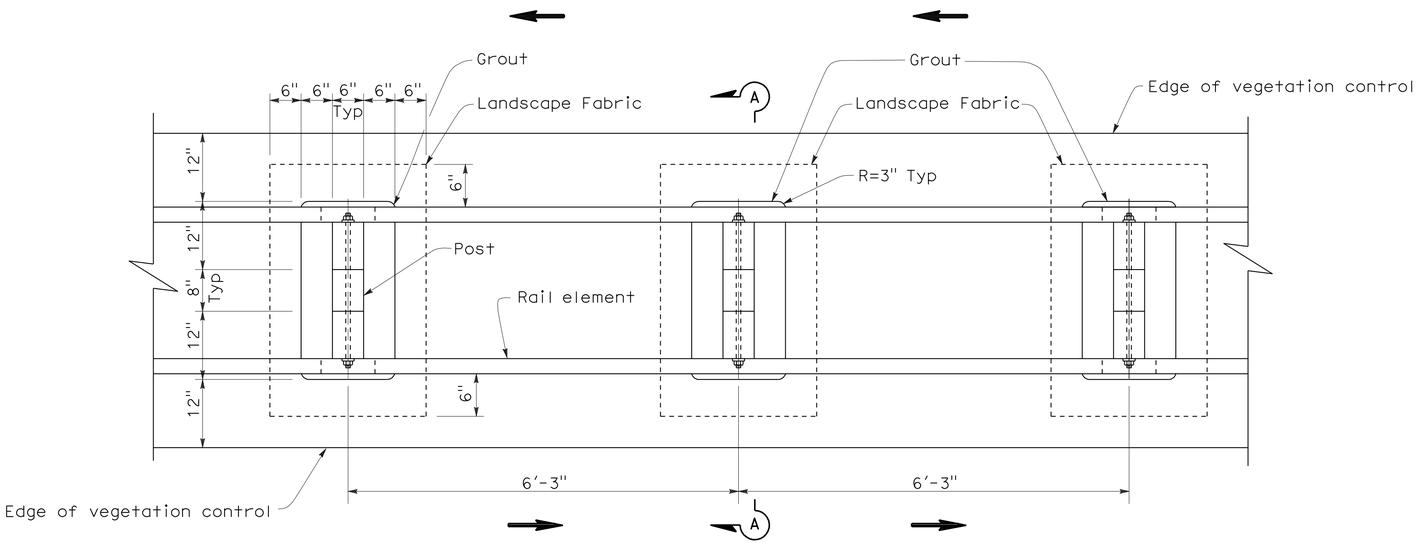

PLAN

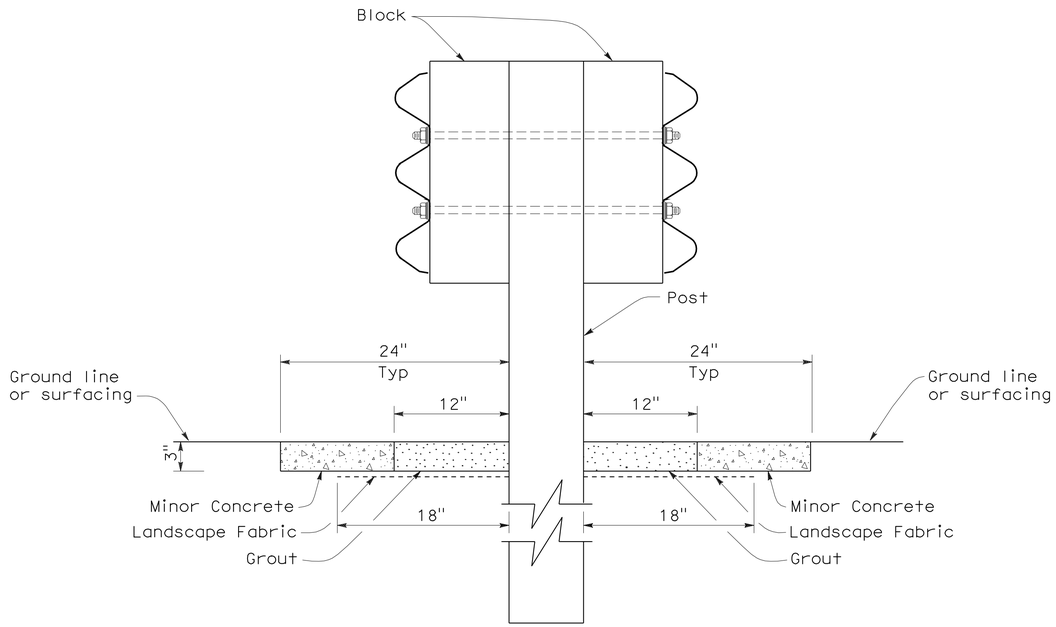

SECTION A-A

NOTE:

1. Direction of adjacent traffic indicated by ➡.

STATE OF CALIFORNIA
DEPARTMENT OF TRANSPORTATION

DOUBLE THRIE BEAM BARRIER TYPICAL VEGETATION CONTROL STANDARD BARRIER RAILING SECTION

NO SCALE

NSP A78C4 DATED OCTOBER 20, 2006 SUPPLEMENTS THE STANDARD PLANS BOOK DATED MAY 2006.

NEW STANDARD PLAN NSP A78C4

2006 NEW STANDARD PLAN NSP A78C4

7-17-06

DIST	COUNTY	ROUTE	POST MILES TOTAL PROJECT	SHEET NO.	TOTAL SHEETS
05	SLO	101	7.8/12.5	54	69

Randell D. Hiatt
REGISTERED CIVIL ENGINEER

October 20, 2006
PLANS APPROVAL DATE

REGISTERED PROFESSIONAL ENGINEER
Randell D. Hiatt
No. C50200
Exp. 6-30-07
CIVIL
STATE OF CALIFORNIA

The State of California or its officers or agents shall not be responsible for the accuracy or completeness of electronic copies of this plan sheet.

To accompany plans dated 4-23-12

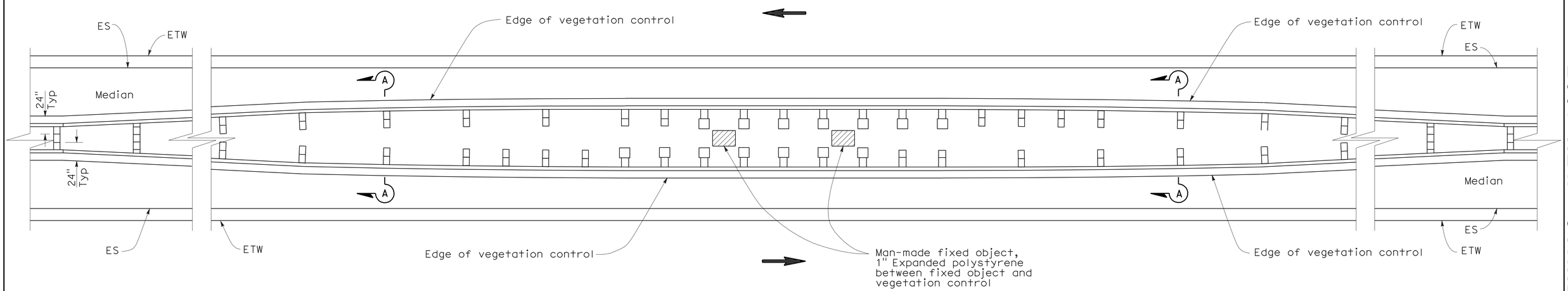

PLAN

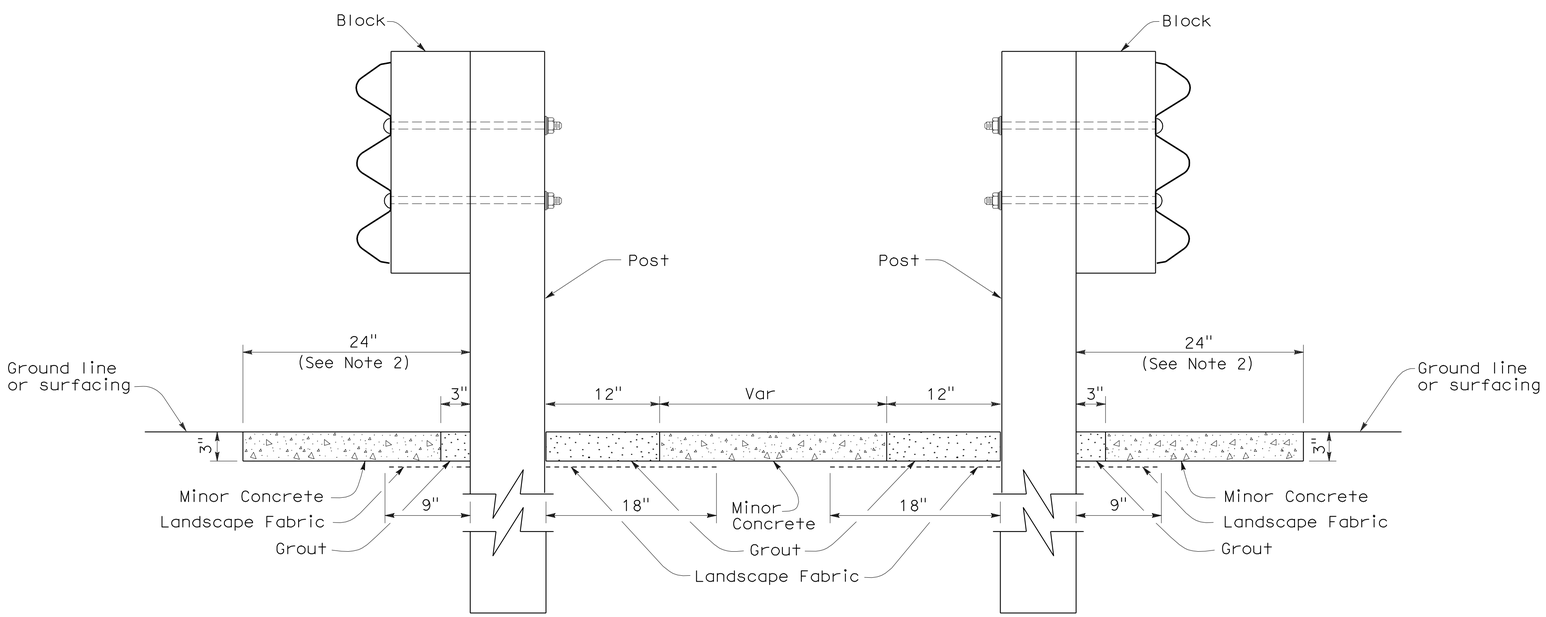

SECTION A-A

NOTES:

1. See New Standard Plan NSP A78C3 for additional vegetation control.
2. Where dike is constructed under barrier, construct vegetation control to back edge of dike. Where paved shoulder is constructed within 24" in front of the post, construct vegetation control to the edge of paved shoulder.
3. Direction of adjacent traffic indicated by ←.

STATE OF CALIFORNIA
DEPARTMENT OF TRANSPORTATION

THRIE BEAM BARRIER TYPICAL VEGETATION CONTROL AT FIXED OBJECTS IN MEDIAN

NO SCALE

NSP A78C5 DATED OCTOBER 20, 2006 SUPPLEMENTS THE STANDARD PLANS BOOK DATED MAY 2006.

NEW STANDARD PLAN NSP A78C5

2006 NEW STANDARD PLAN NSP A78C5

7-17-06

DIST	COUNTY	ROUTE	POST MILES TOTAL PROJECT	SHEET NO.	TOTAL SHEETS
05	SLO	101	7.8/12.5	55	69

Randell D. Hiatt
REGISTERED CIVIL ENGINEER

October 20, 2006
PLANS APPROVAL DATE

REGISTERED PROFESSIONAL ENGINEER
Randell D. Hiatt
No. C50200
Exp. 6-30-07
CIVIL
STATE OF CALIFORNIA

The State of California or its officers or agents shall not be responsible for the accuracy or completeness of electronic copies of this plan sheet.

To accompany plans dated 4-23-12

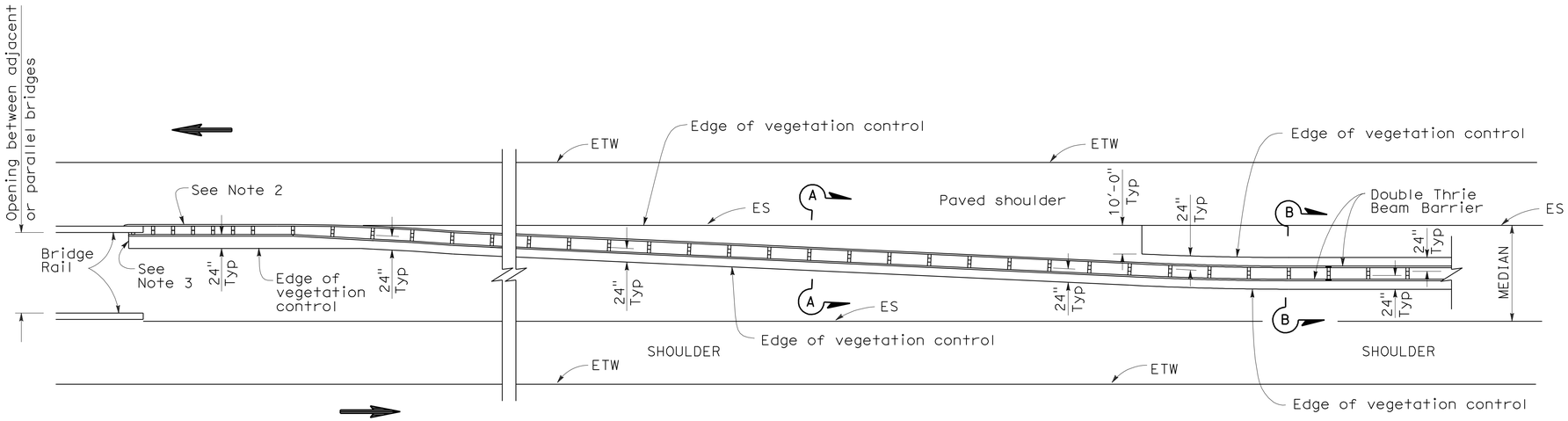

PLAN

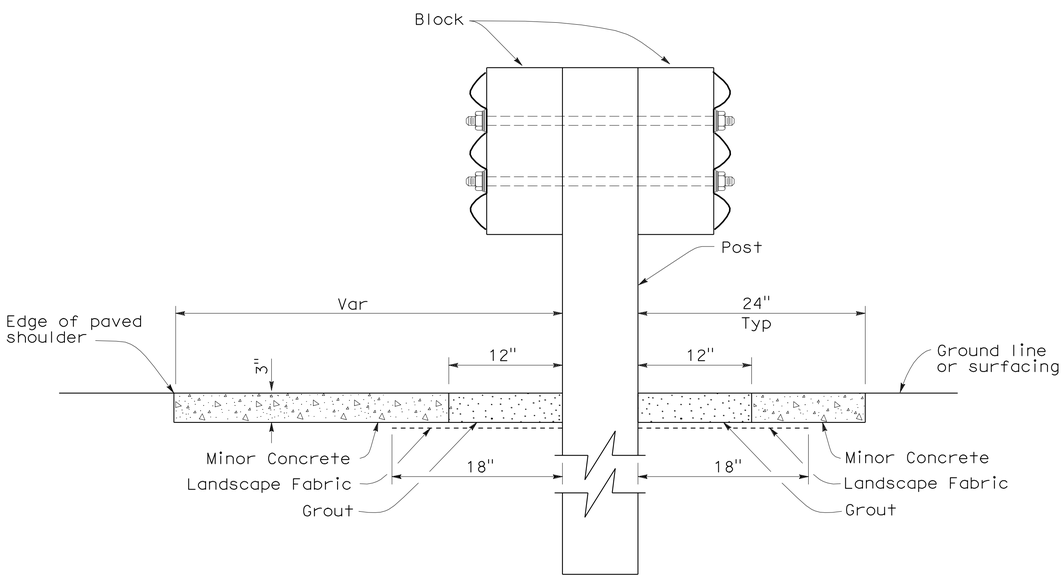

SECTION A-A

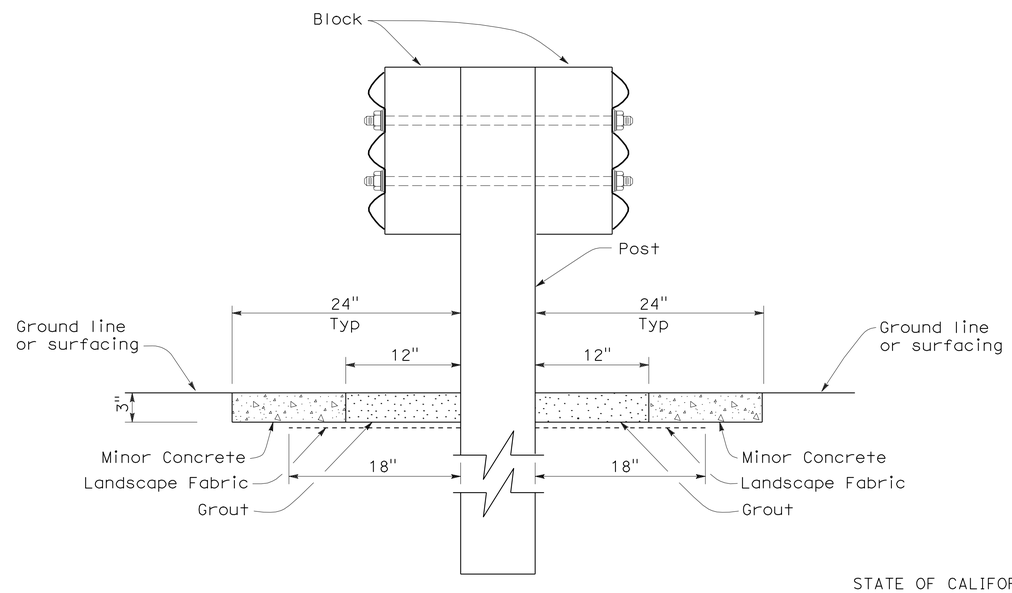

SECTION B-B

NOTES:

1. See New Standard Plan NSP A78C4 for additional vegetation control details.
2. Where dike is constructed under barrier, construct vegetation control to back edge of dike. Where paved shoulder is constructed within 24" in front of the post, construct vegetation control to the edge of paved shoulder.
3. End vegetation control at end of backside rail element attached to bridge railing.
4. Direction of adjacent traffic indicated by ←.

STATE OF CALIFORNIA
DEPARTMENT OF TRANSPORTATION

THRIE BEAM BARRIER TYPICAL VEGETATION CONTROL AT STRUCTURE APPROACH

NO SCALE

NSP A78C6 DATED OCTOBER 20, 2006 SUPPLEMENTS THE STANDARD PLANS BOOK DATED MAY 2006.

NEW STANDARD PLAN NSP A78C6

2006 NEW STANDARD PLAN NSP A78C6

7-17-06

DIST	COUNTY	ROUTE	POST MILES TOTAL PROJECT	SHEET NO.	TOTAL SHEETS
05	SLO	101	7.8/12.5	56	69

Randell D. Hiatt
REGISTERED CIVIL ENGINEER

June 6, 2008
PLANS APPROVAL DATE

REGISTERED PROFESSIONAL ENGINEER
Randell D. Hiatt
No. C50200
Exp. 6-30-09
CIVIL
STATE OF CALIFORNIA

The State of California or its officers or agents shall not be responsible for the accuracy or completeness of electronic copies of this plan sheet.

To accompany plans dated 4-23-12

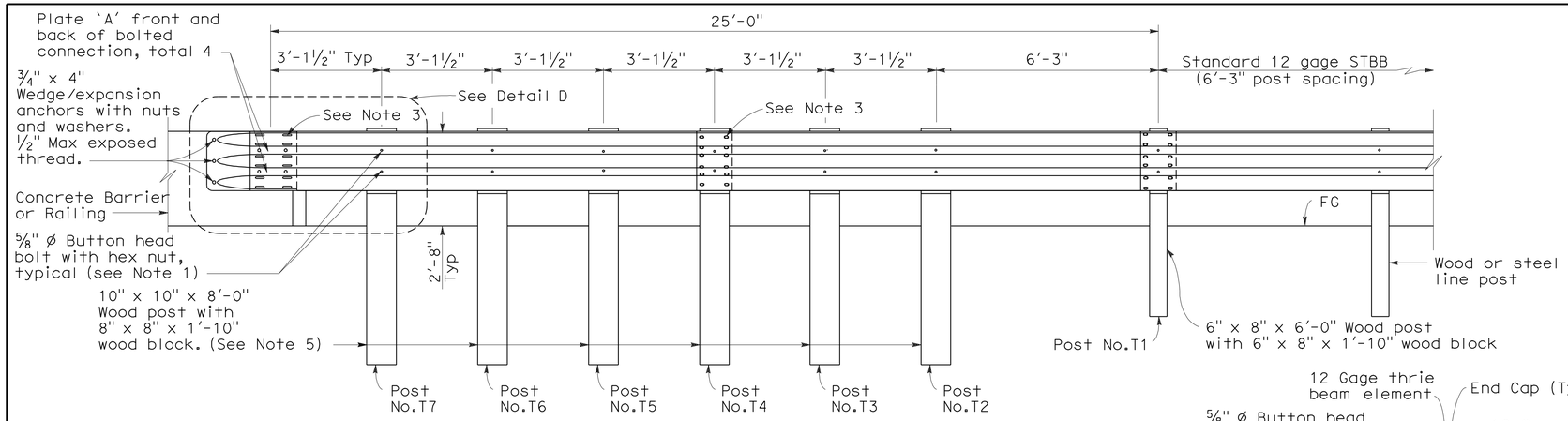

ELEVATION

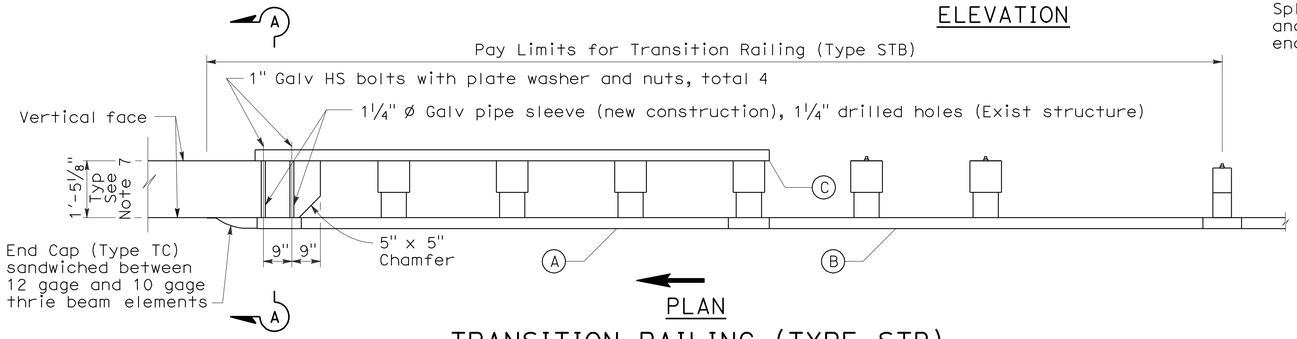

PLAN

TRANSITION RAILING (TYPE STB)

(No Blockout Attachment)

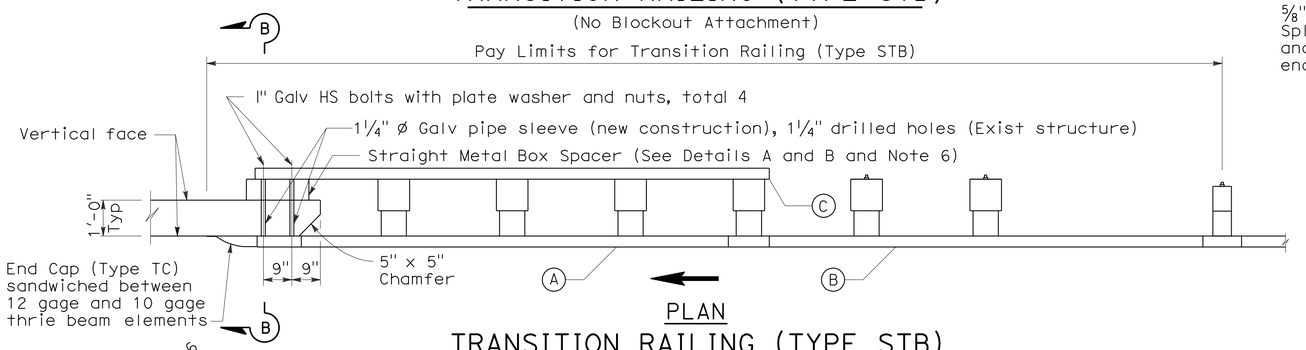

PLAN

TRANSITION RAILING (TYPE STB)

(Blockout Attachment)

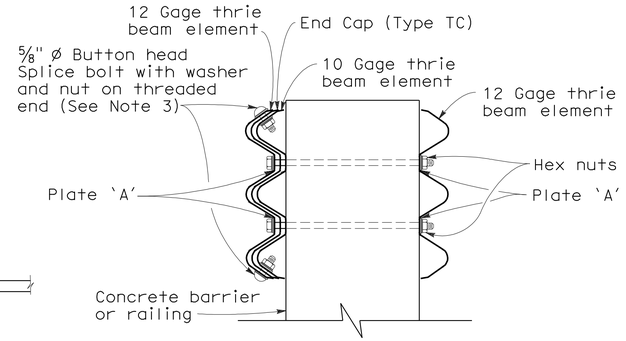

SECTION A-A

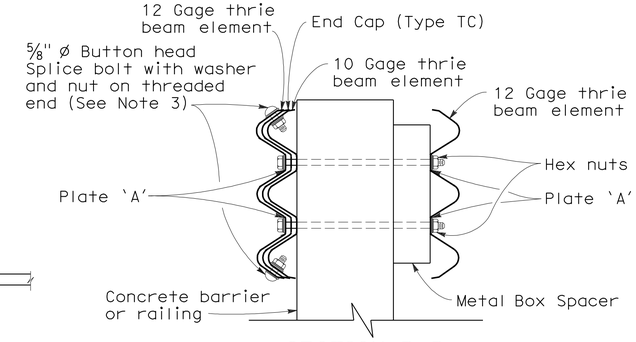

SECTION B-B

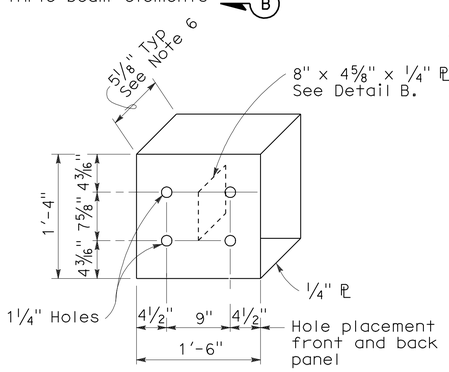

DETAIL A

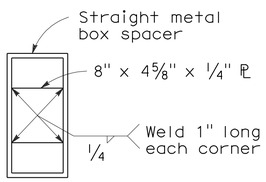

DETAIL B

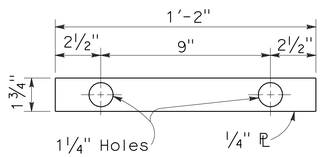

DETAIL C

STRAIGHT METAL BOX SPACER

PLATE 'A'

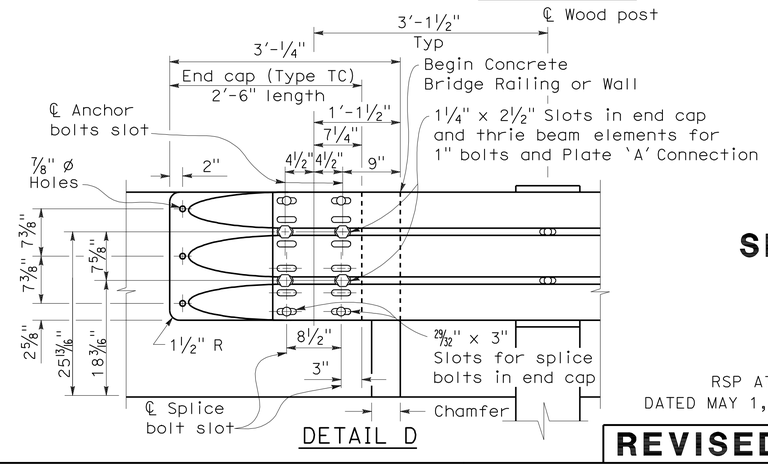

DETAIL D

LEGEND

(A) Nested thrie beam elements (one 12 gage element nested over one 10 gage element).

(B) One 10 gage thrie beam element.

(C) One 12 gage thrie beam element.

10 gage = 0.135" thick

12 gage = 0.108" thick

NOTES:

1. Use ⅝" ø Button head bolts and hex nuts for connection to posts. No washer on rail face for bolted connections to post.
2. The nested rail elements, end cap and single 10 gage thrie beam element, may be spliced together prior to bolting the elements to the wood post and concrete barrier or railing.
3. Exterior splice bolt holes for rail element splices at Post No.T4 and the connection to the concrete barrier or railing shall be the standard 29⁄32" x 1⅛" slot size. Interior splice bolt holes at these locations may be increased up to 1¼" ø. Only the top 2 and the bottom 2 splice bolts with washers and nuts are required for rail splices at Post No.T4 and the connection to the concrete barrier or railing.
4. Direction of adjacent traffic indicated by ⟶.
5. The top elevation of Post Nos.T2 through T7 shall not project more than 1" above the top elevation of the rail element.
6. The depth of the metal box spacer varies from the 5⅛" to 1½" and is dependent on the width of the concrete railing or wall. The combined dimension for the depth of the metal box spacer plus the width of railing or wall is typically 17⅛". Where the space between the backside of the concrete railing or wall and the rear thrie beam element is less than 1½" metal plates similar to Plate 'A' are to be used as spacers.
7. Where the width of the concrete railing or wall is greater than 17⅛", wood blocks are to be used to fill the space created between the backside of Post No.4 through No.7 and the rear thrie beam element. These wood blocks shall be 8" in width and 1'-2" in length. The dimension between the front thrie beam element and the rear thrie beam element is to match the width of the concrete railing or wall.
8. For details of End Cap (Type TC), see Revised Standard Plan RSP A78C1.

STATE OF CALIFORNIA
DEPARTMENT OF TRANSPORTATION

SINGLE THRIE BEAM BARRIER TRANSITION RAILING (TYPE STB)

NO SCALE

RSP A78J DATED JUNE 6, 2008 SUPERSEDES STANDARD PLAN A78J DATED MAY 1, 2006 - PAGE 97 OF THE STANDARD PLANS BOOK DATED MAY 2006.

REVISED STANDARD PLAN RSP A78J

2006 REVISED STANDARD PLAN RSP A78J

5-1-08

DIST	COUNTY	ROUTE	POST MILES TOTAL PROJECT	SHEET NO.	TOTAL SHEETS
05	SLO	101	7.8/12.5	57	69

REGISTERED CIVIL ENGINEER

June 5, 2009
PLANS APPROVAL DATE

REGISTERED PROFESSIONAL ENGINEER Glenn DeCou No. C34547 Exp. 9-30-09 CIVIL STATE OF CALIFORNIA

The State of California or its officers or agents shall not be responsible for the accuracy or completeness of electronic copies of this plan sheet.

To accompany plans dated 4-23-12

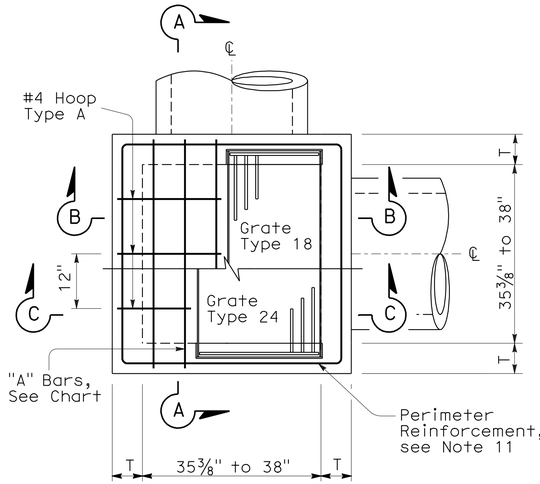

STANDARD TYPE G2 OR G4

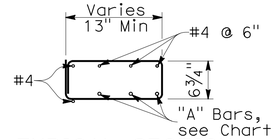

TYPICAL SECTION
(HOOP TYPE A)

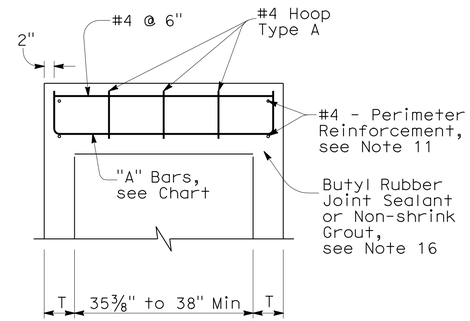

SECTION A-A

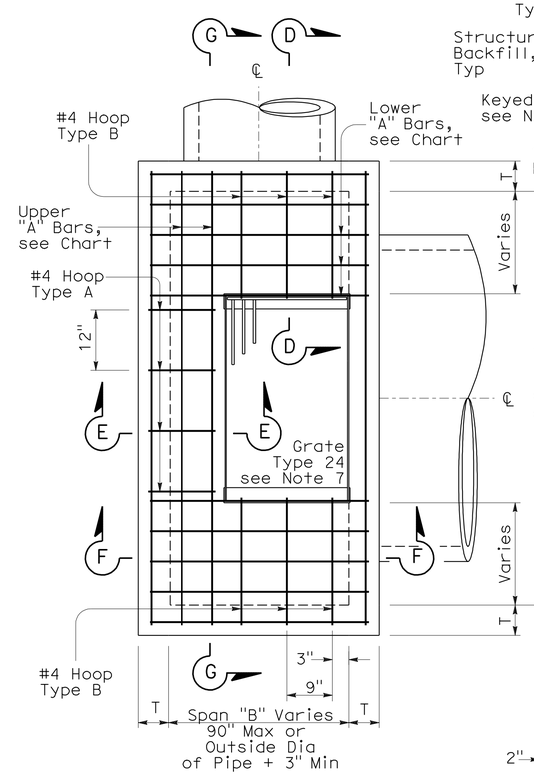

EXPANDED TYPE G2 OR G4
(Top Rebar Not Shown)

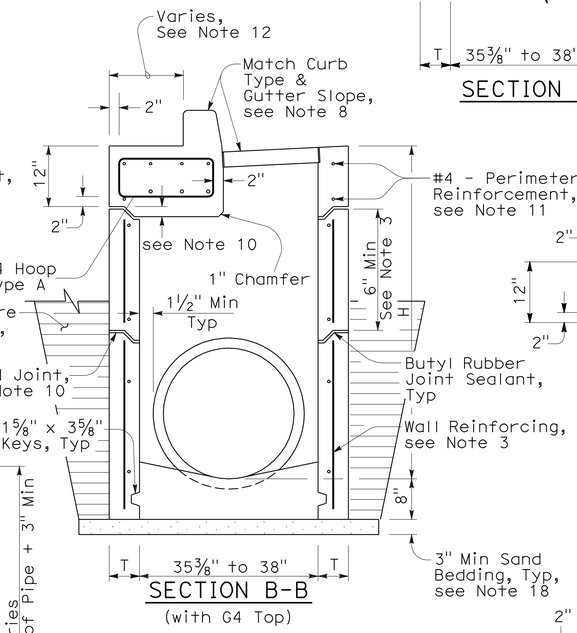

SECTION B-B
(with G4 Top)

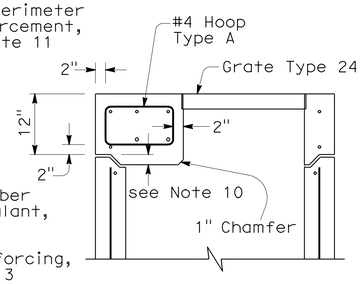

SECTION C-C
(with G2 Top)

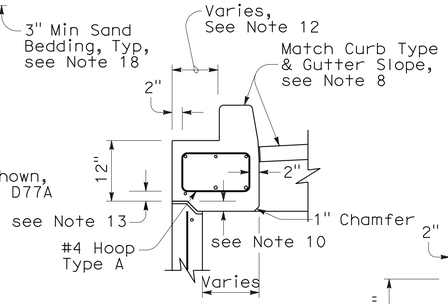

SECTION E-E
(with G4 Top)

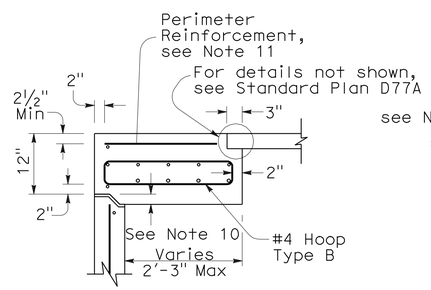

SECTION D-D

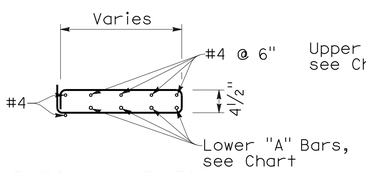

TYPICAL SECTION
(HOOP TYPE B)

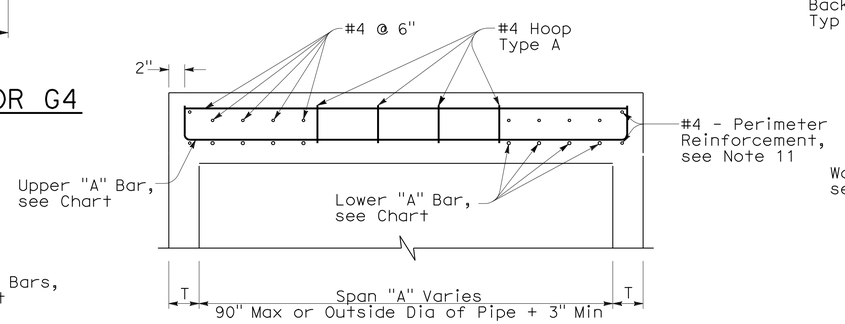

SECTION G-G

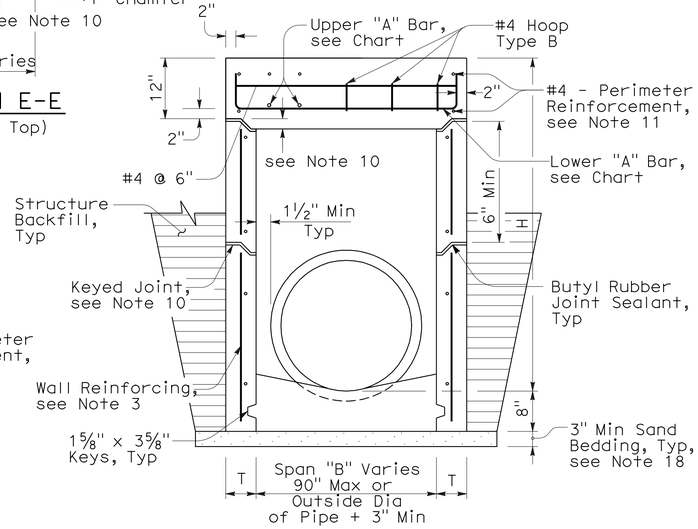

SECTION F-F
(with G2 Top)

NOTES:

1. "H" is the difference in elevation between the outlet pipe flow line and the normal gutter grade line undepressed.
2. For "T" wall thickness: T=6" when "H" is 8' or less. T=8" when "H" is over 8'.
3. Wall reinforcing not required when "H" is 8' or less and the unsupported width or length is 6'-0" or less. Reinforce wall exceeding these limits with #4 bars @ 1'-6" ± centers placed 2" clear to the inside of inlet unless otherwise shown. Short independent wall sections or height adjustment rings 6" to 24" high must have a minimum of two #4 horizontal bars.
4. Seal pre-cast inlets connection openings between wall and pipe with non-shrink grout or resilient connectors as specified in the Special Provisions.
5. Steps - None required where "H" is less than 2'-6". Where "H" is 2'-6" or more, install steps with lowest rung 1'-0" above the floor and highest rung not more than 6" below bottom of lid. The distance between steps must not exceed 1'-0" and be uniform throughout the length of the wall. Place steps in the wall without an opening. Steps inserts may be substituted for the bar steps. Step inserts must comply with State Industrial Safety Requirements. See Standard Plan D74C for step details.
6. Pipe(s) can be placed in any wall.
7. Set inlet so that grate bars are parallel to direction of principal surface flow.
8. Type G4 inlet can use Grate Type 18 or 24. Type G2 inlet uses Grate Type 24. See Revised Standard Plan RSP D77A and Standard Plan D77B for grate and frame details and weights of miscellaneous Iron and Steel.
9. G4 inlet details are the same as the G2 with the addition of a curb and sloped grate that matches the adjacent curb and gutter depression. See Standard Plans D78A & D78B for gutter and inlet depresssion details. See Revised Standard Plan RSP A87A & Standard Plan A87B for Curb and Dike Details.
10. Provide pre-cast inlets with separate top sections for final grade adjustment under Standard Specifcation Section 51-1.02. Provide keyed joints between the top and wall and multiple wall sections. Joint design may vary but must be 1" to 3" in depth.
11. Perimeter reinforcement serves as a rigid frame to position and attach the required structural reinforcement and may be tack welded at outer corners when using ASTM A706 weldable bars.
12. This dimension will vary with different grates, curbs types, box width and wall thickness.
13. 2" unless inlet is expanded in the Span "A" direction, then clearance is 2" plus the diameter of the lower "A" bar.
14. Place "A" Bars at an angle so hooked ends will maintain 2" clear coverage.
15. Refer to Standard Plan D73, Table A for concrete quantities.
16. Non-shrink grout can be used for upper most joint to facilitate final top grade adjustment.
17. Slope inlet floors 4:1 towards the outlet pipe. Pre-cast inlets may have monolithic sloped floors, flat floors, or no floors in which case a sloped floor must be cast in the field. Inlet floors do not require reinforcing.
18. Extend sand bedding under all structure backfill.

TOP REINFORCEMENT CHART

Span	"A" Bars	Required steel area per foot (in^2/ft)
Under 38" with Type 24 Grate	#5 @ 7" C-C 2-#5 Min	0.525
Under 38" with Type 18 Grate	#5 @ 7" C-C 3-#5 Min	0.525
38"-60"	#5 @ 6" C-C	0.621
61"-72"	#5 @ 5" C-C	0.744
73"-90"	#6 @ 6" C-C	0.811

STATE OF CALIFORNIA
DEPARTMENT OF TRANSPORTATION

DRAINAGE INLETS (PRECAST)

NO SCALE

NSP D73A DATED JUNE 5, 2009 SUPPLEMENTS THE STANDARD PLANS BOOK DATED MAY 2006.

NEW STANDARD PLAN NSP D73A

2006 NEW STANDARD PLAN NSP D73A

3-16-09

DIST	COUNTY	ROUTE	POST MILES TOTAL PROJECT	SHEET NO.	TOTAL SHEETS
05	SLO	101	7.8/12.5	58	69

Raymond Don Tsztoo
REGISTERED CIVIL ENGINEER

January 18, 2008
PLANS APPROVAL DATE

REGISTERED PROFESSIONAL ENGINEER
Raymond Don Tsztoo
No. C37332
Exp. 6-30-08
CIVIL
STATE OF CALIFORNIA

The State of California or its officers or agents shall not be responsible for the accuracy or completeness of electronic copies of this plan sheet.

To accompany plans dated 4-23-12

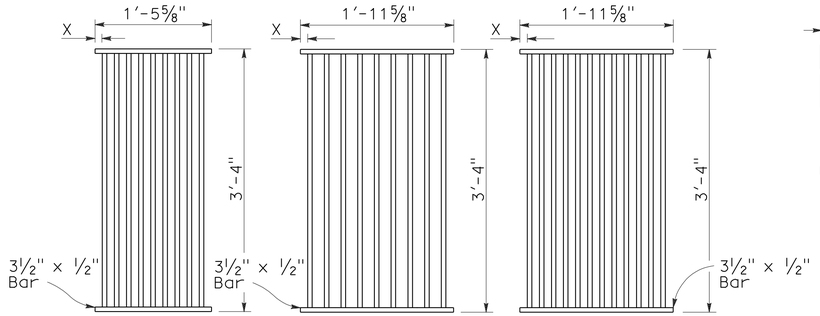

TYPE 18-9

1⅜" Clear spacing. Use within the roadbed on highways where bicycles and pedestrians are excluded.

TYPE 24-9

2" Clear spacing. Use in locations off the roadbed on all types of highways.

TYPE 24-12

1⅜" Clear spacing. Use within the roadbed on highways where bicycles and pedestrians are excluded.

RECTANGULAR GRATE DETAILS

(See table below)

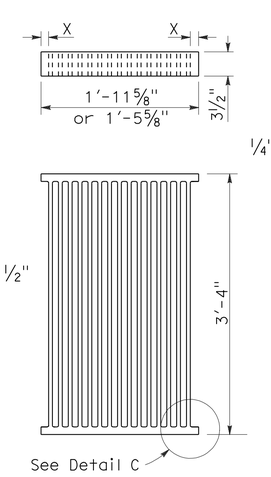

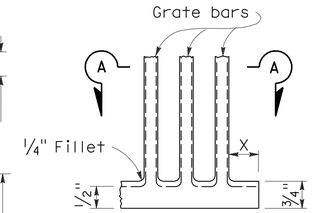

DETAIL C

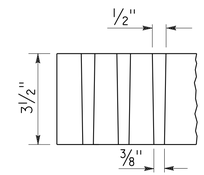

SECTION A-A

ALTERNATIVE CAST NODULAR IRON GRATE OR CAST STEEL GRATE

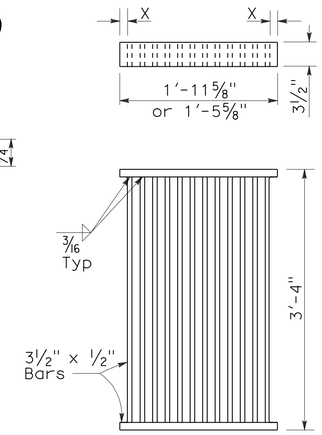

ALTERNATIVE WELDED GRATE

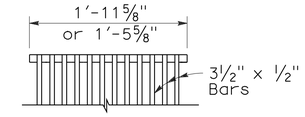

CAST END BLOCK

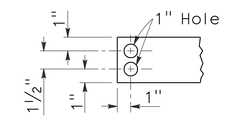

END OF BAR

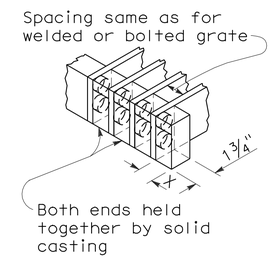

ALTERNATIVE CAST NODULAR IRON OR CAST STEEL END BLOCK GRATE

NOTES:

1. Grate type numbers refer to approximate width of grate in inches and number of bars, respectively.
2. Contractor has the option of using cast nodular iron, cast steel, welded, bolted, or cast end block grate.
3. See Special Provisions for requirements pertaining to galvanizing or asphalt dipping of grates and frames.
4. Rounded top of bars optional on all grates.
5. Pipe inlets with a grate shall be placed so that bars parallel direction of principle surface flow.
6. Full penetration butt welds may be substituted for the fillet welds on all anchors.
7. Standard square, hexagon, round or equivalent headed anchors may be substituted for the right angle hooks on the anchors shown on this plan.
8. Grate and frame weights are based on welded grates (weights of face angles, steps, protection bars, etc. are not included).

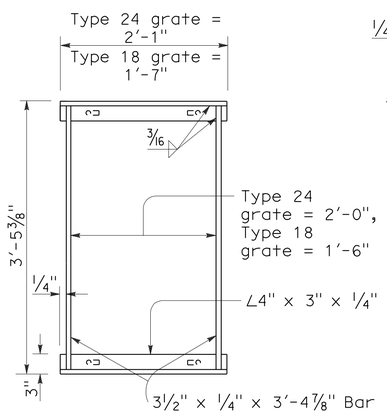

TYPICAL FRAME

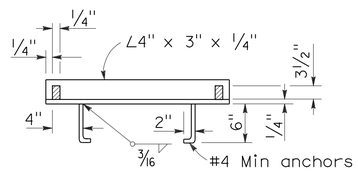

CROSS SECTION

(Thru frame)

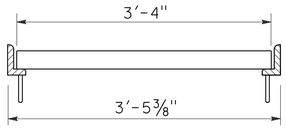

LONGITUDINAL SECTION

(Thru frame and grate)

RECTANGULAR FRAME DETAILS

(For all rectangular grates)

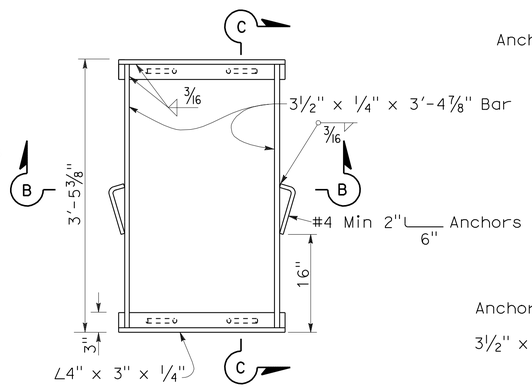

TYPICAL FRAME

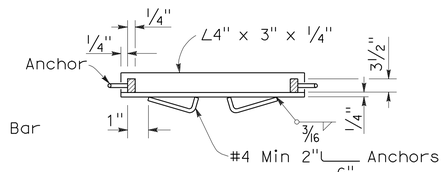

SECTION B-B

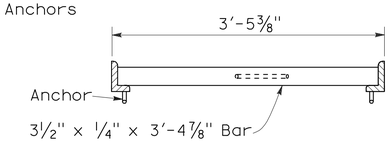

SECTION C-C

ALTERNATIVE ANCHOR FOR RECTANGULAR FRAME

(For details not shown, See Rectangular Frame Details)

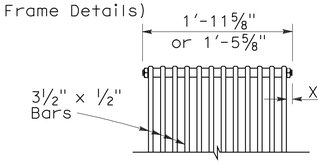

BOLTED END BLOCK

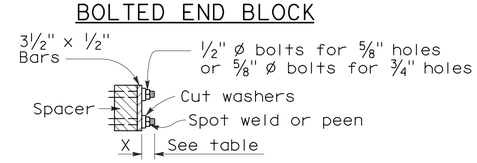

BOLTING DETAIL

ALTERNATIVE BOLTED GRATE

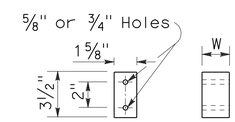

BAR SPACER

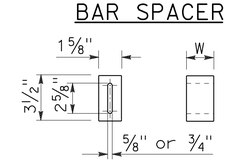

ALTERNATIVE SPACER

W = 1⅜" or 2"

GRATE BAR SPACING TABLE

TYPE	No. OF BARS	CLEAR BAR SPACING	X
18-9	9	1⅜"	1 1/16"
24-9	9	2"	1 9/16"
24-12	12	1⅜"	1¼"

INLET TYPE	COVER TYPE	WEIGHT LB
OS	PLATE	174
OL-7	PLATE	170
OL-10	PLATE	170
OL-14	PLATE	170
OL-21	PLATE	170
OCP	PLATE	112
OCPI	PLATE	112
OCPI	REDWOOD	42
OMP	PLATE	177
OMPI	PLATE	177

INLET TYPE	GRATE TYPE	No. OF GRATES	WEIGHT LB
GDO	24-12	2	634
GOL-7	24-12	1	326
GOL-10	24-12	1	326
GO,G1,G2,G3,G4 (TYPE 24)	24-9	1	263
	24-12	1	326
G4 (TYPE 18),G5,G6	18-9	1	249
GT1	18-9	2	498
GT2	18-9	2	498
GT3	24-12	2	652
GT4	24-12	2	652
TRASH RACK			22

BASIS FOR MISC IRON & STEEL FINAL PAY WEIGHTS FOR DRAINAGE INLETS

(See General Notes, No 8)

STATE OF CALIFORNIA
DEPARTMENT OF TRANSPORTATION

GRATE DETAILS

NO SCALE

RSP D77A DATED JANUARY 18, 2008 SUPERSEDES STANDARD PLAN D77A DATED MAY 1, 2006 - PAGE 155 OF THE STANDARD PLANS BOOK DATED MAY 2006.

REVISED STANDARD PLAN RSP D77A

2006 REVISED STANDARD PLAN RSP D77A

12-14-07

DIST	COUNTY	ROUTE	POST MILES TOTAL PROJECT	SHEET NO.	TOTAL SHEETS
05	SLO	101	7.8/12.5	59	69

Randell D. Hiatt
REGISTERED CIVIL ENGINEER

June 6, 2008
PLANS APPROVAL DATE

REGISTERED PROFESSIONAL ENGINEER
Randell D. Hiatt
No. C50200
Exp. 6-30-09
CIVIL
STATE OF CALIFORNIA

The State of California or its officers or agents shall not be responsible for the accuracy or completeness of electronic copies of this plan sheet.

To accompany plans dated 4-23-12

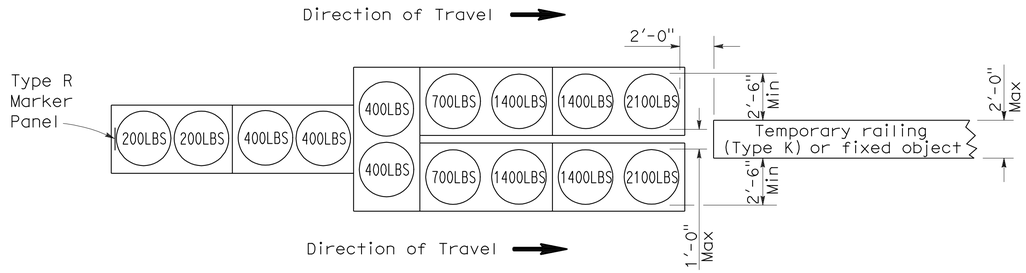

ARRAY 'TU14'

Approach speed 45 mph or more

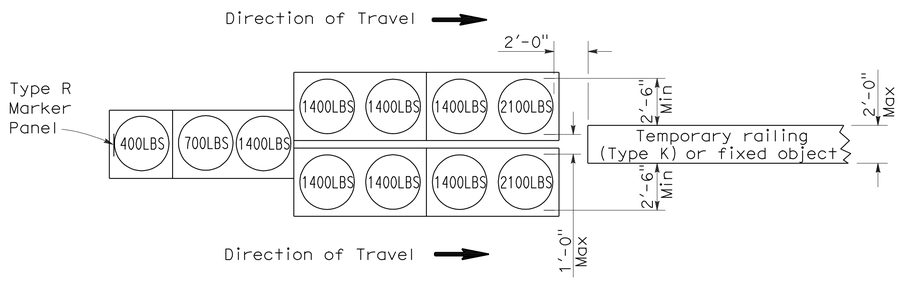

ARRAY 'TU11'

Approach speed less than 45 mph

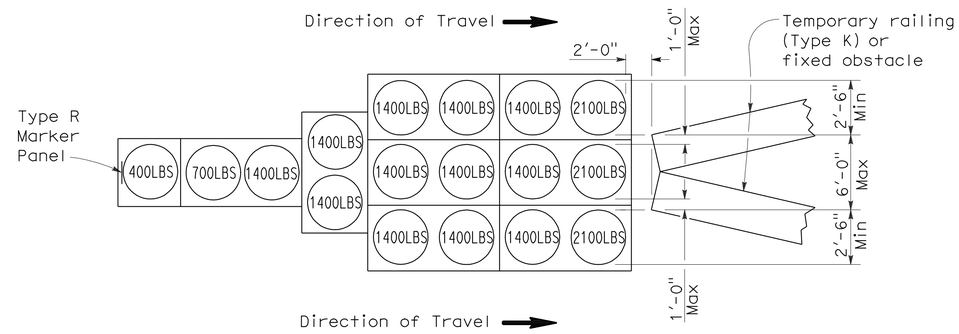

ARRAY 'TU17'

Approach speed less than 45 mph

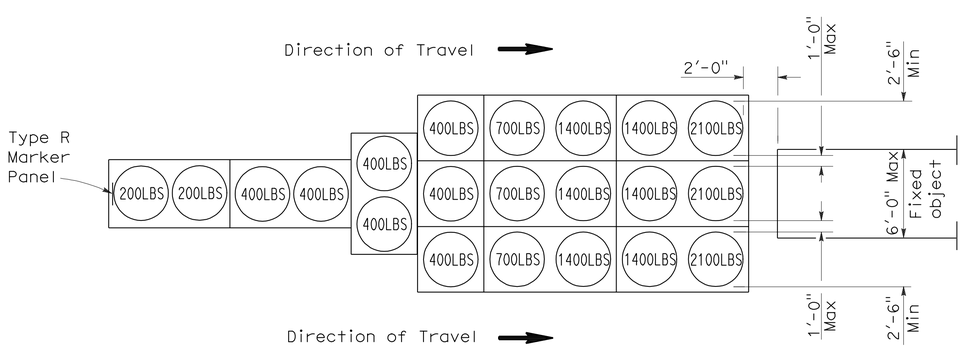

ARRAY 'TU21'

Approach speed 45 mph or more

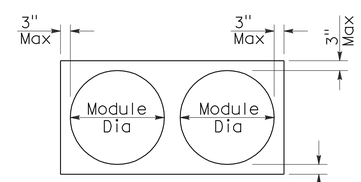

PLAN

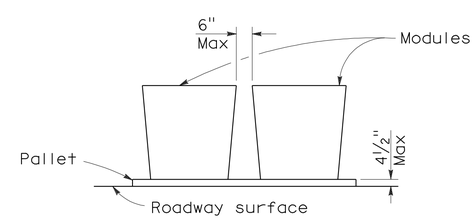

ELEVATION

CRASH CUSHION PALLET DETAIL

See Note 7

NOTES:

1. (XXX) Indicates sand filled module location and weight of sand in pounds for each module. Module spacing is based on the greater diameter of the module.
2. All sand weights are nominal.
3. Temporary crash cushion arrays shall not encroach on the traveled way.
4. Place the top of Type R marker panel 1" below the module lid.
5. Refer to Standard Plan A73B for marker details.
6. Approach speeds indicated conform to NCHRP 350 Report criteria.
7. Use of pallets is optional.

STATE OF CALIFORNIA
DEPARTMENT OF TRANSPORTATION

TEMPORARY CRASH CUSHION, SAND FILLED (UNIDIRECTIONAL)

NO SCALE

RSP T1A DATED JUNE 6, 2008 SUPERSEDES STANDARD PLAN T1A
DATED MAY 1, 2006 - PAGE 211 OF THE STANDARD PLANS BOOK DATED MAY 2006.

REVISED STANDARD PLAN RSP T1A

2006 REVISED STANDARD PLAN RSP T1A

5-15-08

DIST	COUNTY	ROUTE	POST MILES TOTAL PROJECT	SHEET NO.	TOTAL SHEETS
05	SLO	101	7.8/12.5	60	69

Randell D. Hiatt
REGISTERED CIVIL ENGINEER

June 6, 2008
PLANS APPROVAL DATE

REGISTERED PROFESSIONAL ENGINEER
Randell D. Hiatt
No. C50200
Exp. 6-30-09
CIVIL
STATE OF CALIFORNIA

The State of California or its officers or agents shall not be responsible for the accuracy or completeness of electronic copies of this plan sheet.

To accompany plans dated 4-23-12

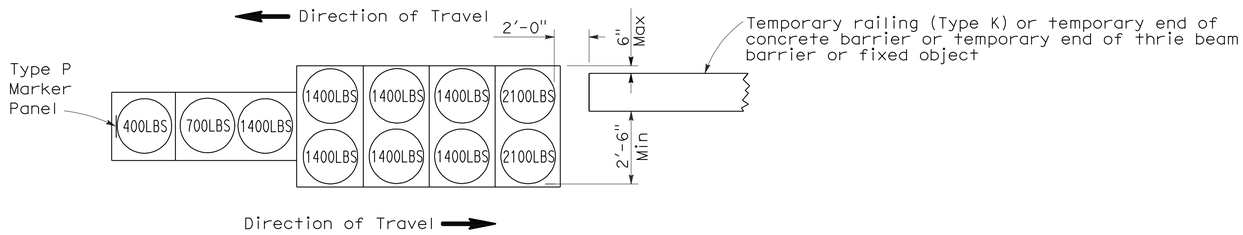

ARRAY 'TB11'

Approach speed less than 45 mph

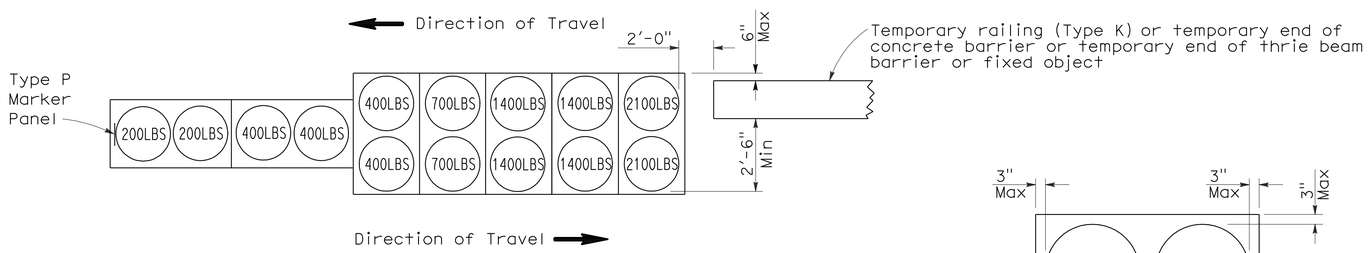

ARRAY 'TB14'

Approach speed 45 mph or more

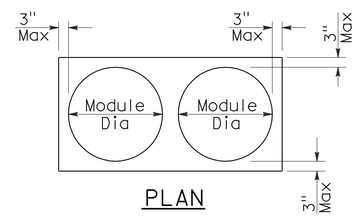

PLAN

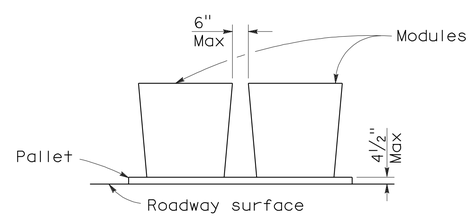

ELEVATION

CRASH CUSHION PALLET DETAIL

See Note 7

NOTES:

1. (XXX) Indicates sand filled module location and weight of sand in pounds for each module. Module spacing is based on the greater diameter of the module.
2. All sand weights are nominal.
3. Temporary crash cushion arrays shall not encroach on the traveled way.
4. Place the Type P marker panel so that the bottom of the panel rests upon the pallet.
5. Refer to Standard Plan A73B for marker details.
6. Approach speeds indicated conform to NCHRP 350 Report criteria.
7. Use of pallets is optional.

STATE OF CALIFORNIA
DEPARTMENT OF TRANSPORTATION

TEMPORARY CRASH CUSHION, SAND FILLED (BIDIRECTIONAL)

NO SCALE

RSP T1B DATED JUNE 6, 2008 SUPERSEDES STANDARD PLAN T1B
DATED MAY 1, 2006 - PAGE 212 OF THE STANDARD PLANS BOOK DATED MAY 2006.

REVISED STANDARD PLAN RSP T1B

2006 REVISED STANDARD PLAN RSP T1B

5-15-08

DIST	COUNTY	ROUTE	POST MILES TOTAL PROJECT	SHEET NO.	TOTAL SHEETS
05	SLO	101	7.8/12.5	61	69

Randell D. Hiatt
REGISTERED CIVIL ENGINEER

June 6, 2008
PLANS APPROVAL DATE

REGISTERED PROFESSIONAL ENGINEER
Randell D. Hiatt
No. C50200
Exp. 6-30-09
CIVIL
STATE OF CALIFORNIA

The State of California or its officers or agents shall not be responsible for the accuracy or completeness of electronic copies of this plan sheet.

To accompany plans dated 4-23-12

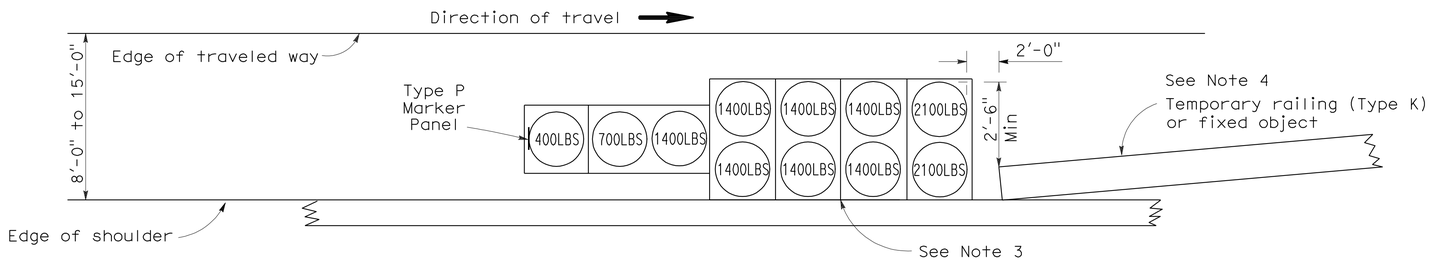

ARRAY 'TS11'

Approach speed less than 45 mph
See Note 9

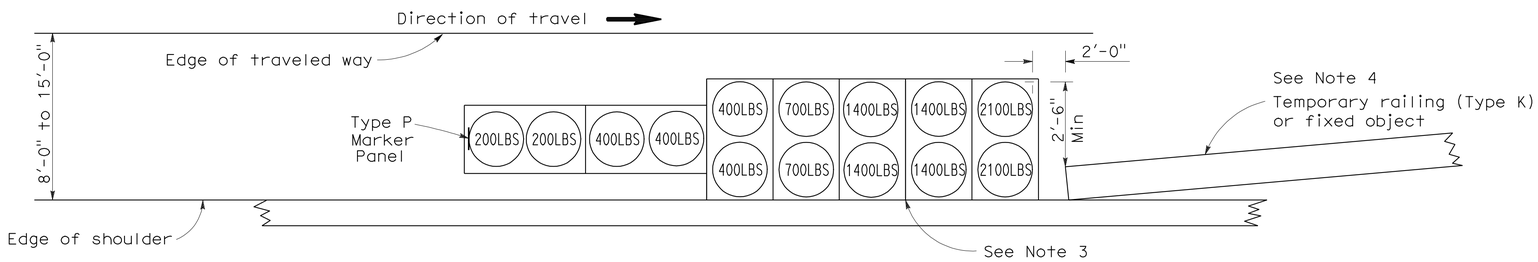

ARRAY 'TS14'

Approach speed 45 mph or more
See Note 9

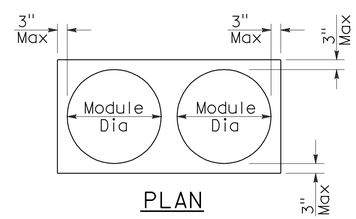

PLAN

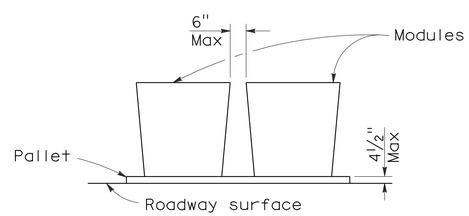

ELEVATION

CRASH CUSHION PALLET DETAIL

See Note 11

NOTES:

1. (XXX) Indicates sand filled module location and weight of sand in pounds for each module. Module spacing is based on the greater diameter of the module.
2. All sand weights are nominal.
3. The temporary crash cushion arrays shown on this plan shall be used only in locations where there will be traffic on one side of the temporary crash cushion array.
4. If the fixed object or approach end of the temporary railing is less than 15'-0" from the edge of traveled way, a temporary crash cushion is required in a construction or work zone.
5. Temporary crash cushion arrays shall not encroach on the traveled way.
6. Arrays for median shoulders shall conform to details shown on this plan for outside shoulders.
7. Place the Type P marker panel so that the bottom of the panel rests upon the pallet and faces traffic.
8. Refer to Standard Plan A73B for marker details.
9. For shoulder widths less than 8'-0", appropriate approved crash cushion protection, other than sand filled modules, shall be provided at fixed objects and at approach ends of temporary railing. The specific type of crash cushion shall be as shown on the project plans or as specified in the Special Provisions, or if not shown on the project plans or specified in the Special Provisions, shall be as approved by the Engineer.
10. Approach speeds indicated conform to NCHRP 350 Report criteria.
11. Use of pallets is optional.

STATE OF CALIFORNIA
DEPARTMENT OF TRANSPORTATION

TEMPORARY CRASH CUSHION, SAND FILLED (SHOULDER INSTALLATIONS)

NO SCALE

RSP T2 DATED JUNE 6, 2008 SUPERSEDES STANDARD PLAN T2
DATED MAY 1, 2006 - PAGE 213 OF THE STANDARD PLANS BOOK DATED MAY 2006.

REVISED STANDARD PLAN RSP T2

2006 REVISED STANDARD PLAN RSP T2

Dist	COUNTY	ROUTE	POST MILES TOTAL PROJECT	SHEET No.	TOTAL SHEETS
05	SLO	101	7.8/12.5	62	69

Randell D. Hiatt
REGISTERED CIVIL ENGINEER

May 20, 2011
PLANS APPROVAL DATE

REGISTERED PROFESSIONAL ENGINEER
Randell D. Hiatt
No. C50200
Exp. 6-30-11
CIVIL
STATE OF CALIFORNIA

The State of California or its officers or agents shall not be responsible for the accuracy or completeness of electronic copies of this plan sheet.

To accompany plans dated 4-23-12

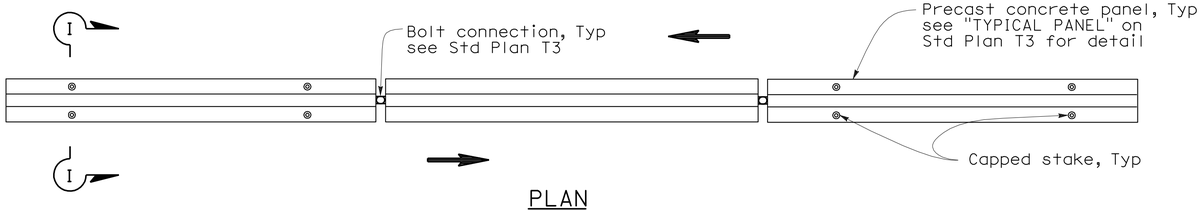

PLAN

RAILING STAKING CONFIGURATION FOR TWO-WAY TRAFFIC

See Note 1

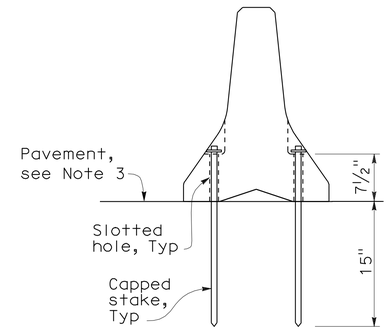

SECTION I-I

NOTES:

1. Where Type K Temporary Railing is placed as a temporary or long term barrier in two-way traffic on highways with less than 24" from the edge of traveled way, use four capped stakes per every other panel with end panels staked.
2. Where Type K Temporary Railing is placed 3" to 24" from the edge of an excavation on highways, use two capped stakes per panel along the traffic side.
3. Staked Type K Temporary Railing must be supported by at least 4" thick concrete, hot mix asphalt or existing asphalt concrete pavement.
4. The minimum yield strength for the washer must be 60,000 psi.
5. Direction of adjacent traffic indicated by ⟹.

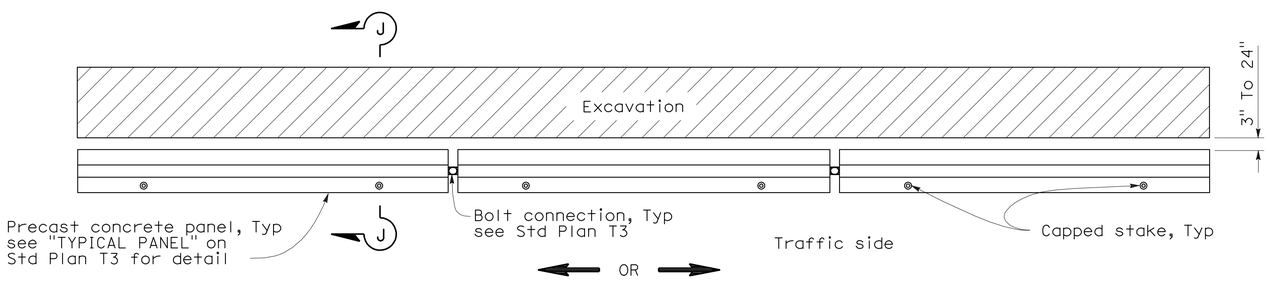

PLAN

RAILING STAKING CONFIGURATION ADJACENT TO AN EXCAVATION

See Note 2

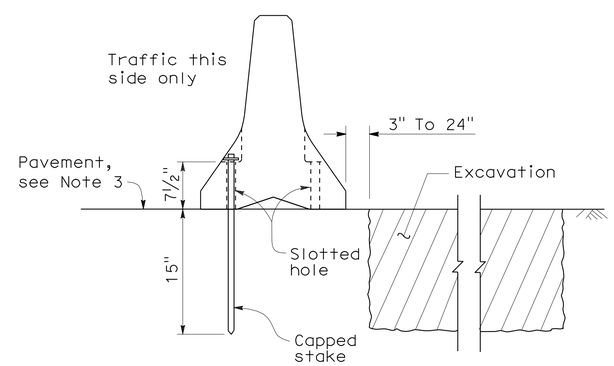

SECTION J-J

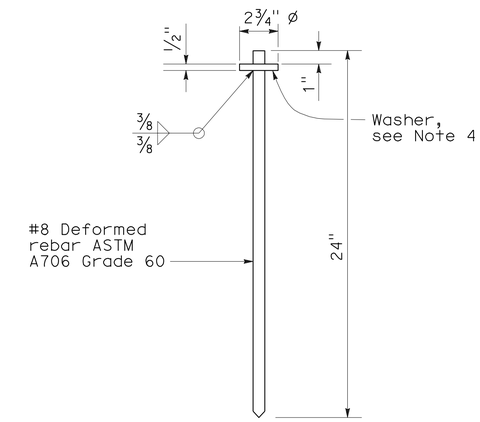

CAPPED STAKE DETAIL

STATE OF CALIFORNIA
DEPARTMENT OF TRANSPORTATION

TEMPORARY RAILING (TYPE K)

NO SCALE

NSP T3A DATED MAY 20, 2011 SUPPLEMENTS
THE STANDARD PLANS BOOK DATED MAY 2006.

NEW STANDARD PLAN NSP T3A

2006 NEW STANDARD PLAN NSP T3A

DIST	COUNTY	ROUTE	POST MILES TOTAL PROJECT	SHEET NO.	TOTAL SHEETS
05	SLO	101	7.8/12.5	63	69

REGISTERED CIVIL ENGINEER

November 17, 2006
PLANS APPROVAL DATE

REGISTERED PROFESSIONAL ENGINEER
Greg W. Edwards
No. C36386
Exp. 6-30-08
CIVIL
STATE OF CALIFORNIA

The State of California or its officers or agents shall not be responsible for the accuracy or completeness of electronic copies of this plan sheet.

To accompany plans dated 4-23-12

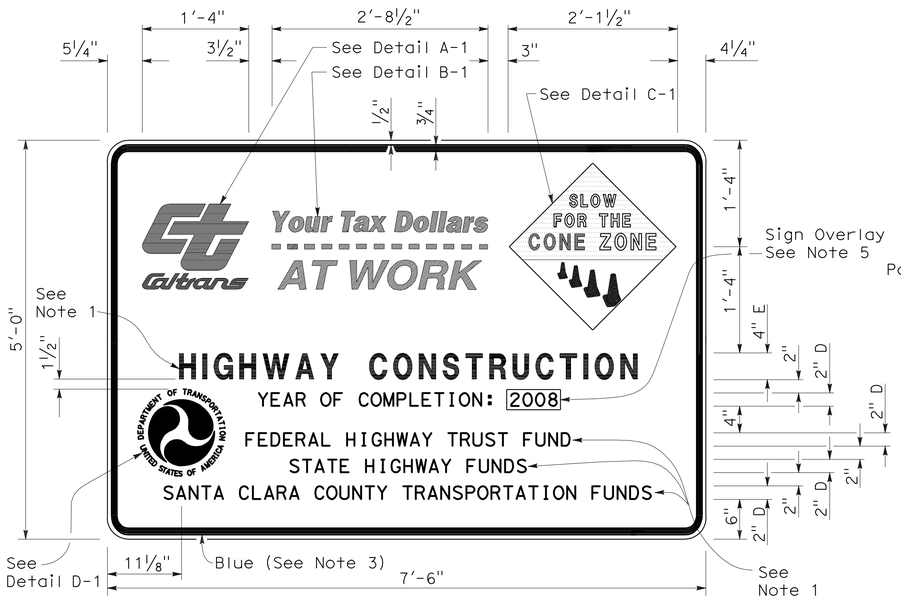

TYPE 1

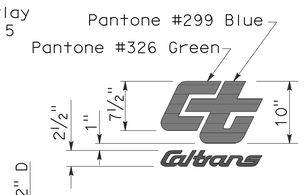

DETAIL A-1

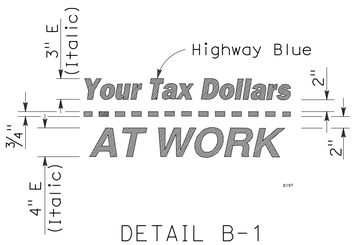

DETAIL B-1
(See Note 3)

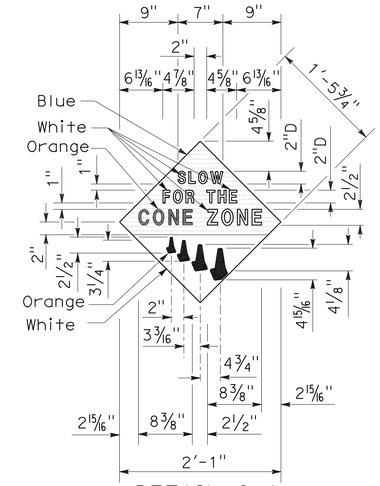

DETAIL C-1
(See Note 4)

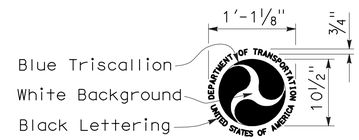

DETAIL D-1
(See Note 6)

NOTES:

1. The sign messages shown for type of project and fund types are examples only. See the Special Provisions for the applicable type of project and fund type messages to be used.
2. Except as otherwise shown, the legend of sign shall be black on a white background (non-reflective).
3. The border of the signs and details "B-1" and "B-2" shall be blue (non-reflective).
4. The diamond in details "C-1" and "C-2" shall be blue for the background of message, " SLOW FOR THE CONE ZONE", and white background for the orange cones. The color and type of font for the "SLOW FOR THE CONE ZONE" message shall be: "SLOW" white D; "FOR THE" white D; "CONE" orange Arial font; "ZONE" white Arial font.
5. Year of completion of project construction shown on the overlay is an example only. See the Special Provisions.
6. Use when the Project involves Federal Highway Trust Fund.

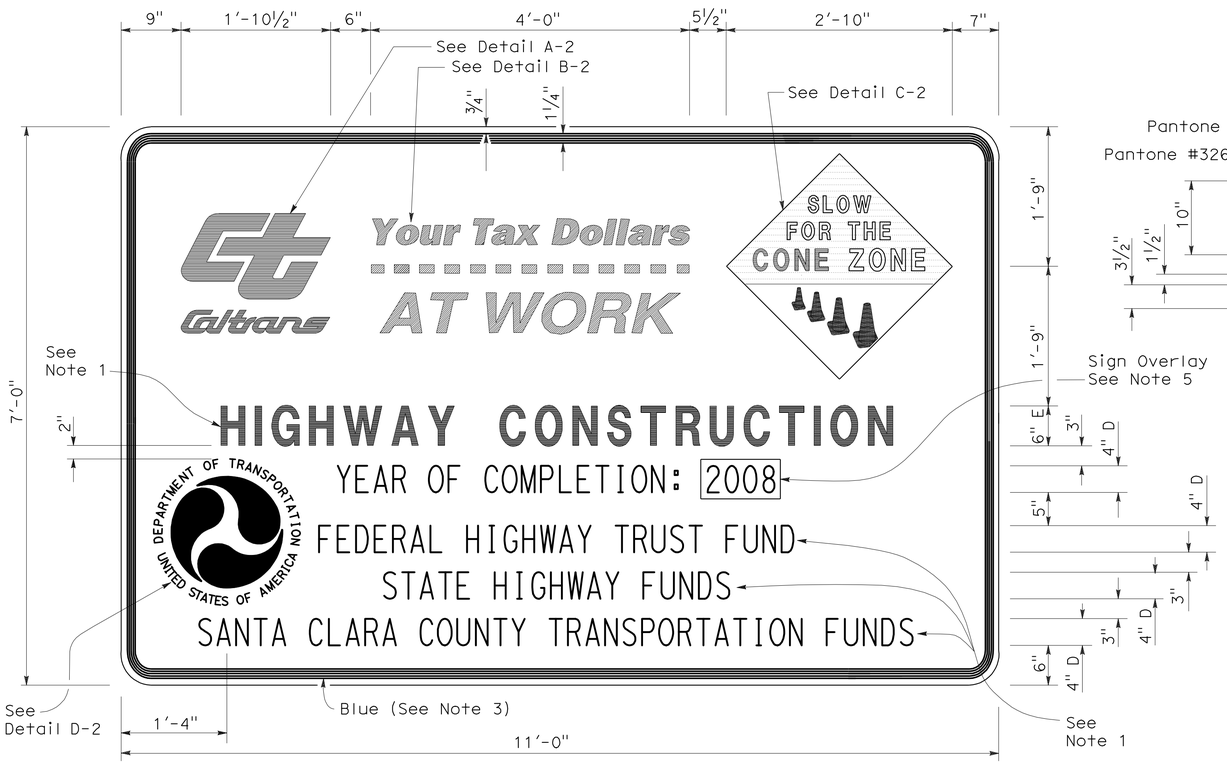

TYPE 2

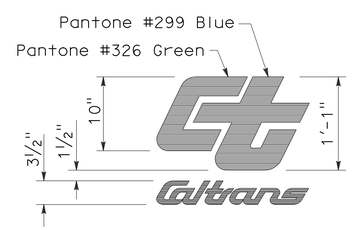

DETAIL A-2

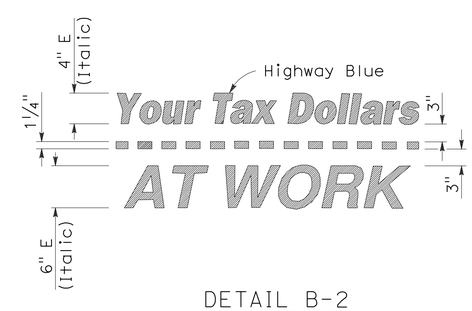

DETAIL B-2
(See Note 3)

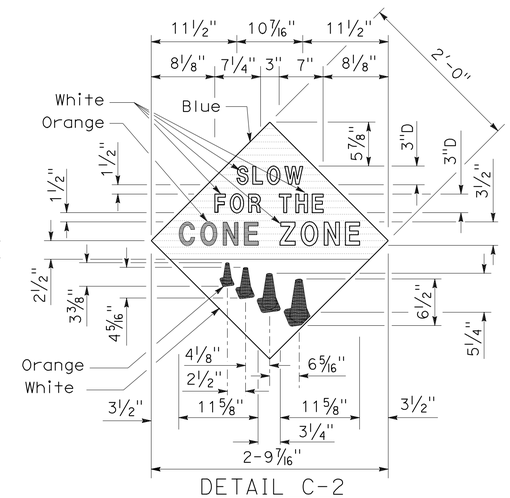

DETAIL C-2
(See Note 4)

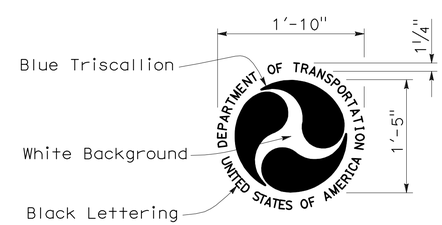

DETAIL D-2
(See Note 6)

STATE OF CALIFORNIA
DEPARTMENT OF TRANSPORTATION

CONSTRUCTION PROJECT FUNDING IDENTIFICATION SIGNS

NO SCALE

RSP T7 DATED NOVEMBER 17, 2006 SUPERSEDES STANDARD PLAN T7
DATED MAY 1, 2006 - PAGE 217 OF THE STANDARD PLANS BOOK DATED MAY 2006.

REVISED STANDARD PLAN RSP T7

2006 REVISED STANDARD PLAN RSP T7

9-7-06

DIST	COUNTY	ROUTE	POST MILES TOTAL PROJECT	SHEET NO.	TOTAL SHEETS
05	SLO	101	7.8/12.5	64	69

LICENSED LANDSCAPE ARCHITECT

April 3, 2009
PLANS APPROVAL DATE

The State of California or its officers or agents shall not be responsible for the accuracy or completeness of electronic copies of this plan sheet.

LICENSED LANDSCAPE ARCHITECT — Robert B. Schott — Signature — 11-30-10 Renewal Date — 2-25-09 Date — STATE OF CALIFORNIA

To accompany plans dated 4-23-12

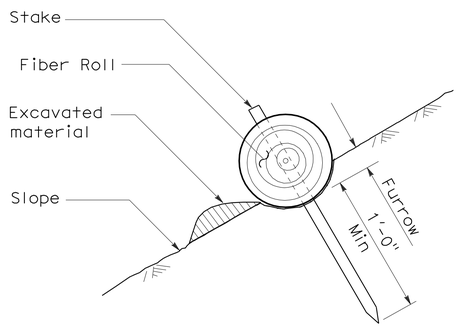

SECTION

TEMPORARY FIBER ROLL (TYPE 1)

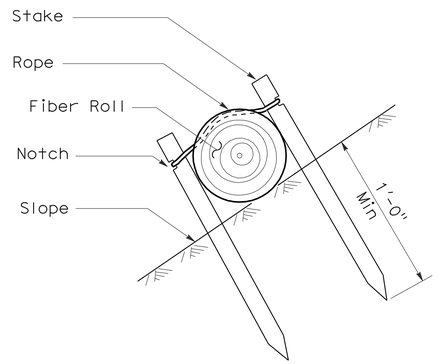

SECTION

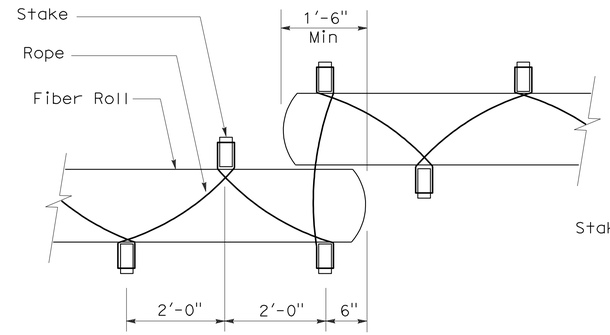

PLAN

TEMPORARY FIBER ROLL (TYPE 2)

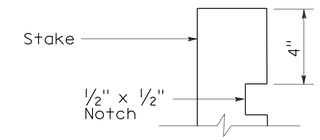

ELEVATION

STAKE NOTCH DETAIL

NOTES:

1. Temporary fiber roll spacing varies depending upon slope inclination.
2. Installations shown in the perspectives are for slope inclination of 10:1 and steeper.

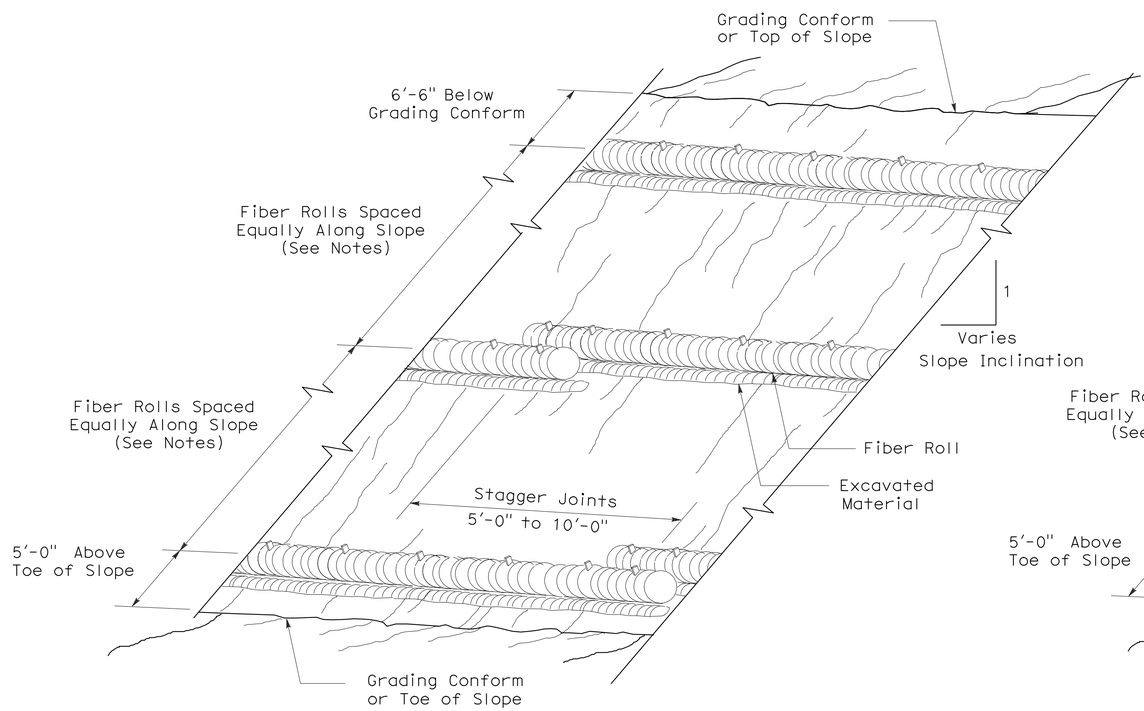

PERSPECTIVE

TEMPORARY FIBER ROLL (TYPE 1)

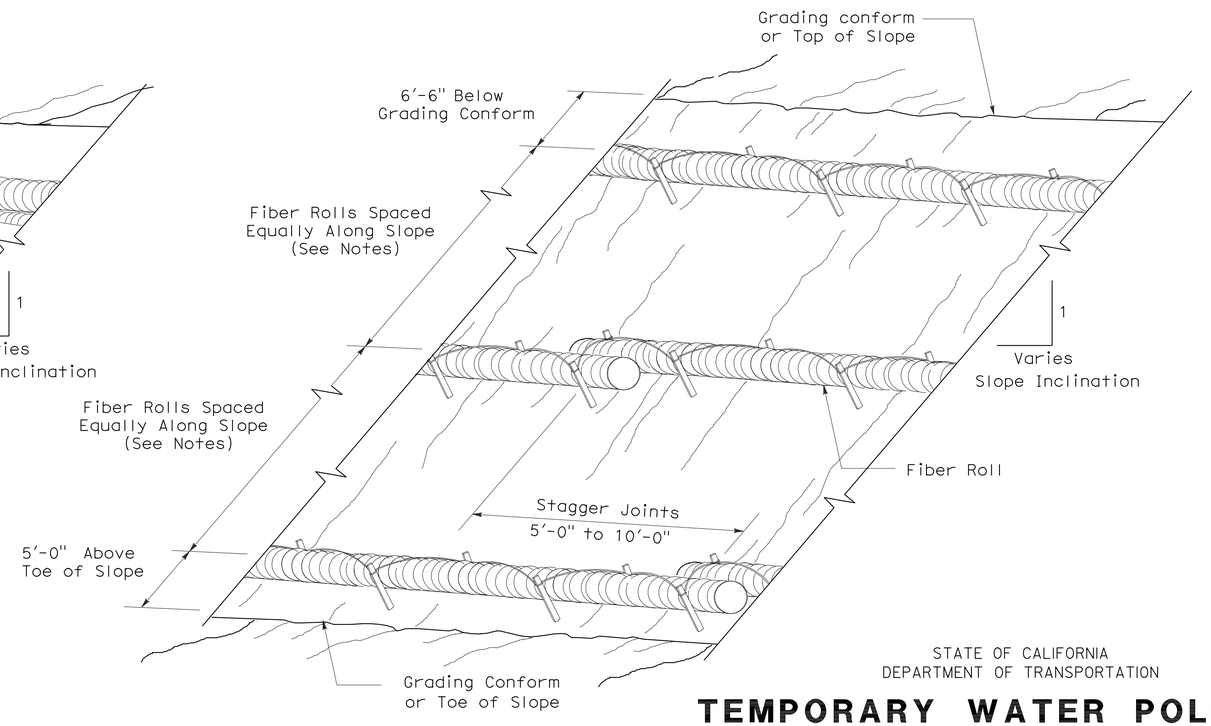

PERSPECTIVE

TEMPORARY FIBER ROLL (TYPE 2)

STATE OF CALIFORNIA
DEPARTMENT OF TRANSPORTATION

TEMPORARY WATER POLLUTION CONTROL DETAILS (TEMPORARY FIBER ROLL)

NO SCALE

RSP T56 DATED APRIL 3, 2009 SUPERSEDES STANDARD PLAN T56
DATED MAY 1, 2006 - PAGE 232 OF THE STANDARD PLANS BOOK DATED MAY 2006.

REVISED STANDARD PLAN RSP T56

2006 REVISED STANDARD PLAN RSP T56

2-23-09

DIST	COUNTY	ROUTE	POST MILES TOTAL PROJECT	SHEET NO.	TOTAL SHEETS
05	SLO	101	7.8/12.5	65	69

LICENSED LANDSCAPE ARCHITECT

August 15, 2008
PLANS Approval DATE

LICENSED LANDSCAPE ARCHITECT
Robert B. Schott 3689
Signature
11-04-08
Renewal Date
08-11-08
Date
STATE OF CALIFORNIA

The State of California or its officers or agents shall not be responsible for the accuracy or completeness of electronic copies of this plan sheet.

To accompany plans dated 4-23-12

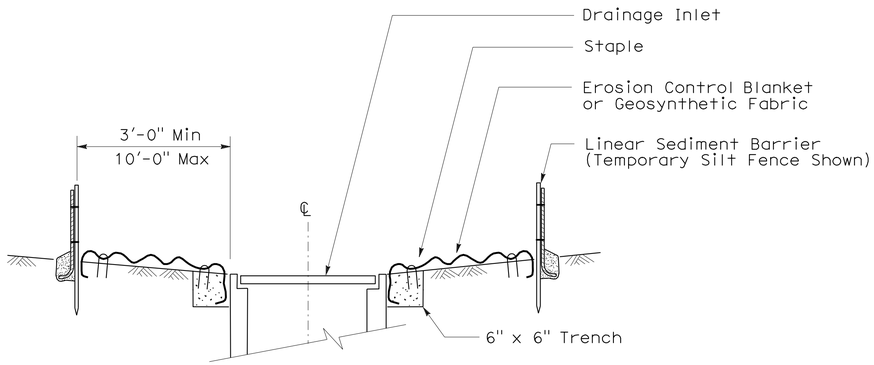

SECTION A-A

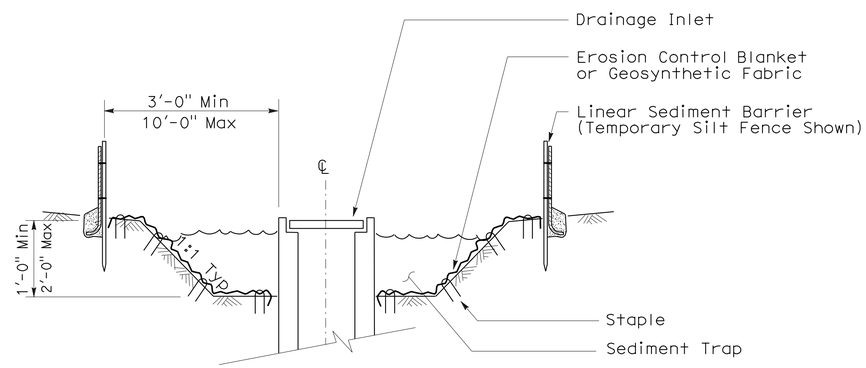

SECTION B-B

NOTES:

1. See Standard Plan T51 for Temporary Silt Fence.
2. Dimensions may vary to fit field conditions.

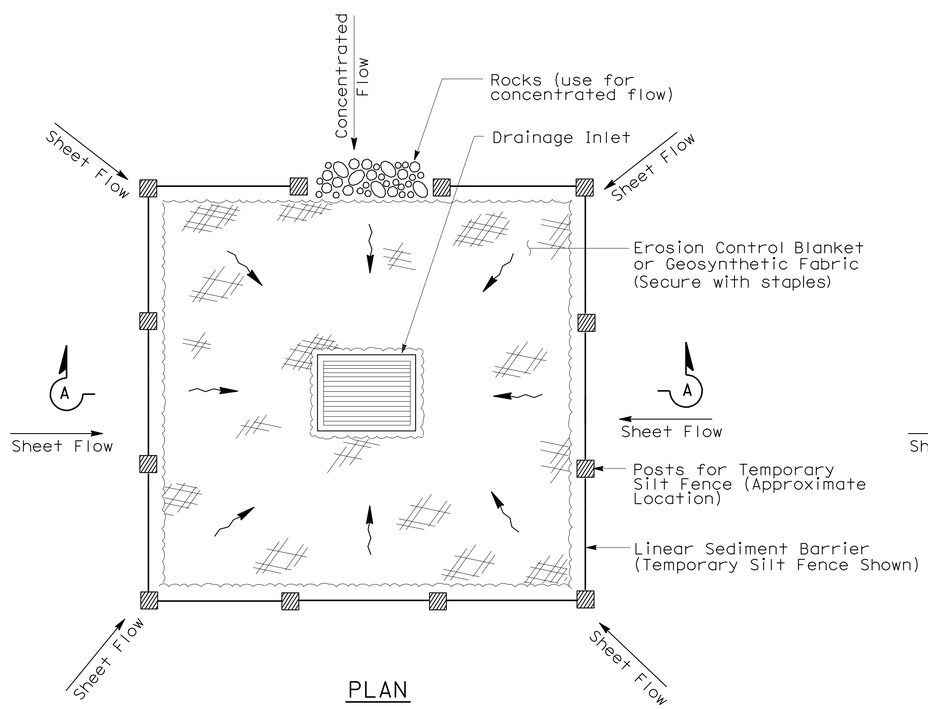

PLAN

TEMPORARY DRAINAGE
INLET PROTECTION (TYPE 1)

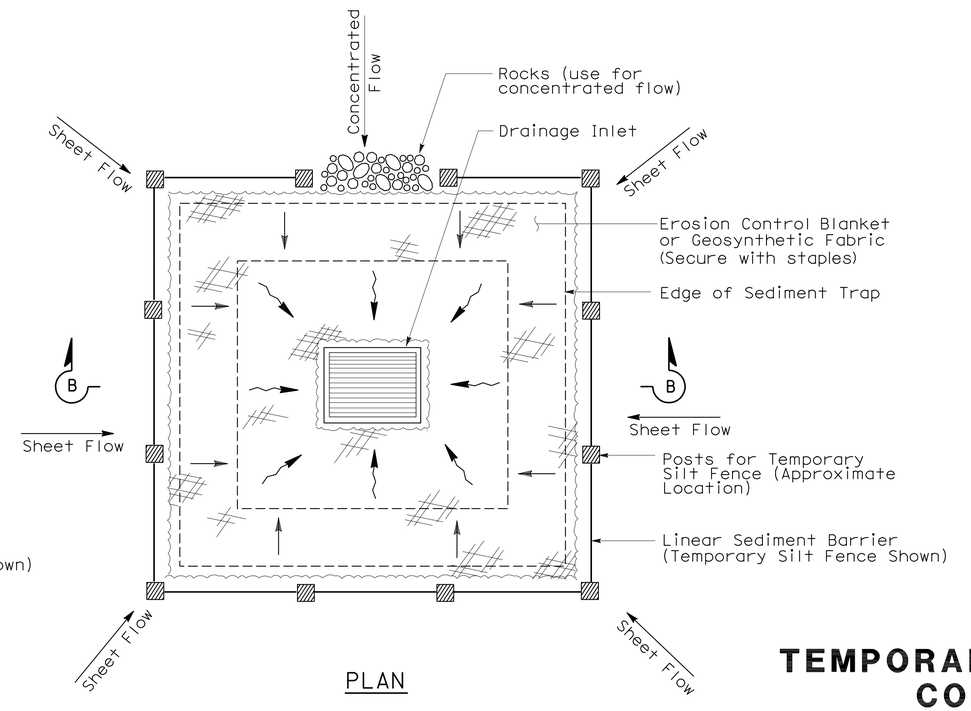

PLAN

TEMPORARY DRAINAGE
INLET PROTECTION (TYPE 2)
(EXCAVATED SEDIMENT TRAP)

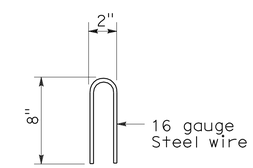

STAPLE DETAIL

STATE OF CALIFORNIA
DEPARTMENT OF TRANSPORTATION

TEMPORARY WATER POLLUTION CONTROL DETAILS (TEMPORARY DRAINAGE INLET PROTECTION)

NO SCALE

NSP T61 DATED AUGUST 15, 2008 SUPPLEMENTS
THE STANDARD PLANS BOOK DATED MAY 2006.

NEW STANDARD PLAN NSP T61

2006 NEW STANDARD PLAN NSP T61

7-11-08

DIST	COUNTY	ROUTE	POST MILES TOTAL PROJECT	SHEET NO.	TOTAL SHEETS
05	SLO	101	7.8/12.5	66	69

LICENSED LANDSCAPE ARCHITECT

August 15, 2008
PLANS APPROVAL DATE

The State of California or its officers or agents shall not be responsible for the accuracy or completeness of electronic copies of this plan sheet.

LICENSED LANDSCAPE ARCHITECT — Robert B. Schott — Signature — 11-04-08 Renewal Date — 08-11-08 Date — STATE OF CALIFORNIA

To accompany plans dated 4-23-12

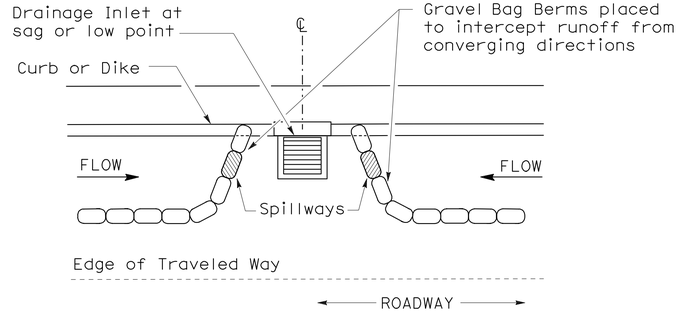

PLAN

CONFIGURATION FOR SAG POINT INLET (GRAVEL BAG BERM)

GRAVEL BAG BERM (TYPE 3A) SPACING TABLE

SLOPE OF ROADWAY (PERCENT)	1 to 3.9	4 to 5.9	6 to 7.9	8 to 10	10+
INTERVAL BETWEEN BERM	100′	75′	50′	25′	12′

For slope of less than 1%, install barriers only if erosion/sediment is prevalent

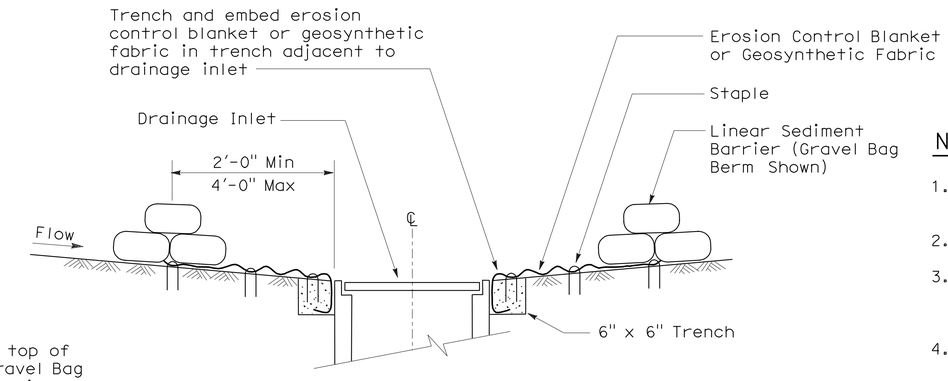

SECTION A-A

NOTES:

1. Place safety cones adjacent to drainage inlet protection.
2. Dimensions may vary to fit field conditions.
3. Install a minimum of 3 gravel bag berms upstream of each drainage inlet to be protected.
4. Position erosion control blanket or geosynthetic fabric at edge of concrete apron and secure in trench.
5. Erosion control blanket or geosynthetic fabric is not required if the area adjacent to the drainage inlet is vegetated or paved.

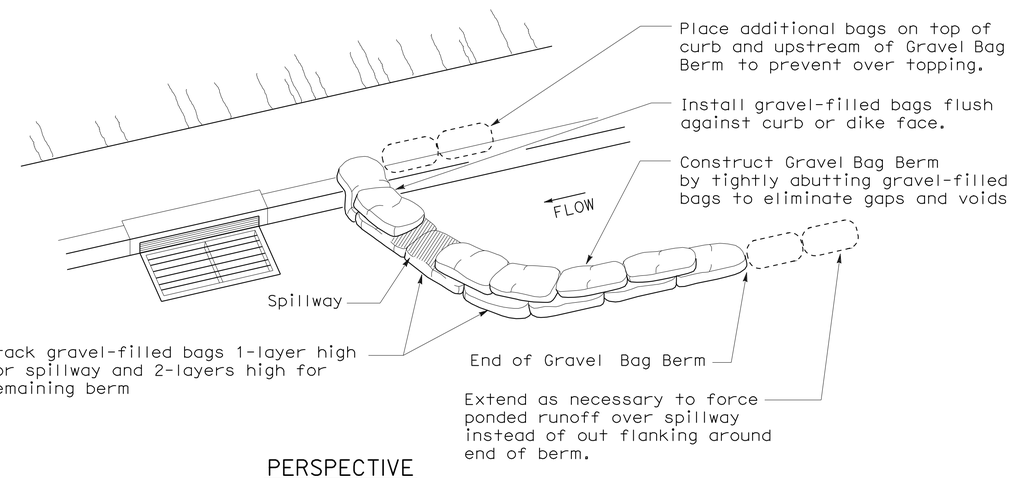

PERSPECTIVE

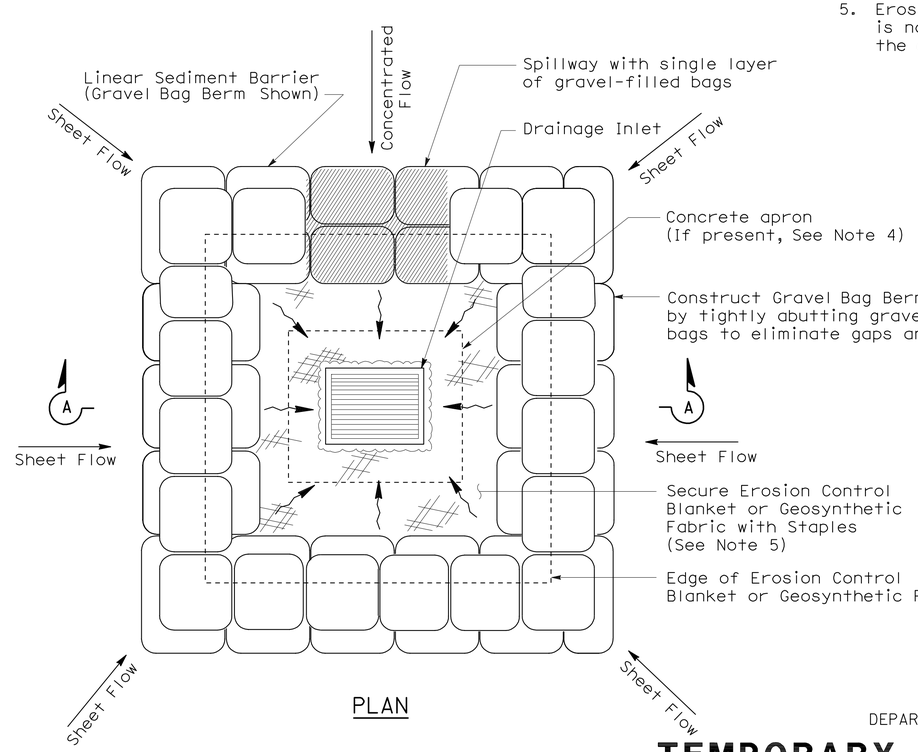

PLAN

TEMPORARY DRAINAGE INLET PROTECTION (TYPE 3B)

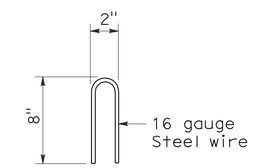

STAPLE DETAIL

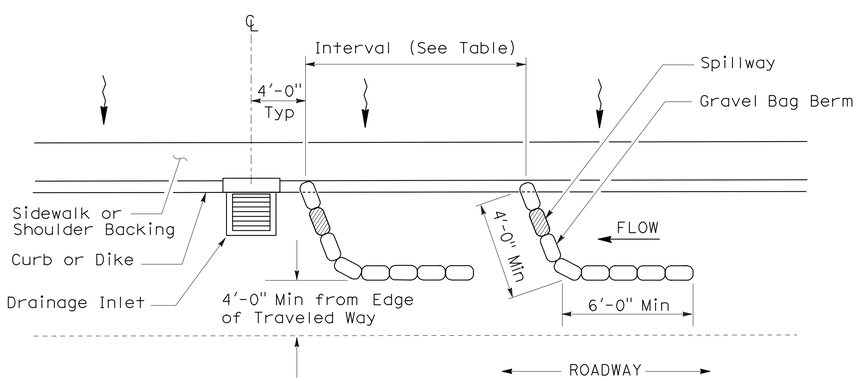

PLAN

TEMPORARY DRAINAGE INLET PROTECTION (TYPE 3A) (GRAVEL BAG BERM)

STATE OF CALIFORNIA
DEPARTMENT OF TRANSPORTATION

TEMPORARY WATER POLLUTION CONTROL DETAILS (TEMPORARY DRAINAGE INLET PROTECTION)

NO SCALE

NSP T62 DATED AUGUST 15, 2008 SUPPLEMENTS THE STANDARD PLANS BOOK DATED MAY 2006.

NEW STANDARD PLAN NSP T62

2006 NEW STANDARD PLAN NSP T62

7-11-08

DIST	COUNTY	ROUTE	POST MILES TOTAL PROJECT	SHEET NO.	TOTAL SHEETS
05	SLO	101	7.8/12.5	67	69

Robert B Schott
LICENSED LANDSCAPE ARCHITECT

August 15, 2008
PLANS APPROVAL DATE

The State of California or its officers or agents shall not be responsible for the accuracy or completeness of electronic copies of this plan sheet.

LICENSED LANDSCAPE ARCHITECT — Robert B. Schott — Signature — 11-04-08 Renewal Date — 08-11-08 Date — STATE OF CALIFORNIA

To accompany plans dated 4-23-12

FLEXIBLE SEDIMENT BARRIER SPACING TABLE

SLOPE OF ROADWAY (PERCENT)	0 to 0.9	1 to 1.9	2 to 2.9	3 to 4	5+
INTERVAL BETWEEN BARRIERS	50′	35′	30′	25′	20′
ANGLE FROM FACE OF CURB	70°	70°	70°	45°	45°
SUGGESTED BARRIER LENGTH	6′	6′	6′	6′	6′

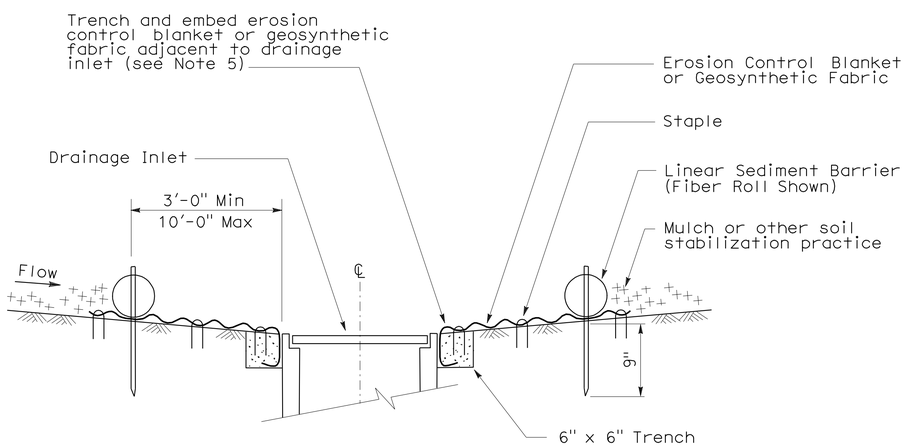

SECTION A-A

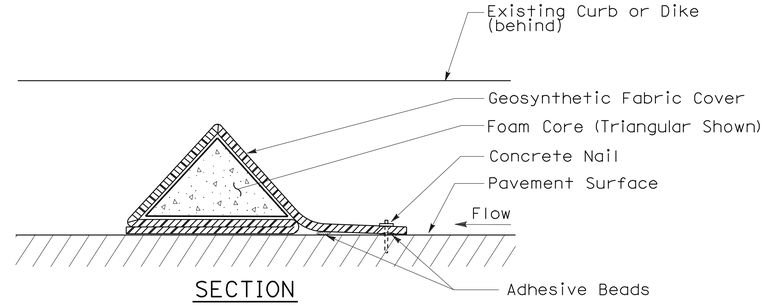

SECTION

FLEXIBLE SEDIMENT BARRIER DETAIL (FOAM BARRIER SHOWN)

NOTES:

1. See Standard Plan T51 for Temporary Silt Fence.
2. Dimensions may vary to fit field conditions.
3. Install a minimum of 3 flexible sediment barriers upstream of each drainage inlet to be protected.
4. Position erosion control blanket or geosynthetic fabric at edge of concrete apron and secure in trench.
5. Erosion control blanket or geosynthetic fabric is not required if the area adjacent to the drainage inlet is vegetated.

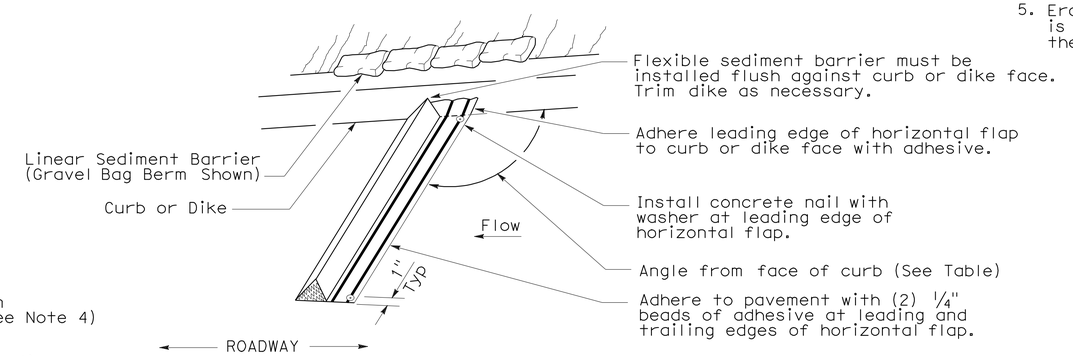

PERSPECTIVE

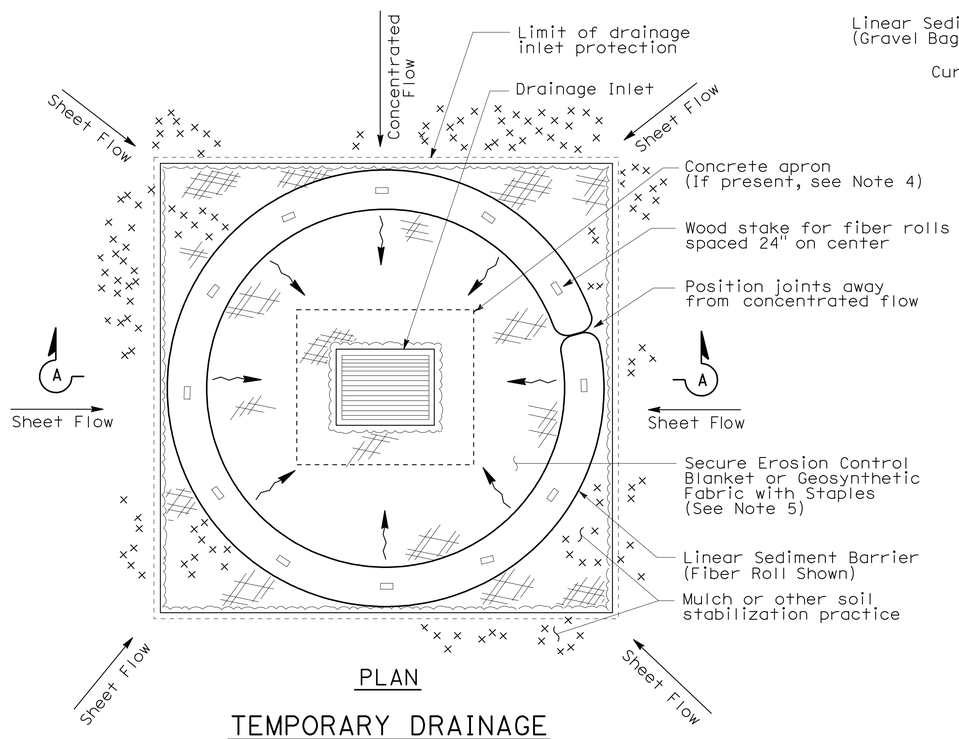

PLAN

TEMPORARY DRAINAGE INLET PROTECTION (TYPE 4A)

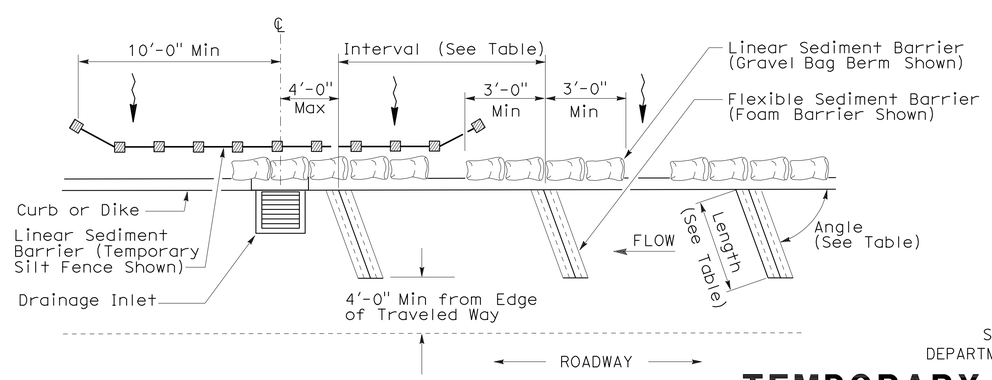

PLAN

TEMPORARY DRAINAGE INLET PROTECTION (TYPE 4B) FLEXIBLE SEDIMENT BARRIER

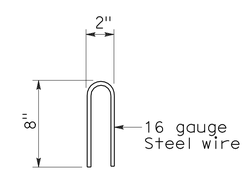

STAPLE DETAIL

STATE OF CALIFORNIA
DEPARTMENT OF TRANSPORTATION

TEMPORARY WATER POLLUTION CONTROL DETAILS (TEMPORARY DRAINAGE INLET PROTECTION)

NO SCALE

NSP T63 DATED AUGUST 15, 2008 SUPPLEMENTS THE STANDARD PLANS BOOK DATED MAY 2006.

NEW STANDARD PLAN NSP T63

2006 NEW STANDARD PLAN NSP T63

7-11-08

DIST	COUNTY	ROUTE	POST MILES TOTAL PROJECT	SHEET NO.	TOTAL SHEETS
05	SLO	101	7.8/12.5	68	69

LICENSED LANDSCAPE ARCHITECT

August 15, 2008
PLANS APPROVAL DATE

LICENSED LANDSCAPE ARCHITECT — Robert B. Schott — Signature 11-04-08 Renewal Date — 08-11-08 Date — STATE OF CALIFORNIA

The State of California or its officers or agents shall not be responsible for the accuracy or completeness of electronic copies of this plan sheet.

To accompany plans dated 4-23-12

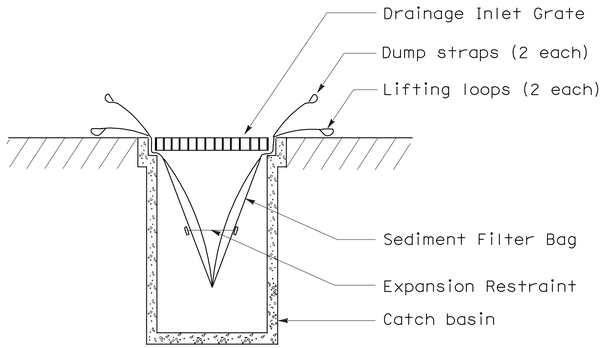

SECTION B-B

SEDIMENT FILTER BAG DETAIL

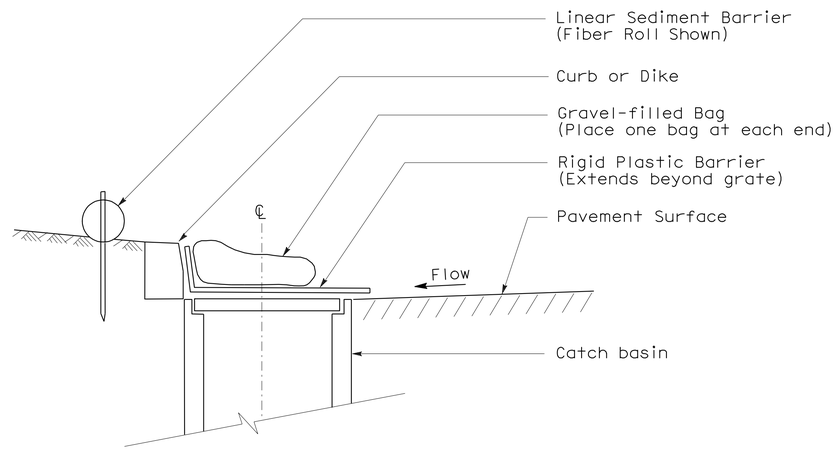

SECTION

TEMPORARY DRAINAGE INLET PROTECTION (TYPE 6A) (CATCH BASIN WITH GRATE)

NOTES:

1. See Standard Plan T51 for Temporary Silt Fence.
2. Dimensions may vary to fit field conditions.

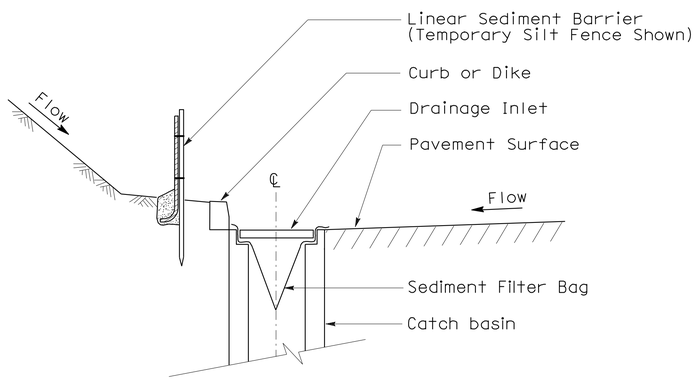

SECTION A-A

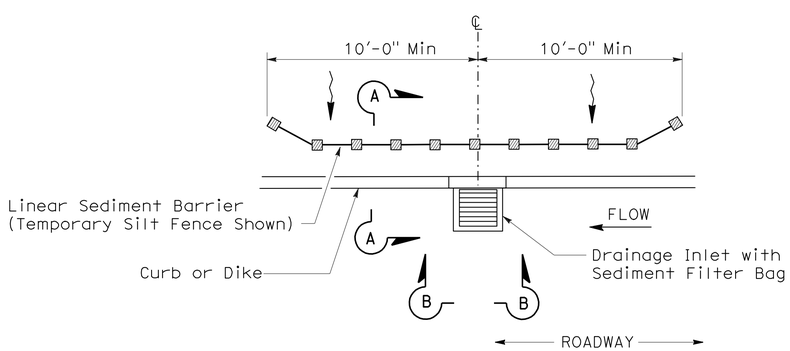

PLAN

TEMPORARY DRAINAGE INLET PROTECTION (TYPE 5) (SEDIMENT FILTER BAG)

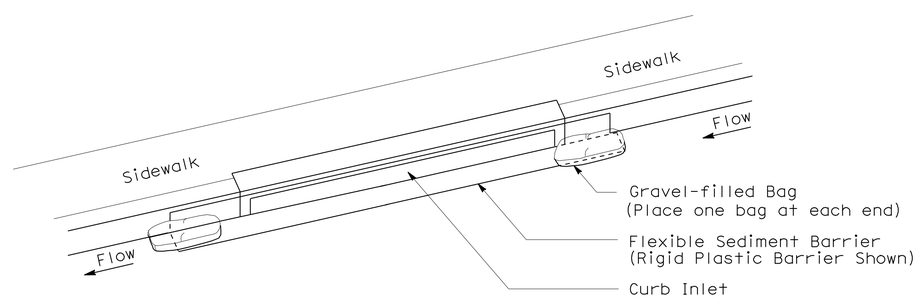

PERSPECTIVE

TEMPORARY DRAINAGE INLET PROTECTION (TYPE 6B) (CURB INLET WITHOUT GRATE)

STATE OF CALIFORNIA
DEPARTMENT OF TRANSPORTATION

TEMPORARY WATER POLLUTION CONTROL DETAILS (TEMPORARY DRAINAGE INLET PROTECTION)

NO SCALE

NSP T64 DATED AUGUST 15, 2008 SUPPLEMENTS THE STANDARD PLANS BOOK DATED MAY 2006.

NEW STANDARD PLAN NSP T64

2006 NEW STANDARD PLAN NSP T64

7-11-08

DIST	COUNTY	ROUTE	POST MILES TOTAL PROJECT	SHEET NO.	TOTAL SHEETS
05	SLO	101	7.8/12.5	69	69

LICENSED LANDSCAPE ARCHITECT

April 3, 2009
PLANS APPROVAL DATE

LICENSED LANDSCAPE ARCHITECT
ROBERT B. SCHOTT 3025
Signature
11-30-10
Renewal Date
2-25-09
Date
STATE OF CALIFORNIA

The State of California or its officers or agents shall not be responsible for the accuracy or completeness of electronic copies of this plan sheet.

To accompany plans dated 4-23-12

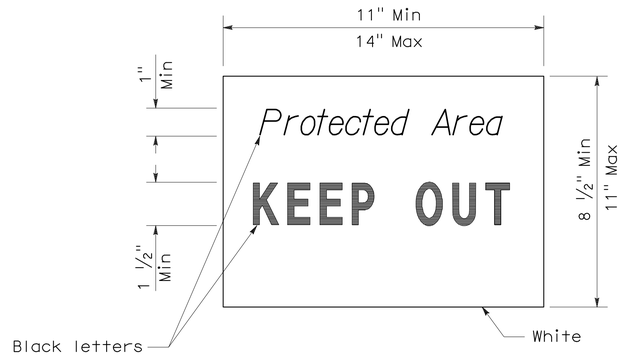

SIGN DETAIL

NOTE:

1. Temporary silt fence and temporary straw bale barrier shown for reference purposes only.

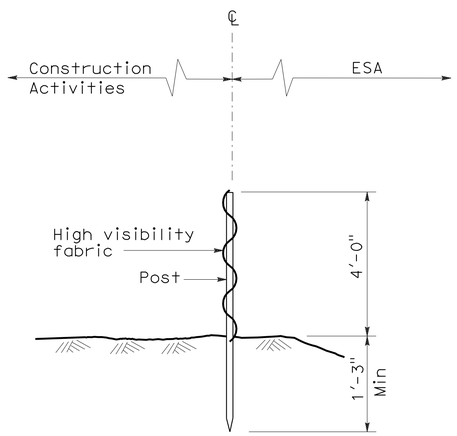

SECTION
TEMPORARY FENCE (TYPE ESA)

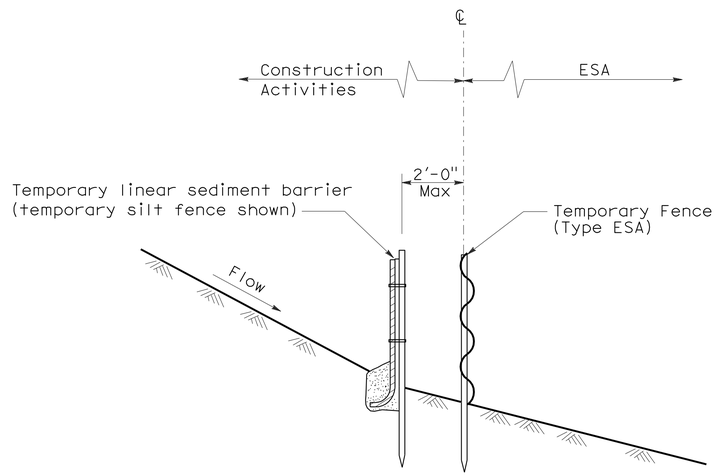

SECTION
PLACEMENT DETAIL
FOR TEMPORARY LINEAR SEDIMENT BARRIER
USED WITH TEMPORARY
FENCE (TYPE ESA)
(See Note 1)

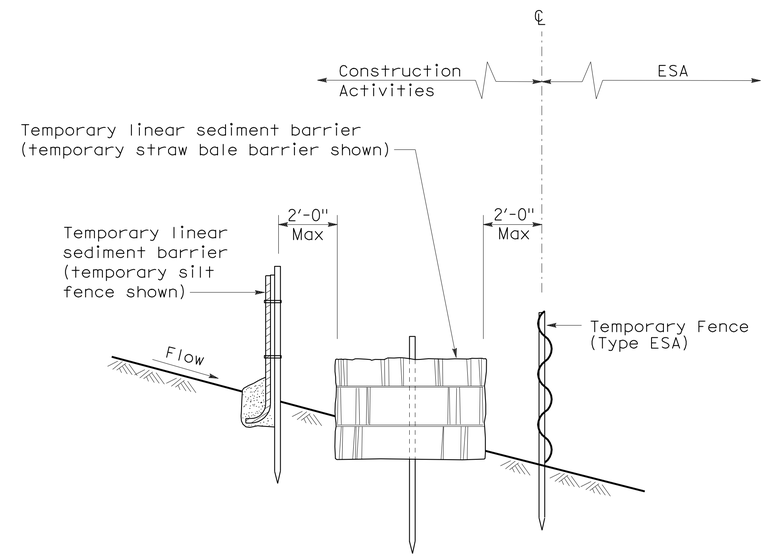

SECTION
PLACEMENT DETAIL
FOR TEMPORARY SILT FENCE
AND TEMPORARY STRAW BALE BARRIER
USED WITH TEMPORARY FENCE (TYPE ESA)
(See Note 1)

STATE OF CALIFORNIA
DEPARTMENT OF TRANSPORTATION

TEMPORARY WATER POLLUTION CONTROL DETAILS [TEMPORARY FENCE (TYPE ESA)]

NO SCALE

NSP T65 DATED APRIL 3, 2009 SUPPLEMENTS
THE STANDARD PLANS BOOK DATED MAY 2006.

NEW STANDARD PLAN NSP T65

2006 NEW STANDARD PLAN NSP T65