Dist	COUNTY	ROUTE	POST MILES TOTAL PROJECT	SHEET No.	TOTAL SHEETS
05	SCr	17	1.0/1.4	1	72

STATE OF CALIFORNIA
DEPARTMENT OF TRANSPORTATION

ACNHP-P017(112)E

PROJECT PLANS FOR CONSTRUCTION ON
STATE HIGHWAY

IN SANTA CRUZ COUNTY NEAR SANTA CRUZ FROM 0.2 MILE NORTH OF PASATIEMPO DRIVE OVERCROSSING TO BEULAH PARK UNDERCROSSING

TO BE SUPPLEMENTED BY STANDARD PLANS DATED 2010

INDEX OF PLANS

SHEET No.	DESCRIPTION
1	TITLE AND LOCATION MAP
2-4	TYPICAL SECTIONS
5-9	LAYOUTS
10-20	CONSTRUCTION DETAILS
21-25	DRAINAGE PLANS
26-29	DRAINAGE PROFILES
30-33	DRAINAGE DETAILS
34-37	DRAINAGE QUANTITIES
38	CONSTRUCTION AREA SIGNS
39-41	STAGE CONSTRUCTION PLANS
42-44	TRAFFIC HANDLING PLANS
45	PAVEMENT DELINEATION QUANTITIES
46-47	SUMMARY OF QUANTITIES
48-49	EROSION CONTROL LEGEND
50-53	EROSION CONTROL PLANS
54-55	EROSION CONTROL DETAILS
56	EROSION CONTROL QUANTITIES
57-72	REVISED STANDARD PLANS

THE STANDARD PLANS LIST APPLICABLE TO THIS CONTRACT IS INCLUDED IN THE NOTICE TO BIDDERS AND SPECIAL PROVISIONS BOOK.

LOCATION MAP

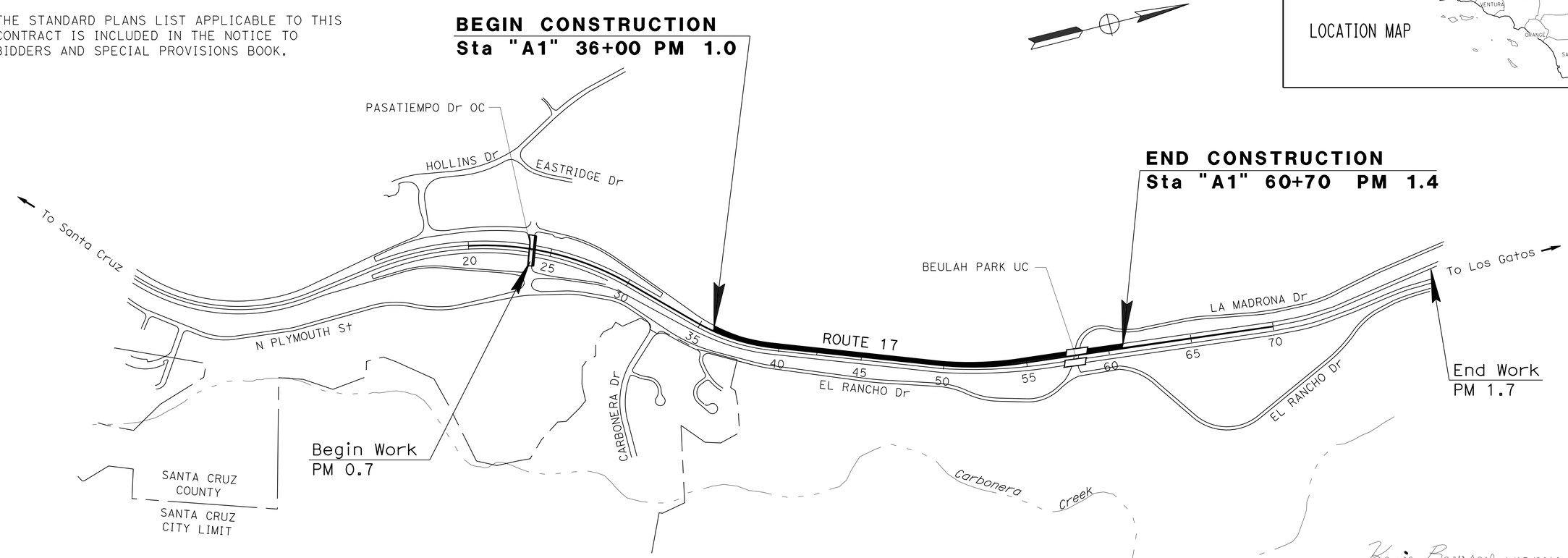

SANTA CRUZ

NO SCALE

THE CONTRACTOR SHALL POSSESS THE CLASS (OR CLASSES) OF LICENSE AS SPECIFIED IN THE "NOTICE TO BIDDERS."

Kevin Bewsey 4/15/2016
PROJECT ENGINEER DATE
REGISTERED CIVIL ENGINEER

REGISTERED PROFESSIONAL ENGINEER
KEVIN BEWSEY
No. 71485
Exp. 12/31/17
CIVIL
STATE OF CALIFORNIA

May 2, 2016
PLANS APPROVAL DATE

THE STATE OF CALIFORNIA OR ITS OFFICERS OR AGENTS SHALL NOT BE RESPONSIBLE FOR THE ACCURACY OR COMPLETENESS OF SCANNED COPIES OF THIS PLAN SHEET.

TY LIN INTERNATIONAL
1601 RESPONSE ROAD, SUITE 260
SACRAMENTO, CA 95815

CONTRACT No.	05-0Q6004
PROJECT ID	0500020290

APPROVED AS TO IMPACT ON STATE FACILITIES AND CONFORMANCE WITH APPLICABLE STATE STANDARDS AND PRACTICES AND THAT TECHNICAL OVERSIGHT WAS PERFORMED.

CONSULTANT DESIGN MANAGER	CALTRANS DESIGN OVERSIGHT APPROVAL	REGISTRATION No.	LICENSE Exp DATE	DATE SIGNED
KEITH RHODES	MASON LEUNG	71709	12/31/17	

LAST REVISION 04-15-16 | DATE PLOTTED => 07-JUN-2016 | TIME PLOTTED => 12:03

Dist	COUNTY	ROUTE	POST MILES TOTAL PROJECT	SHEET No.	TOTAL SHEETS
05	SCr	17	1.0/1.4	2	72

Kevin Bewsey 4/15/16
REGISTERED CIVIL ENGINEER DATE

5-2-16
PLANS APPROVAL DATE

REGISTERED PROFESSIONAL ENGINEER KEVIN BEWSEY No. 71485 Exp. 12/31/17 CIVIL STATE OF CALIFORNIA

THE STATE OF CALIFORNIA OR ITS OFFICERS OR AGENTS SHALL NOT BE RESPONSIBLE FOR THE ACCURACY OR COMPLETENESS OF SCANNED COPIES OF THIS PLAN SHEET.

TY LIN INTERNATIONAL
1601 RESPONSE ROAD
SUITE 260
SACRAMENTO, CA 95815

Dept OF TRANSPORTATION
DISTRICT 5
50 HIGUERA STREET
SAN LUIS OBISPO, CA 93401

DESIGN DESIGNATION

ADT (2012)	63,145	D	65%
ADT (2032)	64,110	T	3%
DHV	5,713	V	65 mph
ESAL	N/A	TI_{20}	N/A

PAVEMENT CLIMATE REGION

CENTRAL COAST

ABBREVIATIONS:

ADTWMS	ANCHORED DOUBLE TWISTED WIRE MESH SYSTEM
UB	UNTREATED BASE

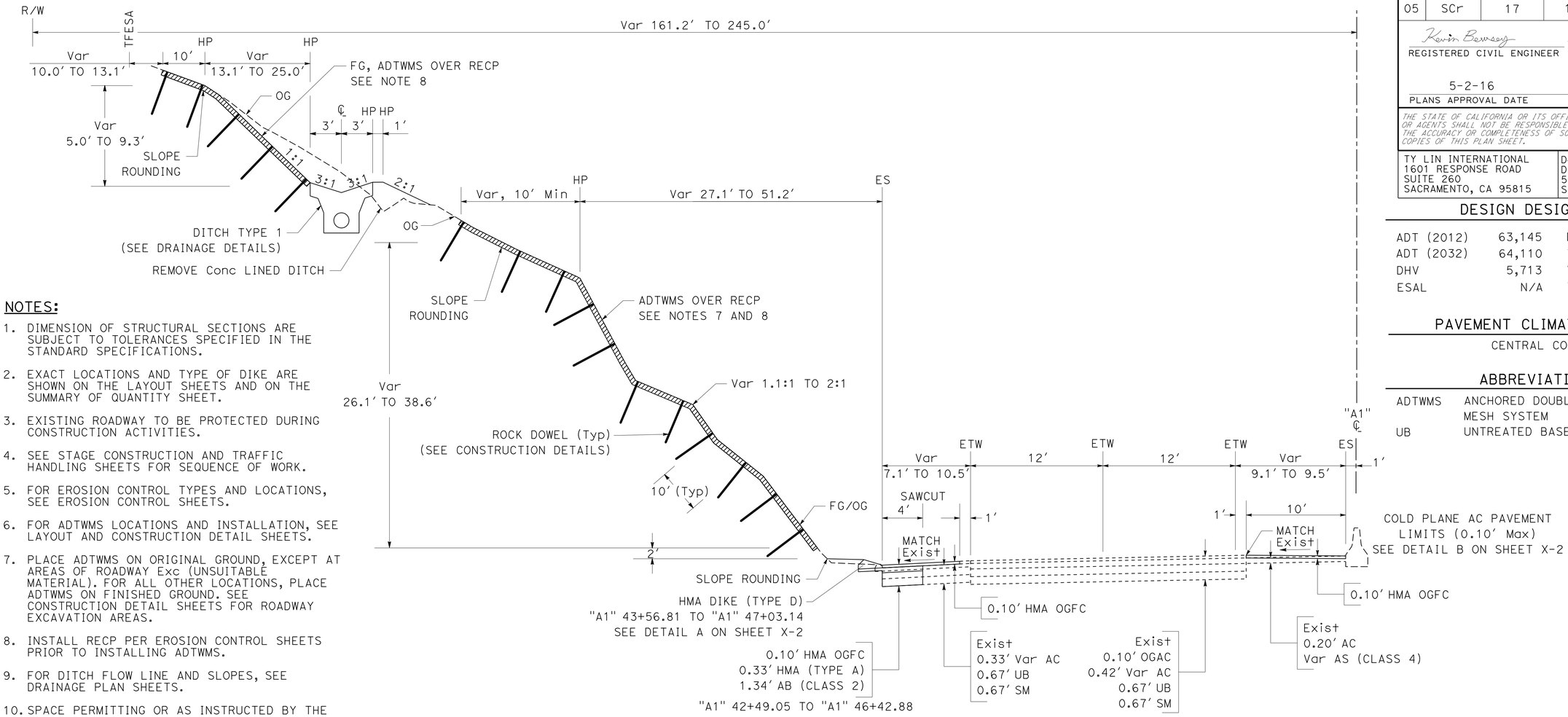

"A1" 42+49.05 TO "A1" 47+03.14

NOTES:

1. DIMENSION OF STRUCTURAL SECTIONS ARE SUBJECT TO TOLERANCES SPECIFIED IN THE STANDARD SPECIFICATIONS.
2. EXACT LOCATIONS AND TYPE OF DIKE ARE SHOWN ON THE LAYOUT SHEETS AND ON THE SUMMARY OF QUANTITY SHEET.
3. EXISTING ROADWAY TO BE PROTECTED DURING CONSTRUCTION ACTIVITIES.
4. SEE STAGE CONSTRUCTION AND TRAFFIC HANDLING SHEETS FOR SEQUENCE OF WORK.
5. FOR EROSION CONTROL TYPES AND LOCATIONS, SEE EROSION CONTROL SHEETS.
6. FOR ADTWMS LOCATIONS AND INSTALLATION, SEE LAYOUT AND CONSTRUCTION DETAIL SHEETS.
7. PLACE ADTWMS ON ORIGINAL GROUND, EXCEPT AT AREAS OF ROADWAY Exc (UNSUITABLE MATERIAL). FOR ALL OTHER LOCATIONS, PLACE ADTWMS ON FINISHED GROUND. SEE CONSTRUCTION DETAIL SHEETS FOR ROADWAY EXCAVATION AREAS.
8. INSTALL RECP PER EROSION CONTROL SHEETS PRIOR TO INSTALLING ADTWMS.
9. FOR DITCH FLOW LINE AND SLOPES, SEE DRAINAGE PLAN SHEETS.
10. SPACE PERMITTING OR AS INSTRUCTED BY THE ENGINEER.

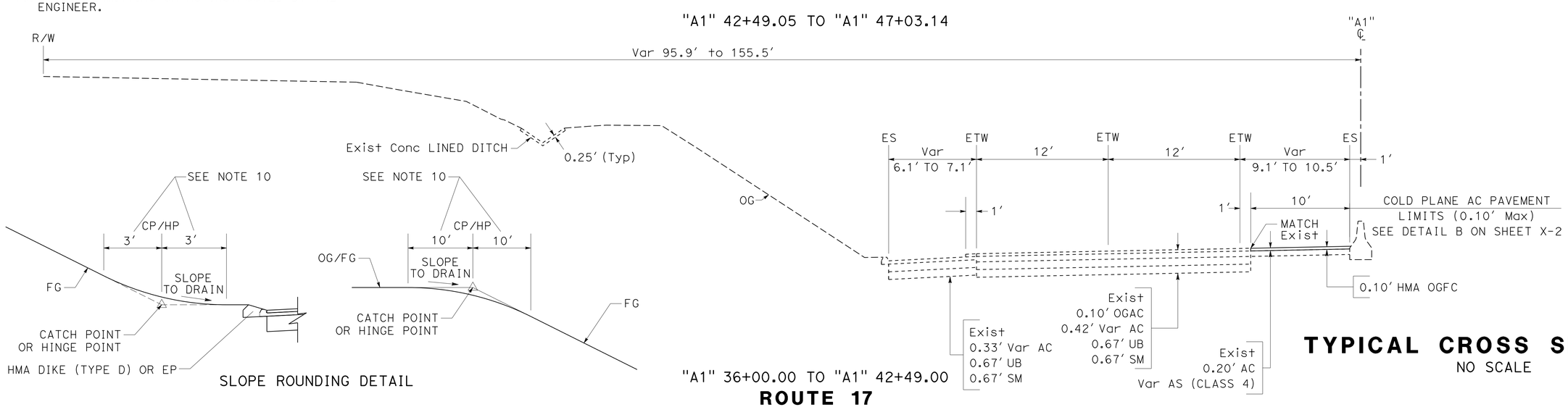

SLOPE ROUNDING DETAIL

"A1" 36+00.00 TO "A1" 42+49.00

ROUTE 17

TYPICAL CROSS SECTIONS

NO SCALE

X-1

STATE OF CALIFORNIA - DEPARTMENT OF TRANSPORTATION
Caltrans

CONSULTANT FUNCTIONAL SUPERVISOR: KEITH RHODES
CALCULATED-DESIGNED BY: K. BEWSEY/D. ZURCHER
CHECKED BY: KEVIN BEWSEY
REVISED BY: DZ
DATE REVISED: 04/15/16

LAST REVISION 04-15-16
DATE PLOTTED => 07-JUN-2016
TIME PLOTTED => 12:03

Dist	COUNTY	ROUTE	POST MILES TOTAL PROJECT	SHEET No.	TOTAL SHEETS
05	SCr	17	1.0/1.4	3	72

Kevin Bewsey 4/15/16
REGISTERED CIVIL ENGINEER DATE

5-2-16
PLANS APPROVAL DATE

REGISTERED PROFESSIONAL ENGINEER KEVIN BEWSEY No. 71485 Exp. 12/31/17 CIVIL STATE OF CALIFORNIA

THE STATE OF CALIFORNIA OR ITS OFFICERS OR AGENTS SHALL NOT BE RESPONSIBLE FOR THE ACCURACY OR COMPLETENESS OF SCANNED COPIES OF THIS PLAN SHEET.

TY LIN INTERNATIONAL
1601 RESPONSE ROAD
SUITE 260
SACRAMENTO, CA 95815

Dept OF TRANSPORTATION
DISTRICT 5
50 HIGUERA STREET
SAN LUIS OBISPO, CA 93401

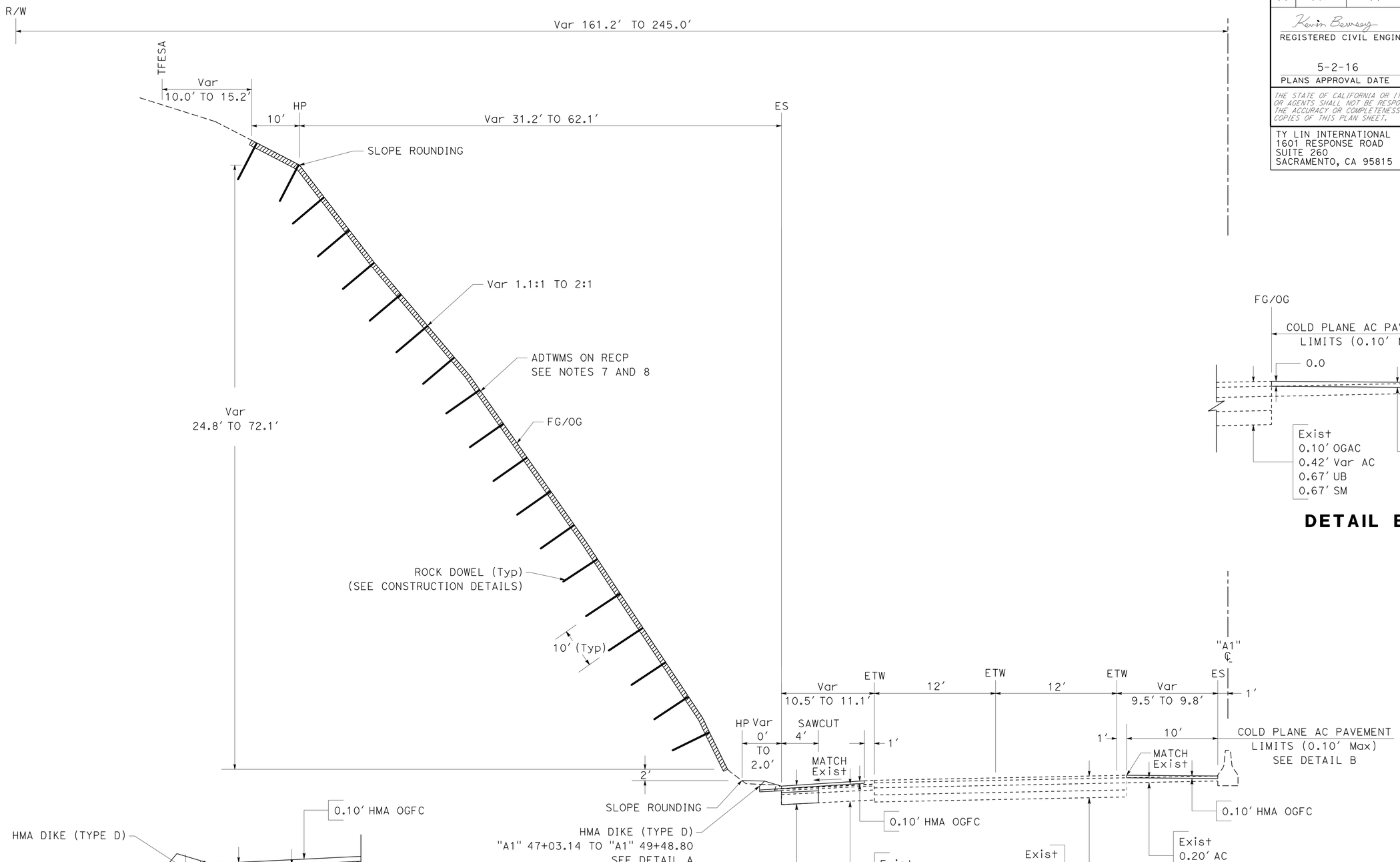

DETAIL B

DETAIL A

"A1" 47+03.14 TO "A1" 49+48.80
ROUTE 17

TYPICAL CROSS SECTIONS
NO SCALE

X-2

STATE OF CALIFORNIA - DEPARTMENT OF TRANSPORTATION
Caltrans®

CONSULTANT FUNCTIONAL SUPERVISOR: KEITH RHODES
CALCULATED-DESIGNED BY: K. BEWSEY/D. ZURCHER
CHECKED BY: KEVIN BEWSEY
REVISED BY: DZ
DATE REVISED: 04/15/16

LAST REVISION 04-15-16 | DATE PLOTTED => 07-JUN-2016 | TIME PLOTTED => 12:03

Dist	COUNTY	ROUTE	POST MILES TOTAL PROJECT	SHEET No.	TOTAL SHEETS
05	SCr	17	1.0/1.4	4	72

Kevin Bewsey 4/15/16
REGISTERED CIVIL ENGINEER DATE

5-2-16
PLANS APPROVAL DATE

REGISTERED PROFESSIONAL ENGINEER KEVIN BEWSEY No. 71485 Exp. 12/31/17 CIVIL STATE OF CALIFORNIA

THE STATE OF CALIFORNIA OR ITS OFFICERS OR AGENTS SHALL NOT BE RESPONSIBLE FOR THE ACCURACY OR COMPLETENESS OF SCANNED COPIES OF THIS PLAN SHEET.

TY LIN INTERNATIONAL
1601 RESPONSE ROAD
SUITE 260
SACRAMENTO, CA 95815

Dept OF TRANSPORTATION
DISTRICT 5
50 HIGUERA STREET
SAN LUIS OBISPO, CA 93401

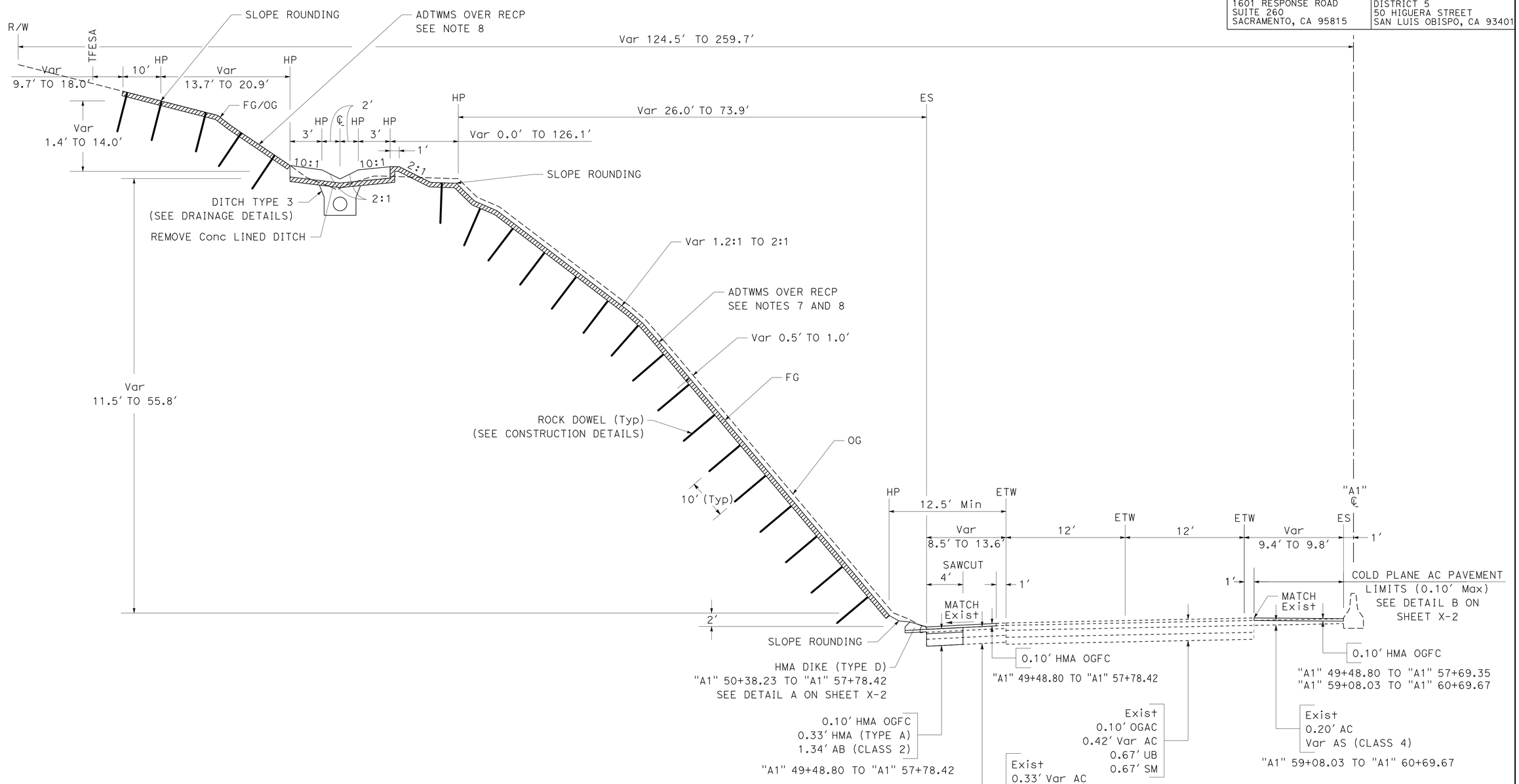

"A1" 49+48.80 TO "A1" 60+69.67
ROUTE 17

TYPICAL CROSS SECTIONS
NO SCALE

X-3

REVISED BY	DZ
DATE REVISED	04/15/16
CALCULATED-DESIGNED BY	K. BEWSEY/D. ZURCHER
CHECKED BY	KEVIN BEWSEY
CONSULTANT FUNCTIONAL SUPERVISOR	KEITH RHODES

STATE OF CALIFORNIA - DEPARTMENT OF TRANSPORTATION
Caltrans

LAST REVISION 04-15-16 | DATE PLOTTED => 07-JUN-2016 | TIME PLOTTED => 12:03

Dist	COUNTY	ROUTE	POST MILES TOTAL PROJECT	SHEET No.	TOTAL SHEETS
05	SCr	17	1.0/1.4	5	72

REGISTERED CIVIL ENGINEER — DATE: 3-7-16

PLANS APPROVAL DATE: 5-2-16

REGISTERED PROFESSIONAL ENGINEER — JENNIFER ABRAMS — No. 77782 — Exp. 6-30-17 — CIVIL — STATE OF CALIFORNIA

THE STATE OF CALIFORNIA OR ITS OFFICERS OR AGENTS SHALL NOT BE RESPONSIBLE FOR THE ACCURACY OR COMPLETENESS OF SCANNED COPIES OF THIS PLAN SHEET.

WRECO
1243 ALPINE ROAD
SUITE 108
WALNUT CREEK, CA 94596

Dept OF TRANSPORTATION
DISTRICT 5
50 HIGUERA STREET
SAN LUIS OBISPO, CA 93401

NOTES:

1. FOR ACCURATE RIGHT OF WAY DATA, CONTACT RIGHT OF WAY ENGINEERING AT THE DISTRICT OFFICE.
2. FOR EROSION CONTROL TYPES, LOCATIONS, AND METHOD OF APPLICATION, SEE EC SHEETS.
3. INSTALL RECP PER EC SHEETS PRIOR TO INSTALLING ADWTMS.
4. FOR FINISHED GRADE, SEE DRAINAGE PROFILES AND CONSTRUCTION DETAILS.
5. LOCATIONS OF EXISTING UTLILITIES ARE APPROXIMATE, VERIFY LOCATION OF EXISTING UTILITIES.
6. SEE DRAINAGE PLANS FOR DITCH/ACCESS ROAD INFORMATION.
7. SEE CONSTRUCTION DETAILS FOR ROADWAY Exc (UNSUITABLE MATERIAL), ROADWAY Exc (TYPE A), DUFF COLLECTION AREAS, VEGETATION CONTROL (TYPE 1), CLEAR AND GRUB OBJECTIONAL MATERIAL, AND CLEAR MATERIAL.
8. WHERE NECESSARY, SPLICE ADTWMS AT EXISTING TREES TO REMAIN.
9. UNDERGROUND FACILITIES ARE NOT POSITIVELY LOCATED. CONTRACTOR SHALL FIELD VERIFY EXACT LOCATION.
10. EXACT LOCATION OF WROUGHT IRON FENCE IS DETERMINED BY ENGINEER.
11. SEE CONSTRUCTION DETAIL SHEETS FOR LAYOUT OF ADTWMS.

LEGEND

- Exist Conc DITCH
- ROCK SLOPE PROTECTION/ROCK STAIN
- ANCHORED DOUBLE TWISTED WIRE MESH SYSTEM
- MAINTENANCE VEHICLE PULLOUT (MVP)
- EXISTING TREE TO REMAIN
- COLD PLANE AC PAVEMENT (0.10' Max)
- SAWCUT LINE
- LIMITS OF AERIALLY DEPOSITED LEAD (ADL)

ABBREVIATION:

ADTWMS - ANCHORED DOUBLE TWISTED WIRE MESH SYSTEM

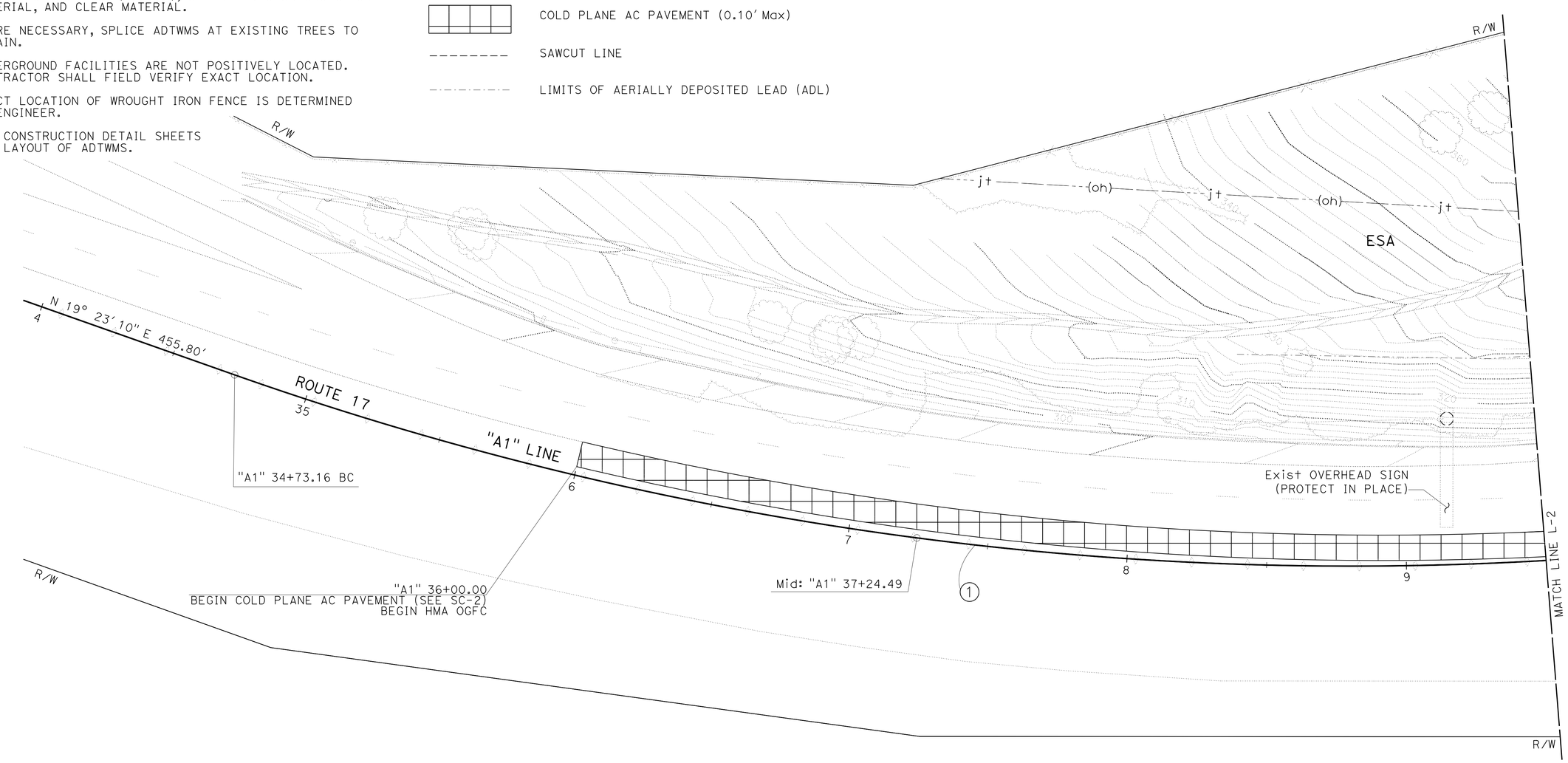

CURVE DATA

No. ⊕	R	Δ	T	L	NORTHING	EASTING
1	1200'	24°00'00"	255.07'	502.65'	1827320.93	6116463.66

LAYOUT

SCALE: 1'' = 20'

L-1

STATE OF CALIFORNIA - DEPARTMENT OF TRANSPORTATION — Caltrans

CONSULTANT FUNCTIONAL SUPERVISOR: HAN-BIN LIANG

CALCULATED-DESIGNED BY: ALVIN YIM — CHECKED BY: JENNIFER ABRAMS

REVISED BY: AY — DATE REVISED: 04/15/16

LAST REVISION 04-15-16 — DATE PLOTTED => 07-JUN-2016 — TIME PLOTTED => 12:03

Dist	COUNTY	ROUTE	POST MILES TOTAL PROJECT	SHEET No.	TOTAL SHEETS
05	SCr	17	1.0/1.4	6	72

Jennifer Abrams 3-7-16
REGISTERED CIVIL ENGINEER DATE

5-2-16
PLANS APPROVAL DATE

REGISTERED PROFESSIONAL ENGINEER JENNIFER ABRAMS No. 77782 Exp. 6-30-17 CIVIL STATE OF CALIFORNIA

THE STATE OF CALIFORNIA OR ITS OFFICERS OR AGENTS SHALL NOT BE RESPONSIBLE FOR THE ACCURACY OR COMPLETENESS OF SCANNED COPIES OF THIS PLAN SHEET.

WRECO
1243 ALPINE ROAD
SUITE 108
WALNUT CREEK, CA 94596

Dept OF TRANSPORTATION
DISTRICT 5
50 HIGUERA STREET
SAN LUIS OBISPO, CA 93401

NOTE:

FOR ACCURATE RIGHT OF WAY DATA, CONTACT RIGHT OF WAY ENGINEERING AT THE DISTRICT OFFICE.

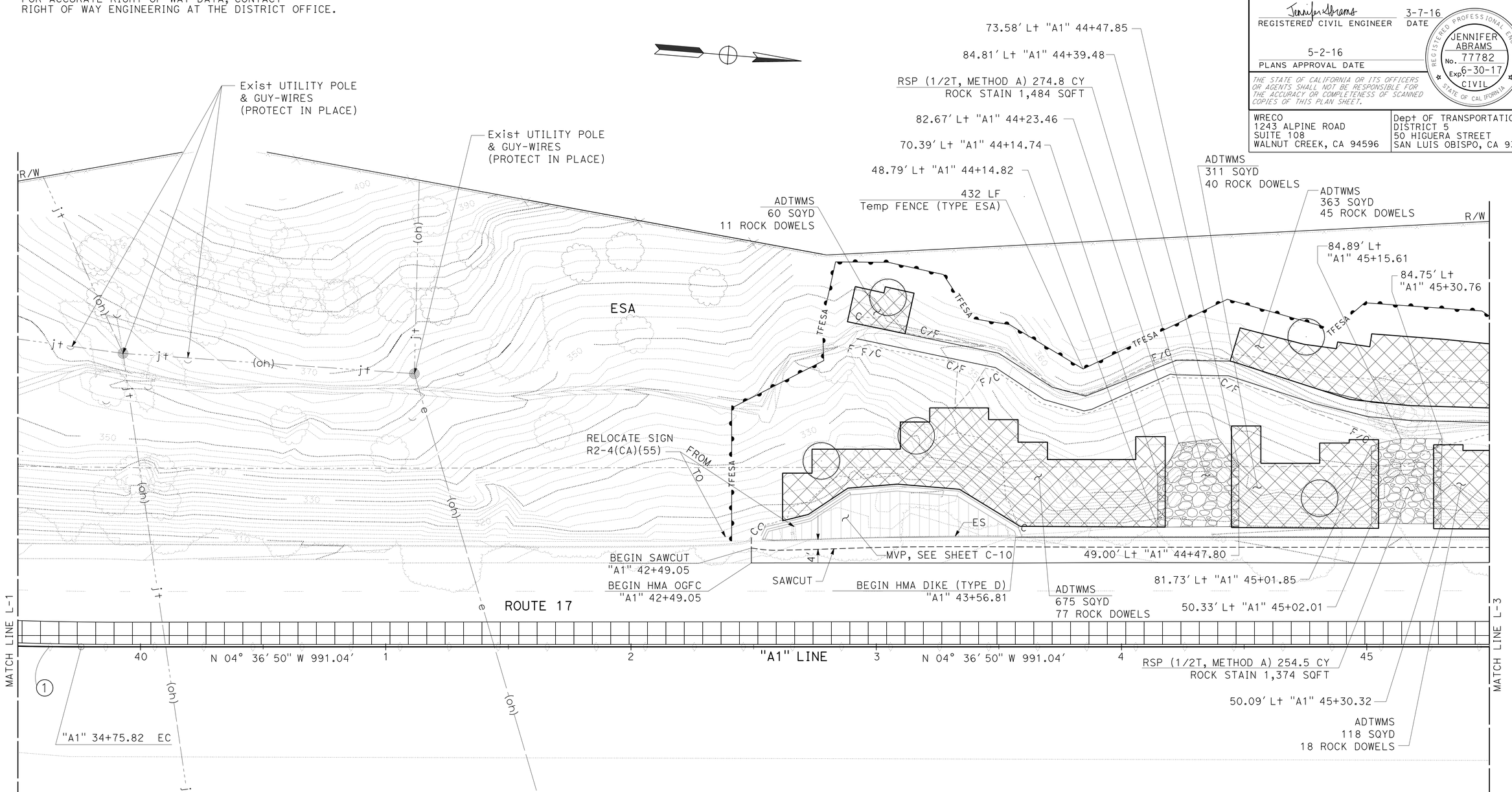

CURVE DATA

No. ⊕	R	Δ	T	L	NORTHING	EASTING
1	1200′	24°00′00"	255.07′	502.65′	1827320.93	6116463.66

LAYOUT

SCALE: 1″ = 20′

L-2

REVISED BY	DATE REVISED
AY	04/15/16

ALVIN YIM — JENNIFER ABRAMS — CALCULATED-DESIGNED BY — CHECKED BY

CONSULTANT FUNCTIONAL SUPERVISOR: HAN-BIN LIANG

STATE OF CALIFORNIA - DEPARTMENT OF TRANSPORTATION — Caltrans

LAST REVISION 04-15-16 | DATE PLOTTED => 07-JUN-2016 | TIME PLOTTED => 12:03

Dist	COUNTY	ROUTE	POST MILES TOTAL PROJECT	SHEET No.	TOTAL SHEETS
05	SCr	17	1.0/1.4	7	72

REGISTERED CIVIL ENGINEER 3-7-16 DATE

5-2-16
PLANS APPROVAL DATE

REGISTERED PROFESSIONAL ENGINEER JENNIFER ABRAMS No. 77782 Exp. 6-30-17 CIVIL STATE OF CALIFORNIA

THE STATE OF CALIFORNIA OR ITS OFFICERS OR AGENTS SHALL NOT BE RESPONSIBLE FOR THE ACCURACY OR COMPLETENESS OF SCANNED COPIES OF THIS PLAN SHEET.

WRECO
1243 ALPINE ROAD
SUITE 108
WALNUT CREEK, CA 94596

Dept OF TRANSPORTATION
DISTRICT 5
50 HIGUERA STREET
SAN LUIS OBISPO, CA 93401

NOTE:

FOR ACCURATE RIGHT OF WAY DATA, CONTACT RIGHT OF WAY ENGINEERING AT THE DISTRICT OFFICE.

CURVE DATA

No. ⊕	R	Δ	T	L	NORTHING	EASTING
2	2000′	14°19′30″	251.33′	500.04′	1828244.44	6115586.54

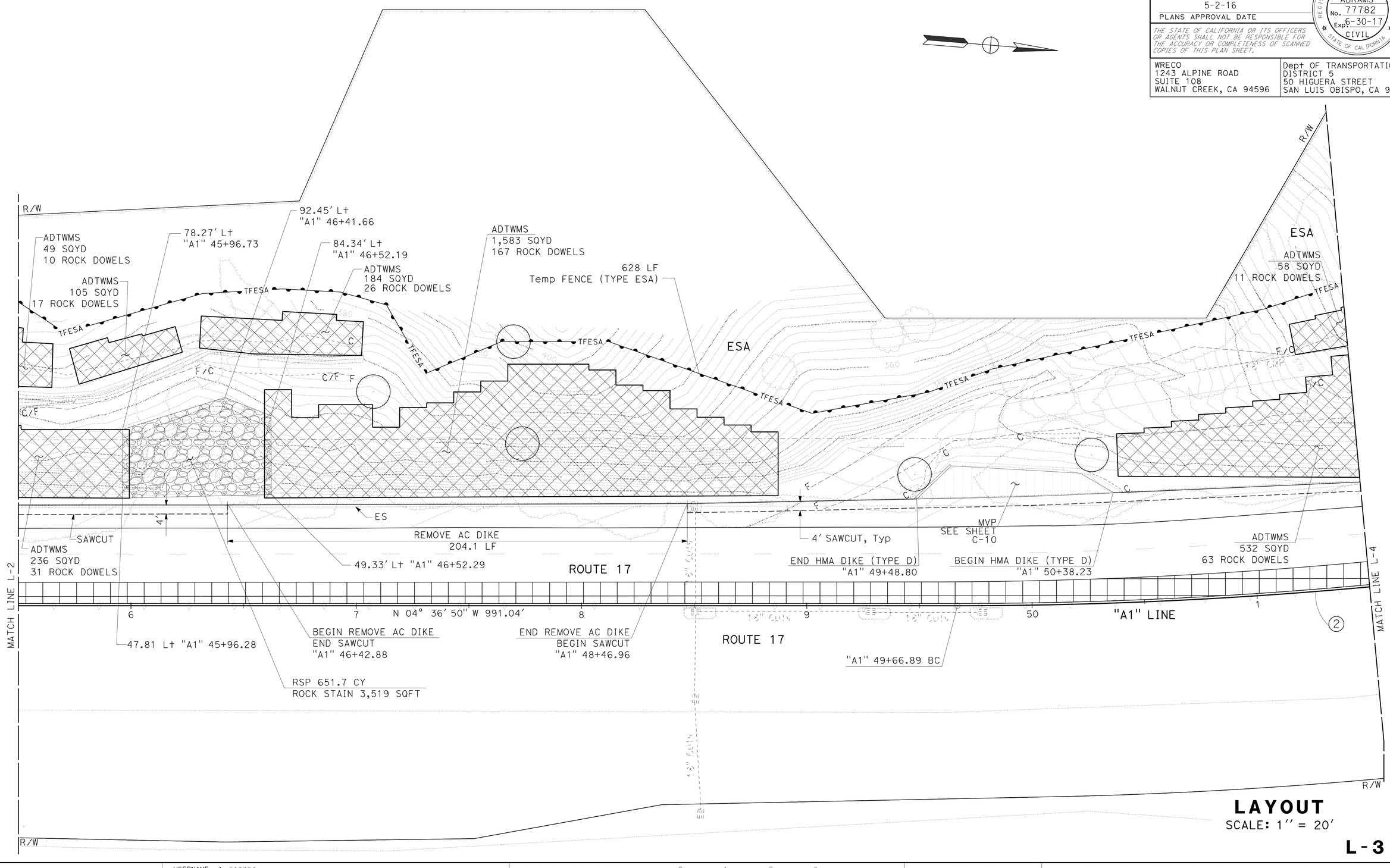

LAYOUT

SCALE: 1″ = 20′

L-3

STATE OF CALIFORNIA - DEPARTMENT OF TRANSPORTATION

Caltrans

CONSULTANT FUNCTIONAL SUPERVISOR: HAN-BIN LIANG

CALCULATED-DESIGNED BY: ALVIN YIM

CHECKED BY: JENNIFER ABRAMS

REVISED BY: AY

DATE REVISED: 04/15/16

LAST REVISION 04-15-16 | DATE PLOTTED => 07-JUN-2016 | TIME PLOTTED => 12:03

Dist	COUNTY	ROUTE	POST MILES TOTAL PROJECT	SHEET No.	TOTAL SHEETS
05	SCr	17	1.0/1.4	8	72

REGISTERED CIVIL ENGINEER — DATE: 3-7-16

5-2-16
PLANS APPROVAL DATE

REGISTERED PROFESSIONAL ENGINEER — JENNIFER ABRAMS No. 77782 Exp. 6-30-17 CIVIL — STATE OF CALIFORNIA

THE STATE OF CALIFORNIA OR ITS OFFICERS OR AGENTS SHALL NOT BE RESPONSIBLE FOR THE ACCURACY OR COMPLETENESS OF SCANNED COPIES OF THIS PLAN SHEET.

WRECO
1243 ALPINE ROAD
SUITE 108
WALNUT CREEK, CA 94596

Dept OF TRANSPORTATION
DISTRICT 5
50 HIGUERA STREET
SAN LUIS OBISPO, CA 93401

NOTE:

FOR ACCURATE RIGHT OF WAY DATA, CONTACT RIGHT OF WAY ENGINEERING AT THE DISTRICT OFFICE.

CURVE DATA

No. ⊕	R	Δ	T	L	NORTHING	EASTING
2	2000′	14°19′30″	251.33′	500.04′	1828244.44	6115586.54

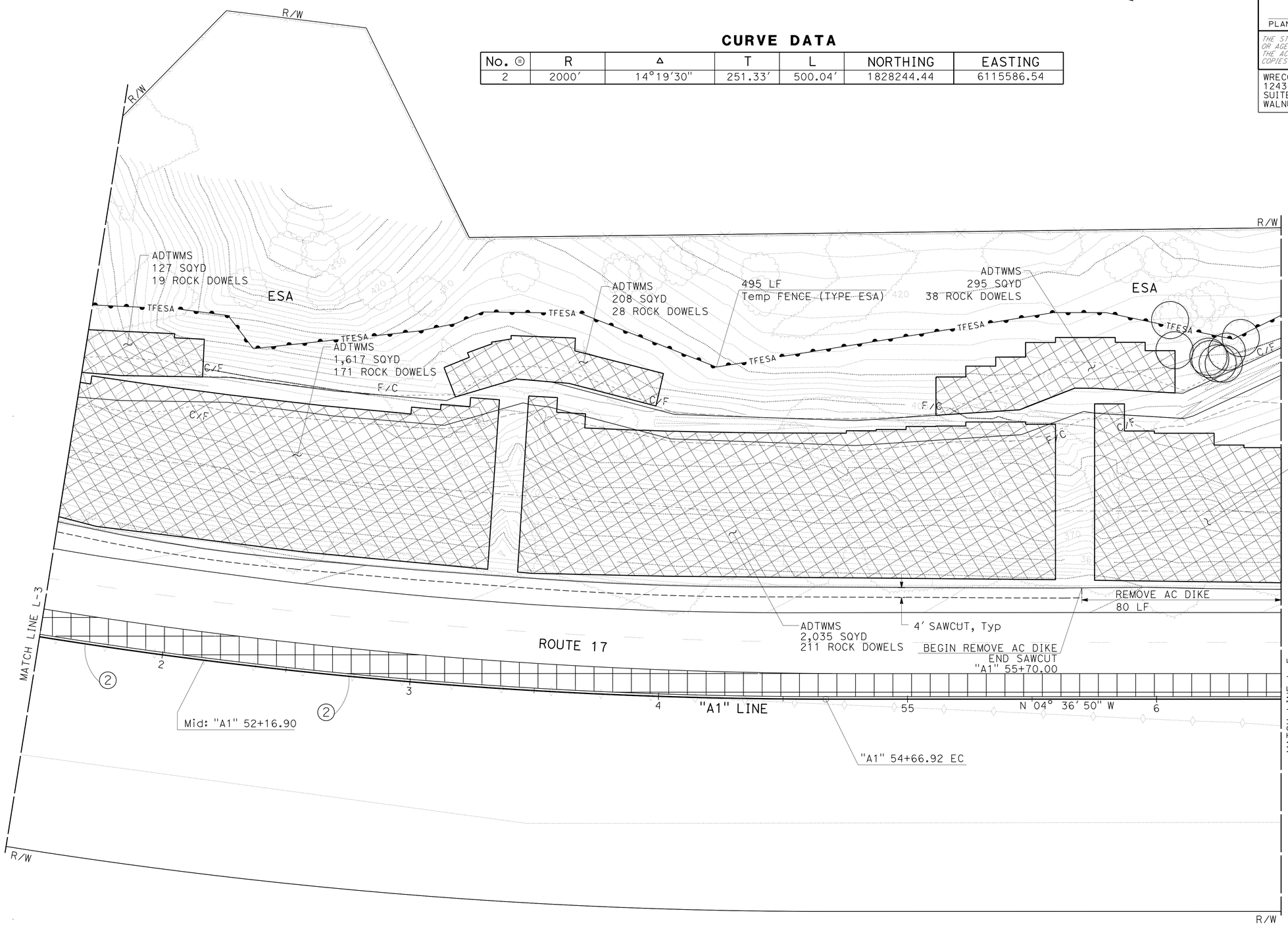

LAYOUT

SCALE: 1″ = 20′

L-4

STATE OF CALIFORNIA - DEPARTMENT OF TRANSPORTATION

Caltrans

CONSULTANT FUNCTIONAL SUPERVISOR: HAN-BIN LIANG

CALCULATED-DESIGNED BY: JENNIFER ABRAMS

CHECKED BY: ALVIN YIM

REVISED BY: AY

DATE REVISED: 04/15/16

LAST REVISION 04-15-16 | DATE PLOTTED => 07-JUN-2016 | TIME PLOTTED => 12:03

Dist	COUNTY	ROUTE	POST MILES TOTAL PROJECT	SHEET No.	TOTAL SHEETS
05	SCr	17	1.0/1.4	9	72

Jennifer Abrams 3-7-16
REGISTERED CIVIL ENGINEER DATE

5-2-16
PLANS APPROVAL DATE

REGISTERED PROFESSIONAL ENGINEER
JENNIFER ABRAMS
No. 77782
Exp. 6-30-17
CIVIL
STATE OF CALIFORNIA

THE STATE OF CALIFORNIA OR ITS OFFICERS OR AGENTS SHALL NOT BE RESPONSIBLE FOR THE ACCURACY OR COMPLETENESS OF SCANNED COPIES OF THIS PLAN SHEET.

WRECO
1243 ALPINE ROAD
SUITE 108
WALNUT CREEK, CA 94596

Dept OF TRANSPORTATION
DISTRICT 5
50 HIGUERA STREET
SAN LUIS OBISPO, CA 93401

NOTE:

FOR ACCURATE RIGHT OF WAY DATA, CONTACT
RIGHT OF WAY ENGINEERING AT THE DISTRICT OFFICE.

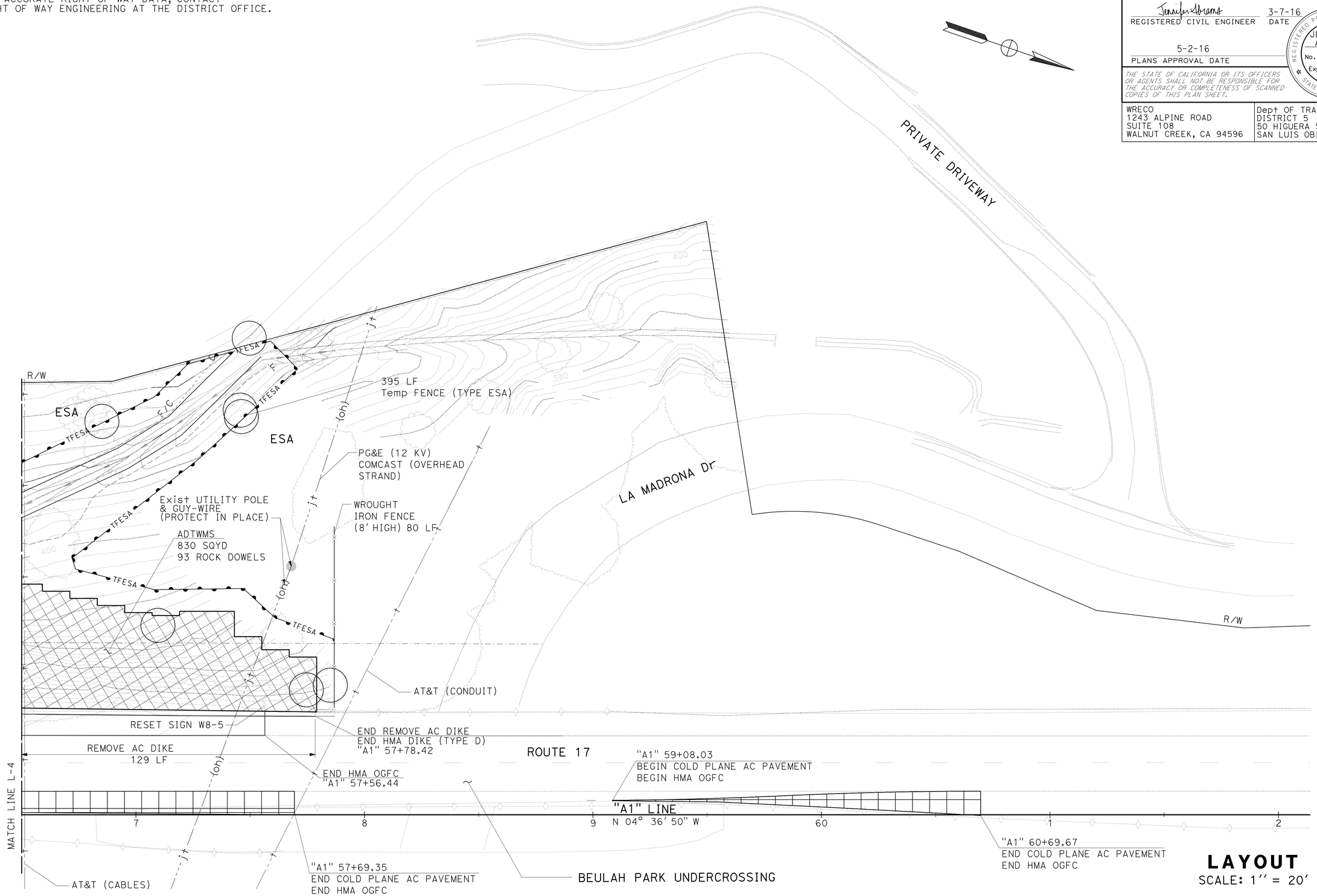

LAYOUT
SCALE: 1'' = 20'

L-5

STATE OF CALIFORNIA - DEPARTMENT OF TRANSPORTATION
Caltrans

CONSULTANT FUNCTIONAL SUPERVISOR: HAN-BIN LIANG
CALCULATED-DESIGNED BY: ALVIN YIM
CHECKED BY: JENNIFER ABRAMS
REVISED BY: AY
DATE REVISED: 04/15/16

LAST REVISION 04-15-16 | DATE PLOTTED => 07-JUN-2016 | TIME PLOTTED => 12:03

Dist	COUNTY	ROUTE	POST MILES TOTAL PROJECT	SHEET No.	TOTAL SHEETS
05	SCr	17	1.0/1.4	10	72

LICENSED LANDSCAPE ARCHITECT 4/15/16

5-2-16
PLANS APPROVAL DATE

LICENSED LANDSCAPE ARCHITECT
Harry Nakagawara No. 1258
Signature
06-30-16
Renewal Date
3-7-16
Date
STATE OF CALIFORNIA

THE STATE OF CALIFORNIA OR ITS OFFICERS OR AGENTS SHALL NOT BE RESPONSIBLE FOR THE ACCURACY OR COMPLETENESS OF SCANNED COPIES OF THIS PLAN SHEET.

ORSEE DESIGN ASSOCIATES
10308 PLACER LANE
SUITE 200
SACRAMENTO, CA 95827

Dept OF TRANSPORTATION
DISTRICT 5
50 HIGUERA STREET
SAN LUIS OBISPO, CA 93401

NOTES:

1. FOR ACCURATE RIGHT OF WAY DATA, CONTACT RIGHT OF WAY ENGINEERING AT THE DISTRICT OFFICE.
2. SEE EC SHEETS FOR VEGETATION CONTROL (TYPE 2) AND PLACEMENT OF DUFF AND TOPSOIL.
3. IN DUFF COLLECTION AREAS, COLLECT DUFF TO A DEPTH OF 3".
4. FOR ROADWAY Exc (TYPE A) EXCAVATE TO A DEPTH OF 6", TO BE USED AS LOCAL TOPSOIL.
5. FOR ROADWAY Exc (UNSUITABLE MATERIAL) EXCAVATE TO A DEPTH OF 6".
6. FOR ROADWAY Exc (TYPE Z-2)(ADL) EXCAVATE 30FT HORIZONTALLY FROM EDGE TO TRAVELED WAY AND TO A DEPTH OF 6".
7. SEE EROSION CONTROL PLANS FOR WILLOW FASCINES AND WILLOW POLES DETAILS IN RSP.
8. LIMIT DUFF COLLECTION AREA AND ROADWAY Exc (TYPE A) TO 5' OUTSIDE DRIPLINE OF EXISTING TREES TO REMAIN.
9. COLLECT DUFF AND ROADWAY Exc (TYPE A) AFTER VEGETATION CONTROL (TYPE 1) IS COMPLETE.
10. LIMIT DUFF COLLECTION TO AREAS OF ROADWAY Exc (TYPE A).
11. CLEAR AND GRUB OBJECTIONABLE MATERIAL; CLEAR THE AREA ABOVE OG OF ALL OBJECTIONABLE MATERIAL INCLUDING VINES, LOGS, UPTURNED STUMPS, DOWNED TREES, PLANTS, BRUSH, GRASS, WEEDS, Conc, AND MASONRY. ERADICATE Exist TREES, STUMPS, AND ROOT SPROUTS UNLESS SHOWN TO REMAIN. GRUB AND REMOVE Exist STUMPS, BURIED LOGS AND OTHER OBJECTIONABLE MATERIAL.
12. CLEAR MATERIAL; CLEAR THE AREA ABOVE OG OF ALL OBJECTIONABLE MATERIAL INCLUDING TREES, LOGS, BURIED LOGS, UPTURNED STUMPS, DOWNED TREES, BRUSH, Conc, AND MASONRY UNLESS SHOWN TO REMAIN. Exist VINES, PLANTS, GRASS, AND WEEDS TO REMAIN UNLESS REMOVAL IS NECESSARY FOR INSTALLATION OF ADTWMS.

LEGEND:

- CLEARING AND GRUBBING
  DUFF COLLECTION AREA, SEE NOTES 9 AND 10
  ROADWAY Exc (TYPE A)/ ROADWAY Exc (TYPE Z-2)(ADL)
- ROADWAY Exc (UNSUITABLE MATERIAL)/ ROADWAY Exc (TYPE Z-2)(ADL)
  VEGETATION CONTROL (TYPE 1)
- CLEAR AND GRUB OBJECTIONABLE MATERIAL, SEE NOTE 11
- CLEAR MATERIAL, SEE NOTE 12
- LIMITS OF ADL
- Exist TREES TO REMAIN
- Exist VEGETATION

ABBREVIATIONS:

ADL	AERIALLY DEPOSITED LEAD
ADTWMS	ANCHORED DOUBLE TWISTED WIRE MESH SYSTEM

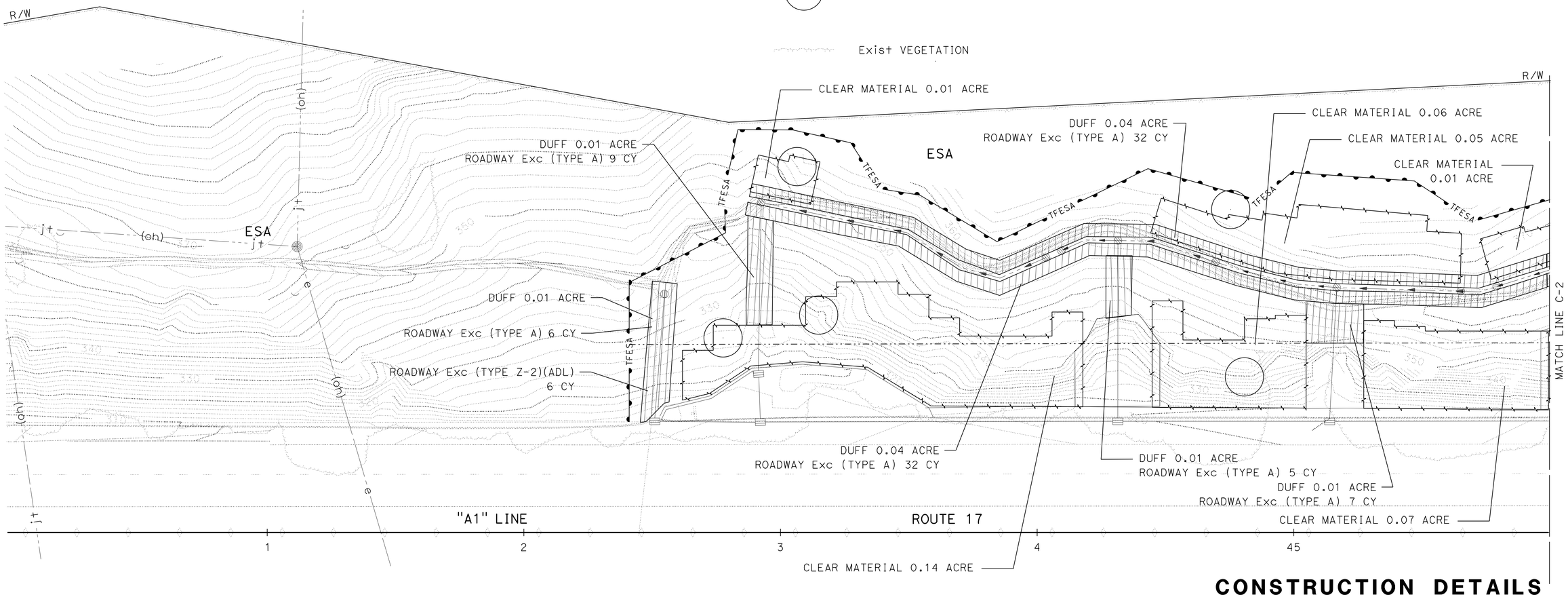

CONSTRUCTION DETAILS

(DUFF, VEGETATION CONTROL (TYPE 1), CLEAR AND GRUB AND ROADWAY EXCAVATION)

SCALE: 1'' = 20'

C-1

REVISED BY	TSH	TIMOTHY HIRAOKA	STATE OF CALIFORNIA - DEPARTMENT OF TRANSPORTATION
DATE REVISED	4/28/16	HARRY NAKAGAWARA	Caltrans
CALCULATED-DESIGNED BY		CONSULTANT SENIOR LANDSCAPE ARCHITECT	
CHECKED BY		TIMOTHY HIRAOKA	

LAST REVISION 04-28-16 | DATE PLOTTED => 07-JUN-2016 | TIME PLOTTED => 12:03

Dist	COUNTY	ROUTE	POST MILES TOTAL PROJECT	SHEET No.	TOTAL SHEETS
05	SCr	17	1.0/1.4	11	72

LICENSED LANDSCAPE ARCHITECT 4/15/16

5-2-16
PLANS APPROVAL DATE

LICENSED LANDSCAPE ARCHITECT
Harry Nakagawara No. 12589
Signature
06-30-16
Renewal Date
3-7-16
Date
STATE OF CALIFORNIA

THE STATE OF CALIFORNIA OR ITS OFFICERS OR AGENTS SHALL NOT BE RESPONSIBLE FOR THE ACCURACY OR COMPLETENESS OF SCANNED COPIES OF THIS PLAN SHEET.

ORSEE DESIGN ASSOCIATES
10308 PLACER LANE
SUITE 200
SACRAMENTO, CA 95827

Dept OF TRANSPORTATION
DISTRICT 5
50 HIGUERA STREET
SAN LUIS OBISPO, CA 93401

NOTE:

FOR ACCURATE RIGHT OF WAY DATA, CONTACT RIGHT OF WAY ENGINEERING AT THE DISTRICT OFFICE.

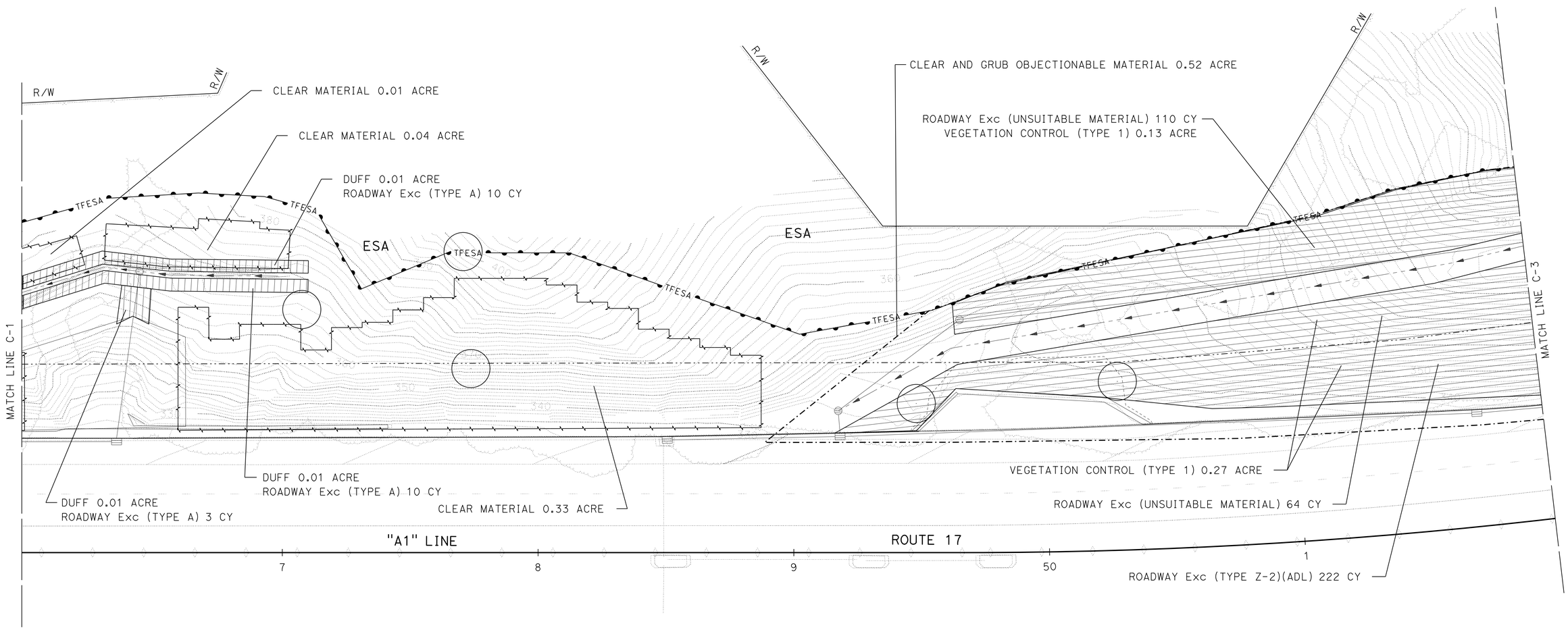

CONSTRUCTION DETAILS

(DUFF, VEGETATION CONTROL (TYPE 1), CLEAR AND GRUB AND ROADWAY EXCAVATION)

SCALE: 1'' = 20'

C-2

STATE OF CALIFORNIA - DEPARTMENT OF TRANSPORTATION
Caltrans

CONSULTANT SENIOR LANDSCAPE ARCHITECT: TIMOTHY HIRAOKA
CALCULATED-DESIGNED BY: TIMOTHY HIRAOKA
CHECKED BY: HARRY NAKAGAWARA
REVISED BY: TSH
DATE REVISED: 4/28/16

LAST REVISION 04-28-16
DATE PLOTTED => 07-JUN-2016
TIME PLOTTED => 12:03

Dist	COUNTY	ROUTE	POST MILES TOTAL PROJECT	SHEET No.	TOTAL SHEETS
05	SCr	17	1.0/1.4	12	72

LICENSED LANDSCAPE ARCHITECT 4/15/16

5-2-16
PLANS APPROVAL DATE

LICENSED LANDSCAPE ARCHITECT
Harry Nakagawara No. 12587
Signature
06-30-16
Renewal Date
3-7-16
Date
STATE OF CALIFORNIA

THE STATE OF CALIFORNIA OR ITS OFFICERS OR AGENTS SHALL NOT BE RESPONSIBLE FOR THE ACCURACY OR COMPLETENESS OF SCANNED COPIES OF THIS PLAN SHEET.

ORSEE DESIGN ASSOCIATES
10308 PLACER LANE
SUITE 200
SACRAMENTO, CA 95827

Dept OF TRANSPORTATION
DISTRICT 5
50 HIGUERA STREET
SAN LUIS OBISPO, CA 93401

NOTE:

FOR ACCURATE RIGHT OF WAY DATA, CONTACT RIGHT OF WAY ENGINEERING AT THE DISTRICT OFFICE.

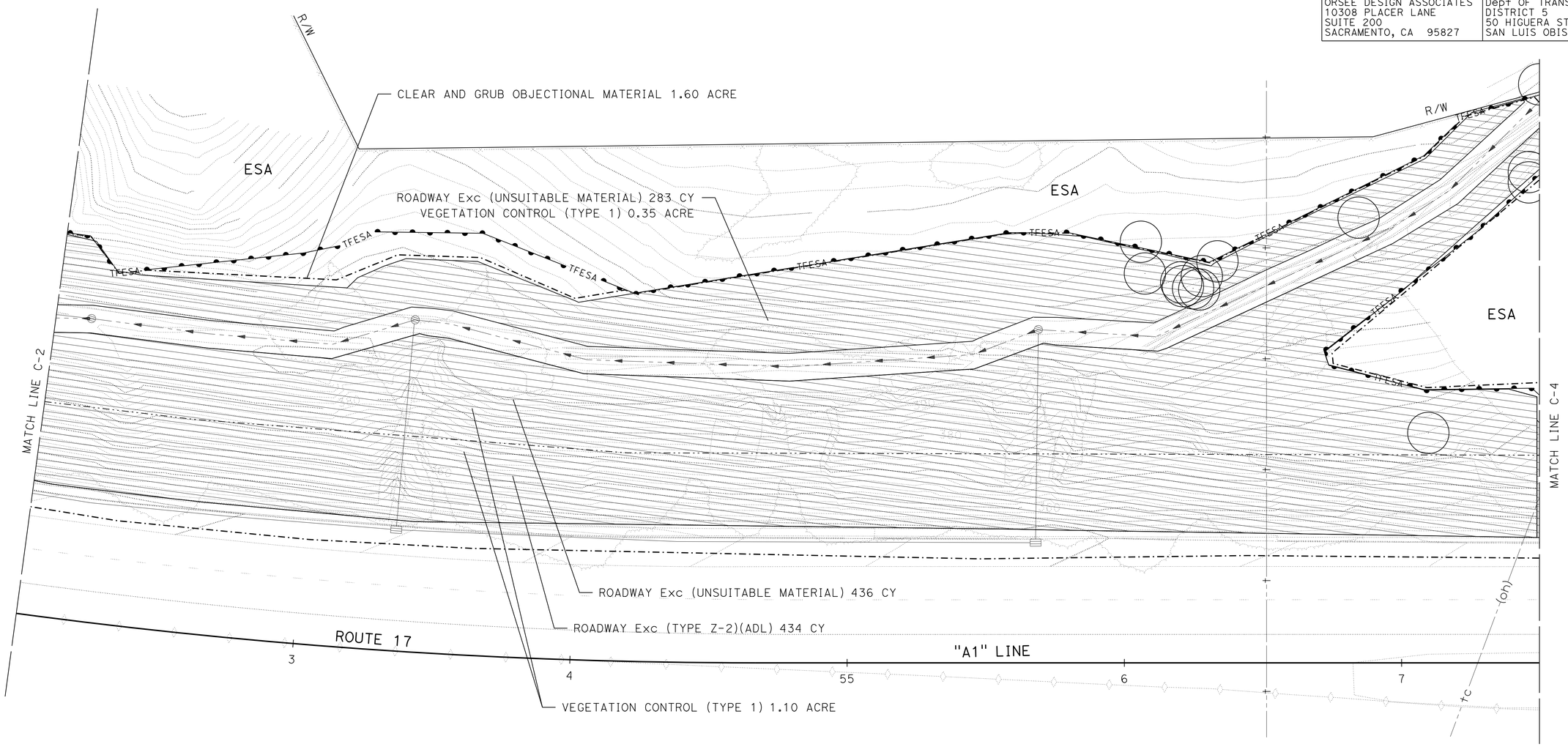

CONSTRUCTION DETAILS

(DUFF, VEGETATION CONTROL (TYPE 1), CLEAR AND GRUB AND ROADWAY EXCAVATION)

SCALE: 1'' = 20'

C-3

REVISED BY	DATE REVISED
TSH	4/28/16

CALCULATED-DESIGNED BY: TIMOTHY HIRAOKA
CHECKED BY: HARRY NAKAGAWARA

CONSULTANT SENIOR LANDSCAPE ARCHITECT: TIMOTHY HIRAOKA

STATE OF CALIFORNIA - DEPARTMENT OF TRANSPORTATION
Caltrans

LAST REVISION 04-28-16 | DATE PLOTTED => 07-JUN-2016 | TIME PLOTTED => 12:03

Dist	COUNTY	ROUTE	POST MILES TOTAL PROJECT	SHEET No.	TOTAL SHEETS
05	SCr	17	1.0/1.4	13	72

LICENSED LANDSCAPE ARCHITECT 4/15/16

5-2-16
PLANS APPROVAL DATE

LICENSED LANDSCAPE ARCHITECT
Harry Nakagawara No. 12587
Signature
06-30-16
Renewal Date
3-7-16
Date
STATE OF CALIFORNIA

THE STATE OF CALIFORNIA OR ITS OFFICERS OR AGENTS SHALL NOT BE RESPONSIBLE FOR THE ACCURACY OR COMPLETENESS OF SCANNED COPIES OF THIS PLAN SHEET.

ORSEE DESIGN ASSOCIATES
10308 PLACER LANE
SUITE 200
SACRAMENTO, CA 95827

Dept OF TRANSPORTATION
DISTRICT 5
50 HIGUERA STREET
SAN LUIS OBISPO, CA 93401

NOTE:

FOR ACCURATE RIGHT OF WAY DATA, CONTACT RIGHT OF WAY ENGINEERING AT THE DISTRICT OFFICE.

CONSTRUCTION DETAILS

(DUFF, VEGETATION CONTROL (TYPE 1), CLEAR AND GRUB AND ROADWAY EXCAVATION)

SCALE: 1'' = 20'

C-4

STATE OF CALIFORNIA - DEPARTMENT OF TRANSPORTATION

Caltrans

CONSULTANT SENIOR LANDSCAPE ARCHITECT: TIMOTHY HIRAOKA

CALCULATED-DESIGNED BY: TIMOTHY HIRAOKA

CHECKED BY: HARRY NAKAGAWARA

REVISED BY: TSH

DATE REVISED: 4/28/16

LAST REVISION: 04-28-16

DATE PLOTTED => 07-JUN-2016

TIME PLOTTED => 12:03

Dist	COUNTY	ROUTE	POST MILES TOTAL PROJECT	SHEET No.	TOTAL SHEETS
05	SCr	17	1.0/1.4	14	72

REGISTERED CIVIL ENGINEER 3-7-16 DATE

5-2-16
PLANS APPROVAL DATE

REGISTERED PROFESSIONAL ENGINEER ROBERT LAWRENCE No. 63076 Exp. 6-30-16 CIVIL STATE OF CALIFORNIA

THE STATE OF CALIFORNIA OR ITS OFFICERS OR AGENTS SHALL NOT BE RESPONSIBLE FOR THE ACCURACY OR COMPLETENESS OF SCANNED COPIES OF THIS PLAN SHEET.

WRECO
1243 ALPINE ROAD
SUITE 108
WALNUT CREEK, CA 94596

Dept OF TRANSPORTATION
DISTRICT 5
50 HIGUERA STREET
SAN LUIS OBISPO, CA 93401

NOTES:

1. FOR ACCURATE RIGHT OF WAY DATA, CONTACT RIGHT OF WAY ENGINEERING AT THE DISTRICT OFFICE.
2. MAINTAIN 10 FOOT GRID SPACING WHERE PRACTICAL
3. ADJUST SPACING AS REQUIRED FOR LOCAL TOPOGRAPHY
4. EXACT LIMITS OF ANCHORED DTWMS TO BE DETERMINED BY THE ENGINEER
5. EXACT LOCATION OF ROCK DOWELS TO BE APPROVED BY THE ENGINEER
6. ROCK DOWEL MINIMUM ALLOWABLE DESIGN LOAD IS 5 TONS
7. LOCATE VERTICAL CONNECTION AT EXISTING TREES TO REMAIN. EXACT CONNECTION TO BE DETERMINED BY THE ENGINEER.

LEGEND:

ANCHORED DOUBLE TWISTED WIRE MESH SYSTEM

EXISTING TREE TO REMAIN

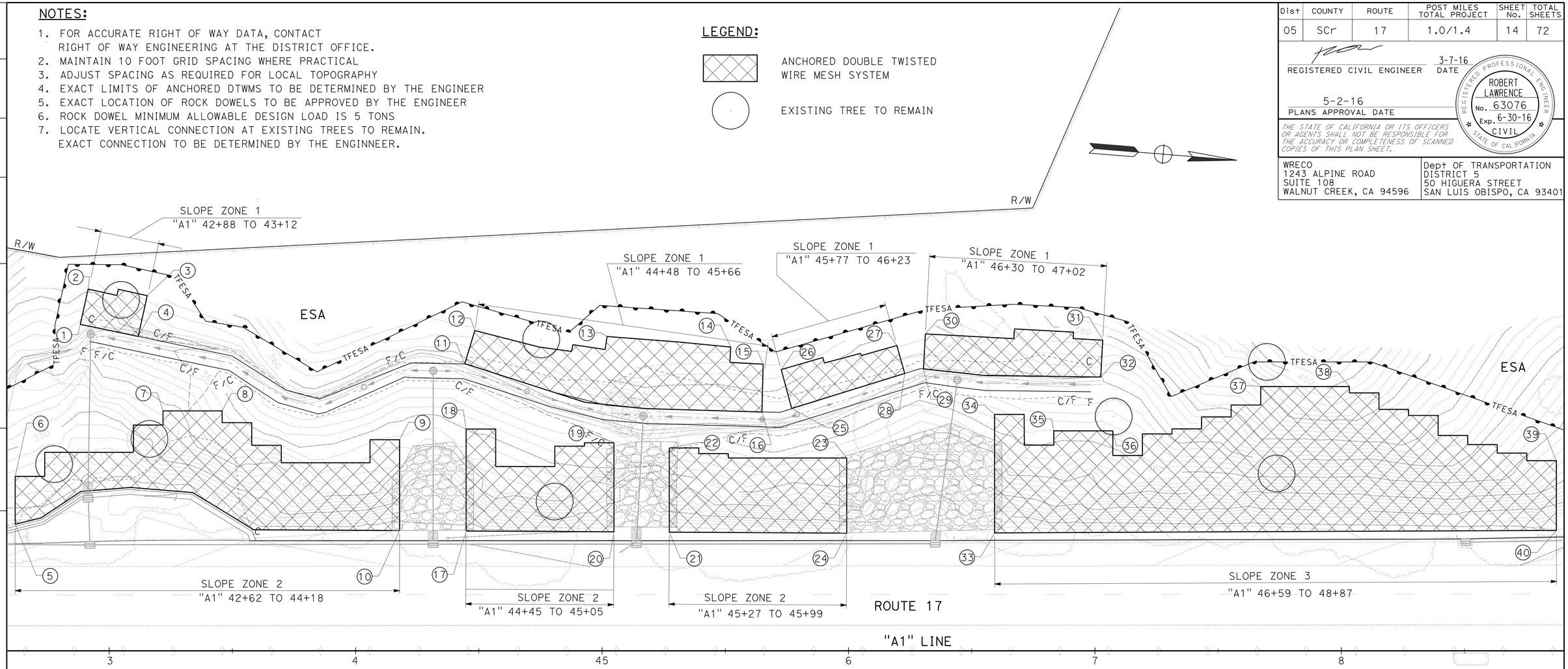

WIRE MESH DATA

SLOPE ZONE	No.	OFFSET/STATION
1	1	132.51' Lt "A1" 42+88.25
	2	146.84' Lt "A1" 42+91.43
	3	144.15' Lt "A1" 43+15.42
	4	127.62' Lt "A1" 43+11.75
2	5	51.37' Lt "A1" 42+61.82
	6	70.79' Lt "A1" 42+61.82
	7	97.39' Lt "A1" 43+21.89
	8	97.39' Lt "A1" 43+45.82
	9	85.69' Lt "A1" 44+17.82
	10	48.79' Lt "A1" 44+17.82

WIRE MESH DATA

SLOPE ZONE	No.	OFFSET/STATION
1	11	116.45' Lt "A1" 44+44.26
	12	130.00' Lt "A1" 44+48.36
	13	127.58' Lt "A1" 45+02.04
	14	123.29' Lt "A1" 45+52.21
	15	116.34' Lt "A1" 45+65.36
	16	96.92' Lt "A1" 45+64.87
2	17	48.63' Lt "A1" 44+44.82
	18	90.02' Lt "A1" 44+44.82
	19	84.44' Lt "A1" 45+04.82
	20	48.29' Lt "A1" 45+04.82

WIRE MESH DATA

SLOPE ZONE	No.	OFFSET/STATION
2	21	48.16' Lt "A1" 45+27.28
	22	82.35' Lt "A1" 45+27.28
	33	78.27' Lt "A1" 45+99.28
	24	47.76' Lt "A1" 45+99.28
1	25	98.38' Lt "A1" 45+76.94
	26	114.17' Lt "A1" 45+72.70
	27	123.93' Lt "A1" 46+19.63
	28	112.59' Lt "A1" 46+22.81
	29	114.45' Lt "A1" 46+30.34
	30	128.65' Lt "A1" 46+31.20

WIRE MESH DATA

SLOPE ZONE	No.	OFFSET/STATION
1	31	126.09' Lt "A1" 47+03.17
	32	111.12' Lt "A1" 47+02.36
3	33	47.85' Lt "A1" 46+59.28
	34	95.96' Lt "A1" 46+59.28
	35	89.28' Lt "A1" 46+83.28
	36	89.28' Lt "A1" 47+07.28
	37	107.27' Lt "A1" 47+67.28
	38	107.27' Lt "A1" 48+03.28
	39	77.19' Lt "A1" 48+87.28
	40	48.87 Lt "A1" 48+87.28

CONSTRUCTION DETAILS
(LAYOUT ANCHORED DOUBLE TWISTED WIRE MESH SYSTEM)

SCALE: 1'' = 20'

C-5

REVISED BY	DATE REVISED
AY	04/15/16

JENNIFER ABRAMS — ROBERT LAWRENCE — CALCULATED-DESIGNED BY — CHECKED BY

CONSULTANT FUNCTIONAL SUPERVISOR: HAN-BIN LIANG

STATE OF CALIFORNIA - DEPARTMENT OF TRANSPORTATION

LAST REVISION 04-15-16 | DATE PLOTTED => 07-JUN-2016 | TIME PLOTTED => 12:03

Dist	COUNTY	ROUTE	POST MILES TOTAL PROJECT	SHEET No.	TOTAL SHEETS
05	SCr	17	1.0/1.4	15	72

REGISTERED CIVIL ENGINEER 3-7-16 DATE

5-2-16
PLANS APPROVAL DATE

REGISTERED PROFESSIONAL ENGINEER ROBERT LAWRENCE No. 63076 Exp. 6-30-16 CIVIL STATE OF CALIFORNIA

THE STATE OF CALIFORNIA OR ITS OFFICERS OR AGENTS SHALL NOT BE RESPONSIBLE FOR THE ACCURACY OR COMPLETENESS OF SCANNED COPIES OF THIS PLAN SHEET.

WRECO
1243 ALPINE ROAD
SUITE 108
WALNUT CREEK, CA 94596

Dept OF TRANSPORTATION
DISTRICT 5
50 HIGUERA STREET
SAN LUIS OBISPO, CA 93401

NOTE:

FOR ACCURATE RIGHT OF WAY DATA, CONTACT RIGHT OF WAY ENGINEERING AT THE DISTRICT OFFICE.

WIRE MESH DATA

SLOPE ZONE	No.	OFFSET/STATION
3	41	56.16′ Lt "A1" 50+40.29
	42	75.05′ Lt "A1" 50+40.29
	43	115.65′ Lt "A1" 53+28.00
	44	47.44′ Lt "A1" 53+28.00
1	45	105.53′ Lt "A1" 51+25.44
	46	119.19′ Lt "A1" 51+23.62
	47	127.85′ Lt "A1" 51+99.82
	48	112.74′ Lt "A1" 52+01.22
	49	115.46′ Lt "A1" 53+09.18
	50	126.88′ Lt "A1" 53+03.32
	51	129.60′ Lt "A1" 53+97.48
	52	116.46′ Lt "A1" 53+94.76
3	53	47.11′ Lt "A1" 53+40.34
	54	117.95′ Lt "A1" 53+40.34

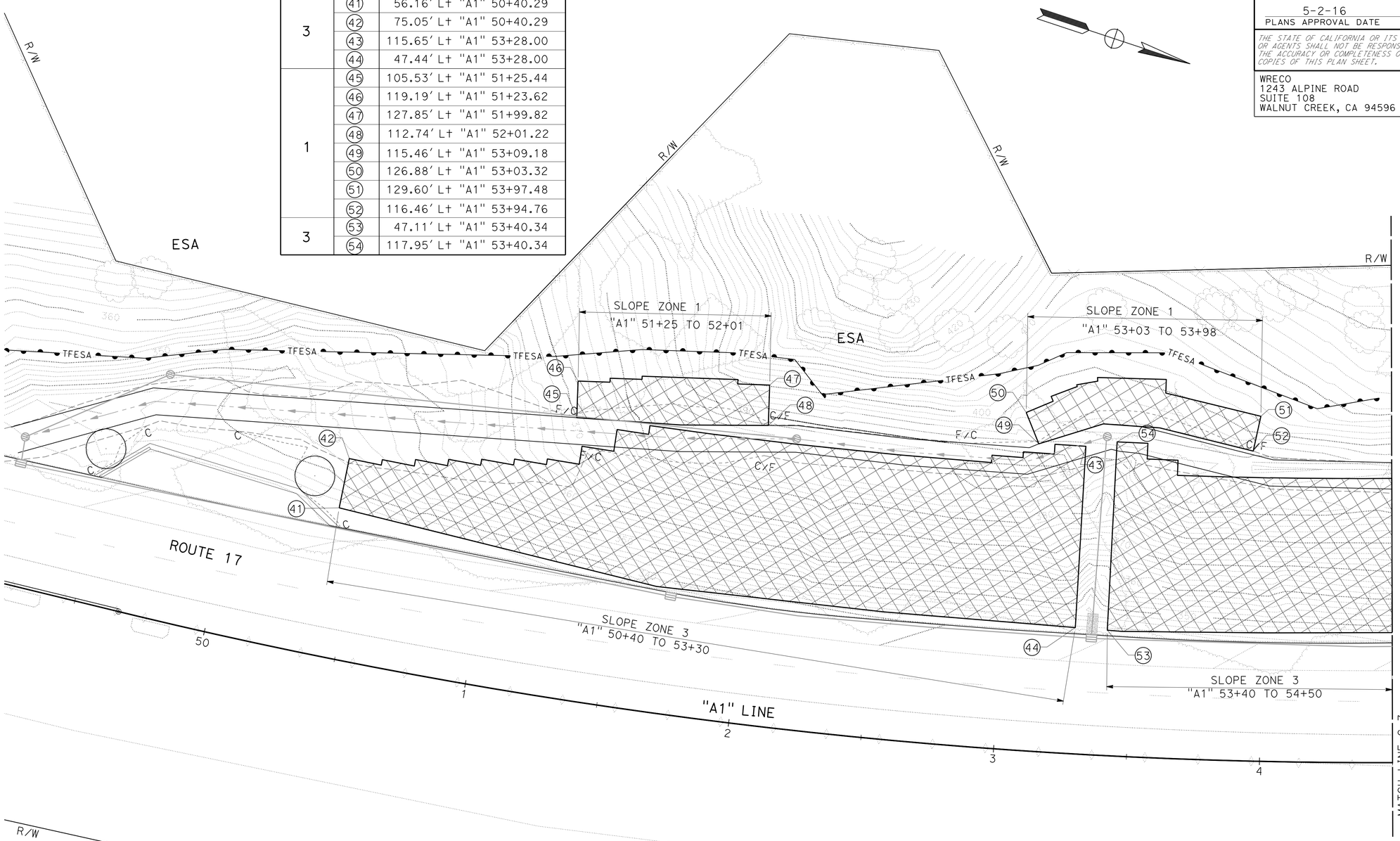

CONSTRUCTION DETAILS
(LAYOUT ANCHORED DOUBLE TWISTED WIRE MESH SYSTEM)

SCALE: 1″ = 20′

C-6

STATE OF CALIFORNIA - DEPARTMENT OF TRANSPORTATION
Caltrans

CONSULTANT FUNCTIONAL SUPERVISOR: HAN-BIN LIANG
CALCULATED-DESIGNED BY: JENNIFER ABRAMS
CHECKED BY: ROBERT LAWRENCE
REVISED BY: AY
DATE REVISED: 04/15/16

LAST REVISION 04-15-16 | DATE PLOTTED => 07-JUN-2016 | TIME PLOTTED => 12:03

Dist	COUNTY	ROUTE	POST MILES TOTAL PROJECT	SHEET No.	TOTAL SHEETS
05	SCr	17	1.0/1.4	16	72

REGISTERED CIVIL ENGINEER 3-7-16 DATE

5-2-16
PLANS APPROVAL DATE

REGISTERED PROFESSIONAL ENGINEER ROBERT LAWRENCE No. 63076 Exp. 6-30-16 CIVIL STATE OF CALIFORNIA

THE STATE OF CALIFORNIA OR ITS OFFICERS OR AGENTS SHALL NOT BE RESPONSIBLE FOR THE ACCURACY OR COMPLETENESS OF SCANNED COPIES OF THIS PLAN SHEET.

WRECO
1243 ALPINE ROAD
SUITE 108
WALNUT CREEK, CA 94596

Dept OF TRANSPORTATION
DISTRICT 5
50 HIGUERA STREET
SAN LUIS OBISPO, CA 93401

NOTE:

FOR ACCURATE RIGHT OF WAY DATA, CONTACT RIGHT OF WAY ENGINEERING AT THE DISTRICT OFFICE.

WIRE MESH DATA

SLOPE ZONE	No.	OFFSET/STATION
3	55	110.39' Lt "A1" 55+59.41
	56	47.96' Lt "A1" 55+59.41
1	57	113.96' Lt "A1" 55+11.41
	58	129.35' Lt "A1" 55+11.41
	59	139.91' Lt "A1" 56+07.41
	60	122.91' Lt "A1" 56+07.41
3	61	47.71' Lt "A1" 55+75.10
	62	118.55' Lt "A1" 55+75.10
	63	69.05' Lt "A1" 57+78.78
	64	45.04' Lt "A1" 57+78.98

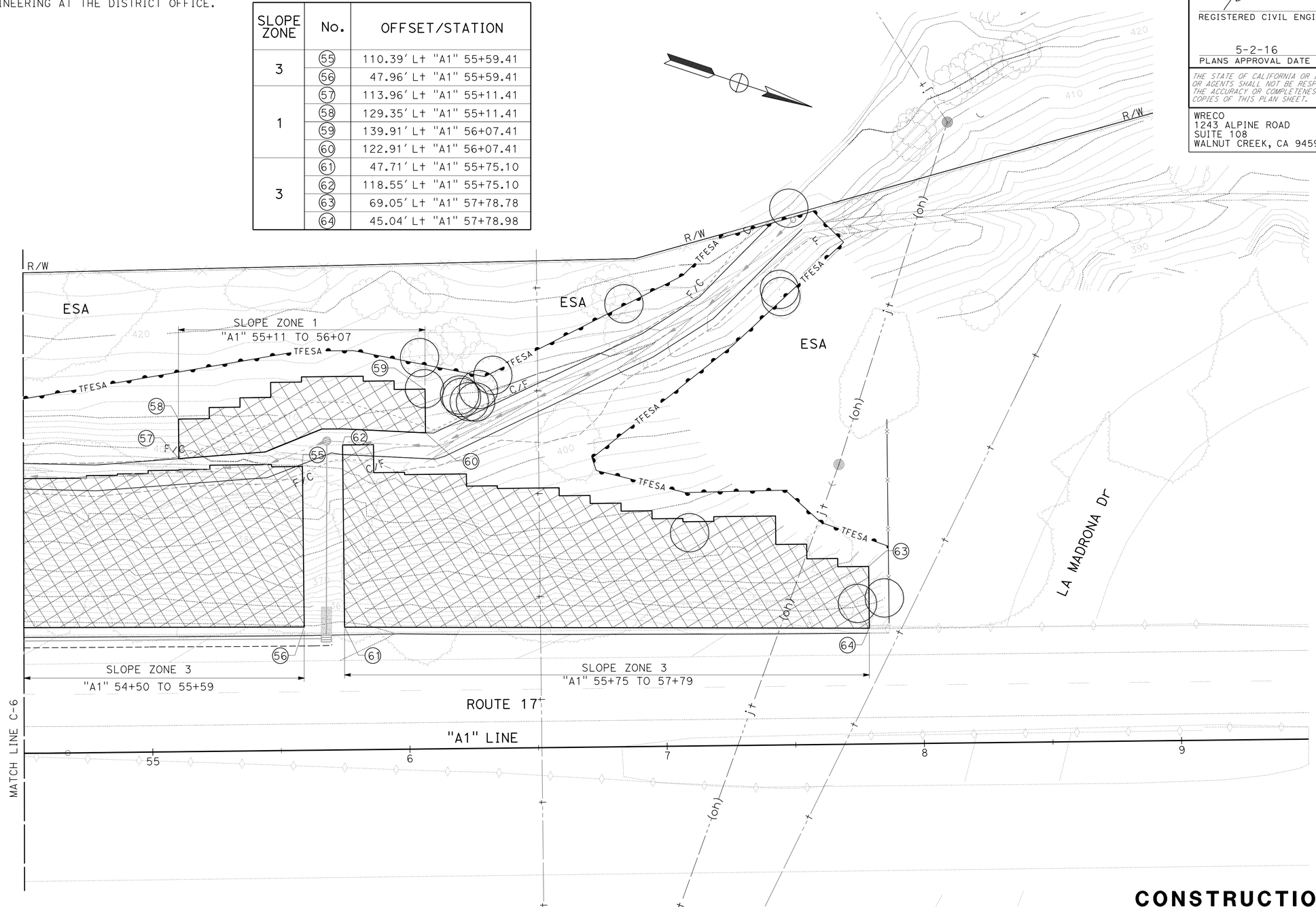

CONSTRUCTION DETAILS
(LAYOUT ANCHORED DOUBLE TWISTED WIRE MESH SYSTEM)

SCALE: 1'' = 20'

C-7

STATE OF CALIFORNIA - DEPARTMENT OF TRANSPORTATION
Caltrans

CONSULTANT FUNCTIONAL SUPERVISOR: HAN-BIN LIANG
CALCULATED-DESIGNED BY: JENNIFER ABRAMS
CHECKED BY: ROBERT LAWRENCE
REVISED BY: AY
DATE REVISED: 04/15/16

LAST REVISION 04-15-16
DATE PLOTTED => 07-JUN-2016
TIME PLOTTED => 12:03

Dist	COUNTY	ROUTE	POST MILES TOTAL PROJECT	SHEET No.	TOTAL SHEETS
05	SCr	17	1.0/1.4	17	72

REGISTERED CIVIL ENGINEER 3-7-16 DATE

5-2-16
PLANS APPROVAL DATE

REGISTERED PROFESSIONAL ENGINEER ROBERT LAWRENCE No. 63076 Exp. 6-30-16 CIVIL STATE OF CALIFORNIA

THE STATE OF CALIFORNIA OR ITS OFFICERS OR AGENTS SHALL NOT BE RESPONSIBLE FOR THE ACCURACY OR COMPLETENESS OF SCANNED COPIES OF THIS PLAN SHEET.

WRECO
1243 ALPINE ROAD
SUITE 108
WALNUT CREEK, CA 94596

Dept OF TRANSPORTATION
DISTRICT 5
50 HIGUERA STREET
SAN LUIS OBISPO, CA 93401

NOTES:

1. MAINTAIN 10 FOOT GRID SPACING WHERE PRACTICAL.
2. ADJUST SPACING AS REQUIRED TO FIT LOCAL TOPOGRAPHY.
3. EXACT LIMITS OF ANCHORED DOUBLE TWISTED WIRE MESH SYSTEM TO BE DETERMINED BY THE ENGINEER.
4. EXACT LOCATION OF ROCK DOWELS TO BE APPROVED BY THE ENGINEER.
5. LIMIT OF DTWM IS SHOWN ON C-5 THROUGH C-7.

ABBREVIATIONS:

DTWM	DOUBLE TWISTED WIRE MESH SYSTEM
ADTWMS	ANCHORED DOUBLE TWISTED WIRE MESH SYSTEM

LEGEND:

⊗	ROCK DOWEL
	DOUBLE TWISTED WIRE MESH

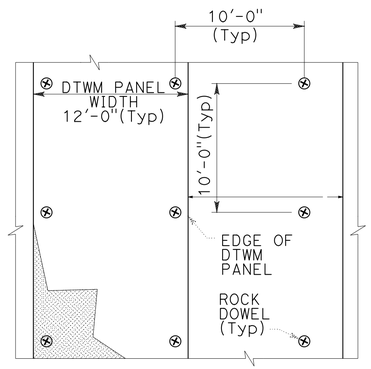

PLAN

ROCK DOWEL AND PANEL LAYOUT

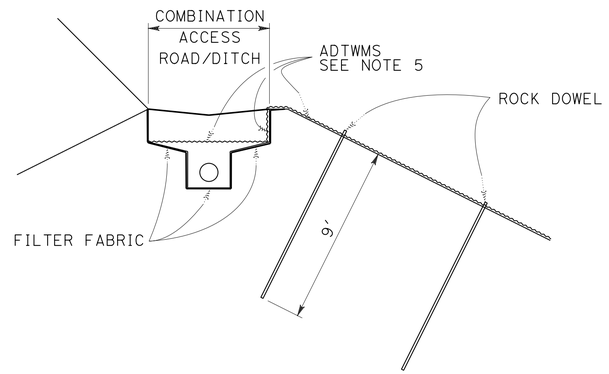

ADTWMS AT ACCESS ROAD

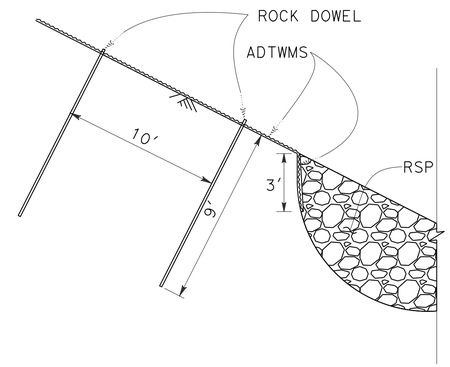

ADTWMS INTERFACE AT RSP

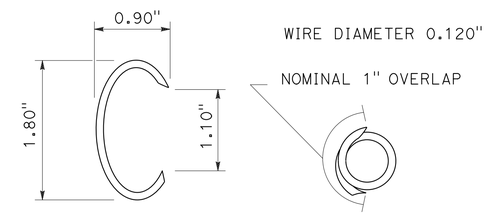

BEFORE CLOSURE AFTER CLOSURE

RING FASTENER DETAIL

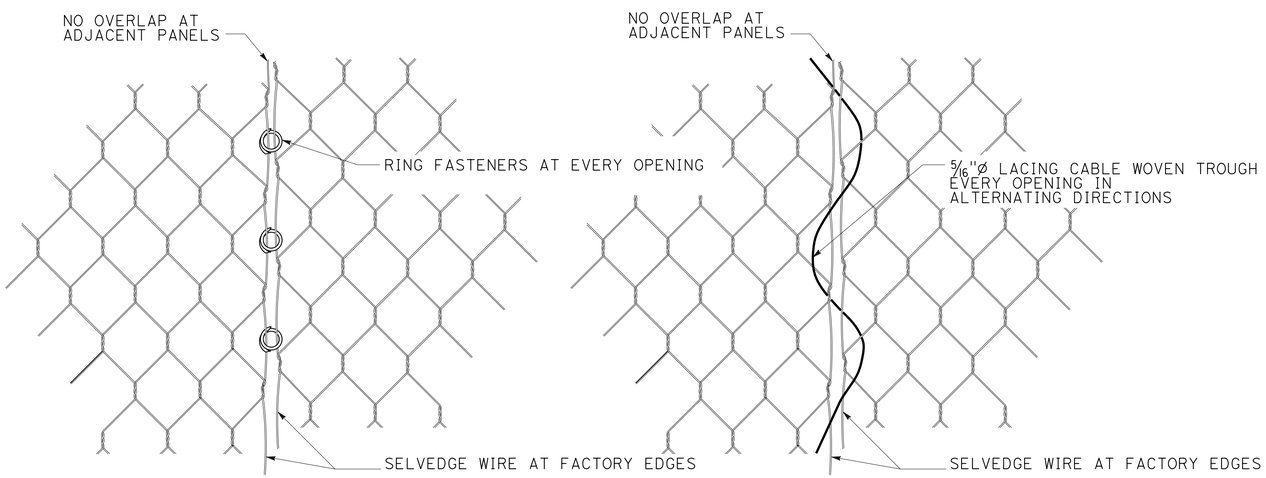

RING FASTENER ALTERNATE

LACING CABLE ALTERNATE

DTWM PANEL VERTICAL CONNECTION DETAIL

CONSTRUCTION DETAILS
(ANCHORED DOUBLE TWISTED WIRE MESH SYSTEM DETAILS)

NO SCALE

C-8

ALL DIMENSIONS ARE IN FEET UNLESS OTHERWISE SHOWN

REVISED BY	AY	CALCULATED-DESIGNED BY	JENNIFER ABRAMS
DATE REVISED	04/15/16	CHECKED BY	ROBERT LAWRENCE

CONSULTANT FUNCTIONAL SUPERVISOR: HAN-BIN LIANG

STATE OF CALIFORNIA - DEPARTMENT OF TRANSPORTATION

Caltrans

LAST REVISION 04-15-16 | DATE PLOTTED => 07-JUN-2016 | TIME PLOTTED => 12:03

Dist	COUNTY	ROUTE	POST MILES TOTAL PROJECT	SHEET No.	TOTAL SHEETS
05	SCr	17	1.0/1.4	18	72

REGISTERED CIVIL ENGINEER 3-7-16 DATE

5-2-16
PLANS APPROVAL DATE

REGISTERED PROFESSIONAL ENGINEER ROBERT LAWRENCE No. 63076 Exp. 6-30-16 CIVIL STATE OF CALIFORNIA

THE STATE OF CALIFORNIA OR ITS OFFICERS OR AGENTS SHALL NOT BE RESPONSIBLE FOR THE ACCURACY OR COMPLETENESS OF SCANNED COPIES OF THIS PLAN SHEET.

WRECO
1243 ALPINE ROAD
SUITE 108
WALNUT CREEK, CA 94596

Dept OF TRANSPORTATION
DISTRICT 5
50 HIGUERA STREET
SAN LUIS OBISPO, CA 93401

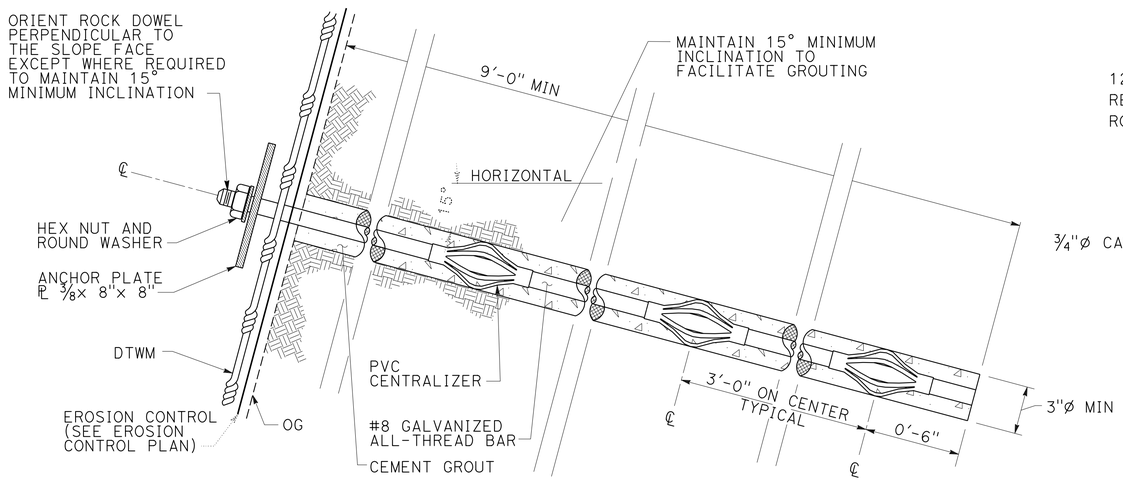

PRODUCTION ROCK DOWEL DETAIL

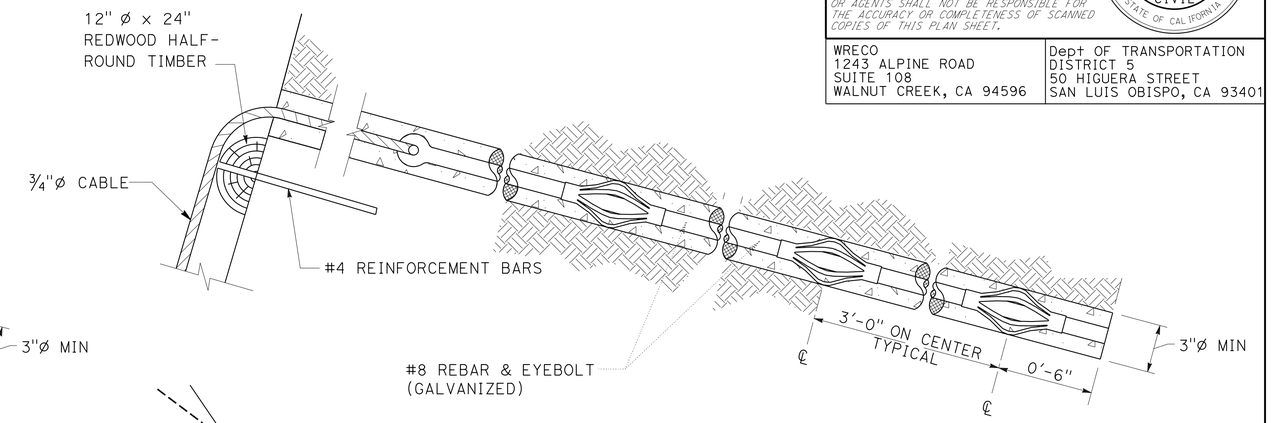

ROCK CABLE ANCHOR

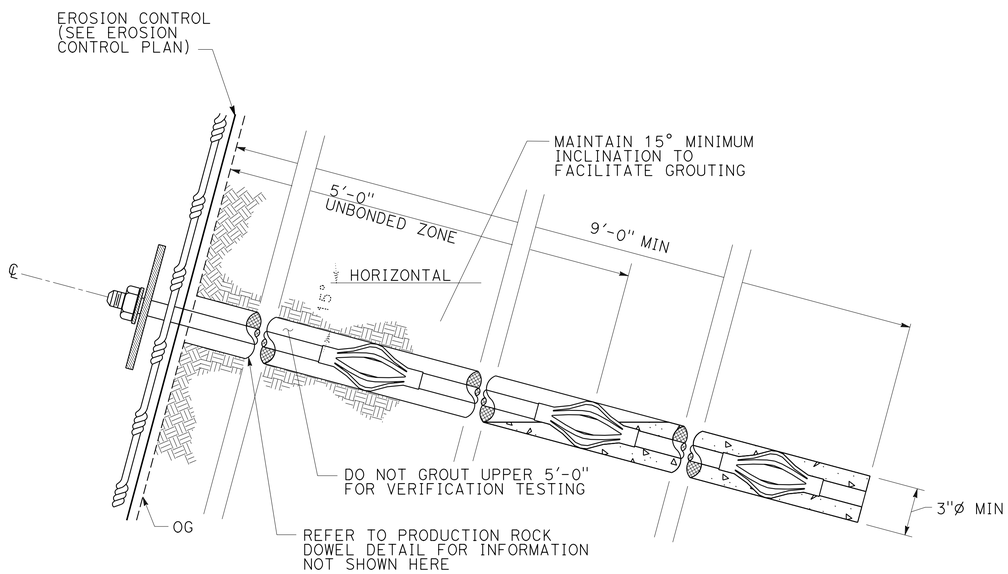

VERIFICATION TEST ROCK DOWEL DETAIL

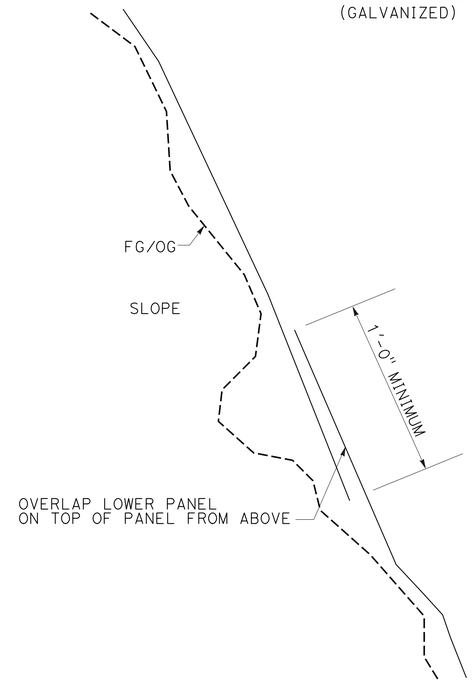

CROSS SECTION

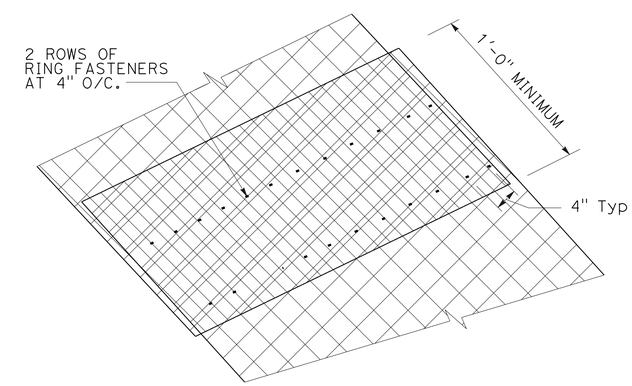

RING FASTENER DETAIL

DTWM PANEL HORIZONTAL CONNECTION DETAIL

CONSTRUCTION DETAILS
(ANCHORED DOUBLE TWISTED WIRE MESH SYSTEM DETAILS)

NO SCALE

ALL DIMENSIONS ARE IN FEET UNLESS OTHERWISE SHOWN

C-9

STATE OF CALIFORNIA - DEPARTMENT OF TRANSPORTATION
Caltrans

CONSULTANT FUNCTIONAL SUPERVISOR: HAN-BIN LIANG
CALCULATED-DESIGNED BY: JENNIFER ABRAMS
CHECKED BY: ROBERT LAWRENCE
REVISED BY: AY
DATE REVISED: 04/15/16

LAST REVISION 04-15-16 | DATE PLOTTED => 07-JUN-2016 | TIME PLOTTED => 12:03

Dist	COUNTY	ROUTE	POST MILES TOTAL PROJECT	SHEET No.	TOTAL SHEETS
05	SCr	17	1.0/1.4	19	72

REGISTERED CIVIL ENGINEER — DATE 4/15/16

5-2-16
PLANS APPROVAL DATE

REGISTERED PROFESSIONAL ENGINEER — KEVIN BEWSEY — No. 71485 — Exp. 12/31/17 — CIVIL — STATE OF CALIFORNIA

THE STATE OF CALIFORNIA OR ITS OFFICERS OR AGENTS SHALL NOT BE RESPONSIBLE FOR THE ACCURACY OR COMPLETENESS OF SCANNED COPIES OF THIS PLAN SHEET.

TY LIN INTERNATIONAL
1601 RESPONSE ROAD
SUITE 260
SACRAMENTO, CA 95815

Dept OF TRANSPORTATION
DISTRICT 5
50 HIGUERA STREET
SAN LUIS OBISPO, CA 93401

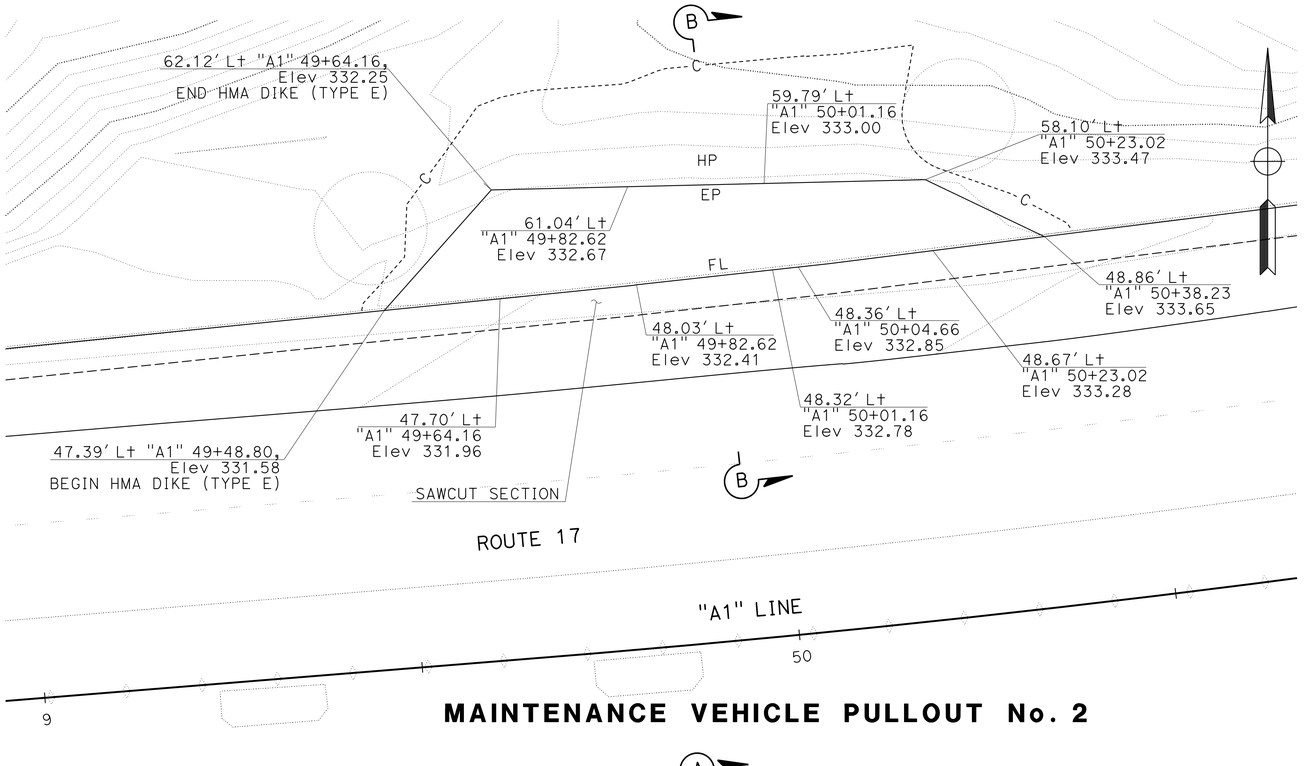

MAINTENANCE VEHICLE PULLOUT No. 2

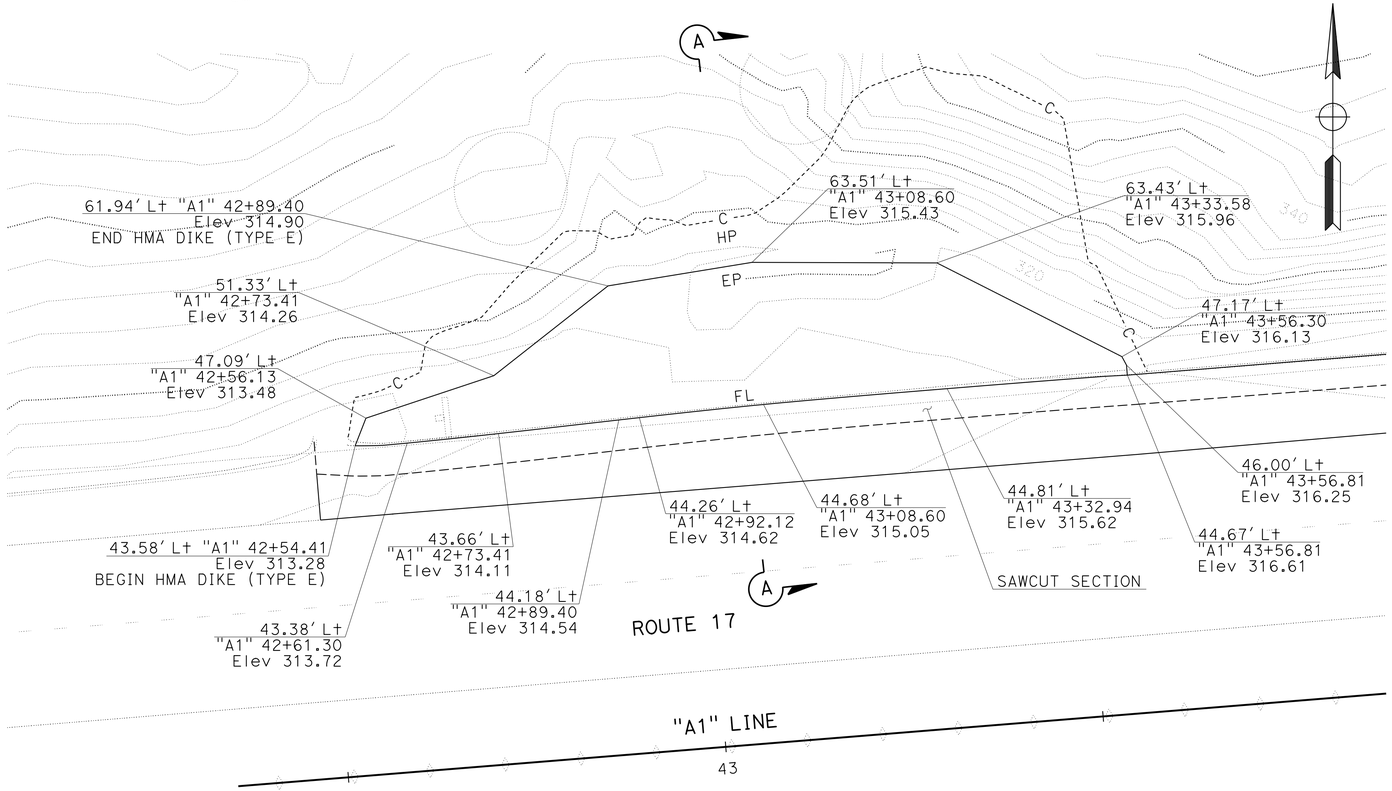

MAINTENANCE VEHICLE PULLOUT No. 1

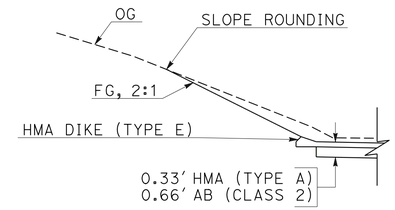

"A1" 49+48.80 TO "A1" 49+64.16

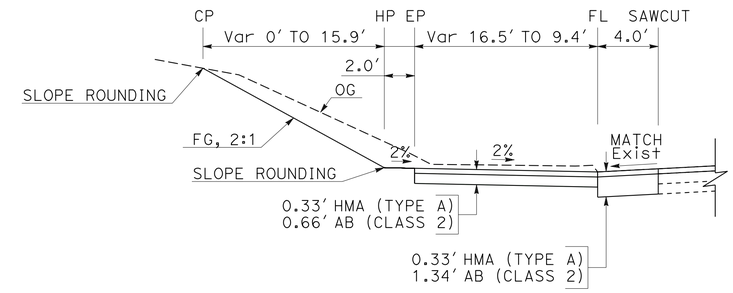

"A1" 49+48.80 TO "A1" 50+38.23
SECTION B-B
NO SCALE

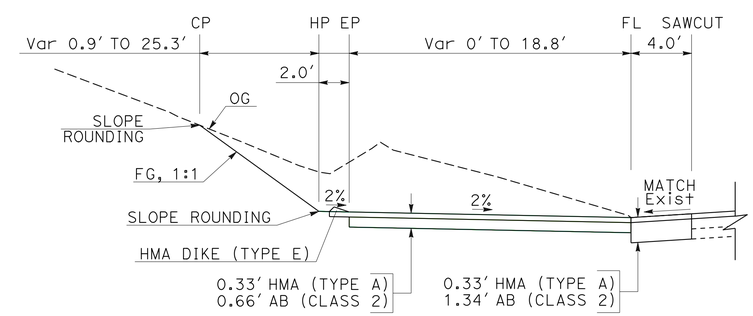

"A1" 42+54.41 TO "A1" 42+89.40
SECTION A-A
NO SCALE

CONSTRUCTION DETAILS

SCALE: 1'' = 10'

C-10

STATE OF CALIFORNIA - DEPARTMENT OF TRANSPORTATION

Caltrans

CONSULTANT FUNCTIONAL SUPERVISOR: KEITH RHODES

CALCULATED-DESIGNED BY: K. BEWSEY/D. ZURCHER — CHECKED BY: KEVIN BEWSEY

REVISED BY: DZ — DATE REVISED: 04/15/16

LAST REVISION: 04-15-16 — DATE PLOTTED => 07-JUN-2016 — TIME PLOTTED => 12:03

Dist	COUNTY	ROUTE	POST MILES TOTAL PROJECT	SHEET No.	TOTAL SHEETS
05	SCr	17	1.0/1.4	20	72

Kevin Bewsey 4/15/16
REGISTERED CIVIL ENGINEER DATE

5-2-16
PLANS APPROVAL DATE

REGISTERED PROFESSIONAL ENGINEER
KEVIN BEWSEY
No. 71485
Exp. 12/31/17
CIVIL
STATE OF CALIFORNIA

THE STATE OF CALIFORNIA OR ITS OFFICERS OR AGENTS SHALL NOT BE RESPONSIBLE FOR THE ACCURACY OR COMPLETENESS OF SCANNED COPIES OF THIS PLAN SHEET.

TY LIN INTERNATIONAL
1601 RESPONSE ROAD
SUITE 260
SACRAMENTO, CA 95815

Dept OF TRANSPORTATION
DISTRICT 5
50 HIGUERA STREET
SAN LUIS OBISPO, CA 93401

NOTES:

1. AVOID INJURY TO TREES AND ROOTS. ROADWAY EXCAVATION WITHIN THE TREE PROTECTION ZONE MUST BE BY PNEUMATIC SOIL EXCAVATION TO LOOSEN SOIL. MOISTEN SOIL PRIOR TO PNEUMATIC SOIL EXCAVATION TO CONTROL DUST. REMOVE LOOSE SOIL WITH HAND TOOLS.
2. ROOTS 1 ½ INCHES OR GREATER MUST BE PROTECTED WITH HEAVY BURLAP WHEN USING HAND TOOLS.
3. DO NOT ALLOW EXPOSED ROOTS TO DRY OUT. REPLACE SOIL TO ORIGINAL GROUND AFTER ROADWAY EXCAVATION WITH IMPORTED TOPSOIL OR SOIL FROM ROADWAY EXCAVATION (TYPE A).

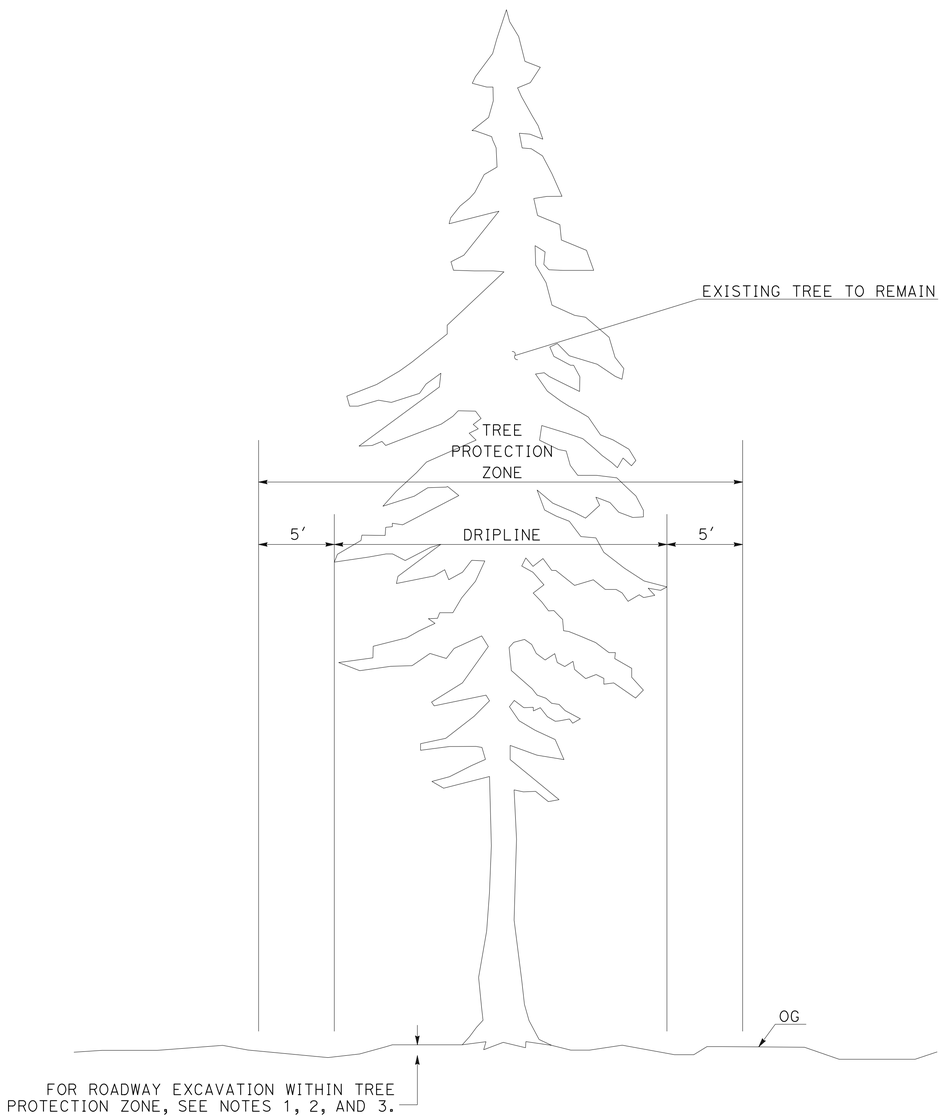

EXISTING TREES TO REMAIN DETAIL

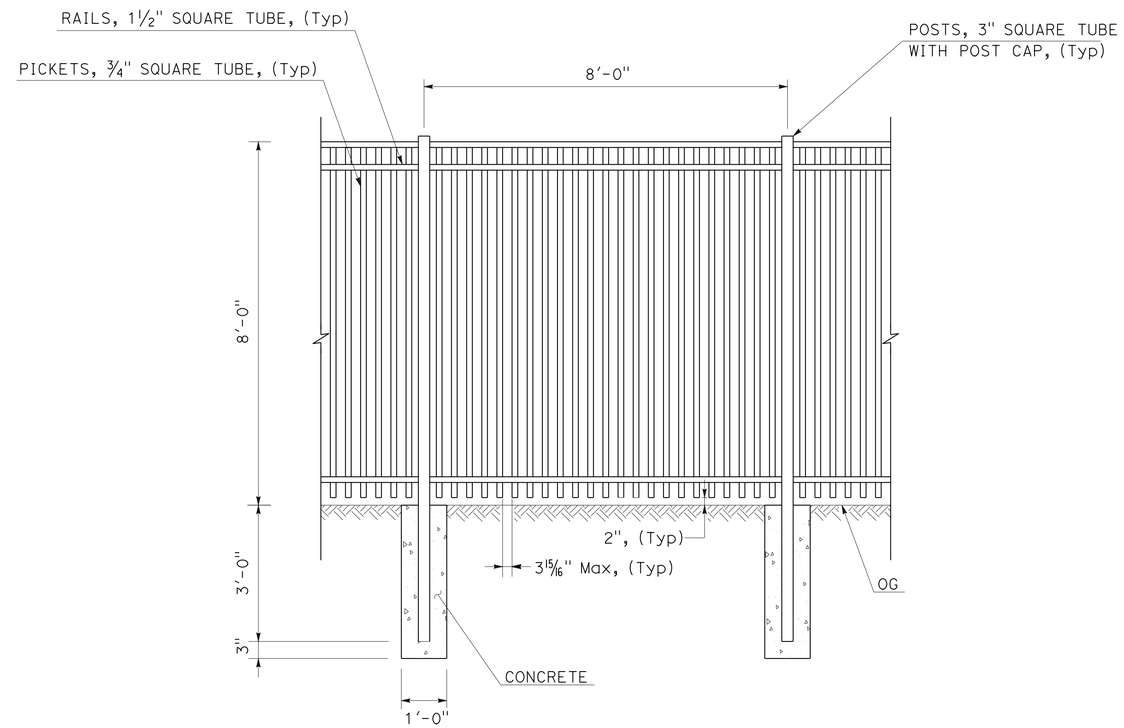

WROUGHT IRON FENCE (8' HIGH) DETAIL

CONSTRUCTION DETAILS

NO SCALE

C-11

STATE OF CALIFORNIA - DEPARTMENT OF TRANSPORTATION
Caltrans

CONSULTANT FUNCTIONAL SUPERVISOR: KEITH RHODES
CALCULATED-DESIGNED BY: K. BEWSEY/D. ZURCHER
CHECKED BY: KEVIN BEWSEY
REVISED BY: DZ
DATE REVISED: 04/15/16

LAST REVISION 04-15-16 | DATE PLOTTED => 07-JUN-2016 | TIME PLOTTED => 12:03

Dist	COUNTY	ROUTE	POST MILES TOTAL PROJECT	SHEET No.	TOTAL SHEETS
05	SCr	17	1.0/1.4	21	72

REGISTERED CIVIL ENGINEER — DATE: 3-7-16

PLANS APPROVAL DATE: 5-2-16

REGISTERED PROFESSIONAL ENGINEER — JENNIFER ABRAMS — No. 77782 — Exp. 6-30-17 — CIVIL — STATE OF CALIFORNIA

THE STATE OF CALIFORNIA OR ITS OFFICERS OR AGENTS SHALL NOT BE RESPONSIBLE FOR THE ACCURACY OR COMPLETENESS OF SCANNED COPIES OF THIS PLAN SHEET.

WRECO
1243 ALPINE ROAD
SUITE 108
WALNUT CREEK, CA 94596

Dept OF TRANSPORTATION
DISTRICT 5
50 HIGUERA STREET
SAN LUIS OBISPO, CA 93401

NOTES:

1. FOR ACCURATE RIGHT OF WAY DATA, CONTACT RIGHT OF WAY ENGINEERING AT THE DISTRICT OFFICE.
2. FOR UTILITIES, SEE LAYOUT SHEETS.
3. STATION & OFFSET TIES TO DRAINAGE STRUCTURES ARE MEASURED PER DETAILS ON SHEET DD-1.
4. FOR FINISHED GRADE, SEE DRAINAGE PROFILES AND CONSTRUCTION DETAILS SHEETS.
5. LOCATIONS OF EXISTING DRAINAGE FACILITIES ARE APPROXIMATE. VERIFY LOCATION AND ELEVATION OF EXISTING DRAINAGE FACILITIES PRIOR TO MODIFYING.

LEGEND:

PROPOSED DITCH w/ CLEANOUT

(1) DITCH BREAK POINT

Exist TREE TO REMAIN

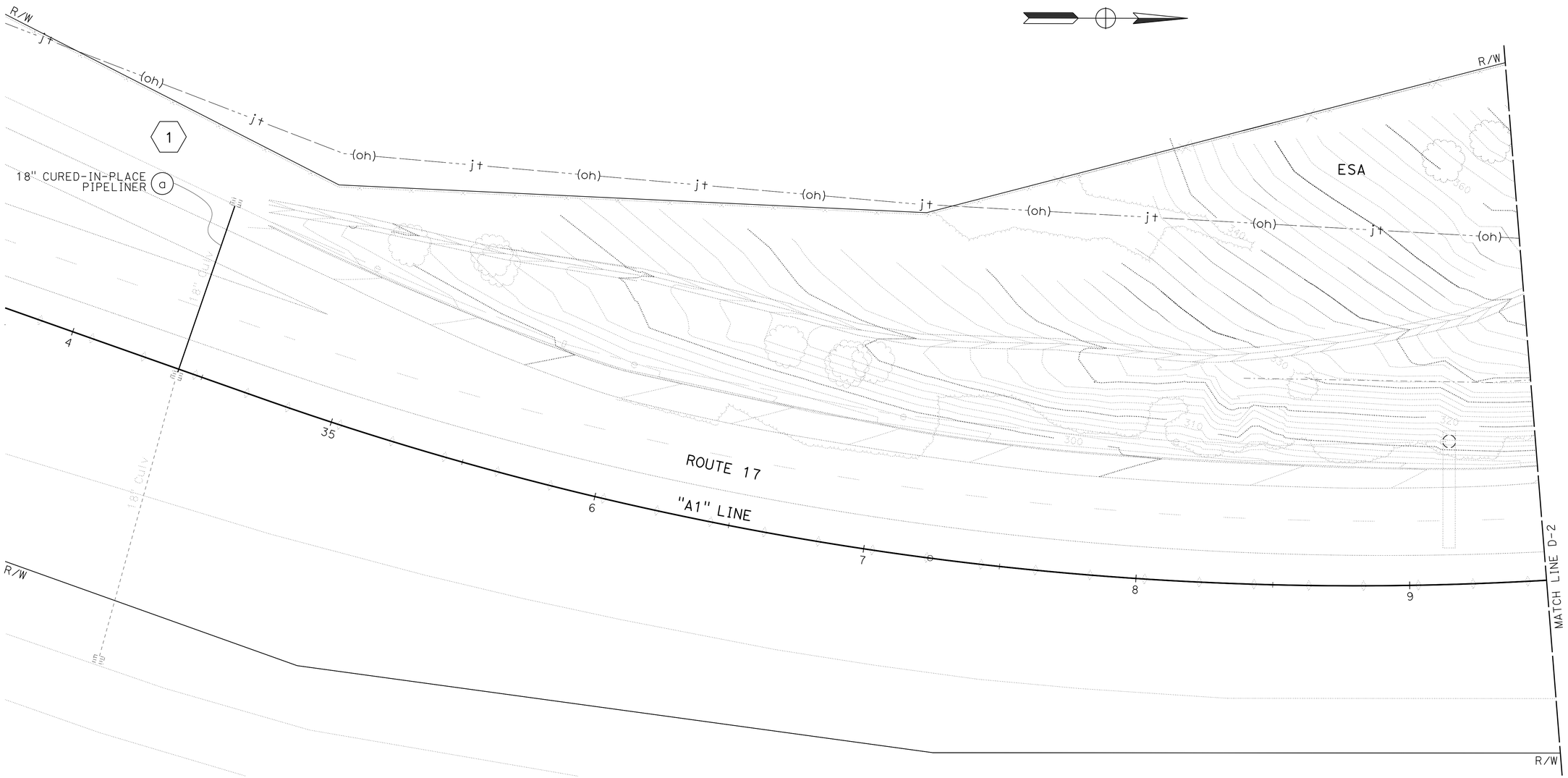

DRAINAGE PLAN

SCALE: 1'' = 20'

D-1

STATE OF CALIFORNIA - DEPARTMENT OF TRANSPORTATION	CONSULTANT FUNCTIONAL SUPERVISOR	CALCULATED-DESIGNED BY	REVISED BY
Caltrans	HAN-BIN LIANG	CHECKED BY	DATE REVISED
	JENNIFER ABRAMS	ALVIN YIM	AY
			04/15/16

LAST REVISION 04-15-16 | DATE PLOTTED => 07-JUN-2016 | TIME PLOTTED => 12:03

Dist	COUNTY	ROUTE	POST MILES TOTAL PROJECT	SHEET No.	TOTAL SHEETS
05	SCr	17	1.0/1.4	22	72

REGISTERED CIVIL ENGINEER 3-7-16 DATE

5-2-16
PLANS APPROVAL DATE

REGISTERED PROFESSIONAL ENGINEER JENNIFER ABRAMS No. 77782 Exp. 6-30-17 CIVIL STATE OF CALIFORNIA

THE STATE OF CALIFORNIA OR ITS OFFICERS OR AGENTS SHALL NOT BE RESPONSIBLE FOR THE ACCURACY OR COMPLETENESS OF SCANNED COPIES OF THIS PLAN SHEET.

WRECO
1243 ALPINE ROAD
SUITE 108
WALNUT CREEK, CA 94596

Dept OF TRANSPORTATION
DISTRICT 5
50 HIGUERA STREET
SAN LUIS OBISPO, CA 93401

NOTE:

FOR ACCURATE RIGHT OF WAY DATA, CONTACT RIGHT OF WAY ENGINEERING AT THE DISTRICT OFFICE.

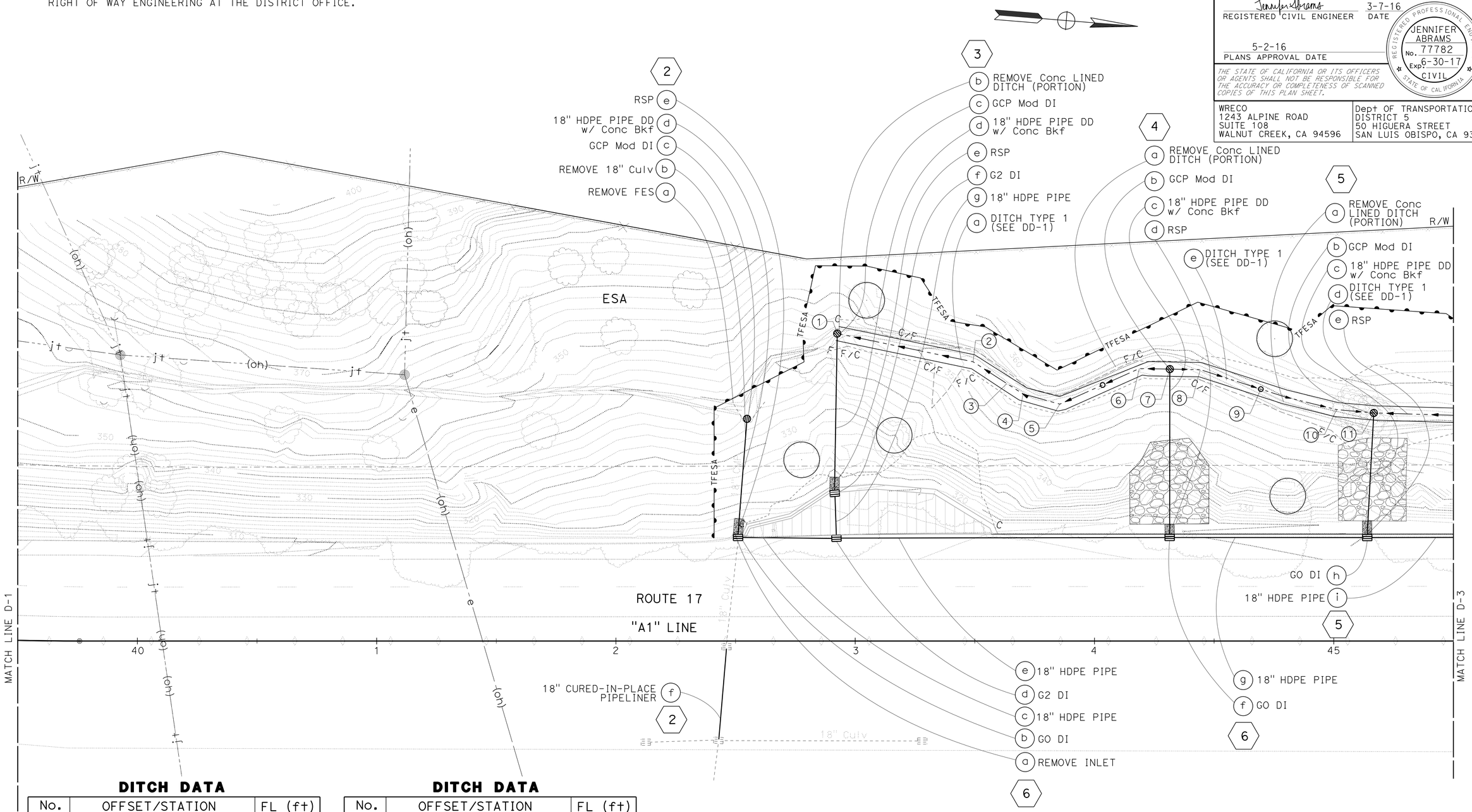

DITCH DATA

No.	OFFSET/STATION	FL (ft)
1	128.55' Lt "A1" 42+92.49	342.00
2	116.73' Lt "A1" 43+49.29	351.65
3	107.63' Lt "A1" 43+63.39	354.44
4	103.31' Lt "A1" 43+70.12	354.67
5	99.04' Lt "A1" 43+85.52	355.13
6	113.90' Lt "A1" 44+18.74	356.17

DITCH DATA

No.	OFFSET/STATION	FL (ft)
7	113.68' Lt "A1" 44+31.48	356.54
8	113.45' Lt "A1" 44+44.21	356.91
9	102.08 Lt "A1" 44+79.54	358.03
10	96.74' Lt "A1" 45+01.18	358.71
11	95.38' Lt "A1" 45+16.73	355.88

DRAINAGE PLAN

SCALE: 1'' = 20'

D-2

REVISED BY	DATE REVISED
AY	04/15/16

ALVIN YIM — JENNIFER ABRAMS

CALCULATED-DESIGNED BY — CHECKED BY

CONSULTANT FUNCTIONAL SUPERVISOR — HAN-BIN LIANG

STATE OF CALIFORNIA - DEPARTMENT OF TRANSPORTATION

Caltrans

LAST REVISION 04-15-16 — DATE PLOTTED => 07-JUN-2016 TIME PLOTTED => 12:03

Dist	COUNTY	ROUTE	POST MILES TOTAL PROJECT	SHEET No.	TOTAL SHEETS
05	SCr	17	1.0/1.4	23	72

Jennifer Abrams 3-7-16
REGISTERED CIVIL ENGINEER DATE

5-2-16
PLANS APPROVAL DATE

REGISTERED PROFESSIONAL ENGINEER
JENNIFER ABRAMS
No. 77782
Exp. 6-30-17
CIVIL
STATE OF CALIFORNIA

THE STATE OF CALIFORNIA OR ITS OFFICERS OR AGENTS SHALL NOT BE RESPONSIBLE FOR THE ACCURACY OR COMPLETENESS OF SCANNED COPIES OF THIS PLAN SHEET.

WRECO
1243 ALPINE ROAD
SUITE 108
WALNUT CREEK, CA 94596

Dept OF TRANSPORTATION
DISTRICT 5
50 HIGUERA STREET
SAN LUIS OBISPO, CA 93401

NOTE:

FOR ACCURATE RIGHT OF WAY DATA, CONTACT RIGHT OF WAY ENGINEERING AT THE DISTRICT OFFICE.

DITCH DATA

No.	OFFSET/STATION	FL (ft)
1	93.70′ Lt "A1" 45+72.34	361.96
2	111.70′ Lt "A1" 46+30.11	360.99
3	110.03′ Lt "A1" 46+44.20	360.74
4	108.62′ Lt "A1" 46+56.03	363.18
5	108.16′ Lt "A1" 46+98.35	369.23
6	55.51′ Lt "A1" 49+17.35	330.52
7	79.95′ Lt "A1" 49+61.42	337.42

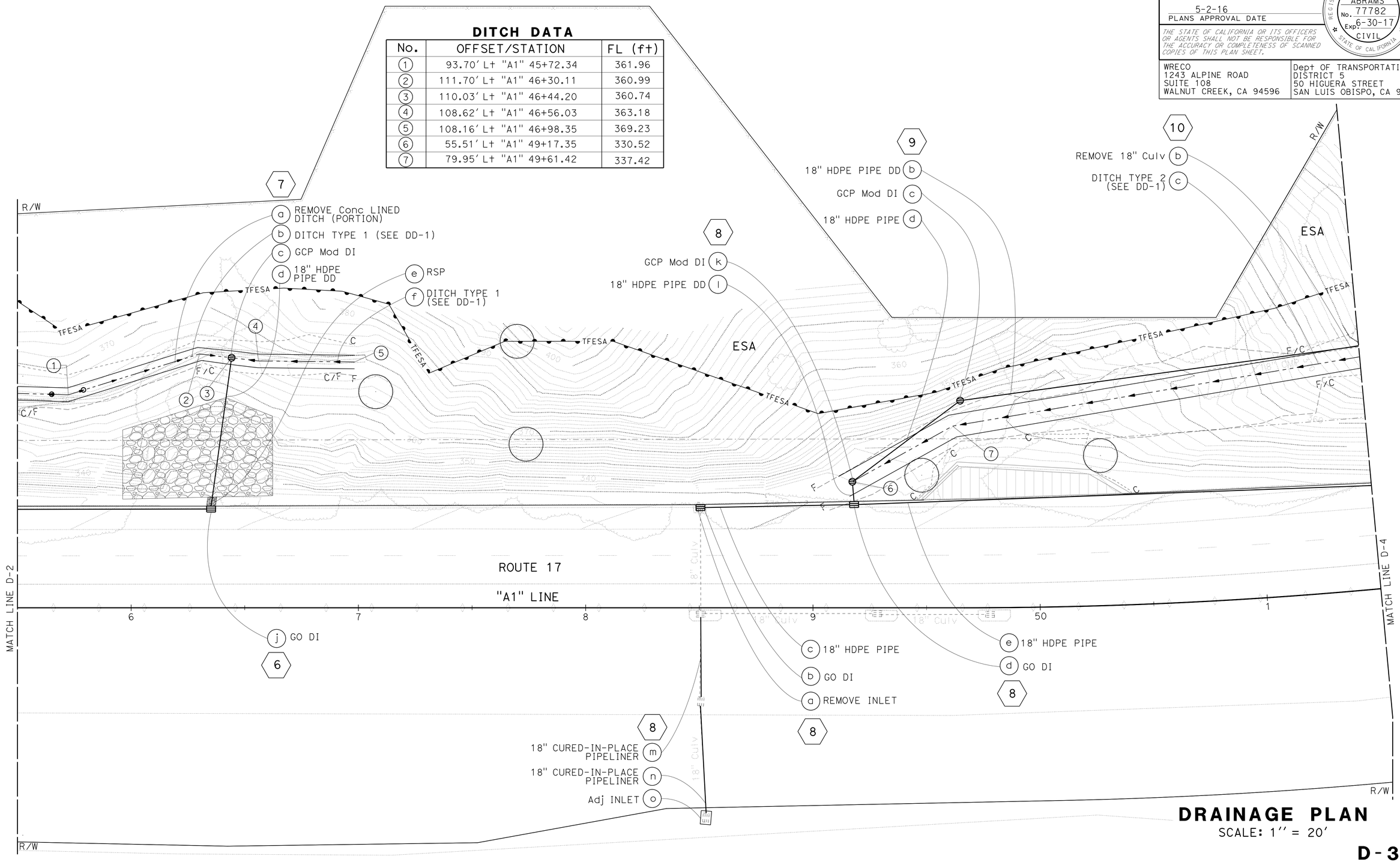

DRAINAGE PLAN

SCALE: 1″ = 20′

D-3

STATE OF CALIFORNIA - DEPARTMENT OF TRANSPORTATION
Caltrans

CONSULTANT FUNCTIONAL SUPERVISOR: HAN-BIN LIANG

CALCULATED-DESIGNED BY: ALVIN YIM
CHECKED BY: JENNIFER ABRAMS

REVISED BY: AY
DATE REVISED: 04/15/16

LAST REVISION: 04-15-16
DATE PLOTTED => 07-JUN-2016
TIME PLOTTED => 12:03

NOTE:

FOR ACCURATE RIGHT OF WAY DATA, CONTACT RIGHT OF WAY ENGINEERING AT THE DISTRICT OFFICE.

DITCH DATA

No.	OFFSET/STATION	FL (ft)
1	103.66' Lt "A1" 51+67.28	378.57
2	108.96' Lt "A1" 52+13.03	387.68
3	108.39' Lt "A1" 52+58.02	388.71
4	108.76' Lt "A1" 53+05.51	389.64
5	119.79 Lt "A1" 53+36.33	390.28
6	119.01 Lt "A1" 53+49.88	390.55

DITCH DATA

No.	OFFSET/STATION	FL (ft)
7	108.36' Lt "A1" 54+02.69	392.62
8	106.81' Lt "A1" 54+79.05	395.58
9	110.33' Lt "A1" 55+32.29	396.94
10	111.19' Lt "A1" 55+45.40	397.72
11	120.18' Lt "A1" 55+68.95	399.21
12	117.67' Lt "A1" 56+11.36	403.55

Dist	COUNTY	ROUTE	POST MILES TOTAL PROJECT	SHEET No.	TOTAL SHEETS
05	SCr	17	1.0/1.4	24	72

REGISTERED CIVIL ENGINEER — DATE 3-7-16

PLANS APPROVAL DATE 5-2-16

REGISTERED PROFESSIONAL ENGINEER — JENNIFER ABRAMS No. 77782 Exp. 6-30-17 CIVIL — STATE OF CALIFORNIA

THE STATE OF CALIFORNIA OR ITS OFFICERS OR AGENTS SHALL NOT BE RESPONSIBLE FOR THE ACCURACY OR COMPLETENESS OF SCANNED COPIES OF THIS PLAN SHEET.

WRECO
1243 ALPINE ROAD
SUITE 108
WALNUT CREEK, CA 94596

Dept OF TRANSPORTATION
DISTRICT 5
50 HIGUERA STREET
SAN LUIS OBISPO, CA 93401

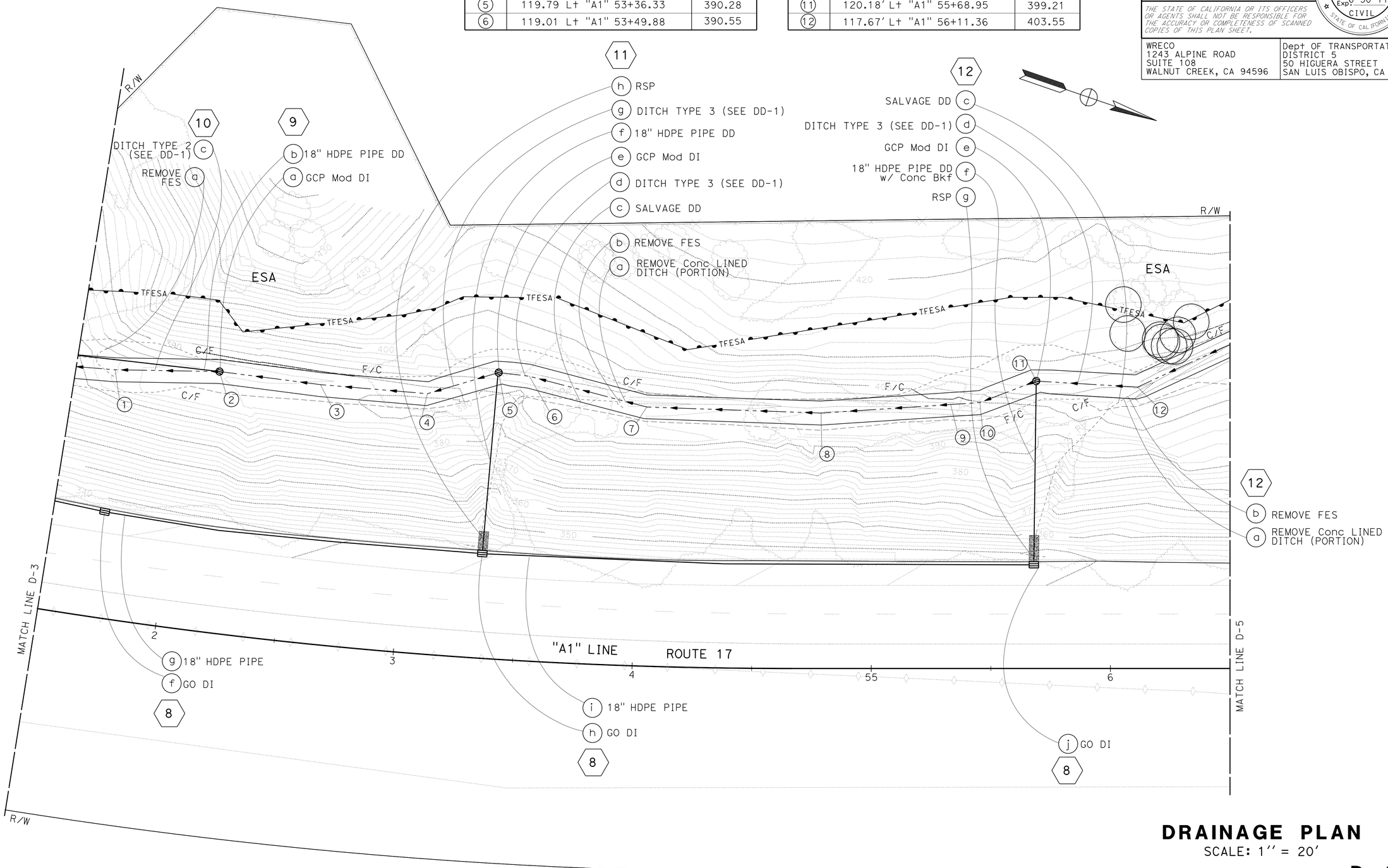

DRAINAGE PLAN

SCALE: 1'' = 20'

D-4

STATE OF CALIFORNIA - DEPARTMENT OF TRANSPORTATION

Caltrans

CONSULTANT FUNCTIONAL SUPERVISOR: HAN-BIN LIANG

CALCULATED-DESIGNED BY: ALVIN YIM — CHECKED BY: JENNIFER ABRAMS

REVISED BY: AY — DATE REVISED: 04/15/16

LAST REVISION 04-15-16 — DATE PLOTTED => 07-JUN-2016 — TIME PLOTTED => 12:03

Dist	COUNTY	ROUTE	POST MILES TOTAL PROJECT	SHEET No.	TOTAL SHEETS
05	SCr	17	1.0/1.4	25	72

Jennifer Abrams 3-7-16
REGISTERED CIVIL ENGINEER DATE

5-2-16
PLANS APPROVAL DATE

REGISTERED PROFESSIONAL ENGINEER
JENNIFER ABRAMS
No. 77782
Exp. 6-30-17
CIVIL
STATE OF CALIFORNIA

THE STATE OF CALIFORNIA OR ITS OFFICERS OR AGENTS SHALL NOT BE RESPONSIBLE FOR THE ACCURACY OR COMPLETENESS OF SCANNED COPIES OF THIS PLAN SHEET.

WRECO
1243 ALPINE ROAD
SUITE 108
WALNUT CREEK, CA 94596

Dept OF TRANSPORTATION
DISTRICT 5
50 HIGUERA STREET
SAN LUIS OBISPO, CA 93401

NOTE:

FOR ACCURATE RIGHT OF WAY DATA, CONTACT RIGHT OF WAY ENGINEERING AT THE DISTRICT OFFICE.

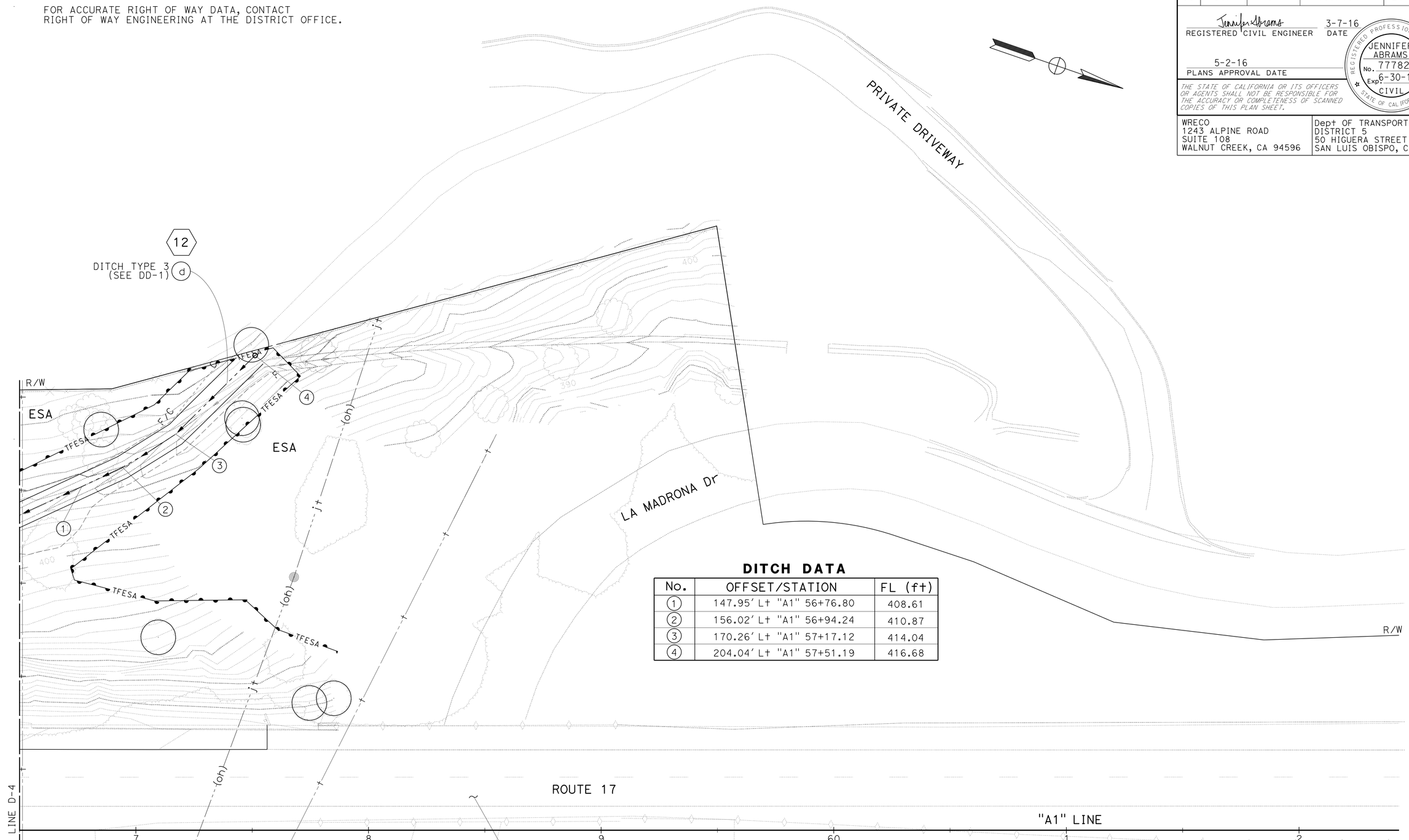

DITCH DATA

No.	OFFSET/STATION	FL (ft)
1	147.95' Lt "A1" 56+76.80	408.61
2	156.02' Lt "A1" 56+94.24	410.87
3	170.26' Lt "A1" 57+17.12	414.04
4	204.04' Lt "A1" 57+51.19	416.68

DRAINAGE PLAN

SCALE: 1'' = 20'

D-5

STATE OF CALIFORNIA - DEPARTMENT OF TRANSPORTATION
Caltrans

CONSULTANT FUNCTIONAL SUPERVISOR: HAN-BIN LIANG
CALCULATED-DESIGNED BY: ALVIN YIM
CHECKED BY: JENNIFER ABRAMS
REVISED BY: AY
DATE REVISED: 04/15/16

LAST REVISION 04-15-16
DATE PLOTTED => 07-JUN-2016
TIME PLOTTED => 12:03

Dist	COUNTY	ROUTE	POST MILES TOTAL PROJECT	SHEET No.	TOTAL SHEETS
05	SCr	17	1.0/1.4	26	72

REGISTERED CIVIL ENGINEER — DATE 3-7-16

5-2-16
PLANS APPROVAL DATE

REGISTERED PROFESSIONAL ENGINEER — JENNIFER ABRAMS — No. 77782 — Exp. 6-30-17 — CIVIL — STATE OF CALIFORNIA

THE STATE OF CALIFORNIA OR ITS OFFICERS OR AGENTS SHALL NOT BE RESPONSIBLE FOR THE ACCURACY OR COMPLETENESS OF SCANNED COPIES OF THIS PLAN SHEET.

WRECO
1243 ALPINE ROAD
SUITE 108
WALNUT CREEK, CA 94596

Dept OF TRANSPORTATION
DISTRICT 5
50 HIGUERA STREET
SAN LUIS OBISPO, CA 93401

NOTES:

1. ALL STATION, OFFSETS, AND CORRESPONDING SHOWN LEADER LINES ARE TO THE CENTER OF BOX (COB), OR FLOW LINE AT CURB (FLC) UNLESS OTHERWISE SHOWN.
2. ALL DRAINAGE STRUCTURES ARE RADIAL TO THE REFERENCE ALIGNMENT UNLESS OTHERWISE SHOWN.

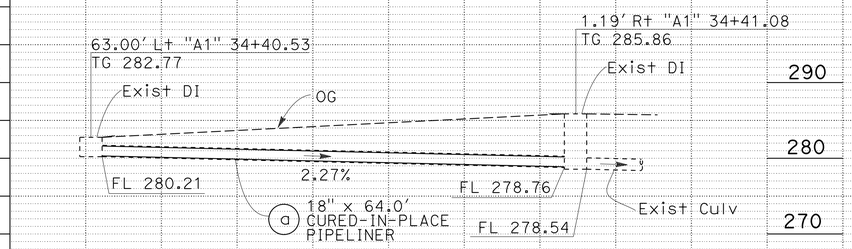

DRAINAGE SYSTEM No. 1

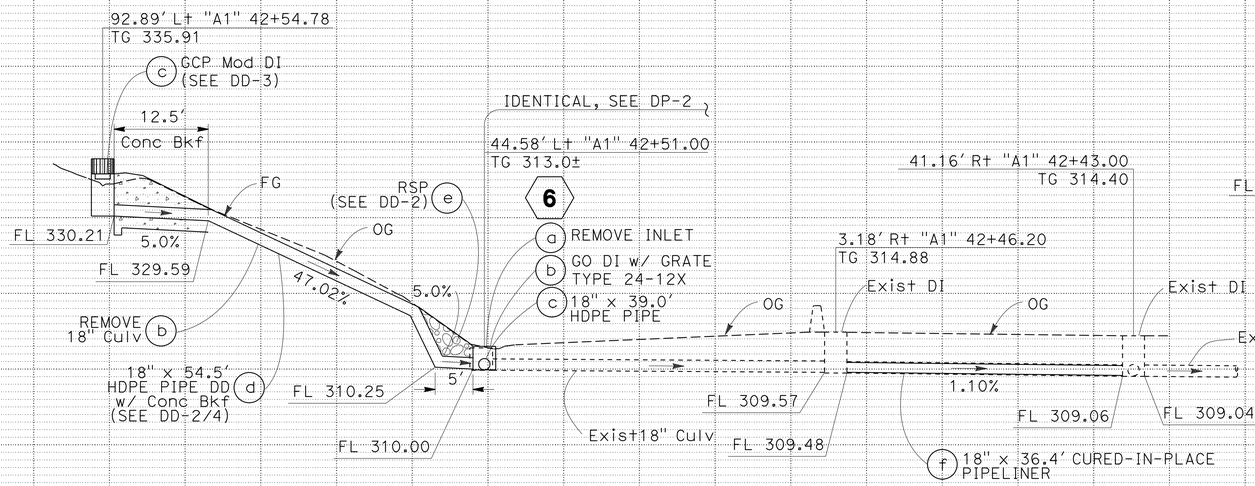

DRAINAGE SYSTEM No. 2

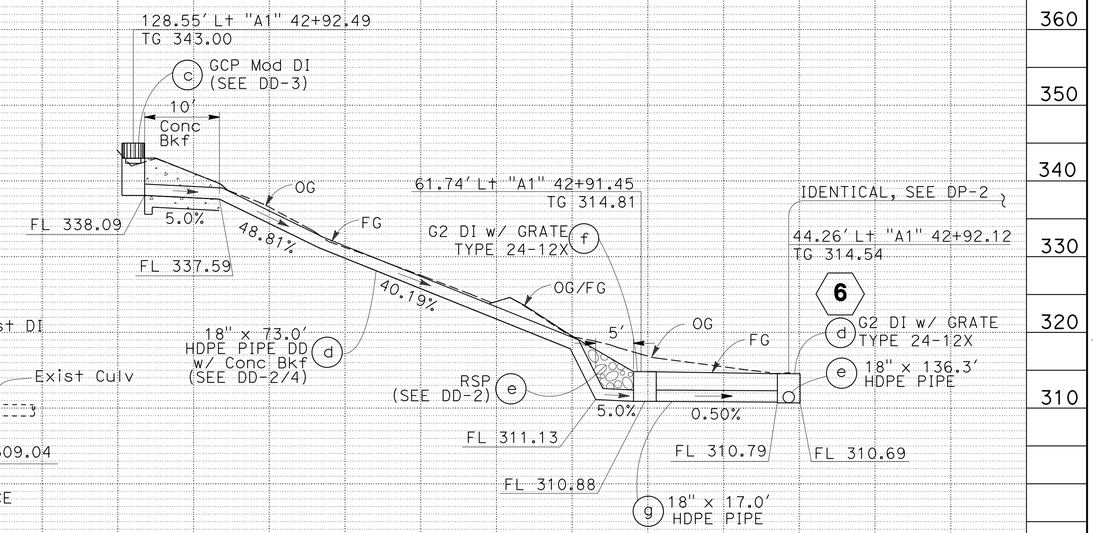

DRAINAGE SYSTEM No. 3

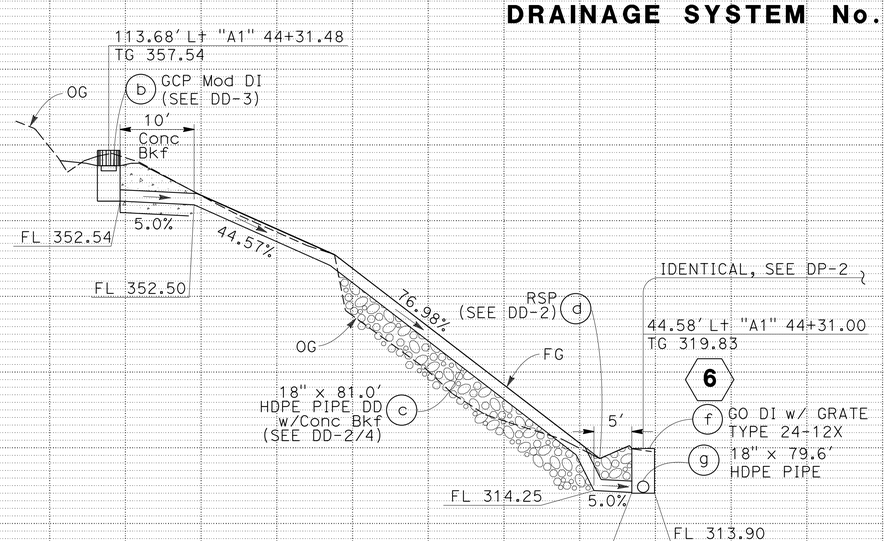

DRAINAGE SYSTEM No. 4

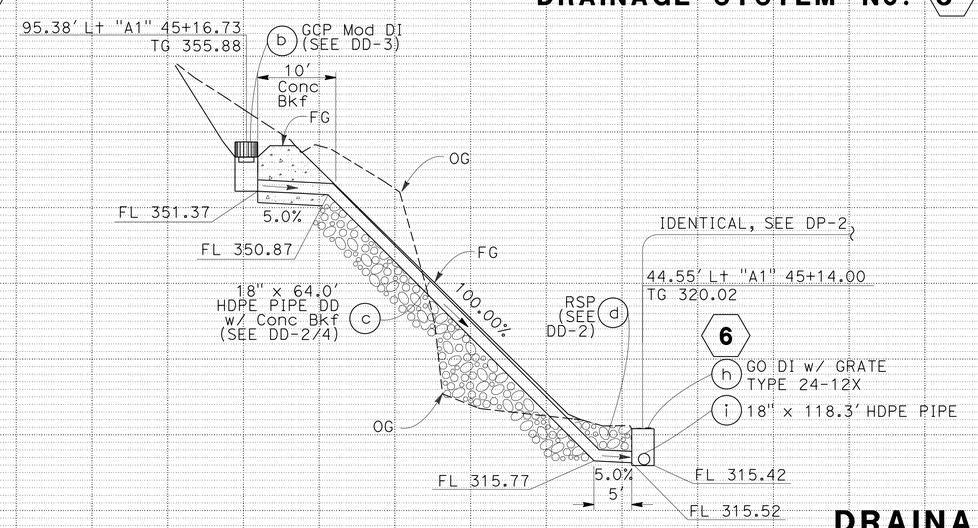

DRAINAGE SYSTEM No. 5

DRAINAGE PROFILES

SCALE: Horiz 1" = 10'
Vert 1" = 10'

DP-1

STATE OF CALIFORNIA - DEPARTMENT OF TRANSPORTATION
Caltrans

CONSULTANT FUNCTIONAL SUPERVISOR: HAN-BIN LIANG
CALCULATED-DESIGNED BY: JENNIFER ABRAMS
CHECKED BY: ALVIN YIM
REVISED BY: AY
DATE REVISED: 04/15/16

LAST REVISION 04-15-16 | DATE PLOTTED => 07-JUN-2016 | TIME PLOTTED => 12:03

Dist	COUNTY	ROUTE	POST MILES TOTAL PROJECT	SHEET No.	TOTAL SHEETS
05	SCr	17	1.0/1.4	27	72

REGISTERED CIVIL ENGINEER — DATE 3-7-16

5-2-16
PLANS APPROVAL DATE

REGISTERED PROFESSIONAL ENGINEER — JENNIFER ABRAMS No. 77782 Exp. 6-30-17 CIVIL — STATE OF CALIFORNIA

THE STATE OF CALIFORNIA OR ITS OFFICERS OR AGENTS SHALL NOT BE RESPONSIBLE FOR THE ACCURACY OR COMPLETENESS OF SCANNED COPIES OF THIS PLAN SHEET.

WRECO
1243 ALPINE ROAD
SUITE 108
WALNUT CREEK, CA 94596

Dept OF TRANSPORTATION
DISTRICT 5
50 HIGUERA STREET
SAN LUIS OBISPO, CA 93401

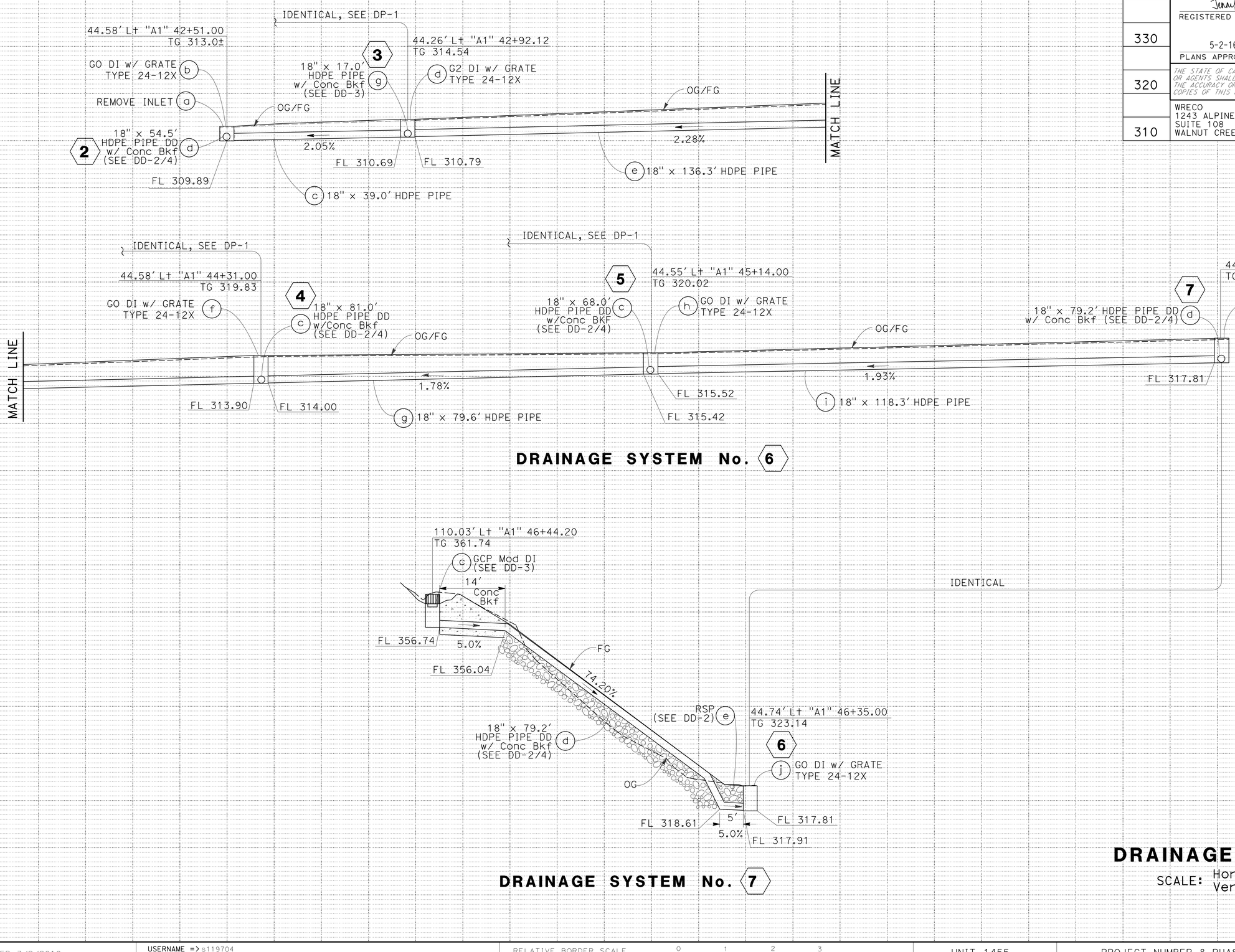

DRAINAGE PROFILES

SCALE: Horiz 1" = 10'
Vert 1" = 10'

DP-2

REVISED BY	DATE REVISED
AY	04/15/16

CALCULATED-DESIGNED BY: ALVIN YIM
CHECKED BY: JENNIFER ABRAMS
CONSULTANT FUNCTIONAL SUPERVISOR: HAN-BIN LIANG

STATE OF CALIFORNIA - DEPARTMENT OF TRANSPORTATION
Caltrans

LAST REVISION 04-15-16 | DATE PLOTTED => 07-JUN-2016 | TIME PLOTTED => 12:03

Dist	COUNTY	ROUTE	POST MILES TOTAL PROJECT	SHEET No.	TOTAL SHEETS
05	SCr	17	1.0/1.4	28	72

REGISTERED CIVIL ENGINEER — DATE 3-7-16

5-2-16
PLANS APPROVAL DATE

REGISTERED PROFESSIONAL ENGINEER — JENNIFER ABRAMS No. 77782 Exp. 6-30-17 CIVIL — STATE OF CALIFORNIA

THE STATE OF CALIFORNIA OR ITS OFFICERS OR AGENTS SHALL NOT BE RESPONSIBLE FOR THE ACCURACY OR COMPLETENESS OF SCANNED COPIES OF THIS PLAN SHEET.

WRECO
1243 ALPINE ROAD
SUITE 108
WALNUT CREEK, CA 94596

Dept OF TRANSPORTATION
DISTRICT 5
50 HIGUERA STREET
SAN LUIS OBISPO, CA 93401

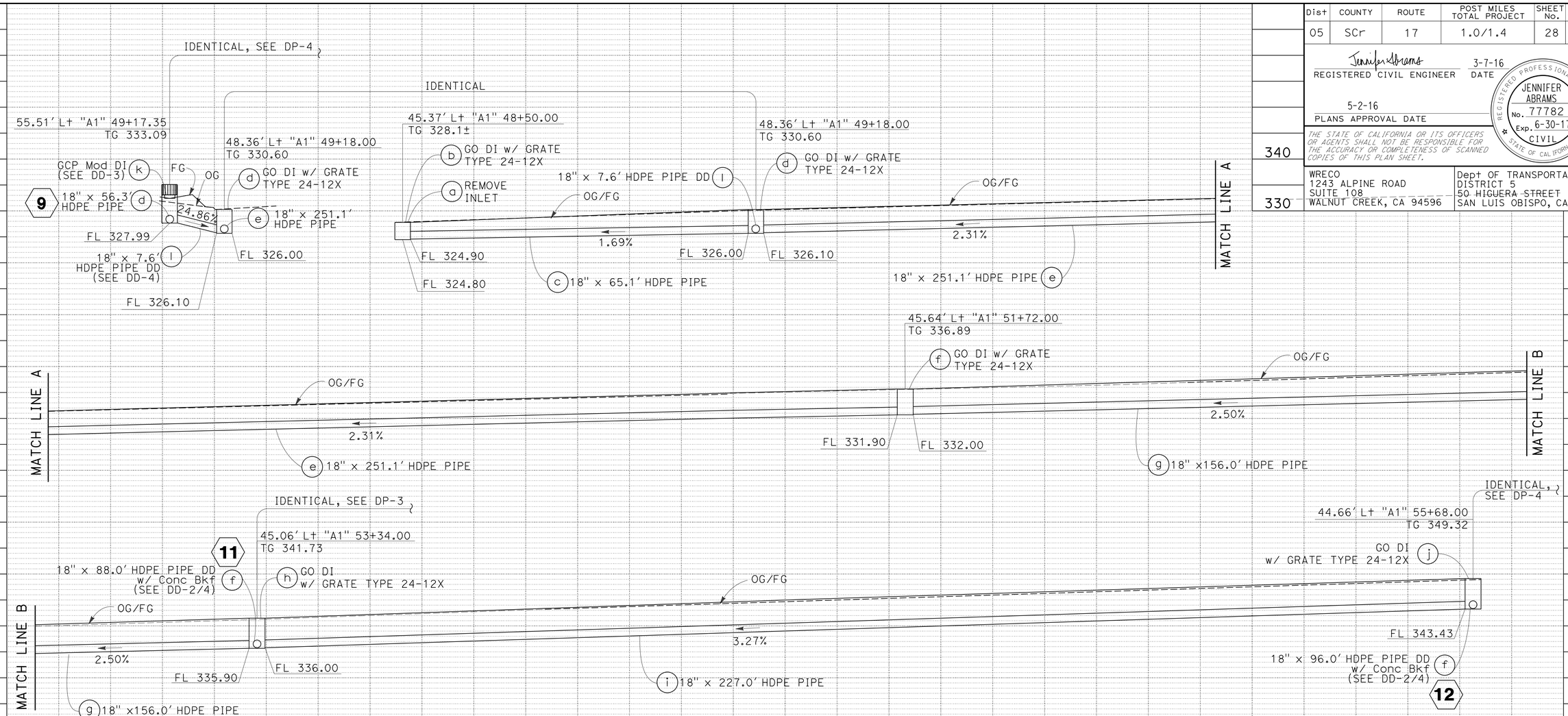

DRAINAGE SYSTEM No. 8

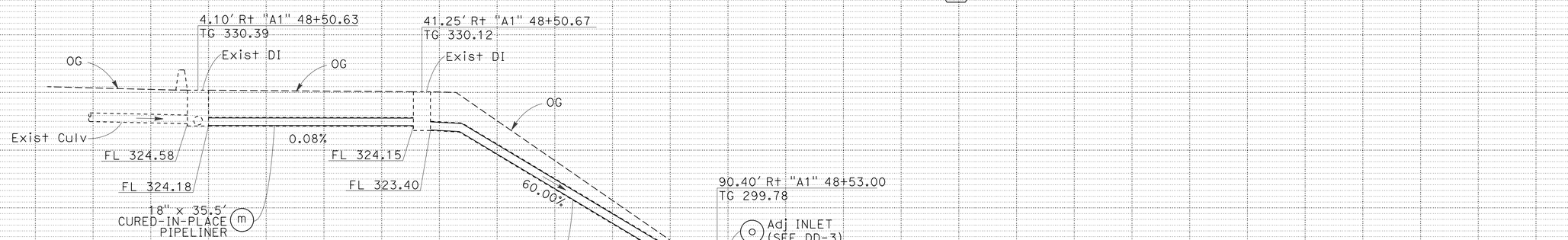

DRAINAGE SYSTEM No. 8

DRAINAGE PROFILES

SCALE: Horiz 1" = 10'
Vert 1" = 10'

DP-3

STATE OF CALIFORNIA - DEPARTMENT OF TRANSPORTATION

Caltrans

CONSULTANT FUNCTIONAL SUPERVISOR: HAN-BIN LIANG

CALCULATED-DESIGNED BY: ALVIN YIM — CHECKED BY: JENNIFER ABRAMS

REVISED BY: AY — DATE REVISED: 04/15/16

LAST REVISION 04-15-16 — DATE PLOTTED => 07-JUN-2016 — TIME PLOTTED => 12:03

Dist	COUNTY	ROUTE	POST MILES TOTAL PROJECT	SHEET No.	TOTAL SHEETS
05	SCr	17	1.0/1.4	29	72

REGISTERED CIVIL ENGINEER — DATE 3-7-16

5-2-16
PLANS APPROVAL DATE

REGISTERED PROFESSIONAL ENGINEER — JENNIFER ABRAMS No. 77782 Exp. 6-30-17 CIVIL — STATE OF CALIFORNIA

THE STATE OF CALIFORNIA OR ITS OFFICERS OR AGENTS SHALL NOT BE RESPONSIBLE FOR THE ACCURACY OR COMPLETENESS OF SCANNED COPIES OF THIS PLAN SHEET.

WRECO
1243 ALPINE ROAD
SUITE 108
WALNUT CREEK, CA 94596

Dept OF TRANSPORTATION
DISTRICT 5
50 HIGUERA STREET
SAN LUIS OBISPO, CA 93401

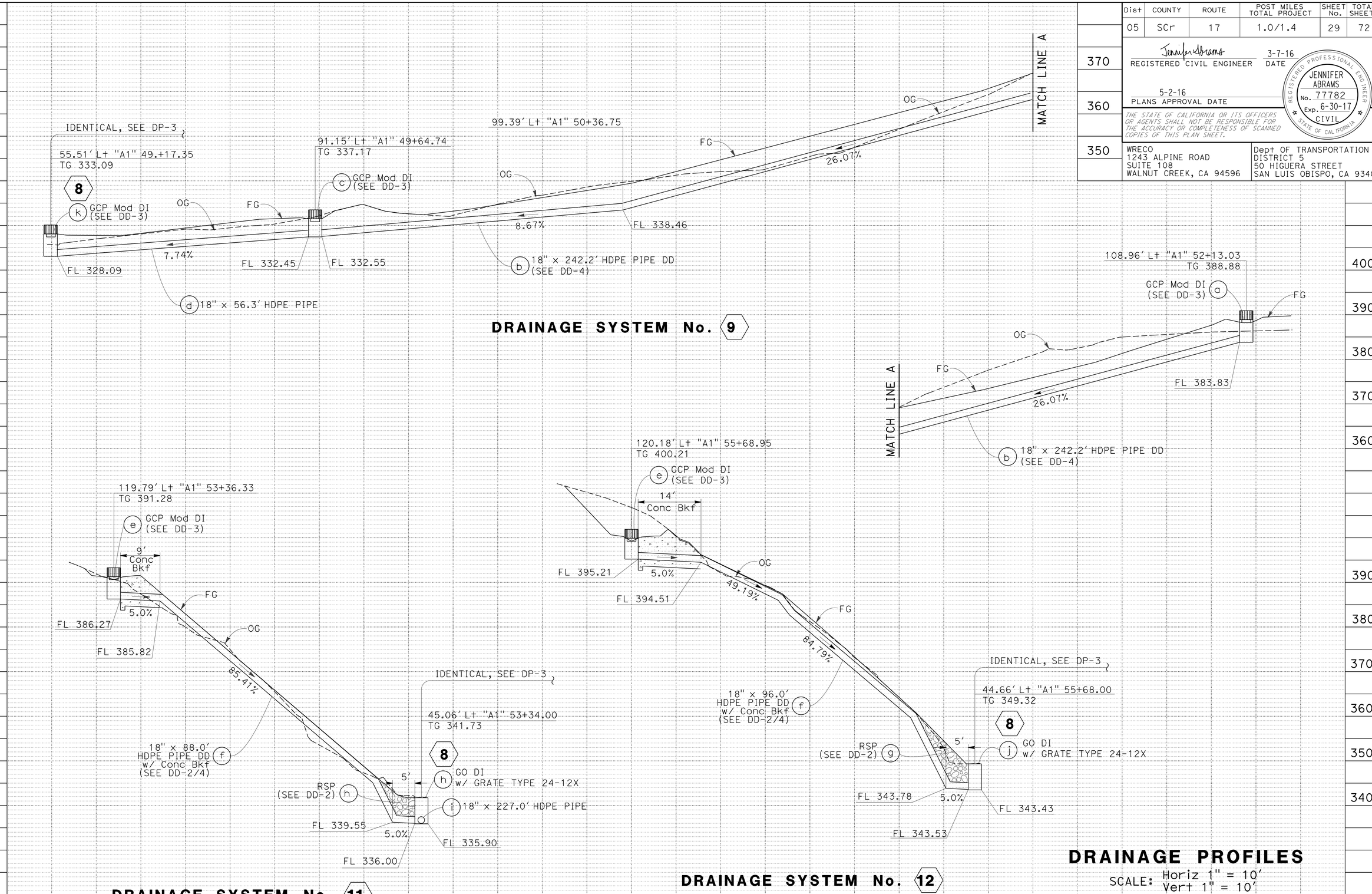

REVISED BY	DATE REVISED
AY	04/15/16

CALCULATED-DESIGNED BY: ALVIN YIM — JENNIFER ABRAMS
CHECKED BY
CONSULTANT FUNCTIONAL SUPERVISOR: HAN-BIN LIANG

STATE OF CALIFORNIA - DEPARTMENT OF TRANSPORTATION — Caltrans

LAST REVISION 04-15-16 | DATE PLOTTED => 07-JUN-2016 | TIME PLOTTED => 12:03

Dist	COUNTY	ROUTE	POST MILES TOTAL PROJECT	SHEET No.	TOTAL SHEETS
05	SCr	17	1.0/1.4	30	72

REGISTERED CIVIL ENGINEER — DATE 3-7-16

5-2-16
PLANS APPROVAL DATE

REGISTERED PROFESSIONAL ENGINEER — JENNIFER ABRAMS — No. 77782 — Exp. 6-30-17 — CIVIL — STATE OF CALIFORNIA

THE STATE OF CALIFORNIA OR ITS OFFICERS OR AGENTS SHALL NOT BE RESPONSIBLE FOR THE ACCURACY OR COMPLETENESS OF SCANNED COPIES OF THIS PLAN SHEET.

WRECO
1243 ALPINE ROAD
SUITE 108
WALNUT CREEK, CA 94596

Dept OF TRANSPORTATION
DISTRICT 5
50 HIGUERA STREET
SAN LUIS OBISPO, CA 93401

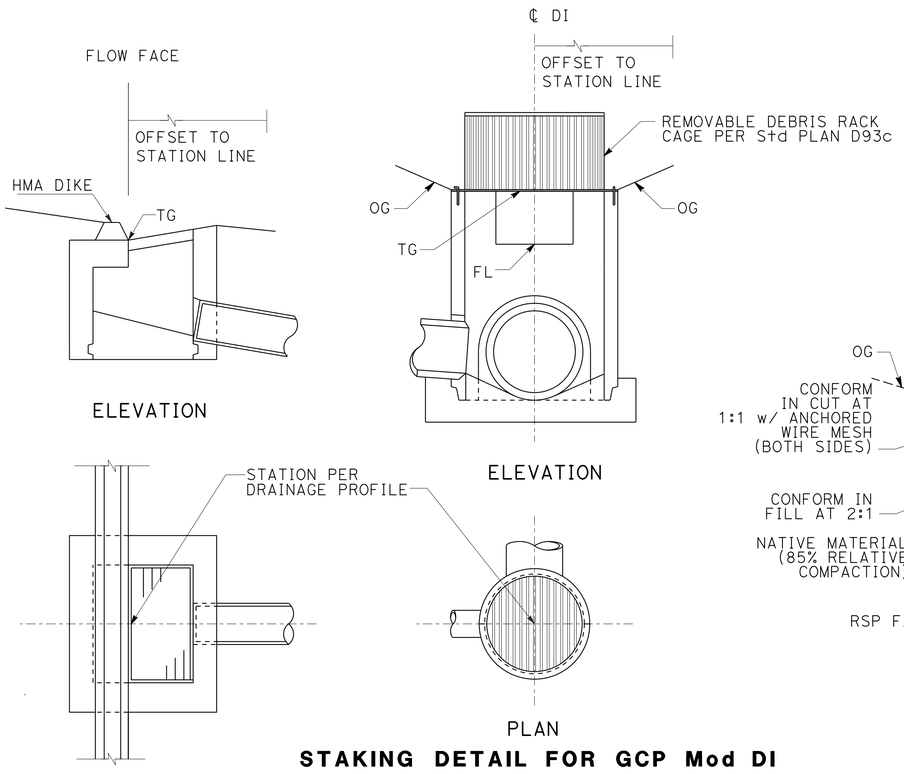

INLET ADJACENT TO AC DIKE

STAKING DETAIL FOR GCP Mod DI

2c 3c 4b 5b 7c

8k 9ac 11e 12e

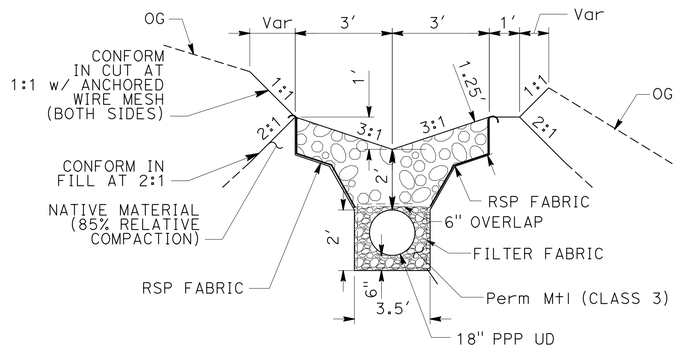

DITCH TYPE 1

3a 4e 5d

7b 7f

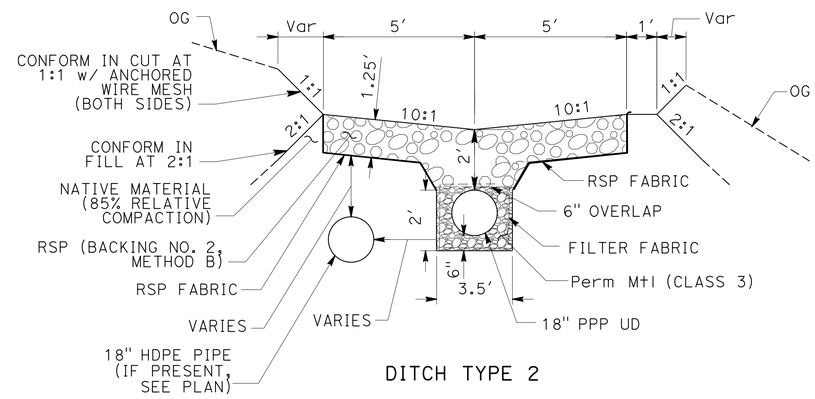

DITCH TYPE 2

10c

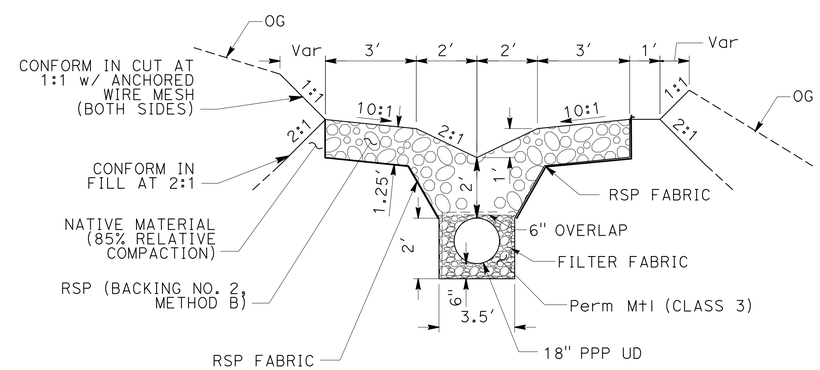

DITCH TYPE 3

11d 11g 12d

COMBINATION ACCESS ROAD/DITCH

DITCH DATA

DRAINAGE UNIT	APPROXIMATE ℄ LOCATION	BEGIN FLOWLINE (ft)	END FLOWLINE (ft)	LENGTH (LF)	TYPE
3a	128.55′ Lt "A1" 42+92.49 TO 113.68′ Lt "A1" 44+31.48	342.00	356.54	117	1
4e	113.68′ Lt "A1" 44+31.48 TO 95.38′ Lt "A1" 45+16.73	356.54	395.37	39	1
5d	95.38′ Lt "A1" 45+16.73 TO 93.70′ Lt "A1" 45+72.34	395.37	362.03	56	1
7b	93.70′ Lt "A1" 45+72.34 TO 110.03′ Lt "A1" 46+44.20	362.03	360.74	76	1
7f	110.03′ Lt "A1" 46+44.20 TO 108.16′ Lt "A1" 46+98.35	360.74	369.23	54	1
10c	55.51′ Lt "A1" 49+17.35 TO 108.96′ Lt "A1" 52+13.03	330.52	387.68	292	2
11d	119.79′ Lt "A1" 53+36.33 TO 120.18′ Lt "A1" 55+68.95	390.28	399.21	119	3
11g	108.96′ Lt "A1" 52+13.03 TO 119.79′ Lt "A1" 53+36.33	387.68	390.28	208	3
12d	120.18′ Lt "A1" 55+68.95 TO 204.04′ Lt "A1" 57+51.19	399.21	416.68	194	3

DRAINAGE DETAILS

NO SCALE

DD-1

REVISED BY	DATE REVISED
AY	04/15/16

CALCULATED-DESIGNED BY: ALVIN YIM — CHECKED BY: JENNIFER ABRAMS

CONSULTANT FUNCTIONAL SUPERVISOR: HAN-BIN LIANG

STATE OF CALIFORNIA - DEPARTMENT OF TRANSPORTATION — Caltrans

LAST REVISION 04-15-16 — DATE PLOTTED => 07-JUN-2016 — TIME PLOTTED => 12:03

Dist	COUNTY	ROUTE	POST MILES TOTAL PROJECT	SHEET No.	TOTAL SHEETS
05	SCr	17	1.0/1.4	31	72

REGISTERED CIVIL ENGINEER 3-7-16 DATE

5-2-16
PLANS APPROVAL DATE

REGISTERED PROFESSIONAL ENGINEER JENNIFER ABRAMS No. 77782 Exp. 6-30-17 CIVIL STATE OF CALIFORNIA

THE STATE OF CALIFORNIA OR ITS OFFICERS OR AGENTS SHALL NOT BE RESPONSIBLE FOR THE ACCURACY OR COMPLETENESS OF SCANNED COPIES OF THIS PLAN SHEET.

WRECO
1243 ALPINE ROAD
SUITE 108
WALNUT CREEK, CA 94596

Dept OF TRANSPORTATION
DISTRICT 5
50 HIGUERA STREET
SAN LUIS OBISPO, CA 93401

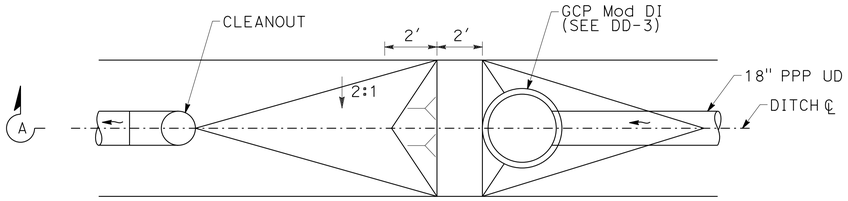

PLAN

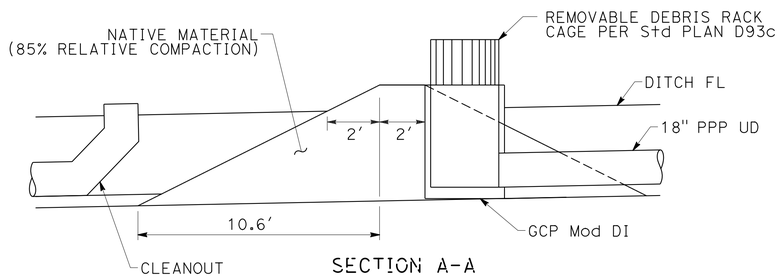

SECTION A-A

DITCH TYPE 1 & TYPE 2 BERM

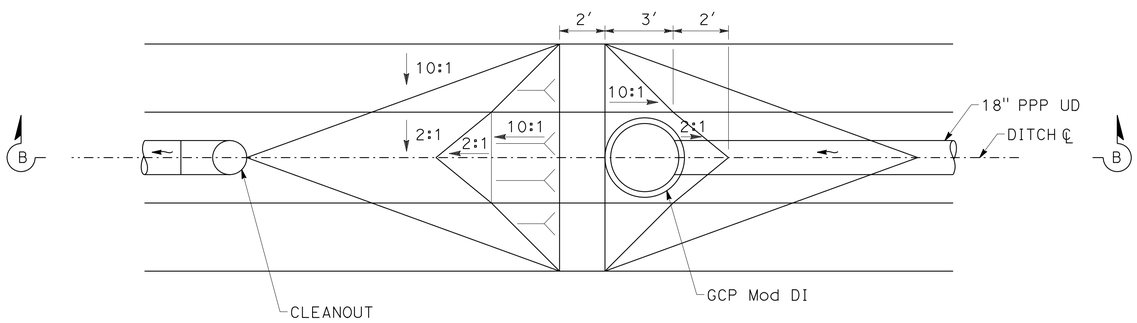

PLAN

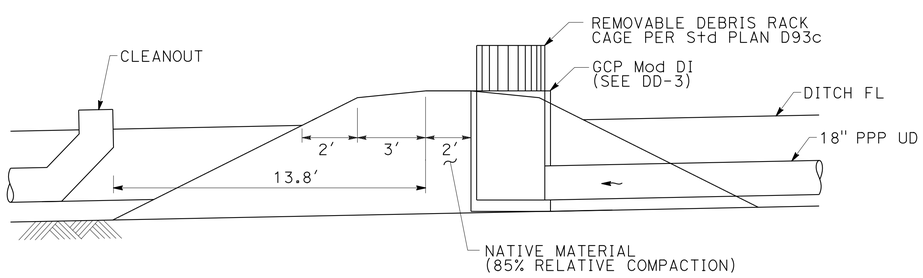

SECTION B-B

DITCH TYPE 3 BERM

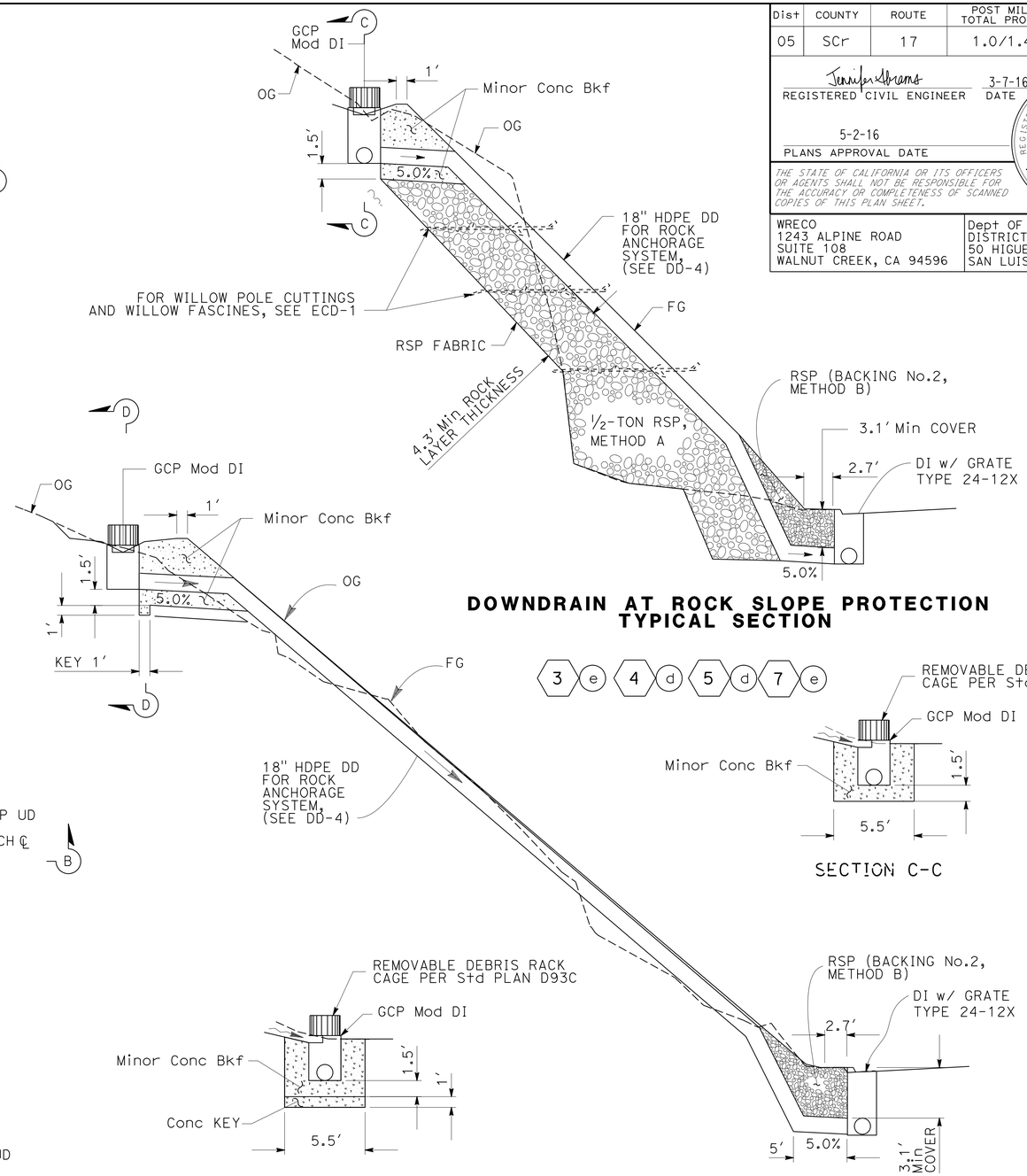

DOWNDRAIN AT ROCK SLOPE PROTECTION TYPICAL SECTION

DOWNDRAIN TYPICAL SECTION

DRAINAGE DETAILS

NO SCALE

DD-2

STATE OF CALIFORNIA - DEPARTMENT OF TRANSPORTATION

Caltrans

CONSULTANT FUNCTIONAL SUPERVISOR: HAN-BIN LIANG

CALCULATED-DESIGNED BY: ALVIN YIM | CHECKED BY: JENNIFER ABRAMS

REVISED BY: AY | DATE REVISED: 04/15/16

LAST REVISION 04-15-16 | DATE PLOTTED => 07-JUN-2016 | TIME PLOTTED => 12:03

Dist	COUNTY	ROUTE	POST MILES TOTAL PROJECT	SHEET No.	TOTAL SHEETS
05	SCr	17	1.0/1.4	32	72

REGISTERED CIVIL ENGINEER 3-7-16 DATE

5-2-16
PLANS APPROVAL DATE

REGISTERED PROFESSIONAL ENGINEER JENNIFER ABRAMS No. 77782 Exp. 6-30-17 CIVIL STATE OF CALIFORNIA

THE STATE OF CALIFORNIA OR ITS OFFICERS OR AGENTS SHALL NOT BE RESPONSIBLE FOR THE ACCURACY OR COMPLETENESS OF SCANNED COPIES OF THIS PLAN SHEET.

WRECO
1243 ALPINE ROAD
SUITE 108
WALNUT CREEK, CA 94596

Dept OF TRANSPORTATION
DISTRICT 5
50 HIGUERA STREET
SAN LUIS OBISPO, CA 93401

NOTE:

FOR DETAILS NOT SHOWN, SEE STD PLAN No. D75B.

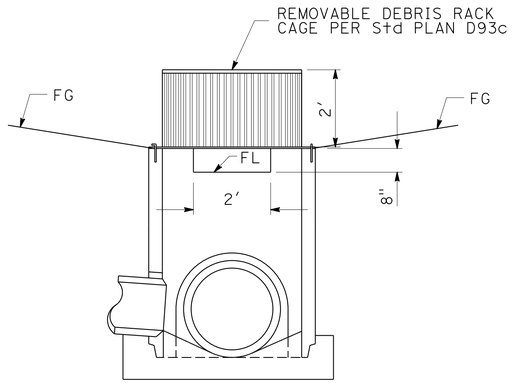

ELEVATION

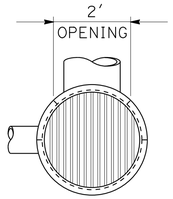

PLAN

GCP Mod DI

2 c 3 c 4 b 5 b

8 k 9 a c 11 e 12 e

PIPE INLETS
DEBRIS DETAILS

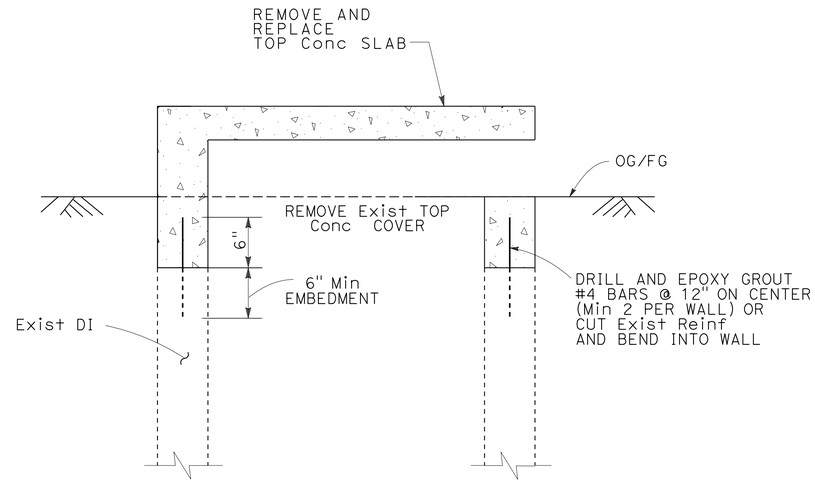

ELEVATION VIEW

Adj INLET

NOTE:

REMOVE 12" Min OF EXISTING WALL FOR SPLICING, ON ALL Adj INLET.

8 o

DRAINAGE DETAILS

NO SCALE

DD-3

STATE OF CALIFORNIA - DEPARTMENT OF TRANSPORTATION
Caltrans

CONSULTANT FUNCTIONAL SUPERVISOR: HAN-BIN LIANG
CALCULATED-DESIGNED BY: ALVIN YIM
CHECKED BY: JENNIFER ABRAMS
REVISED BY: AY
DATE REVISED: 04/15/16

LAST REVISION 04-15-16 | DATE PLOTTED => 07-JUN-2016 TIME PLOTTED => 12:03

Dist	COUNTY	ROUTE	POST MILES TOTAL PROJECT	SHEET No.	TOTAL SHEETS
05	SCr	17	1.0/1.4	33	72

REGISTERED CIVIL ENGINEER — DATE 3-7-16

PLANS APPROVAL DATE 5-2-16

REGISTERED PROFESSIONAL ENGINEER — JENNIFER ABRAMS No. 77782 Exp. 6-30-17 CIVIL — STATE OF CALIFORNIA

THE STATE OF CALIFORNIA OR ITS OFFICERS OR AGENTS SHALL NOT BE RESPONSIBLE FOR THE ACCURACY OR COMPLETENESS OF SCANNED COPIES OF THIS PLAN SHEET.

WRECO
1243 ALPINE ROAD
SUITE 108
WALNUT CREEK, CA 94596

Dept OF TRANSPORTATION
DISTRICT 5
50 HIGUERA STREET
SAN LUIS OBISPO, CA 93401

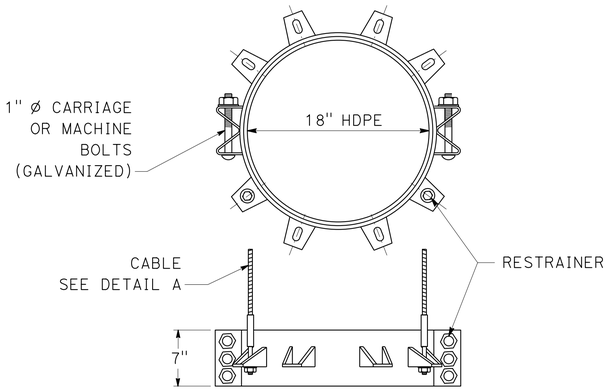

DETAIL C

RESTRAINER ASSEMBLY

NOTES:

1. FOR ADDITIONAL DETAILS OF THE ROCK ANCHOR REFER TO THE MANUFACTURER'S INSTALLATION INSTRUCTIONS.
2. FOR DETAILS OF RESTRAINER, REFER TO THE MANUFACTURER'S INSTALLATION INSTRUCTIONS.
3. PIPE AND FITTINGS USED FOR DOWNDRAIN SHALL BE FROM ONE MANUFACTURER FOR EACH INSTALLATION.
4. ATTACH 2 CABLES TO JOINT RESTRAINER.
5. EACH ROCK ANCHOR MUST BE PROOF TESTED AND MUST BE INSTALLED IN CONFORMANCE WITH THE MANUFACTURER'S PRINTED INSTRUCTIONS.
6. FABRICATED FITTING (90° ELL-FIVE SEGMENT) MUST BE FIELD CUT TO FIT. THE END MUST BE PLAIN FOR FIELD BUTT FUSION TO PIPE.

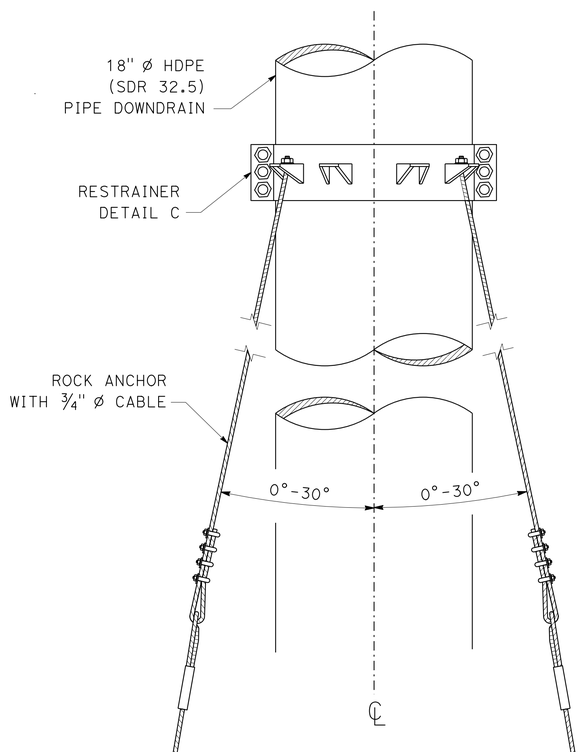

PLAN

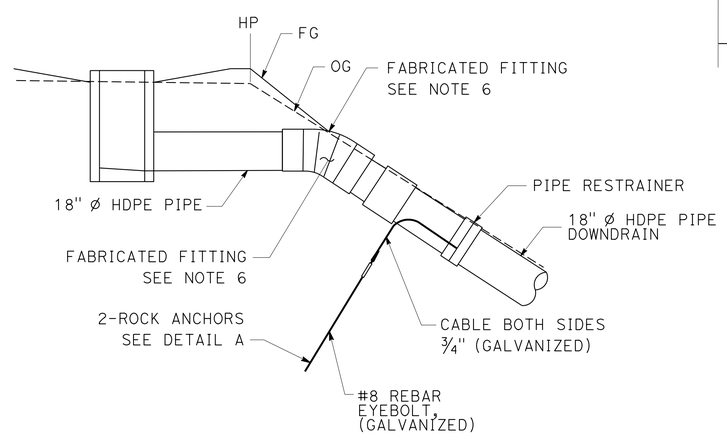

ROCK ANCHORAGE SYSTEM

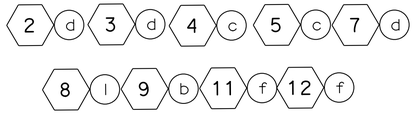

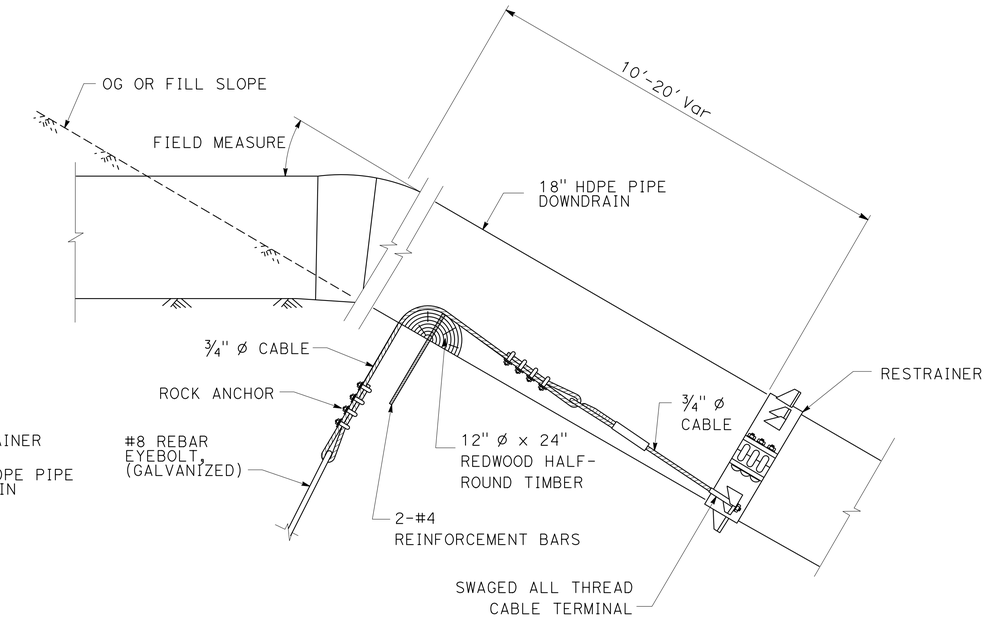

DETAIL A

ROCK ANCHORAGE SYSTEM DETAILS

DRAINAGE DETAILS

NO SCALE

DD-4

AY	04/15/16	ALVIN YIM	JENNIFER ABRAMS
REVISED BY	DATE REVISED	CALCULATED-DESIGNED BY	CHECKED BY

CONSULTANT FUNCTIONAL SUPERVISOR: HAN-BIN LIANG

STATE OF CALIFORNIA - DEPARTMENT OF TRANSPORTATION — Caltrans

LAST REVISION 04-15-16 | DATE PLOTTED => 07-JUN-2016 | TIME PLOTTED => 12:03

Dist	COUNTY	ROUTE	POST MILES TOTAL PROJECT	SHEET No.	TOTAL SHEETS
05	SCr	17	1.0/1.4	34	72

Jennifer Abrams 3-7-16
REGISTERED CIVIL ENGINEER DATE

5-2-16
PLANS APPROVAL DATE

REGISTERED PROFESSIONAL ENGINEER JENNIFER ABRAMS No. 77782 Exp. 6-30-17 CIVIL STATE OF CALIFORNIA

THE STATE OF CALIFORNIA OR ITS OFFICERS OR AGENTS SHALL NOT BE RESPONSIBLE FOR THE ACCURACY OR COMPLETENESS OF SCANNED COPIES OF THIS PLAN SHEET.

WRECO
1243 ALPINE ROAD
SUITE 108
WALNUT CREEK, CA 94596

DEPT OF TRANSPORTATION
DISTRICT 5
50 HIGUERA STREET
SAN LUIS OBISPO, CA 93401

ABBREVIATIONS:

P POSITIVE JOINT
S STANDARD JOINT

DRAINAGE QUANTITIES

REMOVE CULVERT	REMOVE INLET	SALVAGE DOWNDRAIN	REMOVE FES	REMOVE Conc	Adj LINET	CURED-IN-PLACE PIPELINER 18"	HDPE PIPE DOWNDRAIN 18"	HDPE PIPE 18"	REINFORCED CONCRETE PIPE 36"	PERFORATED PLASTIC PIPE UNDERDRAIN 18"	DITCH EXCAVATION	DITCH EXCAVATION (TYPE Z-2) (AERIALLY DEPOSITED LEAD)	MINOR CONCRETE (BACKFILL)	MINOR CONCRETE (MINOR STRUCTURE)	MISCELLANEOUS IRON AND STEEL	INLET FRAME & GRATE (Type 24-12X) (N)	INLET FRAME & GRATE (Type 36R) (N)	PIPE CLASSIFICATION (N)	MAXIMUM COVER (N)	HEIGHT OF INLET OR MH (N)	FILTER FABRIC (N)	CLASS 3 PERMEABLE MATERIAL (N)	ROCK SLOPE PROTECTION (No. 2, METHOD B)	ROCK SLOPE PROTECTION FABRIC (CLASS 8)	CLEANOUT (N)	ROCK ANCHORAGE SYSTEM	DESCRIPTION	STATION	DRAINAGE PLAN SHEET NO.	DRAINAGE SYSTEM No. ⬡	DRAINAGE UNIT ◯
LF	EA	EA	EA	CY	EA	LF	LF	LF	LF	LF	CY	CY	CY	CY	LB	EA	EA		LF	LF	SQYD	CY	CY	SQYD	EA	EA					
						64.0																					18" CURED-IN-PLACE PIPELINER	63.00' Lt "A1" 34+40.53 TO 1.19' Lt "A1" 34+41.08	D-1	1	a
			1																								REMOVE FES	92.89' Lt "A1" 42+54.78	D-2	2	a
47																											REMOVE 18" Culv	92.89' Lt "A1" 42+54.78 TO 45.62' Lt "A1" 42+51.33			b
									6.2						537		1			5.7							GCP Mod DI	92.94' Lt "A1" 42+54.78			c
							55						6					DD	5.3							6	18" HDPE PIPE DD w/ Conc Bkf	92.94' Lt "A1" 42+54.78 TO 44.58' Lt "A1" 42+51.00			d
																							3	9			RSP	44.58' Lt "A1" 42+51.00			e
						36.4																					18" CURED-IN-PLACE PIPELINER	3.18' Rt "A1" 42+46.20 TO 41.16' Lt "A1" 42+43.00			f
										117	73.7										150	16	74	107	1		DITCH TYPE 1	128.55' Lt "A1" 42+92.49 TO 113.68' Lt "A1" 44+31.48	D-2	3	a
				5																							REMOVE Conc LINED DITCH (PORTION)	126.33' Lt "A1" 42+90.00 TO 109.76' Lt "A1" 44+02.07			b
									5.4						537		1			4.9							GCP Mod DI	128.55' Lt "A1" 42+92.49			c
							73						6					DD	5.9							7	18" HDPE PIPE DD w/ Conc Bkf	128.60' Lt "A1" 42+92.48 TO 61.74' Lt "A1" 42+91.45			d
																							3	9			RSP	61.74' Lt "A1" 42+91.45			e
														1.6	239	1				3.9							G2 DI	61.74' Lt "A1" 42+91.45			f
								17										S	2.4								18" HDPE PIPE	63.04' Lt "A1" 42+91.35 TO 44.26' Lt "A1" 42+92.12			g
				2																							REMOVE Conc LINED DITCH (PORTION)	113.18' Lt "A1" 44+09.00 TO 104.11' Lt "A1" 44+68.00	D-2	4	a
									5.5						537		1			5.0							GCP Mod DI	113.68' Lt "A1" 44+31.48			b
							81						6					DD	9.8							8	18" HDPE PIPE DD w/ Conc Bkf	113.68' Lt "A1" 44+31.48 TO 44.58' Lt "A1" 44+31.00			c
																							3	9			RSP	44.58' Lt "A1" 44+31.00			d
										39	50.0										50	5	25	36	1		DITCH TYPE 1	113.68' Lt "A1" 44+31.48 TO 95.38' Lt "A1" 45+16.73			e
				4																							REMOVE Conc LINED DITCH (PORTION)	110.86' Lt "A1" 44+74.00 TO 103.13' Lt "A1" 46+13.00	D-2	5	a
									5.0						537		1			4.5							GCP Mod DI	95.38' Lt "A1" 45+16.73			b
							64						6					DD	4.1							6	18" HDPE PIPE DD w/ Conc Bkf	95.38' Lt "A1" 45+16.73 TO 44.55' Lt "A1" 45+14.00			c
										56	116.1										72	8	35	51	1		DITCH TYPE 1	95.38' Lt "A1" 45+16.73 TO 93.70' Lt "A1" 45+72.34			d
																							3	9			RSP				e
	1																										REMOVE INLET	45.62' Lt "A1" 42+51.33	D-2	6	a
														1.3	239	1				3.1							GO DI	44.58' Lt "A1" 42+51.00			b
								39										S	2.3								18" HDPE PIPE	44.58' Lt "A1" 42+51.00 TO 44.26' Lt "A1" 42+92.12			c
														1.6	239	1				3.9							G2 DI	44.26' Lt "A1" 42+92.12			d
								136										S	4.4								18" HDPE PIPE	44.26' Lt "A1" 42+92.12 TO 44.58' Lt "A1" 44+31.00			e
														2.0	239	1				5.9							GO DI	44.58' Lt "A1" 44+31.00			f
								80										S	4.3								18" HDPE PIPE	44.58' Lt "A1" 44+31.00 TO 44.55' Lt "A1" 45+14.00			g
														1.6	239	1				4.6							GO DI	44.55' Lt "A1" 45+14.00			h
								118										S	3.8								18" HDPE PIPE	44.55' Lt "A1" 45+14.00 TO 44.74' Lt "A1" 46+35.00			i
														1.8	239	1				5.3							GO DI	44.74' Lt "A1" 46+35.00	D-3		j
47	1		1	11		100.4	273	390	22.1	212	239.8		24	9.9	3582	6	4				271	30	145	229	3	27	SHEET TOTAL				

(N) = NOT A SEPARATE PAY ITEM, FOR INFORMATION ONLY

DRAINAGE QUANTITIES
DQ-1

STATE OF CALIFORNIA - DEPARTMENT OF TRANSPORTATION
Caltrans®

CALCULATED-DESIGNED BY: ALVIN YIM
CHECKED BY: JENNIFER ABRAMS
CONSULTANT FUNCTIONAL SUPERVISOR: HAN-BIN LIANG
REVISED BY: AY
DATE REVISED: 04-27-16

LAST REVISION 04-27-16
DATE PLOTTED => 07-JUN-2016
TIME PLOTTED => 12:03

Dist	COUNTY	ROUTE	POST MILES TOTAL PROJECT	SHEET No.	TOTAL SHEETS
05	SCr	17	1.0/1.4	35	72

Jennifer Abrams 3-7-16
REGISTERED CIVIL ENGINEER DATE

5-2-16
PLANS APPROVAL DATE

REGISTERED PROFESSIONAL ENGINEER JENNIFER ABRAMS No. 77782 Exp. 6-30-17 CIVIL STATE OF CALIFORNIA

THE STATE OF CALIFORNIA OR ITS OFFICERS OR AGENTS SHALL NOT BE RESPONSIBLE FOR THE ACCURACY OR COMPLETENESS OF SCANNED COPIES OF THIS PLAN SHEET.

WRECO
1243 ALPINE ROAD
SUITE 108
WALNUT CREEK, CA 94596

DEPT OF TRANSPORTATION
DISTRICT 5
50 HIGUERA STREET
SAN LUIS OBISPO, CA 93401

DRAINAGE QUANTITIES

REMOVE CULVERT	REMOVE INLET	SALVAGE DOWNDRAIN	REMOVE FES	REMOVE Conc	Adj INLET	CURED-IN-PLACE PIPELINER 18"	HDPE PIPE DOWNDRAIN 18"	HDPE PIPE 18"	REINFORCED CONCRETE PIPE 36"	PERFORATED PLASTIC PIPE UNDERDRAIN 18"	DITCH EXCAVATION	DITCH EXCAVATION (TYPE Z-2) (AERIALLY DEPOSITED LEAD)	MINOR CONCRETE (BACKFILL)	MINOR CONCRETE (MINOR STRUCTURE)	MISCELLANEOUS IRON AND STEEL	INLET FRAME & GRATE (Type 24-12X) (N)	INLET FRAME & GRATE (Type 36R) (N)	PIPE CLASSIFICATION (N)	MAXIMUM COVER (N)	HEIGHT OF INLET OR MH (N)	FILTER FABRIC (N)	CLASS 3 PERMEABLE MATERIAL (N)	ROCK SLOPE PROTECTION (No. 2, METHOD B)	ROCK SLOPE PROTECTION FABRIC (CLASS 8)	CLEANOUT (N)	ROCK ANCHORAGE SYSTEM	DESCRIPTION	STATION	DRAINAGE PLAN SHEET No.	DRAINAGE SYSTEM No.	DRAINAGE UNIT
LF	EA	EA	EA	CY	EA	LF	LF	LF	LF	LF	CY	CY	CY	CY	LB	EA	EA		LF	LF	SQYD	CY	CY	SQYD	EA	EA					
				3																							REMOVE Conc LINED DITCH (PORTION)	106.00′ Lt ″A1″ 46+19.00 TO 109.46′ Lt ″A1″ 46+99.00	D-3	7	a
										76	47.9										97	11	48	69	1		DITCH TYPE 1	93.70′ Lt ″A1″ 45+72.34 TO 110.03′ Lt ″A1″ 46+44.20			b
									5.5						537		1			5.0							GCP Mod DI	110.03′ Lt ″A1″ 46+44.20			c
							79						6					DD	4.4							8	18" HDPE PIPE DD w/ Conc Bkf	106.43′ Lt ″A1″ 46+43.37 TO 44.74′ Lt ″A1″ 46+35.00			d
																							3	9			RSP	44.74′ Lt ″A1″ 46+35.00			e
										54	34.0										69	8	34	49			DITCH TYPE 1	110.03′ Lt ″A1″ 46+44.20 TO 108.16′ Lt ″A1″ 46+98.35			f
	1																										REMOVE INLET	46.29′ Lt ″A1″ 48+50.00	D-3	8	a
														1.3		1				3.3							GO DI	45.37′ Lt ″A1″ 48+50.00			b
								65										S	3.1								18" HDPE PIPE	45.37′ Lt ″A1″ 48+50.00 TO 48.36′ Lt ″A1″ 49+18.00			c
														1.6	239	1				4.6							GO DI	48.36′ Lt ″A1″ 49+18.00			d
								251										S	3.5								18" HDPE PIPE	48.36′ Lt ″A1″ 49+18.00 TO 45.64′ Lt ″A1″ 51+72.00			e
														1.7	239	1				5.0							GO DI	45.64′ Lt ″A1″ 51+72.00	D-4		f
								156										S	3.4								18" HDPE PIPE	45.64′ Lt ″A1″ 51+72.00 TO 44.35′ Lt ″A1″ 53+34.00			g
														1.9	239	1				5.8							GO DI	45.06′ Lt ″A1″ 53+34.00			h
								227										S	3.4								18" HDPE PIPE	45.06′ Lt ″A1″ 53+34.00 TO 44.66′ Lt ″A1″ 55+68.00			i
														1.9	239	1				5.9							GO DI	44.66′ Lt ″A1″ 55+68.00			j
									5.6						537		1			5.1							GCP Mod DI	55.51′ Lt ″A1″ 49+17.35	D-3		k
							8											DD	3.6							1	18" HDPE PIPE DD	55.51′ Lt ″A1″ 49+17.35 TO 48.36′ Lt ″A1″ 49+18.00			l
						35.5																					18" CURED-IN-PLACE PIPELINER	04.10′ Rt ″A1″ 48+50.63 TO 41.25′ Rt ″A1″ 48+50.67			m
						55.4																					18" CURED-IN-PLACE PIPELINER	41.25′ Rt ″A1″ 48+50.67 TO 90.40′ Rt ″A1″ 48+53.00			n
					1																						Adj INLET	92.37′ Rt ″A1″ 48+52.89			o
									5.6						537		1			5.1							GCP Mod DI	108.96′ Lt ″A1″ 52+13.03	D-4	9	a
								242										DD	6.0								18" HDPE PIPE DD	91.15′ Lt ″A1″ 49+64.74 TO 108.96′ Lt ″A1″ 52+13.03	D-3		b
									5.2						537		1			4.7							GCP Mod DI	91.15′ Lt ″A1″ 49+64.74			c
								56										P	4.1								18" HDPE PIPE	55.47′ Lt ″A1″ 49+17.35 TO 91.15′ Lt ″A1″ 49+64.74			d
			1																								REMOVE FES	107.25′ Lt ″A1″ 51+59.00	D-4	10	a
75																											REMOVE 18" Culv	101.71′ Lt ″A1″ 50+80.00 TO 107.25′ Lt ″A1″ 51+59.00	D-3		b
										411	227.1	18									373	41	227	360			DITCH TYPE 2	55.51′ Lt ″A1″ 49+17.35 TO 108.96′ Lt ″A1″ 52+13.03	D-4		c
75	1		1	3	1	90.9	87	998	21.9	541	309.0	18	6	8.6	3104	5	4				539	59	312	488	1	9	SHEET TOTAL				

REVISED BY	DATE REVISED
AY	04-27-16

ALVIN YIM — JENNIFER ABRAMS — CALCULATED-DESIGNED BY — CHECKED BY

CONSULTANT FUNCTIONAL SUPERVISOR: HAN-BIN LIANG

STATE OF CALIFORNIA - DEPARTMENT OF TRANSPORTATION

Caltrans®

DRAINAGE QUANTITIES
DQ-2

LAST REVISION 04-27-16 | DATE PLOTTED => 07-JUN-2016 | TIME PLOTTED => 12:03

Dist	COUNTY	ROUTE	POST MILES TOTAL PROJECT	SHEET No.	TOTAL SHEETS
05	SCr	17	1.0/1.4	36	72

Jennifer Abrams 3-7-16
REGISTERED CIVIL ENGINEER DATE

5-2-16
PLANS APPROVAL DATE

REGISTERED PROFESSIONAL ENGINEER JENNIFER ABRAMS No. 77782 Exp. 6-30-17 CIVIL STATE OF CALIFORNIA

THE STATE OF CALIFORNIA OR ITS OFFICERS OR AGENTS SHALL NOT BE RESPONSIBLE FOR THE ACCURACY OR COMPLETENESS OF SCANNED COPIES OF THIS PLAN SHEET.

WRECO
1243 ALPINE ROAD
SUITE 108
WALNUT CREEK, CA 94596

DEPT OF TRANSPORTATION
DISTRICT 5
50 HIGUERA STREET
SAN LUIS OBISPO, CA 93401

DRAINAGE QUANTITIES

REMOVE CULVERT (LF)	REMOVE INLET (EA)	SALVAGE DOWNDRAIN (EA)	REMOVE FES (EA)	REMOVE Conc (CY)	Adj INLET (EA)	CURED-IN-PLACE PIPELINER 18" (LF)	HDPE PIPE DOWNDRAIN 18" (LF)	HDPE PIPE 18" (LF)	REINFORCED CONCRETE PIPE 36" (LF)	PERFORATED PLASTIC PIPE UNDERDRAIN 18" (LF)	DITCH EXCAVATION (CY)	DITCH EXCAVATION (TYPE Z-2) (AERIALLY DEPOSITED LEAD) (CY)	MINOR CONCRETE (BACKFILL) (CY)	MINOR CONCRETE (MINOR STRUCTURE) (CY)	MISCELLANEOUS IRON AND STEEL (LB)	INLET FRAME & GRATE (Type 24-12x) (N) (EA)	INLET FRAME & GRATE (Type 36R) (N) (EA)	PIPE CLASSIFICATION (N)	MAXIMUM COVER (N) (LF)	HEIGHT OF INLET OR MH (N) (LF)	FILTER FABRIC (N) (SQYD)	CLASS 3 PERMEABLE MATERIAL (N) (CY)	ROCK SLOPE PROTECTION (No. 2, METHOD B) (CY)	ROCK SLOPE PROTECTION FABRIC (CLASS 8) (SQYD)	CLEANOUT (N) (EA)	ROCK ANCHORAGE SYSTEM (EA)	DESCRIPTION	STATION	DRAINAGE PLAN SHEET No.	DRAINAGE SYSTEM No.	DRAINAGE UNIT
				7																							REMOVE Conc LINED DITCH (PORTION)	109.60' Lt "A1" 53+95.00 TO 106.41' Lt "A1" 55+61.00	D-4	11	a
			1																								REMOVE FES	109.89' Lt "A1" 53+93.80			b
		1																									SALVAGE DOWNDRAIN	46.24' Lt "A1" 53+32.55 TO 109.89' Lt "A1" 53+93.80			c
										119	101.4										152	17	101	159			DITCH TYPE 3	119.79' Lt "A1" 53+36.33 TO 120.18' Lt "A1" 55+68.95			d
									4.5						537		1			5.0							GCP Mod DI	119.79' Lt "A1" 53+36.33			e
							88						6					DD	6.9							9	18" HDPE PIPE DD w/ Conc Bkf	119.79' Lt "A1" 53+36.33 TO 45.06' Lt "A1" 53+34.00			f
										208	177.2										266	29	177	277			DITCH TYPE 3	108.96' Lt "A1" 52+13.03 TO 119.79' Lt "A1" 53+36.33			g
																							3	9			RSP	45.06' Lt "A1" 53+34.00			h
				9																							REMOVE Conc LINED DITCH (PORTION)	114.01' Lt "A1" 56+07.77 TO 199.10' Lt "A1" 57+55.00	D-4	12	a
			1																								REMOVE FES	114.01' Lt "A1" 56+07.77			b
		1																									SALVAGE DOWNDRAIN	47.32' Lt "A1" 55+67.74 TO 114.01' Lt "A1" 56+07.77			c
										194	165.3										248	27	165	259	1		DITCH TYPE 3	120.18' Lt "A1" 55+68.95 TO 204.04' Lt "A1" 57+51.19	D-5		d
									4.5						537		1			5.0							GCP Mod DI	120.18' Lt "A1" 55+68.95	D-4		e
							96						6					DD	10.0							10	18" HDPE PIPE DD w/ Conc Bkf	100.10' Lt "A1" 55+89.00 TO 44.66' Lt "A1" 55+68.00			f
																							3	9			RSP	44.66' Lt "A1" 55+68.00			g
		2	2	16			184		9.0	521	443.9		12		1074		2				666	73	449	713	1	19	SHEET TOTAL				

DRAINAGE QUANTITIES
DQ-3

CALCULATED-DESIGNED BY	ALVIN YIM	REVISED BY	AY
CHECKED BY	JENNIFER ABRAMS	DATE REVISED	04-27-16
CONSULTANT FUNCTIONAL SUPERVISOR	HAN-BIN LIANG		

STATE OF CALIFORNIA - DEPARTMENT OF TRANSPORTATION
Caltrans®

LAST REVISION 04-27-16 | DATE PLOTTED => 07-JUN-2016 | TIME PLOTTED => 12:03

Dist	COUNTY	ROUTE	POST MILES TOTAL PROJECT	SHEET No.	TOTAL SHEETS
05	SCr	17	1.0/1.4	37	72

Jennifer Abrams 3-7-16
REGISTERED CIVIL ENGINEER DATE

5-2-16
PLANS APPROVAL DATE

REGISTERED PROFESSIONAL ENGINEER JENNIFER ABRAMS No. 77782 Exp. 6-30-17 CIVIL STATE OF CALIFORNIA

THE STATE OF CALIFORNIA OR ITS OFFICERS OR AGENTS SHALL NOT BE RESPONSIBLE FOR THE ACCURACY OR COMPLETENESS OF SCANNED COPIES OF THIS PLAN SHEET.

WRECO
1243 ALPINE ROAD
SUITE 108
WALNUT CREEK, CA 94596

DEPT OF TRANSPORTATION
DISTRICT 5
50 HIGUERA STREET
SAN LUIS OBISPO, CA 93401

DRAINAGE QUANTITIES SUMMARY

REMOVE CULVERT	REMOVE INLET	SALVAGE DOWNDRAIN	REMOVE FES	REMOVE Conc	Adj INLET	CURED-IN-PLACE PIPELINER 18"	HDPE PIPE DOWNDRAIN 18"	HDPE PIPE 18"	REINFORCED CONCRETE PIPE 36"	PERFORATED PLASTIC PIPE UNDERDRAIN 18"	DITCH EXCAVATION	DITCH EXCAVATION (TYPE Z-2) (AERIALLY DEPOSITED LEAD)	MINOR CONCRETE (BACKFILL)	MINOR CONCRETE (MINOR STRUCTURE)	MISCELLANEOUS IRON AND STEEL	INLET FRAME & GRATE (Type 24-12X) (N)	INLET FRAME & GRATE (Type 36R) (N)	PIPE CLASSIFICATION (N)	MAXIMUM COVER (N)	HEIGHT OF INLET OR MH (N)	FILTER FABRIC (N)	CLASS 3 PERMEABLE MATERIAL (N)	ROCK SLOPE PROTECTION (No. 2, METHOD B)	ROCK SLOPE PROTECTION FABRIC (CLASS 8)	CLEANOUT (N)	ROCK ANCHORAGE SYSTEM	DESCRIPTION
LF	EA	EA	EA	CY	EA	LF	LF	LF	LF	LF	CY	CY	CY	CY	LB	EA	EA		LF	LF	SQYD	CY	CY	SQYD	EA	EA	
47	1		1	11		100.4	273	390	22.1	212	240		24	10	3582	6	4				271	30	145	229	3	27	SHEET TOTAL FROM DQ-1
75	1		1	3	1	90.9	87	998	21.9	541	309	18	6	9	3104	5	4				539	59	312	488	1	9	SHEET TOTAL FROM DQ-2
		2	2	16			184		9.0	521	444		12		1074		2				666	73	449	713	1	19	SHEET TOTAL FROM DQ-3
122	2	2	4	30	1	191.3	543	1388	53.0	1274	993	18*	42	19	7760								906*	1430*		55	TOTAL

* QUANTITY INCLUDED IN Q-1 SHEET.

STATE OF CALIFORNIA - DEPARTMENT OF TRANSPORTATION
Caltrans

CONSULTANT FUNCTIONAL SUPERVISOR: HAN-BIN LIANG

CALCULATED-DESIGNED BY: ALVIN YIM
CHECKED BY: JENNIFER ABRAMS

REVISED BY: AY
DATE REVISED: 04-27-16

DRAINAGE QUANTITIES
DQ-4

LAST REVISION 04-27-16 | DATE PLOTTED => 07-JUN-2016 | TIME PLOTTED => 12:03

Dist	COUNTY	ROUTE	POST MILES TOTAL PROJECT	SHEET No.	TOTAL SHEETS
05	SCr	17	1.0/1.4	38	72

Kevin Bewsey 4/15/16
REGISTERED CIVIL ENGINEER DATE

5-2-16
PLANS APPROVAL DATE

REGISTERED PROFESSIONAL ENGINEER KEVIN BEWSEY No. 71485 Exp. 12/31/17 CIVIL STATE OF CALIFORNIA

THE STATE OF CALIFORNIA OR ITS OFFICERS OR AGENTS SHALL NOT BE RESPONSIBLE FOR THE ACCURACY OR COMPLETENESS OF SCANNED COPIES OF THIS PLAN SHEET.

TY LIN INTERNATIONAL
1601 RESPONSE ROAD
SUITE 260
SACRAMENTO, CA 95815

Dept OF TRANSPORTATION
DISTRICT 5
50 HIGUERA STREET
SAN LUIS OBISPO, CA 93401

CONSTRUCTION AREA SIGNS

NOTES:

1. LOCATION OF CONSTRUCTION AREA SIGNS ARE APPROXIMATE. EXACT LOCATIONS WILL BE DETERMINED BY THE ENGINEER.
2. FOR ADDITIONAL CONSTRUCTION AREA SIGNS, SEE TRAFFIC HANDLING PLANS.
3. PORTABLE CHANGEABLE MESSAGE SIGNS TO BE PLACED IN ADVANCE OF PLANNED LANE CLOSURES FOR A PERIOD OF TWO WEEKS. MESSAGE WILL BE DETERMINED BY THE ENGINEER.

SIGN No. (X)	SIGN CODE FEDERAL	SIGN CODE CALIFORNIA	PANEL SIZE	SIGN MESSAGE	No. OF POSTS AND SIZE	No. OF SIGNS
A		C40(CA)	144" x 60"	TRAFFIC FINES DOUBLED IN CONSTRUCTION ZONES	2 - 6" x 6"	1
B		W20-1	60" x 60"	ROAD WORK AHEAD	2 - 6" x 6"	3
C	W21-5b		48" x 48"	RIGHT SHOULDER CLOSED AHEAD	1 - 6" x 6"	1
D		C30A(CA)	48" x 48"	SHOULDER CLOSED	2 - 4" x 6"	1
E	W7-3aP		36" x 30"	NEXT MILE	-	1
F	W3-5a(55)		48" x 48"	SPEED ZONE AHEAD	1 - 6" x 6"	1
G	R2-1(55)		48" x 60"	SPEED LIMIT	1 - 6" x 6"	1
H	G20-2		48" x 24"	END ROAD WORK	1 - 4" x 6"	3

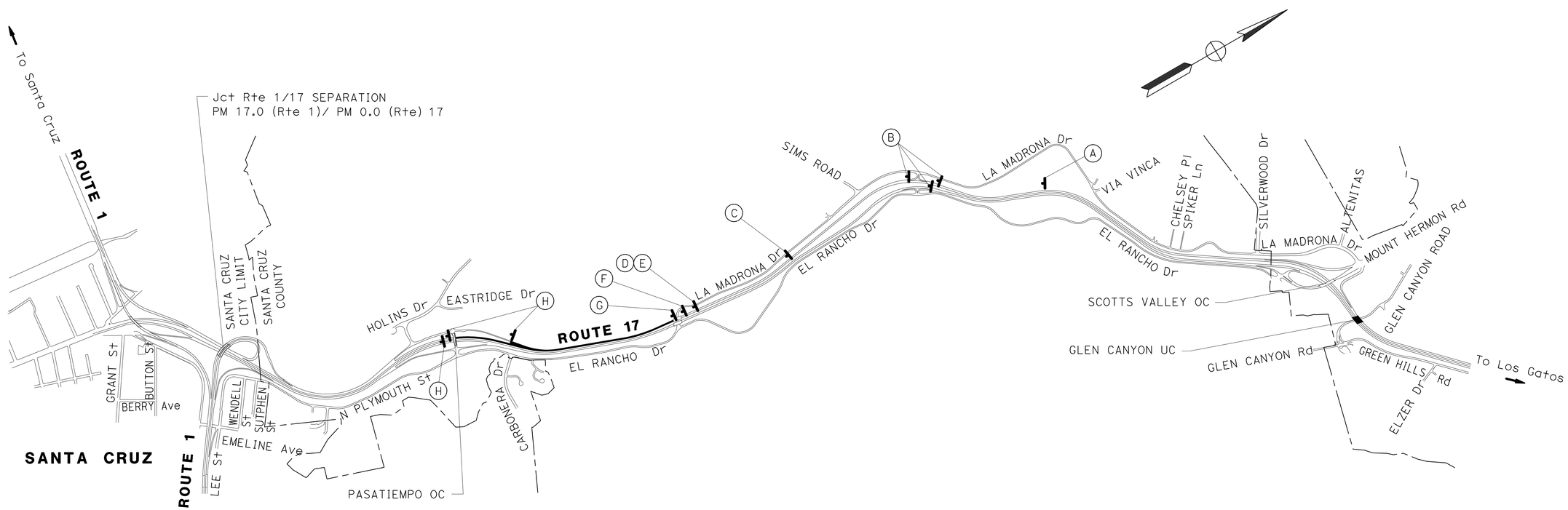

CONSTRUCTION AREA SIGNS

NO SCALE

CS-1

APPROVED FOR CONSTRUCTION AREA SIGN WORK ONLY

STATE OF CALIFORNIA - DEPARTMENT OF TRANSPORTATION
Caltrans

CONSULTANT FUNCTIONAL SUPERVISOR: KEITH RHODES
CALCULATED-DESIGNED BY: K. BEWSEY/D. ZURCHER
CHECKED BY: KEVIN BEWSEY
REVISED BY: DZ
DATE REVISED: 04/15/16

LAST REVISION 04-15-16
DATE PLOTTED => 07-JUN-2016
TIME PLOTTED => 12:03

Dist	COUNTY	ROUTE	POST MILES TOTAL PROJECT	SHEET No.	TOTAL SHEETS
05	SCr	17	1.0/1.4	39	72

Kevin Bewsey 4/15/16
REGISTERED CIVIL ENGINEER DATE

5-2-16
PLANS APPROVAL DATE

REGISTERED PROFESSIONAL ENGINEER KEVIN BEWSEY No. 71485 Exp. 12/31/17 CIVIL STATE OF CALIFORNIA

THE STATE OF CALIFORNIA OR ITS OFFICERS OR AGENTS SHALL NOT BE RESPONSIBLE FOR THE ACCURACY OR COMPLETENESS OF SCANNED COPIES OF THIS PLAN SHEET.

TY LIN INTERNATIONAL
1601 RESPONSE ROAD
SUITE 260
SACRAMENTO, CA 95815

Dept OF TRANSPORTATION
DISTRICT 5
50 HIGUERA STREET
SAN LUIS OBISPO, CA 93401

NOTES:

1. FOR ACCURATE RIGHT OF WAY DATA, CONTACT RIGHT OF WAY ENGINEERING AT THE DISTRICT OFFICE.
2. THE AREA FOR CONTRACTOR USE IS LIMITED TO PAVED OR GRADED LOCATIONS. DO NOT CLEAR VEGETATION WITHIN THE AREA FOR CONTRACTOR USE.
3. MAINTAIN POSITIVE DRAINAGE AND TEMPORARY DRAINAGE OF SITE DURING CONSTRUCTION.
4. CONSTRUCTION OF THE TEMPORARY ACCESS ROADS ARE LIMITED TO THE PROPOSED DITCHES.

LEGEND/ABBREVIATIONS:

- STAGE 1 AREA OF WORK
- STAGE 2 AREA OF WORK
- STAGE 3 AREA OF WORK
- AREA FOR CONTRACTOR USE

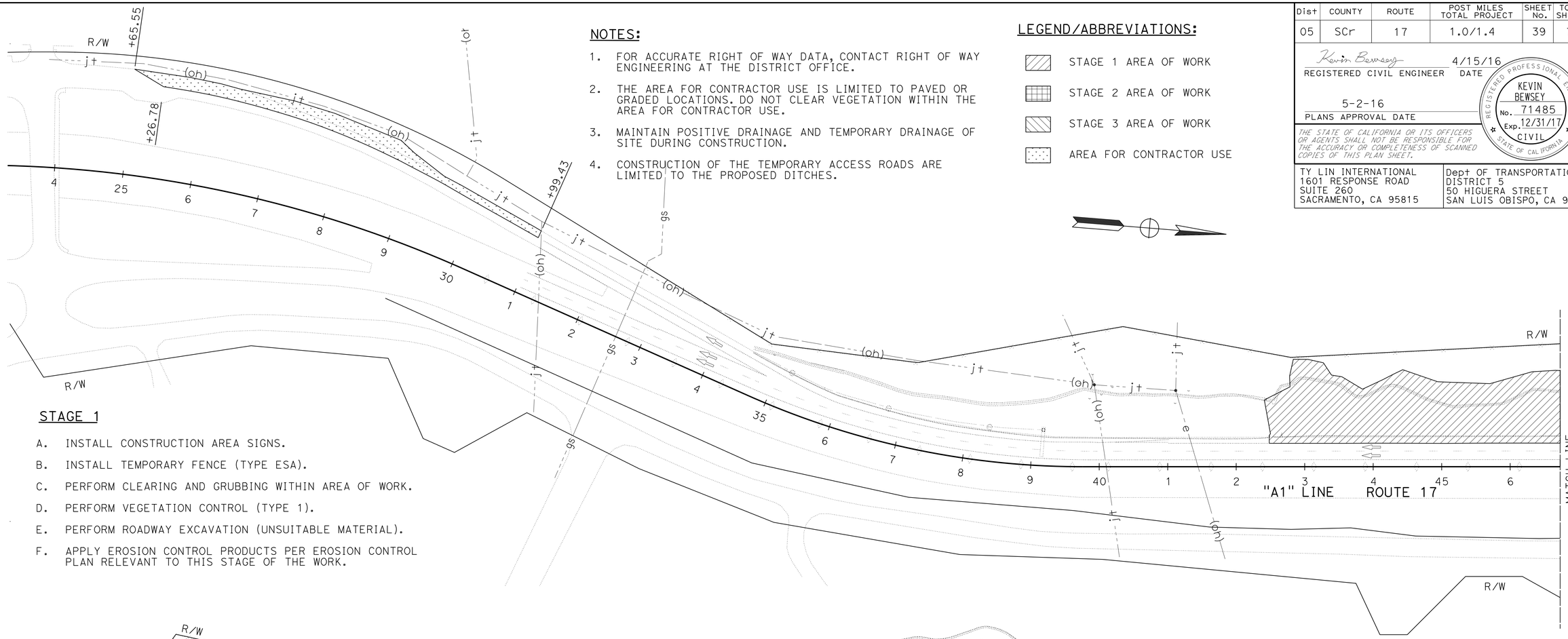

STAGE 1

A. INSTALL CONSTRUCTION AREA SIGNS.

B. INSTALL TEMPORARY FENCE (TYPE ESA).

C. PERFORM CLEARING AND GRUBBING WITHIN AREA OF WORK.

D. PERFORM VEGETATION CONTROL (TYPE 1).

E. PERFORM ROADWAY EXCAVATION (UNSUITABLE MATERIAL).

F. APPLY EROSION CONTROL PRODUCTS PER EROSION CONTROL PLAN RELEVANT TO THIS STAGE OF THE WORK.

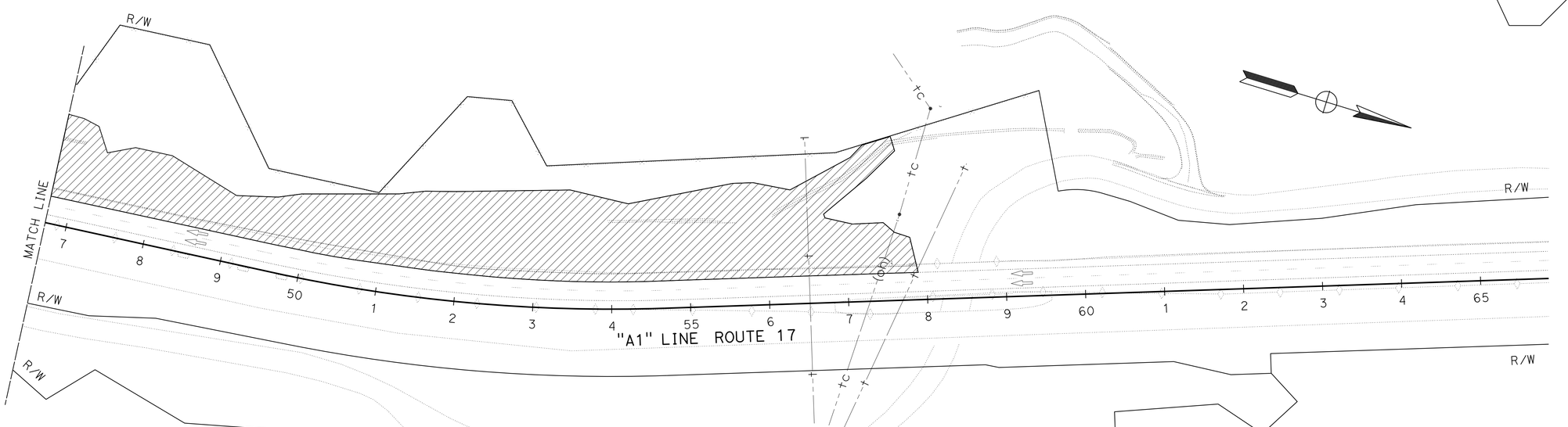

STAGE CONSTRUCTION
(STAGE 1)
NO SCALE

SC-1

APPROVED FOR STAGE CONSTRUCTION WORK ONLY

REVISED BY	DZ
DATE REVISED	04/15/16
CALCULATED-DESIGNED BY	K. BEWSEY/D. ZURCHER
CHECKED BY	KEVIN BEWSEY
CONSULTANT FUNCTIONAL SUPERVISOR	KEITH RHODES

STATE OF CALIFORNIA - DEPARTMENT OF TRANSPORTATION
Caltrans

LAST REVISION 04-15-16
DATE PLOTTED => 07-JUN-2016
TIME PLOTTED => 12:03

Dist	COUNTY	ROUTE	POST MILES TOTAL PROJECT	SHEET No.	TOTAL SHEETS
05	SCr	17	1.0/1.4	40	72

Kevin Bewsey 4/15/16
REGISTERED CIVIL ENGINEER DATE

5-2-16
PLANS APPROVAL DATE

REGISTERED PROFESSIONAL ENGINEER
KEVIN BEWSEY
No. 71485
Exp. 12/31/17
CIVIL
STATE OF CALIFORNIA

THE STATE OF CALIFORNIA OR ITS OFFICERS OR AGENTS SHALL NOT BE RESPONSIBLE FOR THE ACCURACY OR COMPLETENESS OF SCANNED COPIES OF THIS PLAN SHEET.

TY LIN INTERNATIONAL
1601 RESPONSE ROAD
SUITE 260
SACRAMENTO, CA 95815

Dept OF TRANSPORTATION
DISTRICT 5
50 HIGUERA STREET
SAN LUIS OBISPO, CA 93401

NOTE:

FOR ACCURATE RIGHT OF WAY DATA, CONTACT RIGHT OF WAY ENGINEERING AT THE DISTRICT OFFICE.

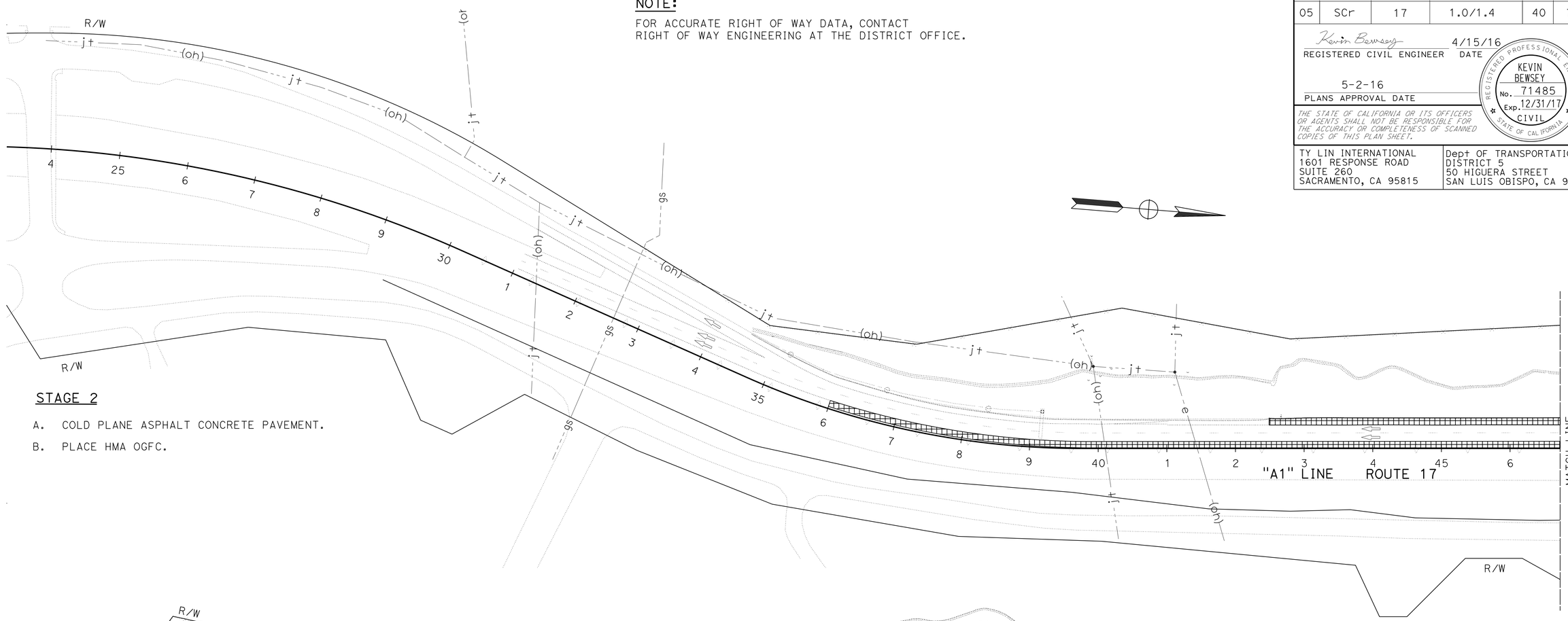

STAGE 2

A. COLD PLANE ASPHALT CONCRETE PAVEMENT.

B. PLACE HMA OGFC.

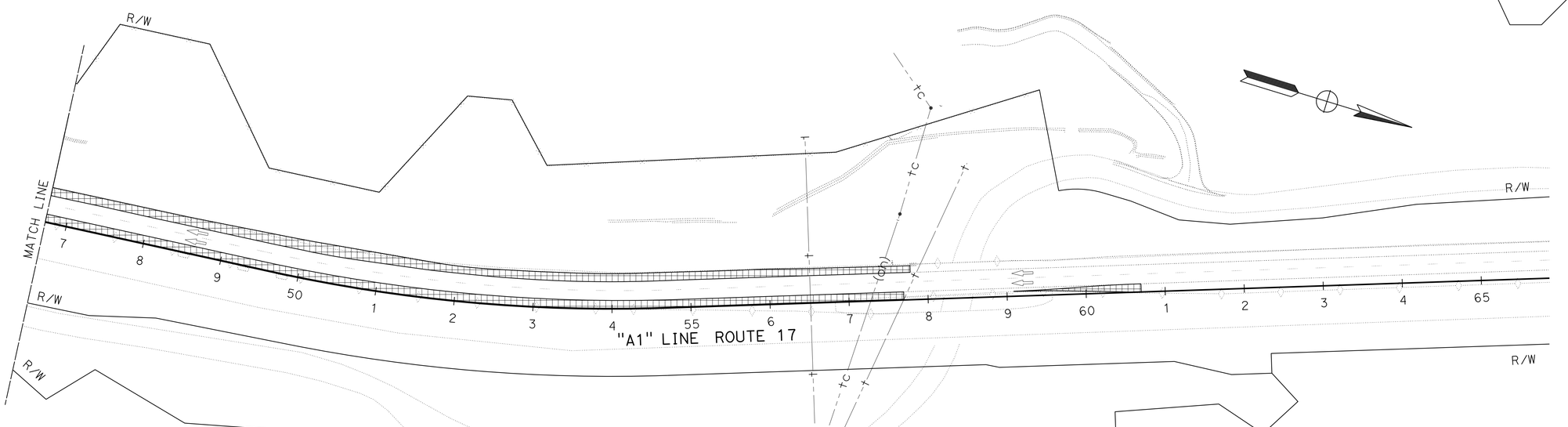

STAGE CONSTRUCTION
(STAGE 2)

NO SCALE

SC-2

APPROVED FOR STATE CONSTRUCTION WORK ONLY

REVISED BY	DZ
DATE REVISED	04/15/16
CALCULATED-DESIGNED BY	K. BEWSEY/D. ZURCHER
CHECKED BY	KEVIN BEWSEY
CONSULTANT FUNCTIONAL SUPERVISOR	KEITH RHODES

STATE OF CALIFORNIA - DEPARTMENT OF TRANSPORTATION
Caltrans

LAST REVISION 04-15-16
DATE PLOTTED => 07-JUN-2016
TIME PLOTTED => 12:03

Dist	COUNTY	ROUTE	POST MILES TOTAL PROJECT	SHEET No.	TOTAL SHEETS
05	SCr	17	1.0/1.4	41	72

Kevin Bewsey 4/15/16
REGISTERED CIVIL ENGINEER DATE

5-2-16
PLANS APPROVAL DATE

REGISTERED PROFESSIONAL ENGINEER KEVIN BEWSEY No. 71485 Exp. 12/31/17 CIVIL STATE OF CALIFORNIA

THE STATE OF CALIFORNIA OR ITS OFFICERS OR AGENTS SHALL NOT BE RESPONSIBLE FOR THE ACCURACY OR COMPLETENESS OF SCANNED COPIES OF THIS PLAN SHEET.

TY LIN INTERNATIONAL
1601 RESPONSE ROAD
SUITE 260
SACRAMENTO, CA 95815

Dept OF TRANSPORTATION
DISTRICT 5
50 HIGUERA STREET
SAN LUIS OBISPO, CA 93401

NOTE:

FOR ACCURATE RIGHT OF WAY DATA, CONTACT RIGHT OF WAY ENGINEERING AT THE DISTRICT OFFICE.

STAGE 3

A. REMOVE DELINEATION.

B. INSTALL TRAFFIC HANDLING PLAN RELEVANT TO THIS STAGE OF THE WORK. REMOVE WHEN WORK ASSOCIATED WITH THIS STAGE IS COMPLETE.

C. PERFORM CLEARING AND GRUBBING WITHIN AREA OF WORK.

D. PERFORM EARTHWORK.

E. INSTALL RECP PER EROSION CONTROL PLAN RELEVANT TO THIS STAGE OF THE WORK.

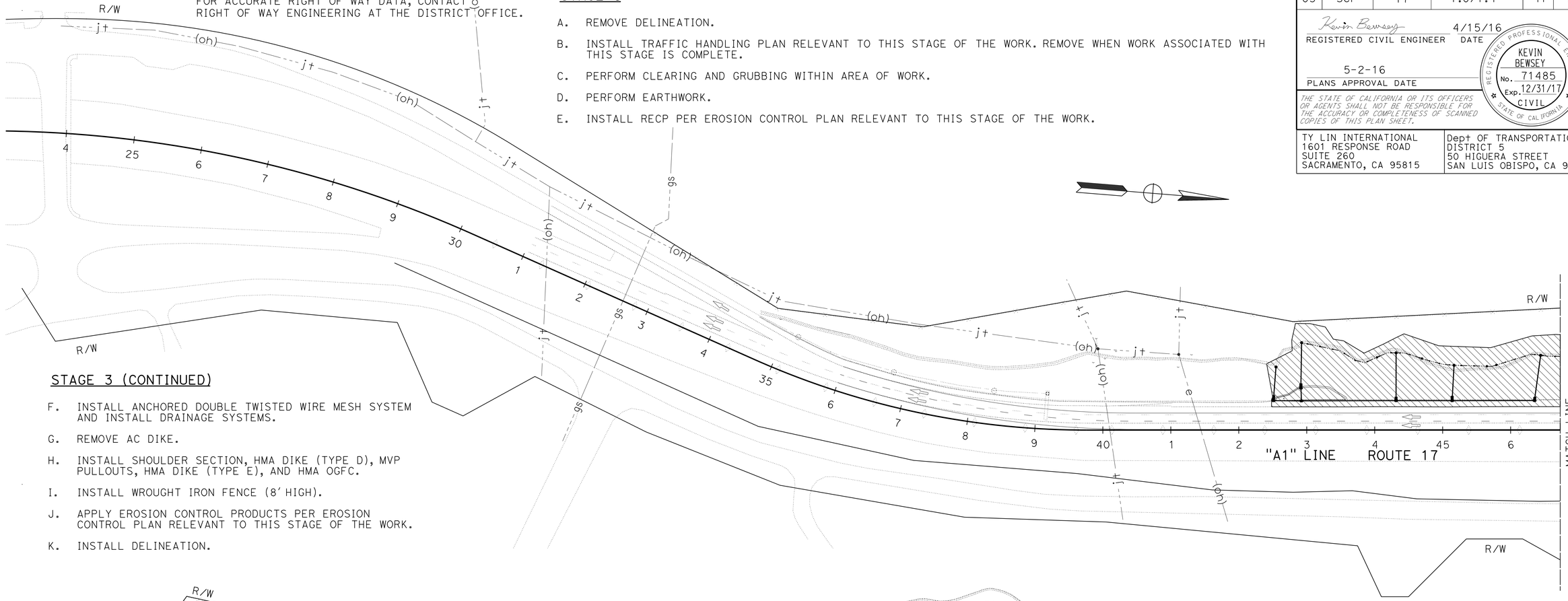

STAGE 3 (CONTINUED)

F. INSTALL ANCHORED DOUBLE TWISTED WIRE MESH SYSTEM AND INSTALL DRAINAGE SYSTEMS.

G. REMOVE AC DIKE.

H. INSTALL SHOULDER SECTION, HMA DIKE (TYPE D), MVP PULLOUTS, HMA DIKE (TYPE E), AND HMA OGFC.

I. INSTALL WROUGHT IRON FENCE (8′ HIGH).

J. APPLY EROSION CONTROL PRODUCTS PER EROSION CONTROL PLAN RELEVANT TO THIS STAGE OF THE WORK.

K. INSTALL DELINEATION.

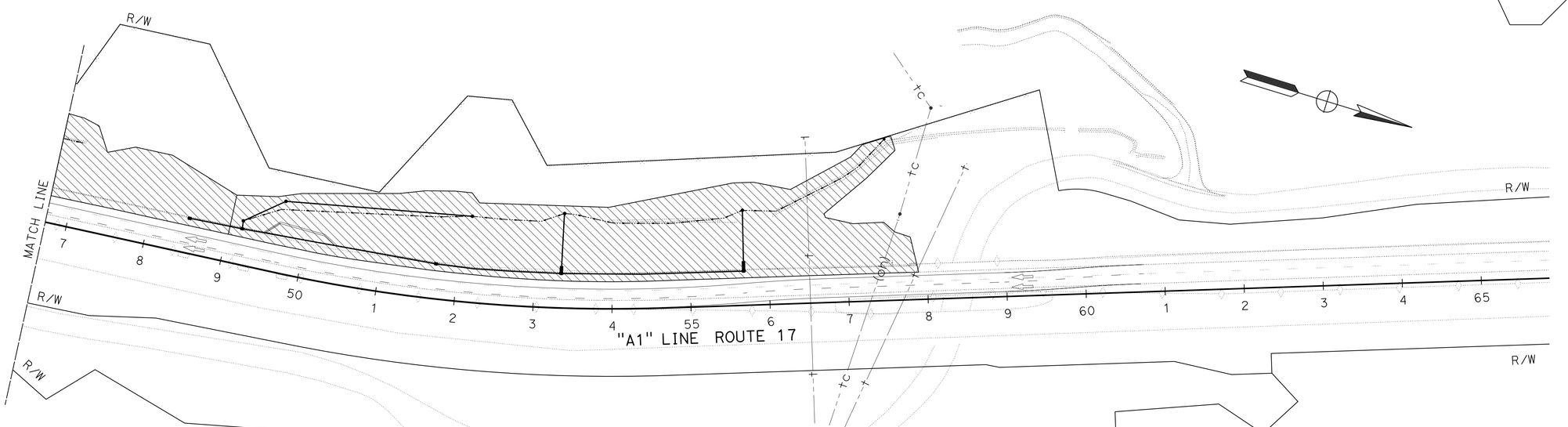

STAGE CONSTRUCTION
(STAGE 3)
NO SCALE

SC-3

APPROVED FOR STAGE CONSTRUCTION WORK ONLY

REVISED BY	DZ
DATE REVISED	04/15/16
CALCULATED-DESIGNED BY	K. BEWSEY/D. ZURCHER
CHECKED BY	KEVIN BEWSEY
CONSULTANT FUNCTIONAL SUPERVISOR	KEITH RHODES

STATE OF CALIFORNIA - DEPARTMENT OF TRANSPORTATION
Caltrans

LAST REVISION 04-15-16
DATE PLOTTED => 07-JUN-2016
TIME PLOTTED => 12:03

Dist	COUNTY	ROUTE	POST MILES TOTAL PROJECT	SHEET No.	TOTAL SHEETS
05	SCr	17	1.0/1.4	42	72

Kevin Bewsey 4/15/16
REGISTERED CIVIL ENGINEER DATE

5-2-16
PLANS APPROVAL DATE

REGISTERED PROFESSIONAL ENGINEER KEVIN BEWSEY No. 71485 Exp. 12/31/17 CIVIL STATE OF CALIFORNIA

THE STATE OF CALIFORNIA OR ITS OFFICERS OR AGENTS SHALL NOT BE RESPONSIBLE FOR THE ACCURACY OR COMPLETENESS OF SCANNED COPIES OF THIS PLAN SHEET.

TY LIN INTERNATIONAL
1601 RESPONSE ROAD
SUITE 260
SACRAMENTO, CA 95815

Dept OF TRANSPORTATION
DISTRICT 5
50 HIGUERA STREET
SAN LUIS OBISPO, CA 93401

NOTES:

1. APPROACH END OF ALL Temp RAILING (TYPE K) SHALL BE FLARED AT 10:1 OR FLATTER WHEN PROTECTED BY TEMPORARY CRASH CUSHIONS.
2. FOR Temp RAILING (TYPE K) DETAILS AND INSTALLTION SEE STANDARD PLANS T3A AND T3B.
3. FOR ACCURATE RIGHT OF WAY DATA, CONTACT RIGHT OF WAY ENGINEERING AT THE DISTRICT OFFICE.

LEGEND/ABBREVIATIONS:

- CONSTRUCTION AREA
- TEMPORARY RAILING (TYPE K)
- TEMPORARY CRASH CUSHION, SAND FILLED ARRAY (TS14)
- TEMPORARY ALTERNATIVE CRASH CUSHION SYSTEM
- CHANNELIZER (SURFACE MOUNTED)
- OBJECT MARKER (TYPE P)
- BEGIN/END DELINEATION
- SIGN
- SYMBOL FOR TRAFFIC LINE DETAIL
- TTS TEMPORARY TRAFFIC SCREEN

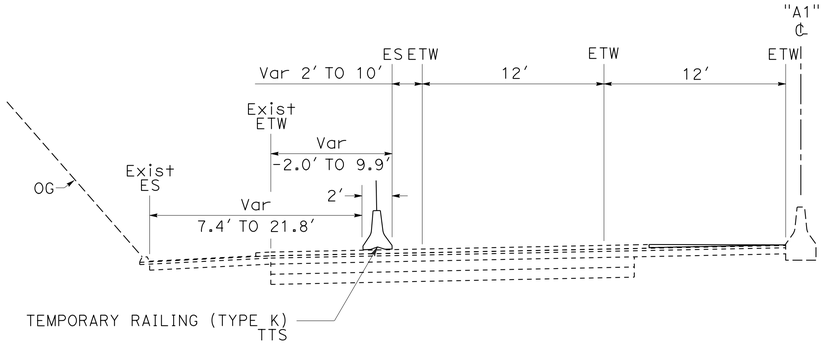

TEMPORARY RAILING (TYPE K) PLACEMENT
NO SCALE

CURVE DATA

No.	R	Δ	T	L	RADIUS POINT N	RADIUS POINT E
1	1429.96'	17°51'49"	224.74'	445.83'	1827374.805	6116227.610

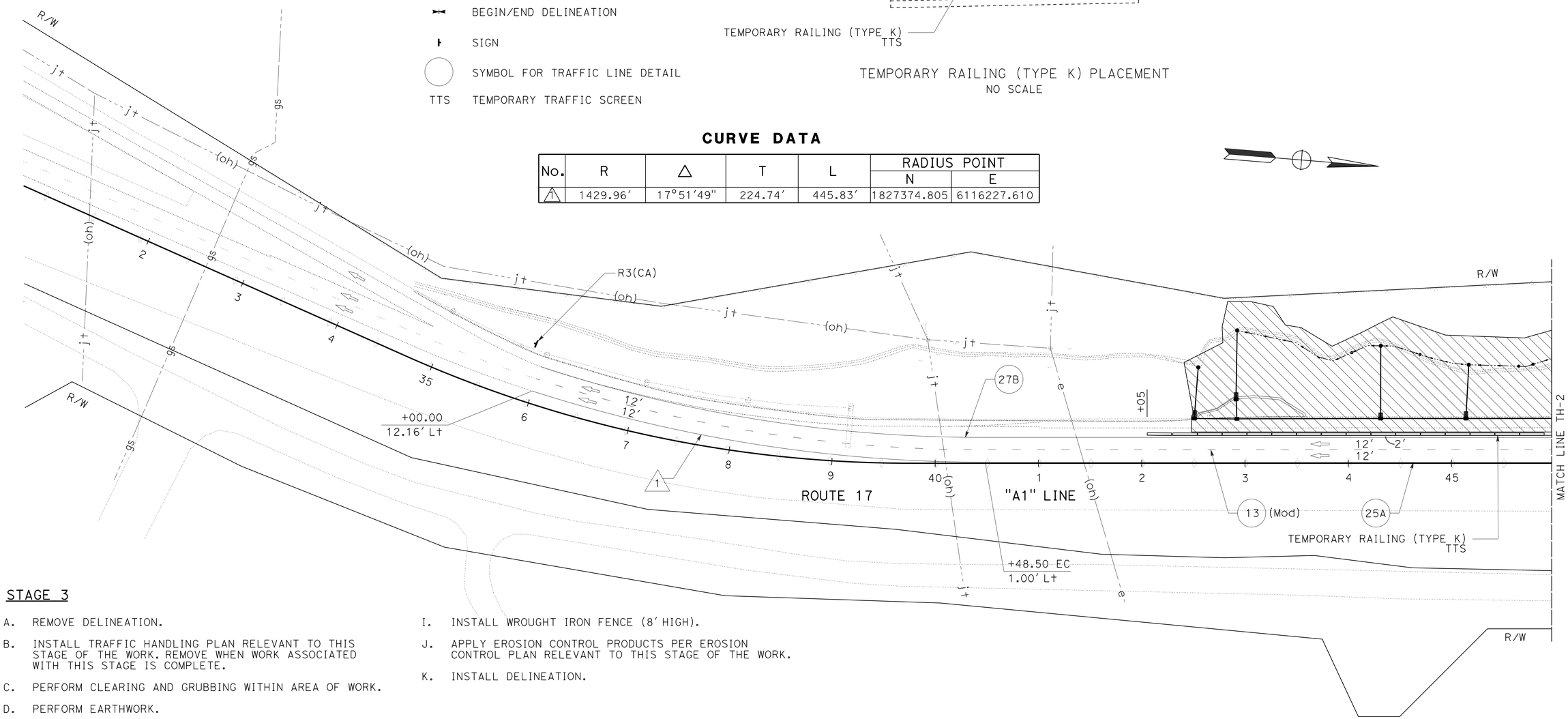

STAGE 3

A. REMOVE DELINEATION.

B. INSTALL TRAFFIC HANDLING PLAN RELEVANT TO THIS STAGE OF THE WORK. REMOVE WHEN WORK ASSOCIATED WITH THIS STAGE IS COMPLETE.

C. PERFORM CLEARING AND GRUBBING WITHIN AREA OF WORK.

D. PERFORM EARTHWORK.

E. INSTALL RECP PER EROSION CONTROL PLAN RELEVANT TO THIS STAGE OF THE WORK.

F. INSTALL ANCHORED DOUBLE TWISTED WIRE MESH SYSTEM AND INSTALL DRAINAGE SYSTEMS.

G. REMOVE AC DIKE.

H. INSTALL SHOULDER SECTION, HMA DIKE (TYPE D), MVP PULLOUTS, HMA DIKE (TYPE E), AND HMA OGFC.

I. INSTALL WROUGHT IRON FENCE (8' HIGH).

J. APPLY EROSION CONTROL PRODUCTS PER EROSION CONTROL PLAN RELEVANT TO THIS STAGE OF THE WORK.

K. INSTALL DELINEATION.

TRAFFIC HANDLING PLAN
(STAGE 3)
SCALE: 1'' = 50'

TH-1

APPROVED FOR TRAFFIC HANDLING WORK ONLY

STATE OF CALIFORNIA - DEPARTMENT OF TRANSPORTATION
Caltrans

CONSULTANT FUNCTIONAL SUPERVISOR: KEITH RHODES
CALCULATED-DESIGNED BY: K. BEWSEY/D. ZURCHER
CHECKED BY: KEVIN BEWSEY
REVISED BY: DZ
DATE REVISED: 04/15/16

LAST REVISION 04-15-16
DATE PLOTTED => 07-JUN-2016
TIME PLOTTED => 12:03

Dist	COUNTY	ROUTE	POST MILES TOTAL PROJECT	SHEET No.	TOTAL SHEETS
05	SCr	17	1.0/1.4	43	72

Kevin Bewsey 4/15/16
REGISTERED CIVIL ENGINEER DATE

5-2-16
PLANS APPROVAL DATE

REGISTERED PROFESSIONAL ENGINEER KEVIN BEWSEY No. 71485 Exp. 12/31/17 CIVIL STATE OF CALIFORNIA

THE STATE OF CALIFORNIA OR ITS OFFICERS OR AGENTS SHALL NOT BE RESPONSIBLE FOR THE ACCURACY OR COMPLETENESS OF SCANNED COPIES OF THIS PLAN SHEET.

TY LIN INTERNATIONAL
1601 RESPONSE ROAD
SUITE 260
SACRAMENTO, CA 95815

Dept OF TRANSPORTATION
DISTRICT 5
50 HIGUERA STREET
SAN LUIS OBISPO, CA 93401

NOTE:

FOR ACCURATE RIGHT OF WAY DATA, CONTACT
RIGHT OF WAY ENGINEERING AT THE DISTRICT OFFICE.

CURVE DATA

No.	R	△	T	L	RADIUS POINT N	RADIUS POINT E
2	1999.00′	17°16′03"	303.52′	602.44′	1828244.439	6115586.535
3	1999.00′	2°55′58"	51.17′	102.32′	1829734.431	6119296.511
4	1858.00′	2°39′31"	43.12′	86.22′	1828695.260	6115575.300
5	1858.00′	2°39′31"	43.12′	86.22′	1830063.646	6119030.177

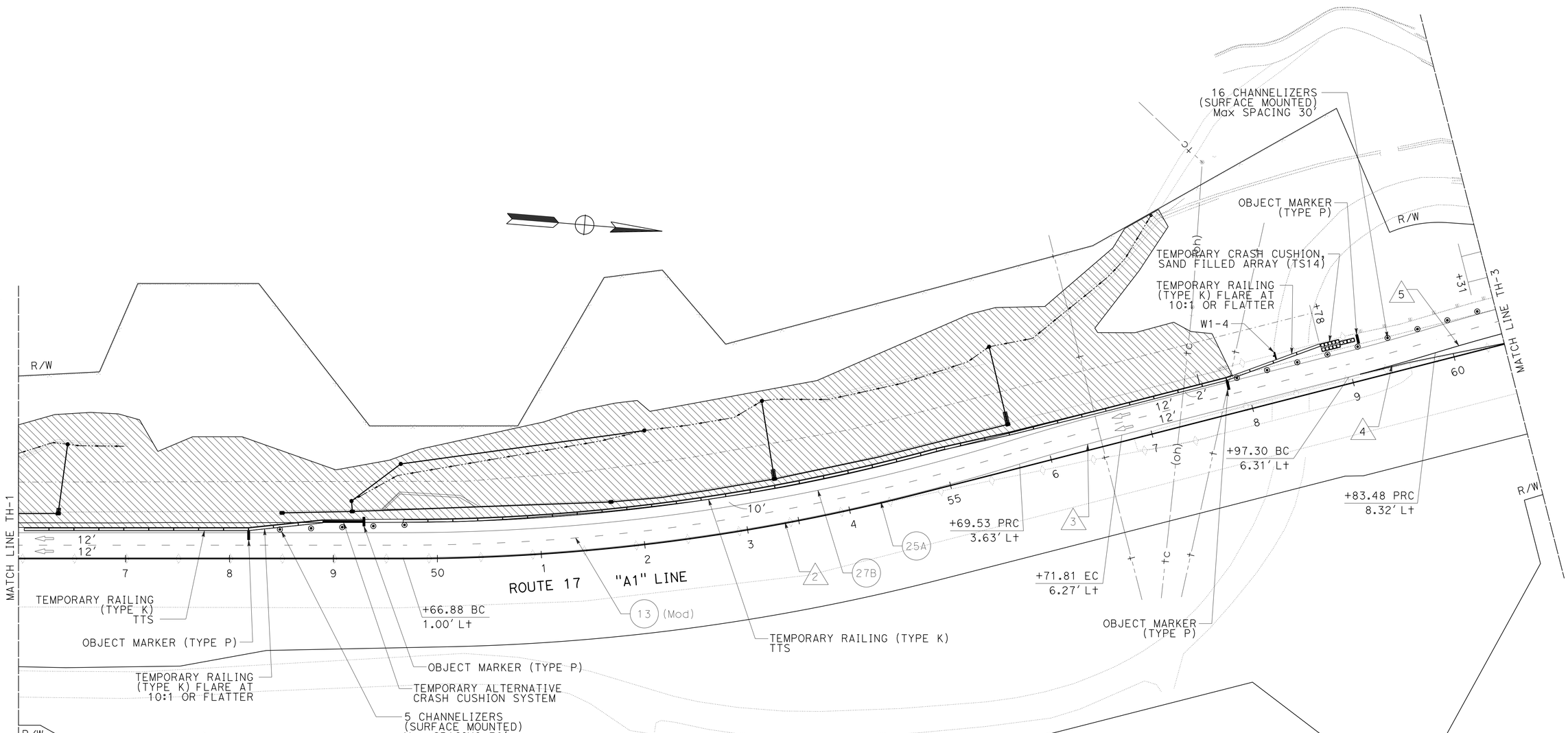

STAGE 3

TRAFFIC HANDLING PLAN

(STAGE 3)

SCALE: 1″ = 50′

TH-2

APPROVED FOR TRAFFIC HANDLING WORK ONLY

STATE OF CALIFORNIA - DEPARTMENT OF TRANSPORTATION
Caltrans

CONSULTANT FUNCTIONAL SUPERVISOR: KEITH RHODES

CALCULATED-DESIGNED BY: K. BEWSEY/D. ZURCHER
CHECKED BY: KEVIN BEWSEY

REVISED BY: DZ
DATE REVISED: 04/15/16

LAST REVISION 04-15-16 | DATE PLOTTED => 07-JUN-2016 | TIME PLOTTED => 12:04

Dist	COUNTY	ROUTE	POST MILES TOTAL PROJECT	SHEET No.	TOTAL SHEETS
05	SCr	17	1.0/1.4	44	72

Kevin Bewsey 4/15/16
REGISTERED CIVIL ENGINEER DATE

5-2-16
PLANS APPROVAL DATE

REGISTERED PROFESSIONAL ENGINEER KEVIN BEWSEY No. 71485 Exp. 12/31/17 CIVIL STATE OF CALIFORNIA

THE STATE OF CALIFORNIA OR ITS OFFICERS OR AGENTS SHALL NOT BE RESPONSIBLE FOR THE ACCURACY OR COMPLETENESS OF SCANNED COPIES OF THIS PLAN SHEET.

TY LIN INTERNATIONAL
1601 RESPONSE ROAD
SUITE 260
SACRAMENTO, CA 95815

Dept OF TRANSPORTATION
DISTRICT 5
50 HIGUERA STREET
SAN LUIS OBISPO, CA 93401

NOTE:

FOR ACCURATE RIGHT OF WAY DATA, CONTACT
RIGHT OF WAY ENGINEERING AT THE DISTRICT OFFICE.

TRAFFIC HANDLING QUANTITIES

SHEET	STATION	DIRECTION	TEMPORARY RAILING (TYPE K)	TEMPORARY TRAFFIC SCREEN	TEMPORARY CRASH CUSHION MODULE	TEMPORARY ALTERNATIVE CRASH CUSHION SYSTEM	CHANNELIZER (SURFACE MOUNTED)	OBJECT MARKER (TYPE P) (N)
			LF	LF	EA	EA	EA	EA
TH-1	"A1" 31+00 TO "A1" 46+00	SB	400	400				
TH-2	"A1" 46+00 TO "A1" 60+50	SB	1200	1200	14	1	14	4
TH-3	"A1" 60+50 TO "A1" 70+00	SB					7	
	TOTAL		1600	1600	14	1	21	4

(N) = NOT A SEPARATE PAY ITEM, FOR INFORMATION ONLY

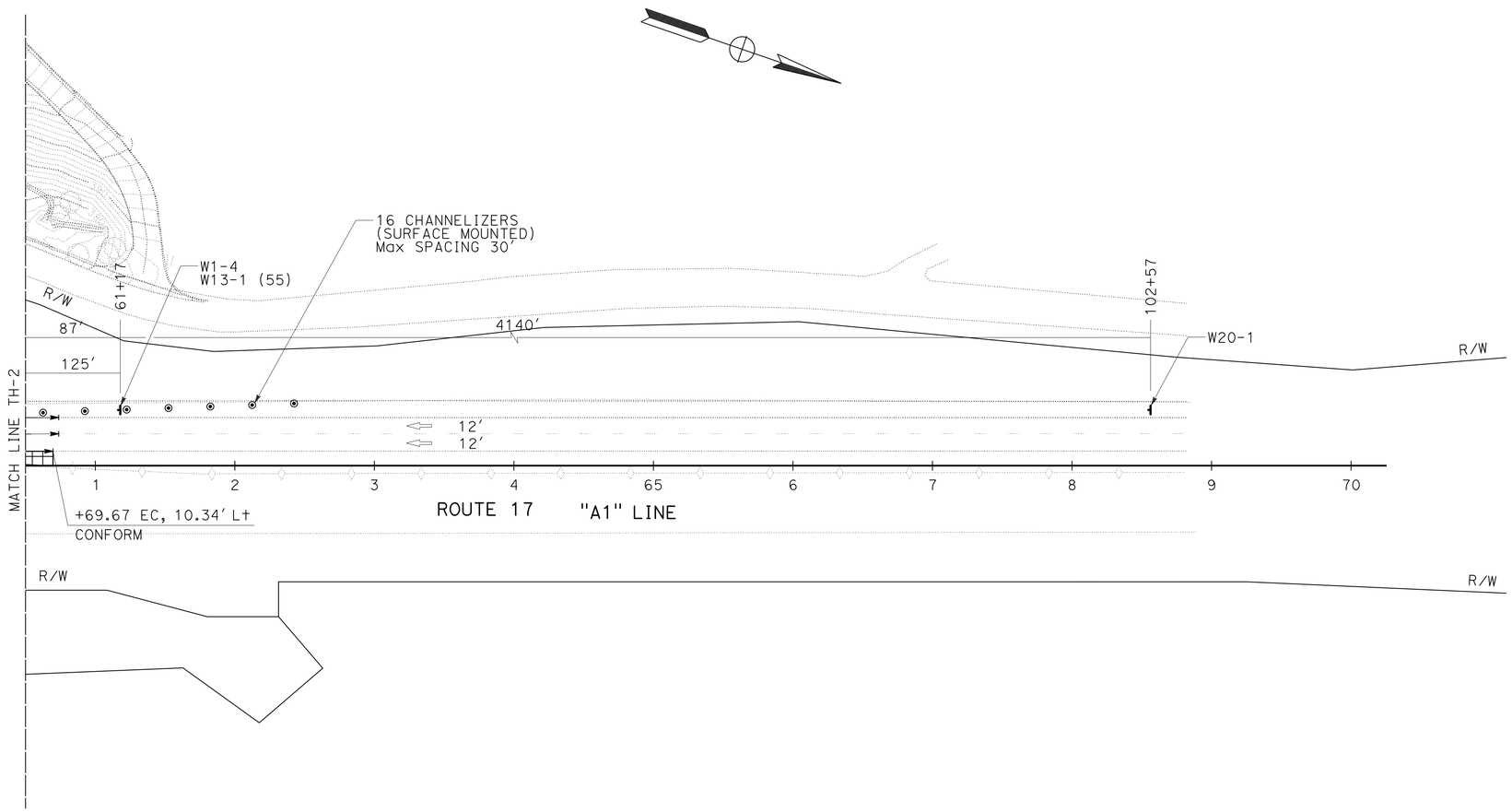

STAGE 3

TRAFFIC HANDLING PLAN

(STAGE 3)

SCALE: 1'' = 50'

TH-3

APPROVED FOR TRAFFIC HANDLING WORK ONLY

STATE OF CALIFORNIA - DEPARTMENT OF TRANSPORTATION
Caltrans

CONSULTANT FUNCTIONAL SUPERVISOR: KEITH RHODES
CALCULATED-DESIGNED BY: K. BEWSEY/D. ZURCHER
CHECKED BY: KEVIN BEWSEY
REVISED BY: DZ
DATE REVISED: 04/15/16

LAST REVISION 04-15-16 | DATE PLOTTED => 07-JUN-2016 | TIME PLOTTED => 12:04

Dist	COUNTY	ROUTE	POST MILES TOTAL PROJECT	SHEET No.	TOTAL SHEETS
05	SCr	17	1.0/1.4	45	72

Kevin Bewsey 4/15/16
REGISTERED CIVIL ENGINEER DATE

5-2-16
PLANS APPROVAL DATE

REGISTERED PROFESSIONAL ENGINEER KEVIN BEWSEY No. 71485 Exp. 12/31/17 CIVIL STATE OF CALIFORNIA

THE STATE OF CALIFORNIA OR ITS OFFICERS OR AGENTS SHALL NOT BE RESPONSIBLE FOR THE ACCURACY OR COMPLETENESS OF SCANNED COPIES OF THIS PLAN SHEET.

TY LIN INTERNATIONAL
1601 RESPONSE ROAD
SUITE 260
SACRAMENTO, CA 95815

Dept OF TRANSPORTATION
DISTRICT 5
50 HIGUERA STREET
SAN LUIS OBISPO, CA 93401

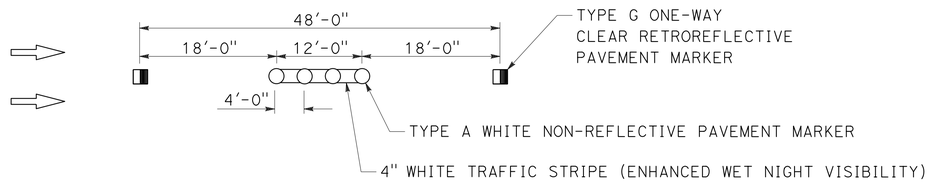

DETAIL 13 (Mod)

NO SCALE

PAVEMENT DELINEATION QUANTITIES

STATION	DETAIL No.	PAVEMENT MARKER (NON-RETROREFLECTIVE)	PAVEMENT MARKER (RETROREFLECTIVE)		4" THERMOPLASTIC TRAFFIC STRIPE (ENHANCED WET NIGHT VISIBILITY) (BROKEN 18-12)	4" THERMOPLASTIC TRAFFIC STRIPE (ENHANCED WET NIGHT VISIBILITY)	TEMPORARY PAVEMENT MARKERS	TEMPORARY TRAFFIC STRIPE (PAINT)	REMOVE THERMOPLASTIC TRAFFIC STRIPE	REMOVE PAVEMENT MARKERS	REMOVE PAINTED TRAFFIC STRIPE	RESET MARKER	DELINEATOR (TYPE 1)
		TYPE A	TYPE G	TYPE H									
		EA	EA	EA	LF	LF	EA	LF	LF	EA	LF	EA	EA
"A1" 36+00.00 TO 60+69.67	12								624.0	52			
	13 (Mod)	208	53		2496.0		261	624.0		261	624.0		
	25			52		2464.0			2463.3	103			
	25A						103	2466.9			2466.9		
	27B					2532.0		2633.5	2531.1		2633.5		
"A1" 36+00.00 TO 60+69.67												3	10
SUBTOTAL		208	53	52	2496.0	4996.0	364	5724.4	5618.4	416	5724.4	3	10
TOTAL		208	105		2496.0	4996.0	364	5724.4	5618.4	416	5724.4	3	10

PAVEMENT DELINEATION QUANTITIES

NO SCALE

PDQ-1

STATE OF CALIFORNIA - DEPARTMENT OF TRANSPORTATION
Caltrans

CONSULTANT FUNCTIONAL SUPERVISOR: KEITH RHODES
CALCULATED-DESIGNED BY: K. BEWSEY/D. ZURCHER
CHECKED BY: KEVIN BEWSEY
REVISED BY: DZ
DATE REVISED: 04/15/16

LAST REVISION 04-15-16 | DATE PLOTTED => 07-JUN-2016 | TIME PLOTTED => 12:04

Dist	COUNTY	ROUTE	POST MILES TOTAL PROJECT	SHEET No.	TOTAL SHEETS
05	SCr	17	1.0/1.4	46	72

Kevin Bewsey 4/15/16
REGISTERED CIVIL ENGINEER DATE

5-2-16
PLANS APPROVAL DATE

REGISTERED PROFESSIONAL ENGINEER KEVIN BEWSEY No. 71485 Exp. 12/31/17 CIVIL STATE OF CALIFORNIA

THE STATE OF CALIFORNIA OR ITS OFFICERS OR AGENTS SHALL NOT BE RESPONSIBLE FOR THE ACCURACY OR COMPLETENESS OF SCANNED COPIES OF THIS PLAN SHEET.

TY LIN INTERNATIONAL
1601 RESPONSE ROAD
SUITE 260
SACRAMENTO, CA 95815

Dept OF TRANSPORTATION
DISTRICT 5
50 HIGUERA STREET
SAN LUIS OBISPO, CA 93401

ROADWAY QUANTITIES SUMMARY

SHEET	STATION	ROADWAY EXCAVATION	ROADWAY EXCAVATION (TYPE Z-2) (AERIALLY DEPOSITED LEAD)	DITCH EXCAVATION (TYPE Z-2) (AERIALLY DEPOSITED LEAD)*	ROADWAY EXCAVATION (TYPE A)	ROADWAY EXCAVATION (UNSUITABLE MATERIAL)	CLASS 2 AGGREGATE BASE (CY)	HOT MIX ASPHALT (TYPE A)	HOT MIX ASPHALT-OPEN GRADED (OPEN GRADED FRICTION COURSE)	COLD PLANE ASPHALT CONCRETE PAVEMENT	TACK COAT
		CY	CY	CY	CY	CY	CY	TON	TON	SQYD	TON
C-1	"A1" 40+00 TO 46+00		6		91						
C-10	MVP No. 1 - "A1" 42+54.41 TO 43+56.81	126	24				32.4	32.8			
C-2	"A1" 46+00 TO 52+00		222	18	23	174					
C-10	MVP No. 2 - "A1" 49+48.80 TO 50+38.23	67	36				21.5	21.8			
C-3	"A1" 52+00 TO 57+50		434			719					
C-4	"A1" 57+50 TO 58+00		26			4					
L-2 - L-4	HMA DIKE							137.3			
L-1 - L-4	"A1" 36+00 TO 60+70						221.5	110.6	223.8	1980	1.0
	TOTAL	193	748	18	114	897	275.4	302.5	223.8	1980	1.0

*QUANTITY INCLUDES QUANTITIES FROM DRAINAGE QUANTITIES.

FENCE

SHEET	STATION	WROUGHT IRON FENCE (8' HIGH)	TEMPORARY FENCE (TYPE ESA)
		LF	LF
L-2	"A1" 39+50 TO 45+50		432
L-3	"A1" 45+50 TO 51+50		628
L-4	"A1" 51+50 TO 56+50		495
L-5	"A1" 56+50 TO 62+00	80	395
	TOTAL	80	1950

PLACE HMA DIKE

SHEET	STATION	PLACE HMA DIKE (TYPE D)	PLACE HMA DIKE (TYPE E)	HMA (TYPE A)**
		LF	LF	TON
L-2/3	"A1" 43+56.81 TO 49+48.80	592.0		59.2
L-3/4	"A1" 50+38.23 TO 57+78.42	740.2		74.2
C-10	"A1" 42+54.41 TO 42+89.40		42.3	2.6
C-10	"A1" 49+48.80 TO 49+64.16		21.3	1.3
	TOTAL	1332.2	63.6	137.3

**QUANTITY INCLUDED IN ROADWAY QUANTITIES SUMMARY.

CLEARING AND GRUBBING AND VEGETATION CONTROL (TYPE 1)

SHEET	STATION	CLEARING AND GRUBBING	CLEARING AND GRUBBING			VEGETATION CONTROL (TYPE 1)
			DUFF COLLECTION AREA (N)	CLEAR MATERIAL (N)	CLEAR AND GRUB OBJECTIONABLE MATERIAL (N)	
		ACRE	ACRE	ACRE	ACRE	ACRE
C-1	"A1" 42+35.00 TO 46+00.00	0.83	0.12[1]	0.34		
C-2	"A1" 46+00.00 TO 52+00.00	1.15	0.03[1]	0.38	0.52	0.40
C-3	"A1" 52+00.00 TO 57+50.00	1.65			1.60	1.41
C-4	"A1" 57+50.00 TO 58+00.00	0.04			0.04	0.04
	TOTAL	3.67				1.85

(N) - NOT A SEPERATE PAY ITEM, FOR INFORMATION ONLY
[1]Approx 3" DEPTH, SEE ECQ-1 FOR DUFF TOTAL.

REMOVE ASPHALT CONCRETE DIKE

SHEET	STATION	REMOVE ASPHALT CONCRETE DIKE
		LF
L-3	"A1" 46+42.88 TO 48+46.96	204.1
L-4/5	"A1" 55+70.00 TO 57+78.42	209.0
	TOTAL	413.1

SUMMARY OF QUANTITIES

Q-1

STATE OF CALIFORNIA - DEPARTMENT OF TRANSPORTATION
Caltrans

CONSULTANT FUNCTIONAL SUPERVISOR: KEITH RHODES
CALCULATED-DESIGNED BY: K. BEWSEY/D. ZURCHER
CHECKED BY: KEVIN BEWSEY
REVISED BY: DZ
DATE REVISED: 04/28/16

LAST REVISION 04-28-16 | DATE PLOTTED => 07-JUN-2016 | TIME PLOTTED => 12:04

Dist	COUNTY	ROUTE	POST MILES TOTAL PROJECT	SHEET No.	TOTAL SHEETS
05	SCr	17	1.0/1.4	47	72

Kevin Bewsey 4/15/16
REGISTERED CIVIL ENGINEER DATE

5-2-16
PLANS APPROVAL DATE

REGISTERED PROFESSIONAL ENGINEER KEVIN BEWSEY No. 71485 Exp. 12/31/17 CIVIL STATE OF CALIFORNIA

THE STATE OF CALIFORNIA OR ITS OFFICERS OR AGENTS SHALL NOT BE RESPONSIBLE FOR THE ACCURACY OR COMPLETENESS OF SCANNED COPIES OF THIS PLAN SHEET.

TY LIN INTERNATIONAL
1601 RESPONSE ROAD
SUITE 260
SACRAMENTO, CA 95815

Dept OF TRANSPORTATION
DISTRICT 5
50 HIGUERA STREET
SAN LUIS OBISPO, CA 93401

NOTES:

1. TEMPORARY DRAINAGE INLET PROTECTION TYPE 6B SHALL NOT BE ALLOWED.
2. TEMPORARY CONSTRUCTION ENTRANCE/EXIT SHALL BE TYPE 2.
3. ROCK STAIN AT RSP (1/2 TON, METHOD A) ONLY.
4. TEMPORARY FIBER ROLLS SHALL BE TYPE 2.

WATER POLLUTION CONTROL

STATION	TEMPORARY CONSTRUCTION ENTRANCE	TEMPORARY DRAINAGE INLET PROTECTION	TEMPORARY LARGE SEDIMENT BARRIER	TEMPORARY HYDRAULIC MULCH (BONDED FIBER MATRIX)	TEMPORARY GRAVEL BAG BERM	TEMPORARY FIBER ROLLS	TEMPORARY CHECK DAM
	EA	EA	LF	SQYD	LF	LF	LF
"A1" 31+24.24 TO 60+69.67	3		2700	29750	1550	1560	300
"A1" 34+40.53		1					
"A1" 34+41.08		1					
"A1" 42+43.00		1					
"A1" 42+51.00		1					
"A1" 42+54.78		1					
"A1" 42+46.20		1					
"A1" 42.91.45		1					
"A1" 42+92.12		1					
"A1" 42+92.49		1					
"A1" 44+31.00		1					
"A1" 44+31.48		1					
"A1" 45+14.00		1					
"A1" 45+16.73		1					
"A1" 46+35.00		1					
"A1" 46+44.20		1					
"A1" 48+50.00		1					
"A1" 48+50.63		1					
"A1" 48+50.63		1					
"A1" 48+50.67		1					
"A1" 49+17.35		1					
"A1" 49+18.00		1					
"A1" 49+64.74		1					
"A1" 51+72.00		1					
"A1" 52+13.03		1					
"A1" 53+34.00		1					
"A1" 53+36.33		1					
"A1" 55+68.00		1					
"A1" 55+68.95		1					
TOTAL	3	28	2700	29750	1550	1560	300

ADTWMS AND RSP

SHEET	STATION	DOUBLE TWISTED WIRE MESH	ROCK DOWELS	ROCK SLOPE PROTECTION (1/2 TON, METHOD A)	ROCK SLOPE PROTECTION (No. 2, METHOD B)***	ROCK SLOPE PROTECTION FABRIC (CLASS 8)***	ROCK STAIN
		SQYD	EA	CY	CY	SQYD	SQFT
L-2	"A1" 39+50 TO 45+50	1527	185	529.3		1381	2858
L-3	"A1" 45+50 TO 51+50	2511	296	651.7		1653	3519
L-4	"A1" 51+50 TO 56+50	4984	547				
L-5	"A1" 56+50 TO 62+00	830	93				
D-1/2/3/4	"A1" 42+51 TO 57+52				906	1430	
TOTAL		9852	1121	1181.0	906	4464	6377

***QUANTITY INCLUDES QUANTITIES FROM DRAINAGE QUANTITIES.

SUMMARY OF QUANTITIES

Q-2

K. BEWSEY/D. ZURCHER	DZ	CALCULATED-DESIGNED BY	CONSULTANT FUNCTIONAL SUPERVISOR
KEVIN BEWSEY	04/15/16	CHECKED BY	KEITH RHODES
REVISED BY	DATE REVISED		

STATE OF CALIFORNIA - DEPARTMENT OF TRANSPORTATION
Caltrans

LAST REVISION 04-15-16 | DATE PLOTTED => 07-JUN-2016 | TIME PLOTTED => 12:04

Dist	COUNTY	ROUTE	POST MILES TOTAL PROJECT	SHEET No.	TOTAL SHEETS
05	SCr	17	1.0/1.4	48	72

LICENSED LANDSCAPE ARCHITECT 4/15/16

5-2-16
PLANS APPROVAL DATE

LICENSED LANDSCAPE ARCHITECT
Hal Hagopsworo No. 12587
Signature
06-30-16
Renewal Date
3-7-16
Date
STATE OF CALIFORNIA

THE STATE OF CALIFORNIA OR ITS OFFICERS OR AGENTS SHALL NOT BE RESPONSIBLE FOR THE ACCURACY OR COMPLETENESS OF SCANNED COPIES OF THIS PLAN SHEET.

ORSEE DESIGN ASSOCIATES
10308 PLACER LANE
SUITE 200
SACRAMENTO, CA 95827

Dept OF TRANSPORTATION
DISTRICT 5
50 HIGUERA STREET
SAN LUIS OBISPO, CA 93401

EROSION CONTROL TYPE 1*

SEQUENCE	ITEM	MATERIAL DESCRIPTION	MATERIAL TYPE	APPLICATION RATE	DEPTH	REMARK
STEP 1	COMPOST	COMPOST	MEDIUM	269 CY/ACRE	2"	
STEP 2	HYDROSEED	SEED	MIX	33.50 LB/ACRE	-	TYPE 1
		FIBER	WOOD	500 LB/ACRE		
STEP 3	HYDROMULCH	FIBER	WOOD	1,500 LB/ACRE		
		TACKIFIER	PSYLLIUM	125 LB/ACRE		
STEP 4	RECP (NETTING) (TYPE B)	NETTING	TYPE B		-	

*PLACE FIBER ROLLS IN THIS AREA.

EROSION CONTROL TYPE 2**

SEQUENCE	ITEM	MATERIAL DESCRIPTION	MATERIAL TYPE	APPLICATION RATE	REMARK
STEP 1	HYDROSEED	SEED	MIX	33.50 LB/ACRE	TYPE 2
		FIBER	WOOD	500 LB/ACRE	
		TACKIFIER	PSYLLIUM	125 LB/ACRE	
STEP 2	RECP (NETTING) (TYPE B)	NETTING	TYPE B		

**FOR AREAS OUTSIDE CLEAR AND GRUB OBJECTIONABLE MATERIAL OUTSIDE OF DITCHES. ADTWMS AREAS. MINIMIZE IMPACT TO SLOPES AS MUCH AS POSSIBLE. COMPOST SOCKS ONLY AT THE TOP AND BOTTOM OF SLOPES; PLACE FIBER ROLLS IN THIS AREA.

EROSION CONTROL TYPE 3***

SEQUENCE	ITEM	MATERIAL DESCRIPTION	MATERIAL TYPE	APPLICATION RATE	DEPTH	REMARK
STEP 1	IMPORTED TOPSOIL	IMPORTED TOPSOIL	SANDY LOAM		6"	
STEP 2	COMPOST	COMPOST	MEDIUM	538 CY/ACRE	4"	
STEP 3	INCORPORATE MATERIALS	COMPOST/ IMPORTED TOPSOIL			8"	
STEP 4	LOCAL TOPSOIL	LOCAL TOPSOIL FROM ROADWAY EXCAVATION (SM)		275 CY/ACRE	2"	
STEP 5	COMPOST	COMPOST	MEDIUM	269 CY/ACRE	2"	
STEP 6	HYDROSEED	SEED	MIX	33.50 LB/ACRE	-	TYPE 2
		FIBER	WOOD	500 LB/ACRE		
		TACKIFIER	PSYLLIUM	125 LB/ACRE		
STEP 7	DUFF					
STEP 8	RECP (NETTING) (TYPE A)	NETTING	TYPE A		-	

***FOR CLEAR AND GRUB OBJECTIONABLE MATERIAL AREAS, OUTSIDE OF DITCHES. NO ADTWMS. ONLY AFTER OBJECTIONABLE MATERIAL HAS BEEN REMOVED SHOULD ABOVE STEPS START. PLACE FIBER ROLLS AND COMPOST SOCKS IN THESE AREAS.

ABBREVIATION:

ADTWMS - ANCHORED DOUBLE TWISTED WIRE MESH SYSTEM

EROSION CONTROL TYPE 4****

SEQUENCE	ITEM	MATERIAL DESCRIPTION	MATERIAL TYPE	APPLICATION RATE	DEPTH	REMARK
STEP 1	COMPOST	COMPOST	MEDIUM	269 CY/ACRE	2"	
STEP 2	HYDROSEED	SEED	MIX	33.50 LB/ACRE	-	TYPE 3
		FIBER	WOOD	500 LB/ACRE		
		SOIL CONDITIONER WITH MYCORRHIZAE	FERT AMEND (5-3-1)	1,300 LB/ACRE		
		TACKIFIER	PSYLLIUM	125 LB/ACRE		
STEP 3	RECP (NETTING) (TYPE B)	NETTING	TYPE B		-	

****FOR CLEAR AND GRUB OBJECTIONABLE MATERIAL AREAS, OUTSIDE OF DITCHES. AT ADTWMS. PLACE FIBER ROLLS AND COMPOST SOCKS AFTER RECP AND BEFORE HYDROSEEDING IN THESE AREAS. ONLY AFTER OBJECTIONABLE MATERIAL HAS BEEN REMOVED SHOULD ABOVE STEPS START.

EROSION CONTROL TYPE 5*****

SEQUENCE	ITEM	MATERIAL DESCRIPTION	MATERIAL TYPE	APPLICATION RATE	DEPTH	REMARK
STEP 1	IMPORTED TOPSOIL	IMPORTED TOPSOIL	SANDY LOAM		6"	
STEP 2	HYDROSEED	SEED	MIX	33.50 LB/ACRE	-	TYPE 2
		FIBER	WOOD	500 LB/ACRE		
		TACKIFIER	PSYLLIUM	125 LB/ACRE		

*****FOR RSP AREAS OUTSIDE CLEAR AND GRUB OBJECTIONABLE MATERIAL AREAS OUTSIDE OF DITCHES. COMPOST SOCKS ONLY AT THE TOP AND BOTTOM OF SLOPES; NO FIBER ROLLS.

EROSION CONTROL LEGEND
ECL-1

REVISED BY	DATE REVISED
TSH	4/15/16

TIMOTHY HIRAOKA — HARRY NAKAGAWARA

CALCULATED-DESIGNED BY — CHECKED BY

CONSULTANT SENIOR LANDSCAPE ARCHITECT — TIMOTHY HIRAOKA

STATE OF CALIFORNIA - DEPARTMENT OF TRANSPORTATION

Caltrans®

LAST REVISION 04-15-16 | DATE PLOTTED => 07-JUN-2016 | TIME PLOTTED => 12:04

Dist	COUNTY	ROUTE	POST MILES TOTAL PROJECT	SHEET No.	TOTAL SHEETS
05	SCr	17	1.0/1.4	49	72

LICENSED LANDSCAPE ARCHITECT 4/15/16

5-2-16
PLANS APPROVAL DATE

LICENSED LANDSCAPE ARCHITECT
Hy Nakagawara No. 1258
Signature
06-30-16
Renewal Date
3-7-16
Date
STATE OF CALIFORNIA

THE STATE OF CALIFORNIA OR ITS OFFICERS OR AGENTS SHALL NOT BE RESPONSIBLE FOR THE ACCURACY OR COMPLETENESS OF SCANNED COPIES OF THIS PLAN SHEET.

ORSEE DESIGN ASSOCIATES
10308 PLACER LANE
SUITE 200
SACRAMENTO, CA 95827

Dept OF TRANSPORTATION
DISTRICT 5
50 HIGUERA STREET
SAN LUIS OBISPO, CA 93401

SEED MIX

BOTANICAL NAME (COMMON NAME)	PERCENT GERMINATION (MINIMUM)	POUNDS PURE LIVE SEED PER ACRE (SLOPE MEASUREMENT)
ACHILLEA MILLEFOLIUM[1] (WESTERN YARROW)	77	0.5
ADENOSTOMA FASCICULATUM[1] (CHAMISE)	39	1.0
ARTEMISIA CALIFORNICA[1] (CALIFORNIA SAGEBRUSH)	39	0.5
BROMUS CARINATUS[1] (CALIFORNIA BROME)	92	1.0
ELMUS GLAUCUS[1] (BLUE WILD RYE)	85	10.0
ERIOGONUM FASCICULATUM[1] (CALIFORNIA BUCKWHEAT)	7	10.0
ESCHSCHOLZIA CALIFORNICA[1] (CALIFORNIA POPPY)	86	1.0
HAZARDIA SQUARROSA[1] (SAW TOOTHED GOLDENBUSH)	8	3.0
LASTHENIA CALIFORNICA[1] (CALIFORNIA GOLDFIELDS)	53	0.5
LOTUS SCOPARIUS[1] (DEER LOTUS)	83	1.0
NASSELLA LEPIDA[1] (FOOTHILL NEEDLEGRASS)	77	2.0
SALVIA MELLIFERA[1] (BLACK SAGE)	49	1.0
VULPIA MICROSTACHYS[1] (SMALL FESCUE)	83	2.0
	TOTAL	33.5

[1] SEED PRODUCED IN CALIFORNIA ONLY.

WILLOW POLES, CUTTINGS AND FASCINES

DESCIPTION	BOTANICAL NAME	COMMON NAME
WILLOW POLE CUTTINGS	SALIX LASIOLEPIS	ARROYO WILLOW
WILLOW CUTTINGS	SALIX LASIOLEPIS	ARROYO WILLOW
WILLOW FASCINES	SALIX LASIOLEPIS	ARROYO WILLOW

COMPOST SOCK

SEQUENCE	ITEM	MATERIAL		REMARKS
		DESCRIPTION	TYPE	
IN EC AREAS COMPOST SOCKS MUST BE INSTALLED AFTER RECP (NETTING), HYDROSEED AND ADTWMS.	COMPOST SOCK	MESH TUBE	8" Dia COTTON	TYPE 2 INSTALLATION PLACE AT TOP AND TOE OF SLOPE

FIBER ROLLS

SEQUENCE	ITEM	MATERIAL		REMARKS
		DESCRIPTION	TYPE	
IN EC TYPES 1, 2, 3, AND 4 FIBER ROLLS MUST BE INSTALLED AFTER RECP (NETTING), ADTWMS, AND HYDROSEED.	FIBER ROLLS	FIBER ROLLS	8" TO 10" Dia	TYPE 1 FIBER ROLL INSTALLATION

EROSION CONTROL LEGEND
ECL-2

REVISED BY	DATE REVISED
TSH	4/15/16

TIMOTHY HIRAOKA
HARRY NAKAGAWARA

CALCULATED-DESIGNED BY
CHECKED BY

CONSULTANT SENIOR LANDSCAPE ARCHITECT
TIMOTHY HIRAOKA

STATE OF CALIFORNIA - DEPARTMENT OF TRANSPORTATION
Caltrans

LAST REVISION 04-15-16 | DATE PLOTTED => 07-JUN-2016 | TIME PLOTTED => 12:04

Dist	COUNTY	ROUTE	POST MILES TOTAL PROJECT	SHEET No.	TOTAL SHEETS
05	SCr	17	1.0/1.4	50	72

LICENSED LANDSCAPE ARCHITECT 4/15/16

5-2-16
PLANS APPROVAL DATE

LICENSED LANDSCAPE ARCHITECT
Hy Nakagawara No. 1258
Signature
06-30-16
Renewal Date
3-7-16
Date
STATE OF CALIFORNIA

THE STATE OF CALIFORNIA OR ITS OFFICERS OR AGENTS SHALL NOT BE RESPONSIBLE FOR THE ACCURACY OR COMPLETENESS OF SCANNED COPIES OF THIS PLAN SHEET.

ORSEE DESIGN ASSOCIATES
10308 PLACER LANE
SUITE 200
SACRAMENTO, CA 95827

Dept OF TRANSPORTATION
DISTRICT 5
50 HIGUERA STREET
SAN LUIS OBISPO, CA 93401

NOTES:

1. FOR ACCURATE RIGHT OF WAY DATA, CONTACT RIGHT OF WAY ENGINEERING AT THE DISTRICT OFFICE.
2. PLACE LOCAL TOPSOIL (ROADWAY Exc (TYPE A)) TO A DEPTH OF 2".
3. PLACE IMPORTED TOPSOIL IN VOIDS OF RSP.
4. SEE CONSTRUCTION DETAILS FOR ROADWAY Exc (UNSUITABLE MATERIAL), ROADWAY Exc (TYPE A), DUFF COLLECTION AREAS, VEGETATION CONTROL (TYPE 1), CLEAR AND GRUB OBJECTIONABLE MATERIAL AND CLEAR MATERIAL.
5. EXACT LOCATION OF WILLOW FASCINES AND WILLOW CUTTINGS NOT SHOWN TO BE DETERMINED BY THE ENGINEER.
6. COMPOST SOCK IS PLACED PARALLEL TO CONTOURS, LAYOUT ON PLANS IS SCHEMATIC.

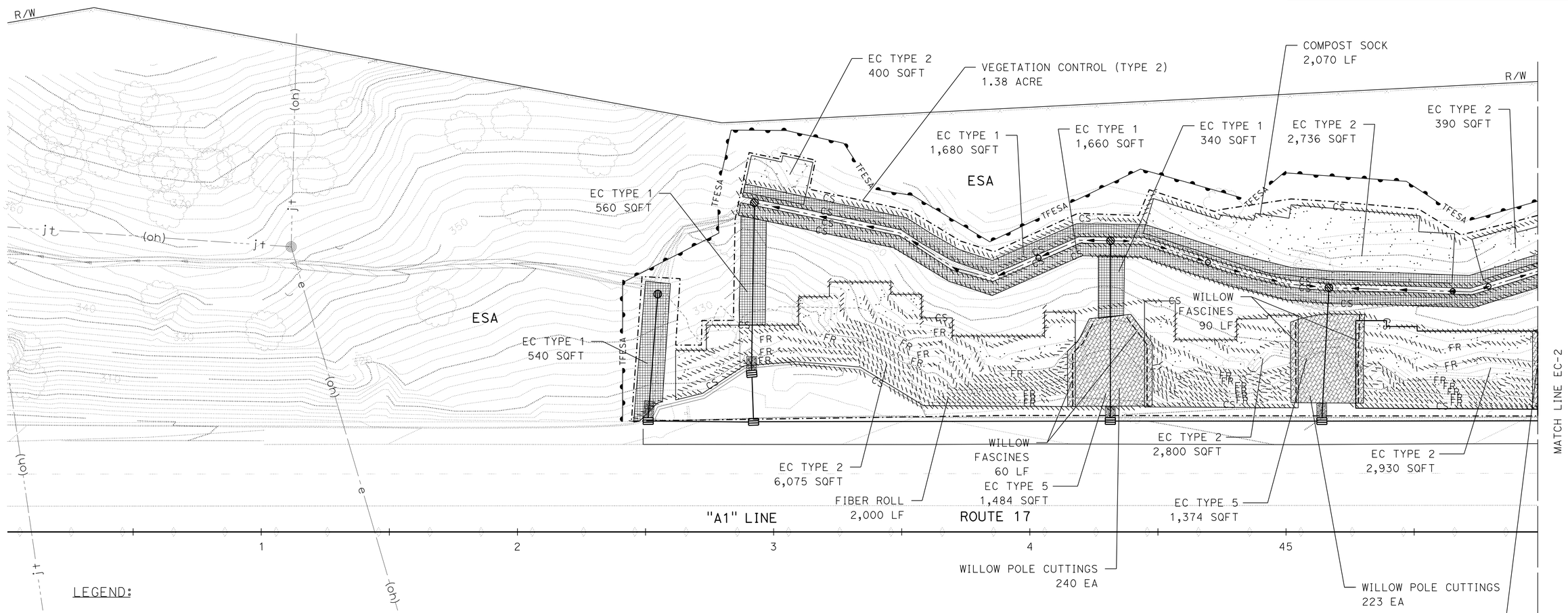

LEGEND:

- VEGETATION CONTROL (TYPE 2)
- WILLOW FASCINES
- EROSION CONTROL TYPE 1
- EROSION CONTROL TYPE 2
- EROSION CONTROL TYPE 3
- EROSION CONTROL TYPE 4
- EROSION CONTROL TYPE 5 IMPORTED TOPSOIL

EROSION CONTROL PLAN

SCALE: 1'' = 20'

EC-1

APPROVED FOR EROSION CONTROL WORK ONLY

REVISED BY	DATE REVISED
TSH	4/15/16

CALCULATED-DESIGNED BY: TIMOTHY HIRAOKA
CHECKED BY: HARRY NAKAGAWARA

CONSULTANT SENIOR LANDSCAPE ARCHITECT: TIMOTHY HIRAOKA

STATE OF CALIFORNIA - DEPARTMENT OF TRANSPORTATION
Caltrans

LAST REVISION 04-15-16 | DATE PLOTTED => 07-JUN-2016 | TIME PLOTTED => 12:04

Dist	COUNTY	ROUTE	POST MILES TOTAL PROJECT	SHEET No.	TOTAL SHEETS
05	SCr	17	1.0/1.4	51	72

LICENSED LANDSCAPE ARCHITECT 4/15/16

5-2-16
PLANS APPROVAL DATE

LICENSED LANDSCAPE ARCHITECT
No. Nakagawara No. 12587
Signature
06-30-16
Renewal Date
3-7-16
Date
STATE OF CALIFORNIA

THE STATE OF CALIFORNIA OR ITS OFFICERS OR AGENTS SHALL NOT BE RESPONSIBLE FOR THE ACCURACY OR COMPLETENESS OF SCANNED COPIES OF THIS PLAN SHEET.

ORSEE DESIGN ASSOCIATES
10308 PLACER LANE
SUITE 200
SACRAMENTO, CA 95827

Dept OF TRANSPORTATION
DISTRICT 5
50 HIGUERA STREET
SAN LUIS OBISPO, CA 93401

NOTE:

FOR ACCURATE RIGHT OF WAY DATA, CONTACT RIGHT OF WAY ENGINEERING AT THE DISTRICT OFFICE.

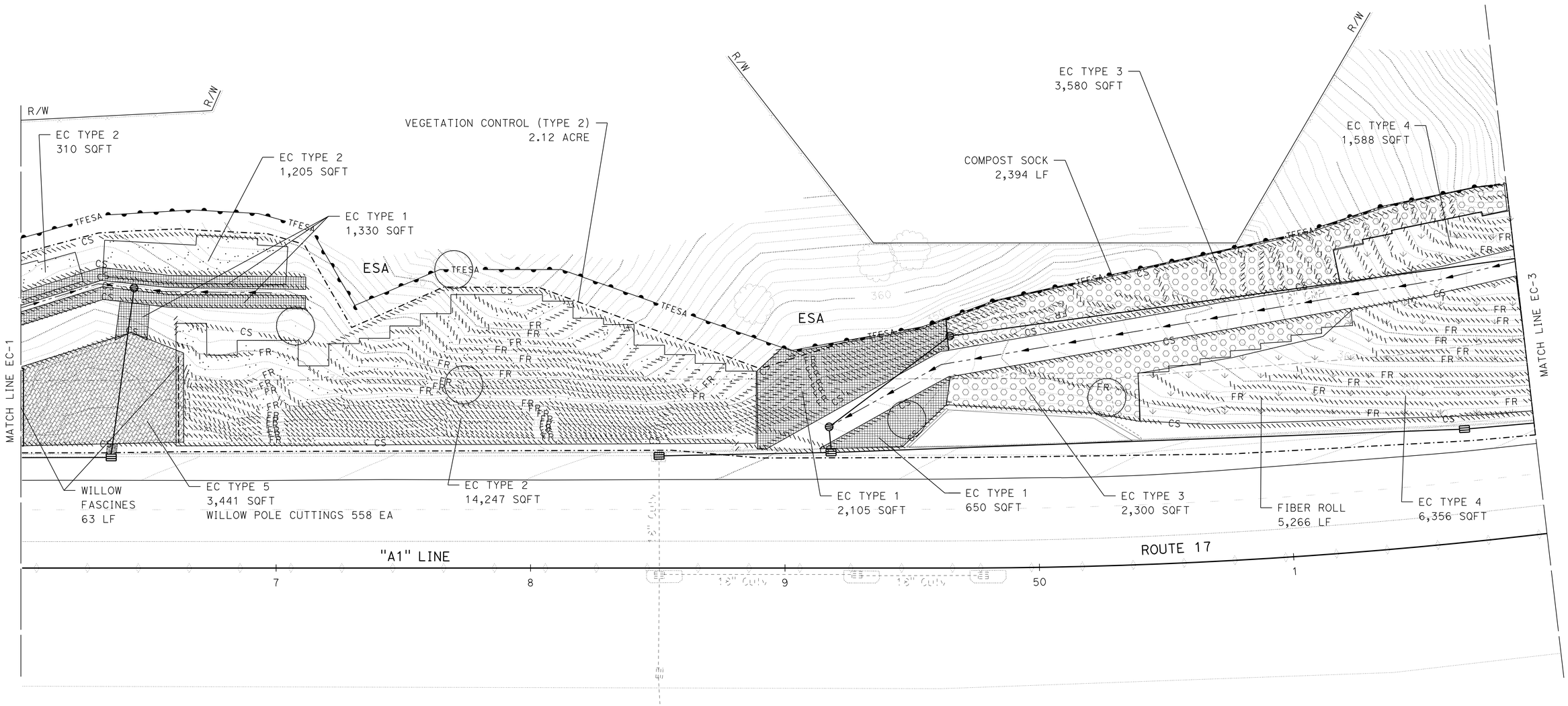

EROSION CONTROL PLAN

SCALE: 1'' = 20'

EC-2

APPROVED FOR EROSION CONTROL WORK ONLY

STATE OF CALIFORNIA - DEPARTMENT OF TRANSPORTATION
Caltrans®

CONSULTANT SENIOR LANDSCAPE ARCHITECT: TIMOTHY HIRAOKA

CALCULATED-DESIGNED BY: TIMOTHY HIRAOKA
CHECKED BY: HARRY NAKAGAWARA

REVISED BY: TSH
DATE REVISED: 4/15/16

LAST REVISION 04-15-16
DATE PLOTTED => 07-JUN-2016
TIME PLOTTED => 12:04

Dist	COUNTY	ROUTE	POST MILES TOTAL PROJECT	SHEET No.	TOTAL SHEETS
05	SCr	17	1.0/1.4	52	72

LICENSED LANDSCAPE ARCHITECT 4/15/16

5-2-16
PLANS APPROVAL DATE

LICENSED LANDSCAPE ARCHITECT
Hy Nakagawara No. 1258
Signature
06-30-16
Renewal Date
3-7-16
Date
STATE OF CALIFORNIA

THE STATE OF CALIFORNIA OR ITS OFFICERS OR AGENTS SHALL NOT BE RESPONSIBLE FOR THE ACCURACY OR COMPLETENESS OF SCANNED COPIES OF THIS PLAN SHEET.

ORSEE DESIGN ASSOCIATES
10308 PLACER LANE
SUITE 200
SACRAMENTO, CA 95827

Dept OF TRANSPORTATION
DISTRICT 5
50 HIGUERA STREET
SAN LUIS OBISPO, CA 93401

NOTE:

FOR ACCURATE RIGHT OF WAY DATA, CONTACT RIGHT OF WAY ENGINEERING AT THE DISTRICT OFFICE.

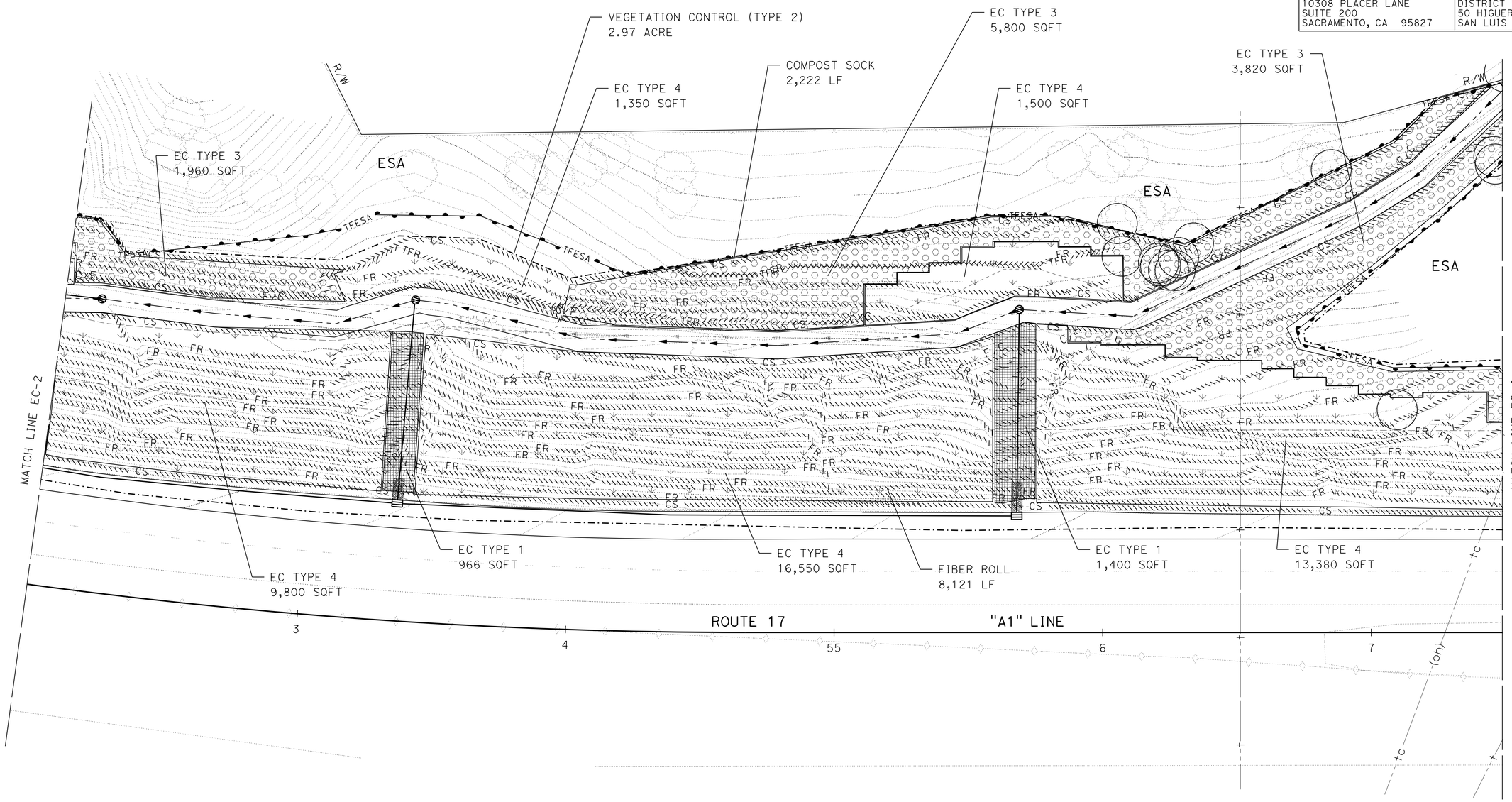

EROSION CONTROL PLAN

SCALE: 1'' = 20'

EC-3

APPROVED FOR EROSION CONTROL WORK ONLY

STATE OF CALIFORNIA - DEPARTMENT OF TRANSPORTATION
Caltrans

CONSULTANT SENIOR LANDSCAPE ARCHITECT: TIMOTHY HIRAOKA
CALCULATED-DESIGNED BY: HARRY NAKAGAWARA
CHECKED BY: TIMOTHY HIRAOKA
REVISED BY: TSH
DATE REVISED: 4/15/16

LAST REVISION 04-15-16
DATE PLOTTED => 07-JUN-2016
TIME PLOTTED => 12:04

Dist	COUNTY	ROUTE	POST MILES TOTAL PROJECT	SHEET No.	TOTAL SHEETS
05	SCr	17	1.0/1.4	53	72

4/15/16
LICENSED LANDSCAPE ARCHITECT

5-2-16
PLANS APPROVAL DATE

LICENSED LANDSCAPE ARCHITECT
Harry Nakagawara No. 12587
Signature
06-30-16
Renewal Date
3-7-16
Date
STATE OF CALIFORNIA

THE STATE OF CALIFORNIA OR ITS OFFICERS OR AGENTS SHALL NOT BE RESPONSIBLE FOR THE ACCURACY OR COMPLETENESS OF SCANNED COPIES OF THIS PLAN SHEET.

ORSEE DESIGN ASSOCIATES
10308 PLACER LANE
SUITE 200
SACRAMENTO, CA 95827

Dept OF TRANSPORTATION
DISTRICT 5
50 HIGUERA STREET
SAN LUIS OBISPO, CA 93401

NOTE:

FOR ACCURATE RIGHT OF WAY DATA, CONTACT RIGHT OF WAY ENGINEERING AT THE DISTRICT OFFICE.

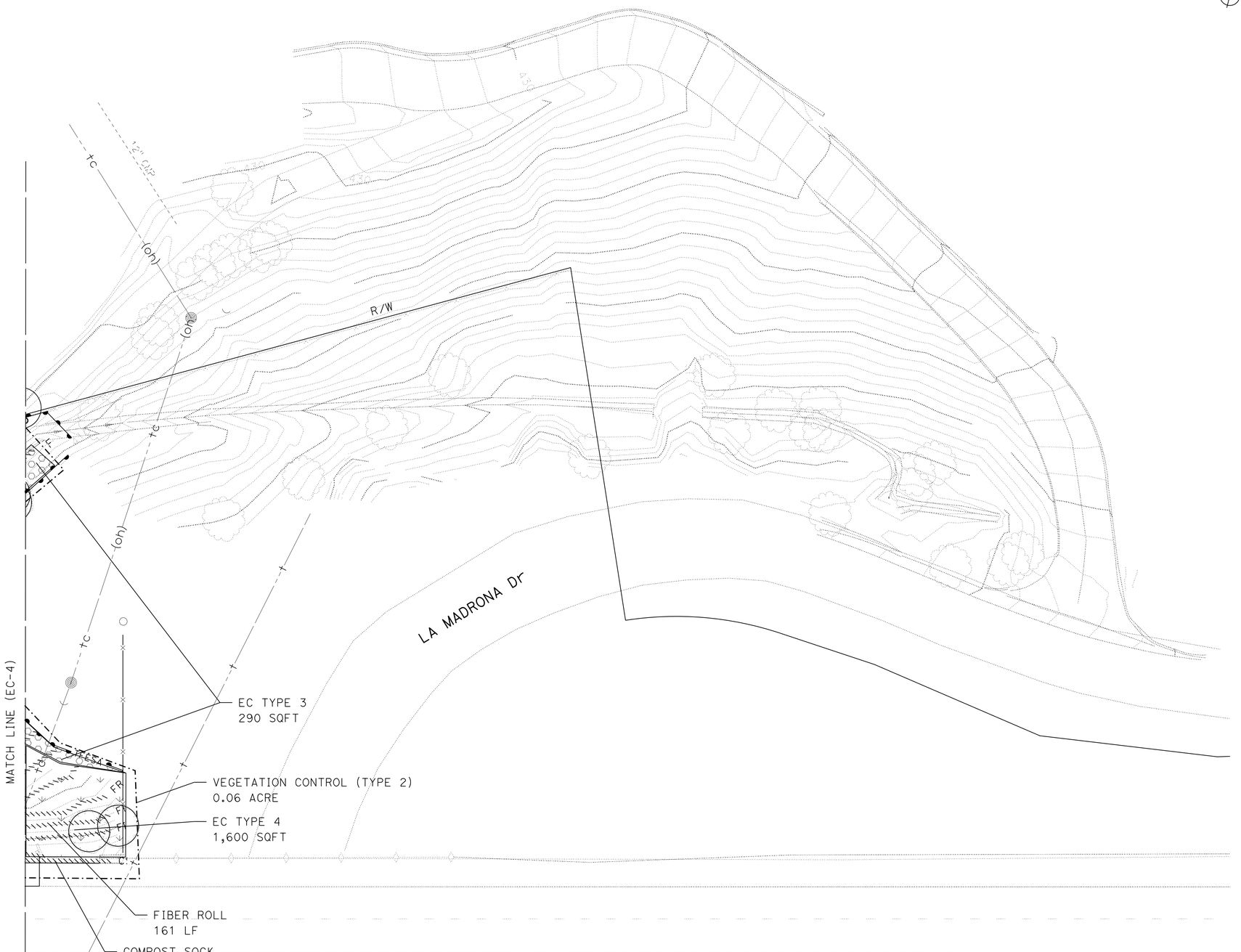

EROSION CONTROL PLAN

SCALE: 1'' = 20'

EC-4

APPROVED FOR EROSION CONTROL WORK ONLY

STATE OF CALIFORNIA - DEPARTMENT OF TRANSPORTATION
Caltrans

CONSULTANT SENIOR LANDSCAPE ARCHITECT: TIMOTHY HIRAOKA
CALCULATED-DESIGNED BY: TIMOTHY HIRAOKA
CHECKED BY: HARRY NAKAGAWARA
REVISED BY: TSH
DATE REVISED: 4/15/16

LAST REVISION 04-15-16
DATE PLOTTED => 07-JUN-2016
TIME PLOTTED => 12:04

Dist	COUNTY	ROUTE	POST MILES TOTAL PROJECT	SHEET No.	TOTAL SHEETS
05	SCr	17	1.0/1.4	54	72

LICENSED LANDSCAPE ARCHITECT 4/15/16

5-2-16
PLANS APPROVAL DATE

LICENSED LANDSCAPE ARCHITECT
Harry Nakagawara No. 12587
Signature
06-30-16
Renewal Date
3-7-16
Date
STATE OF CALIFORNIA

THE STATE OF CALIFORNIA OR ITS OFFICERS OR AGENTS SHALL NOT BE RESPONSIBLE FOR THE ACCURACY OR COMPLETENESS OF SCANNED COPIES OF THIS PLAN SHEET.

ORSEE DESIGN ASSOCIATES
10308 PLACER LANE
SUITE 200
SACRAMENTO, CA 95827

Dept OF TRANSPORTATION
DISTRICT 5
50 HIGUERA STREET
SAN LUIS OBISPO, CA 93401

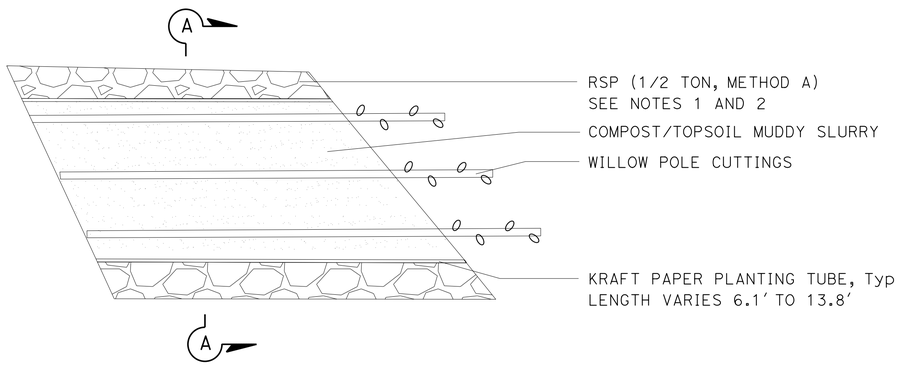

SECTION ENLARGEMENT

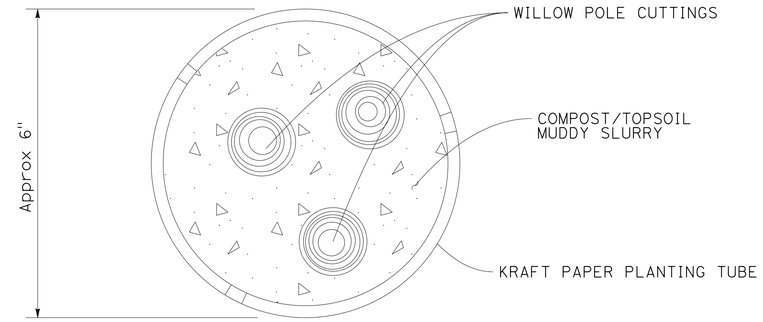

SECTION A - A

NOTES:

1. SEE LAYOUT PLANS, DRAINAGE PLANS AND CONSTRUCTION DETAILS FOR RSP LOCATIONS AND DETAILS.
2. SEE DRAINAGE PLANS FOR DOWNDRAIN IN RSP.

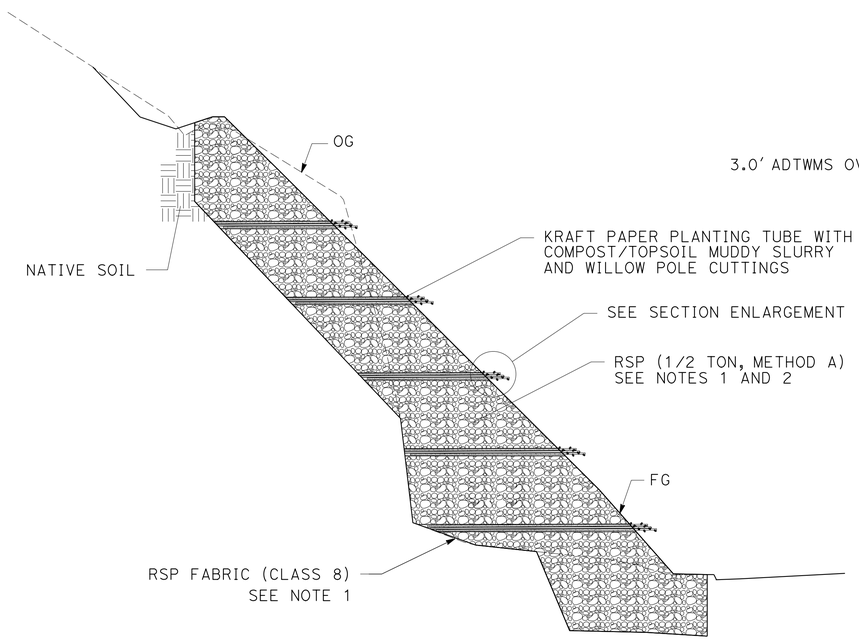

SECTION B - B

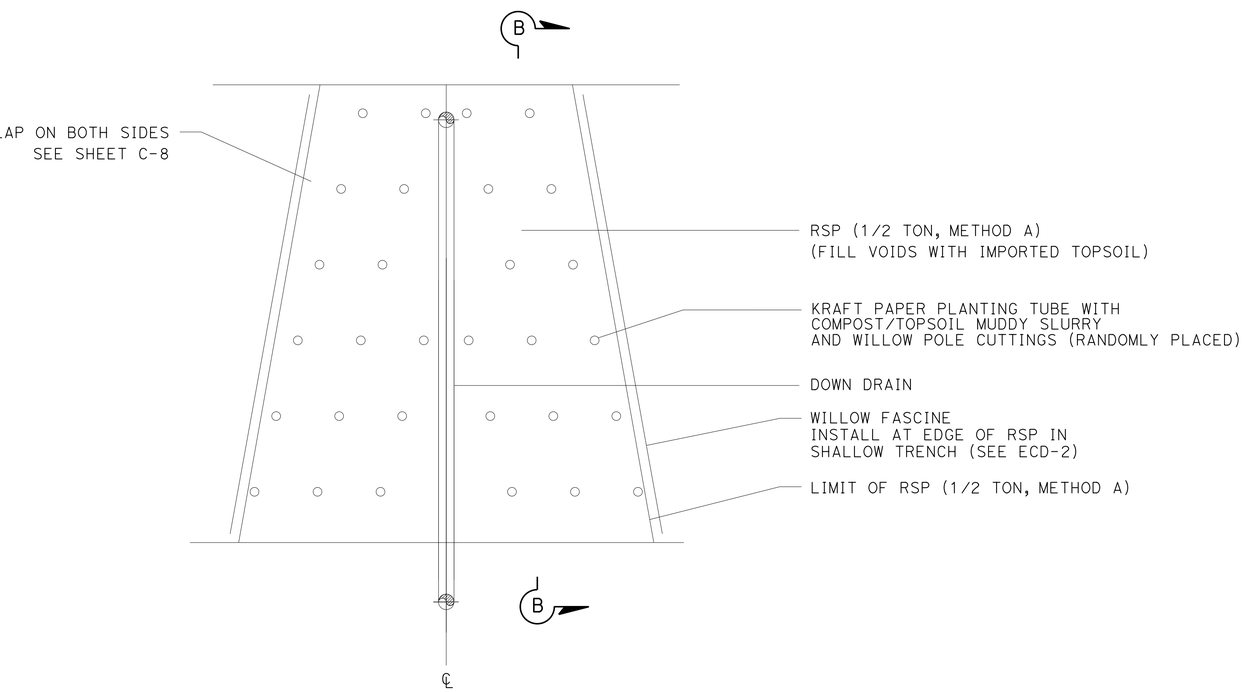

ELEVATION

WILLOW POLE CUTTINGS AND WILLOW FASCINES INSTALLATION AT RSP (1/2 TON, METHOD A)

EROSION CONTROL DETAILS

NO SCALE

ECD-1

REVISED BY	DATE REVISED
TSH	4/15/16

TIMOTHY HIRAOKA
HARRY NAKAGAWARA

CALCULATED-DESIGNED BY
CHECKED BY

CONSULTANT SENIOR LANDSCAPE ARCHITECT
TIMOTHY HIRAOKA

STATE OF CALIFORNIA - DEPARTMENT OF TRANSPORTATION
Caltrans

LAST REVISION 04-15-16
DATE PLOTTED => 07-JUN-2016
TIME PLOTTED => 12:04

Dist	COUNTY	ROUTE	POST MILES TOTAL PROJECT	SHEET No.	TOTAL SHEETS
05	SCr	17	1.0/1.4	55	72

LICENSED LANDSCAPE ARCHITECT 4/15/16

5-2-16
PLANS APPROVAL DATE

LICENSED LANDSCAPE ARCHITECT
Harry Nakagawara No. 12587
Signature
06-30-16
Renewal Date
3-7-16
Date
STATE OF CALIFORNIA

THE STATE OF CALIFORNIA OR ITS OFFICERS OR AGENTS SHALL NOT BE RESPONSIBLE FOR THE ACCURACY OR COMPLETENESS OF SCANNED COPIES OF THIS PLAN SHEET.

ORSEE DESIGN ASSOCIATES
10308 PLACER LANE
SUITE 200
SACRAMENTO, CA 95827

Dept OF TRANSPORTATION
DISTRICT 5
50 HIGUERA STREET
SAN LUIS OBISPO, CA 93401

NOTES:

1. SEEPAGE GULLY LOCATIONS ARE DETERMINED BY THE ENGINEER.
2. LOCATE WILLOW FASCINES IN AREAS OF SEEPAGE OR NATURAL DRAINAGE PATH.

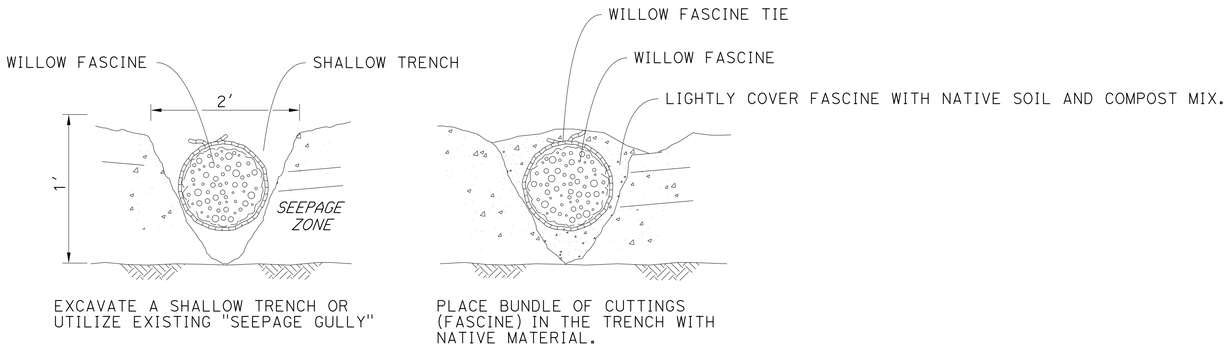

WILLOW FASCINE INSTALLATION IN TRENCH

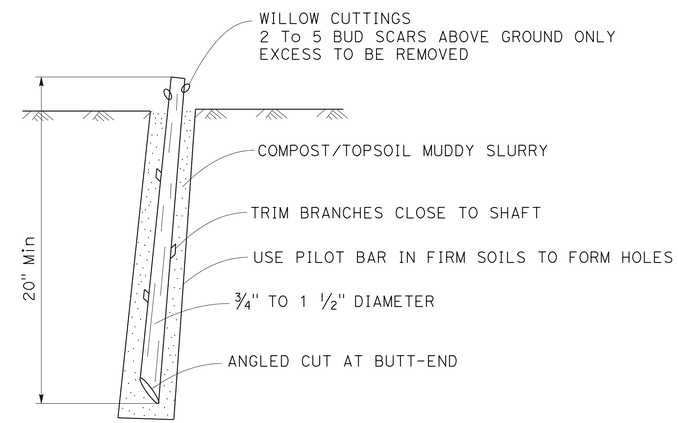

TYPICAL SECTION

WILLOW CUTTINGS

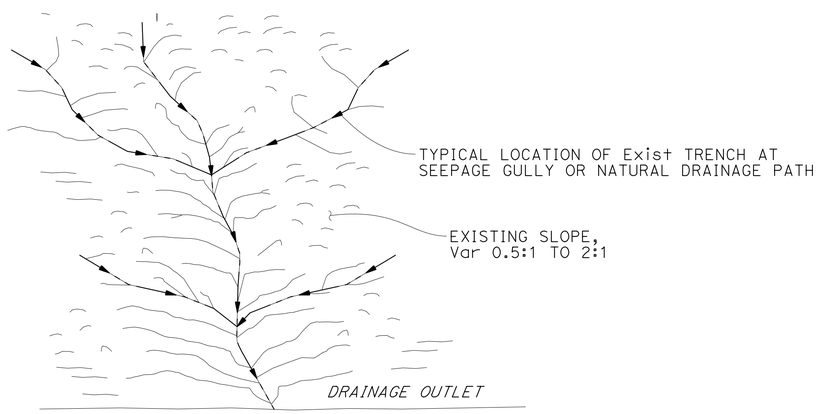

WILLOW FASCINES PLACED PERPENDICULAR TO SLOPE

EROSION CONTROL DETAILS

NO SCALE

ECD-2

REVISED BY	DATE REVISED
TSH	4/15/16

TIMOTHY HIRAOKA
HARRY NAKAGAWARA

CALCULATED-DESIGNED BY
CHECKED BY

CONSULTANT SENIOR LANDSCAPE ARCHITECT
TIMOTHY HIRAOKA

STATE OF CALIFORNIA - DEPARTMENT OF TRANSPORTATION
Caltrans

LAST REVISION 04-15-16
DATE PLOTTED => 07-JUN-2016
TIME PLOTTED => 12:04

Dist	COUNTY	ROUTE	POST MILES TOTAL PROJECT	SHEET No.	TOTAL SHEETS
05	SCr	17	1.0/1.4	56	72

LICENSED LANDSCAPE ARCHITECT 4/15/16

5-2-16
PLANS APPROVAL DATE

LICENSED LANDSCAPE ARCHITECT
Hy Nakagawara No. 1258
Signature
06-30-16
Renewal Date
3-7-16
Date
STATE OF CALIFORNIA

THE STATE OF CALIFORNIA OR ITS OFFICERS OR AGENTS SHALL NOT BE RESPONSIBLE FOR THE ACCURACY OR COMPLETENESS OF SCANNED COPIES OF THIS PLAN SHEET.

ORSEE DESIGN ASSOCIATES
10308 PLACER LANE
SUITE 200
SACRAMENTO, CA 95827

Dept OF TRANSPORTATION
DISTRICT 5
50 HIGUERA STREET
SAN LUIS OBISPO, CA 93401

VEGETATION CONTROL (TYPE 2), FIBER ROLL, AND COMPOST SOCK

SHEET	STATION	VEGETATION CONTROL (TYPE 2)	FIBER ROLL	COMPOST SOCK
		ACRE	LF	LF
EC-1	"A1" 40+00 TO 46+00	1.38	2,000	2,070
EC-2	"A1" 46+00 TO 52+00	2.12	5,266	2,394
EC-3	"A1" 52+00 TO 57+50	2.97	8,121	2,222
EC-4	"A1" 57+50 TO 58+00	0.06	161	37
	TOTAL	6.53	15,548	6,723

EROSION CONTROL

SHEET	DESCRIPTION	DUFF	IMPORTED TOPSOIL	ROLLED EROSION CONTROL PRODUCT (NETTING) TYPE A	ROLLED EROSION CONTROL PRODUCT (NETTING) TYPE B	HYDROMULCH	HYDROSEED			COMPOST		INCORPERATE MATERIALS	LOCAL TOPSOIL (N)
							TYPE 1	TYPE 2	TYPE 3	4" DEPTH	2" DEPTH		
		ACRE	CY	SQFT	SQFT	SQFT	SQFT	SQFT	SQFT	SQFT	SQFT	SQFT	CY
EC SHEETS	EROSION CONTROL (TYPE 1)				11,231	11,231	11,231				11,231		
	EROSION CONTROL (TYPE 2)				31,093			31,093					
	EROSION CONTROL (TYPE 3)	0.41	329	17,750				17,750		17,750	17,750	17,750	112
	EROSION CONTROL (TYPE 4)				52,124				52,124		52,124		
	EROSION CONTROL (TYPE 5)		60					6,377					
	SUBTOTAL	0.41	389	17,750	94,448	11,231	11,231	55,220	52,124	17,750	81,105	17,750	112
	TOTAL	0.41	389	17,750	94,448	11,231	118,575			98,855		17,750	

(N) - NOT A SEPERATE PAY ITEM, FOR INFORMATION ONLY

WILLOW FASCINES AND POLES

SHEET	DESCRIPTION	WILLOW POLE CUTTINGS	WILLOW CUTTINGS	WILLOW FASCINES
		EA	EA	LF
EC SHEETS	EROSION CONTROL (TYPE 1)			
	EROSION CONTROL (TYPE 2)			
	EROSION CONTROL (TYPE 3)			
	EROSION CONTROL (TYPE 4)			
	EROSION CONTROL (TYPE 5)	1,034		213
	DETERMINED BY ENGINEER		80	278
	TOTAL	1,034	80	491

EROSION CONTROL QUANTITIES
ECQ-1

REVISED BY: TSH
DATE REVISED: 4/15/16
TIMOTHY HIRAOKA
HARRY NAKAGAWARA
CALCULATED-DESIGNED BY
CHECKED BY
CONSULTANT SENIOR LANDSCAPE ARCHITECT
TIMOTHY HIRAOKA
STATE OF CALIFORNIA - DEPARTMENT OF TRANSPORTATION
Caltrans

LAST REVISION 04-15-16
DATE PLOTTED => 07-JUN-2016
TIME PLOTTED => 12:04

M

Maint	MAINTENANCE
Max	MAXIMUM
MB	METAL BEAM
MBB	METAL BEAM BARRIER
MBGR	METAL BEAM GUARD RAILING
Med	MEDIAN
MGS	MIDWEST GUARDRAIL SYSTEM
MH	MANHOLE
Min	MINIMUM
Misc	MISCELLANEOUS
Misc I & S	MISCELLANEOUS IRON AND STEEL
Mkr	MARKER
Mod	MODIFIED,
	MODIFY
Mon	MONUMENT
MP	METAL PLATE
MPGR	METAL PLATE GUARD RAILING
MR	MOVEMENT RATING
MSE	MECHANICALLY STABILIZED EMBANKMENT
Mt	MOUNTAIN, MOUNT
Mtl	MATERIAL
MVP	MAINTENANCE VEHICLE PULLOUT

N

N	NORTH
NB	NORTHBOUND
No.	NUMBER (MUST HAVE PERIOD)
Nos.	NUMBERS (MUST HAVE PERIOD)
NPS	NOMINAL PIPE SIZE
NS	NEAR SIDE
NSP	NEW STANDARD PLAN
NTS	NOT TO SCALE

O

Oblr	OBLITERATE
OC	OVERCROSSING
OD	OUTSIDE DIAMETER
OF	OUTSIDE FACE
OG	ORIGINAL GROUND
OGAC	OPEN GRADED ASPHALT CONCRETE
OGFC	OPEN GRADED FRICTION COURSE
OH	OVERHEAD
OHWM	ORDINARY HIGH WATER MARK
O-O	OUT TO OUT
Opp	OPPOSITE
OSD	OVERSIDE DRAIN

P

P	PAGE
PAP	PERFORATED ALUMINUM PIPE
PB	PULL BOX
PC	POINT OF CURVATURE,
	PRECAST
PCC	POINT OF COMPOUND CURVE,
	PORTLAND CEMENT CONCRETE
PCMS	PORTABLE CHANGEABLE MESSAGE SIGN
PCP	PERFORATED CONCRETE PIPE,
	PRESTRESSED CONCRETE PIPE
PCVC	POINT OF COMPOUND VERTICAL CURVE
PEC	PERMIT TO ENTER AND CONSTRUCT
Ped	PEDESTRIAN
Ped OC	PEDESTRIAN OVERCROSSING
Ped UC	PEDESTRIAN UNDERCROSSING
Perm Mtl	PERMEABLE MATERIAL

P continued

PG	PROFILE GRADE
PI	POINT OF INTERSECTION
PJP	PARTIAL JOINT PENETRATION
Pkwy	PARKWAY
₱,PL	PLATE
P/L	PROPERTY LINE
PM	POST MILE,
	TIME FROM NOON TO MIDNIGHT
PN	PAVING NOTCH
POC	POINT OF HORIZONTAL CURVE
POT	POINT OF TANGENT
POVC	POINT OF VERTICAL CURVE
PP	PIPE PILE,
	PLASTIC PIPE,
	POWER POLE
PPL	PREFORMED PERMEABLE LINER
PPP	PERFORATED PLASTIC PIPE
PRC	POINT OF REVERSE CURVE
PRF	PAVEMENT REINFORCING FABRIC
PRVC	POINT OF REVERSE VERTICAL CURVE
PS&E	PLANS, SPECIFICATIONS AND ESTIMATES
PS, P/S	PRESTRESSED
PSP	PERFORATED STEEL PIPE
PT	POINT OF TANGENCY
PVC	POLYVINYL CHLORIDE
Pvmt	PAVEMENT

Q

Qty	QUANTITY

R

R	RADIUS
R & D	REMOVE AND DISPOSE
R & S	REMOVE AND SALVAGE
R/C	RATE OF CHANGE
RCA	REINFORCED CONCRETE ARCH
RCB	REINFORCED CONCRETE BOX
RCP	REINFORCED CONCRETE PIPE
RCPA	REINFORCED CONCRETE PIPE ARCH
Rd	ROAD
Reinf	REINFORCED,
	REINFORCEMENT,
	REINFORCING
Rel	RELOCATE
Repl	REPLACEMENT
Ret	RETAINING
Rev	REVISED, REVISION
Rdwy	ROADWAY
RHMA	RUBBERIZED HOT MIX ASPHALT
Riv	RIVER
RM	ROAD-MIXED
RP	RADIUS POINT,
	REFERENCE POINT
RR	RAILROAD
RSP	ROCK SLOPE PROTECTION,
	REVISED STANDARD PLAN
Rt	RIGHT
Rte	ROUTE
RW	REDWOOD,
	RETAINING WALL
R/W	RIGHT OF WAY
Rwy	RAILWAY

S

S	SOUTH,
	SUPPLEMENT
SAE	STRUCTURE APPROACH EMBANKMENT
Salv	SALVAGE
SAPP	STRUCTURAL ALUMINUM PLATE PIPE
SB	SOUTHBOUND
SC	SAND CUSHION
SCSP	SLOTTED CORRUGATED STEEL PIPE
SD	STORM DRAIN
Sec	SECOND,
	SECTION
Sep	SEPARATION
SG	SUBGRADE
Shld	SHOULDER
Sht	SHEET
Sim	SIMILAR
₤	STATION LINE
SM	SELECTED MATERIAL
Spec	SPECIAL,
	SPECIFICATIONS
SPP	SLOTTED PLASTIC PIPE
SS	SLOPE STAKE
SSBM	STRAP AND SADDLE BRACKET METHOD
SSD	STRUCTURAL SECTION DRAIN
SSPA	STRUCTURAL STEEL PLATE ARCH
SSPP	STRUCTURAL STEEL PLATE PIPE
SSPPA	STRUCTURAL STEEL PLATE PIPE ARCH
SSRP	STEEL SPIRAL RIB PIPE
St	STREET
Sta	STATION
STBB	SINGLE THRIE BEAM BARRIER
Std	STANDARD
Str	STRUCTURE
Surf	SURFACING
SW	SIDEWALK,
	SOUND WALL
Swr	SEWER
Sym	SYMMETRICAL
S4S	SURFACE 4 SIDES

T

T	SEMI-TANGENT
Tan	TANGENT
TBB	THRIE BEAM BARRIER
Tbr	TIMBER
TC	TOP OF CURB
TCB	TRAFFIC CONTROL BOX
TCE	TEMPORARY CONSTRUCTION EASEMENT
Tel	TELEPHONE
Temp	TEMPORARY
TG	TOP OF GRADE
Tot	TOTAL
TP	TELEPHONE POLE
TPB	TREATED PERMEABLE BASE
TPM	TREATED PERMEABLE MATERIAL
Trans	TRANSITION

T continued

TS	TRANSVERSE,
	TRAFFIC SIGNAL,
	TUBULAR STEEL
Typ	TYPICAL

U

UC	UNDERCROSSING
UD	UNDERDRAIN
UG	UNDERGROUND
UON	UNLESS OTHERWISE NOTED
UP	UNDERPASS

V

V	VALVE,
	DESIGN SPEED
Var	VARIABLE,
	VARIES
VC	VERTICAL CURVE
VCP	VITRIFIED CLAY PIPE
Vert	VERTICAL
Via	VIADUCT
Vol	VOLUME

W

W	WEST,
	WIDTH
WB	WESTBOUND
WH	WEEP HOLE
WM	WIRE MESH
WS	WATER SURFACE
WSP	WELDED STEEL PIPE
Wt	WEIGHT
WV	WATER VALVE
WW	WINGWALL
WWLOL	WINGWALL LAYOUT LINE

X

X Sec	CROSS SECTION
Xing	CROSSING

Y

Yr	YEAR
Yrs	YEARS

Dist	COUNTY	ROUTE	POST MILES TOTAL PROJECT	SHEET No.	TOTAL SHEETS
05	SCr	17	1.0/1.4	57	72

Grace M. Tsushima
REGISTERED CIVIL ENGINEER

July 19, 2013
PLANS APPROVAL DATE

REGISTERED PROFESSIONAL ENGINEER
Grace M. Tsushima
No. C49814
Exp. 9-30-14
CIVIL
STATE OF CALIFORNIA

THE STATE OF CALIFORNIA OR ITS OFFICERS OR AGENTS SHALL NOT BE RESPONSIBLE FOR THE ACCURACY OR COMPLETENESS OF SCANNED COPIES OF THIS PLAN SHEET.

TO ACCOMPANY PLANS DATED 5-2-16

UNIT OF MEASUREMENT SYMBOLS:

Some of the symbols used in the project plan quantity tables and in the Bid Item List are:

TABLE A

SYMBOL USED	DEFINITIONS
ACRE	ACRE
CF	CUBIC FOOT
CY	CUBIC YARD
EA	EACH
GAL	GALLON
LB	POUND
LF	LINEAR FOOT
SQFT	SQUARE FOOT
SQYD	SQUARE YARD
STA	100 FEET
TAB	TABLET
TON	2,000 POUNDS

Some of the symbols used in the plans other than in the project plan quantity tables are:

TABLE B

SYMBOL USED	DEFINITIONS
ksi	KIPS PER SQUARE INCH
ksf	KIPS PER SQUARE FOOT
psi	POUNDS PER SQUARE INCH
psf	POUNDS PER SQUARE FOOT
lb/ft^3, pcf	POUNDS PER CUBIC FOOT
tsf	TONS PER SQUARE FOOT
mph, MPH *	MILES PER HOUR
ø	NOMINAL DIAMETER
oz	OUNCE
lb	POUND
kip	1,000 POUNDS
cal	CALORIE
ft	FOOT OR FEET
gal	GALLON

* For use on a sign panel only

STATE OF CALIFORNIA
DEPARTMENT OF TRANSPORTATION

ABBREVIATIONS (SHEET 2 OF 2)

NO SCALE

RSP A10B DATED JULY 19, 2013 SUPERSEDES STANDARD PLAN A10B DATED MAY 20, 2011 - PAGE 2 OF THE STANDARD PLANS BOOK DATED 2010.

REVISED STANDARD PLAN RSP A10B

2010 REVISED STANDARD PLAN RSP A10B

6-7-13

Dist	COUNTY	ROUTE	POST MILES TOTAL PROJECT	SHEET No.	TOTAL SHEETS
05	SCr	17	1.0/1.4	58	72

REGISTERED CIVIL ENGINEER

July 19, 2013
PLANS APPROVAL DATE

REGISTERED PROFESSIONAL ENGINEER Roberta L. McLaughlin No. C40375 Exp. 3-31-15 CIVIL STATE OF CALIFORNIA

THE STATE OF CALIFORNIA OR ITS OFFICERS OR AGENTS SHALL NOT BE RESPONSIBLE FOR THE ACCURACY OR COMPLETENESS OF SCANNED COPIES OF THIS PLAN SHEET.

TO ACCOMPANY PLANS DATED 5-2-16

EXIT RAMP NEUTRAL AREA (GORE) TREATMENT

DETAIL 36

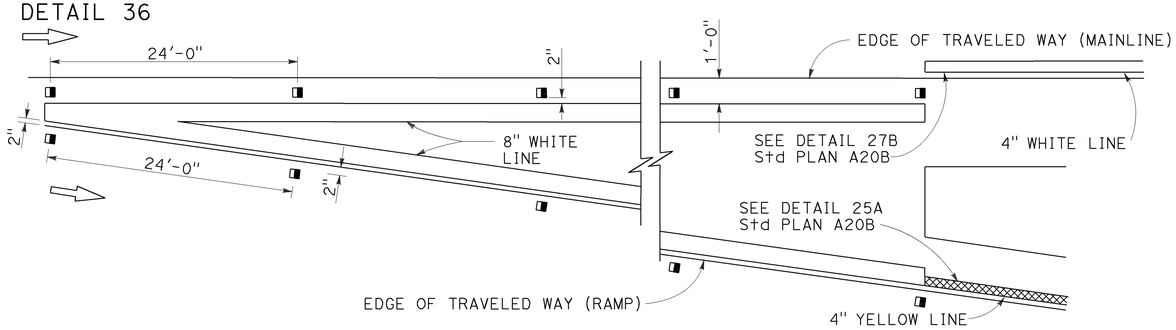

ENTRANCE RAMP NEUTRAL AREA (MERGE) TREATMENT

DETAIL 36A

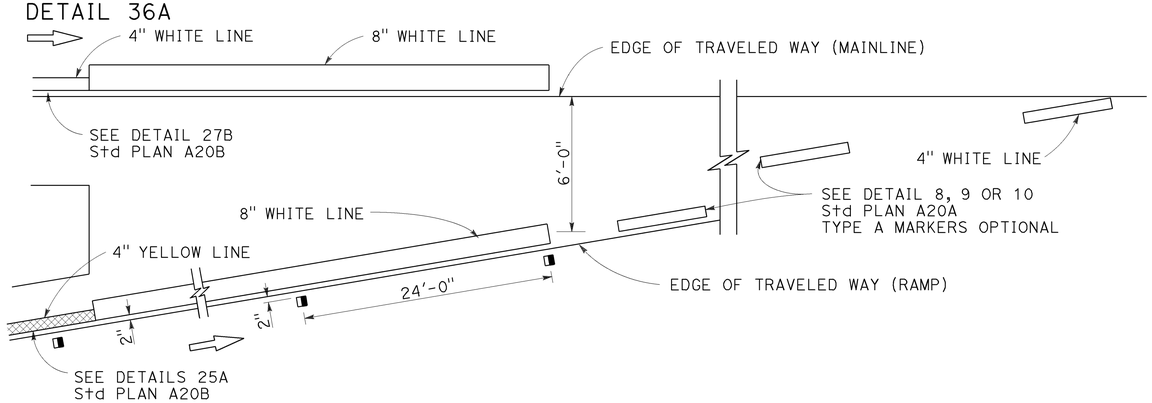

ENTRANCE RAMP NEUTRAL AREA (ACCELERATION LANE) TREATMENT

DETAIL 36B

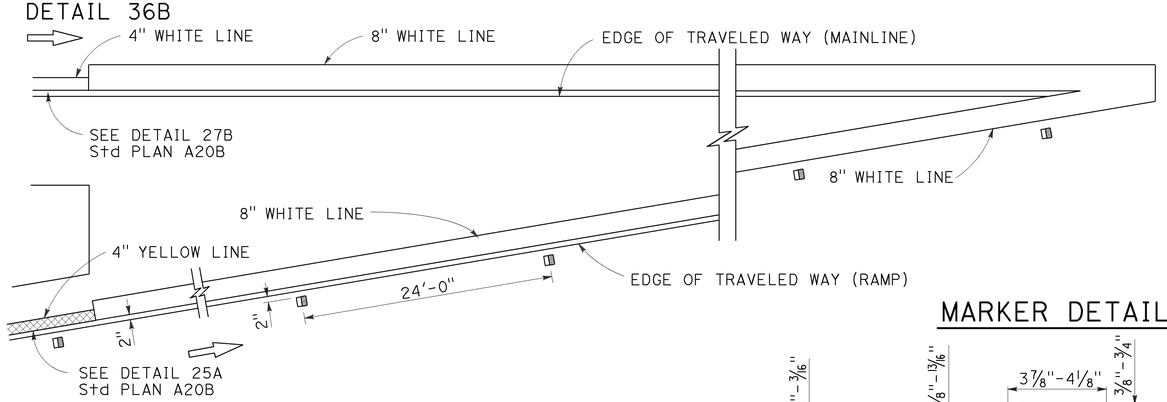

LANE DROP AT EXIT RAMPS

DETAIL 37

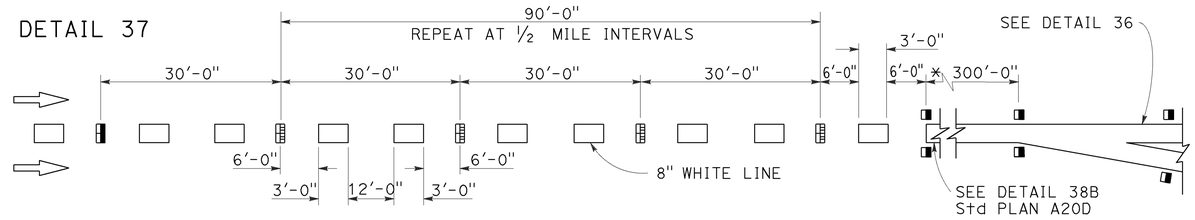

DETAIL 37A

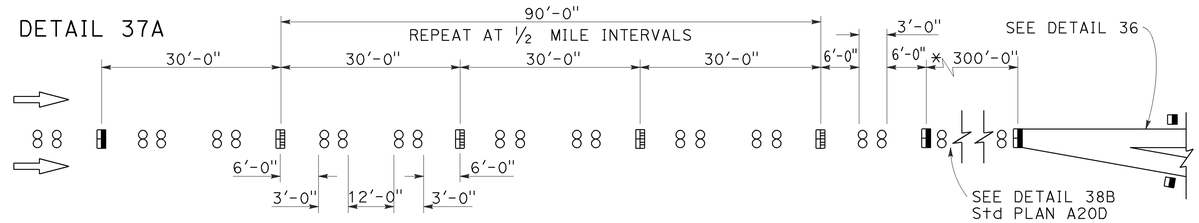

* The solid channelizing line shown may be omitted on short auxiliary lanes where weaving length is critical.

LANE DROP AT INTERSECTIONS

DETAIL 37B

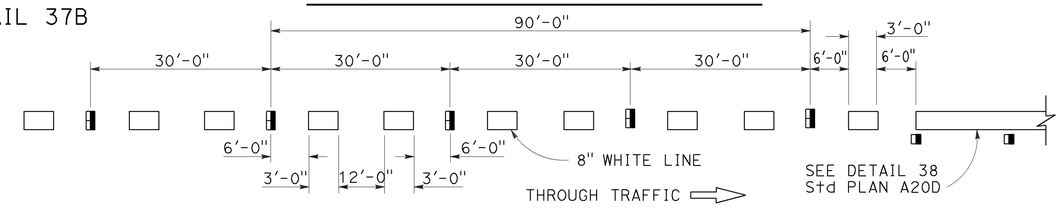

DETAIL 37C

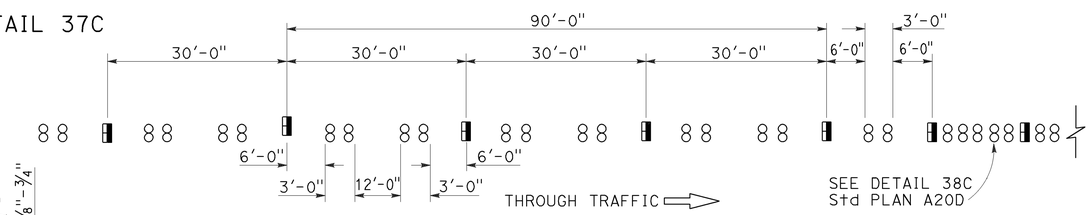

MARKER DETAILS

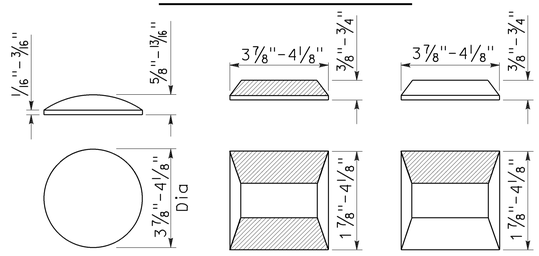

RETROREFLECTIVE FACE

LEGEND:

MARKERS

- ○ TYPE A WHITE NON-REFLECTIVE
- ⊟ TYPE C RED-CLEAR RETROREFLECTIVE
- ◨ TYPE G ONE-WAY CLEAR RETROREFLECTIVE

STATE OF CALIFORNIA
DEPARTMENT OF TRANSPORTATION

PAVEMENT MARKERS AND TRAFFIC LINE TYPICAL DETAILS

NO SCALE

RSP A20C DATED JULY 19, 2013 SUPERSEDES STANDARD PLAN A20C DATED MAY 20, 2011 - PAGE 11 OF THE STANDARD PLANS BOOK DATED 2010.

REVISED STANDARD PLAN RSP A20C

2010 REVISED STANDARD PLAN RSP A20C

4-29-13

Dist	COUNTY	ROUTE	POST MILES TOTAL PROJECT	SHEET No.	TOTAL SHEETS
05	SCr	17	1.0/1.4	59	72

REGISTERED CIVIL ENGINEER

October 30, 2015
PLANS APPROVAL DATE

REGISTERED PROFESSIONAL ENGINEER
Carl M. Duan
No. C59976
Exp. 6-30-16
CIVIL
STATE OF CALIFORNIA

THE STATE OF CALIFORNIA OR ITS OFFICERS OR AGENTS SHALL NOT BE RESPONSIBLE FOR THE ACCURACY OR COMPLETENESS OF SCANNED COPIES OF THIS PLAN SHEET.

TO ACCOMPANY PLANS DATED 5-2-16

2010 REVISED STANDARD PLAN RSP A62F

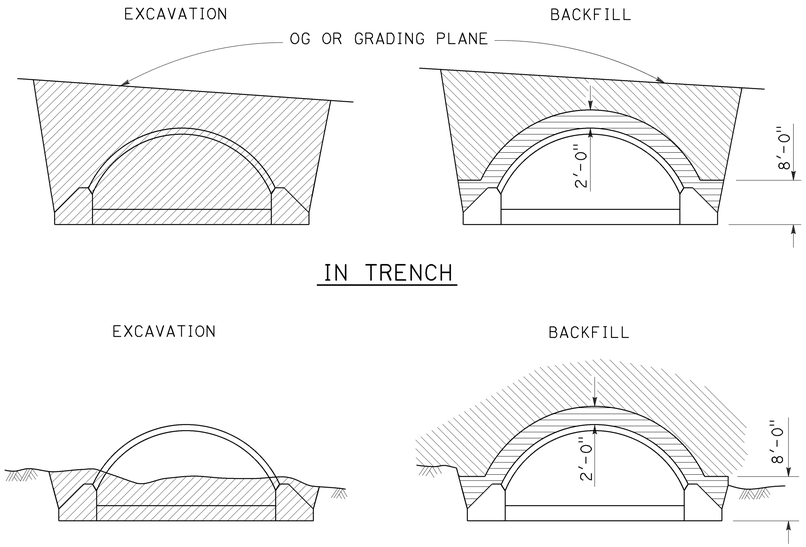

STRUCTURAL STEEL PLATE ARCHES

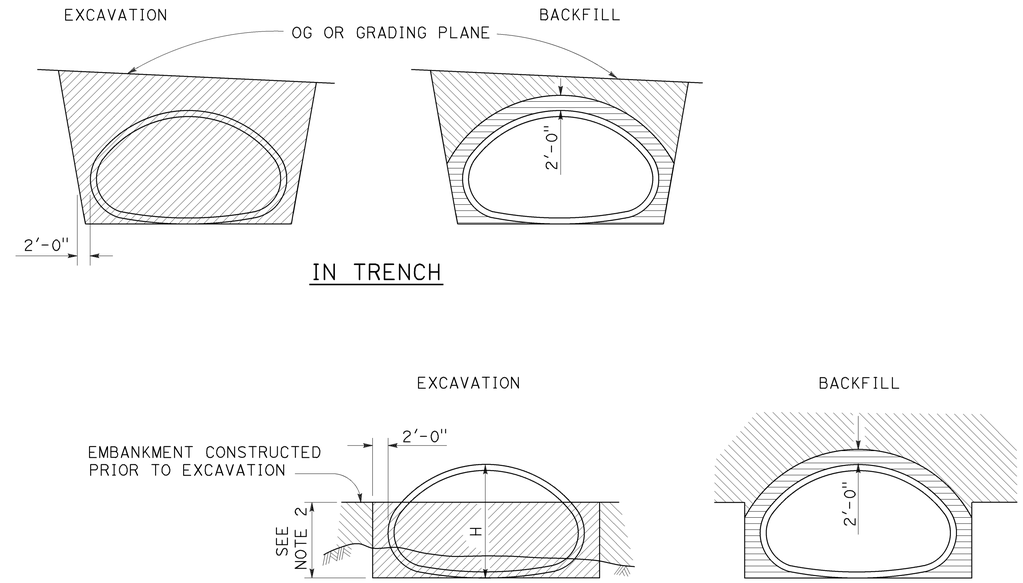

STRUCTURAL STEEL PLATE PIPE ARCHES AND VEHICULAR UNDERCROSSING

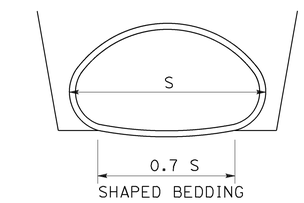

SHAPED BEDDING
S = Larger than 84"

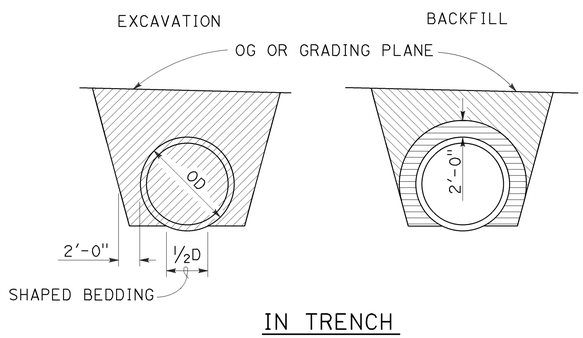

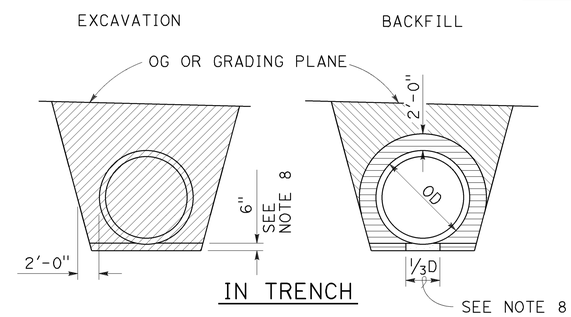

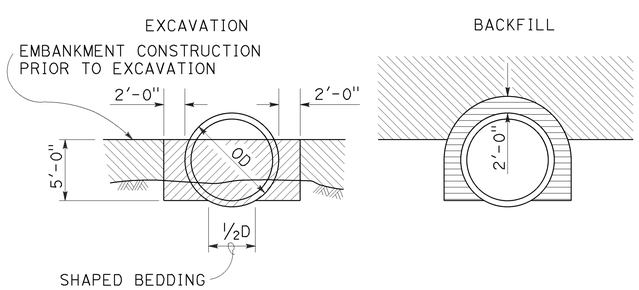

PIPES
Larger than 84"

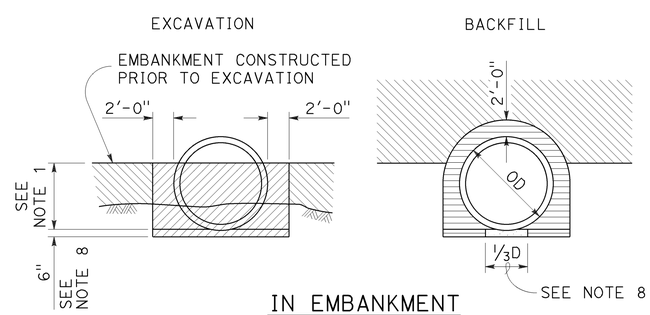

METAL AND PLASTIC PIPES AND CORRUGATED METAL PIPE ARCHES
84" or Smaller

NOTES:

1. PIPES: 30" minimum for diameters up to and including 42" then ⅔ diameter but no more than 60" required. CORRUGATED METAL PIPE ARCHES: 30" maximum.
2. ⅔ H up to 60" maximum.
3. Slope or shore excavation sides as necessary.
4. Backfill shall be placed full width of excavation except as noted.
5. Diagrams do not apply to overside drains.
6. Dimensions shown are minimum.
7. Construction strutting of structural steel plate pipe, arches and vehicular undercrossing to be used when shown on the project plans. When shown, see Standard Plan D88A for strutting requirements.
8. Excavation below pipe and 80% relative compaction requirements for plastic pipes only.
9. D is the inside diameter (ID) of the pipe.

LEGEND

- STRUCTURE EXCAVATION (CULVERT)
- ROADWAY EMBANKMENT
- STRUCTURE BACKFILL (CULVERT) 95% RELATIVE COMPACTION
- STRUCTURE BACKFILL (CULVERT) 80% RELATIVE COMPACTION

STATE OF CALIFORNIA
DEPARTMENT OF TRANSPORTATION

EXCAVATION AND BACKFILL METAL AND PLASTIC CULVERTS

NO SCALE

RSP A62F DATED OCTOBER 30, 2015 SUPERSEDES STANDARD PLAN A62F DATED MAY 20, 2011 - PAGE 26 OF THE STANDARD PLANS BOOK DATED 2010.

REVISED STANDARD PLAN RSP A62F

10-13-15

Dist	COUNTY	ROUTE	POST MILES TOTAL PROJECT	SHEET No.	TOTAL SHEETS
05	SCr	17	1.0/1.4	60	72

REGISTERED CIVIL ENGINEER

January 15, 2016
PLANS APPROVAL DATE

REGISTERED PROFESSIONAL ENGINEER
Michael Janzen
No. 44788
Exp. 3-31-16
CIVIL
STATE OF CALIFORNIA

THE STATE OF CALIFORNIA OR ITS OFFICERS OR AGENTS SHALL NOT BE RESPONSIBLE FOR THE ACCURACY OR COMPLETENESS OF SCANNED COPIES OF THIS PLAN SHEET.

TO ACCOMPANY PLANS DATED 5-2-16

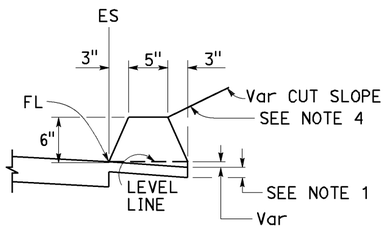

TYPE A
See Notes 3 and 5

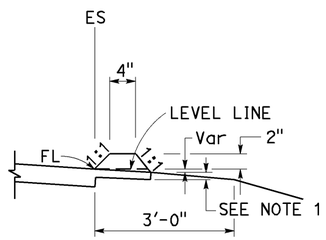

TYPE C

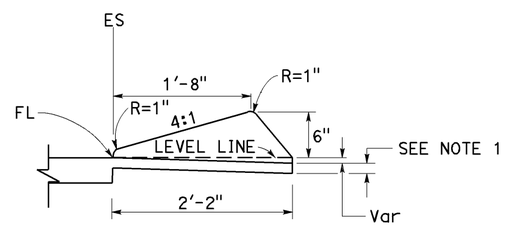

TYPE D

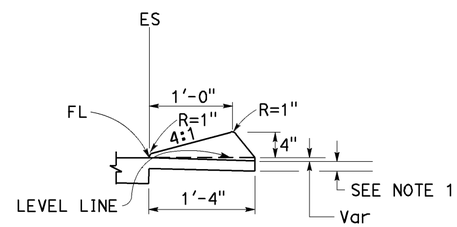

TYPE E

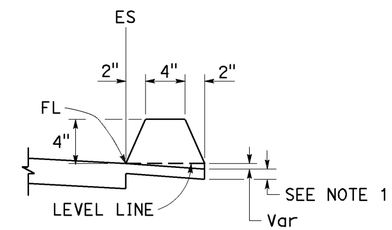

TYPE F
See Note 5

DIKES

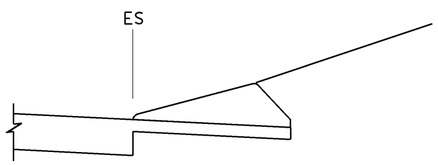

CASE C-1
Cut Slope

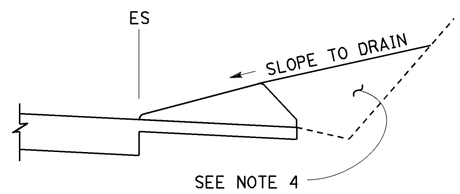

CASE C-2
Cut Slope

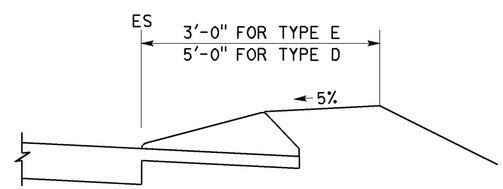

CASE F

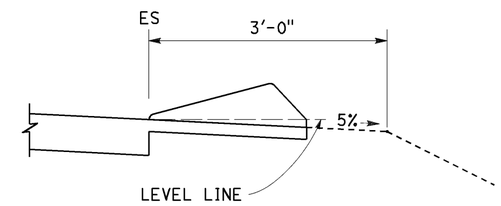

CASE R
See Note 2

TYPE D AND E BACKFILL DETAILS

NOTES:

1. For HMA shoulders only, extend top layer of HMA placed on the shoulder under dike with no joint at the ES. For projects with OGFC shoulders, do not extend OGFC under dike. See project plans for modified dike detail.
2. Case R applies to retrofit only projects where restrictive conditions do not provide enough width for Case F backfill.
3. Type A dike only to be used where restrictive slope conditions do not provide enough width to use Type D or Type E dike.
4. Fill and compact with excavated material to top of dike.
5. Use Type A or F dike, where dike is required with guardrail installations. See Revised Standard Plan RSP A77N4 for dike positioning details. See Revised Standard Plan RSP A77N3 for hinge point offsets with guardrail.

DIKE QUANTITIES

TYPE	CUBIC YARDS PER LINEAR FOOT
A	0.0135
C	0.0038
D	0.0293
E	0.0130
F	0.0066

Quantities based on 5% cross slope.

STATE OF CALIFORNIA
DEPARTMENT OF TRANSPORTATION

HOT MIX ASPHALT DIKES

NO SCALE

RSP A87B DATED JANUARY 15, 2016 SUPERSEDES RSP A87B DATED JULY 19, 2013 AND STANDARD PLAN A87B DATED MAY 20, 2011 - PAGE 120 OF THE STANDARD PLANS BOOK DATED 2010.

REVISED STANDARD PLAN RSP A87B

2010 REVISED STANDARD PLAN RSP A87B

11-17-15

Dist	COUNTY	ROUTE	POST MILES TOTAL PROJECT	SHEET No.	TOTAL SHEETS
05	SCr	17	1.0/1.4	61	72

Srikanth Balasubramanian
REGISTERED CIVIL ENGINEER

October 30, 2015
PLANS APPROVAL DATE

REGISTERED PROFESSIONAL ENGINEER
Srikanth N. Balasubramanian
No. C56426
Exp. 6-30-17
CIVIL
STATE OF CALIFORNIA

THE STATE OF CALIFORNIA OR ITS OFFICERS OR AGENTS SHALL NOT BE RESPONSIBLE FOR THE ACCURACY OR COMPLETENESS OF SCANNED COPIES OF THIS PLAN SHEET.

TO ACCOMPANY PLANS DATED 5-2-16

LEGEND:

- HMA PAVEMENT
- HMA OR CONCRETE PAVEMENT
- CONCRETE PAVEMENT

ABBREVIATIONS:

TE TAPERED EDGE

TT TOTAL THICKNESS OF TE

HW HINGE WIDTH, DISTANCE FROM ES OR EP TO HP

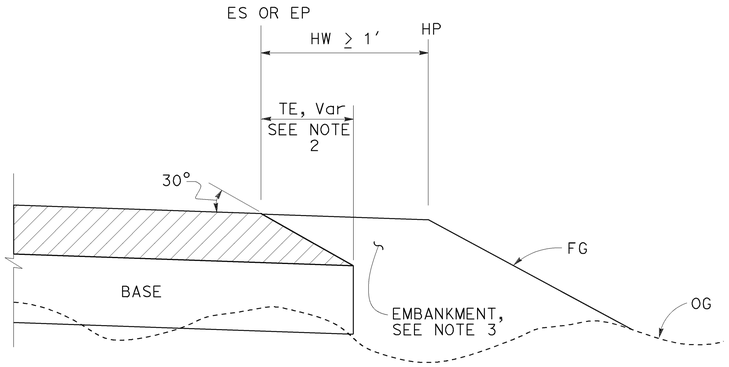

CASE K
Tapered Edge - Fill Section, HW ≥ 1′

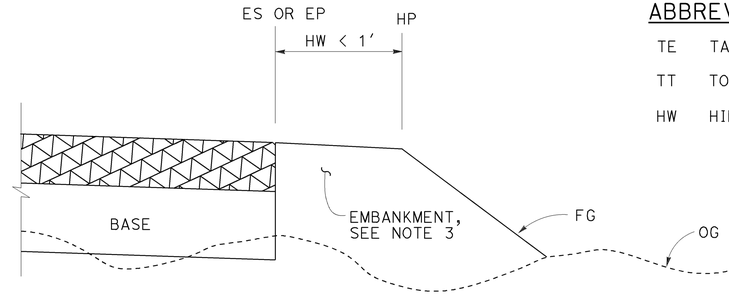

CASE L
Vertical Edge - Fill Section, HW < 1′

FILL SECTION

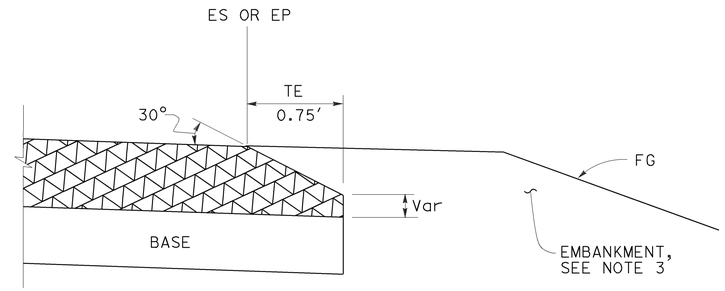

DETAIL "B"
For HMA pavement thickness more than 0.43′ or concrete pavement

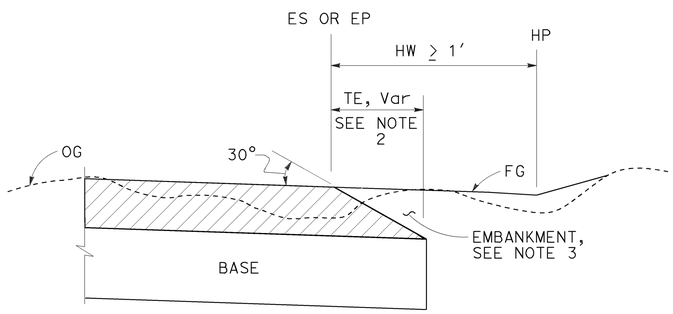

CASE M
Tapered Edge - Cut Section, HW ≥ 1′

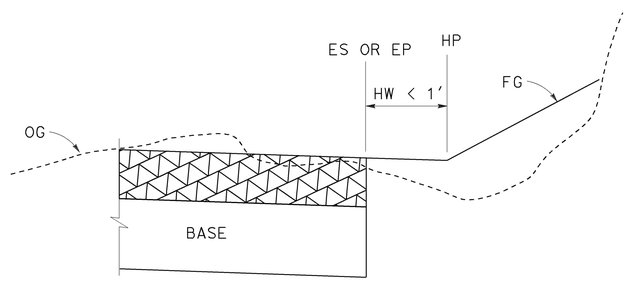

CASE N
Vertical Edge - Cut Section, HW < 1′

CUT SECTION

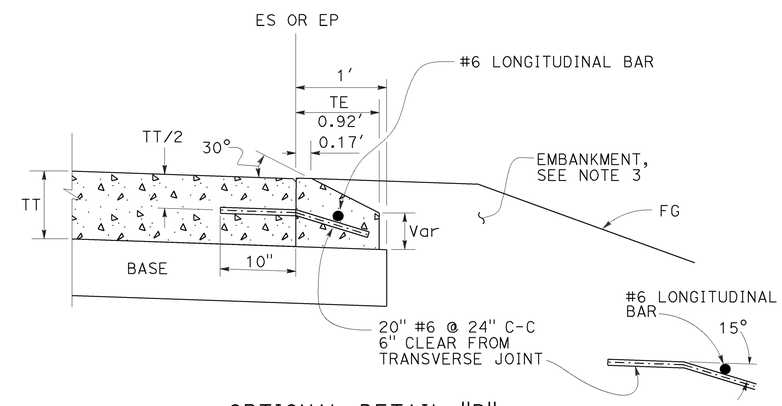

OPTIONAL DETAIL "B"
For concrete pavement
See Note 4

NOTES:

1. For limits of tapered edge and vertical edge treatments, see Revised Standard Plan RSP P74
2. Details shown for HMA pavement thickness less than 0.43′. See Detail "B" for HMA pavement thickness more than 0.43′ or concrete pavement.
3. For locations and limits of embankment see project plans.
4. Tapered edge transverse joint must match pavement transverse joint. End of #6 longitudinal bar must be 2" ±½" clear from transverse joint.
5. Tapered edge is not needed in the area of MGS, barrier, right turn lane and acceleration lane. See Revised Standard Plan RSP P74.

STATE OF CALIFORNIA
DEPARTMENT OF TRANSPORTATION

PAVEMENT EDGE TREATMENTS-NEW CONSTRUCTION

NO SCALE

RSP P76 DATED OCTOBER 30, 2015 SUPERSEDES RSP P76 DATED NOVEMBER 15, 2013 AND RSP P76 DATED JANUARY 20, 2012 THAT SUPPLEMENTS THE STANDARD PLANS BOOK DATED 2010.

REVISED STANDARD PLAN RSP P76

2010 REVISED STANDARD PLAN RSP P76

7-2-15

TO ACCOMPANY PLANS DATED 5-2-16

Dist	COUNTY	ROUTE	POST MILES TOTAL PROJECT	SHEET No.	TOTAL SHEETS
05	SCr	17	1.0/1.4	62	72

REGISTERED CIVIL ENGINEER

October 19, 2012
PLANS APPROVAL DATE

REGISTERED PROFESSIONAL ENGINEER Glenn DeCou No. C34547 Exp. 9-30-13 CIVIL STATE OF CALIFORNIA

THE STATE OF CALIFORNIA OR ITS OFFICERS OR AGENTS SHALL NOT BE RESPONSIBLE FOR THE ACCURACY OR COMPLETENESS OF SCANNED COPIES OF THIS PLAN SHEET.

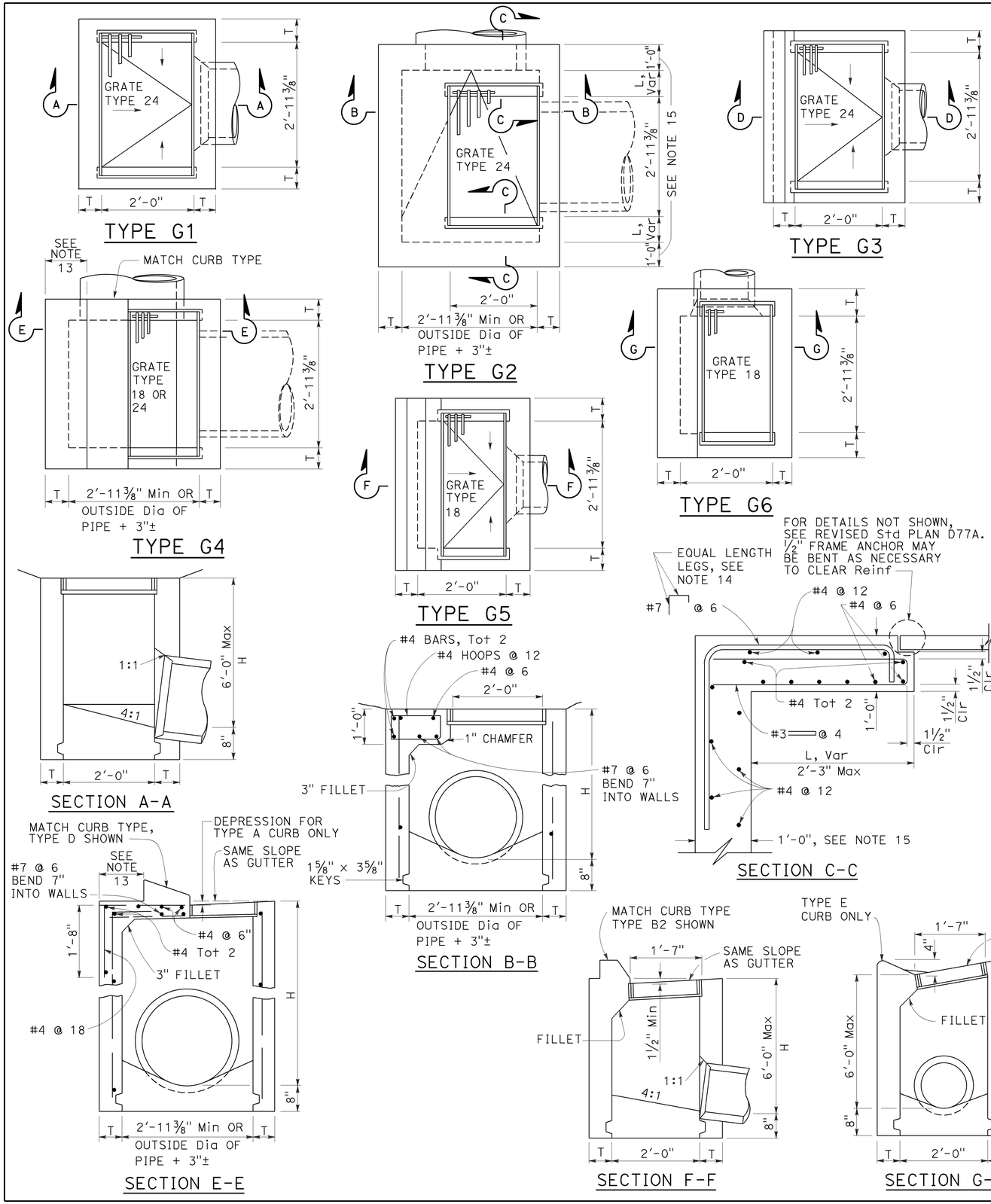

NOTES:

1. "H" is the difference in elevation between the outlet pipe flow line and the normal gutter grade line undepressed.
2. For "T" wall thickness, see Table A below.
3. Wall reinforcing not required when "H" is 8'-0" or less and the unsupported width or length is 7'-0" or less. Walls exceeding these limits shall be reinforced with #4 bars @ 1'-6" ± centers placed 1½" clear to inside of box unless otherwise shown.
4. Inlet bottom reinforcing not required. See Standard Plan D74C for alternative reinforced bottom and alternative half round bottom.
5. Steps-None required where "H" is less than 2'-6". Where "H" is 2'-6" or more, install steps with lowest rung 1'-0" above the floor and highest rung not more than 6" below top of inlet. The distance between steps shall not exceed 1'-0" and shall be uniform throughout the length of the wall. Place steps in the wall without an opening. Steps inserts may be substituted for the bar steps. Step inserts shall comply with State Industrial Safety requirements. See Standard Plan D74C for step details.
6. Details shown apply to both metal and concrete pipe.
7. Pipe(s) can be placed in any wall.
8. Curb section shall match adjacent curb.
9. Basin floors shall have wood trowel finish and a minimum slope of 12:3 from all directions toward outlet pipe.
10. Set inlet so that grate bars are parallel to direction of principal surface flow.
11. See Revised Standard Plans D77A and D77B for grate and frame details and weights of miscellaneous iron and steel.
12. See Standard Plan D78A for gutter depression details.
13. This dimenison will vary with different grates, curbs types, box width and wall thickness.
14. Bar may be rotated as necessary to clear opening. Where "L" is 6" or less, bar may be omitted.
15. Where "L" is 6" or less, wall thickness shall be as shown in Table A.
16. Cast-in-place inlets to be formed around all pipes/stubs intersecting the inlet, and concrete poured in one continuous operation. Precast inlets shall have mortared connections conforming to details for Type GCP Inlet shown on Standard Plan D75B. See Standard Specifications for mortar composition.

TABLE A

CONCRETE QUANTITIES				
TYPE	H=3'-0" TO 8'-0" (T=6")		H=8'-1" TO 20'-0" (T=8")	
	H=3'-0" (CY)	ADDITIONAL PCC PER FOOT (CY)	H=8'-1" (CY)	ADDITIONAL PCC PER FOOT (CY)
G-1	0.95	0.220	See Note A	SEE NOTE A
G-2*	1.31	0.255	3.50	0.357
G-3	1.03	0.220	See Note A	SEE NOTE A
G-4* (TYPE 24)	1.27	0.255	3.48	0.357
G-4* (TYPE 18)	1.30	0.255	3.50	0.357
G-5	1.02	0.220	SEE NOTE A	SEE NOTE A
G-6	1.04	0.220	SEE NOTE A	SEE NOTE A

TABLE BASED ON 8" FLOOR SLAB. NO DEDUCTIONS ARE TO BE MADE TO THESE QUANTITIES BECAUSE OF PIPE OPENINGS, DIFFERENT FLOOR ALTERNATIVES OR DIFFERENT CURB TYPES. * QUANTITIES FOR TYPE G-2 AND G-4 INLETS BASED ON THE MINIMUM INTERIOR DIMENSIONS.

NOTE A:

Maximum allowable height 6'-0".

STATE OF CALIFORNIA
DEPARTMENT OF TRANSPORTATION

DRAINAGE INLETS

NO SCALE

RSP D73 DATED OCTOBER 19, 2012 SUPERSEDES STANDARD PLAN D73 DATED MAY 20, 2011 - PAGE 156 OF THE STANDARD PLANS BOOK DATED 2010.

REVISED STANDARD PLAN RSP D73

2010 REVISED STANDARD PLAN RSP D73

7-19-12

Dist	COUNTY	ROUTE	POST MILES TOTAL PROJECT	SHEET No.	TOTAL SHEETS
05	SCr	17	1.0/1.4	63	72

REGISTERED CIVIL ENGINEER

October 30, 2015
PLANS APPROVAL DATE

REGISTERED PROFESSIONAL ENGINEER Carl M. Duan No. C59976 Exp. 6-30-16 CIVIL STATE OF CALIFORNIA

THE STATE OF CALIFORNIA OR ITS OFFICERS OR AGENTS SHALL NOT BE RESPONSIBLE FOR THE ACCURACY OR COMPLETENESS OF SCANNED COPIES OF THIS PLAN SHEET.

TO ACCOMPANY PLANS DATED 5-2-16

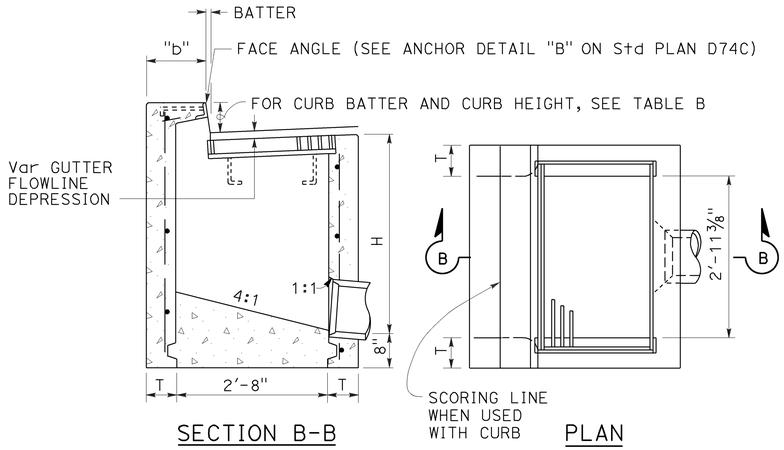

SECTION B-B PLAN

TYPE GO

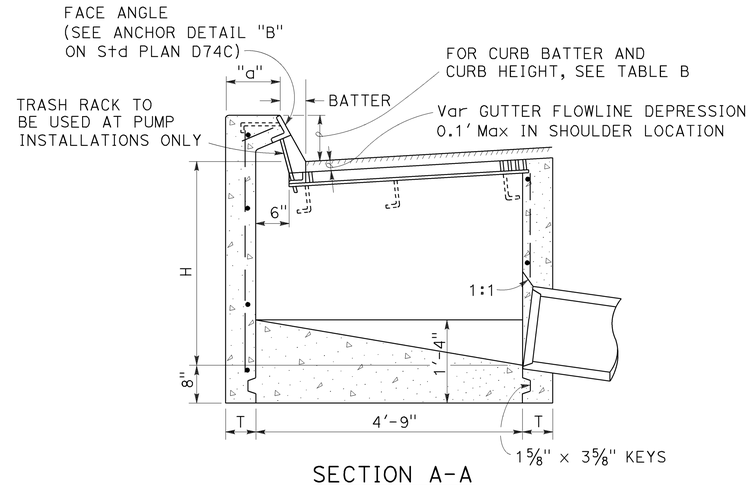

SECTION A-A

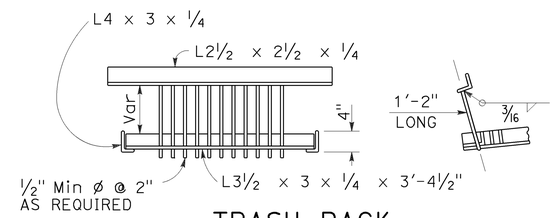

TRASH RACK

(For use with pump installation)

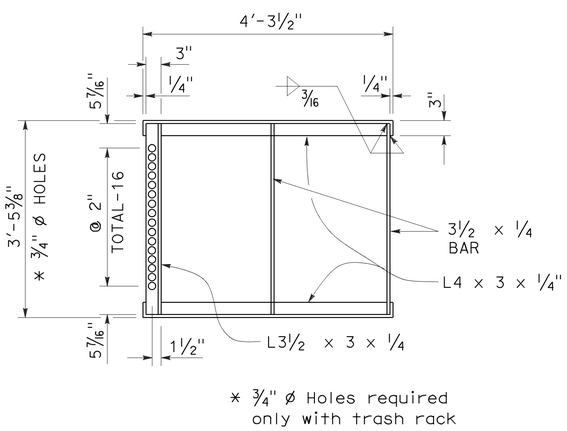

* 3/4" ø Holes required only with trash rack

GRATE FRAME FOR TYPE GDO INLET

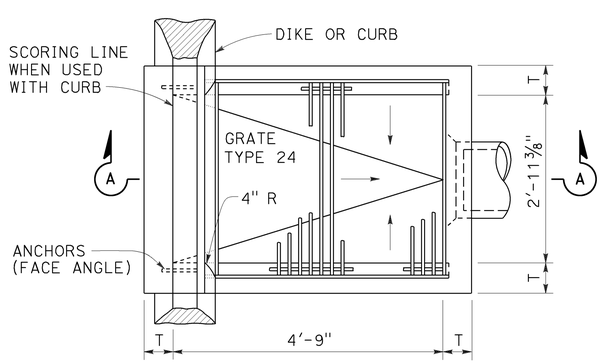

PLAN

TYPE GDO

TABLE A

CONCRETE QUANTITIES				
TYPE	H=3'-0" TO 8'-0" (T=6")		H=8'-1" TO 20'-0" (T=8")	
	H=3'-0" (CY)	ADDITIONAL PCC PER FOOT (CY)	H=8'-1" (CY)	ADDITIONAL PCC PER FOOT (CY)
GO	1.24	0.245	3.39	0.346
GDO	1.62	0.322	4.36	0.446

Table based on 8" floor slab, and curb type giving highest quantity of concrete. no deductions or adjustments are to be made to these quantities because of pipe openings, different floor alternatives or different curb type.

TABLE B

CURB TYPE	NORMAL CURB HEIGHT	CURB BATTER	"a" DIMENSION	"b" DIMENSION
A1-6	6"	1 1/2"	T+7 1/2"	T+6 1/2"
A1-8	8"	2"	T+7"	T+6"
B1-6	6"	4"	T+5"	T+4"
TYPE A DIKE	6"	3"	T+6"	T+5"

NOTES:

1. "H" is the difference in elevation between the outlet pipe flow line and the normal gutter grade line undepressed.
2. For "T" wall thickness, see Table A below.
3. Wall reinforcing not required when "H" is 8'-0" or less and the unsupported width or length is 7'-0" or less. Walls exceeding these limits shall be reinforced with #4 @ 18"± centers placed 1 1/2" clear to inside of box unless otherwise shown.
4. Inlet bottom reinforcing not required. See Standard Plan D74C for alternative reinforced bottom.
5. Steps - None required where "H" is less than 2'-6" Where "H" is 2'-6" or more, install steps with lowest rung 1'-0" above the floor and highest rung not more than 6" below top of inlet. The distance between steps shall not exceed 1'-0" and shall be uniform throughout the length of the wall. Place steps in the wall without an opening. Step inserts may be substituted for the bar steps. Step Inserts shall comply with State Industrial Safety requirements. See Standard Plan D74C for step details.
6. When shown on the project plans, place a 3/4" plain round protection bar horizontally across the length of the opening and bend back 4" into the inlet wall on each side.
7. Pipe(s) can be placed in any wall.
8. Curb section shall match adjacent curb.
9. Basin floors shall have wood trowel finish and shall slope toward the outlet pipe as shown.
10. See Revised Standard Plans RSP D77A and RSP D77B for grate and frame details and weights of miscellaneous iron and Steel.
11. See Standard Plan D78A for gutter depression details.
12. Complete joint penetration butt welds may be substituted for the fillet welds on all anchors.
13. Standard square, hexagon, round or equivalent headed anchors may be substituted for the right angle hooks on the anchors shown on this plan.
14. Cast-in-place inlets to be formed around all pipes/stubs intersecting the inlet and concrete poured in one continuous operation. Precast inlets shall have mortared pipe connections conforming to details for Type GCP inlets on Revised Standard Plan RSP D75B. See Standard Specifications for mortar composition.

STATE OF CALIFORNIA
DEPARTMENT OF TRANSPORTATION

DRAINAGE INLETS

NO SCALE

RSP D74B DATED OCTOBER 30, 2015 SUPERSEDES STANDARD PLAN D74B DATED MAY 20, 2011 - PAGE 159 OF THE STANDARD PLANS BOOK DATED 2010.

REVISED STANDARD PLAN RSP D74B

2010 REVISED STANDARD PLAN RSP D74B

10-13-15

Dist	COUNTY	ROUTE	POST MILES TOTAL PROJECT	SHEET No.	TOTAL SHEETS
05	SCr	17	1.0/1.4	64	72

Raymond Don Tsztoo
REGISTERED CIVIL ENGINEER

October 30, 2015
PLANS APPROVAL DATE

REGISTERED PROFESSIONAL ENGINEER
Raymond Don Tsztoo
No. C37332
Exp. 6-30-16
CIVIL
STATE OF CALIFORNIA

THE STATE OF CALIFORNIA OR ITS OFFICERS OR AGENTS SHALL NOT BE RESPONSIBLE FOR THE ACCURACY OR COMPLETENESS OF SCANNED COPIES OF THIS PLAN SHEET.

TO ACCOMPANY PLANS DATED 5-2-16

2010 REVISED STANDARD PLAN RSP D75B

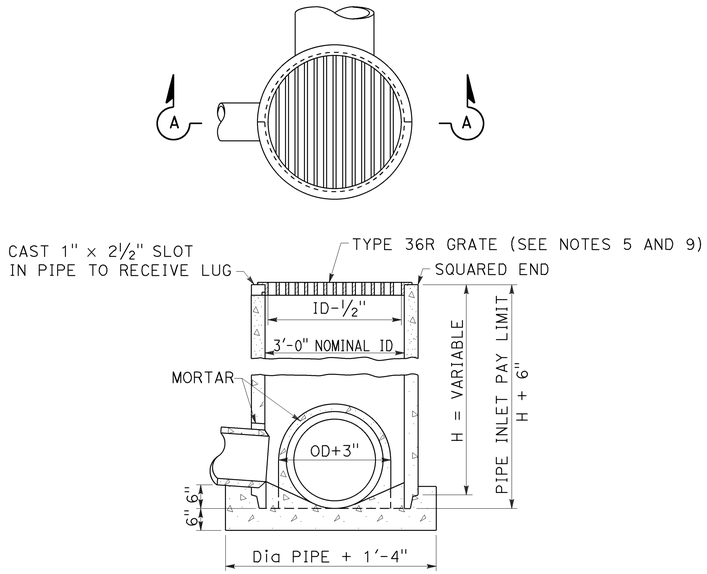

SECTION A-A
TYPE GCP
Concrete pipe inlet with grate

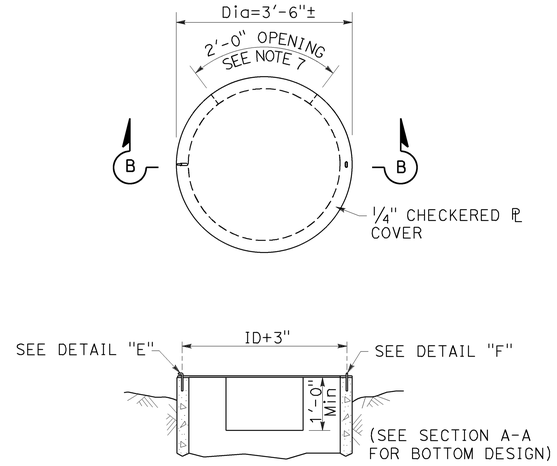

SECTION B-B
TYPE OCP or OCPI
Concrete pipe inlet with steel cover
(See Note 6)

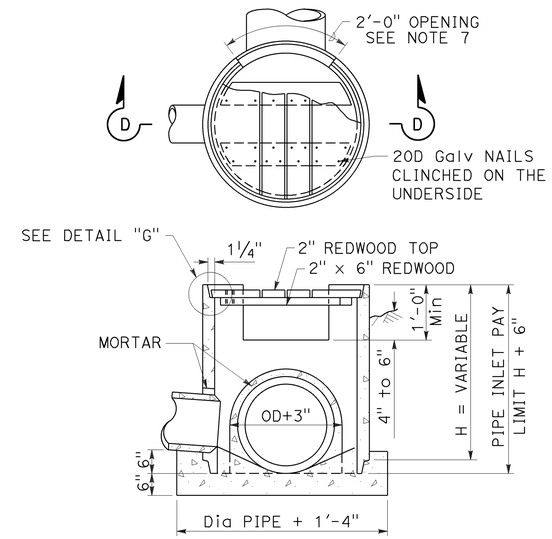

SECTION D-D
TYPE OCP or OCPI
Concrete pipe inlet with redwood cover
(See Notes 6 and 10)

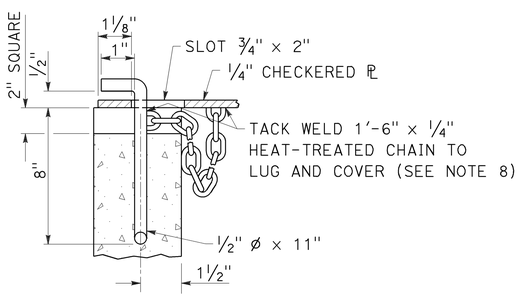

DETAIL "E"

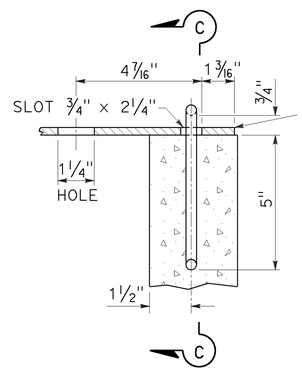

DETAIL "F"

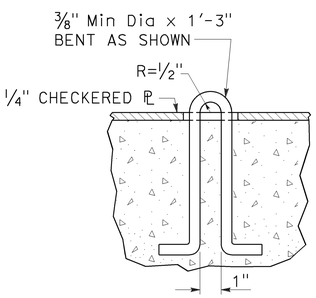

SECTION C-C

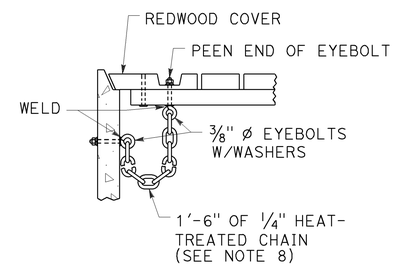

DETAIL "G"

NOTES:

1. For details of steel pipe inlets, see Standard Plan D75A.
2. For details of ladder and steps and when ladder or steps are required, see Standard Plan D75C.
3. Inlet pipes shall not protrude into basin.
4. Except for inlets used for junction boxes, basin floors shall have minimum slope of 4:1 from all directions toward outlet pipe, and a wood trowel finish.
5. See Revised Standard Plans RSP D77A and RSP D77B for Grate and Frame Details and Weights of Miscellaneous Iron and Steel.
6. Designation of Type OCPI pipe inlets on plans indicates trash racks are to be furnished and installed on all side openings. See Standard Plan D75C for Trash Rack details.
7. More than one side opening may be required. Location and number as ordered by the Engineer. Opening may be cast in pipe.
8. Chain to be provided when specified.
9. Place pipe so bars of grate will be parallel with main surface flow.
10. Redwood covers shall only be placed at locations designated on the plans.

STATE OF CALIFORNIA
DEPARTMENT OF TRANSPORTATION

CONCRETE PIPE INLETS

NO SCALE

RSP D75B DATED OCTOBER 30, 2015 SUPERSEDES STANDARD PLAN D75B DATED MAY 20, 2011 - PAGE 162 OF THE STANDARD PLANS BOOK DATED 2010.

REVISED STANDARD PLAN RSP D75B

9-25-15

Dist	COUNTY	ROUTE	POST MILES TOTAL PROJECT	SHEET No.	TOTAL SHEETS
05	SCr	17	1.0/1.4	65	72

Raymond Don Tsztoo
REGISTERED CIVIL ENGINEER

April 19, 2013
PLANS APPROVAL DATE

REGISTERED PROFESSIONAL ENGINEER Raymond Don Tsztoo No. C37332 Exp. 6-30-14 CIVIL STATE OF CALIFORNIA

THE STATE OF CALIFORNIA OR ITS OFFICERS OR AGENTS SHALL NOT BE RESPONSIBLE FOR THE ACCURACY OR COMPLETENESS OF SCANNED COPIES OF THIS PLAN SHEET.

TO ACCOMPANY PLANS DATED 5-2-16

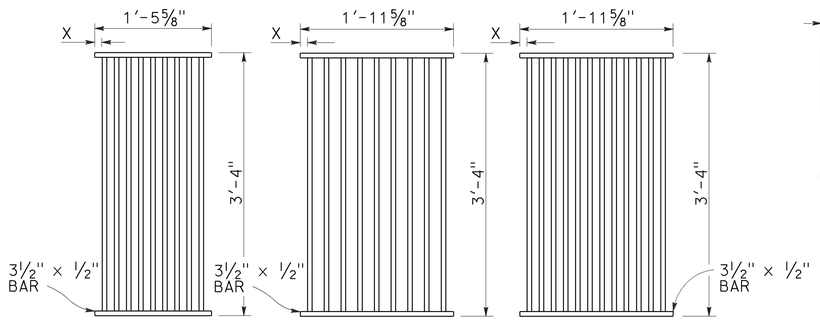

TYPE 18-9
1⅜" Clear spacing. Use within the roadbed on highways where bicycles and pedestrians are excluded.

TYPE 24-9
2" Clear spacing. Use in locations off the roadbed on all types of highways.

TYPE 24-12
1⅜" Clear spacing. Use within the roadbed on highways where bicycles and pedestrians are excluded.

RECTANGULAR GRATE DETAILS
(See table below)

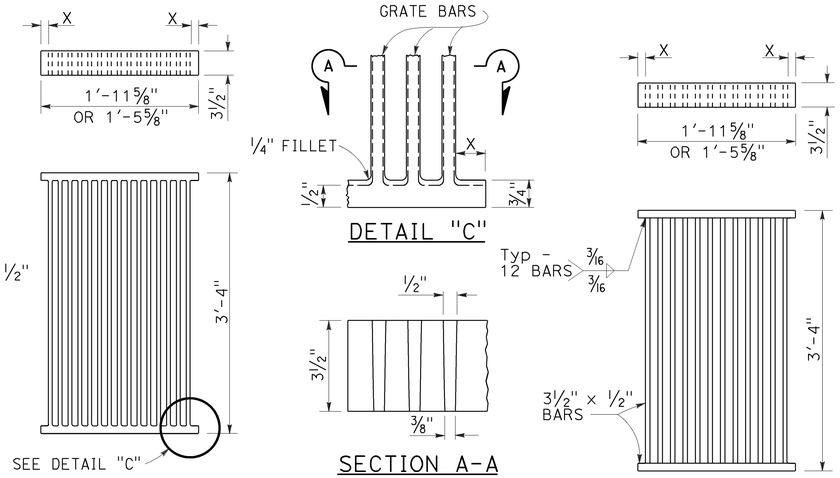

ALTERNATIVE CAST DUCTILE IRON GRATE OR CAST CARBON STEEL GRATE

ALTERNATIVE WELDED GRATE

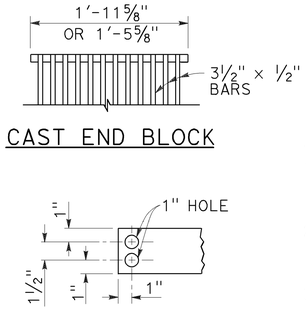

CAST END BLOCK

END OF BAR

NOTES:

1. Grate type numbers refer to approximate width of grate in inches and number of bars, respectively.
2. Contractor has the option of using cast ductile iron, cast carbon steel, welded, bolted, or cast end block grate.
3. Rounded top of bars optional on all grates.
4. Pipe inlets with a grate shall be placed so that bars parallel direction of principle surface flow.
5. Complete joint penetration butt welds may be substituted for the fillet welds on all anchors.
6. Standard square, hexagon, round or equivalent headed anchors may be substituted for the right angle hooks on the anchors shown on this plan.
7. Grate and frame weights are based on welded grates (weights of face angles, steps, protection bars, etc. are not included).
8. Connect chain to grate and frame only at locations shown on the plans. When chain is required, do not use cast ductile iron grates.

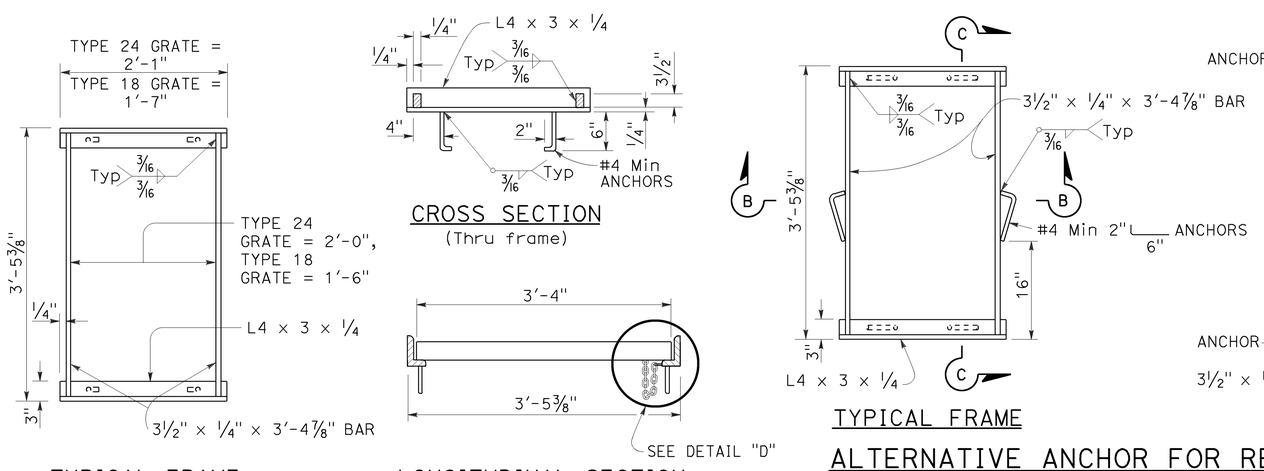

RECTANGULAR FRAME DETAILS
(For all rectangular grates)

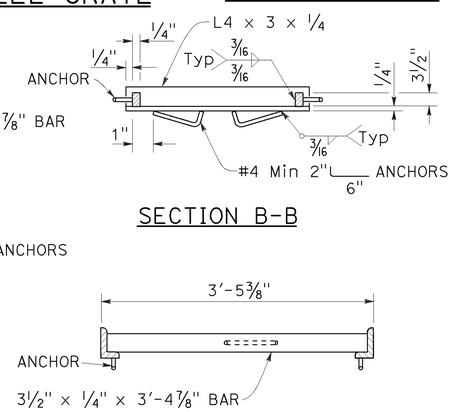

ALTERNATIVE ANCHOR FOR RECTANGULAR FRAME
(For details not shown, See Rectangular Frame Details)

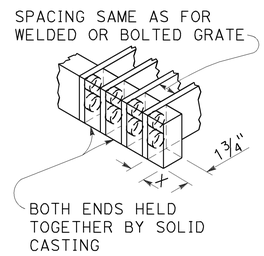

ALTERNATIVE CAST DUCTILE IRON OR CAST CARBON STEEL END BLOCK GRATE

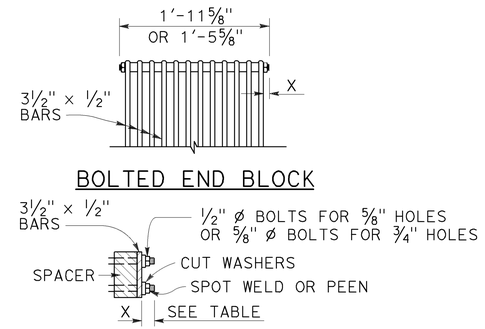

ALTERNATIVE BOLTED GRATE

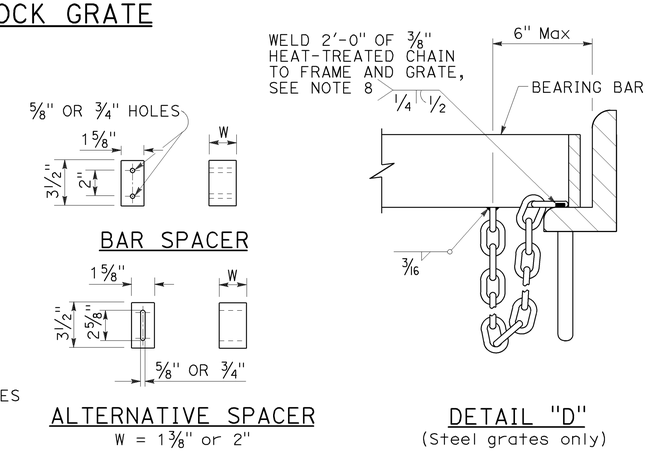

GRATE BAR SPACING TABLE

TYPE	No. OF BARS	CLEAR BAR SPACING	X
18-9	9	1⅜"	1 1/16"
24-9	9	2"	1 9/16"
24-12	12	1⅜"	1¼"

INLET TYPE	COVER TYPE	WEIGHT LB
OS	PLATE	174
OL-7	PLATE	170
OL-10	PLATE	170
OL-14	PLATE	170
OL-21	PLATE	170
OCP	PLATE	112
OCPI	PLATE	112
OCPI	REDWOOD	42
OMP	PLATE	177
OMPI	PLATE	177

INLET TYPE	GRATE TYPE	No. OF GRATES	WEIGHT LB
GDO	24-12	2	634
GOL-7	24-12	1	326
GOL-10	24-12	1	326
GO,G1,G2,G3,G4 (TYPE 24)	24-9	1	263
	24-12	1	326
G4 (TYPE 18),G5,G6	18-9	1	249
GT1	18-9	2	498
GT2	18-9	2	498
GT3	24-12	2	652
GT4	24-12	2	652
TRASH RACK			22
GRATE CHAIN			3

BASIS FOR Misc IRON & STEEL FINAL PAY WEIGHTS FOR DRAINAGE INLETS
(See Note 7)

STATE OF CALIFORNIA
DEPARTMENT OF TRANSPORTATION

GRATE DETAILS No. 1

NO SCALE

RSP D77A DATED APRIL 19, 2013 SUPERSEDES RSP D77A DATED JULY 20, 2012 AND STANDARD PLAN D77A DATED MAY 20, 2011 - PAGE 164 OF THE STANDARD PLANS BOOK DATED 2010.

REVISED STANDARD PLAN RSP D77A

2010 REVISED STANDARD PLAN RSP D77A

4-4-13

Dist	COUNTY	ROUTE	POST MILES TOTAL PROJECT	SHEET No.	TOTAL SHEETS
05	SCr	17	1.0/1.4	66	72

Raymond Don Tsztoo
REGISTERED CIVIL ENGINEER

April 19, 2013
PLANS APPROVAL DATE

REGISTERED PROFESSIONAL ENGINEER Raymond Don Tsztoo No. C37332 Exp. 6-30-14 CIVIL STATE OF CALIFORNIA

THE STATE OF CALIFORNIA OR ITS OFFICERS OR AGENTS SHALL NOT BE RESPONSIBLE FOR THE ACCURACY OR COMPLETENESS OF SCANNED COPIES OF THIS PLAN SHEET.

TO ACCOMPANY PLANS DATED 5-2-16

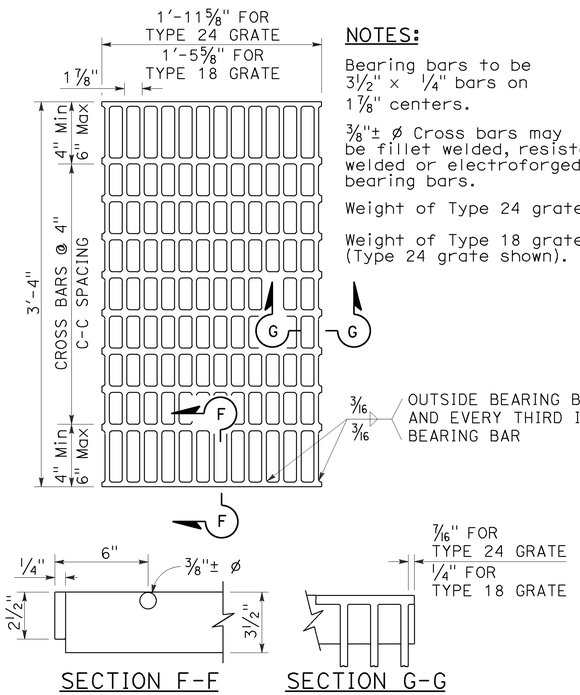

TYPE 18-10 AND 24-13 GRATE

(Welded Steel)

NOTES:

Bearing bars to be 3½" x ¼" bars on 1⅞" centers.

⅜"± ø Cross bars may be fillet welded, resistance welded or electroforged to bearing bars.

Weight of Type 24 grate = 141 LBS.

Weight of Type 18 grate = 107 LBS. (Type 24 grate shown).

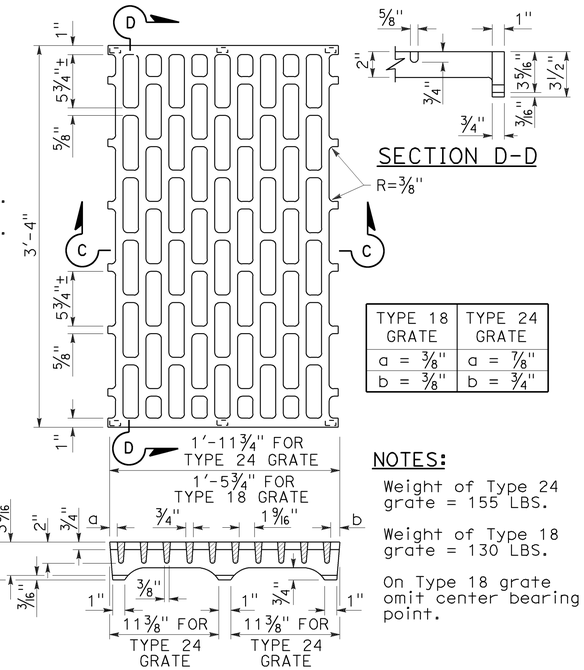

TYPE 18 GRATE	TYPE 24 GRATE
a = ⅜"	a = ⅞"
b = ⅜"	b = ¾"

NOTES:

Weight of Type 24 grate = 155 LBS.

Weight of Type 18 grate = 130 LBS.

On Type 18 grate omit center bearing point.

TYPE 18-8C AND 24-10C GRATE

(Cast ductile iron)

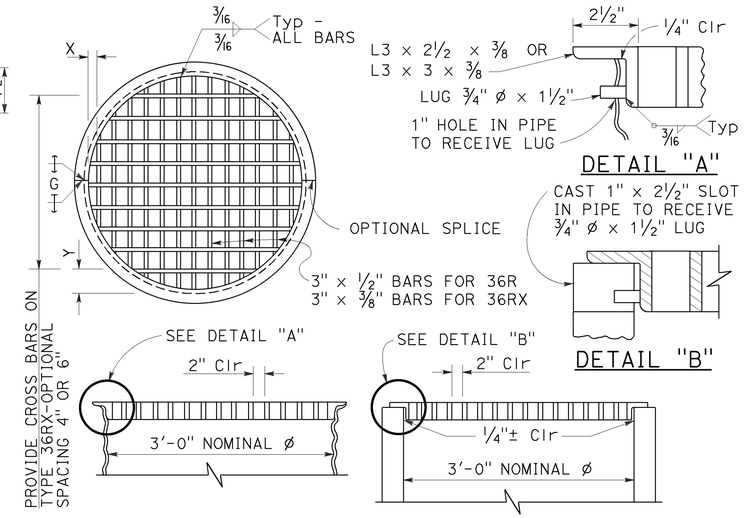

TYPE 36R AND 36RX GRATE DETAILS

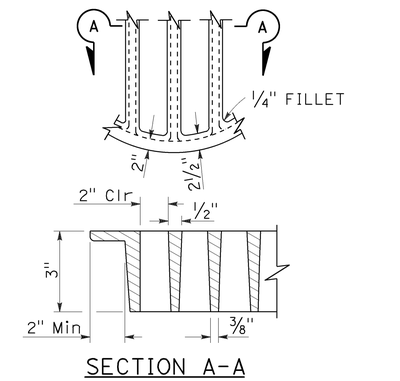

ALTERNATIVE CAST DUCTILE IRON GRATE OR CAST CARBON STEEL GRATE TYPE 36R AND 36RX

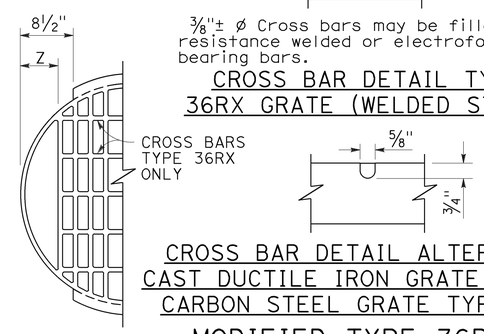

⅜"± ø Cross bars may be fillet welded, resistance welded or electroforged to bearing bars.

CROSS BAR DETAIL TYPE 36RX GRATE (WELDED STEEL)

MODIFIED TYPE 36R AND 36RX GRATE FOR ODI INLET

BASIS FOR Misc IRON AND STEEL FINAL PAY WEIGHTS FOR DRAINAGE INLETS

INLET TYPE	GRATE TYPE	No. OF GRATES	WEIGHT LB
GDO (SEE NOTE 4)	24-10C	2	391
	24-10S	2	456
	24-12X	2	473
	24-13	2	374
GO,GOL,G1,G2, G3,G4 (TYPE 24)	24-10C	1	202
	24-10S	1	229
	24-12X	1	239
	24-13	1	188
G4 (TYPE 18) G5,G6	18-8S	1	187
	18-9X	1	187
	18-10	1	149
GT1,GT2	18-8S	2	374
	18-9X	2	374
	18-10	2	298
GT3,GT4	24-10C	2	404
	24-10S	2	458
	24-12X	2	478
	24-13	2	376
ODI	36RX (Mod)	1	196
GMP,GCP,GCPI	36RX	1	215
ODI	36R (Mod)	1	220
GMP,GCP,GCPI	36R	1	236
TRASH RACK			22
GRATE CHAIN			3

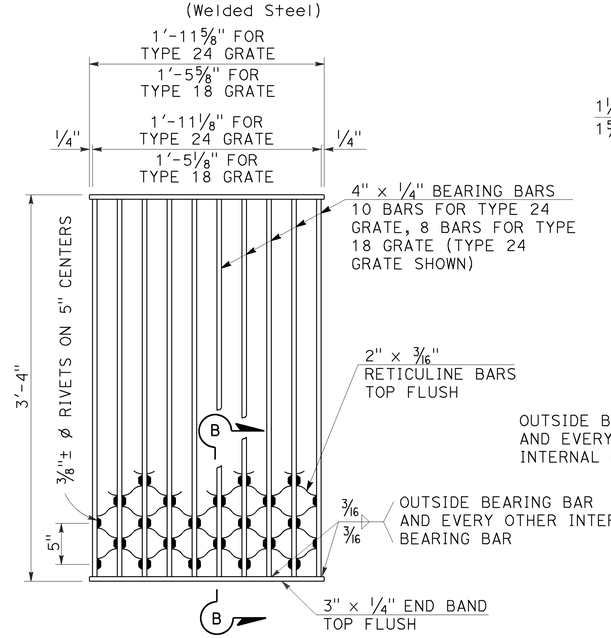

NOTES:

Weight of Type 24 grate = 182 LBS.
Weight of Type 18 grate = 145 LBS.

TYPE 18-8S AND 24-10S GRATE

(Welded Steel) Reticuline type

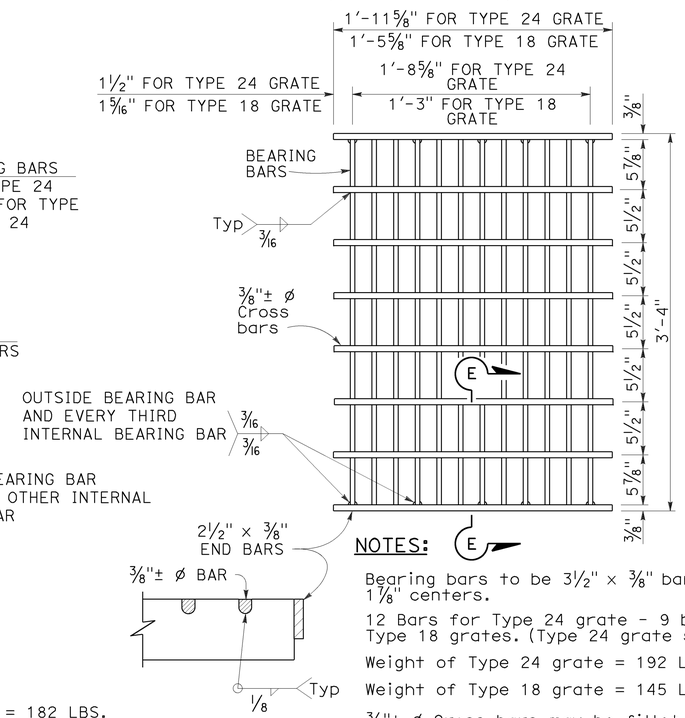

NOTES:

Bearing bars to be 3½" x ⅜" bars on 1⅞" centers.

12 Bars for Type 24 grate - 9 bars for Type 18 grates. (Type 24 grate shown).

Weight of Type 24 grate = 192 LBS.

Weight of Type 18 grate = 145 LBS.

⅜"± ø Cross bars may be fillet welded, resistance welded or electroforged to bearing bars.

TYPE 18-9X AND 24-12X GRATE

(Welded Steel)

NOTES:

1. When alternative grates are allowed - Final pay based on alternative with the lesser weight.
2. Use frame shown on Standard Plan D74A, D74B or RSP D77A as appropriate.
3. When Type 24-10S, 24-12X or 24-13 grates are used with GDO Inlets, a ¼" x 3½" x 3'-4⅞" steel bar shall be welded across the center of inlet frame to separate the individual grates.
4. See Revised Standard Plan RSP D77A for connecting chain to welded grate and frame. When chain is required, do not use cast ductile iron grate.

GRATE BAR SPACING TABLE

TYPE	No. OF BARS	CLEAR BAR SPACING	X	Y 4" SPACING	Y 6" SPACING	Z
36R	13	2"	2⅛"	-	-	-
36RX (STEEL)	15	2"	9/16"	3¾"	5¾"	-
36RX (CAST)	13	2"	2⅛"	3¾"	5¾"	-
36R Mod	12	2"	2⅛"	-	-	5"
36RX Mod (STEEL)	13	2"	9/16"	3¾"	5¾"	5 11/16"
36RX Mod (CAST)	12	2"	2⅛"	3¾"	5¾"	5"

STATE OF CALIFORNIA
DEPARTMENT OF TRANSPORTATION

GRATE DETAILS No. 2

NO SCALE

RSP D77B DATED APRIL 19, 2013 SUPERSEDES RSP D77B DATED JULY 20, 2012 AND STANDARD PLAN D77B DATED MAY 20, 2011 - PAGE 165 OF THE STANDARD PLANS BOOK DATED 2010.

REVISED STANDARD PLAN RSP D77B

2010 REVISED STANDARD PLAN RSP D77B

4-4-13

Dist	COUNTY	ROUTE	POST MILES TOTAL PROJECT	SHEET No.	TOTAL SHEETS
05	SCr	17	1.0/1.4	67	72

Gregory A. Balzer
LICENSED LANDSCAPE ARCHITECT

July 19, 2013
PLANS APPROVAL DATE

THE STATE OF CALIFORNIA OR ITS OFFICERS OR AGENTS SHALL NOT BE RESPONSIBLE FOR THE ACCURACY OR COMPLETENESS OF SCANNED COPIES OF THIS PLAN SHEET.

LICENSED LANDSCAPE ARCHITECT — Gregory A. Balzer 2576 — 01 Expiration Date 2-28-15 — Renewal Date 7-19-13 — Date — STATE OF CALIFORNIA

TO ACCOMPANY PLANS DATED 5-2-16

A

AB	AGGREGATE BASE
ABS	ACRYLONITRILE-BUTADIENE-STYRENE
AC	ASPHALT CONCRETE
ACC	ARMOR-CLAD CONDUCTORS
Adj	ADJACENT/ADJUSTABLE
AIC	AUXILIARY IRRIGATION CONTROLLER
Alt	ALTERNATIVE
AMEND	AMENDMENT
ARV	AIR RELEASE VALVE
AUTO	AUTOMATIC
AUX	AUXILIARY
AVB	ATMOSPHERIC VACUUM BREAKER

B

B&B	BALLED AND BURLAPPED
B/B	BRASS/BRONZE
B/B/PL	BRASS/BRONZE/PLASTIC
B/PL	BRASS/PLASTIC
BFM	BONDED FIBER MATRIX
Bit Ctd	BITUMINOUS COATED
BP	BOOSTER PUMP
BPA	BACKFLOW PREVENTER ASSEMBLY
BPE	BACKFLOW PREVENTER ENCLOSURE
BV	BALL VALVE

C

C	CONDUIT
CAP	CORRUGATED ALUMINUM PIPE
CARV	COMBINATION AIR RELEASE VALVE
CB	COUPLING BAND
CCA	CAM COUPLER ASSEMBLY
CEC	CONTROLLER ENCLOSURE CABINET
CHDPE	CORRUGATED HIGH DENSITY POLYETHYLENE
CL	CHAIN LINK
CNC	CONTROL AND NEUTRAL CONDUCTORS
Conc	CONCRETE
CP	COPPER PIPE
CS	COMPOST SOCK
CSP	CORRUGATED STEEL PIPE
CST	CENTER STRIP
CV	CHECK VALVE

D

Dia	DIAMETER
DIP	DUCTILE IRON PIPE
DIT	DRIP IRRIGATION TUBING
DG	DECOMPOSED GRANITE
DN	DIAMETER NOMINAL
DVA	DRIP VALVE ASSEMBLY

E

EC	EROSION CONTROL
ECTC	EROSION CONTROL TECHNOLOGY COUNCIL
Elect	ELECTRIC/ELECTRICAL
Elev	ELEVATION
ELL	ELBOW
ENCL	ENCLOSURE
EP	EDGE OF PAVEMENT
ES	EDGE OF SHOULDER
EST	END STRIP
ESTB	ESTABLISHMENT
ETW	EDGE OF TRAVELED WAY

F

F	FULL CIRCLE
F/P	FULL/PART CIRCLE
FCV	FLOW CONTROL VALVE
FERT	FERTILIZER
FG	FINISHED GRADE
FH	FLEXIBLE HOSE
FIPT	FEMALE IRON PIPE THREAD
FIS	FERTILIZER INJECTOR SYSTEM
FL	FLOW LINE
FR	FIBER ROLL
FS	FLOW SENSOR
FSC	FLOW SENSOR CABLE
FV	FLUSH VALVE

G

Galv	GALVANIZED
GARV	GARDEN VALVE
GARVA	GARDEN VALVE ASSEMBLY
GM	GRAVEL MULCH
GPH	GALLONS PER HOUR
GPM	GALLONS PER MINUTE
GSP	GALVANIZED STEEL PIPE
GV	GATE VALVE

H

H	HALF CIRCLE
HDPE	HIGH DENSITY POLYETHYLENE
HP	HORSEPOWER/HINGE POINT
HPL	HIGH PRESSURE LINE
Hwy	HIGHWAY

I

IC	IRRIGATION CONTROLLER
ICC	IRRIGATION CONTROLLER(S) IN CONTROLLER ENCLOSURE CABINET
ID	INSIDE DIAMETER
IFS	IRRIGATION FILTRATION SYSTEM
IPS	IRON PIPE SIZE
IPT	IRON PIPE THREAD
Irr	IRRIGATION

L

L	LENGTH

M

Max	MAXIMUM
MBGR	METAL BEAM GUARD RAILING
MCV	MANUAL CONTROL VALVE
MIC	MASTER IRRIGATION CONTROLLER
Min	MINIMUM
MIPT	MALE IRON PIPE THREAD
Misc	MISCELLANEOUS
Mtl	MATERIAL
MVP	MAINTENANCE VEHICLE PULLOUT

N

NCN	NO COMMON NAME
NL	NOZZLE LINE
No.	NUMBER
NPT	NATIONAL PIPE THREAD

O

O/C	ON CENTER
OD	OUTSIDE DIAMETER
OL	OVERLAP

P

P	PART CIRCLE
PB	PULL BOX
PCC	PORTLAND CEMENT CONCRETE
PE	POLYETHYLENE
Pkt	PACKET
PL	PLASTIC
PLS	PURE LIVE SEED
PLT	PLANT/PLANTING
PLT ESTB	PLANT ESTABLISHMENT
PM	POST MILE
PR	PRESSURE RATED
PRLV	PRESSURE RELIEF VALVE
PRV	PRESSURE REGULATING VALVE
PVC	POLYVINYL CHLORIDE
Pvmt	PAVEMENT

Q

Q	QUARTER CIRCLE
QCV	QUICK COUPLING VALVE

R

R	RADIUS
RCP	REINFORCED CONCRETE PIPE
RCV	REMOTE CONTROL VALVE
RCVM	REMOTE CONTROL VALVE (MASTER)
RCVMF	REMOTE CONTROL VALVE (MASTER) W/FLOW SENSOR
RCVP	REMOTE CONTROL VALVE W/PRESSURE REGULATOR
RCW	RECYCLED WATER
RECP	ROLLED EROSION CONTROL PRODUCT
REQ	REQUIRED
RICS	REMOTE IRRIGATION CONTROL SYSTEM
R/W	RIGHT OF WAY

S

S	SLIP
SCH	SCHEDULE
SF	STATE-FURNISHED
Shld	SHOULDER
Sq	SQUARE
SST	SIDE STRIP
Sta	STATION
Std	STANDARD
SW	SIDEWALK/SOUND WALL

T

T	THIRD CIRCLE/THREAD
TLS	TRUCK LOADING STANDPIPE
TQ	THREE QUARTER CIRCLE
TRM	TURF REINFORCEMENT MAT
TT	TWO-THIRDS CIRCLE
TWSA	TREE WELL SPRINKLER ASSEMBLY
Typ	TYPICAL

U

UG	UNDERGROUND

W

W	WIDTH
W/	WITH
WM	WATER METER
WS	WYE STRAINER
WSA	WYE STRAINER ASSEMBLY
WSP	WELDED STEEL PIPE
WWM	WELDED WIRE MESH

NOTE:
For additional abbreviations, see Standard Plans A10A and A10B.

STATE OF CALIFORNIA
DEPARTMENT OF TRANSPORTATION

LANDSCAPE AND EROSION CONTROL ABBREVIATIONS

NO SCALE

RSP H1 DATED JULY 19, 2013 SUPERSEDES STANDARD PLAN H1 DATED MAY 20, 2011 - PAGE 218 OF THE STANDARD PLANS BOOK DATED 2010.

REVISED STANDARD PLAN RSP H1

2010 REVISED STANDARD PLAN RSP H1

6-28-13

Dist	COUNTY	ROUTE	POST MILES TOTAL PROJECT	SHEET No.	TOTAL SHEETS
05	SCr	17	1.0/1.4	68	72

Gregory A. Belzer
LICENSED LANDSCAPE ARCHITECT

November 15, 2013
PLANS APPROVAL DATE

LICENSED LANDSCAPE ARCHITECT Gregory A. Belzer 2516 STATE OF CALIFORNIA
Gregory A. Belzer
02-28-14
2-28-15
Renewal Date
11-15-13
Date

THE STATE OF CALIFORNIA OR ITS OFFICERS OR AGENTS SHALL NOT BE RESPONSIBLE FOR THE ACCURACY OR COMPLETENESS OF SCANNED COPIES OF THIS PLAN SHEET.

TO ACCOMPANY PLANS DATED 5-2-16

EXISTING	NEW	ITEM DESCRIPTION
		WATER METER (WM)
		BACKFLOW PREVENTER ASSEMBLY (BPA)
		BACKFLOW PREVENTER ENCLOSURE (BPE)
		BOOSTER PUMP (BP)
		TRUCK LOADING STANDPIPE (TLS)
	FS	FLOW SENSOR (FS)
		MASTER IRRIGATION CONTROLLER (MIC)
		AUXILIARY IRRIGATION CONTROLLER (AIC)
		IRRIGATION CONTROLLER (IC) IRRIGATION CONTROLLER (IC) (BATTERY) IRRIGATION CONTROLLER (IC) (SOLAR) IRRIGATION CONTROLLER (IC) (TWO WIRE) IRRIGATION CONTROLLER(S) IN CONTROLLER ENCLOSURE CABINET (ICC)
acc	ACC	ARMOR-CLAD CONDUCTORS (ACC)
cnc	CNC	CONTROL AND NEUTRAL CONDUCTORS (CNC)
		IRRIGATION CONDUIT
		EXTEND IRRIGATION CONDUIT
dip	DIP	DUCTILE IRON PIPE (SUPPLY LINE) (MAIN) (DIP)
		GALVANIZED STEEL PIPE (SUPPLY LINE) (MAIN) (GSP)
		GALVANIZED STEEL PIPE (SUPPLY LINE) (LATERAL) (GSP)
		PLASTIC PIPE (SUPPLY LINE) (MAIN)
		PLASTIC PIPE (SUPPLY LINE) (LATERAL)
cp	CP	COPPER PIPE (SUPPLY LINE)
dit	DIT	DRIP IRRIGATION TUBING
		REMOTE CONTROL VALVE (RCV) REMOTE CONTROL VALVE (MASTER) (RCVM) REMOTE CONTROL VALVE (MASTER) W/FLOW METER (RCVMF)
P	P	REMOTE CONTROL VALVE W/PRESSURE REGULATOR (RCVP)
		EXISTING MANUAL CONTROL VALVE (MCV)
	V	DRIP VALVE ASSEMBLY (DVA)
	Y	WYE STRAINER ASSEMBLY (WSA)

EXISTING	NEW	ITEM DESCRIPTION
		GATE VALVE (GV)
		BALL VALVE (BV)
		QUICK COUPLING VALVE (QCV)
		CAM COUPLER ASSEMBLY (CCA)
		GARDEN VALVE ASSEMBLY (GARVA)
		PRESSURE REGULATING VALVE (PRV)
		PRESSURE RELIEF VALVE (PRLV)
		FLOW CONTROL VALVE (FCV)
		COMBINATION AIR RELEASE VALVE (CARV)
		CHECK VALVE (CV)
		FLUSH VALVE (FV)
		EXISTING NOZZLE LINE W/TURNING UNION
		EXISTING IRRIGATION SYSTEM
		EXISTING IRRIGATION SYSTEM TO BE REMOVED
		CHAIN LINK GATE
		QUICK COUPLING VALVE W/SPRINKLER PROTECTOR
3	3	SPRINKLER W/SPRINKLER PROTECTOR
	C	CONNECT TO EXISTING SYSTEM
		CAP
		CAP EXISTING
	\\\FR\\\	FIBER ROLL
	\\\CS\\\	COMPOST SOCK

RCV SIZE
IRRIGATION CONTROLLER
CONTROLLER STATION
VALVE IN PARALLEL (IF APPLICABLE)
GPM
QUANTITY OF SPRINKLERS (WHEN SHOWN)

* 2½"-A-2b-40-60

VALVE CODE

* VALVE CODES FOR EXISTING VALVES ARE SHOWN IN A DASHED ENCLOSURE.

STATE OF CALIFORNIA
DEPARTMENT OF TRANSPORTATION

LANDSCAPE AND EROSION CONTROL SYMBOLS

NO SCALE

RSP H2 DATED NOVEMBER 15, 2013 SUPERSEDES RSP H2 DATED JULY 19, 2013 AND STANDARD PLAN H2 DATED MAY 20, 2011 - PAGE 219 OF THE STANDARD PLANS BOOK DATED 2010.

REVISED STANDARD PLAN RSP H2

2010 REVISED STANDARD PLAN RSP H2

10-9-13

Dist	COUNTY	ROUTE	POST MILES TOTAL PROJECT	SHEET No.	TOTAL SHEETS
05	SCr	17	1.0/1.4	69	72

Gregory A. Balzer
LICENSED LANDSCAPE ARCHITECT

July 19, 2013
PLANS APPROVAL DATE

LICENSED LANDSCAPE ARCHITECT Gregory A. Balzer 2516 STATE OF CALIFORNIA
Gregory A. Balzer
Original Date
2-28-15
Renewal Date
7-19-13
Date

THE STATE OF CALIFORNIA OR ITS OFFICERS OR AGENTS SHALL NOT BE RESPONSIBLE FOR THE ACCURACY OR COMPLETENESS OF SCANNED COPIES OF THIS PLAN SHEET.

TO ACCOMPANY PLANS DATED 5-2-16

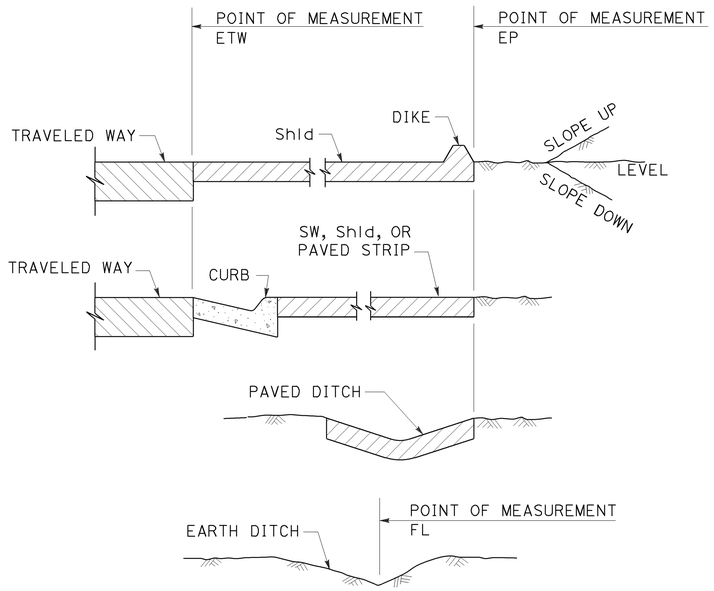

SECTION
POINTS OF MEASUREMENT

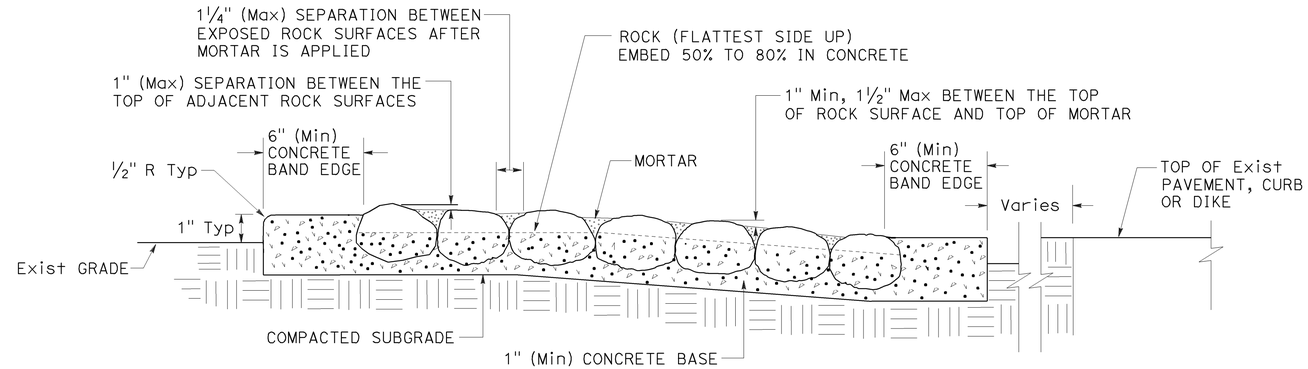

SECTION
ROCK BLANKET

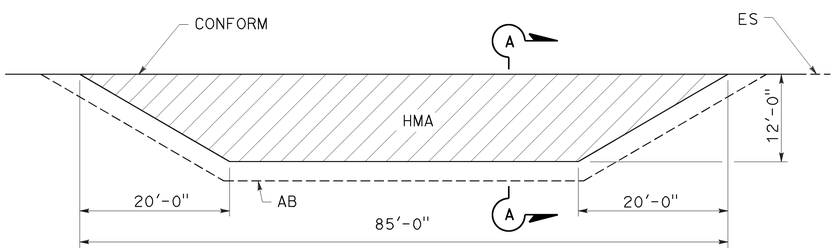

PLAN

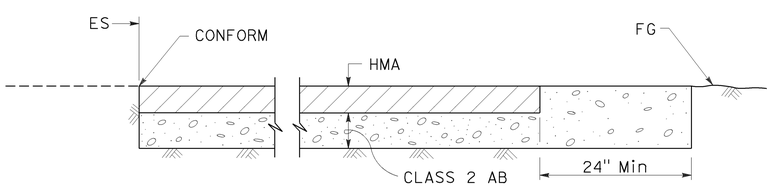

SECTION A-A
MAINTENANCE VEHICLE PULLOUT

STATE OF CALIFORNIA
DEPARTMENT OF TRANSPORTATION

LANDSCAPE DETAILS

NO SCALE

RSP H9A DATED JULY 19, 2013 SUPPLEMENTS THE STANDARD PLANS BOOK DATED 2010.

REVISED STANDARD PLAN RSP H9A

2010 REVISED STANDARD PLAN RSP H9A

6-21-13

Dist	COUNTY	ROUTE	POST MILES TOTAL PROJECT	SHEET No.	TOTAL SHEETS
05	SCr	17	1.0/1.4	70	72

REGISTERED CIVIL ENGINEER

July 19, 2013
PLANS APPROVAL DATE

REGISTERED PROFESSIONAL ENGINEER
Gurinderpal Bhullar
No. C48815
Exp. 9-30-14
CIVIL
STATE OF CALIFORNIA

THE STATE OF CALIFORNIA OR ITS OFFICERS OR AGENTS SHALL NOT BE RESPONSIBLE FOR THE ACCURACY OR COMPLETENESS OF SCANNED COPIES OF THIS PLAN SHEET.

TO ACCOMPANY PLANS DATED 5-2-16

TABLE 1

TAPER LENGTH CRITERIA AND CHANNELIZING DEVICE SPACING

SPEED (S)	MINIMUM TAPER LENGTH * FOR WIDTH OF OFFSET 12 FEET (W)				MAXIMUM CHANNELIZING DEVICE SPACING		
					X	Y	Z **
	TANGENT 2L	MERGING L	SHIFTING L/2	SHOULDER L/3	TAPER	TANGENT	CONFLICT
mph	ft	ft	ft	ft	ft	ft	ft
20	160	80	40	27	20	40	10
25	250	125	63	42	25	50	12
30	360	180	90	60	30	60	15
35	490	245	123	82	35	70	17
40	640	320	160	107	40	80	20
45	1080	540	270	180	45	90	22
50	1200	600	300	200	50	100	25
55	1320	660	330	220	55	110	27
60	1440	720	360	240	60	120	30
65	1560	780	390	260	65	130	32
70	1680	840	420	280	70	140	35

* - For other offsets, use the following merging taper length formula for L:
For speed of 40 mph or less, $L = WS^2/60$
For speed of 45 mph or more, $L = WS$

Where: L = Taper length in feet
W = Width of offset in feet
S = Posted speed limit, off-peak 85th-percentile speed prior to work starting, or the anticipated operating speed in mph

** - Use for taper and tangent sections where there are no pavement markings or where there is a conflict between existing pavement markings and channelizers (CA).

TABLE 2

LONGITUDINAL BUFFER SPACE AND FLAGGER STATION SPACING

SPEED *	Min D **	DOWNGRADE Min D ***		
		-3%	-6%	-9%
mph	ft	ft	ft	ft
20	115	116	120	126
25	155	158	165	173
30	200	205	215	227
35	250	257	271	287
40	305	315	333	354
45	360	378	400	427
50	425	446	474	507
55	495	520	553	593
60	570	598	638	686
65	645	682	728	785
70	730	771	825	891

* - Speed is posted speed limit, off-peak 85th-percentile speed prior to work starting, or the anticipated operating speed in mph

** - Longitudinal buffer space or flagger station spacing

*** - Use on sustained downgrade steeper than -3 percent and longer than 1 mile.

TABLE 3

ADVANCE WARNING SIGN SPACING

ROAD TYPE	DISTANCE BETWEEN SIGNS *		
	A	B	C
	ft	ft	ft
URBAN - 25 mph OR LESS	100	100	100
URBAN - MORE THAN 25 mph TO 40 mph	250	250	250
URBAN - MORE THAN 40 mph	350	350	350
RURAL	500	500	500
EXPRESSWAY / FREEWAY	1000	1500	2640

* - The distances are approximate, are intended for guidance purposes only, and should be applied with engineering judgment. These distances should be adjusted by the Engineer for field conditions, if necessary, by increasing or decreasing the recommmended distances.

STATE OF CALIFORNIA
DEPARTMENT OF TRANSPORTATION

TRAFFIC CONTROL SYSTEM TABLES FOR LANE AND RAMP CLOSURES

NO SCALE

RSP T9 DATED JULY 19, 2013 SUPERSEDES RSP T9 DATED APRIL 19, 2013 THAT SUPPLEMENTS THE STANDARD PLANS BOOK DATED 2010.

REVISED STANDARD PLAN RSP T9

2010 REVISED STANDARD PLAN RSP T9

4-30-13

Dist	COUNTY	ROUTE	POST MILES TOTAL PROJECT	SHEET No.	TOTAL SHEETS
05	SCr	17	1.0/1.4	71	72

REGISTERED CIVIL ENGINEER

April 19, 2013
PLANS APPROVAL DATE

REGISTERED PROFESSIONAL ENGINEER Gurinderpal Bhullar No. C48815 Exp. 9-30-14 CIVIL STATE OF CALIFORNIA

THE STATE OF CALIFORNIA OR ITS OFFICERS OR AGENTS SHALL NOT BE RESPONSIBLE FOR THE ACCURACY OR COMPLETENESS OF SCANNED COPIES OF THIS PLAN SHEET.

TO ACCOMPANY PLANS DATED 5-2-16

NOTES:

See Revised Standard Plan RSP T9 for tables.

Use cone spacing X for taper segment, Y for tangent segment or Z for conflict situations, as approriate, per Table 1, unless X, Y, or Z cone spacing is shown on this sheet.

Unless otherwise specified in the special provisions, all temporary warning signs shall have black legend on fluorescent orange background.

California codes are designated by (CA). Otherwise, Federal (MUTCD) codes are shown.

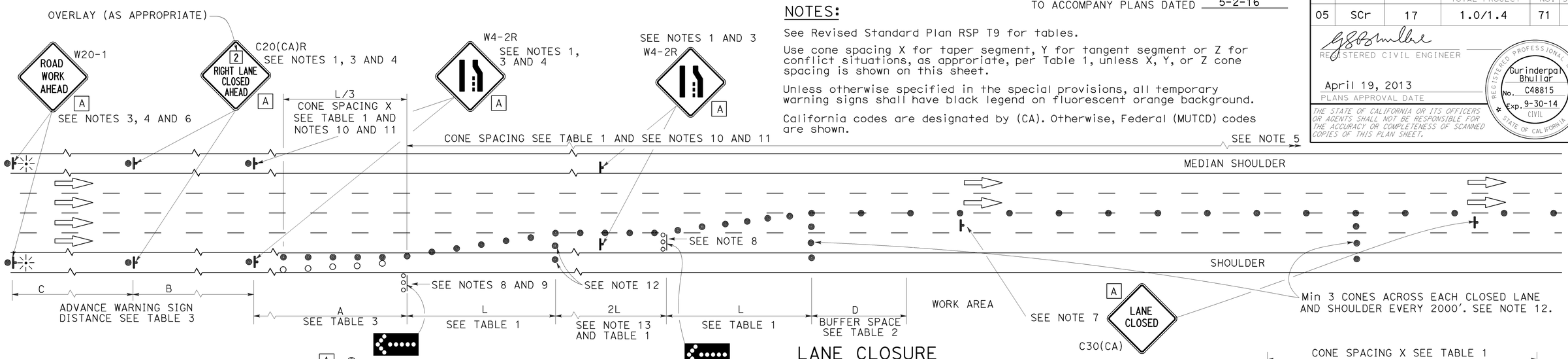

LANE CLOSURE

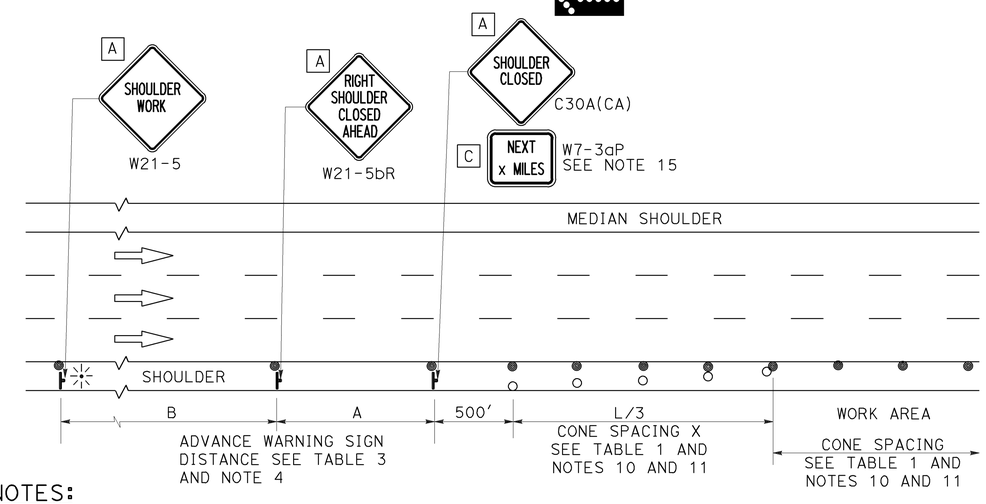

SHOULDER CLOSURE

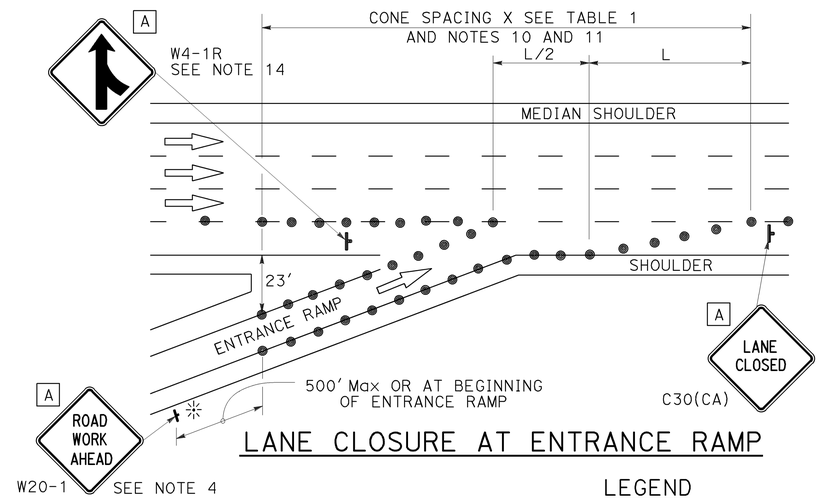

LANE CLOSURE AT ENTRANCE RAMP

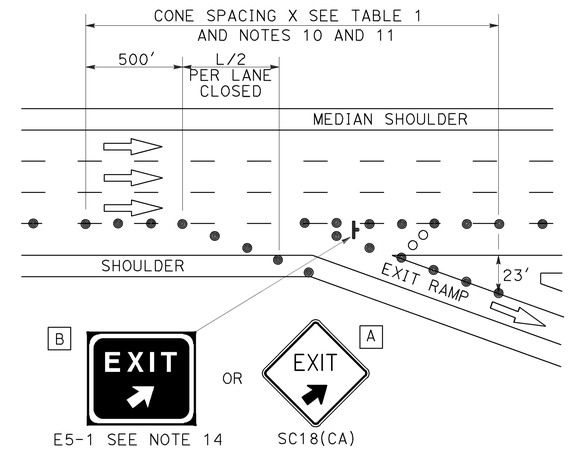

LANE CLOSURE AT EXIT RAMP

NOTES:

1. Median lane closures shall conform to the details as shown except that C20(CA)L and W4-2L signs shall be used.
2. At least one person shall be assigned to provide full time maintenance of traffic control devices for lane closures.
3. Duplicate sign installations are not required:
   a) On opposite shoulder if at least one-half of the available lanes remain open to traffic.
   b) In the median if the width of the median shoulder is less than 8' and the outside lanes are to be closed.
4. Each advance warning sign on each side of the roadway shall be equipped with at least two flags for daytime closure. Each flag shall be at least 16" x 16" in size and shall be orange or fluorescent red-orange in color. Flashing beacons shall be placed at the locations indicated for lane closure during hours of darkness.
5. A G20-2 "END ROAD WORK" sign, with minimum size of 48" x 24" as appropriate, shall be placed at the end of the lane closure unless the end of work area is obvious or ends within a larger project's limits.
6. If the W20-1 sign would follow within 2000' of a stationary W20-1 or G20-1 "ROAD WORK NEXT _____ MILES", use a C20(CA) sign for the first advance warning sign.
7. Place a C30(CA) sign every 2000' throughout length of lane closure.
8. One flashing arrow sign for each lane closed. The flashing arrow signs shall be Type I.
9. A minimum 1500' of sight distance shall be provided where possible for vehicles approaching the first flashing arrow sign. Lane closures shall not begin at top of crest vertical curve or on a horizontal curve.
10. All cones used for lane closures during the hours of darkness shall be fitted with retroreflective bands (or sleeves) as specified in the specifications.
11. Portable delineators, placed at one-half the spacing indicated for traffic cones may be used instead of cones for daytime closures only.
12. Unless otherwise specified in the special provisions, a minimum of 3 cones shall be placed transversely across each closed lane and shoulder at each location where a taper across a traffic lane ends and every 2000' as shown on the "Lane Closure" detail. Two Type II barricades may be used instead of the 3 cones. The transverse alignment of the cones or barricades on the closed shoulder may be shifted from the transverse alignment to provide access to the work.
13. Unless otherwise specified in the special provisions, the 2L tangent shown along lane lines shall be used between the L tapers required for each closed traffic lane.
14. Unless otherwise specified in the special provisions, the E5-1 or SC18(CA) and W4-1 signs shall be used as shown.
15. A W7-3aP "NEXT____ MILES" plaque must be used if theshoulder closure extends beyond the distance that can be perceived by road users.

LEGEND

- TRAFFIC CONE
- TRAFFIC CONE (OPTIONAL TAPER)
- TEMPORARY TRAFFIC CONTROL SIGN
- FLASHING ARROW SIGN (FAS)
- FAS SUPPORT OR TRAILER
- PORTABLE FLASHING BEACON

SIGN PANEL SIZE (Min)

A	48" x 48"
B	72" x 60"
C	36" x 30"

STATE OF CALIFORNIA
DEPARTMENT OF TRANSPORTATION

TRAFFIC CONTROL SYSTEM FOR LANE CLOSURE ON FREEWAYS AND EXPRESSWAYS

NO SCALE

RSP T10 DATED APRIL 19, 2013 SUPERSEDES STANDARD PLAN T10 DATED MAY 20, 2011 - PAGE 237 OF THE STANDARD PLANS BOOK DATED 2010.

REVISED STANDARD PLAN RSP T10

2010 REVISED STANDARD PLAN RSP T10

12-18-12

Dist	COUNTY	ROUTE	POST MILES TOTAL PROJECT	SHEET No.	TOTAL SHEETS
05	SCr	17	1.0/1.4	72	72

REGISTERED CIVIL ENGINEER

April 19, 2013
PLANS APPROVAL DATE

REGISTERED PROFESSIONAL ENGINEER Gurinderpal Bhullar No. C48815 Exp. 9-30-14 CIVIL STATE OF CALIFORNIA

THE STATE OF CALIFORNIA OR ITS OFFICERS OR AGENTS SHALL NOT BE RESPONSIBLE FOR THE ACCURACY OR COMPLETENESS OF SCANNED COPIES OF THIS PLAN SHEET.

TO ACCOMPANY PLANS DATED 5-2-16

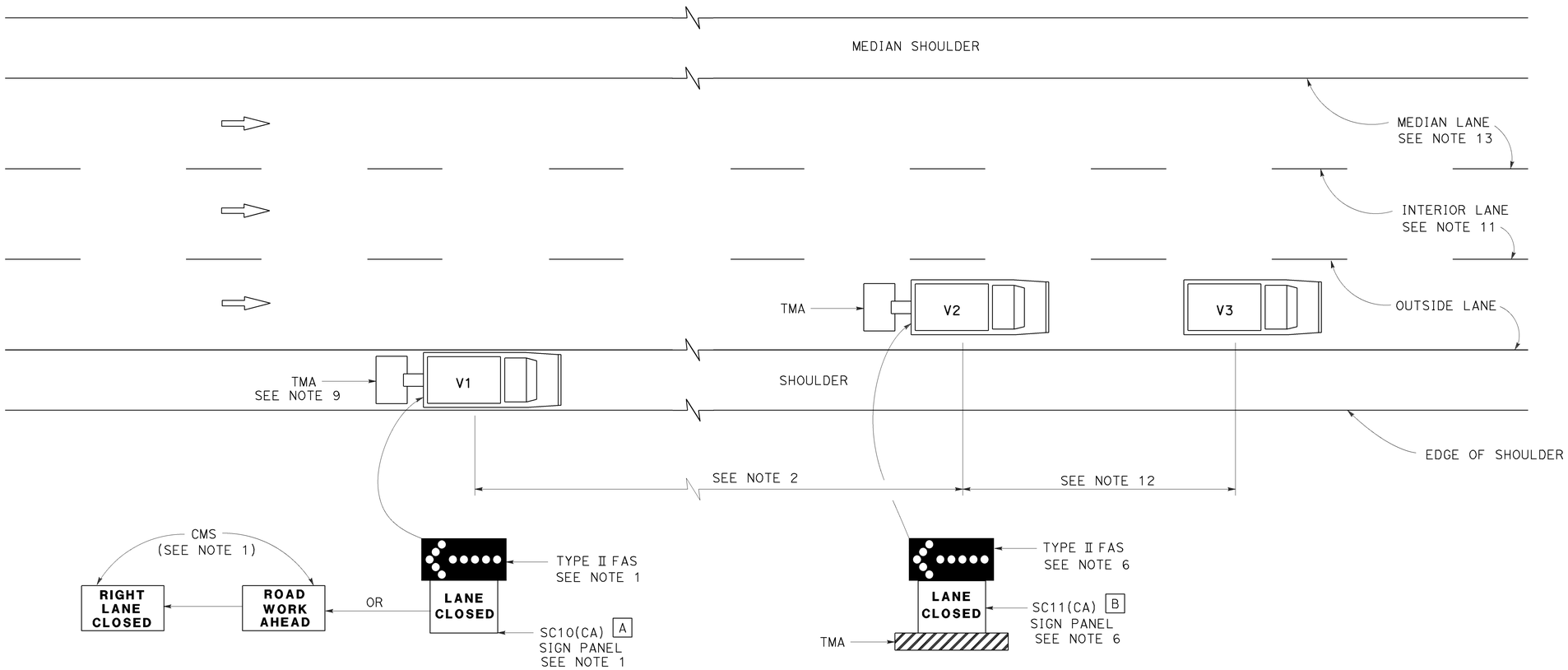

MOVING LANE CLOSURE ON MEDIAN LANE OR OUTSIDE LANE OF MULTILANE HIGHWAYS

SIGN PANEL SIZE (Min)

A 66" x 36"

B 54" x 42"

LEGEND

V1	SIGN VEHICLE
V2	SHADOW VEHICLE
V3	WORK/APPLICATION VEHICLE
	FLASHING ARROW SIGN (FAS)
CMS	CHANGEABLE MESSAGE SIGN
TMA	TRUCK-MOUNTED ATTENUATOR

NOTES:

1. Either a changeable message sign or a SC10(CA) sign panel and a Type II flashing arrow sign shall be mounted on the rear of sign vehicle V1. The changeable message sign shall be sequenced to show the "ROAD WORK AHEAD" message first, followed by the "RIGHT LANE CLOSED" message. For median lane closure, the flashing arrow symbol shall be reversed with the arrowhead on the right and the changeable message sign shall show "LEFT LANE CLOSED".
2. If traffic queues develop, sign vehicle V1 should be positioned upstream from the end of queue. Sign vehicle V1 shall be positioned where highly visible when shoulders are not available.
3. A minimum sight distance of 1500′ should be provided in advance of sign vehicle V1.
4. Sign vehicle V1 should remain at the beginning of horizontal or vertical curves until the other vehicles (V2 and V3) are far enough beyond the curve to resume the minimum sight distance of 1500′.
5. Vehicle-mounted sign panels shall have Type III or above retroreflective sheeting, black on white, or black on fluorescent orange, with 6" minimum series D letters per Caltrans sign specifications.
6. Shadow vehicle V2 shall be equipped with a truck-mounted attenuator. The sign panel shown and a Type II flashing arrow sign shall be mounted on the rear of shadow vehicle V2. For median lane closure the flashing arrow sign symbol shall be displayed with the arrowhead on the right.
7. All vehicles used for lane closures shall be equipped with two-way radios, and the vehicle operators shall maintain communication during the work or application operation.
8. All vehicles shall be equipped with flashing or rotating amber lights.
9. If sign vehicle V1 encroaches into the traffic lane due to insufficient shoulder width, sign vehicle V1 shall be equipped with a truck-mounted attenuator. Sign vehicle V1 shall stay as close to the edge of shoulder as practicable.
10. Where workers would be on foot in the work area, a stationary type lane closure (Revised Standard Plan T10, T11, etc., as applicable) shall be used instead of this plan.
11. For moving lane closure on interior lane of multilane highways, use Revised Standard Plan T16.
12. The spacing between work vehicle(s) and the shadow vehicles, and between each shadow vehicle should be minimized to deter road users from driving in between.
13. When the work/application vehicle V3 occupies the median lane, sign vehicle V1 should drive in the median shoulder and indicate left lane closed ahead.

STATE OF CALIFORNIA
DEPARTMENT OF TRANSPORTATION

TRAFFIC CONTROL SYSTEM FOR MOVING LANE CLOSURE ON MULTILANE HIGHWAYS

NO SCALE

RSP T15 DATED APRIL 19, 2013 SUPERSEDES STANDARD PLAN T15
DATED MAY 20, 2011 - PAGE 243 OF THE STANDARD PLANS BOOK DATED 2010.

REVISED STANDARD PLAN RSP T15

2010 REVISED STANDARD PLAN RSP T15

12-18-12