Dist	COUNTY	ROUTE	POST MILES TOTAL PROJECT	SHEET No.	TOTAL SHEETS
05	Mon	68	R3.9/10.8	1	62

STATE OF CALIFORNIA

DEPARTMENT OF TRANSPORTATION

STP-P068(022)E

PROJECT PLANS FOR CONSTRUCTION ON

STATE HIGHWAY

IN MONTEREY
IN AND NEAR MONTEREY
FROM ROUTE 1/68 SEPARATION
TO SPCA ROAD

TO BE SUPPLEMENTED BY STANDARD PLANS DATED MAY 2006

INDEX OF PLANS

SHEET No.	DESCRIPTION
1	TITLE SHEET AND LOCATION MAP
2-6	TYPICAL CROSS SECTIONS
7-19	CONSTRUCTION DETAILS
20	CONSTRUCTION AREA SIGNS
21-24	MOTORIST INFORMATION PLAN
25-26	PAVEMENT DELINEATION DETAILS & QUANTITIES
27-30	SUMMARY OF QUANTITIES
31-37	ELECTRICAL PLANS
38-62	REVISED AND NEW STANDARD PLANS

THE STANDARD PLANS LIST APPLICABLE TO THIS CONTRACT IS INCLUDED IN THE NOTICE TO BIDDERS AND SPECIAL PROVISIONS BOOK.

LOCATION MAP

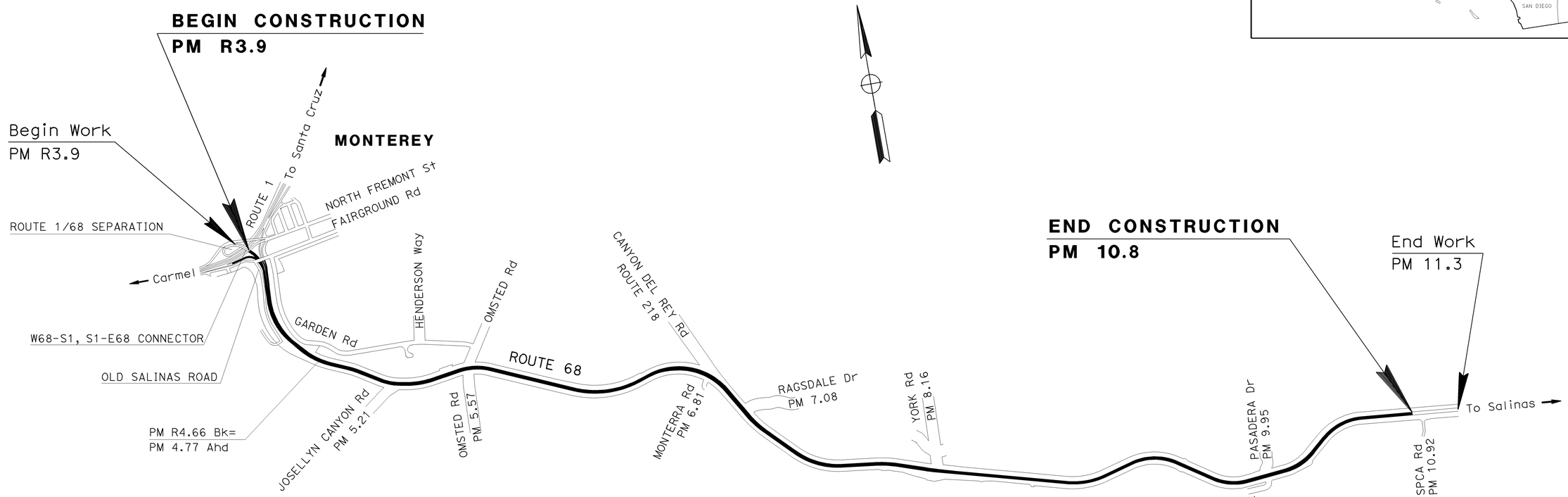

THE CONTRACTOR SHALL POSSESS THE CLASS (OR CLASSES) OF LICENSE AS SPECIFIED IN THE "NOTICE TO BIDDERS."

NO SCALE

PROJECT MANAGER: DAVID RASMUSSEN

DESIGN ENGINEER: ROBERTO BANDA

5-27-11
PROJECT ENGINEER DATE
REGISTERED CIVIL ENGINEER

May 31, 2011
PLANS APPROVAL DATE

REGISTERED PROFESSIONAL ENGINEER
ALEJANDRO CORREA
No. 75776
Exp. 06-30-12
CIVIL
STATE OF CALIFORNIA

THE STATE OF CALIFORNIA OR ITS OFFICERS OR AGENTS SHALL NOT BE RESPONSIBLE FOR THE ACCURACY OR COMPLETENESS OF SCANNED COPIES OF THIS PLAN SHEET.

CONTRACT No.	05-0P9704
PROJECT ID	0500000278

LAST REVISION 05-31-11

DATE PLOTTED => 07-JUL-2011
TIME PLOTTED => 11:09

Dist	COUNTY	ROUTE	POST MILES TOTAL PROJECT	SHEET No.	TOTAL SHEETS
05	Mon	68	R3.9/10.8	2	62

REGISTERED CIVIL ENGINEER 5-27-11 DATE

5-31-11
PLANS APPROVAL DATE

REGISTERED PROFESSIONAL ENGINEER ALEJANDRO CORREA No. 75776 Exp. 06-30-12 CIVIL STATE OF CALIFORNIA

THE STATE OF CALIFORNIA OR ITS OFFICERS OR AGENTS SHALL NOT BE RESPONSIBLE FOR THE ACCURACY OR COMPLETENESS OF SCANNED COPIES OF THIS PLAN SHEET.

NOTES:

1. DIMENSIONS OF THE PAVEMENT STRUCTURES (STRUCTURAL SECTIONS) ARE SUBJECT TO TOLERANCES SPECIFIED IN THE STANDARD SPECIFICATIONS.
2. SUPERELEVATION AS SHOWN OR AS DIRECTED BY THE ENGINEER.
3. FOR LOCATIONS AND TYPE OF HMA DIKE, MBGR, SHOULDER BACKING, AND RUMBLE STRIP, SEE SUMMARY OF QUANTITIES SHEETS
4. EXISTING UTILITY FACILITIES HAVE NOT BEEN PLOTTED ON THESE PLANS
5. FOR ACCURATE RIGHT OF WAY DATA, CONTACT RIGHT OF WAY ENGINEERING AT THE DISTRICT OFFICE.
6. MAINTAIN SIDE GUTTER
7. FOR TEMPORARY FENCE (TYPE ESA) LOCATION, SEE SHEET Q-2.

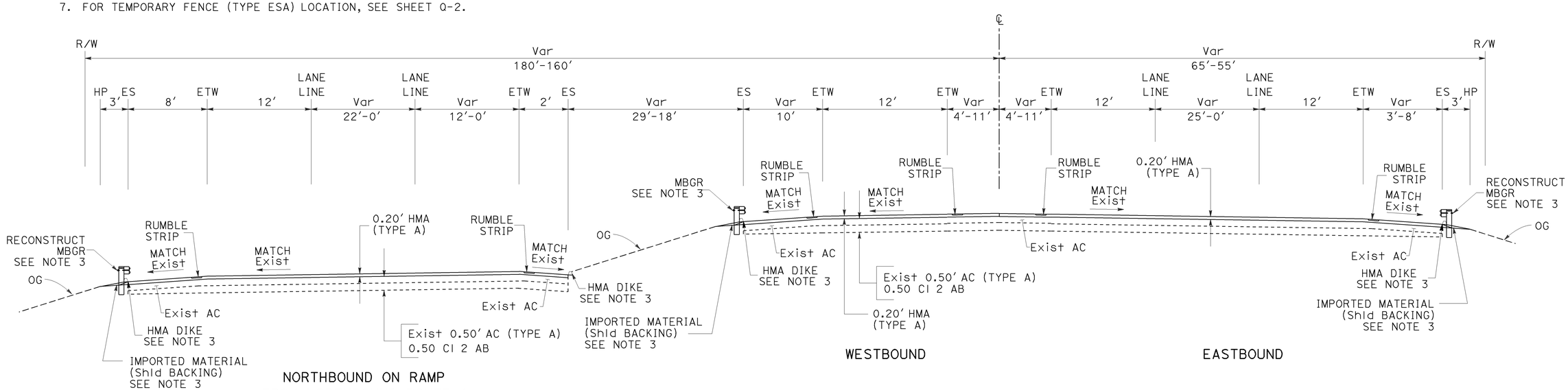

ROUTE 68

PM R3.95 TO R4.16

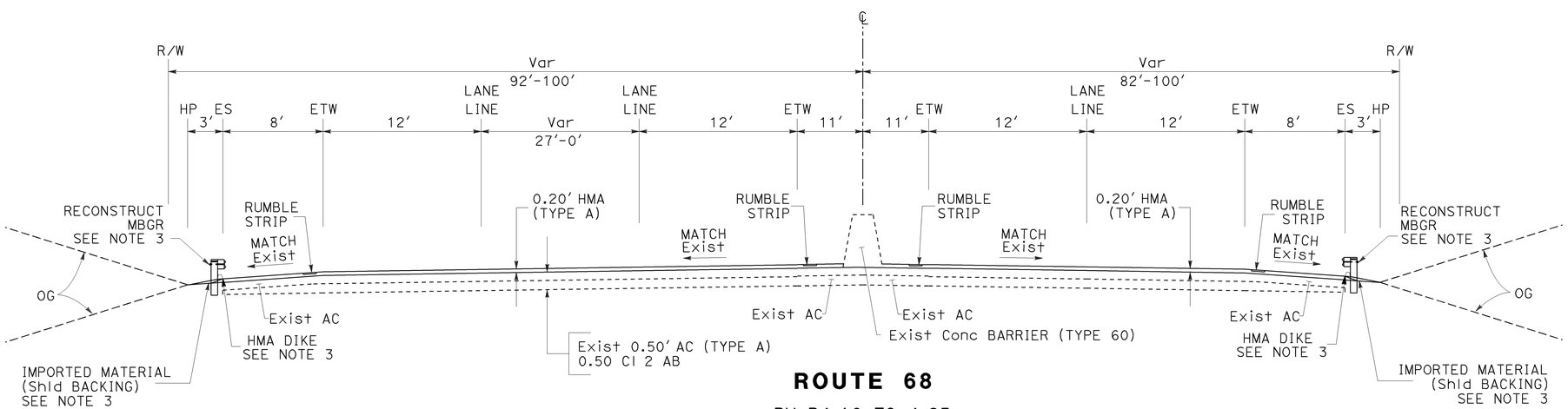

ROUTE 68

PM R4.16 TO 4.25

TYPICAL CROSS SECTIONS

NO SCALE

X-1

STATE OF CALIFORNIA - DEPARTMENT OF TRANSPORTATION

Caltrans®

06-DESIGN

FUNCTIONAL SUPERVISOR: ROBERTO BANDA

CALCULATED-DESIGNED BY: ALEJANDRO CORREA

CHECKED BY: GILBERTO BACA

REVISED BY: AC

DATE REVISED: 09-15-10

LAST REVISION: 12-28-10

DATE PLOTTED => 01-JUL-2011

TIME PLOTTED => 10:39

Dist	COUNTY	ROUTE	POST MILES TOTAL PROJECT	SHEET No.	TOTAL SHEETS
05	Mon	68	R3.9/10.8	3	62

REGISTERED CIVIL ENGINEER 5-27-11 DATE

5-31-11
PLANS APPROVAL DATE

REGISTERED PROFESSIONAL ENGINEER ALEJANDRO CORREA No. 75776 Exp. 06-30-12 CIVIL STATE OF CALIFORNIA

THE STATE OF CALIFORNIA OR ITS OFFICERS OR AGENTS SHALL NOT BE RESPONSIBLE FOR THE ACCURACY OR COMPLETENESS OF SCANNED COPIES OF THIS PLAN SHEET.

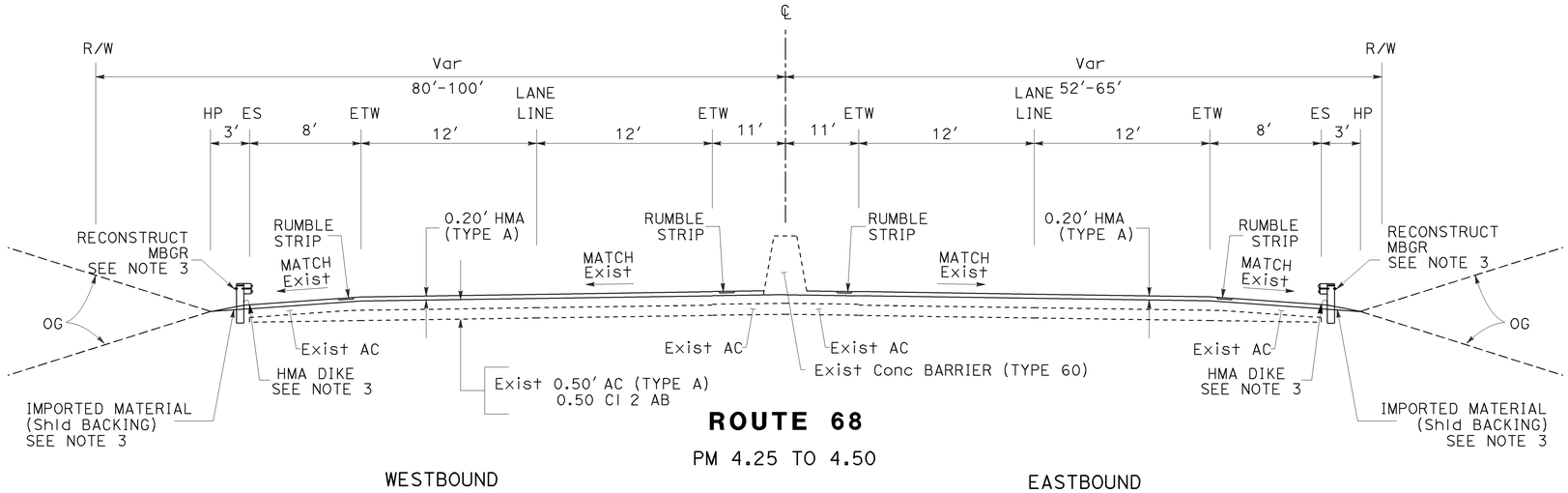

ROUTE 68

PM 4.25 TO 4.50

WESTBOUND EASTBOUND

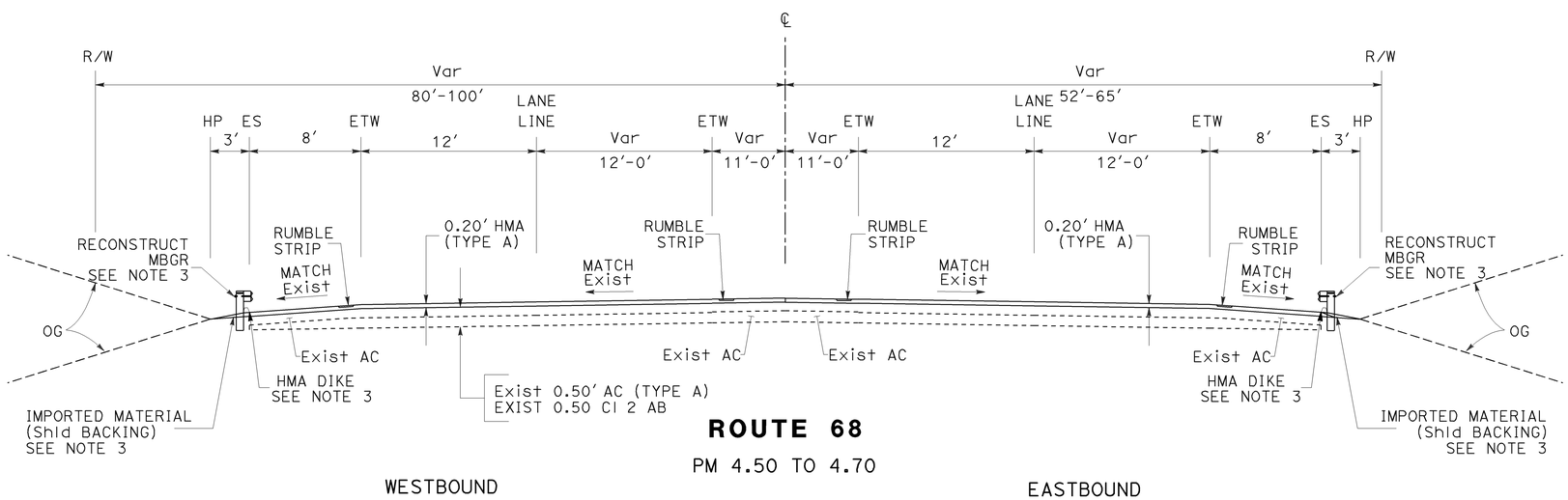

ROUTE 68

PM 4.50 TO 4.70

WESTBOUND EASTBOUND

TYPICAL CROSS SECTIONS

NO SCALE

X-2

REVISED BY	AC
DATE REVISED	09-15-10
CALCULATED-DESIGNED BY	ALEJANDRO CORREA
CHECKED BY	GILBERTO BACA
FUNCTIONAL SUPERVISOR	ROBERTO BANDA

STATE OF CALIFORNIA - DEPARTMENT OF TRANSPORTATION

Caltrans® **06-DESIGN**

LAST REVISION 12-28-10 | DATE PLOTTED => 01-JUL-2011 | TIME PLOTTED => 10:39

Dist	COUNTY	ROUTE	POST MILES TOTAL PROJECT	SHEET No.	TOTAL SHEETS
05	Mon	68	R3.9/10.8	4	62

REGISTERED CIVIL ENGINEER 5-27-11 DATE

5-31-11
PLANS APPROVAL DATE

REGISTERED PROFESSIONAL ENGINEER ALEJANDRO CORREA No. 75776 Exp. 06-30-12 CIVIL STATE OF CALIFORNIA

THE STATE OF CALIFORNIA OR ITS OFFICERS OR AGENTS SHALL NOT BE RESPONSIBLE FOR THE ACCURACY OR COMPLETENESS OF SCANNED COPIES OF THIS PLAN SHEET.

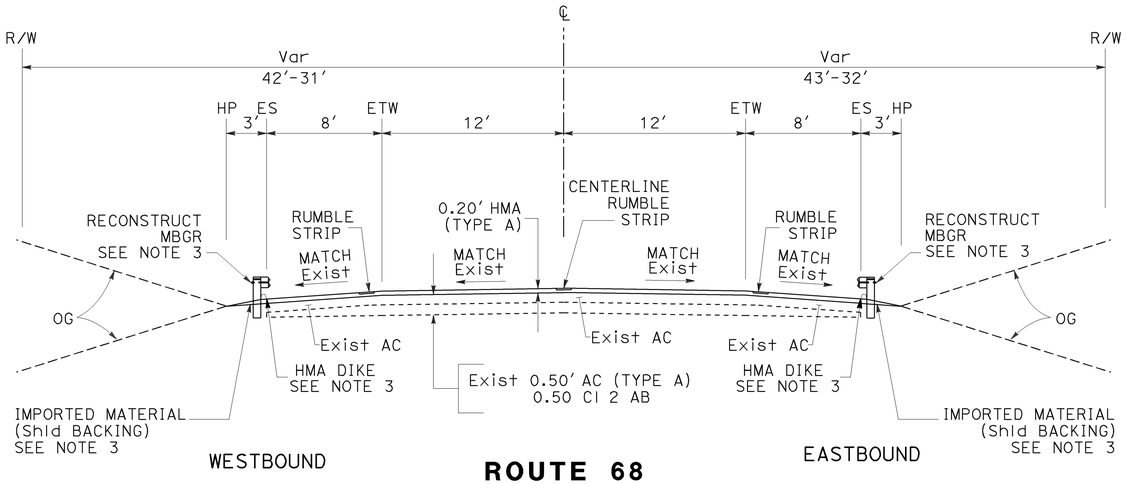

ROUTE 68

PM 4.70 TO 5.15
PM 5.33 TO 5.53
PM 6.27 TO 6.62
PM 7.26 TO 8.05
PM 8.31 TO 9.77
PM 10.12 TO 10.80

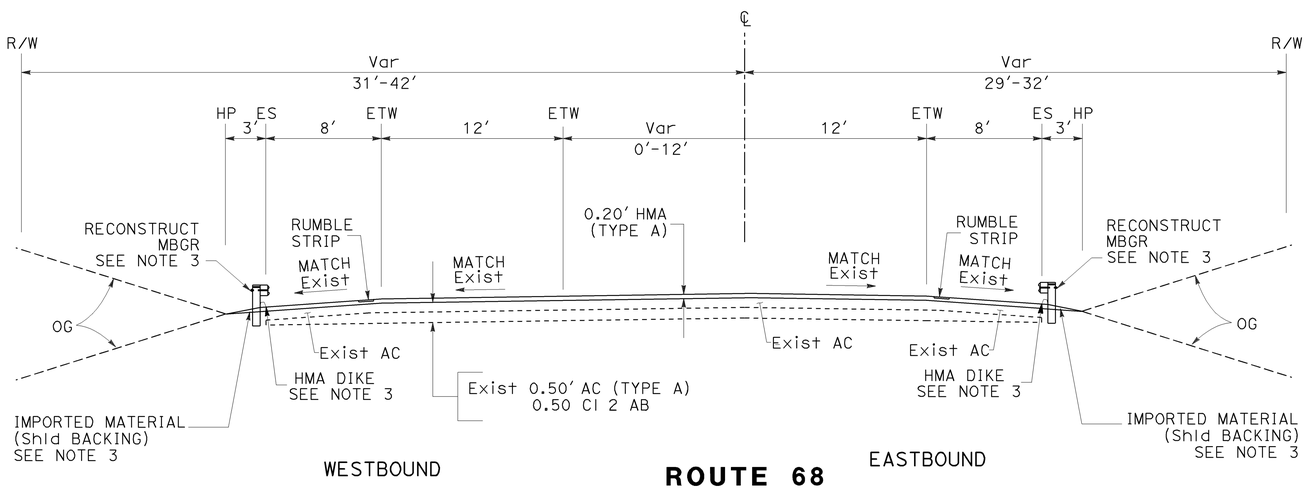

ROUTE 68

PM 5.15 TO 5.33
PM 6.11 TO 6.27
PM 6.62 TO 6.69
PM 7.11 TO 7.26
PM 9.99 TO 10.12

TYPICAL CROSS SECTIONS

NO SCALE

X-3

REVISED BY	DATE REVISED
AC	09-15-10

CALCULATED-DESIGNED BY: ALEJANDRO CORREA
CHECKED BY: GILBERTO BACA
FUNCTIONAL SUPERVISOR: ROBERTO BANDA

STATE OF CALIFORNIA - DEPARTMENT OF TRANSPORTATION
Caltrans
06-DESIGN

LAST REVISION 12-28-10
DATE PLOTTED => 01-JUL-2011
TIME PLOTTED => 10:39

Dist	COUNTY	ROUTE	POST MILES TOTAL PROJECT	SHEET No.	TOTAL SHEETS
05	Mon	68	R3.9/10.8	5	62

REGISTERED CIVIL ENGINEER 5-27-11 DATE

5-31-11
PLANS APPROVAL DATE

REGISTERED PROFESSIONAL ENGINEER ALEJANDRO CORREA No. 75776 Exp. 06-30-12 CIVIL STATE OF CALIFORNIA

THE STATE OF CALIFORNIA OR ITS OFFICERS OR AGENTS SHALL NOT BE RESPONSIBLE FOR THE ACCURACY OR COMPLETENESS OF SCANNED COPIES OF THIS PLAN SHEET.

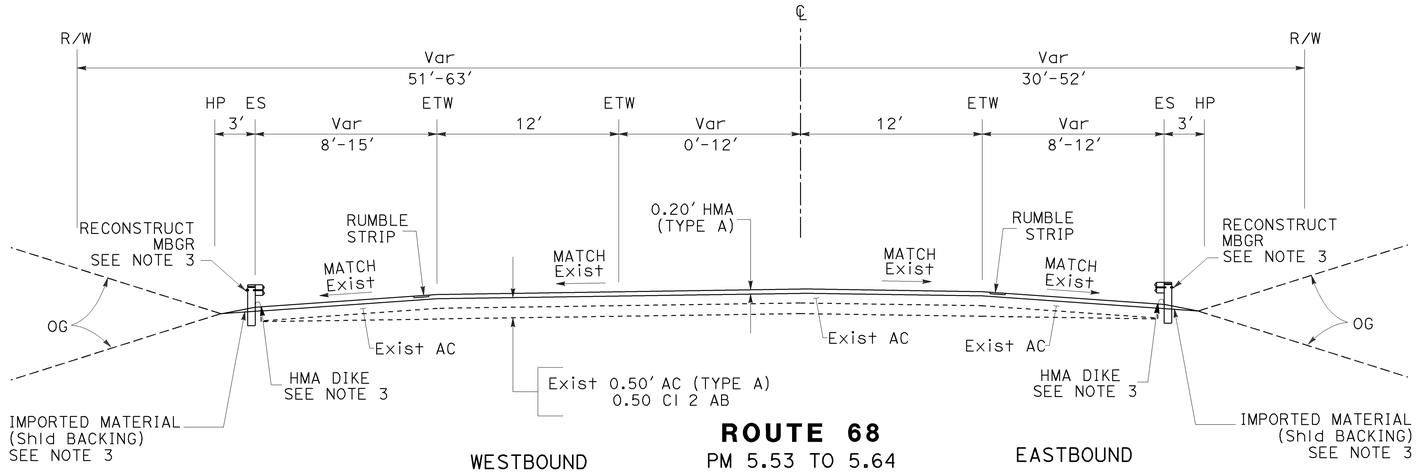

ROUTE 68
PM 5.53 TO 5.64
PM 6.69 TO 6.90
PM 8.05 TO 8.31
PM 9.77 TO 9.99

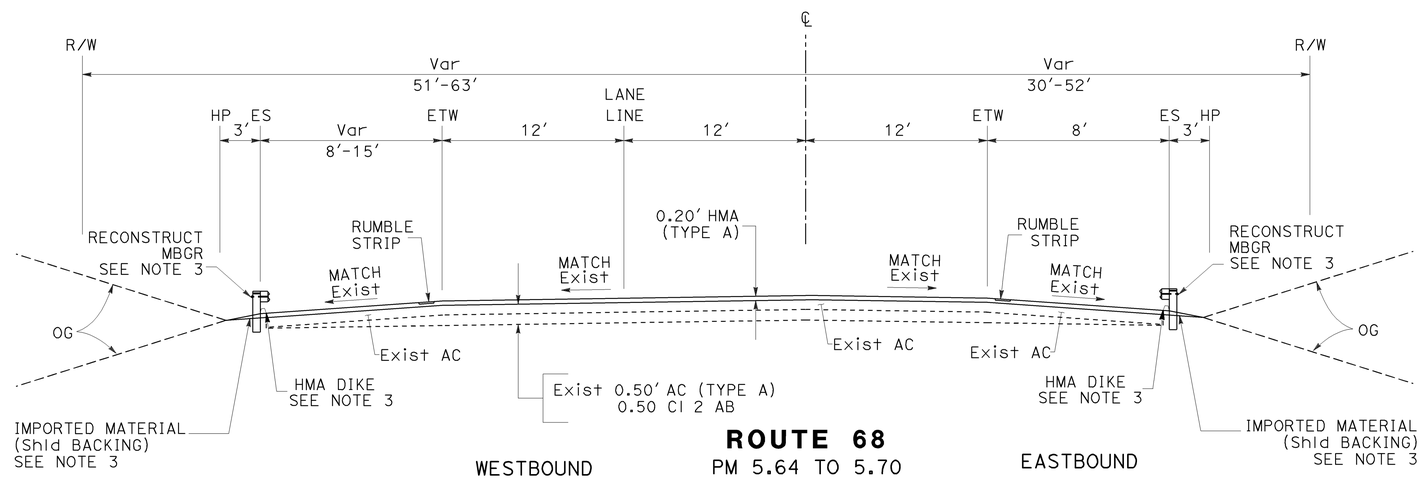

ROUTE 68
PM 5.64 TO 5.70
PM 5.77 TO 5.81
PM 5.98 TO 6.11

TYPICAL CROSS SECTIONS

NO SCALE

X-4

STATE OF CALIFORNIA - DEPARTMENT OF TRANSPORTATION
Caltrans®
06-DESIGN

FUNCTIONAL SUPERVISOR: ROBERTO BANDA
CALCULATED-DESIGNED BY: ALEJANDRO CORREA
CHECKED BY: GILBERTO BACA
REVISED BY: AC
DATE REVISED: 09-15-10

LAST REVISION DATE PLOTTED => 01-JUL-2011
TIME PLOTTED => 10:39
12-28-10

Dist	COUNTY	ROUTE	POST MILES TOTAL PROJECT	SHEET No.	TOTAL SHEETS
05	Mon	68	R3.9/10.8	6	62

REGISTERED CIVIL ENGINEER 5-27-11 DATE

5-31-11
PLANS APPROVAL DATE

REGISTERED PROFESSIONAL ENGINEER
ALEJANDRO CORREA
No. 75776
Exp. 06-30-12
CIVIL
STATE OF CALIFORNIA

THE STATE OF CALIFORNIA OR ITS OFFICERS OR AGENTS SHALL NOT BE RESPONSIBLE FOR THE ACCURACY OR COMPLETENESS OF SCANNED COPIES OF THIS PLAN SHEET.

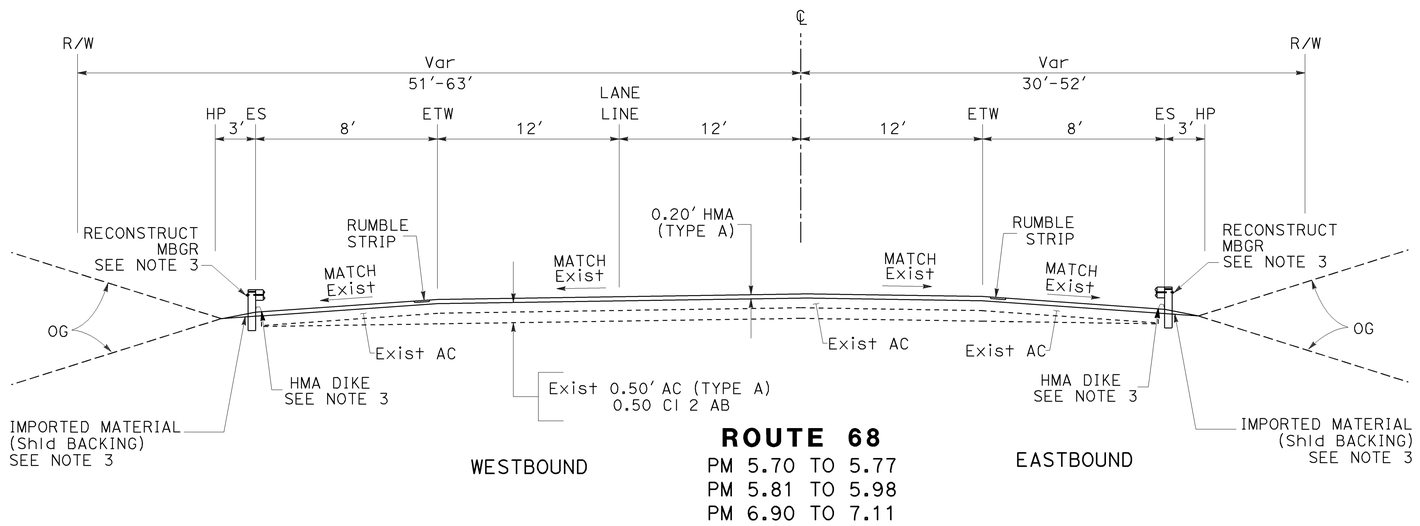

ROUTE 68
PM 5.70 TO 5.77
PM 5.81 TO 5.98
PM 6.90 TO 7.11

TYPICAL CROSS SECTIONS

NO SCALE

X-5

ALEJANDRO CORREA	REVISED BY AC
GILBERTO BACA	DATE REVISED 09-15-10
CALCULATED-DESIGNED BY	
CHECKED BY	
FUNCTIONAL SUPERVISOR ROBERTO BANDA	

STATE OF CALIFORNIA - DEPARTMENT OF TRANSPORTATION
Caltrans
06-DESIGN

LAST REVISION 12-28-10 | DATE PLOTTED => 01-JUL-2011 | TIME PLOTTED => 10:39

Dist	COUNTY	ROUTE	POST MILES TOTAL PROJECT	SHEET No.	TOTAL SHEETS
05	Mon	68	R3.9/10.8	7	62

REGISTERED CIVIL ENGINEER 5-27-11 DATE

5-31-11
PLANS APPROVAL DATE

REGISTERED PROFESSIONAL ENGINEER
ALEJANDRO CORREA
No. 75776
Exp. 06-30-12
CIVIL
STATE OF CALIFORNIA

THE STATE OF CALIFORNIA OR ITS OFFICERS OR AGENTS SHALL NOT BE RESPONSIBLE FOR THE ACCURACY OR COMPLETENESS OF SCANNED COPIES OF THIS PLAN SHEET.

LEGEND

- COLD PLANE HMA Pvmt 0.20' AND PAVE 0.20' HMA (TYPE A)
- REPLACE ASPHALT CONCRETE SURFACING
- PCC

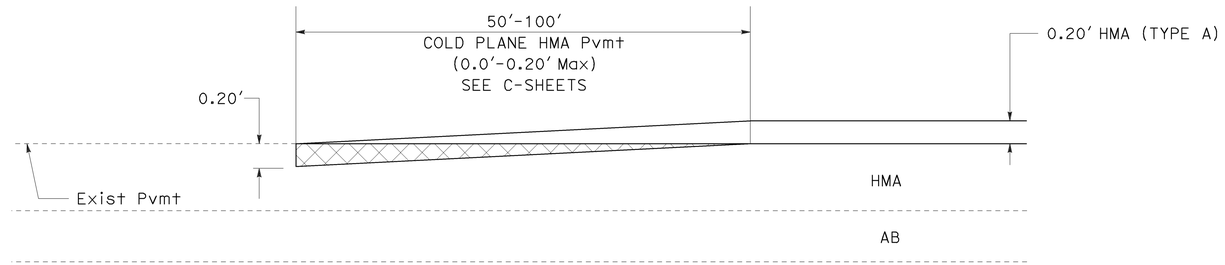

TYPICAL HMA LONGITUDINAL TRANSITION TAPER

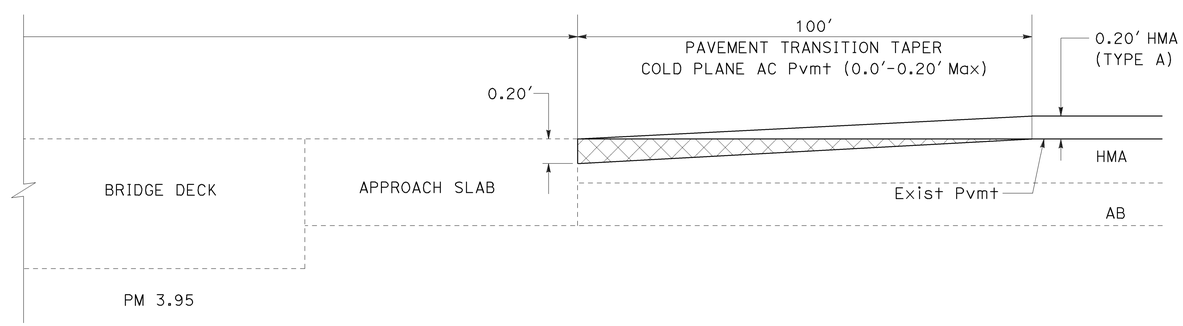

LONGITUDINAL HMA OVERLAY TRANSITION TAPER AT UNDERCROSSING STRUCTURE

CONSTRUCTION DETAILS

NO SCALE

C-1

REVISED BY	DATE REVISED
AC	09-15-10

CALCULATED-DESIGNED BY: ALEJANDRO CORREA
CHECKED BY: GILBERTO BACA
FUNCTIONAL SUPERVISOR: ROBERTO BANDA

STATE OF CALIFORNIA - DEPARTMENT OF TRANSPORTATION
Caltrans
06-DESIGN

LAST REVISION 12-28-10
DATE PLOTTED => 01-JUL-2011
TIME PLOTTED => 10:39

Dist	COUNTY	ROUTE	POST MILES TOTAL PROJECT	SHEET No.	TOTAL SHEETS
05	Mon	68	R3.9/10.8	8	62

REGISTERED CIVIL ENGINEER 5-27-11 DATE

5-31-11
PLANS APPROVAL DATE

REGISTERED PROFESSIONAL ENGINEER ALEJANDRO CORREA No. 75776 Exp. 06-30-12 CIVIL STATE OF CALIFORNIA

THE STATE OF CALIFORNIA OR ITS OFFICERS OR AGENTS SHALL NOT BE RESPONSIBLE FOR THE ACCURACY OR COMPLETENESS OF SCANNED COPIES OF THIS PLAN SHEET.

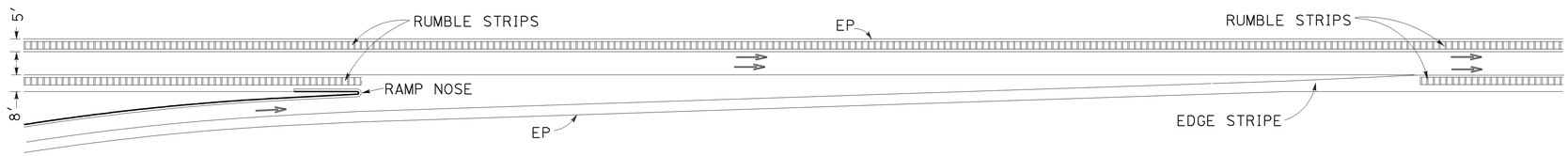

TYPICAL ON-RAMP RUMBLE STRIP LIMITS

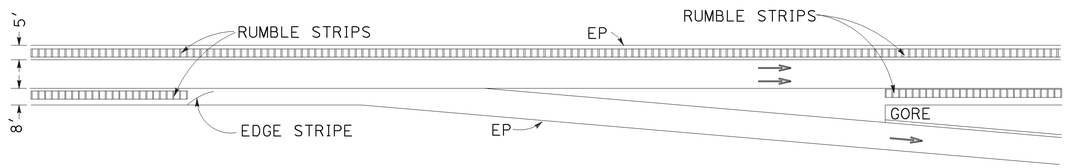

TYPICAL OFF-RAMP RUMBLE STRIP LIMITS

NOTE: SEE SHEET Q-3 FOR RUMBLE STRIP LIMITS

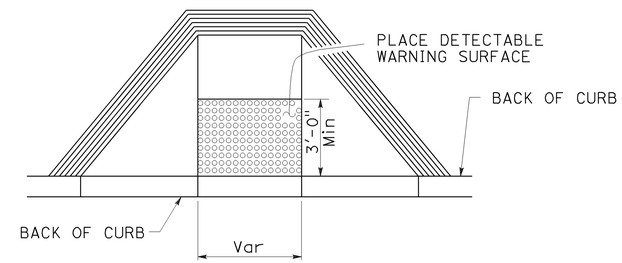

CURB RAMP DETECTABLE WARNING SURFACE

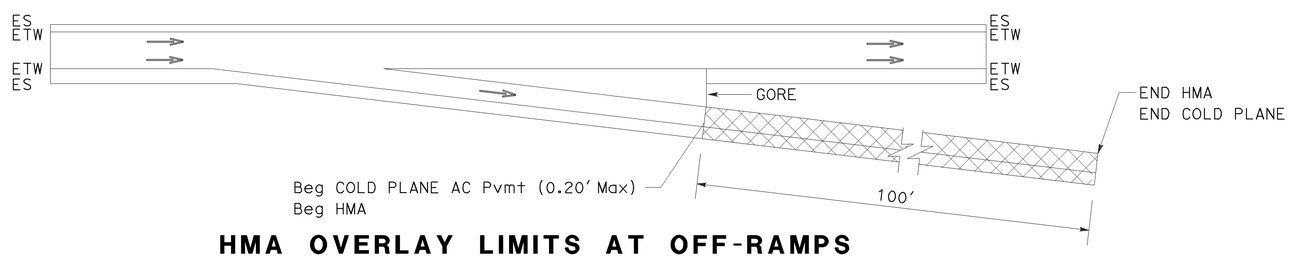

HMA OVERLAY LIMITS AT OFF-RAMPS

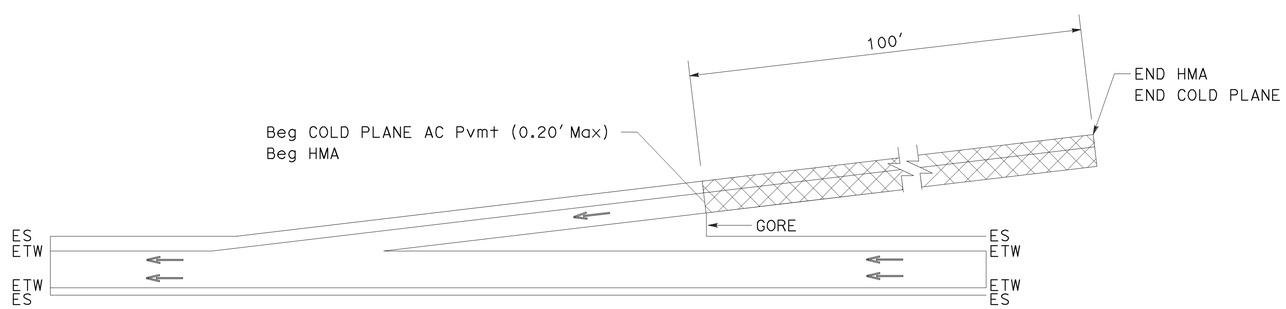

HMA OVERLAY LIMITS AT ON-RAMPS

CONSTRUCTION DETAILS

NO SCALE

C-2

STATE OF CALIFORNIA - DEPARTMENT OF TRANSPORTATION
Caltrans®
06-DESIGN

FUNCTIONAL SUPERVISOR: ROBERTO BANDA
CALCULATED-DESIGNED BY: ALEJANDRO CORREA
CHECKED BY: GILBERTO BACA
REVISED BY: AC
DATE REVISED: 09-15-10

LAST REVISION DATE PLOTTED => 01-JUL-2011
TIME PLOTTED => 10:39

Dist	COUNTY	ROUTE	POST MILES TOTAL PROJECT	SHEET No.	TOTAL SHEETS
05	Mon	68	R3.9/10.8	9	62

REGISTERED CIVIL ENGINEER 5-27-11 DATE

5-31-11
PLANS APPROVAL DATE

REGISTERED PROFESSIONAL ENGINEER ALEJANDRO CORREA No. 75776 Exp. 06-30-12 CIVIL STATE OF CALIFORNIA

THE STATE OF CALIFORNIA OR ITS OFFICERS OR AGENTS SHALL NOT BE RESPONSIBLE FOR THE ACCURACY OR COMPLETENESS OF SCANNED COPIES OF THIS PLAN SHEET.

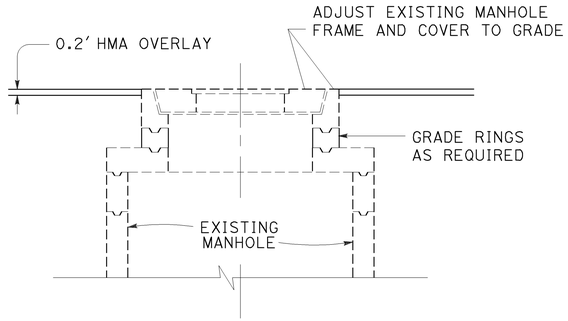

ADJUST MANHOLE TO GRADE

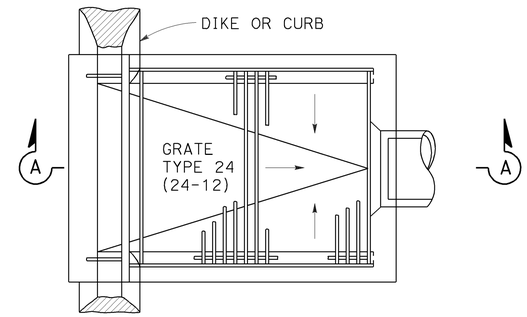

DI (TYPE GDO)

PM 4.85 ROUTE 68 (WB)
PM 5.10 ROUTE 68 (WB)

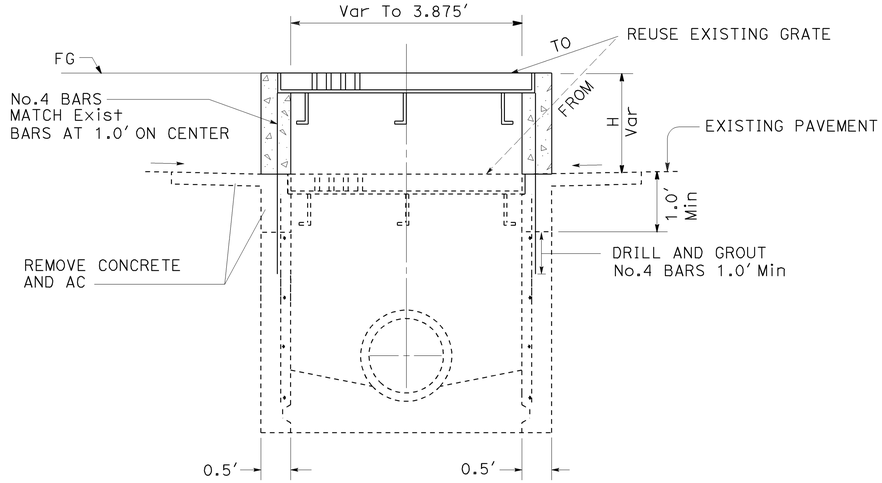

ADJUST INLET

PM 9.94 ROUTE 68 (WB)

DI (TYPE GDO)

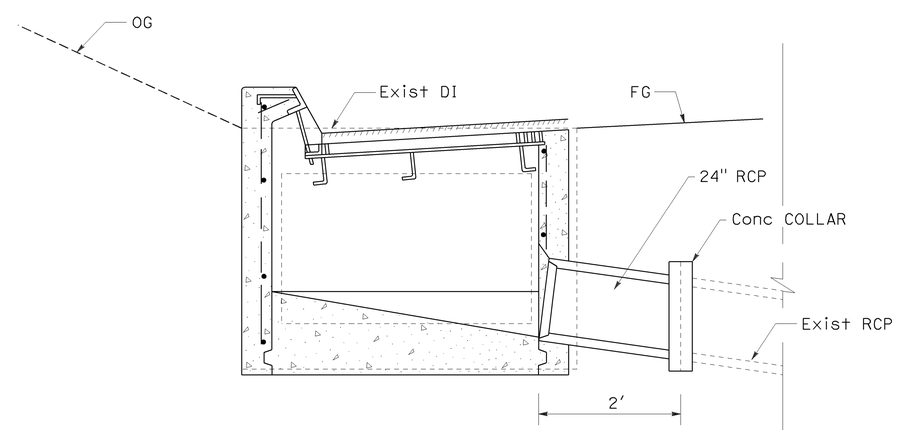

SECTION A-A

CONSTRUCTION DETAILS

NO SCALE

C-3

STATE OF CALIFORNIA - DEPARTMENT OF TRANSPORTATION
Caltrans
06-DESIGN

FUNCTIONAL SUPERVISOR: ROBERTO BANDA
CALCULATED-DESIGNED BY: ALEJANDRO CORREA
CHECKED BY: GILBERTO BACA
REVISED BY: AC
DATE REVISED: 09-15-10

LAST REVISION 12-28-10
DATE PLOTTED => 01-JUL-2011
TIME PLOTTED => 10:39

Dist	COUNTY	ROUTE	POST MILES TOTAL PROJECT	SHEET No.	TOTAL SHEETS
05	Mon	68	R3.9/10.8	10	62

REGISTERED CIVIL ENGINEER 5-27-11 DATE

5-31-11
PLANS APPROVAL DATE

REGISTERED PROFESSIONAL ENGINEER ALEJANDRO CORREA No. 75776 Exp. 06-30-12 CIVIL STATE OF CALIFORNIA

THE STATE OF CALIFORNIA OR ITS OFFICERS OR AGENTS SHALL NOT BE RESPONSIBLE FOR THE ACCURACY OR COMPLETENESS OF SCANNED COPIES OF THIS PLAN SHEET.

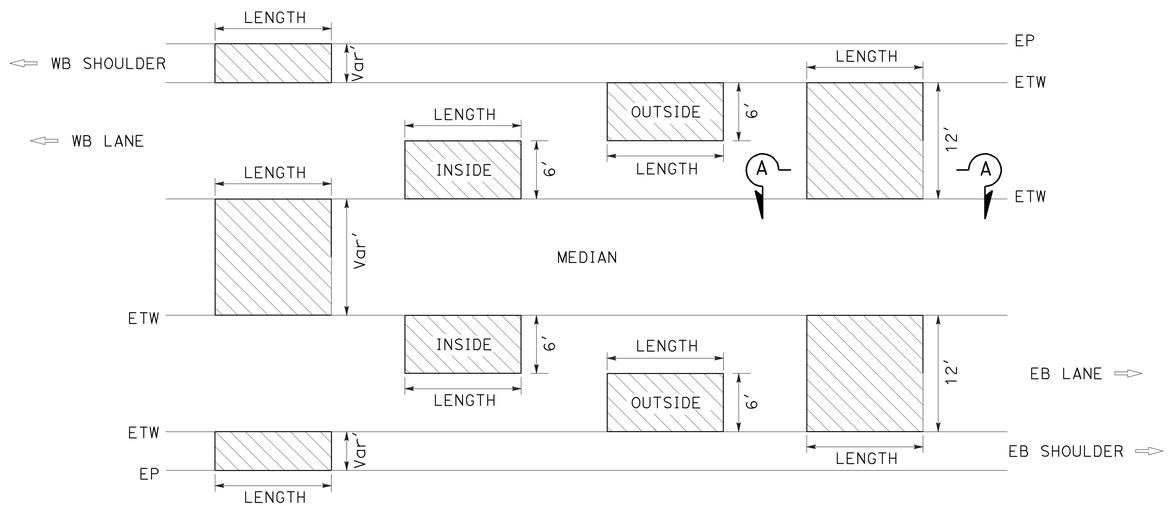

NOTE:EXACT LOCATIONS, WIDTH, DEPTH, AND LENGTH TO BE DETERMINED BY THE ENGINEER. SEE SHEET Q-2

REPLACE ASPHALT CONCRETE SURFACING

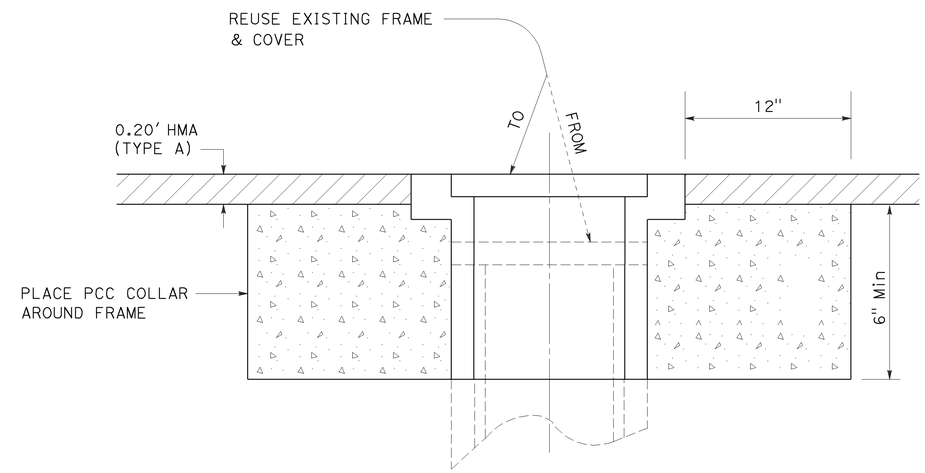

ADJUST WATER VALVE COVER TO GRADE

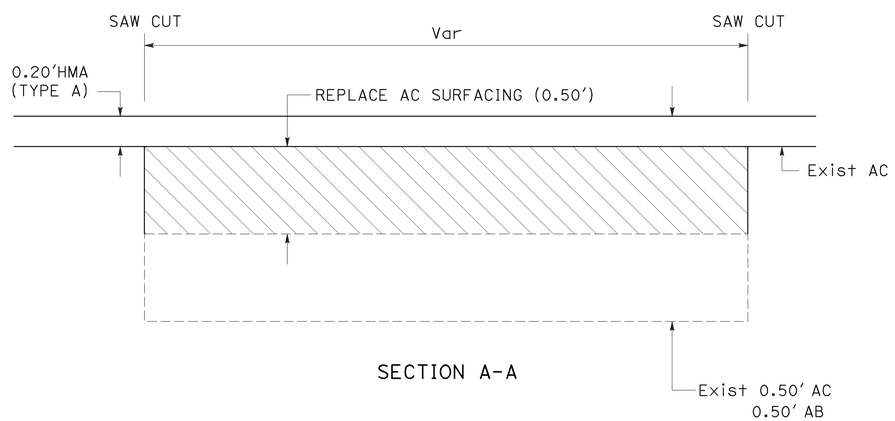

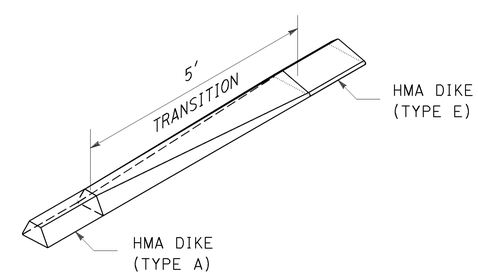

HMA DIKE TRANSITION
(TYPE A TO TYPE E)

CONSTRUCTION DETAILS
NO SCALE

C-4

REVISED BY	DATE REVISED
AC	09-15-10

CALCULATED-DESIGNED BY: ALEJANDRO CORREA
CHECKED BY: GILBERTO BACA
FUNCTIONAL SUPERVISOR: ROBERTO BANDA

STATE OF CALIFORNIA - DEPARTMENT OF TRANSPORTATION
Caltrans
06-DESIGN

LAST REVISION 12-28-10
DATE PLOTTED => 01-JUL-2011
TIME PLOTTED => 10:39

Dist	COUNTY	ROUTE	POST MILES TOTAL PROJECT	SHEET No.	TOTAL SHEETS
05	Mon	68	R3.9/10.8	11	62

REGISTERED CIVIL ENGINEER 5-27-11 DATE

5-31-11
PLANS APPROVAL DATE

REGISTERED PROFESSIONAL ENGINEER ALEJANDRO CORREA No. 75776 Exp. 06-30-12 CIVIL STATE OF CALIFORNIA

THE STATE OF CALIFORNIA OR ITS OFFICERS OR AGENTS SHALL NOT BE RESPONSIBLE FOR THE ACCURACY OR COMPLETENESS OF SCANNED COPIES OF THIS PLAN SHEET.

LEGEND

CENTERLINE RUMBLE STRIP (HMA, GROUND-IN INDENTATION)

TYPE D TWO-WAY YELLOW RETROREFLECTIVE PAVEMENT MARKER

4" YELLOW THERMOPLASTIC TRAFFIC STRIPE

NOTES:

1. OMIT DETAIL MODIFIED (CENTERLINE BUFFER ZONE) AT INTERSECTIONS AND FRONT OF PAVED DRIVEWAYS PER CONSTRUCTION DETAIL C-6

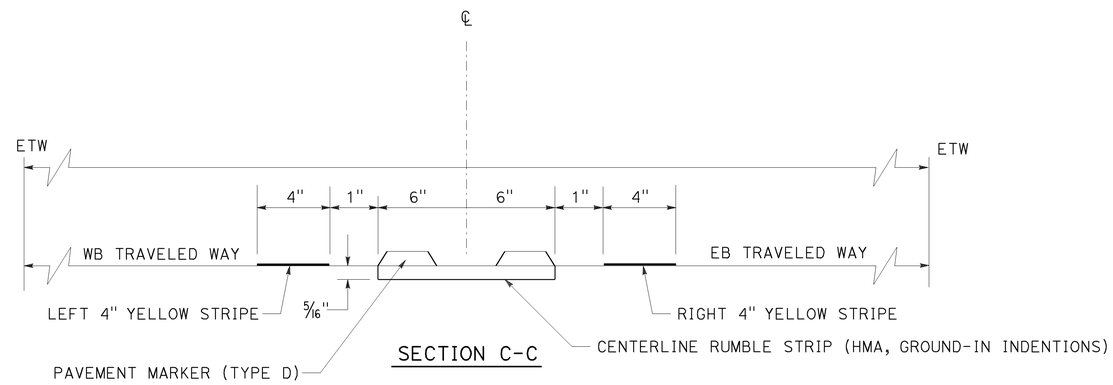

SECTION C-C

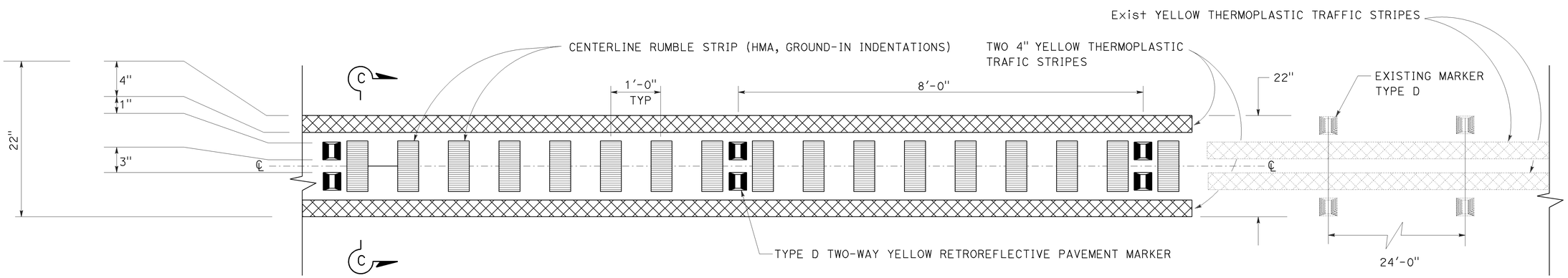

CENTERLINE RUMBLE STRIP AND PAVEMENT DETAIL (22 MODIFIED)

PM 4.64 TO 5.12
PM 5.22 TO 5.23
PM 6.03 TO 6.59
PM 7.18 TO 8.02
PM 8.36 TO 9.75
PM 10.10 TO 10.78

CONSTRUCTION DETAILS

NO SCALE

C-5

STATE OF CALIFORNIA - DEPARTMENT OF TRANSPORTATION
Caltrans
06-DESIGN

FUNCTIONAL SUPERVISOR: ROBERTO BANDA
CALCULATED-DESIGNED BY: ALEJANDRO CORREA
CHECKED BY: GILBERTO BACA
REVISED BY: AC
DATE REVISED: 09-15-10

LAST REVISION 12-28-10
DATE PLOTTED => 01-JUL-2011
TIME PLOTTED => 10:39

Dist	COUNTY	ROUTE	POST MILES TOTAL PROJECT	SHEET No.	TOTAL SHEETS
05	Mon	68	R3.9/10.8	12	62

REGISTERED CIVIL ENGINEER 5-27-11 DATE

5-31-11
PLANS APPROVAL DATE

REGISTERED PROFESSIONAL ENGINEER ALEJANDRO CORREA No. 75776 Exp. 06-30-12 CIVIL STATE OF CALIFORNIA

THE STATE OF CALIFORNIA OR ITS OFFICERS OR AGENTS SHALL NOT BE RESPONSIBLE FOR THE ACCURACY OR COMPLETENESS OF SCANNED COPIES OF THIS PLAN SHEET.

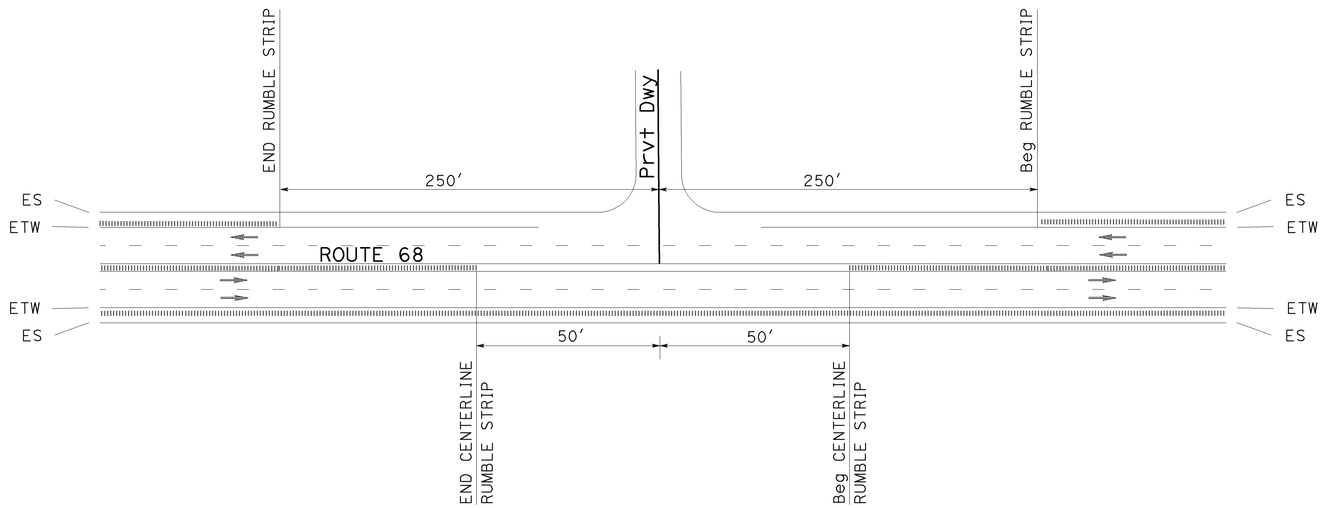

PRIVATE Rd INTERSECTION CENTERLINE RUMBLE STRIP

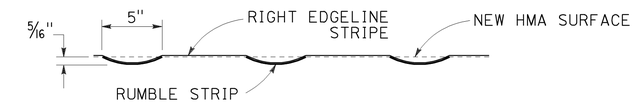

ELEVATION

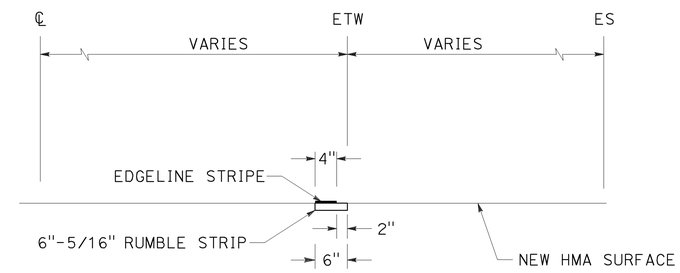

SECTION A-A

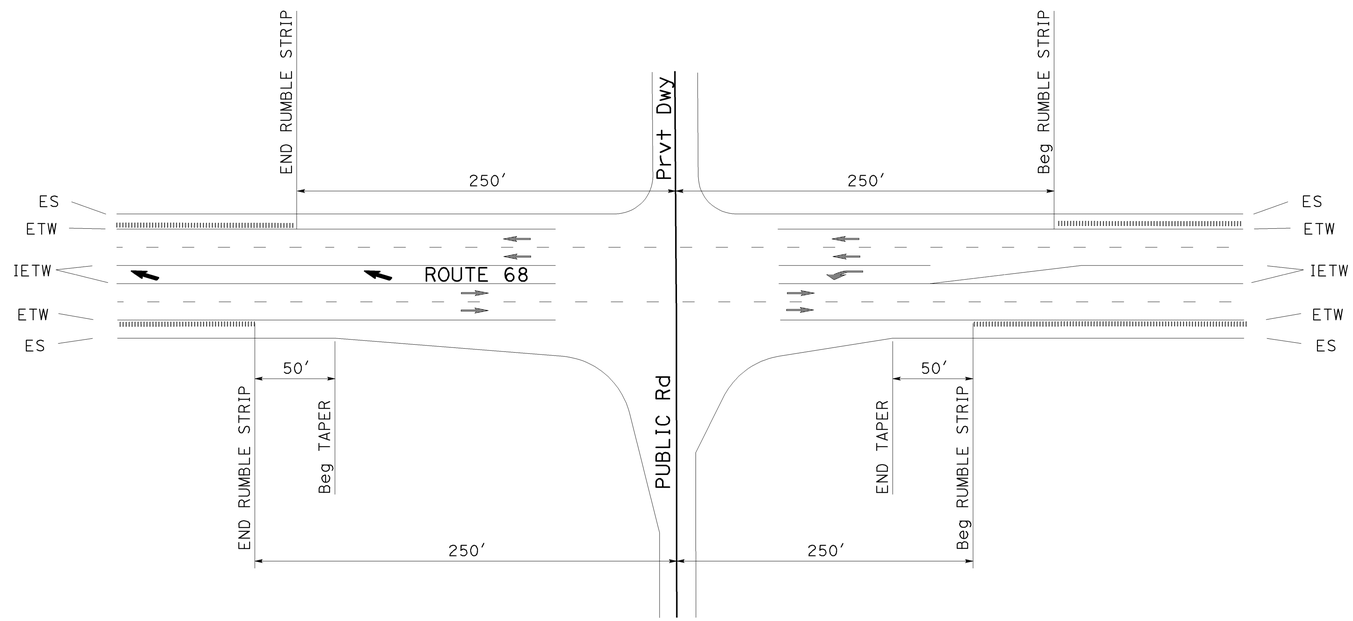

PUBLIC & PRIVATE Rd INTERSECTION RUMBLE STRIP

NOTE: SEE Q-3 SHEET FOR RUMBLE STRIP LIMITS

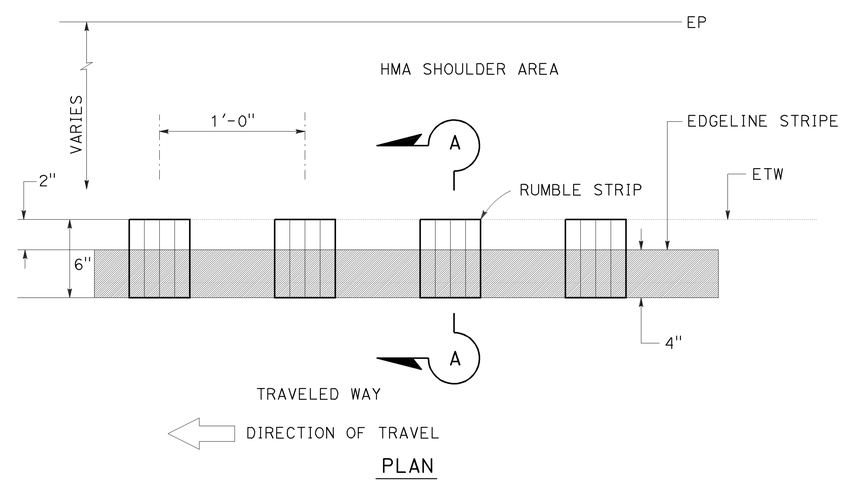

PLAN

RUMBLE STRIP (ALTERNATE EDGE LINE RUMBLE STRIP)

CONSTRUCTION DETAILS

NO SCALE

C-6

STATE OF CALIFORNIA - DEPARTMENT OF TRANSPORTATION
Caltrans
06-DESIGN

FUNCTIONAL SUPERVISOR: ROBERTO BANDA
CALCULATED-DESIGNED BY: ALEJANDRO CORREA
CHECKED BY: GILBERTO BACA
REVISED BY: AC
DATE REVISED: 09-15-10

LAST REVISION 12-28-10
DATE PLOTTED => 01-JUL-2011
TIME PLOTTED => 10:39

Dist	COUNTY	ROUTE	POST MILES TOTAL PROJECT	SHEET No.	TOTAL SHEETS
05	Mon	68	R3.9/10.8	13	62

REGISTERED CIVIL ENGINEER 5-27-11 DATE

5-31-11
PLANS APPROVAL DATE

REGISTERED PROFESSIONAL ENGINEER ALEJANDRO CORREA No. 75776 Exp. 06-30-12 CIVIL STATE OF CALIFORNIA

THE STATE OF CALIFORNIA OR ITS OFFICERS OR AGENTS SHALL NOT BE RESPONSIBLE FOR THE ACCURACY OR COMPLETENESS OF SCANNED COPIES OF THIS PLAN SHEET.

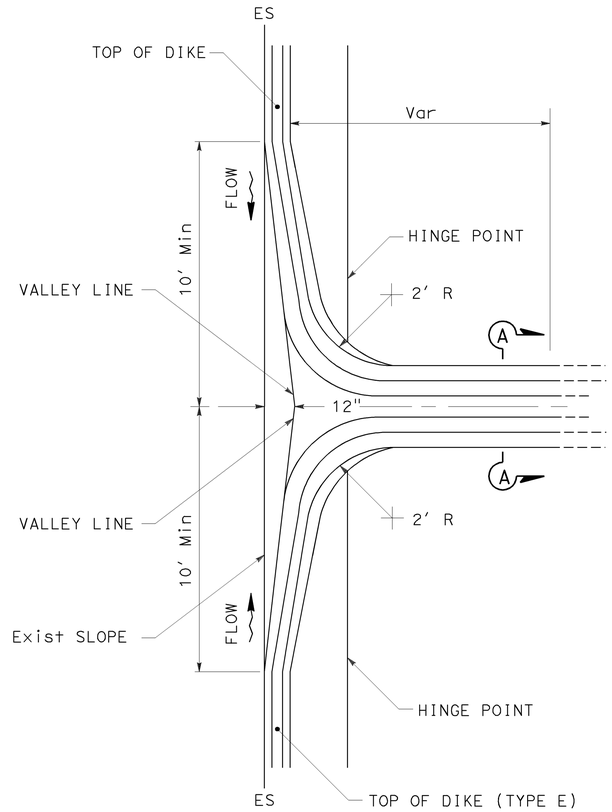

PLACE HMA (Misc AREA)
(MODIFY HMA OVERSIDE DRAIN DETAIL)

SAG LOCATION

PM 5.23 ROUTE 68 (JOSSELYN CANYON)
PM 5.78 ROUTE 68 (DRIVEWAY)
PM 5.62 ROUTE 68 (OLMSTED)
PM 5.63 ROUTE 68 (OLMSTED)

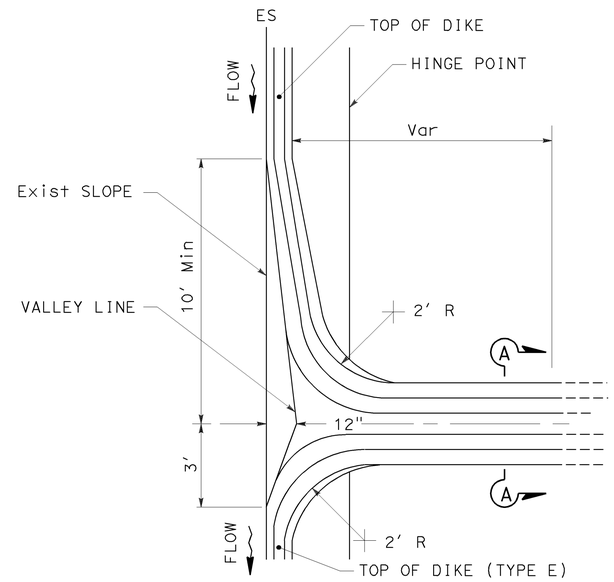

PLACE HMA (Misc AREA)
(MODIFY HMA OVERSIDE DRAIN DETAIL)

CONTINUOUS SLOPE

PM 6.82 ROUTE 68 (ROUTE 218)
PM 5.54 ROUTE 68 (OLMSTED)
PM 5.48 ROUTE 68 (OLMSTED)

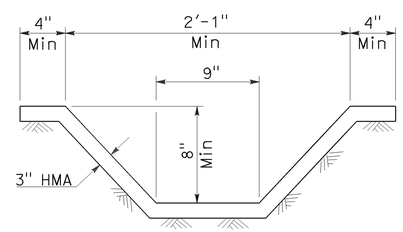

SECTION A-A

CONSTRUCTION DETAILS

NO SCALE

C-7

STATE OF CALIFORNIA - DEPARTMENT OF TRANSPORTATION
Caltrans
06-DESIGN

FUNCTIONAL SUPERVISOR: ROBERTO BANDA
CALCULATED-DESIGNED BY: ALEJANDRO CORREA
CHECKED BY: GILBERTO BACA
REVISED BY: AC
DATE REVISED: 09-15-10

LAST REVISION 12-28-10
DATE PLOTTED => 01-JUL-2011
TIME PLOTTED => 10:39

Dist	COUNTY	ROUTE	POST MILES TOTAL PROJECT	SHEET No.	TOTAL SHEETS
05	Mon	68	R3.9/10.8	14	62

REGISTERED CIVIL ENGINEER 5-27-11 DATE

5-31-11
PLANS APPROVAL DATE

REGISTERED PROFESSIONAL ENGINEER ALEJANDRO CORREA No. 75776 Exp. 06-30-12 CIVIL STATE OF CALIFORNIA

THE STATE OF CALIFORNIA OR ITS OFFICERS OR AGENTS SHALL NOT BE RESPONSIBLE FOR THE ACCURACY OR COMPLETENESS OF SCANNED COPIES OF THIS PLAN SHEET.

NOTES:

1. USE CASE 1 OR CASE 2 WHEN ONE POST OMITTED.
2. USE CASE 3 WHEN TWO POSTS ARE OMITTED.
3. FOR OTHER DETAILS, SEE STANDARD PLANS A77A2, A77B1, A77C2 AND 4.
4. LOCATIONS OF NESTING SHALL BE TO AVOID UTILITY / DRAINAGE FACILITY OR AS DIRECTED BY THE ENGINEER.
5. OFFSET THE ADDITIONAL METAL BEAM GUARD RAILING SPLICES 6'-3" FROM THE BASE METAL BEAM GUARD RAILING SPLICES.

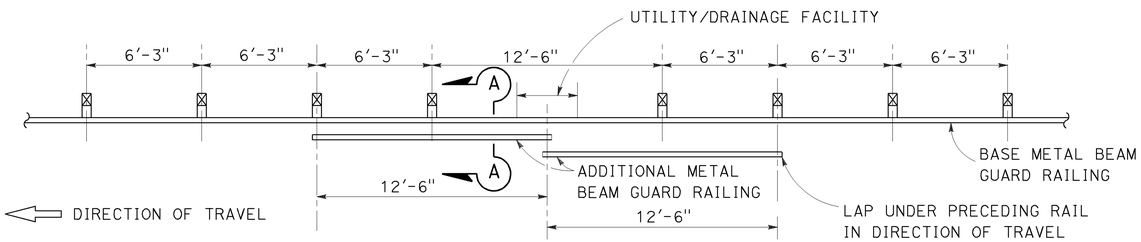

CASE 1
ONE POST OMITTED (SPLICE IN CENTER)

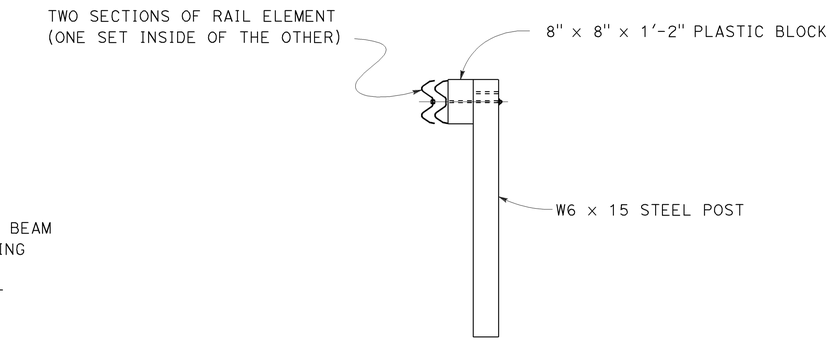

SECTION A-A
SEE NOTE 3

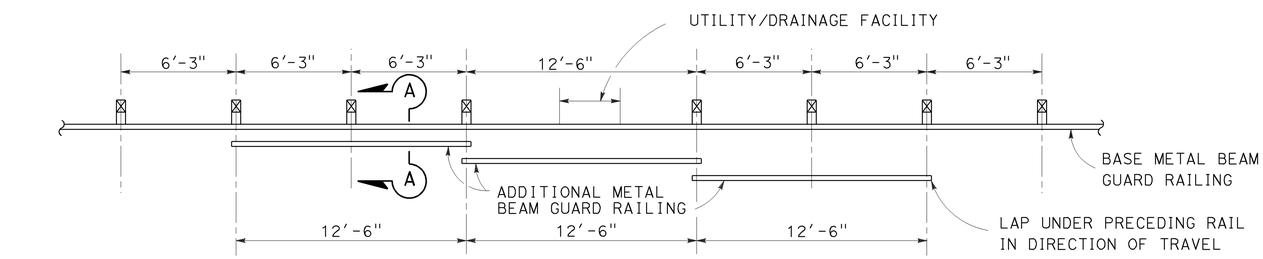

CASE 2
ONE POST OMITTED (SPLICE AT POSTS)

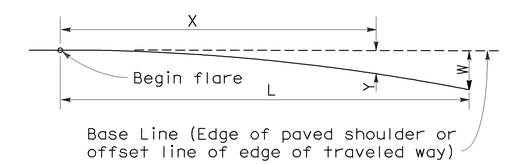

$$Y = \frac{WX^2}{L^2}$$

Y = Offset from base line
W = Maximum offset
X = Distance along base line
L = Length of flare

PARABOLIC FLARE OFFSETS

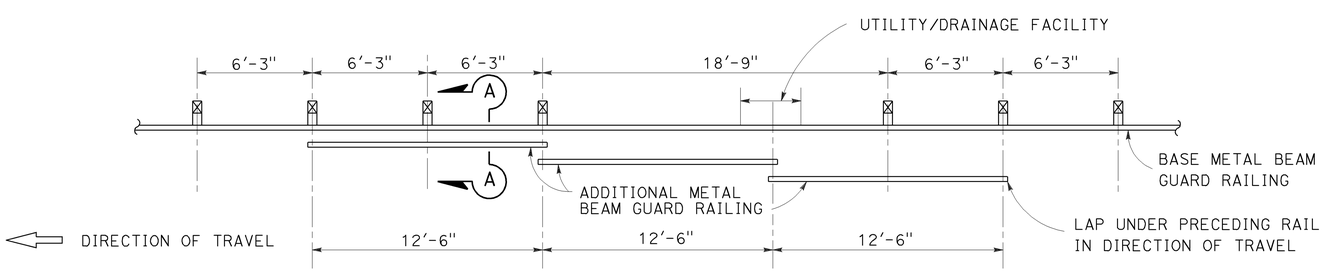

CASE 3
TWO POSTS OMITTED

LONG SPAN NESTED GUARD RAILING

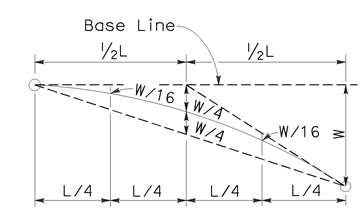

TYPICAL PARABOLIC LAYOUT

CONSTRUCTION DETAILS

NO SCALE

C-8

STATE OF CALIFORNIA - DEPARTMENT OF TRANSPORTATION
Caltrans 06-DESIGN

FUNCTIONAL SUPERVISOR: ROBERTO BANDA
CALCULATED-DESIGNED BY: ALEJANDRO CORREA
CHECKED BY: GILBERTO BACA
REVISED BY: AC
DATE REVISED: 09-15-10

LAST REVISION 12-28-10 | DATE PLOTTED => 01-JUL-2011 | TIME PLOTTED => 10:39

Dist	COUNTY	ROUTE	POST MILES TOTAL PROJECT	SHEET No.	TOTAL SHEETS
05	Mon	68	R3.9/10.8	15	62

REGISTERED CIVIL ENGINEER 5-27-11 DATE

5-31-11
PLANS APPROVAL DATE

REGISTERED PROFESSIONAL ENGINEER ALEJANDRO CORREA No. 75776 Exp. 06-30-12 CIVIL STATE OF CALIFORNIA

THE STATE OF CALIFORNIA OR ITS OFFICERS OR AGENTS SHALL NOT BE RESPONSIBLE FOR THE ACCURACY OR COMPLETENESS OF SCANNED COPIES OF THIS PLAN SHEET.

NOTES:

1. SEE MANUFACTURER PLANS FOR ADDITIONAL DETAILS AND DIMENSIONS NOT SHOWN ON PLANS.
2. SYSTEM TO BE INSTALLED PER MANUFACTURER SPECIFICATIONS.
3. ONLY TIGHTEN THE CABLE ASSEMBLIES USING THE NUTS AT THE CABLE BRACKET (SEE DETAIL D). DO NOT TIGHTEN THE CABLES AT THE FRONT OF THE GROUND ANCHOR.
4. WHEN DRIVING STEEL POST, ENSURE THAT A DRIVING CAP WITH TIMBER OR PLASTIC INSERT IS USED TO PREVENT DAMAGE TO THE GALVANIZING TO THE TOP OF THE STEEL POST.

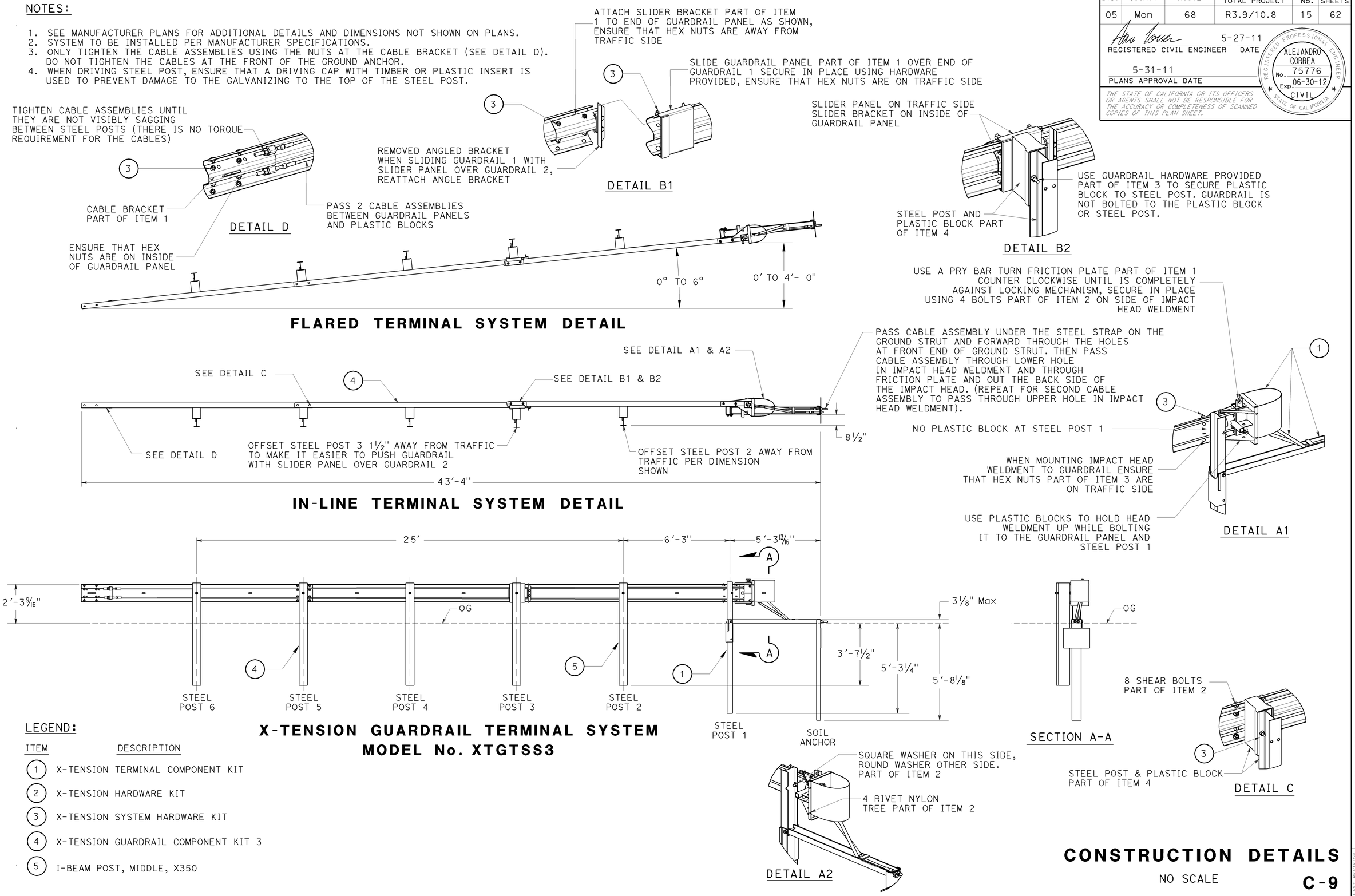

LEGEND:

ITEM	DESCRIPTION
1	X-TENSION TERMINAL COMPONENT KIT
2	X-TENSION HARDWARE KIT
3	X-TENSION SYSTEM HARDWARE KIT
4	X-TENSION GUARDRAIL COMPONENT KIT 3
5	I-BEAM POST, MIDDLE, X350

CONSTRUCTION DETAILS

NO SCALE

C-9

STATE OF CALIFORNIA - DEPARTMENT OF TRANSPORTATION
06-DESIGN
FUNCTIONAL SUPERVISOR: ROBERTO BANDA
CALCULATED-DESIGNED BY: ALEJANDRO CORREA
CHECKED BY: GILBERTO BACA
REVISED BY: AC
DATE REVISED: 09-15-10

LAST REVISION 12-28-10 | DATE PLOTTED => 01-JUL-2011 | TIME PLOTTED => 10:39

Dist	COUNTY	ROUTE	POST MILES TOTAL PROJECT	SHEET No.	TOTAL SHEETS
05	Mon	68	R3.9/10.8	16	62

REGISTERED CIVIL ENGINEER 5-27-11 DATE

5-31-11
PLANS APPROVAL DATE

REGISTERED PROFESSIONAL ENGINEER ALEJANDRO CORREA No. 75776 Exp. 06-30-12 CIVIL STATE OF CALIFORNIA

THE STATE OF CALIFORNIA OR ITS OFFICERS OR AGENTS SHALL NOT BE RESPONSIBLE FOR THE ACCURACY OR COMPLETENESS OF SCANNED COPIES OF THIS PLAN SHEET.

COLD PLANE AC PAVEMENT POSTMILE

WB OFF-RAMP TO ROUTE 1 NB - PM 4.15
WB ROUTE 68 ON-RAMP FROM NB ROUTE 1 - PM 3.95

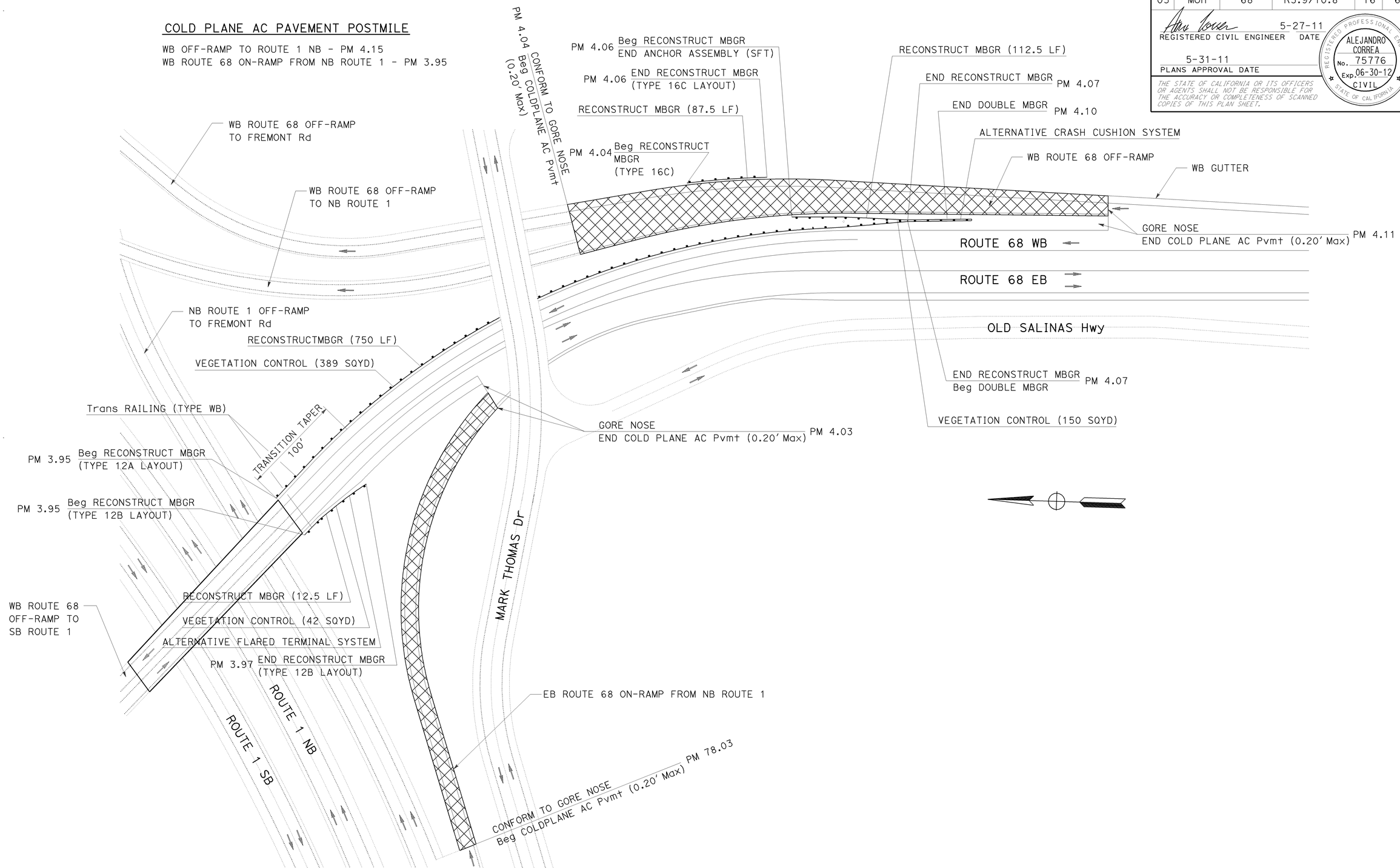

NOTE: EXISTING UTILITY FACILITIES ARE NOT SHOWN ON THESE PLANS.

CONSTRUCTION DETAILS

NO SCALE

C-10

REVISED BY	AC
DATE REVISED	09-15-10
ALEJANDRO CORREA	
GILBERTO BACA	
CALCULATED-DESIGNED BY	
CHECKED BY	
FUNCTIONAL SUPERVISOR	ROBERTO BANDA

STATE OF CALIFORNIA - DEPARTMENT OF TRANSPORTATION
Caltrans
06-DESIGN

LAST REVISION 12-28-10 | DATE PLOTTED => 01-JUL-2011 | TIME PLOTTED => 10:39

Dist	COUNTY	ROUTE	POST MILES TOTAL PROJECT	SHEET No.	TOTAL SHEETS
05	Mon	68	R3.9/10.8	17	62

REGISTERED CIVIL ENGINEER DATE 5-27-11

PLANS APPROVAL DATE 5-31-11

REGISTERED PROFESSIONAL ENGINEER ALEJANDRO CORREA No. 75776 Exp. 06-30-12 CIVIL STATE OF CALIFORNIA

THE STATE OF CALIFORNIA OR ITS OFFICERS OR AGENTS SHALL NOT BE RESPONSIBLE FOR THE ACCURACY OR COMPLETENESS OF SCANNED COPIES OF THIS PLAN SHEET.

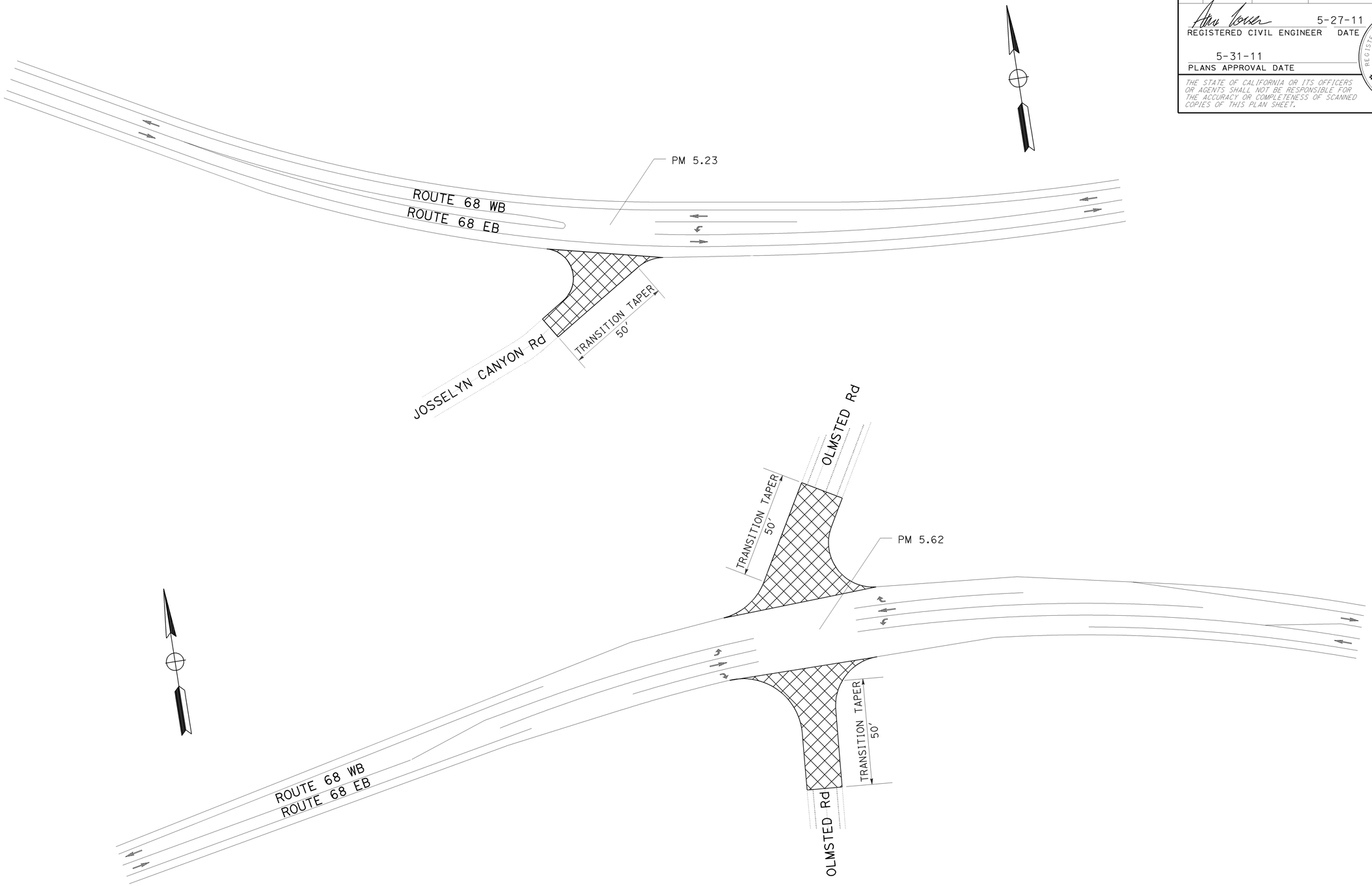

NOTE: EXISTING UTILITY FACILITIES ARE NOT SHOWN ON THESE PLANS.

CONSTRUCTION DETAILS

NO SCALE

C-11

STATE OF CALIFORNIA - DEPARTMENT OF TRANSPORTATION

Caltrans

06-DESIGN

FUNCTIONAL SUPERVISOR: ROBERTO BANDA

CALCULATED-DESIGNED BY: ALEJANDRO CORREA

CHECKED BY: GILBERTO BACA

REVISED BY: AC

DATE REVISED: 09-15-10

LAST REVISION 12-28-10 | DATE PLOTTED => 01-JUL-2011 | TIME PLOTTED => 10:39

Dist	COUNTY	ROUTE	POST MILES TOTAL PROJECT	SHEET No.	TOTAL SHEETS
05	Mon	68	R3.9/10.8	18	62

REGISTERED CIVIL ENGINEER 5-27-11 DATE

5-31-11
PLANS APPROVAL DATE

REGISTERED PROFESSIONAL ENGINEER ALEJANDRO CORREA No. 75776 Exp. 06-30-12 CIVIL STATE OF CALIFORNIA

THE STATE OF CALIFORNIA OR ITS OFFICERS OR AGENTS SHALL NOT BE RESPONSIBLE FOR THE ACCURACY OR COMPLETENESS OF SCANNED COPIES OF THIS PLAN SHEET.

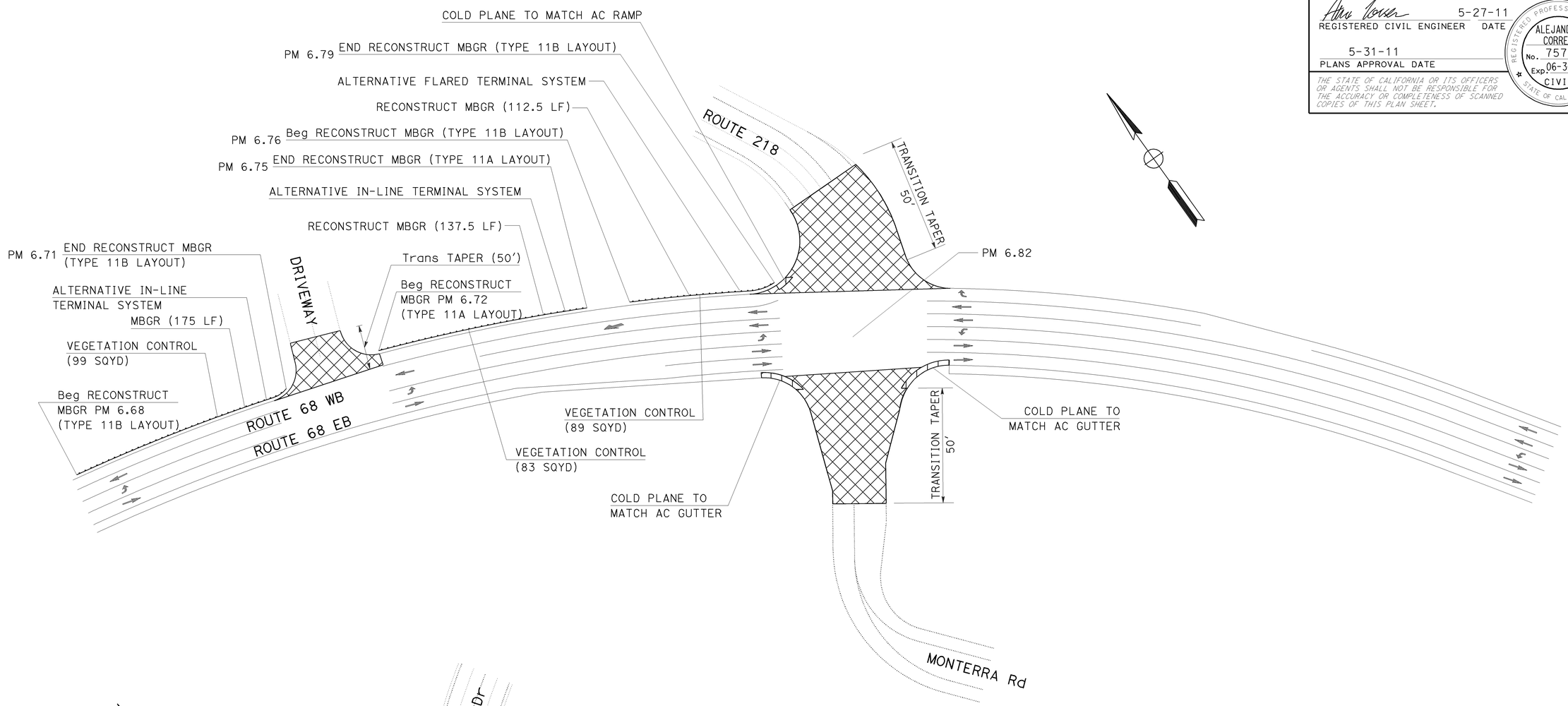

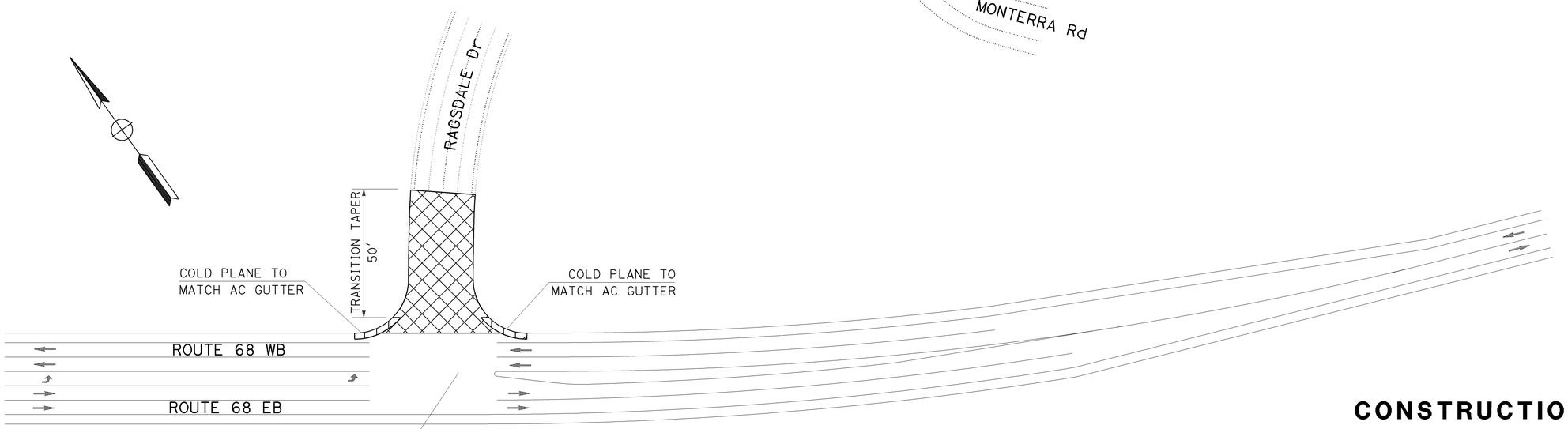

NOTE: EXISTING UTILITY FACILITIES ARE NOT SHOWN ON THESE PLANS.

CONSTRUCTION DETAILS

NO SCALE

C-12

STATE OF CALIFORNIA - DEPARTMENT OF TRANSPORTATION
Caltrans
06-DESIGN

FUNCTIONAL SUPERVISOR: ROBERTO BANDA
CALCULATED-DESIGNED BY: ALEJANDRO CORREA
CHECKED BY: GILBERTO BACA
REVISED BY: AC
DATE REVISED: 09-15-10

LAST REVISION 12-28-10 | DATE PLOTTED => 01-JUL-2011 | TIME PLOTTED => 10:39

Dist	COUNTY	ROUTE	POST MILES TOTAL PROJECT	SHEET No.	TOTAL SHEETS
05	Mon	68	R3.9/10.8	19	62

REGISTERED CIVIL ENGINEER 5-27-11 DATE

5-31-11
PLANS APPROVAL DATE

REGISTERED PROFESSIONAL ENGINEER
ALEJANDRO CORREA
No. 75776
Exp. 06-30-12
CIVIL
STATE OF CALIFORNIA

THE STATE OF CALIFORNIA OR ITS OFFICERS OR AGENTS SHALL NOT BE RESPONSIBLE FOR THE ACCURACY OR COMPLETENESS OF SCANNED COPIES OF THIS PLAN SHEET.

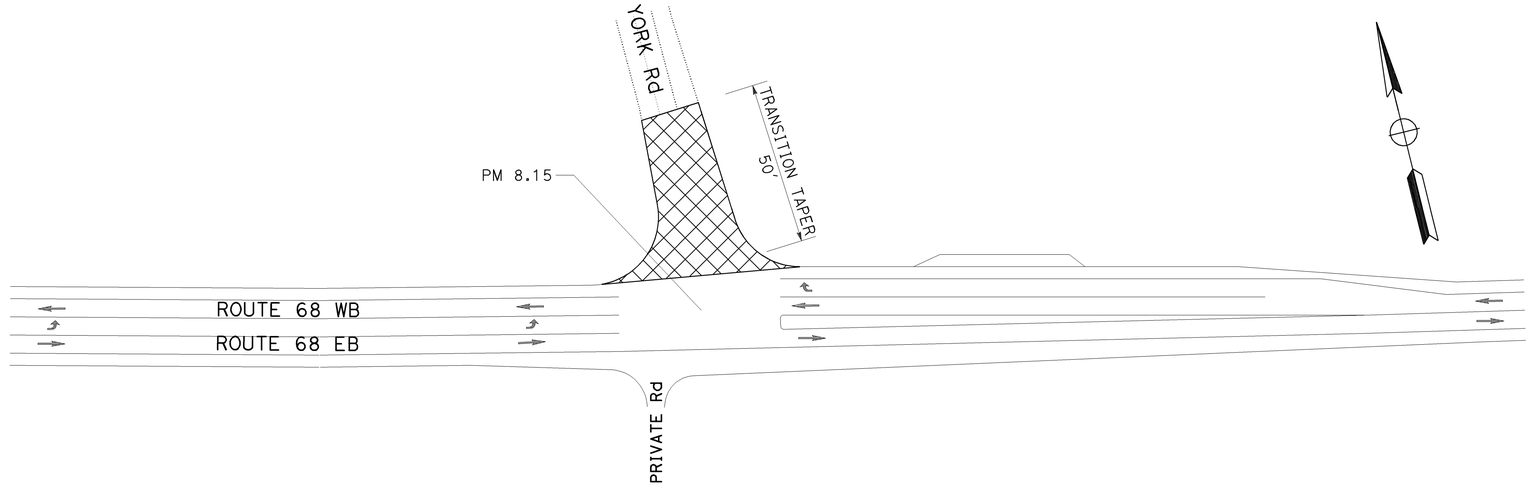

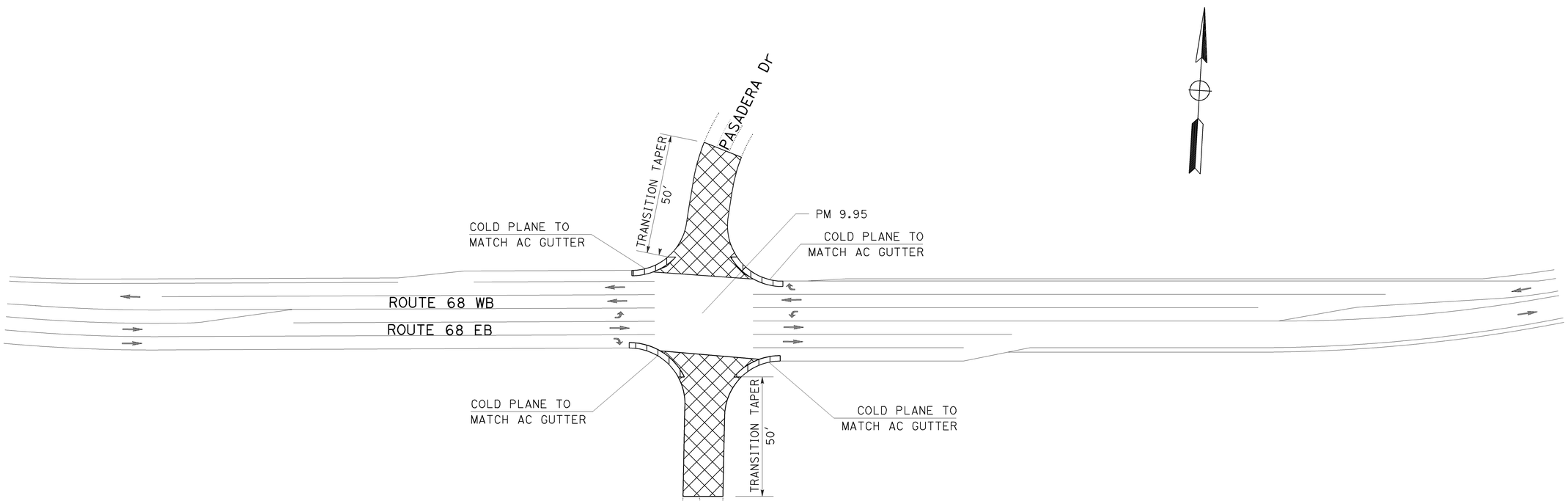

NOTE: EXISTING UTILITY FACILITIES ARE NOT SHOWN ON THESE PLANS.

CONSTRUCTION DETAILS

NO SCALE

C-13

REVISED BY	AC
DATE REVISED	09-15-10
CALCULATED-DESIGNED BY	ALEJANDRO CORREA
CHECKED BY	GILBERTO BACA
FUNCTIONAL SUPERVISOR	ROBERTO BANDA

STATE OF CALIFORNIA - DEPARTMENT OF TRANSPORTATION
Caltrans
06-DESIGN

LAST REVISION DATE PLOTTED => 01-JUL-2011
12-28-10 TIME PLOTTED => 10:40

Dist	COUNTY	ROUTE	POST MILES TOTAL PROJECT	SHEET No.	TOTAL SHEETS
05	Mon	68	R3.9/10.8	20	62

REGISTERED CIVIL ENGINEER 06/15/11 DATE

5-31-11
PLANS APPROVAL DATE

REGISTERED PROFESSIONAL ENGINEER HUE NGUYEN No. 74484 Exp. 12/31/11 CIVIL STATE OF CALIFORNIA

THE STATE OF CALIFORNIA OR ITS OFFICERS OR AGENTS SHALL NOT BE RESPONSIBLE FOR THE ACCURACY OR COMPLETENESS OF SCANNED COPIES OF THIS PLAN SHEET.

STATIONARY MOUNTED CONSTRUCTION AREA SIGNS

SIGN No.	SIGN CODE	SIGN MESSAGE	PANEL SIZE	No. OF POST AND SIZE	No. OF SIGNS EA
A	G20-1	ROAD WORK NEXT 7 MILES	90" x 48"	1 - 4" x 6"	2
B	G20-2	END ROAD WORK	36" x 18"	1 - 4" x 4"	11
C	W20-1	ROAD WORK AHEAD	36" x 36"	1 - 4" x 4"	10
D	C40 (CA)	TRAFFIC FINES DOUBLED IN CONSTRUCTION ZONES	72" x 36"	2 - 4" x 6"	2
E	CPFIS	CONSTRUCTION PROJECT FUNDING IDENTIFICATION SIGN	90" x 60"	2 - 6" x 8"	2

NOTE:
1. LOCATIONS OF CONSTRUCTION AREA SIGNS SHOWN ARE APPROXIMATE EXACT LOCATIONS TO BE DETERMINED BY THE ENGINEER.
2. FOR ADDITIONAL CONSTRUCTION AREA SIGNS SEE TRAFFIC HANDLING SHEETS.

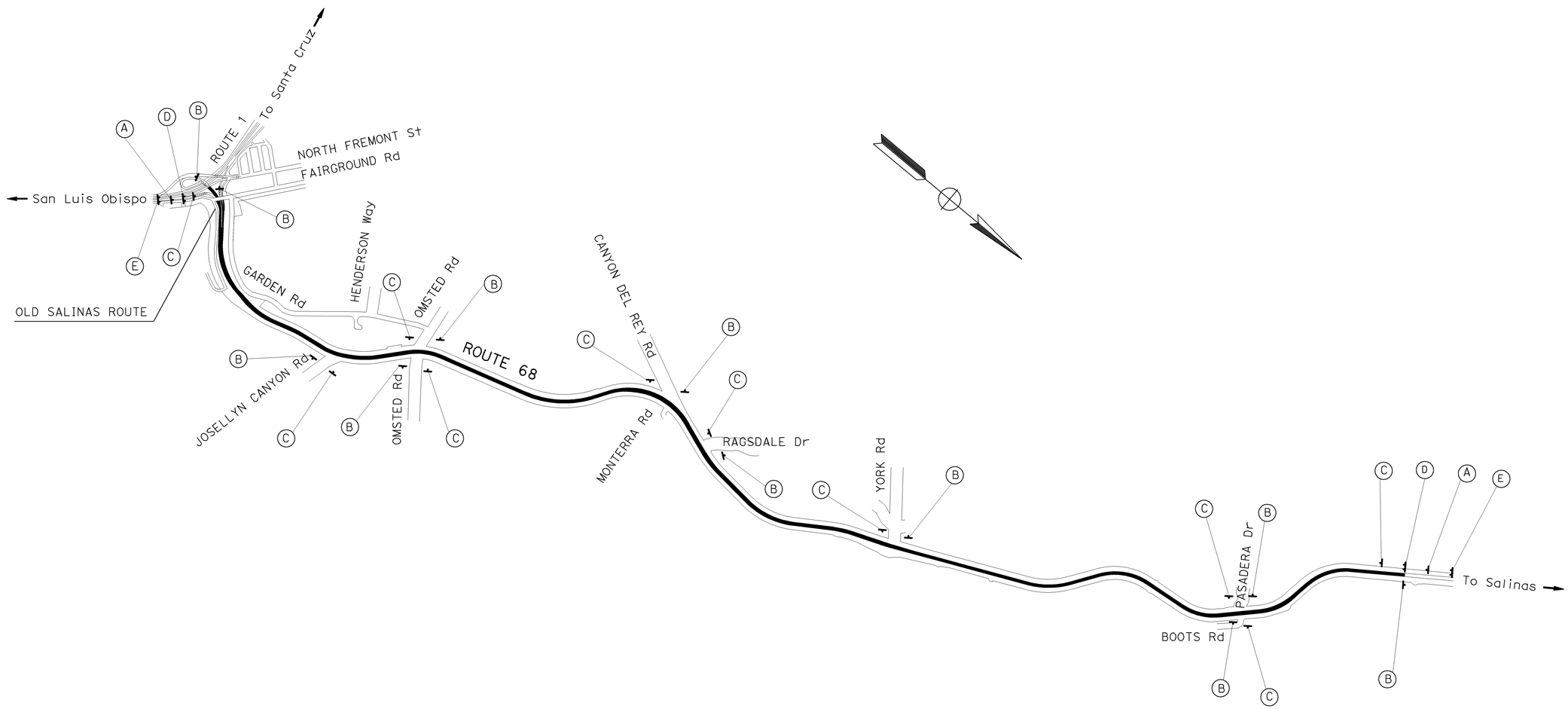

THIS PLAN ACCURATE FOR CONSTRUCTION AREA SIGNS WORK ONLY.

CONSTRUCTION AREA SIGNS

NO SCALE

CS-1

STATE OF CALIFORNIA - DEPARTMENT OF TRANSPORTATION
Caltrans®
TRAFFIC DESIGN

FUNCTIONAL SUPERVISOR: MOHAMMED QATAMI
CALCULATED-DESIGNED BY: FERNANDO LOPEZ
CHECKED BY: HUE NGUYEN
REVISED BY
DATE REVISED

LAST REVISION 05-31-11
DATE PLOTTED => 01-JUL-2011
TIME PLOTTED => 10:40

Dist	COUNTY	ROUTE	POST MILES TOTAL PROJECT	SHEET No.	TOTAL SHEETS
05	Mon	68	R3.9/10.8	21	62

REGISTERED CIVIL ENGINEER 06/15/11 DATE

5-31-11
PLANS APPROVAL DATE

REGISTERED PROFESSIONAL ENGINEER HUE NGUYEN No. 74484 Exp. 12/31/11 CIVIL STATE OF CALIFORNIA

THE STATE OF CALIFORNIA OR ITS OFFICERS OR AGENTS SHALL NOT BE RESPONSIBLE FOR THE ACCURACY OR COMPLETENESS OF SCANNED COPIES OF THIS PLAN SHEET.

LEGEND

- ◯ CONSTRUCTION AREA SIGN No.
- → DIRECTION OF TRAVEL
- PORTABLE CHANGEABLE MESSAGE SIGN (PCMS)

NOTES:

1. DURING THE EB OFF-RAMP CLOSURE. THE PCMS MESSAGE AT (M) SHOULD READ...

1ST FRAME	2ND FRAME
SALINAS EXIT CLOSED	USE CASA VERDE WAY EXIT

2. DURING THE EB OFF-RAMP CLOSURE. THE PCMS MESSAGE AT (N) SHOULD READ...

1ST FRAME	2ND FRAME
FOR SALINAS DETOUR	USE NEXT EXIT

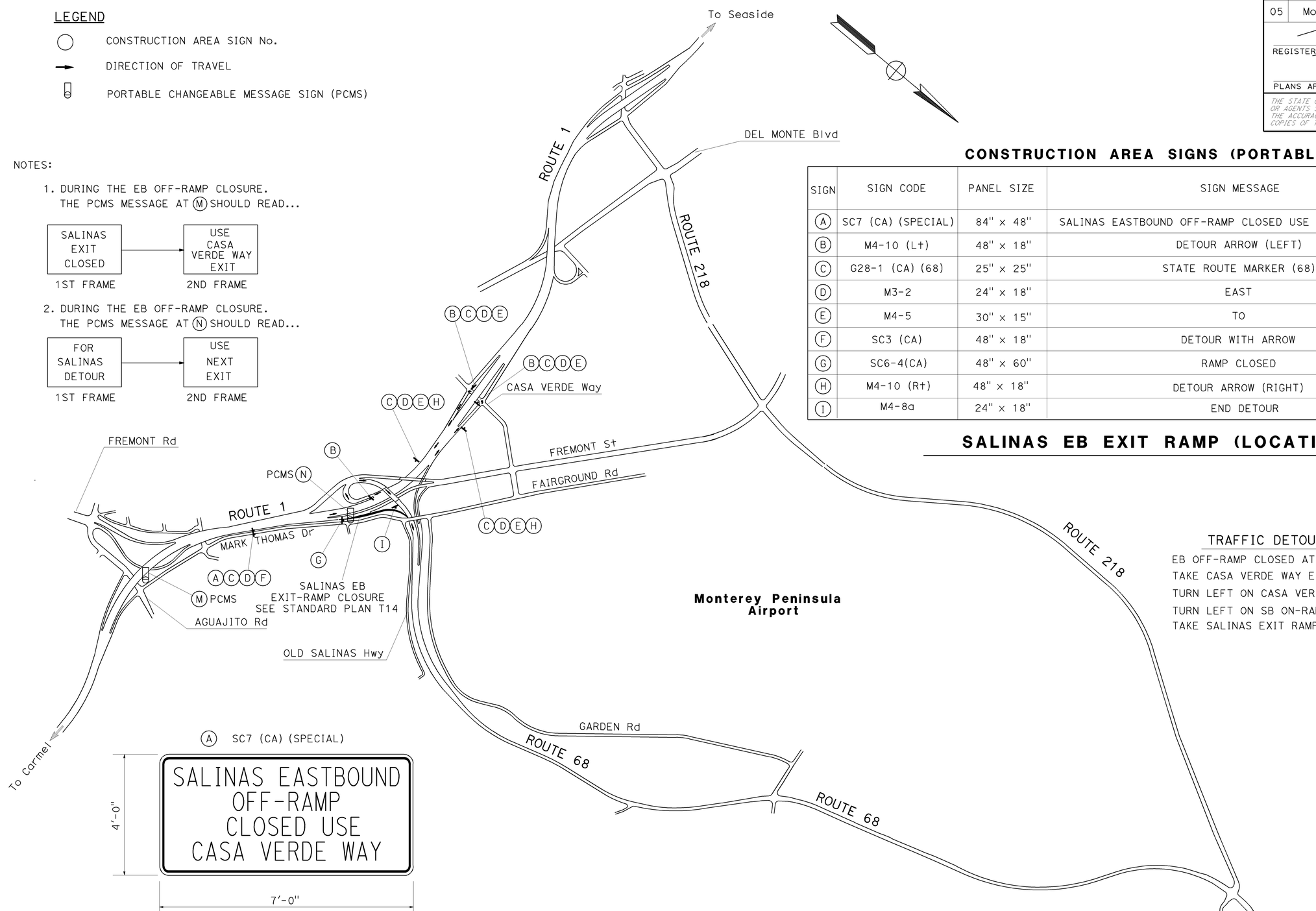

CONSTRUCTION AREA SIGNS (PORTABLE)

SIGN	SIGN CODE	PANEL SIZE	SIGN MESSAGE	No. OF SIGNS
(A)	SC7 (CA) (SPECIAL)	84" x 48"	SALINAS EASTBOUND OFF-RAMP CLOSED USE CASA VERDE WAY	1
(B)	M4-10 (Lt)	48" x 18"	DETOUR ARROW (LEFT)	3
(C)	G28-1 (CA) (68)	25" x 25"	STATE ROUTE MARKER (68)	5
(D)	M3-2	24" x 18"	EAST	5
(E)	M4-5	30" x 15"	TO	4
(F)	SC3 (CA)	48" x 18"	DETOUR WITH ARROW	1
(G)	SC6-4(CA)	48" x 60"	RAMP CLOSED	1
(H)	M4-10 (Rt)	48" x 18"	DETOUR ARROW (RIGHT)	2
(I)	M4-8a	24" x 18"	END DETOUR	1

SALINAS EB EXIT RAMP (LOCATION 1)

TRAFFIC DETOUR PLAN

EB OFF-RAMP CLOSED AT SALINAS.
TAKE CASA VERDE WAY EXIT.
TURN LEFT ON CASA VERDE WAY.
TURN LEFT ON SB ON-RAMP TO ROUTE 1.
TAKE SALINAS EXIT RAMP TO EB ROUTE 68.

(A) SC7 (CA) (SPECIAL)

NOTES:
1. BLACK ON ORANGE
2. USE CALTRANS ALPHABET, SERIES C FOR LETTERING
3. SEE CONSTRUCTION AREA SIGNS, FOR ADDITIONAL CONSTRUCTION AREA SIGNS.
4. SIGNS WILL BE PLACED AT LOCATIONS AS DETERMINED BY THE ENGINEER.
5. COVER ALL CONFLICTING SIGNS.
6. SIGN MOUNTING TO BE APPROVED BY THE ENGINEER.

THIS PLAN ACCURATE FOR DETOUR LAYOUT ONLY

DETOUR PLAN

NO SCALE **DE-1**

REVISED BY | DATE REVISED
FERNANDO LOPEZ | HUE NGUYEN
CALCULATED-DESIGNED BY | CHECKED BY
FUNCTIONAL SUPERVISOR: MOHAMMED QATAMI
STATE OF CALIFORNIA - DEPARTMENT OF TRANSPORTATION
Caltrans 06-TRAFFIC DESIGN

LAST REVISION 06-9-11 | DATE PLOTTED => 01-JUL-2011 | TIME PLOTTED => 10:40

Dist	COUNTY	ROUTE	POST MILES TOTAL PROJECT	SHEET No.	TOTAL SHEETS
05	Mon	68	R3.9/10.8	22	62

REGISTERED CIVIL ENGINEER 06/15/11 DATE

5-31-11
PLANS APPROVAL DATE

REGISTERED PROFESSIONAL ENGINEER HUE NGUYEN No. 74484 Exp. 12/31/11 CIVIL STATE OF CALIFORNIA

THE STATE OF CALIFORNIA OR ITS OFFICERS OR AGENTS SHALL NOT BE RESPONSIBLE FOR THE ACCURACY OR COMPLETENESS OF SCANNED COPIES OF THIS PLAN SHEET.

NOTES:

1. DURING THE SB ON-RAMP CLOSURE. THE PCMS MESSAGE AT (O) SHOULD READ...

1ST FRAME	2ND FRAME
SB RTE 1 EXIT CLOSED	USE SANTA CRUZ NORTH SR 1 EXIT

2. DURING THE SB ON-RAMP CLOSURE. THE PCMS MESSAGE AT (P) SHOULD READ...

1ST FRAME	2ND FRAME
FOR SB RTE 1 DETOUR	USE NEXT EXIT

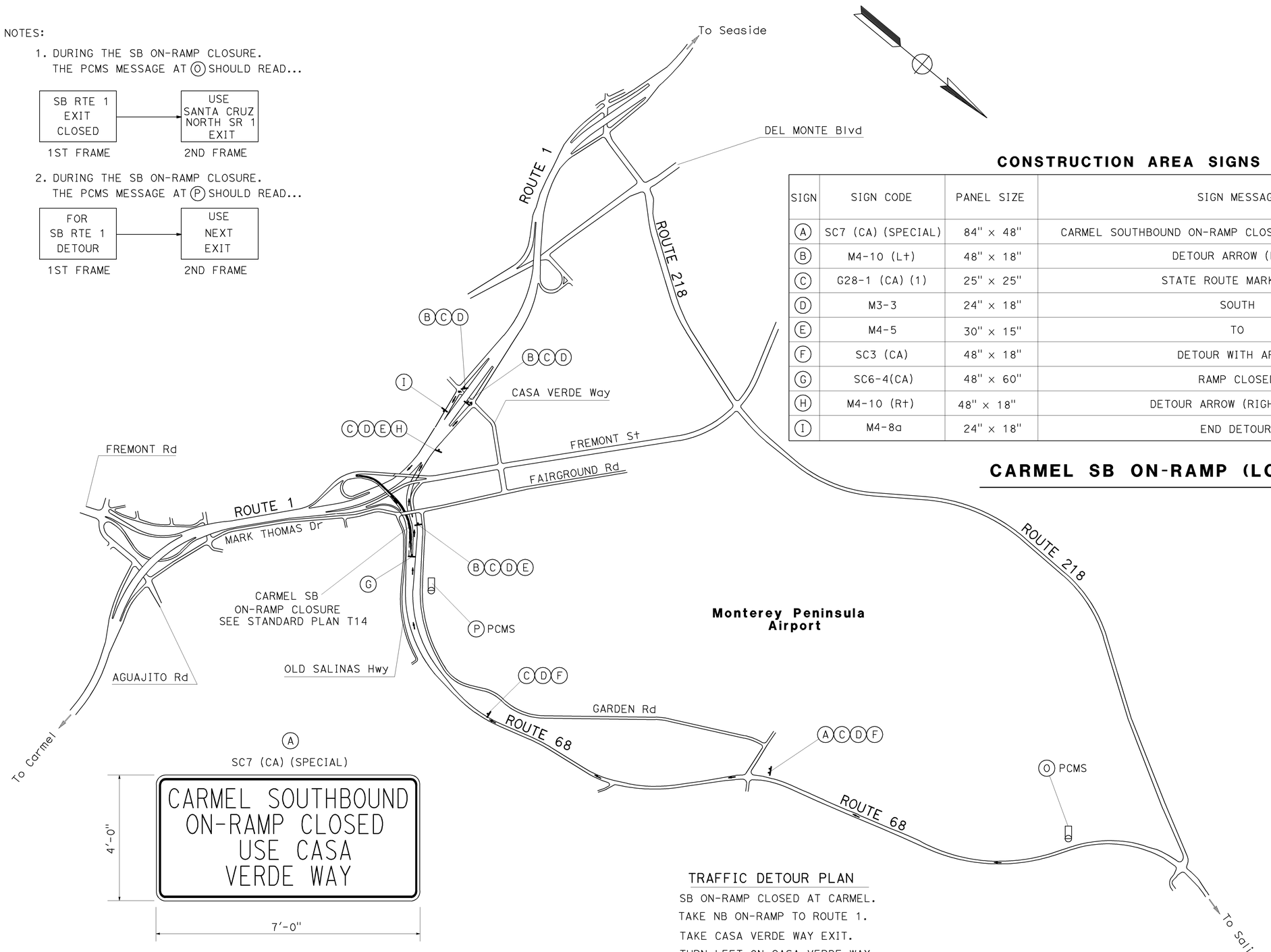

CONSTRUCTION AREA SIGNS (PORTABLE)

SIGN	SIGN CODE	PANEL SIZE	SIGN MESSAGE	No. OF SIGNS
(A)	SC7 (CA) (SPECIAL)	84" x 48"	CARMEL SOUTHBOUND ON-RAMP CLOSED USE CASA VERDE WAY	1
(B)	M4-10 (Lt)	48" x 18"	DETOUR ARROW (LEFT)	3
(C)	G28-1 (CA) (1)	25" x 25"	STATE ROUTE MARKER (1)	6
(D)	M3-3	24" x 18"	SOUTH	6
(E)	M4-5	30" x 15"	TO	1
(F)	SC3 (CA)	48" x 18"	DETOUR WITH ARROW	2
(G)	SC6-4(CA)	48" x 60"	RAMP CLOSED	1
(H)	M4-10 (Rt)	48" x 18"	DETOUR ARROW (RIGHT)	1
(I)	M4-8a	24" x 18"	END DETOUR	1

CARMEL SB ON-RAMP (LOCATION 2)

(A)
SC7 (CA) (SPECIAL)

NOTES:

1. BLACK ON ORANGE
2. USE CALTRANS ALPHABET, SERIES C FOR LETTERING
3. SEE CONSTRUCTION AREA SIGNS, FOR ADDITIONAL CONSTRUCTION AREA SIGNS.
4. SIGNS WILL BE PLACED AT LOCATIONS AS DETERMINED BY THE ENGINEER.
5. SIGN MOUNTING TO BE APPROVED BY THE ENGINEER.

TRAFFIC DETOUR PLAN

SB ON-RAMP CLOSED AT CARMEL.
TAKE NB ON-RAMP TO ROUTE 1.
TAKE CASA VERDE WAY EXIT.
TURN LEFT ON CASA VERDE WAY.
TURN LEFT ON SB ON-RAMP TO ROUTE 1.

THIS PLAN ACCURATE FOR DETOUR LAYOUT ONLY

DETOUR PLAN

NO SCALE **DE-2**

STATE OF CALIFORNIA - DEPARTMENT OF TRANSPORTATION
Caltrans 06-TRAFFIC DESIGN

FUNCTIONAL SUPERVISOR: MOHAMMED OATAMI
CALCULATED-DESIGNED BY: FERNANDO LOPEZ
CHECKED BY: HUE NGUYEN
REVISED BY
DATE REVISED

LAST REVISION 02-15-11
DATE PLOTTED => 01-JUL-2011
TIME PLOTTED => 10:40

Dist	COUNTY	ROUTE	POST MILES TOTAL PROJECT	SHEET No.	TOTAL SHEETS
05	Mon	68	R3.9/10.8	23	62

REGISTERED CIVIL ENGINEER 06/15/11 DATE

5-31-11
PLANS APPROVAL DATE

REGISTERED PROFESSIONAL ENGINEER HUE NGUYEN No. 74484 Exp. 12/31/11 CIVIL STATE OF CALIFORNIA

THE STATE OF CALIFORNIA OR ITS OFFICERS OR AGENTS SHALL NOT BE RESPONSIBLE FOR THE ACCURACY OR COMPLETENESS OF SCANNED COPIES OF THIS PLAN SHEET.

NOTE:

1. DURING THE SB OFF-RAMP CLOSURE. THE PCMS MESSAGE AT (R) SHOULD READ...

SB ON-RAMP TO EB RTE 68 CLOSED	→	USE EB RTE 218 DETOUR
1ST FRAME		2ND FRAME

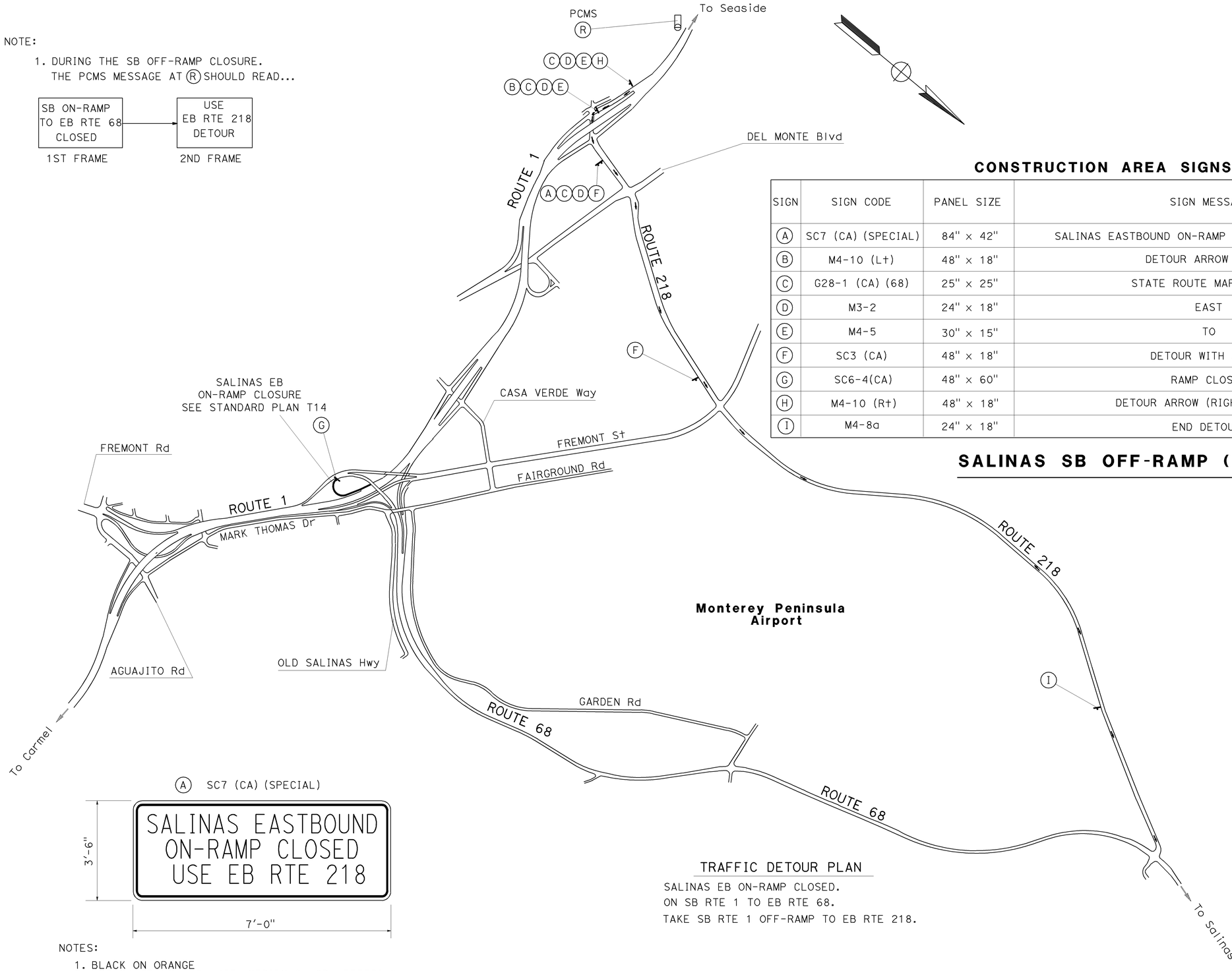

CONSTRUCTION AREA SIGNS (PORTABLE)

SIGN	SIGN CODE	PANEL SIZE	SIGN MESSAGE	No. OF SIGNS
(A)	SC7 (CA) (SPECIAL)	84" x 42"	SALINAS EASTBOUND ON-RAMP CLOSED USE EB RTE 218	1
(B)	M4-10 (Lt)	48" x 18"	DETOUR ARROW (LEFT)	1
(C)	G28-1 (CA) (68)	25" x 25"	STATE ROUTE MARKER (68)	3
(D)	M3-2	24" x 18"	EAST	3
(E)	M4-5	30" x 15"	TO	1
(F)	SC3 (CA)	48" x 18"	DETOUR WITH ARROW	2
(G)	SC6-4(CA)	48" x 60"	RAMP CLOSED	1
(H)	M4-10 (Rt)	48" x 18"	DETOUR ARROW (RIGHT)	1
(I)	M4-8a	24" x 18"	END DETOUR	1

SALINAS SB OFF-RAMP (LOCATION 3)

(A) SC7 (CA) (SPECIAL)

NOTES:

1. BLACK ON ORANGE
2. USE CALTRANS ALPHABET, SERIES C FOR LETTERING
3. SEE CONSTRUCTION AREA SIGNS, FOR ADDITIONAL CONSTRUCTION AREA SIGNS.
4. SIGNS WILL BE PLACED AT LOCATIONS AS DETERMINED BY THE ENGINEER.
5. SIGN MOUNTING TO BE APPROVED BY THE ENGINEER.

TRAFFIC DETOUR PLAN

SALINAS EB ON-RAMP CLOSED.
ON SB RTE 1 TO EB RTE 68.
TAKE SB RTE 1 OFF-RAMP TO EB RTE 218.

THIS PLAN ACCURATE FOR DETOUR LAYOUT ONLY

DETOUR PLAN

NO SCALE **DE-3**

STATE OF CALIFORNIA - DEPARTMENT OF TRANSPORTATION
Caltrans 06-TRAFFIC DESIGN

FUNCTIONAL SUPERVISOR: MOHAMMED QATAMI
CALCULATED-DESIGNED BY: FERNANDO LOPEZ
CHECKED BY: HUE NGUYEN
REVISED BY
DATE REVISED

LAST REVISION 02-16-11
DATE PLOTTED => 01-JUL-2011
TIME PLOTTED => 10:40

Dist	COUNTY	ROUTE	POST MILES TOTAL PROJECT	SHEET No.	TOTAL SHEETS
05	Mon	68	R3.9/10.8	24	62

REGISTERED CIVIL ENGINEER 06/15/11 DATE

5-31-11
PLANS APPROVAL DATE

REGISTERED PROFESSIONAL ENGINEER HUE NGUYEN No. 74484 Exp. 12/31/11 CIVIL STATE OF CALIFORNIA

THE STATE OF CALIFORNIA OR ITS OFFICERS OR AGENTS SHALL NOT BE RESPONSIBLE FOR THE ACCURACY OR COMPLETENESS OF SCANNED COPIES OF THIS PLAN SHEET.

NOTE:

1. DURING THE NB ON-RAMP CLOSURE. THE PCMS MESSAGE AT (S) SHOULD READ...

NB ON-RAMP TO RTE 1 CLOSED	→	USE WB RTE 218 DETOUR
1ST FRAME		2ND FRAME

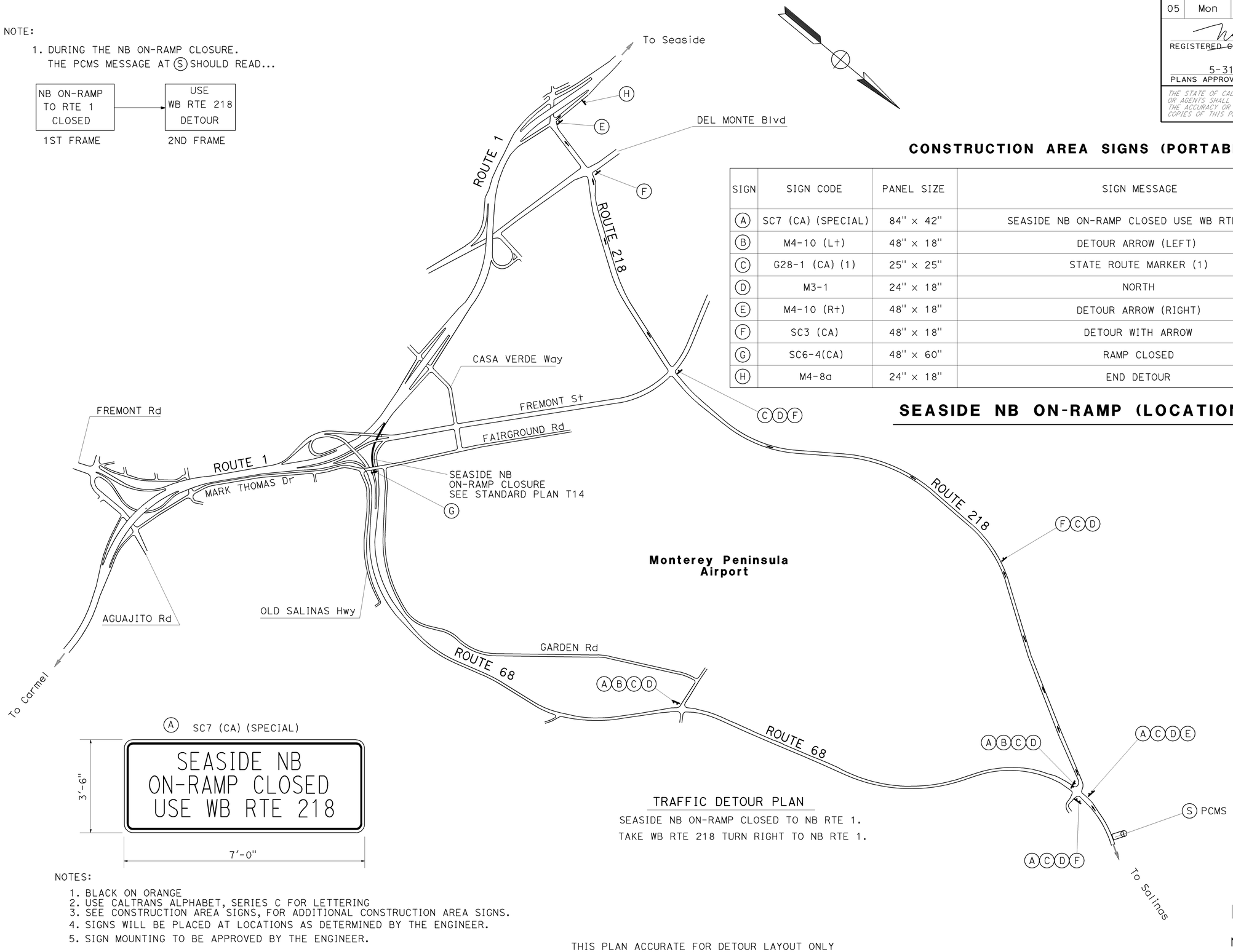

CONSTRUCTION AREA SIGNS (PORTABLE)

SIGN	SIGN CODE	PANEL SIZE	SIGN MESSAGE	No. OF SIGNS
A	SC7 (CA) (SPECIAL)	84" x 42"	SEASIDE NB ON-RAMP CLOSED USE WB RTE 218	4
B	M4-10 (Lt)	48" x 18"	DETOUR ARROW (LEFT)	2
C	G28-1 (CA) (1)	25" x 25"	STATE ROUTE MARKER (1)	6
D	M3-1	24" x 18"	NORTH	6
E	M4-10 (Rt)	48" x 18"	DETOUR ARROW (RIGHT)	2
F	SC3 (CA)	48" x 18"	DETOUR WITH ARROW	4
G	SC6-4(CA)	48" x 60"	RAMP CLOSED	1
H	M4-8a	24" x 18"	END DETOUR	1

SEASIDE NB ON-RAMP (LOCATION 4)

(A) SC7 (CA) (SPECIAL)

TRAFFIC DETOUR PLAN

SEASIDE NB ON-RAMP CLOSED TO NB RTE 1.
TAKE WB RTE 218 TURN RIGHT TO NB RTE 1.

NOTES:

1. BLACK ON ORANGE
2. USE CALTRANS ALPHABET, SERIES C FOR LETTERING
3. SEE CONSTRUCTION AREA SIGNS, FOR ADDITIONAL CONSTRUCTION AREA SIGNS.
4. SIGNS WILL BE PLACED AT LOCATIONS AS DETERMINED BY THE ENGINEER.
5. SIGN MOUNTING TO BE APPROVED BY THE ENGINEER.

THIS PLAN ACCURATE FOR DETOUR LAYOUT ONLY

DETOUR PLAN

NO SCALE **DE-4**

STATE OF CALIFORNIA - DEPARTMENT OF TRANSPORTATION
Caltrans 06-TRAFFIC DESIGN

FUNCTIONAL SUPERVISOR: MOHAMMED QATAMI
CALCULATED-DESIGNED BY: FERNANDO LOPEZ
CHECKED BY: HUE NGUYEN
REVISED BY
DATE REVISED

LAST REVISION 02-14-11
DATE PLOTTED => 01-JUL-2011
TIME PLOTTED => 10:40

Dist	COUNTY	ROUTE	POST MILES TOTAL PROJECT	SHEET No.	TOTAL SHEETS
05	Mon	68	R3.9/10.8	25	62

REGISTERED CIVIL ENGINEER 06/15/11 DATE

5-31-11
PLANS APPROVAL DATE

REGISTERED PROFESSIONAL ENGINEER HUE NGUYEN No. 74484 Exp. 12/31/11 CIVIL STATE OF CALIFORNIA

THE STATE OF CALIFORNIA OR ITS OFFICERS OR AGENTS SHALL NOT BE RESPONSIBLE FOR THE ACCURACY OR COMPLETENESS OF SCANNED COPIES OF THIS PLAN SHEET.

PAVEMENT DELINEATION QUANTITIES

ROUTE	LOCATION FROM	LOCATION TO	DIRECTION	DETAIL No.	REMOVE THERMOPLASTIC TRAFFIC STRIPE 8" LF	REMOVE PAVEMENT MARKER EA	PAVEMENT MARKER (RETROREFLECTIVE) TYPE A WHITE EA	PAVEMENT MARKER (RETROREFLECTIVE) TYPE D YELLOW (TWO-WAY) EA	PAVEMENT MARKER (RETROREFLECTIVE) TYPE G CLEAR (ONE-WAY) EA	PAVEMENT MARKER (RETROREFLECTIVE) TYPE H YELLOW (ONE-WAY) EA	THERMOPLASTIC TRAFFIC STRIPE SOLID 4" LF	THERMOPLASTIC TRAFFIC STRIPE SOLID 8" LF	THERMOPLASTIC TRAFFIC STRIPE 4" (Broken 36-12) LF	THERMOPLASTIC TRAFFIC STRIPE 4" (Broken 17-7) LF	THERMOPLASTIC PAVEMENT MARKING DESCRIPTION	THERMOPLASTIC PAVEMENT MARKING SQFT	THERMOPLASTIC PAVEMENT MARKING REMOVE SQFT
ROUTE 68	EXIT RAMP	(GORE)	EB	36	1078	23			23			539					
	3.95	4.030	EB	25A		19				19	422				TYPE V	33	33
	4.030	4.58	EB	27B							422						
			EB	36A	316	8			8			158					
			EB/WB	29		244		244			11616				2-TYPE V	66	66
			EB	27B							2904				3-TYPE VI	126	126
			EB	11/13		244	195		49				2323				
	4.58	4.64	EB/WB	29		28		28			1267						
			EB	27B							634						
	4.64	5.116	EB	22(Mod)		238		630			5026				SIGNAL AHEAD	63	63
			EB	27B							2513						
	5.116	5.185	EB	27B							364						
			EB/WB	29		32		32			1457						
	5.195	5.215	EB/WB	29		12		12			422				LIMIT LINE	30	30
			EB	27B							106						
	5.215	5.234	EB	22(Mod)		10		30			200						
			EB	27B							100						
	5.234	5.294	EB/WB	29		28		28			1267						
			EB	27B							316						
	5.294	5.57	EB/WB	22		123		123			2915						
			EB	27B							1458				2-TYPE IV (R)	30	30
			EB	38	940	21			21			470			5-TYPE IV (L)	75	75
	5.59	5.67	EB/WB	22		37		37			844				SIGNAL AHEAD	63	63
			EB	27B							422						
			EB	38	844	19			19			422			4-TYPE IV (L)	60	60
	5.67	5.7	EB/WB	29		15		15			632				2-TYPE IV (R)	30	30
			EB	27B							158						
	5.7	5.74	EB/WB	22		20		20			422						
			EB	38	422	10			10			211			3-TYPE IV (L)	45	45
			EB	27B							211						
	5.74	5.829	EB/WB	32		32		32			1880				8-TYPE IV (L)	120	120
			EB	27B							470				SIGNAL AHEAD	63	63
			EB	38	220	6			6			110			2-TYPE IV (R)	30	30
	5.829	5.886	EB/WB	32		34		34			1024						
			EB	27B							301				6-TYPE IV (L)	90	90
	5.886	5.955	EB/WB	22		32		32			728						
			EB	38	728	16			16			364			3-TYPE IV (L)	45	45
			EB	27B							364						
	5.955	6.025	EB/WB	22		33		33			740						
			EB	38	1056	23			23			528			2-TYPE IV (R)	30	30
			EB	27B							370				2-TYPE VI	84	84
	6.025	6.587	EB/WB	22(Mod)		250		750			5934						
			EB	27B							2967						
	6.587	6.647	EB/WB	29		28		28			1268						
			EB	27B							317						
	6.647	6.746	EB/WB	22		46		46			1046						
			EB	38	1046	23			23			523			4-TYPE III (L)	168	168
			EB	27B							317						
	6.766	6.836	EB	9		16			3					53	3-TYPE III (L)	126	126
			EB/WB	22		33		33			740				3-TYPE VI	126	126
			EB	38	740	16			16			370			CROSSWALK	120	120
			EB	27B							370						
	6.836	7.165	EB	9		34			34					1580	3-TYPE IV (L)	45	45
			EB	27B							1580				LIMIT LINE	60	60
	6.956	7.105	EB	38	1574	34			34			787			5-TYPE III	210	210
	7.105	7.175	EB/WB	29		32		32			1480						
	7.175	8.022	EB/WB	22(Mod)		375		1120			8944				SIGNAL AHEAD	63	63
			EB	27B							4472						
	8.022	8.102	EB/WB	29		37		37			1692				SCHOOL	35	35
			EB	27B							423						
	8.102	8.182	EB/WB	22		37		37			844				LIMIT LINE	24	24
			EB	27B							422				3-TYPE IV (L)	45	45
			EB	38	844	19			19			422					
	8.202	8.282	EB/WB	29		36		36			840						
			EB	27B							840				CROSSWALK	96	96
			EB	19		28		10		18	417		417				
CONNECTORS FROM ROUTE 1 TO ROUTE 68			EB/WB	FOG MARKER DETAIL					6								
SHEET SUBTOTAL								3,459	310	37							
SHEET TOTAL					9,808	2,351	195		3,806		76,888	4,904	2,740	1,633		2,201	2,201

NOTE: FOR MODIFIED DETAIL 22: MISSING LOCATION AT PM 7.26 TO PM 8.05, SEE SHEET C-5.

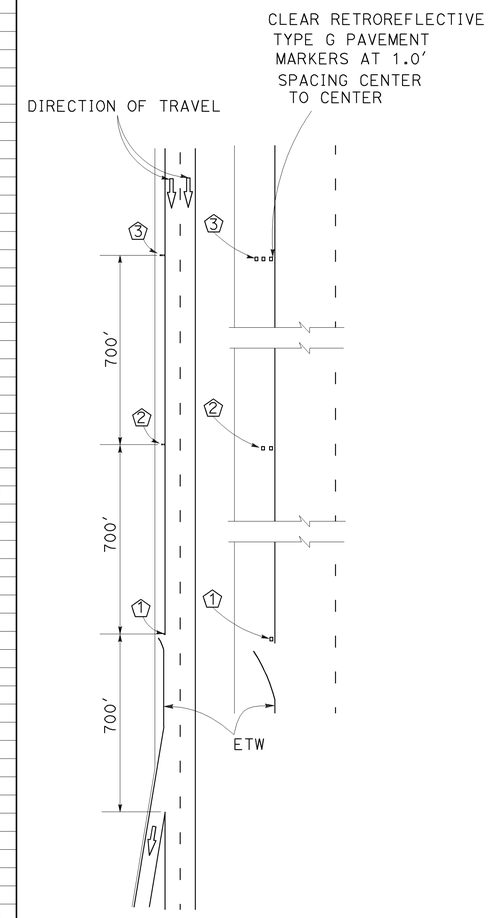

3-2-1 FOG MARKER DETAIL

(PLACED AT CONNECTORS FROM ROUTE I TO ROUTE 68)

NO SCALE

PAVEMENT DELINEATION QUANTITIES
PDQ-1

HN	4/18/11
REVISED BY	DATE REVISED
FERNANDO LOPEZ	HUE NGUYEN
CALCULATED-DESIGNED BY	CHECKED BY
FUNCTIONAL SUPERVISOR	MOHAMMED QATAMI

STATE OF CALIFORNIA - DEPARTMENT OF TRANSPORTATION
Caltrans
TRAFFIC DESIGN

LAST REVISION 05-31-11 | DATE PLOTTED => 07-JUL-2011 | TIME PLOTTED => 11:35

Dist	COUNTY	ROUTE	POST MILES TOTAL PROJECT	SHEET No.	TOTAL SHEETS
05	Mon	68	R3.9/10.8	26	62

REGISTERED CIVIL ENGINEER 06/15/11 DATE

5-31-11
PLANS APPROVAL DATE

REGISTERED PROFESSIONAL ENGINEER HUE NGUYEN No. 74484 Exp. 12/31/11 CIVIL STATE OF CALIFORNIA

THE STATE OF CALIFORNIA OR ITS OFFICERS OR AGENTS SHALL NOT BE RESPONSIBLE FOR THE ACCURACY OR COMPLETENESS OF SCANNED COPIES OF THIS PLAN SHEET.

PAVEMENT DELINEATION QUANTITIES

ROUTE	LOCATION FROM	LOCATION TO	DIRECTION	DETAIL No.	REMOVE: THERMOPLASTIC TRAFFIC STRIPE 6" LF	REMOVE: THERMOPLASTIC TRAFFIC STRIPE 8" LF	REMOVE: PAVEMENT MARKER EA	PAVEMENT MARKER: (NON-REFLECTIVE) TYPE A WHITE EA	PAVEMENT MARKER: (RETROREFLECTIVE) TYPE D YELLOW (TWO-WAY) EA	PAVEMENT MARKER: (RETROREFLECTIVE) TYPE G CLEAR (ONE-WAY) EA	PAVEMENT MARKER: (RETROREFLECTIVE) TYPE H YELLOW (ONE-WAY) EA	THERMOPLASTIC TRAFFIC STRIPE: SOLID 4" LF	THERMOPLASTIC TRAFFIC STRIPE: SOLID 6" LF	THERMOPLASTIC TRAFFIC STRIPE: SOLID 8" LF	THERMOPLASTIC TRAFFIC STRIPE: 4" (Broken 36'-12') LF	THERMOPLASTIC TRAFFIC STRIPE: 4" (Broken 17'-7') LF	THERMOPLASTIC TRAFFIC STRIPE: 8" (Broken 12'-3') LF	THERMOPLASTIC PAVEMENT MARKING: DESCRIPTION	THERMOPLASTIC PAVEMENT MARKING: SQFT	THERMOPLASTIC PAVEMENT MARKING: REMOVE SQFT
	8.361	9.747	EB	6			46													
			EB	19			55													
			EB/WB	22(Mod)			362		493			11785						SIGNAL AHEAD	63	63
			EB	27B								5892								
	9.747	9.857	EB/WB	29			50		50			2324								
			EB	27B								581								
	9.802	9.917	EB	38		1162	25			25				581				3-TYPE III	126	126
	9.857	9.917	EB	38		612	14			14				306				2-TYPE III	84	84
	9.900		EB	27B								306						LIMIT LINE	36	36
	9.937	9.950	EB	38		528	12			12				264				3-TYPE VI	126	126
		10.016	EB/WB	22			37		37			834						CROSSWALK	144	144
			EB	27B								417								
			EB	38		834	18			18				417				3-TYPE VI	126	126
	9.937	9.976	EB	38		412	10			10				206						
	10.016	10.096	EB/WB	29			37		37			1688								
			EB	27B								422								
	10.096	10.784	EB	6			12													
			EB	19			78													
			EB/WB	22(Mod)			164		152			7266								
			EB/WB	27B								7266						SIGNAL AHEAD	63	63
	10.149	9.960	WB	38		2092	46			46				1046				3-TYPE III(L)	126	126
			WB	27B								998						3-TYPE III(R)	126	126
ROUTE 68	9.950	9.900	WB	38		528	12			12				264				3-TYPE VI	126	126
	9.930	9.920	WB	38		106	3			3				53						
	9.960	8.230	WB	27B								9134						SIGNAL AHEAD	63	63
	8.289	8.230	WB	38		624	14			14				312				3-TYPE IV(R)	45	45
	8.200	7.156	WB	27B								5512						SIGNAL AHEAD	63	63
	7.236	7.156	WB	9			10			10						422		LIMIT LINE	24	24
	7.136	6.898	WB	27B								1257								
			WB	38		728	16			16				364				3-TYPE III(L)	126	126
			WB	39	464								309					2-TYPE III(R)	84	84
			WB	38		412	9			9				206				BIKE LANE, SYMBOL	75	75
	6.878	6.798	WB	27B								422								
			WB	9			19			7						264		3-TYPE VI	126	126
			WB	38		316	8											2-TYPE IV(R)	30	30
	6.023	5.943	WB	27B								422						SIGNAL AHEAD	63	63
	5.903	5.784	WB	27B								628								
			WB	38		316	8			8				158				LIMIT LINE	36	36
	5.784	5.625	WB	27B								681						2-TYPE IV(L)	30	30
			WB	38		316	8			8				158				4-TYPE IV(R)	60	60
			WB	38		634	14			14				317				SIGNAL AHEAD	63	63
	5.555	5.237	WB	27B								1521						2-TYPE IV(L)	30	30
			WB	38		316	8			8				158						
	5.237	4.290	WB	27B								5000						CROSSWALK	96	96
	4.620	4.520	WB	12			52	44		12					528					
	4.520	4.350	WB	37B		360	60			60							898			
	4.350	4.290	WB	38		634	14			14				317						
	4.290	4.210	WB	36		1078	23			23				539						
SUB-TOTAL					464	12,008			769	343										
TOTAL THIS SHEET					12,472		1,244	44		1,112		64,356	309	5,824	528	686	898		2,160	2,160
FROM PDQ-1					9,808		2,351	195		3,806		76,888		4,904	2,740	1,633			2,201	2,201
TOTAL					22,280		3,595	239		4,918		141,244	309	10,728	3,268	2,319	898		4,361	4,361

PAVEMENT DELINEATION QUANTITIES
PDQ-2

STATE OF CALIFORNIA - DEPARTMENT OF TRANSPORTATION
Caltrans TRAFFIC DESIGN

FUNCTIONAL SUPERVISOR: MOHAMMED QATAMI
CALCULATED-DESIGNED BY: FERNANDO LOPEZ
CHECKED BY: HUE NGUYEN
REVISED BY: FL
DATE REVISED: 6/10/11

LAST REVISION 06-10-11
DATE PLOTTED => 07-JUL-2011
TIME PLOTTED => 13:13

Dist	COUNTY	ROUTE	POST MILES TOTAL PROJECT	SHEET No.	TOTAL SHEETS
05	Mon	68	R3.9/10.8	27	62

REGISTERED CIVIL ENGINEER 5-27-11 DATE

5-31-11
PLANS APPROVAL DATE

REGISTERED PROFESSIONAL ENGINEER ALEJANDRO CORREA No. 75776 Exp. 06-30-12 CIVIL STATE OF CALIFORNIA

THE STATE OF CALIFORNIA OR ITS OFFICERS OR AGENTS SHALL NOT BE RESPONSIBLE FOR THE ACCURACY OR COMPLETENESS OF SCANNED COPIES OF THIS PLAN SHEET.

ROADWAY QUANTITIES

LOCATION	DIRECTION	HMA (TYPE A)	TACK COAT	COLD PLANE AC PAVEMENT
		TON	TON	SQYD
PM 3.95 To 10.80 (MAIN LINE)	EB/WB	25,995	71.32	
PM 3.95 (BRIDGE APPROACH)	EB/WB			505
PM 3.95 (EB ON-RAMP)	EB	149	0.93	1,100
PM 4.15 (WB OFF-RAMP)	WB	327	0.44	2,420
PM 5.23 (JOSSELYN CANYON Rd)	EB	33	0.06	240
PM 5.62 (OLMSTED Rd)	EB/WB	71	0.18	527
PM 6.82 (ROUTE 218)	EB/WB	113	0.31	837
PM 7.10 (RAGSDALE Dr)	WB	45	0.12	329
PM 8.15 (YORK Rd)	WB	34	0.10	252
PM 9.95 (PASADERA Dr)	EB/WB	67	0.19	496
PM 3.95 TO PM 4.22 (WB SHOULDER GUTTER)	WB			775
PM 5.78 ROUTE 68 (DRIVEWAY)	WB			42
PM 6.08 ROUTE 68 (DRIVEWAY)	WB			45
PM 6.88 ROUTE 68 (ROUTE 218-SW/SE RETURNS)	EB			39
PM 7.14 ROUTE 68 (RAGSDALE DR-NW/NE RETURNS)	WB			44
PM 9.95 ROUTE 68 (BOOTS Rd-RETURNS)	EB/WB			98
PM 10.80 ROUTE 68 (END OF CONSTRUCTION)	EB/WB			44
HMA DIKE (SEE Q-2)		71		
HMA OVERSIDE DRAINS (SEE Q-1)		11		
TOTAL		26,916	73.65	7,793

IMPORTED MATERIAL (SHOULDER BACKING)

LOCATION	DIRECTION	SHOULDER BACKING
		TON
PM 3.95 To 10.80	EB	770
PM 3.95 TO 6.65	WB	315
PM 6.68 TO 10.80	WB	480
TOTAL		1,565

HMA OVERSIDE DRAIN

LOCATION	SIDE	PLACE HMA (Misc AREA)	HMA (TYPE A) *	REMARK
		SQYD	TON	
PM 5.23 (JOSSELYN CANYON)	EB	4.5	1.0	SW CORNER
PM 5.78 (DRIVEWAY)	WB	5.5	1.2	WEST OF CURB RETURN
PM 6.82 (ROUTE 218)	EB	6.5	1.5	SW CORNER
PM 5.54 (OLMSTED)	WB	8.0	1.8	NE CORNER
PM 5.48 (OLMSTED)	WB	5.5	1.2	NW CORNER
PM 5.62 (OLMSTED)	EB	10	2.2	SW CORNER
PM 5.63 (OLMSTED)	EB	5.5	1.2	SE CORNER
TOTAL		45.5	10.1 *	

* QUANTITY INCLUDED IN ROADWAY QUANTITIES TABLE.

SUMMARY OF QUANTITIES

Q-1

REVISED BY	AC
DATE REVISED	09-15-10
CALCULATED-DESIGNED BY	ALEJANDRO CORREA
CHECKED BY	GILBERTO BACA
FUNCTIONAL SUPERVISOR	ROBERTO BANDA

STATE OF CALIFORNIA - DEPARTMENT OF TRANSPORTATION
Caltrans
06-DESIGN

LAST REVISION DATE PLOTTED => 01-JUL-2011
12-28-10 TIME PLOTTED => 10:40

Dist	COUNTY	ROUTE	POST MILES TOTAL PROJECT	SHEET No.	TOTAL SHEETS
05	Mon	68	R3.9/10.8	28	62

REGISTERED CIVIL ENGINEER 5-27-11 DATE

5-31-11
PLANS APPROVAL DATE

REGISTERED PROFESSIONAL ENGINEER ALEJANDRO CORREA No. 75776 Exp. 06-30-12 CIVIL STATE OF CALIFORNIA

THE STATE OF CALIFORNIA OR ITS OFFICERS OR AGENTS SHALL NOT BE RESPONSIBLE FOR THE ACCURACY OR COMPLETENESS OF SCANNED COPIES OF THIS PLAN SHEET.

PLACE HOT MIX ASPHALT DIKE

LOCATION ROUTE 68		SIDE	TYPE A	TYPE E	REMOVE AC DIKE	HMA (TYPE A)
FROM	TO		LF	LF	LF	TON
PM 3.95 (EB ON-RAMP)	PM 4.26 (EB ON-RAMP)	EB		1540	1540	20.02
PM 5.23 (JOSSELYN CANYON)	PM 5.23 (JOSSELYN CANYON)	EB		30	30	0.39
PM 5.56 (OLMSTED Rd)	PM 5.62 (OLMSTED Rd)	EB		300	300	3.90
PM 5.63 (OLMSTED Rd)	PM 5.69 (OLMSTED Rd)	EB		310	310	4.03
PM 5.69 (OLMSTED Rd)	PM 5.73 (OLMSTED Rd)	EB		110	110	1.43
PM 5.88	PM 5.99	EB		560	560	7.28
PM 6.78 (ROUTE 218)	PM 6.86 (ROUTE 218)	EB		310	310	4.03
PM 6.86 (ROUTE 218)	PM 6.88 (ROUTE 218)	EB		40	40	0.52
PM 6.90 (ROUTE 218)	PM 6.96 (ROUTE 218)	EB		320	320	4.16
PM 4.55	PM 4.66	WB		375	375	4.88
PM 5.14 (JOSSELYN CANYON)	PM 5.15 (JOSSELYN CANYON)	WB		80	80	1.04
PM 5.48 (OLMSTED Rd)	PM 5.52 (OLMSTED Rd)	WB		255	255	3.32
PM 5.54 (OLMSTED Rd)	PM 5.60 (OLMSTED Rd)	WB		350	350	4.55
PM 5.67 (DRIVEWAY)	PM 5.68 (DRIVEWAY)	WB		24	24	0.31
PM 5.71 (DRIVEWAY)	PM 5.73 (DRIVEWAY)	WB		72	72	0.94
PM 6.70 (ROUTE 218)	PM 6.72 (ROUTE 218)	WB	100		100	1.35
PM 7.07 (RAGSDALE Dr)	PM 7.12 (RAGSDALE Dr)	WB		275	275	3.58
PM 8.50 (BUS STOP)	PM 8.50 (BUS STOP)	WB			20	0.26
PM 9.75 (PASADERA Dr)	PM 9.86 (PASADERA Dr)	WB		375	375	4.88
	TOTAL		100	5 326	5 446	70.87*

* QUANTITY INCLUDED ON ROADWAY QUANTITIES TABLE ON SHEET Q-1

ADJUST WATER VALVE COVER TO GRADE

LOCATION	EA
PM 5.23 (JOSSELYN CANYON Rd)	6
PM 5.45 (OXTON Rd)	3
PM 5.62 (OLSMTED Dr)	3
PM 5.78 (DRIVEWAY)	3
PM 5.92 (DRIVEWAY)	5
PM 6.08 (DRIVEWAY)	1
PM 6.42	1
PM 6.88 (ROUTE 218)	3
PM 6.79 (DRIVEWAY)	2
PM 7.14 (RAGSDALE Dr)	2
PM 7.45 (RAGSDALE Dr)	6
PM 9.95 (BOOTS Rd)	3
TOTAL	38

TEMPORARY FENCE (TYPE ESA)

LOCATION	LF
PM 5.9 TO 6.5 (WESTBOUND)	3,200
PM 6.65 TO 6.68 (WESTBOUND-ROCKWALL)	100
TOTAL	3,300

REPLACE ASPHALT CONCRETE SURFACING

PM	DIRECTION	LENGTH	LANE			SHOULDER	MEDIAN
			12′	6′	OUTSIDE	8′	6′
		LF	CY	CY		CY	CY
9.00	WB	40				6.0	
9.55	WB	200					22.3
9.61	WB	260				34.5	
9.78	EB	120	26.7				
10.03	WB	90		10.0	X		
10.10	WB	220				32.7	
10.52	WB	160				23.8	
SUBTOTAL			26.7	10.0		97.0	22.3
TOTAL			156.0				

(N) NOT A SEPARATE PAY ITEM, FOR INFORMATION ONLY.

EROSION CONTROL

POST MILE		EROSION CONTROL (HYDROSEED)		
BEGIN	END	L†	R†	ACRE
3.95	10.8	X		2.5
3.95	10.8		X	2.5
TOTAL				5.0

SUMMARY OF QUANTITIES

Q-2

STATE OF CALIFORNIA - DEPARTMENT OF TRANSPORTATION
Caltrans
06-DESIGN

FUNCTIONAL SUPERVISOR: ROBERTO BANDA
CALCULATED-DESIGNED BY: ALEJANDRO CORREA
CHECKED BY: GILBERTO BACA
REVISED BY: AC
DATE REVISED: 09-15-10

LAST REVISION DATE PLOTTED => 01-JUL-2011
TIME PLOTTED => 10:40
12-28-10

Dist	COUNTY	ROUTE	POST MILES TOTAL PROJECT	SHEET No.	TOTAL SHEETS
05	Mon	68	R3.9/10.8	29	62

REGISTERED CIVIL ENGINEER DATE 5-27-11

PLANS APPROVAL DATE 5-31-11

REGISTERED PROFESSIONAL ENGINEER ALEJANDRO CORREA No. 75776 Exp. 06-30-12 CIVIL STATE OF CALIFORNIA

THE STATE OF CALIFORNIA OR ITS OFFICERS OR AGENTS SHALL NOT BE RESPONSIBLE FOR THE ACCURACY OR COMPLETENESS OF SCANNED COPIES OF THIS PLAN SHEET.

RUMBLE STRIP

LOCATION		SIDE	INSIDE Shld (IES)	OUTSIDE Shld (IES)
FROM	TO		STA	STA
PM 4.15	PM 5.15	EB		59
PM 5.30	PM 5.50	EB		12
PM 5.62	PM 6.75	EB		62
PM 6.98	PM 9.80	EB		151
PM 10.05	PM 10.80	EB		38
PM R3.95	PM 4.60	EB	31	
PM R3.95	PM 4.60	WB	31	
PM R4.22	PM 5.45	WB		60
PM 5.75	PM 6.60	WB		60
PM 6.92	PM 7.07	WB		9
PM 7.13	PM 8.08	WB		53
PM 8.26	PM 9.80	WB		83
PM 10.04	PM 10.80	WB		42
		SUBTOTAL	62	629
		TOTAL	691	

CENTERLINE RUMBLE STRIP (HMA, GROUND-IN INDENTATION)

LOCATION		SIDE	STA
FROM	TO		
PM 4.64	PM 5.12	EB/WB	26
PM 5.22	PM 5.23	EB/WB	1
PM 6.03	PM 6.59	EB/WB	30
PM 7.18	PM 8.02	EB/WB	45
PM 8.36	PM 9.75	EB/WB	74
PM 10.10	PM 10.78	EB/WB	36
		TOTAL	212

DRAINAGE QUANTITIES

PM	DIRECTION	DI TYPE	** (N) HEIGHT OF INLET "H"	(N) FRAME AND GRATE (24-12)	MINOR CONCRETE (MINOR STRUCTURE)	Misc IRON AND STEEL	24" REINFORCED CONCRETE PIPE	(N) CONCRETE COLLAR	ADJUST INLET	(N) REMOVE INLET
			LF	EA	CY	LB	LF	EA	EA	EA
4.85	WB	GDO	4	2	2.94	634	2	1		1
5.10	WB	GDO	4	2	2.94	634	2	1		1
9.94	WB	G1							1	
TOTAL					5.88	1 268	4		1	

** THE EXACT HEIGHT OF INLET TO BE VERIFIED DURING CONSTRUCTION
(N) NOT A SEPARATE PAY ITEM, FOR INFORMATION ONLY.

CURB RAMP DETECTABLE WARNING SURFACE

LOCATION	SIDE	AREA
		SQFT
PM 6.82	EB	12
PM 6.82	EB	12
PM 7.10	WB	12
PM 7.10	WB	12
TOTAL	48	

ADJUST MANHOLE TO GRADE

LOCATION	EA
PM 5.62 (OLMSTED Dr)	2
PM 6.88 (ROUTE 218)	3
PM 6.96 (WB SHOULDER)	1
PM 7.06 (WB SHOULDER)	1
PM 7.10 (RAGSDALE Dr)	2
PM 7.11 (WB)	1
PM 7.20 (WB)	1
PM 7.30 (WB)	1
PM 9.95 (BOOTS Rd)	1
TOTAL	13

ADJUST UTILITY COVER TO GRADE

LOCATION	EA
PM 6.79 (DRIVEWAY)	1
PM 7.03 (WB SHOULDER)	1
PM 7.14 (RAGSDALE Dr)	1
TOTAL	3

SUMMARY OF QUANTITIES

Q-3

Dist	COUNTY	ROUTE	POST MILES TOTAL PROJECT	SHEET No.	TOTAL SHEETS
05	Mon	68	R3.9/10.8	30	62

REGISTERED CIVIL ENGINEER 5-27-11 DATE

5-31-11
PLANS APPROVAL DATE

REGISTERED PROFESSIONAL ENGINEER ALEJANDRO CORREA No. 75776 Exp. 06-30-12 CIVIL STATE OF CALIFORNIA

THE STATE OF CALIFORNIA OR ITS OFFICERS OR AGENTS SHALL NOT BE RESPONSIBLE FOR THE ACCURACY OR COMPLETENESS OF SCANNED COPIES OF THIS PLAN SHEET.

METAL BEAM GUARD RAILING

LOCATION	DIRECTION OF TRAVEL	(N) LAYOUT TYPE	RECONSTRUCT MBGR (STEEL POST)	DOUBLE MBGR (STEEL POST)	(N) Exist MBGR (TO BE RECONSTRUCTED OR SALVAGE)	REMOVE CRASH CUSHION (SAND FILLED)	ALTERNATIVE IN-LINE TERMINAL SYSTEM	ALTERNATIVE FLARED TERMINAL SYSTEM	END ANCHOR ASSEMBLY (TYPE SFT)	TRANSITION RAILING (TYPE WB)	(N) END CAP (TC)	(N) BURIED POST END ANCHOR	(N) RAIL TENSION ASSEMBLY	ALTERNATIVE CRASH CUSHION SYSTEM	VEGETATION CONTROL (MINOR CONCRETE)
			LF	LF	LF	EA	EA	EA	EA	EA	EA	EA	EA	EA	SQYD
PM 3.95 TO 4.07	WB	12A	750		485					1	1				389
PM 3.95 TO 3.97 (BRIDGE)	EB	12B	12.5		80			1		1	1				42
PM 4.06 TO 4.07 (GORE)	WB		112.5		354				1				1	1	150
PM 4.07 TO 4.10 (GORE)	WB			25		1									
PM 4.04 TO 4.06 (OFF-RAMP TO FREMONT Rd)	WB	16C	87.5		87.5				1			1			
PM 4.20 TO 4.24	WB	16C	87.5		87.5				1			1			
PM 4.44 TO 4.46	WB	16C	87.5		82				1			1			
PM 6.68 TO 6.71	WB	11B	175		215		1		1						99
PM 6.72 TO 6.75	WB	11A	137.5		191		1		1						89
PM 6.76 TO 6.79	WB	11B	112.5		160			1	1						83
TOTAL			1,562.5	25	1,742	1	2	2	7	2	2	3	1	1	852

(N) NOT A SEPARATE PAY ITEM, FOR INFORMATION ONLY.

SALVAGE MBGR 179.5′

ADJUST MONUMENT COVER

LOCATION	SIDE	EA	COORDINATES	
			N	E
PM 5.33	WB	1	2107939.896	5723719.680
PM 6.95	WB	1	2106143.442	5731956.399
TOTAL		2		

SUMMARY OF QUANTITIES

Q-4

STATE OF CALIFORNIA - DEPARTMENT OF TRANSPORTATION
Caltrans 06-DESIGN

FUNCTIONAL SUPERVISOR: ROBERTO BANDA
CALCULATED-DESIGNED BY: ALEJANDRO CORREA
CHECKED BY: GILBERTO BACA
REVISED BY: AC
DATE REVISED: 09-15-10

LAST REVISION DATE PLOTTED => 01-JUL-2011
TIME PLOTTED => 10:40

Dist	COUNTY	ROUTE	POST MILES TOTAL PROJECT	SHEET No.	TOTAL SHEETS
05	Mon	68	R3.9/10.8	31	62

REGISTERED ELECTRICAL ENGINEER 5-30-13 DATE

5-31-11
PLANS APPROVAL DATE

REGISTERED PROFESSIONAL ENGINEER XAVIER I. ALFARO No. E17488 Exp. 6-30-13 ELECTRICAL STATE OF CALIFORNIA

THE STATE OF CALIFORNIA OR ITS OFFICERS OR AGENTS SHALL NOT BE RESPONSIBLE FOR THE ACCURACY OR COMPLETENESS OF SCANNED COPIES OF THIS PLAN SHEET.

NOTES: (FOR SHEETS E-1 TO E-7)

1. FOR ACCURATE RIGHT OF WAY DATA, CONTACT RIGHT OF WAY ENGINEERING AT THE DISTRICT OFFICE.
2. TYPE 21D ELECTROLIER.
3. PROTECT IN PLACE Exist ELECTRICAL CONDUIT.
4. REPLACE No. 5 PULL BOX COVER.
5. AB Exist LOOP DETECTORS DESIGNATED TO BE REPLACED.
6. SEE SHEET E-2 DETAIL A FOR LOOP DETECTOR INSTALLATION.
7. Exist SIGNALS AND LIGHTING ARE NOT SHOWN.
8. ALL Exist CONDUCTORS DESIGNATED WITH RR SHALL BE PULLED BACK TO THIS PULL BOX, THEN REPULLED TO Exist LOOP DETECTORS AND SIGNAL POLES B, C AND D AS INDICATED OR AS NEEDED.

ABBREVIATIONS:

CTID CALTRANS IDENTIFICATION
PG&E PACIFIC GAS AND ELECTRIC

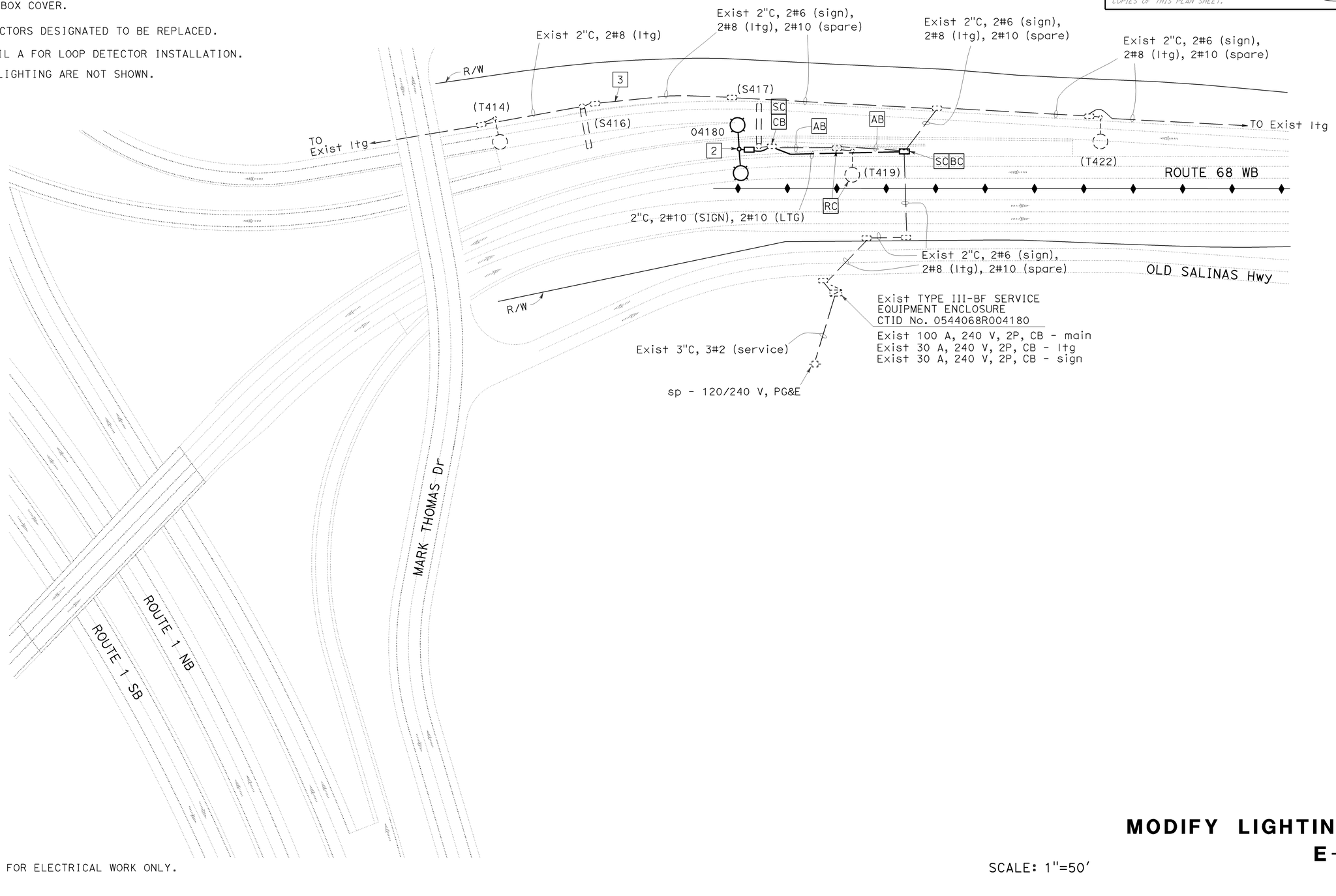

THIS PLAN IS ACCURATE FOR ELECTRICAL WORK ONLY.

SCALE: 1"=50'

MODIFY LIGHTING
E-1

REVISED BY	DATE REVISED
XAVIER ALFARO	PAUL MATOS
CALCULATED-DESIGNED BY	CHECKED BY
FUNCTIONAL SUPERVISOR	ALI BAKHDOUD

STATE OF CALIFORNIA - DEPARTMENT OF TRANSPORTATION
Caltrans ELECTRICAL DESIGN

LAST REVISION 05-24-11 DATE PLOTTED => 01-JUL-2011 TIME PLOTTED => 10:40

Dist	COUNTY	ROUTE	POST MILES TOTAL PROJECT	SHEET No.	TOTAL SHEETS
05	Mon	68	R3.9/10.8	32	62

REGISTERED ELECTRICAL ENGINEER 5-30-13 DATE

5-31-11
PLANS APPROVAL DATE

REGISTERED PROFESSIONAL ENGINEER XAVIER I. ALFARO No. E17488 Exp. 6-30-13 ELECTRICAL STATE OF CALIFORNIA

THE STATE OF CALIFORNIA OR ITS OFFICERS OR AGENTS SHALL NOT BE RESPONSIBLE FOR THE ACCURACY OR COMPLETENESS OF SCANNED COPIES OF THIS PLAN SHEET.

NOTES:

1. FOR ACCURATE RIGHT OF WAY DATA, CONTACT RIGHT OF WAY ENGINEERING AT THE DISTRICT OFFICE.
2. FOR ADDITIONAL NOTES, SEE SHEET E-1.

FRONT END OF TYPE D LOOP SHALL LINE UP WITH FRONT EDGE OF LIMIT LINE.

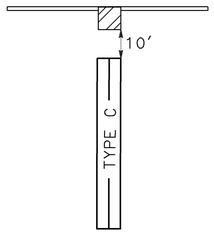

DETAIL A

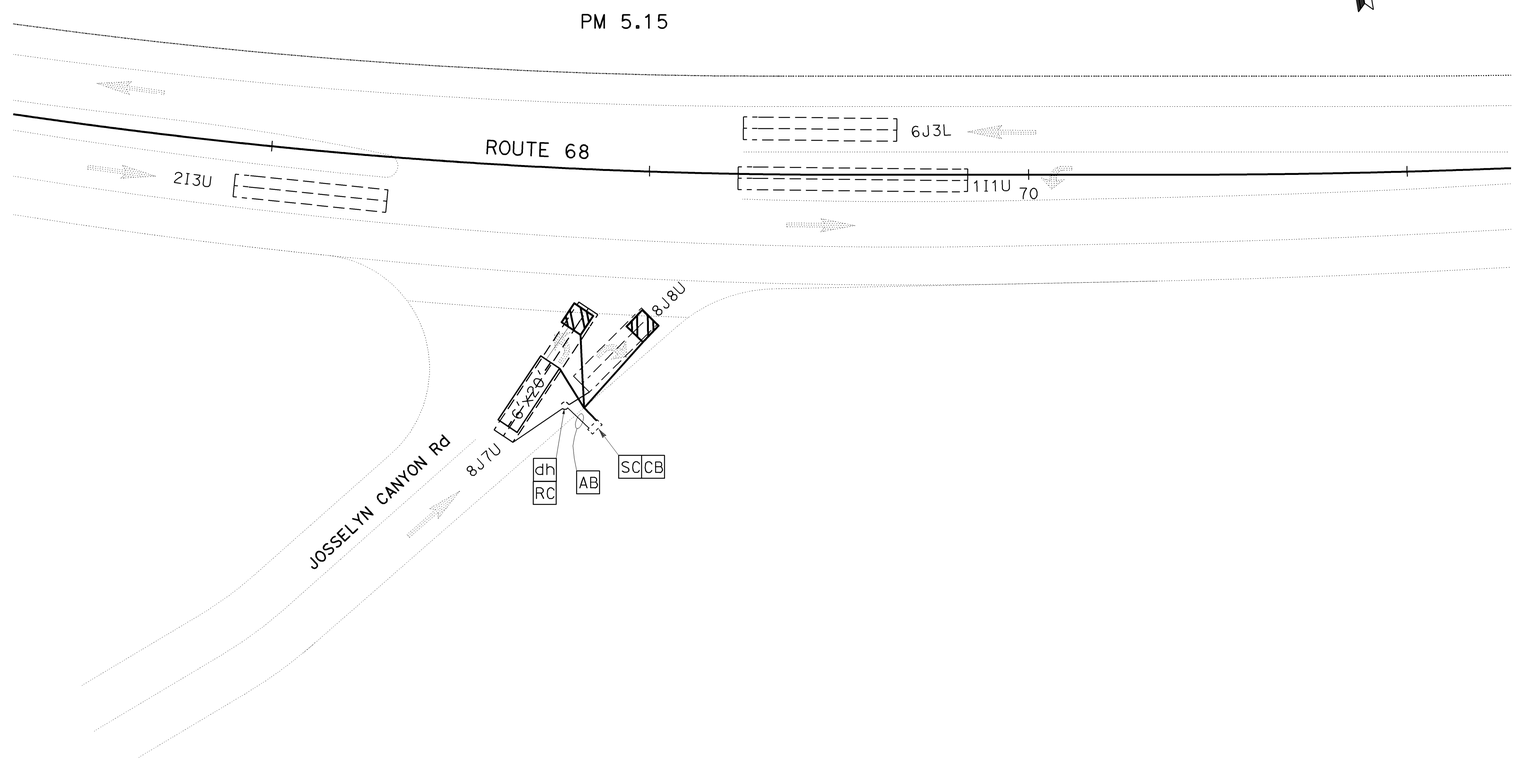

THIS PLAN IS ACCURATE FOR ELECTRICAL WORK ONLY.

INDUCTIVE LOOP DETECTOR
E-2

SCALE: 1"=20'

STATE OF CALIFORNIA - DEPARTMENT OF TRANSPORTATION
Caltrans® ELECTRICAL DESIGN

FUNCTIONAL SUPERVISOR: ALI BAKHDOUD
CALCULATED-DESIGNED BY: XAVIER ALFARO
CHECKED BY: PAUL MATOS
REVISED BY
DATE REVISED

LAST REVISION 05-24-11
DATE PLOTTED => 01-JUL-2011
TIME PLOTTED => 10:40

Dist	COUNTY	ROUTE	POST MILES TOTAL PROJECT	SHEET No.	TOTAL SHEETS
05	Mon	68	R3.9/10.8	33	62

REGISTERED ELECTRICAL ENGINEER 5-30-13 DATE

5-31-11
PLANS APPROVAL DATE

REGISTERED PROFESSIONAL ENGINEER XAVIER I. ALFARO No. E17488 Exp. 6-30-13 ELECTRICAL STATE OF CALIFORNIA

THE STATE OF CALIFORNIA OR ITS OFFICERS OR AGENTS SHALL NOT BE RESPONSIBLE FOR THE ACCURACY OR COMPLETENESS OF SCANNED COPIES OF THIS PLAN SHEET.

NOTES:

1. FOR ACCURATE RIGHT OF WAY DATA, CONTACT RIGHT OF WAY ENGINEERING AT THE DISTRICT OFFICE.
2. FOR ADDITIONAL NOTES, SEE SHEET E-1.

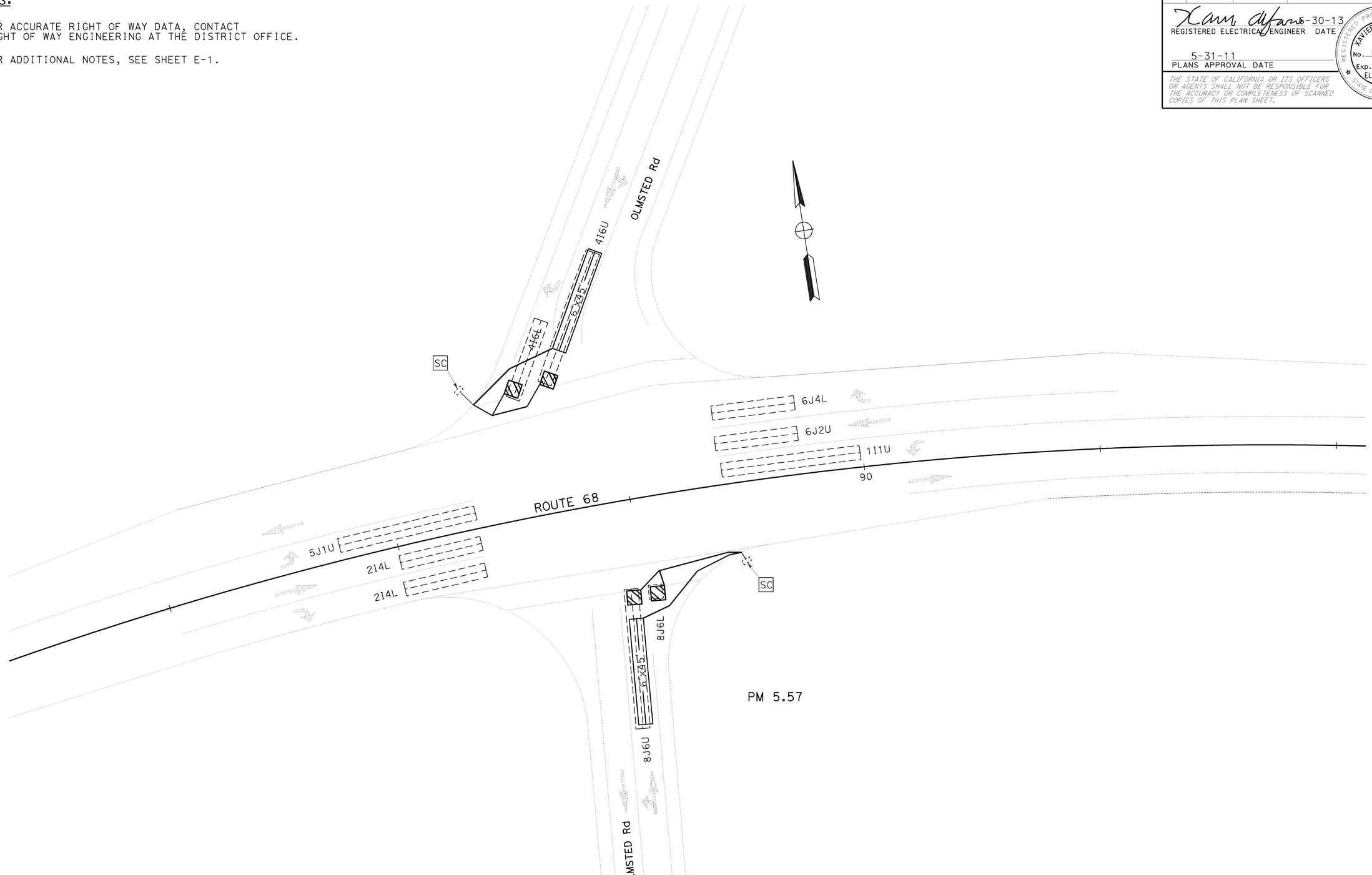

THIS PLAN IS ACCURATE FOR ELECTRICAL WORK ONLY.

INDUCTIVE LOOP DETECTOR
E-3

SCALE: 1"=20'

STATE OF CALIFORNIA - DEPARTMENT OF TRANSPORTATION
Caltrans® ELECTRICAL DESIGN

FUNCTIONAL SUPERVISOR: ALI BAKHDOUD
CALCULATED-DESIGNED BY: XAVIER ALFARO
CHECKED BY: PAUL MATOS
REVISED BY
DATE REVISED

LAST REVISION 05-24-11
DATE PLOTTED => 01-JUL-2011
TIME PLOTTED => 10:40

Dist	COUNTY	ROUTE	POST MILES TOTAL PROJECT	SHEET No.	TOTAL SHEETS
05	Mon	68	R3.9/10.8	34	62

REGISTERED ELECTRICAL ENGINEER 5-30-13 DATE

5-31-11
PLANS APPROVAL DATE

REGISTERED PROFESSIONAL ENGINEER XAVIER I. ALFARO No. E17488 Exp. 6-30-13 ELECTRICAL STATE OF CALIFORNIA

THE STATE OF CALIFORNIA OR ITS OFFICERS OR AGENTS SHALL NOT BE RESPONSIBLE FOR THE ACCURACY OR COMPLETENESS OF SCANNED COPIES OF THIS PLAN SHEET.

NOTES:

1. FOR ACCURATE RIGHT OF WAY AND ACCESS DATA, CONTACT RIGHT OF WAY ENGINEERING AT THE DISTRICT OFFICE.
2. FOR ADDITIONAL NOTES, SEE SHEET E-1.

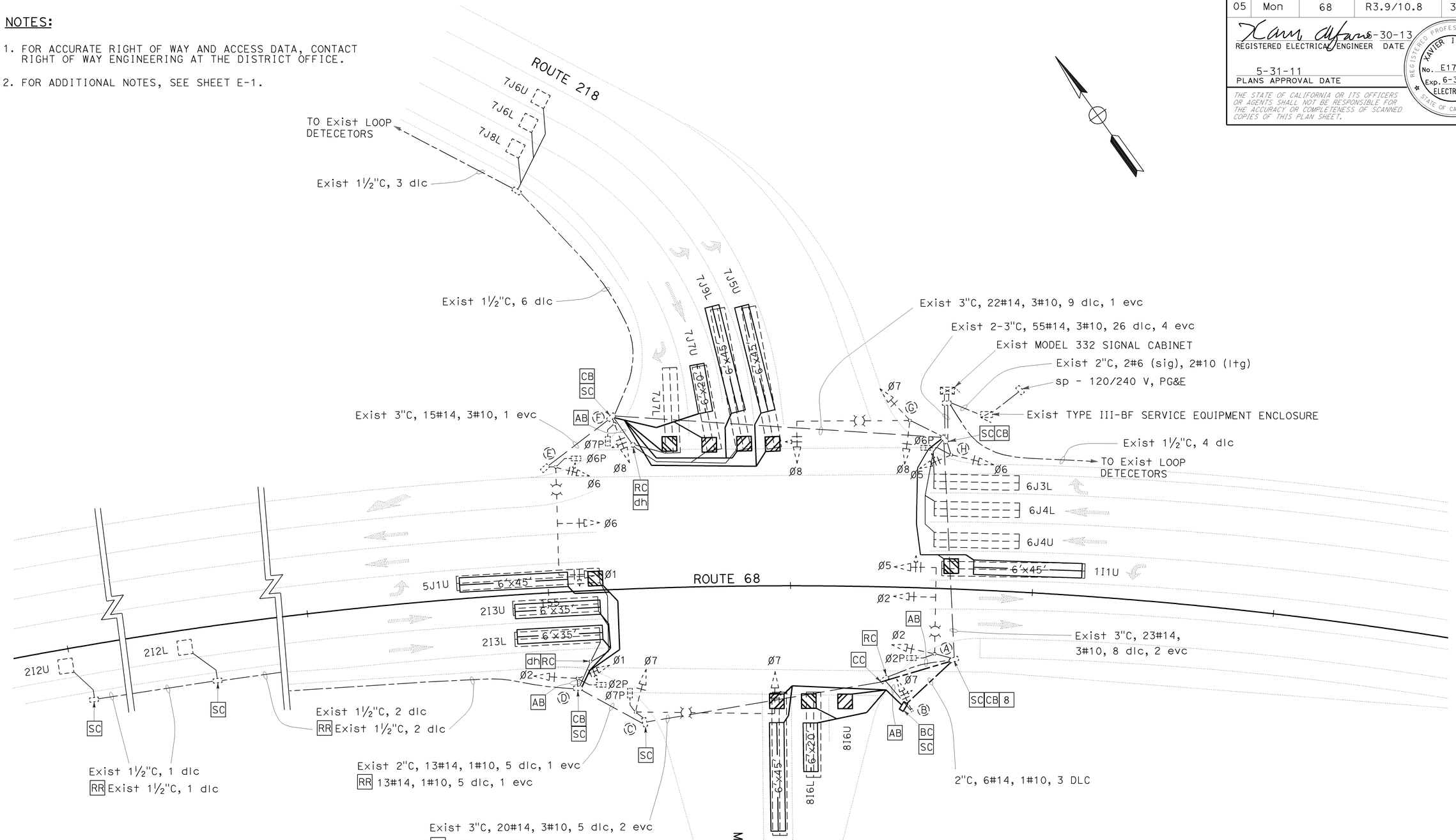

THIS PLAN IS ACCURATE FOR ELECTRICAL WORK ONLY.

INDUCTIVE LOOP DETECTOR MODIFY SIGNAL

SCALE: 1"=20'

E-4

STATE OF CALIFORNIA - DEPARTMENT OF TRANSPORTATION
Caltrans® ELECTRICAL DESIGN

FUNCTIONAL SUPERVISOR: ALI BAKHDOUD
CALCULATED-DESIGNED BY: XAVIER ALFARO
CHECKED BY: PAUL MATOS
REVISED BY
DATE REVISED

LAST REVISION 05-24-11
DATE PLOTTED => 01-JUL-2011
TIME PLOTTED => 10:40

Dist	COUNTY	ROUTE	POST MILES TOTAL PROJECT	SHEET No.	TOTAL SHEETS
05	Mon	68	R3.9/10.8	35	62

REGISTERED ELECTRICAL ENGINEER 5-30-13 DATE

5-31-11
PLANS APPROVAL DATE

REGISTERED PROFESSIONAL ENGINEER XAVIER I. ALFARO No. E17488 Exp. 6-30-13 ELECTRICAL STATE OF CALIFORNIA

THE STATE OF CALIFORNIA OR ITS OFFICERS OR AGENTS SHALL NOT BE RESPONSIBLE FOR THE ACCURACY OR COMPLETENESS OF SCANNED COPIES OF THIS PLAN SHEET.

NOTES:

1. FOR ACCURATE RIGHT OF WAY DATA, CONTACT RIGHT OF WAY ENGINEERING AT THE DISTRICT OFFICE.
2. FOR ADDITIONAL NOTES, SEE SHEET E-1.

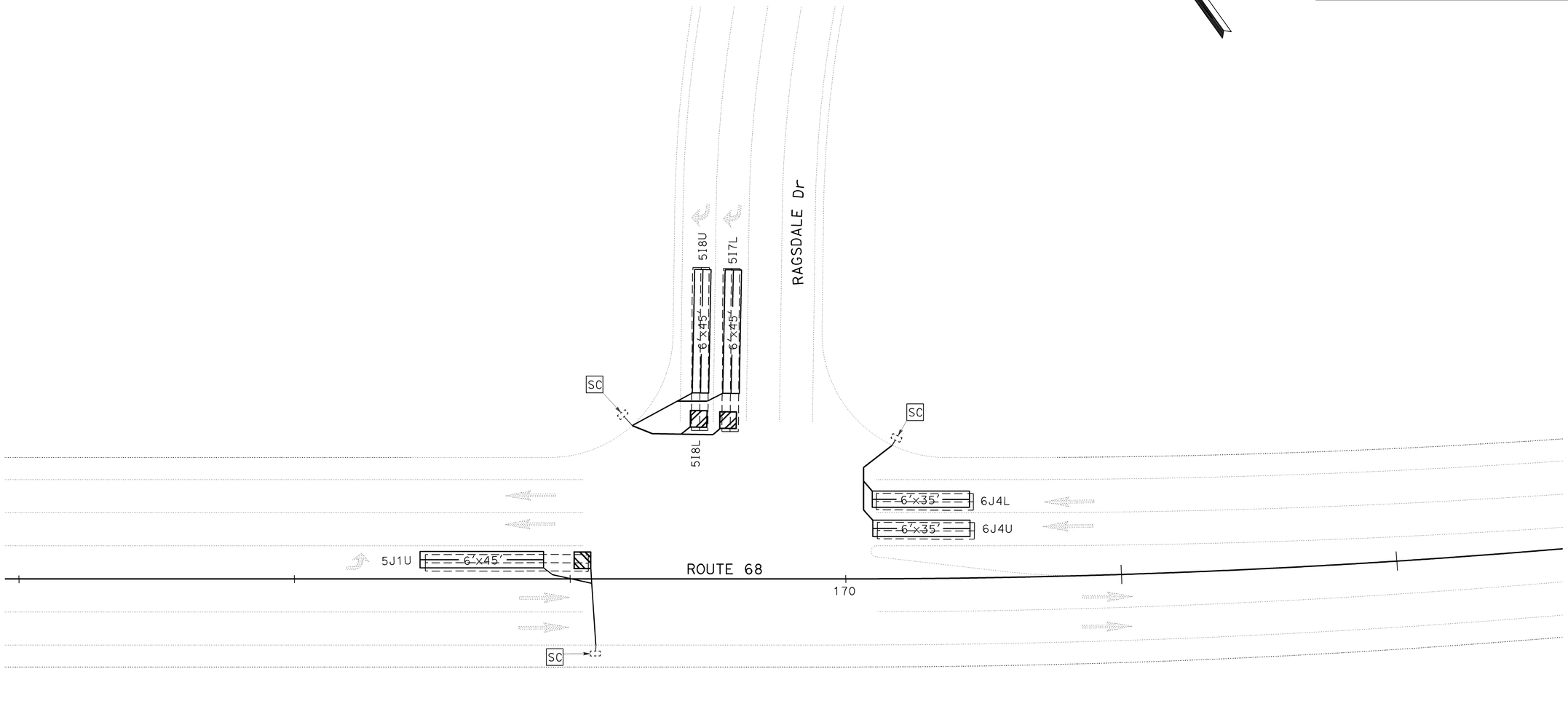

THIS PLAN IS ACCURATE FOR ELECTRICAL WORK ONLY.

INDUCTIVE LOOP DETECTOR
E-5

SCALE: 1"=20'

REVISED BY	DATE REVISED

CALCULATED-DESIGNED BY	XAVIER ALFARO
CHECKED BY	PAUL MATOS
FUNCTIONAL SUPERVISOR	ALI BAKHDOUD

STATE OF CALIFORNIA - DEPARTMENT OF TRANSPORTATION
Caltrans®
ELECTRICAL DESIGN

LAST REVISION 05-24-11 | DATE PLOTTED => 01-JUL-2011 | TIME PLOTTED => 10:40

Dist	COUNTY	ROUTE	POST MILES TOTAL PROJECT	SHEET No.	TOTAL SHEETS
05	Mon	68	R3.9/10.8	36	62

REGISTERED ELECTRICAL ENGINEER 5-30-13 DATE

5-31-11
PLANS APPROVAL DATE

REGISTERED PROFESSIONAL ENGINEER XAVIER I. ALFARO No. E17488 Exp. 6-30-13 ELECTRICAL STATE OF CALIFORNIA

THE STATE OF CALIFORNIA OR ITS OFFICERS OR AGENTS SHALL NOT BE RESPONSIBLE FOR THE ACCURACY OR COMPLETENESS OF SCANNED COPIES OF THIS PLAN SHEET.

NOTES:

1. FOR ACCURATE RIGHT OF WAY AND ACCESS DATA, CONTACT RIGHT OF WAY ENGINEERING AT THE DISTRICT OFFICE.
2. FOR ADDITIONAL NOTES, SEE SHEET E-1.

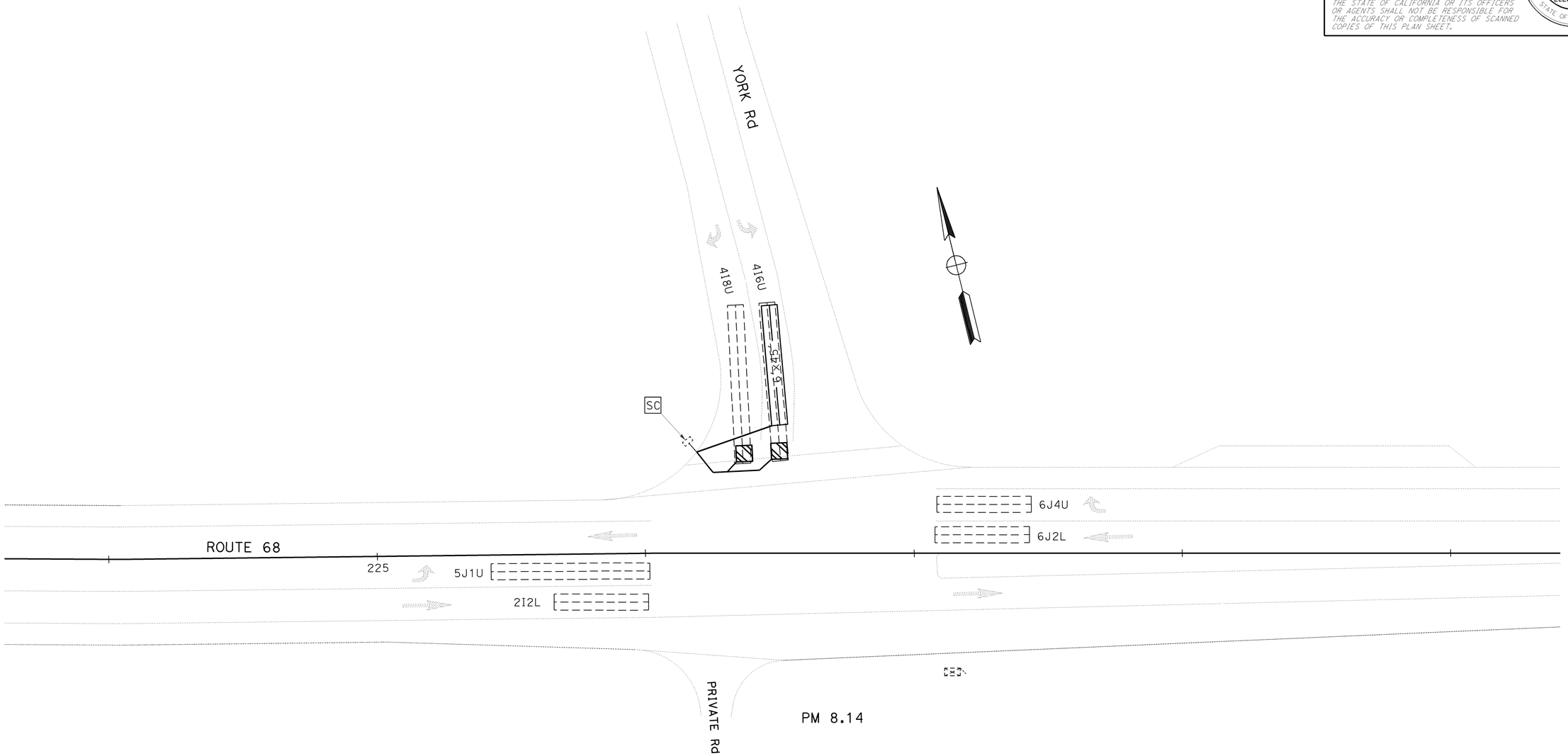

THIS PLAN IS ACCURATE FOR ELECTRICAL WORK ONLY.

INDUCTIVE LOOP DETECTOR
E-6

SCALE: 1"=20'

REVISED BY	XAVIER ALFARO
DATE REVISED	PAUL MATOS
CALCULATED-DESIGNED BY	
CHECKED BY	
FUNCTIONAL SUPERVISOR	ALI BAKHDOUD

STATE OF CALIFORNIA - DEPARTMENT OF TRANSPORTATION
Caltrans
ELECTRICAL DESIGN

LAST REVISION 05-24-11 | DATE PLOTTED => 01-JUL-2011 | TIME PLOTTED => 10:40

Dist	COUNTY	ROUTE	POST MILES TOTAL PROJECT	SHEET No.	TOTAL SHEETS
05	Mon	68	R3.9/10.8	37	62

Xavier Alfaro 5-30-13
REGISTERED ELECTRICAL ENGINEER DATE

5-31-11
PLANS APPROVAL DATE

REGISTERED PROFESSIONAL ENGINEER XAVIER I. ALFARO No. E17488 Exp. 6-30-13 ELECTRICAL STATE OF CALIFORNIA

THE STATE OF CALIFORNIA OR ITS OFFICERS OR AGENTS SHALL NOT BE RESPONSIBLE FOR THE ACCURACY OR COMPLETENESS OF SCANNED COPIES OF THIS PLAN SHEET.

NOTES:

1. FOR ACCURATE RIGHT OF WAY AND ACCESS DATA, CONTACT RIGHT OF WAY ENGINEERING AT THE DISTRICT OFFICE.

2. FOR ADDITIONAL NOTES, SEE SHEET E-1.

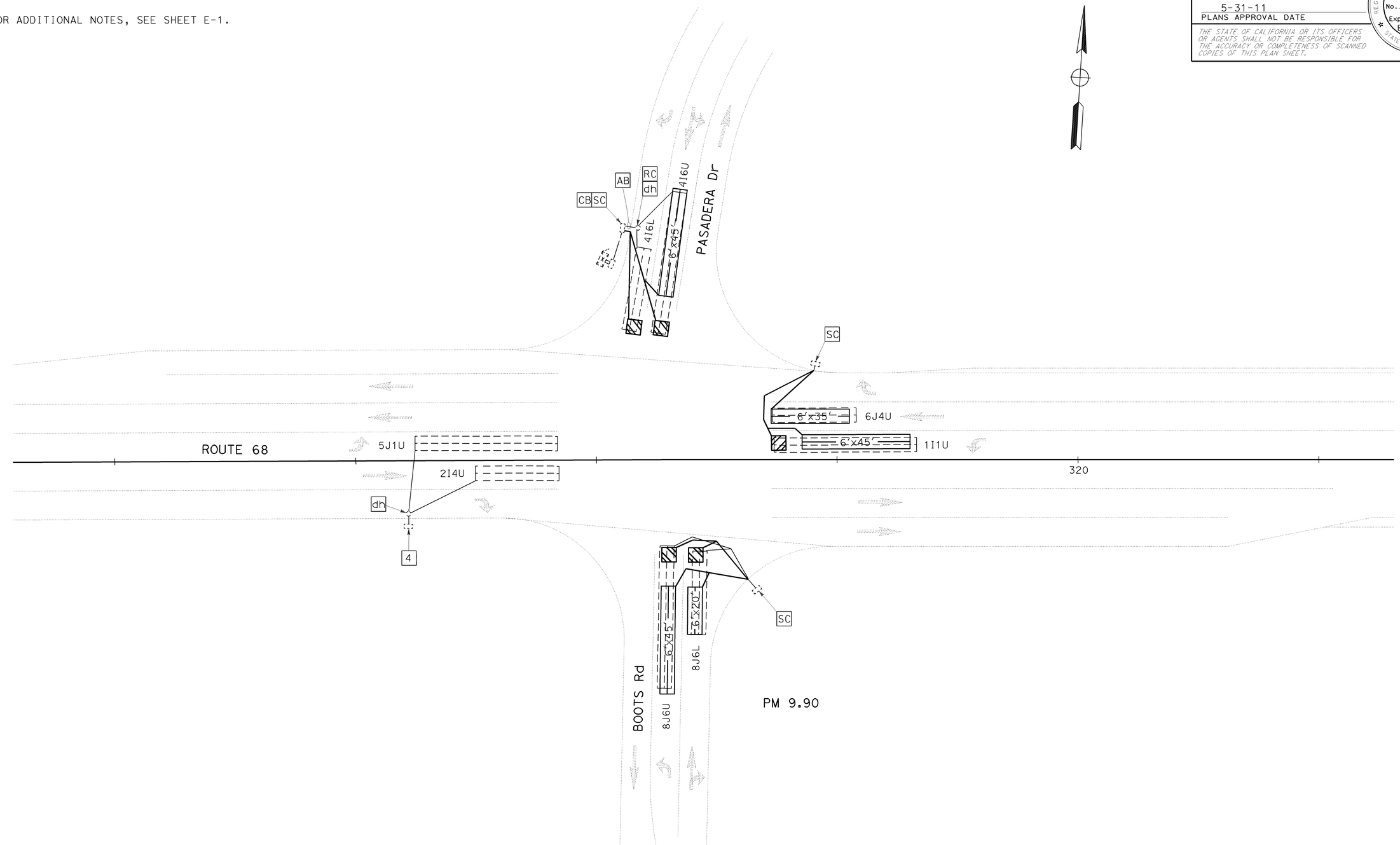

THIS PLAN IS ACCURATE FOR ELECTRICAL WORK ONLY.

INDUCTIVE LOOP DETECTOR
E-7

SCALE: 1"=20'

STATE OF CALIFORNIA - DEPARTMENT OF TRANSPORTATION
Caltrans ELECTRICAL DESIGN

FUNCTIONAL SUPERVISOR: ALI BAKHDOUD
CALCULATED-DESIGNED BY: XAVIER ALFARO
CHECKED BY: PAUL MATOS
REVISED BY
DATE REVISED

LAST REVISION 05-24-11
DATE PLOTTED => 01-JUL-2011
TIME PLOTTED => 10:40

DIST	COUNTY	ROUTE	POST MILES TOTAL PROJECT	SHEET NO.	TOTAL SHEETS
05	Mon	68	R3.9/10.8	38	62

REGISTERED CIVIL ENGINEER

November 17, 2006
PLANS APPROVAL DATE

REGISTERED PROFESSIONAL ENGINEER Dallas Forester No. C37765 Exp. 12-31-06 CIVIL STATE OF CALIFORNIA

The State of California or its officers or agents shall not be responsible for the accuracy or completeness of electronic copies of this plan sheet.

To accompany plans dated 5-31-11

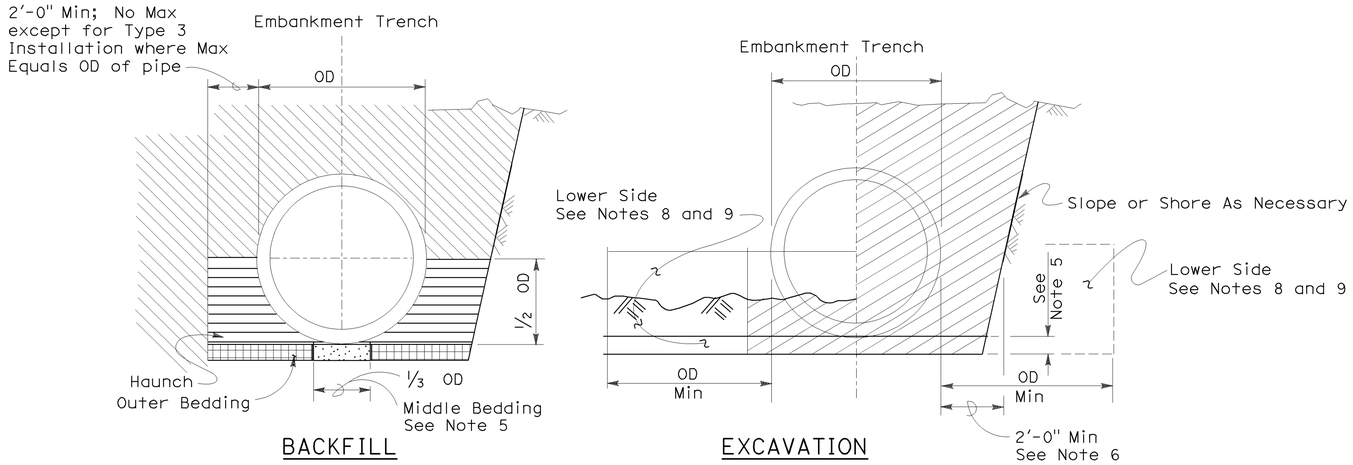

Roadway Embankment

Structure Backfill (Culvert) See Note 6

Structure Backfill (Culvert) See Note 6

Loose Backfill

Excavation Structure (Culvert)

TYPE 1 INSTALLATION:

The haunch and outer bedding shall be compacted to a minimum 90 percent relative compaction. In addition, the minimum sand equivalent in these areas shall be 30 and the maximum percentage passing the 75 μm sieve size shall be 12.

TYPE 2 INSTALLATION:

The haunch and outer bedding shall be compacted to a minimum 90 percent relative compaction. In addition, the minimum sand equivalent in these areas shall be 25.

TYPE 3 INSTALLATION:

The haunch and outer bedding shall be compacted to a minimum 85 percent relative compaction. 90 percent relative compaction will be required where the fill over the pipe is less than 4'-0" or 1/2 OD.

INSTALLATION TYPE 1

MINIMUM CLASS AND D-LOAD	COVER	
	108" Dia AND SMALLER	OVER 108" Dia
Class II 1000D	14.9'	12.9'
Class III 1350D	15.0' - 20.9'	13.0' - 18.9'
Class III Special 1700D	21.0' - 26.9'	19.0' - 24.9'
Class IV 2000D	27.0' - 31.9'	25.0' - 29.9'
Class IV Special 2500D	32.0' - 40.9'	30.0' - 38.9'
Class V 3000D	41.0' - 49.9'	39.0' - 46.9'
Class V Special 3600D	50.0' - 59.0'	47.0' - 58.0'

INSTALLATION TYPE 2

MINIMUM CLASS AND D-LOAD	COVER
Class II 1000D	9.9'
Class III 1350D	10.0'- 14.9'
Class III Special 1700D	15.0' - 19.9'
Class IV 2000D	20.0' - 24.9'
Class IV Special 2500D	25.0' - 31.9'
Class V 3000D	32.0' - 38.9'
Class V Special 3600D	39.0' - 47.0'

INSTALLATION TYPE 3

MINIMUM CLASS AND D-LOAD	COVER	
	48" Dia AND SMALLER	OVER 48" Dia
Class II 1000D	7.9'	5.9'
Class III 1350D	8.0' - 10.9'	6.0' - 8.9'
Class III Special 1700D	11.0' - 14.9'	9.0' - 12.9'
Class IV 2000D	15.0' - 17.9'	13.0' - 15.9'
Class IV Special 2500D	18.0' - 21.9'	16.0' - 19.9'
Class V 3000D	22.0' - 26.9'	20.0' - 24.9'
Class V Special 3600D	30.0' - 33.0'	25.0' - 31.0'

NOTES:

1. Unless otherwise shown on the plans or specified in the special provision, the Contractor shall have the option of selecting the class of RCP and the type of installation to be used, provided the height of cover does not exceed the value shown for the RCP selected.
   Example: 24" RCP culvert with maximum cover of 19'-0" the options are:
   a) Class III or stronger with Installation Type 1.
   b) Class III Special or stronger with Installation Type 2.
   c) Class IV Special or stronger with Installation Type 3.
   Cover is defined as the maximum vertical distance from top of the pipe to finished grade within the length of any given culvert.
2. The class of RCP and Installation Type selected shall be the same throughout the length of any given culvert.
3. The "length of any culvert" is defined as the culvert between:
   a) Successive drainage structure (inlets, junction boxes, headwalls, etc.).
   b) A drainage structure and the inlet or outlet end of the culvert.
   c) The inlet and outlet end of the culvert when there are no intervening drainage structures.
4. Oval and arch shaped RCP shall not be used.
5. 1/25 OD Min, not less than 3".
6. Slurry cement backfill may be substituted for backfill in the outer bedding and haunch areas. If slurry is used the outer and middle beddings shall be omitted. Prior to installation the soil under the middle 1/3 of the outside diameter of the pipe shall be softened by scarifying or other means to a minimum depth of 1/25 OD, but not less than 3". Where slurry cement backfill is used clear distance to trench wall may be reduced as set forth in Section 19-3.062 of the Standard Specifications.
7. Backfill shall be placed full width of excavation except where dimensions are shown for backfill width or thickness. Dimensions shown are minimums.
8. Lower side shall be suitable material as determined by the Engineer. Otherwise it shall be considered unsuitable as set forth in Section 19-2.02 of the Standard Specifications. See Note 9.
9. Where the pipe is placed in a trench, if the trench walls are sloped at 5 vertical to 1 horizontal or steeper for at least 90 percent of the trench height or up to not less than 12" from the grading plane, the firmness of the soil in the lower side need not be considered.
10. Non-reinforced precast concrete pipe sizes 3'-0" or smaller may be placed under installation Types 1, 2 or 3.

STATE OF CALIFORNIA
DEPARTMENT OF TRANSPORTATION

EXCAVATION AND BACKFILL CONCRETE PIPE CULVERTS

NO SCALE

RSP A62DA DATED NOVEMBER 17, 2006 SUPERSEDES STANDARD PLAN A62DA DATED MAY 1, 2006 - PAGE 20 OF THE STANDARD PLANS BOOK DATED MAY 2006.

REVISED STANDARD PLAN RSP A62DA

2006 REVISED STANDARD PLAN RSP A62DA

10-26-06

Dist	COUNTY	ROUTE	POST MILES TOTAL PROJECT	SHEET No.	TOTAL SHEETS
05	Mon	68	R3.9/10.8	39	62

Randell D. Hiatt
REGISTERED CIVIL ENGINEER

May 20, 2011
PLANS APPROVAL DATE

REGISTERED PROFESSIONAL ENGINEER
Randell D. Hiatt
No. C50200
Exp. 6-30-11
CIVIL
STATE OF CALIFORNIA

The State of California or its officers or agents shall not be responsible for the accuracy or completeness of electronic copies of this plan sheet.

To accompany plans dated 5-31-11

NOTES:

1. When necessary to place dike in front of face of guard railing, only Type C dike may be used. For dike details, see Standard Plan A87B.
2. For standard railing post embedment, see Standard Plans A77C3.
3. Guard railing delineation to be used where shown on the Project Plans.
4. When dike or curb is placed under guard railing, the maximum height of the dike or curb shall be 4". Mountable dike should not be used. For dike and curb details, see Standard Plans A87A and A87B.
5. For details of typical distance between the face of rail and hinge point, see Standard Plan A77C3.
6. For steel line posts, use ¼ - 20 self-tapping screws in 0.22" diameter holes or ¼" bolts in 9/32" diameter holes.

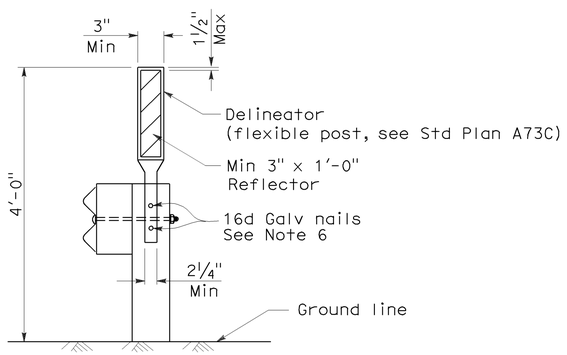

GUARD RAILING DELINEATION

See Note 3

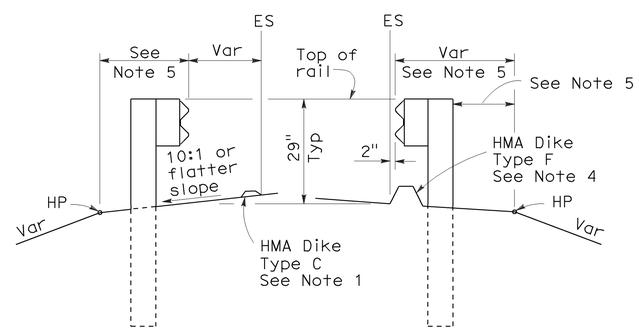

DIKE POSITIONING

See Note 1

STATE OF CALIFORNIA
DEPARTMENT OF TRANSPORTATION

METAL BEAM GUARD RAILING TYPICAL RAILING DELINEATION AND DIKE POSITIONING DETAILS

NO SCALE

RSP A77C4 DATED MAY 20, 2011 SUPERSEDES RSP A77C4 DATED JUNE 6, 2008 AND STANDARD PLAN A77C4 DATED MAY 1, 2006 - PAGE 47 OF THE STANDARD PLANS BOOK DATED MAY 2006.

REVISED STANDARD PLAN RSP A77C4

2006 REVISED STANDARD PLAN RSP A77C4

3-10-11

DIST	COUNTY	ROUTE	POST MILES TOTAL PROJECT	SHEET NO.	TOTAL SHEETS
05	Mon	68	R3.9/10.8	40	62

Randell D. Hiatt
REGISTERED CIVIL ENGINEER

October 20, 2006
PLANS APPROVAL DATE

REGISTERED PROFESSIONAL ENGINEER
Randell D. Hiatt
No. C50200
Exp. 6-30-07
CIVIL
STATE OF CALIFORNIA

The State of California or its officers or agents shall not be responsible for the accuracy or completeness of electronic copies of this plan sheet.

To accompany plans dated 5-31-11

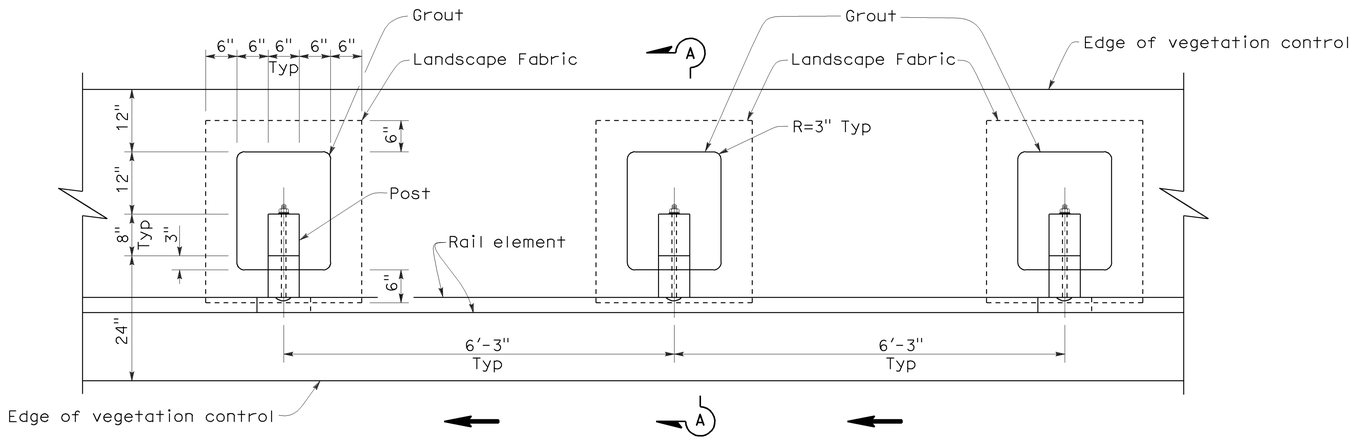

PLAN

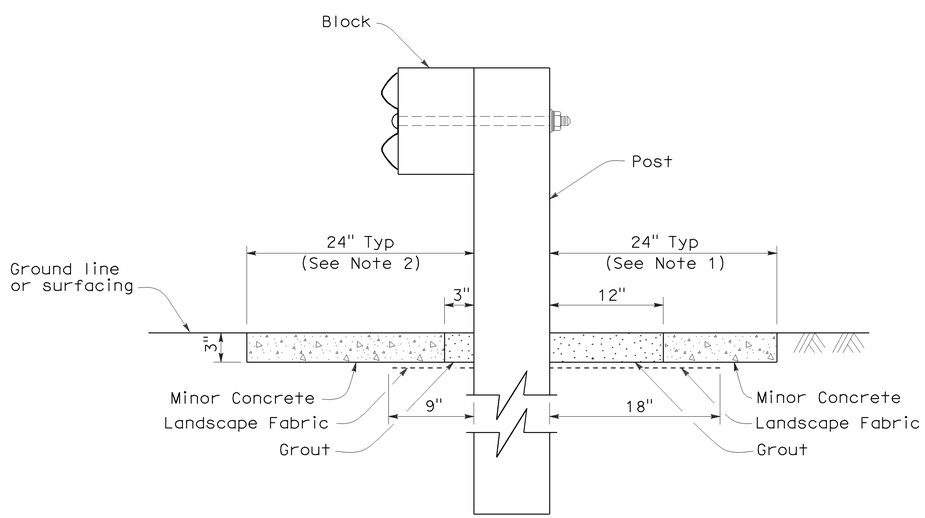

SECTION A-A

NOTES:

1. Where the distance between back of post and hinge point is less than 24", vegetation control to be constructed flush with the back edge of the post.
2. Where dike is constructed under railing, construct vegetation control to back edge of dike. Where paved shoulder is constructed within 24" in front of the post, construct vegetation control to the edge of paved shoulder.
3. Direction of adjacent traffic indicated by ← .

STATE OF CALIFORNIA
DEPARTMENT OF TRANSPORTATION

METAL BEAM GUARD RAILING TYPICAL VEGETATION CONTROL STANDARD RAILING SECTION

NO SCALE

NSP A77C5 DATED OCTOBER 20, 2006 SUPPLEMENTS THE STANDARD PLANS BOOK DATED MAY 2006.

NEW STANDARD PLAN NSP A77C5

2006 NEW STANDARD PLAN NSP A77C5

7-17-06

DIST	COUNTY	ROUTE	POST MILES TOTAL PROJECT	SHEET NO.	TOTAL SHEETS
05	Mon	68	R3.9/10.8	41	62

Randell D. Hiatt
REGISTERED CIVIL ENGINEER

October 20, 2006
PLANS APPROVAL DATE

REGISTERED PROFESSIONAL ENGINEER
Randell D. Hiatt
No. C50200
Exp. 6-30-07
CIVIL
STATE OF CALIFORNIA

The State of California or its officers or agents shall not be responsible for the accuracy or completeness of electronic copies of this plan sheet.

To accompany plans dated 5-31-11

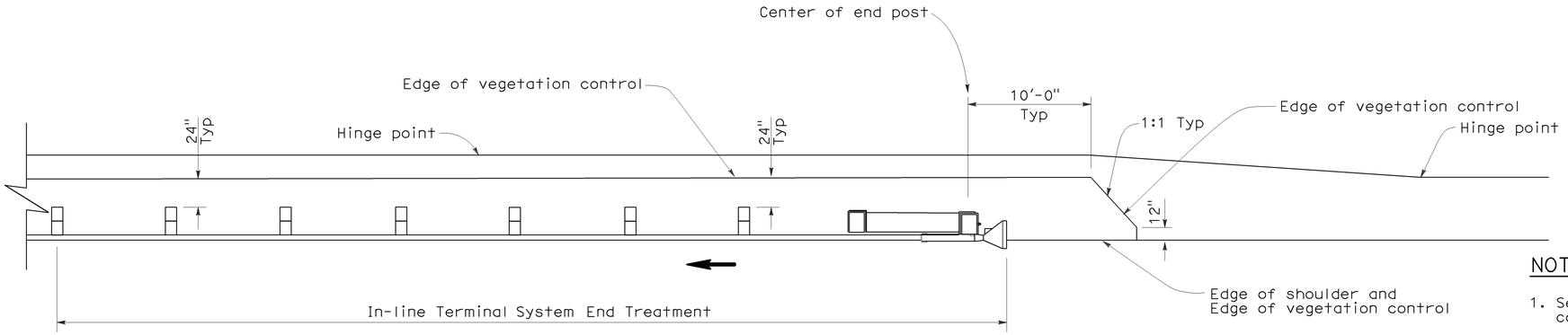

PLAN

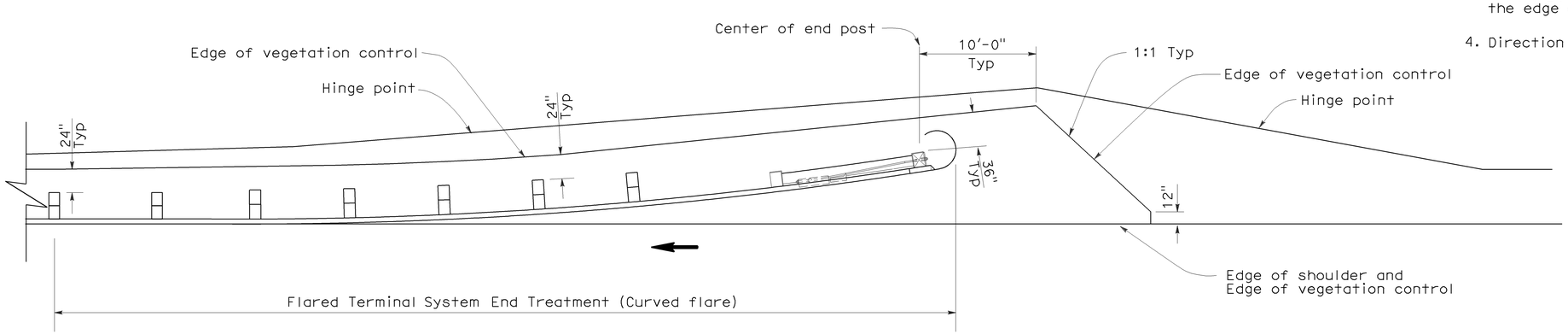

PLAN

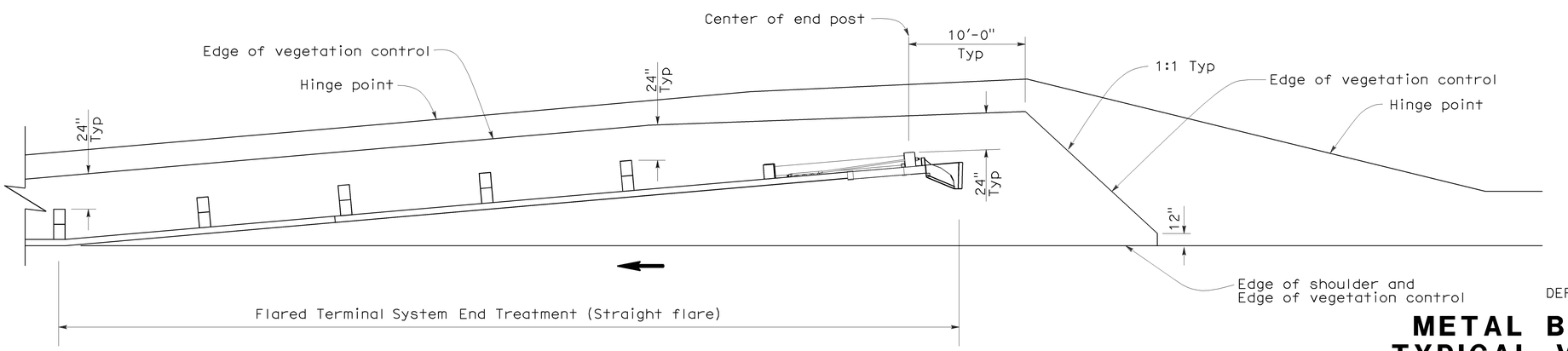

PLAN

NOTES:

1. See New Standard Plan NSP A77C5 for additional vegetation control details.
2. Where the distance between back of post and hinge point is less than 24", vegetation control to be constructed flush with the back edge of the post.
3. Where dike is constructed under railing, construct vegetation control to back edge of dike. Where paved shoulder is constructed within 24" in front of the post, construct vegetation control to the edge of paved shoulder.
4. Direction of adjacent traffic indicated by ←.

STATE OF CALIFORNIA
DEPARTMENT OF TRANSPORTATION

METAL BEAM GUARD RAILING TYPICAL VEGETATION CONTROL FOR TERMINAL SYSTEM END TREATMENTS

NO SCALE

NSP A77C6 DATED OCTOBER 20, 2006 SUPPLEMENTS THE STANDARD PLANS BOOK DATED MAY 2006.

NEW STANDARD PLAN NSP A77C6

2006 NEW STANDARD PLAN NSP A77C6

7-17-06

DIST	COUNTY	ROUTE	POST MILES TOTAL PROJECT	SHEET NO.	TOTAL SHEETS
05	Mon	68	R3.9/10.8	42	62

Randell D. Hiatt
REGISTERED CIVIL ENGINEER

October 20, 2006
PLANS APPROVAL DATE

REGISTERED PROFESSIONAL ENGINEER
Randell D. Hiatt
No. C50200
Exp. 6-30-07
CIVIL
STATE OF CALIFORNIA

The State of California or its officers or agents shall not be responsible for the accuracy or completeness of electronic copies of this plan sheet.

To accompany plans dated 5-31-11

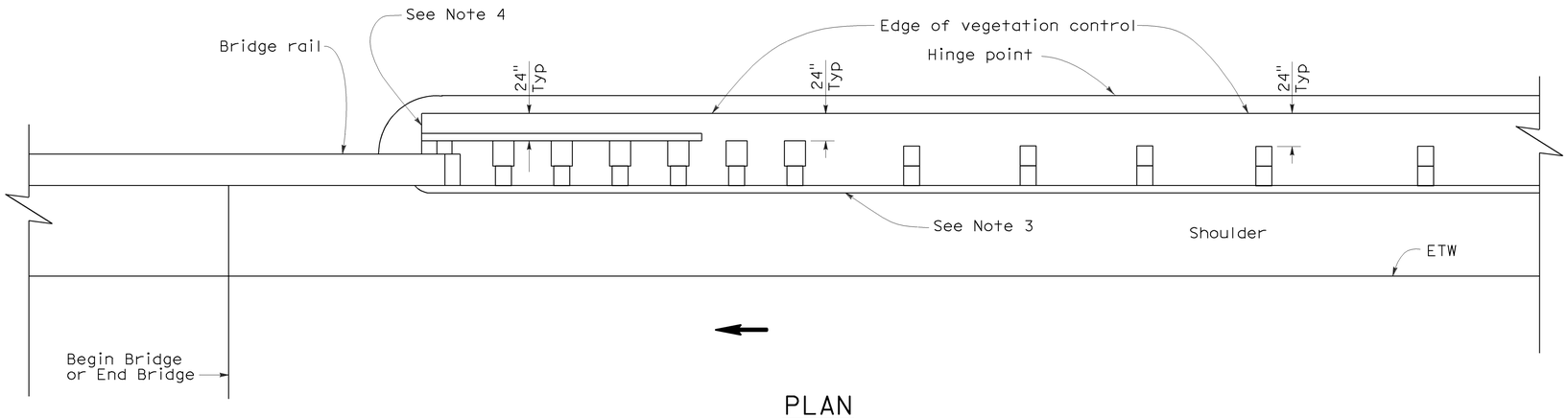

PLAN

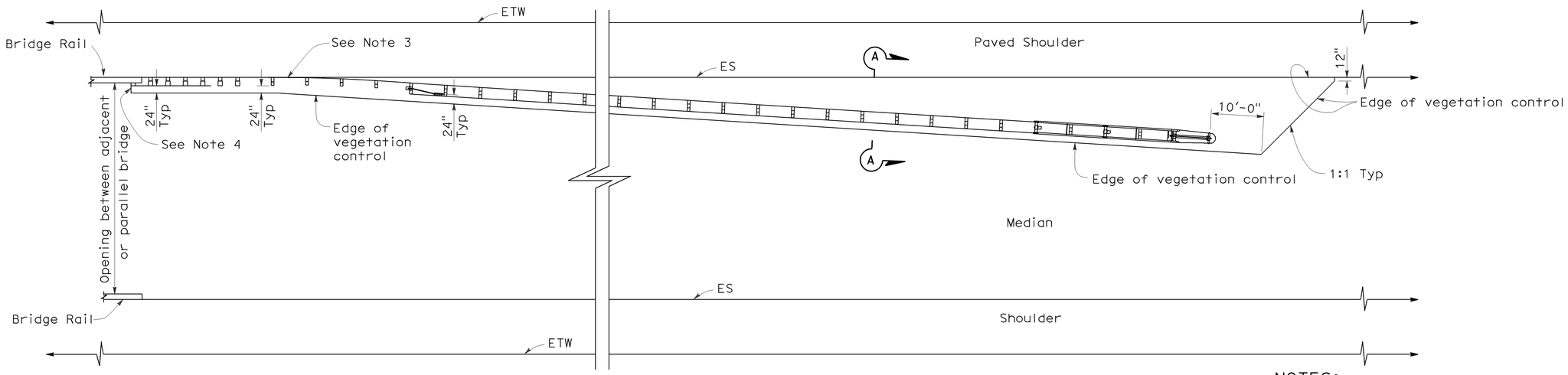

PLAN

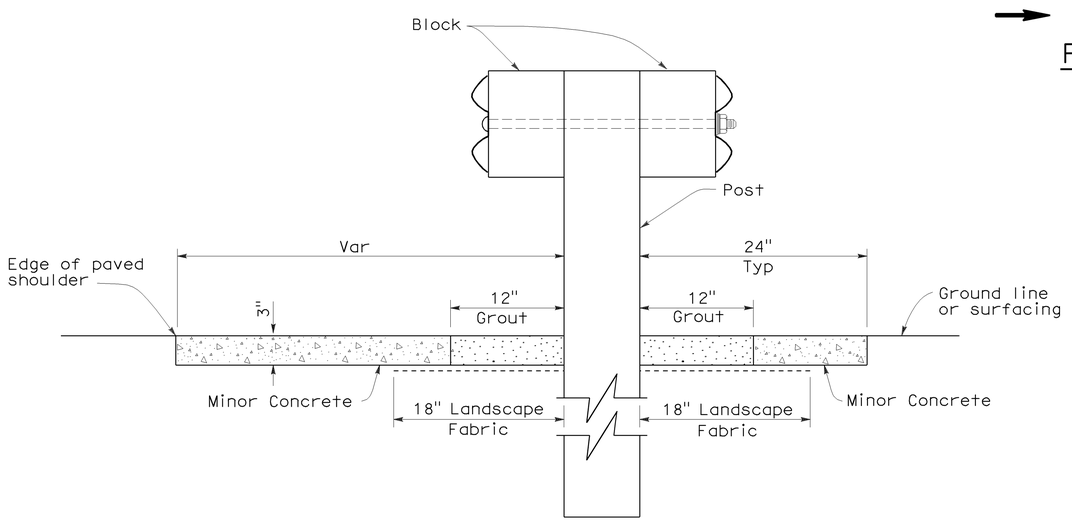

SECTION A-A

NOTES:

1. See New Standard Plan NSP A77C5 for additional vegetation control details.
2. Where the distance between back of post and hinge point is less than 24", vegetation control to be constructed flush with the back edge of the post.
3. Where dike is constructed under railing, construct vegetation control to back edge of dike. Where paved shoulder is constructed within 24" in front of the post, construct vegetation control to the edge of paved shoulder.
4. End vegetation control at end of backside rail element.
5. Direction of adjacent traffic indicated by ←.

STATE OF CALIFORNIA
DEPARTMENT OF TRANSPORTATION

METAL BEAM GUARD RAILING TYPICAL VEGETATION CONTROL AT STRUCTURE APPROACH AND DEPARTURE

NO SCALE

NSP A77C7 DATED OCTOBER 20, 2006 SUPPLEMENTS THE STANDARD PLANS BOOK DATED MAY 2006.

NEW STANDARD PLAN NSP A77C7

2006 NEW STANDARD PLAN NSP A77C7

7-17-06

DIST	COUNTY	ROUTE	POST MILES TOTAL PROJECT	SHEET NO.	TOTAL SHEETS
05	Mon	68	R3.9/10.8	43	62

Randell D. Hiatt
REGISTERED CIVIL ENGINEER

October 20, 2006
PLANS APPROVAL DATE

REGISTERED PROFESSIONAL ENGINEER
Randell D. Hiatt
No. C50200
Exp. 6-30-07
CIVIL
STATE OF CALIFORNIA

The State of California or its officers or agents shall not be responsible for the accuracy or completeness of electronic copies of this plan sheet.

To accompany plans dated 5-31-11

NOTES:

1. See New Standard Plan NSP A77C5 for additional vegetation control details.
2. Where the distance between back of post and hinge point is less than 24", vegetation control to be constructed flush with the back edge of the post.
3. Where dike is constructed under railing, construct vegetation control to back edge of dike. Where paved shoulder is constructed within 24" in front of the post, construct vegetation control to the edge of paved shoulder.
4. Direction of adjacent traffic indicated by ←.

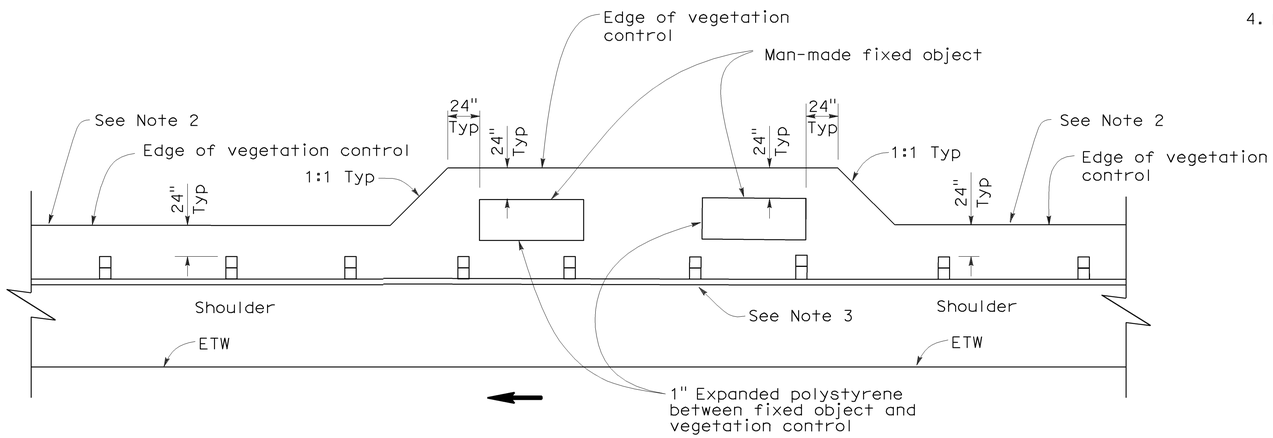

PLAN

FIXED OBJECT(S) ON SHOULDER

STATE OF CALIFORNIA
DEPARTMENT OF TRANSPORTATION

METAL BEAM GUARD RAILING TYPICAL VEGETATION CONTROL AT FIXED OBJECT

NO SCALE

NSP A77C8 DATED OCTOBER 20, 2006 SUPPLEMENTS THE STANDARD PLANS BOOK DATED MAY 2006.

NEW STANDARD PLAN NSP A77C8

2006 NEW STANDARD PLAN NSP A77C8

DIST	COUNTY	ROUTE	POST MILES TOTAL PROJECT	SHEET NO.	TOTAL SHEETS
05	Mon	68	R3.9/10.8	44	62

Randell D. Hiatt
REGISTERED CIVIL ENGINEER

October 20, 2006
PLANS APPROVAL DATE

REGISTERED PROFESSIONAL ENGINEER
Randell D. Hiatt
No. C50200
Exp. 6-30-07
CIVIL
STATE OF CALIFORNIA

The State of California or its officers or agents shall not be responsible for the accuracy or completeness of electronic copies of this plan sheet.

To accompany plans dated 5-31-11

NOTES:

1. See New Standard Plan NSP A77C5 for additional vegetation control details.
2. Where dike is constructed under railing, construct vegetation control to back edge of dike. Where paved shoulder is constructed within 24" in front of the post, construct vegetation control to the edge of paved shoulder.
3. Direction of adjacent traffic indicated by ← .

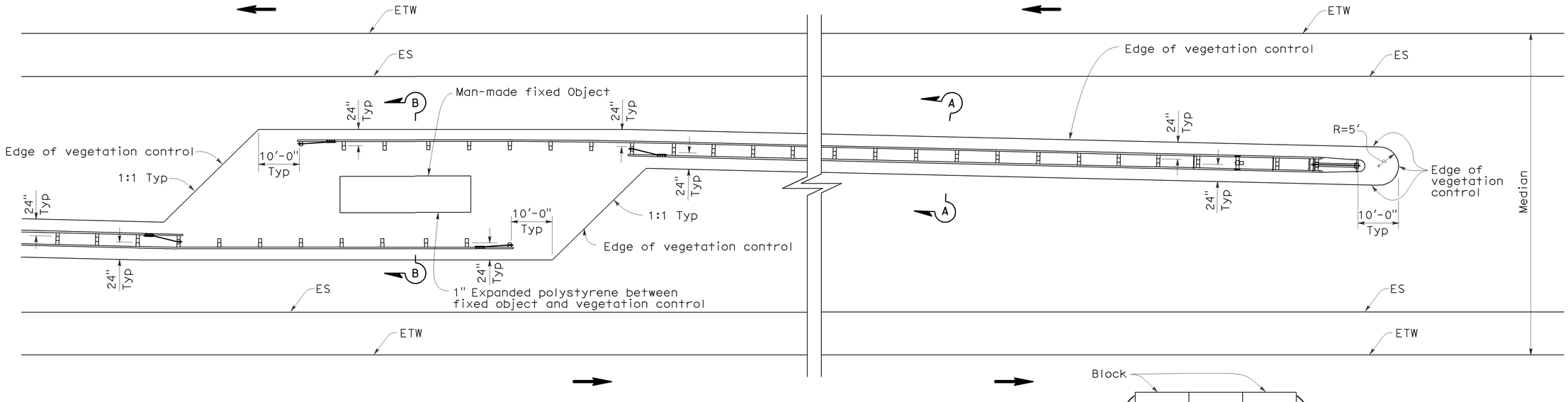

PLAN

FIXED OBJECT(S) IN MEDIAN

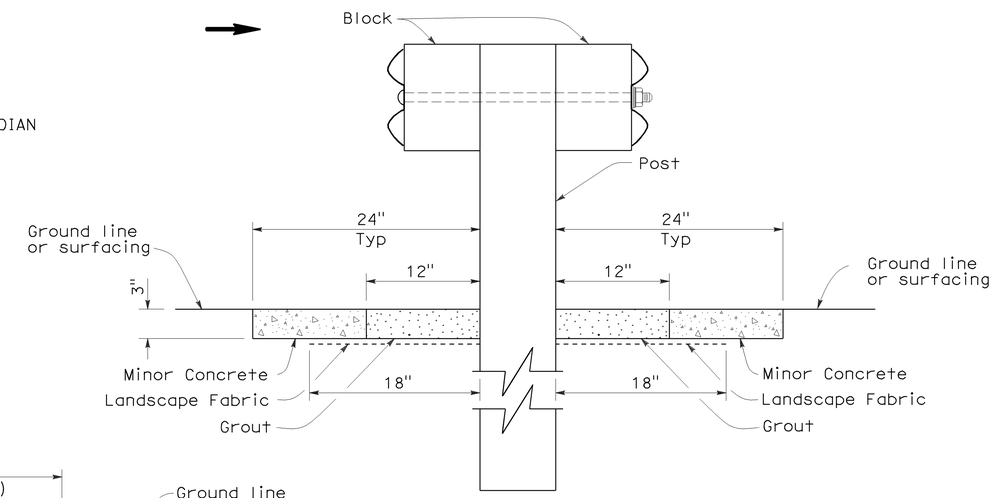

SECTION A-A

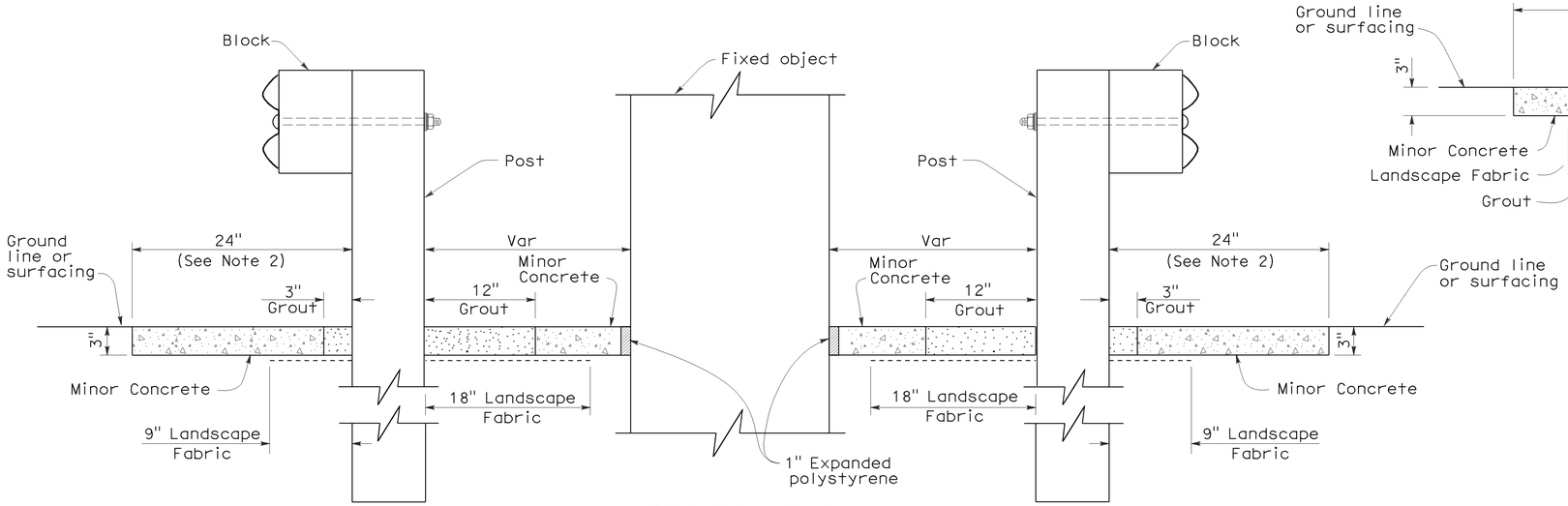

SECTION B-B

STATE OF CALIFORNIA
DEPARTMENT OF TRANSPORTATION

METAL BEAM GUARD RAILING TYPICAL VEGETATION CONTROL AT FIXED OBJECT

NO SCALE

NSP A77C9 DATED OCTOBER 20, 2006 SUPPLEMENTS THE STANDARD PLANS BOOK DATED MAY 2006.

NEW STANDARD PLAN NSP A77C9

2006 NEW STANDARD PLAN NSP A77C9

7-17-06

DIST	COUNTY	ROUTE	POST MILES TOTAL PROJECT	SHEET NO.	TOTAL SHEETS
05	Mon	68	R3.9/10.8	45	62

Randell D. Hiatt
REGISTERED CIVIL ENGINEER

October 20, 2006
PLANS APPROVAL DATE

REGISTERED PROFESSIONAL ENGINEER
Randell D. Hiatt
No. C50200
Exp. 6-30-07
CIVIL
STATE OF CALIFORNIA

The State of California or its officers or agents shall not be responsible for the accuracy or completeness of electronic copies of this plan sheet.

To accompany plans dated 5-31-11

NOTES:

1. See New Standard Plan NSP A77C5 for additional vegetation control details.
2. Where dike is constructed under railing, construct vegetation control to back edge of dike. Where paved shoulder is constructed within 24" in front of the post, construct vegetation control to the edge of paved shoulder.
3. Direction of adjacent traffic indicated by ←.

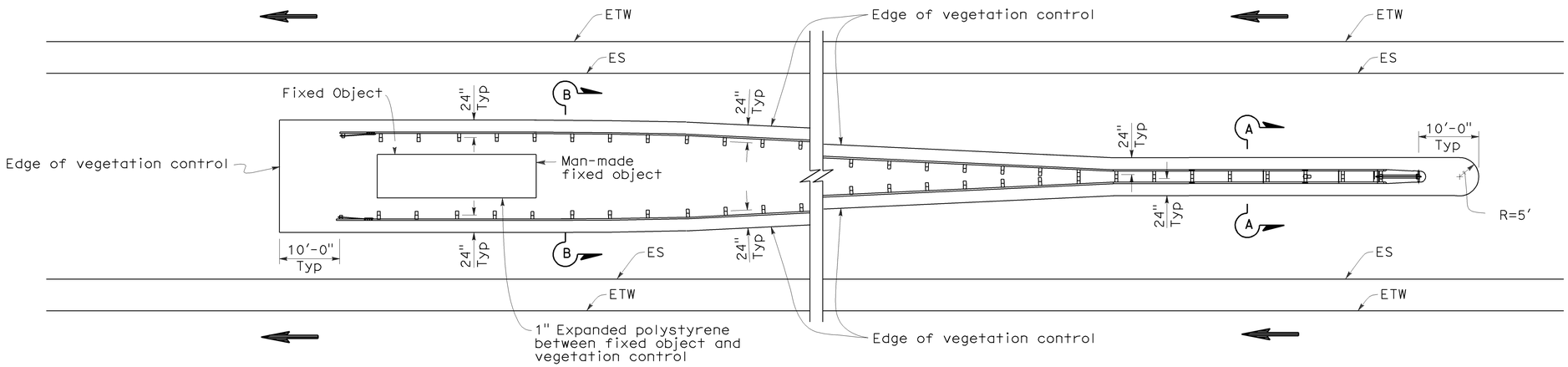

PLAN

FIXED OBJECT(S) BETWEEN SEPARATE ROADBEDS
(ONE-WAY TRAFFIC)

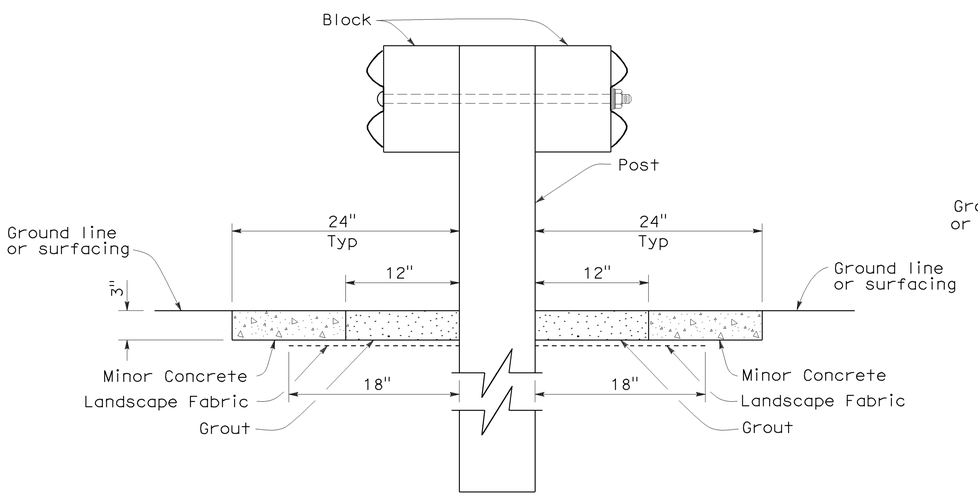

SECTION A-A

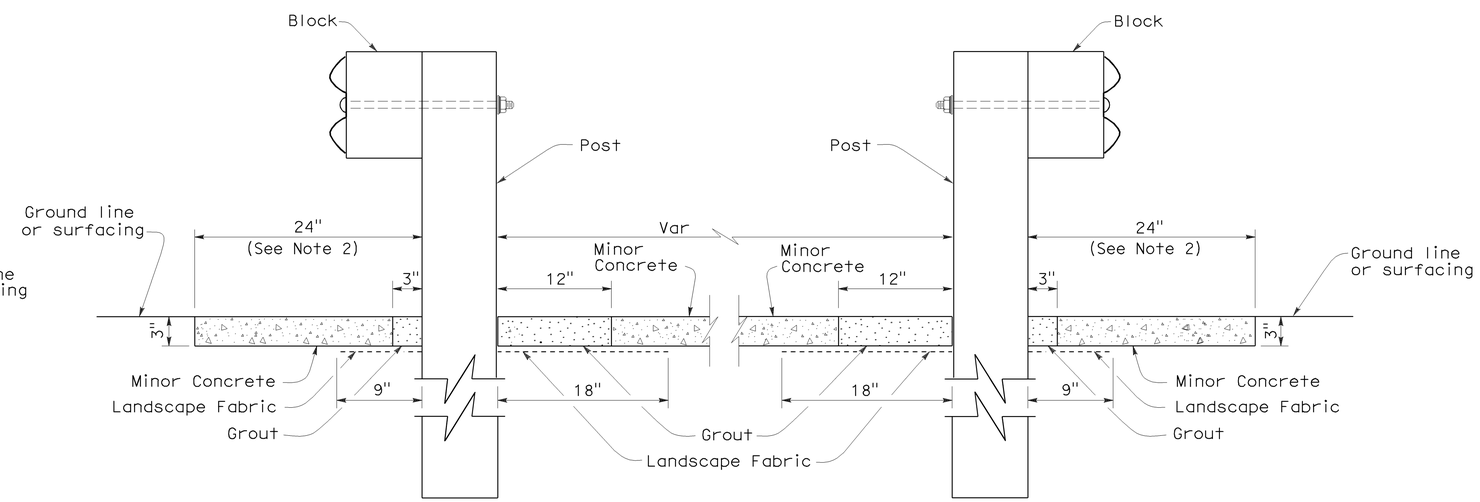

SECTION B-B

STATE OF CALIFORNIA
DEPARTMENT OF TRANSPORTATION

METAL BEAM GUARD RAILING TYPICAL VEGETATION CONTROL AT FIXED OBJECT

NO SCALE

NSP A77C10 DATED OCTOBER 20, 2006 SUPPLEMENTS THE STANDARD PLANS BOOK DATED MAY 2006.

NEW STANDARD PLAN NSP A77C10

2006 NEW STANDARD PLAN NSP A77C10

7-17-06

DIST	COUNTY	ROUTE	POST MILES TOTAL PROJECT	SHEET NO.	TOTAL SHEETS
05	Mon	68	R3.9/10.8	46	62

Randell D. Hiatt
REGISTERED CIVIL ENGINEER

June 6, 2008
PLANS APPROVAL DATE

REGISTERED PROFESSIONAL ENGINEER Randell D. Hiatt No. C50200 Exp. 6-30-09 CIVIL STATE OF CALIFORNIA

The State of California or its officers or agents shall not be responsible for the accuracy or completeness of electronic copies of this plan sheet.

To accompany plans dated 5-31-11

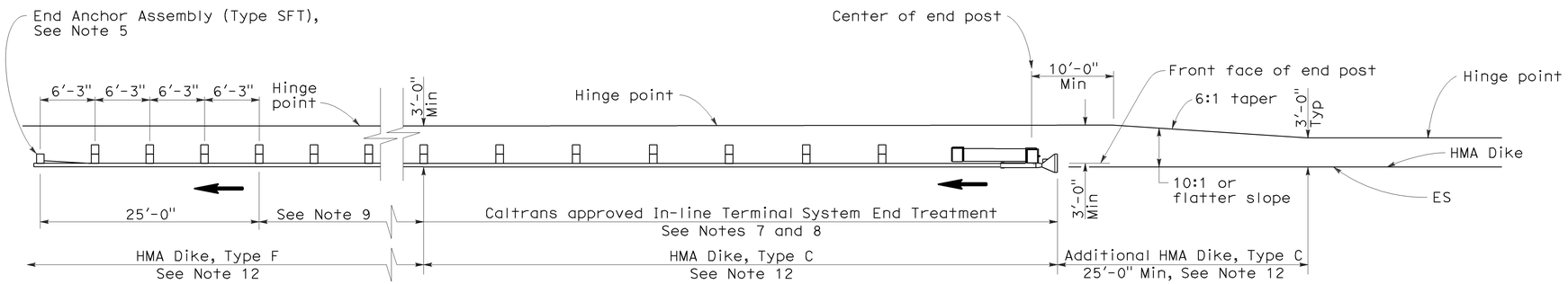

TYPE 11A LAYOUT

(EMBANKMENT GUARD INSTALLATION WITH IN-LINE END TREATMENT AT TRAFFIC APPROACH END OF RAILING)
See Note 6

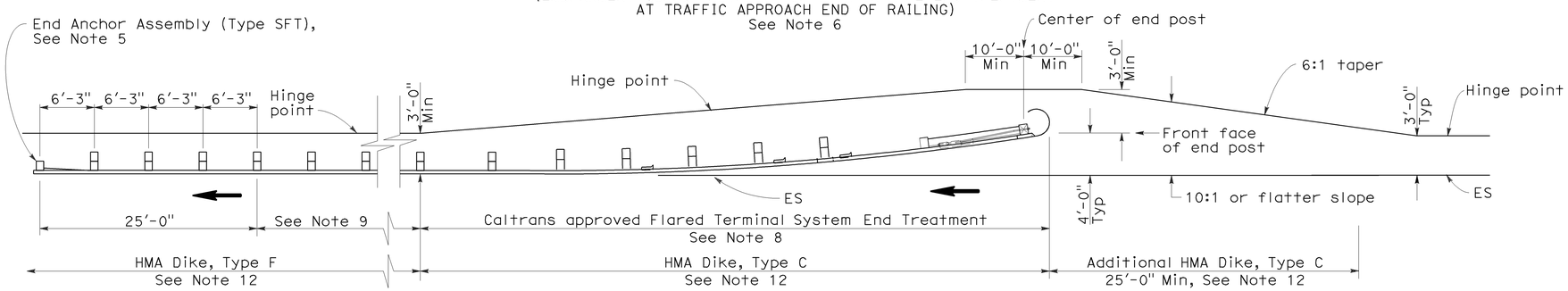

TYPE 11B LAYOUT

(EMBANKMENT GUARD RAILING INSTALLATION WITH FLARED END TREATMENT AT TRAFFIC APPROACH END OF RAILING)
See Note 6

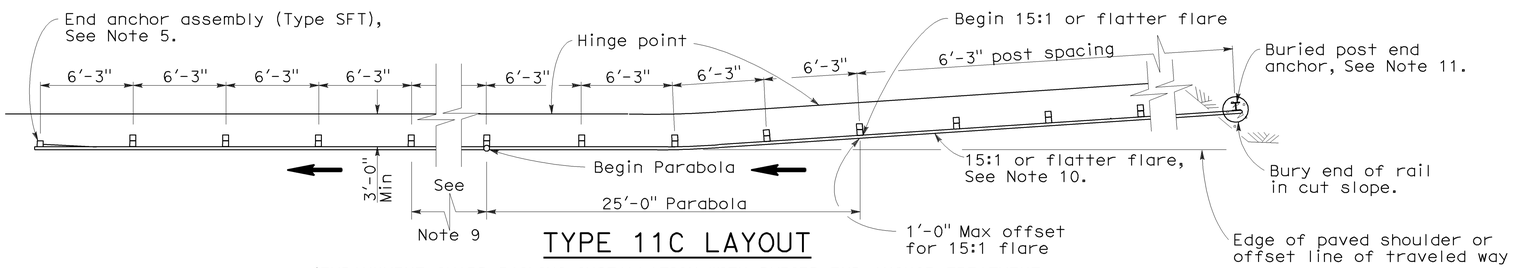

TYPE 11C LAYOUT

(EMBANKMENT GUARD RAILING INSTALLATION WITH BURIED END ANCHOR TREATMENT AT TRAFFIC APPROACH END OF RAILING)
See Notes 6 and 12

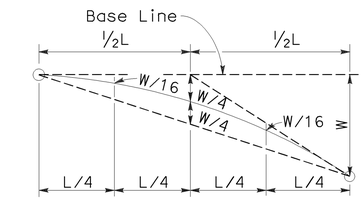

TYPICAL PARABOLIC LAYOUT

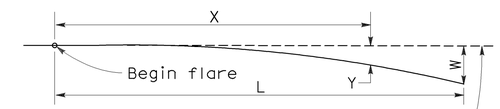

Base Line (Edge of paved shoulder or offset line of edge of traveled way)

$$Y = \frac{WX^2}{L^2}$$

Y = Offset from base line
W = Maximum offset
X = Distance along base line
L = Length of flare

PARABOLIC FLARE OFFSETS

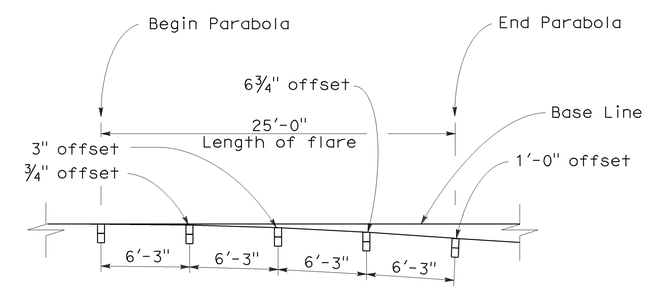

TYPICAL FLARE OFFSETS FOR 1 FOOT MAX END OFFSET

NOTES:

1. Line post, blocks and hardware to be used are shown on Standard Plans A77A1, A77A2, A77B1, A77C1, and A77C2.
2. Guard rail post spacing to be 6'-3" center to center, except as otherwise noted.
3. Except as noted, line posts are 6" x 8" x 6'-0" wood with 6" x 8" x 1'-2" wood blocks. W6 x 9 steel posts, 6'-0" in length, with 6" x 8" x 1'-2" notched wood blocks or recycled plastic blocks may be used for 6" x 8" x 6'-0" wood post with 6" x 8" x 1'-2" wood blocks where applicable and when specified.
4. Direction of adjacent traffic indicated by ⟶.
5. For End Anchor Assembly (Type SFT) details, see Standard Plan A77H1.
6. Layout Types 11A, 11B or 11C are typically used where guard railing is recommended to shield embankment slopes and a crashworthy end treatment is required for only one direction of traffic.
7. In-line Terminal System End Treatments are used where site conditions will not accommodate a flared end treatment.
8. The type of terminal system end treatment to be used will be shown on the Project Plans.
9. Dependent on site conditions (embankment height and side slope), construction of additional guard railing (length equal to multiples of 12'-6" with 6'-3" post spacing) may be advisable.
10. The 15:1 or flatter flare used with buried end anchors is based on the edge of the paved shoulder or offset line of edge of the traveled way. The length of guard railing within the 15:1 or flatter flare is based on site conditions and should be a length equal to multiples of 12'-6".
11. For details of the buried post end anchor used with Type 11C Layout, see Standard Plan A77I2.
12. Where placement of dike is required with guard railing installations, see Revised Standard Plan RSP A77C4 for dike positioning details.

STATE OF CALIFORNIA
DEPARTMENT OF TRANSPORTATION

METAL BEAM GUARD RAILING TYPICAL LAYOUTS FOR EMBANKMENTS

NO SCALE

RSP A77E1 DATED JUNE 6, 2008 SUPERSEDES STANDARD PLAN A77E1 DATED MAY 1, 2006 - PAGE 48 OF THE STANDARD PLANS BOOK DATED MAY 2006.

REVISED STANDARD PLAN RSP A77E1

2006 REVISED STANDARD PLAN RSP A77E1

12-10-07

DIST	COUNTY	ROUTE	POST MILES TOTAL PROJECT	SHEET NO.	TOTAL SHEETS
05	Mon	68	R3.9/10.8	47	62

Randell D. Hiatt
REGISTERED CIVIL ENGINEER

June 6, 2008
PLANS APPROVAL DATE

REGISTERED PROFESSIONAL ENGINEER
Randell D. Hiatt
No. C50200
Exp. 6-30-09
CIVIL
STATE OF CALIFORNIA

The State of California or its officers or agents shall not be responsible for the accuracy or completeness of electronic copies of this plan sheet.

To accompany plans dated 5-31-11

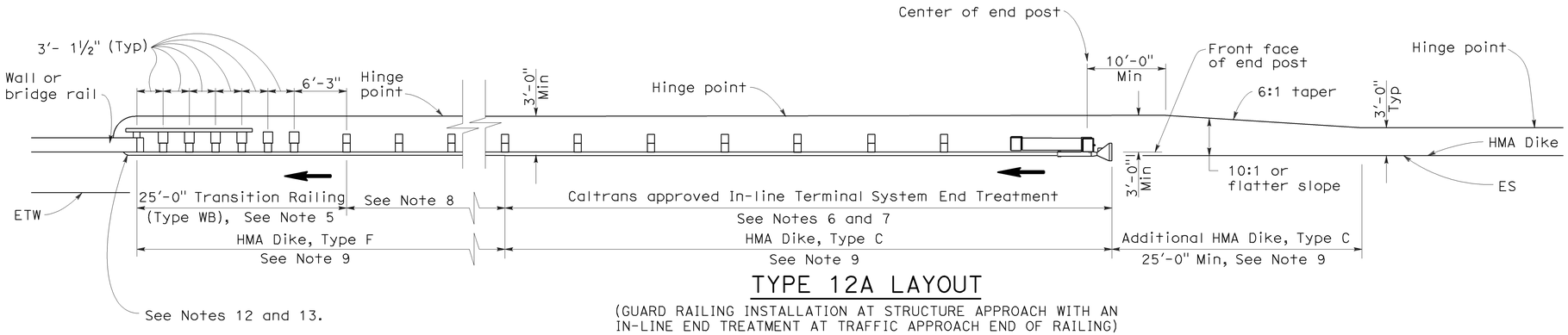

TYPE 12A LAYOUT

(GUARD RAILING INSTALLATION AT STRUCTURE APPROACH WITH AN IN-LINE END TREATMENT AT TRAFFIC APPROACH END OF RAILING)
See Notes 10

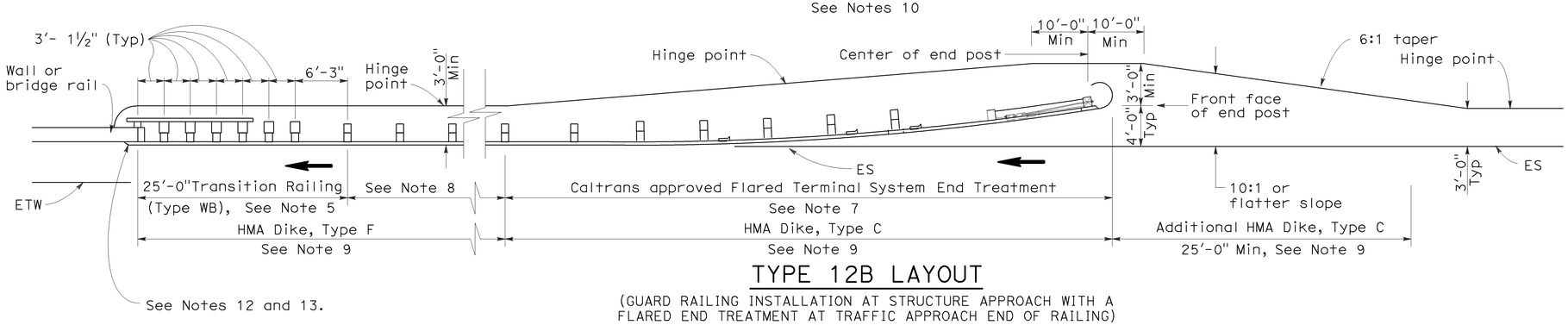

TYPE 12B LAYOUT

(GUARD RAILING INSTALLATION AT STRUCTURE APPROACH WITH A FLARED END TREATMENT AT TRAFFIC APPROACH END OF RAILING)
See Notes 10

NOTES:

1. Line post, blocks and hardware to be used are shown on Standard Plans A77A1, A77A2, A77B1, A77C1 and A77C2.
2. Guard rail post spacing to be 6'-3" center to center, except as otherwise noted.
3. Except as noted, line posts are 6" x 8" x 6'-0" wood with 6" x 8" x 1'-2" wood blocks. W6 x 9 steel posts, 6'-0" in length, with 6" x 8" x 1'-2" notched wood blocks or plastic blocks may be used for 6" x 8" x 6'-0" wood posts with 6" x 8" x 1'-2" wood blocks where applicable and when specified.
4. Direction of adjacent traffic indicated by ➡.
5. For Transition Railing (Type WB) details for Types 12A and 12B Layouts, see Standard Plan A77J4.
6. In-line Terminal System End Treatments are used where site conditions will not accommodate a flared end treatment.
7. The type of terminal system end treatment to be used will be shown on the Project Plans.
8. Dependent on site conditions (embankment height, side slopes, or other fixed objects), it may be advisable to construct additional guard railing (a length equal to multiples of 12'-6" with 6'-3" post spacing) between the transition railing and end treatment.
9. Where placement of dike is required with guard railing installations, see Revised Standard Plan RSP A77C4 for dike positioning details.
10. Type 12A or Type 12B Layouts are typically used:
    a. To the right of approaching traffic, at the end of a structure, on two-lane conventional highway where the roadbed width across the structure is less than 40 feet.
    b. To the left of approaching traffic, at the end of a structure, on two-lane conventional highway where the roadbed width across the structure is less than 40 feet.
    c. To the right of approaching traffic at the end of each structure on multilane freeways or expressways with separate adjacent or parallel bridges.
    d. To the right of approaching traffic at the end of the structure on multilane freeways or expressways with decked median on the bridge.
11. See Revised Standard Plan RSP A77F3 for typical layout used left of approaching traffic at the ends of each structure on multilane freeways or expressways with separate adjacent or parallel bridges.
12. For additional details of typical connections to bridge rail, see Connection Detail AA on Revised Standard Plans RSP A77J1 and RSP A77J2 and Connection Detail FF on Standard Plans A77K1 and A77K2.
13. For additional details of a typical connection to walls or abutments, see Standard Plan A77J3.

STATE OF CALIFORNIA
DEPARTMENT OF TRANSPORTATION

METAL BEAM GUARD RAILING TYPICAL LAYOUTS FOR STRUCTURE APPROACH

NO SCALE

RSP A77F1 DATED JUNE 6, 2008 SUPERSEDES STANDARD PLAN A77F1
DATED MAY 1, 2006 - PAGE 54 OF THE STANDARD PLANS BOOK DATED MAY 2006.

REVISED STANDARD PLAN RSP A77F1

2006 REVISED STANDARD PLAN RSP A77F1

12-10-07

DIST	COUNTY	ROUTE	POST MILES TOTAL PROJECT	SHEET NO.	TOTAL SHEETS
05	Mon	68	R3.9/10.8	48	62

Randell D. Hiatt
REGISTERED CIVIL ENGINEER

June 6, 2008
PLANS APPROVAL DATE

REGISTERED PROFESSIONAL ENGINEER
Randell D. Hiatt
No. C50200
Exp. 6-30-09
CIVIL
STATE OF CALIFORNIA

The State of California or its officers or agents shall not be responsible for the accuracy or completeness of electronic copies of this plan sheet.

To accompany plans dated 5-31-11

NOTES:

1. Line post, blocks and hardware to be used are shown on Standard Plans A77A1, A77A2, A77B1, A77C1 and A77C2.
2. Guard railing post spacing to be 6′-3″ center to center, except as otherwise noted.
3. Except as noted, line posts are 6″ x 8″ x 6′-0″ wood with 6″ x 8″ x 1′-2″ wood blocks. W6 x 9 steel posts, 6′-0″ in length, with 6″ x 8″ x 1′-2″ notched wood blocks or notched recycled plastic blocks may be used for 6″ x 8″ x 6′-0″ wood line posts with 6″ x 8″ x 1′-2″ wood blocks where applicable and when specified.
4. A 4′-0″ minimum clearance is required between the face of the railing and the face of a fixed object located directly behind standard guard railing section with post spacing of 6′-3″. Construct guard railing as shown in the detail "Strengthened Railing Sections for Fixed Objects" on this plan, where the clearance between the face of the railing and the face of a fixed object is less than 4′-0″, but not less than 2′-3″. Where the clearance is less than 2′-3″, a concrete wall or barrier should be constructed to shield the fixed object(s).
5. Direction of adjacent traffic indicated by ➡.
6. For End Anchor Assembly (Type SFT) details, see Standard Plan A77H1.
7. Type of crash cushion to be used will be shown on the Project Plans.
8. Type 15A layout is typically used on multilane freeways or expressways to shield fixed objects in the area between separated one-way roadbeds.
9. For typical flare offsets for 25′-0″ length parabola with maximum offset of 1′-0″, see Revised Standard Plan RSP A77E1.
10. The 15:1 or flatter flare is measured off of the edge of the traveled way.
11. W6 x 15 steel post, 8′-0″ in length, with 8″ x 8″ x 1′-2″ notched wood block or notched recycled plastic blocks may be used in place of the 10″ x 10″ x 8′-0″ wood post with 8″ x 8″ x 1′-2″ wood block shown in the "Strengthened Railing Sections Detail".

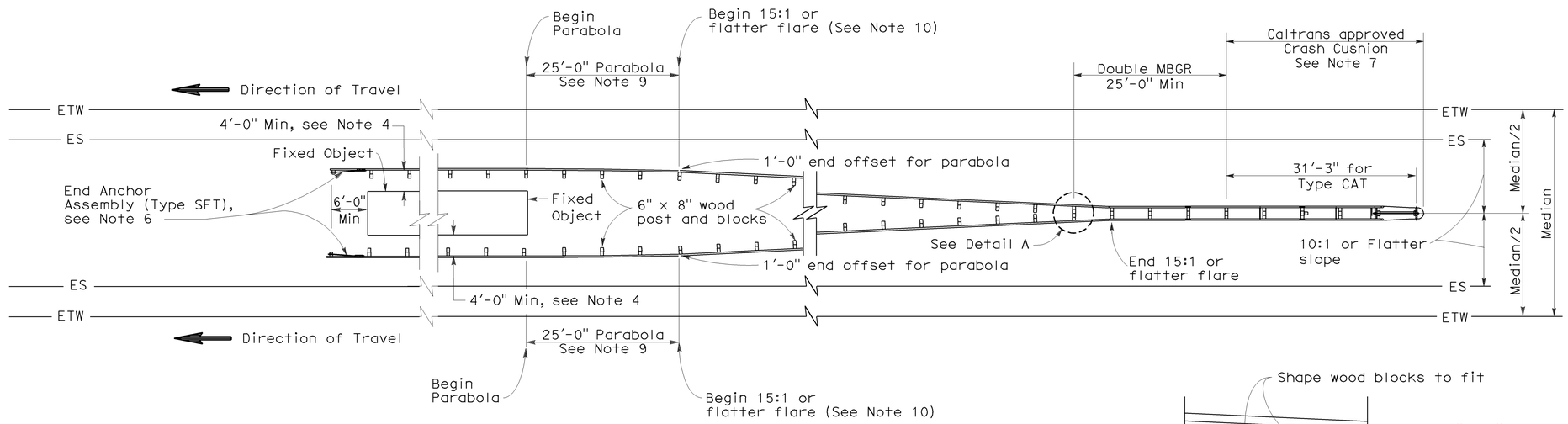

TYPE 15A LAYOUT

See Note 9

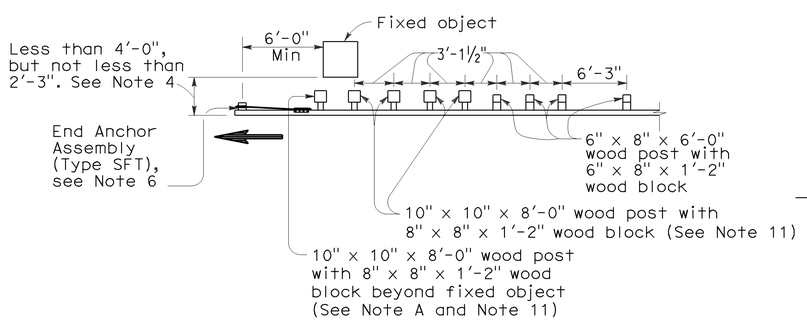

NOTE A: For a series of fixed objects (bridge columns, overhead sign supports, etc.) additional 10″ x 10″ x 8′-0″ wood post with 8″ x 8″ x 1′-2″ wood blocks at 3′-1½″ center to center spacing are to be used between fixed objects.

STRENGTHENED RAILING SECTIONS FOR FIXED OBJECT

Use strengthened railing sections with Type 15A layout where minimum clearance between the face of the guard railing and the fixed object(s) is less than 4′-0″, but not less than 2′-3″. See Note 4.

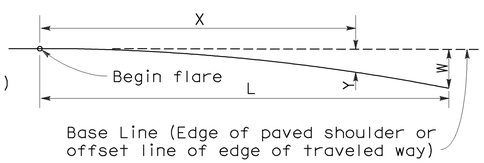

$$Y = \frac{WX^2}{L^2}$$

Y = Offset from base line
W = Maximum offset
X = Distance along base line
L = Length of flare

PARABOLIC FLARE OFFSETS

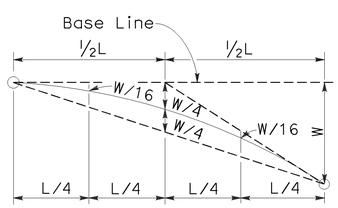

TYPICAL PARABOLIC LAYOUT

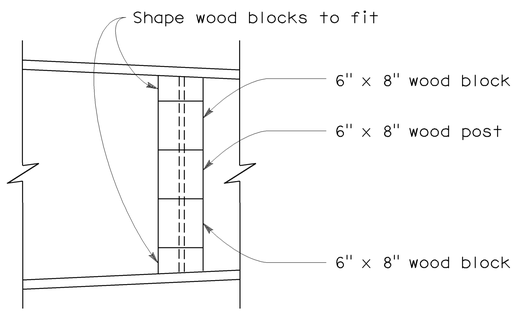

DETAIL A

STATE OF CALIFORNIA
DEPARTMENT OF TRANSPORTATION

METAL BEAM GUARD RAILING TYPICAL LAYOUTS FOR FIXED OBJECTS BETWEEN SEPARATE ROADBEDS (ONE-WAY TRAFFIC)

NO SCALE

RSP A77G2 DATED JUNE 6, 2008 SUPERSEDES STANDARD PLAN A77G2
DATED MAY 1, 2006 - PAGE 60 OF THE STANDARD PLANS BOOK DATED MAY 2006.

REVISED STANDARD PLAN RSP A77G2

2006 REVISED STANDARD PLAN RSP A77G2

12-10-07

DIST	COUNTY	ROUTE	POST MILES TOTAL PROJECT	SHEET NO.	TOTAL SHEETS
05	Mon	68	R3.9/10.8	49	62

Randell D. Hiatt
REGISTERED CIVIL ENGINEER

June 6, 2008
PLANS APPROVAL DATE

REGISTERED PROFESSIONAL ENGINEER
Randell D. Hiatt
No. C50200
Exp. 6-30-09
CIVIL
STATE OF CALIFORNIA

The State of California or its officers or agents shall not be responsible for the accuracy or completeness of electronic copies of this plan sheet.

To accompany plans dated 5-31-11

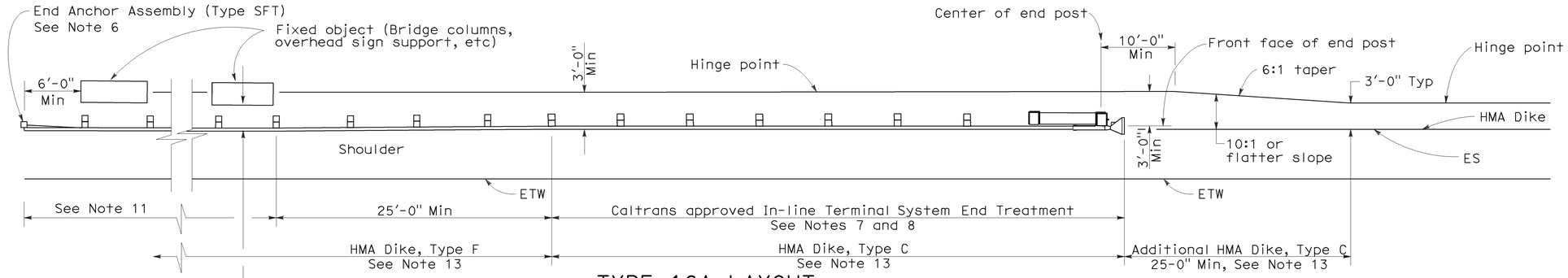

TYPE 16A LAYOUT

(GUARD RAILING INSTALLATION AT ROADSIDE FIXED OBJECT OR OBJECTS WITH AN IN-LINE END TREATMENT AT TRAFFIC APPROACH END OF RAILING)
See Notes 12 and 13

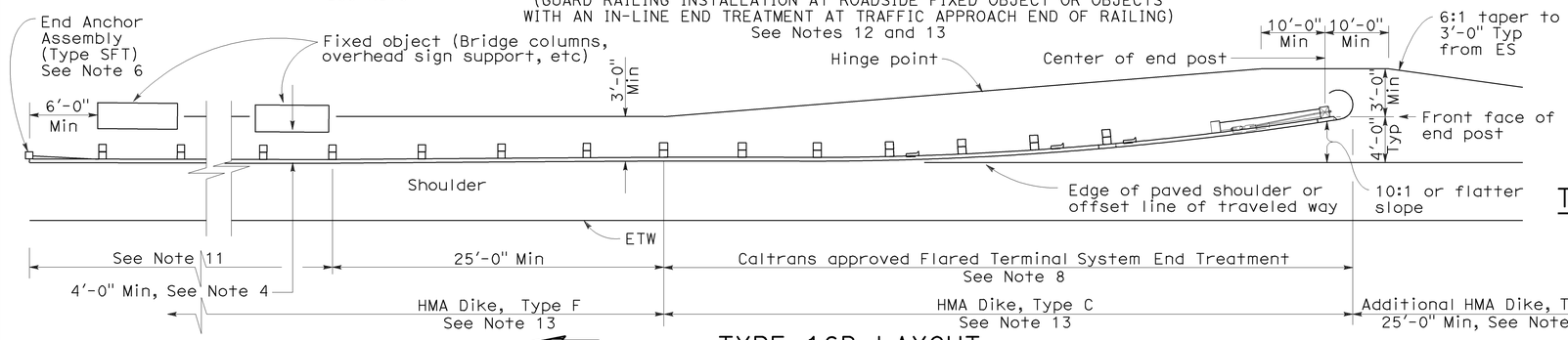

TYPE 16B LAYOUT

(GUARD RAILING INSTALLATION AT ROADSIDE FIXED OBJECT OR OBJECTS WITH A FLARED END TREATMENT AT TRAFFIC APPROACH END OF RAILING)
See Notes 12 and 13

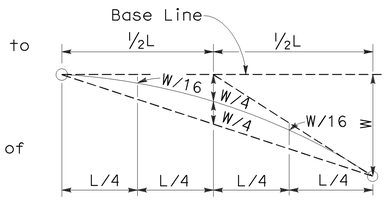

TYPICAL PARABOLIC LAYOUT

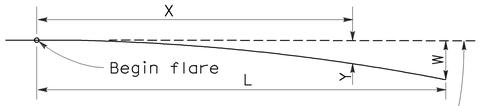

Base Line (Edge of paved shoulder or offset line of edge of traveled way)

$$Y = \frac{WX^2}{L^2}$$

Y = Offset from base line
W = Maximum offset
X = Distance along base line
L = Length of flare

PARABOLIC FLARE OFFSETS

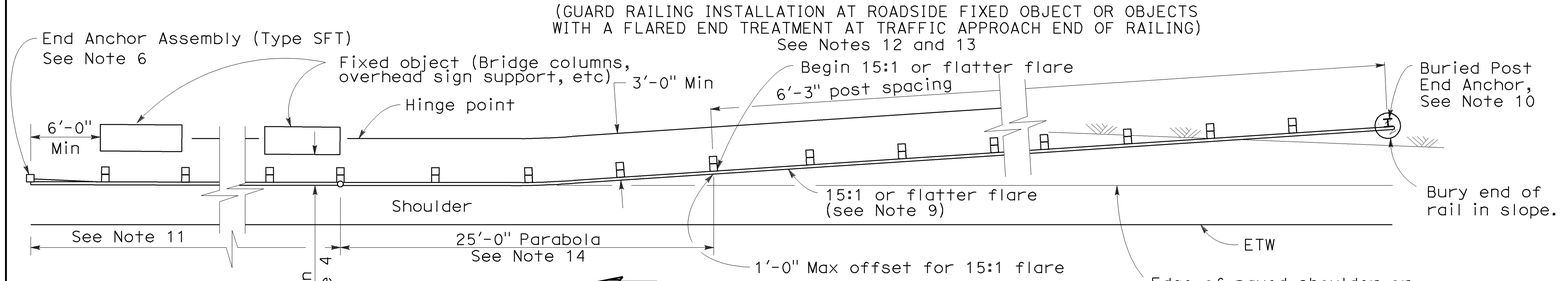

TYPE 16C LAYOUT

(GUARD RAILING INSTALLATION AT ROADSIDE FIXED OBJECT OR OBJECTS WITH A BURIED END ANCHOR TREATMENT AT TRAFFIC APPROACH END OF RAILING)
See Notes 12 and 13

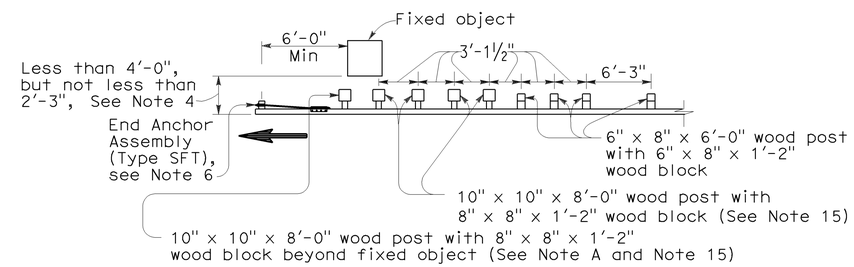

NOTE A: For a series of fixed objects (bridge columns, overhead sign supports, etc.) additional 10" x 10" x 8'-0" wood post with 8" x 8" x 1'-2" wood blocks at 3'-1½" center to center spacing are to be used between fixed objects.

STRENGTHENED RAILING SECTIONS FOR FIXED OBJECT

Use strengthened railing sections with Types 16A, 16B or 16C Layouts where minimum clearance between the face of the guard railing and fixed object(s) is less than 4'-0", but not less than 2'-3". See Note 4

NOTES:

1. Line post, blocks and hardware to be used are shown on Revised Standard Plans A77A1, A77A2, A77B1, A77C1 and A77C2.
2. Guard railing post spacing to be 6'-3" center to center, except as otherwise noted.
3. Except as noted, line posts are 6" x 8" x 6'-0" wood with 6" x 8" x 1'-2" wood blocks. W6 x 9 steel posts, 6'-0" in length, with 6" x 8" x 1'-2" notched wood blocks or notched recycled plastic blocks may be used for 6" x 8" x 6'-0" wood line posts with 6" x 8" x 1'-2" wood blocks where applicable and when specified.
4. A 4'-0" minimum clearance is required between the face of the railing and the face of a fixed object located directly behind standard guard railing sections with post spacing of 6'-3". Construct guard railing as shown in the detail "Strengthened Railing Sections for Fixed Objects" on this plan, where the clearance between the face of the railing and the face of a fixed object is less than 4'-0", but not less than 2'-3". Where the clearance is less than 2'-3", a concrete wall or barrier should be constructed to shield the fixed object(s).
5. Direction of adjacent traffic indicated by ⟶.
6. For End Anchor Assembly (Type SFT) details, see Standard Plan A77H1.
7. In-line Terminal System End Treatments are used where site conditions will not accommodate a flared end treatment.
8. The type of terminal system to be used will be shown on the Project Plans.
9. The 15:1 or flatter flare used with Type 16C Layout is based on the edge of the paved shoulder or offset line of edge of the traveled way. The length of guard railing within the 15:1 or flatter flare is based on site conditions and should be a length equal to multiples of 12'-6".
10. For details of the Buried Post End Anchor used with Type 16C Layout, see Standard Plan A77I2.
11. As site conditions dictate, construct additional guard railing to shield fixed object(s). Additional guard railing length equal to multiples of 12'-6". Post spacing at 6'-3" except as specified in Note 4.
12. Layout Types 16A, 16B or 16C are typically used where guard railing is recommended to shield roadside fixed object(s) and a crashworthy end treatment is required for only one direction of traffic.
13. Where placement of dike is required with guard railing, see Revised Standard Plan RSP A77C4 for dike positioning details.
14. For typical flare offsets for 25'-0" length parabola with maximum offset of 1'-0", see Revised Standard Plan RSP A77E1.
15. W6 x 15 steel post, 8'-0" in length, with 8" x 8" x 1'-2" notched wood block or notched recycled plastic blocks may be used in place of the 10" x 10" x 8'-0" wood post with 8" x 8" x 1'-2" wood block shown in the "Strengthened Railing Sections Detail".

STATE OF CALIFORNIA
DEPARTMENT OF TRANSPORTATION

METAL BEAM GUARD RAILING TYPICAL LAYOUTS FOR ROADSIDE FIXED OBJECTS

NO SCALE

RSP A77G3 DATED JUNE 6, 2008 SUPERSEDES STANDARD PLAN A77G3
DATED MAY 1, 2006 - PAGE 61 OF THE STANDARD PLANS BOOK DATED MAY 2006.

REVISED STANDARD PLAN RSP A77G3

2006 REVISED STANDARD PLAN RSP A77G3

12-10-07

Dist	COUNTY	ROUTE	POST MILES TOTAL PROJECT	SHEET No.	TOTAL SHEETS
05	Mon	68	R3.9/10.8	50	62

Randell D. Hiatt
REGISTERED CIVIL ENGINEER

May 20, 2011
PLANS APPROVAL DATE

REGISTERED PROFESSIONAL ENGINEER
Randell D. Hiatt
No. C50200
Exp. 6-30-11
CIVIL
STATE OF CALIFORNIA

The State of California or its officers or agents shall not be responsible for the accuracy or completeness of electronic copies of this plan sheet.

To accompany plans dated 5-31-11

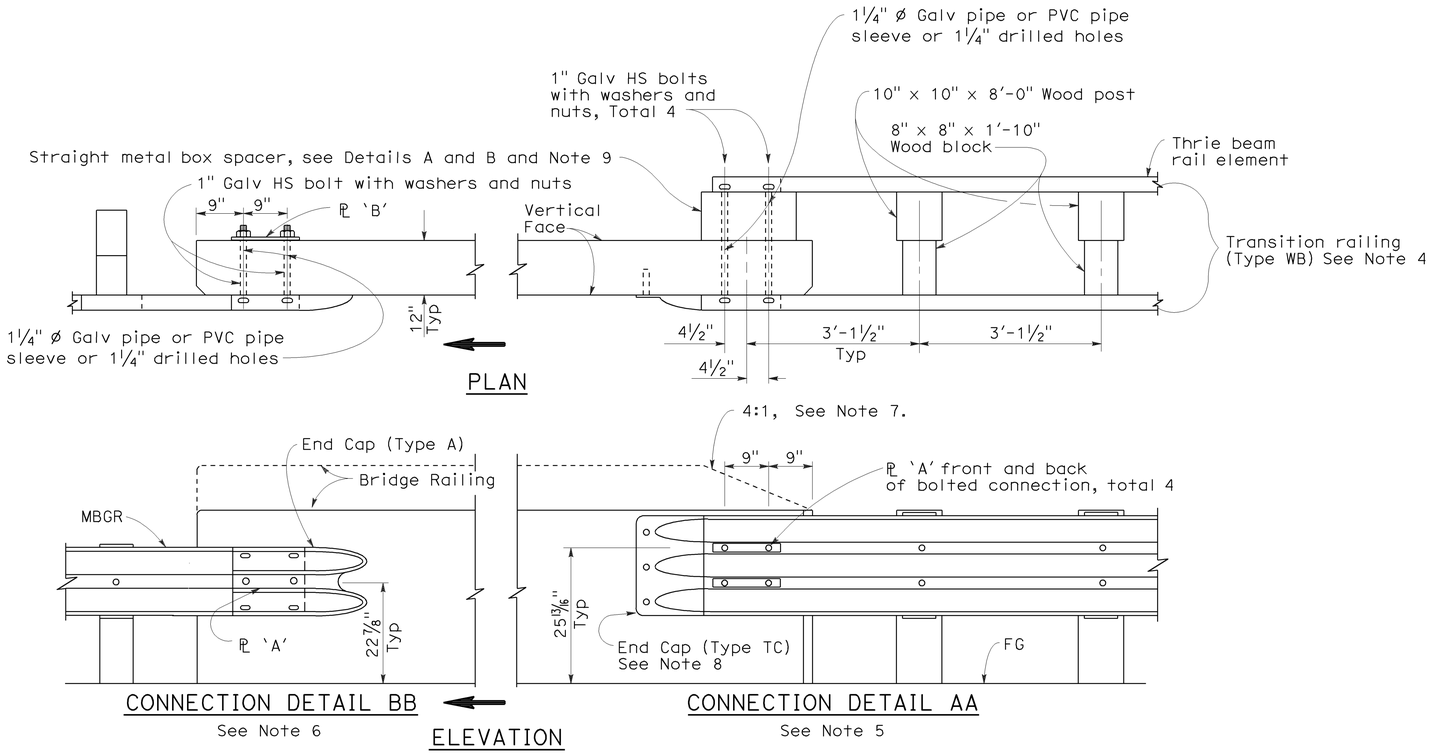

GUARD RAILING CONNECTION TO BRIDGE RAILING WITHOUT SIDEWALK

NOTES:

1. See Revised Standard Plan RSP A77J2 for additional connection details to bridges without sidewalks.
2. Additional details of posts, blocks and hardware are shown on Standard Plan A77B1, A77C1 and A77C2.
3. Direction of adjacent traffic indicated by ➡.
4. For additional details of Transition Railing (Type WB), see Standard Plan A77J4. Transition Railing (Type WB) transitions the 12 gage w-beam standard railing section of guard railing to a heavier gage nested thrie beam railing section which is connected to the concrete bridge railing.
5. For typical use of Connection Detail AA, see Layout Types 12A and 12B on Revised Standard Plan RSP A77F1, Layout Types 12C and 12D on Standard Plan A77F2, and Layout Type 12E on Revised Standard Plan RSP A77F3.
6. For typical use of Connection Detail BB, see Layout Type 12D (structure departure railing connection) on Standard Plan A77F2 and Layout Type 12DD on Standard Plan A77F5.
7. Where the height of the bridge railing exceeds the height of the thrie beam railing by more than 1" at Connection Detail AA, taper the top of the end of the bridge railing at 4:1 to match the top elevation of the thrie beam rail.
8. For details of End Cap (Type TC), see Standard Plan A77J4.
9. See Standard Plan A77J4 for additional details regarding depth dimension for straight metal box spacer.

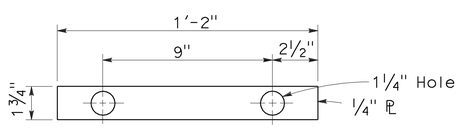

PLATE 'A'

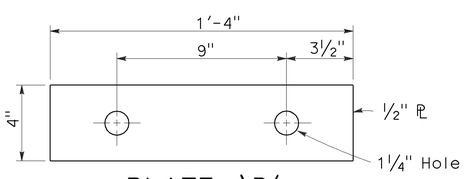

PLATE 'B'
(For backside of connection BB)

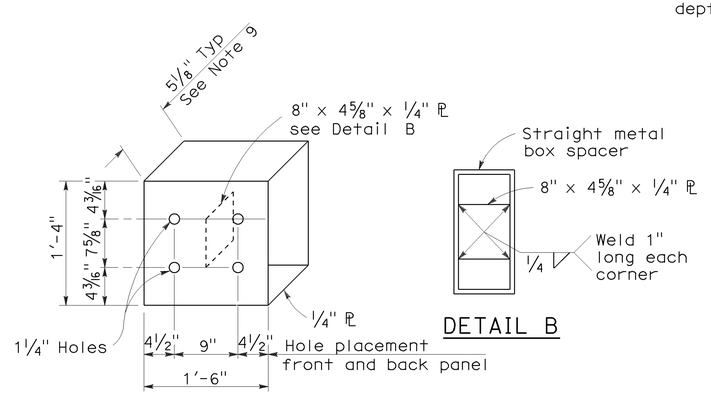

DETAIL A

DETAIL B

STRAIGHT METAL BOX SPACER

STATE OF CALIFORNIA
DEPARTMENT OF TRANSPORTATION

METAL BEAM GUARD RAILING CONNECTIONS TO BRIDGE RAILINGS WITHOUT SIDEWALKS DETAILS No.1

NO SCALE

RSP A77J1 DATED MAY 20, 2011 SUPERSEDES RSP A77J1 DATED JUNE 6, 2008 AND STANDARD PLAN A77J1 DATED MAY 1, 2006 - PAGE 72 OF THE STANDARD PLANS BOOK DATED MAY 2006.

REVISED STANDARD PLAN RSP A77J1

2006 REVISED STANDARD PLAN RSP A77J1

3-10-11

DIST	COUNTY	ROUTE	POST MILES TOTAL PROJECT	SHEET NO.	TOTAL SHEETS
05	Mon	68	R3.9/10.8	51	62

Randell D. Hiatt
REGISTERED CIVIL ENGINEER

June 6, 2008
PLANS APPROVAL DATE

REGISTERED PROFESSIONAL ENGINEER
Randell D. Hiatt
No. C50200
Exp. 6-30-09
CIVIL
STATE OF CALIFORNIA

The State of California or its officers or agents shall not be responsible for the accuracy or completeness of electronic copies of this plan sheet.

To accompany plans dated 5-31-11

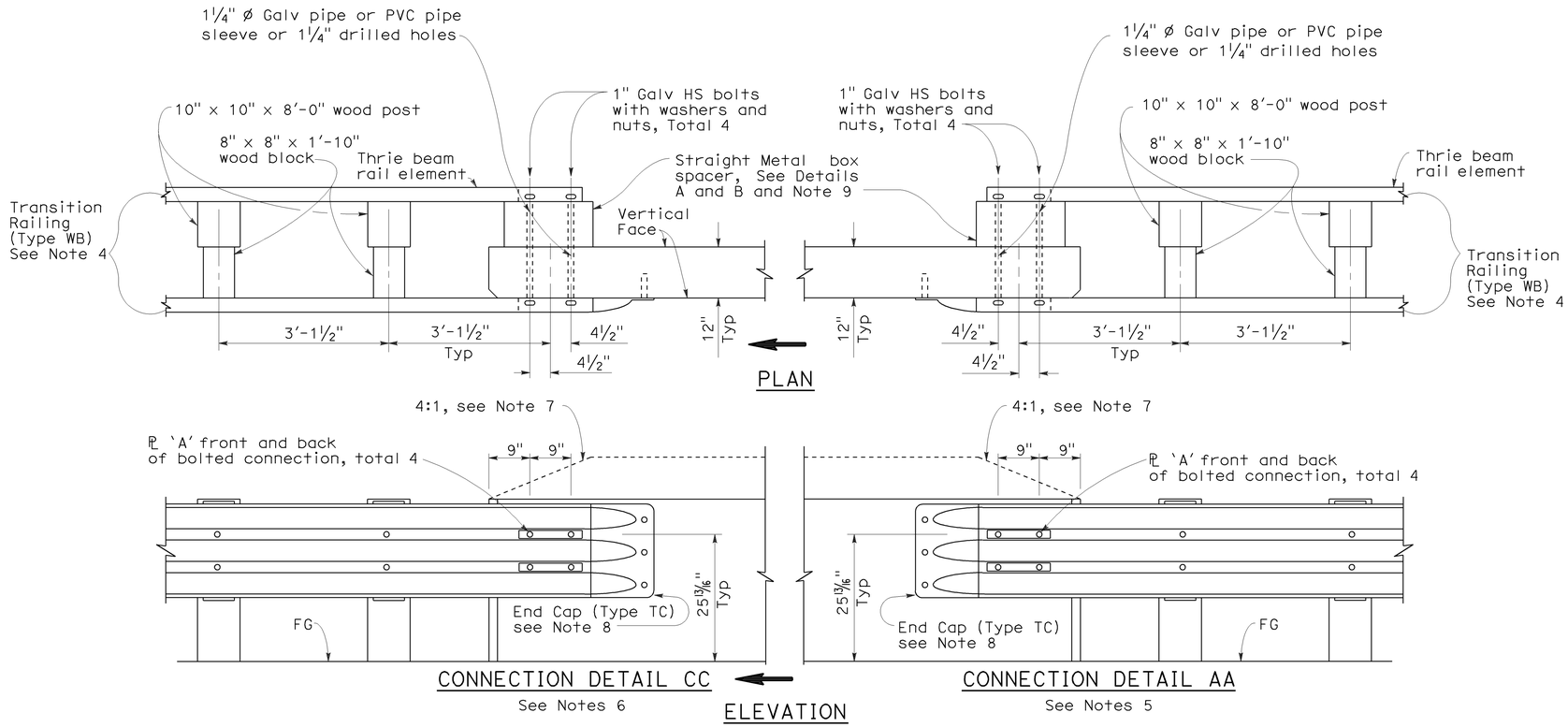

GUARD RAILING CONNECTION TO BRIDGE RAILING WITHOUT SIDEWALK

NOTES:

1. See Revised Standard Plan RSP A77J1 for additional connection details to bridges without sidewalks.
2. Additional details of posts, blocks and hardware are shown on Standard Plan A77B1, A77C1 and A77C2.
3. Direction of adjacent traffic indicated by ⟹.
4. For additional details of Transition Railing (Type WB), see Standard Plan A77J4. Transition Railing (Type WB) transitions the 12 gage w-beam standard railing section of guard railing to a heavier gage nested thrie beam railing section which is connected to the concrete bridge railing.
5. For typical use of Connection Detail AA, see Layout Types 12A and 12B on Revised Standard Plan RSP A77F1, Layout Types 12C and 12D on Standard Plan A77F2, and Layout Type 12E on Revised Standard Plan RSP A77F3.
6. For typical use of Connection Detail CC, see Layout Types 12AA and 12BB on Standard Plan A77F4 and Layout Type 12CC on Standard Plan A77F5.
7. Where the height of the bridge railing exceeds the height of the thrie beam railing by more than 1" at Connection Detail AA and connection Detail CC, taper the top of the end of the bridge railing at 4:1 to match the top elevation of the thrie beam railing.
8. For details of End Cap (Type TC), see Standard Plans A77J4.
9. See Standard Plans A77J4 for additional details regarding depth dimension for straight metal box spacer.

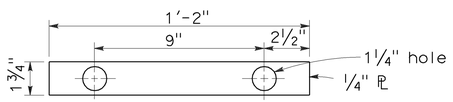

PLATE 'A'

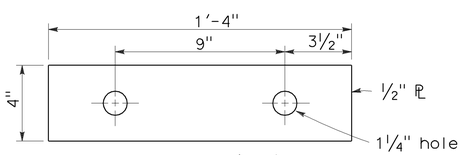

PLATE 'B'
(For backside of connection BB)

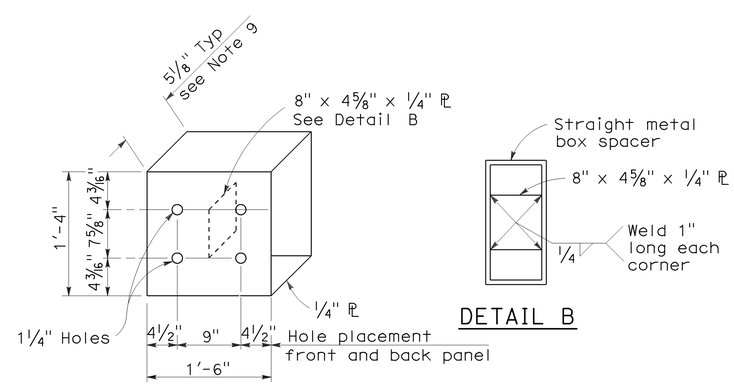

DETAIL A

DETAIL B

STRAIGHT METAL BOX SPACER

STATE OF CALIFORNIA
DEPARTMENT OF TRANSPORTATION

METAL BEAM GUARD RAILING CONNECTIONS TO BRIDGE RAILINGS WITHOUT SIDEWALKS DETAILS No.2

NO SCALE

RSP A77J2 DATED JUNE 6, 2008 SUPERSEDES STANDARD PLAN A77J2 DATED MAY 1, 2006 - PAGE 73 OF THE STANDARD PLANS BOOK DATED MAY 2006.

REVISED STANDARD PLAN RSP A77J2

2006 REVISED STANDARD PLAN RSP A77J2

12-10-07

Dist	COUNTY	ROUTE	POST MILES TOTAL PROJECT	SHEET No.	TOTAL SHEETS
05	Mon	68	R3.9/10.8	52	62

Randell D. Hiatt
REGISTERED CIVIL ENGINEER

May 20, 2011
PLANS APPROVAL DATE

REGISTERED PROFESSIONAL ENGINEER Randell D. Hiatt No. C50200 Exp. 6-30-11 CIVIL STATE OF CALIFORNIA

To accompany plans dated 5-31-11

The State of California or its officers or agents shall not be responsible for the accuracy or completeness of electronic copies of this plan sheet.

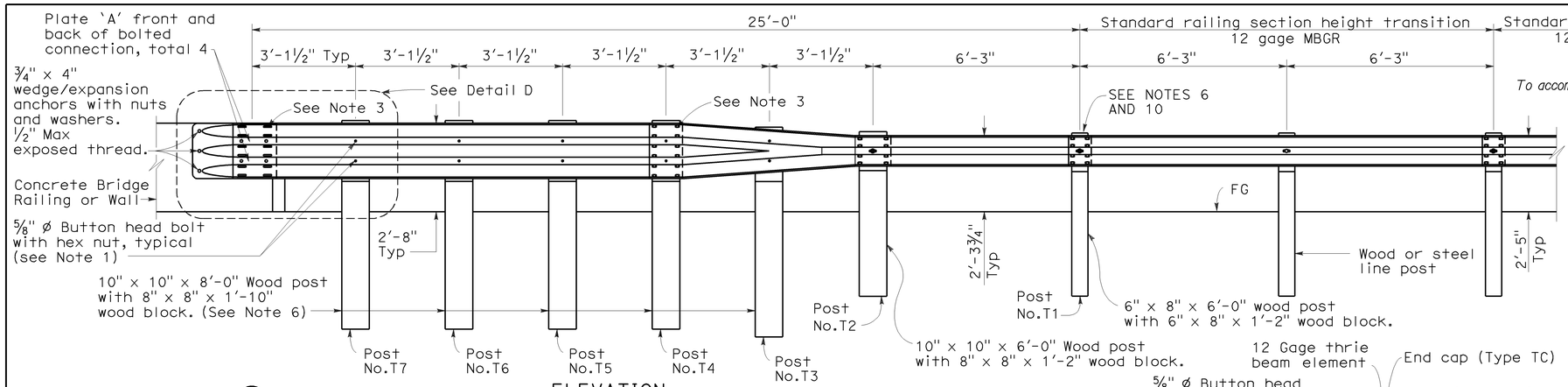

ELEVATION

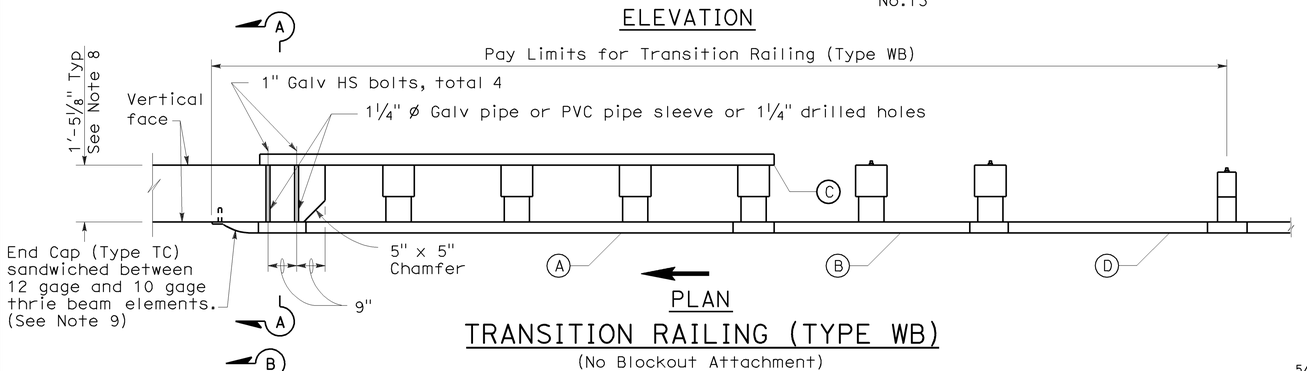

PLAN

TRANSITION RAILING (TYPE WB)

(No Blockout Attachment)

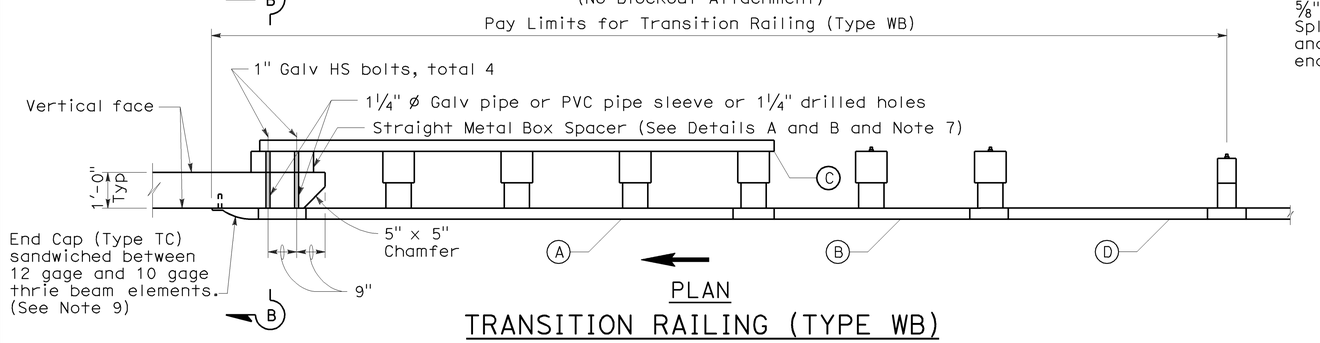

PLAN

TRANSITION RAILING (TYPE WB)

(Blockout Attachment)

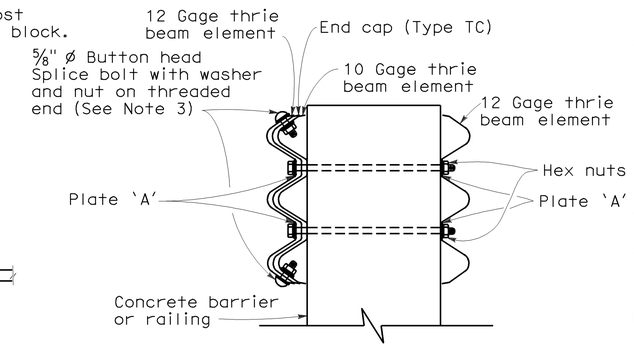

SECTION A-A

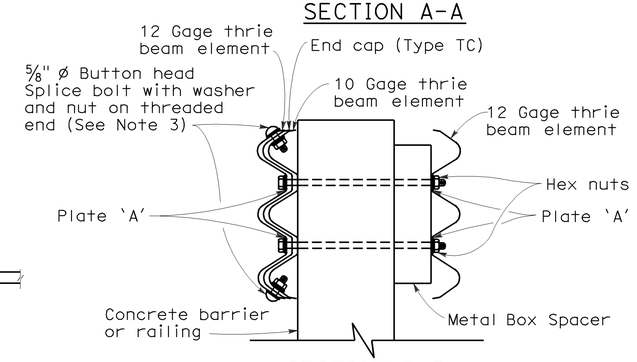

SECTION B-B

NOTES:

1. Use ⅝" ø Button head bolts and hex nuts for connections to posts. No washer on rail face for bolted connections to post.
2. The nested rail elements, end cap, and 'W' beam to thrie beam element may be spliced together prior to bolting the elements to the wood post and concrete barrier or railing.
3. Exterior splice bolt holes for rail element splices at Post No. T4 and the connection to the concrete barrier or railing shall be the standard 29/32" x 1⅛" slot size. Interior splice bolt holes at these locations may be increased up to 1¼" ø. Only the top 2 and the bottom 2 splice bolts with washers and nuts are required for rail splices at Post No. T4 and the connection to the concrete barrier or railing.
4. Direction of adjacent traffic indicated by ➡.
5. The top elevation of Posts No. T2 through No. T7 shall not project more than 1" above the top elevation of the rail element.
6. Typically, the railing connected to Transition Railing (Type WB) will be either standard railing section of metal beam guard railing with height transition ratio of 120:1 or an approved Caltrans end treatment attached to Post No. T1.
7. The depth of the metal box spacer varies from the 5⅛" to 1½" and is dependent on the width of the concrete railing or wall. The combined dimension for the depth of the metal box spacer plus the width of railing or wall is typically 17⅛". Where the space between the backside of the concrete railing or wall and the rear thrie beam element is less than 1½", metal plates similar to Plate 'A' are to be used as spacers.
8. Where the width of the concrete railing or wall is greater than 17⅛", wood blocks are to be used to fill the space created between the backside of Posts No. T4 through No. T7 and the rear thrie beam element. These wood blocks shall be 8" in width and 1'-2" in length. The dimension between the front thrie beam element and the rear thrie beam element is to match the width of the concrete railing or wall.
9. End cap may be installed over 12 gage and 10 gage thrie beam elements where transition railing is installed on the departure end of bridge railing.
10. Conform standard railing section height to 2'-3¾" at Post No. T1 using height transition ratio of 120:1.

LEGEND

(A) Nested thrie beam elements (one 12 gage element nested over one 10 gage element).

(B) One 10 gage "W" beam to thrie beam element.

(C) One 12 gage thrie beam element.

(D) One 10 gage "W" beam rail element (7'-3½" length)

10 gage = 0.135" thick

12 gage = 0.108" thick

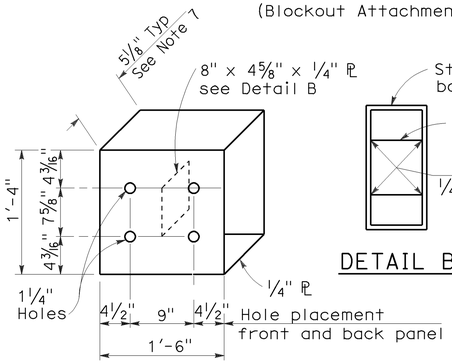

DETAIL A

STRAIGHT METAL BOX SPACER

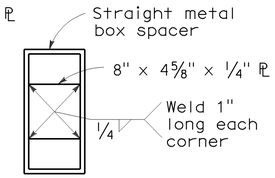

DETAIL B

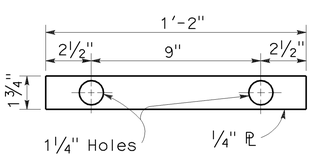

DETAIL C

PLATE 'A'

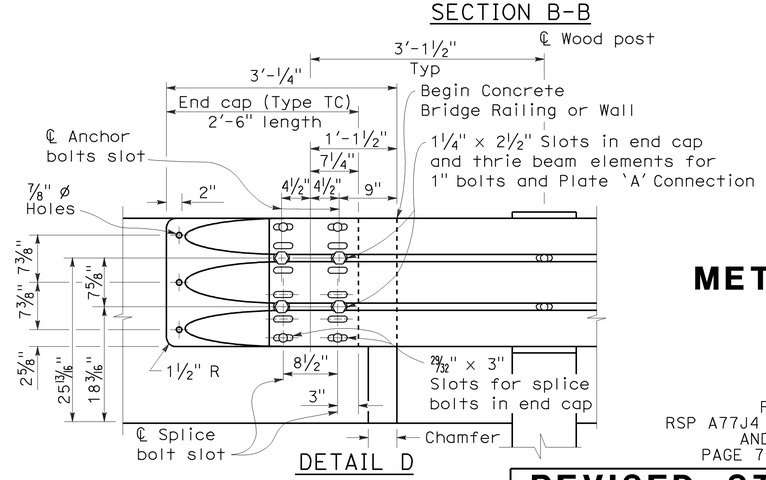

DETAIL D

STATE OF CALIFORNIA
DEPARTMENT OF TRANSPORTATION

METAL BEAM GUARD RAILING TRANSITION RAILING (TYPE WB)

NO SCALE

RSP A77J4 DATED MAY 20, 2011 SUPERSEDES
RSP A77J4 DATED JUNE 5, 2009, RSP A77J4 DATED JUNE 6, 2008
AND STANDARD PLAN A77J4 DATED MAY 1, 2006 -
PAGE 75 OF THE STANDARD PLANS BOOK DATED MAY 2006.

REVISED STANDARD PLAN RSP A77J4

2006 REVISED STANDARD PLAN RSP A77J4

5-14-09

DIST	COUNTY	ROUTE	POST MILES TOTAL PROJECT	SHEET NO.	TOTAL SHEETS
05	Mon	68	R3.9/10.8	53	62

REGISTERED CIVIL ENGINEER

September 1, 2006
PLANS APPROVAL DATE

REGISTERED PROFESSIONAL ENGINEER Hector David Cordova No. C41957 Exp. 3-31-08 CIVIL STATE OF CALIFORNIA

The State of California or its officers or agents shall not be responsible for the accuracy or completeness of electronic copies of this plan sheet.

To accompany plans dated 5-31-11

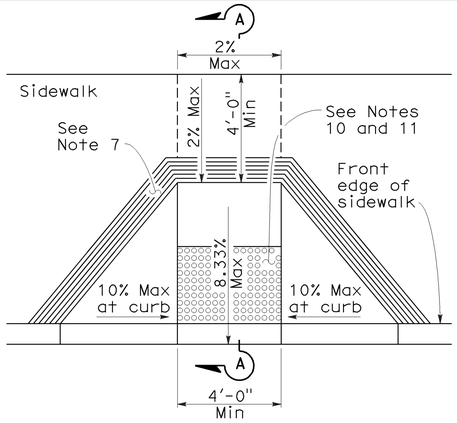

CASE A

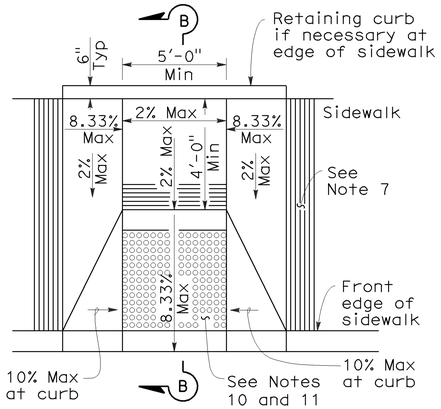

CASE B

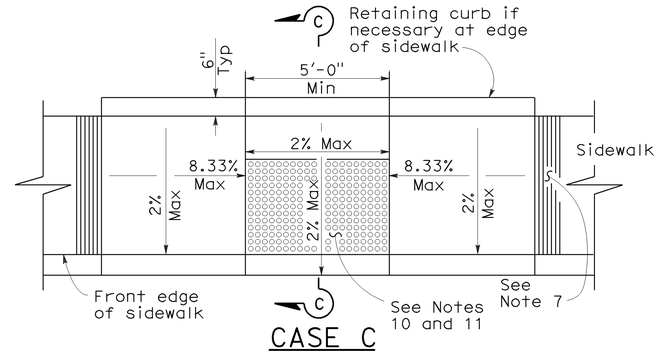

CASE C

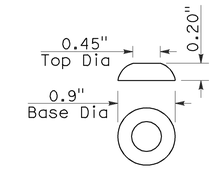

RAISED TRUNCATED DOME

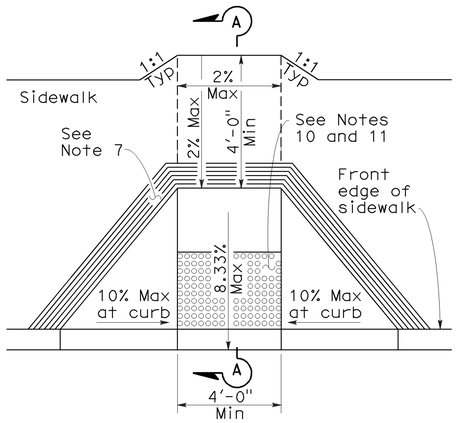

CASE D

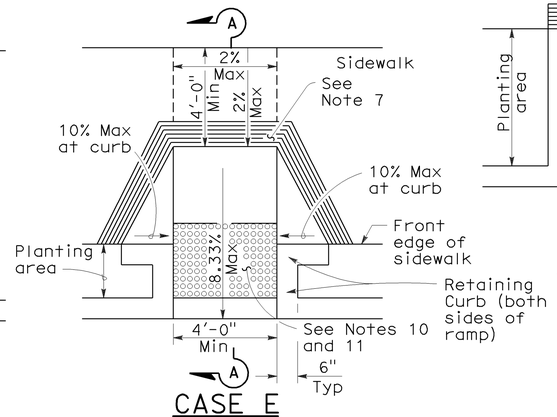

CASE E

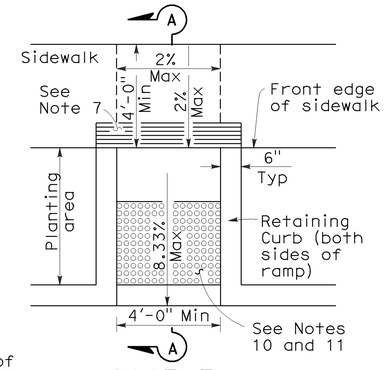

CASE F

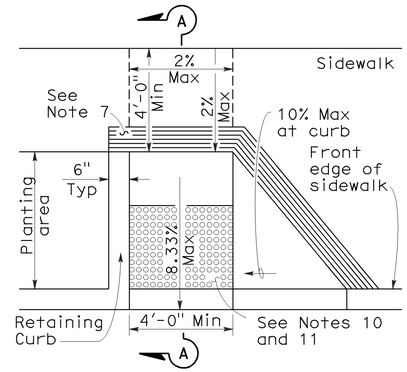

CASE G

See Note 4

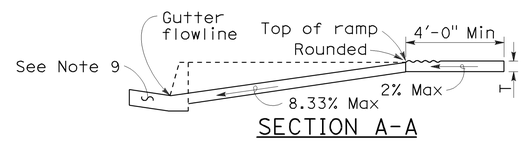

SECTION A-A

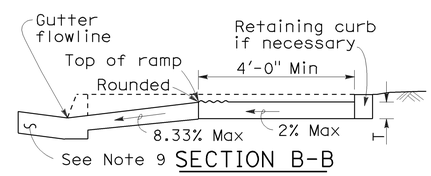

SECTION B-B

Depress entire sidewalk as required

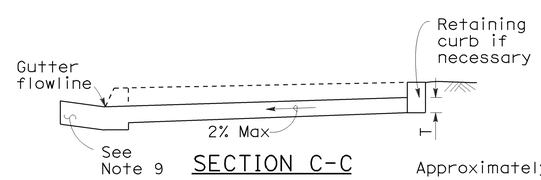

SECTION C-C

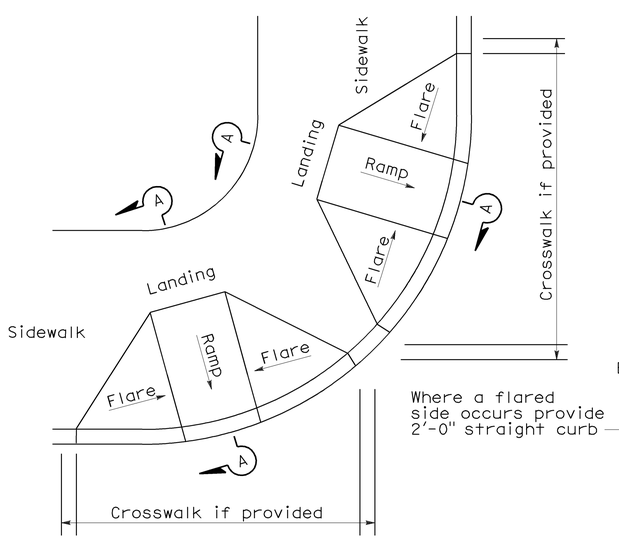

DETAIL A

TYPICAL TWO-RAMP CORNER INSTALLATION

See Note 1

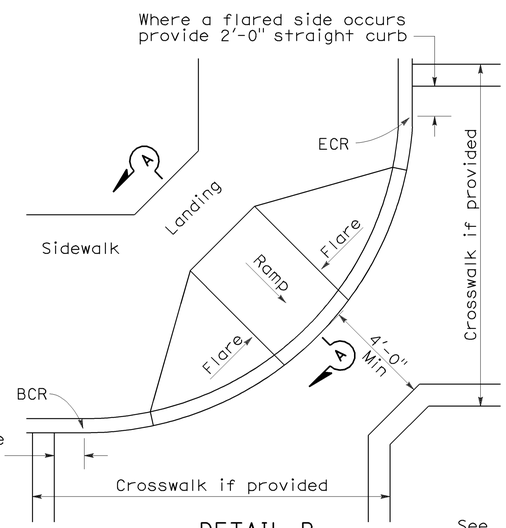

DETAIL B

TYPICAL ONE-RAMP CORNER INSTALLATION

See Notes 1 and 3

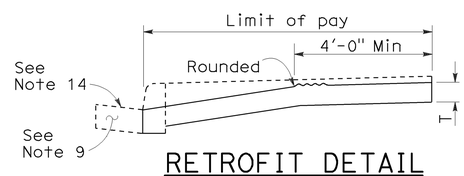

RETROFIT DETAIL

Existing curb and sidewalk

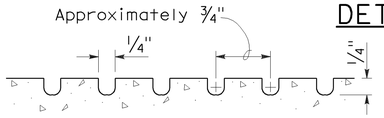

GROOVING DETAIL

NOTES:

1. As site conditions dictate, Case A through Case G curb ramps may be used for corner installations similar to those shown in Detail A and Detail B. The case of curb ramps used in Detail A do not have to be the same. Case A through Case G curb ramps also may be used at mid block locations, as site conditions dictate.
2. If distance from curb to back of sidewalk is too short to accommodate ramp and 4'-0" platform (landing) as shown in Case A, the sidewalk may be depressed longitudinally as in Case B, or C or may be widened as in Case D.
3. When ramp is located in center of curb return, crosswalk configuration must be similar to that shown for Detail B.
4. As site conditions dictate, the retaining curb side and the flared side of the Case G ramp shall be constructed in reversed position.
5. If located on a curve, the sides of the ramp need not be parallel, but the minimum width of the ramp shall be 4'-0".
6. Side slope of ramp flares vary uniformly from a maximum of 10% at curb to conform with longitudinal sidewalk slope adjacent to top of the ramp, except in Case C and Case F.
7. The curb ramp shall be outlined, as shown, with a 1'-0" wide border with 1/4" grooves approximately 3/4" on center. See grooving detail.
8. Transitions from ramps and landing to walks, gutters or streets shall be flush and free of abrupt changes.
9. Maximum slopes of adjoining gutters, the road surface immediately adjacent to the curb ramp or accessible route shall not exceed 5 percent within 4'-0" of the top and bottom of the curb ramp.
10. Curb ramps shall have a detectable warning surface that extends the full width and 3'-0" depth of the ramp. Detectable Warning Surfaces shall conform to the details on this plan and the requirements in the Special Provisions.
11. The edge of the detectable warning surface nearest the street shall be between 6" and 8" from the gutter flowline.
12. Sidewalk and ramp thickness, "T", shall be 3 1/2" minimum.
13. Utility pull boxes, manholes, vaults and all other utility facilities within the boundaries of the curb ramp will be relocated or adjusted to grade by the owner prior to, or in conjunction with, curb ramp construction.
14. For retrofit conditions, removal and replacement of curb apron will be at the Contractor's option, unless otherwise shown on project plans.

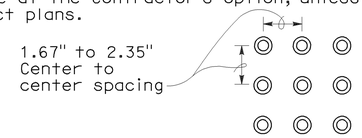

RAISED TRUNCATED DOME PATTERN (IN-LINE)

DETECTABLE WARNING SURFACE

See Note 10

STATE OF CALIFORNIA
DEPARTMENT OF TRANSPORTATION

CURB RAMP DETAILS

NO SCALE

RSP A88A DATED SEPTEMBER 1, 2006 SUPERSEDES STANDARD PLAN A88A DATED MAY 1, 2006 - PAGE 115 OF THE STANDARD PLANS BOOK DATED MAY 2006.

REVISED STANDARD PLAN RSP A88A

2006 REVISED STANDARD PLAN RSP A88A

8-3-06

DIST	COUNTY	ROUTE	POST MILES TOTAL PROJECT	SHEET NO.	TOTAL SHEETS
05	Mon	68	R3.9/10.8	54	62

REGISTERED CIVIL ENGINEER

June 15, 2007
PLANS APPROVAL DATE

REGISTERED PROFESSIONAL ENGINEER Glenn DeCou No. C34547 Exp. 9-30-07 CIVIL STATE OF CALIFORNIA

The State of California or its officers or agents shall not be responsible for the accuracy or completeness of electronic copies of this plan sheet.

To accompany plans dated 5-31-11

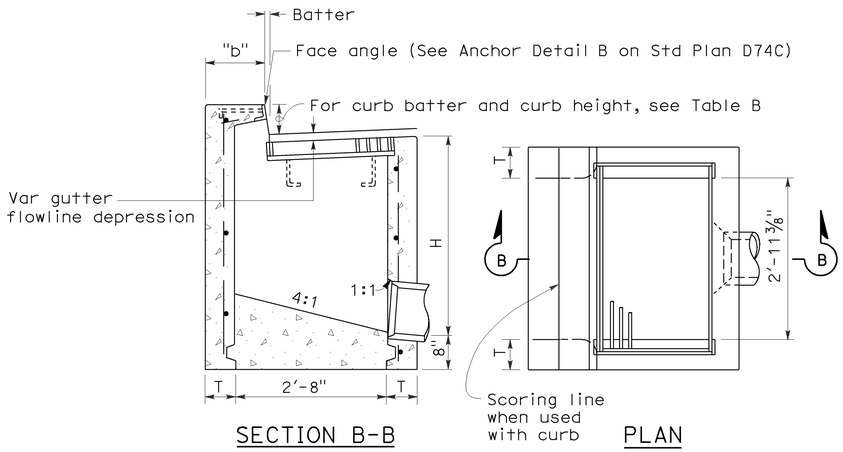

SECTION B-B PLAN

TYPE GO

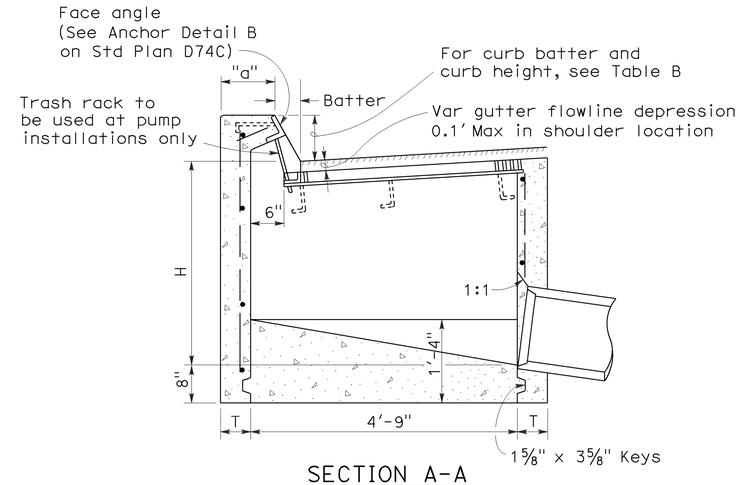

SECTION A-A

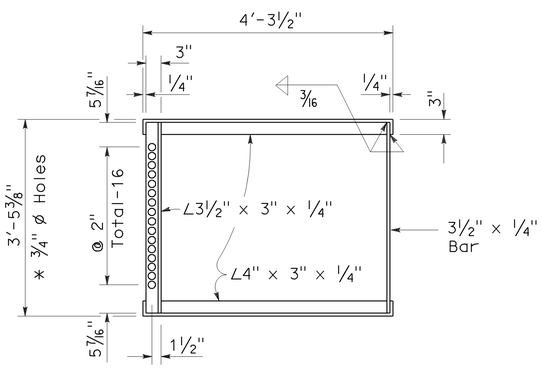

* 3/4" ø Holes required only with trash rack

GRATE FRAME FOR TYPE GDO INLET

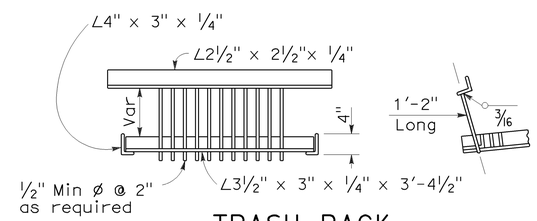

TRASH RACK

(For use with pump installation)

TABLE A

CONCRETE QUANTITIES				
TYPE	H=3'-0" TO 8'-0" (T=6")		H=8'-1" TO 20'-0" (T=8")	
	H=3'-0" (CY)	ADDITIONAL PCC PER FOOT (CY)	H=8'-1" (CY)	ADDITIONAL PCC PER FOOT (CY)
GO	1.24	0.245	3.39	0.346
GDO	1.62	0.322	4.36	0.446

Table based on 8" floor slab, no deduction for pipe openings, and curb type giving highest quantity of concrete. No deductions or adjustments are to be made to these quantities because of pipe openings, different floor alternatives or different curb type.

TABLE B

CURB TYPE	NORMAL CURB HEIGHT	CURB BATTER	"a" DIMENSION	"b" DIMENSION
A1-6	6"	1 1/2"	T+7 1/2"	T+6 1/2"
A1-8	8"	2"	T+7"	T+6"
B1-6	6"	4"	T+5"	T+4"
Type A Dike	6"	3"	T+6"	T+5"

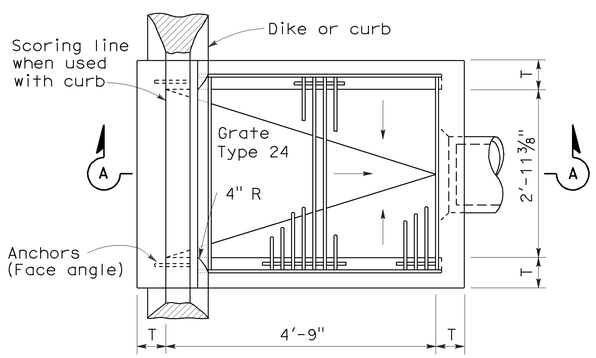

PLAN

TYPE GDO

NOTES:

1. "H" is the difference in elevation between the outlet pipe flow line and the normal gutter grade line undepressed.
2. For "T" wall thickness, see Table A below.
3. Wall reinforcing not required when "H" is 8'-0" or less and the unsupported width or length is 7'-0" or less. Walls exceeding these limits shall be reinforced with #4 @ 18"± centers placed 1 1/2" clear to inside of box unless otherwise shown.
4. Inlet bottom reinforcing not required. See Standard Plan D74C for alternative reinforced bottom.
5. Steps - None required where "H" is less than 2'-6" Where "H" is 2'-6" or more, install steps with lowest rung 1'-0" above the floor and highest rung not more than 6" below top of inlet. The distance between steps shall not exceed 1'-0" and shall be uniform throughout the length of the wall. Place steps in the wall without an opening. Step inserts may be substituted for the bar steps. Step Inserts shall comply with State Industrial Safety requirements. See Standard Plan D74C for step details.
6. When shown on the project plans, place a 3/4" plain round protection bar horizontally across the length of the opening and bend back 4" into the inlet wall on each side.
7. Pipe(s) can be placed in any wall.
8. Curb section shall match adjacent curb.
9. Basin floors shall have wood trowel finish and shall slope toward the outlet pipe as shown.
10. Galvanizing - See Standard Specifications or Special Provisions.
11. See Standard Plan D77A and D77B for grate and frame details and weights of miscellaneous iron and Steel.
12. See Standard Plan D78A for gutter depression details.
13. Full penetration butt welds may be substituted for the fillet welds on all anchors.
14. Standard square, hexagon, round or equivalent headed anchors may be substituted for the right angle hooks on the anchors shown on this plan.
15. Cast-in-place or precast alternative is optional with contractor. See Standard Specifications.
16. Cast-in-place inlets to be formed around all pipes/stubs intersecing the inlet and concrete poured in one continuous operation. Precast inlets shall have mortared pipe connections conforming to details for Type GCP inlets on Standard Plan D75B. See Standard Specifications for mortar composition.

STATE OF CALIFORNIA
DEPARTMENT OF TRANSPORTATION

DRAINAGE INLETS

NO SCALE

RSP D74B DATED JUNE 15, 2007 SUPERSEDES STANDARD PLAN D74B DATED MAY 1, 2006 - PAGE 150 OF THE STANDARD PLANS BOOK DATED MAY 2006.

REVISED STANDARD PLAN RSP D74B

2006 REVISED STANDARD PLAN RSP D74B

4-16-07

DIST	COUNTY	ROUTE	POST MILES TOTAL PROJECT	SHEET NO.	TOTAL SHEETS
05	Mon	68	R3.9/10.8	55	62

Randell D. Hiatt
REGISTERED CIVIL ENGINEER

June 6, 2008
PLANS APPROVAL DATE

REGISTERED PROFESSIONAL ENGINEER
Randell D. Hiatt
No. C50200
Exp. 6-30-09
CIVIL
STATE OF CALIFORNIA

The State of California or its officers or agents shall not be responsible for the accuracy or completeness of electronic copies of this plan sheet.

To accompany plans dated 5-31-11

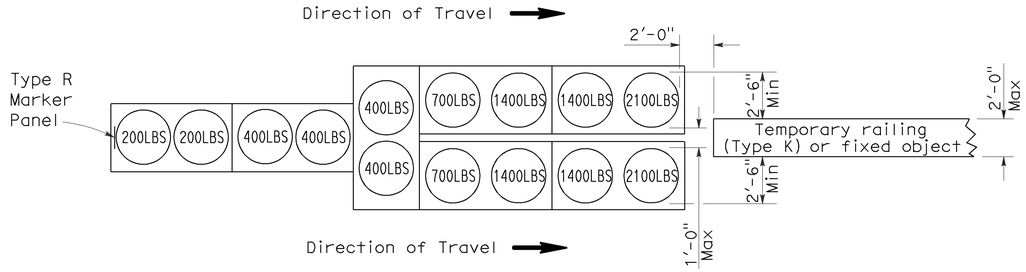

ARRAY 'TU14'

Approach speed 45 mph or more

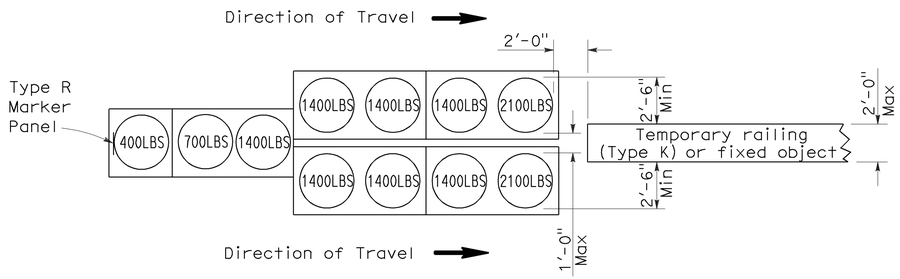

ARRAY 'TU11'

Approach speed less than 45 mph

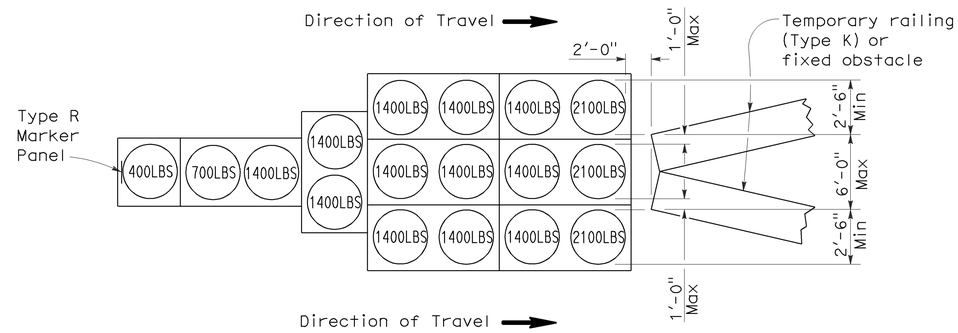

ARRAY 'TU17'

Approach speed less than 45 mph

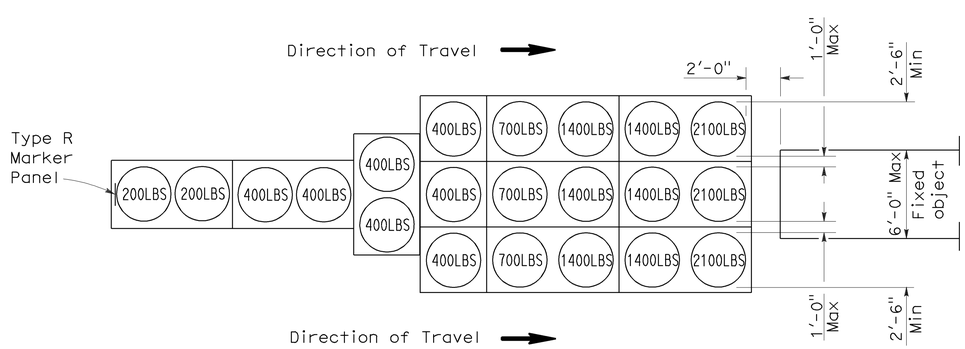

ARRAY 'TU21'

Approach speed 45 mph or more

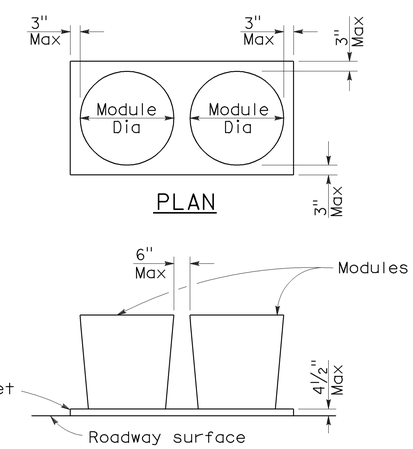

PLAN

ELEVATION

CRASH CUSHION PALLET DETAIL

See Note 7

NOTES:

1. (XXX) Indicates sand filled module location and weight of sand in pounds for each module. Module spacing is based on the greater diameter of the module.
2. All sand weights are nominal.
3. Temporary crash cushion arrays shall not encroach on the traveled way.
4. Place the top of Type R marker panel 1" below the module lid.
5. Refer to Standard Plan A73B for marker details.
6. Approach speeds indicated conform to NCHRP 350 Report criteria.
7. Use of pallets is optional.

STATE OF CALIFORNIA
DEPARTMENT OF TRANSPORTATION

TEMPORARY CRASH CUSHION, SAND FILLED (UNIDIRECTIONAL)

NO SCALE

RSP T1A DATED JUNE 6, 2008 SUPERSEDES STANDARD PLAN T1A
DATED MAY 1, 2006 - PAGE 211 OF THE STANDARD PLANS BOOK DATED MAY 2006.

REVISED STANDARD PLAN RSP T1A

2006 REVISED STANDARD PLAN RSP T1A

5-15-08

DIST	COUNTY	ROUTE	POST MILES TOTAL PROJECT	SHEET NO.	TOTAL SHEETS
05	Mon	68	R3.9/10.8	56	62

Randell D. Hiatt
REGISTERED CIVIL ENGINEER

June 6, 2008
PLANS APPROVAL DATE

REGISTERED PROFESSIONAL ENGINEER
Randell D. Hiatt
No. C50200
Exp. 6-30-09
CIVIL
STATE OF CALIFORNIA

The State of California or its officers or agents shall not be responsible for the accuracy or completeness of electronic copies of this plan sheet.

To accompany plans dated 5-31-11

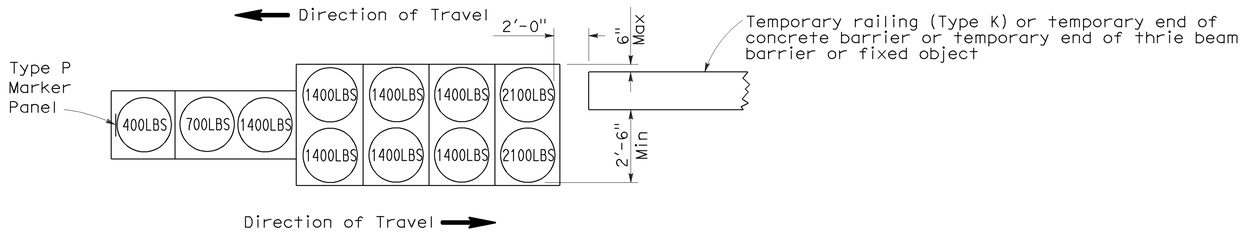

ARRAY 'TB11'

Approach speed less than 45 mph

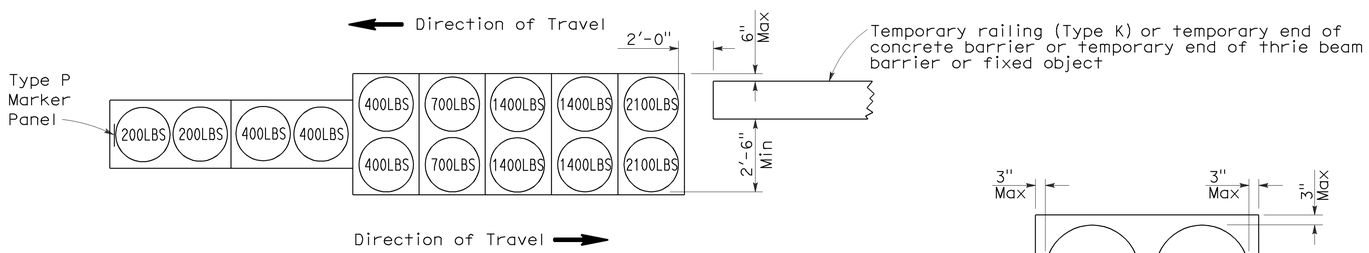

ARRAY 'TB14'

Approach speed 45 mph or more

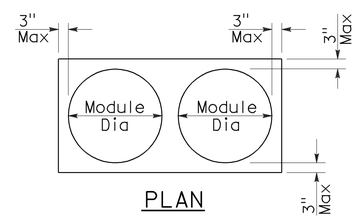

PLAN

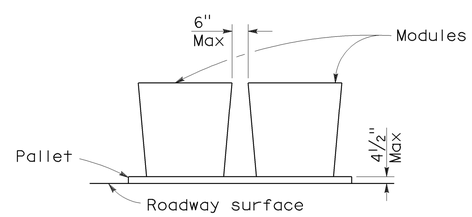

ELEVATION

CRASH CUSHION PALLET DETAIL

See Note 7

NOTES:

1. (XXX) Indicates sand filled module location and weight of sand in pounds for each module. Module spacing is based on the greater diameter of the module.
2. All sand weights are nominal.
3. Temporary crash cushion arrays shall not encroach on the traveled way.
4. Place the Type P marker panel so that the bottom of the panel rests upon the pallet.
5. Refer to Standard Plan A73B for marker details.
6. Approach speeds indicated conform to NCHRP 350 Report criteria.
7. Use of pallets is optional.

STATE OF CALIFORNIA
DEPARTMENT OF TRANSPORTATION

TEMPORARY CRASH CUSHION, SAND FILLED (BIDIRECTIONAL)

NO SCALE

RSP T1B DATED JUNE 6, 2008 SUPERSEDES STANDARD PLAN T1B
DATED MAY 1, 2006 - PAGE 212 OF THE STANDARD PLANS BOOK DATED MAY 2006.

REVISED STANDARD PLAN RSP T1B

2006 REVISED STANDARD PLAN RSP T1B

5-15-08

DIST	COUNTY	ROUTE	POST MILES TOTAL PROJECT	SHEET NO.	TOTAL SHEETS
05	Mon	68	R3.9/10.8	57	62

Randell D. Hiatt
REGISTERED CIVIL ENGINEER

June 6, 2008
PLANS APPROVAL DATE

REGISTERED PROFESSIONAL ENGINEER
Randell D. Hiatt
No. C50200
Exp. 6-30-09
CIVIL
STATE OF CALIFORNIA

The State of California or its officers or agents shall not be responsible for the accuracy or completeness of electronic copies of this plan sheet.

To accompany plans dated 5-31-11

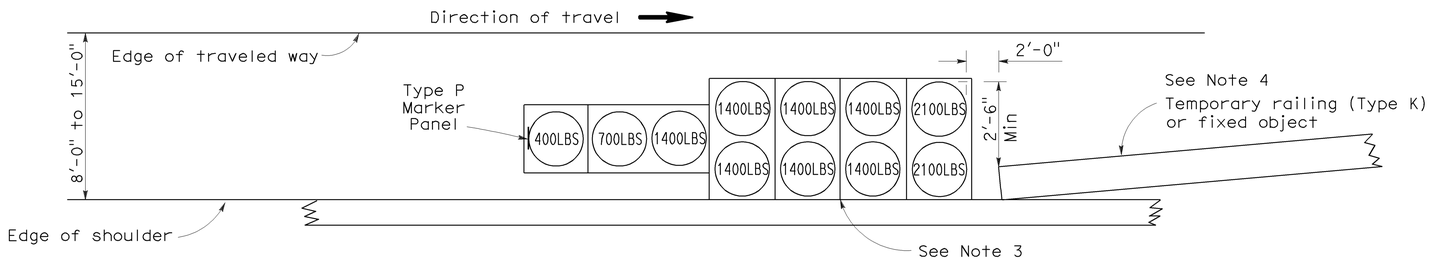

ARRAY 'TS11'

Approach speed less than 45 mph
See Note 9

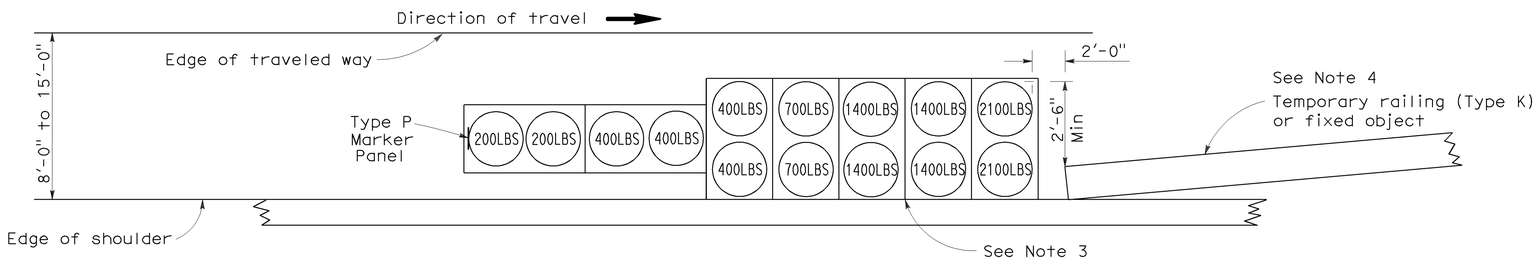

ARRAY 'TS14'

Approach speed 45 mph or more
See Note 9

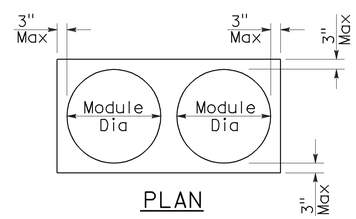

PLAN

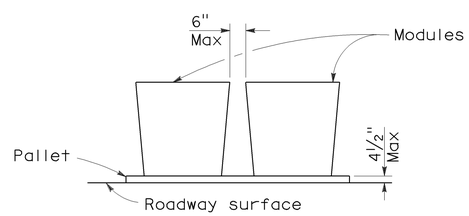

ELEVATION

CRASH CUSHION PALLET DETAIL

See Note 11

NOTES:

1. (XXX) Indicates sand filled module location and weight of sand in pounds for each module. Module spacing is based on the greater diameter of the module.
2. All sand weights are nominal.
3. The temporary crash cushion arrays shown on this plan shall be used only in locations where there will be traffic on one side of the temporary crash cushion array.
4. If the fixed object or approach end of the temporary railing is less than 15'-0" from the edge of traveled way, a temporary crash cushion is required in a construction or work zone.
5. Temporary crash cushion arrays shall not encroach on the traveled way.
6. Arrays for median shoulders shall conform to details shown on this plan for outside shoulders.
7. Place the Type P marker panel so that the bottom of the panel rests upon the pallet and faces traffic.
8. Refer to Standard Plan A73B for marker details.
9. For shoulder widths less than 8'-0", appropriate approved crash cushion protection, other than sand filled modules, shall be provided at fixed objects and at approach ends of temporary railing. The specific type of crash cushion shall be as shown on the project plans or as specified in the Special Provisions, or if not shown on the project plans or specified in the Special Provisions, shall be as approved by the Engineer.
10. Approach speeds indicated conform to NCHRP 350 Report criteria.
11. Use of pallets is optional.

STATE OF CALIFORNIA
DEPARTMENT OF TRANSPORTATION

TEMPORARY CRASH CUSHION, SAND FILLED (SHOULDER INSTALLATIONS)

NO SCALE

RSP T2 DATED JUNE 6, 2008 SUPERSEDES STANDARD PLAN T2
DATED MAY 1, 2006 - PAGE 213 OF THE STANDARD PLANS BOOK DATED MAY 2006.

REVISED STANDARD PLAN RSP T2

2006 REVISED STANDARD PLAN RSP T2

5-15-08

DIST	COUNTY	ROUTE	POST MILES TOTAL PROJECT	SHEET NO.	TOTAL SHEETS
05	Mon	68	R3.9/10.8	58	62

LICENSED LANDSCAPE ARCHITECT

April 3, 2009
PLANS APPROVAL DATE

LICENSED LANDSCAPE ARCHITECT — Robert B. Schott 3625 — Signature — 11-30-10 Renewal date — 2-25-09 Date — STATE OF CALIFORNIA

The State of California or its officers or agents shall not be responsible for the accuracy or completeness of electronic copies of this plan sheet.

To accompany plans dated 5-31-11

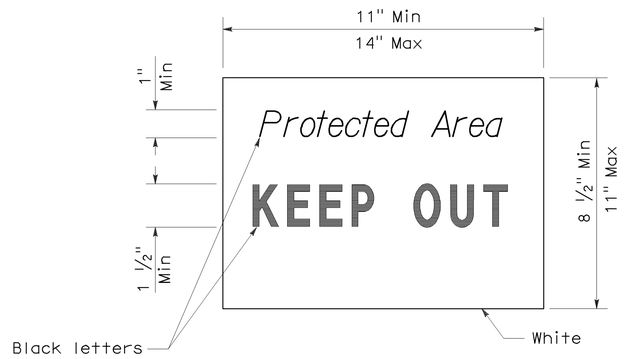

SIGN DETAIL

NOTE:

1. Temporary silt fence and temporary straw bale barrier shown for reference purposes only.

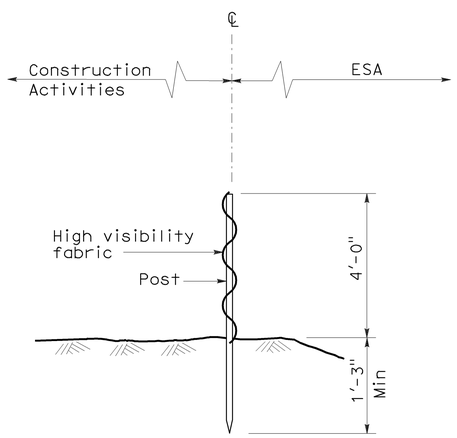

SECTION
TEMPORARY FENCE (TYPE ESA)

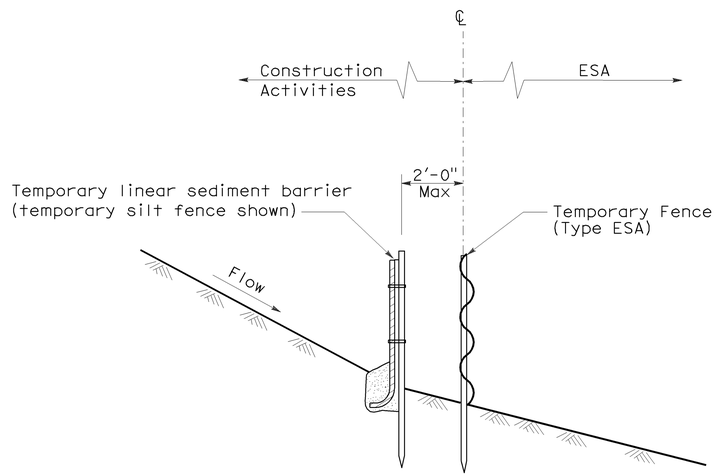

SECTION
PLACEMENT DETAIL
FOR TEMPORARY LINEAR SEDIMENT BARRIER
USED WITH TEMPORARY
FENCE (TYPE ESA)
(See Note 1)

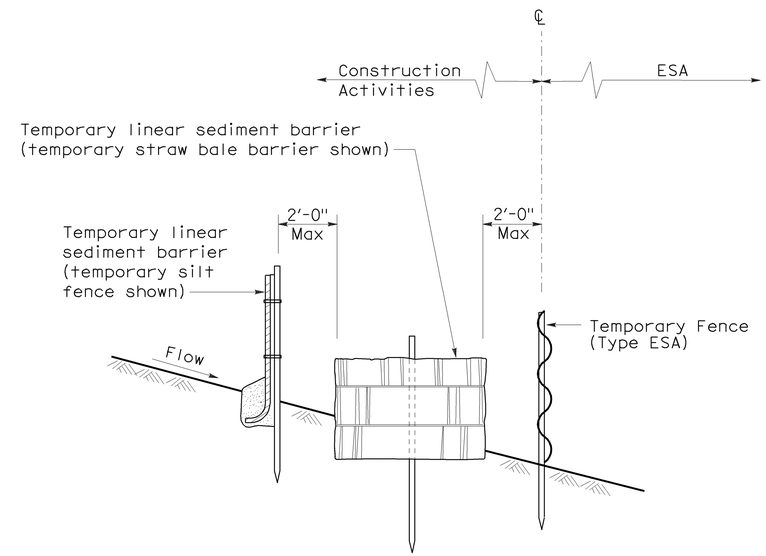

SECTION
PLACEMENT DETAIL
FOR TEMPORARY SILT FENCE
AND TEMPORARY STRAW BALE BARRIER
USED WITH TEMPORARY FENCE (TYPE ESA)
(See Note 1)

STATE OF CALIFORNIA
DEPARTMENT OF TRANSPORTATION

TEMPORARY WATER POLLUTION CONTROL DETAILS [TEMPORARY FENCE (TYPE ESA)]

NO SCALE

NSP T65 DATED APRIL 3, 2009 SUPPLEMENTS
THE STANDARD PLANS BOOK DATED MAY 2006.

NEW STANDARD PLAN NSP T65

2006 NEW STANDARD PLAN NSP T65

DIST	COUNTY	ROUTE	POST MILES TOTAL PROJECT	SHEET NO.	TOTAL SHEETS
05	Mon	68	R3.9/10.8	59	62

REGISTERED ELECTRICAL ENGINEER

October 5, 2007
PLANS APPROVAL DATE

REGISTERED PROFESSIONAL ENGINEER Jeffery G. McRae No. E14512 Exp. 6-30-08 ELECTRICAL STATE OF CALIFORNIA

The State of California or its officers or agents shall not be responsible for the accuracy or completeness of electronic copies of this plan sheet.

To accompany plans dated 5-31-11

ELECTROLIERS

STANDARD TYPES
15, 15D
15 STRUCTURE
21, 21D STRUCTURE
30
31
32
35
36-20A

High mast light pole

Double Arm lighting standard

Existing electrolier

Electrolier foundation (Future installation)

NOTES:

1. Luminaires shall be 310 W HPS when installed on Type 21, 21D, 30, 31, 32, 35 and 36-20A Standards, unless otherwise specified. Luminaires shall be 200 W HPS when installed on other type standards or poles, unless otherwise specified.
2. Luminaires shall be the cutoff type, ANSI Type Ⅲ medium cutoff lighting distribution, unless otherwise specified.
3. Variations noted adjacent to symbol on project plans.

Electrolier (see project notes or project plans)

Luminaire on wood pole

STANDARD NOTES:

- AB — Abandon. If applied to conduit, remove conductors.
- BC — Install pull box in existing conduit run.
- BP — Pedestrian barricade, type as indicated on plan.
- CB — Install conduit into existing pull box.
- CC — Connect new and existing conduit. Remove existing conductors and install conductors as indicated.
- CF — Conduit to remain for future use. Remove conductors. Install pull wire or rope.
- DH — Detector handhole.
- FA — Foundation to be abandoned.
- IS — Install sign on signal mast arm.
- NS — No slip base on standard.
- PEC — Photoelectric control.
- PEU — Photoelectric unit.
- RC — Equipment or material to be removed and become the property of the Contractor.
- RE — Remove electrolier, fuses and ballast. Tape ends of conductors.
- RL — Relocate equipment.
- RR — Remove and reuse equipment.
- RS — Remove and salvage equipment.
- SC — Splice new to existing conductors.
- SD — Service disconnect.
- SF — Standard to remain for future use. Remove luminaire, pole conductors, fuses and ballast.
- TSP — Telephone service point.

ABBREVIATIONS AND EQUIPMENT DESIGNATIONS

PROPOSED	EXISTING	
BBS	bbs	Battery backup system
BC	bc	Bolt circle
C	C	Conduit
CCTV	cctv	Closed circuit television
CKT	ckt	Circuit
CMS	cms	Changeable message sign
DLC	dlc	Loop detector lead-in cable
EMS	ems	Extinguishable message sign
EVC	evc	Emergency vehicle cable
EVD	evd	Emergency vehicle detector
FB	fb	Flashing beacon
FBCA	fbca	Flashing beacon control assembly
FBS	fbs	Flashing beacon with slip base
FO	fo	Fiber optic
G	G	Ground (Equipment Grounding Conductor)
GFCI	GFCI	Ground fault circuit interrupt
HAR	har	Highway advisory radio
HEX	hex	Hexagonal
HPS	hps	High pressure sodium
IISNS	iisns	Internally illuminated street name sign
ISL	isl	Induction sign lighting
LED	led	Light emitting diode
LMA	lma	Luminaire mast arm
LPS	lps	Low pressure sodium
LTG	ltg	Lighting
LUM	lum	Luminaire
MAT	mat	Mast arm mounting vehicle signal faces, top attachment
MAS	mas	Mast arm mounting vehicle signal faces, side attachment
MAS-4A	mas-4A	Mast arm mounting vehicle signal faces, side attachment - 4 signal section
MAS-4B	mas-4B	
MAS-4C	mas-4C	
MAS-5A	mas-5A	Mast arm mounting vehicle signal faces, side attachment - 5 signal section
MAS-5B	mas-5B	
MC	mc	Mercury contactor
M/M	m/m	Multiple to multiple transformer
MT	mt	Conduit with pull wire or rope only
MTG	mtg	Mounting
	mv	Mercury vapor lighting fixture
N	N	Neutral (Grounded Conductor)
NC	NC	Normally closed
NO	NO	Normally open
PB	pb	Pull box
PEC	pec	Photoelectric control (Type Ⅰ, Ⅱ, Ⅲ, Ⅳ or Ⅴ as shown)
PED	ped	Pedestrian
PEU	peu	Photoelectric unit
PPB	ppb	Pedestrian push button
RL		Relocated equipment
RM	rm	Ramp metering
SB	sb	Slip base
SIC	sic	Signal interconnect cable
SIG	sig	Signal
SMA	sma	Signal mast arm
SNS	sns	Street name sign
SP	sp	Service point
TDC	tdc	Telephone demarcation cabinet
TMS	tms	Traffic monitoring station
TOS	tos	Traffic Operations System
VEH	veh	Vehicle
XFMR	xfmr	Transformer
COMM	comm	Communication
RWIS	rwis	Roadway weather information system

SOFFIT AND WALL MOUNTED LUMINAIRES

Pendant, 70 W HPS unless otherwise specified.

Flush, 70 W HPS unless otherwise specified.

Wall surface, 70 W HPS unless otherwise specified.

Existing soffit or wall luminaire to remain unmodified.

Existing soffit or wall luminaire to be modified as specified.

NOTE:

Arrow indicates "street side" of luminaire.

STATE OF CALIFORNIA
DEPARTMENT OF TRANSPORTATION

ELECTRICAL SYSTEMS (SYMBOLS AND ABBREVIATIONS)

NO SCALE

RSP ES-1A DATED OCTOBER 5, 2007 SUPERSEDES STANDARD PLAN ES-1A
DATED MAY 1, 2006 - PAGE 400 OF THE STANDARD PLANS BOOK DATED MAY 2006.

REVISED STANDARD PLAN RSP ES-1A

2006 REVISED STANDARD PLAN RSP ES-1A

DIST	COUNTY	ROUTE	POST MILES TOTAL PROJECT	SHEET NO.	TOTAL SHEETS
05	Mon	68	R3.9/10.8	60	62

REGISTERED ELECTRICAL ENGINEER

October 5, 2007
PLANS APPROVAL DATE

REGISTERED PROFESSIONAL ENGINEER Jeffery G. McRae No. E14512 Exp. 6-30-08 ELECTRICAL STATE OF CALIFORNIA

The State of California or its officers or agents shall not be responsible for the accuracy or completeness of electronic copies of this plan sheet.

To accompany plans dated 5-31-11

CONDUIT

PROPOSED	EXISTING	
		Lighting Conduit, unless otherwise indicated or noted
		Traffic signal conduit
C	c	Communication conduit
T	t	Telephone conduit
F	f	Fire alarm conduit
FO	fo	Fiber optic conduit
		Conduit termination (RSP ES-9A C)
R	r	Conduit riser in/on structure or service pole

SERVICE EQUIPMENT

PROPOSED	EXISTING	
OH	oh	Overhead lines
U	U	Wood pole "U" indicates utility owned
		Pole guy with anchor
		Utility transformer - ground mounted
III		Service equipment enclosure type
		Service equipment enclosure door indicates front of enclosure
T	t	Telephone demarcation cabinet

POLE-MOUNTED SERVICE DESIGNATION

Type of installation

TYPE H SERVICE - 28'-10" ← Pole height above grade

ILLUMINATED OVERHEAD SIGN

PROPOSED	EXISTING	
		Overhead sign - Single post
		Overhead sign - Two post
		Overhead sign - Mounted on structure
		Overhead sign with electrolier

SIGNAL EQUIPMENT

PROPOSED	EXISTING	
		Pedestrian signal face
		Pedestrian push button post
		Pedestrian barricade
		Vehicle signal face (with backplate, 3-Section: red, yellow and green)
		Vehicle signal face with angle visors
PV	PV	Modifications of basic symbols: "L" indicates all non-arrow sections louvered "LG" indicates louvered green section only "PV" indicates 12" programmed visibility sections "8" indicates all 8" sections (only when specified)
		Type 15TS and Vehicle signal face
		Vehicle signal face with red, yellow and green left arrow sections
		Vehicle signal face with red and yellow sections and up green arrow
		Vehicle signal face (5 Section) with red, yellow and green sections and yellow and green right arrows
		Type 1 Standard and attached vehicle signal faces
		Standard with signal mast arm only and attached vehicle signal faces and internally illuminated street name sign
		Type 33 Standard, Left-turn vehicle signal face and sign
		Standard with luminaire and signal mast arms and attached vehicle signal faces
		Cantilever flashing beacon Type 9 Frame, with a sign unless otherwise specified or indicated
		Type 15-FBS Standard with two vehicle signal face sections with lens, backplate and visor with a sign
R	Y	Flashing beacon. One vehicle signal face section with lens, backplate and visor. "R" indicates red indication, "Y" indicates yellow indication
		Controller assembly. Door indicates front of cabinet

SIGNAL EQUIPMENT Cont

PROPOSED	EXISTING	
		Guard post
		Type 1 Standard with "Meter On" sign
		Emergency Vehicle detector

NOTES:

1. All signal sections shall be 12" unless shown otherwise.
2. Signal heads shall be provided with backplates unless shown otherwise.
3. Signal indication shall be LED.

STATE OF CALIFORNIA
DEPARTMENT OF TRANSPORTATION

ELECTRICAL SYSTEMS (SYMBOLS AND ABBREVIATIONS)

NO SCALE

RSP ES-1B DATED OCTOBER 5, 2007 SUPERCEDES STANDARD PLAN ES-1B DATED MAY 1, 2006 - PAGE 401 OF THE STANDARD PLANS BOOK DATED MAY 2006.

REVISED STANDARD PLAN RSP ES-1B

2006 REVISED STANDARD PLAN RSP ES-1B

7-10-07

DIST	COUNTY	ROUTE	POST MILES TOTAL PROJECT	SHEET NO.	TOTAL SHEETS
05	Mon	68	R3.9/10.8	61	62

REGISTERED ELECTRICAL ENGINEER

October 5, 2007
PLANS APPROVAL DATE

REGISTERED PROFESSIONAL ENGINEER Jeffery G. McRae No. E14512 Exp. 6-30-08 ELECTRICAL STATE OF CALIFORNIA

The State of California or its officers or agents shall not be responsible for the accuracy or completeness of electronic copies of this plan sheet.

To accompany plans dated 5-31-11

EQUIPMENT IDENTIFICATION

ILLUMINATED SIGN IDENTIFICATION NUMBER:

Sign No. 12345 — Sign number - Place on post or structure

10 ISL SCI 1.0

- 1.0 — Transformer rating (kVA)
- SCI — Lighting control type
- ISL — Number and type of fixtures

Do NOT place on standard or structure

ELECTROLIER OR EQUIPMENT IDENTIFICATION NUMBER:

12345 - 15'-0"

- 15'-0" — Mast arm length, if shown. Do not place on standard or structure.
- 12345 — Equipment number - Place on standard or structure. Existing equipment numbers are shown in parenthesis

CONDUIT AND CONDUCTOR IDENTIFICATION:

1½"C, 2#10, 15#14, 2 DLC

- 2#10, 15#14, 2 DLC — Number and size of conductors and cables
- 1½"C — Size of conduit in inches

Ø1, Ø2, Ø2P, etc.	Traffic phase identification for signal faces, detectors and phase diagrams
1 2 3	Project note numbers
A B C	Equipment description, installation or item numbers
1 2 3	Conduit run numbers

SIGNAL AND LIGHTING STANDARD (TYPICAL DESIGNATION):

19A - 3 - 100

- 100 — Wind velocity = 100 mph
- 3 — Case 3 arm loading
- 19A — Standard type
- Standard Plan sheet number
- Detail number or letter

MISCELLANEOUS EQUIPMENT

PROPOSED	EXISTING	
CMS	cms	Changeable message sign
		Closed circuit television camera
		Highway advisory radio pole and antenna
EMS	ems	Extinguishable message sign
M V	m v	Detection device M = Microwave sensor V = Video image sensor

WIRING DIAGRAM LEGEND

P	Pole
CB	Circuit breaker
A	Ampere
V	Volt
M	Metered
UM	Unmetered
NB	Neutral bus
GB	Ground bus
G	Equipment grounding conductor
N	Grounded conductor (Neutral)

- External conductor
- Conductor or bus
- Tie point
- Contactor coil
- Contactor, Contact NO
- Terminal blocks
- Contactor, Contact NC
- Enclosure bond
- Grounding electrode
- Circuit breaker
- Receptacle

PULL BOXES

PROPOSED EXISTING

Pull box-No. 5 unless otherwise indicated or noted.

3 — 9A(21)

Pull box-Additional designations or descriptions

3 = No. 3½ pull box
5 = No. 5 pull box
6 = No. 6 pull box
7 = No. 7 (Ceiling pull box)
8 = No. 8 (Pendant soffit pull box)
9 = No. 9 pull box
9A = No. 9A pull box

(C) = Communications pull box
(E) = Pull box with extension
(S) = Sprinkler control pull box
(21) = Anchor bolts and conduit for future installation of Type 21 Standard
(T) = Traffic pull box

VEHICLE DETECTORS

5 J 9 U

- U = Upper
- L = Lower
- Slot number in input file
- Input file (I or J)
- Phase

PROPOSED	EXISTING	
		Type A detector loop. Outline of sawcut shown.
		Type B detector loop. Outline of sawcut shown.
		Type C detector loop. Outline of sawcut shown.
		Type D detector loop. Outline of sawcut shown.
		Type E detector loop. Outline of sawcut shown.
		Type Q detector loop. Outline of sawcut shown.
		Magnetic detector
DH	dh	Detector handhole
		Microwave or video detection zone

STATE OF CALIFORNIA
DEPARTMENT OF TRANSPORTATION

ELECTRICAL SYSTEMS (SYMBOLS AND ABBREVIATIONS)

NO SCALE

RSP ES-1C DATED OCTOBER 5, 2007 SUPERCEDES STANDARD PLAN ES-1C DATED MAY 1, 2006 - PAGE 402 OF THE STANDARD PLANS BOOK DATED MAY 2006.

REVISED STANDARD PLAN RSP ES-1C

2006 REVISED STANDARD PLAN RSP ES-1C

DIST	COUNTY	ROUTE	POST MILES TOTAL PROJECT	SHEET NO.	TOTAL SHEETS
05	Mon	68	R3.9/10.8	62	62

REGISTERED ELECTRICAL ENGINEER

October 5, 2007
PLANS APPROVAL DATE

REGISTERED PROFESSIONAL ENGINEER Jeffery G. McRae No. E14512 Exp. 6-30-08 ELECTRICAL STATE OF CALIFORNIA

The State of California or its officers or agents shall not be responsible for the accuracy or completeness of electronic copies of this plan sheet.

To accompany plans dated 5-31-11

LOOP INSTALLATION PROCEDURE

1. Loops shall be centered in lanes.
2. Saw slots in pavement for loop conductors as shown in details.
3. Distance between side of loop and a lead-in saw cut from adjacent detectors shall be 2'-0" minimum. Distance between lead-in saw cuts shall be 6" minimum.
4. Bottom of saw slot shall be smooth with no sharp edges.
5. Slots shall be washed until clean, blown out and thoroughly dried before installing loop conductors.
6. Adjacent loops on the same sensor unit channel shall be wound in opposite directions.
7. Identify and tag loop circuit pairs in the pull box with loop number, start (S) and finish (F) of conductor. Identify and tag lead-in-cable with sensor number and phase.
8. Install loop conductor in slot using a 3/16" to 1/4" thick wood paddle. Hold loop conductors with wood paddles (at the bottom of the sawed slot) during sealant placement.
9. No more than 2 twisted pairs shall be installed in one sawed slot.
10. Allow additional 5'-0" of slack length of conductor for the lead-in run to pull box.
11. The additional length of each conductor for each loop shall be twisted together into a pair (6 turns per 3'-4" minimum) before being placed in the slot and conduit leading to pull box.
12. Test each loop circuit for continuity, circuit resistance and insulation resistance at the pull box before filling slots.
13. Fill slots as shown in details.
14. Splice loop conductors to lead-in-cable. Splices shall be soldered.
15. End of lead-in-cable and Type 2 loop conductor shall be waterproofed prior to installing in conduit to prevent moisture from entering the cable.
16. Lead-in-cable shall not be spliced between the pull box and the controller cabinet terminals.
17. Test each loop circuit for continuity, circuit resistance and insulation resistance at the controller cabinet location.
18. Where loop conductors are not to be spliced to a lead-in-cable, the ends of the conductors shall be taped and waterproofed with electrical insulating coating.

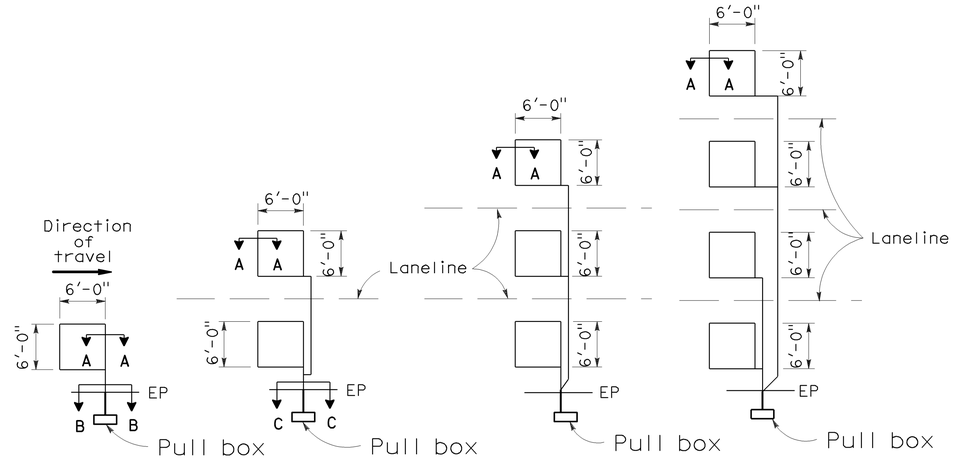

TYPE 1A INSTALLATION | TYPE 2A INSTALLATION | TYPE 3A INSTALLATION | TYPE 4A INSTALLATION

SAWCUT DETAILS

(Type A loop detector configurations illustrated)

1. 1A thru 4A = 1 Type A loop configuration in each lane.
2. 1B thru 4B = 1 Type B loop configuration in each lane.
3. 1C = 1 Type C loop configuration entering lanes as required.
4. 1D thru 4D = 1 Type D loop configuration in each lane.
5. 1E thru 4E = 1 Type E loop configuration in each lane.
6. 1Q thru 4Q = 1 Type Q loop configuration in each lane. (Use Type A, B, C, D, E or Q loop detector configurations only when specified or shown on plans)

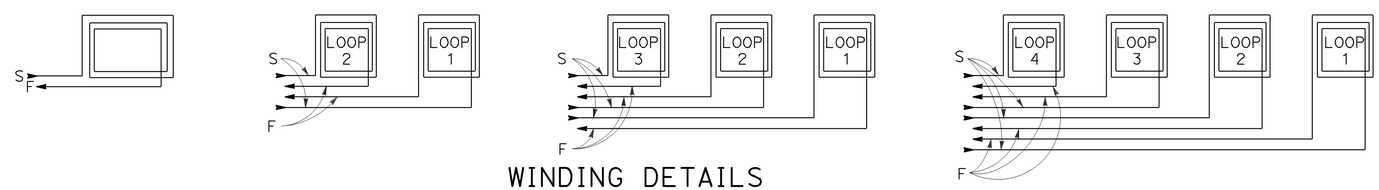

WINDING DETAILS

See Notes 6 and 7

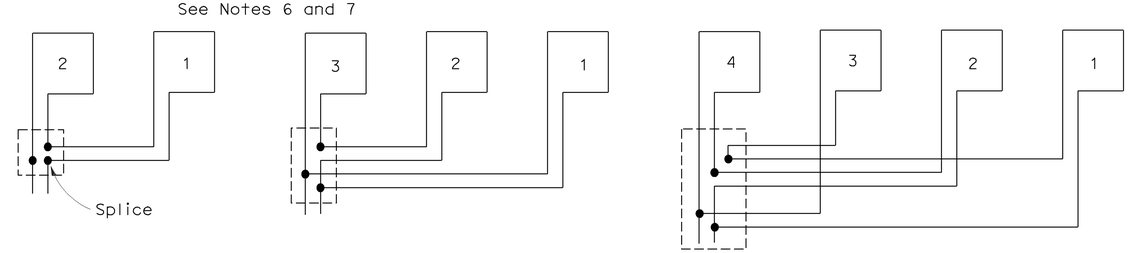

TYPICAL LOOP CONNECTIONS

(Dashed lines represent the pull box)

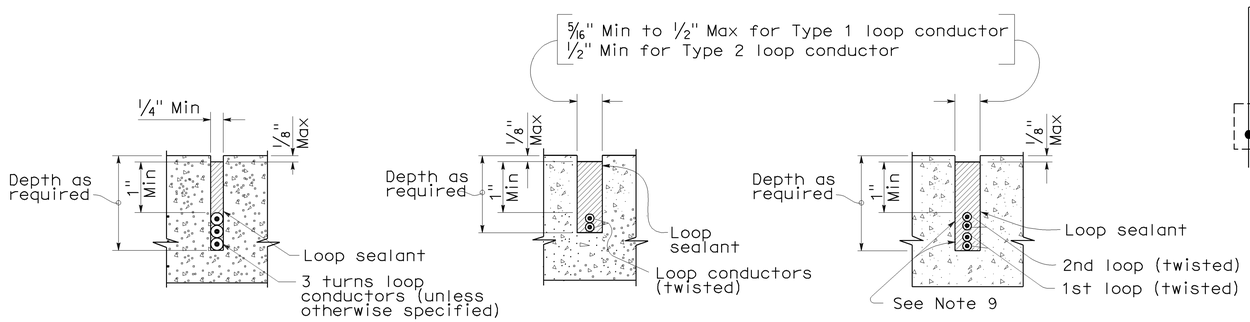

SECTION A-A | SECTION B-B | SECTION C-C

SLOT DETAILS - TYPE 1 AND TYPE 2 LOOP CONDUCTOR

STATE OF CALIFORNIA
DEPARTMENT OF TRANSPORTATION

ELECTRICAL SYSTEMS (DETECTORS)

NO SCALE

RSP ES-5A DATED OCTOBER 5, 2007 SUPERCEDES STANDARD PLAN ES-5A DATED MAY 1, 2006 - PAGE 423 OF THE STANDARD PLANS BOOK DATED MAY 2006.

REVISED STANDARD PLAN RSP ES-5A

2006 REVISED STANDARD PLAN RSP ES-5A