ER-43I9(004)E

Dist	COUNTY	ROUTE	POST MILES TOTAL PROJECT	SHEET No.	TOTAL SHEETS
05	SCr	9	20.4	1	32

STATE OF CALIFORNIA

DEPARTMENT OF TRANSPORTATION

PROJECT PLANS FOR CONSTRUCTION ON

STATE HIGHWAY

IN SANTA CRUZ COUNTY
ABOUT 7.3 MILES NORTH OF BOULDER CREEK
AT 0.4 MILE SOUTH OF
ROUTE 236/9 SEPARATION

TO BE SUPPLEMENTED BY STANDARD PLANS DATED MAY 2006

INDEX OF PLANS

SHEET No.	DESCRIPTION
1	TITLE AND LOCATION MAP
2	TYPICAL CROSS SECTIONS
3	LAYOUTS
4	EROSION CONTROL PLAN
5	UTILITY PLAN
6-7	TRAFFIC HANDLING PLANS AND QUANTITIES
8	CONSTRUCTION AREA SIGNS
9-10	PAVEMENT DELINEATION PLANS AND QUANTITIES
11	SUMMARY OF QUANTITIES
12-14	ELECTRICAL PLANS
15-24	REVISED AND NEW STANDARD PLANS
STRUCTURE PLANS	
25-32	SLOPE REPAIR WALL Br No. 36E0019

THE STANDARD PLANS LIST APPLICABLE TO THIS CONTRACT IS INCLUDED IN THE NOTICE TO BIDDERS AND SPECIAL PROVISIONS BOOK.

LOCATION MAP

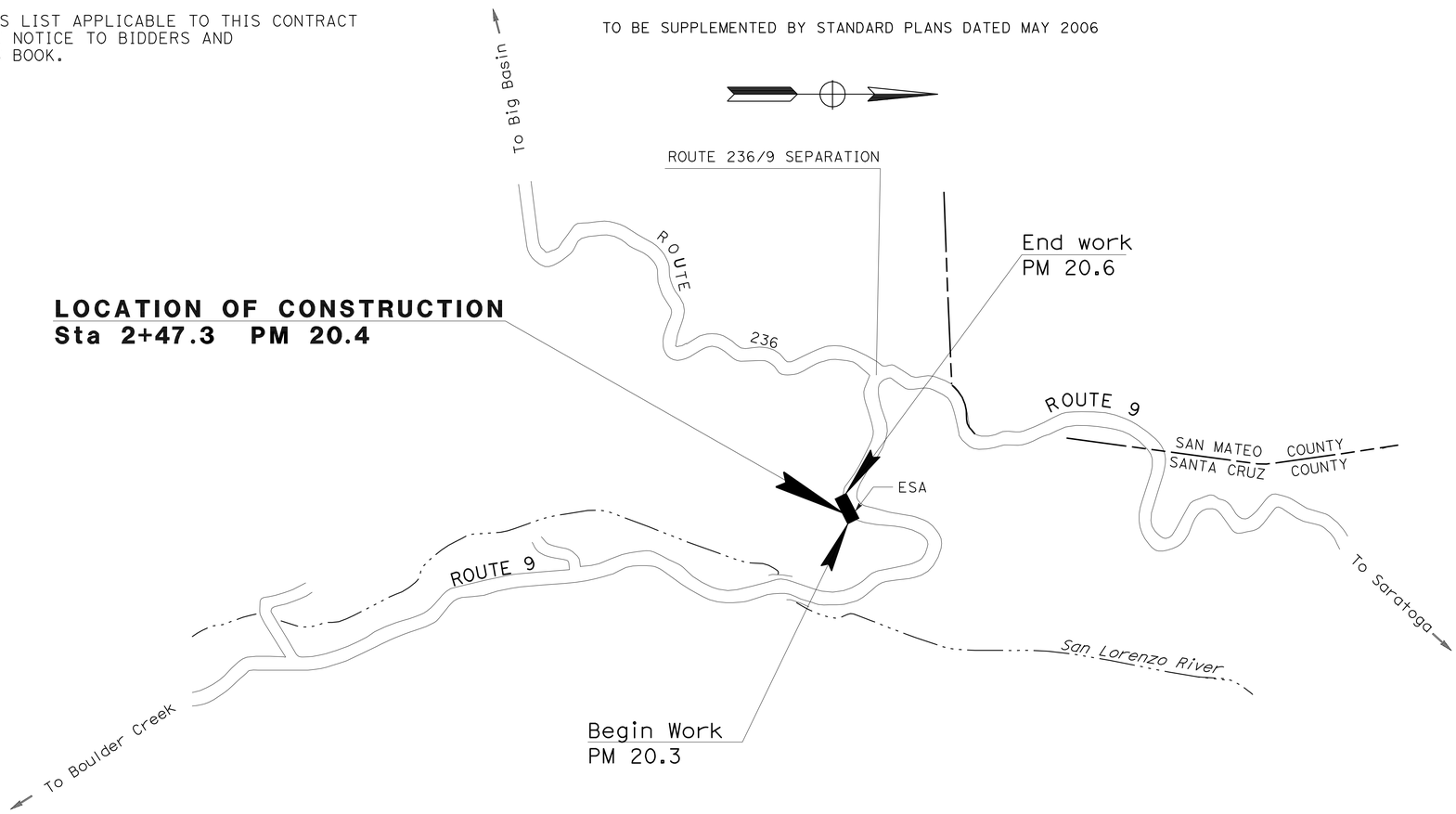

LOCATION OF CONSTRUCTION
Sta 2+47.3 PM 20.4

NO SCALE

THE CONTRACTOR SHALL POSSESS THE CLASS (OR CLASSES) OF LICENSE AS SPECIFIED IN THE "NOTICE TO BIDDERS."

PROJECT MANAGER: STEVE DIGRAZIA

DESIGN ENGINEER: ARTHUR RAMIREZ

Mohammed El-Saadi 3-30-09
PROJECT ENGINEER DATE
REGISTERED CIVIL ENGINEER

REGISTERED PROFESSIONAL ENGINEER
MOHAMMED EL-SAADI
No. 61991
Exp. 9-30-09
CIVIL
STATE OF CALIFORNIA

May 4, 2009
PLANS APPROVAL DATE

THE STATE OF CALIFORNIA OR ITS OFFICERS OR AGENTS SHALL NOT BE RESPONSIBLE FOR THE ACCURACY OR COMPLETENESS OF SCANNED COPIES OF THIS PLAN SHEET.

LAST REVISION 04-01-09
DATE PLOTTED => 27-AUG-2009
TIME PLOTTED => 09:11

CONTRACT No. 05-0P8704

Dist	COUNTY	ROUTE	POST MILES TOTAL PROJECT	SHEET No.	TOTAL SHEETS
05	SCr	9	20.4	2	32

Mohammed El-Saadi 3-30-09
REGISTERED CIVIL ENGINEER DATE

5-4-09
PLANS APPROVAL DATE

REGISTERED PROFESSIONAL ENGINEER
MOHAMMED EL-SAADI
No. 61991
Exp. 9-30-09
CIVIL
STATE OF CALIFORNIA

THE STATE OF CALIFORNIA OR ITS OFFICERS OR AGENTS SHALL NOT BE RESPONSIBLE FOR THE ACCURACY OR COMPLETENESS OF SCANNED COPIES OF THIS PLAN SHEET.

NOTES:

1. DIMENSIONS OF THE PAVEMENT STRUCTURES (STRUCTURE SECTIONS) ARE SUBJECT TO TOLERANCES SPECIFIED IN THE STANDARD SPECIFICATIONS.
2. SUPERELEVATION AS SHOWN OR AS DIRECTED BY THE ENGINEER.
3. EXACT LOCATION OF RECONSTRUCT MBGR ARE SHOWN ON THE LAYOUT SHEET.
4. FOR COMPLETE RIGHT OF WAY AND ACCURATE ACCESS DATA, SEE RIGHT OF WAY RECORD MAPS AT DISTRICT OFFICE.
5. SEE LAYOUT AND QUANTITY SHEETS FOR INSTALLING TEMPORARY FENCE (TYPE ESA).

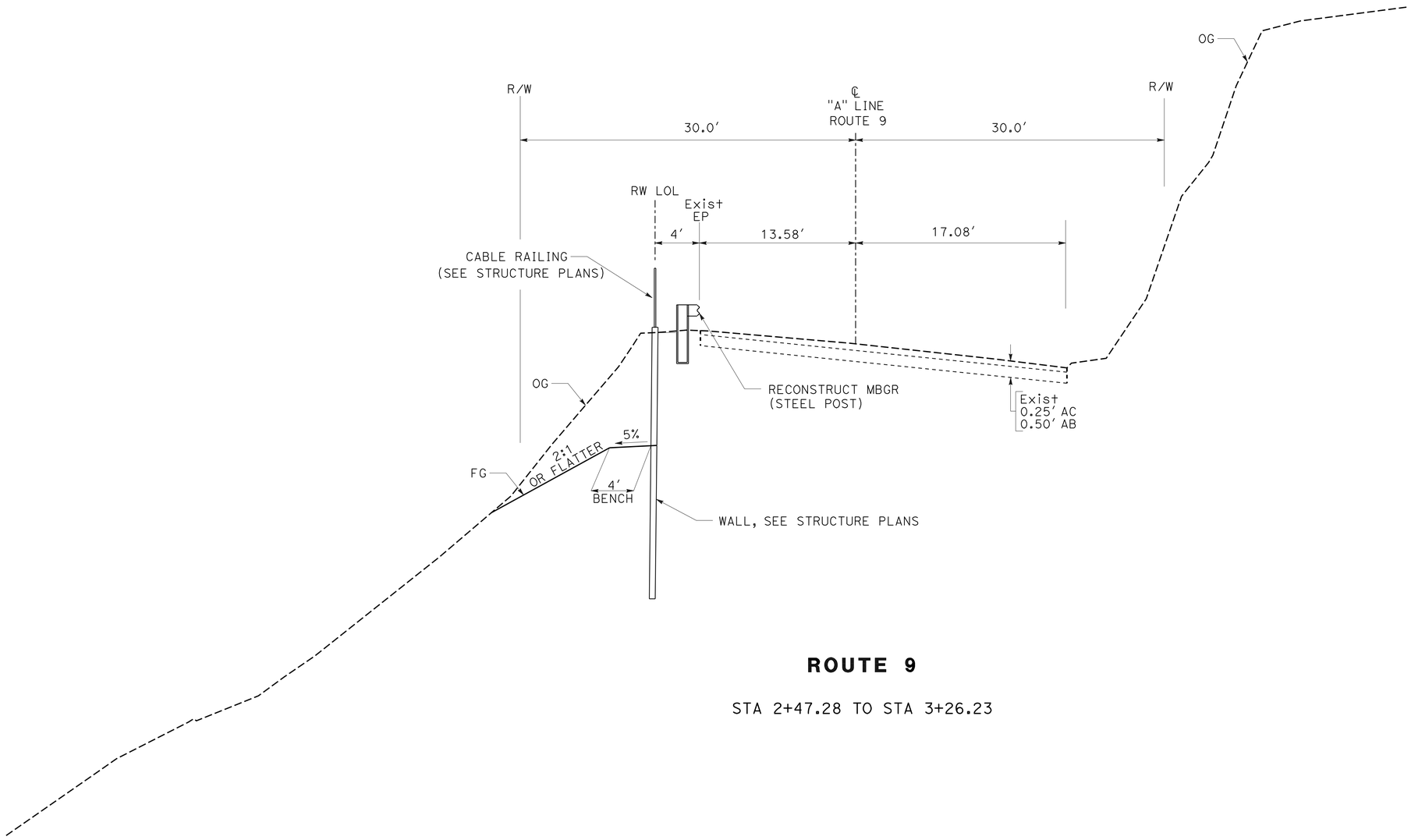

ROUTE 9

STA 2+47.28 TO STA 3+26.23

TYPICAL CROSS SECTION

NO SCALE

X-1

STATE OF CALIFORNIA - DEPARTMENT OF TRANSPORTATION
Caltrans
06-DESIGN

FUNCTIONAL SUPERVISOR: ARTHUR RAMIREZ
CALCULATED-DESIGNED BY: MOHAMMED EL- SAADI
CHECKED BY: HASSAN SHAHRIARI
REVISED BY
DATE REVISED

LAST REVISION 03-12-09 | DATE PLOTTED => 27-AUG-2009 | TIME PLOTTED => 09:11

Dist	COUNTY	ROUTE	POST MILES TOTAL PROJECT	SHEET No.	TOTAL SHEETS
05	SCr	9	20.4	3	32

Mohammed El-Saadi 3-30-09
REGISTERED CIVIL ENGINEER DATE

5-4-09
PLANS APPROVAL DATE

REGISTERED PROFESSIONAL ENGINEER
MOHAMMED EL-SAADI
No. 61991
Exp. 9-30-09
CIVIL
STATE OF CALIFORNIA

THE STATE OF CALIFORNIA OR ITS OFFICERS OR AGENTS SHALL NOT BE RESPONSIBLE FOR THE ACCURACY OR COMPLETENESS OF SCANNED COPIES OF THIS PLAN SHEET.

NOTES: 1. FOR COMPLETE RIGHT OF WAY AND ACCURATE ACCESS DATA, SEE RIGHT OF WAY RECORD MAPS AT DISTRICT OFFICE.

2. FOR INSTALLATION OF TEMPORARY FENCE(TYPE ESA). SEE EROSION CONTROL AND QUANTITY SHEET

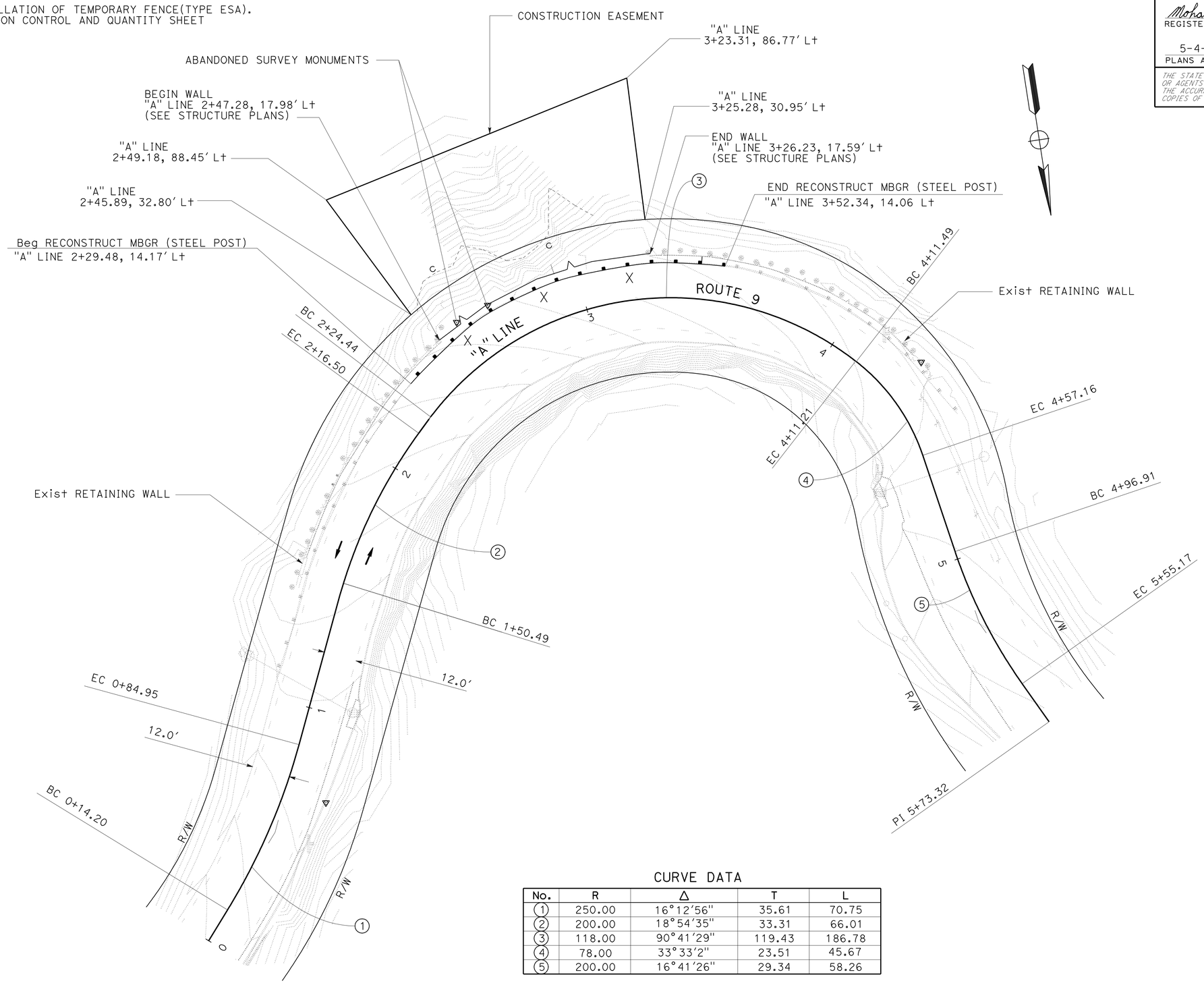

CURVE DATA

No.	R	Δ	T	L
1	250.00	16°12'56"	35.61	70.75
2	200.00	18°54'35"	33.31	66.01
3	118.00	90°41'29"	119.43	186.78
4	78.00	33°33'2"	23.51	45.67
5	200.00	16°41'26"	29.34	58.26

LAYOUT L-1

SCALE: 1"=20'

STATE OF CALIFORNIA - DEPARTMENT OF TRANSPORTATION
Caltrans
06-DESIGN

FUNCTIONAL SUPERVISOR: ARTHUR RAMIREZ
CALCULATED-DESIGNED BY: MOHAMMED EL-SAADI
CHECKED BY: HASSAN SHAHRIARI
REVISED BY
DATE REVISED

LAST REVISION 03-23-09
DATE PLOTTED => 27-AUG-2009
TIME PLOTTED => 09:12

Dist	COUNTY	ROUTE	POST MILES TOTAL PROJECT	SHEET No.	TOTAL SHEETS
05	SCr	9	20.4	4	32

LICENSED LANDSCAPE ARCHITECT

5-4-09
PLANS APPROVAL DATE

LICENSED LANDSCAPE ARCHITECT
Bryan D Parker No. 3896
Signature
12-31-09
Renewal Date
4-1-09
Date
STATE OF CALIFORNIA

THE STATE OF CALIFORNIA OR ITS OFFICERS OR AGENTS SHALL NOT BE RESPONSIBLE FOR THE ACCURACY OR COMPLETENESS OF SCANNED COPIES OF THIS PLAN SHEET.

NOTES

1. Temporary fence (Type ESA) shown for reference purposes only.
2. Setback dimension may vary according to field conditions.

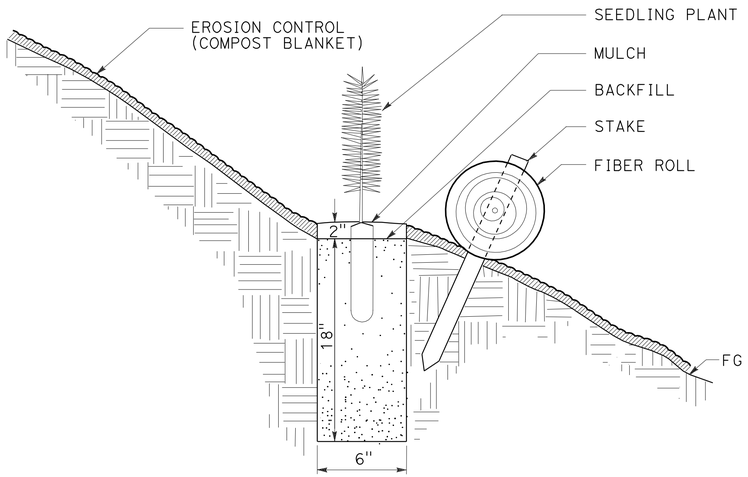

SECTION

PLANT (GROUP S) AND PERMANENT FIBER ROLL

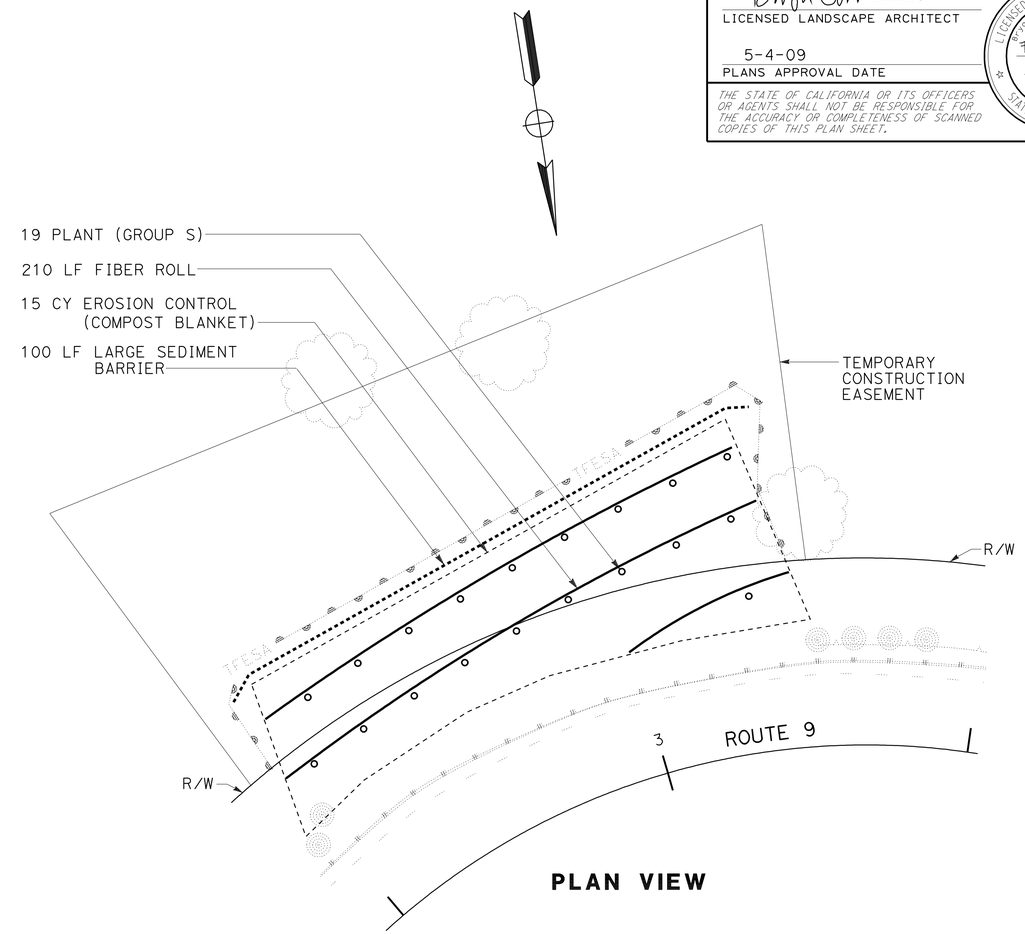

PLAN VIEW

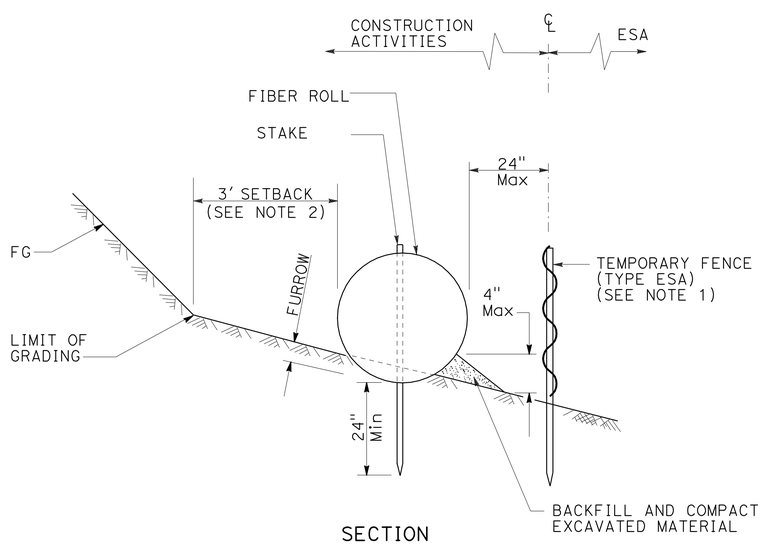

SECTION

PLACEMENT DETAIL FOR TEMPORARY FENCE (TYPE ESA) WITH LARGE SEDIMENT BARRIER

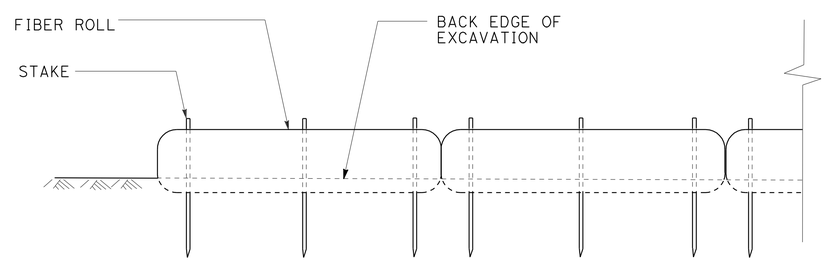

ELEVATION

LARGE SEDIMENT BARRIER

THIS PLAN ACCURATE FOR EROSION CONTROL WORK ONLY.

EROSION CONTROL PLAN

NO SCALE

EC-1

STATE OF CALIFORNIA - DEPARTMENT OF TRANSPORTATION
Caltrans LANDSCAPE ARCHITECTURE
SENIOR LANDSCAPE ARCHITECT: DENNIS REEVES
CALCULATED-DESIGNED BY: KRISTEN LANGAGER
CHECKED BY: BRYAN PARKER
REVISED BY
DATE REVISED

LAST REVISION 04-01-09
DATE PLOTTED => 27-AUG-2009
TIME PLOTTED => 09:12

Dist	COUNTY	ROUTE	POST MILES TOTAL PROJECT	SHEET No.	TOTAL SHEETS
05	SCr	9	20.4	5	32

Mohammed El-Saadi 3-30-09
REGISTERED CIVIL ENGINEER DATE

5-4-09
PLANS APPROVAL DATE

REGISTERED PROFESSIONAL ENGINEER
MOHAMMED EL-SAADI
No. 61991
Exp. 9-30-09
CIVIL
STATE OF CALIFORNIA

THE STATE OF CALIFORNIA OR ITS OFFICERS OR AGENTS SHALL NOT BE RESPONSIBLE FOR THE ACCURACY OR COMPLETENESS OF SCANNED COPIES OF THIS PLAN SHEET.

NOTE: LOCATIONS OF UTILITY FACILITIES SHOWN ON THESE PLANS ARE APPROXIMATE AND SHALL BE VERIFIED BY THE CONTRACTOR PRIOR TO CONSTRUCTION.

UTILITY OWNERSHIP ON THIS PROJECT:

TELEPHONE - AT&T

LEGEND

Exist OVERHEAD TELEPHONE —--t——— ———--(oh)——

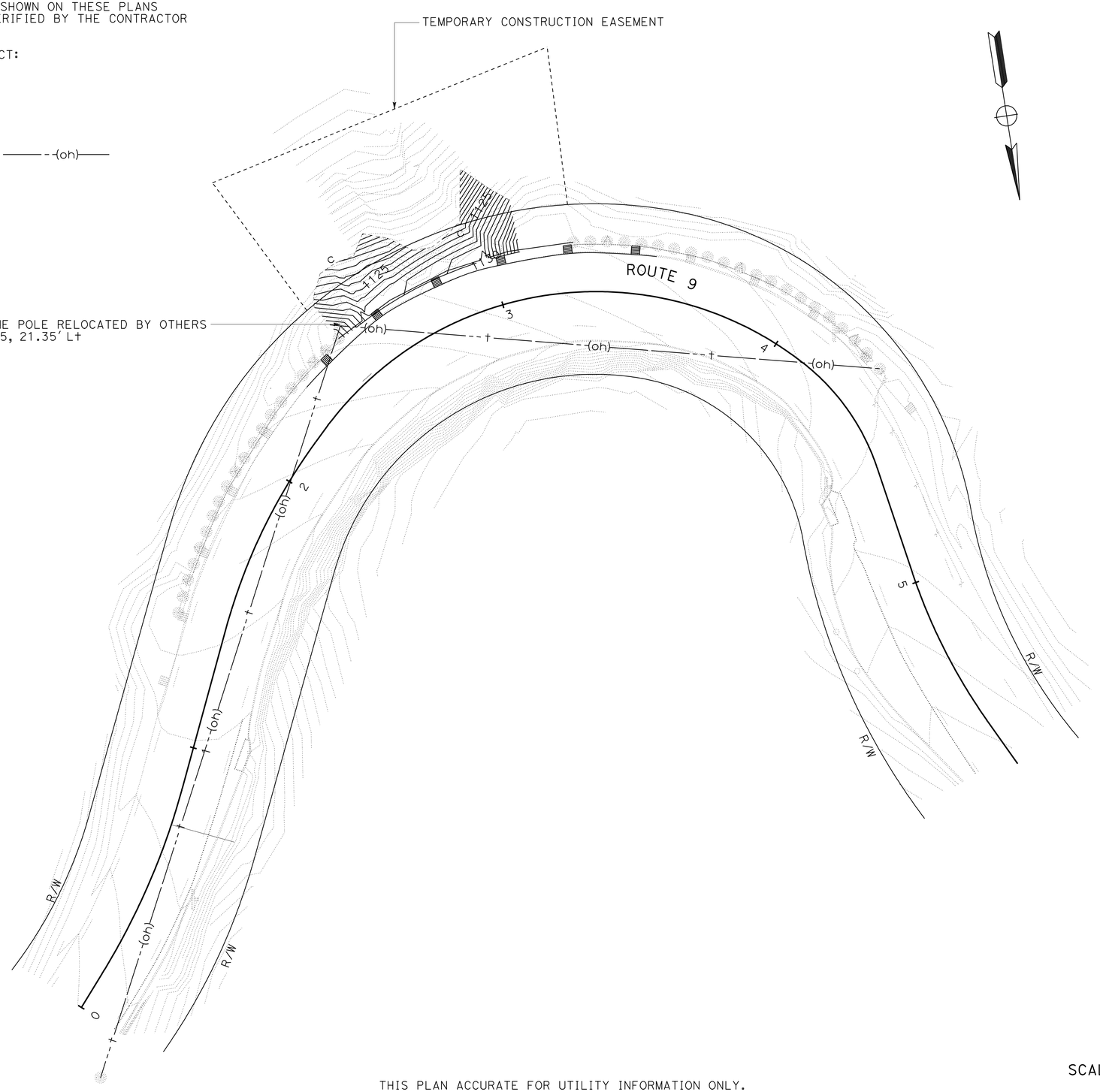

UTILITY PLAN

SCALE: 1"=20'

U-1

THIS PLAN ACCURATE FOR UTILITY INFORMATION ONLY.

STATE OF CALIFORNIA - DEPARTMENT OF TRANSPORTATION
Caltrans
06-DESIGN

FUNCTIONAL SUPERVISOR: ARTHUR RAMIREZ
CALCULATED-DESIGNED BY: MOHAMMED EL-SAADI
CHECKED BY: HASSAN SHAHRIARI
REVISED BY
DATE REVISED

LAST REVISION 03-24-09
DATE PLOTTED => 27-AUG-2009
TIME PLOTTED => 09:12

Dist	COUNTY	ROUTE	POST MILES TOTAL PROJECT	SHEET No.	TOTAL SHEETS
05	SCr	9	20.4	6	32

REGISTERED CIVIL ENGINEER — DATE 4-1-09

5-4-09
PLANS APPROVAL DATE

REGISTERED PROFESSIONAL ENGINEER HASSAN S. MAREI No. 35068 Exp. 9-30-09 CIVIL STATE OF CALIFORNIA

THE STATE OF CALIFORNIA OR ITS OFFICERS OR AGENTS SHALL NOT BE RESPONSIBLE FOR THE ACCURACY OR COMPLETENESS OF SCANNED COPIES OF THIS PLAN SHEET.

LEGEND:

- TEMPORARY TRAFFIC STRIPE (TAPE)
- REMOVE THERMOPLASTIC TRAFFIC STRIPE
- CONSTRUCTION AREA SIGN NUMBER
- SURFACE-MOUNTED CHANNELIZER
- PORTABLE FLASHING BEACON

ABBREVIATIONS:

A = 500 (feet) - THE A DIMENSION IS THE DISTANCE FROM THE TRANSITION.
B = 500 (feet) - THE B DIMENSION IS THE DISTANCE BETWEEN THE FIRST AND SECOND SIGNS.
C = 500 (feet) - THE C DIMENSION IS THE DISTANCE BETWEEN THE SECOND AND THIRD SIGNS.

NOTE:

FOR INSTALLATION OF TEMPORARY FENCE (TYPE ESA), SEE EROSION CONTROL AND QUANTITY SHEET.

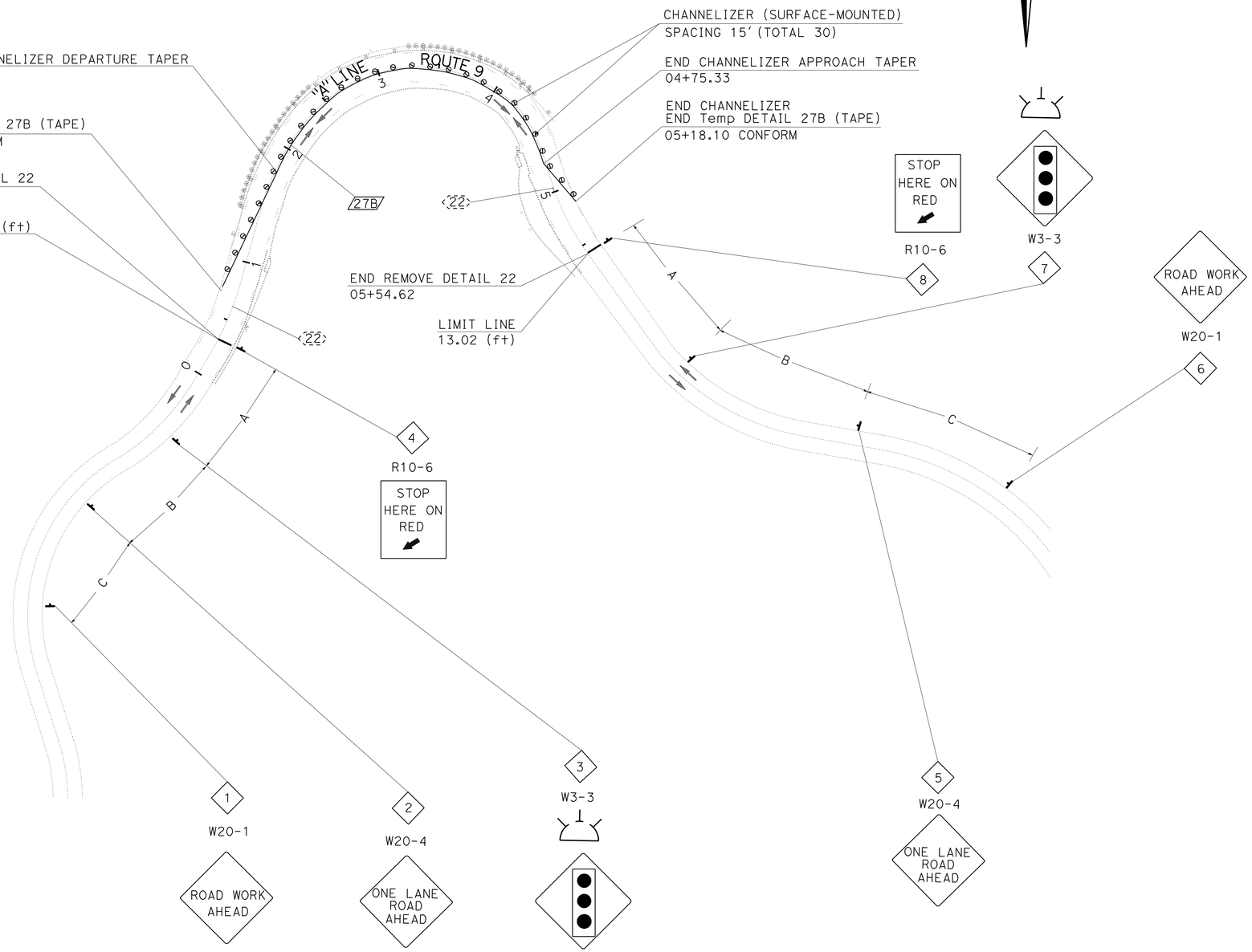

TRAFFIC HANDLING PLAN

NO SCALE

TH-1

THIS PLAN ACCURATE FOR TRAFFIC HANDLING WORK ONLY.

STATE OF CALIFORNIA - DEPARTMENT OF TRANSPORTATION
Caltrans® **TRAFFIC DESIGN**

FUNCTIONAL SUPERVISOR: HASSAN MAREI
CALCULATED-DESIGNED BY: DAVID BLACK
CHECKED BY: RAJESH PATEL
REVISED BY
DATE REVISED

LAST REVISION 03-11-09
DATE PLOTTED => 27-AUG-2009
TIME PLOTTED => 09:12

Dist	COUNTY	ROUTE	POST MILES TOTAL PROJECT	SHEET No.	TOTAL SHEETS
05	SCr	9	20.4	7	32

REGISTERED CIVIL ENGINEER 4-1-09 DATE

5-4-09
PLANS APPROVAL DATE

REGISTERED PROFESSIONAL ENGINEER HASSAN S. MAREI No. 35068 Exp. 9-30-09 CIVIL STATE OF CALIFORNIA

THE STATE OF CALIFORNIA OR ITS OFFICERS OR AGENTS SHALL NOT BE RESPONSIBLE FOR THE ACCURACY OR COMPLETENESS OF SCANNED COPIES OF THIS PLAN SHEET.

NOTE: FOR INSTALLATION OF TEMPORARY FENCE (TYPE ESA). SEE LAYOUT SHEET.

TRAFFIC HANDLING PAVEMENT DELINEATION

SHEET No.	STATION	DETAIL No.	REMOVE PAVEMENT MARKER	TEMPORARY TRAFFIC STRIPE (TAPE)	REMOVE YELLOW THERMOPLASTIC TRAFFIC STRIPE
			TYPE D	4" WHITE	4" YELLOW
			EA	LF	LF
TH-1	00+32.32 TO 05+54.62	22	46		1045
	00+70.77 TO 05+18.10	27B		448	
	TOTAL		46	448	1045

CONSTRUCTION AREA SIGNS (FOR TRAFFIC HANDLING)

SIGN NUMBER	SIGN CODE	No. OF POST AND SIZE	PANEL SIZE	REMARKS	No. OF SIGNS
1	W20-1	1-4" x 6"	48" x 48"	ROAD WORK AHEAD	1
2	W20-4	1-4" x 6"	48" x 48"	ONE LANE ROAD AHEAD	1
3	W3-3	1-4" x 6"	48" x 48"	SIGNAL AHEAD	1
4	R10-6	1-4" x 4"	24" x 30"	STOP HERE ON RED	1
5	W20-4	1-4" x 6"	48" x 48"	ONE LANE ROAD AHEAD	1
6	W20-1	1-4" x 6"	48" x 48"	ROAD WORK AHEAD	1
7	W3-3	1-4" x 6"	48" x 48"	SIGNAL AHEAD	1
8	R10-6	1-4" x 4"	24" x 30"	STOP HERE ON RED	1

TEMPORARY PAVEMENT MARKINGS

TEMPORARY PAVEMENT MARKING (TAPE)	
SHEET No.	PLACE LIMIT LINE
	SQFT
TH-1	25.09
TOTAL	25.09

CHANNELIZER (SURFACE MOUNTED)

SHEET No.	STATION LIMIT	CHANNELIZERS
		EA
TH-1	Sta 00+70.77 TO Sta 05+18.10	30
TOTAL		30

TRAFFIC HANDLING QUANTITIES

THQ-1

REVISED BY | DATE REVISED
DAVID BLACK | RAJESH PATEL
CALCULATED-DESIGNED BY | CHECKED BY
FUNCTIONAL SUPERVISOR: HASSAN MAREI
STATE OF CALIFORNIA - DEPARTMENT OF TRANSPORTATION
Caltrans® TRAFFIC DESIGN

LAST REVISION 03-11-09 | DATE PLOTTED => 27-AUG-2009 | TIME PLOTTED => 09:13

Dist	COUNTY	ROUTE	POST MILES TOTAL PROJECT	SHEET No.	TOTAL SHEETS
05	SCr	9	20.4	8	32

REGISTERED CIVIL ENGINEER 4-1-09 DATE

5-4-09
PLANS APPROVAL DATE

REGISTERED PROFESSIONAL ENGINEER HASSAN S. MAREI No. 35068 Exp. 9-30-09 CIVIL STATE OF CALIFORNIA

THE STATE OF CALIFORNIA OR ITS OFFICERS OR AGENTS SHALL NOT BE RESPONSIBLE FOR THE ACCURACY OR COMPLETENESS OF SCANNED COPIES OF THIS PLAN SHEET.

CONSTRUCTION AREA SIGNS (STATIONARY MOUNTED)

SIGN No.	SIGN CODE	SIGN MESSAGE	PANEL SIZE	No. OF POST AND SIZE	No.OF SIGNS
Ⓐ	W20-1	ROAD WORK AHEAD	48" x 48"	1 - 6" x 6"	2
Ⓑ	G20-2	END ROAD WORK	36" x 18"	1 - 4" x 4"	2

NOTES: 1. SIGN LOCATIONS SHOWN ARE APPROXIMATE.
EXACT LOCATIONS TO BE DETERMINED BY THE ENGINEER.

2. FOR INSTALLATION OF TEMPORARY FENCE (TYPE ESA), SEE LAYOUT SHEET.

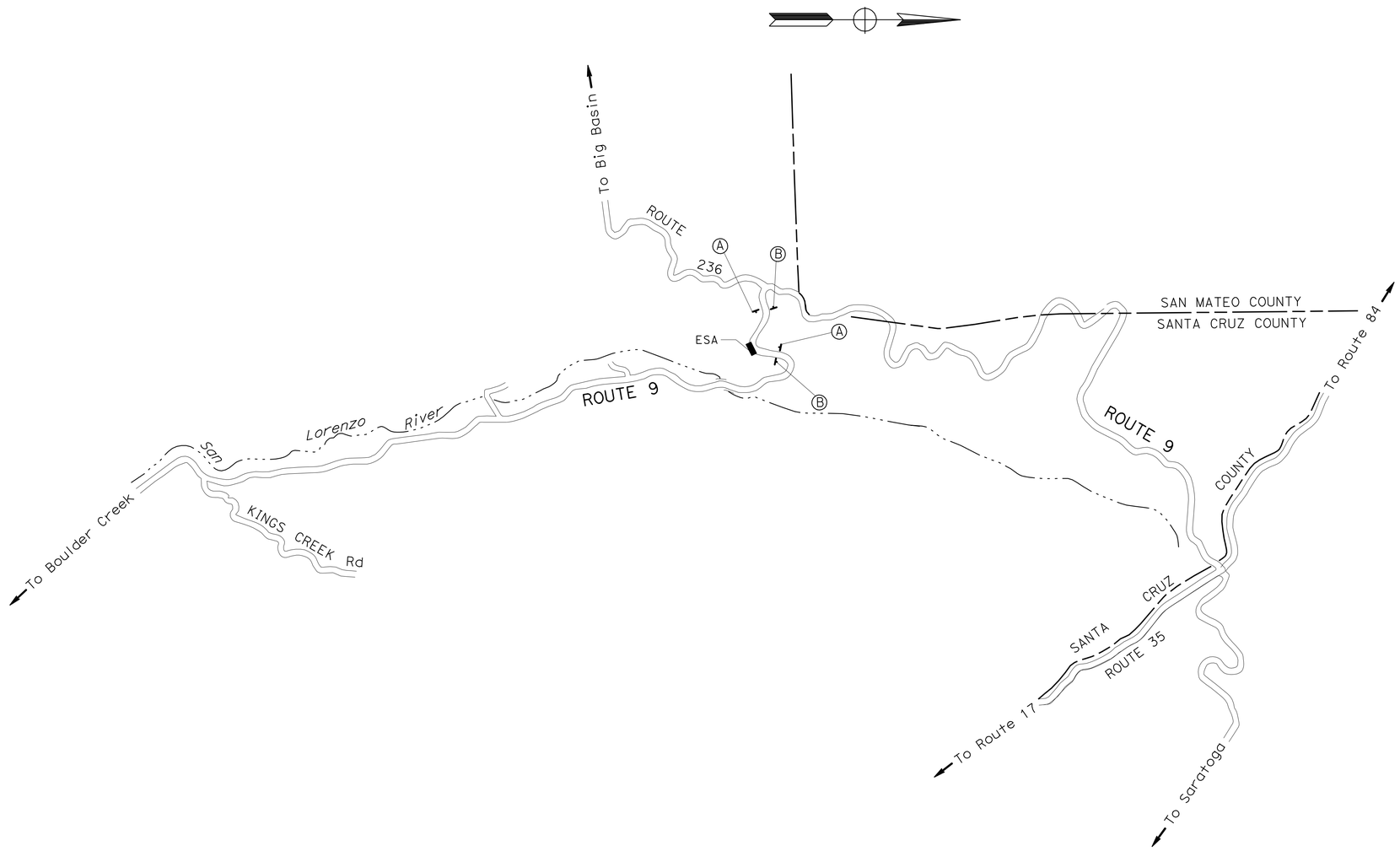

THIS PLAN ACCURATE FOR CONSTRUCTION AREA SIGNS WORK ONLY.

CONSTRUCTION AREA SIGNS

NO SCALE

CS-1

STATE OF CALIFORNIA - DEPARTMENT OF TRANSPORTATION
Caltrans® TRAFFIC DESIGN

FUNCTIONAL SUPERVISOR: HASSAN MAREI
CALCULATED-DESIGNED BY: DAVID BLACK
CHECKED BY: RAJESH PATEL
REVISED BY
DATE REVISED

LAST REVISION 04-01-09
DATE PLOTTED => 27-AUG-2009
TIME PLOTTED => 09:13

Dist	COUNTY	ROUTE	POST MILES TOTAL PROJECT	SHEET No.	TOTAL SHEETS
05	SCr	9	20.4	9	32

REGISTERED CIVIL ENGINEER — DATE 4-1-09

5-4-09
PLANS APPROVAL DATE

REGISTERED PROFESSIONAL ENGINEER HASSAN S. MAREI No. 35068 Exp. 9-30-09 CIVIL STATE OF CALIFORNIA

THE STATE OF CALIFORNIA OR ITS OFFICERS OR AGENTS SHALL NOT BE RESPONSIBLE FOR THE ACCURACY OR COMPLETENESS OF SCANNED COPIES OF THIS PLAN SHEET.

NOTE:
FOR INSTALLATION OF FENCE (TYPE ESA), SEE LAYOUT SHEET.

LEGEND:

- THERMOPLASTIC TRAFFIC STRIPE(SPRAYABLE) DETAIL NUMBER
- DIRECTION OF TRAFFIC FLOW
- F_{Gr} GUARD RAILING DELINEATOR (TYPE F)

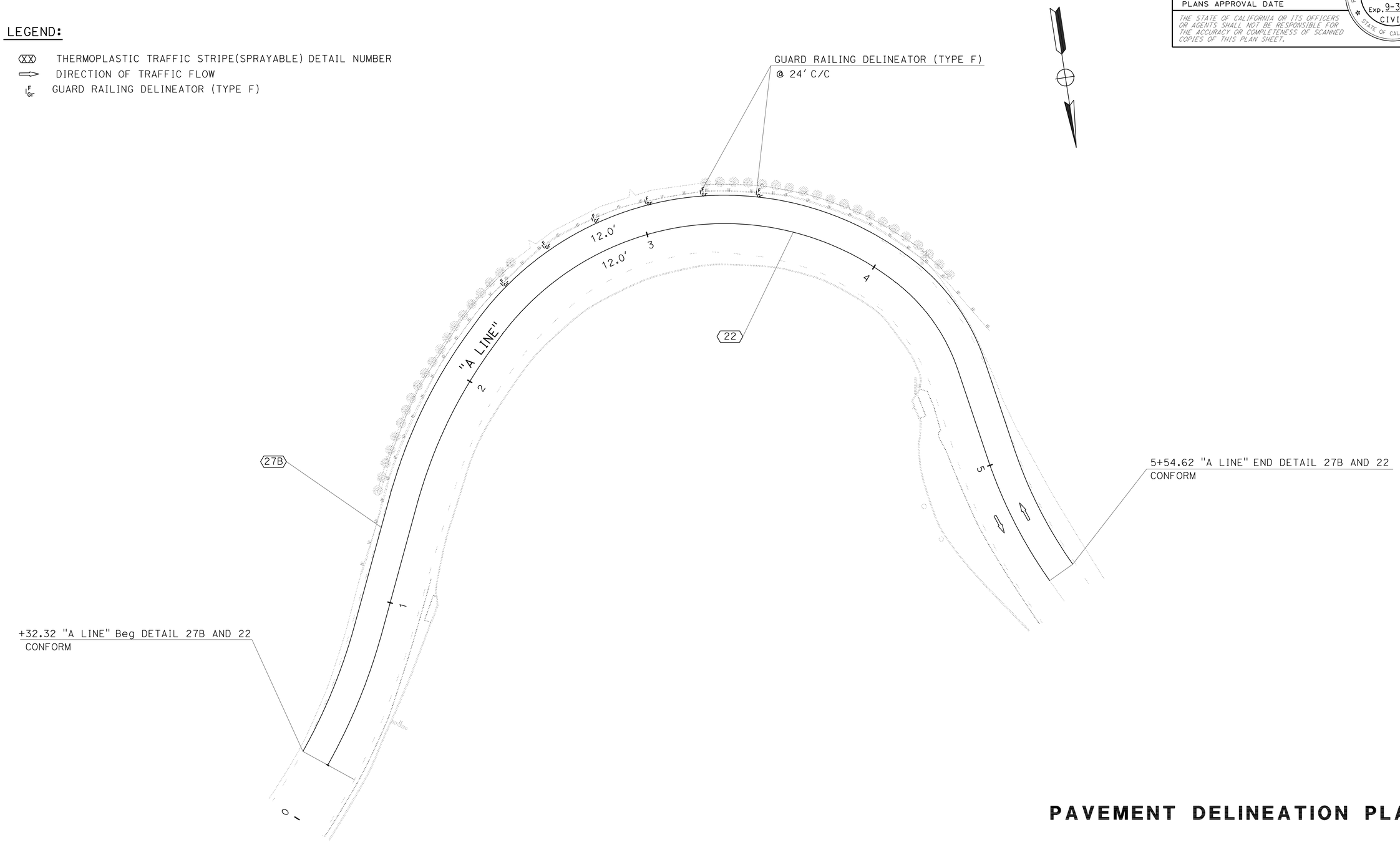

THIS PLAN ACCURATE FOR PAVEMENT DELINEATION WORK ONLY.

PAVEMENT DELINEATION PLAN

SCALE: 1"=20'

PD-1

STATE OF CALIFORNIA - DEPARTMENT OF TRANSPORTATION
Caltrans® TRAFFIC DESIGN

FUNCTIONAL SUPERVISOR: HASSAN MAREI
CALCULATED-DESIGNED BY: DAVID BLACK
CHECKED BY: RAJESH PATEL
REVISED BY
DATE REVISED

LAST REVISION 03-11-09
DATE PLOTTED => 27-AUG-2009
TIME PLOTTED => 09:13

Dist	COUNTY	ROUTE	POST MILES TOTAL PROJECT	SHEET No.	TOTAL SHEETS
05	SCr	9	20.4	10	32

REGISTERED CIVIL ENGINEER 4-1-09 DATE

5-4-09
PLANS APPROVAL DATE

REGISTERED PROFESSIONAL ENGINEER HASSAN S. MAREI No. 35068 Exp. 9-30-09 CIVIL STATE OF CALIFORNIA

THE STATE OF CALIFORNIA OR ITS OFFICERS OR AGENTS SHALL NOT BE RESPONSIBLE FOR THE ACCURACY OR COMPLETENESS OF SCANNED COPIES OF THIS PLAN SHEET.

NOTE: FOR INSTALLATION OF TEMPORARY FENCE (TYPE ESA), SEE LAYOUT SHEET.

PAVEMENT DELINEATION QUANTITIES

SHEET No.	STATION	DETAIL No.	PAVEMENT MARKER (RETROREFLECTIVE) TYPE D	THERMOPLASTIC TRAFFIC STRIPE (SPRAYABLE)	
			PLACE	4" WHITE	4" YELLOW
			EA	LF	
PD-1	00+32.32 TO 05+54.62	22	46		522.3
		27B		522.3	
	SUBTOTAL		46	522.3	522.3
	TOTAL		46	1044.6	

DELINEATOR QUANTITIES

SHEET No.	STATION	GUARD RAILING DELINEATOR
		EA
PD-1	0+00 TO 5+73.33	6
	TOTAL	6

PAVEMENT DELINEATION QUANTITIES

PDQ-1

STATE OF CALIFORNIA - DEPARTMENT OF TRANSPORTATION
Caltrans® TRAFFIC DESIGN

FUNCTIONAL SUPERVISOR: HASSAN MAREI
CALCULATED-DESIGNED BY: DAVID BLACK
CHECKED BY: RAJESH PATEL
REVISED BY
DATE REVISED

LAST REVISION 04-01-09
DATE PLOTTED => 27-AUG-2009
TIME PLOTTED => 09:14

Dist	COUNTY	ROUTE	POST MILES TOTAL PROJECT	SHEET No.	TOTAL SHEETS
05	SCr	9	20.4	11	32

Mohammed El-Saadi 3-30-09
REGISTERED CIVIL ENGINEER DATE

5-4-09
PLANS APPROVAL DATE

REGISTERED PROFESSIONAL ENGINEER
MOHAMMED EL-SAADI
No. 61991
Exp. 9-30-09
CIVIL
STATE OF CALIFORNIA

THE STATE OF CALIFORNIA OR ITS OFFICERS OR AGENTS SHALL NOT BE RESPONSIBLE FOR THE ACCURACY OR COMPLETENESS OF SCANNED COPIES OF THIS PLAN SHEET.

EARTHWORK

LOCATION	ROADWAY EXCAVATION
	CY
"A" LINE 2+29.48 TO 3+52.34	160 *
TOTAL	160 *

* SEE STRUCTURAL PLAN

WATER POLLUTION CONTROL

	TEMPORARY COVER	TEMPORARY FENCE (TYPE ESA)
Sta TO Sta	SQYD	LF
2+47.28 TO 3+26.23	240	158
TOTAL	240	158

EROSION CONTROL

PLAN SHEET No.	STATION	PLANT (GROUP S)	FIBER ROLL	EROSION CONTROL (COMPOST BLANKET)	LARGE SEDIMENT BARRIER (20" FIBER ROLL)
		EA	LF	CY	LF
EC-1	"A" LINE 2+29.48 TO 3+52.34	19	210	15	100
TOTAL		19	210	15	100

RECONSTRUCT METAL BEAM GUARD RAILING

PLAN SHEET No.	STATION	RECONSTRUCT MBGR (STEEL POST)
		LF
L-1	"A" LINE 2+29.48 TO 3+52.34	123
TOTAL		123

SUMMARY OF QUANTITIES
Q-1

STATE OF CALIFORNIA - DEPARTMENT OF TRANSPORTATION
Caltrans®
06-DESIGN

FUNCTIONAL SUPERVISOR: ARTHUR RAMIREZ
CALCULATED-DESIGNED BY: DAHIR KHALID
CHECKED BY: HASSAN SHAHRIARI
REVISED BY
DATE REVISED

LAST REVISION 03-23-09
DATE PLOTTED => 27-AUG-2009
TIME PLOTTED => 09:14

Dist	COUNTY	ROUTE	POST MILES TOTAL PROJECT	SHEET No.	TOTAL SHEETS
05	SCr	9	20.4	12	32

Omar Mendoza 4-1-09
REGISTERED ELECTRICAL ENGINEER

5-4-09
PLANS APPROVAL DATE

REGISTERED PROFESSIONAL ENGINEER OMAR MENDOZA No. 17982 Exp. 12/31/10 ELECTRICAL STATE OF CALIFORNIA

THE STATE OF CALIFORNIA OR ITS OFFICERS OR AGENTS SHALL NOT BE RESPONSIBLE FOR THE ACCURACY OR COMPLETENESS OF SCANNED COPIES OF THIS PLAN SHEET.

NOTES: (FOR SHEETS E-1 TO E-3)

1. 120/240 V, 1Ø, 3 WIRE NEMA 3R SERVICE EQUIPMENT ENCLOSURE WITH THE FOLLOWING CIRCUIT BREAKERS: (SEE DETAIL A ON SHEET E-2).

AMPERES	VOLTS	POLES	LOAD	METER
60	240	2	MAIN	NO
30	120	1	TRAFFIC SIGNAL	NO
15	120	1	FLASHING BEACON (NB)	NO
15	120	1	FLASHING BEACON (SB)	NO
20	240	2	LIGHTING	NO

2. STATE-FURNISHED MODEL 2070 CONTROLLER ASSEMBLY AND BATTERY BACKUP SYSTEM ON CONCRETE FOUNDATION WITHOUT RAISED PCC PAD.
3. 20′ WOOD POLE WITH FLASHING BEACON, FBCA, INCANDESCENT SIGN LIGHTING AND W3-3 SIGN, (SEE DETAIL C ON SHEET E-2).
4. 40′ WOOD POLE WITH SIGNAL AND LIGHTING EQUIPMENT, (SEE DETAIL D ON SHEET E-3.
5. 20′ WOOD POLE WITH INCANDESCENT SIGN LIGHTING, (SEE DETAIL E ON SHEET E-3).
6. Ø8 LOOPS SHALL HAVE 5 TURNS.
7. GENERATORS WITH FUEL TANK (SEE DETAIL B ON SHEET E-2).
8. SPLICE INCANDESCENT SIGN LIGHTING CONDUCTORS TO FLASHING BEACON CONDUCTORS.
9. REFER TO TRAFFIC HANDLING PLAN FOR LIMIT LINE LOCATION.
10. MESSENGER CABLE SHALL BE ⅜", 7 STRAND GALVANIZED.
11. ALL PULL BOXES SHALL BE No. 3½ UNLESS OTHERWISE SPECIFIED.
12. FOR COMPLETE RIGHT OF WAY DATA, SEE RIGHT OF WAY RECORD MAPS AT DISTRICT OFFICE.

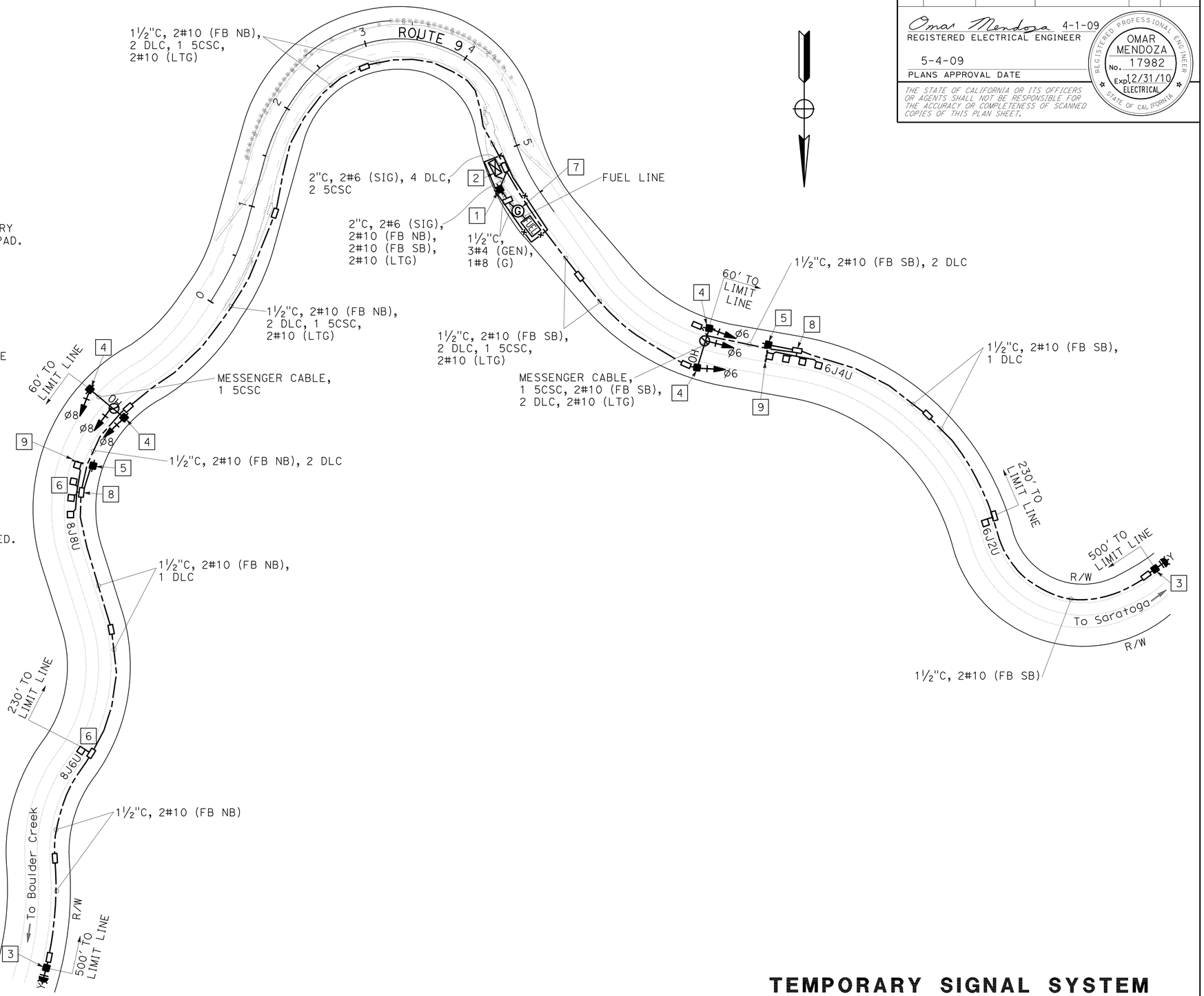

→ Ø8 Ø6 ←

PHASE DIAGRAM

LEGEND:

- (G) GENERATORS AND TRANSFER SWITCH
- FUEL TANK
- —×——×— TEMPORARY 6′ CL-6 FENCE WITH 3′ GATE
- —G— FUEL LINE

THIS PLAN IS ACCURATE FOR ELECTRICAL WORK ONLY.

TEMPORARY SIGNAL SYSTEM

SCALE: 1"=50′

E-1

STATE OF CALIFORNIA - DEPARTMENT OF TRANSPORTATION
Caltrans® ELECTRICAL DESIGN

FUNCTIONAL SUPERVISOR: ALI BAKHDOUD
CALCULATED-DESIGNED BY: OMAR MENDOZA
CHECKED BY: PAUL MATOS
REVISED BY
DATE REVISED

LAST REVISION 03-25-09
DATE PLOTTED => 27-AUG-2009
TIME PLOTTED => 09:14

Dist	COUNTY	ROUTE	POST MILES TOTAL PROJECT	SHEET No.	TOTAL SHEETS
05	SCr	9	20.4	13	32

Omar Mendoza 4-1-09
REGISTERED ELECTRICAL ENGINEER

5-4-09
PLANS APPROVAL DATE

REGISTERED PROFESSIONAL ENGINEER
OMAR MENDOZA
No. 17982
Exp. 12/31/10
ELECTRICAL
STATE OF CALIFORNIA

THE STATE OF CALIFORNIA OR ITS OFFICERS OR AGENTS SHALL NOT BE RESPONSIBLE FOR THE ACCURACY OR COMPLETENESS OF SCANNED COPIES OF THIS PLAN SHEET.

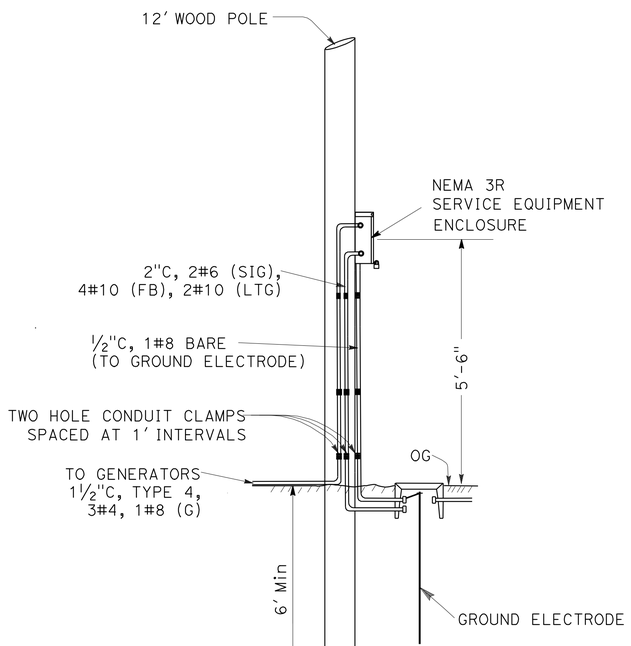

DETAIL A
TEMPORARY SERVICE INSTALLATION

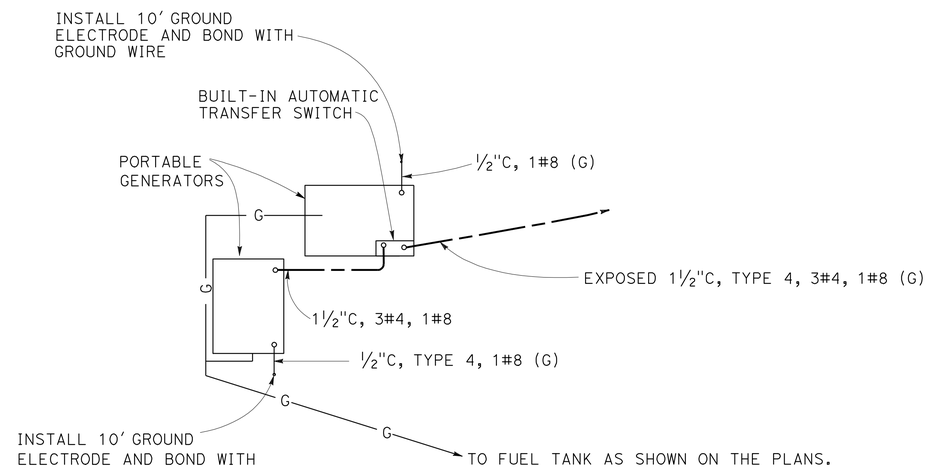

DETAIL B
GENERATORS WITH FUEL TANK

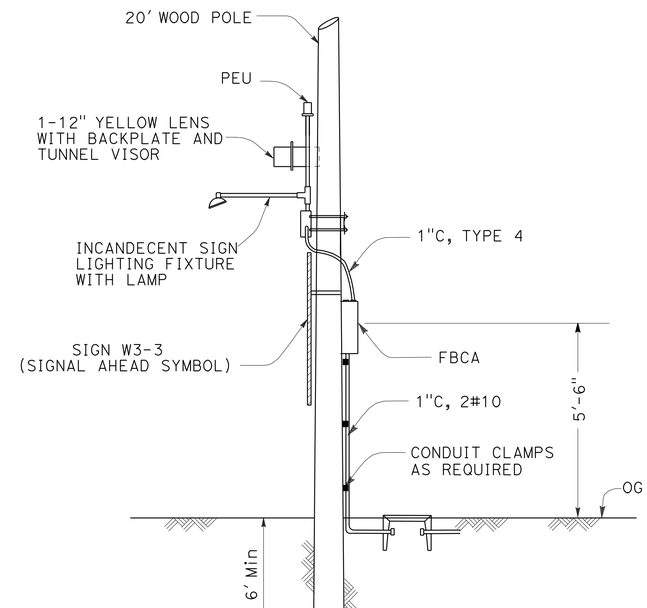

DETAIL C
TEMPORARY FLASHING BEACON INSTALLATION

THIS PLAN IS ACCURATE FOR ELECTRICAL WORK ONLY.

TEMPORARY SIGNAL SYSTEM

NO SCALE

E-2

STATE OF CALIFORNIA - DEPARTMENT OF TRANSPORTATION
Caltrans® ELECTRICAL DESIGN

FUNCTIONAL SUPERVISOR: ALI BAKHDOUD
CALCULATED-DESIGNED BY: PAUL MATOS
CHECKED BY: OMAR MENDOZA
REVISED BY
DATE REVISED

LAST REVISION 03-25-09
DATE PLOTTED => 27-AUG-2009
TIME PLOTTED => 09:14

Dist	COUNTY	ROUTE	POST MILES TOTAL PROJECT	SHEET No.	TOTAL SHEETS
05	SCr	9	20.4	14	32

Omar Mendoza 4-1-09
REGISTERED ELECTRICAL ENGINEER

5-4-09
PLANS APPROVAL DATE

REGISTERED PROFESSIONAL ENGINEER
OMAR MENDOZA
No. 17982
Exp. 12/31/10
ELECTRICAL
STATE OF CALIFORNIA

THE STATE OF CALIFORNIA OR ITS OFFICERS OR AGENTS SHALL NOT BE RESPONSIBLE FOR THE ACCURACY OR COMPLETENESS OF SCANNED COPIES OF THIS PLAN SHEET.

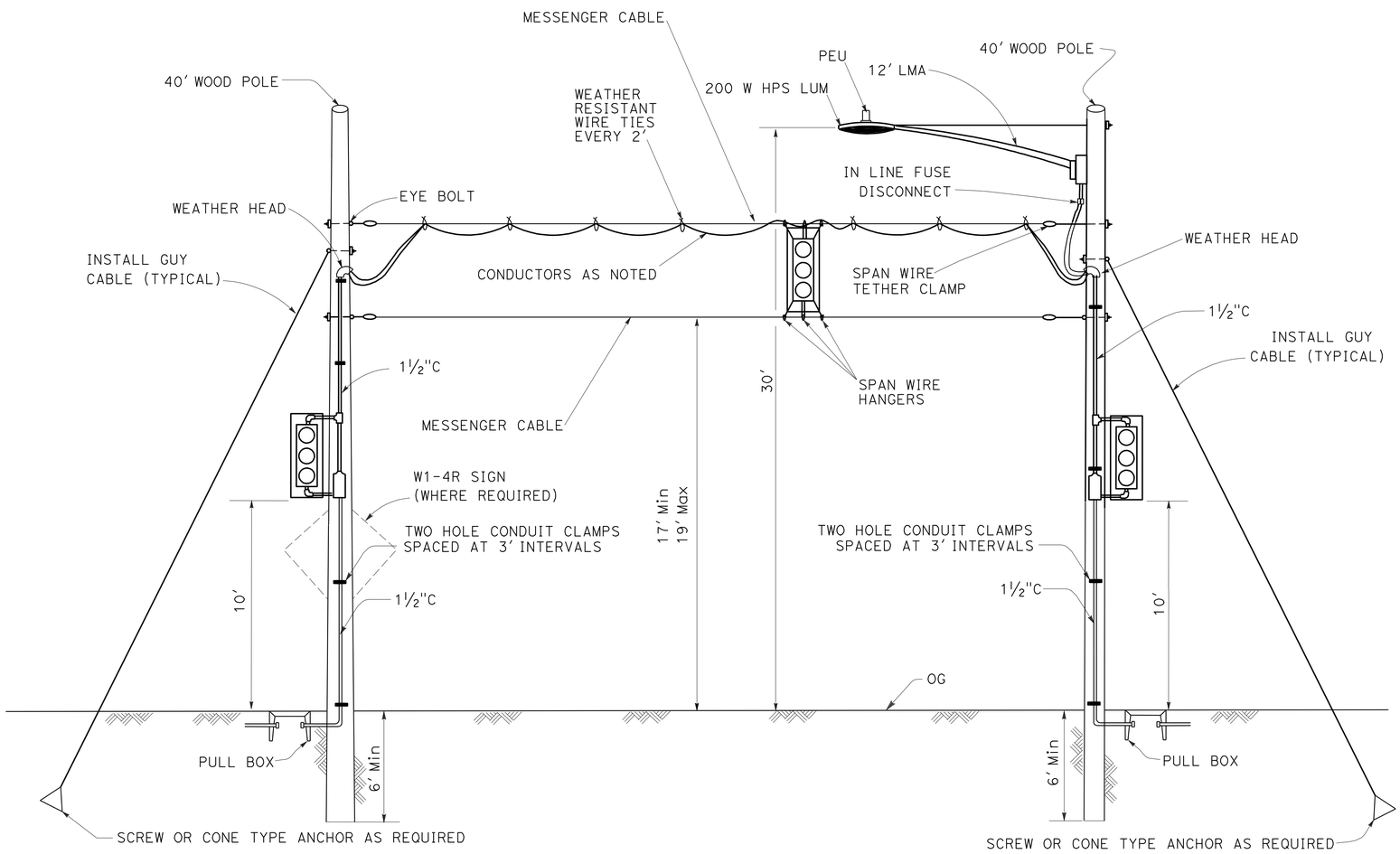

DETAIL D

TEMPORARY SIGNAL AND LIGHTING INSTALLATION

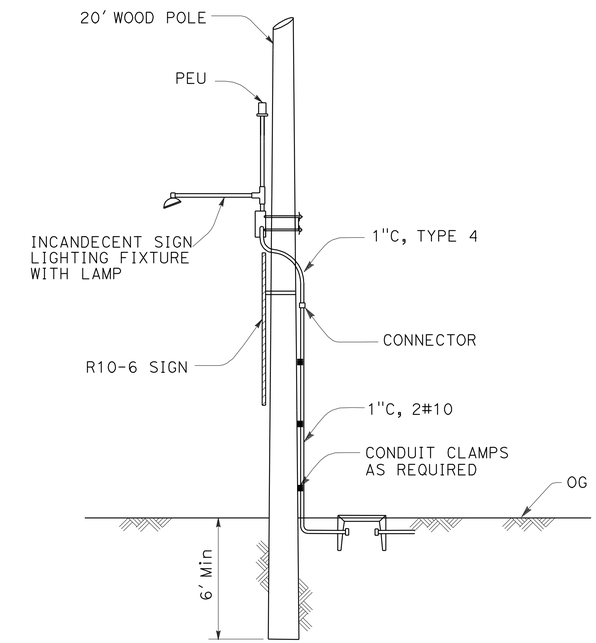

DETAIL E

TEMPORARY INCANDESCENT SIGN LIGHTING

TEMPORARY SIGNAL SYSTEM

THIS PLAN IS ACCURATE FOR ELECTRICAL WORK ONLY.

NO SCALE

E-3

STATE OF CALIFORNIA - DEPARTMENT OF TRANSPORTATION
Caltrans®
ELECTRICAL DESIGN

FUNCTIONAL SUPERVISOR: ALI BAKHDOUD
CALCULATED-DESIGNED BY: PAUL MATOS
CHECKED BY: OMAR MENDOZA
REVISED BY
DATE REVISED

LAST REVISION 03-25-09
DATE PLOTTED => 27-AUG-2009
TIME PLOTTED => 09:15

DIST	COUNTY	ROUTE	POST MILES TOTAL PROJECT	SHEET NO.	TOTAL SHEETS
05	SCr	9	20.4	15	32

Randell D. Hiatt
REGISTERED CIVIL ENGINEER

June 6, 2008
PLANS APPROVAL DATE

REGISTERED PROFESSIONAL ENGINEER
Randell D. Hiatt
No. C50200
Exp. 6-30-09
CIVIL
STATE OF CALIFORNIA

The State of California or its officers or agents shall not be responsible for the accuracy or completeness of electronic copies of this plan sheet.

To accompany plans dated 5-4-09

NOTES:

1. When necessary to place dike in front of face of guard railing, only Type C dike may be used. For dike details, see Standard Plan A87B.
2. For standard railing post embedment, see Standard Plans A77C3.
3. Guard railing delineation to be used where shown on the Project Plans.
4. When dike or curb is placed under guard railing, the maximum height of the dike or curb shall be 4". Mountable dike should not be used. For dike and curb details, see Revised Standard Plans RSP A87A and Standard Plan A87B.
5. For details of typical distance between the face of rail and hinge point, see Standard Plan A77C3.

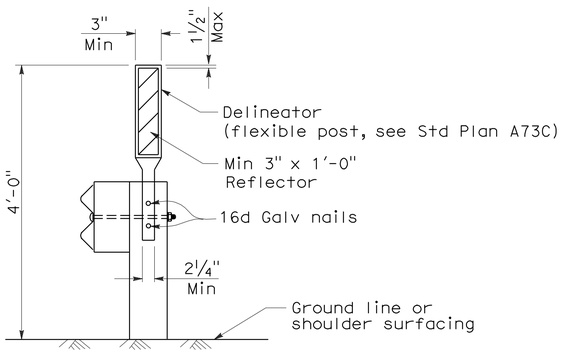

GUARD RAILING DELINEATION

See Note 3

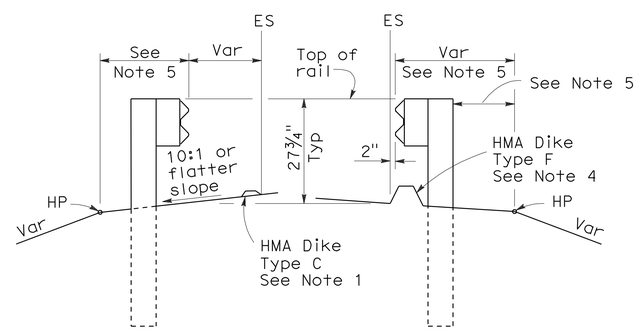

DIKE POSITIONING

See Note 1

STATE OF CALIFORNIA
DEPARTMENT OF TRANSPORTATION

METAL BEAM GUARD RAILING TYPICAL RAILING DELINEATION AND DIKE POSITIONING DETAILS

NO SCALE

RSP A77C4 DATED JUNE 6, 2008 SUPERSEDES STANDARD PLAN A77C4
DATED MAY 1, 2006 - PAGE 47 OF THE STANDARD PLANS BOOK DATED MAY 2006.

REVISED STANDARD PLAN RSP A77C4

2006 REVISED STANDARD PLAN RSP A77C4

12-10-07

DIST	COUNTY	ROUTE	POST MILES TOTAL PROJECT	SHEET NO.	TOTAL SHEETS
05	SCr	9	20.4	16	32

Gregory A. Balzer
LICENSED LANDSCAPE ARCHITECT

April 3, 2009
PLANS APPROVAL DATE

LICENSED LANDSCAPE ARCHITECT
Gregory A. Balzer 2516
Signature
02-28-11
Renewal Date
03-04-09
Date
STATE OF CALIFORNIA

The State of California or its officers or agents shall not be responsible for the accuracy or completeness of electronic copies of this plan sheet.

To accompany plans dated 5-4-09

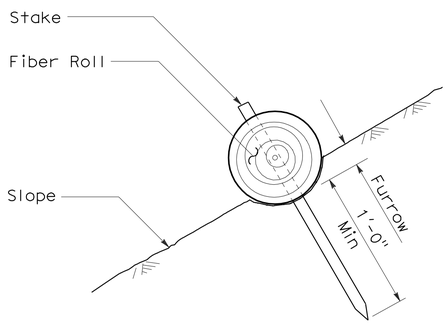

SECTION

FIBER ROLL (TYPE 1)

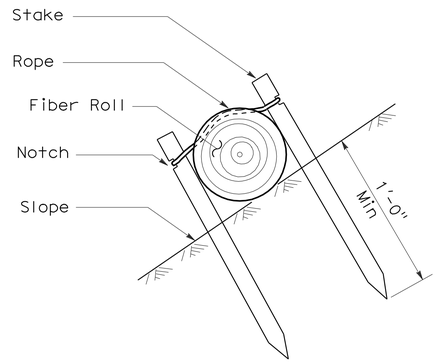

SECTION

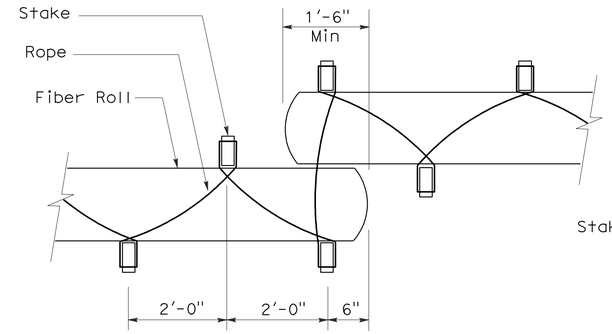

PLAN

FIBER ROLL (TYPE 2)

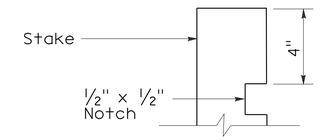

ELEVATION

STAKE NOTCH DETAIL

NOTES:

1. Fiber roll spacing varies depending upon slope inclination.
2. Installations shown in the perspectives are for slope inclination of 10:1 and steeper.

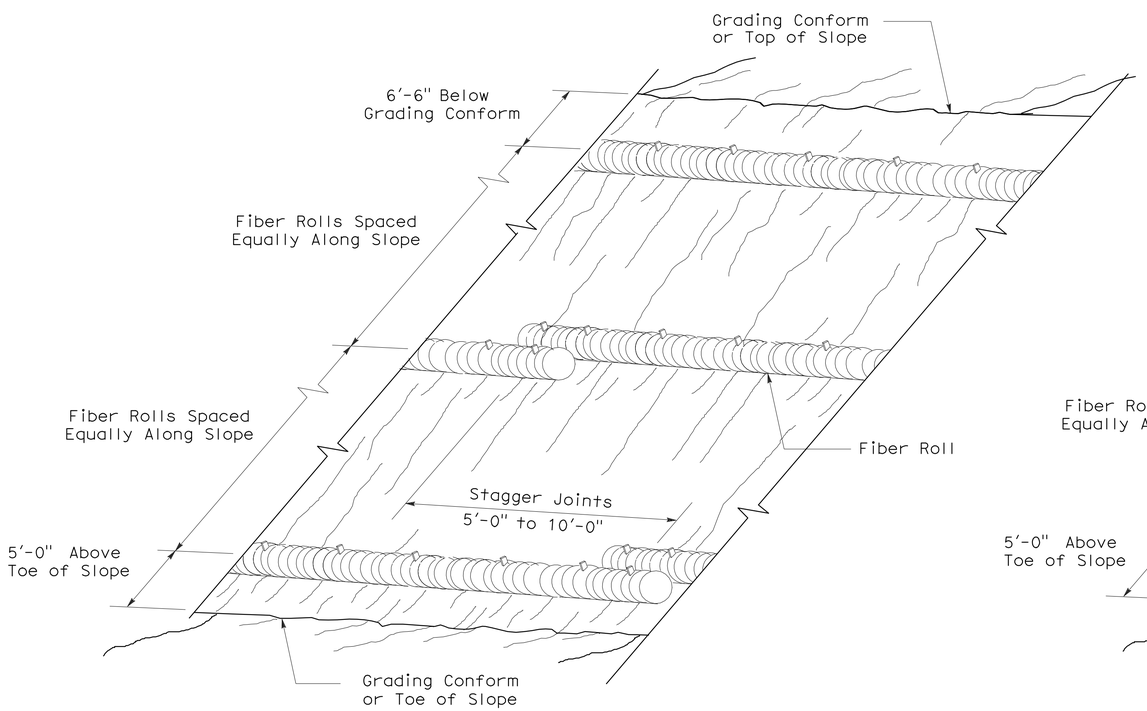

PERSPECTIVE

FIBER ROLL (TYPE 1)

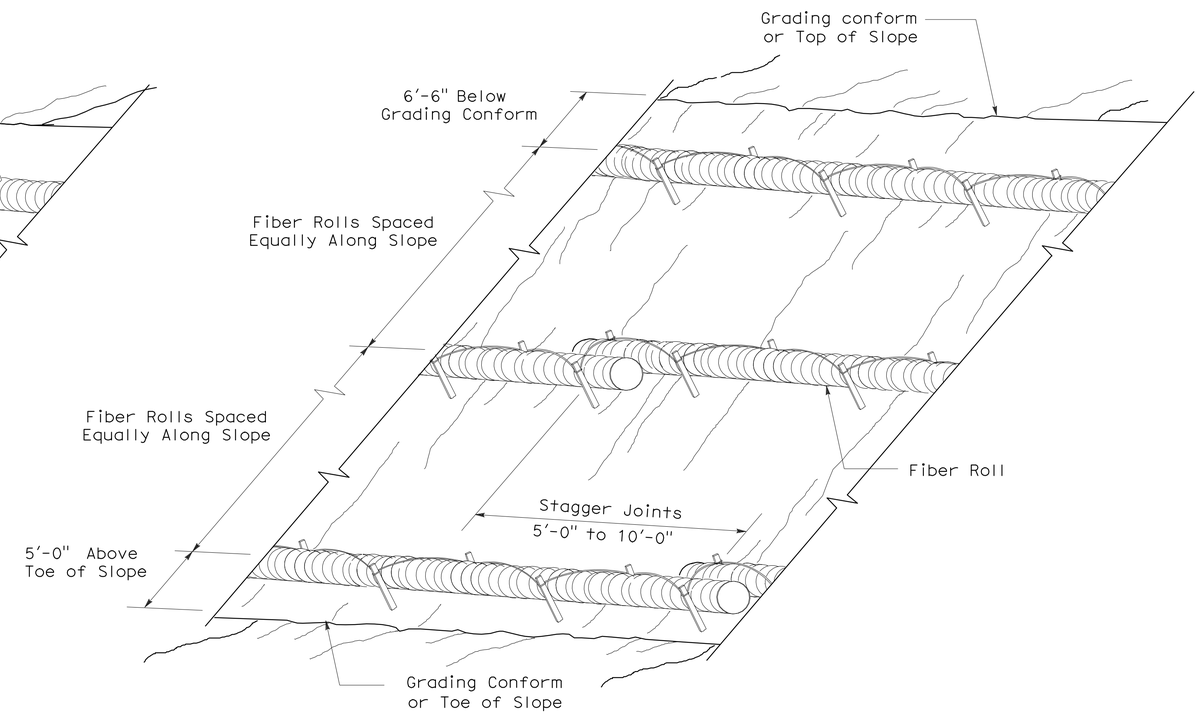

PERSPECTIVE

FIBER ROLL (TYPE 2)

STATE OF CALIFORNIA
DEPARTMENT OF TRANSPORTATION

EROSION CONTROL DETAILS (FIBER ROLL)

NO SCALE

RNSP H51 DATED APRIL 3, 2009 SUPERSEDES NSP H51 DATED DECEMBER 1, 2006 THAT SUPPLEMENTS THE STANDARD PLANS BOOK DATED MAY 2006.

REVISED NEW STANDARD PLAN RNSP H51

2006 REVISED NEW STANDARD PLAN RNSP H51

3-4-09

DIST	COUNTY	ROUTE	POST MILES TOTAL PROJECT	SHEET NO.	TOTAL SHEETS
05	SCr	9	20.4	17	32

Randell D. Hiatt
REGISTERED CIVIL ENGINEER

June 6, 2008
PLANS APPROVAL DATE

REGISTERED PROFESSIONAL ENGINEER
Randell D. Hiatt
No. C50200
Exp. 6-30-09
CIVIL
STATE OF CALIFORNIA

The State of California or its officers or agents shall not be responsible for the accuracy or completeness of electronic copies of this plan sheet.

To accompany plans dated 5-4-09

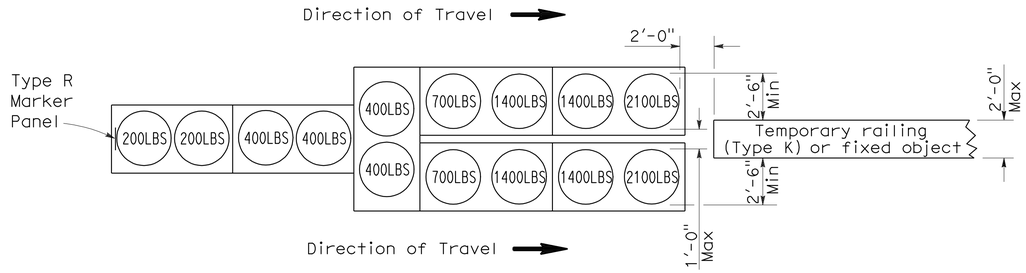

ARRAY 'TU14'

Approach speed 45 mph or more

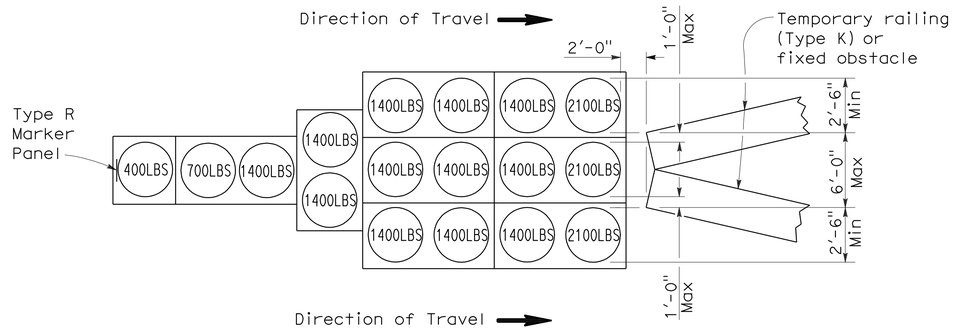

ARRAY 'TU17'

Approach speed less than 45 mph

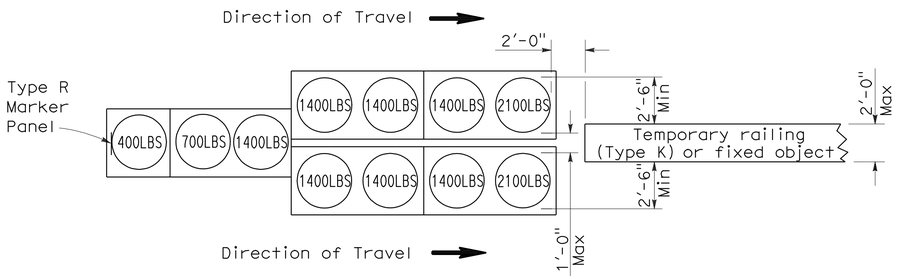

ARRAY 'TU11'

Approach speed less than 45 mph

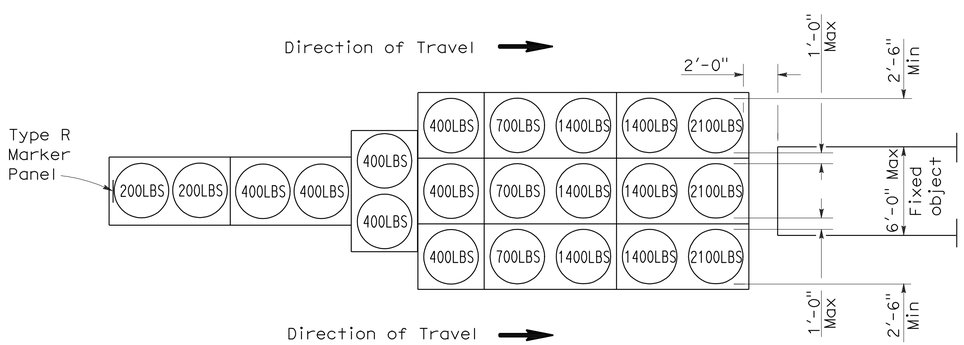

ARRAY 'TU21'

Approach speed 45 mph or more

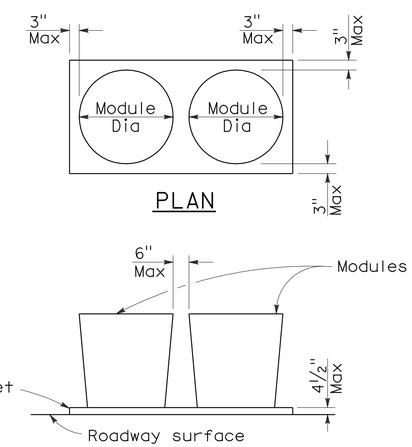

ELEVATION

CRASH CUSHION PALLET DETAIL

See Note 7

NOTES:

1. (XXX) Indicates sand filled module location and weight of sand in pounds for each module. Module spacing is based on the greater diameter of the module.
2. All sand weights are nominal.
3. Temporary crash cushion arrays shall not encroach on the traveled way.
4. Place the top of Type R marker panel 1" below the module lid.
5. Refer to Standard Plan A73B for marker details.
6. Approach speeds indicated conform to NCHRP 350 Report criteria.
7. Use of pallets is optional.

STATE OF CALIFORNIA
DEPARTMENT OF TRANSPORTATION

TEMPORARY CRASH CUSHION, SAND FILLED (UNIDIRECTIONAL)

NO SCALE

RSP T1A DATED JUNE 6, 2008 SUPERSEDES STANDARD PLAN T1A
DATED MAY 1, 2006 - PAGE 211 OF THE STANDARD PLANS BOOK DATED MAY 2006.

REVISED STANDARD PLAN RSP T1A

2006 REVISED STANDARD PLAN RSP T1A

5-15-08

DIST	COUNTY	ROUTE	POST MILES TOTAL PROJECT	SHEET NO.	TOTAL SHEETS
05	SCr	9	20.4	18	32

Randell D. Hiatt
REGISTERED CIVIL ENGINEER

June 6, 2008
PLANS APPROVAL DATE

REGISTERED PROFESSIONAL ENGINEER
Randell D. Hiatt
No. C50200
Exp. 6-30-09
CIVIL
STATE OF CALIFORNIA

The State of California or its officers or agents shall not be responsible for the accuracy or completeness of electronic copies of this plan sheet.

To accompany plans dated 5-4-09

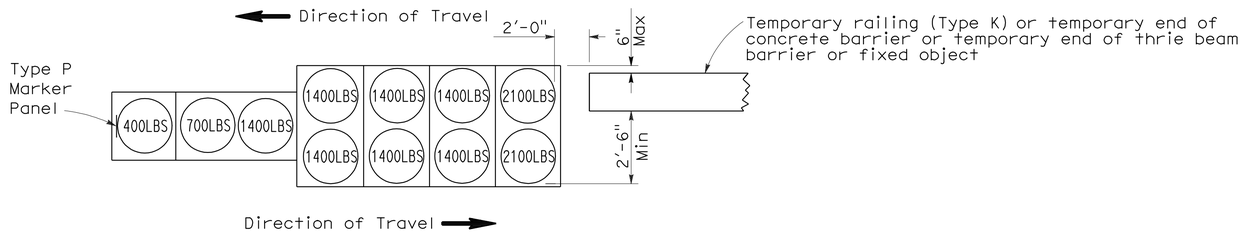

ARRAY 'TB11'

Approach speed less than 45 mph

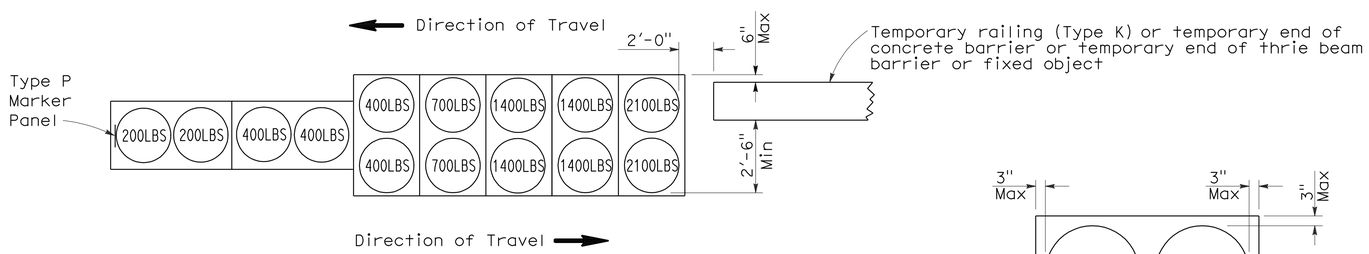

ARRAY 'TB14'

Approach speed 45 mph or more

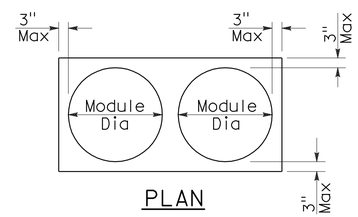

PLAN

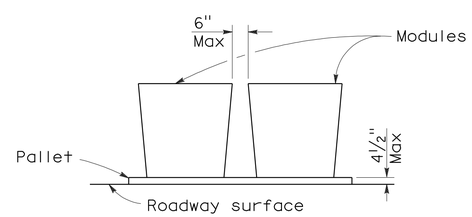

ELEVATION

CRASH CUSHION PALLET DETAIL

See Note 7

NOTES:

1. (XXX) Indicates sand filled module location and weight of sand in pounds for each module. Module spacing is based on the greater diameter of the module.
2. All sand weights are nominal.
3. Temporary crash cushion arrays shall not encroach on the traveled way.
4. Place the Type P marker panel so that the bottom of the panel rests upon the pallet.
5. Refer to Standard Plan A73B for marker details.
6. Approach speeds indicated conform to NCHRP 350 Report criteria.
7. Use of pallets is optional.

STATE OF CALIFORNIA
DEPARTMENT OF TRANSPORTATION

TEMPORARY CRASH CUSHION, SAND FILLED (BIDIRECTIONAL)

NO SCALE

RSP T1B DATED JUNE 6, 2008 SUPERSEDES STANDARD PLAN T1B
DATED MAY 1, 2006 - PAGE 212 OF THE STANDARD PLANS BOOK DATED MAY 2006.

REVISED STANDARD PLAN RSP T1B

2006 REVISED STANDARD PLAN RSP T1B

5-15-08

DIST	COUNTY	ROUTE	POST MILES TOTAL PROJECT	SHEET NO.	TOTAL SHEETS
05	SCr	9	20.4	19	32

Randell D. Hiatt
REGISTERED CIVIL ENGINEER

June 6, 2008
PLANS APPROVAL DATE

REGISTERED PROFESSIONAL ENGINEER
Randell D. Hiatt
No. C50200
Exp. 6-30-09
CIVIL
STATE OF CALIFORNIA

The State of California or its officers or agents shall not be responsible for the accuracy or completeness of electronic copies of this plan sheet.

To accompany plans dated 5-4-09

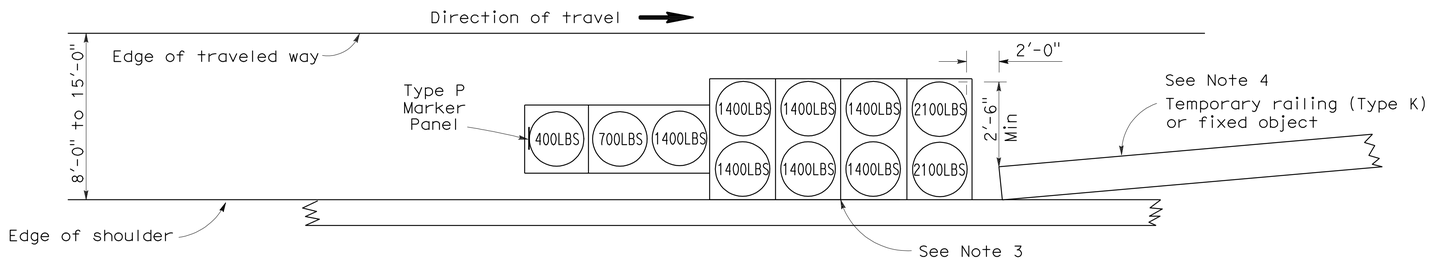

ARRAY 'TS11'

Approach speed less than 45 mph
See Note 9

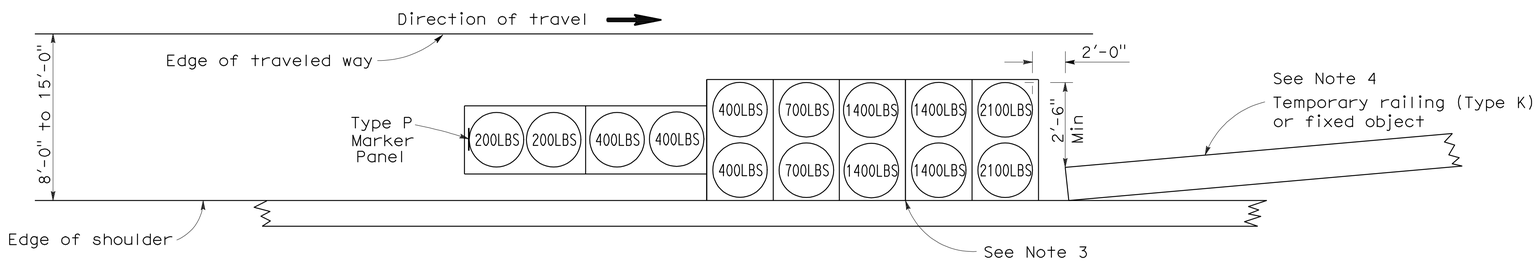

ARRAY 'TS14'

Approach speed 45 mph or more
See Note 9

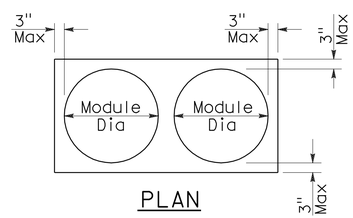

PLAN

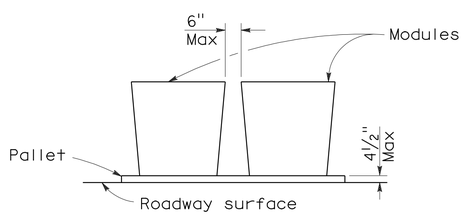

ELEVATION

CRASH CUSHION PALLET DETAIL

See Note 11

NOTES:

1. (XXX) Indicates sand filled module location and weight of sand in pounds for each module. Module spacing is based on the greater diameter of the module.
2. All sand weights are nominal.
3. The temporary crash cushion arrays shown on this plan shall be used only in locations where there will be traffic on one side of the temporary crash cushion array.
4. If the fixed object or approach end of the temporary railing is less than 15'-0" from the edge of traveled way, a temporary crash cushion is required in a construction or work zone.
5. Temporary crash cushion arrays shall not encroach on the traveled way.
6. Arrays for median shoulders shall conform to details shown on this plan for outside shoulders.
7. Place the Type P marker panel so that the bottom of the panel rests upon the pallet and faces traffic.
8. Refer to Standard Plan A73B for marker details.
9. For shoulder widths less than 8'-0", appropriate approved crash cushion protection, other than sand filled modules, shall be provided at fixed objects and at approach ends of temporary railing. The specific type of crash cushion shall be as shown on the project plans or as specified in the Special Provisions, or if not shown on the project plans or specified in the Special Provisions, shall be as approved by the Engineer.
10. Approach speeds indicated conform to NCHRP 350 Report criteria.
11. Use of pallets is optional.

STATE OF CALIFORNIA
DEPARTMENT OF TRANSPORTATION

TEMPORARY CRASH CUSHION, SAND FILLED (SHOULDER INSTALLATIONS)

NO SCALE

RSP T2 DATED JUNE 6, 2008 SUPERSEDES STANDARD PLAN T2
DATED MAY 1, 2006 - PAGE 213 OF THE STANDARD PLANS BOOK DATED MAY 2006.

REVISED STANDARD PLAN RSP T2

2006 REVISED STANDARD PLAN RSP T2

5-15-08

DIST	COUNTY	ROUTE	POST MILES TOTAL PROJECT	SHEET NO.	TOTAL SHEETS
05	SCr	9	20.4	20	32

REGISTERED ELECTRICAL ENGINEER

October 5, 2007
PLANS APPROVAL DATE

REGISTERED PROFESSIONAL ENGINEER Jeffery G. McRae No. E14512 Exp. 6-30-08 ELECTRICAL STATE OF CALIFORNIA

The State of California or its officers or agents shall not be responsible for the accuracy or completeness of electronic copies of this plan sheet.

To accompany plans dated 5-4-09

ELECTROLIERS

STANDARD TYPES
15, 15D
15 STRUCTURE
21, 21D STRUCTURE
30
31
32
35
36-20A

High mast light pole

Double Arm lighting standard

Existing electrolier

Electrolier foundation (Future installation)

NOTES:

1. Luminaires shall be 310 W HPS when installed on Type 21, 21D, 30, 31, 32, 35 and 36-20A Standards, unless otherwise specified. Luminaires shall be 200 W HPS when installed on other type standards or poles, unless otherwise specified.
2. Luminaires shall be the cutoff type, ANSI Type III medium cutoff lighting distribution, unless otherwise specified.
3. Variations noted adjacent to symbol on project plans.

Electrolier (see project notes or project plans)

Luminaire on wood pole

STANDARD NOTES:

- AB — Abandon. If applied to conduit, remove conductors.
- BC — Install pull box in existing conduit run.
- BP — Pedestrian barricade, type as indicated on plan.
- CB — Install conduit into existing pull box.
- CC — Connect new and existing conduit. Remove existing conductors and install conductors as indicated.
- CF — Conduit to remain for future use. Remove conductors. Install pull wire or rope.
- DH — Detector handhole.
- FA — Foundation to be abandoned.
- IS — Install sign on signal mast arm.
- NS — No slip base on standard.
- PEC — Photoelectric control.
- PEU — Photoelectric unit.
- RC — Equipment or material to be removed and become the property of the Contractor.
- RE — Remove electrolier, fuses and ballast. Tape ends of conductors.
- RL — Relocate equipment.
- RR — Remove and reuse equipment.
- RS — Remove and salvage equipment.
- SC — Splice new to existing conductors.
- SD — Service disconnect.
- SF — Standard to remain for future use. Remove luminaire, pole conductors, fuses and ballast.
- TSP — Telephone service point.

ABBREVIATIONS AND EQUIPMENT DESIGNATIONS

PROPOSED	EXISTING	
BBS	bbs	Battery backup system
BC	bc	Bolt circle
C	C	Conduit
CCTV	cctv	Closed circuit television
CKT	ckt	Circuit
CMS	cms	Changeable message sign
DLC	dlc	Loop detector lead-in cable
EMS	ems	Extinguishable message sign
EVC	evc	Emergency vehicle cable
EVD	evd	Emergency vehicle detector
FB	fb	Flashing beacon
FBCA	fbca	Flashing beacon control assembly
FBS	fbs	Flashing beacon with slip base
FO	fo	Fiber optic
G	G	Ground (Equipment Grounding Conductor)
GFCI	GFCI	Ground fault circuit interrupt
HAR	har	Highway advisory radio
HEX	hex	Hexagonal
HPS	hps	High pressure sodium
IISNS	iisns	Internally illuminated street name sign
ISL	isl	Induction sign lighting
LED	led	Light emitting diode
LMA	lma	Luminaire mast arm
LPS	lps	Low pressure sodium
LTG	ltg	Lighting
LUM	lum	Luminaire
MAT	mat	Mast arm mounting vehicle signal faces, top attachment
MAS	mas	Mast arm mounting vehicle signal faces, side attachment
MAS-4A	mas-4A	Mast arm mounting vehicle signal faces, side attachment - 4 signal section
MAS-4B	mas-4B	
MAS-4C	mas-4C	
MAS-5A	mas-5A	Mast arm mounting vehicle signal faces, side attachment - 5 signal section
MAS-5B	mas-5B	
MC	mc	Mercury contactor
M/M	m/m	Multiple to multiple transformer
MT	mt	Conduit with pull wire or rope only
MTG	mtg	Mounting
	mv	Mercury vapor lighting fixture
N	N	Neutral (Grounded Conductor)
NC	NC	Normally closed
NO	NO	Normally open
PB	pb	Pull box
PEC	pec	Photoelectric control (Type I, II, III, IV or V as shown)
PED	ped	Pedestrian
PEU	peu	Photoelectric unit
PPB	ppb	Pedestrian push button
RL		Relocated equipment
RM	rm	Ramp metering
SB	sb	Slip base
SIC	sic	Signal interconnect cable
SIG	sig	Signal
SMA	sma	Signal mast arm
SNS	sns	Street name sign
SP	sp	Service point
TDC	tdc	Telephone demarcation cabinet
TMS	tms	Traffic monitoring station
TOS	tos	Traffic Operations System
VEH	veh	Vehicle
XFMR	xfmr	Transformer
COMM	comm	Communication
RWIS	rwis	Roadway weather information system

SOFFIT AND WALL MOUNTED LUMINAIRES

Pendant, 70 W HPS unless otherwise specified.

Flush, 70 W HPS unless otherwise specified.

Wall surface, 70 W HPS unless otherwise specified.

Existing soffit or wall luminaire to remain unmodified.

Existing soffit or wall luminaire to be modified as specified.

NOTE:

Arrow indicates "street side" of luminaire.

STATE OF CALIFORNIA
DEPARTMENT OF TRANSPORTATION

ELECTRICAL SYSTEMS (SYMBOLS AND ABBREVIATIONS)

NO SCALE

RSP ES-1A DATED OCTOBER 5, 2007 SUPERSEDES STANDARD PLAN ES-1A DATED MAY 1, 2006 - PAGE 400 OF THE STANDARD PLANS BOOK DATED MAY 2006.

REVISED STANDARD PLAN RSP ES-1A

2006 REVISED STANDARD PLAN RSP ES-1A

DIST	COUNTY	ROUTE	POST MILES TOTAL PROJECT	SHEET NO.	TOTAL SHEETS
05	SCr	9	20.4	21	32

REGISTERED ELECTRICAL ENGINEER

October 5, 2007
PLANS APPROVAL DATE

REGISTERED PROFESSIONAL ENGINEER Jeffery G. McRae No. E14512 Exp. 6-30-08 ELECTRICAL STATE OF CALIFORNIA

The State of California or its officers or agents shall not be responsible for the accuracy or completeness of electronic copies of this plan sheet.

To accompany plans dated 5-4-09

CONDUIT

PROPOSED	EXISTING	
		Lighting Conduit, unless otherwise indicated or noted
		Traffic signal conduit
C	c	Communication conduit
T	t	Telephone conduit
F	f	Fire alarm conduit
FO	fo	Fiber optic conduit
		Conduit termination (RSP ES-9A C)
R	r	Conduit riser in/on structure or service pole

SERVICE EQUIPMENT

PROPOSED	EXISTING	
OH	oh	Overhead lines
U	U	Wood pole "U" indicates utility owned
		Pole guy with anchor
		Utility transformer - ground mounted
III		Service equipment enclosure type
		Service equipment enclosure door indicates front of enclosure
T	t	Telephone demarcation cabinet

POLE-MOUNTED SERVICE DESIGNATION

Type of installation

TYPE H SERVICE - 28'-10" ← Pole height above grade

ILLUMINATED OVERHEAD SIGN

PROPOSED	EXISTING	
		Overhead sign - Single post
		Overhead sign - Two post
		Overhead sign - Mounted on structure
		Overhead sign with electrolier

SIGNAL EQUIPMENT

PROPOSED	EXISTING	
		Pedestrian signal face
		Pedestrian push button post
		Pedestrian barricade
		Vehicle signal face (with backplate, 3-Section: red, yellow and green)
		Vehicle signal face with angle visors
PV	PV	Modifications of basic symbols: "L" indicates all non-arrow sections louvered "LG" indicates louvered green section only "PV" indicates 12" programmed visibility sections "8" indicates all 8" sections (only when specified)
		Type 15TS and Vehicle signal face
		Vehicle signal face with red, yellow and green left arrow sections
		Vehicle signal face with red and yellow sections and up green arrow
		Vehicle signal face (5 Section) with red, yellow and green sections and yellow and green right arrows
		Type 1 Standard and attached vehicle signal faces
		Standard with signal mast arm only and attached vehicle signal faces and internally illuminated street name sign
		Type 33 Standard, Left-turn vehicle signal face and sign
		Standard with luminaire and signal mast arms and attached vehicle signal faces
		Cantilever flashing beacon Type 9 Frame, with a sign unless otherwise specified or indicated
		Type 15-FBS Standard with two vehicle signal face sections with lens, backplate and visor with a sign
R	Y	Flashing beacon. One vehicle signal face section with lens, backplate and visor. "R" indicates red indication, "Y" indicates yellow indication
		Controller assembly. Door indicates front of cabinet

SIGNAL EQUIPMENT Cont

PROPOSED	EXISTING	
		Guard post
		Type 1 Standard with "Meter On" sign
		Emergency Vehicle detector

NOTES:

1. All signal sections shall be 12" unless shown otherwise.
2. Signal heads shall be provided with backplates unless shown otherwise.
3. Signal indication shall be LED.

STATE OF CALIFORNIA
DEPARTMENT OF TRANSPORTATION

ELECTRICAL SYSTEMS (SYMBOLS AND ABBREVIATIONS)

NO SCALE

RSP ES-1B DATED OCTOBER 5, 2007 SUPERCEDES STANDARD PLAN ES-1B DATED MAY 1, 2006 - PAGE 401 OF THE STANDARD PLANS BOOK DATED MAY 2006.

REVISED STANDARD PLAN RSP ES-1B

2006 REVISED STANDARD PLAN RSP ES-1B

7-10-07

DIST	COUNTY	ROUTE	POST MILES TOTAL PROJECT	SHEET NO.	TOTAL SHEETS
05	SCr	9	20.4	22	32

REGISTERED ELECTRICAL ENGINEER

October 5, 2007
PLANS APPROVAL DATE

REGISTERED PROFESSIONAL ENGINEER Jeffery G. McRae No. E14512 Exp. 6-30-08 ELECTRICAL STATE OF CALIFORNIA

The State of California or its officers or agents shall not be responsible for the accuracy or completeness of electronic copies of this plan sheet.

To accompany plans dated 5-4-09

EQUIPMENT IDENTIFICATION

ILLUMINATED SIGN IDENTIFICATION NUMBER:

Sign No. 12345

10 ISL SCI 1.0

- Sign number - Place on post or structure
- Transformer rating (kVA)
- Lighting control type
- Number and type of fixtures

Do NOT place on standard or structure

ELECTROLIER OR EQUIPMENT IDENTIFICATION NUMBER:

12345 - 15'-0"

- Mast arm length, if shown. Do not place on standard or structure.
- Equipment number - Place on standard or structure. Existing equipment numbers are shown in parenthesis

CONDUIT AND CONDUCTOR IDENTIFICATION:

1½"C, 2#10, 15#14, 2 DLC

- Number and size of conductors and cables
- Size of conduit in inches

Ø1, Ø2, Ø2P, etc.	Traffic phase identification for signal faces, detectors and phase diagrams
1 2 3	Project note numbers
A B C	Equipment description, installation or item numbers
1 2 3	Conduit run numbers

SIGNAL AND LIGHTING STANDARD (TYPICAL DESIGNATION):

19A - 3 - 100

- Wind velocity = 100 mph
- Case 3 arm loading
- Standard type
- Standard Plan sheet number
- Detail number or letter

MISCELLANEOUS EQUIPMENT

PROPOSED	EXISTING	
CMS	cms	Changeable message sign
		Closed circuit television camera
		Highway advisory radio pole and antenna
EMS	ems	Extinguishable message sign
M V	m v	Detection device M = Microwave sensor V = Video image sensor

WIRING DIAGRAM LEGEND

P	Pole
CB	Circuit breaker
A	Ampere
V	Volt
M	Metered
UM	Unmetered
NB	Neutral bus
GB	Ground bus
G	Equipment grounding conductor
N	Grounded conductor (Neutral)

- External conductor
- Conductor or bus
- Tie point
- Contactor coil
- Contactor, Contact NO
- Terminal blocks
- Contactor, Contact NC
- Enclosure bond
- Grounding electrode
- Circuit breaker
- Receptacle

PULL BOXES

PROPOSED	EXISTING	
		Pull box-No. 5 unless otherwise indicated or noted.
3	9A(21)	Pull box-Additional designations or descriptions

3 = No. 3½ pull box
5 = No. 5 pull box
6 = No. 6 pull box
7 = No. 7 (Ceiling pull box)
8 = No. 8 (Pendant soffit pull box)
9 = No. 9 pull box
9A = No. 9A pull box

(C) = Communications pull box
(E) = Pull box with extension
(S) = Sprinkler control pull box
(21) = Anchor bolts and conduit for future installation of Type 21 Standard
(T) = Traffic pull box

VEHICLE DETECTORS

5 J 9 U

- Vehicle detector designation
- U = Upper
- L = Lower
- Slot number in input file
- Input file (I or J)
- Phase

PROPOSED	EXISTING	
		Type A detector loop. Outline of sawcut shown.
		Type B detector loop. Outline of sawcut shown.
		Type C detector loop. Outline of sawcut shown.
		Type D detector loop. Outline of sawcut shown.
		Type E detector loop. Outline of sawcut shown.
		Type Q detector loop. Outline of sawcut shown.
		Magnetic detector
DH	dh	Detector handhole
		Microwave or video detection zone

STATE OF CALIFORNIA
DEPARTMENT OF TRANSPORTATION

ELECTRICAL SYSTEMS (SYMBOLS AND ABBREVIATIONS)

NO SCALE

RSP ES-1C DATED OCTOBER 5, 2007 SUPERCEDES STANDARD PLAN ES-1C DATED MAY 1, 2006 - PAGE 402 OF THE STANDARD PLANS BOOK DATED MAY 2006.

REVISED STANDARD PLAN RSP ES-1C

2006 REVISED STANDARD PLAN RSP ES-1C

DIST	COUNTY	ROUTE	POST MILES TOTAL PROJECT	SHEET NO.	TOTAL SHEETS
05	SCr	9	20.4	23	32

REGISTERED ELECTRICAL ENGINEER

June 6, 2008
PLANS APPROVAL DATE

REGISTERED PROFESSIONAL ENGINEER Jeffery G. McRae No. E14512 Exp. 6-30-10 ELECTRICAL STATE OF CALIFORNIA

The State of California or its officers or agents shall not be responsible for the accuracy or completeness of electronic copies of this plan sheet.

To accompany plans dated 5-4-09

VISORS

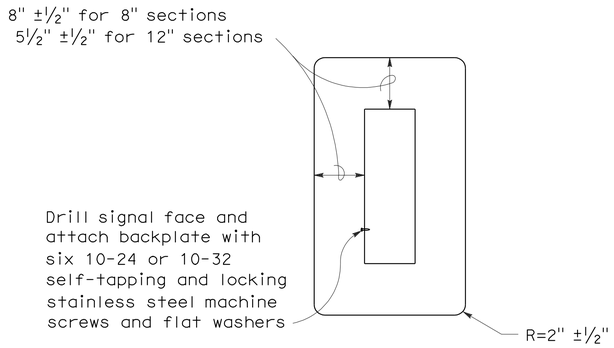

8" AND 12" SECTIONS

BACKPLATE

1/16" minimum thickness
3001-14 aluminum, or plastic when specified

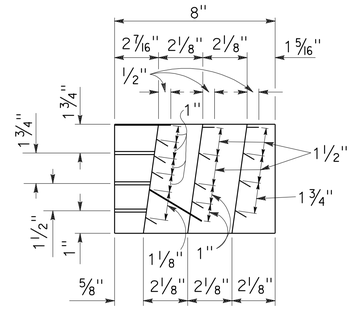

SECTION A-A

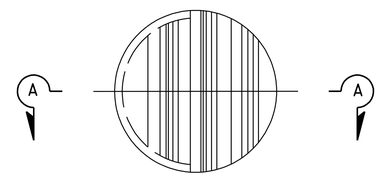

FRONT VIEW

DIRECTIONAL LOUVER

Directional louvers shall be oriented as directed by the Engineer and secured in place with one plated brass machine screw and nut.

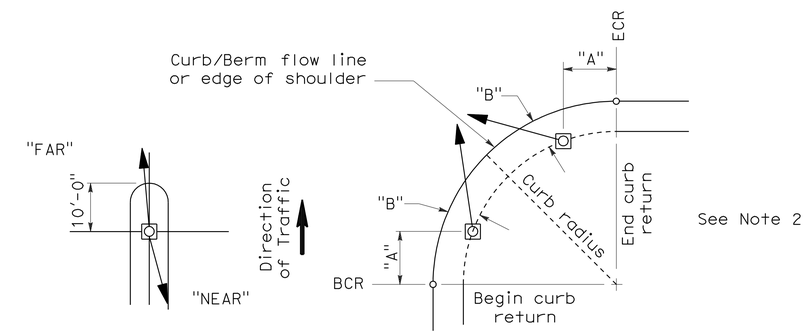

NOTES:

1. Typical signal pole placement unless dimensioned on plans.
2. For "A" and "B" dimensions, see Pole Schedule, or as directed by the Engineer.

SIGNAL STANDARD PLACEMENT DIMENSIONS AND EQUIPMENT LOCATIONS

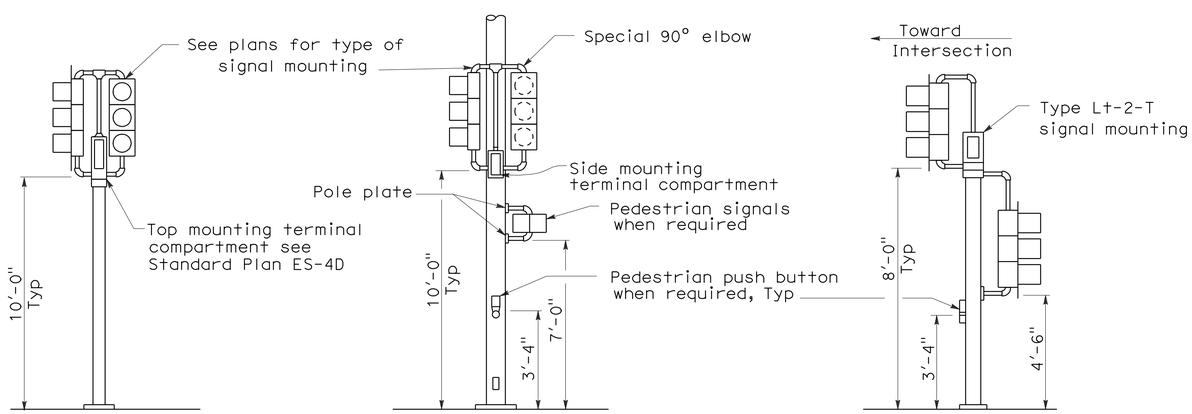

TOP MOUNTED SIGNALS (TV)

Type 1-A, 1-B, 1-C and 1-D standard as indicated on the plans

SIDE MOUNTED SIGNALS (SV AND SP)

Normally used on standards with luminaire or signal mast arm

LEFT TURN LANE SIGNAL

Type 1-A, 1-B, 1-C and 1-D standard as indicated on plans

TYPICAL SIGNAL INSTALLATIONS

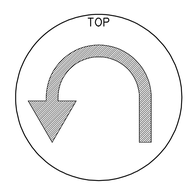

U-TURN SIGNAL FACE

BICYCLE SIGNAL FACE

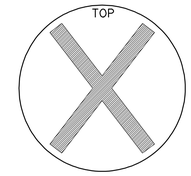

LANE CONTROL SIGNAL FACE

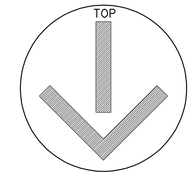

LANE CONTROL SIGNAL FACE

STATE OF CALIFORNIA
DEPARTMENT OF TRANSPORTATION

ELECTRICAL SYSTEMS (SIGNAL HEADS AND MOUNTINGS)

NO SCALE

RSP ES-4C DATED JUNE 6, 2008 SUPERSEDES STANDARD PLAN ES-4C DATED MAY 1, 2006 - PAGE 420 OF THE STANDARD PLANS BOOK DATED MAY 2006.

REVISED STANDARD PLAN RSP ES-4C

2006 REVISED STANDARD PLAN RSP ES-4C

5-19-08

DIST	COUNTY	ROUTE	POST MILES TOTAL PROJECT	SHEET NO.	TOTAL SHEETS
05	SCr	9	20.4	24	32

REGISTERED ELECTRICAL ENGINEER

October 5, 2007
PLANS APPROVAL DATE

REGISTERED PROFESSIONAL ENGINEER Jeffery G. McRae No. E14512 Exp. 6-30-08 ELECTRICAL STATE OF CALIFORNIA

The State of California or its officers or agents shall not be responsible for the accuracy or completeness of electronic copies of this plan sheet.

To accompany plans dated 5-4-09

LOOP INSTALLATION PROCEDURE

1. Loops shall be centered in lanes.
2. Saw slots in pavement for loop conductors as shown in details.
3. Distance between side of loop and a lead-in saw cut from adjacent detectors shall be 2'-0" minimum. Distance between lead-in saw cuts shall be 6" minimum.
4. Bottom of saw slot shall be smooth with no sharp edges.
5. Slots shall be washed until clean, blown out and thoroughly dried before installing loop conductors.
6. Adjacent loops on the same sensor unit channel shall be wound in opposite directions.
7. Identify and tag loop circuit pairs in the pull box with loop number, start (S) and finish (F) of conductor. Identify and tag lead-in-cable with sensor number and phase.
8. Install loop conductor in slot using a 3/16" to 1/4" thick wood paddle. Hold loop conductors with wood paddles (at the bottom of the sawed slot) during sealant placement.
9. No more than 2 twisted pairs shall be installed in one sawed slot.
10. Allow additional 5'-0" of slack length of conductor for the lead-in run to pull box.
11. The additional length of each conductor for each loop shall be twisted together into a pair (6 turns per 3'-4" minimum) before being placed in the slot and conduit leading to pull box.
12. Test each loop circuit for continuity, circuit resistance and insulation resistance at the pull box before filling slots.
13. Fill slots as shown in details.
14. Splice loop conductors to lead-in-cable. Splices shall be soldered.
15. End of lead-in-cable and Type 2 loop conductor shall be waterproofed prior to installing in conduit to prevent moisture from entering the cable.
16. Lead-in-cable shall not be spliced between the pull box and the controller cabinet terminals.
17. Test each loop circuit for continuity, circuit resistance and insulation resistance at the controller cabinet location.
18. Where loop conductors are not to be spliced to a lead-in-cable, the ends of the conductors shall be taped and waterproofed with electrical insulating coating.

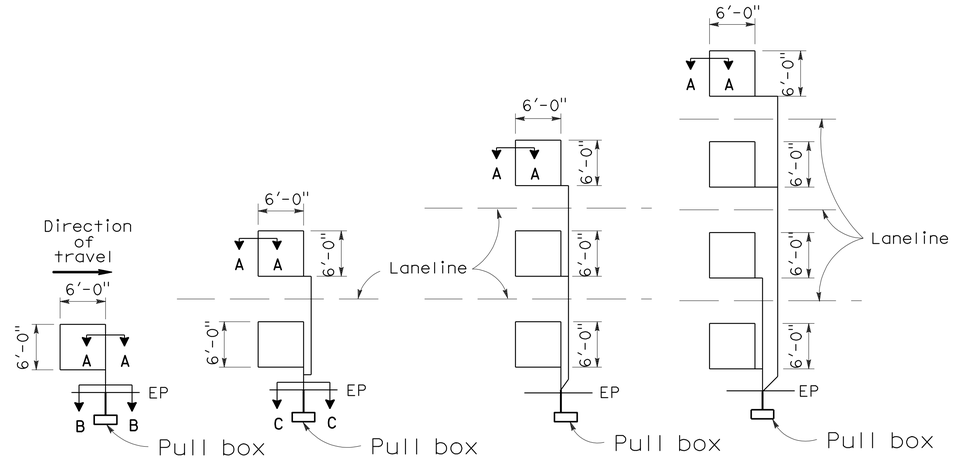

TYPE 1A INSTALLATION | TYPE 2A INSTALLATION | TYPE 3A INSTALLATION | TYPE 4A INSTALLATION

SAWCUT DETAILS

(Type A loop detector configurations illustrated)

1. 1A thru 4A = 1 Type A loop configuration in each lane.
2. 1B thru 4B = 1 Type B loop configuration in each lane.
3. 1C = 1 Type C loop configuration entering lanes as required.
4. 1D thru 4D = 1 Type D loop configuration in each lane.
5. 1E thru 4E = 1 Type E loop configuration in each lane.
6. 1Q thru 4Q = 1 Type Q loop configuration in each lane. (Use Type A, B, C, D, E or Q loop detector configurations only when specified or shown on plans)

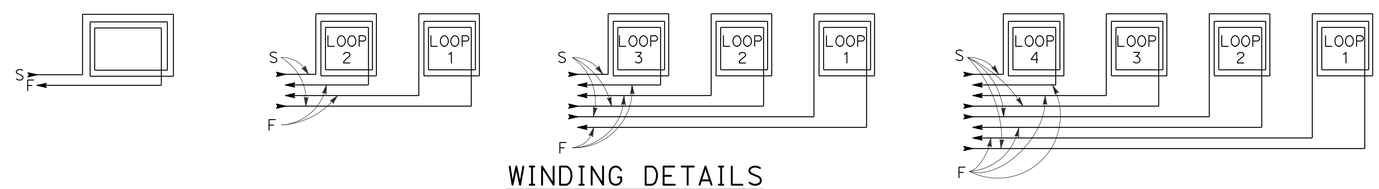

WINDING DETAILS

See Notes 6 and 7

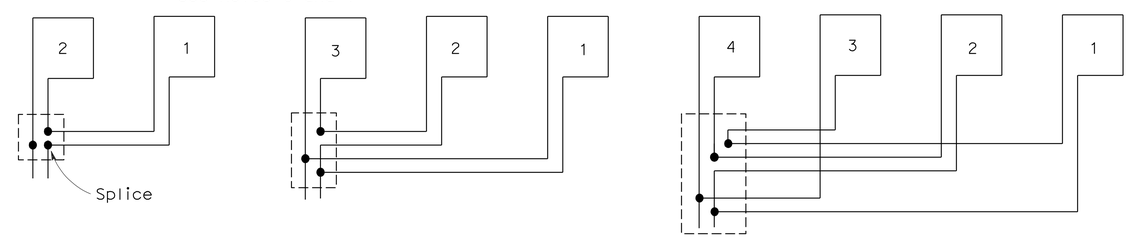

TYPICAL LOOP CONNECTIONS

(Dashed lines represent the pull box)

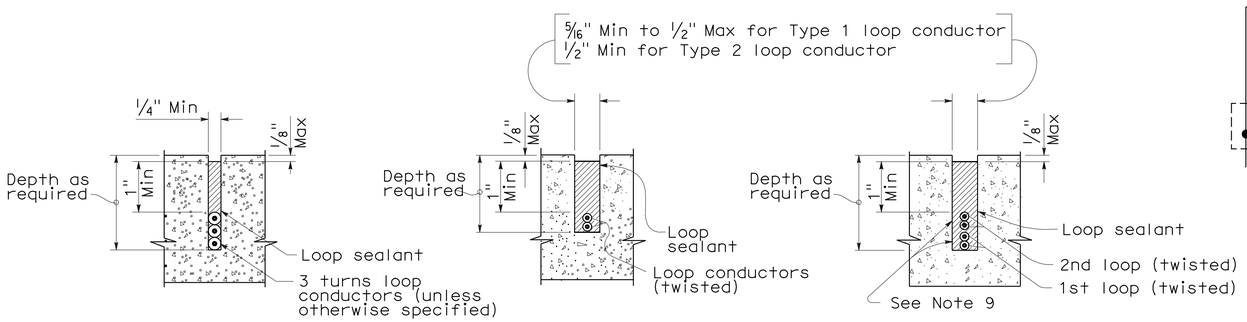

SECTION A-A | SECTION B-B | SECTION C-C

SLOT DETAILS - TYPE 1 AND TYPE 2 LOOP CONDUCTOR

STATE OF CALIFORNIA
DEPARTMENT OF TRANSPORTATION

ELECTRICAL SYSTEMS (DETECTORS)

NO SCALE

RSP ES-5A DATED OCTOBER 5, 2007 SUPERCEDES STANDARD PLAN ES-5A DATED MAY 1, 2006 - PAGE 423 OF THE STANDARD PLANS BOOK DATED MAY 2006.

REVISED STANDARD PLAN RSP ES-5A

2006 REVISED STANDARD PLAN RSP ES-5A

8-17-07

DIST	COUNTY	ROUTE	POST MILES TOTAL PROJECT	SHEET No	TOTAL SHEETS
05	SCr	9	20.4	25	32

REGISTERED CIVIL ENGINEER 10-01-08 DATE

5-4-09
PLANS APPROVAL DATE

REGISTERED PROFESSIONAL ENGINEER MARC FRIEDHEIM No. 57968 Exp. 06-30-10 CIVIL STATE OF CALIFORNIA

The State of California or its officers or agents shall not be responsible for the accuracy or completeness of electronic copies of this plan sheet.

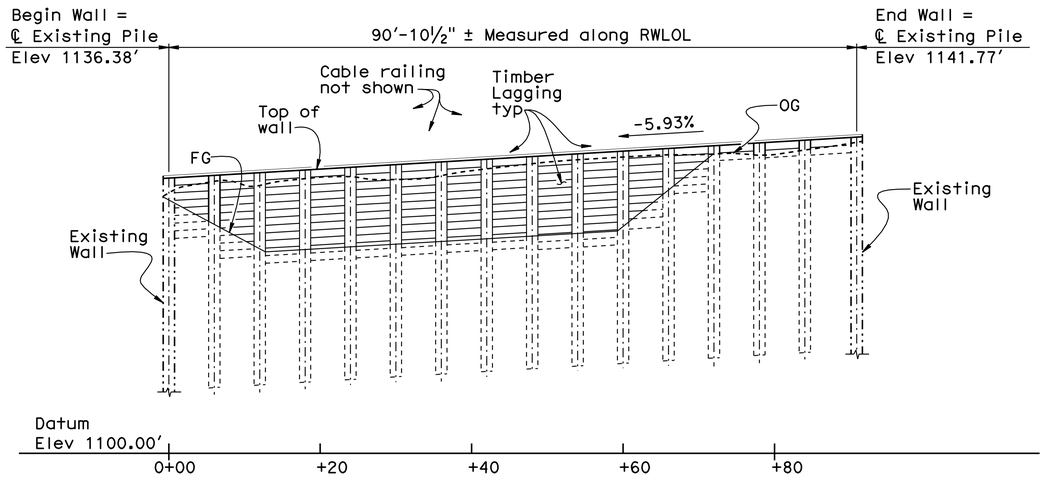

DEVELOPED ELEVATION

1" = 10'

INDEX TO PLANS

Sheet No.	Title
1.	GENERAL PLAN
2.	STRUCTURE PLAN
3.	FOUNDATION PLAN
4.	DETAILS NO. 1
5.	DETAILS NO. 2
6.	EXCAVATION AND BACKFILL
7.	LOG OF TEST BORINGS 1 OF 2
8.	LOG OF TEST BORINGS 2 OF 2

STANDARD PLANS DATED MAY 2006

B11-47 CABLE RAILING

STANDARD PLAN SHEET NO.

DETAIL NO.

B11-47

LEGEND:

① Paint "Br. No. 36E0019" on first pile

② MBGR see Road Plans

-·-·-·- Denotes existing structure

③ Limits of Cable Railing are from 17'-6¾" Lt "A" Line Sta 1+44.49 to 17'-10" Lt "A" Line Sta 4+24.36

④ Salvage chain link railing

QUANTITIES

REMOVE CHAIN LINK FENCE	113	LF
STRUCTURE EXCAVATION (RETAINING WALL)	110	CY
STRUCTURE BACKFILL (RETAINING WALL)	44	CY
18" CAST-IN-DRILLED-HOLE CONCRETE PILING	392	LF
TIMBER LAGGING	4	MFBM
CABLE RAILING	318	LF

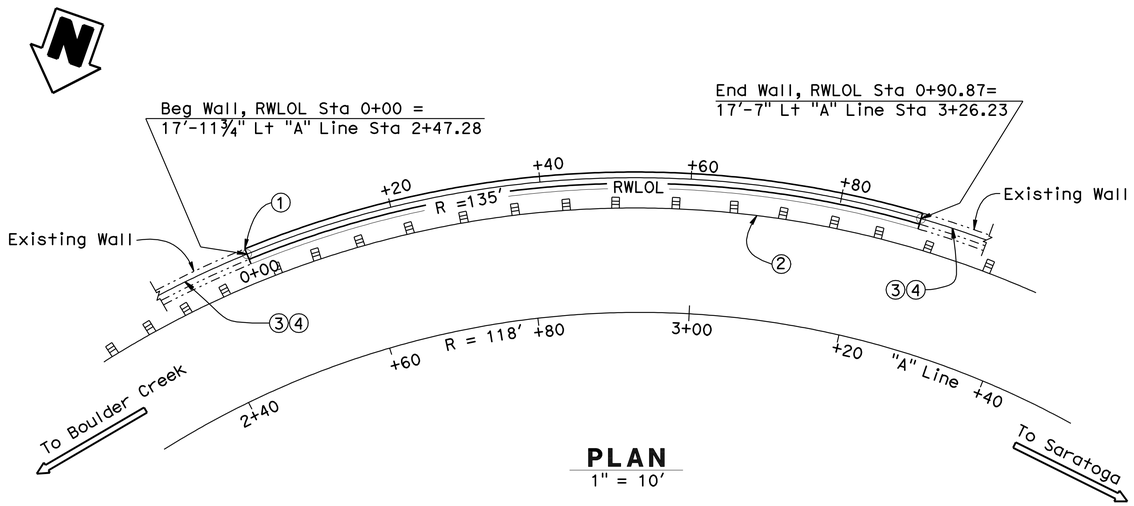

PLAN

1" = 10'

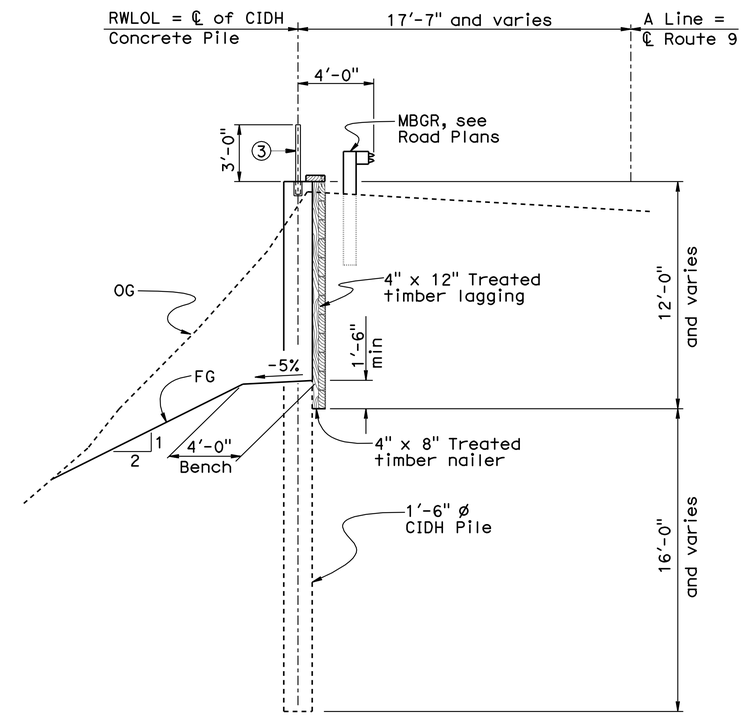

TYPICAL SECTION

¼" = 1'-0"

Note:
The contractor shall verify all controlling field dimensions before ordering or fabricating any material.

CURVE DATA

RWLOL	"A" LINE
R = 135'	R = 118'
Δ = 38°33'59"	Δ = 90°41'15"
L = 90.87'	L = 186.77'
T = 47.23'	T = 119.42'

KEVIN KEADY
DESIGN ENGINEER

	BY	CHECKED			
DESIGN	A. Tern	T. Bui	LOAD FACTOR DESIGN	LIVE LOADING: HS-20 AND ALTERNATIVE AND PERMIT DESIGN LOAD	
DETAILS	L. Wang	T. Bui	LAYOUT	M. Friedheim	T. Bui
QUANTITIES	A. Tern	T. Bui	SPECIFICATIONS	J. Corrado	PLANS AND SPECS. COMPARED M. Friedheim

ORIGINAL SCALE IN INCHES FOR REDUCED PLANS 0 1 2 3

STATE OF CALIFORNIA
DEPARTMENT OF TRANSPORTATION

DIVISION OF ENGINEERING SERVICES
STRUCTURE DESIGN
DESIGN BRANCH 17

CU 05
EA 0P8701

BRIDGE NO. 36E0019
POST MILE 20.4

SLOPE REPAIR WALL
GENERAL PLAN

DISREGARD PRINTS BEARING EARLIER REVISION DATES

REVISION DATES: 02-20-08 06-13-08 08-26-08 10-09-08 12-05-08 12-11-08 04-24-08 05-02-08 06-30-08

SHEET 1 OF 8

STRUCTURES DESIGN GENERAL PLAN SHEET (ENGLISH) (REV.07-24-06)

FILE => 36e0019-a-gp.dgn

USERNAME => trmikesi DATE PLOTTED => 27-AUG-2009 TIME PLOTTED => 09:17

DIST	COUNTY	ROUTE	POST MILES TOTAL PROJECT	SHEET No	TOTAL SHEETS
05	SCr	9	20.4	26	32

REGISTERED CIVIL ENGINEER 10-01-08 DATE

5-4-09
PLANS APPROVAL DATE

REGISTERED PROFESSIONAL ENGINEER MARC FRIEDHEIM No. 57968 Exp. 06-30-10 CIVIL STATE OF CALIFORNIA

The State of California or its officers or agents shall not be responsible for the accuracy or completeness of electronic copies of this plan sheet.

GENERAL NOTES
WORKING STRESS DESIGN

DESIGN: Bridge Design Specifications April 2000 (1996 AASHTO with interms and Revision by Caltrans)

LIVE LOADing: Includes 2-ft level surcharge

REINFORCED CONCRETE: f_y = 60,000 psi, f'_c = 4,000 psi, n = 8; f_s = 24,000 psi, f_c = 1,450 psi, n = 10

STRUCTURAL TIMBER: Treated Douglas Fir, No. 1 or better, full sawn.

SOIL PARAMETERS: ø = 37° γ = 130 pcf c = 0 pcf

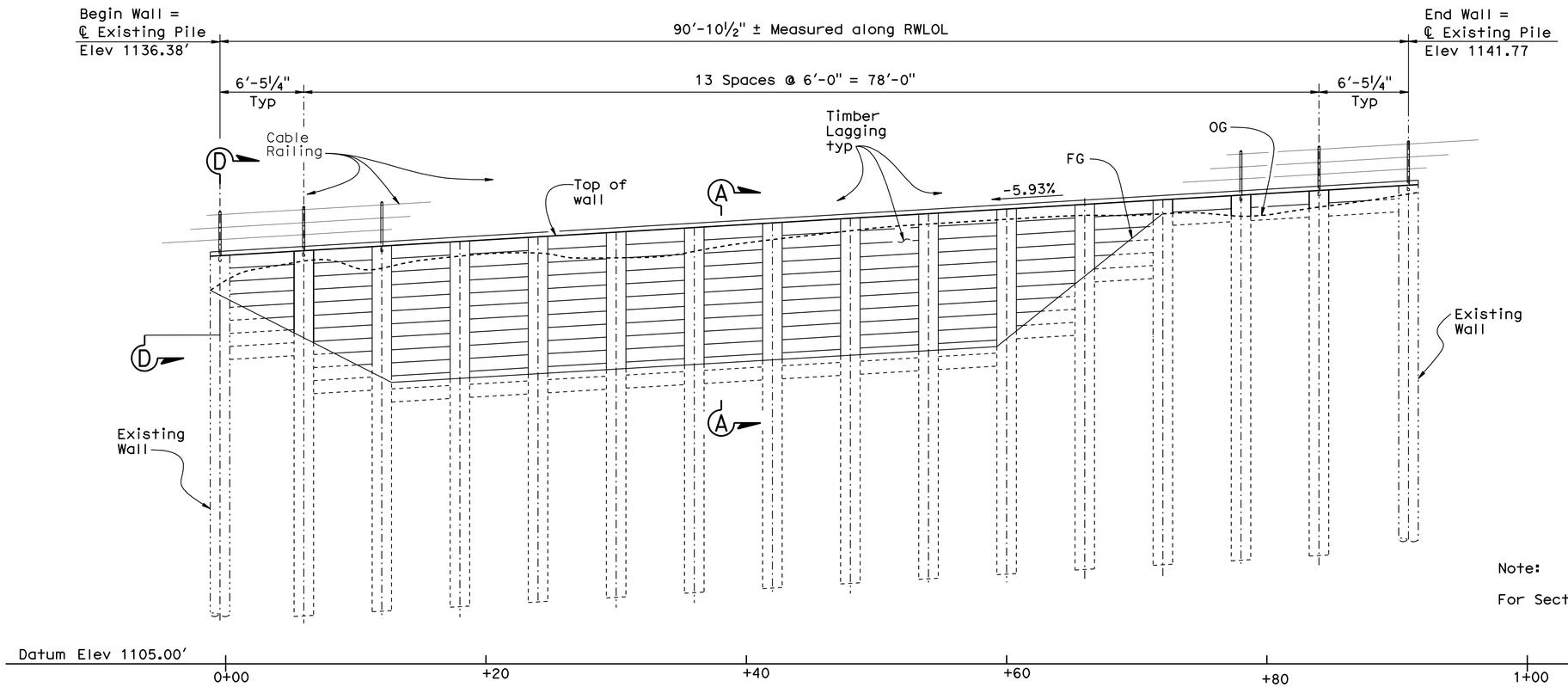

Note:

For Section A-A & Section D-D, see "DETAILS NO. 1" sheet.

DEVELOPED ELEVATION
1" = 5′

Pile #	1	2	3	4	5	6	7	8	9	10	11	12	13	14
Pile length (ft)	28	28	28	28	28	28	28	28	28	28	28	28	28	28
Number of Timber Lagging	8	11	12	12	12	12	12	12	12	12	10	6	2	2	2

	BY	CHECKED
DESIGN	A Tern	T. Bui
DETAILS	L. Wang	T. Bui
QUANTITIES	A Tern	T. Bui

STATE OF CALIFORNIA
DEPARTMENT OF TRANSPORTATION

DIVISION OF ENGINEERING SERVICES
STRUCTURE DESIGN
DESIGN BRANCH 17

BRIDGE NO. 36E0019
POST MILE 20.4

SLOPE REPAIR WALL
STRUCTURE PLAN

STRUCTURES DESIGN DETAIL SHEET (ENGLISH) (REV. 10/25/05)

ORIGINAL SCALE IN INCHES FOR REDUCED PLANS 0 1 2 3

CU 05
EA 0P8701

DISREGARD PRINTS BEARING EARLIER REVISION DATES

REVISION DATES: 03-17-08 10-09-08 12-08-08 04-23-08 04-25-08 04-28-08 05-02-08 06-16-08 08-26-08

SHEET 2 OF 8

FILE => 36e0019-c-sp.dgn

USERNAME => trmikest DATE PLOTTED => 27-AUG-2009 TIME PLOTTED => 09:17

DIST	COUNTY	ROUTE	POST MILES TOTAL PROJECT	SHEET No	TOTAL SHEETS
05	SCr	9	20.4	27	32

REGISTERED CIVIL ENGINEER 10-01-08 DATE

5-4-09
PLANS APPROVAL DATE

REGISTERED PROFESSIONAL ENGINEER MARC FRIEDHEIM No. 579688 Exp. 06-30-10 CIVIL STATE OF CALIFORNIA

The State of California or its officers or agents shall not be responsible for the accuracy or completeness of electronic copies of this plan sheet.

CURVE DATA

No.	R	Δ	T	L
Ⓐ	250.00	16°12'56"	35.62	70.75
Ⓑ	200.00	18°54'35"	33.31	66.01
Ⓒ	118.00	90°41'30"	119.43	186.78
Ⓓ	78.00	33°33'02"	23.51	45.67
Ⓔ	200.00	16°41'26"	29.34	58.26
Ⓕ	135.00	38°34'04"	47.23	90.87

① Beg Wall, RWLOL Sta 0+00, Elev 1136.38' = 17'-11¾" Lt "A" Line Sta 2+47.28

② End Wall, RWLOL Sta 0+90.87, Elev 1141.77' = 17'-7" Lt "A" Line Sta 3+26.23

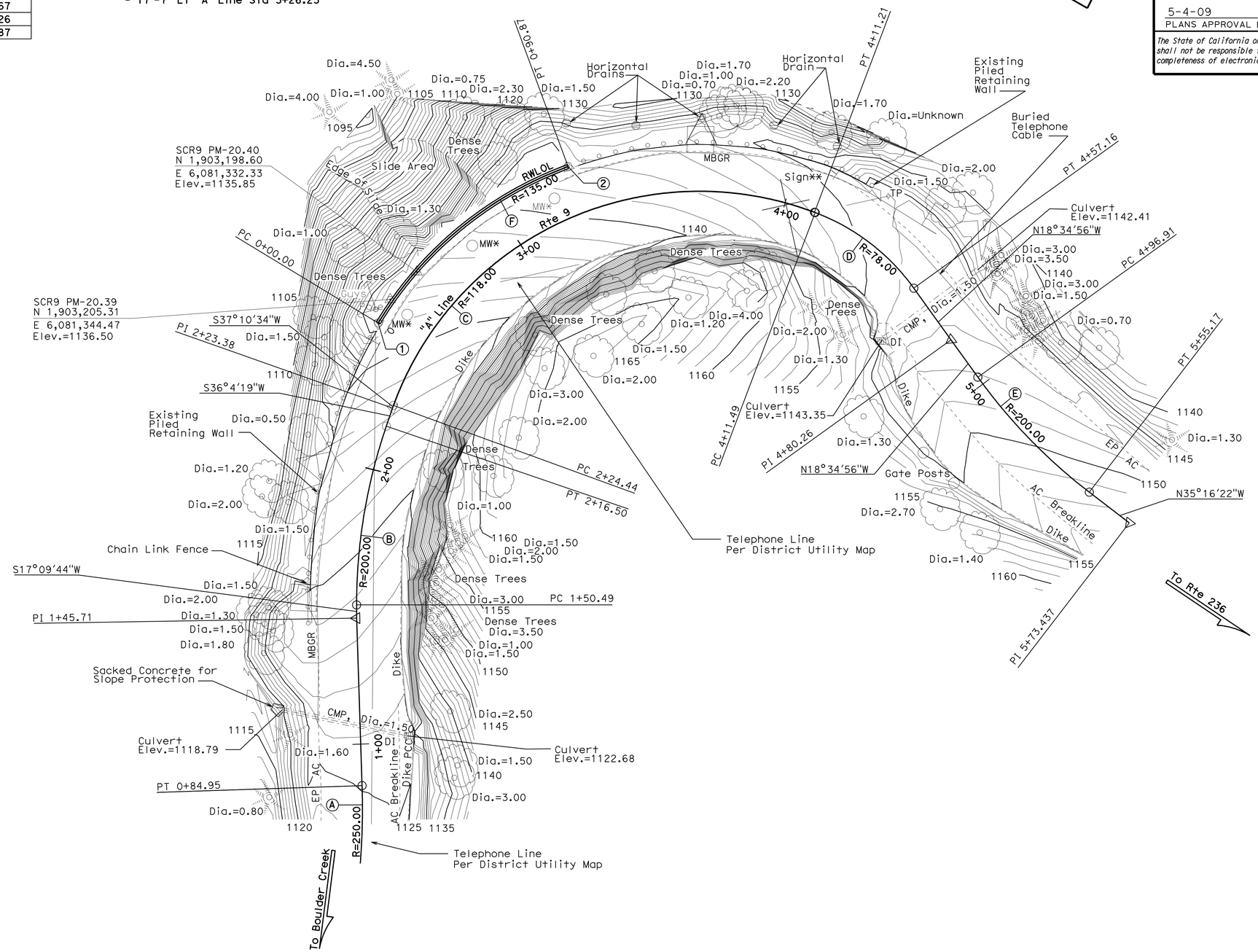

Notes: 1. MW* - Monitoring Well
2. ** - Per Field Observation

SURVEY CONTROL

SCR9 PM-20.39
Fnd 1" IP w/Caltrans PP w/Nail
19.00 Ft Lt. "A" Line Rte 9
Sta. 2+55.52
N 1,903,205.31
E 6,081,344.47
Elev.=1136.50

SCR9 PM-20.40
Fnd 1"IP w/ Yellow Cal Dot PP w/Nail
17.57 Ft Lt "A" Line Rte 9
Sta. 2+67.47
N 1,903,198.60
E 6,081,332.33
Elev.=1135.85

PRELIMINARY INVESTIGATION SECTION

SCALE	VERT.DATUM NAVD 88	PHOTOGRAMMETRY AS OF: X			
1"=20'	HORZ.DATUM NAD83 (1991.35)	SURVEYED	BY District	CHECKED	BY J.Pallares 01/2008
ALIGNMENT TIES Dist. Traverse Sheet		DRAFTED	BY T.Marchenko 01/2008	CHECKED	BY T.Zolnikova 01/2008

STRUCTURES FOUNDATION PLAN SHEET (ENGLISH) (REV. 10/25/05)

	BY	CHECKED
DESIGN	A. Tern	T. Bui
DETAILS	L. Wang	T. Bui
QUANTITIES	A. Tern	T. Bui

ORIGINAL SCALE IN INCHES FOR REDUCED PLANS 0 1 2 3

STATE OF CALIFORNIA
DEPARTMENT OF TRANSPORTATION

DIVISION OF ENGINEERING SERVICES
STRUCTURE DESIGN
DESIGN BRANCH 17

CU 05
EA 0P8701

BRIDGE NO. 36E0019
POST MILE 20.4

SLOPE REPAIR WALL
FOUNDATION PLAN

DISREGARD PRINTS BEARING EARLIER REVISION DATES

REVISION DATES: 03-17-08 04-28-08 05-02-08 06-10-08 08-28-08 10-09-08

SHEET 3 OF 8

FILE => 36e0019-e-fp.dgn

USERNAME => trmikesl DATE PLOTTED => 27-AUG-2009 TIME PLOTTED => 09:18

DIST	COUNTY	ROUTE	POST MILES TOTAL PROJECT	SHEET No	TOTAL SHEETS
05	SCr	9	20.4	28	32

REGISTERED CIVIL ENGINEER 10-01-08 DATE

5-4-09
PLANS APPROVAL DATE

REGISTERED PROFESSIONAL ENGINEER MARC FRIEDHEIM No. 57968 Exp. 06-30-10 CIVIL STATE OF CALIFORNIA

The State of California or its officers or agents shall not be responsible for the accuracy or completeness of electronic copies of this plan sheet.

Notes:

1. Splices in fabric to have a 1'-0" lap.
2. For "VIEW C-C" see "DETAILS NO. 2" sheet.
3. All bolts, nuts, washers and screws to be galvanized or stainless steel.
4. Locate cast-in-place inserts at center of nailers and 10" from each end or joint and 2' max Ctrs.
5. Top of pile, portion of which is above ground, shall be cast inside of a form.
6. For location of SECTION D-D, see "Structure Plan" sheet.

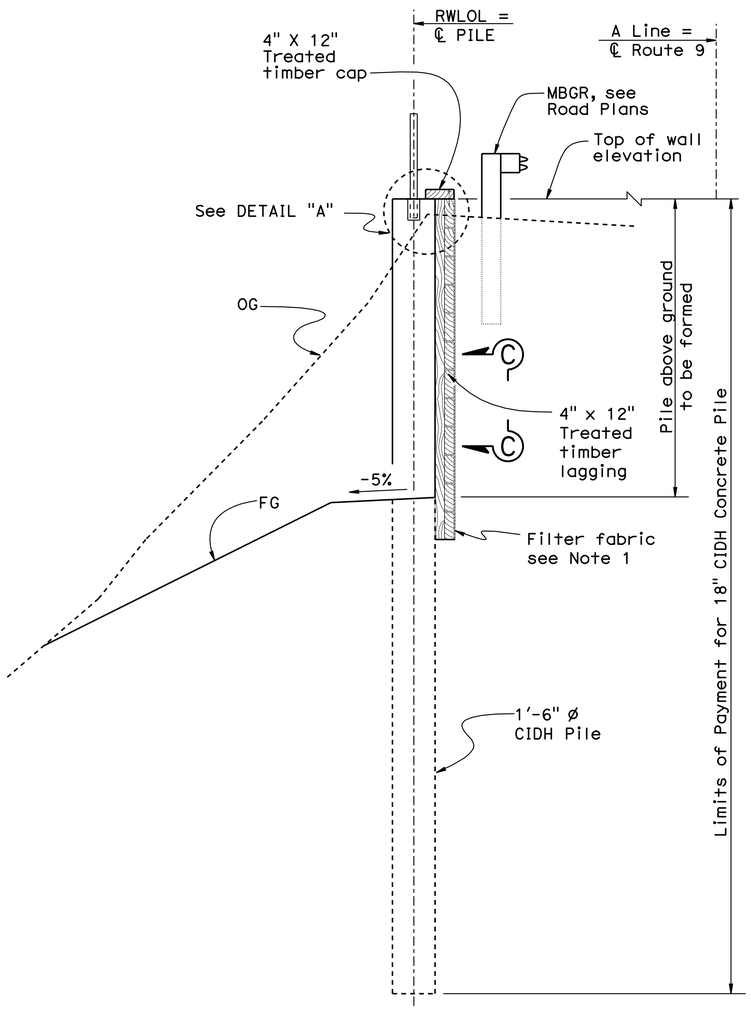

SECTION A-A
3/8" = 1'-0"

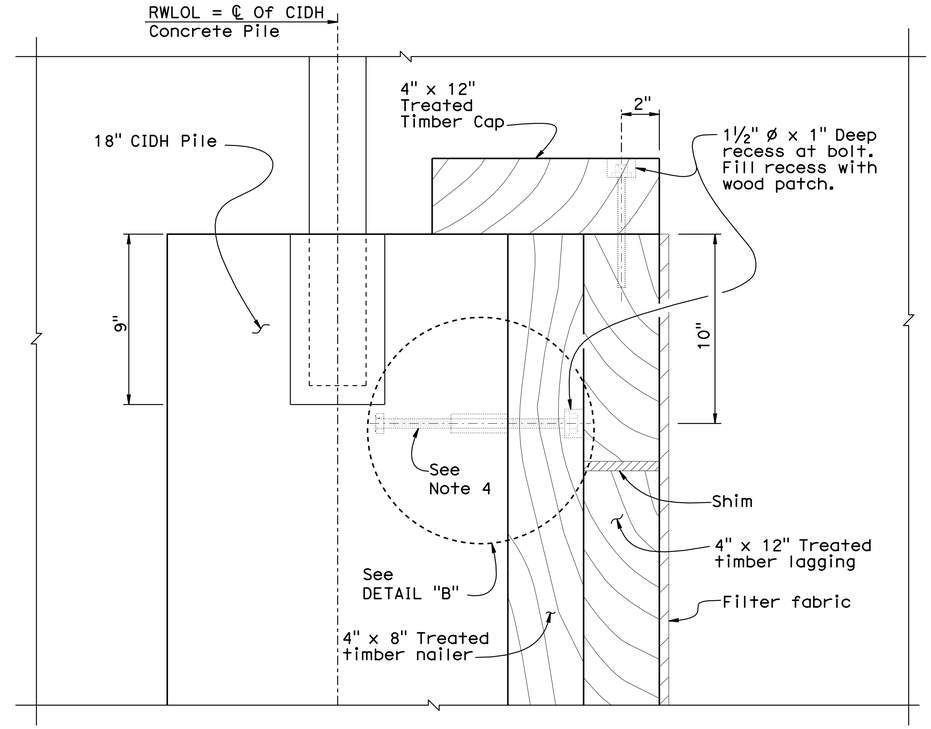

DETAIL "A"
3" = 1'-0"

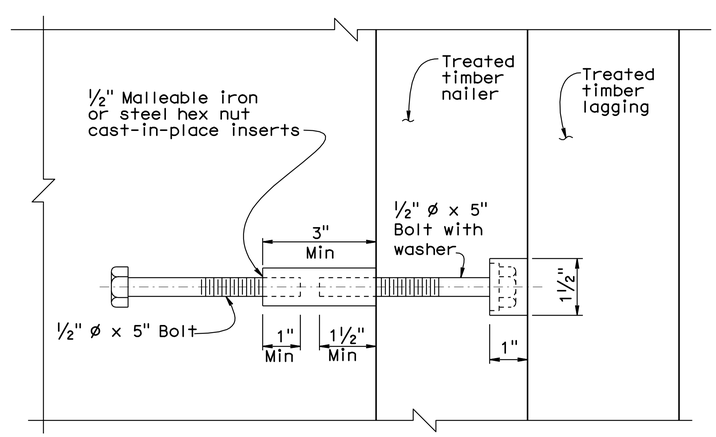

DETAIL "B"
6" = 1'-0"

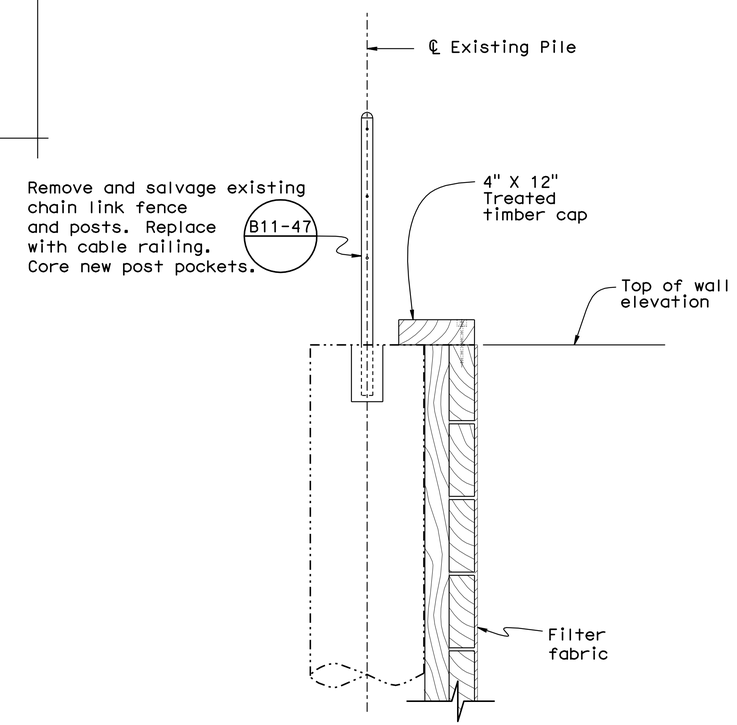

Note: Existing chain link fence is from 17'-6¾" Lt "A" Line Sta 1+44.49 to 18' Lt "A" Line Sta 2+44.28

SECTION D-D
1" = 1'-0"

	BY	CHECKED
DESIGN	A. Tern	T. Bui
DETAILS	L. Wang	T. Bui
QUANTITIES	A. Tern	T. Bui

STATE OF CALIFORNIA DEPARTMENT OF TRANSPORTATION

DIVISION OF ENGINEERING SERVICES STRUCTURE DESIGN
DESIGN BRANCH 17

BRIDGE NO. 36E0019
POST MILE 20.4

SLOPE REPAIR WALL
DETAILS NO. 1

STRUCTURES DESIGN DETAIL SHEET (ENGLISH) (REV. 10/25/05)

ORIGINAL SCALE IN INCHES FOR REDUCED PLANS 0 1 2 3

CU 05
EA 0P8701

DISREGARD PRINTS BEARING EARLIER REVISION DATES

REVISION DATES: 04-05-08, 08-26-08, 10-09-08, 10-14-08, 12-05-08, 12-11-08, 06-11-08, 06-17-08, 06-23-08

SHEET 4 OF 8

FILE => 36e0019-g-dt01.dgn

USERNAME => trmikesi DATE PLOTTED => 27-AUG-2009 TIME PLOTTED => 09:18

DIST	COUNTY	ROUTE	POST MILES TOTAL PROJECT	SHEET No	TOTAL SHEETS
05	SCr	9	20.4	29	32

REGISTERED CIVIL ENGINEER 10-01-08 DATE

5-4-09
PLANS APPROVAL DATE

REGISTERED PROFESSIONAL ENGINEER MARC FRIEDHEIM No. 579688 Exp. 06-30-10 CIVIL STATE OF CALIFORNIA

The State of California or its officers or agents shall not be responsible for the accuracy or completeness of electronic copies of this plan sheet.

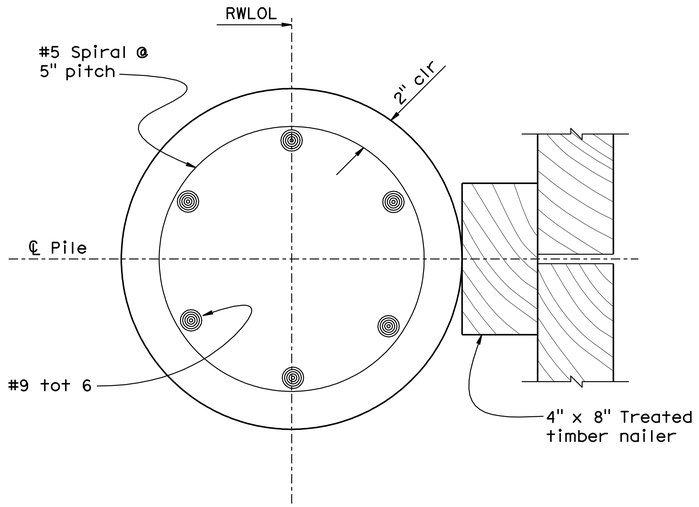

PILE SECTION WITH LAGGING
3" = 1′

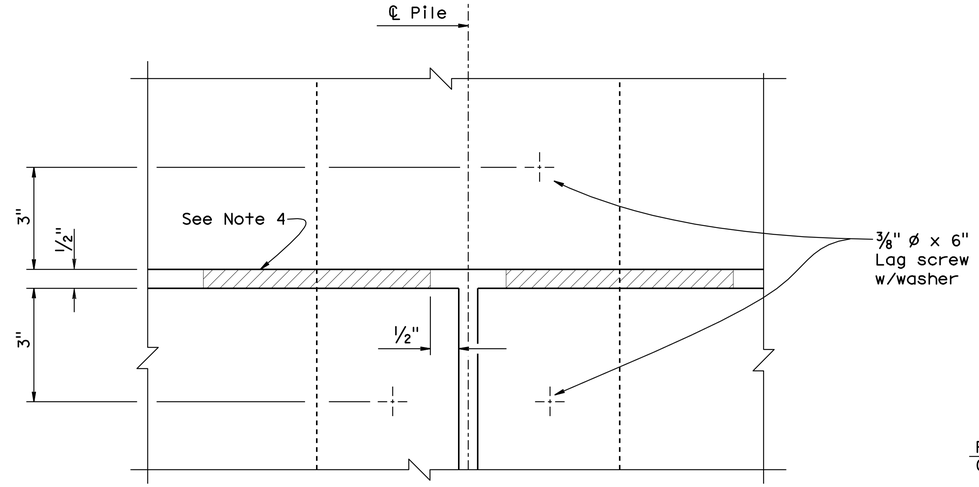

DETAIL "C"
6" = 1′

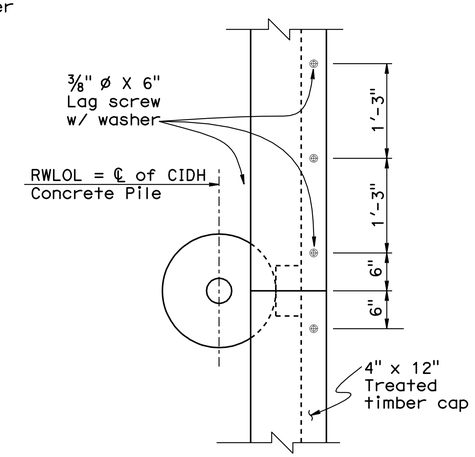

PART PLAN AT TOP OF WALL
1" = 1′

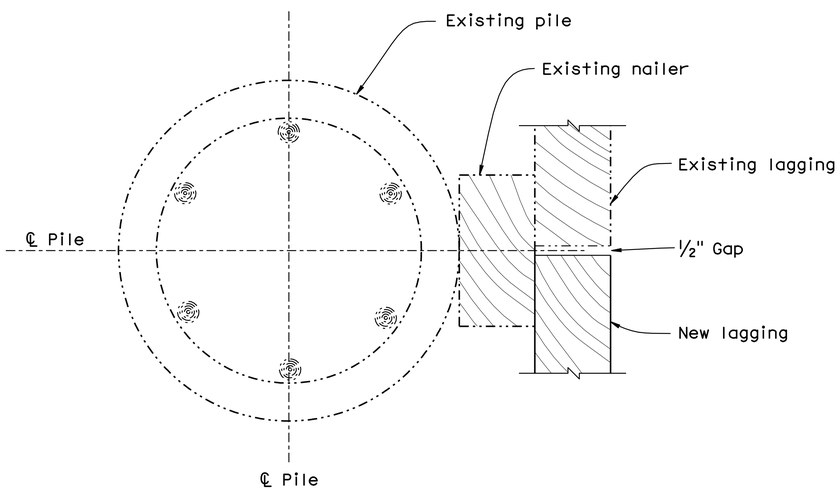

PILE SECTION WITH LAGGING AT BEGINNING OR END OF WALL
3" = 1′

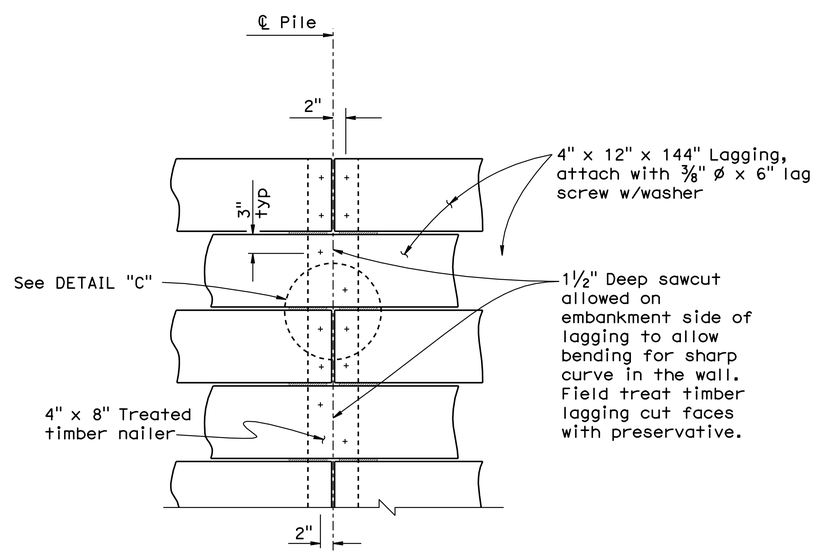

VIEW C-C
1" = 1′

Notes:

1. Joints in lagging are to occur at ℄ Pile.
2. Joints in lagging are to be staggered vertically at each pile.
3. Leave a 1/2" gap between each level of lagging and lagging butt joints.
4. 1/2" x 6" High density polyethylene (HDPE) shim between lagging members secured with 2 - 12d galvanized commercial wire nails. Typical width of shim to match width of timber lagging.

\+ Indicates location of lag screw.

—·—·— Denotes Existing Structure

	BY	CHECKED
DESIGN	A. Tern	T. Bui
DETAILS	L. Wang	T. Bui
QUANTITIES	A. Tern	T. Bui

STATE OF CALIFORNIA
DEPARTMENT OF TRANSPORTATION

DIVISION OF ENGINEERING SERVICES
STRUCTURE DESIGN
DESIGN BRANCH 17

BRIDGE NO. 36E0019
POST MILE 20.4

SLOPE REPAIR WALL
DETAILS NO. 2

STRUCTURES DESIGN DETAIL SHEET (ENGLISH) (REV. 10/25/05)

ORIGINAL SCALE IN INCHES FOR REDUCED PLANS 0 1 2 3

CU 05
EA 0P8701

DISREGARD PRINTS BEARING EARLIER REVISION DATES

REVISION DATES: 04-14-08 12-08-08 12-11-08 04-28-08 05-02-08 06-10-08 06-11-08 08-26-08 10-01-08

SHEET 5 OF 8

FILE => 36e0019-g-dt02.dgn

USERNAME => trmikesl DATE PLOTTED => 27-AUG-2009 TIME PLOTTED => 09:18

DIST	COUNTY	ROUTE	POST MILES TOTAL PROJECT	SHEET No	TOTAL SHEETS
05	SCr	9	20.4	30	32

REGISTERED CIVIL ENGINEER 10-01-08 DATE

5-4-09
PLANS APPROVAL DATE

REGISTERED PROFESSIONAL ENGINEER MARC FRIEDHEIM No. 57968 Exp. 06-30-10 CIVIL STATE OF CALIFORNIA

The State of California or its officers or agents shall not be responsible for the accuracy or completeness of electronic copies of this plan sheet.

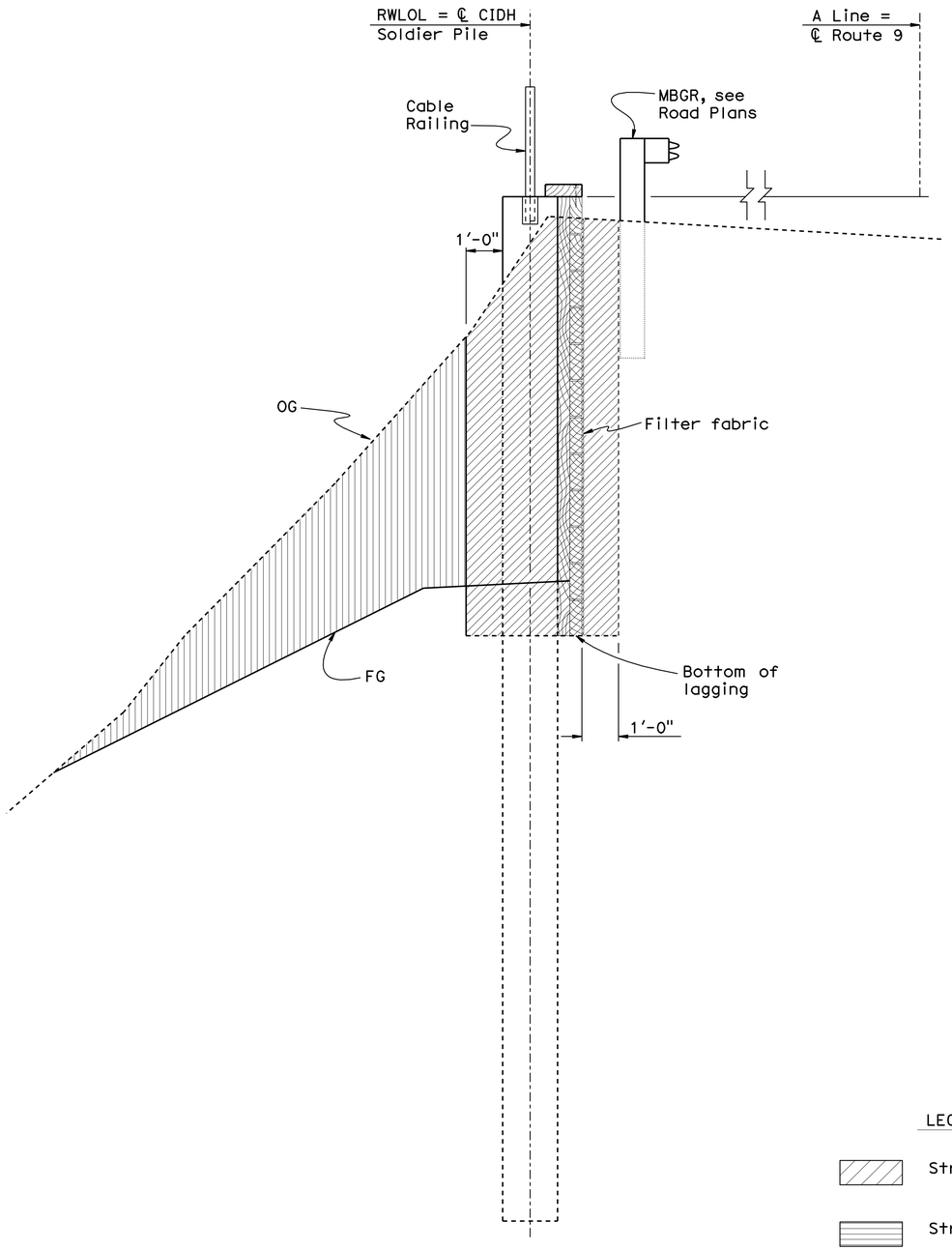

EXCAVATION
½" = 1'-0"

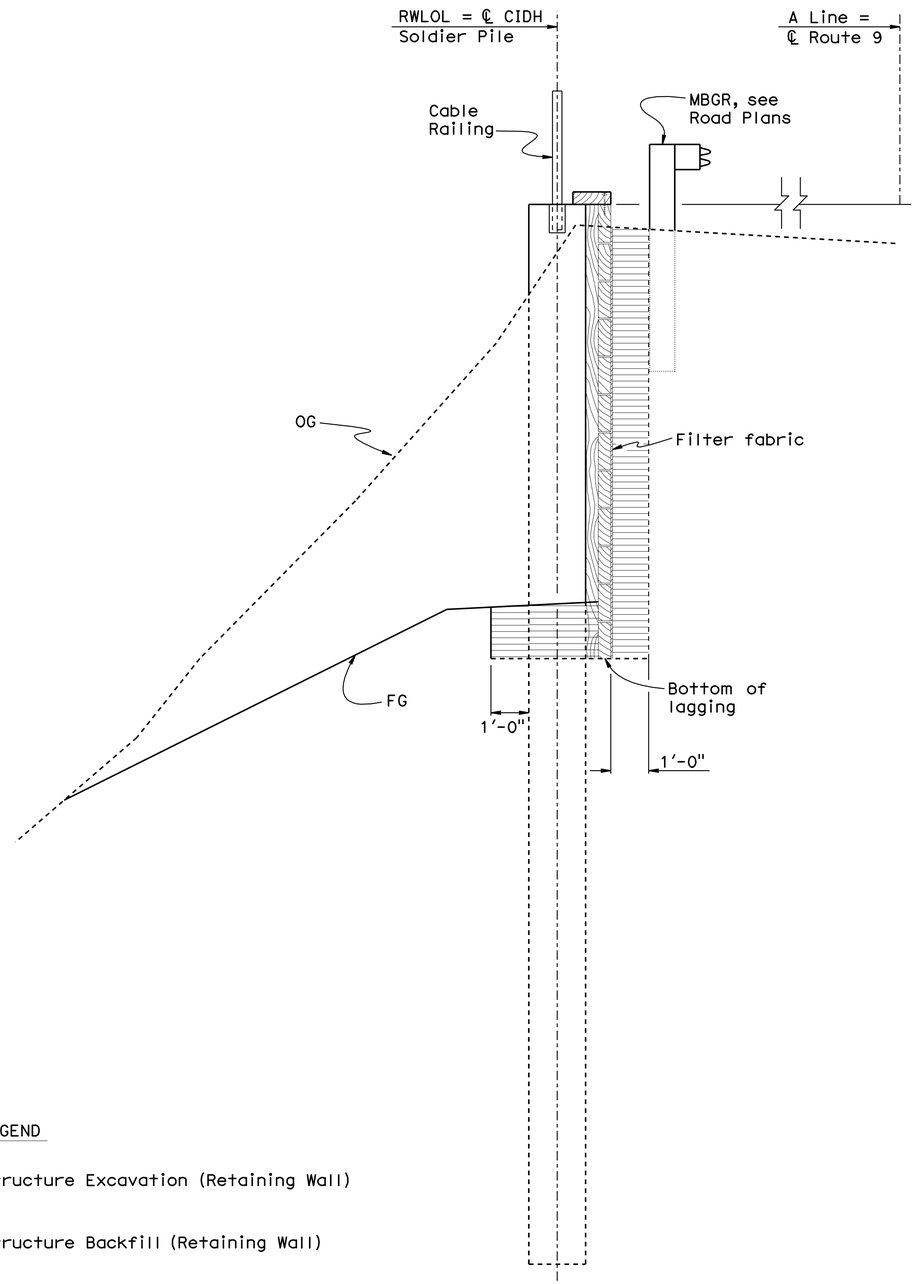

BACKFILL
½" = 1'-0"

LEGEND

- Structure Excavation (Retaining Wall)
- Structure Backfill (Retaining Wall)
- Roadway Excavation

DESIGN	BY A. Tern	CHECKED T. Bui	
DETAILS	BY L. Wang	CHECKED T. Bui	
QUANTITIES	BY A. Tern	CHECKED T. Bui	

STATE OF CALIFORNIA
DEPARTMENT OF TRANSPORTATION

DIVISION OF ENGINEERING SERVICES
STRUCTURE DESIGN
DESIGN BRANCH 17

BRIDGE NO. 36E0019
POST MILE 20.4

SLOPE REPAIR WALL
EXCAVATION AND BACKFILL

STRUCTURES DESIGN DETAIL SHEET (ENGLISH) (REV. 10/25/05)

ORIGINAL SCALE IN INCHES FOR REDUCED PLANS 0 1 2 3

CU 05
EA 0P8701

DISREGARD PRINTS BEARING EARLIER REVISION DATES

REVISION DATES: 04-08-08 10-09-08 04-28-08 05-02-08 05-20-08 06-16-08 06-18-08 06-19-08 08-26-08

SHEET 6 OF 8

FILE => 36e0019-v-excbkf.dgn

USERNAME => trmikest DATE PLOTTED => 27-AUG-2009 TIME PLOTTED => 09:18

DIST	COUNTY	ROUTE	POST MILES TOTAL PROJECT	SHEET No	TOTAL SHEETS
05	SCr	9	20.4	31	32

Michael S. Finegan 3-13-08
REGISTERED CIVIL ENGINEER

5-4-09
PLANS APPROVAL DATE

REGISTERED PROFESSIONAL ENGINEER Michael S. Finegan No. C50138 Exp. 6-30-09 CIVIL STATE OF CALIFORNIA

The State of California or its officers or agents shall not be responsible for the accuracy or completeness of electronic copies of this plan sheet.

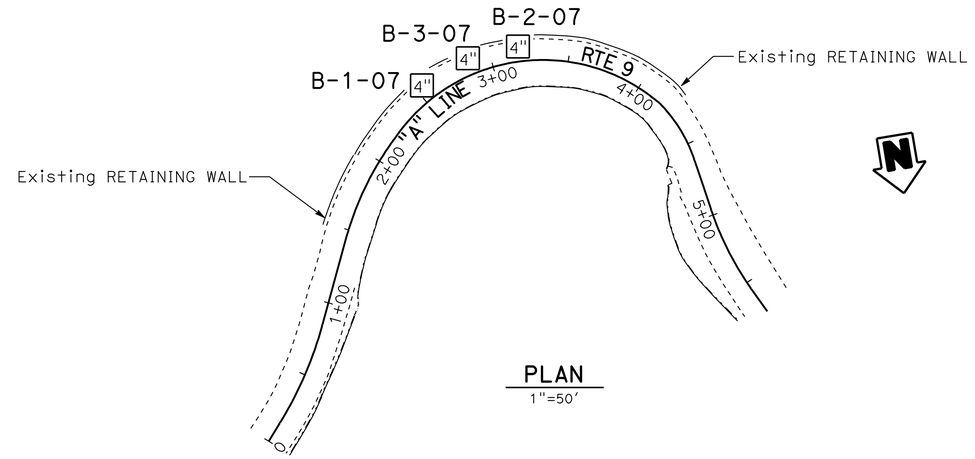

PLAN
1"=50'

BENCH MARK
PM 20.40 Elev. 346.206'
1" IP W/YELLOW
CAL DOT W/NAIL

Note:
No ground water encountered during field investigation.

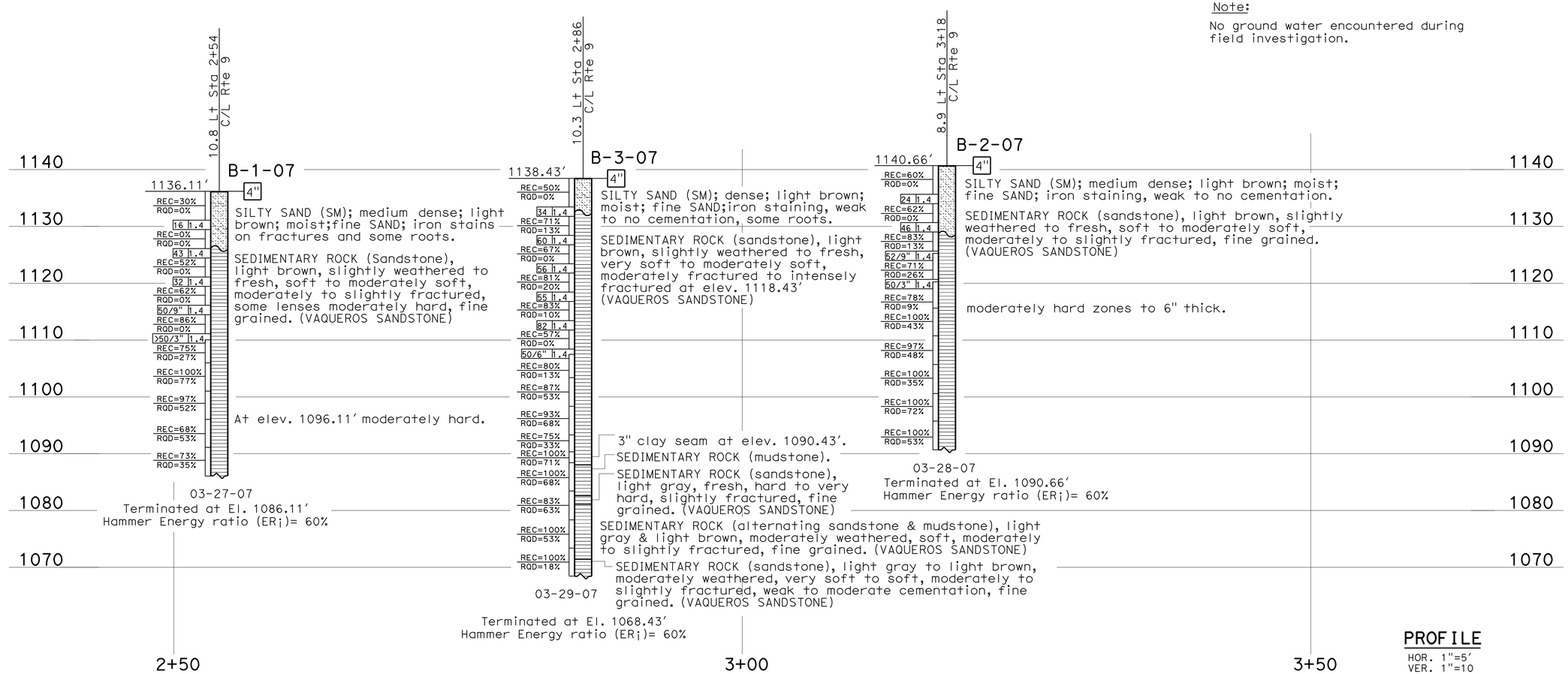

PROFILE
HOR. 1"=5'
VER. 1"=10

LEGEND OF BORING OPERATIONS

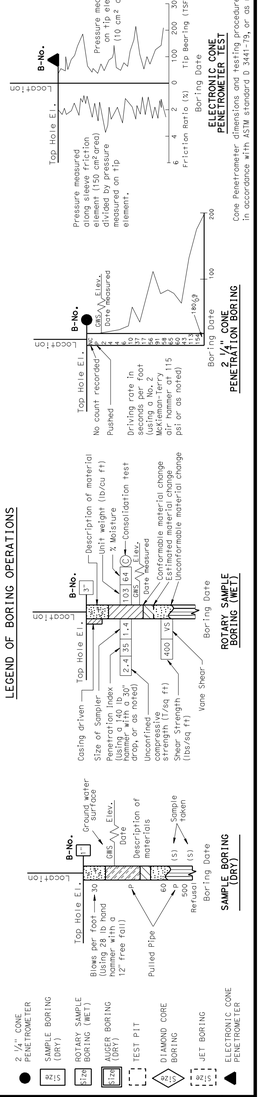

LEGEND OF EARTH MATERIALS

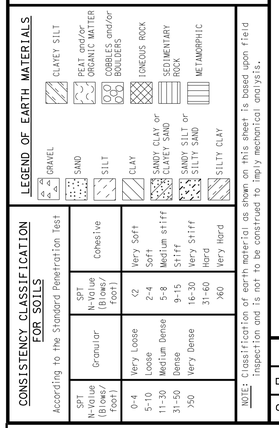

CONSISTENCY CLASSIFICATION FOR SOILS
According to the Standard Penetration Test

SPT N-Value (Blows/ Foot)	Granular	SPT N-Value (Blows/ Foot)	Cohesive
0-4	Very Loose	<2	Very Soft
5-10	Loose	2-4	Soft
11-30	Medium Dense	5-8	Medium stiff
31-50	Dense	9-15	Stiff
>50	Very Dense	16-30	Very Stiff
		31-60	Hard
		>60	Very Hard

NOTE: Classification of earth material as shown on this sheet is based upon field Inspection and is not to be construed to imply mechanical analysis.

ENGINEERING SERVICES	GEOTECHNICAL SERVICES
DRAWN BY	W. Tang 01/08
CHECKED BY	W. Hoon

FIELD INVESTIGATION BY: W. Hoon

STATE OF CALIFORNIA DEPARTMENT OF TRANSPORTATION

DIVISION OF ENGINEERING SERVICES STRUCTURE DESIGN
DESIGN BRANCH 17

BRIDGE NO. 36E0019
POST MILE 20.4

SLOPE REPAIR WALL
LOG OF TEST BORINGS 1 OF 2

OGS LOG OF TEST BORINGS SHEET (ENGLISH) (REV. 5/25/07)

ORIGINAL SCALE IN INCHES FOR REDUCED PLANS 0 1 2 3

CU 05
EA 0P8701

DISREGARD PRINTS BEARING EARLIER REVISION DATES

REVISION DATES (PRELIMINARY STAGE ONLY) 02-06-08 02-07-08 03-06-08 08-26-08

SHEET 7 OF 8

FILE => 36e0019-z-1tb1of2.dgn

USERNAME => trmikesl DATE PLOTTED => 27-AUG-2009 TIME PLOTTED => 09:19

DIST	COUNTY	ROUTE	POST MILES TOTAL PROJECT	SHEET No	TOTAL SHEETS
05	SCr	9	20.4	32	32

REGISTERED CIVIL ENGINEER 3-13-08

5-4-09
PLANS APPROVAL DATE

REGISTERED PROFESSIONAL ENGINEER Michael S. Finegan No. C50138 Exp. 6-30-09 CIVIL STATE OF CALIFORNIA

The State of California or its officers or agents shall not be responsible for the accuracy or completeness of electronic copies of this plan sheet.

WEATHERING DESCRIPTORS

Modified from United States Bureau of Reclamation, Engineering Geology Field Manual.

Descriptors		Diagnostic features					General characteristics (strength, excavation, etc.)§
		Chemical weathering-Discoloration and/or oxidation		Mechanical weathering-Grain boundary conditions (disaggregation) primarily for granitics and some coarse-grained sediments	Texture and solutioning		
Alphanumeric descriptor	Descriptive term	Body of rock	Fracture surfaces †		Texture	Solutioning	
W1	Fresh	No discoloration, not oxidized.	No discoloration or oxidation.	No separation, intact (tight).	No change.	No solutioning.	Hammer rings when crystalline rocks are struck. Almost always rock excavation except for naturally weak or weakly cemented rocks such as siltstones or shales.
W2	Slightly weathered to fresh ○						
W3	Slightly weathered	Discoloration or oxidation is limited to surface of, or short distance from, fractures; some feldspar crystals are dull.	Minor to complete discoloration or oxidation of most surfaces.	No visible separation, intact (tight).	Preserved.	Minor leaching of some soluble minerals may be noted.	Hammer rings when crystalline rocks are struck. Body of rock not weakened. With few exceptions, such as siltstones or shales, classified as rock excavation.
W4	Moderately to slightly weathered ○						
W5	Moderately weathered	Discoloration or oxidation extends from fractures usually throughout; Fe-Mg minerals are "rusty," feldspar crystals are "cloudy."	All fracture surfaces are discolored or oxidized.	Partial separation of boundaries visible.	Generally preserved.	Soluble minerals may be mostly leached.	Hammer does not ring when rock is struck. Body of rock is slightly weakened. Depending on fracturing, usually is rock excavation except in naturally weak rocks such as siltstones or shales.
W6	Intensely to moderately weathered ○						
W7	Intensely weathered	Discoloration or oxidation throughout; all feldspars and Fe-Mg minerals are altered to clay to some extent; or chemical alteration produces in-situ disaggregation, see grain boundary conditions.	All fracture surfaces are discolored or oxidized, surfaces friable.	Partial separation, rock is friable; in semiarid conditions granitics are disaggregated.	Texture altered by chemical disintegra-tion (hy-dration, argillation).	Leaching of soluble minerals may be complete.	Dull sound when struck with hammer, usually can be broken with moderate to heavy manual pressure or by light hammer blow without reference to planes of weakness such as incipient or hairline fractures, or veinlets. Rock is significantly weakened. Usually common excavation.
W8	Very intensely weathered						
W9	Decomposed	Discolored or oxidized throughout, but resistant minerals such as quartz may be unaltered; all feldspars and Fe-Mg minerals are completely altered to clay.		Complete separation of grain boundaries (disaggregated).	Resembles a soil, partial or complete remnant rock structure may be preserved; leaching of soluble minerals usually complete.		Can be granulated by hand. Always common excavation. Resistant minerals such as quartz may be present as "stringers" or "dikes."

Note: This chart and its horizontal categories are more readily applied to rocks with feldspars and mafic minerals. Weathering in various sedimentary rocks, particularly limestones and poorly indurated sediments, will not always fit the categories established. This chart and weathering categories may have to be modified for particular site conditions or alteration such as hydrothermal effects; however, the basic framework and similar descriptors are to be used.

○ Combination descriptors are permissible where equal distribution of both weathering characteristics are present over significant intervals or where characteristics present are "in between" the diagnostic feature. However, dual descriptors should not be used where significant, identifiable zones can be delineated. When given as a range, only two adjacent terms may be combined. "Decomposed to slightly weathered," or "moderately weathered to fresh" are not acceptable.

† Does not include directional weathering along shears or faults and their associated features. For example, a shear zone that carried weathering to great depths into a fresh rock mass would not require the rock mass to be classified as weathered.

§ These are generalizations and should not be used as diagnostic features for weathering or excavation classification. These characteristics vary to a large extent based on naturally weak materials or cementation and type of excavation.

ROCK QUALITY DESIGNATION (RQD) & PERCENT RECOVERY (REC) LOGGING

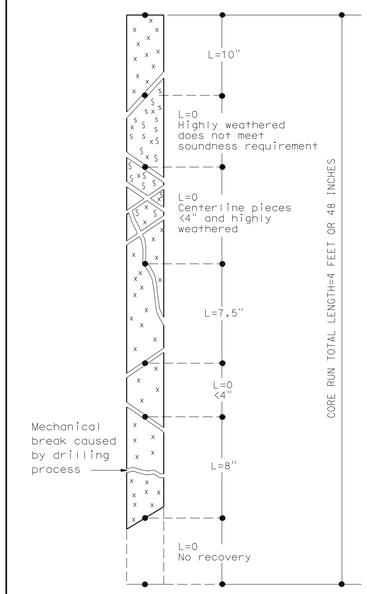

$$RQD = \frac{\sum \text{Length of sound core} \geq 4 \text{ inches pieces}}{\text{Total core run length}}$$

$$RQD = \frac{10 + 7.5 + 8}{48} \times 100\%$$

RQD = 53% (fair)

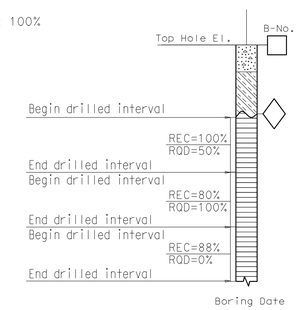

RQD (ROCK QUALITY DESIGNATION)	DESCRIPTION OF ROCK QUALITY
0 - 25%	VERY POOR
25 - 50%	POOR
50 - 75%	FAIR
75 - 90%	GOOD
90 - 100%	EXCELLENT

After Deere & Deere, 1989

FRACTURE DENSITY

Modified from United States Bureau of Reclamation, Engineering Geology Field Manual.

FRACTURE DENSITY- Based on the spacing of all natural fractures in an exposure or core recovery lengths in boreholes; excludes mechanical breaks, shears, and shear zones; however, shear-disturbed zones (fracturing outside the shear) are included. Descriptors for fracture density apply to all rock exposures such as tunnel walls, dozer trenches, outcrops, or foundation cut slopes and inverts, as well as boreholes. Descriptive criteria presented below are based on borehole cores where lengths are measured along the core axis, for other exposures the criteria is distance measured between fractures (size of blocks).

UNFRACTURED (FD0): No fractures.

VERY SLIGHTLY FRACTURED (FD1): Core recovered mostly in lengths greater than 3 ft.

SLIGHTLY TO VERY SLIGHTLY FRACTURED (FD2)*

SLIGHTLY FRACTURED (FD3): Core recovered mostly in lengths from 1 to 3 ft. with few scattered lengths less than 1 ft or greater than 3 ft.

MODERATELY TO SLIGHTLY FRACTURED (FD4)*

MODERATELY FRACTURED (FD5): Core recovered mostly in 0.3 to 1.0 ft lengths with most lengths about 0.6 ft.

INTENSELY TO MODERATELY FRACTURED (FD6)*

INTENSELY FRACTURED (FD7): Lengths average from 0.1 to 0.3 ft with scattered fragmented intervals. Core recovered mostly in lengths less than 0.3 ft.

VERY INTENSELY TO INTENSELY FRACTURED (FD8)*

VERY INTENSELY FRACTURED (FD9): Core recovered mostly as chips and fragments with a few scattered short core lengths.

* Combinations of fracture densities (e.g. very intensely to intensely fractured, or moderately to slightly fractured) are used where equal distribution of both fracture density characteristics are present over a significant interval or exposure, or where characteristics are "in between" the descriptor definitions.

ROCK HARDNESS DESCRIPTORS

Alphanumeric Descriptor	Descriptor	Criteria
H1	Extremely hard	Core, fragment, or exposure cannot be scratched with knife or sharp pick; can only be chipped with repeated heavy hammer blows.
H2	Very hard	Cannot be scratched with knife on sharp pick. Core or fragment breaks with repeated heavy hammer blows.
H3	Hard	Can be scratched with knife or sharp pick with difficulty (heavy pressure). Heavy hammer blow required to break specimen.
H4	Moderately hard	Can be scratched with knife or sharp pick with light or moderate pressure. Core or fragment breaks with moderate hammer blow.
H5	Moderately soft	Can be grooved 1/16 inch deep by knife or sharp pick with moderate or heavy pressure. Core or fragment breaks with light hammer blow or heavy manual pressure.
H6	Soft	Can be grooved or gouged easily by knife or sharp pick with light pressure, can be scratched with fingernail. Breaks with light to moderate manual pressure.
H7	Very soft	Can be readily indented, grooved or gouged with fingernail, or carved with a knife. Breaks with light manual pressure.

Any bedrock unit softer than H7, very soft, is to be described using ASTM D-2488 consistency descriptors.

Note: Although "sharp pick" is included in these definitions, descriptions of ability to be scratched, grooved or gouged by a knife is the preferred criteria.

Modified from United States Bureau of Reclamation, Engineering Geology Field Manual.

BEDDING, FOLIATION, OR FLOW TEXTURE DESCRIPTORS

Descriptors	Thickness / Spacing
Massive	Greater than 10 ft
Very thickly (bedded, foliated, or banded)	3 to 10 ft
Thickly	1 to 3 ft
Moderately	0.3 to 1 ft
Thinly	0.1 to 0.3 ft
Very thinly	0.03 (3/8 in) to 0.1 ft
Laminated (intensely foliated or banded)	Less than 0.03 ft (3/8 in)

Modified from United States Bureau of Reclamation, Engineering Geology Field Manual.

ENGINEERING SERVICES	GEOTECHNICAL SERVICES
PREPARED BY	W. Tang 01/08
CHECKED BY	

STATE OF CALIFORNIA DEPARTMENT OF TRANSPORTATION

DIVISION OF ENGINEERING SERVICES STRUCTURE DESIGN DESIGN BRANCH 17

BRIDGE NO. 36E0019 POST MILE 20.4

SLOPE REPAIR WALL
LOG OF TEST BORINGS 2 OF 2

TL 6051 (CADD 1/8/98)

ORIGINAL SCALE IN INCHES FOR REDUCED PLANS 0 1 2 3

CU 05
EA 0P8701

DISREGARD PRINTS BEARING EARLIER REVISION DATES 08-26-08

REVISION DATES (PRELIMINARY STAGE ONLY) SHEET 8 OF 8

USERNAME => trmikesl
36e0019-z-ltb2of2.dgn

USERNAME => trmikesl