Dist	COUNTY	ROUTE	POST MILES TOTAL PROJECT	SHEET No.	TOTAL SHEETS
05	SLO	1	R36.7/39.6	1	54

ACSTPE-P001(570)E

STATE OF CALIFORNIA

DEPARTMENT OF TRANSPORTATION

PROJECT PLANS FOR CONSTRUCTION ON

STATE HIGHWAY

IN SAN LUIS OBISPO COUNTY NEAR CAYUCOS FROM 0.1 MILE SOUTH OF NORTH OCEAN AVENUE TO 0.8 MILE SOUTH OF VILLA CREEK ROAD

TO BE SUPPLEMENTED BY STANDARD PLANS DATED MAY 2006

INDEX OF PLANS

SHEET No.	DESCRIPTION
1	TITLE AND LOCATION MAP
2-14	LAYOUTS
15-22	CONSTRUCTION DETAILS
23	TEMPORARY WATER POLLUTION CONTROL QUANTITIES
24	DRAINAGE AND EROSION CONTROL DETAILS
25-26	SUMMARY OF QUANTITIES
27	PLANT LIST
28-36	PLANTING AND IRRIGATION PLAN
37	LANDSCAPE DETAILS
38	IRRIGATION QUANTITIES AND SPRINKLER SCHEDULE
39	CONSTRUCTION AREA SIGNS
40-54	REVISED AND NEW STANDARD PLANS

THE STANDARD PLANS LIST APPLICABLE TO THIS CONTRACT IS INCLUDED IN THE NOTICE TO BIDDERS AND SPECIAL PROVISIONS BOOK.

LOCATION MAP

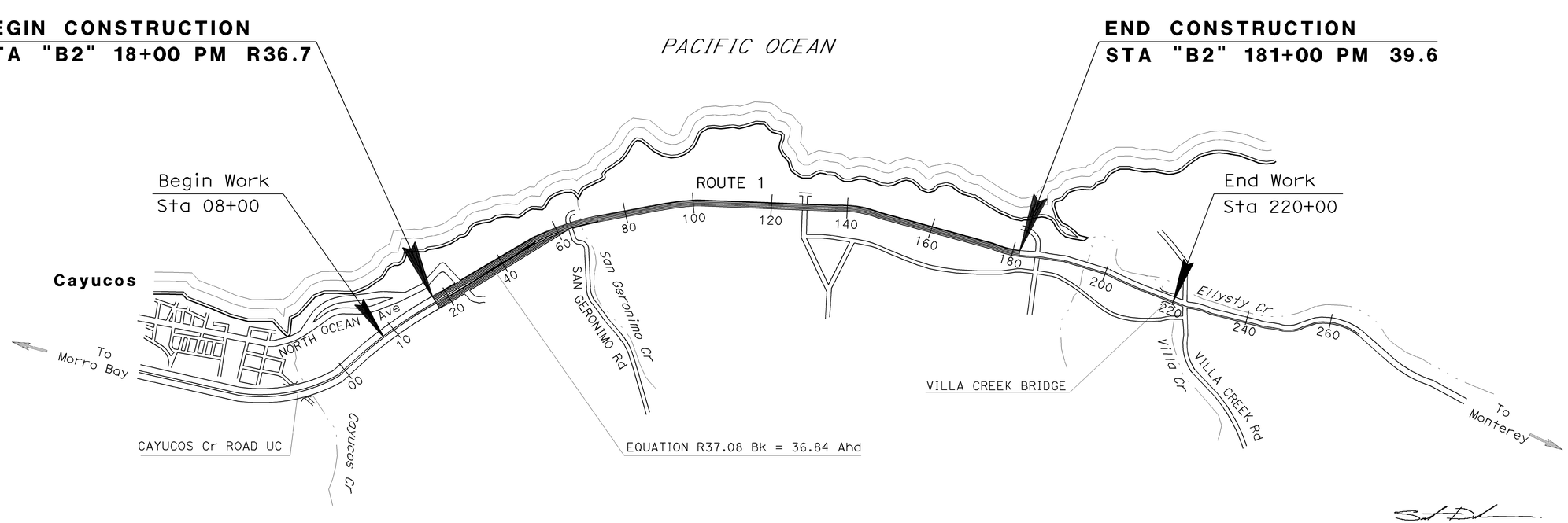

NO SCALE

LICENSED LANDSCAPE ARCHITECT

May 14, 2012

PLANS APPROVAL DATE

THE STATE OF CALIFORNIA OR ITS OFFICERS OR AGENTS SHALL NOT BE RESPONSIBLE FOR THE ACCURACY OR COMPLETENESS OF SCANNED COPIES OF THIS PLAN SHEET.

LICENSED LANDSCAPE ARCHITECT SCOTT P. DOWLAN No. 4410 Signature 9-30-12 Renewal Date 5-14-12 Date STATE OF CALIFORNIA

THE CONTRACTOR SHALL POSSESS THE CLASS (OR CLASSES) OF LICENSE AS SPECIFIED IN THE "NOTICE TO BIDDERS."

CONTRACT No.	05-0N4004
PROJECT ID	0500000213

PROJECT MANAGER: KEN DOSTALEK

SENIOR LANDSCAPE ARCHITECT: DENNIS REEVES

LAST REVISION 05-10-12 DATE PLOTTED => 08-JUN-2012 TIME PLOTTED => 09:24

Dist	COUNTY	ROUTE	POST MILES TOTAL PROJECT	SHEET No.	TOTAL SHEETS
05	SLO	1	R36.7/39.6	2	54

LICENSED LANDSCAPE ARCHITECT

5-14-12
PLANS APPROVAL DATE

LICENSED LANDSCAPE ARCHITECT — SCOTT P. DOWLAN No. 4480 — Registered 9-30-12 Renewal Date 5-14-12 Date — STATE OF CALIFORNIA

THE STATE OF CALIFORNIA OR ITS OFFICERS OR AGENTS SHALL NOT BE RESPONSIBLE FOR THE ACCURACY OR COMPLETENESS OF SCANNED COPIES OF THIS PLAN SHEET.

NOTE:

1. FOR ACCURATE RIGHT OF WAY DATA, CONTACT RIGHT OF WAY ENGINEERING AT THE DISTRICT OFFICE.
2. ELEVATIONS SHOWN IN POSITIVE LOCATION INFORMATION TABLE REFER TO THE TOP OF PIPE OR CONDUIT, UNLESS OTHERWISE STATED.
3. UTILITY OWNERSHIP ON THIS PROJECT OR AS SHOWN:
   GAS- SOUTHERN CALIFORNIA GAS COMPANY (SCG)
   ELECTRICAL- PACIFIC GAS & ELECTRIC (PG&E)
   TELEPHONE- AMERICAN TELEPHONE & TELEGRAPH (AT&T)
   FIBER OPTIC- AMERICAN TELEPHONE & TELEGRAPH (AT&T)
   FIBER OPTIC- CHARTER COMMUNICATIONS
4. CHAIN LINK FENCE SHOWN TO BE REMOVED IS 4 FT HIGH CHAIN LINK FABRIC WITH METAL 'T' POSTS.
5. UTILITY VAULTS MUST BE KEPT CLEAR OF EROSION CONTROL MATERIALS.
6. LOCATIONS OF UTILITY FACILITIES SHOWN ON THESE PLANS ARE APPROXIMATE AND SHALL BE VERIFIED BY THE CONTRACTOR PRIOR TO CONSTRUCTION.

LEGEND

- EROSION CONTROL TYPE 1: COMPOST (INCORPORATE); EROSION CONTROL (COMPOST BLANKET); EROSION CONTROL (HYDROSEED) (SEED MIX 1)
- EROSION CONTROL TYPE 2: COMPOST (INCORPORATE); EROSION CONTROL (COMPOST BLANKET); EROSION CONTROL (HYDROSEED) (SEED MIX 2)
- EROSION CONTROL TYPE 3: EROSION CONTROL (HYDROSEED) (SEED MIX 1); ROLLED EROSION CONTROL PRODUCT (NETTING)
- VEGETATION CONTROL TYPE 1
- VEGETATION CONTROL TYPE 2
- jt — EXIST JOINT TRENCH (UNDERGROUND)
- REVEGETATION SIGN (ON POST)
- BOULDER
- GRADING
- ESA — ENVIRONMENTALLY SENSITIVE AREA
- TFESA — TEMPORARY FENCE (TYPE ESA)
- FENCE (TYPE WIRE STRAND)
- TEMPORARY FENCE (TYPE WIRE STRAND)

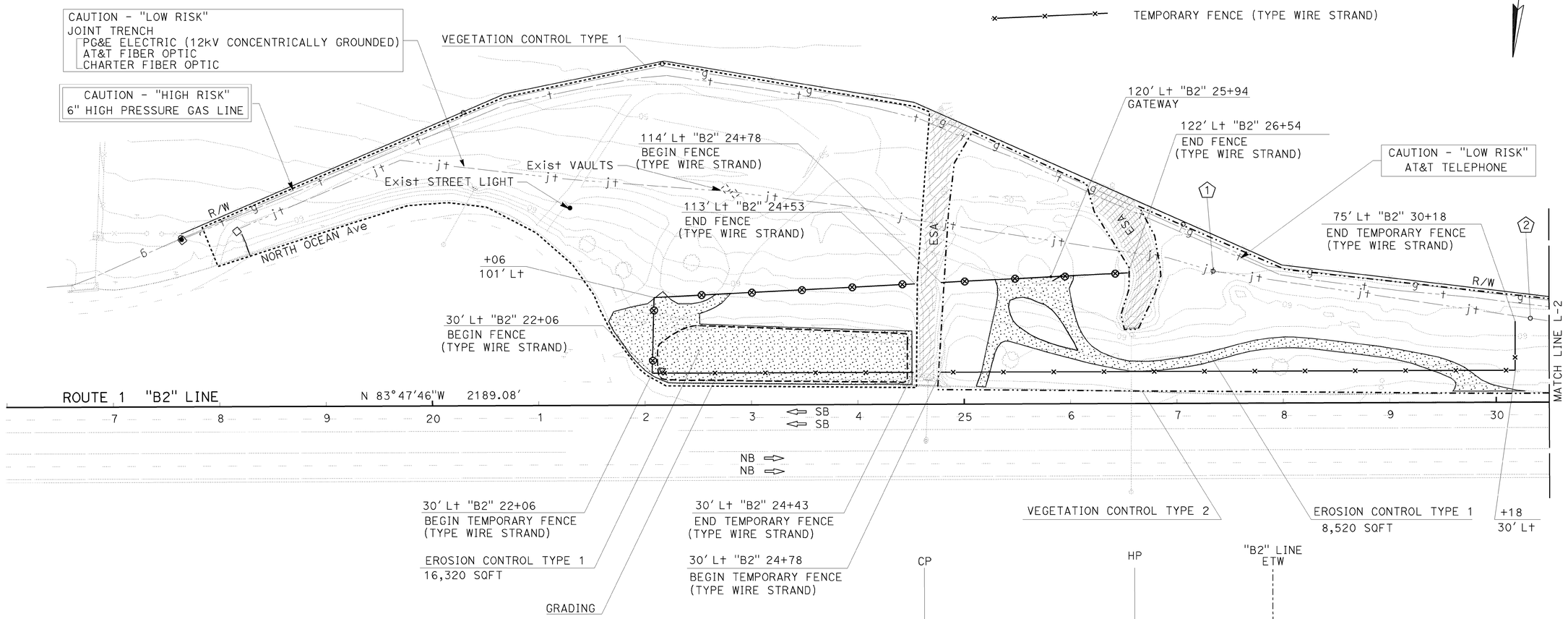

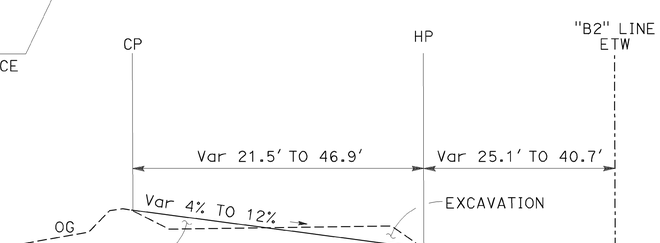

TYPICAL GRADING CROSS SECTION

STA 22+00 TO STA 24+30 Lt
NO SCALE

POSITIVE LOCATION INFORMATION

No.	DESCRIPTION	LOCATION	ELEVATION		METHOD
			OG	TOP OF PIPE	
1	JOINT TRENCH	124.1' Lt "B2" 27+34.4	56.2	51.9	POTHOLING
2	JOINT TRENCH	78.8' Lt "B2" 30+32.4	58.7	55.2	POTHOLING

SCALE: 1"=50'

LAYOUT L-1

REVISED BY | DATE REVISED
SCOTT DOWLAN | KRISTEN LANGAGER
CALCULATED-DESIGNED BY | CHECKED BY
SENIOR LANDSCAPE ARCHITECT | DENNIS REEVES
STATE OF CALIFORNIA - DEPARTMENT OF TRANSPORTATION
Caltrans LANDSCAPE ARCHITECTURE

LAST REVISION 05-10-12 | DATE PLOTTED => 15-MAY-2012 | TIME PLOTTED => 07:57

Dist	COUNTY	ROUTE	POST MILES TOTAL PROJECT	SHEET No.	TOTAL SHEETS
05	SLO	1	R36.7/39.6	3	54

LICENSED LANDSCAPE ARCHITECT

5-14-12
PLANS APPROVAL DATE

LICENSED LANDSCAPE ARCHITECT — SCOTT P. DOWLAN No. 4480 — STATE OF CALIFORNIA — Expiration Date 9-30-12 — Renewal Date 5-14-12 — Date

THE STATE OF CALIFORNIA OR ITS OFFICERS OR AGENTS SHALL NOT BE RESPONSIBLE FOR THE ACCURACY OR COMPLETENESS OF SCANNED COPIES OF THIS PLAN SHEET.

NOTE:

FOR ACCURATE RIGHT OF WAY DATA, CONTACT RIGHT OF WAY ENGINEERING AT THE DISTRICT OFFICE.

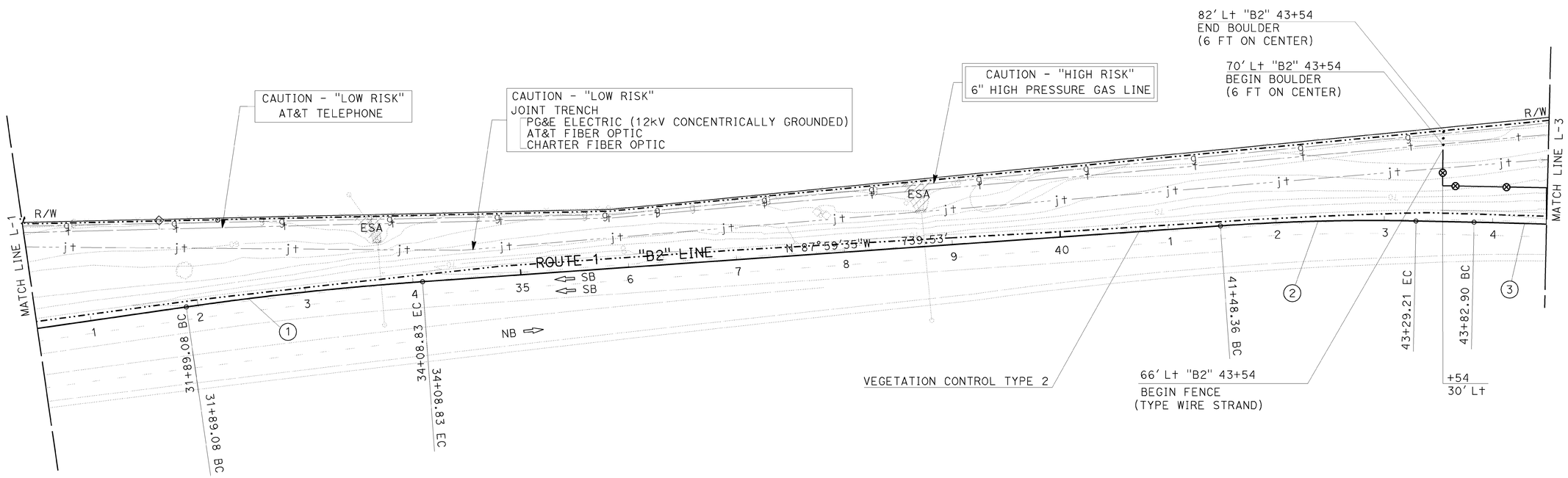

POSITIVE LOCATION INFORMATION

No. ⬠	DESCRIPTION	LOCATION	ELEVATION		METHOD
			OG	TOP OF PIPE	
1	JOINT TRENCH	124.1' Lt "B2" 27+34.4	56.2	51.9	POTHOLING
2	JOINT TRENCH	78.8' Lt "B2" 30+32.4	58.7	55.2	POTHOLING

CURVE DATA

No. ◯	R	Δ	T	L
1	3000.00'	4°11'49"	109.93'	219.75'
2	2000.00'	5°10'51"	90.48'	180.85'
3	5000.00'	5°2'52"	220.40'	440.51'

LAYOUT L-2

SCALE: 1"=50'

REVISED BY	DATE REVISED

CALCULATED-DESIGNED BY: SCOTT DOWLAN
CHECKED BY: KRISTEN LANGAGER
SENIOR LANDSCAPE ARCHITECT: DENNIS REEVES

STATE OF CALIFORNIA - DEPARTMENT OF TRANSPORTATION
Caltrans LANDSCAPE ARCHITECTURE

LAST REVISION 05-10-12
DATE PLOTTED => 15-MAY-2012
TIME PLOTTED => 07:57

Dist	COUNTY	ROUTE	POST MILES TOTAL PROJECT	SHEET No.	TOTAL SHEETS
05	SLO	1	R36.7/39.6	4	54

LICENSED LANDSCAPE ARCHITECT

5-14-12

PLANS APPROVAL DATE

LICENSED LANDSCAPE ARCHITECT SCOTT P. DOWLAN No. 4480 STATE OF CALIFORNIA Expiration Date 9-30-12 Renewal Date 5-14-12 Date

THE STATE OF CALIFORNIA OR ITS OFFICERS OR AGENTS SHALL NOT BE RESPONSIBLE FOR THE ACCURACY OR COMPLETENESS OF SCANNED COPIES OF THIS PLAN SHEET.

NOTE:

1. FOR ACCURATE RIGHT OF WAY DATA, CONTACT RIGHT OF WAY ENGINEERING AT THE DISTRICT OFFICE.
2. FENCE (TYPE WIRE STRAND, PERMANENT) TO BE OFFSET 3 FEET FROM EDGE OF PULLOUT

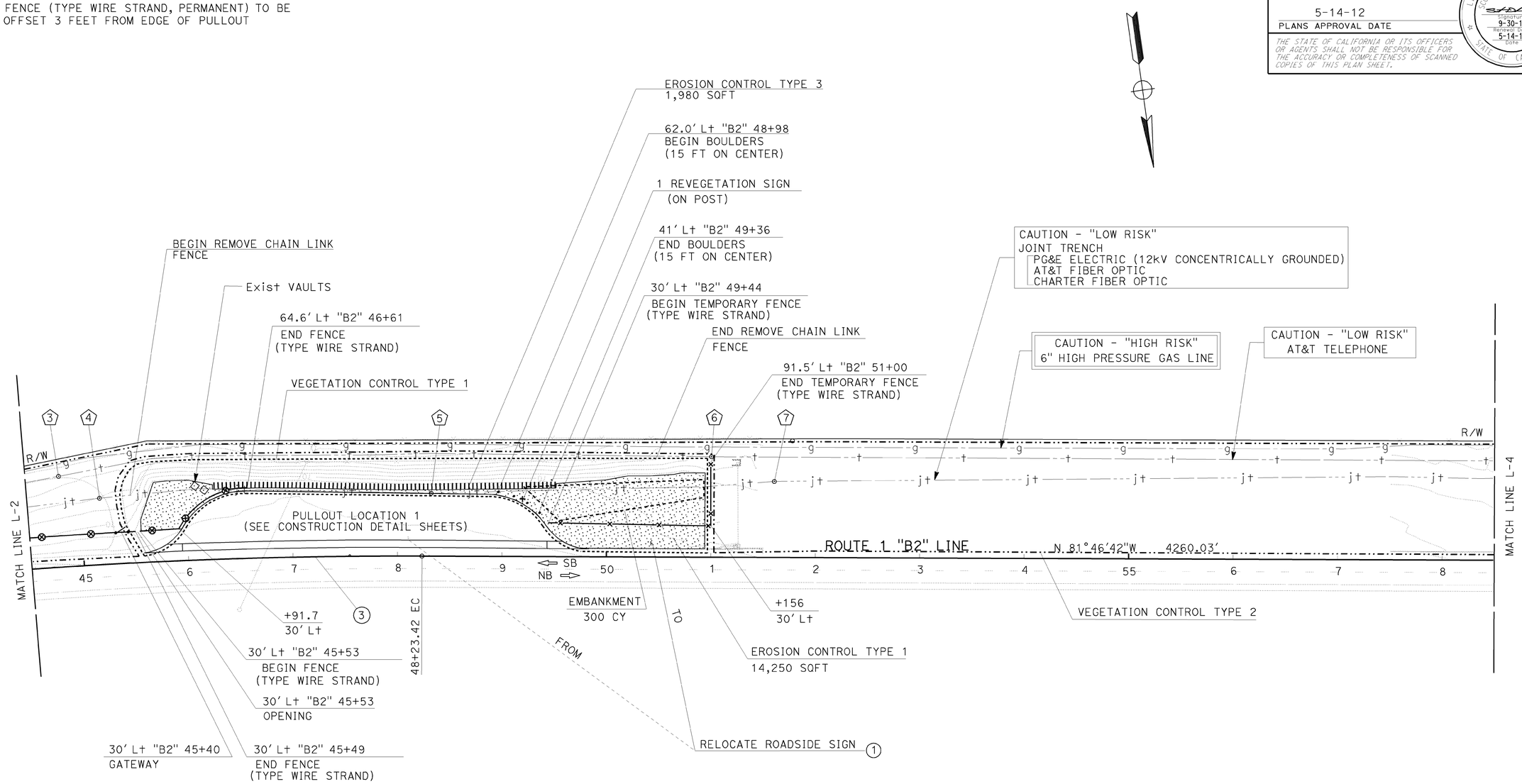

POSITIVE LOCATION INFORMATION

No. ⬠	DESCRIPTION	LOCATION	ELEVATION		METHOD
			OG	TOP OF PIPE	
3	TELEPHONE	85.8' Lt "B2" 44+81.1	66.6	63.5	POTHOLING
4	JOINT TRENCH	61.8' Lt "B2" 45+18.1	63.2	60.7	POTHOLING
5	JOINT TRENCH	60.1' Lt "B2" 48+32.0	72.9	68.7	POTHOLING
6	TELEPHONE	95.9' Lt "B2" 51+00.0	66.9	63.2	POTHOLING
7	JOINT TRENCH	72.5' Lt "B2" 51+60.6	69.3	64.5	POTHOLING

CURVE DATA

No. ◯	R	Δ	T	L
3	5000.00'	5°2'52"	220.40'	440.51'

LAYOUT L-3

SCALE: 1"=50'

STATE OF CALIFORNIA - DEPARTMENT OF TRANSPORTATION
LANDSCAPE ARCHITECTURE

SENIOR LANDSCAPE ARCHITECT: DENNIS REEVES

CALCULATED-DESIGNED BY: SCOTT DOWLAN
CHECKED BY: KRISTEN LANGAGER

REVISED BY / DATE REVISED

LAST REVISION 05-10-12 | DATE PLOTTED => 15-MAY-2012 | TIME PLOTTED => 07:57

Dist	COUNTY	ROUTE	POST MILES TOTAL PROJECT	SHEET No.	TOTAL SHEETS
05	SLO	1	R36.7/39.6	5	54

LICENSED LANDSCAPE ARCHITECT

5-14-12
PLANS APPROVAL DATE

LICENSED LANDSCAPE ARCHITECT SCOTT P. DOWLAN No. 4470 STATE OF CALIFORNIA
Expiration Date 9-30-12
Renewal Date 5-14-12
Date

THE STATE OF CALIFORNIA OR ITS OFFICERS OR AGENTS SHALL NOT BE RESPONSIBLE FOR THE ACCURACY OR COMPLETENESS OF SCANNED COPIES OF THIS PLAN SHEET.

NOTE:

FOR ACCURATE RIGHT OF WAY DATA, CONTACT
RIGHT OF WAY ENGINEERING AT THE DISTRICT OFFICE.

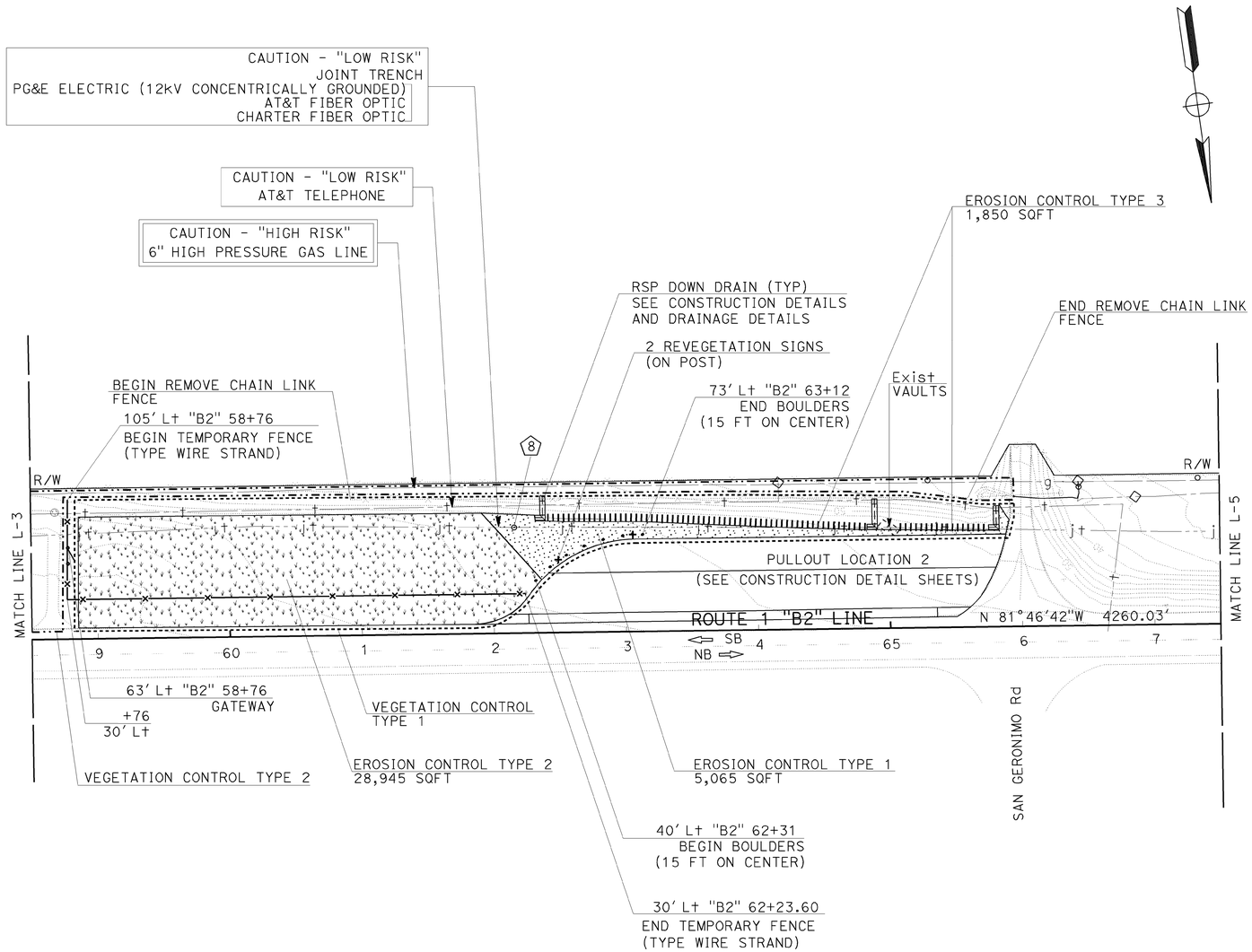

POSITIVE LOCATION INFORMATION

No. ⬠	DESCRIPTION	LOCATION	ELEVATION		METHOD
			OG	TOP OF PIPE	
8	JOINT TRENCH	80.0' Lt "B2" 62+15.9	57.4	53.4	POTHOLING

LAYOUT L-4

SCALE: 1"=50'

STATE OF CALIFORNIA - DEPARTMENT OF TRANSPORTATION
Caltrans LANDSCAPE ARCHITECTURE

SENIOR LANDSCAPE ARCHITECT: DENNIS REEVES
CALCULATED-DESIGNED BY: SCOTT DOWLAN
CHECKED BY: KRISTEN LANGAGER
REVISED BY
DATE REVISED

LAST REVISION 05-10-12
DATE PLOTTED => 15-MAY-2012
TIME PLOTTED => 07:57

Dist	COUNTY	ROUTE	POST MILES TOTAL PROJECT	SHEET No.	TOTAL SHEETS
05	SLO	1	R36.7/39.6	6	54

LICENSED LANDSCAPE ARCHITECT

5-14-12
PLANS APPROVAL DATE

LICENSED LANDSCAPE ARCHITECT
SCOTT P. DOWLAN No. 4470
Expiration Date 9-30-12
Renewal Date 5-14-12
Date
STATE OF CALIFORNIA

THE STATE OF CALIFORNIA OR ITS OFFICERS OR AGENTS SHALL NOT BE RESPONSIBLE FOR THE ACCURACY OR COMPLETENESS OF SCANNED COPIES OF THIS PLAN SHEET.

NOTE:

FOR ACCURATE RIGHT OF WAY DATA, CONTACT
RIGHT OF WAY ENGINEERING AT THE DISTRICT OFFICE.

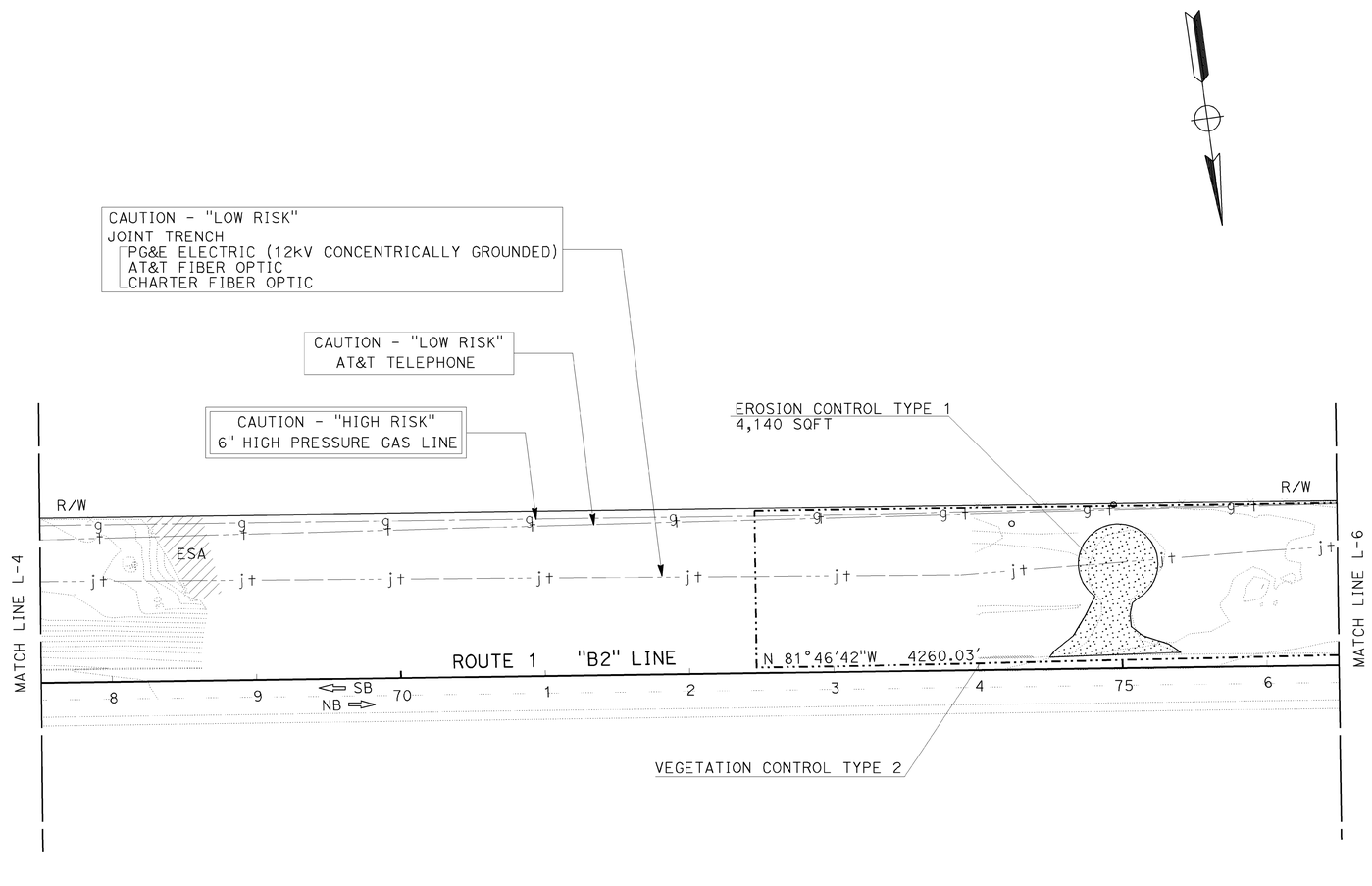

LAYOUT L-5

SCALE: 1"=50'

STATE OF CALIFORNIA - DEPARTMENT OF TRANSPORTATION
Caltrans LANDSCAPE ARCHITECTURE

SENIOR LANDSCAPE ARCHITECT: DENNIS REEVES
CALCULATED-DESIGNED BY: SCOTT DOWLAN
CHECKED BY: KRISTEN LANGAGER
REVISED BY
DATE REVISED

LAST REVISION 05-10-12
DATE PLOTTED => 15-MAY-2012
TIME PLOTTED => 07:57

Dist	COUNTY	ROUTE	POST MILES TOTAL PROJECT	SHEET No.	TOTAL SHEETS
05	SLO	1	R36.7/39.6	7	54

LICENSED LANDSCAPE ARCHITECT

5-14-12
PLANS APPROVAL DATE

LICENSED LANDSCAPE ARCHITECT SCOTT P. DOWLAN No. 4480 STATE OF CALIFORNIA Signature 9-30-12 Renewal Date 5-14-12 Date

THE STATE OF CALIFORNIA OR ITS OFFICERS OR AGENTS SHALL NOT BE RESPONSIBLE FOR THE ACCURACY OR COMPLETENESS OF SCANNED COPIES OF THIS PLAN SHEET.

NOTE:

FOR ACCURATE RIGHT OF WAY DATA, CONTACT RIGHT OF WAY ENGINEERING AT THE DISTRICT OFFICE.

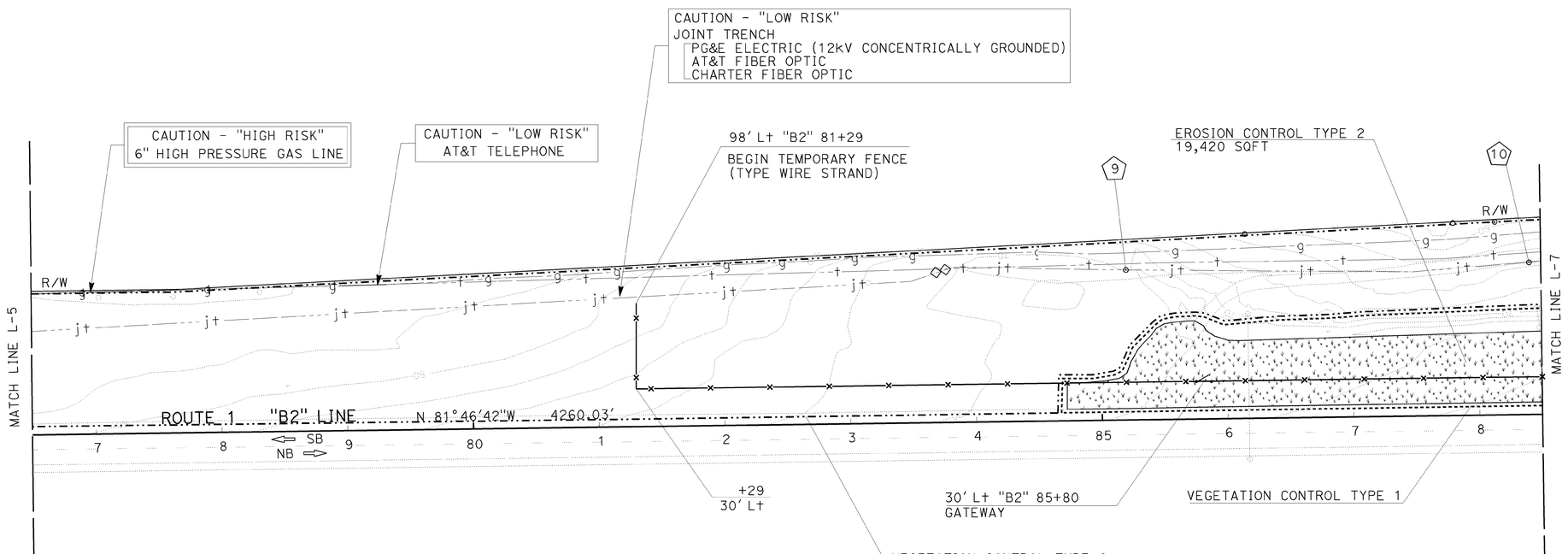

POSITIVE LOCATION INFORMATION

No. ⬠	DESCRIPTION	LOCATION	ELEVATION		METHOD
			OG	TOP OF PIPE	
9	JOINT TRENCH	119.2' Lt "B2" 85+20.2	70.4	67.5	POTHOLING
10	JOINT TRENCH	120.9' Lt "B2" 88+40.9	63.9	60.2	POTHOLING

LAYOUT L-6

SCALE: 1"=50'

STATE OF CALIFORNIA - DEPARTMENT OF TRANSPORTATION
LANDSCAPE ARCHITECTURE

SENIOR LANDSCAPE ARCHITECT: DENNIS REEVES

CALCULATED-DESIGNED BY: SCOTT DOWLAN
CHECKED BY: KRISTEN LANGAGER

REVISED BY
DATE REVISED

LAST REVISION 05-10-12
DATE PLOTTED => 15-MAY-2012
TIME PLOTTED => 07:57

Dist	COUNTY	ROUTE	POST MILES TOTAL PROJECT	SHEET No.	TOTAL SHEETS
05	SLO	1	R36.7/39.6	8	54

LICENSED LANDSCAPE ARCHITECT

5-14-12

PLANS APPROVAL DATE

THE STATE OF CALIFORNIA OR ITS OFFICERS OR AGENTS SHALL NOT BE RESPONSIBLE FOR THE ACCURACY OR COMPLETENESS OF SCANNED COPIES OF THIS PLAN SHEET.

LICENSED LANDSCAPE ARCHITECT SCOTT P. DOWLAN No. 4410 Signature 9-30-12 Renewal Date 5-14-12 Date STATE OF CALIFORNIA

NOTE:

FOR ACCURATE RIGHT OF WAY DATA, CONTACT RIGHT OF WAY ENGINEERING AT THE DISTRICT OFFICE.

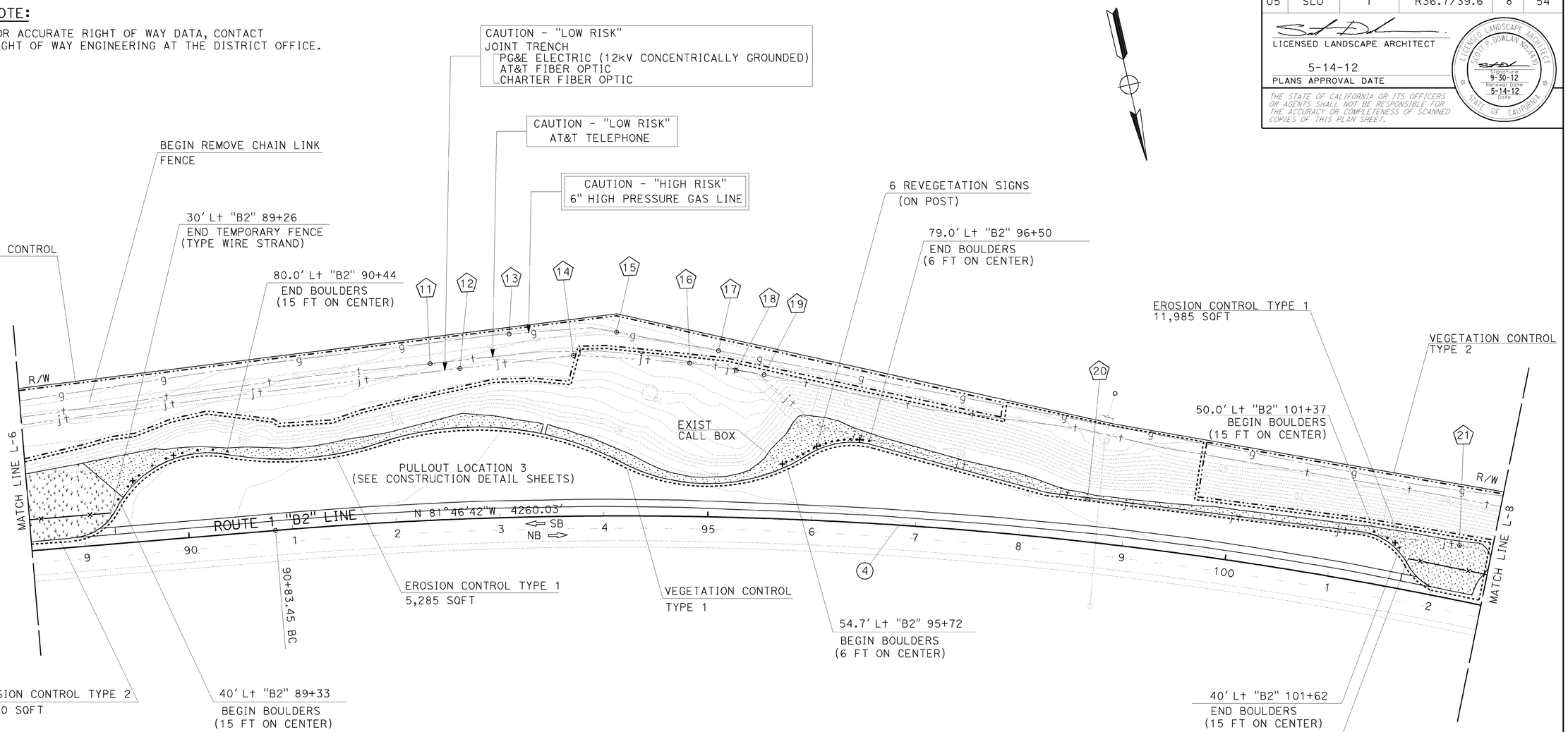

POSITIVE LOCATION INFORMATION

No. ⬠	DESCRIPTION	LOCATION	ELEVATION OG	ELEVATION TOP OF PIPE	METHOD
11	TELEPHONE	150.8' Lt "B2" 92+39.3	68.0	64.8	POTHOLING
12	JOINT TRENCH	145.1' Lt "B2" 92+66.4	70.0	66.1	POTHOLING
13	6" HIGH PRESSURE GAS	176.7' Lt "B2" 93+13.3	67.2	64.1	POTHOLING
14	JOINT TRENCH	154.8' Lt "B2" 93+72.5	66.6	63.7	POTHOLING
15	6" HIGH PRESSURE GAS	178.0' Lt "B2" 94+09.8	64.7	61.2	POTHOLING
16	JOINT TRENCH	147.8' Lt "B2" 94+80.4	63.6	60.1	POTHOLING
17	6" HIGH PRESSURE GAS	160.2' Lt "B2" 95+06.8	61.7	58.0	POTHOLING
18	JOINT TRENCH	141.9' Lt "B2" 95+23.8	61.8	58.7	POTHOLING
19	TELEPHONE	138.3' Lt "B2" 95+49.7	61.4	57.9	POTHOLING
20	JOINT TRENCH	40.7' Lt "B2" 98+62.2	79.3	75.8	POTHOLING
21	JOINT TRENCH	52.2' Lt "B2" 102+18.6	77.1	73.7	POTHOLING

CURVE DATA

No. ◯	R	Δ	T	L
4	4012.01'	17°9'15"	605.12'	1201.19'

LAYOUT L-7

SCALE: 1"=50'

STATE OF CALIFORNIA - DEPARTMENT OF TRANSPORTATION

Caltrans LANDSCAPE ARCHITECTURE

SENIOR LANDSCAPE ARCHITECT: DENNIS REEVES

CALCULATED-DESIGNED BY: SCOTT DOWLAN

CHECKED BY: KRISTEN LANGAGER

REVISED BY

DATE REVISED

LAST REVISION 05-10-12

DATE PLOTTED => 15-MAY-2012

TIME PLOTTED => 07:57

Dist	COUNTY	ROUTE	POST MILES TOTAL PROJECT	SHEET No.	TOTAL SHEETS
05	SLO	1	R36.7/39.6	9	54

LICENSED LANDSCAPE ARCHITECT

5-14-12

PLANS APPROVAL DATE

LICENSED LANDSCAPE ARCHITECT SCOTT P. DOWLAN No. 4470 STATE OF CALIFORNIA Expiration Date 9-30-12 Renewal Date 5-14-12 Date

THE STATE OF CALIFORNIA OR ITS OFFICERS OR AGENTS SHALL NOT BE RESPONSIBLE FOR THE ACCURACY OR COMPLETENESS OF SCANNED COPIES OF THIS PLAN SHEET.

NOTE:

FOR ACCURATE RIGHT OF WAY DATA, CONTACT RIGHT OF WAY ENGINEERING AT THE DISTRICT OFFICE.

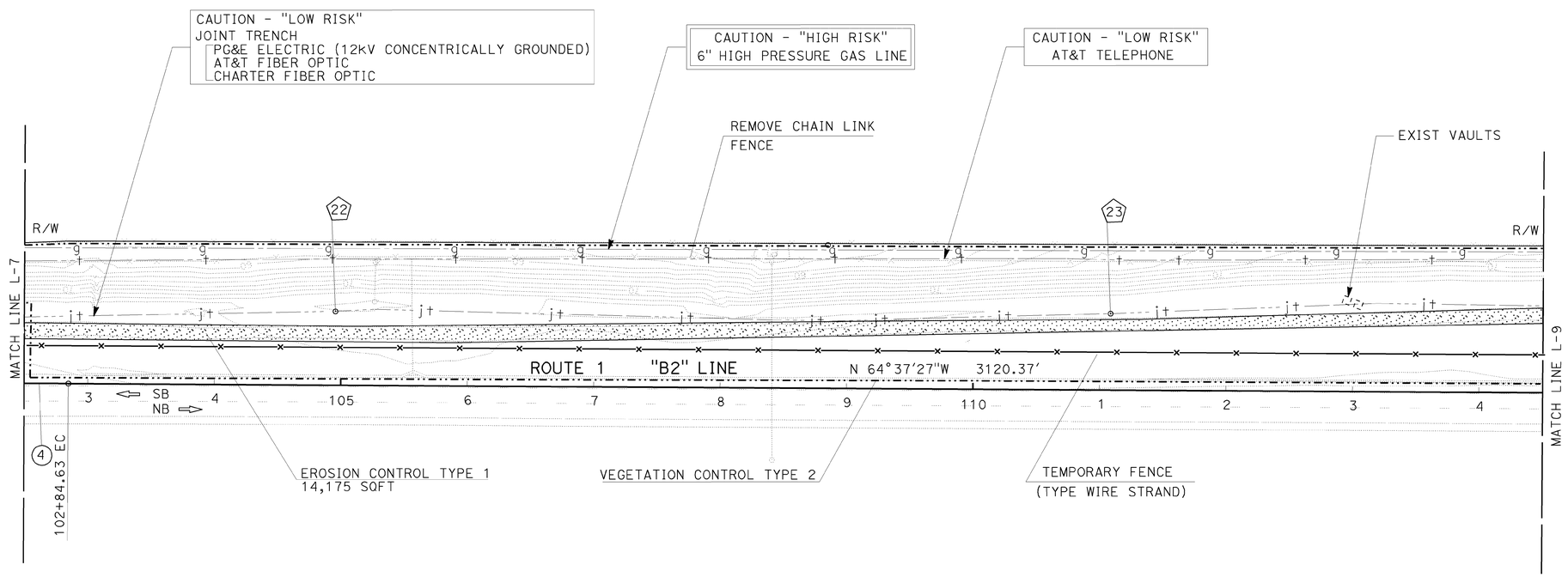

POSITIVE LOCATION INFORMATION

No. ⬠	DESCRIPTION	LOCATION	ELEVATION		METHOD
			OG	TOP OF PIPE	
22	JOINT TRENCH	58.4' Lt "B2" 104+95.6	74.0	70.1	POTHOLING
23	JOINT TRENCH	60.5' Lt "B2" 111+08.5	76.8	73.1	POTHOLING

CURVE DATA

No. ◯	R	Δ	T	L
4	4012.01'	17°9'15"	605.12'	1201.19

LAYOUT

SCALE: 1"=50'

L-8

STATE OF CALIFORNIA - DEPARTMENT OF TRANSPORTATION

Caltrans LANDSCAPE ARCHITECTURE

SENIOR LANDSCAPE ARCHITECT: DENNIS REEVES

CALCULATED-DESIGNED BY: SCOTT DOWLAN

CHECKED BY: KRISTEN LANGAGER

REVISED BY

DATE REVISED

LAST REVISION 05-10-12

DATE PLOTTED => 15-MAY-2012

TIME PLOTTED => 07:57

Dist	COUNTY	ROUTE	POST MILES TOTAL PROJECT	SHEET No.	TOTAL SHEETS
05	SLO	1	R36.7/39.6	10	54

LICENSED LANDSCAPE ARCHITECT

5-14-12
PLANS APPROVAL DATE

LICENSED LANDSCAPE ARCHITECT SCOTT P. DOWLAN No. 4470 STATE OF CALIFORNIA
Signature 9-30-12 Renewal Date 5-14-12 Date

THE STATE OF CALIFORNIA OR ITS OFFICERS OR AGENTS SHALL NOT BE RESPONSIBLE FOR THE ACCURACY OR COMPLETENESS OF SCANNED COPIES OF THIS PLAN SHEET.

NOTE:

FOR ACCURATE RIGHT OF WAY DATA, CONTACT RIGHT OF WAY ENGINEERING AT THE DISTRICT OFFICE.

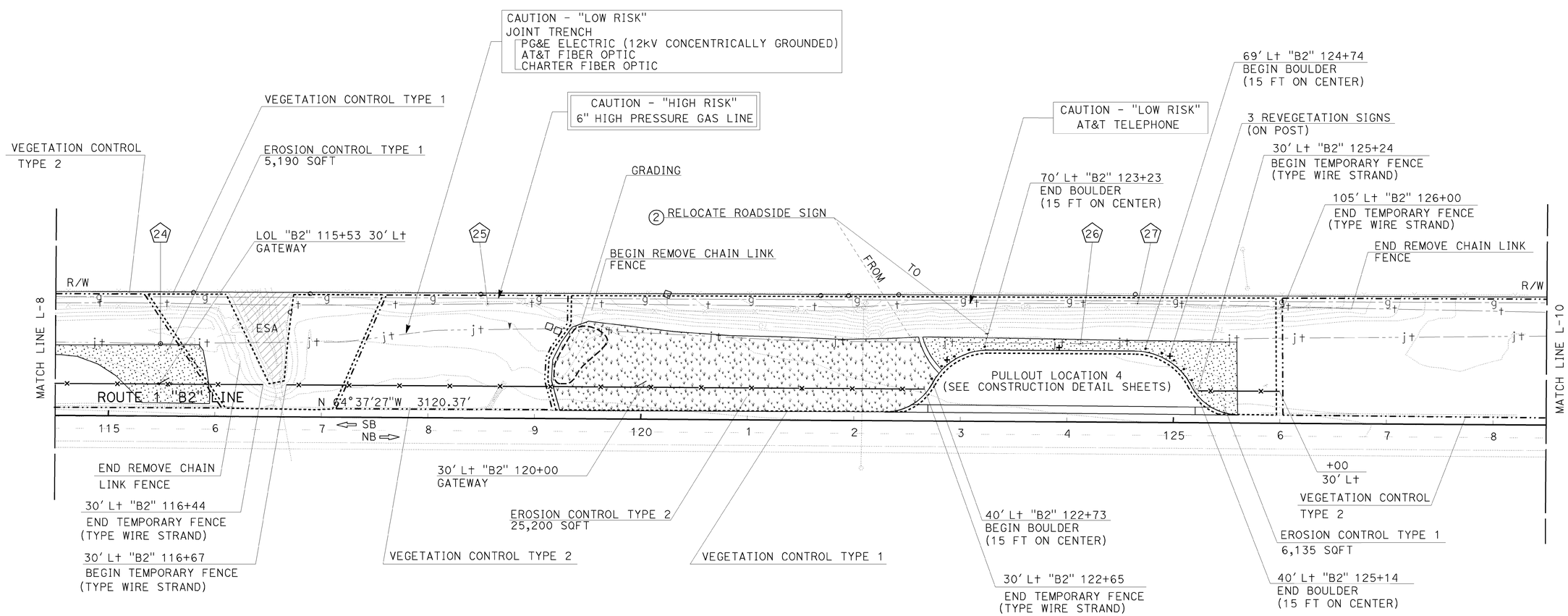

POSITIVE LOCATION INFORMATION

No. ⬠	DESCRIPTION	LOCATION	ELEVATION		METHOD
			OG	TOP OF PIPE	
24	JOINT TRENCH	67.9' Lt "B2" 115+48.6	76.4	73.0	POTHOLING
25	TELEPHONE	107.2' Lt "B2" 118+55.6	71.2	68.4	POTHOLING
26	JOINT TRENCH	73.4' Lt "B2" 124+12.6	72.1	68.9	POTHOLING
27	TELEPHONE	111.5' Lt "B2" 124+65.8	60.5	57.9	POTHOLING

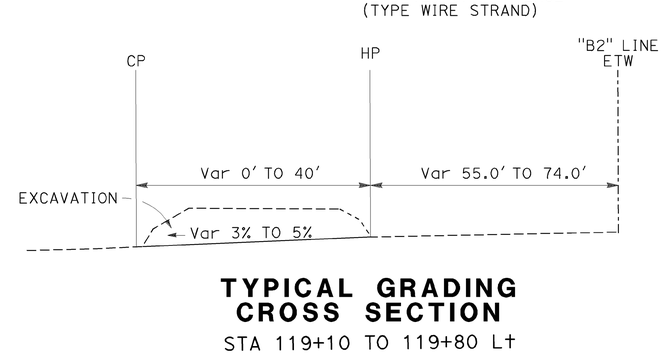

TYPICAL GRADING CROSS SECTION

STA 119+10 TO 119+80 Lt
NO SCALE

LAYOUT L-9

SCALE: 1"=50'

STATE OF CALIFORNIA - DEPARTMENT OF TRANSPORTATION
LANDSCAPE ARCHITECTURE

SENIOR LANDSCAPE ARCHITECT: DENNIS REEVES
CALCULATED-DESIGNED BY: SCOTT DOWLAN
CHECKED BY: KRISTEN LANGAGER
REVISED BY / DATE REVISED

LAST REVISION 05-10-12
DATE PLOTTED => 15-MAY-2012
TIME PLOTTED => 07:57

Dist	COUNTY	ROUTE	POST MILES TOTAL PROJECT	SHEET No.	TOTAL SHEETS
05	SLO	1	R36.7/39.6	11	54

LICENSED LANDSCAPE ARCHITECT

5-14-12
PLANS APPROVAL DATE

LICENSED LANDSCAPE ARCHITECT SCOTT P. DOWLAN No. 4470 STATE OF CALIFORNIA Expires 9-30-12 Renewal Date 5-14-12 Date

THE STATE OF CALIFORNIA OR ITS OFFICERS OR AGENTS SHALL NOT BE RESPONSIBLE FOR THE ACCURACY OR COMPLETENESS OF SCANNED COPIES OF THIS PLAN SHEET.

NOTE:

FOR ACCURATE RIGHT OF WAY DATA, CONTACT RIGHT OF WAY ENGINEERING AT THE DISTRICT OFFICE.

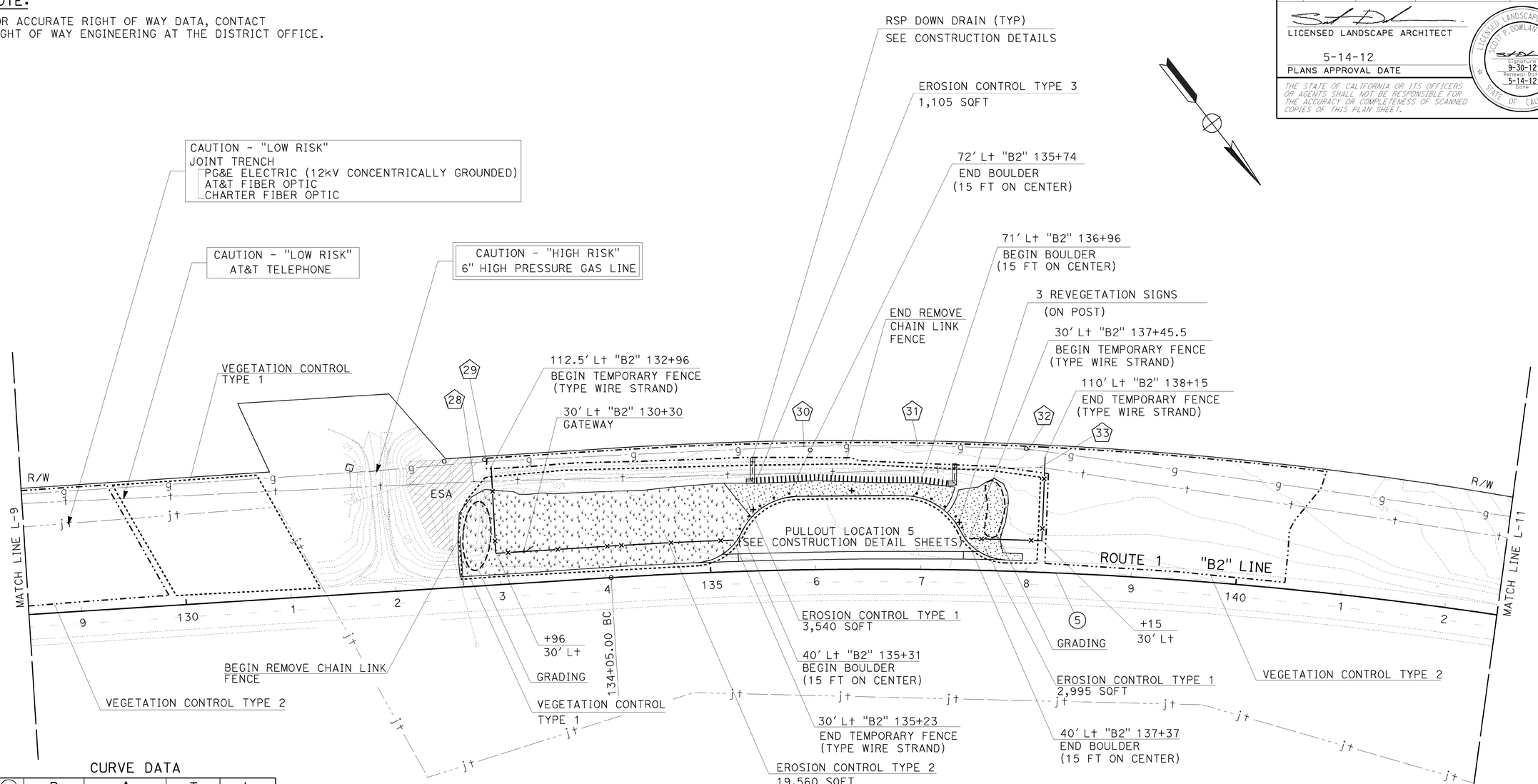

CURVE DATA

No. ◯	R	Δ	T	L
5	4012.10'	12°5'05"	424.69'	846.23'

POSITIVE LOCATION INFORMATION

No. ⬠	DESCRIPTION	LOCATION	ELEVATION		METHOD
			OG	TOP OF PIPE	
28	TELEPHONE	99.3' Lt "B2" 132+80.6	50.4	45.3	POTHOLING
29	6" HIGH PRESSURE GAS	117.7' Lt "B2" 132+93.7	51.9	48.4	POTHOLING
30	6" HIGH PRESSURE GAS	117.5' Lt "B2" 135+90.1	52.5	49.9	POTHOLING
31	6" HIGH PRESSURE GAS	118.0' Lt "B2" 136+96.1	52.1	48.7	POTHOLING
32	6" HIGH PRESSURE GAS	116.6' Lt "B2" 137+98.8	52.1	48.8	POTHOLING
33	TELEPHONE	99.8' Lt "B2" 138+09.7	52.1	48.7	POTHOLING

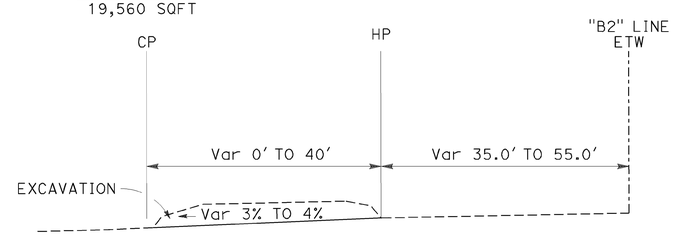

TYPICAL GRADING CROSS SECTION

STA 132+64 TO 132+95 Lt
STA 137+60 TO 137+80 Lt
NO SCALE

SCALE: 1"=50'

LAYOUT L-10

REVISED BY	DATE REVISED

CALCULATED-DESIGNED BY	CHECKED BY
SCOTT DOWLAN	KRISTEN LANGAGER

SENIOR LANDSCAPE ARCHITECT: DENNIS REEVES

STATE OF CALIFORNIA - DEPARTMENT OF TRANSPORTATION
Caltrans LANDSCAPE ARCHITECTURE

LAST REVISION 05-10-12 | DATE PLOTTED => 15-MAY-2012 | TIME PLOTTED => 07:57

Dist	COUNTY	ROUTE	POST MILES TOTAL PROJECT	SHEET No.	TOTAL SHEETS
05	SLO	1	R36.7/39.6	12	54

LICENSED LANDSCAPE ARCHITECT

5-14-12
PLANS APPROVAL DATE

LICENSED LANDSCAPE ARCHITECT
SCOTT P. DOWLAN No. 4470
Signature
9-30-12
Renewal Date
5-14-12
Date
STATE OF CALIFORNIA

THE STATE OF CALIFORNIA OR ITS OFFICERS OR AGENTS SHALL NOT BE RESPONSIBLE FOR THE ACCURACY OR COMPLETENESS OF SCANNED COPIES OF THIS PLAN SHEET.

NOTE:

FOR ACCURATE RIGHT OF WAY DATA, CONTACT
RIGHT OF WAY ENGINEERING AT THE DISTRICT OFFICE.

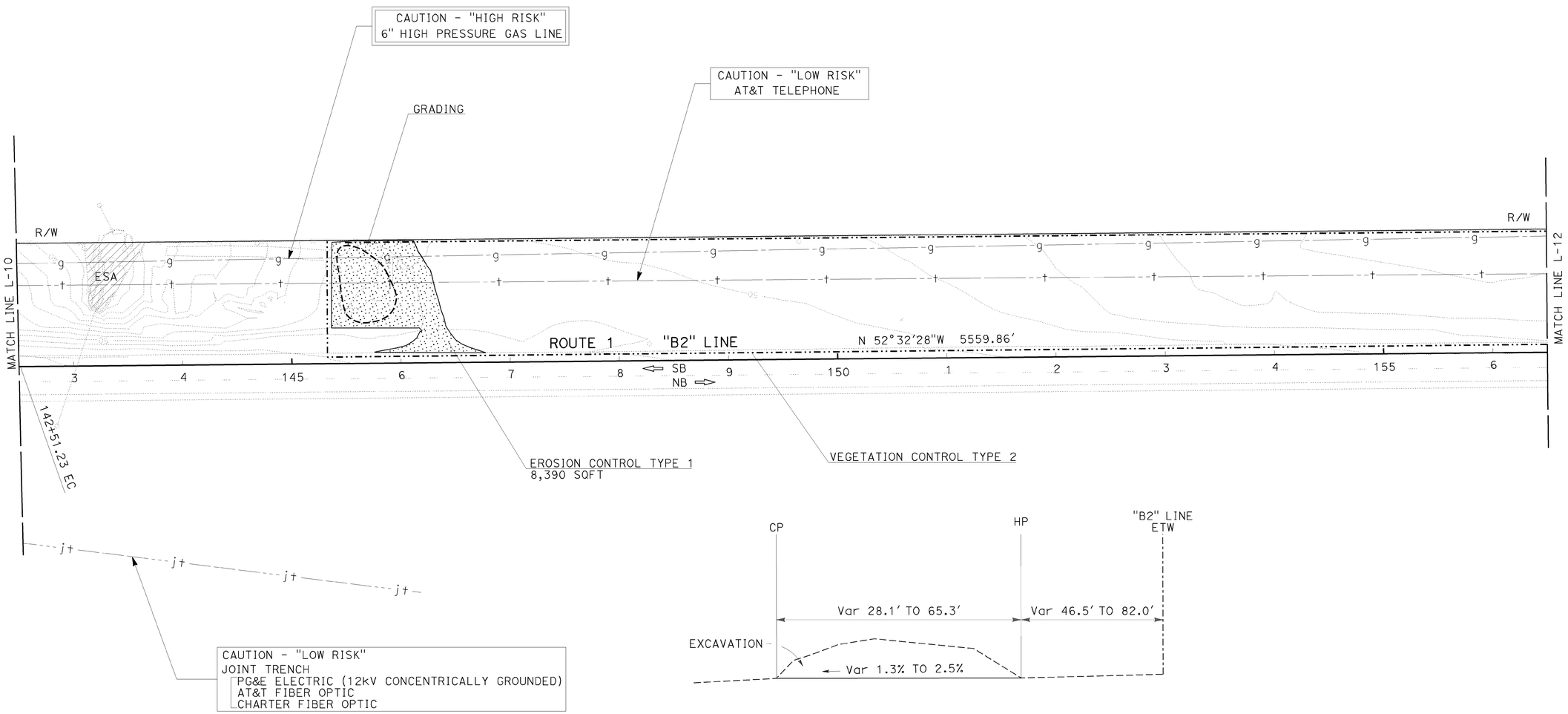

TYPICAL GRADING CROSS SECTION

STA 145+40 TO 145+90 L+
NO SCALE

LAYOUT

SCALE: 1"=50'

L-11

REVISED BY | DATE REVISED
SCOTT DOWLAN | KRISTEN LANGAGER
CALCULATED-DESIGNED BY | CHECKED BY
SENIOR LANDSCAPE ARCHITECT | DENNIS REEVES
STATE OF CALIFORNIA - DEPARTMENT OF TRANSPORTATION
Caltrans LANDSCAPE ARCHITECTURE

LAST REVISION 05-10-12 | DATE PLOTTED => 15-MAY-2012 | TIME PLOTTED => 07:57

Dist	COUNTY	ROUTE	POST MILES TOTAL PROJECT	SHEET No.	TOTAL SHEETS
05	SLO	1	R36.7/39.6	13	54

LICENSED LANDSCAPE ARCHITECT

5-14-12

PLANS APPROVAL DATE

LICENSED LANDSCAPE ARCHITECT SCOTT P. DOWLAN No. 4470 STATE OF CALIFORNIA Signature 9-30-12 Renewal Date 5-14-12 Date

THE STATE OF CALIFORNIA OR ITS OFFICERS OR AGENTS SHALL NOT BE RESPONSIBLE FOR THE ACCURACY OR COMPLETENESS OF SCANNED COPIES OF THIS PLAN SHEET.

NOTE:

FOR ACCURATE RIGHT OF WAY DATA, CONTACT RIGHT OF WAY ENGINEERING AT THE DISTRICT OFFICE.

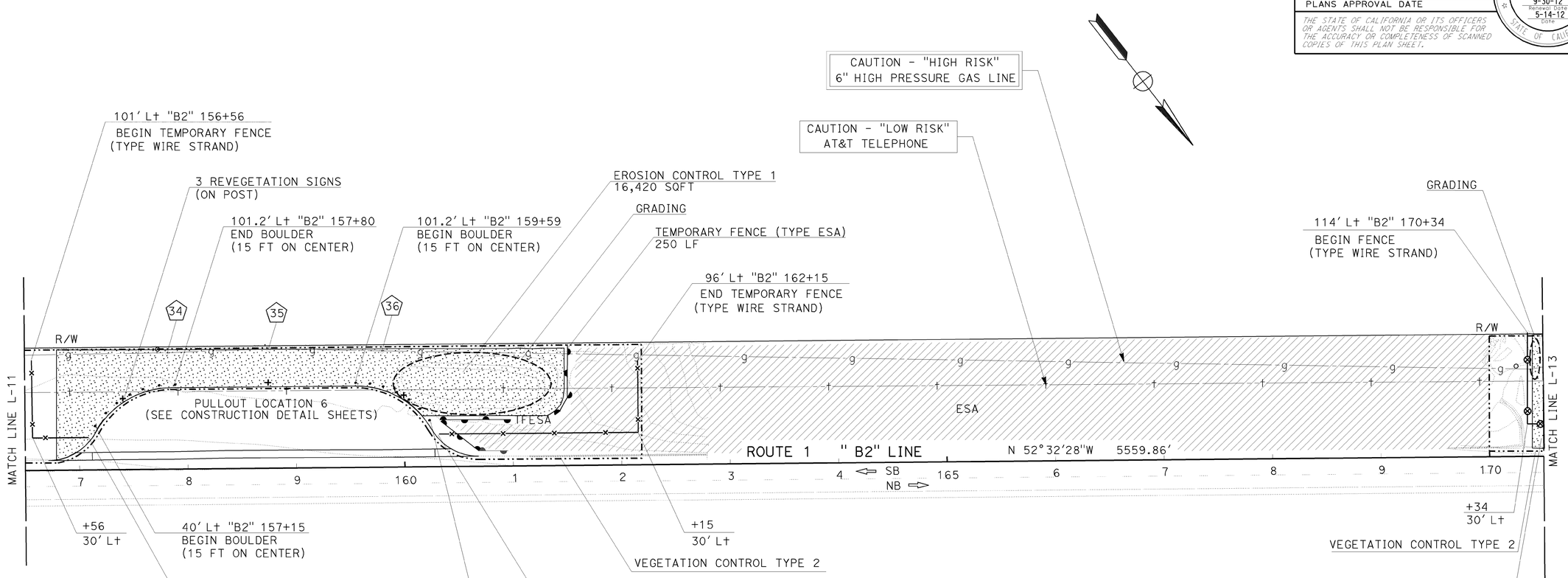

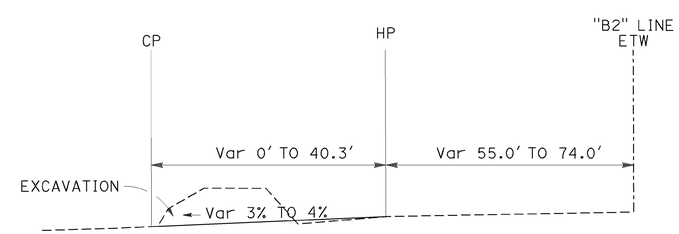

TYPICAL GRADING CROSS SECTION

STA 160+68.17 TO 161+30.00 Lt
STA 170+40.00 TO 170+48.00 Lt
NO SCALE

POSITIVE LOCATION INFORMATION

No.	DESCRIPTION	LOCATION	ELEVATION		METHOD
			OG	TOP OF PIPE	
34	6" HIGH PRESSURE GAS	107.4' Lt "B2" 157+81.7	41.4	38.0	POTHOLING
35	6" HIGH PRESSURE GAS	109.8' Lt "B2" 158+75.0	40.8	37.2	POTHOLING
36	6" HIGH PRESSURE GAS	107.2' Lt "B2" 159+79.8	40.8	37.3	POTHOLING

LAYOUT

SCALE: 1"=50'

L-12

STATE OF CALIFORNIA - DEPARTMENT OF TRANSPORTATION
LANDSCAPE ARCHITECTURE

SENIOR LANDSCAPE ARCHITECT: DENNIS REEVES
CALCULATED-DESIGNED BY: SCOTT DOWLAN
CHECKED BY: KRISTEN LANGAGER
REVISED BY
DATE REVISED

LAST REVISION 05-10-12
DATE PLOTTED => 15-MAY-2012
TIME PLOTTED => 07:57

Dist	COUNTY	ROUTE	POST MILES TOTAL PROJECT	SHEET No.	TOTAL SHEETS
05	SLO	1	R36.7/39.6	14	54

LICENSED LANDSCAPE ARCHITECT

5-14-12
PLANS APPROVAL DATE

LICENSED LANDSCAPE ARCHITECT SCOTT P. DOWLAN No. 4470 STATE OF CALIFORNIA Expiration Date 9-30-12 Renewal Date 5-14-12 Date

THE STATE OF CALIFORNIA OR ITS OFFICERS OR AGENTS SHALL NOT BE RESPONSIBLE FOR THE ACCURACY OR COMPLETENESS OF SCANNED COPIES OF THIS PLAN SHEET.

NOTE:

FOR ACCURATE RIGHT OF WAY DATA, CONTACT
RIGHT OF WAY ENGINEERING AT THE DISTRICT OFFICE.

POSITIVE LOCATION INFORMATION

No.	DESCRIPTION	LOCATION	ELEVATION OG	ELEVATION TOP OF PIPE	METHOD
37	6" HIGH PRESSURE GAS	88.3' Lt "B2" 170+84.4	36.9	33.3	POTHOLING
38	6" HIGH PRESSURE GAS	106.4' Lt "B2" 171+87.5	38.9	35.1	POTHOLING
39	6" HIGH PRESSURE GAS	108.5' Lt "B2" 177+40.5	39.7	35.9	POTHOLING

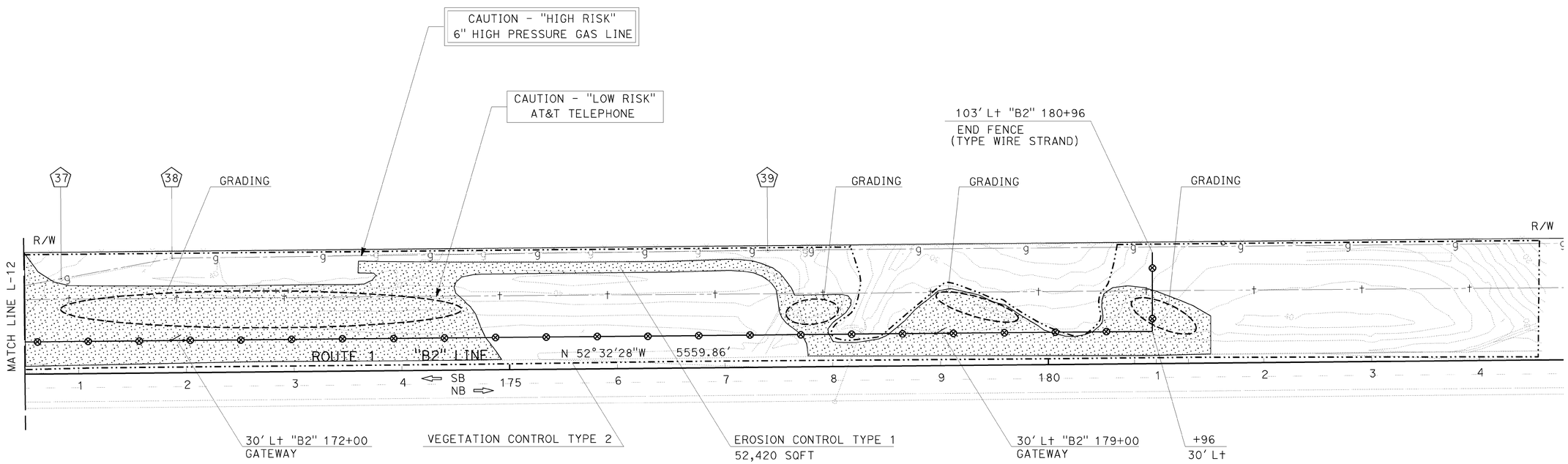

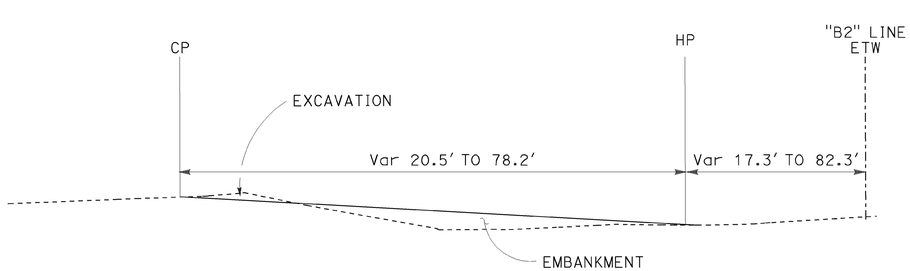

TYPICAL GRADING CROSS SECTION

STA 170+80 TO 174+60 Lt
NO SCALE

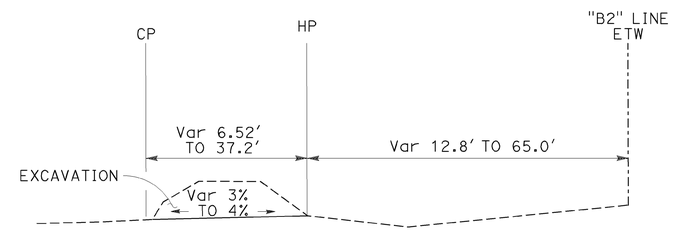

TYPICAL GRADING CROSS SECTION

STA 177+50 TO 178+10 Lt
STA 178+90 TO 179+70 Lt
STA 180+80 TO 181+30 Lt
NO SCALE

SCALE: 1"=50'

LAYOUT L-13

STATE OF CALIFORNIA - DEPARTMENT OF TRANSPORTATION
Caltrans LANDSCAPE ARCHITECTURE

SENIOR LANDSCAPE ARCHITECT: DENNIS REEVES
CALCULATED-DESIGNED BY: SCOTT DOWLAN
CHECKED BY: KRISTEN LANGAGER
REVISED BY
DATE REVISED

LAST REVISION 05-10-12
DATE PLOTTED => 15-MAY-2012
TIME PLOTTED => 07:57

Dist	COUNTY	ROUTE	POST MILES TOTAL PROJECT	SHEET No.	TOTAL SHEETS
05	SLO	1	R36.7/39.6	15	54

REGISTERED CIVIL ENGINEER 5-14-12 DATE

5-14-12
PLANS APPROVAL DATE

REGISTERED PROFESSIONAL ENGINEER POH LIM No. 76644 Exp. 12-31-12 CIVIL STATE OF CALIFORNIA

THE STATE OF CALIFORNIA OR ITS OFFICERS OR AGENTS SHALL NOT BE RESPONSIBLE FOR THE ACCURACY OR COMPLETENESS OF SCANNED COPIES OF THIS PLAN SHEET.

NOTE:

1. PLACE SAFETY EDGE AS SHOWN AT ALL PULLOUTS.
2. DIMENSIONS OF THE PAVEMENT STRUCTURES (STRUCTURAL SECTIONS) ARE SUBJECT TO TOLERANCES SPECIFIED IN THE STANDARD SPECIFICATIONS.
3. SEE LAYOUTS FOR UTILITIES AND POSITIVE LOCATION INFORMATION.
4. FOR ACCURATE RIGHT OF WAY DATA, CONTACT RIGHT OF WAY ENGINEERING AT THE DISTRICT OFFICE.

TYPICAL STRUCTURAL SECTIONS

1. 0.30′ HMA (TYPE A)
   1.50′ CLASS 2 AB
2. 1.00′ CLASS 2 AB
3. 0.21′ POROUS PAVEMENT SYSTEM
   0.83′ CLASS 2 AB
4. Exist
   0.21′ AC
   0.67′ AB
   0.50′ AS

CURVE DATA

No.	R	Δ	T	L
3	5000.00′	5°2′52″	220.40′	440.51′
6	50.00′	52°37′25″	24.72′	45.92′
7	70.00′	60°41′33″	40.98′	74.15′
8	70.00′	54°58′51″	36.42′	67.17′
9	50.00′	55°21′48″	26.23′	48.31′

LEGEND

- HMA (TYPE A)
- ASPHALT COLOR COATING
- POROUS PAVEMENT SYSTEM
- CLASS 2 AB
- TRAFFIC STRIPE DETAIL NUMBER

ABBREVIATION

Ang Pt ANGLE POINT

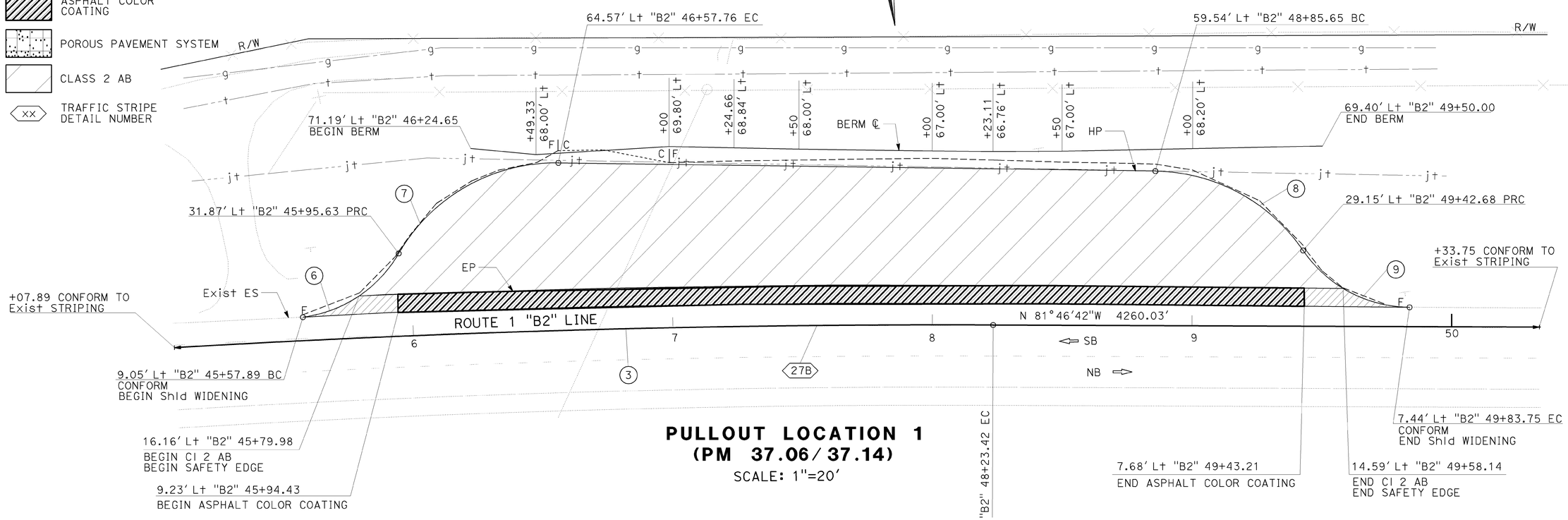

PULLOUT LOCATION 1
(PM 37.06/37.14)

SCALE: 1″=20′

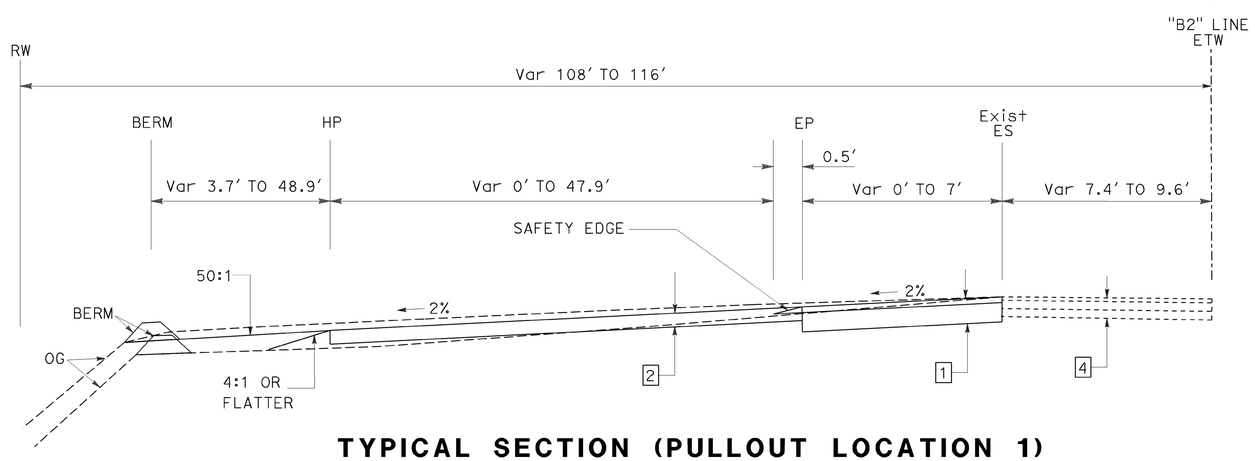

TYPICAL SECTION (PULLOUT LOCATION 1)

NO SCALE

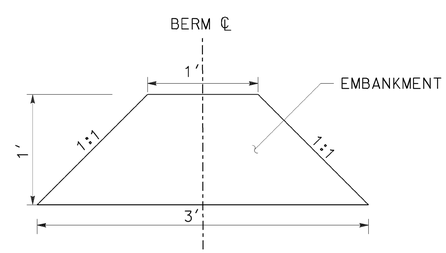

BERM

NO SCALE

CONSTRUCTION DETAILS

SCALE AS SHOWN

C-1

STATE OF CALIFORNIA - DEPARTMENT OF TRANSPORTATION
DESIGN

FUNCTIONAL SUPERVISOR: JOHN FOUCHE
CALCULATED-DESIGNED BY: POH LIM
CHECKED BY: JOHN FOUCHE
REVISED BY / DATE REVISED

LAST REVISION 05-10-12
DATE PLOTTED => 15-MAY-2012
TIME PLOTTED => 07:57

Dist	COUNTY	ROUTE	POST MILES TOTAL PROJECT	SHEET No.	TOTAL SHEETS
05	SLO	1	R36.7/39.6	16	54

REGISTERED CIVIL ENGINEER 5-14-12 DATE

5-14-12
PLANS APPROVAL DATE

REGISTERED PROFESSIONAL ENGINEER POH LIM No. 76644 Exp. 12-31-12 CIVIL STATE OF CALIFORNIA

THE STATE OF CALIFORNIA OR ITS OFFICERS OR AGENTS SHALL NOT BE RESPONSIBLE FOR THE ACCURACY OR COMPLETENESS OF SCANNED COPIES OF THIS PLAN SHEET.

NOTE:

FOR ACCURATE RIGHT OF WAY DATA, CONTACT RIGHT OF WAY ENGINEERING AT THE DISTRICT OFFICE.

CURVE DATA

No.	R	Δ	T	L
10	50.00′	54°34′18"	25.79′	47.62′
11	100.00′	54°27′40"	51.46′	95.05′

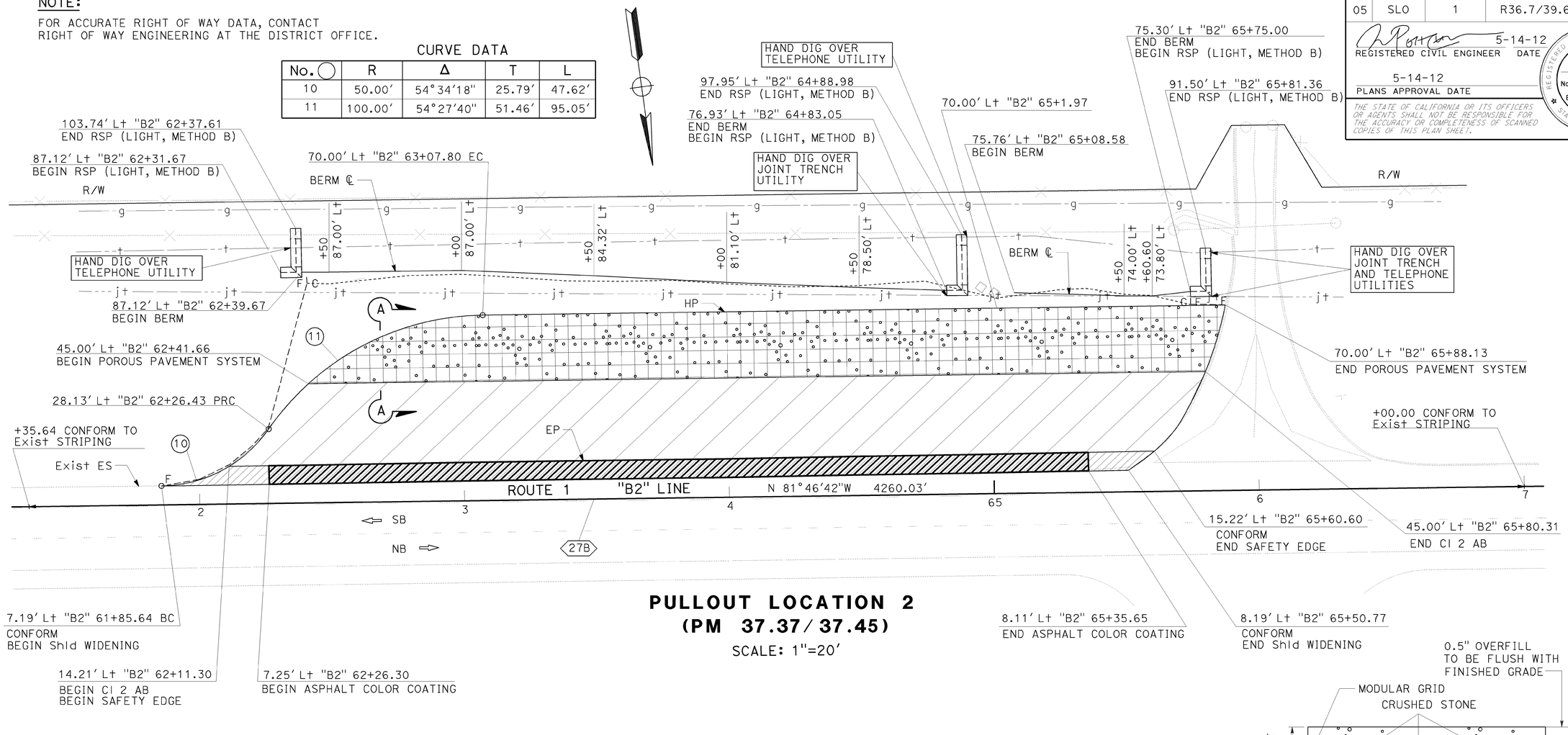

PULLOUT LOCATION 2
(PM 37.37/37.45)
SCALE: 1"=20′

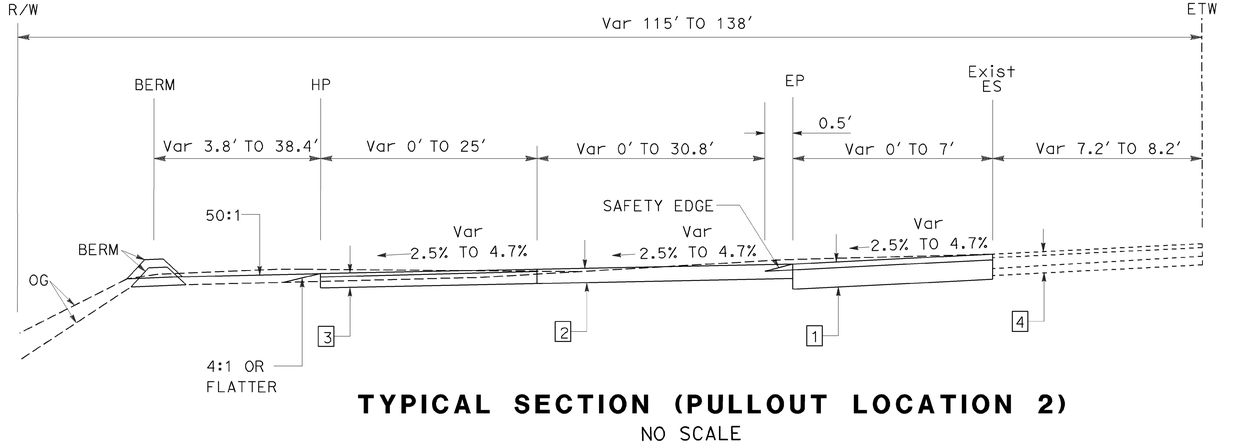

TYPICAL SECTION (PULLOUT LOCATION 2)
NO SCALE

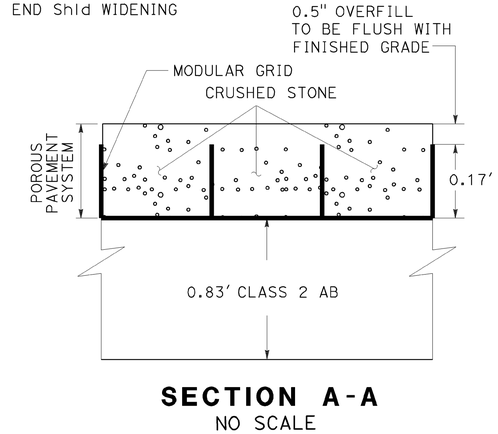

SECTION A-A
NO SCALE

CONSTRUCTION DETAILS
SCALE AS SHOWN
C-2

REVISED BY | DATE REVISED
POH LIM | JOHN FOUCHE
CALCULATED-DESIGNED BY | CHECKED BY
FUNCTIONAL SUPERVISOR | JOHN FOUCHE
STATE OF CALIFORNIA - DEPARTMENT OF TRANSPORTATION
DESIGN
Caltrans

LAST REVISION DATE PLOTTED => 15-MAY-2012
05-10-12 TIME PLOTTED => 07:57

Dist	COUNTY	ROUTE	POST MILES TOTAL PROJECT	SHEET No.	TOTAL SHEETS
05	SLO	1	R36.7/39.6	17	54

REGISTERED CIVIL ENGINEER 5-14-12 DATE

5-14-12
PLANS APPROVAL DATE

REGISTERED PROFESSIONAL ENGINEER POH LIM No. 76644 Exp. 12-31-12 CIVIL STATE OF CALIFORNIA

THE STATE OF CALIFORNIA OR ITS OFFICERS OR AGENTS SHALL NOT BE RESPONSIBLE FOR THE ACCURACY OR COMPLETENESS OF SCANNED COPIES OF THIS PLAN SHEET.

NOTE:

FOR ACCURATE RIGHT OF WAY DATA, CONTACT
RIGHT OF WAY ENGINEERING AT THE DISTRICT OFFICE.

CURVE DATA

No. ◯	R	Δ	T	L
4	4012.01′	17°9′15"	605.12′	1201.19′
12	50.00′	58°13′23"	27.84′	50.81′
13	100.00′	72°59′05"	73.98′	127.38′
14	300.00′	28°22′43"	75.85′	148.59′
15	300.00′	46°2′53"	127.49′	241.11′
16	180.00′	59°44′40"	103.39′	187.69′

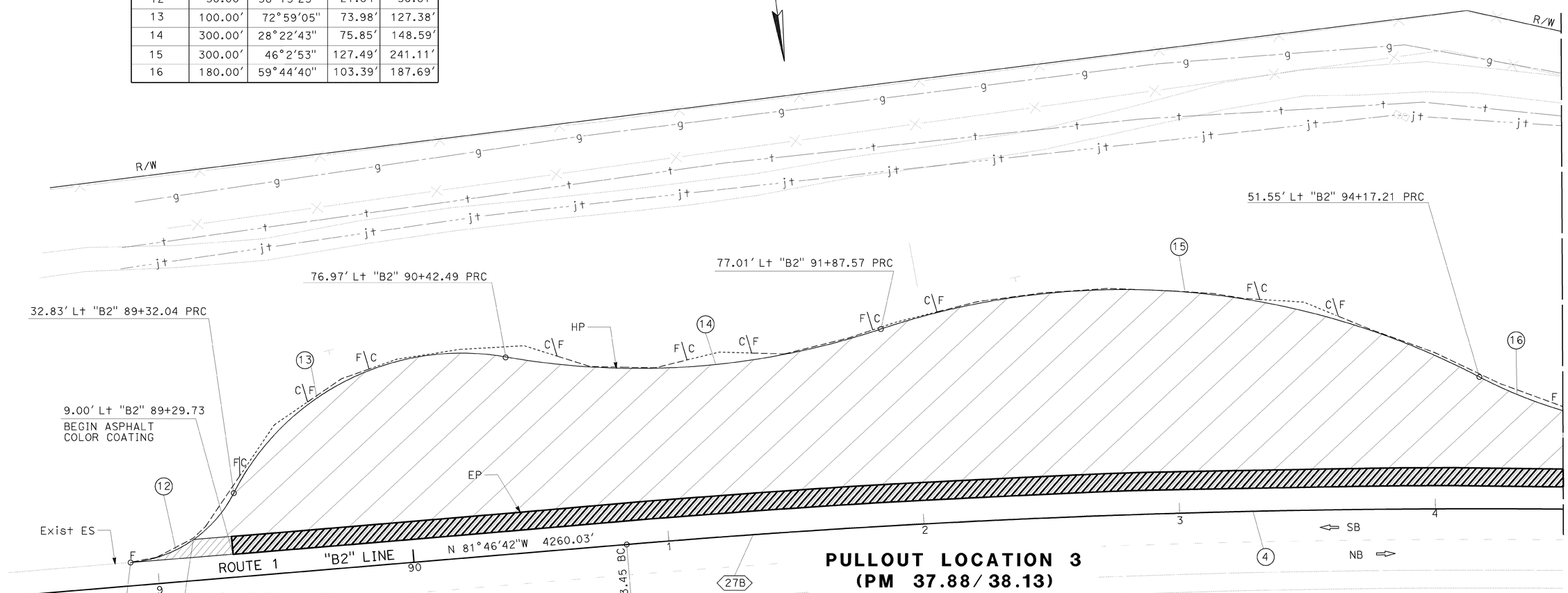

PULLOUT LOCATION 3
(PM 37.88/38.13)
SCALE: 1"=20′

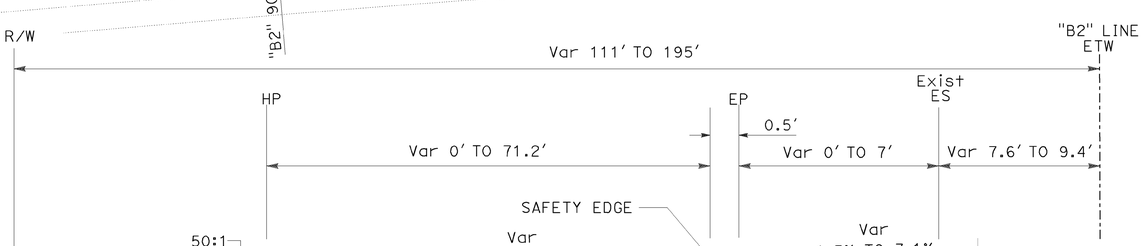

TYPICAL SECTION (PULLOUT LOCATION 3)
NO SCALE

CONSTRUCTION DETAILS
SCALE AS SHOWN **C-3**

STATE OF CALIFORNIA - DEPARTMENT OF TRANSPORTATION
DESIGN
FUNCTIONAL SUPERVISOR: JOHN FOUCHE
CALCULATED-DESIGNED BY: POH LIM
CHECKED BY: JOHN FOUCHE
REVISED BY / DATE REVISED

LAST REVISION 05-10-12
DATE PLOTTED => 15-MAY-2012
TIME PLOTTED => 07:57

Dist	COUNTY	ROUTE	POST MILES TOTAL PROJECT	SHEET No.	TOTAL SHEETS
05	SLO	1	R36.7/39.6	18	54

REGISTERED CIVIL ENGINEER 5-14-12 DATE

5-14-12
PLANS APPROVAL DATE

REGISTERED PROFESSIONAL ENGINEER
POH LIM
No. 76644
Exp. 12-31-12
CIVIL
STATE OF CALIFORNIA

THE STATE OF CALIFORNIA OR ITS OFFICERS OR AGENTS SHALL NOT BE RESPONSIBLE FOR THE ACCURACY OR COMPLETENESS OF SCANNED COPIES OF THIS PLAN SHEET.

NOTE:

FOR ACCURATE RIGHT OF WAY DATA, CONTACT RIGHT OF WAY ENGINEERING AT THE DISTRICT OFFICE.

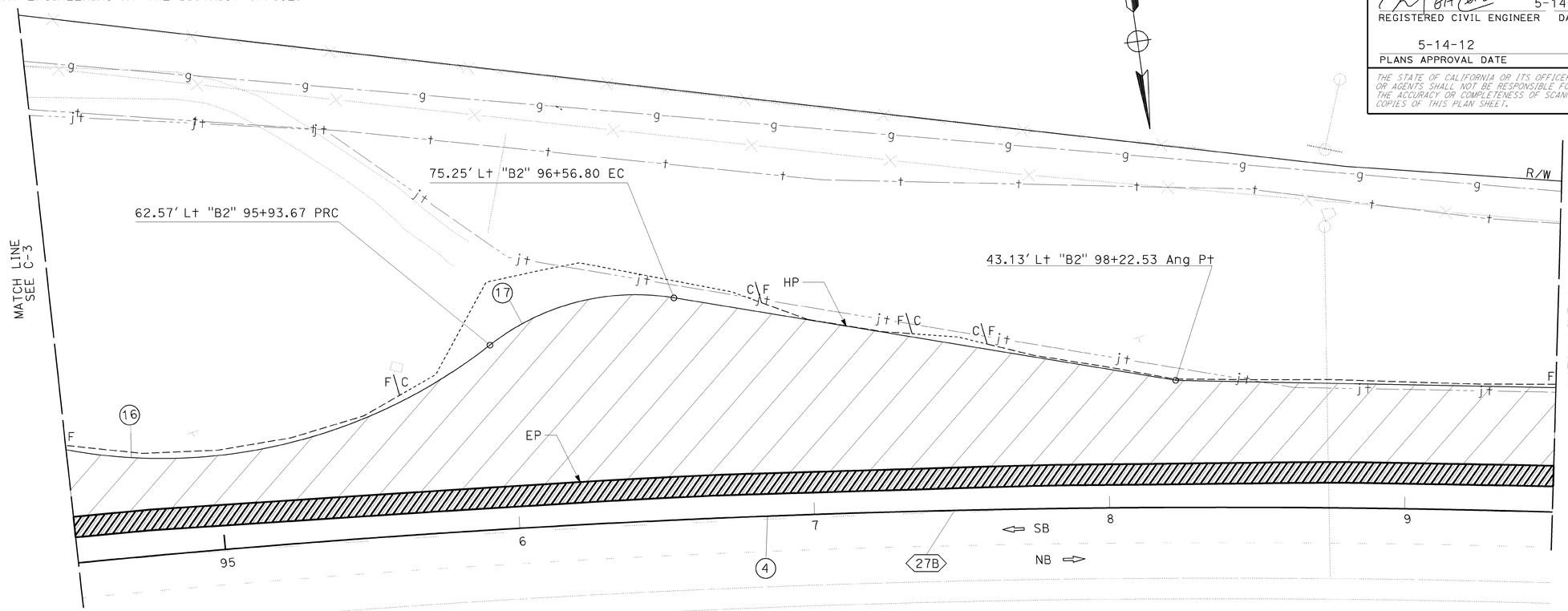

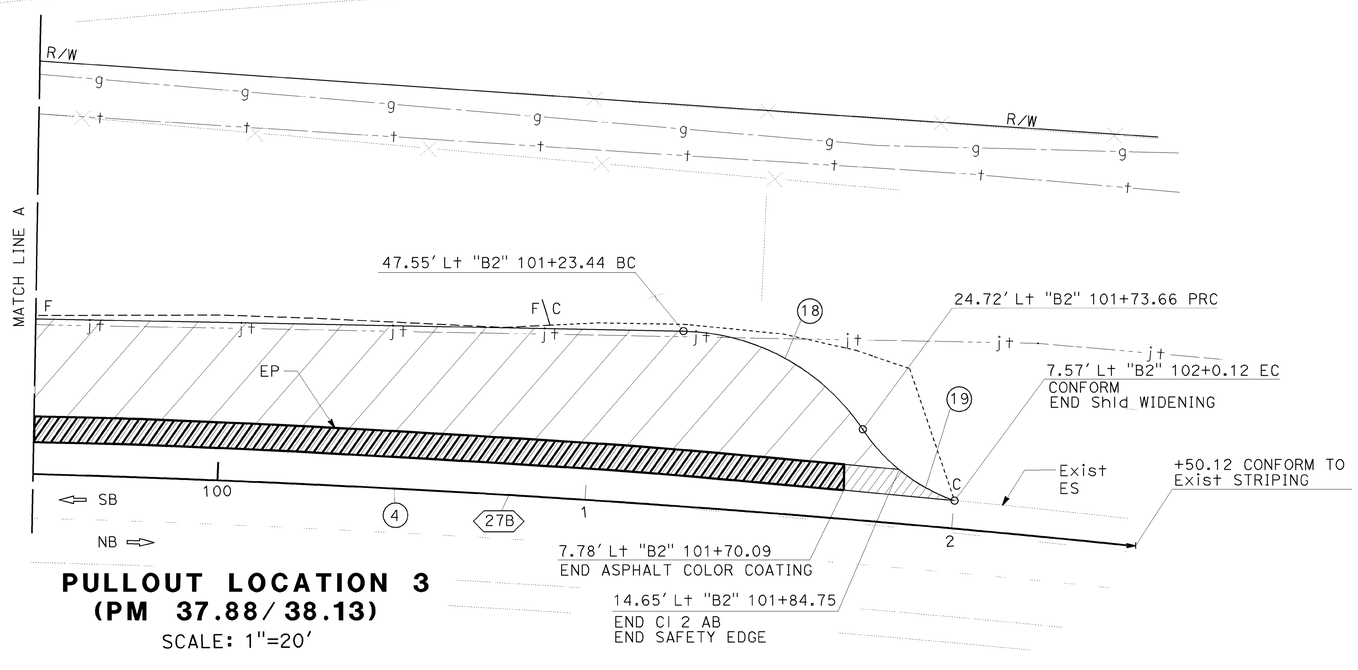

CURVE DATA

No. ◯	R	Δ	T	L
4	4012.01'	17°9'15"	605.12'	1201.19'
16	180.00'	59°44'40"	103.39'	187.69'
17	80.00'	45°28'33"	35.18'	66.29'
18	60.00'	55°10'24"	31.35'	57.78'
19	50.00'	36°52'28"	16.67'	32.18'

PULLOUT LOCATION 3
(PM 37.88/38.13)
SCALE: 1"=20'

CONSTRUCTION DETAILS
SCALE AS SHOWN

C-4

REVISED BY | DATE REVISED
POH LIM | JOHN FOUCHE
CALCULATED-DESIGNED BY | CHECKED BY
FUNCTIONAL SUPERVISOR
JOHN FOUCHE

STATE OF CALIFORNIA - DEPARTMENT OF TRANSPORTATION
Caltrans
DESIGN

LAST REVISION 05-10-12 | DATE PLOTTED => 15-MAY-2012 | TIME PLOTTED => 07:57

Dist	COUNTY	ROUTE	POST MILES TOTAL PROJECT	SHEET No.	TOTAL SHEETS
05	SLO	1	R36.7/39.6	19	54

REGISTERED CIVIL ENGINEER 5-14-12 DATE

5-14-12
PLANS APPROVAL DATE

REGISTERED PROFESSIONAL ENGINEER POH LIM No. 76644 Exp. 12-31-12 CIVIL STATE OF CALIFORNIA

THE STATE OF CALIFORNIA OR ITS OFFICERS OR AGENTS SHALL NOT BE RESPONSIBLE FOR THE ACCURACY OR COMPLETENESS OF SCANNED COPIES OF THIS PLAN SHEET.

NOTE:

FOR ACCURATE RIGHT OF WAY DATA, CONTACT RIGHT OF WAY ENGINEERING AT THE DISTRICT OFFICE.

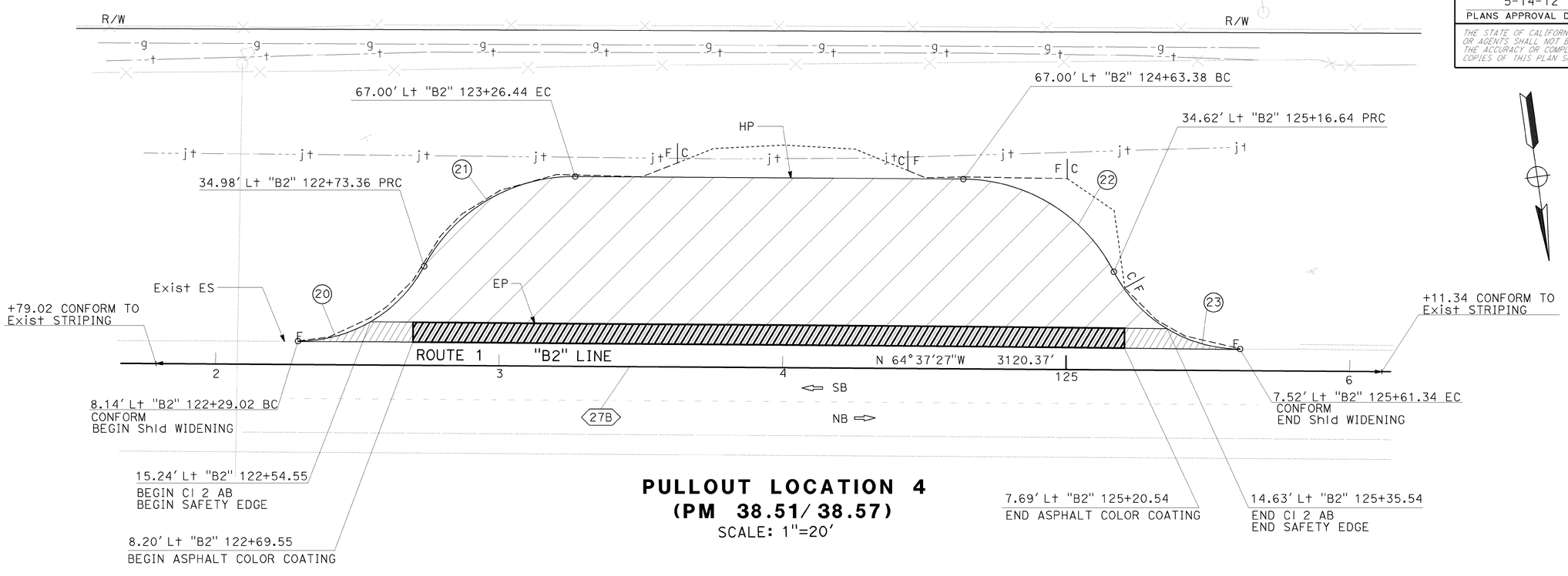

PULLOUT LOCATION 4
(PM 38.51/38.57)
SCALE: 1"=20'

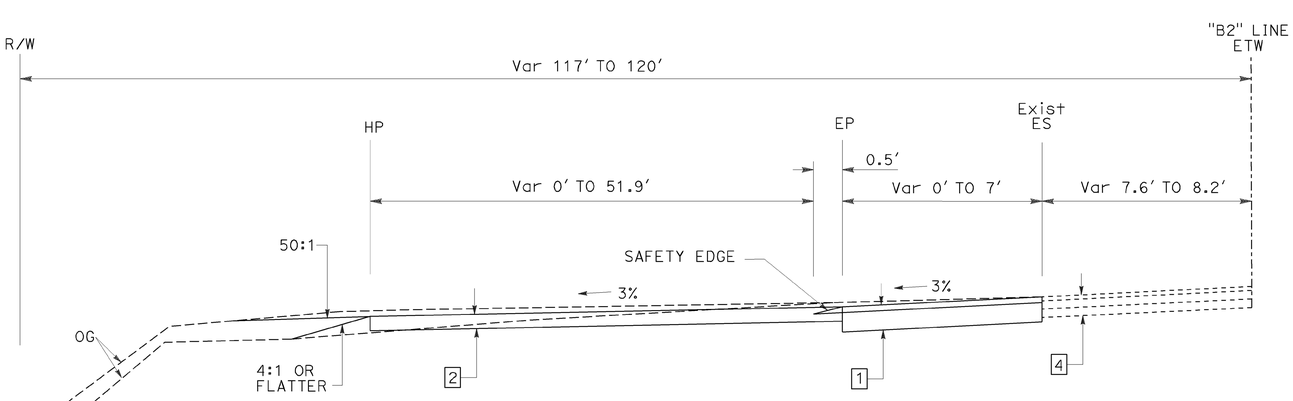

TYPICAL SECTION (PULLOUT LOCATION 4)
NO SCALE

CURVE DATA

No. ◯	R	Δ	T	L
20	50.00'	62°20'05"	30.24'	54.40'
21	60.00'	62°12'19"	36.20'	65.14'
22	60.00'	62°35'18"	36.47'	65.54'
23	50.00'	62°56'45"	30.61'	54.93'

CONSTRUCTION DETAILS
SCALE AS SHOWN

C-5

STATE OF CALIFORNIA - DEPARTMENT OF TRANSPORTATION
Caltrans
DESIGN

FUNCTIONAL SUPERVISOR: JOHN FOUCHE
CALCULATED-DESIGNED BY: POH LIM
CHECKED BY: JOHN FOUCHE
REVISED BY
DATE REVISED

LAST REVISION 05-10-12
DATE PLOTTED => 15-MAY-2012
TIME PLOTTED => 07:57

Dist	COUNTY	ROUTE	POST MILES TOTAL PROJECT	SHEET No.	TOTAL SHEETS
05	SLO	1	R36.7/39.6	20	54

REGISTERED CIVIL ENGINEER 5-14-12 DATE

5-14-12
PLANS APPROVAL DATE

REGISTERED PROFESSIONAL ENGINEER POH LIM No. 76644 Exp. 12-31-12 CIVIL STATE OF CALIFORNIA

THE STATE OF CALIFORNIA OR ITS OFFICERS OR AGENTS SHALL NOT BE RESPONSIBLE FOR THE ACCURACY OR COMPLETENESS OF SCANNED COPIES OF THIS PLAN SHEET.

NOTE:

FOR ACCURATE RIGHT OF WAY DATA, CONTACT RIGHT OF WAY ENGINEERING AT THE DISTRICT OFFICE.

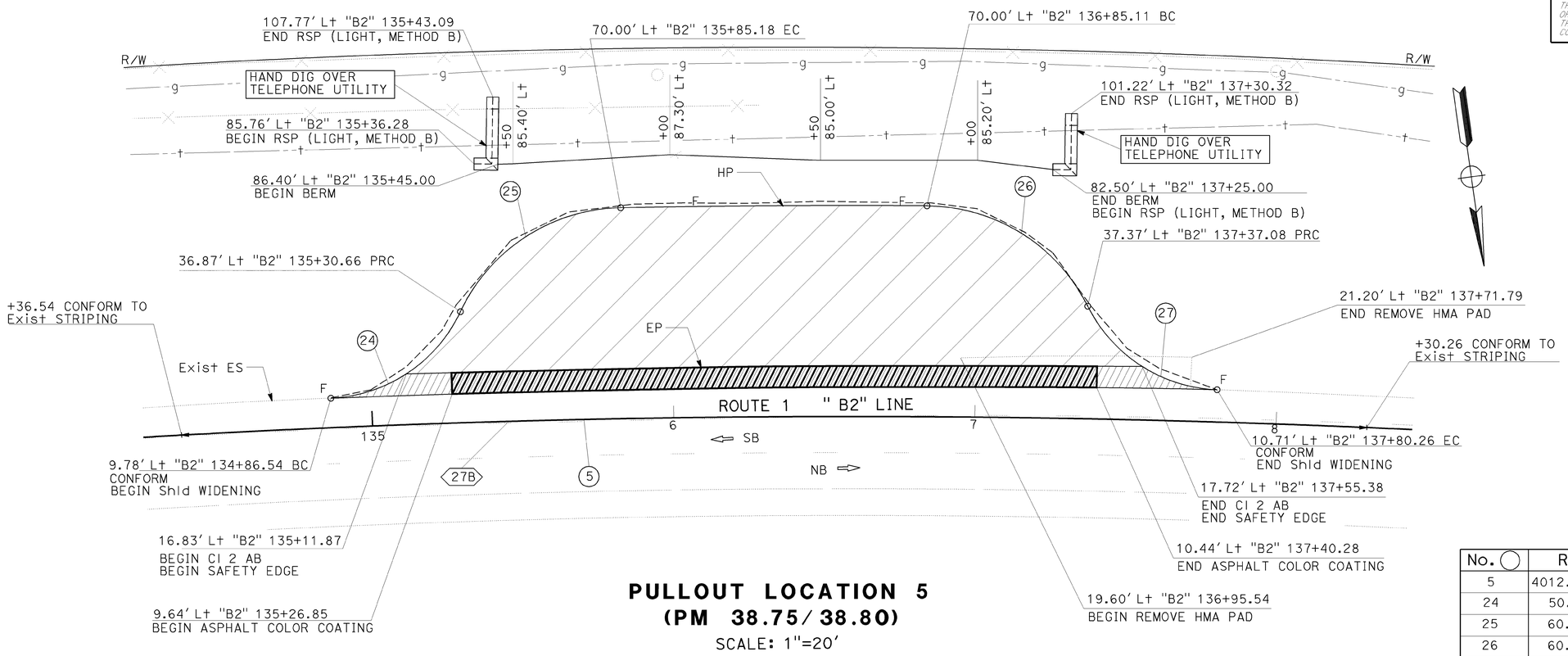

PULLOUT LOCATION 5
(PM 38.75/38.80)
SCALE: 1"=20'

CURVE DATA

No.	R	Δ	T	L
5	4012.10'	12°5'05"	424.69'	846.23'
24	50.00'	62°17'07"	30.21'	54.35'
25	60.00'	63°46'52"	37.33'	66.79'
26	60.00'	63°14'27"	36.94'	66.23'
27	50.00'	61°26'11"	29.71'	53.61'

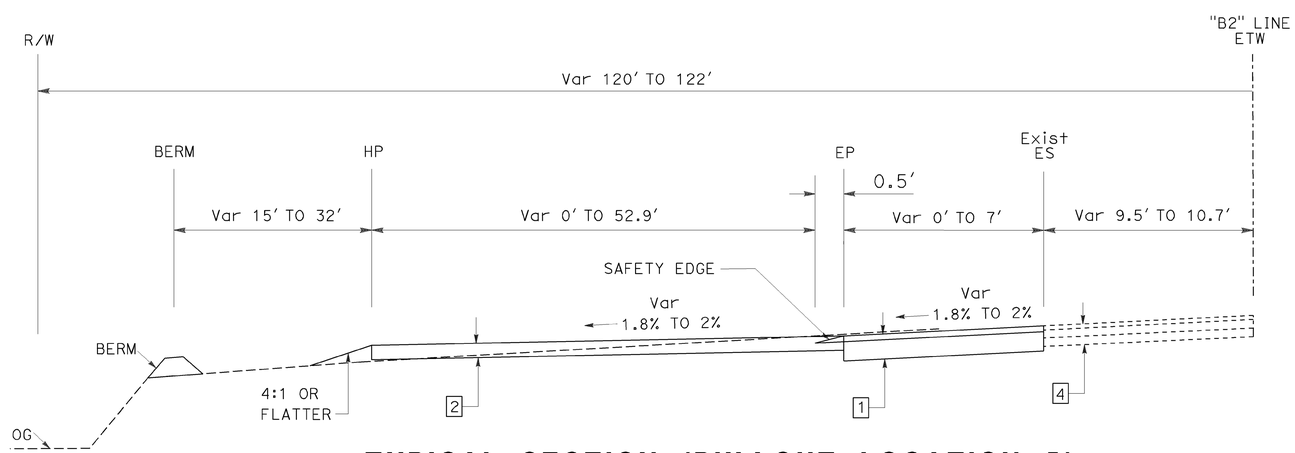

TYPICAL SECTION (PULLOUT LOCATION 5)
NO SCALE

CONSTRUCTION DETAILS
SCALE AS SHOWN

C-6

STATE OF CALIFORNIA - DEPARTMENT OF TRANSPORTATION
DESIGN

FUNCTIONAL SUPERVISOR: JOHN FOUCHE
CALCULATED-DESIGNED BY: POH LIM
CHECKED BY: JOHN FOUCHE
REVISED BY / DATE REVISED

LAST REVISION 05-10-12 | DATE PLOTTED => 15-MAY-2012 | TIME PLOTTED => 07:57

Dist	COUNTY	ROUTE	POST MILES TOTAL PROJECT	SHEET No.	TOTAL SHEETS
05	SLO	1	R36.7/39.6	21	54

REGISTERED CIVIL ENGINEER 5-14-12 DATE

5-14-12
PLANS APPROVAL DATE

REGISTERED PROFESSIONAL ENGINEER POH LIM No. 76644 Exp. 12-31-12 CIVIL STATE OF CALIFORNIA

THE STATE OF CALIFORNIA OR ITS OFFICERS OR AGENTS SHALL NOT BE RESPONSIBLE FOR THE ACCURACY OR COMPLETENESS OF SCANNED COPIES OF THIS PLAN SHEET.

NOTE:

FOR ACCURATE RIGHT OF WAY DATA, CONTACT RIGHT OF WAY ENGINEERING AT THE DISTRICT OFFICE.

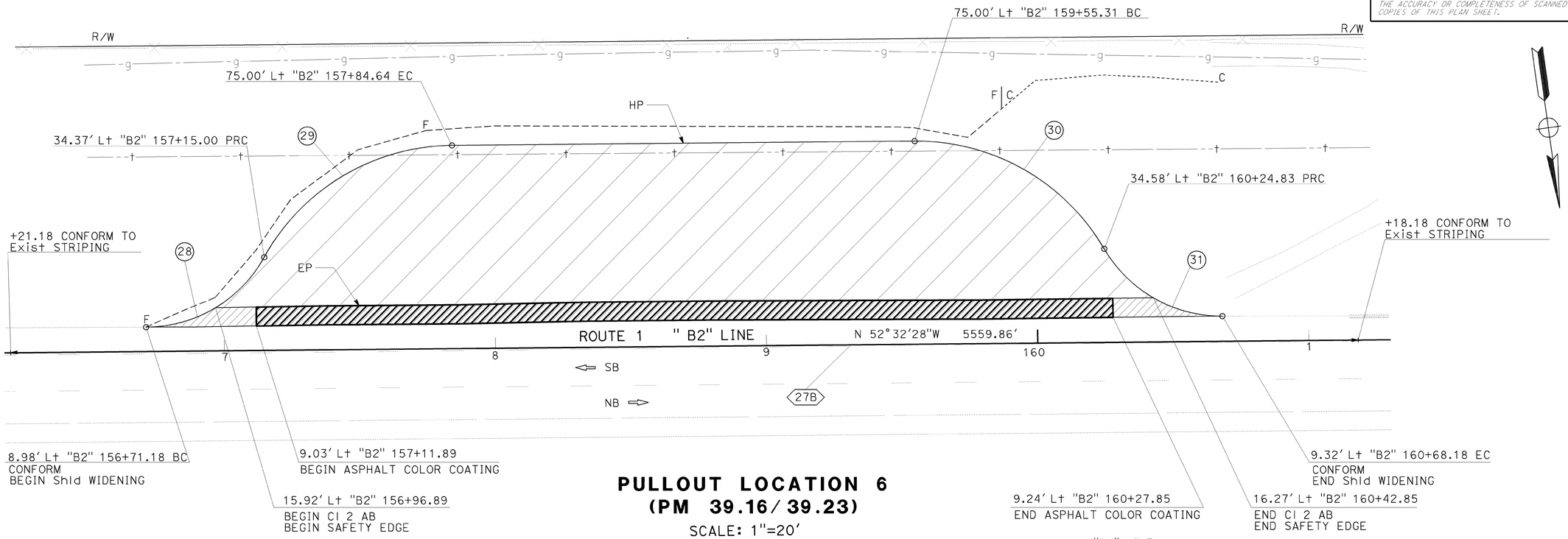

PULLOUT LOCATION 6
(PM 39.16/39.23)

SCALE: 1"=20'

CURVE DATA

No. ◯	R	Δ	T	L
28	50.00'	60°50'56"	29.36'	53.10'
29	80.00'	60°31'14"	46.67'	84.50'
30	80.00'	60°20'51"	46.51'	84.26'
31	50.00'	60°13'30"	29.00'	52.56'

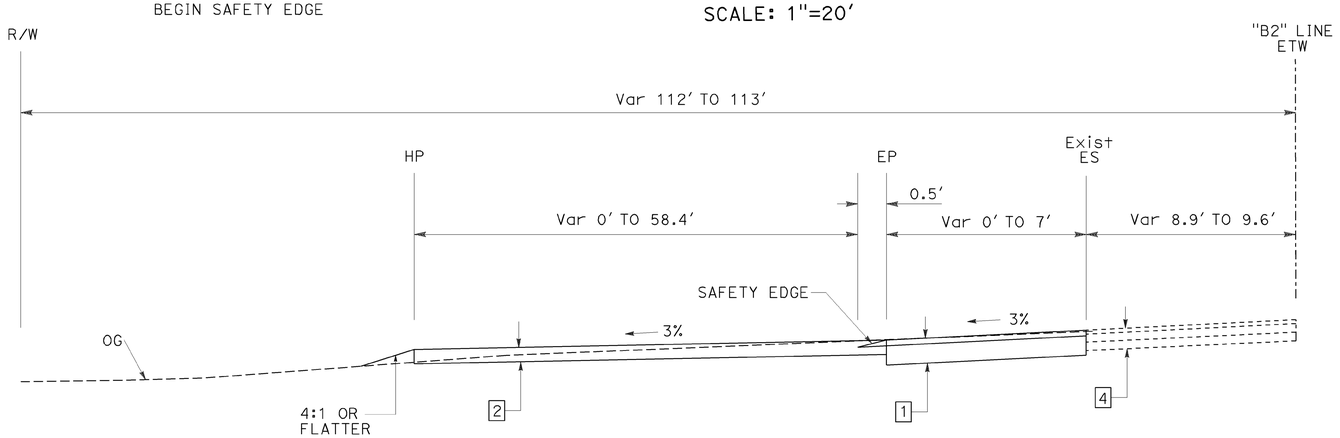

TYPICAL SECTION (PULLOUT LOCATION 6)

NO SCALE

CONSTRUCTION DETAILS

SCALE AS SHOWN

C-7

STATE OF CALIFORNIA - DEPARTMENT OF TRANSPORTATION
DESIGN
Caltrans

FUNCTIONAL SUPERVISOR: JOHN FOUCHE
CALCULATED-DESIGNED BY: POH LIM
CHECKED BY: JOHN FOUCHE
REVISED BY / DATE REVISED

LAST REVISION 05-10-12
DATE PLOTTED => 15-MAY-2012
TIME PLOTTED => 07:57

Dist	COUNTY	ROUTE	POST MILES TOTAL PROJECT	SHEET No.	TOTAL SHEETS
05	SLO	1	R36.7/39.6	22	54

LICENSED LANDSCAPE ARCHITECT

5-14-12
PLANS APPROVAL DATE

LICENSED LANDSCAPE ARCHITECT SCOTT P. DOWLAN No. 4470 STATE OF CALIFORNIA Signature 9-30-12 Renewal Date 5-14-12 Date

THE STATE OF CALIFORNIA OR ITS OFFICERS OR AGENTS SHALL NOT BE RESPONSIBLE FOR THE ACCURACY OR COMPLETENESS OF SCANNED COPIES OF THIS PLAN SHEET.

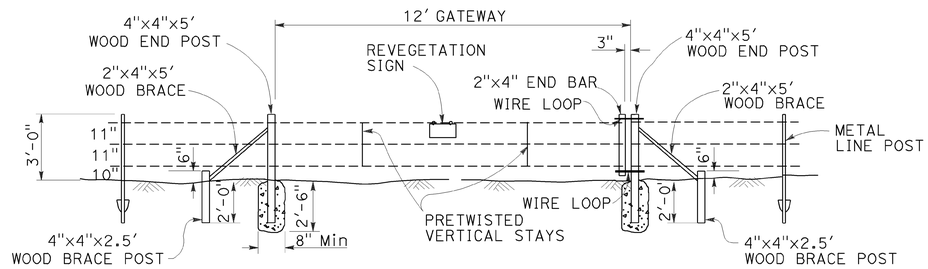

GATEWAY

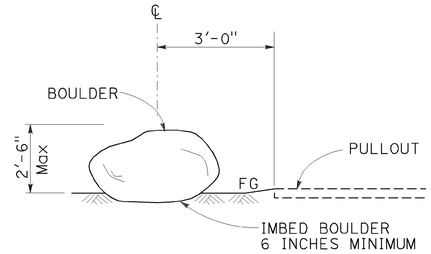

BOULDER

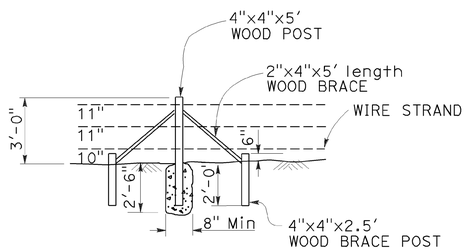

PULL POST ASSEMBLY

AT 1320'-0" MAXIMUM INTERVALS

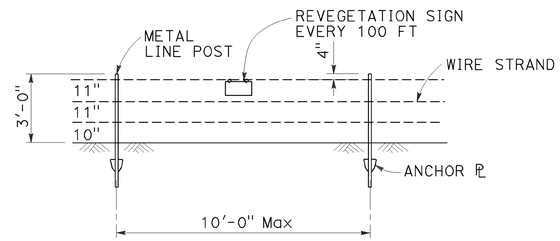

LINE POST

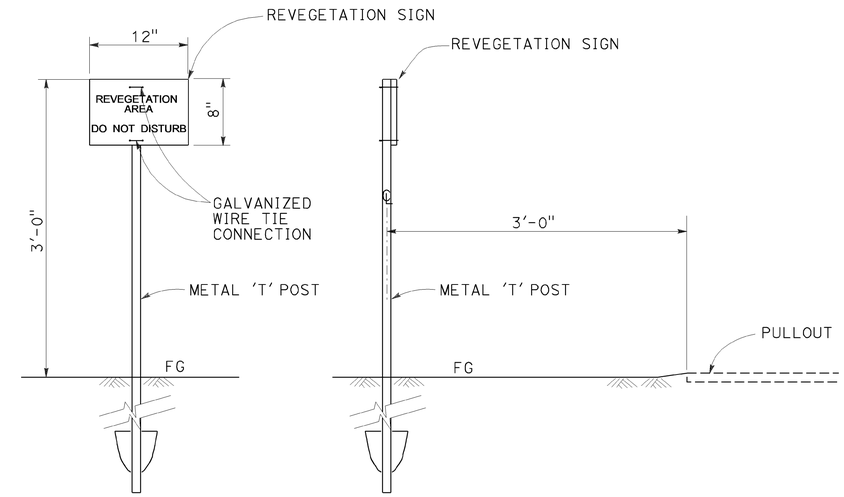

ON POST

REVEGETATION SIGN

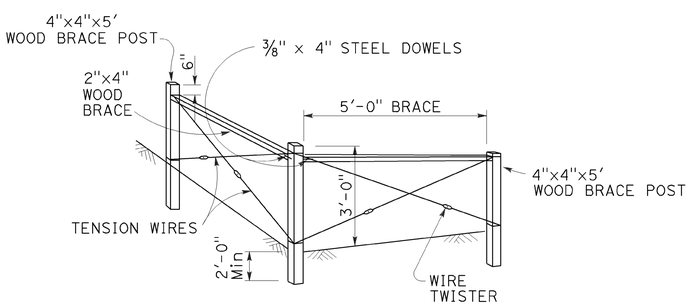

END AND CORNER POST ASSEMBLY

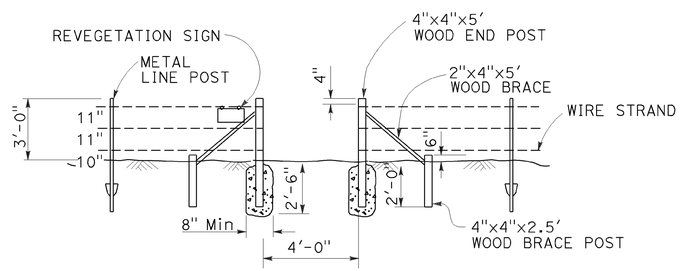

OPENING

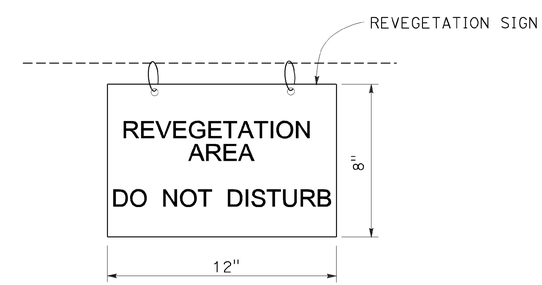

ON FENCE

REVEGETATION SIGN

FENCE (TYPE WIRE STRAND)
TEMPORARY FENCE (TYPE WIRE STRAND)

CONSTRUCTION DETAILS

NO SCALE

C-8

STATE OF CALIFORNIA - DEPARTMENT OF TRANSPORTATION
Caltrans LANDSCAPE ARCHITECTURE

SENIOR LANDSCAPE ARCHITECT: DENNIS REEVES
CALCULATED-DESIGNED BY: SCOTT DOWLAN
CHECKED BY: KRISTEN LANGAGER
REVISED BY
DATE REVISED

LAST REVISION 05-10-12
DATE PLOTTED => 15-MAY-2012
TIME PLOTTED => 07:57

Dist	COUNTY	ROUTE	POST MILES TOTAL PROJECT	SHEET No.	TOTAL SHEETS
05	SLO	1	R36.7/39.6	23	54

LICENSED LANDSCAPE ARCHITECT

5-14-12
PLANS APPROVAL DATE

LICENSED LANDSCAPE ARCHITECT SCOTT P. DOWLAN No. 4470 STATE OF CALIFORNIA Expiration Date 9-30-12 Renewal Date 5-14-12 Date

THE STATE OF CALIFORNIA OR ITS OFFICERS OR AGENTS SHALL NOT BE RESPONSIBLE FOR THE ACCURACY OR COMPLETENESS OF SCANNED COPIES OF THIS PLAN SHEET.

TEMPORARY FENCE (TYPE ESA)

SHEET	STATION	LF
L-12	160+40 TO 161+50 Lt	250

TEMPORARY HYDRAULIC MULCH (BONDED FIBER MATRIX)

STATION	SQYD
22+00 TO 24+50 Lt	1415
132+64 TO 132+95 Lt	152
159+65 TO 161+50 Lt	1145
170+50 TO 174+00 Lt	1090
177+50 TO 178+25 Lt	390
179+30 TO 179+80 Lt	130
180+75 TO 181+00 Lt	145
TOTAL	4467

TEMPORARY FIBER ROLLS

STATION	LF
22+00 TO 24+50 Lt	500
132+64 TO 132+95 Lt	100
170+50 TO 174+00 Lt	700
177+50 TO 178+25 Lt	150
179+30 TO 179+80 Lt	100
180+75 TO 181+00 Lt	50
TOTAL	1600

TEMPORARY DRAINAGE INLET PROTECTION

STATION	LOCATION	EA
51+24 Lt	ROADSIDE	1
65+67 Lt	TOE OF SLOPE	1
88+46 Lt	TOP OF EMBANKMENT	1
96+00 Lt	TOP OF EMBANKMENT	1
105+22 Lt	TOP OF EMBANKMENT	1
TOTAL		5

TEMPORARY CHECK DAM

STATION	LOCATION	LF
23+32 TO 24+32 Lt	ROADSIDE OVERSIDE DRAIN	100
65+85 Lt	SAN GERONIMO RD ALONG DIKE	100
117+57 TO 118+57 Lt	ROADSIDE OVERSIDE DRAIN	100
32+00 Lt	PRIVATE ROAD ALONG DIKE	50
170+33 TO 171+30 Lt	ROADSIDE OVERSIDE DRAIN	100
TOTAL		450

TEMPORARY SILT FENCE

STATION	LOCATION	LF
24+55 Lt	AT DRAINAGE SWALE	50
145+48 TO 51+00 Lt	AROUND PULLOUT	667
61+50 TO 65+87 Lt	AROUND PULLOUT	426
89+00 TO 102+00 Lt	AROUND PULLOUT	1400
122+00 TO 126+00 Lt	AROUND PULLOUT	400
132+64 TO 132.95 Lt	AT DRAINAGE SWALE	70
134+50 TO 138+00 Lt	AROUND PULLOUT	385
156+50 TO 162+25 Lt	AT R/W FENCE AND EXISTING VEGETATION	670
178+00 TO 178+73 Lt	AROUND DRAINAGE SWALE	225
178+85 TO 181+00 Lt	AT R/W FENCE	275
TOTAL		4568

TEMPORARY WATER POLLUTION CONTROL QUANTITIES
WPCQ-1

REVISED BY | DATE REVISED
SCOTT DOWLAN | KRISTEN LANGAGER
CALCULATED-DESIGNED BY | CHECKED BY
SENIOR LANDSCAPE ARCHITECT | DENNIS REEVES
STATE OF CALIFORNIA - DEPARTMENT OF TRANSPORTATION
Caltrans LANDSCAPE ARCHITECTURE

LAST REVISION 05-20-12 | DATE PLOTTED => 15-MAY-2012 | TIME PLOTTED => 07:57

Dist	COUNTY	ROUTE	POST MILES TOTAL PROJECT	SHEET No.	TOTAL SHEETS
05	SLO	1	R36.7/39.6	24	54

LICENSED LANDSCAPE ARCHITECT

5-14-12
PLANS APPROVAL DATE

LICENSED LANDSCAPE ARCHITECT SCOTT P. DOWLAN No. 4470 Signature 9-30-12 Renewal Date 5-14-12 Date STATE OF CALIFORNIA

THE STATE OF CALIFORNIA OR ITS OFFICERS OR AGENTS SHALL NOT BE RESPONSIBLE FOR THE ACCURACY OR COMPLETENESS OF SCANNED COPIES OF THIS PLAN SHEET.

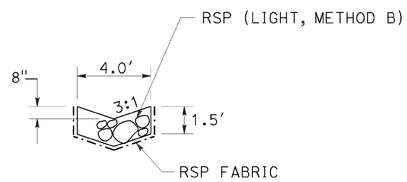

TYPICAL CROSS SECTION

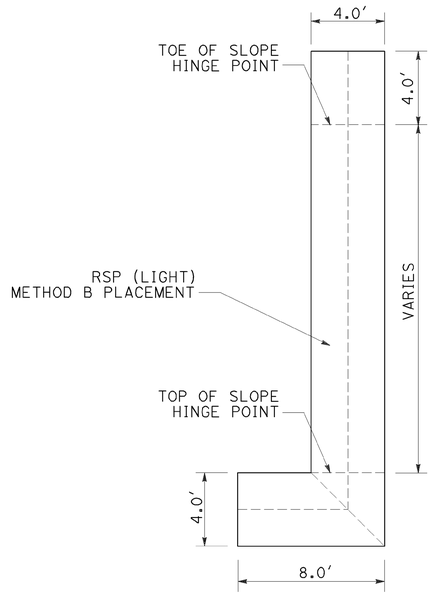

TYPICAL LAYOUT PLAN

NOTE:
FASTENER PATTERN FOR
ROLLED EROSION CONTROL PRODUCT (NETTING)
PER MANUFACTURER'S RECOMMENDATIONS

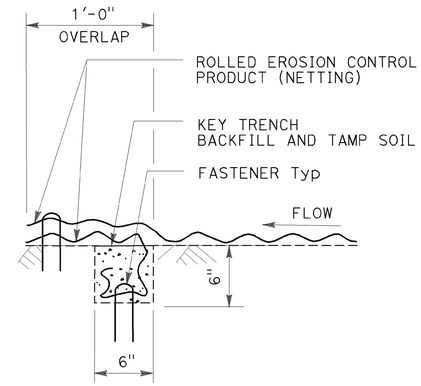

SECTION

TRAVERSE JOINT

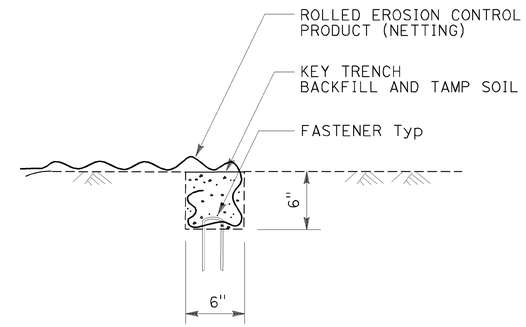

SECTION

KEY TRENCH

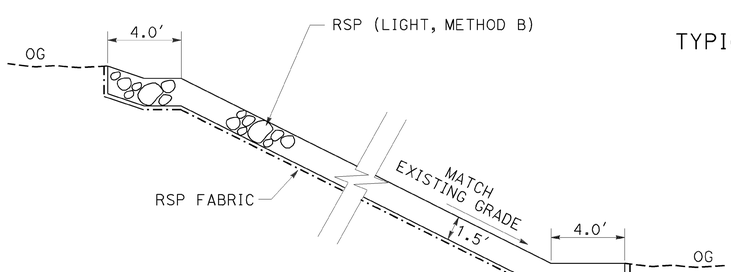

TYPICAL SECTION

ROCK SLOPE PROTECTION

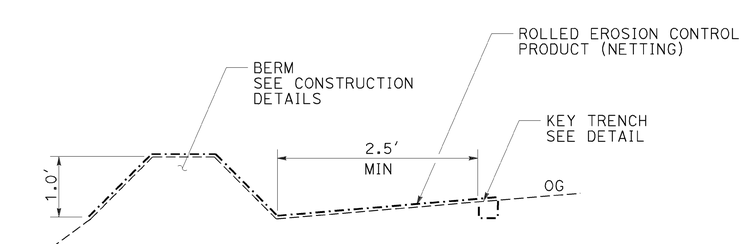

TYPICAL SECTION

ROLLED EROSION CONTROL PRODUCT (NETTING)

DRAINAGE AND EROSION CONTROL DETAILS

NO SCALE

DD-1

STATE OF CALIFORNIA - DEPARTMENT OF TRANSPORTATION
Caltrans LANDSCAPE ARCHITECTURE

SENIOR LANDSCAPE ARCHITECT: DENNIS REEVES
CALCULATED-DESIGNED BY: SCOTT DOWLAN
CHECKED BY: KRISTEN LANGAGER
REVISED BY / DATE REVISED

LAST REVISION 05-10-12 | DATE PLOTTED => 15-MAY-2012 | TIME PLOTTED => 07:57

Dist	COUNTY	ROUTE	POST MILES TOTAL PROJECT	SHEET No.	TOTAL SHEETS
05	SLO	1	R36.7/39.6	25	54

LICENSED LANDSCAPE ARCHITECT

5-14-12
PLANS APPROVAL DATE

LICENSED LANDSCAPE ARCHITECT SCOTT P. DOWLAN No. 4480 STATE OF CALIFORNIA Registration Date 9-30-12 Renewal Date 5-14-12 Date

THE STATE OF CALIFORNIA OR ITS OFFICERS OR AGENTS SHALL NOT BE RESPONSIBLE FOR THE ACCURACY OR COMPLETENESS OF SCANNED COPIES OF THIS PLAN SHEET.

EARTHWORK QUANTITIES SUMMARY

SHEET No.	STATION	LOCATION	ROADWAY EXCAVATION	EMBANKMENT (N)
			CY	CY
C-1	"B2" 45+57.89 TO 49+83.75	PULLOUT 1	613	6
C-2	"B2" 61+85.64 TO 65+88.13	PULLOUT 2	860	
C-3,C-4	"B2" 88+89.55 TO 102+0.12	PULLOUT 3	2442	3
C-5	"B2" 122+29.02 TO 125+61.34	PULLOUT 4	502	1
C-6	"B2" 134+86.54 TO 137+80.26	PULLOUT 5	378	2
C-7	"B2" 156+71.18 TO 160+68.18	PULLOUT 6	493	177
L-1	"B2" 22+00.00 TO 24+30.00	GRADING AREA	229	94
L-9	"B2" 119+10.00 TO 119+80.00	GRADING AREA	155	
L-10	"B2" 132+64.00 TO 132+95.00	GRADING AREA	23	
	"B2" 137+60.00 TO 137+80.00	GRADING AREA	13	
L-11	"B2" 145+40.00 TO 145+90.00	GRADING AREA	174	
L-12	"B2" 160+68.17 TO 161+30.00	GRADING AREA	214	45
	"B2" 170+40.00 TO 170+48.00	GRADING AREA	25	
L-13	"B2" 170+80.00 TO 174+60.00	GRADING AREA	178	540
	"B2" 177+50.00 TO 178+10.00	GRADING AREA	25	
	"B2" 178+90.00 TO 179+70.00	GRADING AREA	26	
	"B2" 180+80.00 TO 181+30.00	GRADING AREA	26	
C-1	"B2" 46+24.65 TO 49+50.00	PULLOUT 1 BERM Const		25
C-2	"B2" 62+39.67 TO 64+83.05	PULLOUT 2 BERM Const		18
	"B2" 65+08.58 TO 65+75.00			5
C-6	"B2" 135+45.00 TO 137+25.00	PULLOUT 5 BERM Const		14
C-2	"B2" 62+31.67 TO 62+37.61	PULLOUT 2 RSP Const	5	
	"B2" 64+83.05 TO 64+88.98		6	
	"B2" 65+75.00 TO 65+81.36		5	
C-6	"B2" 135+36.28 TO 135+43.09	PULLOUT 5 RSP Const	6	
	"B2" 137+25.00 TO 137+30.32		6	
		TOTAL	6404	930

(N)-NOT A SEPARATE PAY ITEM, FOR INFORMATION ONLY

ROCK SLOPE PROTECTION

SHEET No.	STATION	LOCATION	RSP (LIGHT, METHOD B)	RSP FABRIC
			CY	SQYD
C-2	"B2" 62+31.67 TO 62+37.61	PULLOUT 2	5	10
	"B2" 64+83.05 TO 64+88.98		6	12
	"B2" 65+75.00 TO 65+81.36		5	10
C-6	"B2" 135+36.28 TO 135+43.09	PULLOUT 5	6	13
	"B2" 137+25.00 TO 137+30.32		6	12
		TOTAL	28	57

RELOCATE ROADSIDE SIGN

SHEET No.	STA	SIGN No. ◯	SIGN CODE	PANEL SIZE (LxD)	No. OF POST AND SIZE	RELOCATE ROADSIDE SIGN	REMARKS
				(INCH × INCH)	(INCH × INCH)	EA	
L-3	48+12 Lt	1	W6-3	48" × 48"	1-4" × 6"	1	TWO WAY TRAFFIC
L-9	122+53 Lt	2	-	12" × 18"	1-4" × 4"	1	"NO OVERNIGHT CAMPING"
					TOTAL	2	

PAVEMENT DELINEATION QUANTITIES

SHEET No.	STATION	PULLOUT LOCATION	4" THERMOPLASTIC TRAFFIC STRIPE
			WHITE
			DETAIL 27B
			LF
C-1	"B2" 45+07.89 TO 50+33.75	1	526
C-2	"B2" 61+35.64 TO 67+00.00	2	564
C-3,C-4	"B2" 88+39.55 TO 102+50.12	3	1411
C-5	"B2" 121+79.02 TO 126+11.34	4	432
C-6	"B2" 134+36.54 TO 138+30.26	5	394
C-7	"B2" 156+21.18 TO 161+18.18	6	497
		TOTAL	3824

PAVEMENT STRUCTURE QUANTITIES

SHEET No.	STATION	PULLOUT LOCATION	HOT MIX ASPHALT (TYPE A)	CLASS 2 AGGREGATE BASE	TACK COAT	ASPHALT COLOR COATING
			TON	CY	TON	SQYD
C-1	"B2" 45+57.89 TO 49+83.75	1	65.2	715	0.05	270
C-2	"B2" 62+85.64 TO 65+88.13	2	61.1	770	0.05	241
C-3,C-4	"B2" 88+89.55 TO 102+00.12	3	210.4	2500	0.17	967
C-5	"B2" 122+29.02 TO 125+61.34	4	48.6	558	0.04	196
C-6	"B2" 134+86.54 TO 137+80.26	5	44.4	486	0.03	167
C-7	"B2" 156+71.18 TO 160+68.18	6	61.1	1008	0.05	246
		TOTAL	490.8	6037	0.39	2087

POROUS PAVEMENT SYSTEM

LOCATION	STATION	SQFT
PULLOUT 2	"B2" 62+41.66 TO 65+88.13	8035

SUMMARY OF QUANTITIES
Q-1

REVISED BY | DATE REVISED
SCOTT DOWLAN | KRISTEN LANGAGER
CALCULATED-DESIGNED BY | CHECKED BY
SENIOR LANDSCAPE ARCHITECT | DENNIS REEVES
STATE OF CALIFORNIA - DEPARTMENT OF TRANSPORTATION
Caltrans LANDSCAPE ARCHITECTURE

LAST REVISION 05-10-12 | DATE PLOTTED => 15-MAY-2012 | TIME PLOTTED => 07:57

Dist	COUNTY	ROUTE	POST MILES TOTAL PROJECT	SHEET No.	TOTAL SHEETS
05	SLO	1	R36.7/39.6	26	54

LICENSED LANDSCAPE ARCHITECT

5-14-12
PLANS APPROVAL DATE

LICENSED LANDSCAPE ARCHITECT SCOTT P. DOWLAN No. 4480 STATE OF CALIFORNIA Expiration Date 9-30-12 Renewal Date 5-14-12 Date

THE STATE OF CALIFORNIA OR ITS OFFICERS OR AGENTS SHALL NOT BE RESPONSIBLE FOR THE ACCURACY OR COMPLETENESS OF SCANNED COPIES OF THIS PLAN SHEET.

FENCE (TYPE WIRE STRAND)

SHEET No.	LOCATION FROM	LOCATION TO	LF
L-1	Sta 22+06 Lt	Sta 24+53 Lt	317
L-1	Sta 24+78 Lt	Sta 26+54 Lt	176
L-2	Sta 43+54 Lt	Sta 44+50 Lt	130
L-3	Sta 44+50 Lt	Sta 46+61 Lt	224
L-12	Sta 170+34 Lt	Sta 170+50 Lt	98
L-13	Sta 170+50 Lt	Sta 180+96 Lt	1120
		TOTAL	2065

TEMPORARY FENCE (TYPE WIRE STRAND)

SHEET No.	LOCATION FROM	LOCATION TO	LF
L-1	Sta 22+06 Lt	Sta 30+18 Lt	833
L-3	Sta 49+44 Lt	Sta 51+00 Lt	217
L-4	Sta 58+76 Lt	Sta 62+23.60 Lt	422
L-6	Sta 81+29 Lt	Sta 88+50 Lt	789
L-7	Sta 88+50 Lt	Sta 89+26 Lt	79
L-7	Sta 101+73 Lt	Sta 102+50 Lt	78
L-8	Sta 102+50 Lt	Sta 114+50 Lt	1200
L-9	Sta 114+50 Lt	Sta 116+44 Lt	196
L-9	Sta 116+67 Lt	Sta 122+65 Lt	600
L-9	Sta 125+24 Lt	Sta 126+00 Lt	152
L-10	Sta 132+96 Lt	Sta 135+23 Lt	309
L-10	Sta 137+45.50 Lt	Sta 138+15 Lt	149
L-12	Sta 156+56 Lt	Sta 157+08 Lt	124
L-12	Sta 160+31 Lt	Sta 162+15 Lt	250
		TOTAL	5398

REMOVE CHAIN LINK FENCE

SHEET No.	LOCATION FROM	LOCATION TO	LF
L-3	Sta 45+44 Lt	Sta 50+47 Lt	519
L-4	Sta 60+91 Lt	Sta 65+59 Lt	468
L-7	Sta 89+13 Lt	Sta 102+50 Lt	1381
L-8	Sta 102+50 Lt	Sta 114+50 Lt	1200
L-9	Sta 114+50 Lt	Sta 116+25 Lt	207
L-9	Sta 119+54 Lt	Sta 126+67 Lt	712
L-10	Sta 132+80 Lt	Sta 136+30 Lt	406
		TOTAL	4893

BOULDER

SHEET No.	LOCATION FROM	LOCATION TO	EA	ON CENTER SPACING
L-2	Sta 43+54 Lt	Sta 43+54 Lt	3	6′
L-3	Sta 48+98 Lt	Sta 49+36 Lt	4	15′
L-4	Sta 62+31 Lt	Sta 63+12 Lt	7	15′
L-7	Sta 89+33 Lt	Sta 90+44 Lt	9	15′
L-7	Sta 95+72 Lt	Sta 96+50 Lt	15	6′
L-7	Sta 101+37 Lt	Sta 101+62 Lt	3	15′
L-9	Sta 122+73 Lt	Sta 123+23 Lt	5	15′
L-9	Sta 124+74 Lt	Sta 125+14 Lt	5	15′
L-10	Sta 135+31 Lt	Sta 135+74 Lt	5	15′
L-10	Sta 136+96 Lt	Sta 137+37 Lt	5	15′
L-12	Sta 157+15 Lt	Sta 157+80 Lt	7	15′
L-12	Sta 159+59 Lt	Sta 160+25 Lt	7	15′
		TOTAL	75	

REVEGETATION SIGN

SHEET No.	LOCATION FROM	LOCATION TO	EA	DESCRIPTION
L-1	Sta 22+07 Lt	Sta 24+53 Lt	5	ON FENCE
L-1	Sta 24+78 Lt	Sta 30+18 Lt	8	ON FENCE
L-2	Sta 43+54 Lt	Sta 44+50 Lt	2	ON FENCE
L-3	Sta 44+50 Lt	Sta 46+60 Lt	2	ON FENCE
L-3	Sta 46+60 Lt	Sta 49+44 Lt	1	ON POST
L-3	Sta 49+44 Lt	Sta 51+00 Lt	2	ON FENCE
L-4	Sta 58+76 Lt	Sta 62+24 Lt	4	ON FENCE
L-4	Sta 62+24 Lt	Sta 65+82 Lt	2	ON POST
L-6	Sta 81+29 Lt	Sta 88+50 Lt	8	ON FENCE
L-7	Sta 88+50 Lt	Sta 89+26 Lt	1	ON FENCE
L-7	Sta 89+26 Lt	Sta 101+73 Lt	6	ON POST
L-7	Sta 101+73 Lt	Sta 102+50 Lt	1	ON FENCE
L-8	Sta 102+50 Lt	Sta 114+50 Lt	12	ON FENCE
L-9	Sta 114+50 Lt	Sta 122+65 Lt	8	ON FENCE
L-9	Sta 122+65 Lt	Sta 125+24 Lt	3	ON POST
L-9	Sta 125+24 Lt	Sta 126+00 Lt	2	ON FENCE
L-10	Sta 132+96 Lt	Sta 135+23 Lt	7	ON FENCE
L-10	Sta 135+23 Lt	Sta 137+45 Lt	3	ON POST
L-10	Sta 137+45 Lt	Sta 138+15 Lt	2	ON FENCE
L-12	Sta 156+56 Lt	Sta 157+08 Lt	2	ON FENCE
L-12	Sta 157+08 Lt	Sta 160+31 Lt	3	ON POST
L-12	Sta 160+31 Lt	Sta 162+15 Lt	2	ON FENCE
L-12	Sta 170+34 Lt	Sta 170+50 Lt	1	ON FENCE
L-13	Sta 170+50 Lt	Sta 180+96 Lt	11	ON FENCE
		TOTAL	98	

EROSION CONTROL QUANTITIES

SHEET NO.	TYPE	COMPOST (INCORPORATE) SQFT	EROSION CONTROL (COMPOST BLANKET) SQFT	ROLLED EROSION CONTROL PRODUCT (NETTING) SQFT	EROSION CONTROL (HYDROSEED) (SEED MIX 1) SQFT	EROSION CONTROL (HYDROSEED) (SEED MIX 2) SQFT
L-1,3,4,5,7,8,9,10,11,12,13	EROSION CONTROL TYPE 1	176,250	176,250		176,250	
L-4,6,7,9,10	EROSION CONTROL TYPE 2	98,305	98,305			98,305
L-3,4,10	EROSION CONTROL TYPE 3			4,935	4,935	
	TOTAL	274,555	274,555	4,935	181,185	98,305

SUMMARY OF QUANTITIES
Q-2

STATE OF CALIFORNIA - DEPARTMENT OF TRANSPORTATION
LANDSCAPE ARCHITECTURE
SENIOR LANDSCAPE ARCHITECT: DENNIS REEVES
CALCULATED-DESIGNED BY: SCOTT DOWLAN
CHECKED BY: KRISTEN LANGAGER
REVISED BY
DATE REVISED

LAST REVISION 05-10-12
DATE PLOTTED => 15-MAY-2012
TIME PLOTTED => 07:57

Dist	COUNTY	ROUTE	POST MILES TOTAL PROJECT	SHEET No.	TOTAL SHEETS
05	SLO	1	R36.7/39.6	27	54

LICENSED LANDSCAPE ARCHITECT

5-14-12
PLANS APPROVAL DATE

LICENSED LANDSCAPE ARCHITECT SCOTT P. DOWLAN No. 4470 STATE OF CALIFORNIA
Signature
9-30-12
Renewal Date
5-14-12
Date

THE STATE OF CALIFORNIA OR ITS OFFICERS OR AGENTS SHALL NOT BE RESPONSIBLE FOR THE ACCURACY OR COMPLETENESS OF SCANNED COPIES OF THIS PLAN SHEET.

PLANT LIST AND PLANTING SPECIFICATIONS

PLANT GROUP	PLANT No.	SYMBOL	BOTANICAL NAME	COMMON NAME	SIZE	QUANTITY EACH	HOLE SIZE (INCH) Dia	HOLE SIZE (INCH) DEPTH	BASIN TYPE	IRON SULFATE	SOIL AMEND (CY) (1)	(1) COMMERCIAL FERTILIZER PLANTING	(1) COMMERCIAL FERTILIZER PLT ESTB	BASIN MULCH (CY) (1)	STAKING	PLANTING LIMITS MINIMUM DISTANCE (Ft) FROM TRVD WAY	Pvmt	FENCE	WALL	PAVED DITCH	EARTH DITCH	ON CENTER (Ft)	REMARKS
A	1	△	ARTEMESIA CALIFORNICA	CALIFORNIA SAGEBRUSH	No. 1	98	(2)		II	-	-	2 Pkt	3 Oz	.10	-	-	-	-	-	-	-	5	SHRUB (5)
	2		DANTHONIA CALIFORNICA	CALIFORNIA OAT GRASS	No. 1	271	(2)		II	-	-	2 Pkt	3 Oz	.10	-	-	-	-	-	-	-	4	GRASS (5)
	3		ERIOGONUM PARVIFOLIUM	CLIFF BUCKWHEAT	No. 1	144	(2)		II	-	-	2 Pkt	3 Oz	.10	-	-	-	-	-	-	-	4	SHRUB (5)
	4		ERIOPHYLLUM STAECHADIFOLIUM	SEASIDE WOOLY SUNFLOWER	No. 1	114	(2)		II	-	-	2 Pkt	3 Oz	.10	-	-	-	-	-	-	-	4	SHRUB (5)
	5		HAZARDIA SQUARROSA	SAW TOOTHED GOLDENBUSH	No. 1	97	(2)		II	-	-	2 Pkt	3 Oz	.10	-	-	-	-	-	-	-	3	SHRUB (5)
	6		LOTUS SCOPARIUS	DEERWEED	No. 1	154	(2)		II	-	-	2 Pkt	3 Oz	.10	-	-	-	-	-	-	-	3	SHRUB (5)
	7		MIMULUS AURANTIACUS	STICKY MONKEY FLOWER	No. 1	166	(2)		II	-	-	2 Pkt	3 Oz	.10	-	-	-	-	-	-	-	3	SHRUB (5)
	8		SALVIA MELLIFERA	BLACK SAGE	No. 1	129	(2)		II	-	-	2 Pkt	3 Oz	.10	-	-	-	-	-	-	-	4	SHRUB (5)

APPLICABLE WHEN CIRCLED:

(1) - QUANTITIES SHOWN ARE "PER PLANT".
(2) - SUFFICIENT TO RECEIVE ROOT BALL AND ROOT PROTECTOR.
3 - DOES NOT APPLY TO MULCH AREAS.
4 - AS SHOWN ON PLANS WITH A MINIMUM OF 16' O/C.
(5) - ROOT PROTECTOR REQUIRED.

NOTE:

UNDERLINE PORTIONS OF BOTANICAL NAME INDICATE ABBREVIATIONS USED ON PLANTING PLANS.

LEGEND:

- ESA — ENVIRONMENTALLY SENSITIVE AREA
- TFESA — TEMPORARY FENCE (TYPE ESA)
- EXISTING FENCE
- jt — EXIST JOINT TRENCH (UNDERGROUND)
- EXISTING BERM AND SWALE
- EXISTING BOULDERS
- EXISTING REVEGETATION SIGNS
- EXISTING RSP DOWN DRAIN
- ROADSIDE CLEARING LIMITS

MULCH

LOCATION SHEET	BASIN MULCH (CY)
PI-1	10.8
PI-2	15.7
PI-3	8.4
PI-4	13.8
PI-5	13.3
PI-6	5.4
PI-7	13.3
PI-8	15.8
PI-9	20.8
TOTAL	117.3

REVISED BY | DATE REVISED
SCOTT DOWLAN | KRISTEN LANGAGER
CALCULATED-DESIGNED BY | CHECKED BY
SENIOR LANDSCAPE ARCHITECT | DENNIS REEVES

STATE OF CALIFORNIA - DEPARTMENT OF TRANSPORTATION
Caltrans LANDSCAPE ARCHITECTURE

PLANT LIST
PL-1

LAST REVISION 05-10-12 | DATE PLOTTED => 15-MAY-2012 | TIME PLOTTED => 07:57

Dist	COUNTY	ROUTE	POST MILES TOTAL PROJECT	SHEET No.	TOTAL SHEETS
05	SLO	1	R36.7/39.6	28	54

LICENSED LANDSCAPE ARCHITECT

5-14-12
PLANS APPROVAL DATE

LICENSED LANDSCAPE ARCHITECT
SCOTT P. DOWLAN No. 4470
Expiration Date 9-30-12
Renewal Date 5-14-12
DATE
STATE OF CALIFORNIA

THE STATE OF CALIFORNIA OR ITS OFFICERS OR AGENTS SHALL NOT BE RESPONSIBLE FOR THE ACCURACY OR COMPLETENESS OF SCANNED COPIES OF THIS PLAN SHEET.

NOTES:

1. FOR ACCURATE RIGHT OF WAY DATA, CONTACT RIGHT OF WAY ENGINEERING AT THE DISTRICT OFFICE.
2. PLASTIC PIPE (SUPPLY LINE) DOWNSTREAM OF FAU MUST BE ON GRADE, EXCEPT WHERE IRRIGATION SLEEVES ARE SHOWN.

LEGEND

——— PLASTIC PIPE (SCHEDULE 40)(SUPPLY LINE)

-·-·- ¾" PLASTIC PIPE (IRRIGATION LINE)

CAM COUPLER ASSEMBLY VALVE CODE

CCA SIZE
CAM COUPLER ASSEMBLY
CCA NAME

2"-CCA-1

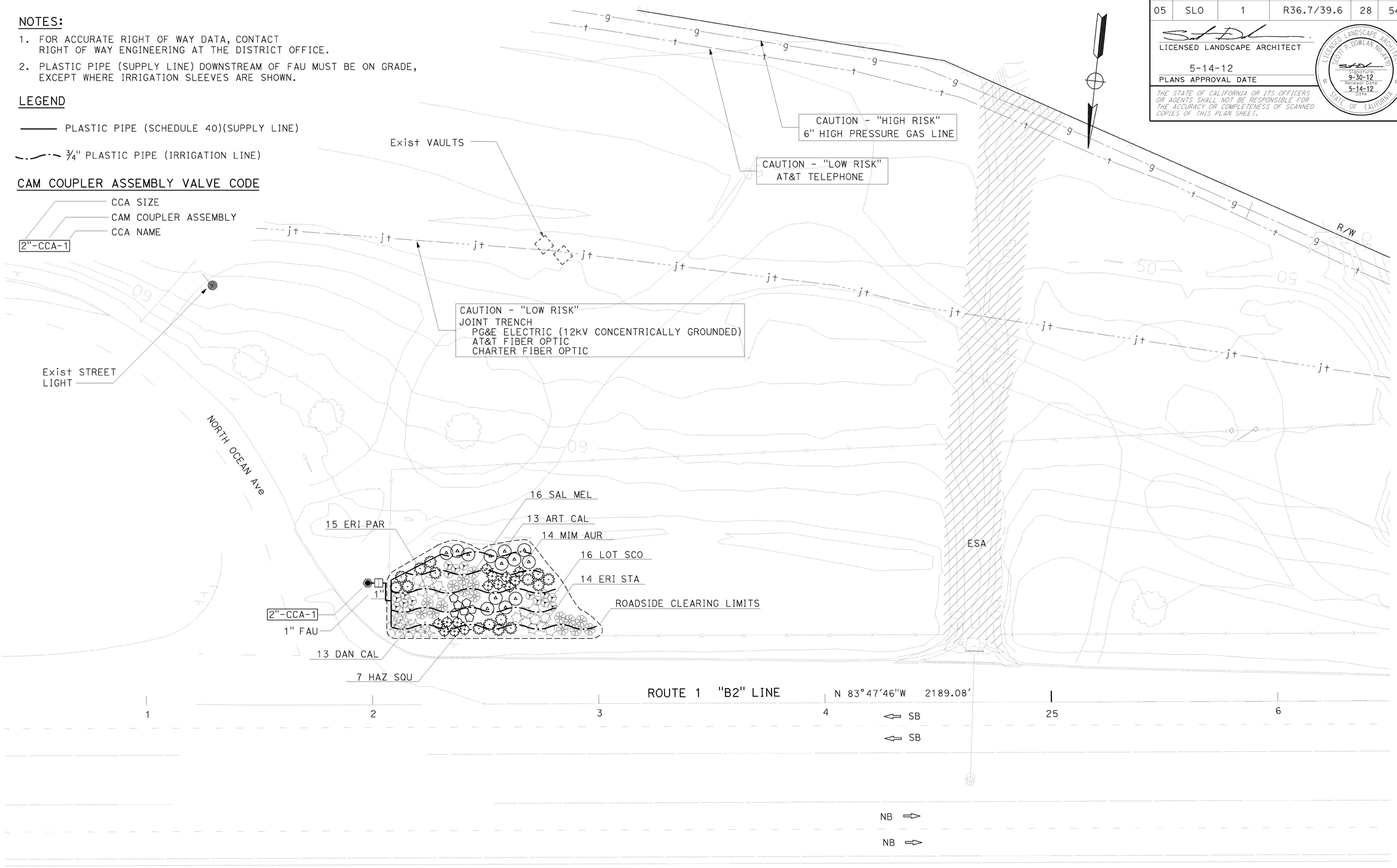

APPROVED FOR PLANTING AND IRRIGATION WORK ONLY

PLANTING AND IRRIGATION PLAN
SCALE: 1"=20'

PI-1

REVISED BY | DATE REVISED
SCOTT DOWLAN | KRISTEN LANGAGER
CALCULATED-DESIGNED BY | CHECKED BY
SENIOR LANDSCAPE ARCHITECT | DENNIS REEVES

STATE OF CALIFORNIA - DEPARTMENT OF TRANSPORTATION
Caltrans LANDSCAPE ARCHITECTURE

LAST REVISION 05-14-12
DATE PLOTTED => 15-MAY-2012
TIME PLOTTED => 07:57

Dist	COUNTY	ROUTE	POST MILES TOTAL PROJECT	SHEET No.	TOTAL SHEETS
05	SLO	1	R36.7/39.6	29	54

LICENSED LANDSCAPE ARCHITECT

5-14-12

PLANS APPROVAL DATE

LICENSED LANDSCAPE ARCHITECT SCOTT P. DOWLAN No. 4480 STATE OF CALIFORNIA Registered 9-30-12 Renewal Date 5-14-12 Date

THE STATE OF CALIFORNIA OR ITS OFFICERS OR AGENTS SHALL NOT BE RESPONSIBLE FOR THE ACCURACY OR COMPLETENESS OF SCANNED COPIES OF THIS PLAN SHEET.

NOTE:

FOR ACCURATE RIGHT OF WAY DATA, CONTACT RIGHT OF WAY ENGINEERING AT THE DISTRICT OFFICE.

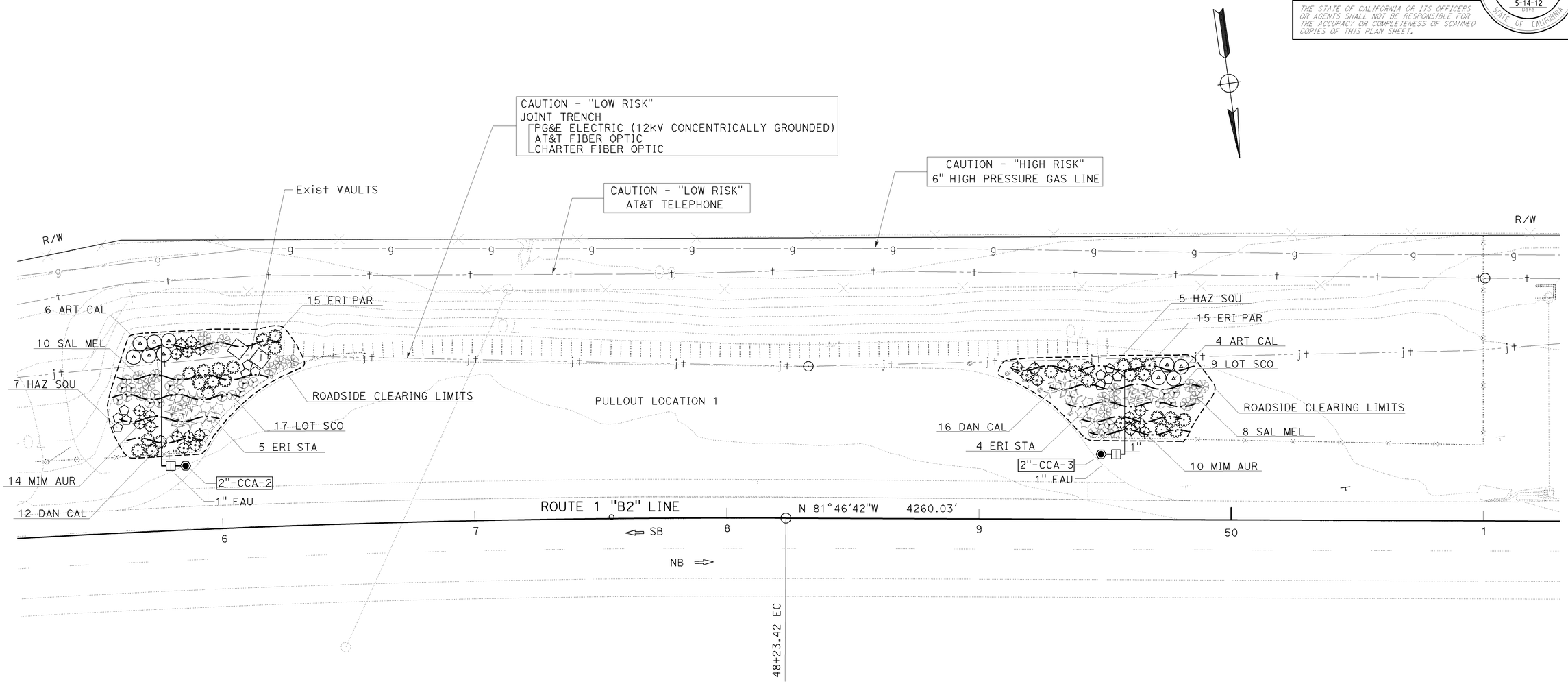

APPROVED FOR PLANTING AND IRRIGATION WORK ONLY

PLANTING AND IRRIGATION PLAN

SCALE: 1"=20'

PI-2

REVISED BY | DATE REVISED

SCOTT DOWLAN | KRISTEN LANGAGER

CALCULATED-DESIGNED BY | CHECKED BY

SENIOR LANDSCAPE ARCHITECT

DENNIS REEVES

STATE OF CALIFORNIA - DEPARTMENT OF TRANSPORTATION

Caltrans LANDSCAPE ARCHITECTURE

LAST REVISION 05-10-12 | DATE PLOTTED => 15-MAY-2012 | TIME PLOTTED => 07:57

Dist	COUNTY	ROUTE	POST MILES TOTAL PROJECT	SHEET No.	TOTAL SHEETS
05	SLO	1	R36.7/39.6	30	54

LICENSED LANDSCAPE ARCHITECT

5-14-12
PLANS APPROVAL DATE

LICENSED LANDSCAPE ARCHITECT
SCOTT P. DOWLAN No. 4480
Expiration Date 9-30-12
Renewal Date 5-14-12
DATE
STATE OF CALIFORNIA

THE STATE OF CALIFORNIA OR ITS OFFICERS OR AGENTS SHALL NOT BE RESPONSIBLE FOR THE ACCURACY OR COMPLETENESS OF SCANNED COPIES OF THIS PLAN SHEET.

NOTE:

FOR ACCURATE RIGHT OF WAY DATA, CONTACT RIGHT OF WAY ENGINEERING AT THE DISTRICT OFFICE.

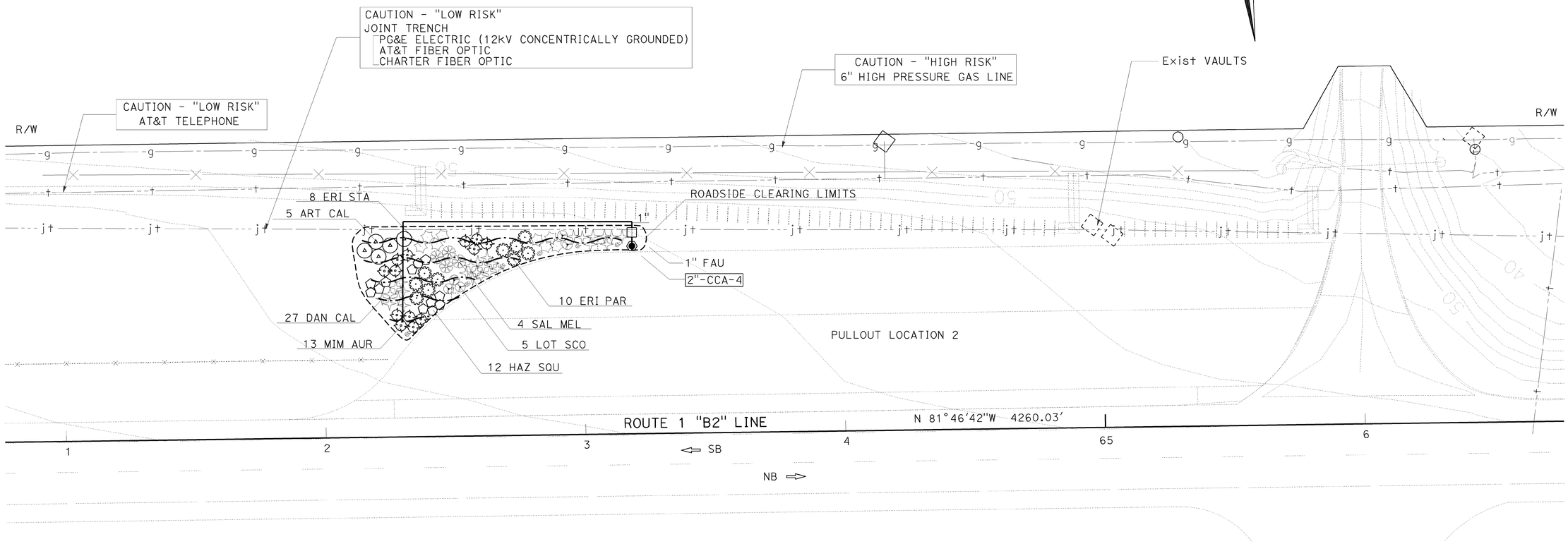

APPROVED FOR PLANTING AND IRRIGATION WORK ONLY

PLANTING AND IRRIGATION PLAN

SCALE: 1"=20'

PI-3

REVISED BY | DATE REVISED

SCOTT DOWLAN | KRISTEN LANGAGER

CALCULATED-DESIGNED BY | CHECKED BY

SENIOR LANDSCAPE ARCHITECT | DENNIS REEVES

STATE OF CALIFORNIA - DEPARTMENT OF TRANSPORTATION

Caltrans LANDSCAPE ARCHITECTURE

LAST REVISION 05-10-12 | DATE PLOTTED => 15-MAY-2012 | TIME PLOTTED => 07:57

Dist	COUNTY	ROUTE	POST MILES TOTAL PROJECT	SHEET No.	TOTAL SHEETS
05	SLO	1	R36.7/39.6	31	54

LICENSED LANDSCAPE ARCHITECT

5-14-12
PLANS APPROVAL DATE

LICENSED LANDSCAPE ARCHITECT SCOTT P. DOWLAN No. 4470 STATE OF CALIFORNIA
Expiration Date 9-30-12
Renewal Date 5-14-12
Date

THE STATE OF CALIFORNIA OR ITS OFFICERS OR AGENTS SHALL NOT BE RESPONSIBLE FOR THE ACCURACY OR COMPLETENESS OF SCANNED COPIES OF THIS PLAN SHEET.

NOTE:

FOR ACCURATE RIGHT OF WAY DATA, CONTACT RIGHT OF WAY ENGINEERING AT THE DISTRICT OFFICE.

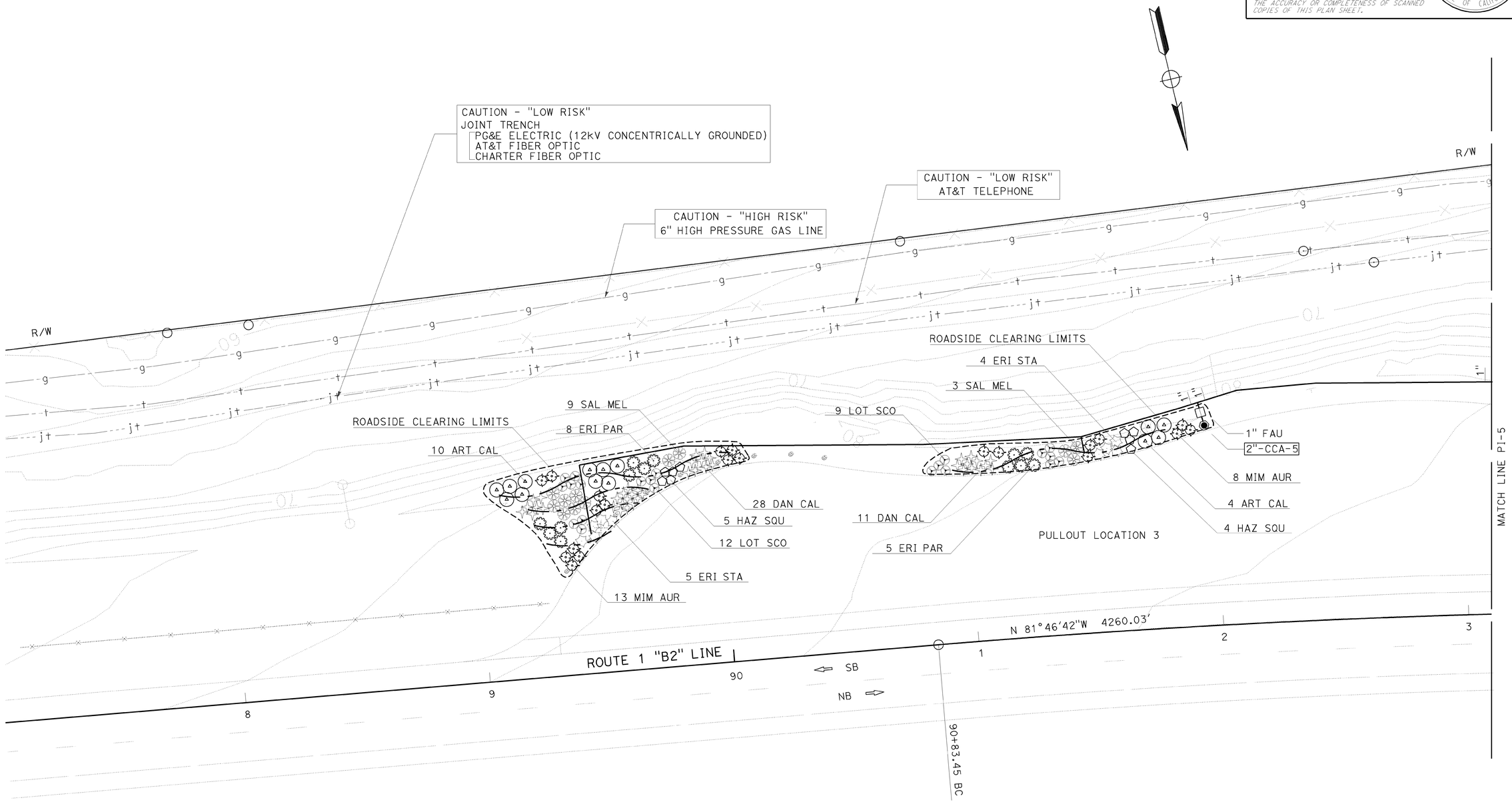

APPROVED FOR PLANTING AND IRRIGATION WORK ONLY

PLANTING AND IRRIGATION PLAN

SCALE: 1"=20'

PI-4

STATE OF CALIFORNIA - DEPARTMENT OF TRANSPORTATION
LANDSCAPE ARCHITECTURE

SENIOR LANDSCAPE ARCHITECT: DENNIS REEVES
CALCULATED-DESIGNED BY: SCOTT DOWLAN
CHECKED BY: KRISTEN LANGAGER
REVISED BY
DATE REVISED

LAST REVISION 05-10-12
DATE PLOTTED => 15-MAY-2012
TIME PLOTTED => 07:57

Dist	COUNTY	ROUTE	POST MILES TOTAL PROJECT	SHEET No.	TOTAL SHEETS
05	SLO	1	R36.7/39.6	32	54

LICENSED LANDSCAPE ARCHITECT

5-14-12
PLANS APPROVAL DATE

LICENSED LANDSCAPE ARCHITECT SCOTT P. DOWLAN No. 4480 STATE OF CALIFORNIA
Signature 9-30-12 Renewal Date 5-14-12 Date

THE STATE OF CALIFORNIA OR ITS OFFICERS OR AGENTS SHALL NOT BE RESPONSIBLE FOR THE ACCURACY OR COMPLETENESS OF SCANNED COPIES OF THIS PLAN SHEET.

NOTE:

FOR ACCURATE RIGHT OF WAY DATA, CONTACT RIGHT OF WAY ENGINEERING AT THE DISTRICT OFFICE.

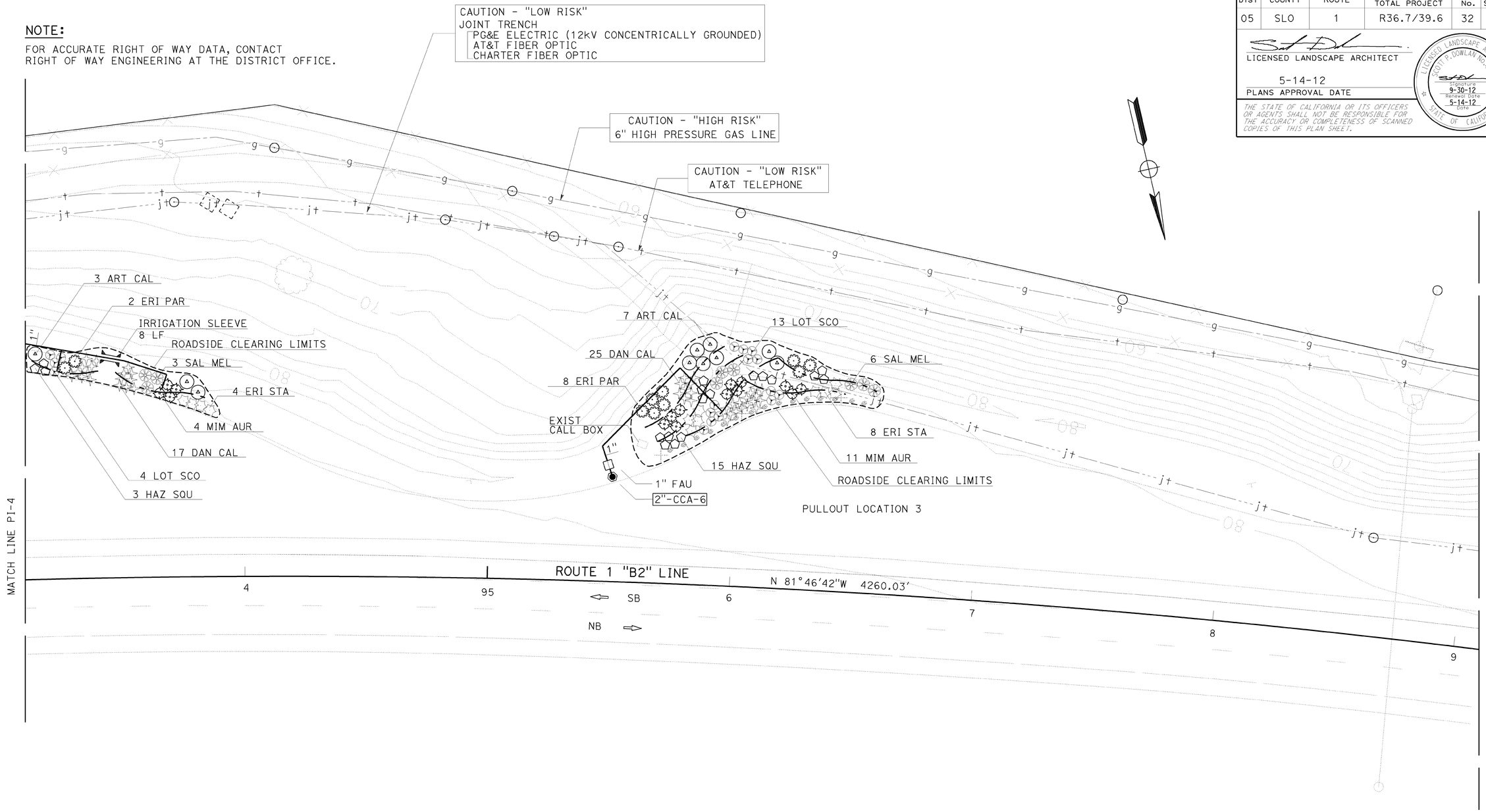

APPROVED FOR PLANTING AND IRRIGATION WORK ONLY

PLANTING AND IRRIGATION PLAN

SCALE: 1"=20'

PI-5

REVISED BY | DATE REVISED
SCOTT DOWLAN | KRISTEN LANGAGER
CALCULATED-DESIGNED BY | CHECKED BY
SENIOR LANDSCAPE ARCHITECT | DENNIS REEVES

STATE OF CALIFORNIA - DEPARTMENT OF TRANSPORTATION
Caltrans LANDSCAPE ARCHITECTURE

LAST REVISION 05-10-12
DATE PLOTTED => 15-MAY-2012
TIME PLOTTED => 07:57

Dist	COUNTY	ROUTE	POST MILES TOTAL PROJECT	SHEET No.	TOTAL SHEETS
05	SLO	1	R36.7/39.6	33	54

LICENSED LANDSCAPE ARCHITECT

5-14-12

PLANS APPROVAL DATE

LICENSED LANDSCAPE ARCHITECT SCOTT P. DOWLAN No. 4470 STATE OF CALIFORNIA Signature 9-30-12 Renewal Date 5-14-12 Date

THE STATE OF CALIFORNIA OR ITS OFFICERS OR AGENTS SHALL NOT BE RESPONSIBLE FOR THE ACCURACY OR COMPLETENESS OF SCANNED COPIES OF THIS PLAN SHEET.

NOTE:

FOR ACCURATE RIGHT OF WAY DATA, CONTACT RIGHT OF WAY ENGINEERING AT THE DISTRICT OFFICE.

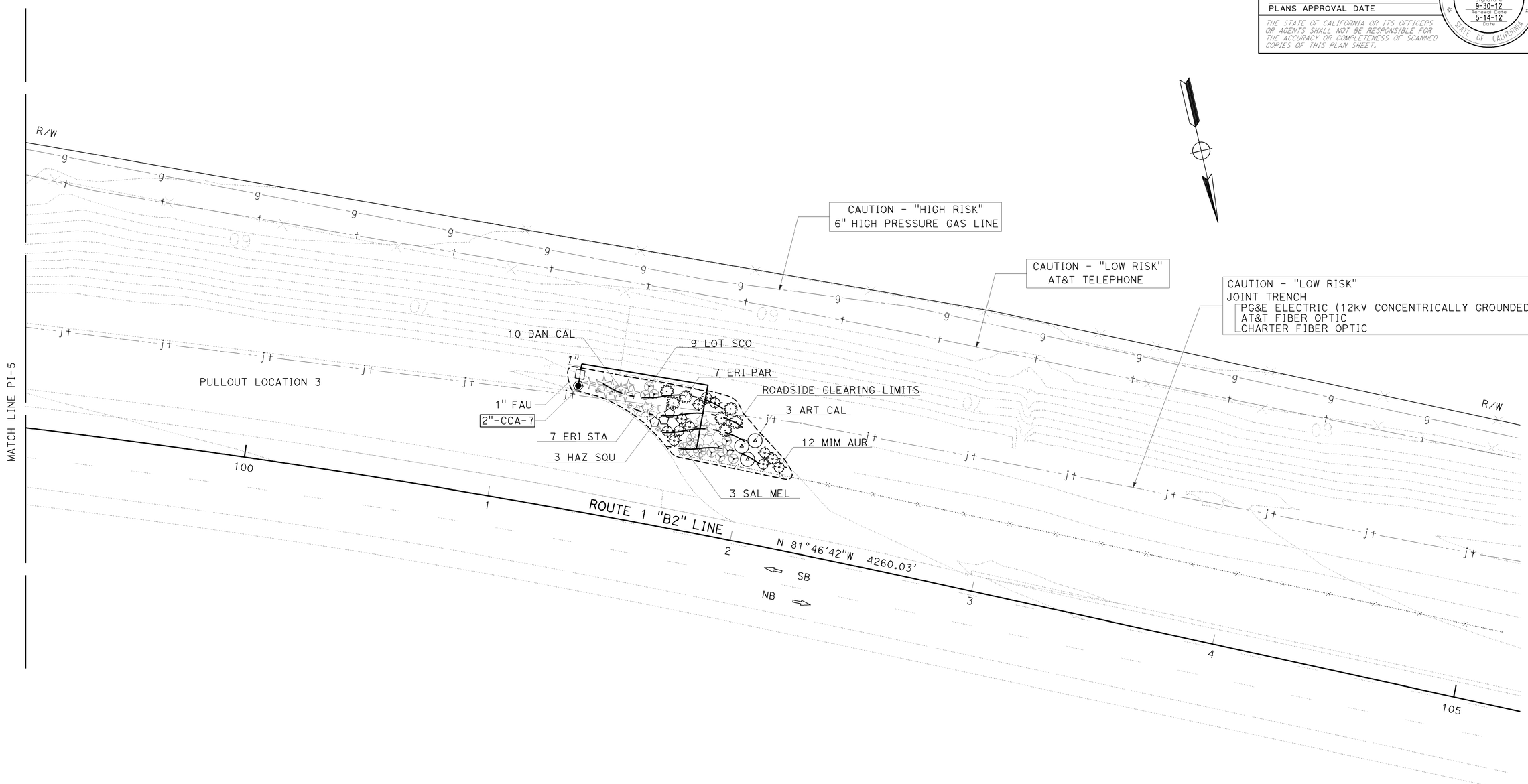

APPROVED FOR PLANTING AND IRRIGATION WORK ONLY

PLANTING AND IRRIGATION PLAN

SCALE: 1"=20'

PI-6

REVISED BY	DATE REVISED

CALCULATED-DESIGNED BY: SCOTT DOWLAN

CHECKED BY: KRISTEN LANGAGER

SENIOR LANDSCAPE ARCHITECT: DENNIS REEVES

STATE OF CALIFORNIA - DEPARTMENT OF TRANSPORTATION

Caltrans LANDSCAPE ARCHITECTURE

LAST REVISION 05-10-12

DATE PLOTTED => 15-MAY-2012

TIME PLOTTED => 07:57

Dist	COUNTY	ROUTE	POST MILES TOTAL PROJECT	SHEET No.	TOTAL SHEETS
05	SLO	1	R36.7/39.6	34	54

LICENSED LANDSCAPE ARCHITECT

5-14-12
PLANS APPROVAL DATE

LICENSED LANDSCAPE ARCHITECT SCOTT P. DOWLAN No. 4470 STATE OF CALIFORNIA Expires 9-30-12 Renewal Date 5-14-12 Date

THE STATE OF CALIFORNIA OR ITS OFFICERS OR AGENTS SHALL NOT BE RESPONSIBLE FOR THE ACCURACY OR COMPLETENESS OF SCANNED COPIES OF THIS PLAN SHEET.

NOTE:

FOR ACCURATE RIGHT OF WAY DATA, CONTACT
RIGHT OF WAY ENGINEERING AT THE DISTRICT OFFICE.

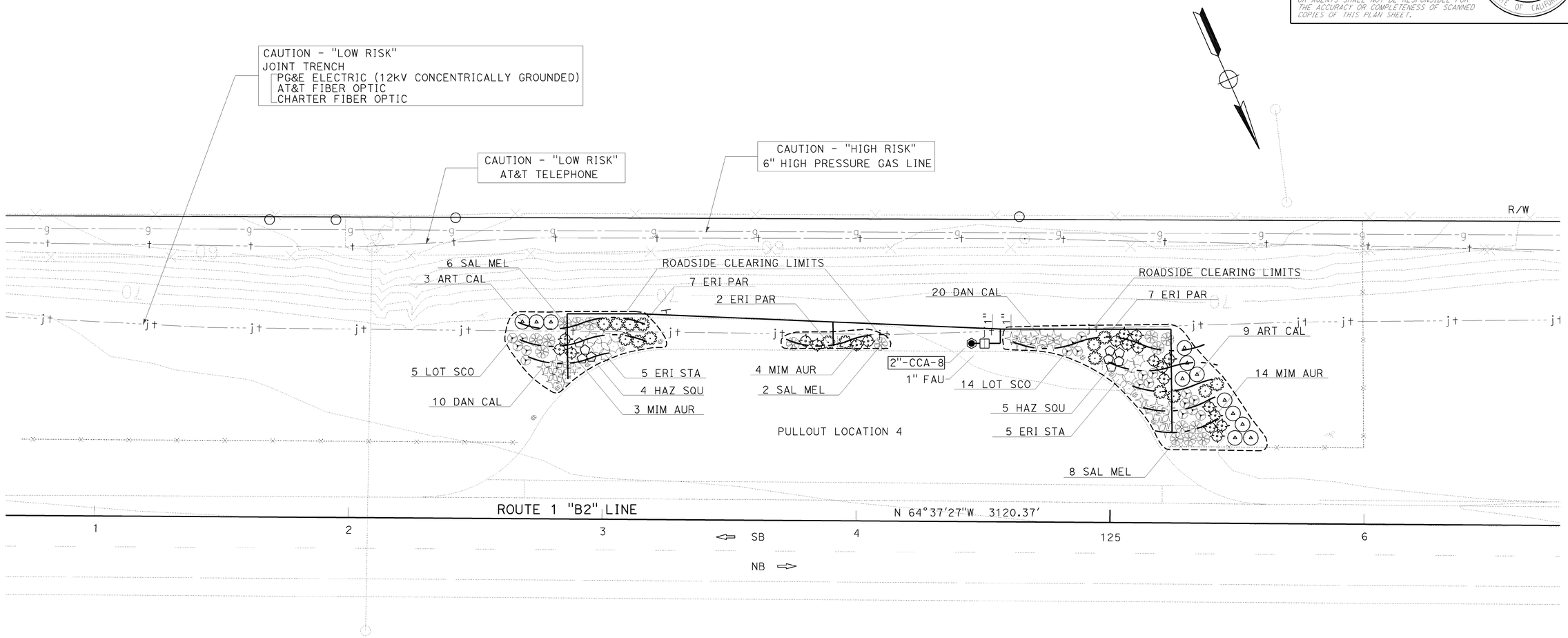

APPROVED FOR PLANTING AND IRRIGATION WORK ONLY

PLANTING AND IRRIGATION PLAN

SCALE: 1"=20'

PI-7

REVISED BY	DATE REVISED

SCOTT DOWLAN — KRISTEN LANGAGER — CALCULATED-DESIGNED BY

CHECKED BY

SENIOR LANDSCAPE ARCHITECT — DENNIS REEVES

STATE OF CALIFORNIA - DEPARTMENT OF TRANSPORTATION
LANDSCAPE ARCHITECTURE

LAST REVISION 05-10-12 | DATE PLOTTED => 15-MAY-2012 | TIME PLOTTED => 07:57

Dist	COUNTY	ROUTE	POST MILES TOTAL PROJECT	SHEET No.	TOTAL SHEETS
05	SLO	1	R36.7/39.6	35	54

LICENSED LANDSCAPE ARCHITECT

5-14-12

PLANS APPROVAL DATE

LICENSED LANDSCAPE ARCHITECT SCOTT P. DOWLAN No. 4470 STATE OF CALIFORNIA Expiration Date 9-30-12 Renewal Date 5-14-12 Date

THE STATE OF CALIFORNIA OR ITS OFFICERS OR AGENTS SHALL NOT BE RESPONSIBLE FOR THE ACCURACY OR COMPLETENESS OF SCANNED COPIES OF THIS PLAN SHEET.

NOTE:

FOR ACCURATE RIGHT OF WAY DATA, CONTACT RIGHT OF WAY ENGINEERING AT THE DISTRICT OFFICE.

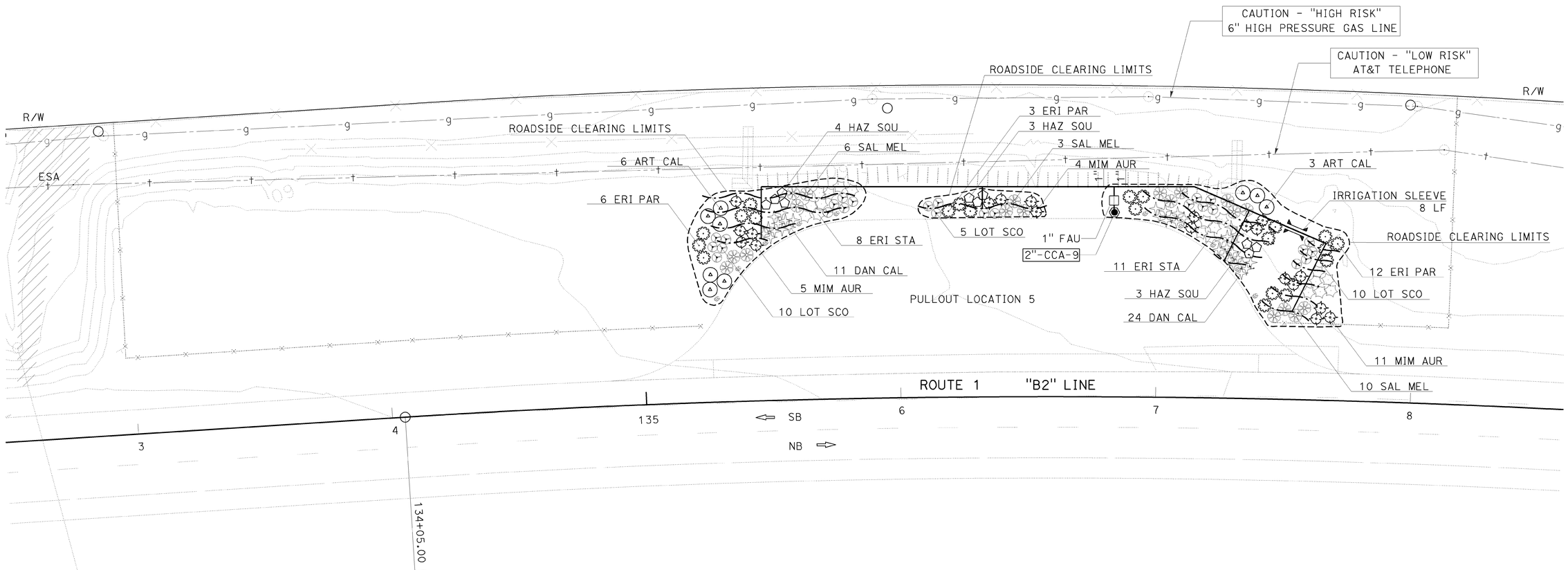

APPROVED FOR PLANTING AND IRRIGATION WORK ONLY

PLANTING AND IRRIGATION PLAN

SCALE: 1"=20'

PI-8

STATE OF CALIFORNIA - DEPARTMENT OF TRANSPORTATION

Caltrans LANDSCAPE ARCHITECTURE

SENIOR LANDSCAPE ARCHITECT: DENNIS REEVES

CALCULATED-DESIGNED BY: SCOTT DOWLAN

CHECKED BY: KRISTEN LANGAGER

REVISED BY

DATE REVISED

LAST REVISION 05-10-12

DATE PLOTTED => 15-MAY-2012

TIME PLOTTED => 07:57

Dist	COUNTY	ROUTE	POST MILES TOTAL PROJECT	SHEET No.	TOTAL SHEETS
05	SLO	1	R36.7/39.6	36	54

LICENSED LANDSCAPE ARCHITECT

5-14-12
PLANS APPROVAL DATE

LICENSED LANDSCAPE ARCHITECT SCOTT P. DOWLAN No. 4470 STATE OF CALIFORNIA
Signature 9-30-12 Renewal Date 5-14-12 Date

THE STATE OF CALIFORNIA OR ITS OFFICERS OR AGENTS SHALL NOT BE RESPONSIBLE FOR THE ACCURACY OR COMPLETENESS OF SCANNED COPIES OF THIS PLAN SHEET.

NOTE:

FOR ACCURATE RIGHT OF WAY DATA, CONTACT RIGHT OF WAY ENGINEERING AT THE DISTRICT OFFICE.

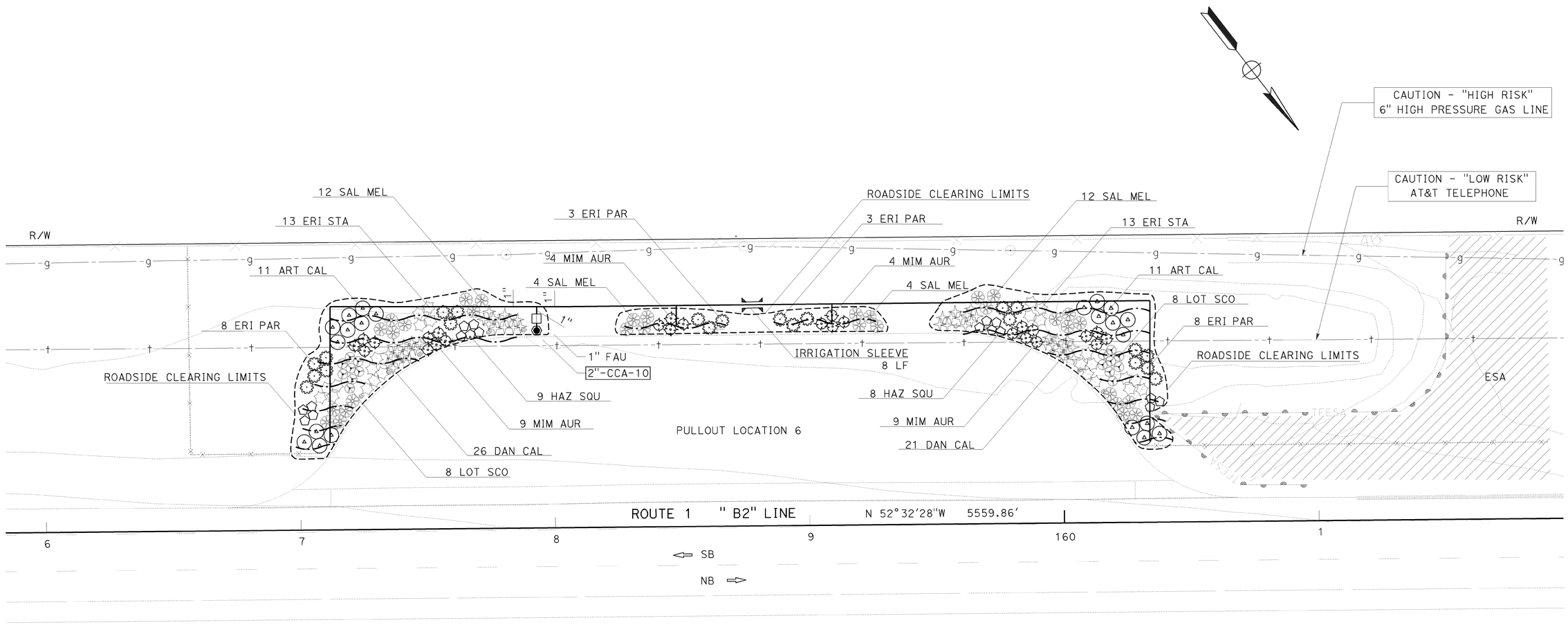

APPROVED FOR PLANTING AND IRRIGATION WORK ONLY

PLANTING AND IRRIGATION PLAN

SCALE: 1"=20'

PI-9

STATE OF CALIFORNIA - DEPARTMENT OF TRANSPORTATION
Caltrans LANDSCAPE ARCHITECTURE

SENIOR LANDSCAPE ARCHITECT: DENNIS REEVES
CALCULATED-DESIGNED BY: SCOTT DOWLAN
CHECKED BY: KRISTEN LANGAGER
REVISED BY
DATE REVISED

LAST REVISION 05-10-12
DATE PLOTTED => 15-MAY-2012
TIME PLOTTED => 07:57

Dist	COUNTY	ROUTE	POST MILES TOTAL PROJECT	SHEET No.	TOTAL SHEETS
05	SLO	1	R36.7/39.6	37	54

LICENSED LANDSCAPE ARCHITECT

5-14-12
PLANS APPROVAL DATE

LICENSED LANDSCAPE ARCHITECT
SCOTT P. DOWLAN No. 4470
Signature
9-30-12
Renewal Date
5-14-12
Date
STATE OF CALIFORNIA

THE STATE OF CALIFORNIA OR ITS OFFICERS OR AGENTS SHALL NOT BE RESPONSIBLE FOR THE ACCURACY OR COMPLETENESS OF SCANNED COPIES OF THIS PLAN SHEET.

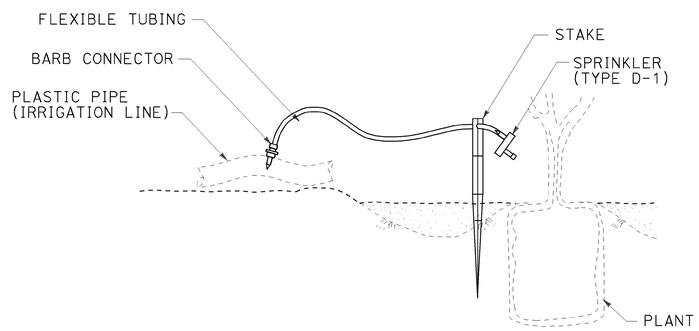

SECTION
DRIP EMITTER

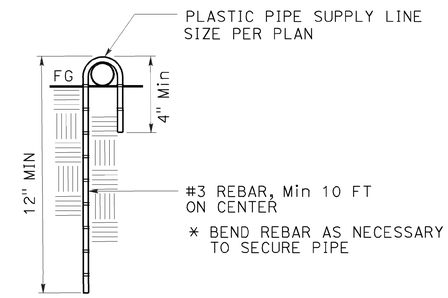

SECTION
PIPE ANCHOR

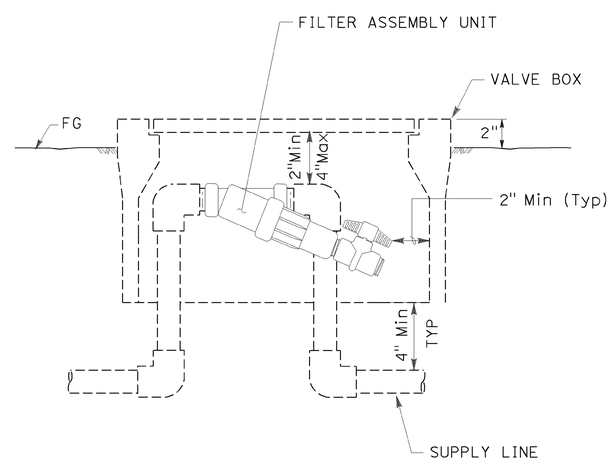

SECTION
FILTER ASSEMBLY UNIT

LANDSCAPE DETAILS
LD-1

STATE OF CALIFORNIA - DEPARTMENT OF TRANSPORTATION
Caltrans LANDSCAPE ARCHITECTURE

SENIOR LANDSCAPE ARCHITECT: DENNIS REEVES
CALCULATED-DESIGNED BY: SCOTT DOWLAN
CHECKED BY: KRISTEN LANGAGER
REVISED BY
DATE REVISED

LAST REVISION 05-10-12
DATE PLOTTED => 15-MAY-2012
TIME PLOTTED => 07:57

Dist	COUNTY	ROUTE	POST MILES TOTAL PROJECT	SHEET No.	TOTAL SHEETS
05	SLO	1	R36.7/39.6	38	54

LICENSED LANDSCAPE ARCHITECT

5-14-12
PLANS APPROVAL DATE

LICENSED LANDSCAPE ARCHITECT SCOTT P. DOWLAN No. 4401 STATE OF CALIFORNIA Expiration Date 9-30-12 Renewal Date 5-14-12 Date

THE STATE OF CALIFORNIA OR ITS OFFICERS OR AGENTS SHALL NOT BE RESPONSIBLE FOR THE ACCURACY OR COMPLETENESS OF SCANNED COPIES OF THIS PLAN SHEET.

TOTALS PER VALVE ON LATERAL SUPPLY SIDE OF CAM COUPLER

DESCRIPTION		UNIT	ASSEMBLY NUMBER CCA-1	CCA-2	CCA-3	CCA-4	CCA-5	CCA-6	CCA-7	CCA-8	CCA-9	CCA-10	TOTALS	UNIT	DESCRIPTION	
ASSEMBLIES	CCA	2 INCH	EA	1	1	1	1	1	1	1	1	1	1	10	EA	2 INCH	CCA ASSEMBLIES
ASSEMBLIES	FAU	1 INCH	EA	1	1	1	1	1	1	1	1	1	1	10	EA	1 INCH	FAU ASSEMBLIES
PLASTIC PIPE SUPPLY LINE	SCHEDULE 40	1 INCH	LF	64	57	43	136	495	84	88	330	286	455	2038	LF	1 INCH	SCHEDULE 40 PLASTIC PIPE SUPPLY LINE
PLASTIC PIPE IRRIGATION LINE		¾ INCH	LF	520	365	415	410	580	265	280	565	735	945	5080	LF	¾ INCH	PLASTIC PIPE IRRIGATION LINE
SPRINKLER TYPE		D-1	EA	108	86	71	84	178	93	54	133	158	208	1173	EA	D-1	SPRINKLER TYPE

IRRIGATION SLEEVES

SHEET No.	LF
PI-5	8
PI-8	8
PI-9	8
TOTAL	24

SPRINKLER SCHEDULE

SYMBOL	TYPE	DESCRIPTION	SPRAY PATTERN	OPERATING PRESSURE (psi)	PRESSURE COMPENSATING	PLUS/MINUS 5% ② DISCHARGE: GALLONS PER MINUTE (GPM)	GALLONS PER HOUR (GPH)	RADIUS (ft)	WIDTH x LENGTH (ft)	MATERIAL	INLET CONNECTION (NPT INCH)	POSITIVE-LOCKING Adj ARC STOP	BACKSPLASH PREVENTER	DIFFUSER PIN	DISTANCE CONTROL FLAP	Adj DISCHARGE	RISER: TYPE	MATERIAL: PLASTIC	GALVANIZED	SIZE (IPS INCH)	HEIGHT (INCH)	FLOW SHUTOFF DEVICE	SWING JOINT (TYPE)	RISER SUPPORT	SPRINKLER PROTECTOR (TYPE)	REMARKS
-	D-1	EMITTER	-	30	X	-	2.0	-	-	PL	-	-	-	-	-	-	-	-	-	-	-	-	-	-	-	⑦

APPLICABLE WHEN CIRCLED BELOW:

1 - SEE SPECIAL PROVISIONS.
② - IF A PRESSURE COMPENSATING DEVICE IS SPECIFIED, THE DISCHARGE AND RADII SHOWN REFLECT ITS USE.
3 - ARC STOP SHALL BE FITTED WITH A NUT AND BOLT.

X IN BOX DENOTES REQUIREMENT

4 - VINYL-COATED CAST IRON HOUSING.
5 - SWING JOINTS REQUIRED ADJACENT TO SHOULDERS, CURBS, SIDEWALKS, AND DIKES.
6 - UNLESS OTHERWISE SHOWN ON PLANS.
⑦ - ONE EMITTER PER PLANT.

IRRIGATION QUANTITIES AND SPRINKLER SCHEDULE IQ-1

STATE OF CALIFORNIA - DEPARTMENT OF TRANSPORTATION
LANDSCAPE ARCHITECTURE

SENIOR LANDSCAPE ARCHITECT: DENNIS REEVES
CALCULATED-DESIGNED BY: SCOTT DOWLAN
CHECKED BY: KRISTEN LANGAGER
REVISED BY / DATE REVISED

LAST REVISION 05-10-12
DATE PLOTTED => 15-MAY-2012
TIME PLOTTED => 07:57

Dist	COUNTY	ROUTE	POST MILES TOTAL PROJECT	SHEET No.	TOTAL SHEETS
05	SLO	1	R36.7/39.6	39	54

REGISTERED CIVIL ENGINEER 5-14-12 DATE

5-14-12
PLANS APPROVAL DATE

REGISTERED PROFESSIONAL ENGINEER FAWZI YAGHMOUR No. C-54750 Exp. 12-31-13 CIVIL STATE OF CALIFORNIA

THE STATE OF CALIFORNIA OR ITS OFFICERS OR AGENTS SHALL NOT BE RESPONSIBLE FOR THE ACCURACY OR COMPLETENESS OF SCANNED COPIES OF THIS PLAN SHEET.

STATIONARY MOUNTED CONSTRUCTION AREA SIGNS

SIGN No. ⊗	SIGN CODE		PANEL SIZE	SIGN MESSAGE	NUMBER OF POSTS AND SIZE	No. OF SIGNS
	FEDERAL	CALIFORNIA				
(A)	W20-1	C-23	60" x 60"	ROAD WORK AHEAD	2-4" x 6"	2
(B)	W20-1	C-23	48" x 48"	ROAD WORK AHEAD	1-6" x 6"	4
(C)	G20-2	C-14	36" x 18"	END ROAD WORK	1-4" x 6"	3
(D)		C40 (CA)	72" x 36"	TRAFFIC FINES DOUBLED IN CONSTRUCTION ZONES	2-4" x 6"	2

NOTE: EXACT SIGN LOCATIONS TO BE DETERMINED BY THE ENGINEER.

ABBREVIATION: PCMS = PORTABLE CHANGEABLE MESSAGE SIGN

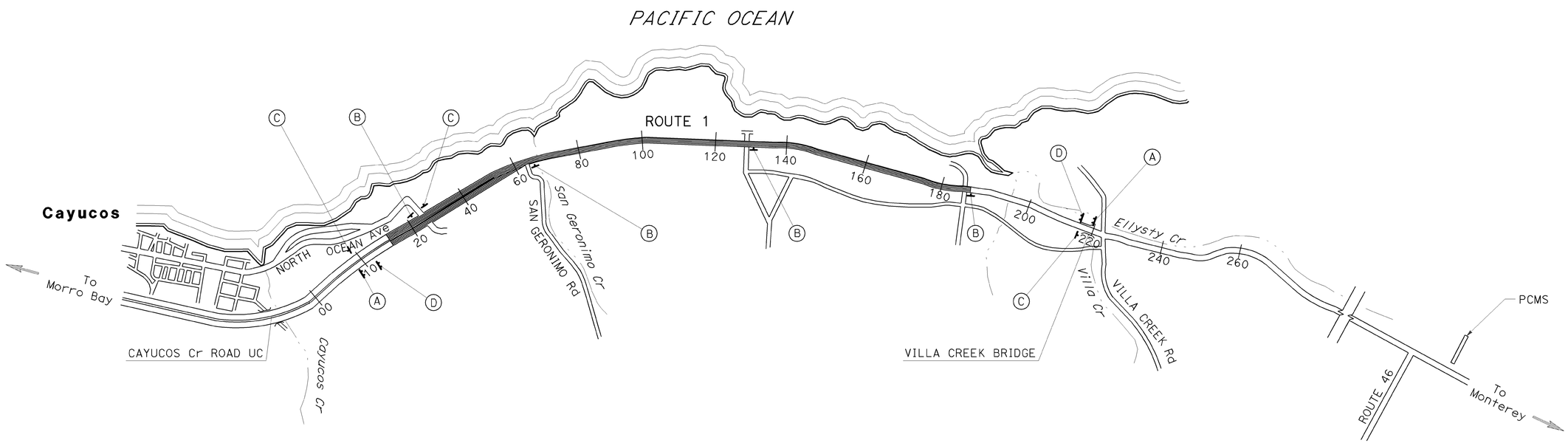

APPROVED FOR CONSTRUCTION AREA SIGN WORK ONLY

CONSTRUCTION AREA SIGNS

NO SCALE

CS-1

STATE OF CALIFORNIA - DEPARTMENT OF TRANSPORTATION
Caltrans® TRAFFIC DESIGN

FUNCTIONAL SUPERVISOR: MOHAMMED QATAMI
CALCULATED-DESIGNED BY: DAVID BLACK
CHECKED BY: FAWZI YAGHMOUR
REVISED BY
DATE REVISED

LAST REVISION 05-10-12
DATE PLOTTED => 15-MAY-2012
TIME PLOTTED => 07:57

DIST	COUNTY	ROUTE	POST MILES TOTAL PROJECT	SHEET No.	TOTAL SHEETS
05	SLO	1	R36.7/39.6	40	54

REGISTERED CIVIL ENGINEER

January 20, 2012
PLANS APPROVAL DATE

REGISTERED PROFESSIONAL ENGINEER Cornelis M. Hakim No. C55610 Exp. 12-31-12 CIVIL STATE OF CALIFORNIA

The State of California or its officers or agents shall not be responsible for the accuracy or completeness of electronic copies of this plan sheet.

To accompany plans dated 5-14-12

LEGEND:

- HMA Pavement
- HMA or Concrete Pavement
- Concrete Pavement

ABBREVIATIONS:

SE Safety Edge
TT Total Thickness of SE
HW Hinge Width, distance from ES or EP to HP

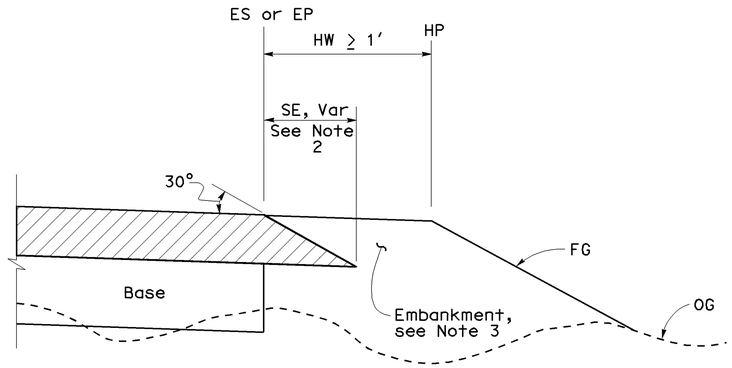

CASE K
Safety Edge - Fill Section, HW ≥ 1′

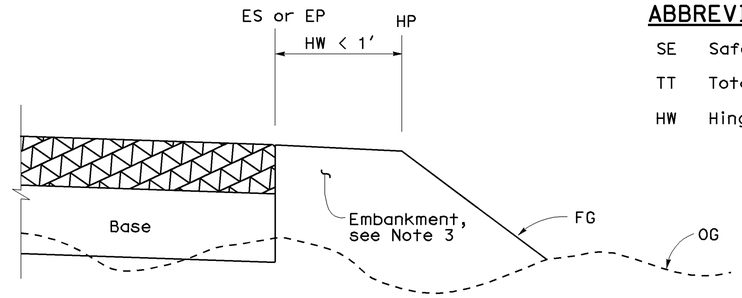

CASE L
Vertical Edge - Fill Section, HW < 1′

FILL SECTION

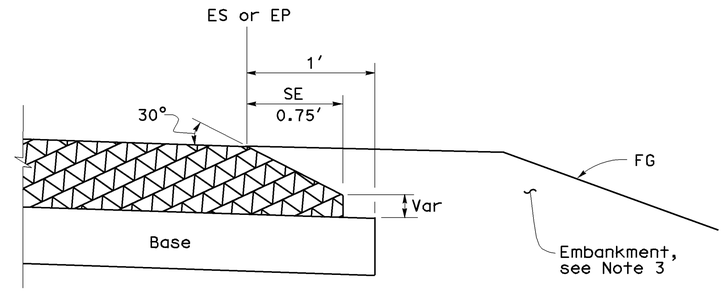

DETAIL "B"
For HMA pavement thickness more than 0.43′ or concrete pavement

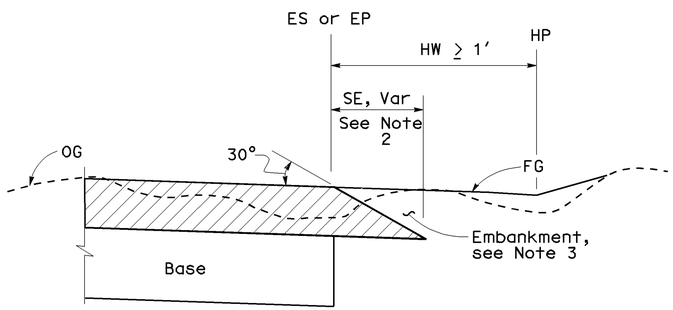

CASE M
Safety Edge - Cut Section, HW ≥ 1′

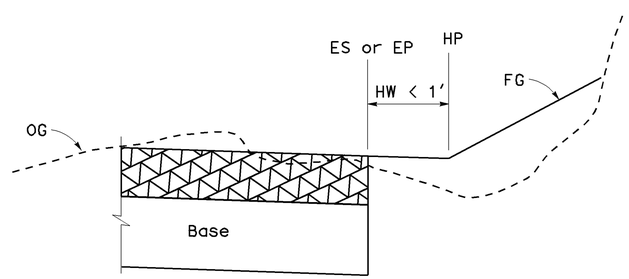

CASE N
Vertical Edge - Cut Section, HW < 1′

CUT SECTION

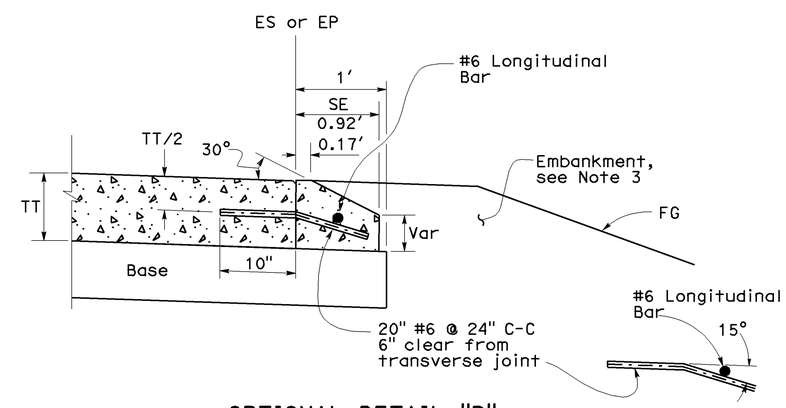

OPTIONAL DETAIL "B"
For concrete pavement
See Note 4

NOTES:

1. For limits of safety edge and vertical edge treatments, see New Standard Plan NSP P74
2. Details shown for HMA pavement thickness less than 0.43′. See Detail "B" for HMA pavement thickness more than 0.43′ or concrete pavement.
3. For locations and limits of embankment see project plans.
4. Safety edge transverse joint must match pavement transverse joint. End of #6 longitudinal bar must be 2" ±½" clear from transverse joint.
5. Safety edge is not needed in the area of MBGR, barrier, right turn lane and acceleration lane. See New Standard Plan NSP P74.

STATE OF CALIFORNIA
DEPARTMENT OF TRANSPORTATION

PAVEMENT EDGE TREATMENTS-NEW CONSTRUCTION

NO SCALE

NSP P76 DATED JANUARY 20, 2012 SUPPLEMENTS THE STANDARD PLANS BOOK DATED MAY 2006.

NEW STANDARD PLAN NSP P76

2006 NEW STANDARD PLAN NSP P76

Dist	COUNTY	ROUTE	POST MILES TOTAL PROJECT	SHEET No.	TOTAL SHEETS
05	SLO	1	R36.7/39.6	41	54

Randell D. Hiatt
REGISTERED CIVIL ENGINEER

May 20, 2011
PLANS APPROVAL DATE

REGISTERED PROFESSIONAL ENGINEER
Randell D. Hiatt
No. C50200
Exp. 6-30-11
CIVIL
STATE OF CALIFORNIA

The State of California or its officers or agents shall not be responsible for the accuracy or completeness of electronic copies of this plan sheet.

To accompany plans dated 5-14-12

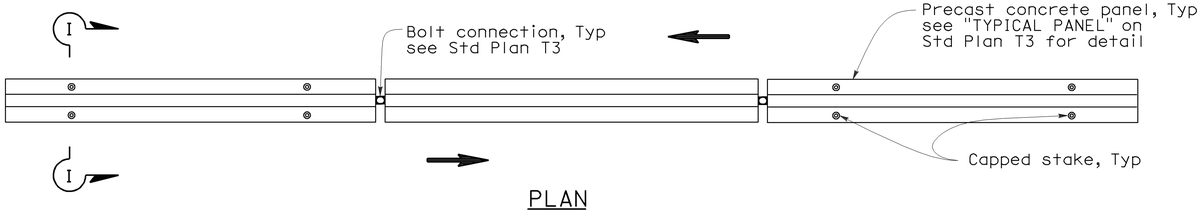

PLAN

RAILING STAKING CONFIGURATION FOR TWO-WAY TRAFFIC

See Note 1

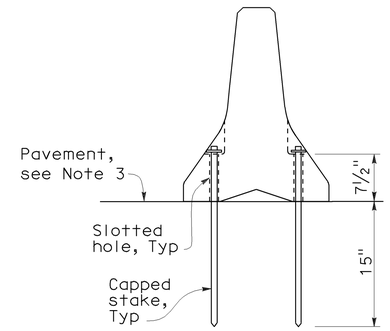

SECTION I-I

NOTES:

1. Where Type K Temporary Railing is placed as a temporary or long term barrier in two-way traffic on highways with less than 24" from the edge of traveled way, use four capped stakes per every other panel with end panels staked.
2. Where Type K Temporary Railing is placed 3" to 24" from the edge of an excavation on highways, use two capped stakes per panel along the traffic side.
3. Staked Type K Temporary Railing must be supported by at least 4" thick concrete, hot mix asphalt or existing asphalt concrete pavement.
4. The minimum yield strength for the washer must be 60,000 psi.
5. Direction of adjacent traffic indicated by ⟹.

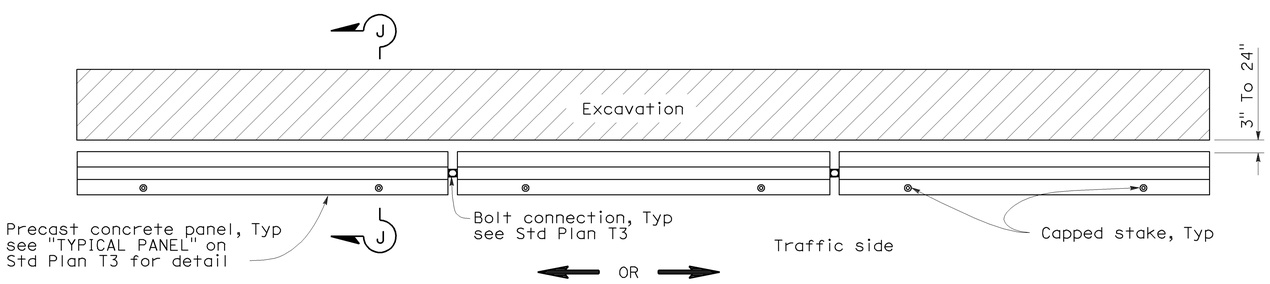

PLAN

RAILING STAKING CONFIGURATION ADJACENT TO AN EXCAVATION

See Note 2

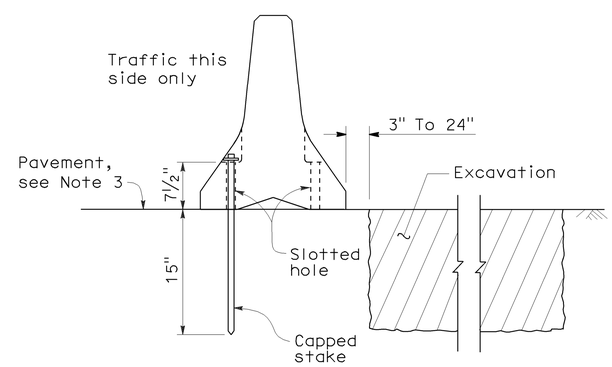

SECTION J-J

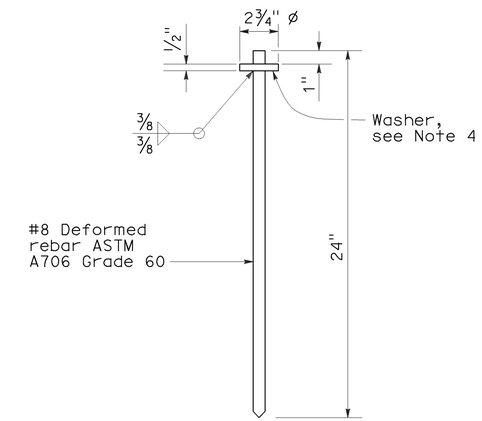

CAPPED STAKE DETAIL

STATE OF CALIFORNIA
DEPARTMENT OF TRANSPORTATION

TEMPORARY RAILING (TYPE K)

NO SCALE

NSP T3A DATED MAY 20, 2011 SUPPLEMENTS
THE STANDARD PLANS BOOK DATED MAY 2006.

NEW STANDARD PLAN NSP T3A

2006 NEW STANDARD PLAN NSP T3A

DIST	COUNTY	ROUTE	POST MILES TOTAL PROJECT	SHEET NO.	TOTAL SHEETS
05	SLO	1	R36.7/39.6	42	54

LICENSED LANDSCAPE ARCHITECT

August 15, 2008
PLANS Approval DATE

The State of California or its officers or agents shall not be responsible for the accuracy or completeness of electronic copies of this plan sheet.

LICENSED LANDSCAPE ARCHITECT
Robert B. Schott 3635
Signature
11-04-08
Renewal Date
08-11-08
Date
STATE OF CALIFORNIA

To accompany plans dated 5-14-12

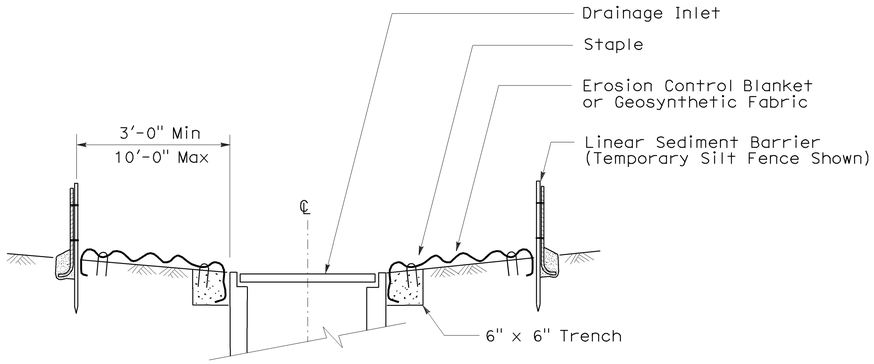

SECTION A-A

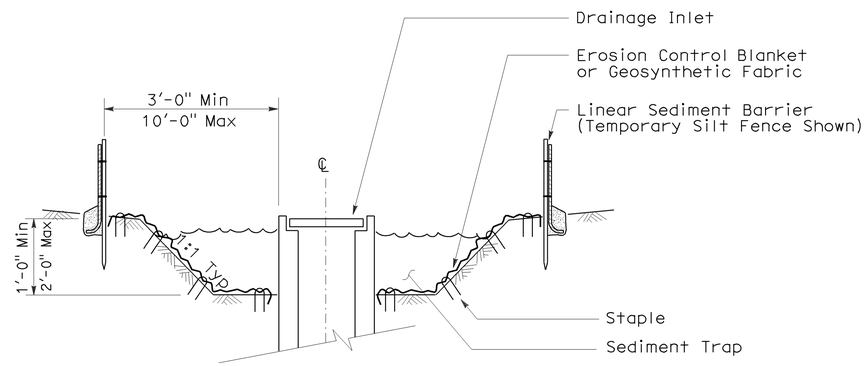

SECTION B-B

NOTES:

1. See Standard Plan T51 for Temporary Silt Fence.
2. Dimensions may vary to fit field conditions.

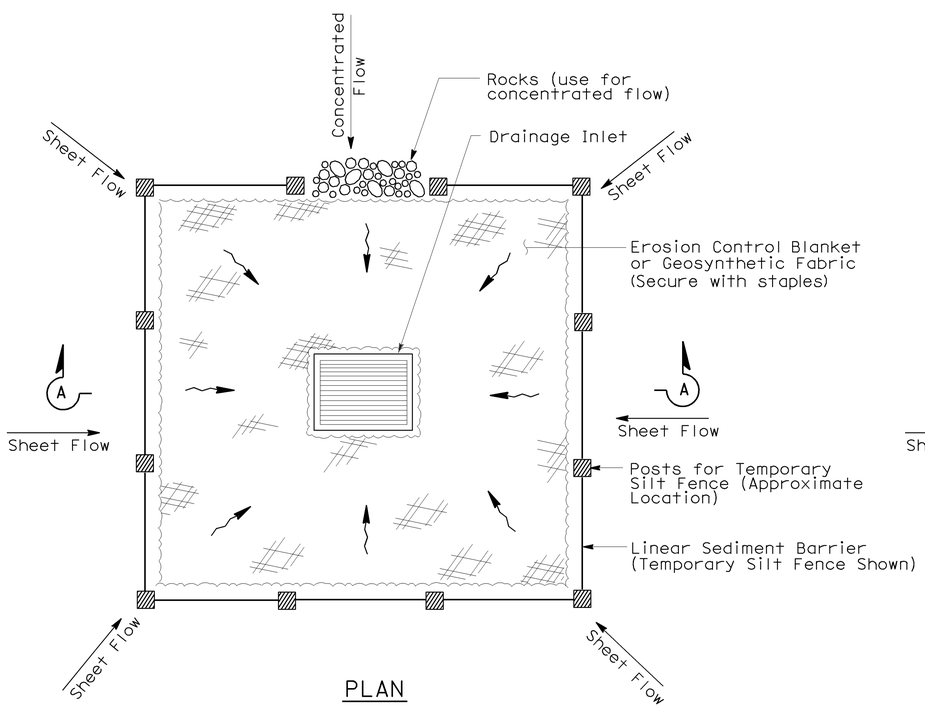

PLAN

TEMPORARY DRAINAGE
INLET PROTECTION (TYPE 1)

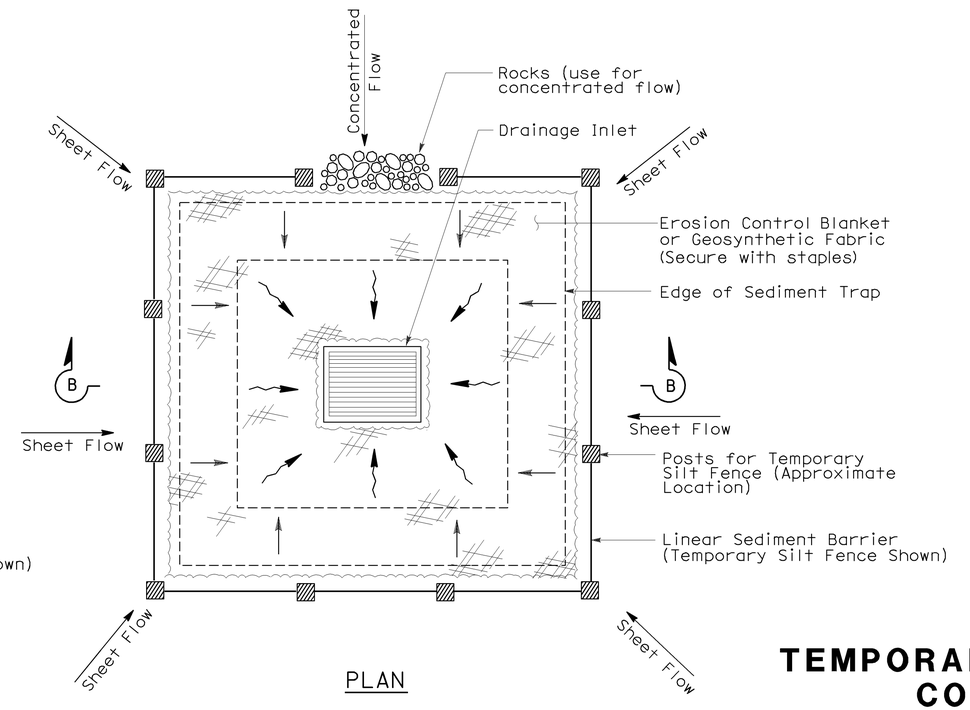

PLAN

TEMPORARY DRAINAGE
INLET PROTECTION (TYPE 2)
(EXCAVATED SEDIMENT TRAP)

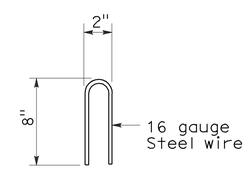

STAPLE DETAIL

STATE OF CALIFORNIA
DEPARTMENT OF TRANSPORTATION

TEMPORARY WATER POLLUTION CONTROL DETAILS (TEMPORARY DRAINAGE INLET PROTECTION)

NO SCALE

Nsp t61 dated august 15, 2008 supplements the standard plans book dated may 2006.

NEW STANDARD PLAN NSP T61

2006 NEW STANDARD PLAN NSP T61

7-11-08

DIST	COUNTY	ROUTE	POST MILES TOTAL PROJECT	SHEET NO.	TOTAL SHEETS
05	SLO	1	R36.7/39.6	43	54

LICENSED LANDSCAPE ARCHITECT

August 15, 2008
PLANS APPROVAL DATE

The State of California or its officers or agents shall not be responsible for the accuracy or completeness of electronic copies of this plan sheet.

LICENSED LANDSCAPE ARCHITECT — Robert B. Schott — 3635 — Signature — 11-04-08 Renewal Date — 08-11-08 Date — STATE OF CALIFORNIA

To accompany plans dated 5-14-12

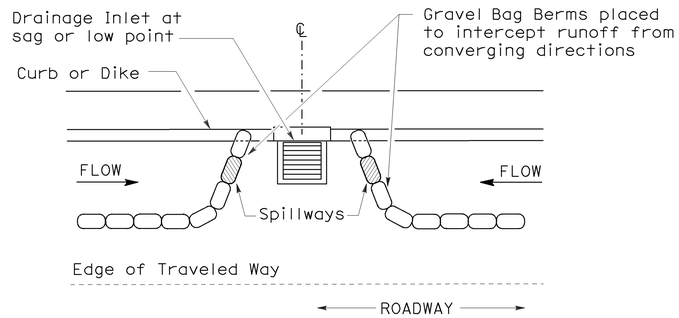

PLAN

CONFIGURATION FOR SAG POINT INLET (GRAVEL BAG BERM)

GRAVEL BAG BERM (TYPE 3A) SPACING TABLE

SLOPE OF ROADWAY (PERCENT)	1 to 3.9	4 to 5.9	6 to 7.9	8 to 10	10+
INTERVAL BETWEEN BERM	100′	75′	50′	25′	12′

For slope of less than 1%, install barriers only if erosion/sediment is prevalent

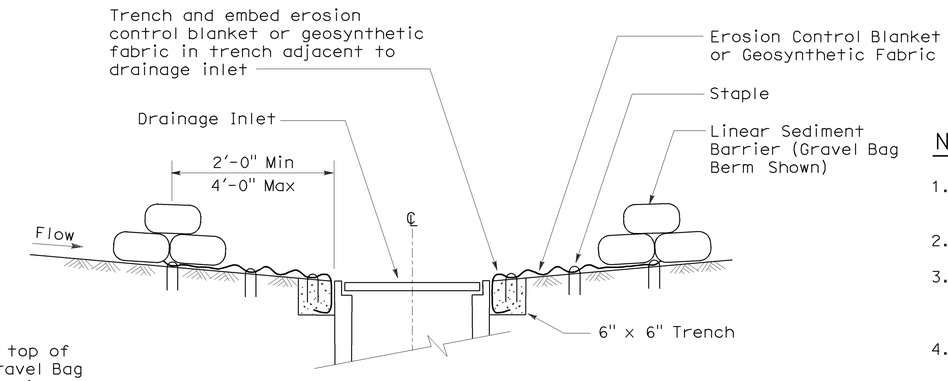

SECTION A-A

NOTES:

1. Place safety cones adjacent to drainage inlet protection.
2. Dimensions may vary to fit field conditions.
3. Install a minimum of 3 gravel bag berms upstream of each drainage inlet to be protected.
4. Position erosion control blanket or geosynthetic fabric at edge of concrete apron and secure in trench.
5. Erosion control blanket or geosynthetic fabric is not required if the area adjacent to the drainage inlet is vegetated or paved.

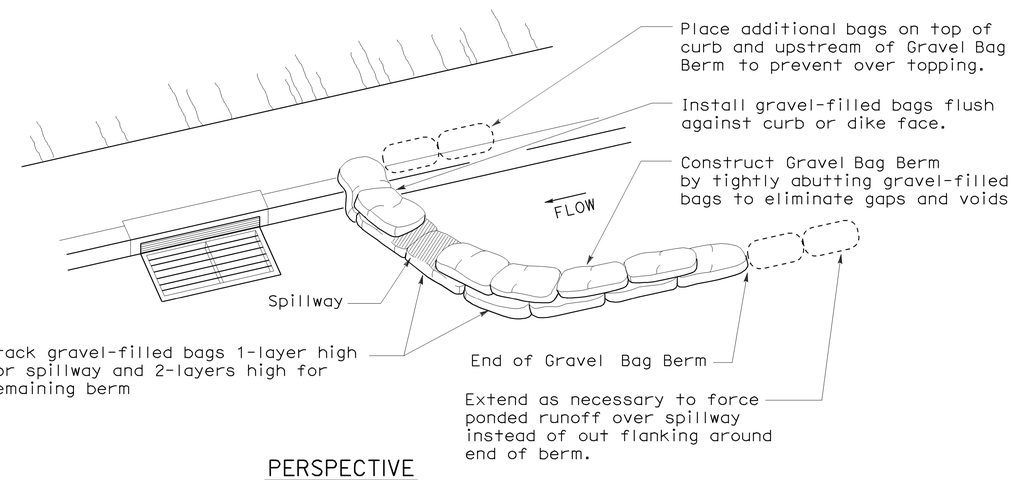

PERSPECTIVE

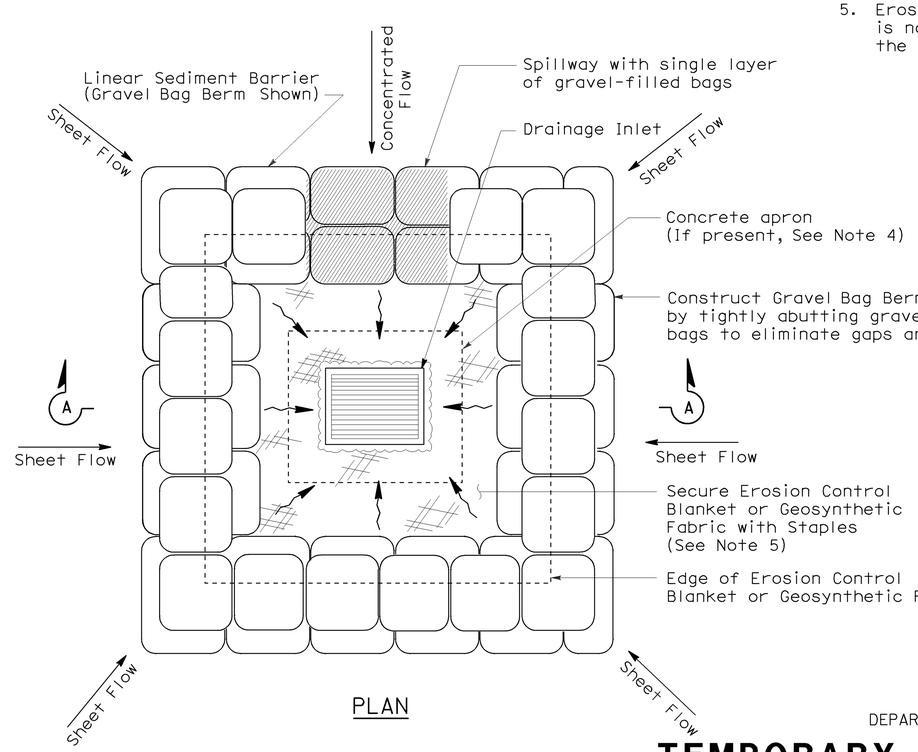

PLAN

TEMPORARY DRAINAGE INLET PROTECTION (TYPE 3B)

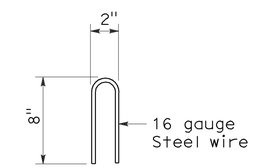

STAPLE DETAIL

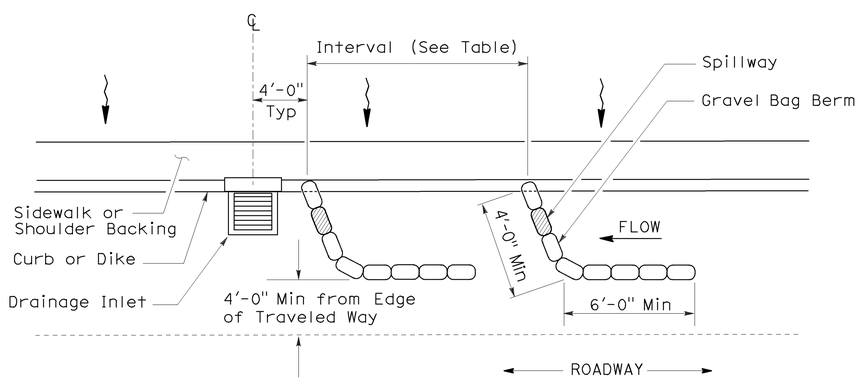

PLAN

TEMPORARY DRAINAGE INLET PROTECTION (TYPE 3A) (GRAVEL BAG BERM)

STATE OF CALIFORNIA
DEPARTMENT OF TRANSPORTATION

TEMPORARY WATER POLLUTION CONTROL DETAILS (TEMPORARY DRAINAGE INLET PROTECTION)

NO SCALE

NSP T62 DATED AUGUST 15, 2008 SUPPLEMENTS THE STANDARD PLANS BOOK DATED MAY 2006.

NEW STANDARD PLAN NSP T62

2006 NEW STANDARD PLAN NSP T62

7-11-08

DIST	COUNTY	ROUTE	POST MILES TOTAL PROJECT	SHEET NO.	TOTAL SHEETS
05	SLO	1	R36.7/39.6	44	54

LICENSED LANDSCAPE ARCHITECT

August 15, 2008
PLANS APPROVAL DATE

The State of California or its officers or agents shall not be responsible for the accuracy or completeness of electronic copies of this plan sheet.

LICENSED LANDSCAPE ARCHITECT — Robert B. Schott — 3635 — Signature — 11-04-08 Renewal Date — 08-11-08 Date — STATE OF CALIFORNIA

To accompany plans dated 5-14-12

FLEXIBLE SEDIMENT BARRIER SPACING TABLE

SLOPE OF ROADWAY (PERCENT)	0 to 0.9	1 to 1.9	2 to 2.9	3 to 4	5+
INTERVAL BETWEEN BARRIERS	50′	35′	30′	25′	20′
ANGLE FROM FACE OF CURB	70°	70°	70°	45°	45°
SUGGESTED BARRIER LENGTH	6′	6′	6′	6′	6′

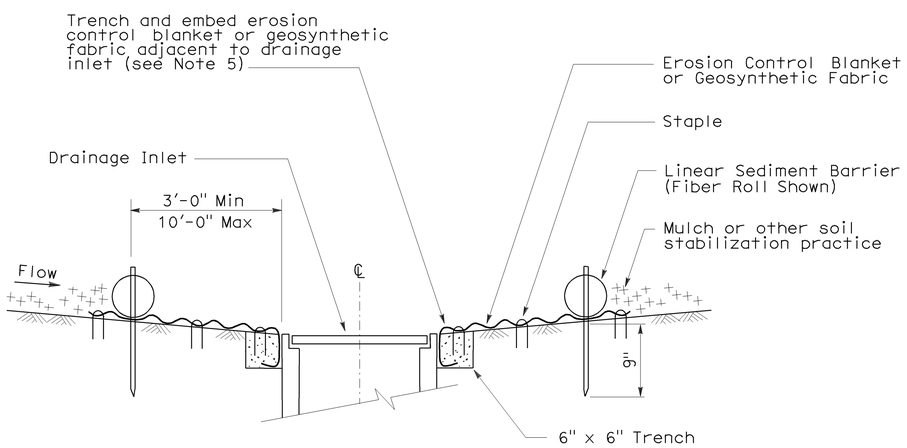

SECTION A-A

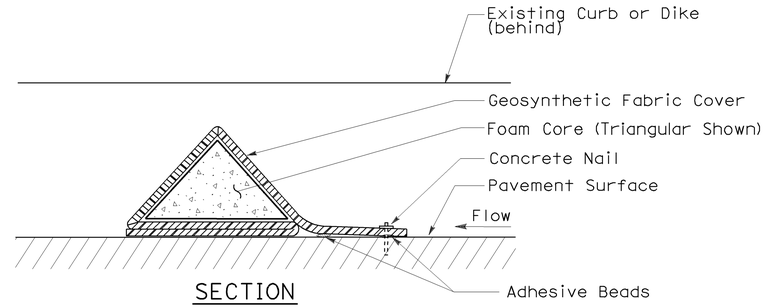

SECTION

FLEXIBLE SEDIMENT BARRIER DETAIL (FOAM BARRIER SHOWN)

NOTES:

1. See Standard Plan T51 for Temporary Silt Fence.
2. Dimensions may vary to fit field conditions.
3. Install a minimum of 3 flexible sediment barriers upstream of each drainage inlet to be protected.
4. Position erosion control blanket or geosynthetic fabric at edge of concrete apron and secure in trench.
5. Erosion control blanket or geosynthetic fabric is not required if the area adjacent to the drainage inlet is vegetated.

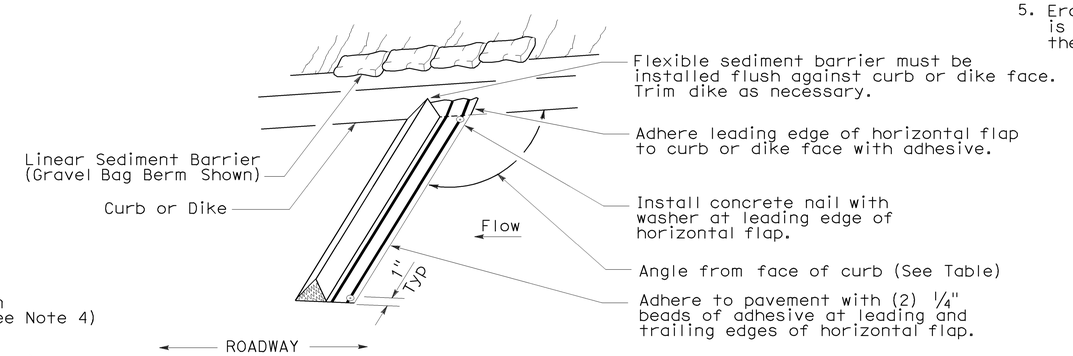

PERSPECTIVE

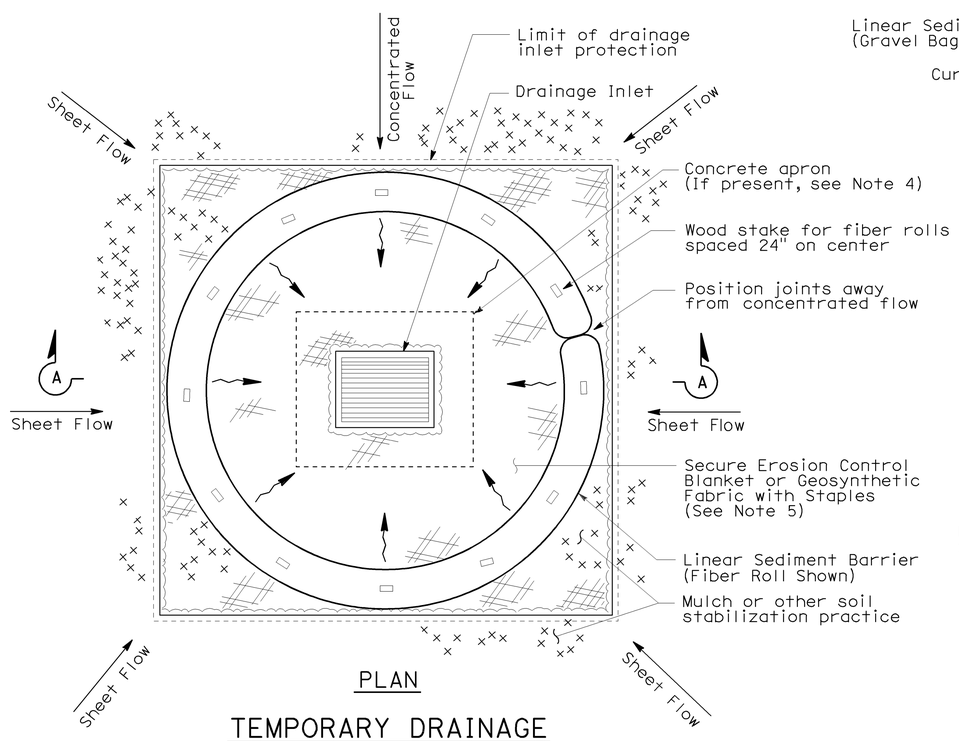

PLAN

TEMPORARY DRAINAGE INLET PROTECTION (TYPE 4A)

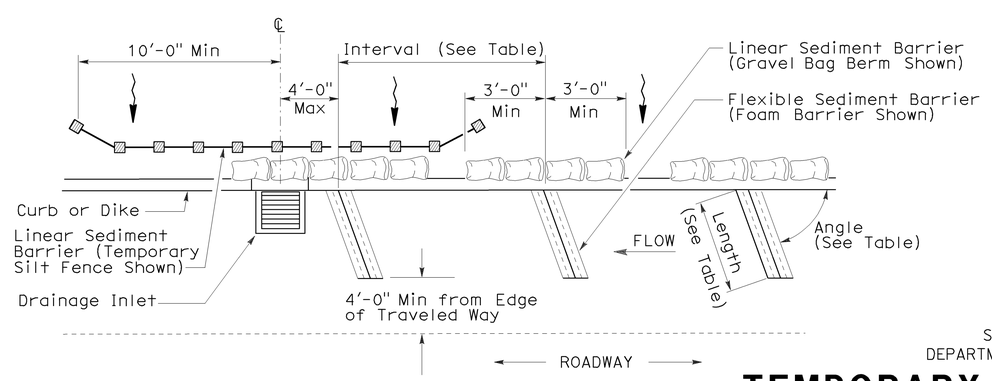

PLAN

TEMPORARY DRAINAGE INLET PROTECTION (TYPE 4B) FLEXIBLE SEDIMENT BARRIER

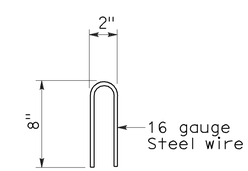

STAPLE DETAIL

STATE OF CALIFORNIA
DEPARTMENT OF TRANSPORTATION

TEMPORARY WATER POLLUTION CONTROL DETAILS (TEMPORARY DRAINAGE INLET PROTECTION)

NO SCALE

NSP T63 DATED AUGUST 15, 2008 SUPPLEMENTS THE STANDARD PLANS BOOK DATED MAY 2006.

NEW STANDARD PLAN NSP T63

2006 NEW STANDARD PLAN NSP T63

7-11-08

DIST	COUNTY	ROUTE	POST MILES TOTAL PROJECT	SHEET NO.	TOTAL SHEETS
05	SLO	1	R36.7/39.6	45	54

LICENSED LANDSCAPE ARCHITECT

August 15, 2008
PLANS APPROVAL DATE

LICENSED LANDSCAPE ARCHITECT
Robert B. Schott 3635
Signature
11-04-08
Renewal Date
08-11-08
Date
STATE OF CALIFORNIA

The State of California or its officers or agents shall not be responsible for the accuracy or completeness of electronic copies of this plan sheet.

To accompany plans dated 5-14-12

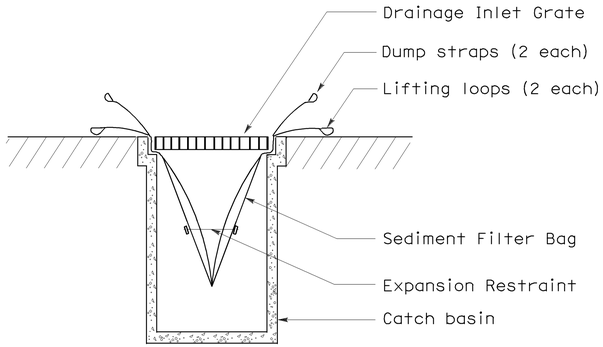

SECTION B-B

SEDIMENT FILTER BAG DETAIL

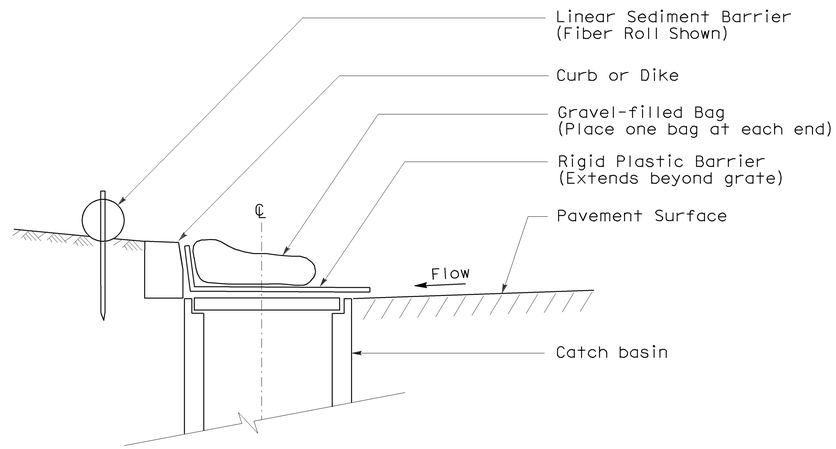

SECTION

TEMPORARY DRAINAGE INLET PROTECTION (TYPE 6A) (CATCH BASIN WITH GRATE)

NOTES:

1. See Standard Plan T51 for Temporary Silt Fence.
2. Dimensions may vary to fit field conditions.

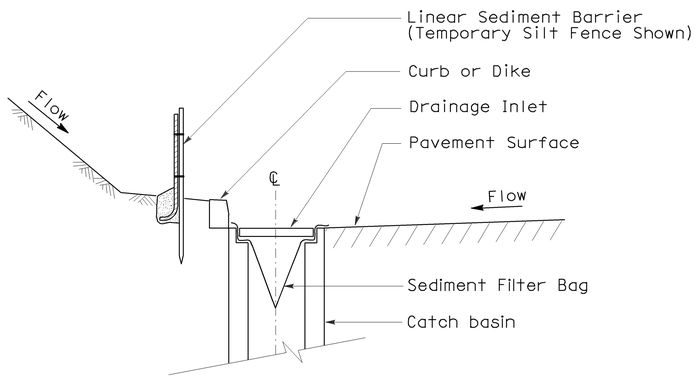

SECTION A-A

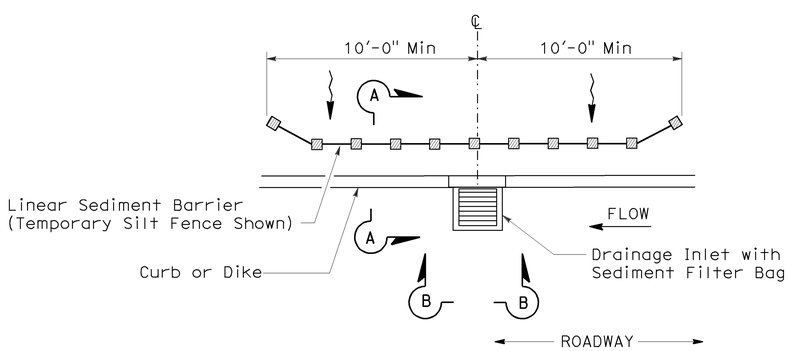

PLAN

TEMPORARY DRAINAGE INLET PROTECTION (TYPE 5) (SEDIMENT FILTER BAG)

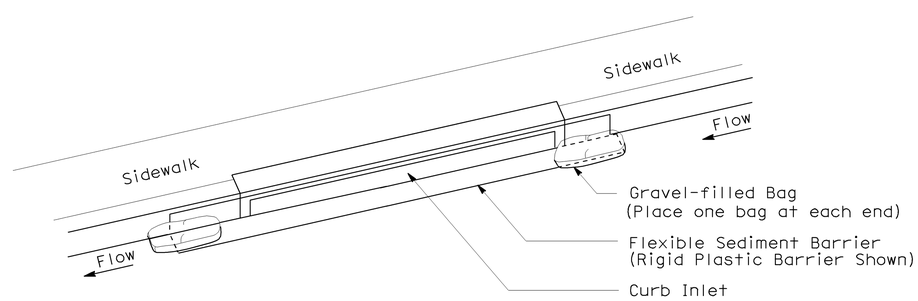

PERSPECTIVE

TEMPORARY DRAINAGE INLET PROTECTION (TYPE 6B) (CURB INLET WITHOUT GRATE)

STATE OF CALIFORNIA
DEPARTMENT OF TRANSPORTATION

TEMPORARY WATER POLLUTION CONTROL DETAILS (TEMPORARY DRAINAGE INLET PROTECTION)

NO SCALE

NSP T64 DATED AUGUST 15, 2008 SUPPLEMENTS
THE STANDARD PLANS BOOK DATED MAY 2006.

NEW STANDARD PLAN NSP T64

2006 NEW STANDARD PLAN NSP T64

7-11-08

DIST	COUNTY	ROUTE	POST MILES TOTAL PROJECT	SHEET NO.	TOTAL SHEETS
05	SLO	1	R36.7/39.6	46	54

LICENSED LANDSCAPE ARCHITECT

April 3, 2009
PLANS APPROVAL DATE

The State of California or its officers or agents shall not be responsible for the accuracy or completeness of electronic copies of this plan sheet.

LICENSED LANDSCAPE ARCHITECT
Robert B. Schott 3695
Signature
11-30-10
Renewal Date
2-25-09
Date
STATE OF CALIFORNIA

To accompany plans dated 5-14-12

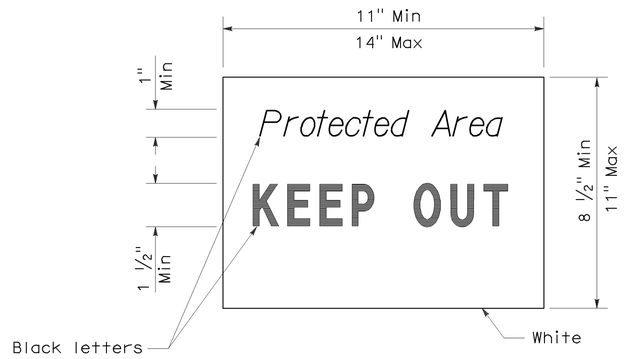

SIGN DETAIL

NOTE:

1. Temporary silt fence and temporary straw bale barrier shown for reference purposes only.

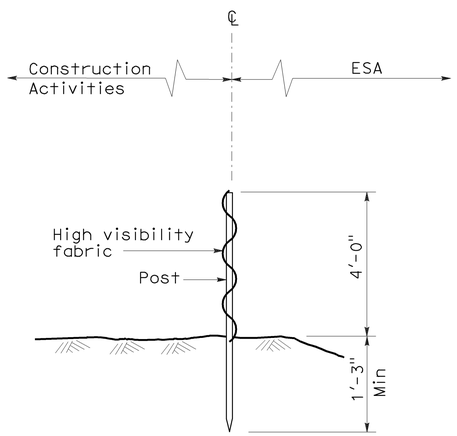

SECTION
TEMPORARY FENCE (TYPE ESA)

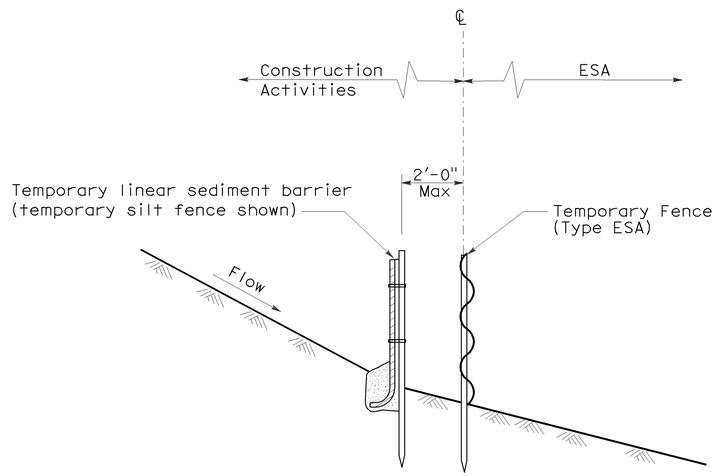

SECTION
PLACEMENT DETAIL
FOR TEMPORARY LINEAR SEDIMENT BARRIER
USED WITH TEMPORARY
FENCE (TYPE ESA)
(See Note 1)

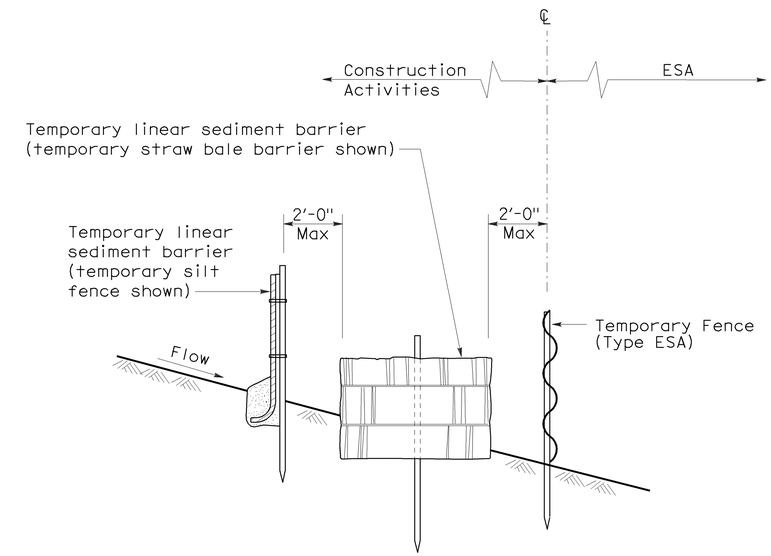

SECTION
PLACEMENT DETAIL
FOR TEMPORARY SILT FENCE
AND TEMPORARY STRAW BALE BARRIER
USED WITH TEMPORARY FENCE (TYPE ESA)
(See Note 1)

STATE OF CALIFORNIA
DEPARTMENT OF TRANSPORTATION

TEMPORARY WATER POLLUTION CONTROL DETAILS [TEMPORARY FENCE (TYPE ESA)]

NO SCALE

NSP T65 DATED APRIL 3, 2009 SUPPLEMENTS
THE STANDARD PLANS BOOK DATED MAY 2006.

NEW STANDARD PLAN NSP T65

2006 NEW STANDARD PLAN NSP T65

DIST	COUNTY	ROUTE	POST MILES TOTAL PROJECT	SHEET NO.	TOTAL SHEETS
05	SLO	1	R36.7/39.6	47	54

LICENSED LANDSCAPE ARCHITECT

June 5, 2009
PLANS APPROVAL DATE

Gregory A. Balzer 2576
10 Expiration Date
2-28-11 Renewal Date
5-14-09 Date
LICENSED LANDSCAPE ARCHITECT
STATE OF CALIFORNIA

The State of California or its officers or agents shall not be responsible for the accuracy or completeness of electronic copies of this plan sheet.

To accompany plans dated 5-14-12

A

AB	aggregate base
ABS	acrylonitrile-butadiene-styrene
AC	asphalt concrete
Adj	adjacent/adjustable
AIC	auxiliary irrigation controller
Alt	alternative
AMEND	amendment
ARV	air release valve
AUTO	automatic
AUX	auxiliary
AVB	atmospheric vacuum breaker

B

B&B	balled and burlapped
B/B	brass/bronze
B/B/PL	brass/bronze/plastic
B/PL	brass/plastic
BFM	bonded fiber matrix
Bit Ctd	bituminous coated
BP	booster pump
BPA	backflow preventer assembly
BPAE	backflow preventer assembly in enclosure
BPE	backflow preventer enclosure
BV	ball valve

C

CAP	corrugated aluminum pipe
CARV	combination air release valve
CCA	cam coupler assembly
CEC	controller enclosure cabinet
CHDPE	corrugated high density polyethylene
CL	chain link
CNC	control and neutral conductors
Conc	concrete
Cond	conduit
CSP	corrugated steel pipe
CST	center strip
CV	check valve

D

Dia	diameter
DIP	ductile iron pipe
DN	diameter nominal

E

EA	each
Elect	electric/electrical
Elev	elevation
ENCL	enclosure
EP	edge of pavement
ES	edge of shoulder
EST	end strip
ESTB	establishment
ETW	edge of traveled way

F

F	full circle
F/P	full/part circle
FAU	filter assembly unit
FCV	flow control valve
FERT	fertilizer
FG	finished grade
FIPT	female iron pipe thread
FIS	fertilizer injector system
FL	flow line
FM	flow monitor
FS	flow sensor
Ft	foot/feet
FV	flush valve

G

GAL	Gallon(s)
Galv	galvanized
GARV	garden valve
GPH	gallons per hour
GPM	gallons per minute
GSP	galvanized steel pipe
GV	gate valve

H

H	half circle
HB	hose bib
HDPE	high density polyethylene
HP	horsepower/hinge point
HPL	high pressure line
Hwy	highway

I

IC	irrigation controller
ICC	irrigation controller(s) in controller enclosure cabinet
ID	inside diameter
In	inches
IFS	irrigation filtration system
IPS	iron pipe size
IPT	iron pipe thread
Irr	irrigation

L

L	length
LF	linear foot

M

Max	maximum
MBGR	metal beam guard railing
MCV	manual control valve
MIC	master irrigation controller
Min	minimum
MIPT	male iron pipe thread
Misc	miscellaneous
Mtl	material
MVP	maintenance vehicle pullout

N

NCN	no common name
NL	nozzle line
No.	number
NPT	national pipe thread

O

O/C	on center
OD	outside diameter
Oz	ounce

P

P	part circle
PB	pull box
PCC	portland cement concrete
PE	polyethylene
Pkt	packet
PL	plastic
PLT	plant/planting
PLT ESTB	plant establishment
PM	post mile
PR	pressure rated
PRLV	pressure relief valve
PSFM	polymer stabilized fiber matrix
PSI	pounds per square inch
PRV	pressure reducing valve
PVC	polyvinyl chloride
Pvmt	pavement

Q

Q	quarter circle
QCV	quick coupling valve

R

R	radius
RCP	reinforced concrete pipe
RCV	remote control valve
RCVM	remote control valve (master)
RCVMF	remote control valve (master) w/ flow meter
RCW	recycled/reclaimed water
RECP	rolled erosion control product
REQ	required
R/W	right of way

S

S	slip
SCC	sprinkler control conduit
SCH	schedule
SF	state-furnished
Shld	shoulder
SQFT	square foot/feet
SQYD	square yard(s)
SST	side strip
Sta	station
Std	standard
SW	sidewalk/sound wall

T

T	third circle/thread
TLS	truck loading standpipe
TQ	three quarter circle
TRM	turf reinforcement mat
TRVD	traveled
TT	two third circle
Typ	typical

U

UG	underground

V

VAU	valve assembly unit

W

W	width
W/	with
WM	water meter
WS	wye strainer
WSP	welded steel pipe
WWM	welded wire mesh

NOTE:

FOR ADDITIONAL ABBREVIATIONS, SEE STANDARD PLANS A10A AND A10B.

STATE OF CALIFORNIA
DEPARTMENT OF TRANSPORTATION

PLANTING AND IRRIGATION ABBREVIATIONS

NO SCALE

RSP H1 DATED JUNE 5, 2009 SUPERSEDES STANDARD PLAN H1
DATED MAY 1, 2006 - PAGE 201 OF THE STANDARD PLANS BOOK DATED MAY 2006.

REVISED STANDARD PLAN RSP H1

2006 REVISED STANDARD PLAN RSP H1

5-28-09

DIST	COUNTY	ROUTE	POST MILES TOTAL PROJECT	SHEET NO.	TOTAL SHEETS
05	SLO	1	R36.7/39.6	48	54

Gregory A. Balzer
LICENSED LANDSCAPE ARCHITECT

June 5, 2009
PLANS APPROVAL DATE

LICENSED LANDSCAPE ARCHITECT
Gregory A. Balzer 2576
Signature
2-28-11
Renewal Date
5-14-09
Date
STATE OF CALIFORNIA

The State of California or its officers or agents shall not be responsible for the accuracy or completeness of electronic copies of this plan sheet.

To accompany plans dated 5-14-12

EXISTING	PROPOSED	ITEM DESCRIPTION
		WATER METER (WM)
		BACKFLOW PREVENTER ASSEMBLY (BPA)
		BACKFLOW PREVENTER ASSEMBLY IN ENCLOSURE (BPAE)
		BACKFLOW PREVENTER ENCLOSURE (BPE)
		BOOSTER PUMP (BP)
		TRUCK LOADING STANDPIPE (TLS)
FS	FS	FLOW SENSOR (FS)
		MASTER IRRIGATION CONTROLLER (MIC)
		AUXILIARY IRRIGATION CONTROLLER (AIC)
		IRRIGATION CONTROLLER (IC)/ IRRIGATION CONTROLLER (IC) (BATTERY) IRRIGATION CONTROLLER (IC) (SOLAR)
		IRRIGATION CONTROLLER(S) IN CONTROLLER ENCLOSURE CABINET (ICC)
		CONTROL AND NEUTRAL CONDUCTORS (CNC)
SCC	SCC	SPRINKLER CONTROL CONDUIT (SCC)
		IRRIGATION CROSSOVER
		EXTEND IRRIGATION CROSSOVER
		IRRIGATION SLEEVE
dip	DIP	DUCTILE IRON PIPE (SUPPLY LINE) (MAIN) (DIP)
		GALVANIZED STEEL PIPE (SUPPLY LINE) (MAIN) (GSP)
		GALVANIZED STEEL PIPE (SUPPLY LINE) (LATERAL) (GSP)
		PLASTIC PIPE (PR 200) (SUPPLY LINE) (MAIN)
		PLASTIC PIPE (PR 200) (SUPPLY LINE) (LATERAL)
		PLASTIC PIPE (IRRIGATION LINE)
		REMOTE CONTROL VALVE (RCV) REMOTE CONTROL VALVE (MASTER) (RCVM) REMOTE CONTROL VALVE (MASTER) W/FLOW METER (RCVMF)
		MANUAL CONTROL VALVE (MCV)
		VALVE ASSEMBLY UNIT (VAU)
		WYE STRAINER (WS)
		FILTER ASSEMBLY UNIT (FAU)
		GATE VALVE (GV)
		BALL VALVE (BV)

EXISTING	PROPOSED	ITEM DESCRIPTION
		QUICK COUPLING VALVE (QCV)
		CAM COUPLER ASSEMBLY (CCA)
		PRESSURE REDUCING VALVE (PRV)
		PRESSURE RELIEF VALVE (PRLV)
		FLOW CONTROL VALVE (FCV)
		COMBINATION AIR RELEASE VALVE (CARV)
		CHECK VALVE (CV)
		FLUSH VALVE (FV)
		NOZZLE LINE W/TURNING UNION
		IRRIGATION SYSTEM
		IRRIGATION SYSTEM TO BE REMOVED
		CHAIN LINK GATE
		QUICK COUPLING VALVE W/SPRINKLER PROTECTOR
3	3	SPRINKLER W/SPRINKLER PROTECTOR
		CONNECT TO EXISTING SYSTEM
		CAP
		CAP EXISTING

VALVE CODE

RCV SIZE
IRRIGATION CONTROLLER
CONTROLLER STATION
VALVE IN PARALLEL (IF APPLICABLE)
GPM
QUANTITY OF SPRINKLERS (WHEN SHOWN)

* 2½"-A-2b-40 -60

MCV SIZE
VALVE NUMBER
GPM
QUANTITY OF TYPE SPRINKLERS (WHEN SHOWN)

* 2"-3-30 -50

* VALVE CODES FOR EXISTING VALVES ARE SHOWN IN A DASHED ENCLOSURE.

STATE OF CALIFORNIA
DEPARTMENT OF TRANSPORTATION

PLANTING AND IRRIGATION SYMBOLS

NO SCALE

RSP H2 DATED JUNE 5, 2009 SUPERSEDES RSP H2 DATED MARCH 7, 2008 AND STANDARD PLAN H2 DATED MAY 1, 2006 - PAGE 202 OF THE STANDARD PLANS BOOK DATED MAY 2006.

REVISED STANDARD PLAN RSP H2

2006 REVISED STANDARD PLAN RSP H2

5-11-09

DIST	COUNTY	ROUTE	POST MILES TOTAL PROJECT	SHEET NO.	TOTAL SHEETS
05	SLO	1	R36.7/39.6	49	54

Gregory A. Balzer
LICENSED LANDSCAPE ARCHITECT

June 5, 2009
PLANS APPROVAL DATE

LICENSED LANDSCAPE ARCHITECT
Gregory A. Balzer 2576
Signature
2-28-11
Renewal Date
5-14-09
Date
STATE OF CALIFORNIA

The State of California or its officers or agents shall not be responsible for the accuracy or completeness of electronic copies of this plan sheet.

To accompany plans dated 5-14-12

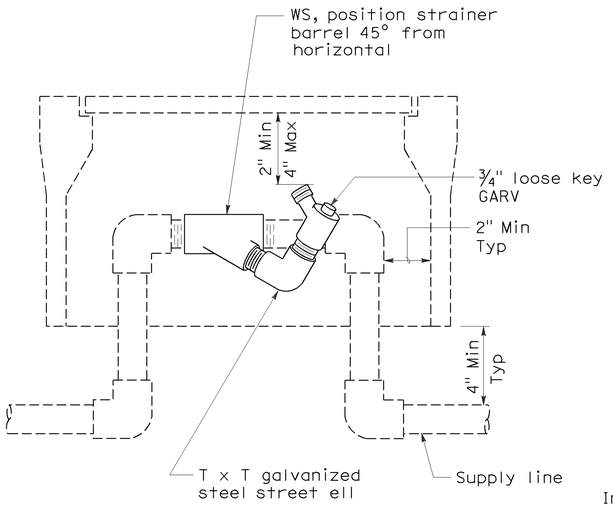

ELEVATION
WYE STRAINER

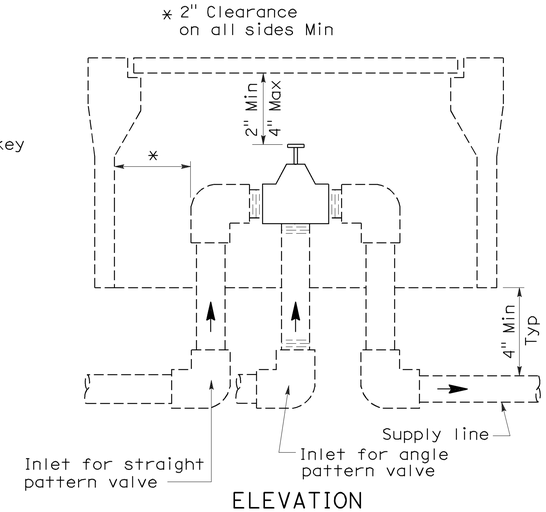

ELEVATION
VALVE

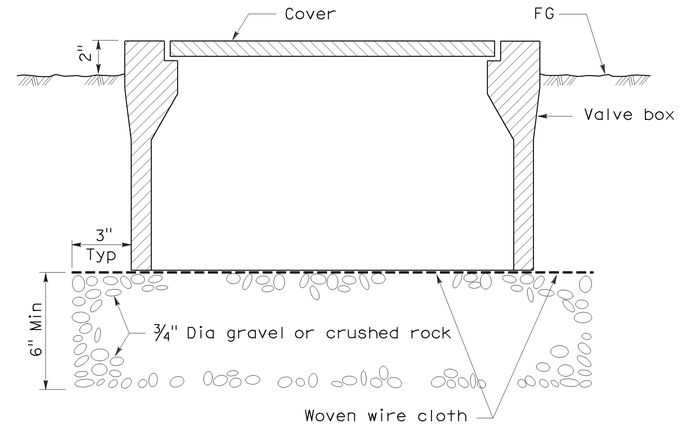

SECTION
VALVE BOX

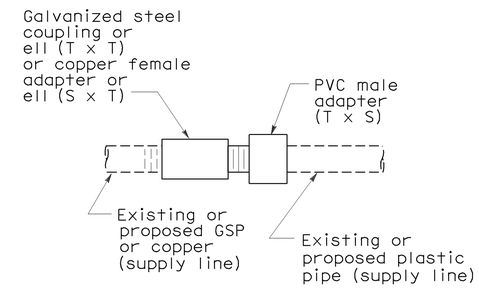

PLAN
GALVANIZED OR COPPER PIPE CONNECTION TO PLASTIC PIPE

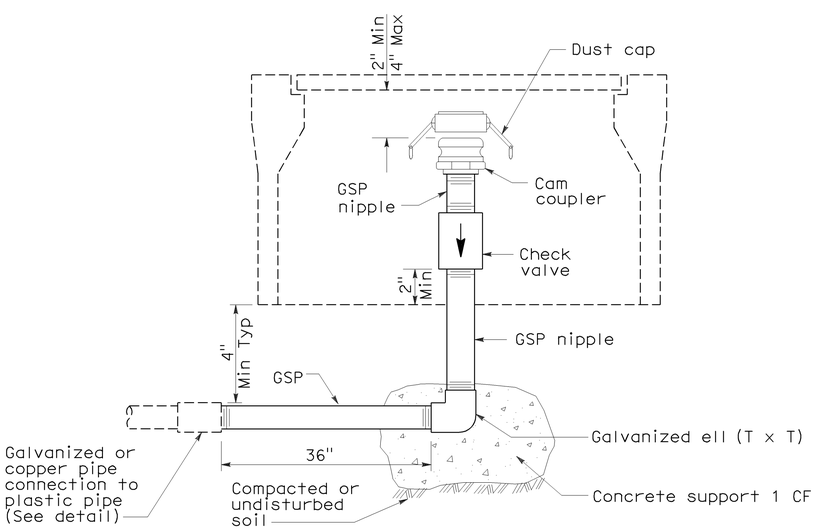

ELEVATION
CAM COUPLER ASSEMBLY

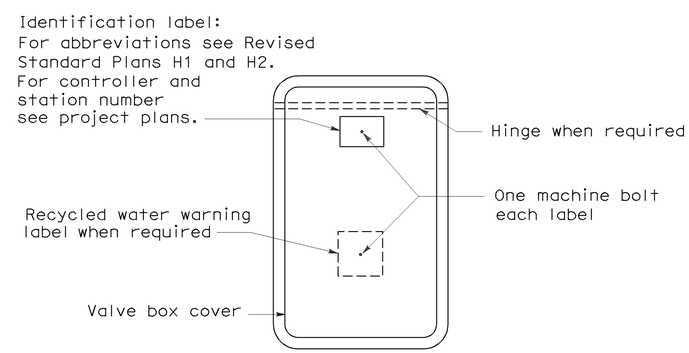

PLAN

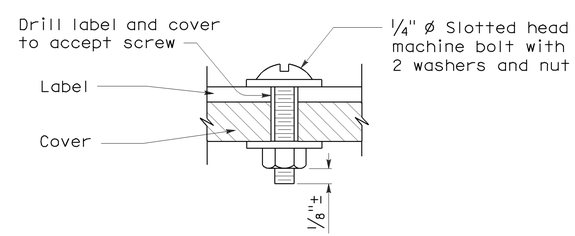

SECTION
VALVE BOX IDENTIFICATION

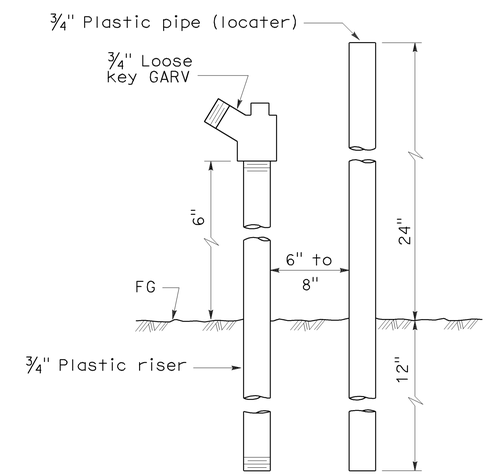

ELEVATION
FLUSH VALVE

STATE OF CALIFORNIA
DEPARTMENT OF TRANSPORTATION

PLANTING AND IRRIGATION DETAILS

NO SCALE

RSP H7 DATED JUNE 5, 2009 SUPERSEDES STANDARD PLAN H7
DATED MAY 1, 2006 - PAGE 207 OF THE STANDARD PLANS BOOK DATED MAY 2006.

REVISED STANDARD PLAN RSP H7

2006 REVISED STANDARD PLAN RSP H7

5-28-09

DIST	COUNTY	ROUTE	POST MILES TOTAL PROJECT	SHEET NO.	TOTAL SHEETS
05	SLO	1	R36.7/39.6	50	54

Randell D. Hiatt
REGISTERED CIVIL ENGINEER

June 6, 2008
PLANS APPROVAL DATE

REGISTERED PROFESSIONAL ENGINEER
Randell D. Hiatt
No. C50200
Exp. 6-30-09
CIVIL
STATE OF CALIFORNIA

The State of California or its officers or agents shall not be responsible for the accuracy or completeness of electronic copies of this plan sheet.

To accompany plans dated 5-14-12

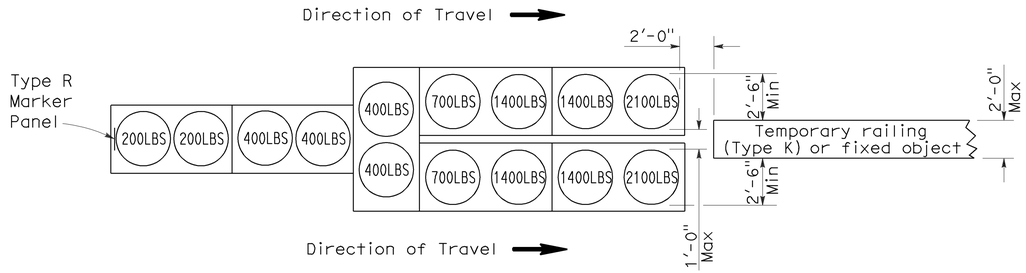

ARRAY 'TU14'

Approach speed 45 mph or more

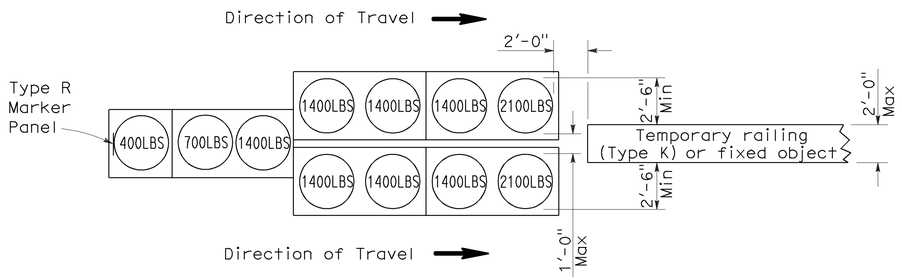

ARRAY 'TU11'

Approach speed less than 45 mph

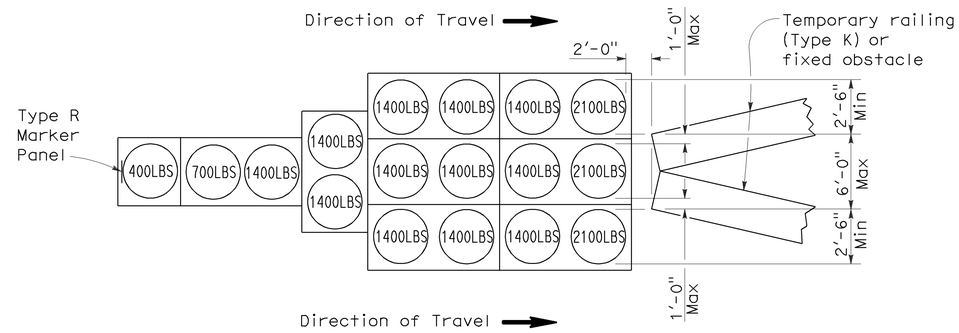

ARRAY 'TU17'

Approach speed less than 45 mph

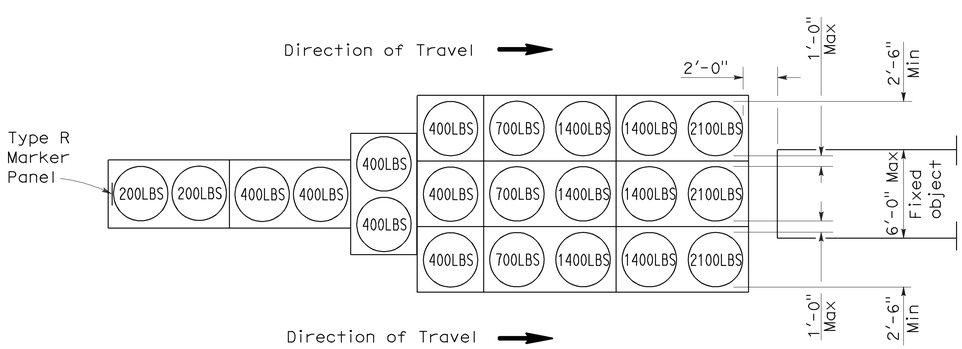

ARRAY 'TU21'

Approach speed 45 mph or more

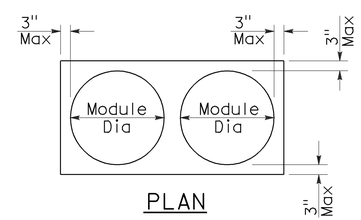

PLAN

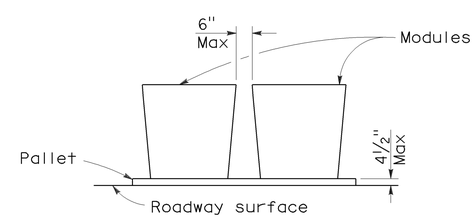

ELEVATION

CRASH CUSHION PALLET DETAIL

See Note 7

NOTES:

1. (XXX) Indicates sand filled module location and weight of sand in pounds for each module. Module spacing is based on the greater diameter of the module.
2. All sand weights are nominal.
3. Temporary crash cushion arrays shall not encroach on the traveled way.
4. Place the top of Type R marker panel 1" below the module lid.
5. Refer to Standard Plan A73B for marker details.
6. Approach speeds indicated conform to NCHRP 350 Report criteria.
7. Use of pallets is optional.

STATE OF CALIFORNIA
DEPARTMENT OF TRANSPORTATION

TEMPORARY CRASH CUSHION, SAND FILLED (UNIDIRECTIONAL)

NO SCALE

RSP T1A DATED JUNE 6, 2008 SUPERSEDES STANDARD PLAN T1A
DATED MAY 1, 2006 - PAGE 211 OF THE STANDARD PLANS BOOK DATED MAY 2006.

REVISED STANDARD PLAN RSP T1A

2006 REVISED STANDARD PLAN RSP T1A

DIST	COUNTY	ROUTE	POST MILES TOTAL PROJECT	SHEET NO.	TOTAL SHEETS
05	SLO	1	R36.7/39.6	51	54

Randell D. Hiatt
REGISTERED CIVIL ENGINEER

June 6, 2008
PLANS APPROVAL DATE

REGISTERED PROFESSIONAL ENGINEER
Randell D. Hiatt
No. C50200
Exp. 6-30-09
CIVIL
STATE OF CALIFORNIA

The State of California or its officers or agents shall not be responsible for the accuracy or completeness of electronic copies of this plan sheet.

To accompany plans dated 5-14-12

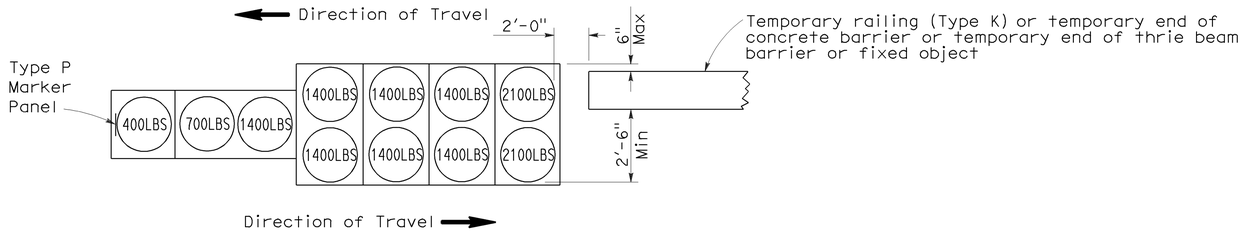

ARRAY 'TB11'

Approach speed less than 45 mph

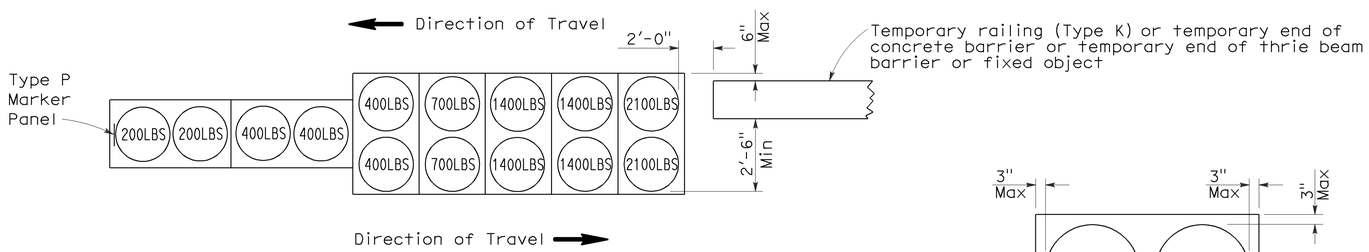

ARRAY 'TB14'

Approach speed 45 mph or more

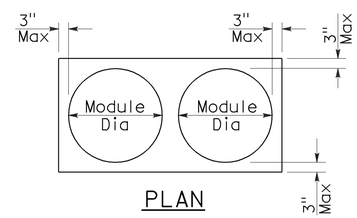

PLAN

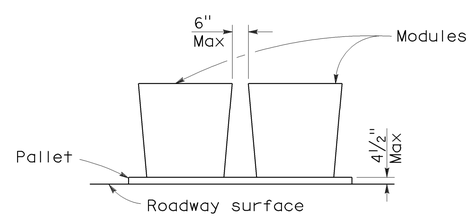

ELEVATION

CRASH CUSHION PALLET DETAIL

See Note 7

NOTES:

1. (XXX) Indicates sand filled module location and weight of sand in pounds for each module. Module spacing is based on the greater diameter of the module.
2. All sand weights are nominal.
3. Temporary crash cushion arrays shall not encroach on the traveled way.
4. Place the Type P marker panel so that the bottom of the panel rests upon the pallet.
5. Refer to Standard Plan A73B for marker details.
6. Approach speeds indicated conform to NCHRP 350 Report criteria.
7. Use of pallets is optional.

STATE OF CALIFORNIA
DEPARTMENT OF TRANSPORTATION

TEMPORARY CRASH CUSHION, SAND FILLED (BIDIRECTIONAL)

NO SCALE

RSP T1B DATED JUNE 6, 2008 SUPERSEDES STANDARD PLAN T1B
DATED MAY 1, 2006 - PAGE 212 OF THE STANDARD PLANS BOOK DATED MAY 2006.

REVISED STANDARD PLAN RSP T1B

2006 REVISED STANDARD PLAN RSP T1B

5-15-08

DIST	COUNTY	ROUTE	POST MILES TOTAL PROJECT	SHEET NO.	TOTAL SHEETS
05	SLO	1	R36.7/39.6	52	54

Randell D. Hiatt
REGISTERED CIVIL ENGINEER

June 6, 2008
PLANS APPROVAL DATE

REGISTERED PROFESSIONAL ENGINEER
Randell D. Hiatt
No. C50200
Exp. 6-30-09
CIVIL
STATE OF CALIFORNIA

The State of California or its officers or agents shall not be responsible for the accuracy or completeness of electronic copies of this plan sheet.

To accompany plans dated 5-14-12

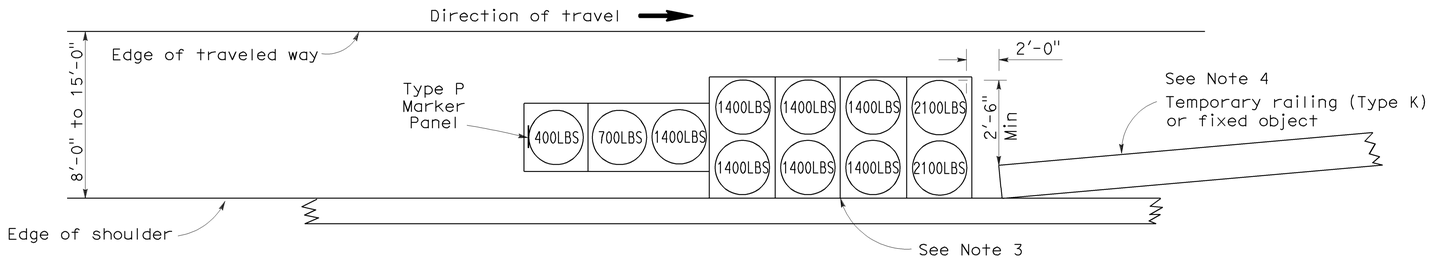

ARRAY 'TS11'

Approach speed less than 45 mph
See Note 9

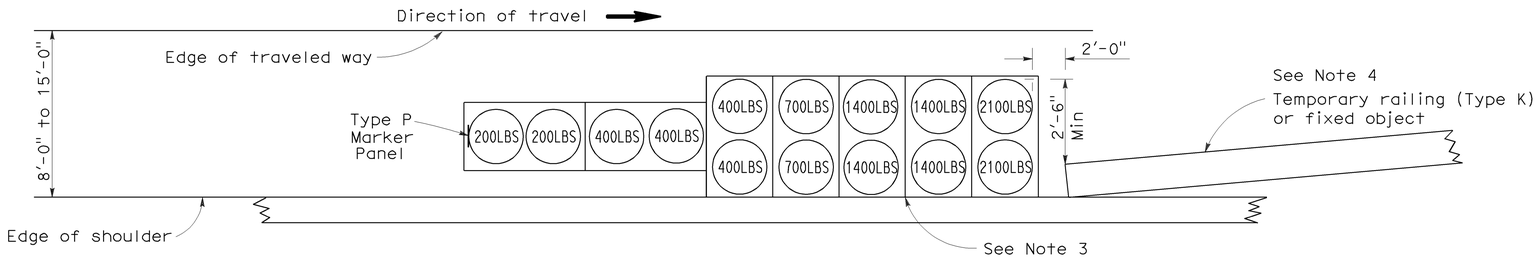

ARRAY 'TS14'

Approach speed 45 mph or more
See Note 9

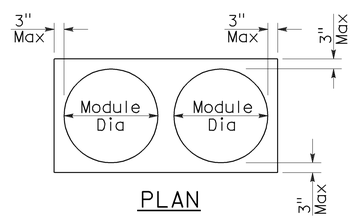

PLAN

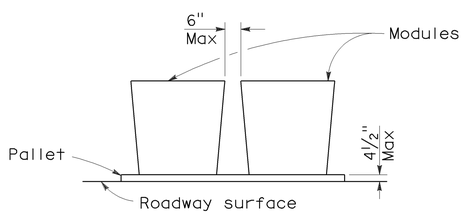

ELEVATION

CRASH CUSHION PALLET DETAIL

See Note 11

NOTES:

1. (XXX) Indicates sand filled module location and weight of sand in pounds for each module. Module spacing is based on the greater diameter of the module.
2. All sand weights are nominal.
3. The temporary crash cushion arrays shown on this plan shall be used only in locations where there will be traffic on one side of the temporary crash cushion array.
4. If the fixed object or approach end of the temporary railing is less than 15'-0" from the edge of traveled way, a temporary crash cushion is required in a construction or work zone.
5. Temporary crash cushion arrays shall not encroach on the traveled way.
6. Arrays for median shoulders shall conform to details shown on this plan for outside shoulders.
7. Place the Type P marker panel so that the bottom of the panel rests upon the pallet and faces traffic.
8. Refer to Standard Plan A73B for marker details.
9. For shoulder widths less than 8'-0", appropriate approved crash cushion protection, other than sand filled modules, shall be provided at fixed objects and at approach ends of temporary railing. The specific type of crash cushion shall be as shown on the project plans or as specified in the Special Provisions, or if not shown on the project plans or specified in the Special Provisions, shall be as approved by the Engineer.
10. Approach speeds indicated conform to NCHRP 350 Report criteria.
11. Use of pallets is optional.

STATE OF CALIFORNIA
DEPARTMENT OF TRANSPORTATION

TEMPORARY CRASH CUSHION, SAND FILLED (SHOULDER INSTALLATIONS)

NO SCALE

RSP T2 DATED JUNE 6, 2008 SUPERSEDES STANDARD PLAN T2
DATED MAY 1, 2006 - PAGE 213 OF THE STANDARD PLANS BOOK DATED MAY 2006.

REVISED STANDARD PLAN RSP T2

2006 REVISED STANDARD PLAN RSP T2

5-15-08

DIST	COUNTY	ROUTE	POST MILES TOTAL PROJECT	SHEET NO.	TOTAL SHEETS
05	SLO	1	R36.7/39.6	53	54

REGISTERED CIVIL ENGINEER

November 17, 2006
PLANS APPROVAL DATE

REGISTERED PROFESSIONAL ENGINEER — Greg W. Edwards — No. C36386 — Exp. 6-30-08 — CIVIL — STATE OF CALIFORNIA

The State of California or its officers or agents shall not be responsible for the accuracy or completeness of electronic copies of this plan sheet.

To accompany plans dated 5-14-12

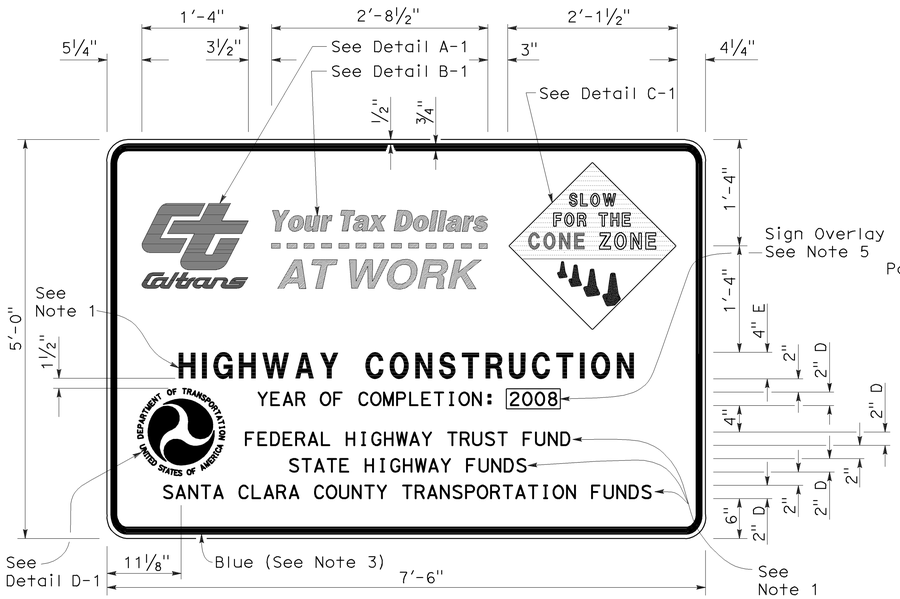

TYPE 1

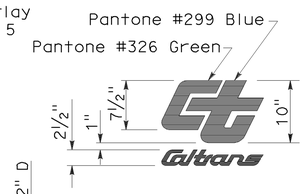

DETAIL A-1

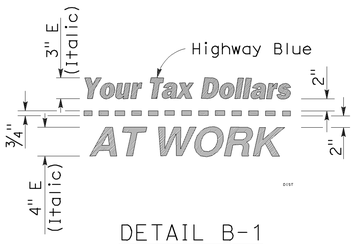

DETAIL B-1
(See Note 3)

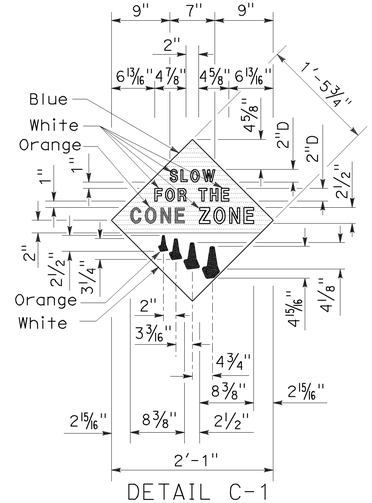

DETAIL C-1
(See Note 4)

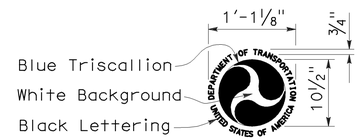

DETAIL D-1
(See Note 6)

NOTES:

1. The sign messages shown for type of project and fund types are examples only. See the Special Provisions for the applicable type of project and fund type messages to be used.
2. Except as otherwise shown, the legend of sign shall be black on a white background (non-reflective).
3. The border of the signs and details "B-1" and "B-2" shall be blue (non-reflective).
4. The diamond in details "C-1" and "C-2" shall be blue for the background of message, " SLOW FOR THE CONE ZONE", and white background for the orange cones. The color and type of font for the "SLOW FOR THE CONE ZONE" message shall be: "SLOW" white D; "FOR THE" white D; "CONE" orange Arial font; "ZONE" white Arial font.
5. Year of completion of project construction shown on the overlay is an example only. See the Special Provisions.
6. Use when the Project involves Federal Highway Trust Fund.

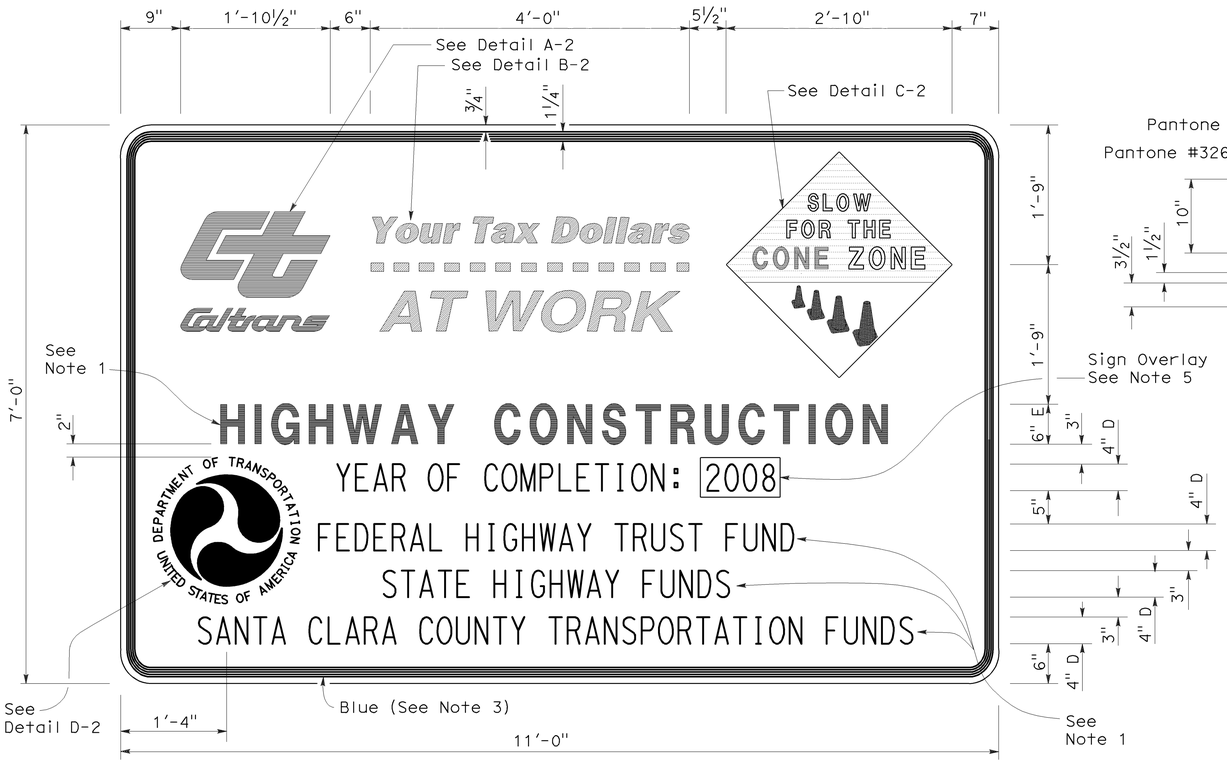

TYPE 2

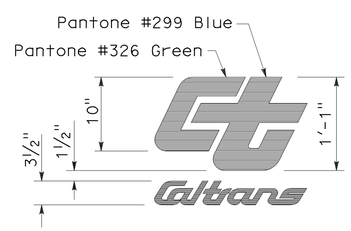

DETAIL A-2

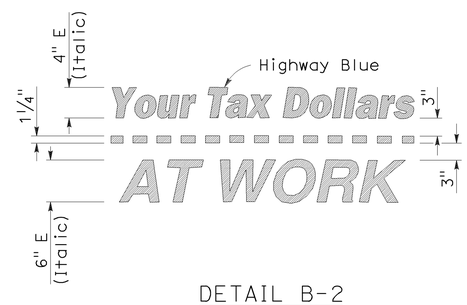

DETAIL B-2
(See Note 3)

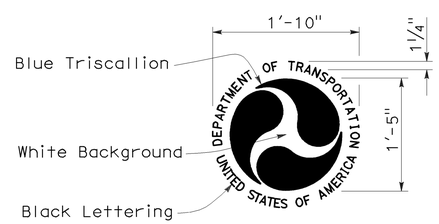

DETAIL D-2
(See Note 6)

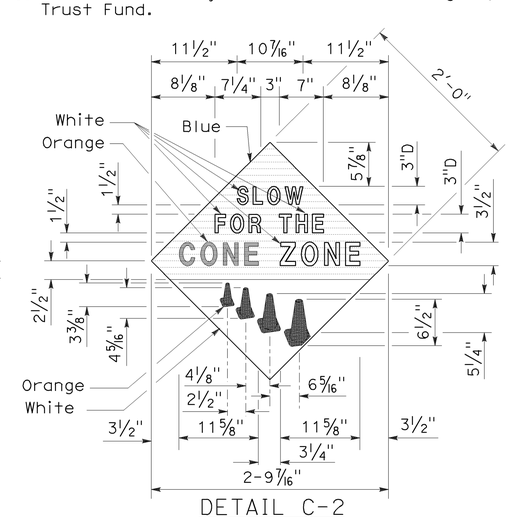

DETAIL C-2
(See Note 4)

STATE OF CALIFORNIA
DEPARTMENT OF TRANSPORTATION

CONSTRUCTION PROJECT FUNDING IDENTIFICATION SIGNS

NO SCALE

RSP T7 DATED NOVEMBER 17, 2006 SUPERSEDES STANDARD PLAN T7
DATED MAY 1, 2006 - PAGE 217 OF THE STANDARD PLANS BOOK DATED MAY 2006.

REVISED STANDARD PLAN RSP T7

2006 REVISED STANDARD PLAN RSP T7

9-7-06

DIST	COUNTY	ROUTE	POST MILES TOTAL PROJECT	SHEET NO.	TOTAL SHEETS
05	SLO	1	R36.7/39.6	54	54

LICENSED LANDSCAPE ARCHITECT

April 3, 2009
PLANS APPROVAL DATE

LICENSED LANDSCAPE ARCHITECT — Robert B. Schott 3635 — 11-30-10 Renewal Date — 2-25-09 Date — STATE OF CALIFORNIA

The State of California or its officers or agents shall not be responsible for the accuracy or completeness of electronic copies of this plan sheet.

To accompany plans dated 5-14-12

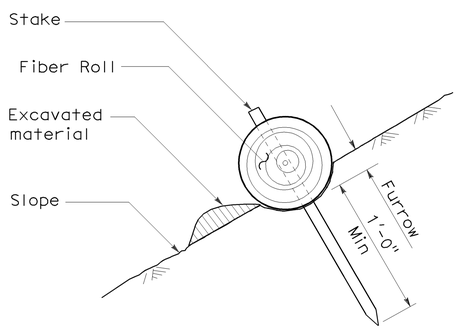

SECTION

TEMPORARY FIBER ROLL (TYPE 1)

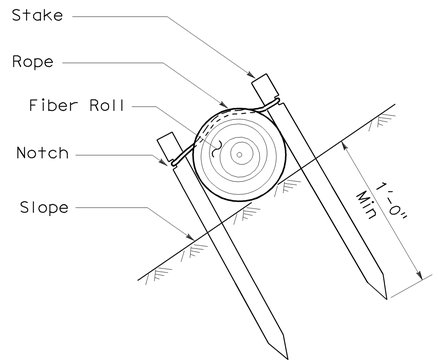

SECTION

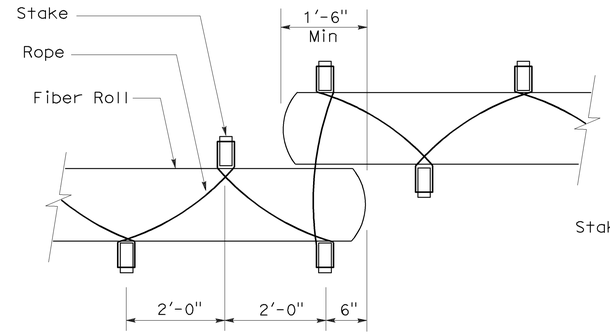

PLAN

TEMPORARY FIBER ROLL (TYPE 2)

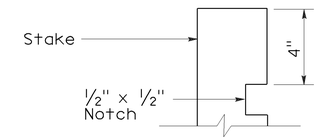

ELEVATION

STAKE NOTCH DETAIL

NOTES:

1. Temporary fiber roll spacing varies depending upon slope inclination.
2. Installations shown in the perspectives are for slope inclination of 10:1 and steeper.

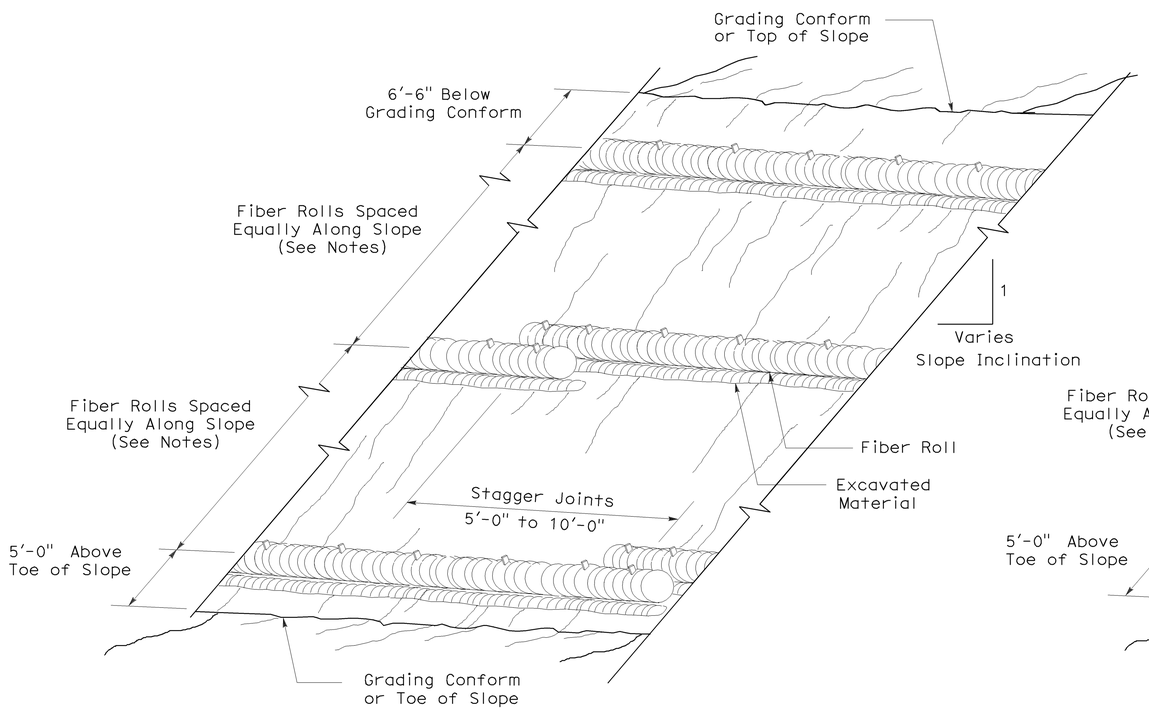

PERSPECTIVE

TEMPORARY FIBER ROLL (TYPE 1)

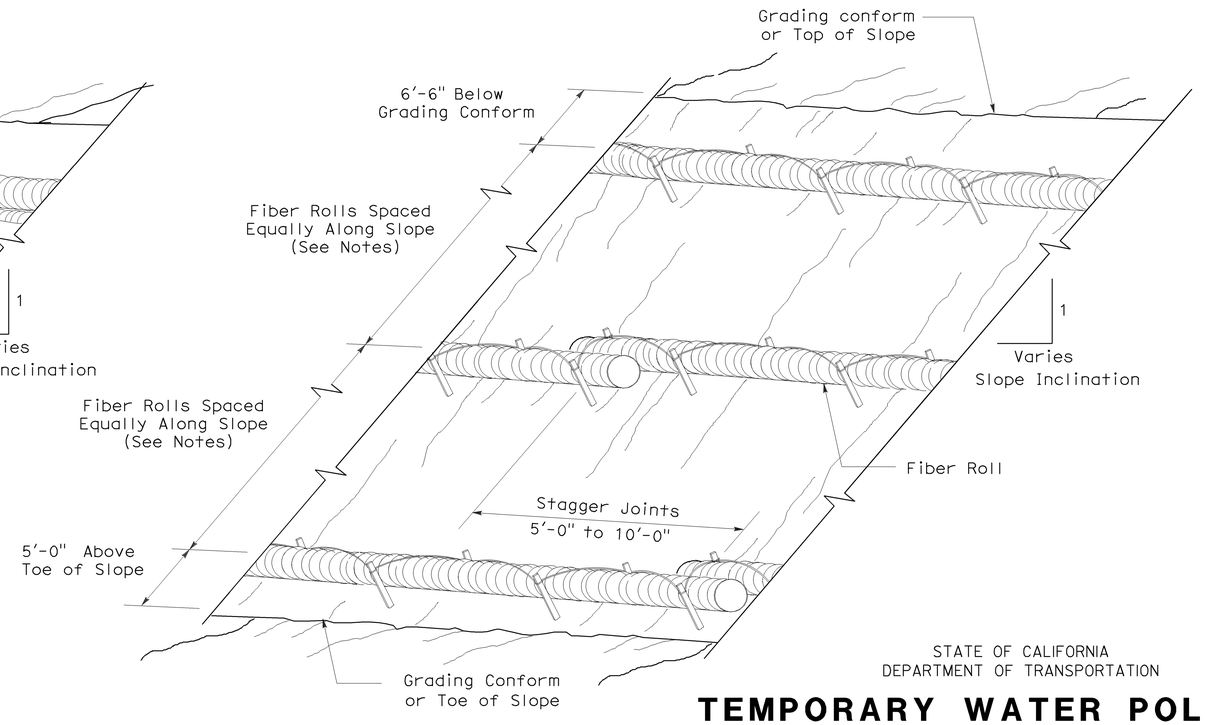

PERSPECTIVE

TEMPORARY FIBER ROLL (TYPE 2)

STATE OF CALIFORNIA
DEPARTMENT OF TRANSPORTATION

TEMPORARY WATER POLLUTION CONTROL DETAILS (TEMPORARY FIBER ROLL)

NO SCALE

RSP T56 DATED APRIL 3, 2009 SUPERSEDES STANDARD PLAN T56
DATED MAY 1, 2006 - PAGE 232 OF THE STANDARD PLANS BOOK DATED MAY 2006.

REVISED STANDARD PLAN RSP T56

2006 REVISED STANDARD PLAN RSP T56

2-23-09