Dist	COUNTY	ROUTE	POST MILES TOTAL PROJECT	SHEET No.	TOTAL SHEETS
05	SCr	1	17.5/26.0	1	61

ACSTPG-P001(566)E

STATE OF CALIFORNIA
DEPARTMENT OF TRANSPORTATION

PROJECT PLANS FOR CONSTRUCTION ON
STATE HIGHWAY

IN SANTA CRUZ COUNTY
IN AND NEAR SANTA CRUZ
AT VARIOUS LOCATIONS
FROM SAN LORENZO RIVER BRIDGE TO LAGUNA ROAD

INDEX OF PLANS

SHEET No.	DESCRIPTION
1	TITLE AND LOCATION MAP
2	LOCATIONS OF CONSTRUCTION
3-15	CONSTRUCTION DETAILS
16-18	DRAINAGE PLAN, PROFILES AND QUANTITIES
19	CONSTRUCTION AREA SIGNS
20-21	SIGN PLAN AND QUANTITIES
22-25	TRAFFIC HANDLING PLANS AND QUANTITIES
26-31	SUMMARY OF QUANTITIES
32-34	SIGNAL, LIGHTING AND ELECTRICAL SYSTEMS PLANS AND DETAILS
35-56	REVISED AND NEW STANDARD PLANS

STRUCTURE PLANS

57-61	STRUCTURE PLANS

THE STANDARD PLANS LIST APPLICABLE TO THIS CONTRACT IS INCLUDED IN THE NOTICE TO BIDDERS AND SPECIAL PROVISIONS BOOK.

TO BE SUPPLEMENTED BY STANDARD PLANS DATED MAY 2006

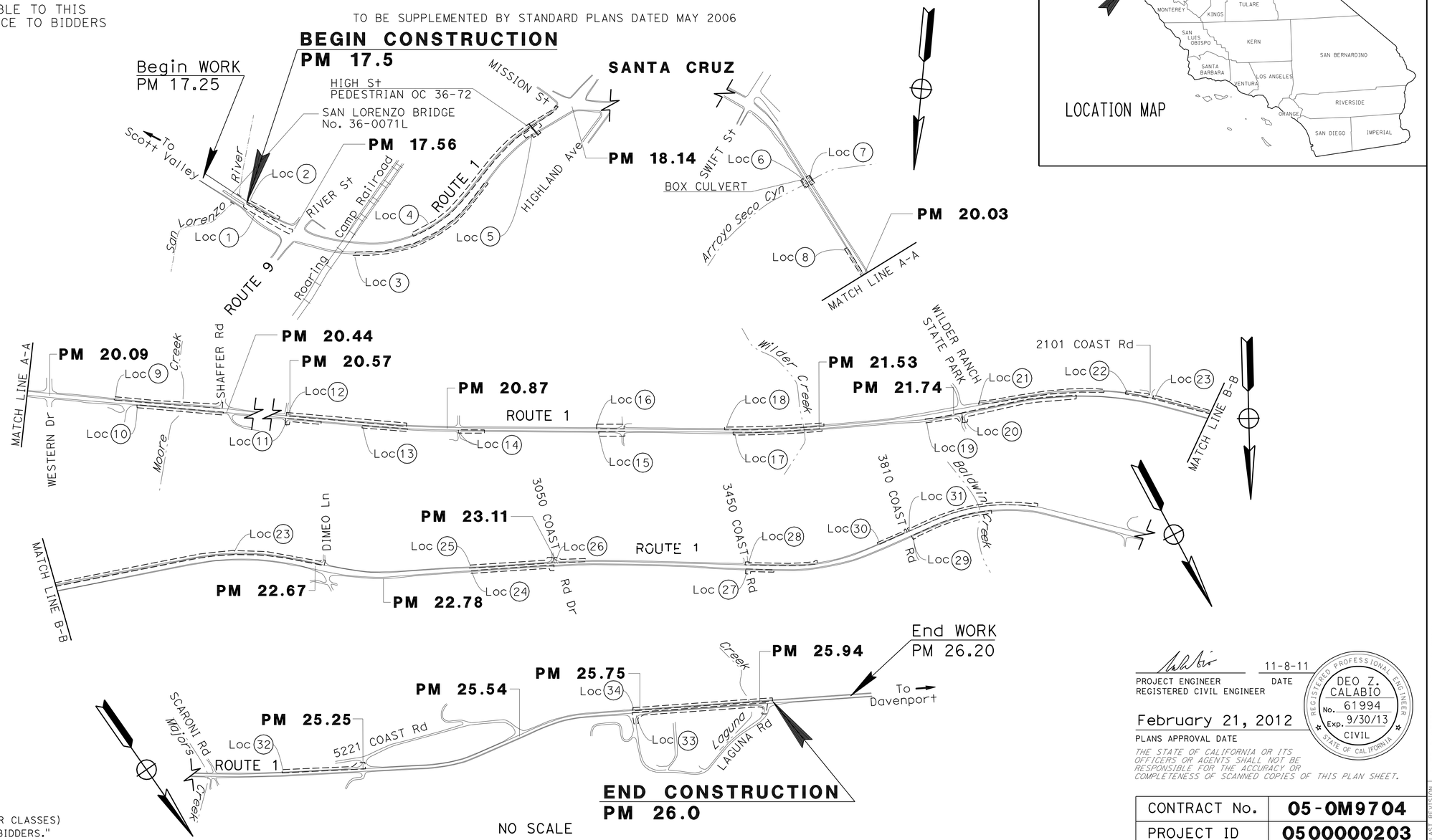

LOCATION MAP

PROJECT MANAGER: LUIS DUAZO

DESIGN ENGINEER: DEO CALABIO

THE CONTRACTOR SHALL POSSESS THE CLASS (OR CLASSES) OF LICENSE AS SPECIFIED IN THE "NOTICE TO BIDDERS."

11-8-11
PROJECT ENGINEER REGISTERED CIVIL ENGINEER — DATE

REGISTERED PROFESSIONAL ENGINEER — DEO Z. CALABIO — No. 61994 — Exp. 9/30/13 — CIVIL — STATE OF CALIFORNIA

February 21, 2012
PLANS APPROVAL DATE

THE STATE OF CALIFORNIA OR ITS OFFICERS OR AGENTS SHALL NOT BE RESPONSIBLE FOR THE ACCURACY OR COMPLETENESS OF SCANNED COPIES OF THIS PLAN SHEET.

CONTRACT No.	05-0M9704
PROJECT ID	0500000203

LAST REVISION 12-09-11

DATE PLOTTED => 23-AUG-2012
TIME PLOTTED => 07:23

Dist	COUNTY	ROUTE	POST MILES TOTAL PROJECT	SHEET No.	TOTAL SHEETS
05	SCr	1	17.5/26.0	2	61

REGISTERED CIVIL ENGINEER 11-8-11 DATE

2-21-12
PLANS APPROVAL DATE

REGISTERED PROFESSIONAL ENGINEER DEO CALABIO No. 61994 Exp. 9-30-11 CIVIL STATE OF CALIFORNIA

THE STATE OF CALIFORNIA OR ITS OFFICERS OR AGENTS SHALL NOT BE RESPONSIBLE FOR THE ACCURACY OR COMPLETENESS OF SCANNED COPIES OF THIS PLAN SHEET.

LOCATIONS OF CONSTRUCTION

LOCATION	COUNTY	PM	DIRECTION	DESCRIPTION	SHEET No.
1		17.48	NB	ROUTE 1/SAN LORENZO BRIDGE	C-1
2		17.48	SB	ROUTE 1/SAN LORENZO BRIDGE	C-1
3		17.80	NB	ROUTE 1	C-2
4		17.94	SB	ROUTE 1	C-2,C-3
5		18.05	NB	ROUTE 1	C-3
6		19.86	NB	ROUTE 1	C-4
7		19.87	SB	ROUTE 1	C-4
8		20.00	NB	ROUTE 1/WESTERN Dr	C-4
9		20.30	SB	ROUTE 1/SHAFTER Rd	C-4
10		20.32	NB	ROUTE 1	C-4
11		20.73	NB	ROUTE 1	C-5
12		20.80	SB	ROUTE 1	C-5
13		20.87	NB	ROUTE 1	C-5
14		21.02	NB	ROUTE 1	C-5
15	SCr	21.27	NB	ROUTE 1	C-5
16		21.27	SB	ROUTE 1	C-5
17		21.45	NB	ROUTE 1	C-6
18		21.46	SB	ROUTE 1	C-6
19		21.74	NB	ROUTE 1	C-6
20		21.88	NB	ROUTE 1	C-6,C-7
21		21.97	SB	ROUTE 1	C-6,C-7
22		22.08	SB	ROUTE 1	C-7
23		22.40	SB	ROUTE 1	C-7
24		23.01	NB	ROUTE 1	C-8
25		23.01	SB	ROUTE 1	C-8
26		23.14	SB	ROUTE 1	C-8
27		23.47	NB	ROUTE 1	C-8
28		23.50	SB	ROUTE 1	C-8
29		23.82	NB	ROUTE 1	C-9
30		23.71	SB	ROUTE 1	C-9
31		23.86	SB	ROUTE 1	C-9
32		25.18	SB	ROUTE 1	C-10
33		25.88	NB	ROUTE 1/LAGUNA Rd	C-10
34		25.88	SB	ROUTE 1/LAGUNA Rd	C-10

LOCATIONS OF CONSTRUCTION
LC-1

REVISED BY | DATE REVISED
DEO CALABIO | BORIS AYAVIRI
CALCULATED-DESIGNED BY | CHECKED BY
FUNCTIONAL SUPERVISOR: BORIS AYAVIRI
STATE OF CALIFORNIA - DEPARTMENT OF TRANSPORTATION
Caltrans
06-DESIGN

LAST REVISION 11-30-11 | DATE PLOTTED => 23-AUG-2012 | TIME PLOTTED => 07:23

Dist	COUNTY	ROUTE	POST MILES TOTAL PROJECT	SHEET No.	TOTAL SHEETS
05	SCr	1	17.5/26.0	3	61

REGISTERED CIVIL ENGINEER 11-8-11 DATE

2-21-12
PLANS APPROVAL DATE

REGISTERED PROFESSIONAL ENGINEER DEO CALABIO No. 61994 Exp. 9-30-13 CIVIL STATE OF CALIFORNIA

THE STATE OF CALIFORNIA OR ITS OFFICERS OR AGENTS SHALL NOT BE RESPONSIBLE FOR THE ACCURACY OR COMPLETENESS OF SCANNED COPIES OF THIS PLAN SHEET.

NOTES:

1. SEE CONSTRUCTION DETAIL C-13 FOR VEGETATION CONTROL (ASPHALT COMPOSITE).
2. Exist RAIL ELEMENTS FROM R/RC MBGR THAT MEET THE REQUIREMENTS OF THE SPECIFICATIONS AND SPECIAL PROVISIONS SHALL BE AVAILABLE TO RECONSTRUCT AT NEW OR Exist LOCATIONS. SEE SUMMARY OF QUANTITIES SHEET. CORTEN MBGR RAIL ELEMENTS SHALL NOT BE RECONSTRUCTED.
3. N/RCD MBGR SHALL BE CONSTRUCTED WITH NEW OR Exist MBGR RAIL ELEMENTS. SEE SUMMARY OF QUANTITIES SHEET.
4. PROTECT IN PLACE Exist STATE ELECTRICAL CONDUIT.
5. MBGR: W6x9x6.0′ FOR ALL LOCATIONS EXCEPT LOCATIONS 32, 33, AND 34.
6. MBGR: W6x9x7.0′ FOR LOCATIONS 32, 33, AND 34.
7. DIMENSIONS OF THE PAVEMENT STRUCTURES (STRUCTURAL SECTIONS) ARE SUBJECT TO TOLERANCES SPECIFIED IN THE STANDARD SPECIFICATIONS.

ABBREVIATIONS:

AFTS - ALTERNATIVE FLARED TERMINAL SYSTEM
AITS - ALTERNATIVE IN-LINE TERMINAL SYSTEM
EAA - END ANCHOR ASSEMBLY
R/RC - REMOVE AND RECONSTRUCT. SEE NOTE 2.
N/RCD - NEW OR RECONSTRUCTED. SEE NOTE 3.
CTB - CONCRETE TRANSITION BLOCK
BPEA - BURIED POST END ANCHOR
CT - CALTRANS
EMS - EXTINGUISHABLE MESSAGE SIGN

LEGEND:

- TRANSITION BLOCK CONNECTIONS
- DIRECTION OF TRAFFIC
- MBGR TERMINAL SYSTEM
- ROADWAY EXCAVATION AND PLACE AB (CL 2) AND HMA (TYPE A)
- ROADWAY EXCAVATION
- ROADWAY EXCAVATION AND PLACE PORTLAND CEMENT CONCRETE (PCC 8" THICK) (SEE SHEET C-3)

STRUCTURAL SECTIONS

A: 0.30′ HMA (TYPE A)
1.50′ Cl 2 AB

B: 0.30′ HMA (TYPE A)
0.50′ Cl 2 AB

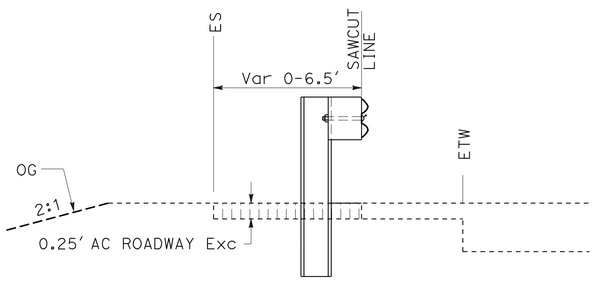

SECTION B-B

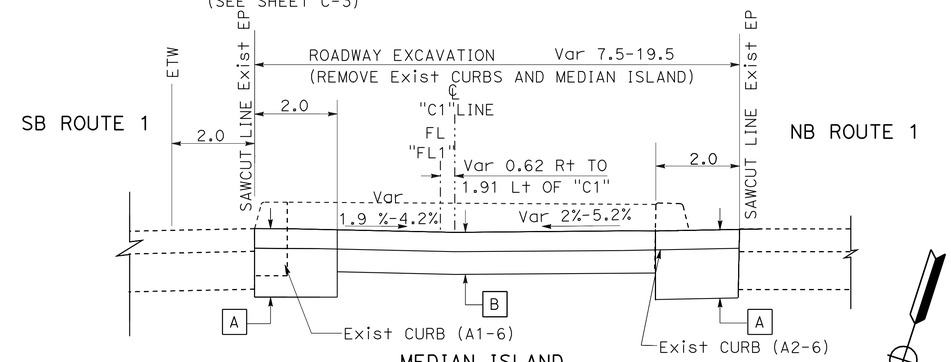

MEDIAN ISLAND
SECTION A-A

LOCATION 2-SOUTHBOUND OUTSIDE SHOULDER

SCr 1 PM 17.48
TYPE 11A LAYOUT

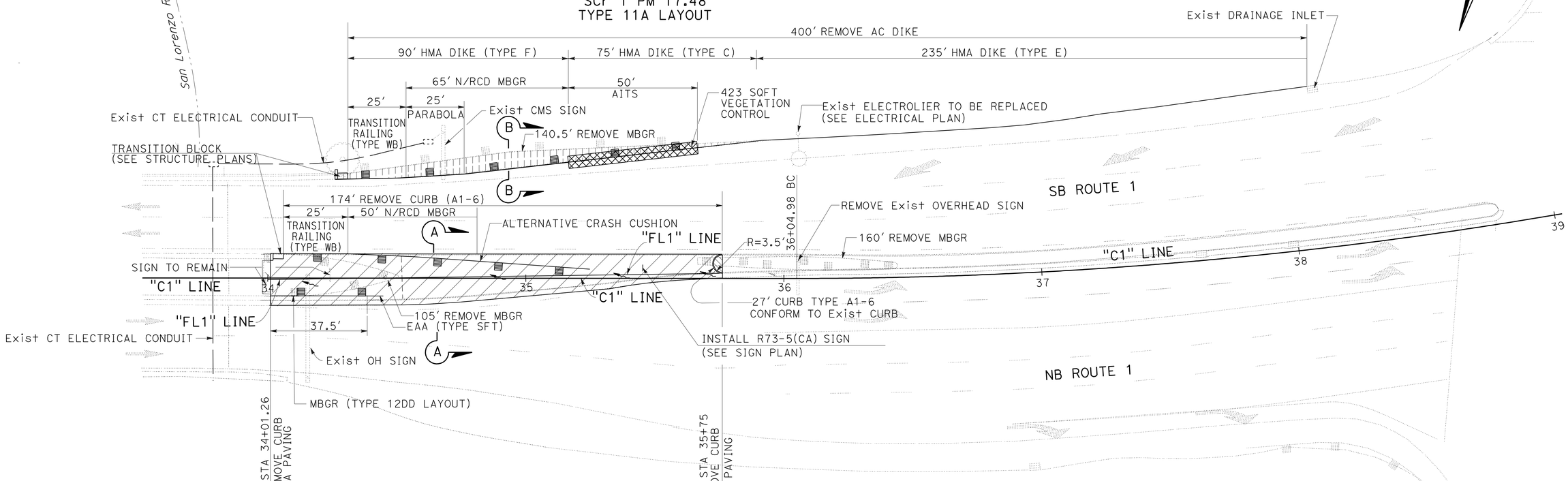

LOCATION 1-NORTHBOUND MEDIAN

SCr 1 PM 17.48
TYPE 12E AND TYPE 12DD LAYOUTS

EXISTING UTILITY FACILITIES ARE NOT SHOWN ON THE PLANS

CONSTRUCTION DETAILS

NO SCALE **C-1**

STATE OF CALIFORNIA - DEPARTMENT OF TRANSPORTATION
Caltrans® 06-DESIGN

FUNCTIONAL SUPERVISOR: BORIS AYAVIRI
CALCULATED-DESIGNED BY: DEO CALABIO
CHECKED BY: BORIS AYAVIRI
REVISED BY / DATE REVISED

LAST REVISION 12-09-11
DATE PLOTTED => 23-AUG-2012
TIME PLOTTED => 07:23

Dist	COUNTY	ROUTE	POST MILES TOTAL PROJECT	SHEET No.	TOTAL SHEETS
05	SCr	1	17.5/26.0	4	61

REGISTERED CIVIL ENGINEER 11-8-11 DATE

2-21-12
PLANS APPROVAL DATE

REGISTERED PROFESSIONAL ENGINEER DEO CALABIO No. 61994 Exp. 9-30-13 CIVIL STATE OF CALIFORNIA

THE STATE OF CALIFORNIA OR ITS OFFICERS OR AGENTS SHALL NOT BE RESPONSIBLE FOR THE ACCURACY OR COMPLETENESS OF SCANNED COPIES OF THIS PLAN SHEET.

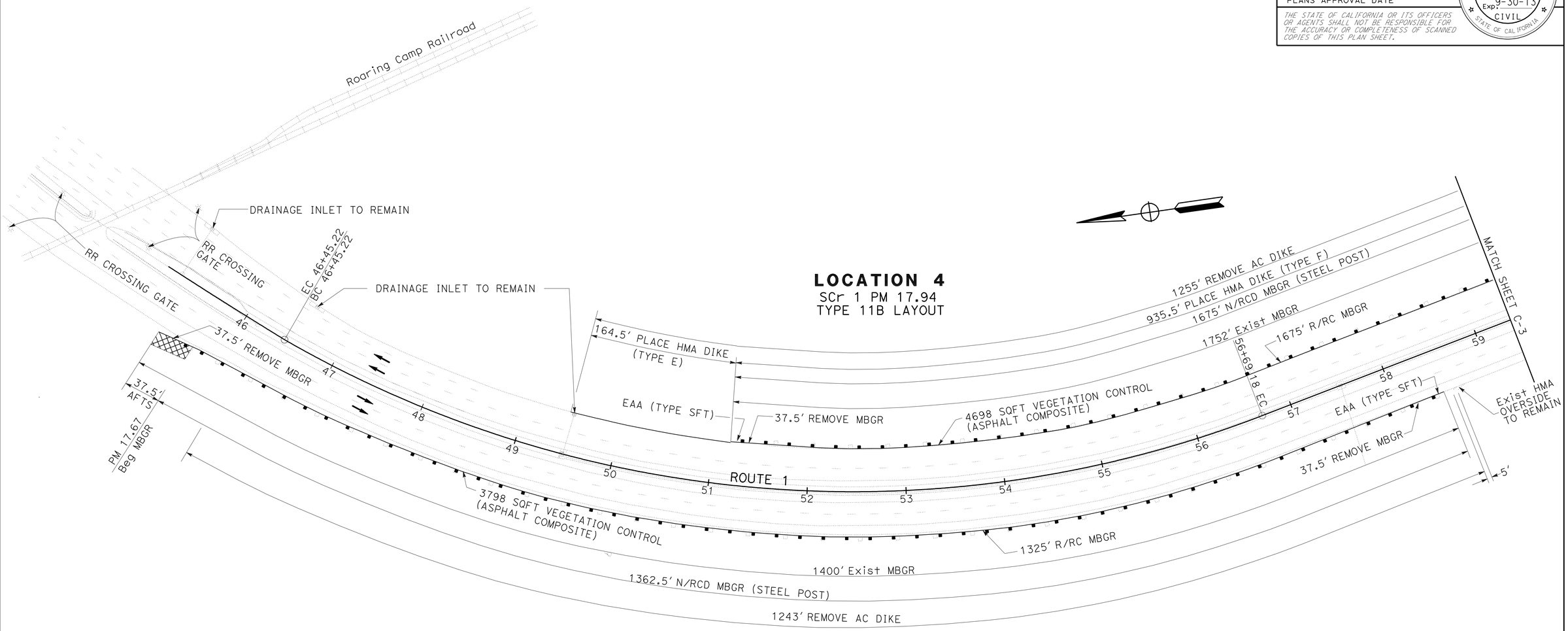

LOCATION 4
SCr 1 PM 17.94
TYPE 11B LAYOUT

LOCATION 3
SCr 1 PM 17.80
TYPE 11B LAYOUT

EXISTING UTILITY FACILITIES ARE NOT SHOWN ON THE PLANS

CONSTRUCTION DETAILS

NO SCALE **C-2**

REVISED BY | DATE REVISED
DEO CALABIO | BORIS AYAVIRI
CALCULATED-DESIGNED BY | CHECKED BY
FUNCTIONAL SUPERVISOR: BORIS AYAVIRI
STATE OF CALIFORNIA - DEPARTMENT OF TRANSPORTATION
Caltrans
06-DESIGN

LAST REVISION 10-14-11 | DATE PLOTTED => 23-AUG-2012 | TIME PLOTTED => 07:23

Dist	COUNTY	ROUTE	POST MILES TOTAL PROJECT	SHEET No.	TOTAL SHEETS
05	SCr	1	17.5/26.0	5	61

REGISTERED CIVIL ENGINEER 11-8-11 DATE

2-21-12
PLANS APPROVAL DATE

REGISTERED PROFESSIONAL ENGINEER DEO CALABIO No. 61994 Exp. 9-30-13 CIVIL STATE OF CALIFORNIA

THE STATE OF CALIFORNIA OR ITS OFFICERS OR AGENTS SHALL NOT BE RESPONSIBLE FOR THE ACCURACY OR COMPLETENESS OF SCANNED COPIES OF THIS PLAN SHEET.

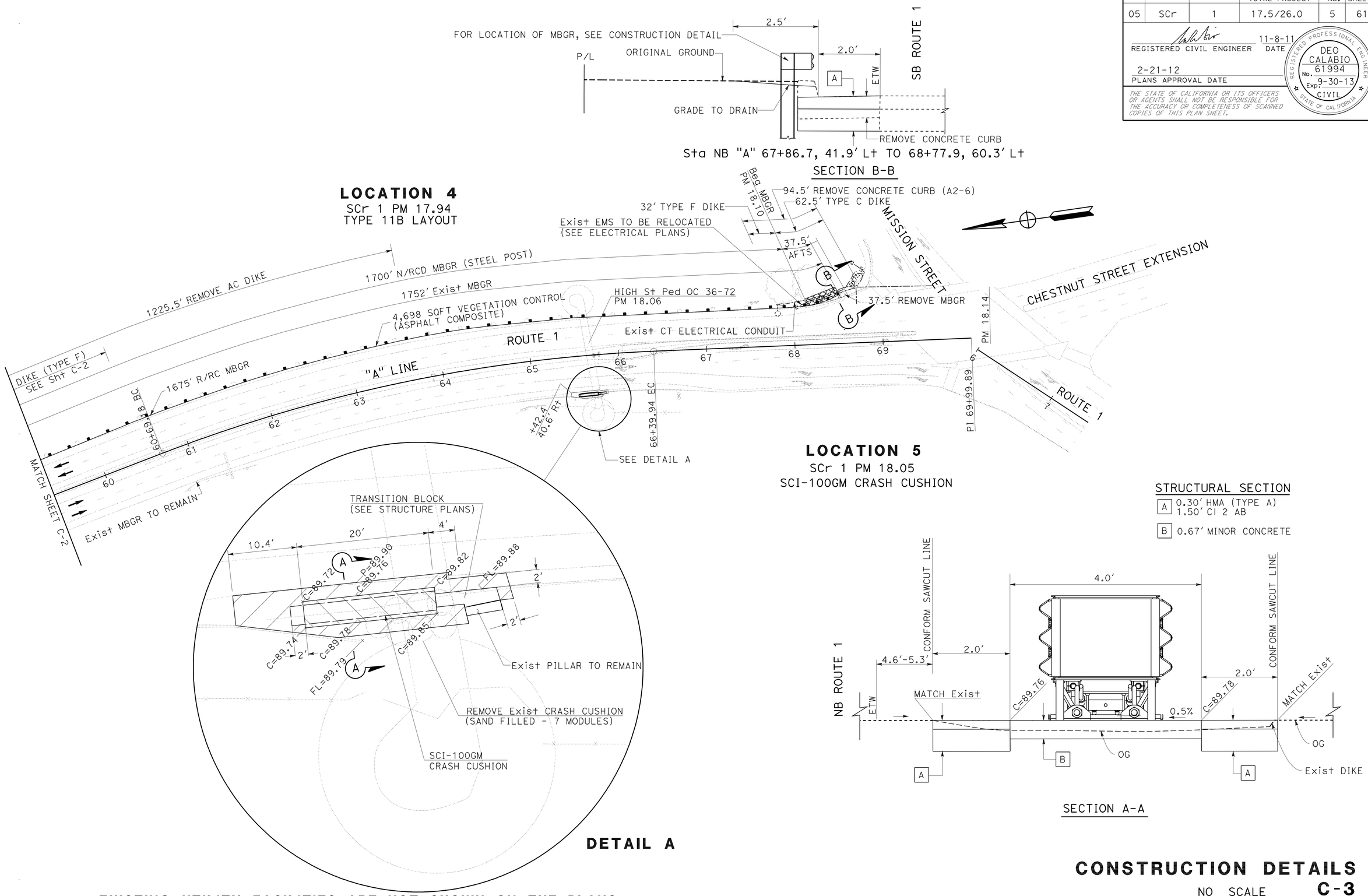

EXISTING UTILITY FACILITIES ARE NOT SHOWN ON THE PLANS

CONSTRUCTION DETAILS

NO SCALE

C-3

STATE OF CALIFORNIA - DEPARTMENT OF TRANSPORTATION
Caltrans
06-DESIGN

FUNCTIONAL SUPERVISOR: BORIS AYAVIRI
CALCULATED-DESIGNED BY: DEO CALABIO
CHECKED BY: BORIS AYAVIRI
REVISED BY
DATE REVISED

LAST REVISION 10-14-11
DATE PLOTTED => 23-AUG-2012
TIME PLOTTED => 07:24

Dist	COUNTY	ROUTE	POST MILES TOTAL PROJECT	SHEET No.	TOTAL SHEETS
05	SCr	1	17.5/26.0	6	61

REGISTERED CIVIL ENGINEER 11-8-11 DATE

2-21-12
PLANS APPROVAL DATE

REGISTERED PROFESSIONAL ENGINEER DEO CALABIO No. 61994 Exp. 9-30-13 CIVIL STATE OF CALIFORNIA

THE STATE OF CALIFORNIA OR ITS OFFICERS OR AGENTS SHALL NOT BE RESPONSIBLE FOR THE ACCURACY OR COMPLETENESS OF SCANNED COPIES OF THIS PLAN SHEET.

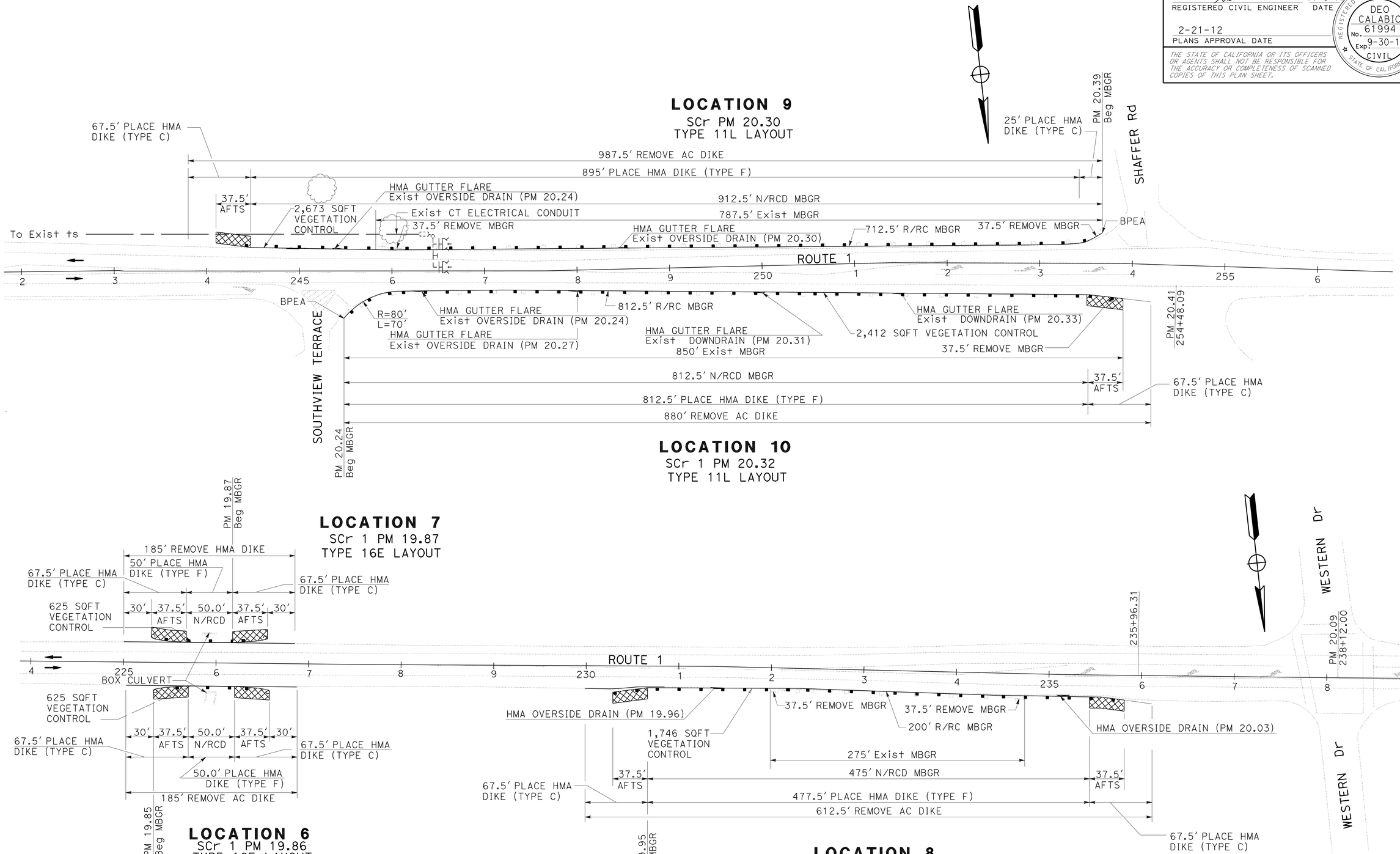

EXISTING UTILITY FACILITIES ARE NOT SHOWN ON THE PLANS

CONSTRUCTION DETAILS

NO SCALE

C-4

STATE OF CALIFORNIA - DEPARTMENT OF TRANSPORTATION
Caltrans®
06-DESIGN

FUNCTIONAL SUPERVISOR: BORIS AYAVIRI
CALCULATED-DESIGNED BY: DEO CALABIO
CHECKED BY: BORIS AYAVIRI
REVISED BY
DATE REVISED

LAST REVISION 10-14-11
DATE PLOTTED => 23-AUG-2012
TIME PLOTTED => 07:24

Dist	COUNTY	ROUTE	POST MILES TOTAL PROJECT	SHEET No.	TOTAL SHEETS
05	SCr	1	17.5/26.0	7	61

REGISTERED CIVIL ENGINEER 11-8-11 DATE

2-21-12
PLANS APPROVAL DATE

REGISTERED PROFESSIONAL ENGINEER DEO CALABIO No. 61994 Exp. 9-30-13 CIVIL STATE OF CALIFORNIA

THE STATE OF CALIFORNIA OR ITS OFFICERS OR AGENTS SHALL NOT BE RESPONSIBLE FOR THE ACCURACY OR COMPLETENESS OF SCANNED COPIES OF THIS PLAN SHEET.

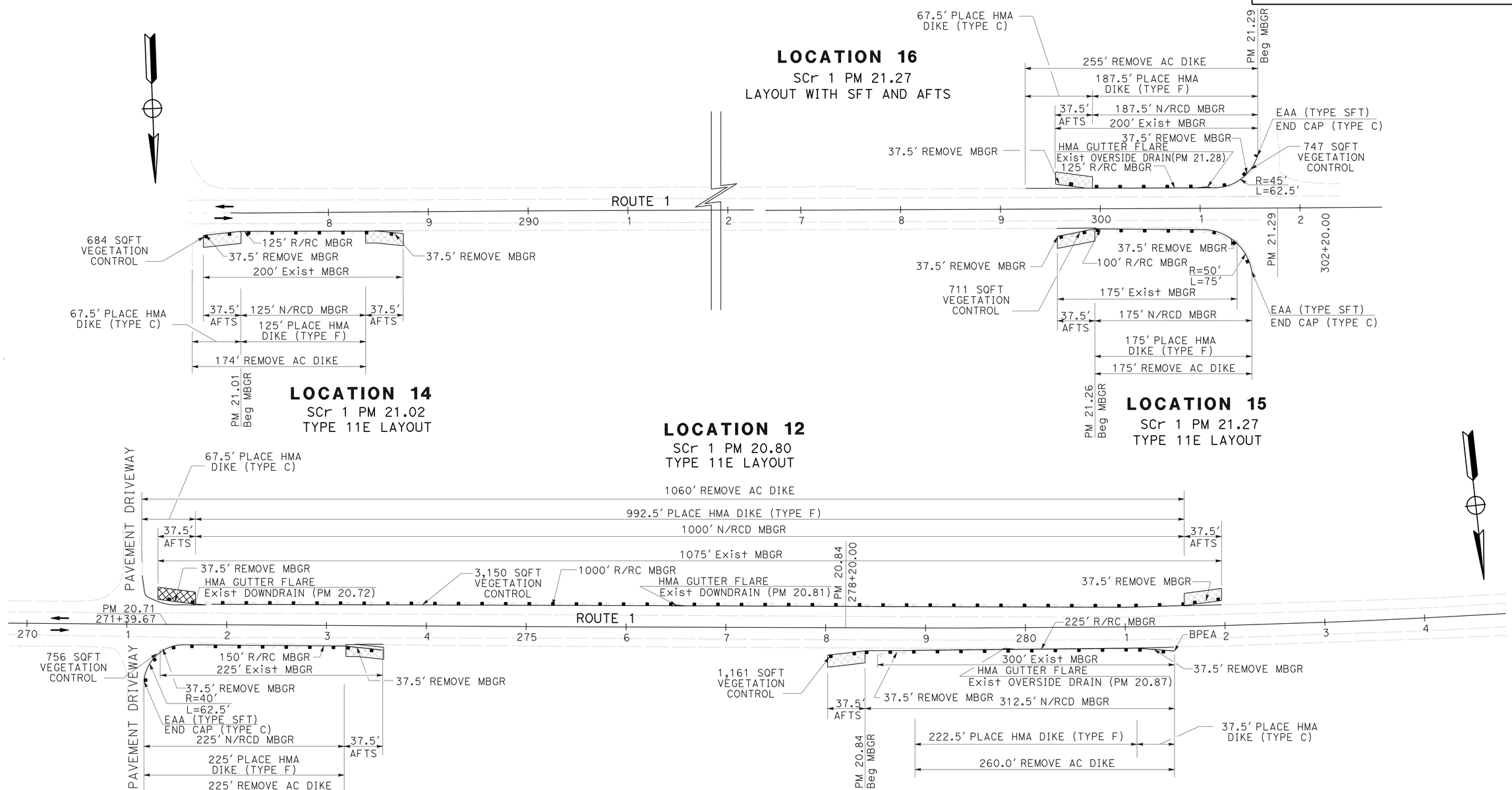

EXISTING UTILITY FACILITIES ARE NOT SHOWN ON THE PLANS

CONSTRUCTION DETAILS

NO SCALE

C-5

STATE OF CALIFORNIA - DEPARTMENT OF TRANSPORTATION
06-DESIGN
FUNCTIONAL SUPERVISOR: BORIS AYAVIRI
CALCULATED-DESIGNED BY: DEO CALABIO
CHECKED BY: BORIS AYAVIRI
REVISED BY
DATE REVISED

LAST REVISION 10-14-11
DATE PLOTTED => 23-AUG-2012
TIME PLOTTED => 07:24

Dist	COUNTY	ROUTE	POST MILES TOTAL PROJECT	SHEET No.	TOTAL SHEETS
05	SCr	1	17.5/26.0	8	61

REGISTERED CIVIL ENGINEER 11-8-11 DATE

2-21-12
PLANS APPROVAL DATE

REGISTERED PROFESSIONAL ENGINEER DEO CALABIO No. 61994 Exp. 9-30-13 CIVIL STATE OF CALIFORNIA

THE STATE OF CALIFORNIA OR ITS OFFICERS OR AGENTS SHALL NOT BE RESPONSIBLE FOR THE ACCURACY OR COMPLETENESS OF SCANNED COPIES OF THIS PLAN SHEET.

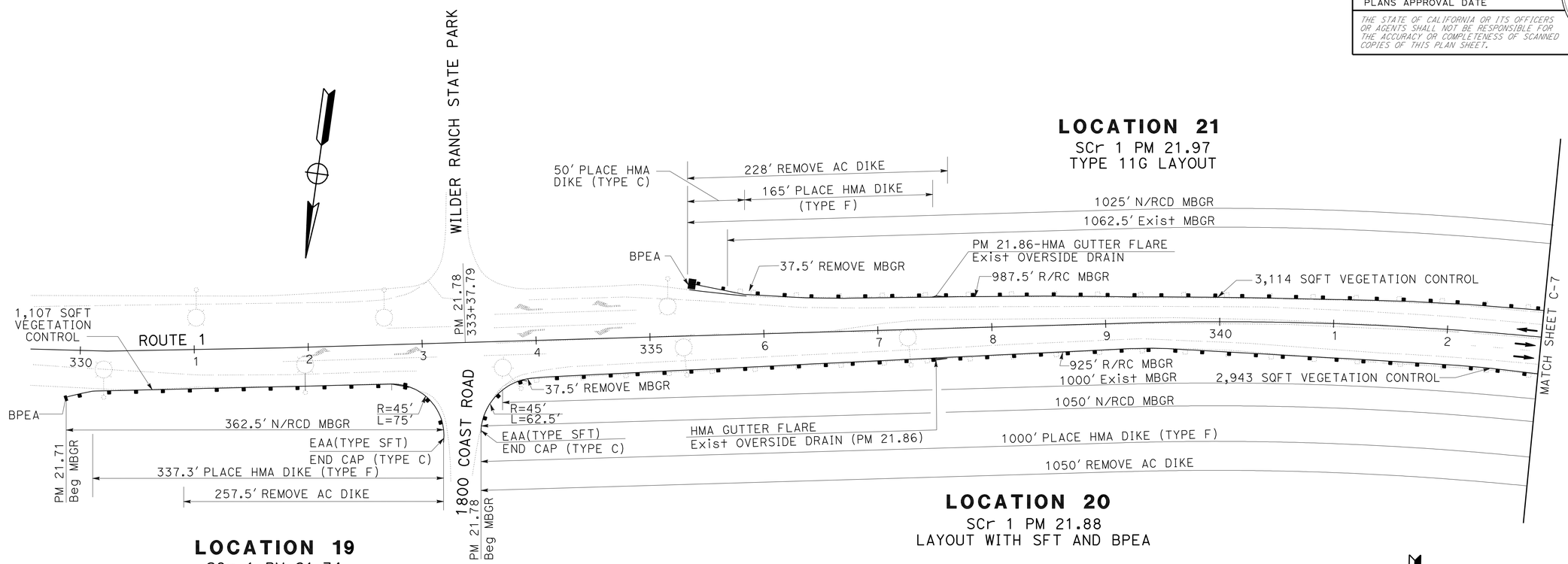

EXISTING UTILITY FACILITIES ARE NOT SHOWN ON THE PLANS

CONSTRUCTION DETAILS

NO SCALE

C-6

STATE OF CALIFORNIA - DEPARTMENT OF TRANSPORTATION

06-DESIGN

Caltrans

FUNCTIONAL SUPERVISOR: BORIS AYAVIRI

CALCULATED-DESIGNED BY: DEO CALABIO

CHECKED BY: BORIS AYAVIRI

REVISED BY

DATE REVISED

LAST REVISION 10-14-11

DATE PLOTTED => 23-AUG-2012

TIME PLOTTED => 07:24

Dist	COUNTY	ROUTE	POST MILES TOTAL PROJECT	SHEET No.	TOTAL SHEETS
05	SCr	1	17.5/26.0	9	61

REGISTERED CIVIL ENGINEER 11-8-11 DATE

2-21-12
PLANS APPROVAL DATE

REGISTERED PROFESSIONAL ENGINEER
DEO CALABIO
No. 61994
Exp. 9-30-13
CIVIL
STATE OF CALIFORNIA

THE STATE OF CALIFORNIA OR ITS OFFICERS OR AGENTS SHALL NOT BE RESPONSIBLE FOR THE ACCURACY OR COMPLETENESS OF SCANNED COPIES OF THIS PLAN SHEET.

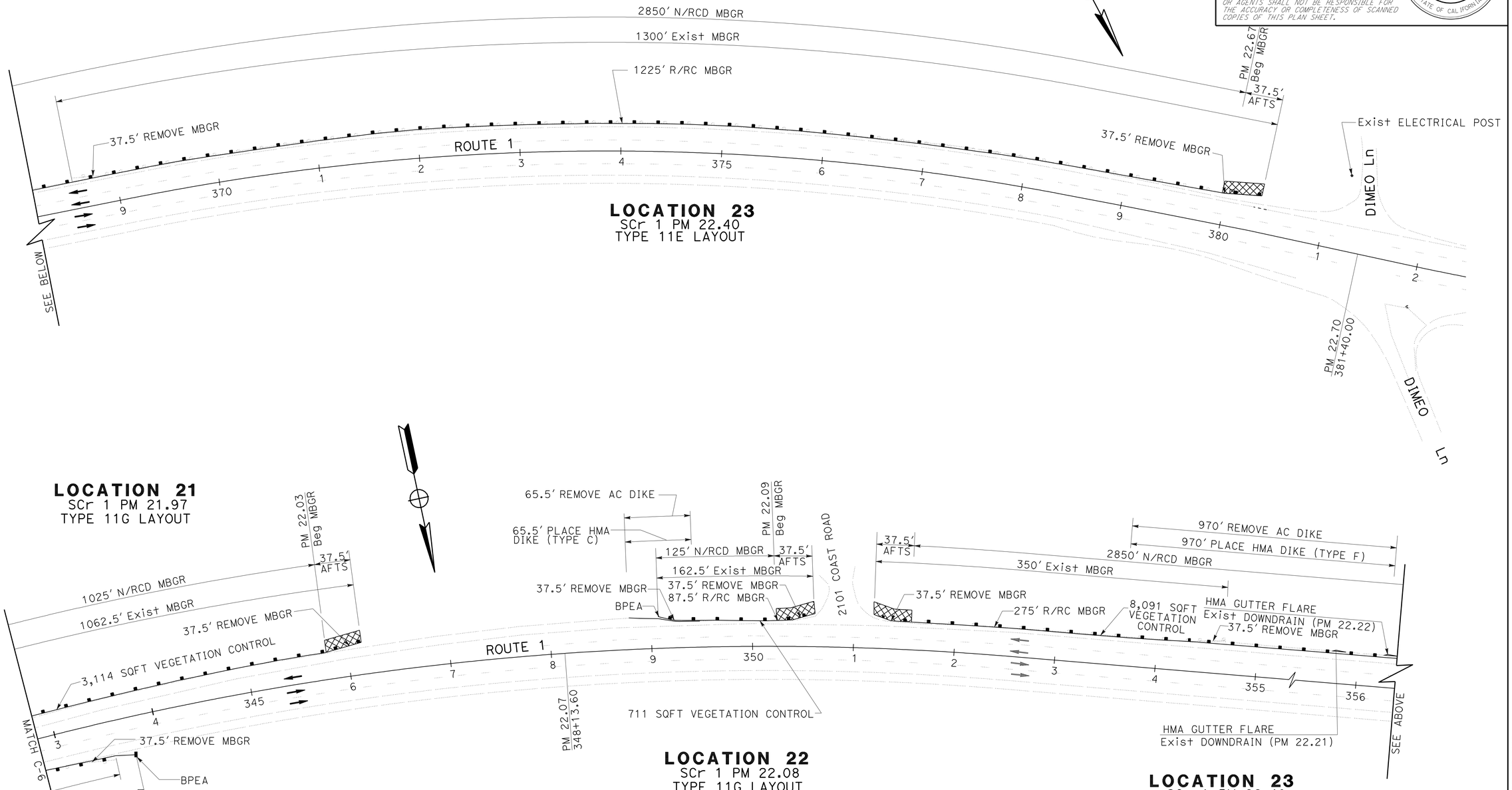

EXISTING UTILITY FACILITIES ARE NOT SHOWN ON THE PLANS

CONSTRUCTION DETAILS

NO SCALE

C-7

STATE OF CALIFORNIA - DEPARTMENT OF TRANSPORTATION
Caltrans
06-DESIGN

FUNCTIONAL SUPERVISOR: BORIS AYAVIRI
CALCULATED-DESIGNED BY: DEO CALABIO
CHECKED BY: BORIS AYAVIRI
REVISED BY
DATE REVISED

LAST REVISION 10-14-11
DATE PLOTTED => 23-AUG-2012
TIME PLOTTED => 07:24

Dist	COUNTY	ROUTE	POST MILES TOTAL PROJECT	SHEET No.	TOTAL SHEETS
05	SCr	1	17.5/26.0	10	61

REGISTERED CIVIL ENGINEER 11-8-11 DATE

2-21-12
PLANS APPROVAL DATE

REGISTERED PROFESSIONAL ENGINEER DEO CALABIO No. 61994 Exp. 9-30-13 CIVIL STATE OF CALIFORNIA

THE STATE OF CALIFORNIA OR ITS OFFICERS OR AGENTS SHALL NOT BE RESPONSIBLE FOR THE ACCURACY OR COMPLETENESS OF SCANNED COPIES OF THIS PLAN SHEET.

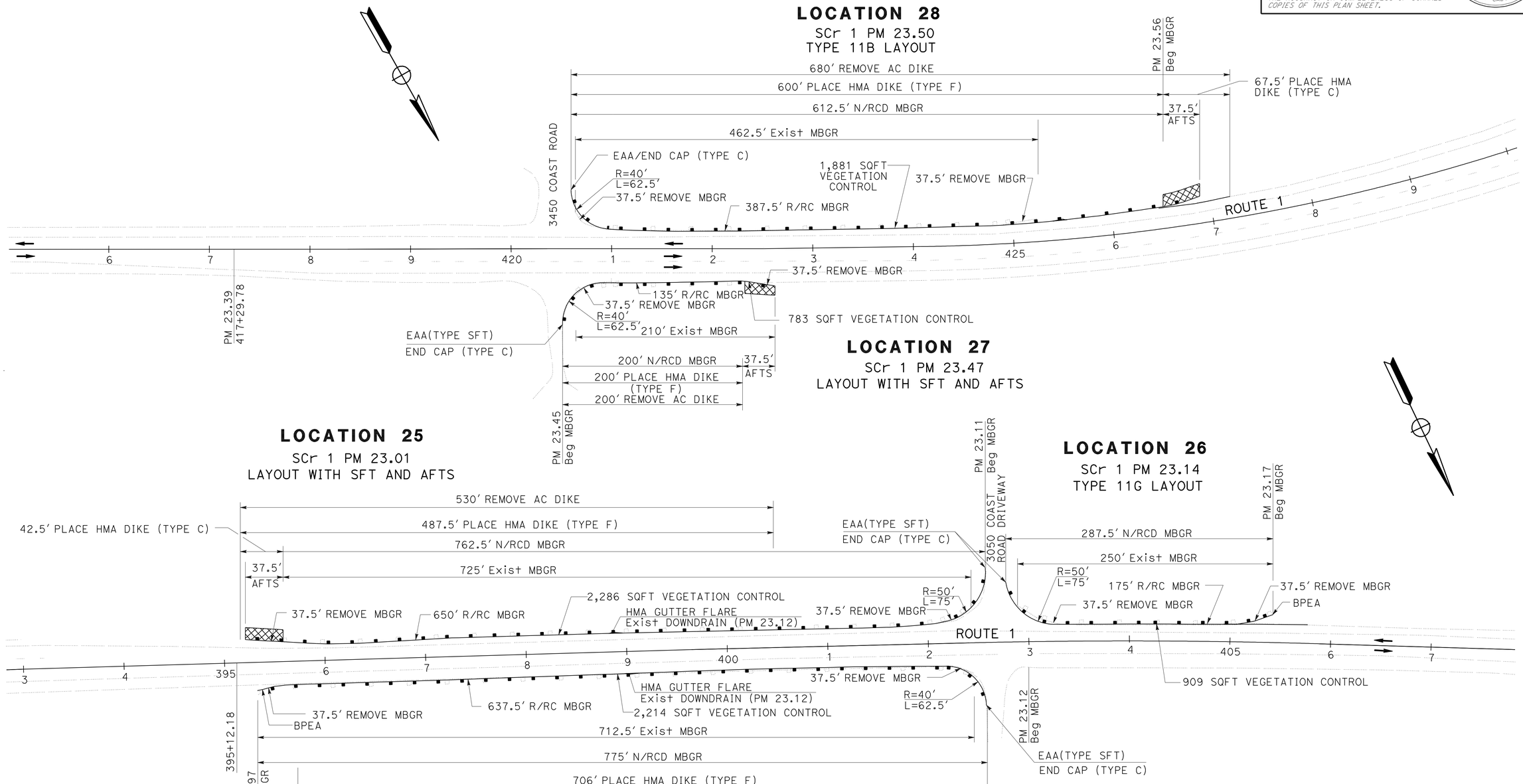

EXISTING UTILITY FACILITIES ARE NOT SHOWN ON THE PLANS

CONSTRUCTION DETAILS

NO SCALE **C-8**

STATE OF CALIFORNIA - DEPARTMENT OF TRANSPORTATION
Caltrans
06-DESIGN

FUNCTIONAL SUPERVISOR: BORIS AYAVIRI
CALCULATED-DESIGNED BY: DEO CALABIO
CHECKED BY: BORIS AYAVIRI
REVISED BY
DATE REVISED

LAST REVISION 10-14-11
DATE PLOTTED => 23-AUG-2012
TIME PLOTTED => 07:24

Dist	COUNTY	ROUTE	POST MILES TOTAL PROJECT	SHEET No.	TOTAL SHEETS
05	SCr	1	17.5/26.0	11	61

REGISTERED CIVIL ENGINEER 11-8-11 DATE

2-21-12
PLANS APPROVAL DATE

REGISTERED PROFESSIONAL ENGINEER
DEO CALABIO
No. 61994
Exp. 9-30-13
CIVIL
STATE OF CALIFORNIA

THE STATE OF CALIFORNIA OR ITS OFFICERS OR AGENTS SHALL NOT BE RESPONSIBLE FOR THE ACCURACY OR COMPLETENESS OF SCANNED COPIES OF THIS PLAN SHEET.

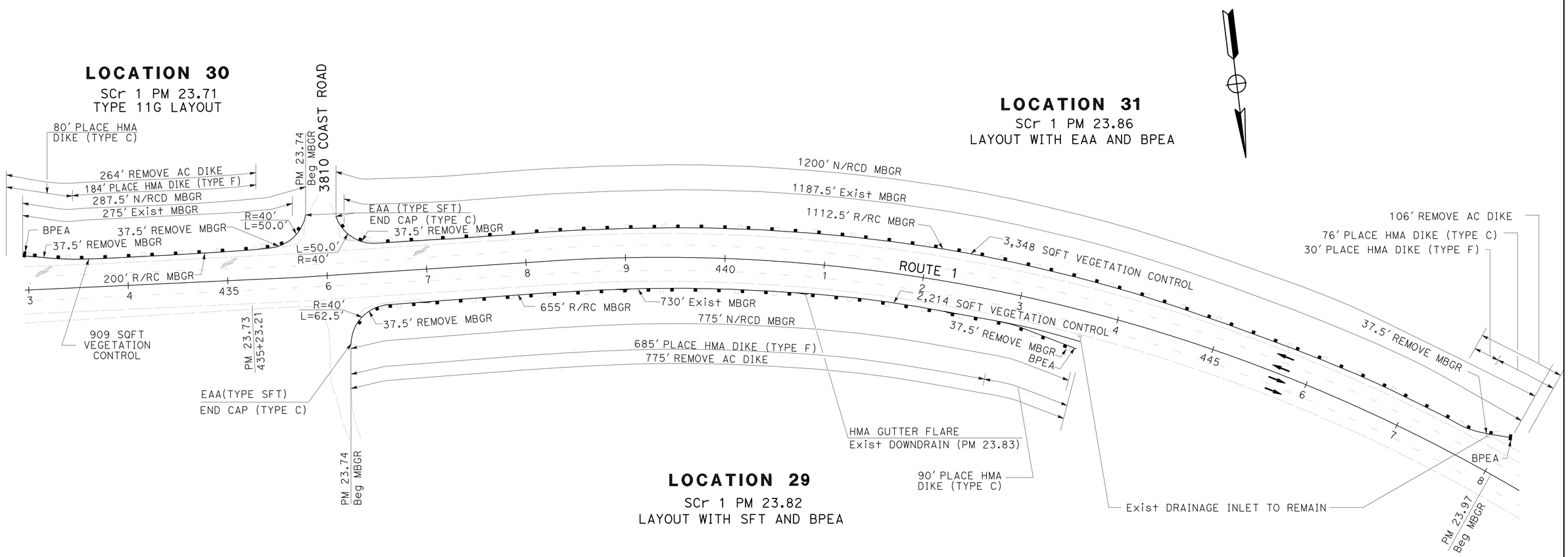

EXISTING UTILITY FACILITIES ARE NOT SHOWN ON THE PLANS

CONSTRUCTION DETAILS

NO SCALE **C-9**

STATE OF CALIFORNIA - DEPARTMENT OF TRANSPORTATION
Caltrans
06-DESIGN

FUNCTIONAL SUPERVISOR: BORIS AYAVIRI
CALCULATED-DESIGNED BY: DEO CALABIO
CHECKED BY: BORIS AYAVIRI
REVISED BY
DATE REVISED

LAST REVISION 10-14-11
DATE PLOTTED => 23-AUG-2012
TIME PLOTTED => 07:24

Dist	COUNTY	ROUTE	POST MILES TOTAL PROJECT	SHEET No.	TOTAL SHEETS
05	SCr	1	17.5/26.0	12	61

REGISTERED CIVIL ENGINEER 11-8-11 DATE

2-21-12
PLANS APPROVAL DATE

REGISTERED PROFESSIONAL ENGINEER DEO CALABIO No. 61994 Exp. 9-30-13 CIVIL STATE OF CALIFORNIA

THE STATE OF CALIFORNIA OR ITS OFFICERS OR AGENTS SHALL NOT BE RESPONSIBLE FOR THE ACCURACY OR COMPLETENESS OF SCANNED COPIES OF THIS PLAN SHEET.

LOCATION 34
SCr 1 PM 25.88
TYPE 11F LAYOUT

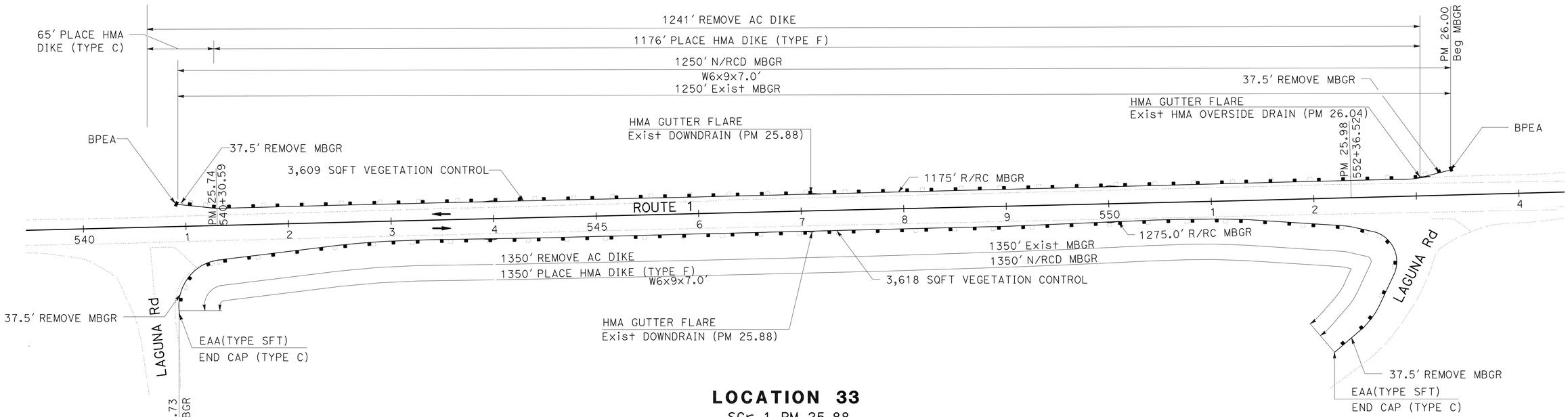

LOCATION 33
SCr 1 PM 25.88
LAYOUT WITH SFT AT ENDS OF RAILING

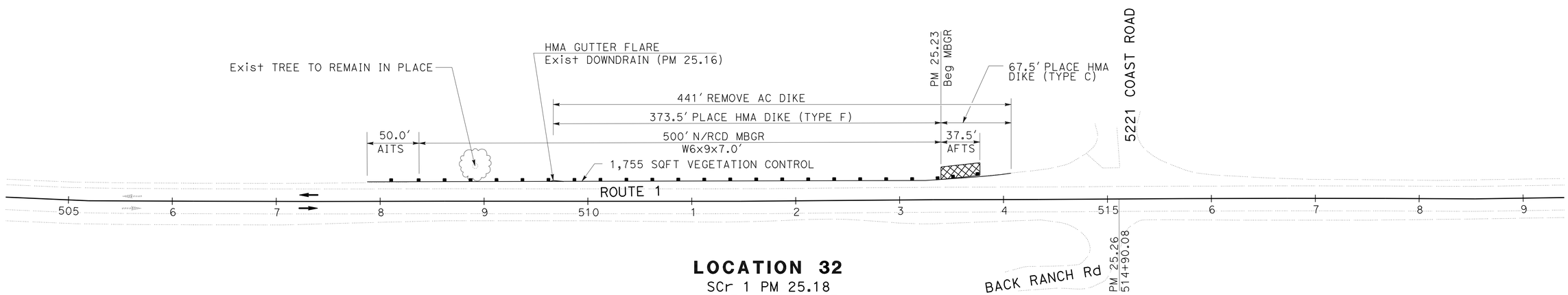

LOCATION 32
SCr 1 PM 25.18
TYPE 11H LAYOUT

EXISTING UTILITY FACILITIES ARE NOT SHOWN ON THE PLANS

CONSTRUCTION DETAILS
NO SCALE **C-10**

REVISED BY | DATE REVISED
DEO CALABIO | BORIS AYAVIRI
CALCULATED-DESIGNED BY | CHECKED BY
FUNCTIONAL SUPERVISOR | BORIS AYAVIRI

STATE OF CALIFORNIA - DEPARTMENT OF TRANSPORTATION
Caltrans
06-DESIGN

LAST REVISION 10-14-11 | DATE PLOTTED => 23-AUG-2012 | TIME PLOTTED => 09:49

Dist	COUNTY	ROUTE	POST MILES TOTAL PROJECT	SHEET No.	TOTAL SHEETS
05	SCr	1	17.5/26.0	13	61

REGISTERED CIVIL ENGINEER 11-8-11 DATE

2-21-12
PLANS APPROVAL DATE

REGISTERED PROFESSIONAL ENGINEER DEO CALABIO No. 61994 Exp. 9-30-13 CIVIL STATE OF CALIFORNIA

THE STATE OF CALIFORNIA OR ITS OFFICERS OR AGENTS SHALL NOT BE RESPONSIBLE FOR THE ACCURACY OR COMPLETENESS OF SCANNED COPIES OF THIS PLAN SHEET.

NOTES:

1. USE CASE 3 WHEN TWO POSTS ARE OMITTED.
2. FOR OTHER DETAILS, SEE STANDARD PLANS A77A2, A77B1, A77C2 AND 4.
3. LOCATIONS OF NESTING SHALL BE TO AVOID UTILITY / DRAINAGE FACILITY OR AS DIRECTED BY THE ENGINEER.
4. OFFSET THE ADDITIONAL METAL BEAM GUARD RAILING SPLICES 6'-3" FROM THE BASE METAL BEAM GUARD RAILING SPLICES.

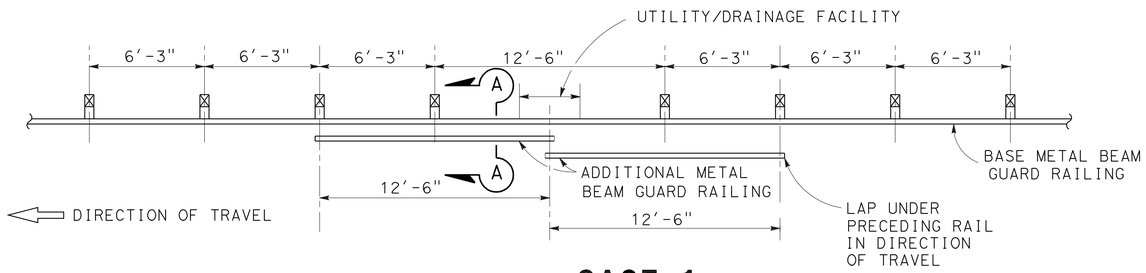

CASE 1
ONE POST OMITTED (SPLICE IN CENTER)

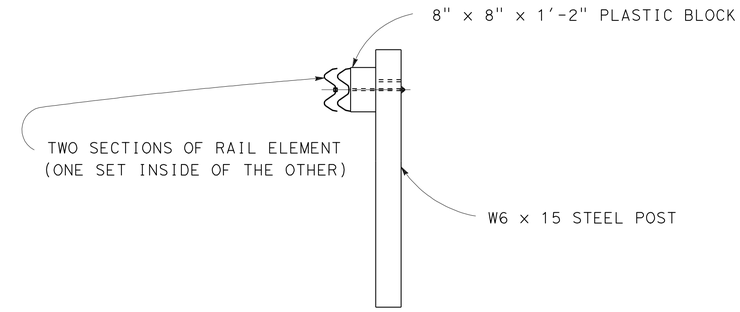

SECTION A-A
SEE NOTE 2

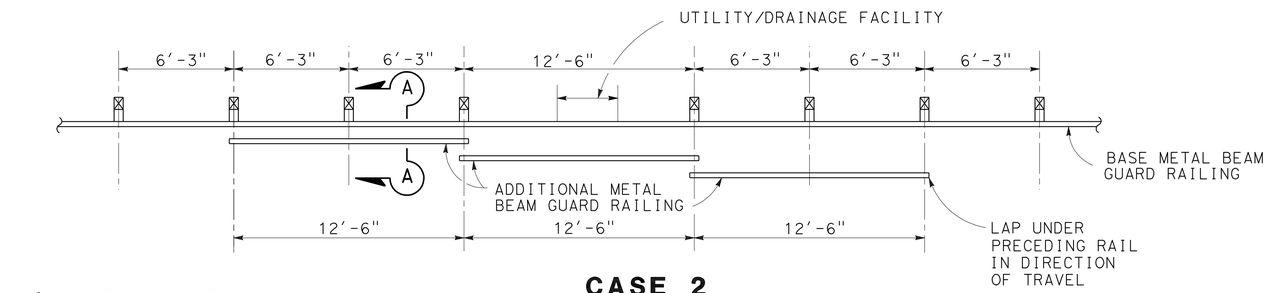

CASE 2
ONE POST OMITTED (SPLICE AT POSTS)

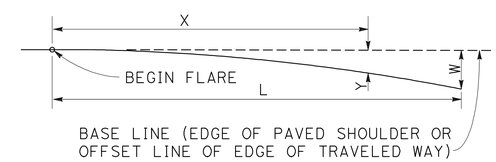

$$Y = \frac{WX^2}{L^2}$$

Y = OFFSET FROM BASE LINE
W = MAXIMUM OFFSET
X = DISTANCE ALONG BASE LINE
L = LENGTH OF FLARE

PARABOLIC FLARE OFFSETS

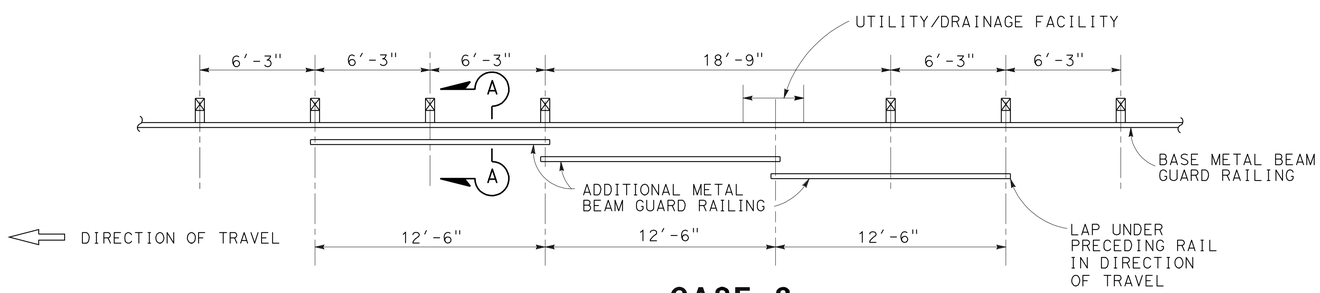

CASE 3
TWO POSTS OMITTED

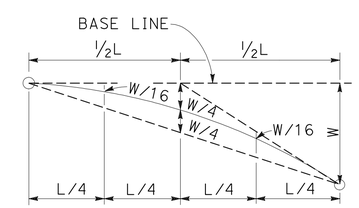

TYPICAL PARABOLIC LAYOUT

LONG SPAN NESTED GUARD RAILING

EXISTING UTILITY FACILITIES ARE NOT SHOWN ON THE PLANS

CONSTRUCTION DETAILS

NO SCALE

C-11

REVISED BY | DATE REVISED
DEO CALABIO | BORIS AYAVIRI
CALCULATED-DESIGNED BY | CHECKED BY
FUNCTIONAL SUPERVISOR | BORIS AYAVIRI
STATE OF CALIFORNIA - DEPARTMENT OF TRANSPORTATION
06-DESIGN
Caltrans

LAST REVISION 10-14-11 | DATE PLOTTED => 23-AUG-2012 | TIME PLOTTED => 09:49

Dist	COUNTY	ROUTE	POST MILES TOTAL PROJECT	SHEET No.	TOTAL SHEETS
05	SCr	1	17.5/26.0	14	61

REGISTERED CIVIL ENGINEER 11-8-11 DATE

2-21-12
PLANS APPROVAL DATE

REGISTERED PROFESSIONAL ENGINEER DEO CALABIO No. 61994 Exp. 9-30-13 CIVIL STATE OF CALIFORNIA

THE STATE OF CALIFORNIA OR ITS OFFICERS OR AGENTS SHALL NOT BE RESPONSIBLE FOR THE ACCURACY OR COMPLETENESS OF SCANNED COPIES OF THIS PLAN SHEET.

NOTES:

1. FOR DIKE POSITIONING WITH GUARD RAILING INSTALLATIONS, SEE STANDARD PLAN A77C4.
2. USE WHERE DIRECTED BY THE ENGINEER.
3. DIRECTION OF ADJACENT TRAFFIC INDICATED BY ←

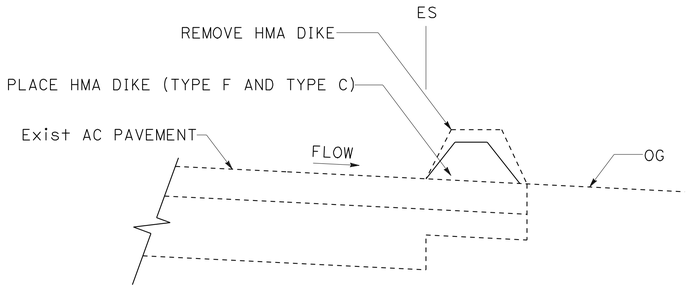

REMOVE AC DIKE / PLACE HMA DIKE AND HMA (Misc AREA)

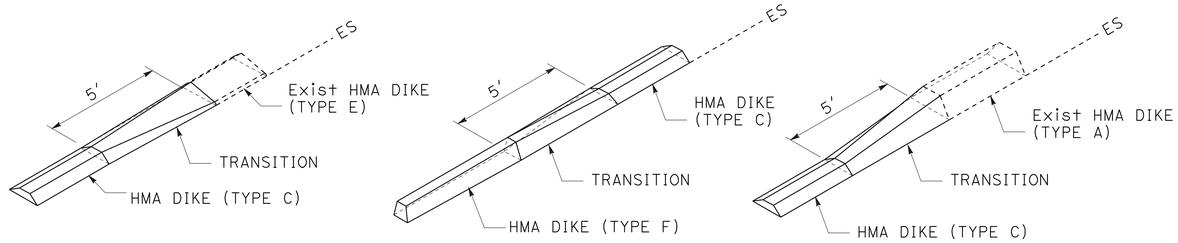

TYPICAL HMA DIKE TRANSITION DETAILS

SEE NOTE 1

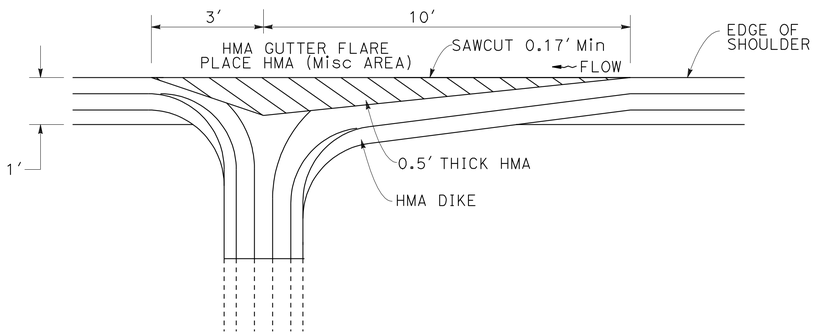

HMA TRANSITION AT EXISTING OVERSIDE DRAINS

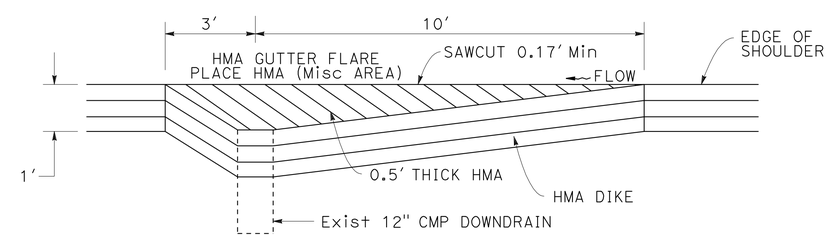

HMA TRANSITION AT EXISTING PIPE DOWNDRAINS

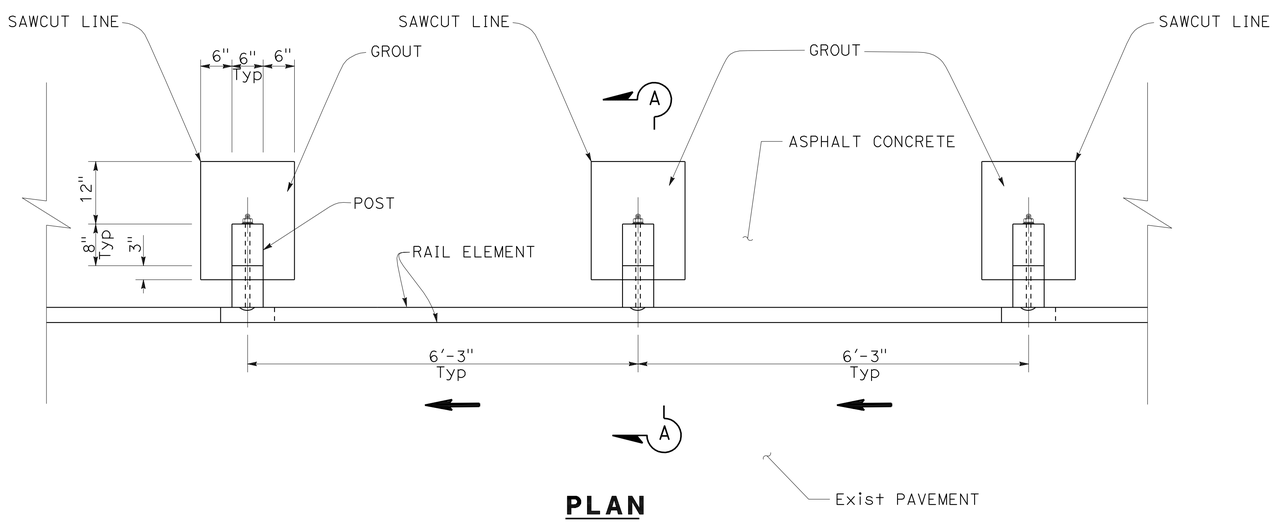

PLAN

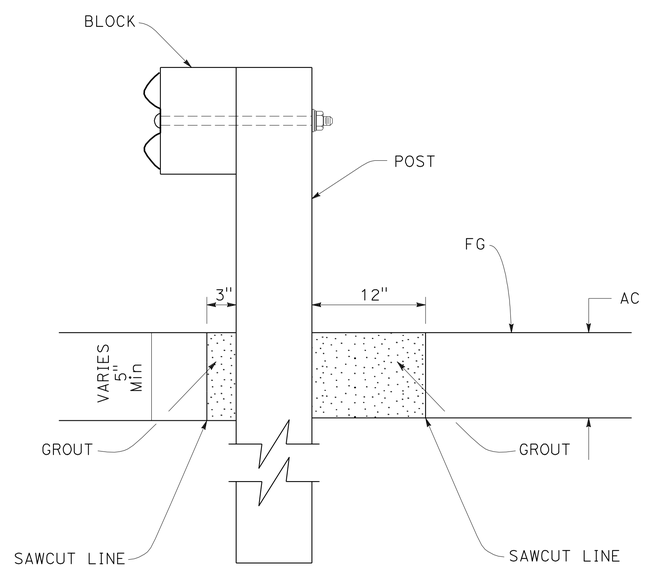

SECTION A-A

METAL BEAM GUARD RAILING THROUGH ASPHALT CONCRETE

CRASH CUSHION (TYPE CAT)

EXISTING UTILITY FACILITIES ARE NOT SHOWN ON THE PLANS

CONSTRUCTION DETAILS

NO SCALE **C-12**

STATE OF CALIFORNIA - DEPARTMENT OF TRANSPORTATION
Caltrans
06-DESIGN

FUNCTIONAL SUPERVISOR: BORIS AYAVIRI
CALCULATED-DESIGNED BY: DEO CALABIO
CHECKED BY: BORIS AYAVIRI
REVISED BY
DATE REVISED

LAST REVISION 10-14-11
DATE PLOTTED => 23-AUG-2012
TIME PLOTTED => 09:49

Dist	COUNTY	ROUTE	POST MILES TOTAL PROJECT	SHEET No.	TOTAL SHEETS
05	SCr	1	17.5/26.0	15	61

REGISTERED CIVIL ENGINEER 11-8-11 DATE

2-21-12
PLANS APPROVAL DATE

REGISTERED PROFESSIONAL ENGINEER DEO CALABIO No. 61994 Exp. 9-30-13 CIVIL STATE OF CALIFORNIA

THE STATE OF CALIFORNIA OR ITS OFFICERS OR AGENTS SHALL NOT BE RESPONSIBLE FOR THE ACCURACY OR COMPLETENESS OF SCANNED COPIES OF THIS PLAN SHEET.

NOTES:

1. WHERE THE DISTANCE BETWEEN BACK OF POST AND HINGE POINT IS LESS THAN 24", VEGETATION CONTROL TO BE CONSTRUCTED FLUSH WITH THE BACK EDGE OF THE POST.
2. WHERE DIKE IS CONSTRUCTED UNDER RAILING, CONSTRUCT VEGETATION CONTROL TO BACK EDGE OF DIKE. WHERE PAVED SHOULDER IS CONSTRUCTED WITHIN 24" IN FRONT OF THE POST, CONSTRUCT VEGETATION CONTROL TO THE EDGE OF PAVED SHOULDER.
3. DIRECTION OF ADJACENT TRAFFIC INDICATED BY ⟵ .
4. SEE NEW STANDARD PLAN A77C6 THROUGH A77C10 FOR OTHER HORIZONTAL DIMENSIONS OF VEGETATION CONTROL AT ROADSIDE FEATURES.

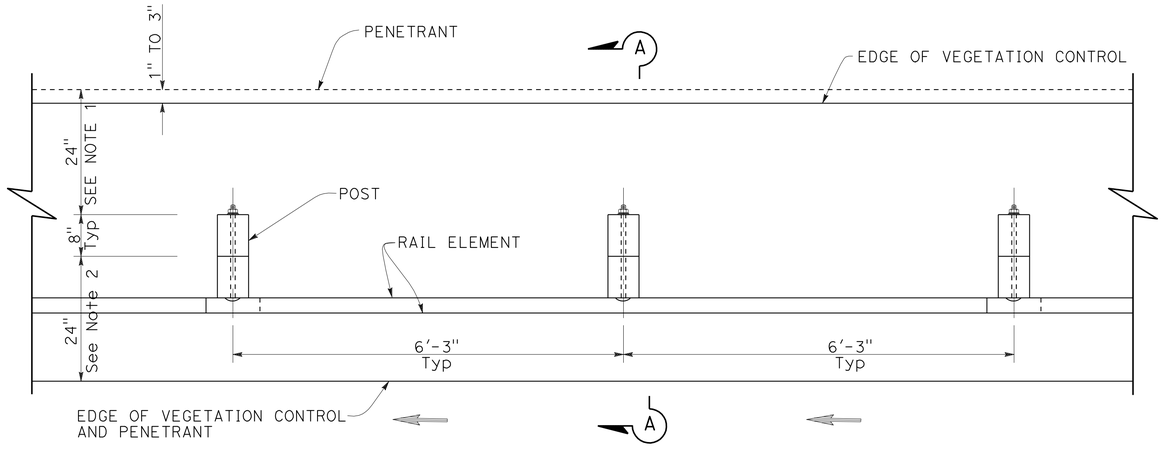

PLAN

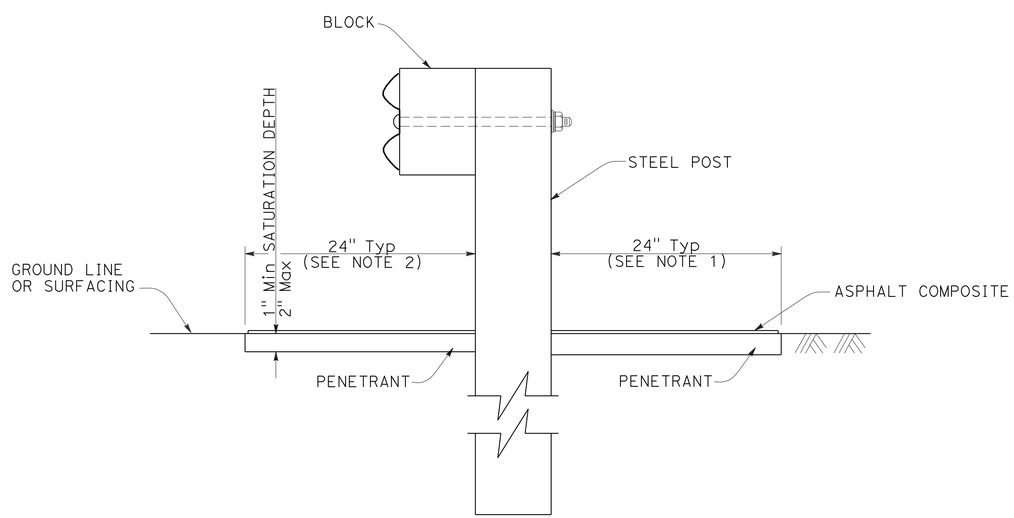

SECTION A-A

METAL BEAM GUARD RAILING TYPICAL VEGETATION CONTROL STANDARD RAILING SECTION

EXISTING UTILITY FACILITIES ARE NOT SHOWN ON THE PLANS

CONSTRUCTION DETAILS

NO SCALE **C-13**

STATE OF CALIFORNIA - DEPARTMENT OF TRANSPORTATION
Caltrans
06-DESIGN

FUNCTIONAL SUPERVISOR: BORIS AYAVIRI
CALCULATED-DESIGNED BY: DEO CALABIO
CHECKED BY: BORIS AYAVIRI
REVISED BY
DATE REVISED

LAST REVISION 10-14-11
DATE PLOTTED => 23-AUG-2012
TIME PLOTTED => 09:49

Dist	COUNTY	ROUTE	POST MILES TOTAL PROJECT	SHEET No.	TOTAL SHEETS
05	SCr	1	17.5/26.0	16	61

REGISTERED CIVIL ENGINEER 11-8-11 DATE

2-21-11
PLANS APPROVAL DATE

REGISTERED PROFESSIONAL ENGINEER DEO CALABIO No. 61994 Exp. 9-30-13 CIVIL STATE OF CALIFORNIA

THE STATE OF CALIFORNIA OR ITS OFFICERS OR AGENTS SHALL NOT BE RESPONSIBLE FOR THE ACCURACY OR COMPLETENESS OF SCANNED COPIES OF THIS PLAN SHEET.

LOCATION 31
SCr 1 PM 23.97
LAYOUT WITH EAA AND BPEA

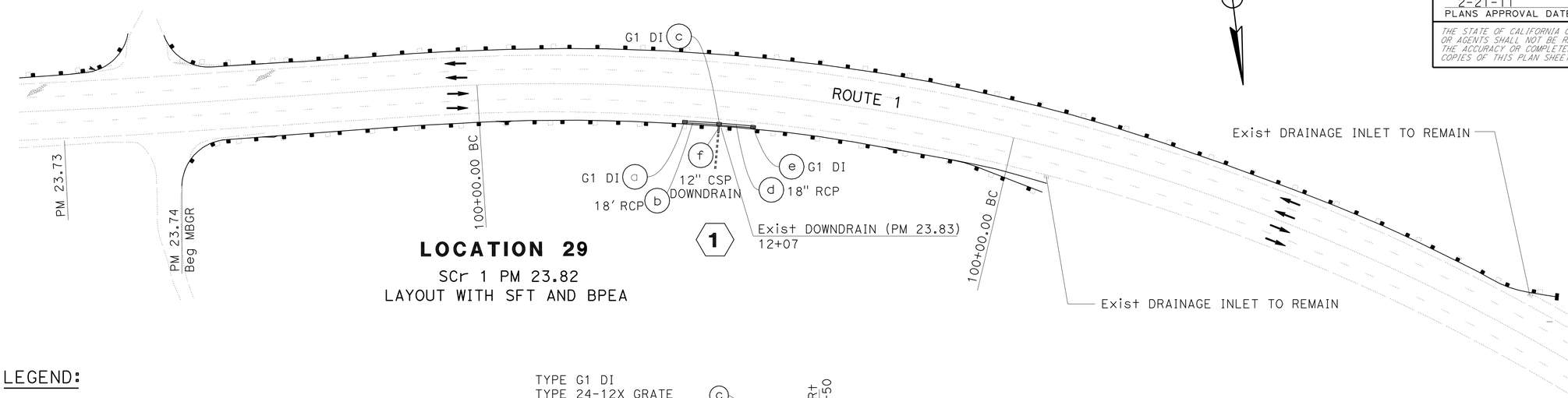

LOCATION 29
SCr 1 PM 23.82
LAYOUT WITH SFT AND BPEA

LEGEND:

DRAINAGE SYSTEM No.

- # DRAINAGE UNIT No.
- (x) DRAINAGE ITEM
- GRADE TO TRAIN
- DIRCTION OF TRAVEL

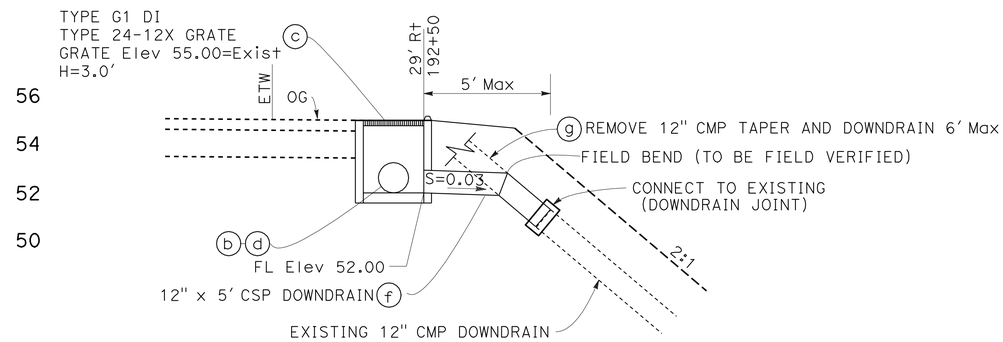

DRAINAGE SYSTEM No. 1 c
PROFILE

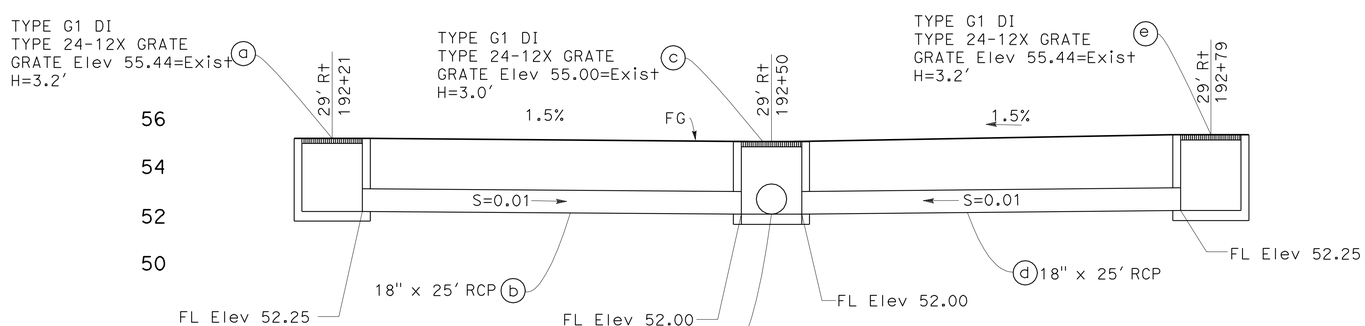

DRAINAGE SYSTEM No. 1
PROFILE

APPROVED FOR DRAINAGE WORK ONLY

DRAINAGE PLANS AND PROFILES
NO SCALE

D-1

STATE OF CALIFORNIA - DEPARTMENT OF TRANSPORTATION
Caltrans
06-DESIGN

FUNCTIONAL SUPERVISOR: BORIS AYAVIRI
CALCULATED-DESIGNED BY: DEO CALABIO
CHECKED BY
REVISED BY
DATE REVISED

LAST REVISION 10-14-11
DATE PLOTTED => 23-AUG-2012
TIME PLOTTED => 09:49

Dist	COUNTY	ROUTE	POST MILES TOTAL PROJECT	SHEET No.	TOTAL SHEETS
05	SCr	1	17.5/26.0	17	61

REGISTERED CIVIL ENGINEER 11-8-11 DATE

2-21-11
PLANS APPROVAL DATE

REGISTERED PROFESSIONAL ENGINEER DEO CALABIO No. 61994 Exp. 9-30-13 CIVIL STATE OF CALIFORNIA

THE STATE OF CALIFORNIA OR ITS OFFICERS OR AGENTS SHALL NOT BE RESPONSIBLE FOR THE ACCURACY OR COMPLETENESS OF SCANNED COPIES OF THIS PLAN SHEET.

LOCATION 34
SCr 1 PM 25.88
TYPE 11F LAYOUT

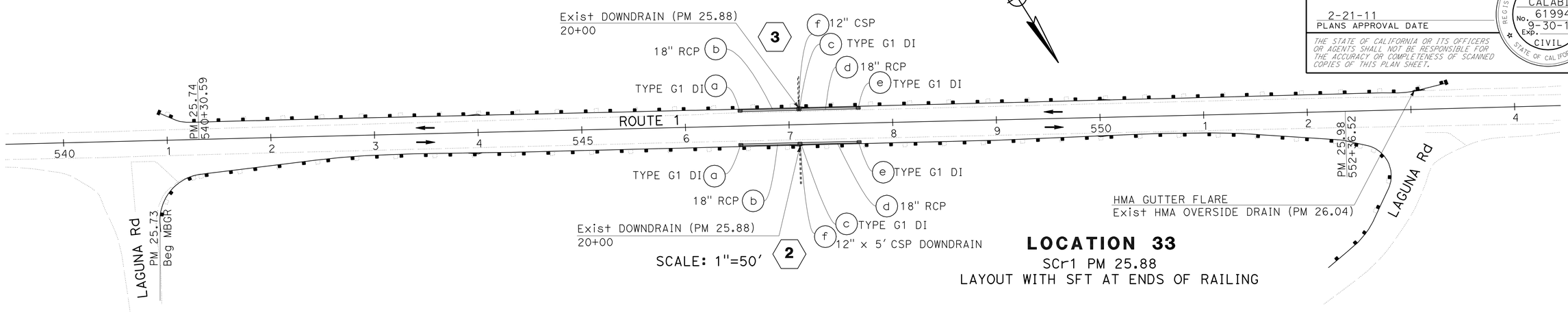

SCALE: 1"=50'

LOCATION 33
SCr1 PM 25.88
LAYOUT WITH SFT AT ENDS OF RAILING

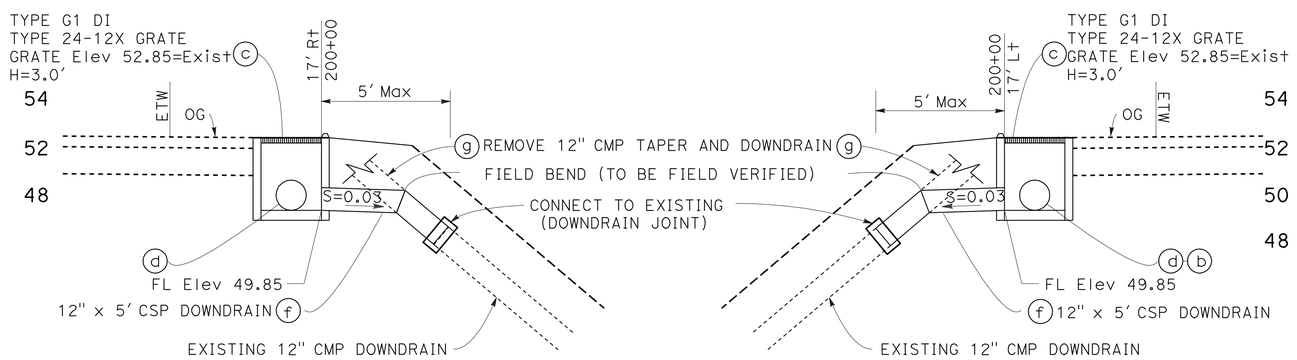

DRAINAGE SYSTEM PROFILE

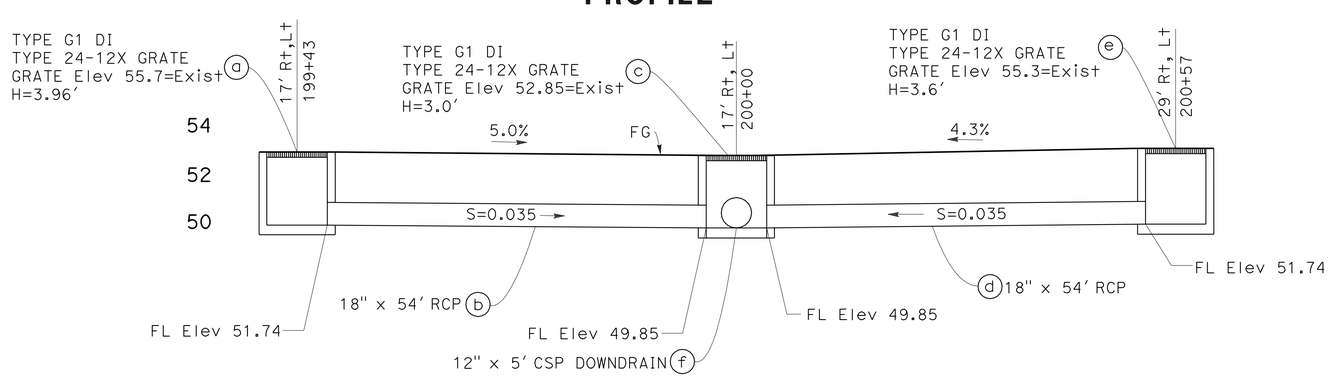

DRAINAGE SYSTEM No. 2 AND 3 PROFILE

DRAINAGE AND PROFILE PLANS
NO SCALE

D-2

APPROVED FOR DRAINAGE WORK ONLY

REVISED BY | DATE REVISED
DEO CALABIO
CALCULATED-DESIGNED BY | CHECKED BY
FUNCTIONAL SUPERVISOR
BORIS AYAVIRI
STATE OF CALIFORNIA - DEPARTMENT OF TRANSPORTATION
Caltrans
06-DESIGN

LAST REVISION 10-14-11
DATE PLOTTED => 23-AUG-2012
TIME PLOTTED => 09:49

Dist	COUNTY	ROUTE	POST MILES TOTAL PROJECT	SHEET No.	TOTAL SHEETS
05	SCr	1	17.5/26.0	18	61

REGISTERED CIVIL ENGINEER 11-8-11 DATE

2-21-11
PLANS APPROVAL DATE

REGISTERED PROFESSIONAL ENGINEER DEO CALABIO 61994 No. Exp. 9-30-13 CIVIL STATE OF CALIFORNIA

THE STATE OF CALIFORNIA OR ITS OFFICERS OR AGENTS SHALL NOT BE RESPONSIBLE FOR THE ACCURACY OR COMPLETENESS OF SCANNED COPIES OF THIS PLAN SHEET.

DRAINAGE QUANTITIES

DRAINAGE SYSTEM No.	DRAINAGE UNIT No.	LOCATION	DRAINAGE INLET MARKER	DRAINAGE INLETS: MINOR CONCRETE (MINOR STRUCTURE)	DRAINAGE INLETS: "H" (N)	DRAINAGE INLETS: 18" REINFORCED CONCRETE PIPE	REMOVE CMP DOWNDRAIN	12" CSP DOWNDRAIN (.079" THICK)	MISC IRON AND STEEL	DESCRIPTION	DRAINAGE SYSTEM No.	DRAINAGE UNIT No.
				CY	LF	LF	LF	LF	LB			
1	a	29	1	1.0	3.2				239	TYPE G1 INLET, TYPE 24-12X GRATE	1	a
	b	29				25.0				18" RCP		b
	c	29	1	0.95	3.0				239	TYPE G1 INLET, TYPE 24-12X GRATE		c
	d	29				25.0				18" RCP		d
	e	29	1	1.0	3.2				239	TYPE G1 INLET, TYPE 24-12X GRATE		e
	f	29						5.0		12" CSP		f
	g	29					6					g
2	a	33	1	1.17	3.96				239	TYPE G1 INLET, TYPE 24-12X GRATE	2	a
	b	33				54.0				18" RCP		b
	c	33	1	0.95	3.0				239	TYPE G1 INLET, TYPE 24-12X GRATE		c
	d	33				54.0				18" RCP		d
	e	33	1	1.08	3.6				239	TYPE G1 INLET, TYPE 24-12X GRATE		e
	f	33						5.0		12" CSP		f
	g						6				3	g
3	a	34	1	1.17	4.0				239	TYPE G1 INLET, TYPE 24-12X GRATE		a
	b	34				54.0				18" RCP		b
	c	34	1	0.95	3.0				239	TYPE G1 INLET, TYPE 24-12X GRATE		c
	d	34				54.0				18" RCP		d
	e	34	1	1.08	3.6			5.0	239	TYPE G1 INLET, TYPE 24-12X GRATE		e
	f	34								12" CSP		f
	g						6					g
TOTAL			9	9.35		266.0	18	15.0	2,151			

(N) NOT A SEPARATE PAY ITEM, FOR INFORMATION ONLY.

REVISED BY | DATE REVISED

DEO CALABIO

CALCULATED-DESIGNED BY | CHECKED BY

FUNCTIONAL SUPERVISOR: BORIS AYAVIRI

STATE OF CALIFORNIA - DEPARTMENT OF TRANSPORTATION

Caltrans®

06-DESIGN

DRAINAGE QUANTITIES

DQ-1

LAST REVISION 05-30-11 | DATE PLOTTED => 23-AUG-2012 | TIME PLOTTED => 09:50

Dist	COUNTY	ROUTE	POST MILES TOTAL PROJECT	SHEET No.	TOTAL SHEETS
05	SCr	1	17.5/26.0	19	61

REGISTERED CIVIL ENGINEER 11-8-11 DATE

2-21-11
PLANS APPROVAL DATE

REGISTERED PROFESSIONAL ENGINEER FAWZI YAGHMOUR No. C-54750 Exp. 12/31/11 CIVIL STATE OF CALIFORNIA

THE STATE OF CALIFORNIA OR ITS OFFICERS OR AGENTS SHALL NOT BE RESPONSIBLE FOR THE ACCURACY OR COMPLETENESS OF SCANNED COPIES OF THIS PLAN SHEET.

NOTES:

1. SIGN LOCATIONS ARE APPROXIMATE
   EXACT SIGN LOCATIONS TO BE DETERMINED BY THE ENGINEER.
2. CONSTRUTION AREA SIGNS SHALL BE
   STATIONARY OR PORTABLE MOUNTED.

LEGEND

(X) SIGN NUMBER

CONSTRUCTION AREA SIGNS (1 POST)

CONSTRUCTION AREA SIGNS (2 POST)

STATIONARY MOUNTED CONSTRUCTION AREA SIGNS

SIGN No.	SIGN CODE FEDERAL	PANEL SIZE (INCHES)	No. OF POSTS AND SIZE (INCHES)	SIGN MESSAGE	No. OF SIGNS
(A)	G20-1	36" x 36"	1 - 4" x 6"	ROAD WORK NEXT 10 MILES	3
(B)	W20-1	36" x 36"	1 - 4" x 6"	ROAD WORK AHEAD	32
(C)	G20-2	60" x 24"	2 - 4" x 4"	END ROAD WORK	2

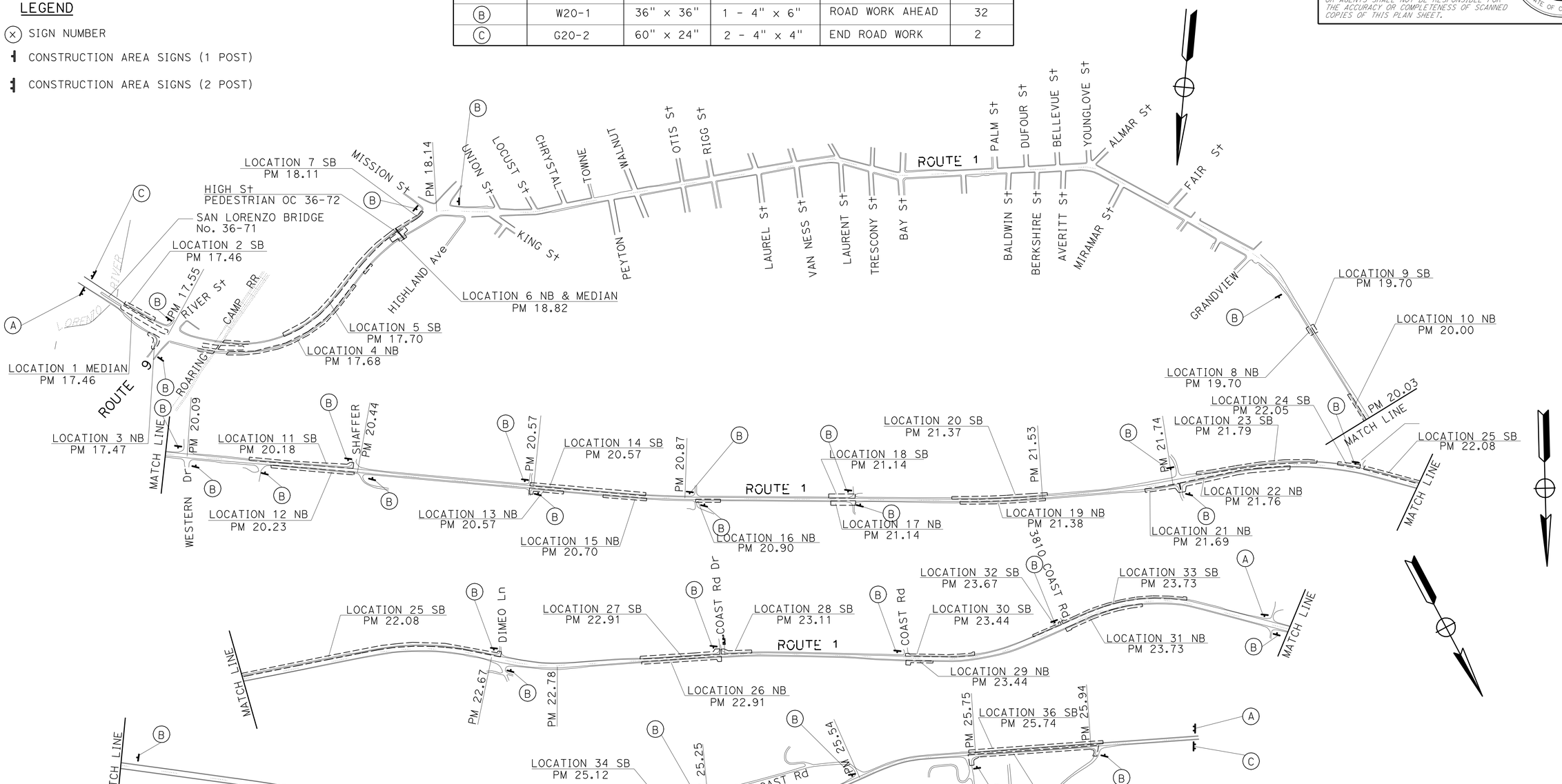

CONSTRUCTION AREA SIGNS

CS-1

NO SCALE

APPROVED FOR CONSTRUCTION AREA SIGN WORK ONLY

STATE OF CALIFORNIA - DEPARTMENT OF TRANSPORTATION
Caltrans® TRAFFIC DESIGN

FUNCTIONAL SUPERVISOR: MOHAMMED QATAMI
CALCULATED-DESIGNED BY: FAWZI YAGHMOUR
CHECKED BY: DAVID BLACK
REVISED BY / DATE REVISED

LAST REVISION 12-09-11
DATE PLOTTED => 23-AUG-2012
TIME PLOTTED => 09:50

Dist	COUNTY	ROUTE	POST MILES TOTAL PROJECT	SHEET No.	TOTAL SHEETS
05	SCr	1	17.5/26.0	20	61

REGISTERED CIVIL ENGINEER 10-26-11 DATE

2-21-11
PLANS APPROVAL DATE

REGISTERED PROFESSIONAL ENGINEER FAWZI YAGHMOUR No. C-54750 Exp. 12/31/11 CIVIL STATE OF CALIFORNIA

THE STATE OF CALIFORNIA OR ITS OFFICERS OR AGENTS SHALL NOT BE RESPONSIBLE FOR THE ACCURACY OR COMPLETENESS OF SCANNED COPIES OF THIS PLAN SHEET.

LEGEND

- (x) SIGN NUMBER
- SIGN ONE POST
- ROADSIDE SIGN (ONE OR TWO POST)
- REMOVE EXISTING OVERHEAD SIGN
- DIRECTION OF TRAFFIC

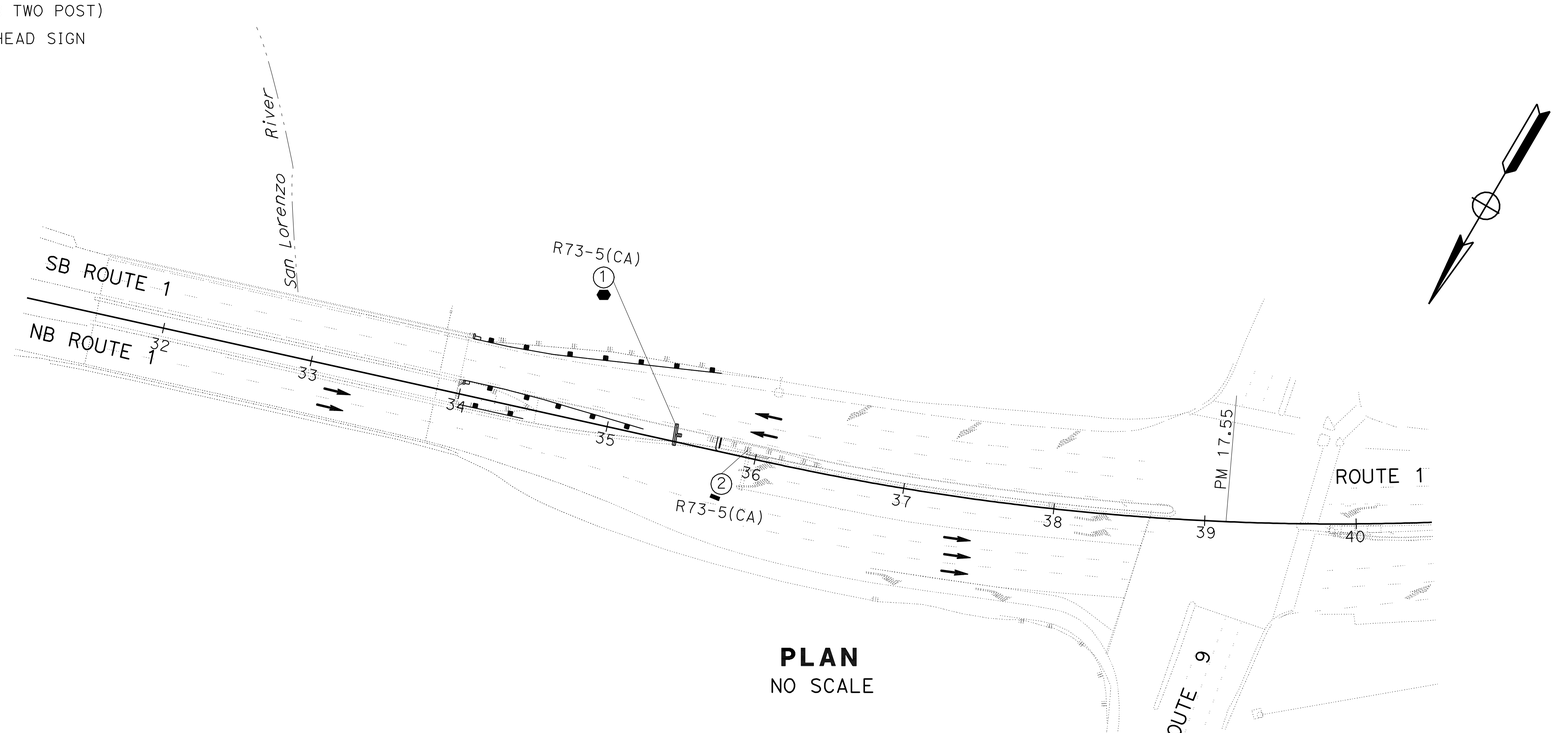

PLAN
NO SCALE

OVERHEAD SIGN AND ROADSIDE SIGN QUANTITIES

SHEET No.	SIGN No.	SIGN CODE	No. OF POST AND SIZE	SINGLE FACED	BACKGROUND	LEGEND		PROTECTION FILM	ROADSIDE SIGN ONE POST	REMOVE SIGN STRUCTURE	REMARKS
					SHEETING COLOR	SHEETING COLOR	RETROREFLECTIVITY ASTM TYPE	PREMIUM			
			(Inch x Inch)						EA	EA	
S-1	1	R73-5(CA)	1-4" x 4"	X	BLACK	WHITE	III	X	1		TWO LEFT LANE WITH LEGAL LANE#1 U-TURN
	2	R73-5(CA)								1	
		TOTAL							1	1	

APPROVED FOR SIGN WORK ONLY

SIGN PLAN AND QUANTITIES
S-1

STATE OF CALIFORNIA - DEPARTMENT OF TRANSPORTATION
Caltrans
TRAFFIC DESIGN

FUNCTIONAL SUPERVISOR: MOHAMMED QATAMI
CALCULATED-DESIGNED BY: DAVID BLACK
CHECKED BY: FAWZI YAGHMOUR
REVISED BY
DATE REVISED

LAST REVISION 12-02-11 | DATE PLOTTED => 23-AUG-2012 | TIME PLOTTED => 09:57

Dist	COUNTY	ROUTE	POST MILES TOTAL PROJECT	SHEET No.	TOTAL SHEETS
05	SCr	1	17.5/26.0	21	61

REGISTERED CIVIL ENGINEER 10-26-11 DATE

2-21-11
PLANS APPROVAL DATE

REGISTERED PROFESSIONAL ENGINEER FAWZI YAGHMOUR No. C-54750 Exp. 12/31/11 CIVIL STATE OF CALIFORNIA

THE STATE OF CALIFORNIA OR ITS OFFICERS OR AGENTS SHALL NOT BE RESPONSIBLE FOR THE ACCURACY OR COMPLETENESS OF SCANNED COPIES OF THIS PLAN SHEET.

OBJECT MARKER AND DELINEATORS

Loc No.	Co	PM	DESCRIPTION	DIRECTION OF TRAVEL NB/SB	SIDE OF TRAVELED WAY Rt/Lt	END OF BRIDGE A/D	GUARD RAILING DELINEATORS (TYPE F) EA	OBJECT MARKER (TYPE L-1)	REMOVE OBJECT MARKER	SHEET No.
1		17.48	ROUTE 1 (SAN LORENZO River Br-MEDIAN)	NB		D	3			C-1
				SB		A				C-1
2		17.48	ROUTE 1 (SAN LORENZO RIVER Br)	SB	Rt	A	3			C-1
3		17.93	ROUTE 1	NB			13	2	1	C-2
4		17.94	ROUTE 1	SB	Rt		17	2	2	C-3
5		18.05	ROUTE 1 (HIGH St-PEDESTRIAN OC)	NB	Rt				1	C-3
6		19.86	ROUTE 1	NB	Rt		2	2		C-4
7		19.87	ROUTE 1	SB	Rt		2	2		C-4
8		20.00	ROUTE 1	NB	Rt		4	2	1	C-4
9		20.30	ROUTE 1 (SHAFTER Rd)	SB	Rt		9	2	1	C-4
10		20.32	ROUTE 1 (SHAFTER Rd)	NB	Rt		6	2	1	C-4
11		20.73	ROUTE 1	NB	Rt		3	2	2	C-5
12		20.80	ROUTE 1	SB	Rt		10	2	2	C-5
13		20.87	ROUTE 1	NB	Rt		3	2	2	C-5
14		21.02	ROUTE 1	NB	Rt		2	2	2	C-5
15		21.27	ROUTE 1	NB	Rt		2	2	2	C-5
16	SCr	21.27	ROUTE 1	SB	Rt		2	2	2	C-5
17		21.45	ROUTE 1	NB	Rt		7	2	2	C-6
18		21.46	ROUTE 1	SB	Rt		8	2	2	C-6
19		21.74	ROUTE 1	NB	Rt		3	2		C-6
20		21.88	ROUTE 1	NB	Rt		10	2	2	C-6
21		21.97	ROUTE 1	SB	Rt		10	2	2	C-6
22		22.08	ROUTE 1 (2101 COAST Rd)	SB	Rt		2	2	2	C-7
23		22.40	ROUTE 1 (2101 COAST Rd)	SB	Rt		28	2	4	C-7
24		23.01	ROUTE 1 (3050 COAST Rd)	NB	Rt		7	2	1	C-8
25		23.01	ROUTE 1 (3050 COAST Rd)	NB	Rt		7	2	2	C-8
26		23.14	ROUTE 1 (3050 COAST Rd)	SB	Rt		3	2	2	C-8
27		23.47	ROUTE 1 (3450 COAST Rd)	NB	Rt		2	2	2	C-8
28		23.50	ROUTE 1 (3450 COAST Rd)	SB	Rt		6	2	2	C-8
29		23.82	ROUTE 1 (3810 COAST Rd)	NB	Rt		7	2	1	C-9
30		23.71	ROUTE 1 (3810 COAST Rd)	SB	Rt		2	2	2	C-9
31		23.86	ROUTE 1 (3810 COAST Rd)	SB	Rt		12	2	2	C-9
32		25.18	ROUTE 1 (5521 COAST Rd)	SB	Rt		5	1		C-10
33		25.88	ROUTE 1 (LAGUNA Rd)	NB	Rt		13	2	1	C-10
34		25.88	ROUTE 1 (LAGUNA Rd)	SB	Rt		12	2	2	C-10
FROM "OBJECT MARKER TABLE"								25		
TOTAL							225	86	50	

OBJECT MARKER

LOCATION	DESCRIPTION	PM	OBJECT MARKER (TYPE L-1) EA	SHEET No.
8	NB GUTTER FLARE	19.96	2	C-4
	NB GUTTER FLARE	20.03		C-4
9	SB GUTTER FLARE	20.24	2	C-4
	SB GUTTER FLARE	20.30		C-4
10	NB GUTTER FLARE	20.27	3	C-4
	NB GUTTER FLARE	20.31		C-4
	NB GUTTER FLARE	20.33		C-4
12	SB GUTTER FLARE	20.72	2	C-5
	SB GUTTER FLARE	20.81		C-5
13	NB GUTTER FLARE	20.87	1	C-5
16	SB GUTTER FLARE	21.28	1	C-5
17	NB GUTTER FLARE	21.40	1	C-6
18	SB GUTTER FLARE	21.44	3	C-6
	SB GUTTER FLARE	21.50		C-6
	SB GUTTER FLARE	21.52		C-6
20	NB GUTTER FLARE	21.86	1	C-6
21	SB GUTTER FLARE	21.86	1	C-6
23	SB GUTTER FLARE	22.21	1	C-7
	SB GUTTER FLARE	22.22	1	C-7
24	NB GUTTER FLARE	23.12	1	C-8
25	SB GUTTER FLARE	23.12	1	C-8
29	NB GUTTER FLARE	23.83	1	C-9
32	SB GUTTER FLARE	25.16	1	C-10
33	NB GUTTER FLARE	25.88	1	C-10
34	SB GUTTER FLARE	25.88	1	C-10
SUB TOTAL			25	

SIGN QUANTITIES

SQ-1

APPROVED FOR SIGN WORK ONLY

STATE OF CALIFORNIA - DEPARTMENT OF TRANSPORTATION
Caltrans® TRAFFIC DESIGN

FUNCTIONAL SUPERVISOR: MOHAMMED QATAMI
DAVID BLACK — FAWZI YAGHMOUR
CALCULATED-DESIGNED BY — CHECKED BY
REVISED BY — DATE REVISED

LAST REVISION 12-02-11 | DATE PLOTTED => 23-AUG-2012 | TIME PLOTTED => 09:50

Dist	COUNTY	ROUTE	POST MILES TOTAL PROJECT	SHEET No.	TOTAL SHEETS
05	SCr	1	17.5/26.0	22	61

REGISTERED CIVIL ENGINEER 10-26-11 DATE

2-21-12
PLANS APPROVAL DATE

REGISTERED PROFESSIONAL ENGINEER FAWZI YAGHMOUR No. C-54750 Exp. 12/31/11 CIVIL STATE OF CALIFORNIA

THE STATE OF CALIFORNIA OR ITS OFFICERS OR AGENTS SHALL NOT BE RESPONSIBLE FOR THE ACCURACY OR COMPLETENESS OF SCANNED COPIES OF THIS PLAN SHEET.

NOTES:

1. EXACT LOCATIONS OF TEMPORARY RAILING (TYPE K) TO BE DETERMINED BY THE ENGINEER.
2. EXACT LOCATIONS OF SIGNS TO BE DETERMINED BY THE ENGINEER.
3. PHASE 1- PLACE TEMPORARY K-RAIL ON SB Rte 1 INNER Shld. REMOVE Exist MBGR ON NB AND SB INNER Shld, CONSTRUCT TRANSITION BLOCK ON SB Br APPROACH, REMOVE CURB AND MEDIAN ISLAND, PLACE NEW HMA Pvmt FOR MEDIAN, AND CONSTRUCT MBGR ON NB AND SB INNER Shld.
4. PHASE 2- PLACE TEMPORARY K-RAIL ON SB Rte 1 OUTER Shld. REMOVE Exist MBGR, CONSTRUCT CAB ON SB Br APPROACH, AND PLACE MBGR ON SB OUTER SIDE.
5. REMOVE PAVEMENT MARKER PRIOR TO PLACEMENT OF TEMPORARY K-RAIL.

LEGEND:

- DIRECTION OF TRAFFIC
- Temp RAILING (TYPE K)
- Temp RAILING (TYPE K)
- CHANNELIZERS (SURFACE MOUNTED)
- (X) SIGN NUMBER
- SIGN ONE POST
- Temp ALTERNATIVE CRASH CUSHION SYSTEM

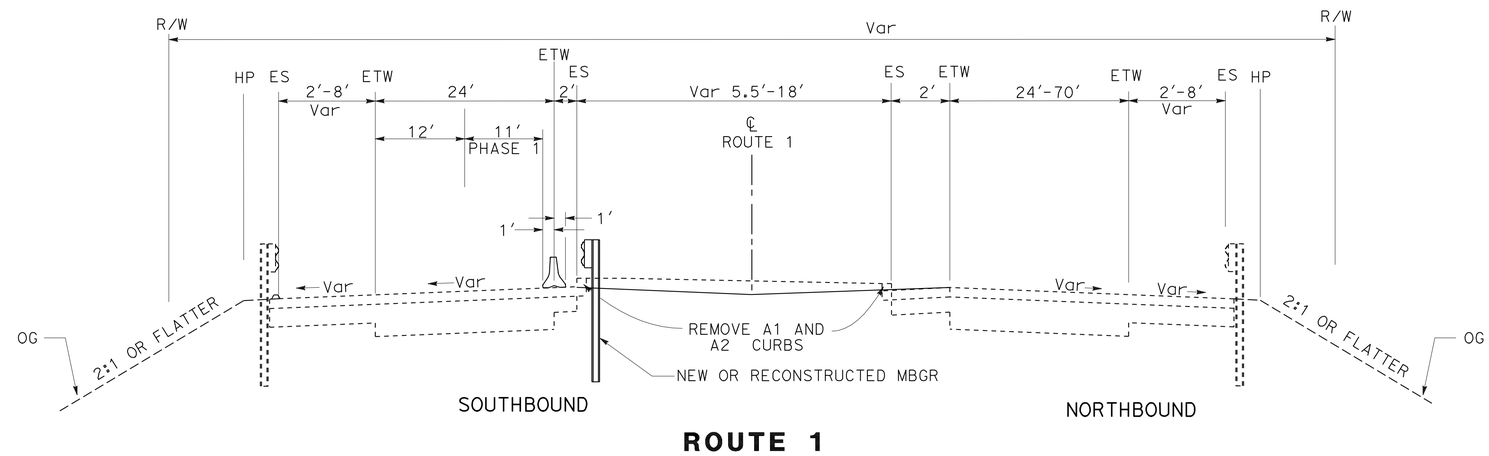

ROUTE 1

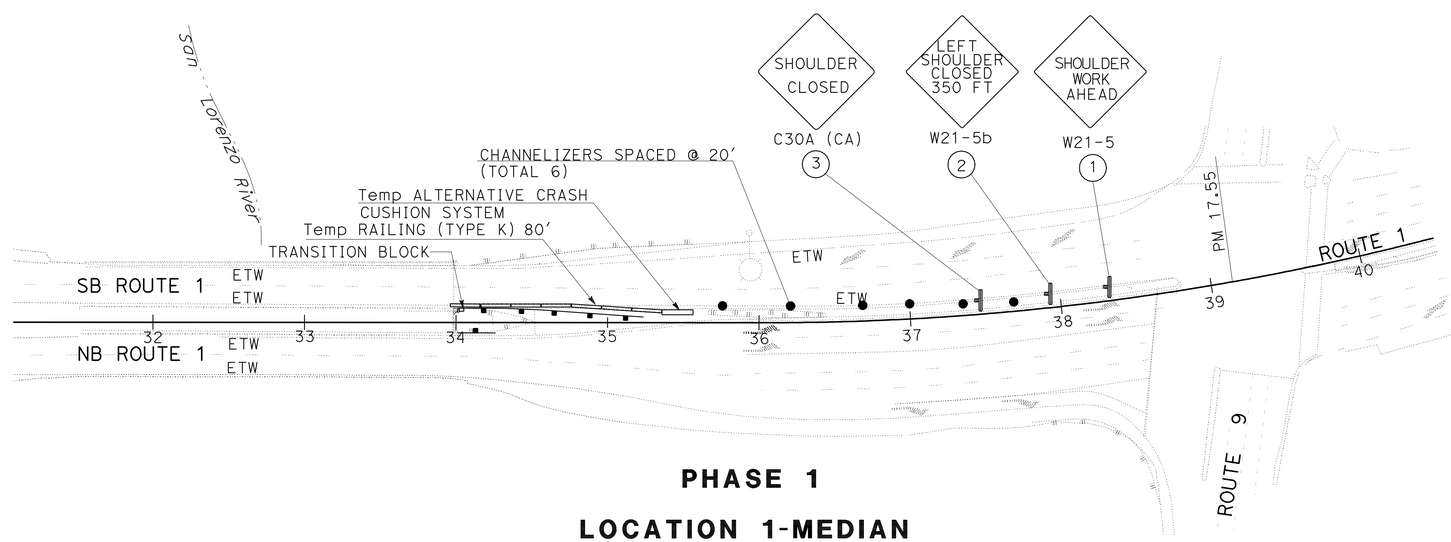

PHASE 1

LOCATION 1-MEDIAN

SCr 1 PM 17.48

TRAFFIC HANDLING PLAN

(PHASE 1)

NO SCALE

TH-1

APPROVED FOR TRAFFIC HANDLING WORK ONLY

STATE OF CALIFORNIA - DEPARTMENT OF TRANSPORTATION

Caltrans® **TRAFFIC DESIGN**

FUNCTIONAL SUPERVISOR: MOHAMMED QATAMI

CALCULATED-DESIGNED BY: DAVID BLACK

CHECKED BY: FAWZI YAGHMOUR

REVISED BY / DATE REVISED

LAST REVISION 12-02-11

DATE PLOTTED => 23-AUG-2012
TIME PLOTTED => 09:50

Dist	COUNTY	ROUTE	POST MILES TOTAL PROJECT	SHEET No.	TOTAL SHEETS
05	SCr	1	17.5/26.0	23	61

REGISTERED CIVIL ENGINEER 10-26-11 DATE

2-21-12
PLANS APPROVAL DATE

REGISTERED PROFESSIONAL ENGINEER FAWZI YAGHMOUR No. C-54750 Exp. 12/31/11 CIVIL STATE OF CALIFORNIA

THE STATE OF CALIFORNIA OR ITS OFFICERS OR AGENTS SHALL NOT BE RESPONSIBLE FOR THE ACCURACY OR COMPLETENESS OF SCANNED COPIES OF THIS PLAN SHEET.

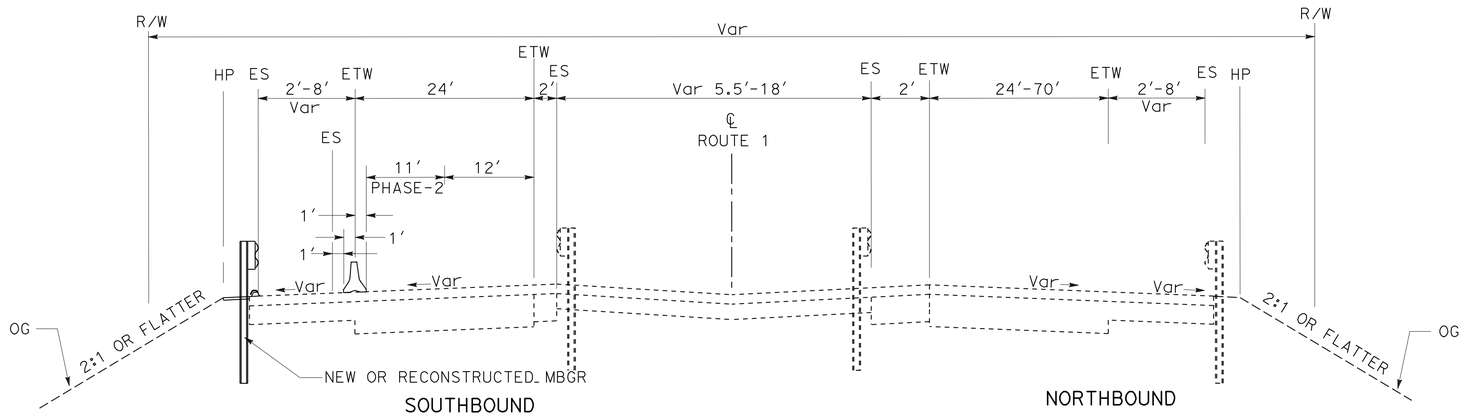

ROUTE 1

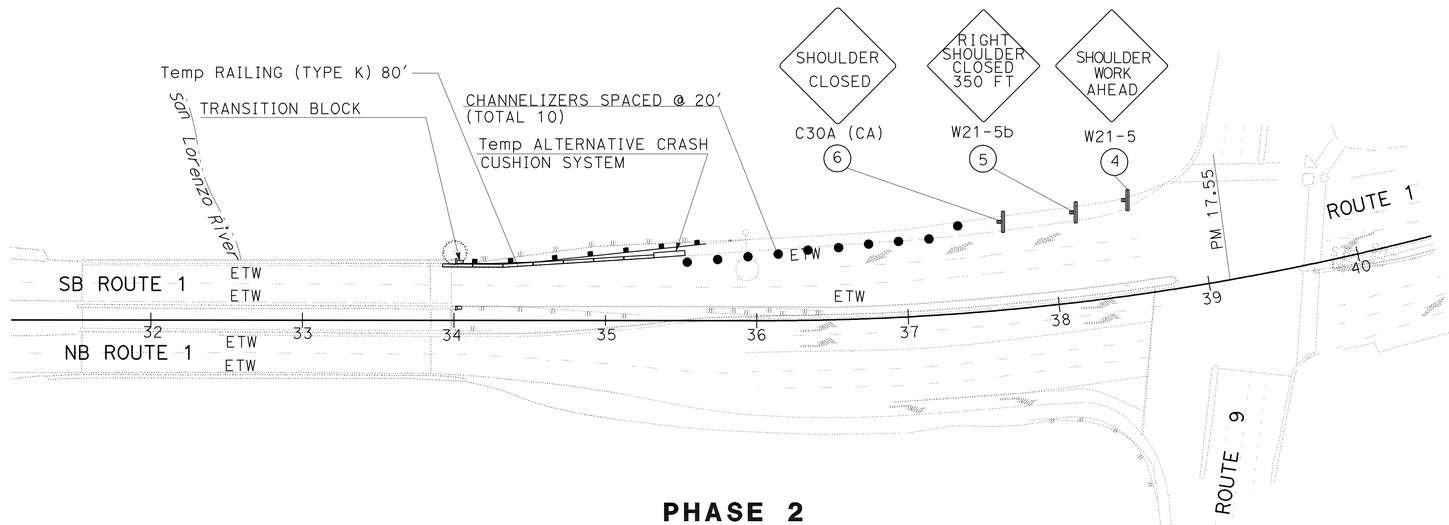

PHASE 2

LOCATION 1 - SB OUTSIDE Shld

SCr 1 PM 17.48

TRAFFIC HANDLING PLAN
(PHASE 2)

NO SCALE

TH-2

APPROVED FOR TRAFFIC HANDLING WORK ONLY

STATE OF CALIFORNIA - DEPARTMENT OF TRANSPORTATION
Caltrans® TRAFFIC DESIGN

FUNCTIONAL SUPERVISOR: MOHAMMED QATAMI
CALCULATED-DESIGNED BY: DAVID BLACK
CHECKED BY: FAWZI YAGHMOUR
REVISED BY
DATE REVISED

LAST REVISION 12-02-11
DATE PLOTTED => 23-AUG-2012
TIME PLOTTED => 07:55

Dist	COUNTY	ROUTE	POST MILES TOTAL PROJECT	SHEET No.	TOTAL SHEETS
05	SCr	1	17.5/26.0	24	61

REGISTERED CIVIL ENGINEER 10-26-11 DATE

2-21-12
PLANS APPROVAL DATE

REGISTERED PROFESSIONAL ENGINEER FAWZI YAGHMOUR No. C-54750 Exp. 12/31/11 CIVIL STATE OF CALIFORNIA

THE STATE OF CALIFORNIA OR ITS OFFICERS OR AGENTS SHALL NOT BE RESPONSIBLE FOR THE ACCURACY OR COMPLETENESS OF SCANNED COPIES OF THIS PLAN SHEET.

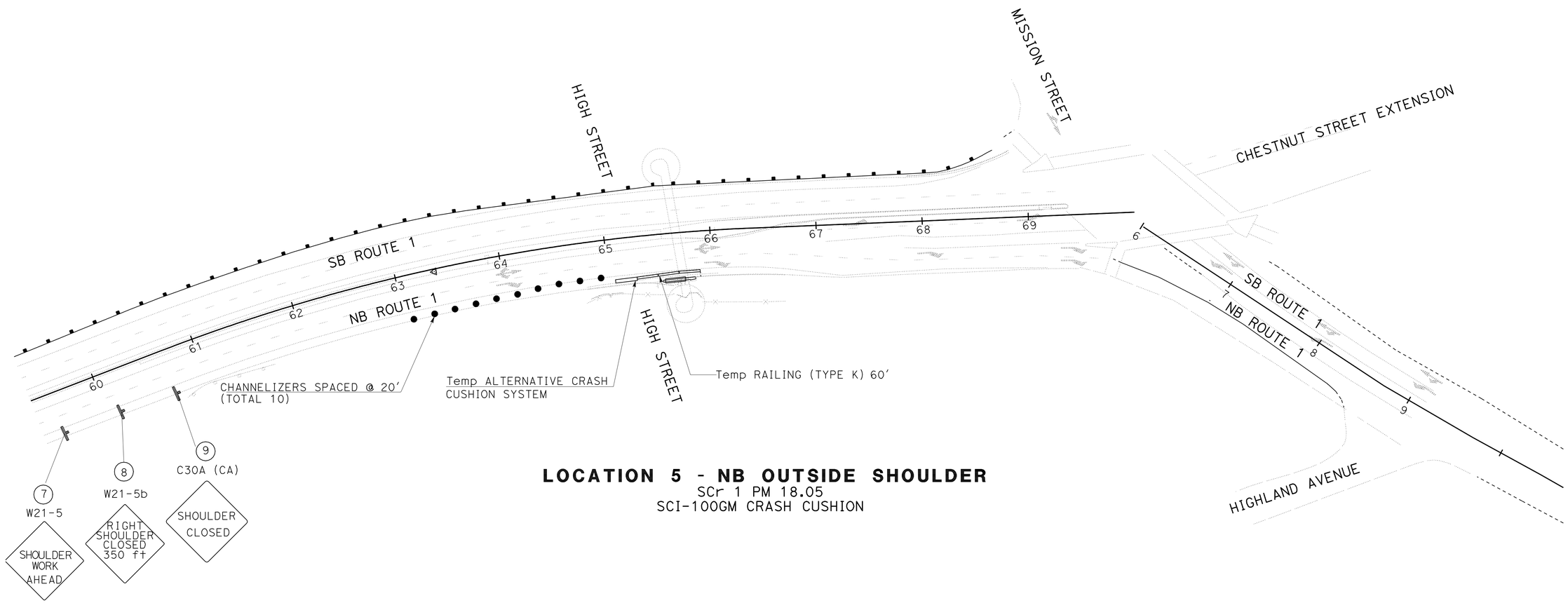

LOCATION 5 - NB OUTSIDE SHOULDER

SCr 1 PM 18.05
SCI-100GM CRASH CUSHION

TRAFFIC HANDLING PLAN

(LOCATION 5)

NO SCALE

TH-3

APPROVED FOR TRAFFIC HANDLING WORK ONLY

STATE OF CALIFORNIA - DEPARTMENT OF TRANSPORTATION
Caltrans®
TRAFFIC DESIGN

FUNCTIONAL SUPERVISOR: MOHAMMED QATAMI
CALCULATED-DESIGNED BY: DAVID BLACK
CHECKED BY: FAWZI YAGHMOUR
REVISED BY
DATE REVISED

LAST REVISION 12-02-11
DATE PLOTTED => 23-AUG-2012
TIME PLOTTED => 07:55

Dist	COUNTY	ROUTE	POST MILES TOTAL PROJECT	SHEET No.	TOTAL SHEETS
05	SCr	1	17.5/26.0	25	61

REGISTERED CIVIL ENGINEER 10-26-11 DATE

2-21-12
PLANS APPROVAL DATE

REGISTERED PROFESSIONAL ENGINEER FAWZI YAGHMOUR No. C-54750 Exp. 12/31/11 CIVIL STATE OF CALIFORNIA

THE STATE OF CALIFORNIA OR ITS OFFICERS OR AGENTS SHALL NOT BE RESPONSIBLE FOR THE ACCURACY OR COMPLETENESS OF SCANNED COPIES OF THIS PLAN SHEET.

STATIONARY MOUNTED CONSTRUCTION AREA SIGNS

LOCATION	SHEET	SIGN No.	SIGN CODE	PANEL SIZE	No. OF POST AND SIZE	SIGN MESSAGE	No. OF SIGNS
1	TH-1	1	W21-5	48" x 48"	1 - 4" x 6"	SHOULDER WORK AHEAD	1
		2	W21-5b	48" x 48"	1 - 4" x 6"	LEFT SHOULDER CLOSED 350 FT	1
		3	C30A (CA)	48" x 48"	1 - 4" x 6"	SHOULDER CLOSED	1
1	TH-2	4	W21-5	48" x 48"	1 - 4" x 6"	SHOULDER WORK AHEAD	1
		5	W21-5b	48" x 48"	1 - 4" x 6"	RIGHT SHOULDER CLOSED 350 FT	1
		6	C30A (CA)	48" x 48"	1 - 4" x 6"	SHOULDER CLOSED	1
5	TH-3	7	W21-5	48" x 48"	1 - 4" x 6"	SHOULDER WORK AHEAD	1
		8	W21-5b	48" x 48"	1 - 4" x 6"	RIGHT SHOULDER CLOSED 350 FT	1
		9	C30A (CA)	48" x 48"	1 - 4" x 6"	SHOULDER CLOSED	1

TRAFFIC HANDLING QUANTITIES

LOCATION	SHEET	CHANNELIZER (SURFACE MOUNTED)	TEMPORARY ALTERNATIVE CRASH CUSHION SYSTEM	TEMPORARY RAILING (TYPE K)
		EA	EA	LF
1	TH-1	6	1	80
1	TH-2	10	1	80
5	TH-3	10	1	60
TOTAL		26	3	220

TRAFFIC HANDLING QUANTITIES

THQ-1

REVISED BY | DATE REVISED

DAVID BLACK | FAWZI YAGHMOUR

CALCULATED-DESIGNED BY | CHECKED BY

FUNCTIONAL SUPERVISOR: MOHAMMED QATAMI

STATE OF CALIFORNIA - DEPARTMENT OF TRANSPORTATION

Caltrans® TRAFFIC DESIGN

LAST REVISION 12-05-11 | DATE PLOTTED => 23-AUG-2012 | TIME PLOTTED => 07:55

Dist	COUNTY	ROUTE	POST MILES TOTAL PROJECT	SHEET No.	TOTAL SHEETS
05	SCr	1	17.5/26.0	26	61

REGISTERED CIVIL ENGINEER 11-8-11 DATE

2-21-12
PLANS APPROVAL DATE

REGISTERED PROFESSIONAL ENGINEER DEO CALABIO No. 61994 Exp. 9-30-13 CIVIL STATE OF CALIFORNIA

THE STATE OF CALIFORNIA OR ITS OFFICERS OR AGENTS SHALL NOT BE RESPONSIBLE FOR THE ACCURACY OR COMPLETENESS OF SCANNED COPIES OF THIS PLAN SHEET.

LEGEND:

A- BRIDGE APPROACH
D- BRIDGE DEPARTURE

METAL BEAM GUARD RAILING AND CRASH CUSHIONS

Loc No.	Co	PM	DESCRIPTION	DIRECTION OF TRAVEL NB/SB	SIDE OF TRAVELED WAY R+/L+	END OF BRIDGE A/D	(N) REMOVE AND RECONSTRUCT MBGR LF	REMOVE MBGR LF	(N) NEW OR RECONSTRUCTED MBGR LF	METAL BEAM GUARD RAILING (N) (STRENGTHENED RAILING SECTION) LF	METAL BEAM GUARD RAILING REMOVE CRASH CUSHION(SAND FILLED) EA	TRANSITION RAILING (TYPE WB) EA	END ANCHOR ASSEMBLY (TYPE SFT) EA	ALTERNATIVE FLARED TERMINAL SYSTEM EA	ALTERNATEIVE IN-LINE TERMINAL SYSTEM EA	ALTERNATIVE CRASH CUSHION SYSTEM LF	REMOVE AND RECONSTRUCT (N) END CAP(TYPE C) EA	CRASH CUSHION (SCI-100GM) EA	(N) BURIED POST END ANCHOR EA	VEGETATION CONTROL (ASPHALT COMPOSITE) SQFT	MBGR LAYOUT TYPE	SHEET No.
1	SCr	17.48	ROUTE 1 (SAN LORENZO RIVER Br-MEDIAN)	NB		D		265.0	37.5				1								12DD	C-1
				SB		A			50.0			1				1					12E	C-1
2		17.48	ROUTE 1 (SAN LORENZO RIVER Br)	SB	R+	A		140.5	65.0			1			1					423	12A	C-1
3		17.93	ROUTE 1	NB			1,325.0	75.0	1,362.5				1	1						3,798	11B	C-2
4		17.94	ROUTE 1	SB	R+		1,675.0	75.0	1,700.0	50.0			1	1						4,698	11B	C-3
5		18.05	ROUTE 1 (HIGH St-PEDESTRIAN OC)	NB	R+						1							1				C-3
6		19.86	ROUTE 1	NB	R+				50.0					2						625	11E	C-4
7		19.87	ROUTE 1	SB	R+				50.0					2						625	11E	C-4
8		20.00	ROUTE 1	NB	R+		200.0	75.0	475.0					2			1			1,746	11E	C-4
9		20.30	ROUTE 1 (SHAFTER Rd)	SB	R+		712.5	75.0	912.5					1					1	2,673	11L	C-4
10		20.32	ROUTE 1 (SHAFTER Rd)	NB	R+		812.5	37.5	812.5					1			1		1	2,412	11L	C-4
11		20.73	ROUTE 1	NB	R+		150.0	75.0	225.0				1	1			1			756		C-5
12		20.80	ROUTE 1	SB	R+		1,000.0	75.0	1,000.0					2			1			3,150	11E	C-5
13		20.87	ROUTE 1	NB	R+		225.0	75.0	312.5					1			1		1	1,161	11G	C-5
14		21.02	ROUTE 1	NB	R+		125.0	75.0	125.0					2			1			684	11E	C-5
15		21.27	ROUTE 1	NB	R+		100.0	75.0	175.0				1	1			1			711	11B	C-5
16		21.27	ROUTE 1	SB	R+		125.0	75.0	187.5				1	1			1			747		C-5
17		21.45	ROUTE 1	NB	R+		700.0	75.0	775.0								1		2	2,205	11F	C-6
SHEET Q-1 SUB-TOTAL							7,150.0	1,268.0	8,315.0	50.0	1	2	6	18	1	1	9	1	5	26,414		

(N) - NOT A SEPARATE PAY ITEM, FOR INFORMATION ONLY

SUMMARY OF QUANTITIES
Q-1

REVISED BY | DATE REVISED
DEO CALABIO | BORIS AYAVIRI
CALCULATED-DESIGNED BY | CHECKED BY
FUNCTIONAL SUPERVISOR: BORIS AYAVIRI
STATE OF CALIFORNIA - DEPARTMENT OF TRANSPORTATION
Caltrans 06-DESIGN

LAST REVISION 05-30-11 | DATE PLOTTED => 23-AUG-2012 | TIME PLOTTED => 07:55

Dist	COUNTY	ROUTE	POST MILES TOTAL PROJECT	SHEET No.	TOTAL SHEETS
05	SCr	1	17.5/26.0	27	61

REGISTERED CIVIL ENGINEER 11-8-11 DATE

2-21-12
PLANS APPROVAL DATE

REGISTERED PROFESSIONAL ENGINEER DEO CALABIO No. 61994 Exp. 9-30-13 CIVIL STATE OF CALIFORNIA

THE STATE OF CALIFORNIA OR ITS OFFICERS OR AGENTS SHALL NOT BE RESPONSIBLE FOR THE ACCURACY OR COMPLETENESS OF SCANNED COPIES OF THIS PLAN SHEET.

METAL BEAM GUARD RAILING AND CRASH CUSHIONS

Loc No.	Co	PM	DESCRIPTION	DIRECTION OF TRAVEL	SIDE OF TRAVELED WAY	END OF BRIDGE	(N) REMOVE AND RECONSTRUCT MBGR	REMOVE MBGR	(N) NEW OR RECONSTRUCTED MBGR	METAL BEAM GUARD RAILING (N) (STRENGTHENED RAILING SECTION)	METAL BEAM GUARD RAILING REMOVE CRASH CUSHION(SAND FILLED)	TRANSITION RAILING (TYPE WB)	END ANCHOR ASSEMBLY (TYPE SFT)	ALTERNATIVE FLARED TERMINAL SYSTEM	ALTERNATIVE IN-LINE TERMINAL SYSTEM	ALTERNATIVE CRASH CUSHION SYSTEM	(N) REMOVE AND RECONSTRUCT END CAP(TYPE C)	CRASH CUSHION (SCI-100GM)	(N) BURIED POST END ANCHOR	VEGETATION CONTROL (ASPHALT COMPOSITE)	(N) MBGR LAYOUT TYPE	SHEET No.
				NB/SB	R†/L†	A/D	LF	LF	LF	LF	EA	EA	EA	EA	EA	LF	EA	EA	EA	SQFT		
18		21.46	ROUTE 1	SB	R†		787.5	75.0	825.0					1			1		1	2,448	11L	C-6
19		21.74	ROUTE 1	NB	R†				362.5	50.0			1						1	1,107	11C	C-6
20		21.88	ROUTE 1	NB	R†		925.0	75.0	1,050.0	75.0			1						1	2,943		C-6
21		21.97	ROUTE 1	SB	R†		987.5	75.0	1,025.0					1			1		1	3,114	11G	C-7
22		22.08	ROUTE 1 (2101 COAST Rd)	SB	R†		87.5	75.0	125.0					1					1	711	11G	C-7
23		22.40	ROUTE 1 (2101 COAST Rd)	SB	R†		1,500.0	150.0	2,850.0					2			1			8,091	11E	C-7
24		23.01	ROUTE 1 (3050 COAST Rd)	NB	R†		637.5	75.0	775.0				1				1		1	2,214	11C	C-8
25		23.01	ROUTE 1 (3050 COAST Rd)	NB	R†		650.0	75.0	762.5				1	1			1			2,286		C-8
26	SCr	23.14	ROUTE 1 (3050 COAST Rd)	SB	R†		175.0	75.0	287.5				1				1		1	909	11C	C-8
27		23.47	ROUTE 1 (3450 COAST Rd)	NB	R†		135.0	75.0	200.0				1	1						783		C-8
28		23.50	ROUTE 1 (3450 COAST Rd)	SB	R†		387.5	75.0	612.5				1	1			1			1,881	11B	C-8
29		23.82	ROUTE 1 (3810 COAST Rd)	NB	R†		655.0	75.0	775.0				1						1	2,214		C-9
30		23.71	ROUTE 1 (3810 COAST Rd)	SB	R†		200.0	75.0	287.5				1						1	909		C-9
31		23.86	ROUTE 1 (3810 COAST Rd)	SB	R†		1,112.5	75.0	1200.0				1						1	3,348	11C	C-9
32		25.18	ROUTE 1 (5521 COAST Rd)	SB	R†				500.0					1	1					1,755	11H	C-10
33		25.88	ROUTE 1 (LAGUNA Rd)	NB	R†		1,275.0	75.5	1,350.0				2							3,618		C-10
34		25.88	ROUTE 1 (LAGUNA Rd)	SB	R†		1,175.0	75.0	1,250.0										2	3,609	11F	C-10
SHEET Q-2 SUB-TOTAL							10,690.0	1,200.5	14,237.5	125.0			12	9	1		7		12	41,940		
SHEET Q-1 SUB-TOTAL							7,150.0	1,268.0	8,315.0	50.0	1	2	6	18	1	1	9	1	5	26,414		
TOTAL							17,840.0	2,468.5	22,552.5	175.0	1	2	18	27	2	1	16	1	17	68,354		

(N) - NOT A SEPARATE PAY ITEM, FOR INFORMATION ONLY

METAL BEAM GUARD RAILING

DESCRIPTION	RECONSTRUCT METAL BEAM GUARD RAILING	METAL BEAM GUARD RAILING (STEEL POST)
	LF	LF
REMOVE AND RECONSTRUCT MBGR	17,840.0	(-17,840.0)
NEW OR RECONSTRUCTED MBGR		22,552.5
TOTAL	17,840.0	4,712.5

SUMMARY OF QUANTITIES
Q-2

STATE OF CALIFORNIA - DEPARTMENT OF TRANSPORTATION
Caltrans®
06-DESIGN

FUNCTIONAL SUPERVISOR: BORIS AYAVIRI
CALCULATED-DESIGNED BY: DEO CALABIO
CHECKED BY: BORIS AYAVIRI
REVISED BY
DATE REVISED

LAST REVISION 05-30-11
DATE PLOTTED => 23-AUG-2012
TIME PLOTTED => 07:55

Dist	COUNTY	ROUTE	POST MILES TOTAL PROJECT	SHEET No.	TOTAL SHEETS
05	SCr	1	17.5/26.0	28	61

REGISTERED CIVIL ENGINEER 11-8-11 DATE

2-21-12
PLANS APPROVAL DATE

REGISTERED PROFESSIONAL ENGINEER DEO CALABIO No. 61994 Exp. 9-30-13 CIVIL STATE OF CALIFORNIA

THE STATE OF CALIFORNIA OR ITS OFFICERS OR AGENTS SHALL NOT BE RESPONSIBLE FOR THE ACCURACY OR COMPLETENESS OF SCANNED COPIES OF THIS PLAN SHEET.

ROADWAY QUANTITIES

Loc No.	Co	PM	DESCRIPTION	DIRECTION OF TRAVEL	SIDE OF TRAVELED WAY	REMOVE CONCRETE CURB	REMOVE AC DIKE	PLACE HMA DIKE (TYPE E)	PLACE HMA DIKE (TYPE F)	PLACE HMA DIKE (TYPE C)	MINOR HMA DIKE	MINOR HMA MEDIAN PAVING	MINOR HMA SHOULDER PAVING	ROADWAY EXCAVATION	ROADWAY EXCAVATION (TYPE Z-2) AERIALLY DEPOSITED LEAD	MINOR CONCRETE (CURB)	CLASS 2 AGGREGATE BASE	SHEET No.
				NB/SB	R+/L+	LF	LF	LF	LF	LF	TON	TON	TON	CY	CY	CY	CY	
1		17.48	ROUTE 1 (SAN LORENZO Br) MEDIAN	NB		174.0						70.8		114.0	56.0	0.6	84.3	C-1
				SB		174.0												
2		17.48	ROUTE 1 (SAN LORENZO Br)	SB	R+		400.0	235.0	90.0	75.0	7.5			12.2				C-1
3		17.80	ROUTE 1	NB			1,243.0											C-2
4		17.94	ROUTE 1	SB	R+	94.5	1,430.0	164.5	967.5	62.5	17.5		5.2	15.8			13.3	C-3
5		18.05	ROUTE 1	NB	R+								13.2	14.0			9.9	C-3
6		19.86	ROUTE 1	NB	R+		185.0		50.0	135.0	2.0							C-4
7		19.87	ROUTE 1	SB	R+		185.0		50.0	135.0	1.5							C-4
8		20.00	ROUTE 1	NB	R+		612.5		477.5	135.0	7.3							C-4
9	SCr	20.30	ROUTE 1 (SHAFTER Rd)	SB	R+		987.5		895.0	92.5	12.5							C-4
10		20.32	ROUTE 1 (SHAFTER Rd)	NB	R+		880.0		812.5	67.5	11.2							C-4
11		20.73	ROUTE 1	NB	R+		225.0		225.0		3.0							C-5
12		20.80	ROUTE 1	SB	R+		1,060.0		992.5	67.5	13.6							C-5
13		20.87	ROUTE 1	NB	R+		260.0		222.5	37.5	3.2							C-5
14		21.02	ROUTE 1	NB	R+		174.0		125.0	67.5	2.2							C-5
15		21.27	ROUTE 1	NB	R+		175.0		175.0		2.3							C-5
16		21.27	ROUTE 1	SB	R+		255.0		187.5	67.5	3.0							C-5
17		21.45	ROUTE 1	NB	R+		770.0		715.0	55.0	9.9							C-6
SHEET Q-3 SUB-TOTAL						442.5	8,842.0	399.5	5,985.0	997.5	96.7	70.8	18.4	156.0	56.0	0.6	107.5	

SUMMARY OF QUANTITIES
Q-3

STATE OF CALIFORNIA - DEPARTMENT OF TRANSPORTATION
06-DESIGN
Caltrans

FUNCTIONAL SUPERVISOR: BORIS AYAVIRI
CALCULATED-DESIGNED BY: DEO CALABIO
CHECKED BY: BORIS AYAVIRI
REVISED BY
DATE REVISED

LAST REVISION 05-30-11
DATE PLOTTED => 23-AUG-2012
TIME PLOTTED => 07:55

Dist	COUNTY	ROUTE	POST MILES TOTAL PROJECT	SHEET No.	TOTAL SHEETS
05	SCr	1	17.5/26.0	29	61

REGISTERED CIVIL ENGINEER 11-8-11 DATE

2-21-12
PLANS APPROVAL DATE

REGISTERED PROFESSIONAL ENGINEER DEO CALABIO No. 61994 Exp. 9-30-13 CIVIL STATE OF CALIFORNIA

THE STATE OF CALIFORNIA OR ITS OFFICERS OR AGENTS SHALL NOT BE RESPONSIBLE FOR THE ACCURACY OR COMPLETENESS OF SCANNED COPIES OF THIS PLAN SHEET.

ROADWAY QUANTITIES

Loc No.	Co	PM	DESCRIPTION	DIRECTION OF TRAVEL	SIDE OF TRAVELED WAY	REMOVE CONCRETE CURB	REMOVE AC DIKE	PLACE HMA DIKE (TYPE E)	PLACE HMA DIKE (TYPE F)	PLACE HMA DIKE (TYPE C)	MINOR HMA DIKE	MINOR HMA MEDIAN PAVING	MINOR HMA SHOULDER PAVING	ROADWAY EXCAVATION	ROADWAY EXCAVATION (TYPE Z-2) AERIALLY DEPOSITED LEAD	MINOR CONCRETE (CURB)	CLASS 2 AGGREGATE BASE	SHEET No.
				NB/SB	R+/L+	LF	LF	LF	LF	LF	TON	TON	TON	CY	CY	CY	CY	
18		21.46	ROUTE 1	SB	R+		840.0		760.0	80.0	10.6							C-6
19		21.74	ROUTE 1	NB	R+		257.5		337.3		4.5							C-6
20		21.88	ROUTE 1	NB	R+		1050.0		1000.0	50.0	13.6							C-6
21		21.97	ROUTE 1	SB	R+		228.0		165.0	50.0	2.6							C-6
22		22.08	ROUTE 1 (2101 COAST Rd)	SB	R+		65.5			65.5	0.5							C-7
23		22.40	ROUTE 1 (2101 COAST Rd)	SB	R+		970.0		970.0		12.8							C-7
24		23.01	ROUTE 1 (3050 COAST Rd)	NB	R+		706.0		706.0		9.3							C-8
25		23.01	ROUTE 1	NB	R+		530.0		487.5	42.5	6.8							C-8
26	SCr	23.14	ROUTE 1	SB	R+													C-8
27		23.47	ROUTE 1	NB	R+		200.0		200.0		2.6							C-8
28		23.50	ROUTE 1	NB	R+		680.0		600.0	67.5	8.4							C-8
29		23.82	ROUTE 1	NB	R+		775.0		685.0	90.0	9.7							C-9
30		23.71	ROUTE 1	SB	R+		264.0		184.0	80.0	3.0							C-9
31		23.86	ROUTE 1 (SHAFTER Rd)	SB	R+		106.0		30.0	76.0	1.0							C-9
32		25.18	ROUTE 1 (SHAFTER Rd)	SB	R+		441.0		373.5	67.5	5.4							C-10
33		25.88	ROUTE 1	NB	R+		1,350.0		1,350.0		17.8							C-10
34		25.88	ROUTE 1	SB	R+		1,241.0		1,176.0	65.0	16.0							C-10
SHEET Q-4 SUB-TOTAL							9,704.0		9,024.3	734.0	124.6							
SHEET Q-3 SUB-TOTAL						442.5	8,842.0	399.5	5,985.0	997.5	96.7	70.8	18.4	156.0	56.0	0.6	107.5	
DRAINAGE QUANTITIES-PLACE HMA (Misc AREA)											7.4							
TOTAL						442.5	18,546.0	399.5	15,009.3	1,731.5	317.9			156.0	56.0	0.6	107.5	

SUMMARY OF QUANTITIES

Q-4

STATE OF CALIFORNIA - DEPARTMENT OF TRANSPORTATION
Caltrans
06-DESIGN

FUNCTIONAL SUPERVISOR: BORIS AYAVIRI
CALCULATED-DESIGNED BY: DEO CALABIO
CHECKED BY: BORIS AYAVIRI
REVISED BY
DATE REVISED

LAST REVISION 12-09-11
DATE PLOTTED => 23-AUG-2012
TIME PLOTTED => 07:56

Dist	COUNTY	ROUTE	POST MILES TOTAL PROJECT	SHEET No.	TOTAL SHEETS
05	SCr	1	17.5/26.0	30	61

REGISTERED CIVIL ENGINEER 11-8-11 DATE

2-21-12
PLANS APPROVAL DATE

REGISTERED PROFESSIONAL ENGINEER DEO CALABIO No. 61994 Exp. 9-30-13 CIVIL STATE OF CALIFORNIA

THE STATE OF CALIFORNIA OR ITS OFFICERS OR AGENTS SHALL NOT BE RESPONSIBLE FOR THE ACCURACY OR COMPLETENESS OF SCANNED COPIES OF THIS PLAN SHEET.

WATER POLLUTION CONTROL

Loc No.	Co	PM	DESCRIPTION	DIRECTION OF TRAVEL NB/SB	SIDE OF TRAVELED WAY R+/L+	Temp DRAINAGE INLET PROTECTION EA	SHEET No.
1	SCr	17.48	ROUTE 1	NB		2	C-1
2		17.48	ROUTE 1 (SAN LORENZO Br)	SB	R+	1	C-1
3		17.80	ROUTE 1	NB			C-2
4		17.94	ROUTE 1	SB	R+		C-3
5		18.05	ROUTE 1	NB	R+		C-3
6		19.86	ROUTE 1	NB	R+		C-4
7		19.87	ROUTE 1	SB	R+		C-4
8		20.00	ROUTE 1	NB	R+	2	C-4
9		20.30	ROUTE 1 (SHAFTER Rd)	SB	R+	2	C-4
10		20.32	ROUTE 1 (SHAFTER Rd)	NB	R+	3	C-4
11		20.73	ROUTE 1	NB	R+		C-5
12		20.80	ROUTE 1	SB	R+	2	C-5
13		20.87	ROUTE 1	NB	R+	1	C-5
14		21.02	ROUTE 1	NB	R+		C-5
15		21.27	ROUTE 1	NB	R+		C-5
16		21.27	ROUTE 1	SB	R+	1	C-5
17		21.45	ROUTE 1	NB	R+	1	C-6
SHEET Q-5 SUB-TOTAL						15	

PLACE HMA (Misc AREA)

Loc No.	Co	PM	DESCRIPTION	DIRECTION OF TRAVEL NB/SB	SIDE OF TRAVELED WAY R+/L+	AREA SQYD	HMA (TYPE A) * TON
8	SCr	19.96	ROUTE 1	NB	R+	0.72	0.24
		20.03	ROUTE 1	NB	R+	0.72	0.24
9		20.24	ROUTE 1 (SHAFTER Rd)	SB	R+	0.72	0.24
		20.30	ROUTE 1 (SHAFTER Rd)	SB	R+	0.72	0.24
10		20.24	ROUTE 1 (SHAFTER Rd)	NB	R+	0.72	0.24
		20.27	ROUTE 1 (SHAFTER Rd)	NB	R+	0.72	0.24
		20.33	ROUTE 1 (SHAFTER Rd)	NB	R+	0.72	0.24
12		20.72	ROUTE 1	SB	R+	0.72	0.24
		20.81	ROUTE 1	SB	R+	0.72	0.24
13		20.87	ROUTE 1	NB	R+	0.72	0.24
16		21.28	ROUTE 1	SB	R+	0.72	0.24
17		21.40	ROUTE 1	NB	R+	0.72	0.24
SHEET Q-5 SUB-TOTAL						8.64	2.88

*- QUANTITY INCLUDED IN ROADWAY QUANTITIES.

SUMMARY OF QUANTITIES

Q-5

REVISED BY | DATE REVISED
DEO CALABIO | BORIS AYAVIRI
CALCULATED-DESIGNED BY | CHECKED BY
FUNCTIONAL SUPERVISOR | BORIS AYAVIRI
STATE OF CALIFORNIA - DEPARTMENT OF TRANSPORTATION
Caltrans
06-DESIGN

LAST REVISION 12-09-11 | DATE PLOTTED => 23-AUG-2012 | TIME PLOTTED => 07:56

Dist	COUNTY	ROUTE	POST MILES TOTAL PROJECT	SHEET No.	TOTAL SHEETS
05	SCr	1	17.5/26.0	31	61

REGISTERED CIVIL ENGINEER 11-8-11 DATE

2-21-12
PLANS APPROVAL DATE

REGISTERED PROFESSIONAL ENGINEER DEO CALABIO No. 61994 Exp. 9-30-13 CIVIL STATE OF CALIFORNIA

THE STATE OF CALIFORNIA OR ITS OFFICERS OR AGENTS SHALL NOT BE RESPONSIBLE FOR THE ACCURACY OR COMPLETENESS OF SCANNED COPIES OF THIS PLAN SHEET.

WATER POLLUTION CONTROL

Loc No.	Co	PM	DESCRIPTION	DIRECTION OF TRAVEL NB/SB	SIDE OF TRAVELED WAY R+/L+	Temp DRAINAGE INLET PROTECTION EA	SHEET No.
18	SCr	21.46	ROUTE 1	SB	R+	3	C-6
19		21.74	ROUTE 1	NB	R+		C-6
20		21.88	ROUTE 1	NB	R+	1	C-6
21		21.97	ROUTE 1	SB	R+	1	C-6
22		22.08	ROUTE 1 (2101 COAST Rd)	SB	R+		C-7
23		22.40	ROUTE 1 (2101 COAST Rd)	SB	R+	2	C-7
24		23.01	ROUTE 1 (3050 COAST Rd)	NB	R+	1	C-8
25		23.01	ROUTE 1	NB	R+	1	C-8
26		23.14	ROUTE 1	SB	R+		C-8
27		23.47	ROUTE 1	NB	R+		C-8
28		23.50	ROUTE 1	NB	R+		C-8
29		23.82	ROUTE 1	NB	R+	3	C-9
30		23.71	ROUTE 1	SB	R+		C-9
31		23.85	ROUTE 1 (SHAFTER Rd)	SB	R+		C-9
32		25.18	ROUTE 1 (SHAFTER Rd)	SB	R+	1	C-10
33		25.88	ROUTE 1	NB	R+	3	C-10
34		25.88	ROUTE 1	SB	R+	3	C-10
SHEET Q-6 SUBTOTAL						19	
SHEET Q-5 SUBTOTAL						15	
TOTAL						34	

PLACE HMA (Misc AREA)

Loc No.	Co	PM	DESCRIPTION	DIRECTION OF TRAVEL NB/SB	SIDE OF TRAVELED WAY R+/L+	AREA SQYD	HMA (TYPE A) * TON
18	SCr	21.48	ROUTE 1	SB	R+	0.72	0.24
		21.50	ROUTE 1	SB	R+	0.72	0.24
		21.52	ROUTE 1	SB	R+	0.72	0.24
20		21.86	ROUTE 1	NB	R+	0.72	0.24
21		21.86	ROUTE 1	SB	R+	0.72	0.24
23		22.21	ROUTE 1 (2101 COAST Rd)	SB	R+	0.72	0.24
		22.22	ROUTE 1 (2101 COAST Rd)	SB	R+	0.72	0.24
24		23.12	ROUTE 1 (3050 COAST Rd)	NB	R+	0.72	0.24
25		23.12	ROUTE 1	SB	R+	0.72	0.24
29		23.82	ROUTE 1	NB	R+	0.72	0.24
		23.83	ROUTE 1	NB	R+	0.72	0.24
		23.84	ROUTE 1	NB	R+	0.72	0.24
32		25.16	ROUTE 1	SB	R+	0.72	0.24
33		25.79	ROUTE 1	NB	R+	0.72	0.24
		25.88	ROUTE 1	NB	R+	0.72	0.24
		25.94	ROUTE 1	NB	R+	0.72	0.24
34		25.79	ROUTE 1	SB	R+	0.72	0.24
		25.88	ROUTE 1	SB	R+	0.72	0.24
		25.94		SB	R+	0.72	0.24
SHEET Q-6 SUBTOTAL						13.68	4.56
SHEET Q-5 SUBTOTAL						8.64	2.88
TOTAL						22.32	7.44

* - THESE QUANTITIES ARE INCLUDED IN "HMA" TABLE

SUMMARY OF QUANTITIES

Q-6

STATE OF CALIFORNIA - DEPARTMENT OF TRANSPORTATION
Caltrans 06-DESIGN

FUNCTIONAL SUPERVISOR: BORIS AYAVIRI
CALCULATED-DESIGNED BY: DEO CALABIO
CHECKED BY: BORIS AYAVIRI
REVISED BY
DATE REVISED

LAST REVISION 12-09-11 DATE PLOTTED => 23-AUG-2012 TIME PLOTTED => 07:51

Dist	COUNTY	ROUTE	POST MILES TOTAL PROJECT	SHEET No.	TOTAL SHEETS
05	SCr	1	17.5/26.0	32	61

Xavier Alfaro 10-26-11
REGISTERED ELECTRICAL ENGINEER

2-21-12
PLANS APPROVAL DATE

REGISTERED PROFESSIONAL ENGINEER XAVIER I. ALFARO No. E17488 Exp. 6-30-13 ELECTRICAL STATE OF CALIFORNIA

THE STATE OF CALIFORNIA OR ITS OFFICERS OR AGENTS SHALL NOT BE RESPONSIBLE FOR THE ACCURACY OR COMPLETENESS OF SCANNED COPIES OF THIS PLAN SHEET.

NOTE:

1. FOR ACCURATE RIGHT OF WAY DATA, CONTACT RIGHT OF WAY ENGINEERING AT THE DISTRICT OFFICE.

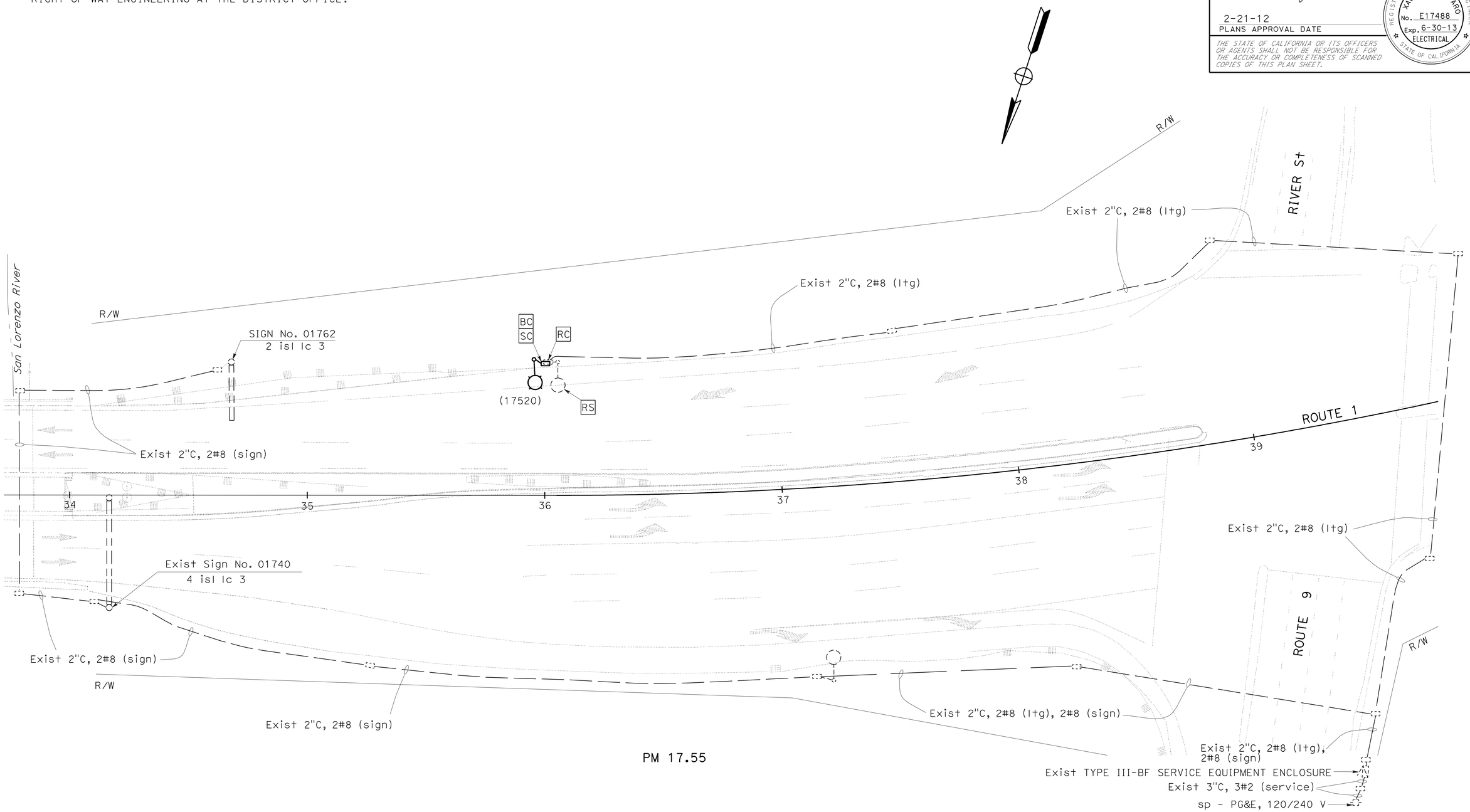

MODIFY LIGHTING

SCALE: 1" = 20′ **E-1**

APPROVED FOR ELECTRICAL WORK ONLY

STATE OF CALIFORNIA - DEPARTMENT OF TRANSPORTATION
Caltrans® **ELECTRICAL DESIGN**

FUNCTIONAL SUPERVISOR: ALI BAKHDOUD
CALCULATED-DESIGNED BY: XAVIER ALFARO
CHECKED BY: RAJPREET SINGH
REVISED BY
DATE REVISED

LAST REVISION 11-30-11
DATE PLOTTED => 23-AUG-2012
TIME PLOTTED => 07:51

Dist	COUNTY	ROUTE	POST MILES TOTAL PROJECT	SHEET No.	TOTAL SHEETS
05	SCr	1	17.5/26.0	33	61

Xavier Alfaro 10-26-11
REGISTERED ELECTRICAL ENGINEER

2-21-12
PLANS APPROVAL DATE

REGISTERED PROFESSIONAL ENGINEER XAVIER I. ALFARO No. E17488 Exp. 6-30-13 ELECTRICAL STATE OF CALIFORNIA

THE STATE OF CALIFORNIA OR ITS OFFICERS OR AGENTS SHALL NOT BE RESPONSIBLE FOR THE ACCURACY OR COMPLETENESS OF SCANNED COPIES OF THIS PLAN SHEET.

NOTES:

1. FOR ACCURATE RIGHT OF WAY DATA, CONTACT RIGHT OF WAY ENGINEERING AT THE DISTRICT OFFICE.

2 REMOVE Exist 1 dlc AND INSTALL IT IN NEW CONDUIT.

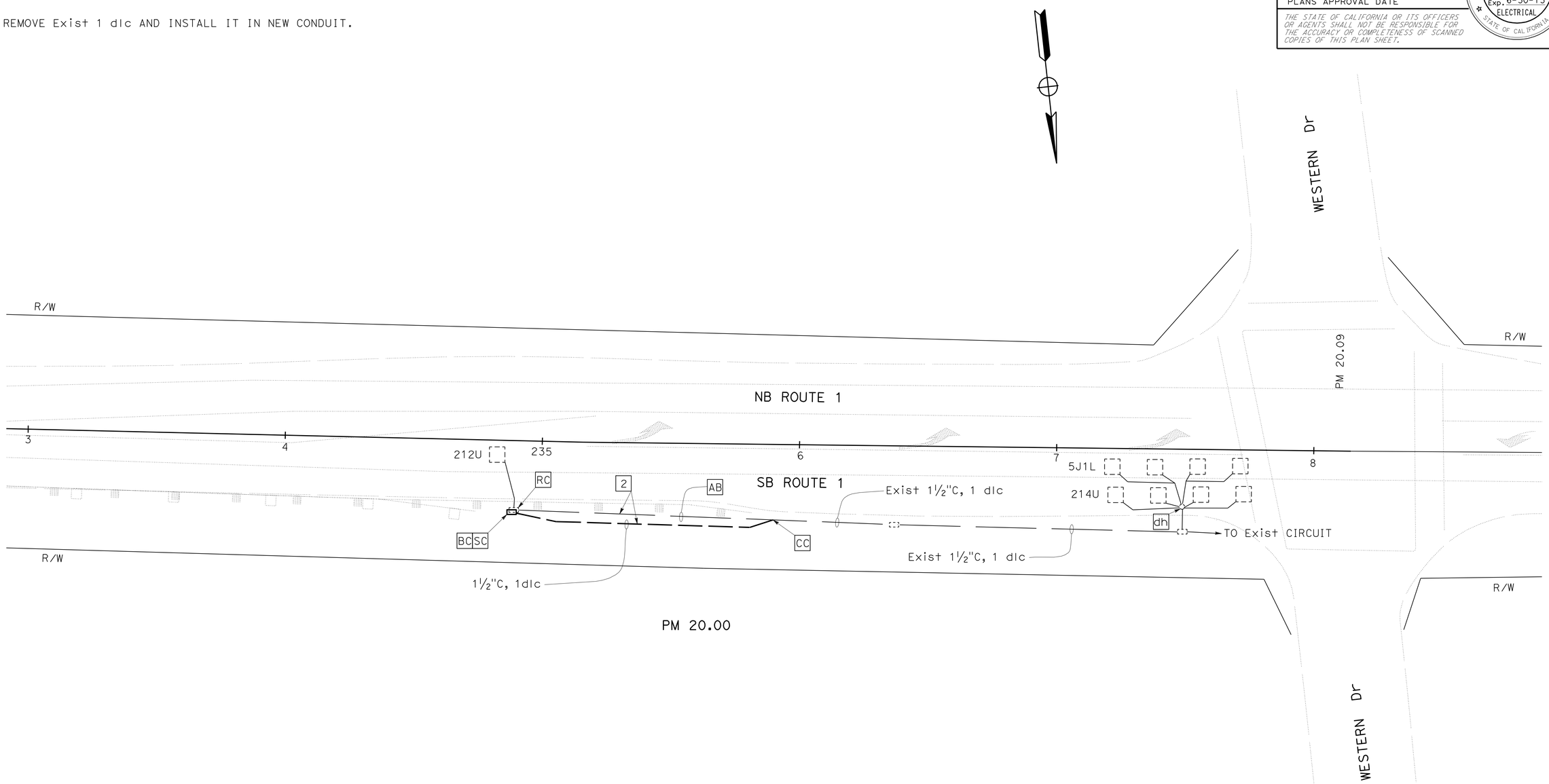

APPROVED FOR ELECTRICAL WORK ONLY

MODIFY SIGNAL

SCALE: 1" = 20'

E-2

STATE OF CALIFORNIA - DEPARTMENT OF TRANSPORTATION
Caltrans® **ELECTRICAL DESIGN**

FUNCTIONAL SUPERVISOR: ALI BAKHDOUD
CALCULATED-DESIGNED BY: XAVIER ALFARO
CHECKED BY: RAJPREET SINGH
REVISED BY
DATE REVISED

LAST REVISION 11-30-11
DATE PLOTTED => 23-AUG-2012
TIME PLOTTED => 07:51

Dist	COUNTY	ROUTE	POST MILES TOTAL PROJECT	SHEET No.	TOTAL SHEETS
05	SCr	1	17.4/26.0	34	61

REGISTERED ELECTRICAL ENGINEER 10-26-11 DATE

2-21-12
PLANS APPROVAL DATE

REGISTERED PROFESSIONAL ENGINEER XAVIER I. ALFARO No. E17488 Exp. 6-30-13 ELECTRICAL STATE OF CALIFORNIA

THE STATE OF CALIFORNIA OR ITS OFFICERS OR AGENTS SHALL NOT BE RESPONSIBLE FOR THE ACCURACY OR COMPLETENESS OF SCANNED COPIES OF THIS PLAN SHEET.

NOTES:

1. FOR ACCURATE RIGHT OF WAY DATA, CONTACT RIGHT OF WAY ENGINEERING AT THE DISTRICT OFFICE.

2 RL Exist ems AND Exist WOOD POST FROM STA 68+00 to STA 63+00, SEE DETAIL B.

3 INSTALL WOOD POST TO DEPTH AS DETERMINED BY THE ENGINEER.

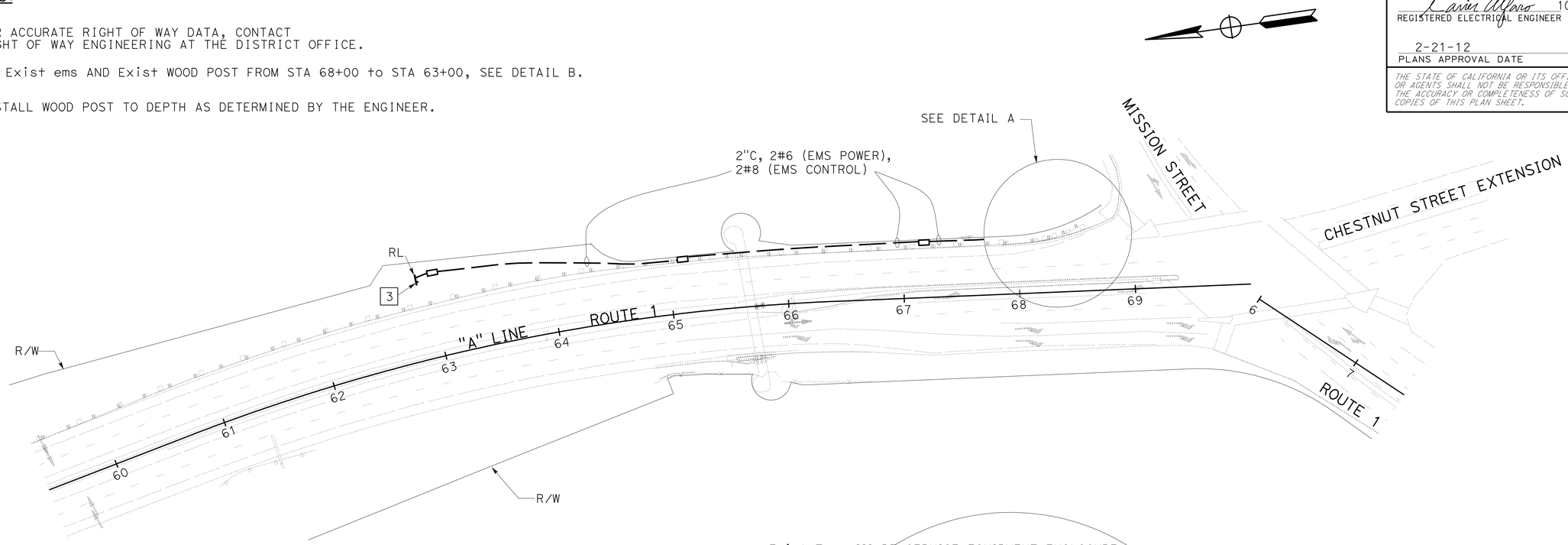

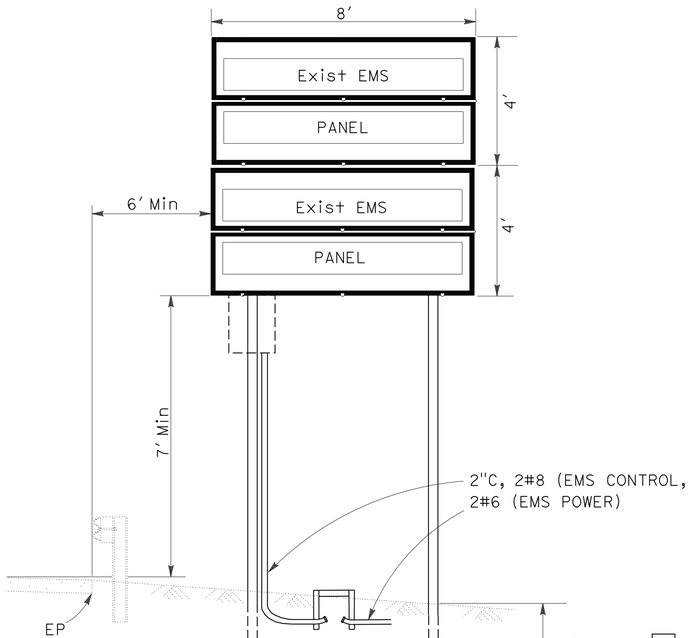

DETAIL B
NO SCALE

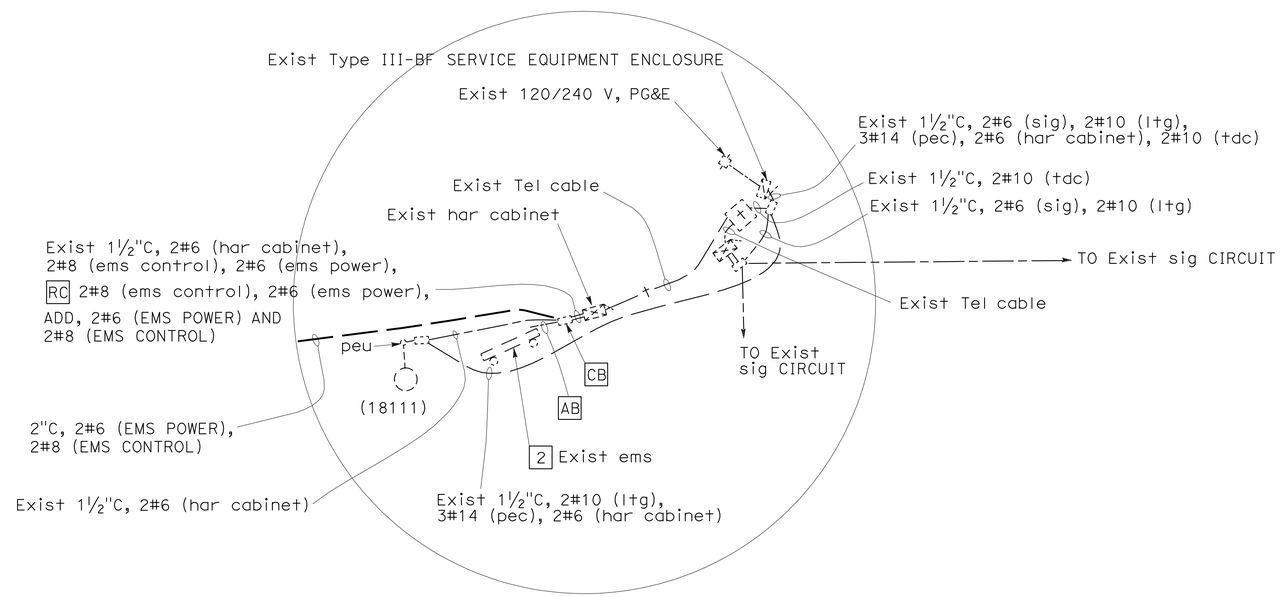

DETAIL A
NO SCALE

APPROVED FOR ELECTRICAL WORK ONLY

RELOCATE EXTINGUISHABLE MESSAGE SIGN

SCALE: 1" = 50'

E-3

STATE OF CALIFORNIA - DEPARTMENT OF TRANSPORTATION
Caltrans® **ELECTRICAL DESIGN**

FUNCTIONAL SUPERVISOR: ALI BAKHDOUD

CALCULATED-DESIGNED BY: XAVIER ALFARO
CHECKED BY: RAJPREET SINGH

REVISED BY
DATE REVISED

LAST REVISION 11-30-11
DATE PLOTTED => 23-AUG-2012
TIME PLOTTED => 07:51

DIST	COUNTY	ROUTE	POST MILES TOTAL PROJECT	SHEET NO.	TOTAL SHEETS
05	SCr	1	17.5/26.0	35	61

REGISTERED CIVIL ENGINEER

November 17, 2006
PLANS APPROVAL DATE

REGISTERED PROFESSIONAL ENGINEER Dallas Forester No. C37765 Exp. 12-31-06 CIVIL STATE OF CALIFORNIA

The State of California or its officers or agents shall not be responsible for the accuracy or completeness of electronic copies of this plan sheet.

To accompany plans dated 2-21-12

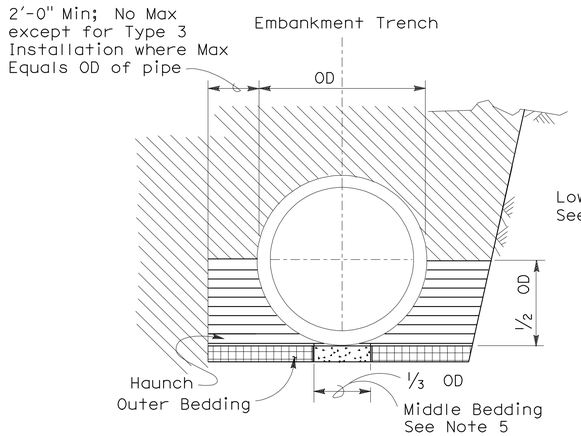

BACKFILL

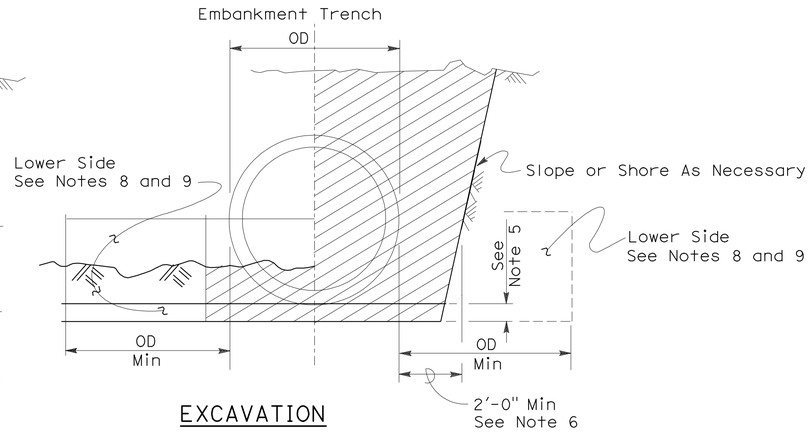

EXCAVATION

Roadway Embankment

Structure Backfill (Culvert) See Note 6

Structure Backfill (Culvert) See Note 6

Loose Backfill

Excavation Structure (Culvert)

TYPE 1 INSTALLATION:

The haunch and outer bedding shall be compacted to a minimum 90 percent relative compaction. In addition, the minimum sand equivalent in these areas shall be 30 and the maximum percentage passing the 75 μm sieve size shall be 12.

TYPE 2 INSTALLATION:

The haunch and outer bedding shall be compacted to a minimum 90 percent relative compaction. In addition, the minimum sand equivalent in these areas shall be 25.

TYPE 3 INSTALLATION:

The haunch and outer bedding shall be compacted to a minimum 85 percent relative compaction. 90 percent relative compaction will be required where the fill over the pipe is less than 4'-0" or 1/2 OD.

INSTALLATION TYPE 1

MINIMUM CLASS AND D-LOAD	COVER	
	108" Dia AND SMALLER	OVER 108" Dia
Class II 1000D	14.9'	12.9'
Class III 1350D	15.0' - 20.9'	13.0' - 18.9'
Class III Special 1700D	21.0' - 26.9'	19.0' - 24.9'
Class IV 2000D	27.0' - 31.9'	25.0' - 29.9'
Class IV Special 2500D	32.0' - 40.9'	30.0' - 38.9'
Class V 3000D	41.0' - 49.9'	39.0' - 46.9'
Class V Special 3600D	50.0' - 59.0'	47.0' - 58.0'

INSTALLATION TYPE 2

MINIMUM CLASS AND D-LOAD	COVER
Class II 1000D	9.9'
Class III 1350D	10.0'- 14.9'
Class III Special 1700D	15.0' - 19.9'
Class IV 2000D	20.0' - 24.9'
Class IV Special 2500D	25.0' - 31.9'
Class V 3000D	32.0' - 38.9'
Class V Special 3600D	39.0' - 47.0'

INSTALLATION TYPE 3

MINIMUM CLASS AND D-LOAD	COVER	
	48" Dia AND SMALLER	OVER 48" Dia
Class II 1000D	7.9'	5.9'
Class III 1350D	8.0' - 10.9'	6.0' - 8.9'
Class III Special 1700D	11.0' - 14.9'	9.0' - 12.9'
Class IV 2000D	15.0' - 17.9'	13.0' - 15.9'
Class IV Special 2500D	18.0' - 21.9'	16.0' - 19.9'
Class V 3000D	22.0' - 26.9'	20.0' - 24.9'
Class V Special 3600D	30.0' - 33.0'	25.0' - 31.0'

NOTES:

1. Unless otherwise shown on the plans or specified in the special provision, the Contractor shall have the option of selecting the class of RCP and the type of installation to be used, provided the height of cover does not exceed the value shown for the RCP selected.
   Example: 24" RCP culvert with maximum cover of 19'-0" the options are:
   a) Class III or stronger with Installation Type 1.
   b) Class III Special or stronger with Installation Type 2.
   c) Class IV Special or stronger with Installation Type 3.
   Cover is defined as the maximum vertical distance from top of the pipe to finished grade within the length of any given culvert.
2. The class of RCP and Installation Type selected shall be the same throughout the length of any given culvert.
3. The "length of any culvert" is defined as the culvert between:
   a) Successive drainage structure (inlets, junction boxes, headwalls, etc.).
   b) A drainage structure and the inlet or outlet end of the culvert.
   c) The inlet and outlet end of the culvert when there are no intervening drainage structures.
4. Oval and arch shaped RCP shall not be used.
5. 1/25 OD Min, not less than 3".
6. Slurry cement backfill may be substituted for backfill in the outer bedding and haunch areas. If slurry is used the outer and middle beddings shall be omitted. Prior to installation the soil under the middle 1/3 of the outside diameter of the pipe shall be softened by scarifying or other means to a minimum depth of 1/25 OD, but not less than 3". Where slurry cement backfill is used clear distance to trench wall may be reduced as set forth in Section 19-3.062 of the Standard Specifications.
7. Backfill shall be placed full width of excavation except where dimensions are shown for backfill width or thickness. Dimensions shown are minimums.
8. Lower side shall be suitable material as determined by the Engineer. Otherwise it shall be considered unsuitable as set forth in Section 19-2.02 of the Standard Specifications. See Note 9.
9. Where the pipe is placed in a trench, if the trench walls are sloped at 5 vertical to 1 horizontal or steeper for at least 90 percent of the trench height or up to not less than 12" from the grading plane, the firmness of the soil in the lower side need not be considered.
10. Non-reinforced precast concrete pipe sizes 3'-0" or smaller may be placed under installation Types 1, 2 or 3.

STATE OF CALIFORNIA
DEPARTMENT OF TRANSPORTATION

EXCAVATION AND BACKFILL CONCRETE PIPE CULVERTS

NO SCALE

RSP A62DA DATED NOVEMBER 17, 2006 SUPERSEDES STANDARD PLAN A62DA DATED MAY 1, 2006 - PAGE 20 OF THE STANDARD PLANS BOOK DATED MAY 2006.

REVISED STANDARD PLAN RSP A62DA

2006 REVISED STANDARD PLAN RSP A62DA

10-26-06

Dist	COUNTY	ROUTE	POST MILES TOTAL PROJECT	SHEET No.	TOTAL SHEETS
05	SCr	1	17.5/26.0	36	61

Randell D. Hiatt
REGISTERED CIVIL ENGINEER

May 20, 2011
PLANS APPROVAL DATE

REGISTERED PROFESSIONAL ENGINEER
Randell D. Hiatt
No. C50200
Exp. 6-30-11
CIVIL
STATE OF CALIFORNIA

The State of California or its officers or agents shall not be responsible for the accuracy or completeness of electronic copies of this plan sheet.

To accompany plans dated 2-21-12

NOTES:

1. When necessary to place dike in front of face of guard railing, only Type C dike may be used. For dike details, see Standard Plan A87B.
2. For standard railing post embedment, see Standard Plans A77C3.
3. Guard railing delineation to be used where shown on the Project Plans.
4. When dike or curb is placed under guard railing, the maximum height of the dike or curb shall be 4". Mountable dike should not be used. For dike and curb details, see Standard Plans A87A and A87B.
5. For details of typical distance between the face of rail and hinge point, see Standard Plan A77C3.
6. For steel line posts, use 1/4 - 20 self-tapping screws in 0.22" diameter holes or 1/4" bolts in 9/32" diameter holes.

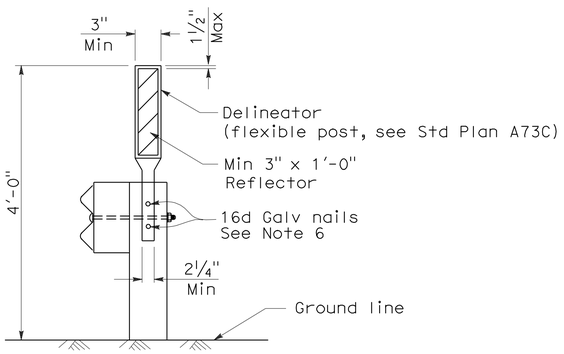

GUARD RAILING DELINEATION

See Note 3

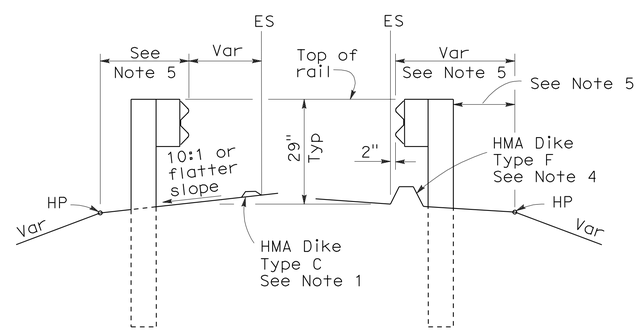

DIKE POSITIONING

See Note 1

STATE OF CALIFORNIA
DEPARTMENT OF TRANSPORTATION

METAL BEAM GUARD RAILING TYPICAL RAILING DELINEATION AND DIKE POSITIONING DETAILS

NO SCALE

RSP A77C4 DATED MAY 20, 2011 SUPERSEDES RSP A77C4 DATED JUNE 6, 2008 AND STANDARD PLAN A77C4 DATED MAY 1, 2006 - PAGE 47 OF THE STANDARD PLANS BOOK DATED MAY 2006.

REVISED STANDARD PLAN RSP A77C4

2006 REVISED STANDARD PLAN RSP A77C4

3-10-11

DIST	COUNTY	ROUTE	POST MILES TOTAL PROJECT	SHEET NO.	TOTAL SHEETS
05	SCr	1	17.5/26.0	37	61

Randell D. Hiatt
REGISTERED CIVIL ENGINEER

June 6, 2008
PLANS APPROVAL DATE

REGISTERED PROFESSIONAL ENGINEER
Randell D. Hiatt
No. C50200
Exp. 6-30-09
CIVIL
STATE OF CALIFORNIA

The State of California or its officers or agents shall not be responsible for the accuracy or completeness of electronic copies of this plan sheet.

To accompany plans dated 2-21-12

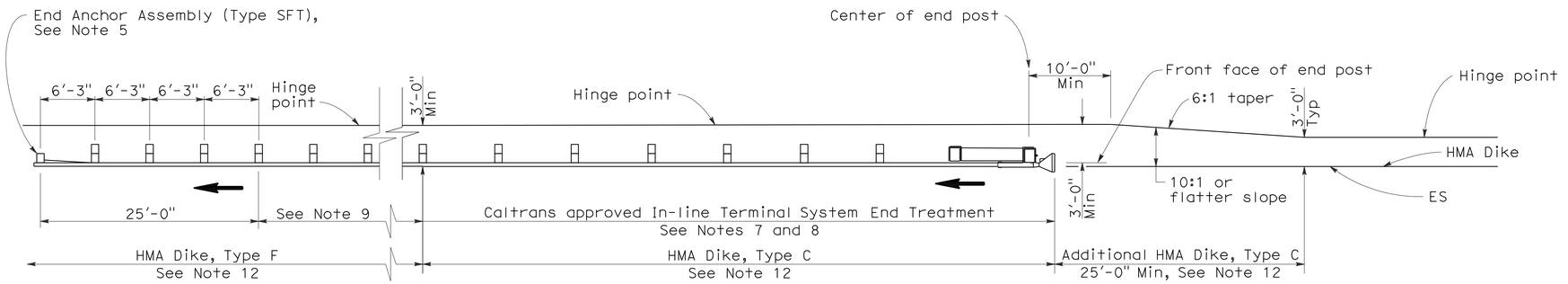

TYPE 11A LAYOUT

(EMBANKMENT GUARD INSTALLATION WITH IN-LINE END TREATMENT AT TRAFFIC APPROACH END OF RAILING)
See Note 6

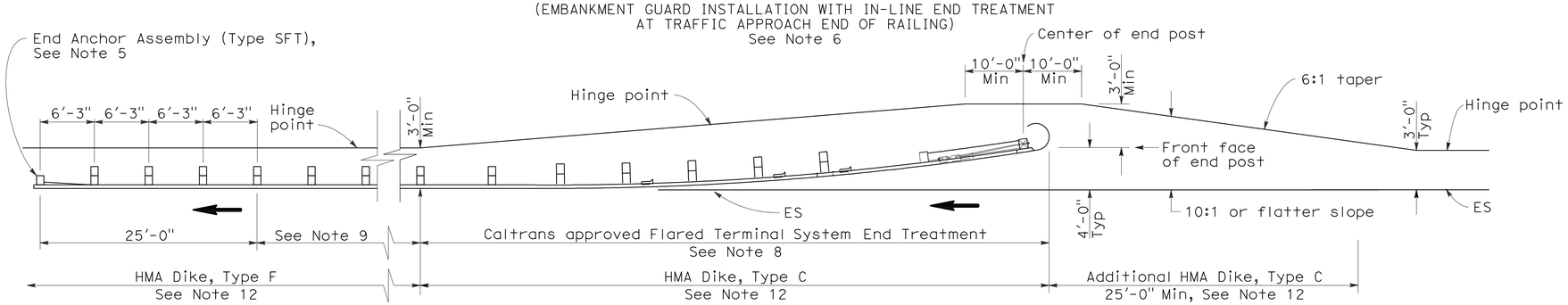

TYPE 11B LAYOUT

(EMBANKMENT GUARD RAILING INSTALLATION WITH FLARED END TREATMENT AT TRAFFIC APPROACH END OF RAILING)
See Note 6

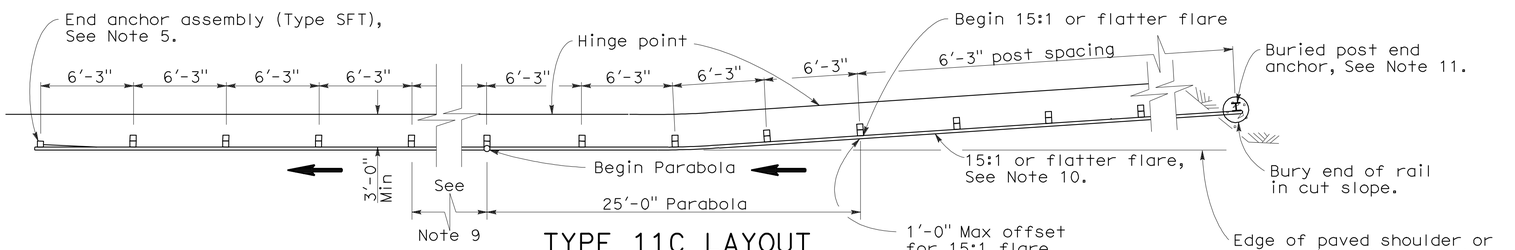

TYPE 11C LAYOUT

(EMBANKMENT GUARD RAILING INSTALLATION WITH BURIED END ANCHOR TREATMENT AT TRAFFIC APPROACH END OF RAILING)
See Notes 6 and 12

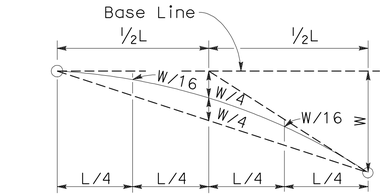

TYPICAL PARABOLIC LAYOUT

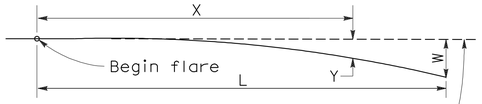

Base Line (Edge of paved shoulder or offset line of edge of traveled way)

$$Y = \frac{WX^2}{L^2}$$

Y = Offset from base line
W = Maximum offset
X = Distance along base line
L = Length of flare

PARABOLIC FLARE OFFSETS

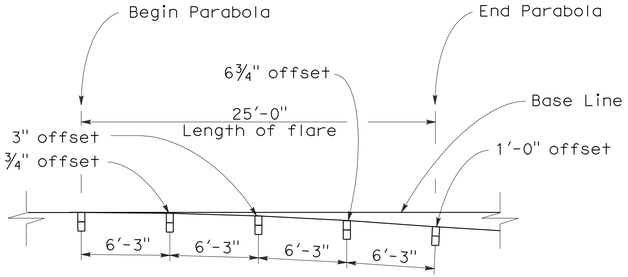

TYPICAL FLARE OFFSETS FOR 1 FOOT MAX END OFFSET

NOTES:

1. Line post, blocks and hardware to be used are shown on Standard Plans A77A1, A77A2, A77B1, A77C1, and A77C2.
2. Guard rail post spacing to be 6'-3" center to center, except as otherwise noted.
3. Except as noted, line posts are 6" x 8" x 6'-0" wood with 6" x 8" x 1'-2" wood blocks. W6 x 9 steel posts, 6'-0" in length, with 6" x 8" x 1'-2" notched wood blocks or recycled plastic blocks may be used for 6" x 8" x 6'-0" wood post with 6" x 8" x 1'-2" wood blocks where applicable and when specified.
4. Direction of adjacent traffic indicated by ⟶.
5. For End Anchor Assembly (Type SFT) details, see Standard Plan A77H1.
6. Layout Types 11A, 11B or 11C are typically used where guard railing is recommended to shield embankment slopes and a crashworthy end treatment is required for only one direction of traffic.
7. In-line Terminal System End Treatments are used where site conditions will not accommodate a flared end treatment.
8. The type of terminal system end treatment to be used will be shown on the Project Plans.
9. Dependent on site conditions (embankment height and side slope), construction of additional guard railing (length equal to multiples of 12'-6" with 6'-3" post spacing) may be advisable.
10. The 15:1 or flatter flare used with buried end anchors is based on the edge of the paved shoulder or offset line of edge of the traveled way. The length of guard railing within the 15:1 or flatter flare is based on site conditions and should be a length equal to multiples of 12'-6".
11. For details of the buried post end anchor used with Type 11C Layout, see Standard Plan A77I2.
12. Where placement of dike is required with guard railing installations, see Revised Standard Plan RSP A77C4 for dike positioning details.

STATE OF CALIFORNIA
DEPARTMENT OF TRANSPORTATION

METAL BEAM GUARD RAILING TYPICAL LAYOUTS FOR EMBANKMENTS

NO SCALE

RSP A77E1 DATED JUNE 6, 2008 SUPERSEDES STANDARD PLAN A77E1
DATED MAY 1, 2006 - PAGE 48 OF THE STANDARD PLANS BOOK DATED MAY 2006.

REVISED STANDARD PLAN RSP A77E1

2006 REVISED STANDARD PLAN RSP A77E1

12-10-07

DIST	COUNTY	ROUTE	POST MILES TOTAL PROJECT	SHEET NO.	TOTAL SHEETS
05	SCr	1	17.5/26.0	38	61

Randell D. Hiatt
REGISTERED CIVIL ENGINEER

June 6, 2008
PLANS APPROVAL DATE

REGISTERED PROFESSIONAL ENGINEER
Randell D. Hiatt
No. C50200
Exp. 6-30-09
CIVIL
STATE OF CALIFORNIA

The State of California or its officers or agents shall not be responsible for the accuracy or completeness of electronic copies of this plan sheet.

To accompany plans dated 2-21-12

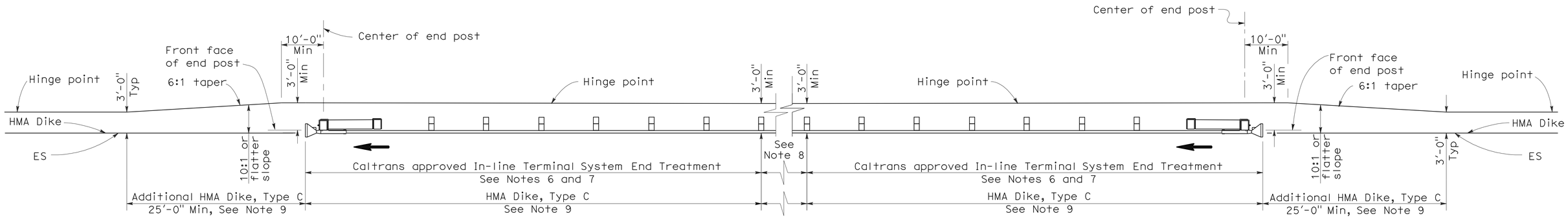

TYPE 11D LAYOUT

(EMBANKMENT GUARD RAILING INSTALLATION WITH IN-LINE END TREATMENT AT EACH END OF RAILING)
See Note 5

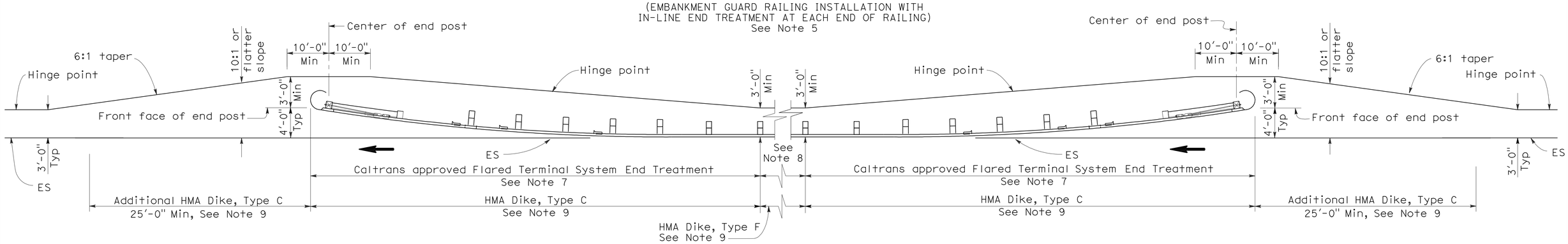

TYPE 11E LAYOUT

(EMBANKMENT GUARD RAILING INSTALLATION WITH FLARED END TREATMENT AT EACH END OF RAILING)
See Note 5

NOTES:

1. Line post, blocks and hardware to be used are shown on Standard Plans A77A1, A77A2, A77B1, A77C1 and A77C2.
2. Guard rail post spacing to be 6'-3" center to center, except as otherwise noted.
3. Except as noted, line posts are 6" x 8" x 6'-0" wood with 6" x 8" x 1'-2" wood blocks. W6 x 9 steel posts, 6'-0" in length, with 6" x 8" x 1'-2" notched wood blocks or plastic blocks may be used for 6" x 8" x 6'-0" wood post with 6" x 8" x 1'-2" wood blocks where applicable and when specified.
4. Direction of adjacent traffic indicated by ➡.
5. Layout Types 11D through 11L, shown on the A77E Series of Revised Standard Plans, are typically used where guard railing is recommended to shield embankment slopes and a crashworthy end treatment is required for both directions of traffic.
6. In-line Terminal System End Treatments are used where site conditions will not accommodate a flared end treatment.
7. The type of terminal system end treatment to be used will be shown on the Project Plans.
8. Dependent on site conditions (embankment height and side slope), construction of additional guard railing (length equal to multiples of 12'-6" with 6'-3" post spacing) may be advisable.
9. Where placement of dike is required with guard railing installations, see Revised Standard Plan RSP A77C4 for dike positioning details.

STATE OF CALIFORNIA
DEPARTMENT OF TRANSPORTATION

METAL BEAM GUARD RAILING TYPICAL LAYOUTS FOR EMBANKMENTS

NO SCALE

RSP A77E2 DATED JUNE 6, 2008 SUPERSEDES STANDARD PLAN A77E2
DATED MAY 1, 2006 - PAGE 49 OF THE STANDARD PLANS BOOK DATED MAY 2006.

REVISED STANDARD PLAN RSP A77E2

2006 REVISED STANDARD PLAN RSP A77E2

12-10-07

DIST	COUNTY	ROUTE	POST MILES TOTAL PROJECT	SHEET NO.	TOTAL SHEETS
05	SCr	1	17.5/26.0	39	61

Randell D. Hiatt
REGISTERED CIVIL ENGINEER

June 6, 2008
PLANS APPROVAL DATE

REGISTERED PROFESSIONAL ENGINEER
Randell D. Hiatt
No. C50200
Exp. 6-30-09
CIVIL
STATE OF CALIFORNIA

The State of California or its officers or agents shall not be responsible for the accuracy or completeness of electronic copies of this plan sheet.

To accompany plans dated 2-21-12

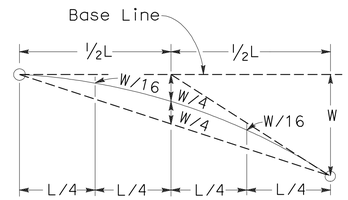

TYPICAL PARABOLIC LAYOUT

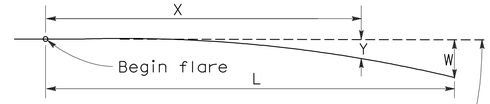

Base Line (Edge of paved shoulder or offset line of edge of traveled way)

$$Y = \frac{WX^2}{L^2}$$

Y = Offset from base line
W = Maximum offset
X = Distance along base line
L = Length of flare

PARABOLIC FLARE OFFSETS

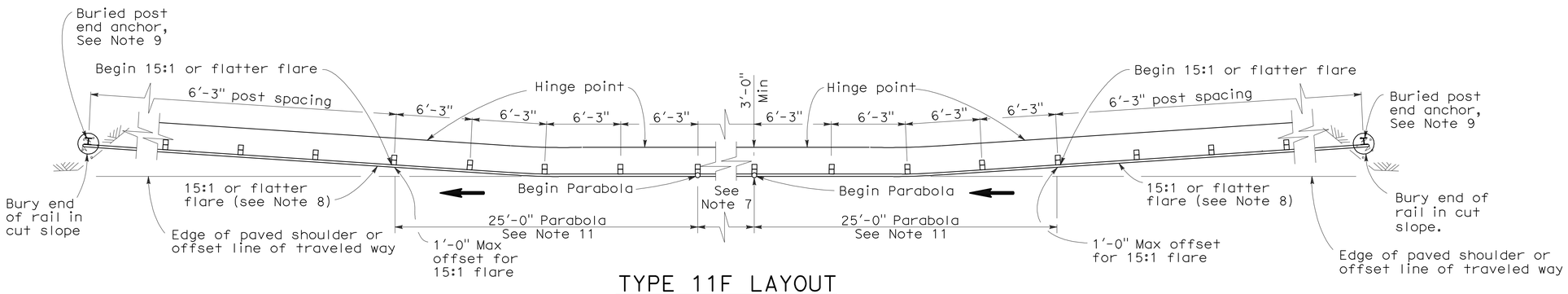

TYPE 11F LAYOUT

(EMBANKMENT GUARD RAILING INSTALLATION WITH A BURIED END ANCHOR TREATMENT AT EACH END OF RAILING)
See Notes 5 and 10

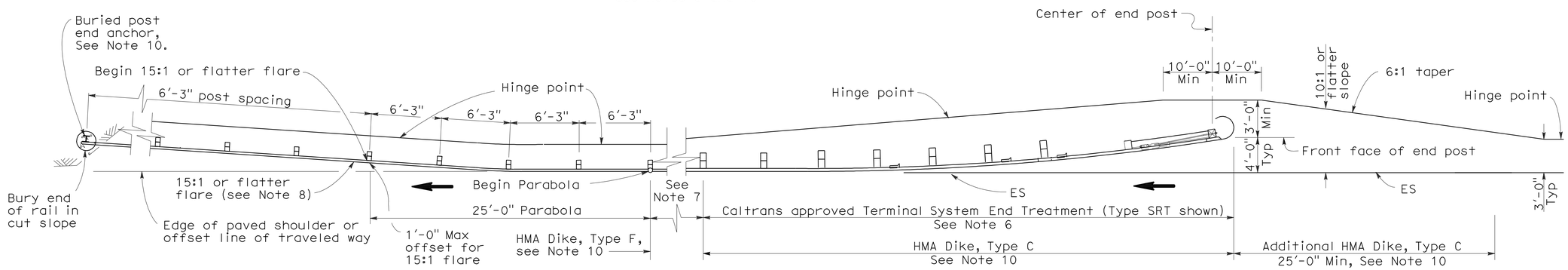

TYPE 11G LAYOUT

(EMBANKMENT GUARD RAILING INSTALLATION WITH FLARED END TREATMENT AND A BURIED END ANCHOR TREATMENT AT THE ENDS OF RAILING)
See Notes 5 and 10

NOTES:

1. Line post, blocks and hardware to be used are shown on Standard Plans A77A1, A77A2, A77B1, A77C1 and A77C2.
2. Guard rail post spacing to be 6'-3" center to center, except as otherwise noted.
3. Except as noted, line posts are 6" x 8" x 6'-0" wood with 6" x 8" x 1'-2" wood blocks. W6 x 9 steel posts, 6'-0" in length, with 6" x 8" x 1'-2" notched wood blocks or plastic blocks may be used for 6" x 8" x 6'-0" wood post with 6" x 8" x 1'-2" wood blocks where applicable and when specified.
4. Direction of adjacent traffic indicated by ⟶.
5. Layout Types 11D through 11L, shown on the A77E Series of Revised Standard Plans, are typically used where guard railing is recommended to shield embankment slopes and a crashworthy end treatment is required for both directions of traffic.
6. The type of terminal system end treatment to be used will be shown on the Project Plans.
7. Dependent on site conditions (embankment height and side slope), construction of additional guard railing (length equal to multiples of 12'-6" with 6'-3" post spacing) may be advisable.
8. The 15:1 or flatter flare used with buried end anchors is based on the edge of the paved shoulder or offset line of edge of the traveled way. The length of guard railing within the 15:1 or flatter flare is based on site conditions and should be a length equal to multiples of 12'-6".
9. For details of the buried post end anchor used with Type 11F and 11G Layouts, see Standard Plan A77I2.
10. Where placement of dike is required with guard railing installations, see Revised Standard Plan RSP A77C4 for dike positioning details.
11. For typical flare offsets for 25'-0" length parabola with maximum offset of 1'-0", see Revised Standard Plan RSP A77E1.

STATE OF CALIFORNIA
DEPARTMENT OF TRANSPORTATION

METAL BEAM GUARD RAILING TYPICAL LAYOUTS FOR EMBANKMENTS

NO SCALE

RSP A77E3 DATED JUNE 6, 2008 SUPERSEDES STANDARD PLAN A77E3 DATED MAY 1, 2006 - PAGE 50 OF THE STANDARD PLANS BOOK DATED MAY 2006.

REVISED STANDARD PLAN RSP A77E3

2006 REVISED STANDARD PLAN RSP A77E3

12-10-07

DIST	COUNTY	ROUTE	POST MILES TOTAL PROJECT	SHEET NO.	TOTAL SHEETS
05	SCr	1	17.5/26.0	40	61

Randell D. Hiatt
REGISTERED CIVIL ENGINEER

June 6, 2008
PLANS APPROVAL DATE

REGISTERED PROFESSIONAL ENGINEER
Randell D. Hiatt
No. C50200
Exp. 6-30-09
CIVIL
STATE OF CALIFORNIA

The State of California or its officers or agents shall not be responsible for the accuracy or completeness of electronic copies of this plan sheet.

To accompany plans dated 2-21-12

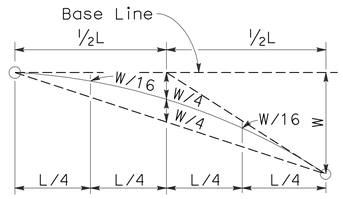

TYPICAL PARABOLIC LAYOUT

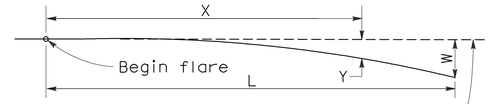

Base Line (Edge of paved shoulder or offset line of edge of traveled way)

$$Y = \frac{WX^2}{L^2}$$

Y = Offset from base line
W = Maximum offset
X = Distance along base line
L = Length of flare

PARABOLIC FLARE OFFSETS

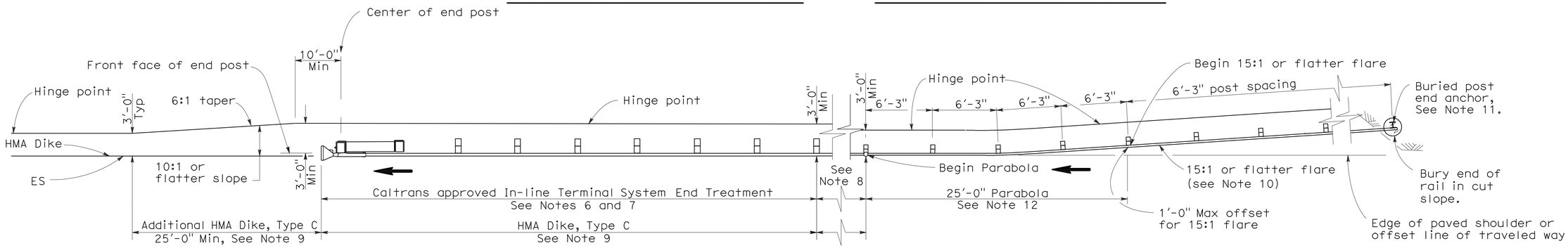

TYPE 11K LAYOUT

(EMBANKMENT GUARD RAILING INSTALLATION WITH A BURIED END ANCHOR TREATMENT AND AN IN-LINE END TREATMENT AT THE ENDS OF RAILING)
See Note 5

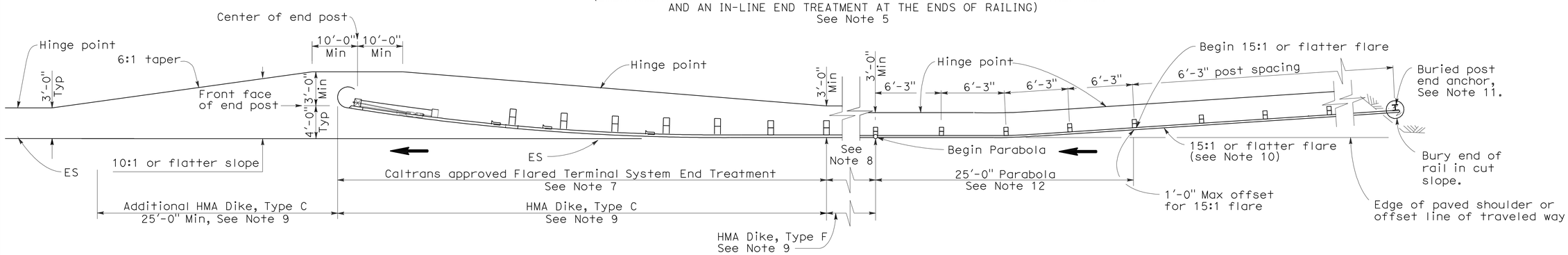

TYPE 11L LAYOUT

(EMBANKMENT GUARD RAILING INSTALLATION WITH A BURIED END ANCHOR TREATMENT AND A FLARED END TREATMENT AT THE ENDS OF RAILING)
See Note 5

NOTES:

1. Line post, blocks and hardware to be used are shown on Standard Plans A77A1, A77A2, A77B1, A77C1 and A77C2.
2. Guard rail post spacing to be 6'-3" center to center, except as otherwise noted.
3. Except as noted, line posts are 6" x 8" x 6'-0" wood with 6" x 8" x 1'-2" wood blocks. W6 x 9 steel posts, 6'-0" in length, with 6" x 8" x 1'-2" notched wood blocks or plastic blocks may be used for 6" x 8" x 6'-0" wood post with 6" x 8" x 1'-2" wood blocks where applicable and when specified.
4. Direction of adjacent traffic indicated by ⟶.
5. Layout Types 11D through 11L, shown on the A77E Series of Revised Standard Plans, are typically used where guard railing is recommended to shield embamkment slopes and a crashworthy end treatment is required for both directions of traffic.
6. In-line Terminal System End Treatments are used where site conditions will not accommodate a flared end treatment.
7. The type of terminal system end treatment to be used will be shown on the Project Plans.
8. Dependent on site conditions (embankment height and side slope), construction of additional guard railing (length equal to multiples of 12'-6" with 6'-3" post spacing) may be advisable.
9. Where placement of dike is required with guard railing installations, see Revised Standard Plan RSP A77C4 for dike positioning details.
10. The 15:1 or flatter flare used with buried end anchors is based on the edge of the paved shoulder or offset line of edge of the traveled way. The length of guard railing within the 15:1 or flatter flare is based on site conditions and should be a length equal to multiples of 12'-6".
11. For details of the buried post end anchor used with Type 11K and 11L Layouts, see Standard Plan A77I2.
12. For typical flare offsets for 25'-0" length parabola with maximum offset of 1'-0", see Revised Standard Plan RSP A77E1.

STATE OF CALIFORNIA
DEPARTMENT OF TRANSPORTATION

METAL BEAM GUARD RAILING TYPICAL LAYOUTS FOR EMBANKMENTS

NO SCALE

RSP A77E6 DATED JUNE 6, 2008 SUPERSEDES STANDARD PLAN A77E6
DATED MAY 1, 2006 - PAGE 53 OF THE STANDARD PLANS BOOK DATED MAY 2006.

REVISED STANDARD PLAN RSP A77E6

2006 REVISED STANDARD PLAN RSP A77E6

12-10-07

DIST	COUNTY	ROUTE	POST MILES TOTAL PROJECT	SHEET NO.	TOTAL SHEETS
05	SCr	1	17.5/26.0	41	61

Randell D. Hiatt
REGISTERED CIVIL ENGINEER

June 6, 2008
PLANS APPROVAL DATE

REGISTERED PROFESSIONAL ENGINEER
Randell D. Hiatt
No. C50200
Exp. 6-30-09
CIVIL
STATE OF CALIFORNIA

The State of California or its officers or agents shall not be responsible for the accuracy or completeness of electronic copies of this plan sheet.

To accompany plans dated 2-21-12

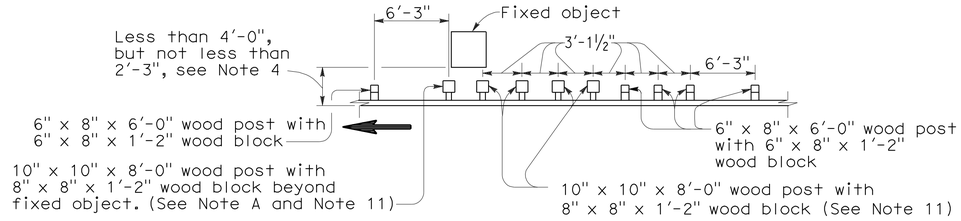

NOTE A: For a series of fixed objects (bridge columns, overhead sign supports, etc.) additional 10" x 10" x 8'-0" wood post with 8" x 8" x 1'-2" wood blocks at 3'-1½" center to center spacing are to be used between fixed object(s).

STRENGTHENED RAILING SECTIONS FOR FIXED OBJECT

Use strengthened railing sections with Layout Types 16D or 16E where minimum clearance between the guard railing and fixed object(s) is less than 4'-0", but not less than 2'-3". See Note 4.

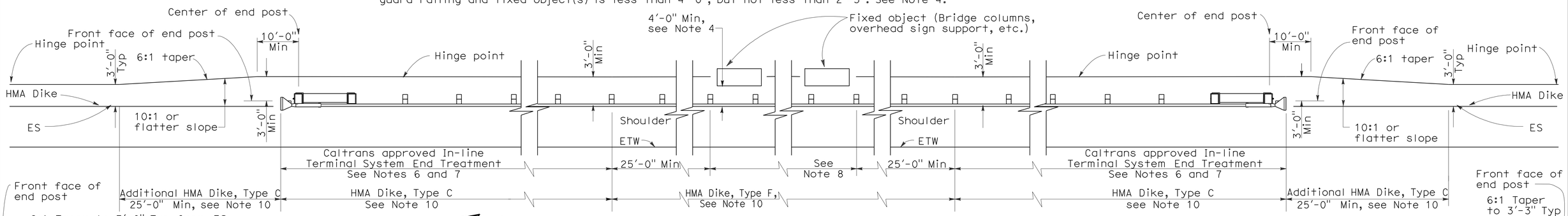

TYPE 16D LAYOUT

(GUARD RAILING INSTALLATION AT ROADSIDE FIXED OBJECT OR OBJECTS WITH AN IN-LINE END TREATMENT AT EACH END OF RAILING)
See Note 9

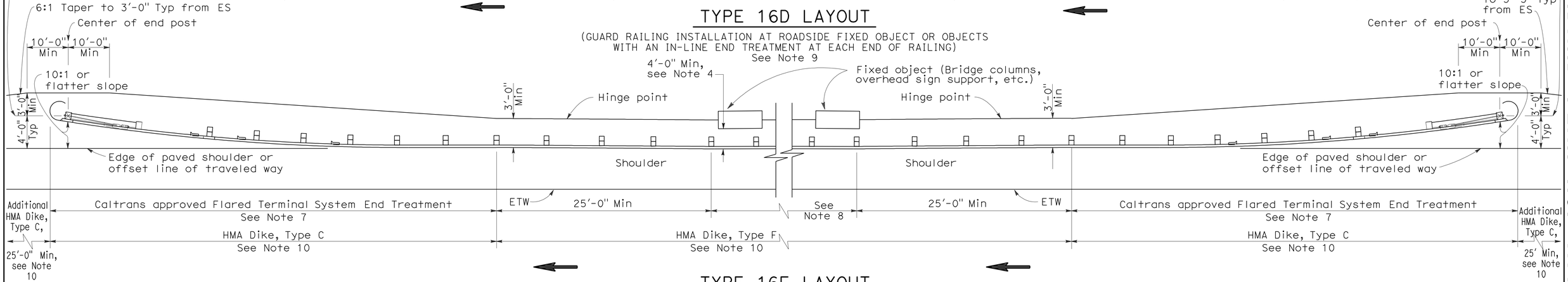

TYPE 16E LAYOUT

(GUARD RAILING INSTALLATION AT ROADSIDE FIXED OBJECT OR OBJECTS WITH A FLARED END TREATMENT AT EACH END OF RAILING)
See Note 9

NOTES:

1. Line post, blocks and hardware to be used are shown on Standard Plans A77A1, A77A2, A77B1, A77C1 and A77C2.
2. Guard railing post spacing to be 6'-3" center to center, except as otherwise noted.
3. Except as noted, line posts are 6" x 8" x 6'-0" wood with 6" x 8" x 1'-2" wood blocks. W6 x 9 steel posts, 6'-0" in length, with 6" x 8" x 1'-2" notched wood blocks or notched recycled plastic blocks may be used for 6" x 8" x 6'-0" wood line posts with 6" x 8" x 1'-2" wood blocks where applicable and when specified.
4. A 4'-0" minimum clearance is required between the face of the railing and the face of a fixed object located directly behind standard guard railing sections with post spacing at 6'-3". Construct guard railing as shown in the detail "Strengthened Railing Sections for Fixed Objects" on this plan, where the clearance between the face of the railing and the face of a fixed object is less than 4'-0", but not less than 2'-3". Where the clearance is less than 2'-3", a concrete wall or barrier should be constructed to shield the fixed object(s).
5. Direction of adjacent traffic indicated by ⟶ .
6. In-line Terminal System End Treatments are used where site conditions will not accommodate a flared end treatment.
7. The type of terminal system to be used will be shown on the Project Plans.
8. As site conditions dictate, construct additional guard railing to shield fixed object(s). Additional guard railing length equal to multiples of 12'-6". Post spacing at 6'-3", except as specified in Note 4.
9. Layout Types 16D through 16L, shown on the A77G Series of Revised Standard Plans, are typically used where guard railing is recommended to shield roadside fixed object(s) and a crashworthy end treatment is required for both directions of traffic.
10. Where placement of dike is required with guard railing, see Revised Standard Plan RSP A77C4 for dike positioning details.
11. W6 x 15 steel post, 8'-0" in length, with 8" x 8" x 1'-2" notched wood block or notched recycled plastic block may be used in place of the 10" x 10" x 8'-0" wood post with 8" x 8" x 1'-2" wood block shown in the "Strengthened Railing Sections Detail."

STATE OF CALIFORNIA
DEPARTMENT OF TRANSPORTATION

METAL BEAM GUARD RAILING TYPICAL LAYOUTS FOR ROADSIDE FIXED OBJECTS

NO SCALE

RSP A77G4 DATED JUNE 6, 2008 SUPERSEDES STANDARD PLAN A77G4
DATED MAY 1, 2006 - PAGE 62 OF THE STANDARD PLANS BOOK DATED MAY 2006.

REVISED STANDARD PLAN RSP A77G4

2006 REVISED STANDARD PLAN RSP A77G4

12-10-07

Dist	COUNTY	ROUTE	POST MILES TOTAL PROJECT	SHEET No.	TOTAL SHEETS
05	SCr	1	17.5/26.0	42	61

Randell D. Hiatt
REGISTERED CIVIL ENGINEER

May 20, 2011
PLANS APPROVAL DATE

REGISTERED PROFESSIONAL ENGINEER
Randell D. Hiatt
No. C50200
Exp. 6-30-11
CIVIL
STATE OF CALIFORNIA

The State of California or its officers or agents shall not be responsible for the accuracy or completeness of electronic copies of this plan sheet.

To accompany plans dated 2-21-12

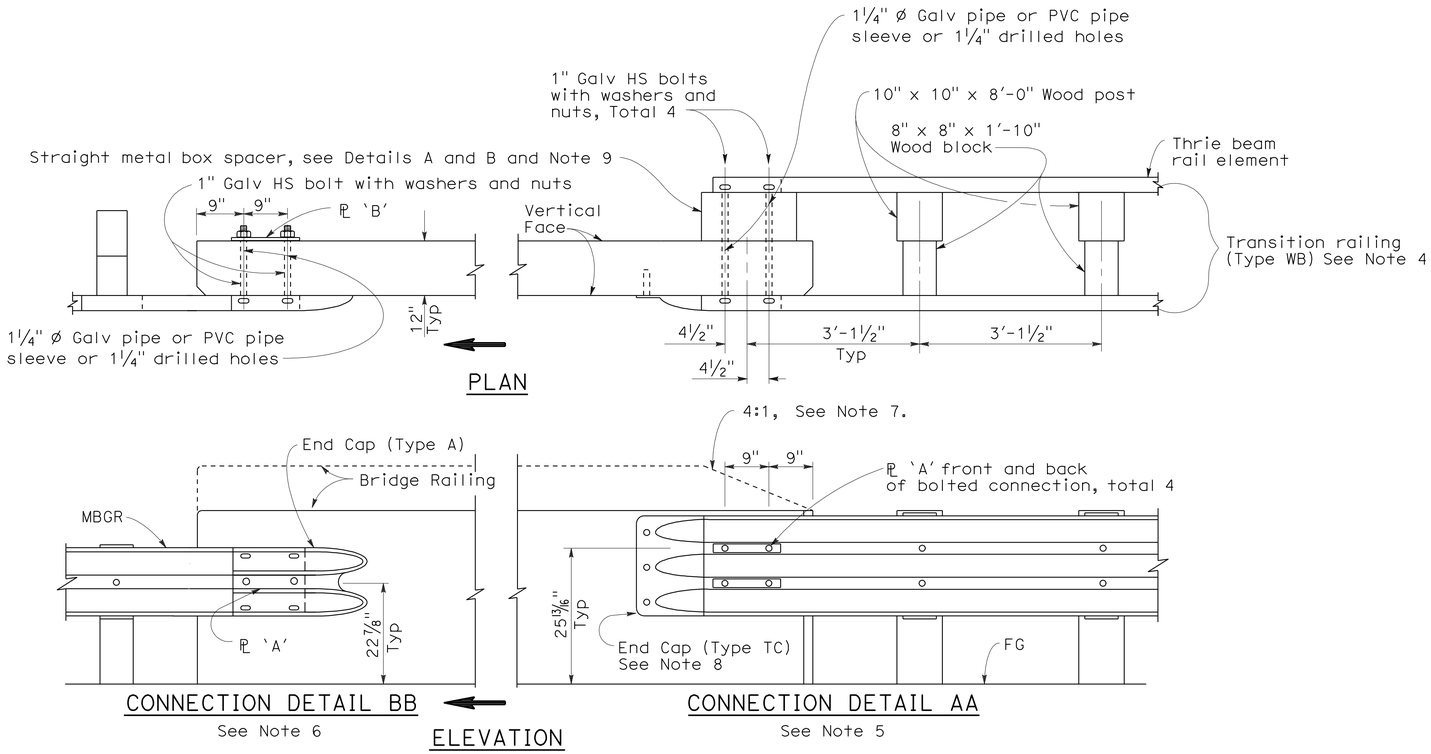

GUARD RAILING CONNECTION TO BRIDGE RAILING WITHOUT SIDEWALK

NOTES:

1. See Revised Standard Plan RSP A77J2 for additional connection details to bridges without sidewalks.
2. Additional details of posts, blocks and hardware are shown on Standard Plan A77B1, A77C1 and A77C2.
3. Direction of adjacent traffic indicated by ➡.
4. For additional details of Transition Railing (Type WB), see Standard Plan A77J4. Transition Railing (Type WB) transitions the 12 gage w-beam standard railing section of guard railing to a heavier gage nested thrie beam railing section which is connected to the concrete bridge railing.
5. For typical use of Connection Detail AA, see Layout Types 12A and 12B on Revised Standard Plan RSP A77F1, Layout Types 12C and 12D on Standard Plan A77F2, and Layout Type 12E on Revised Standard Plan RSP A77F3.
6. For typical use of Connection Detail BB, see Layout Type 12D (structure departure railing connection) on Standard Plan A77F2 and Layout Type 12DD on Standard Plan A77F5.
7. Where the height of the bridge railing exceeds the height of the thrie beam railing by more than 1" at Connection Detail AA, taper the top of the end of the bridge railing at 4:1 to match the top elevation of the thrie beam rail.
8. For details of End Cap (Type TC), see Standard Plan A77J4.
9. See Standard Plan A77J4 for additional details regarding depth dimension for straight metal box spacer.

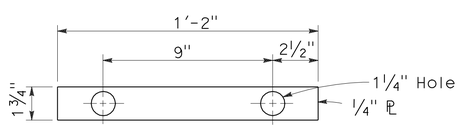

PLATE 'A'

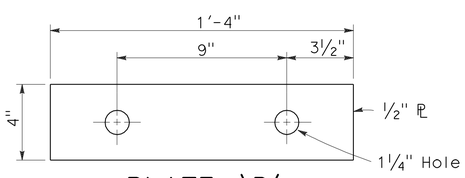

PLATE 'B'
(For backside of connection BB)

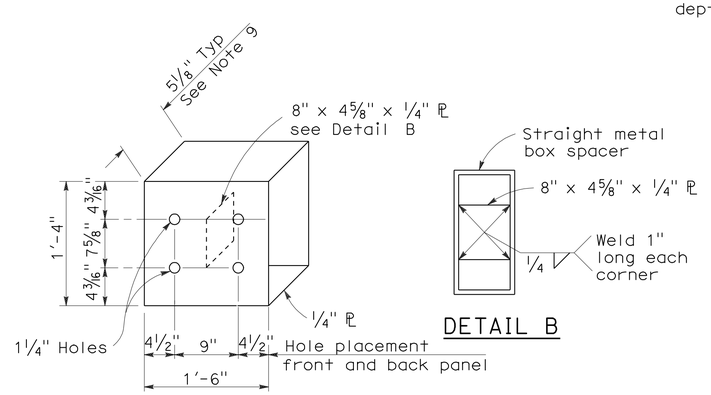

DETAIL A

DETAIL B

STRAIGHT METAL BOX SPACER

STATE OF CALIFORNIA
DEPARTMENT OF TRANSPORTATION

METAL BEAM GUARD RAILING CONNECTIONS TO BRIDGE RAILINGS WITHOUT SIDEWALKS DETAILS No.1

NO SCALE

RSP A77J1 DATED MAY 20, 2011 SUPERSEDES RSP A77J1 DATED JUNE 6, 2008 AND STANDARD PLAN A77J1 DATED MAY 1, 2006 - PAGE 72 OF THE STANDARD PLANS BOOK DATED MAY 2006.

REVISED STANDARD PLAN RSP A77J1

2006 REVISED STANDARD PLAN RSP A77J1

3-10-11

DIST	COUNTY	ROUTE	POST MILES TOTAL PROJECT	SHEET NO.	TOTAL SHEETS
05	SCr	1	17.5/26.0	43	61

Randell D. Hiatt
REGISTERED CIVIL ENGINEER

June 6, 2008
PLANS APPROVAL DATE

REGISTERED PROFESSIONAL ENGINEER
Randell D. Hiatt
No. C50200
Exp. 6-30-09
CIVIL
STATE OF CALIFORNIA

The State of California or its officers or agents shall not be responsible for the accuracy or completeness of electronic copies of this plan sheet.

To accompany plans dated 2-21-12

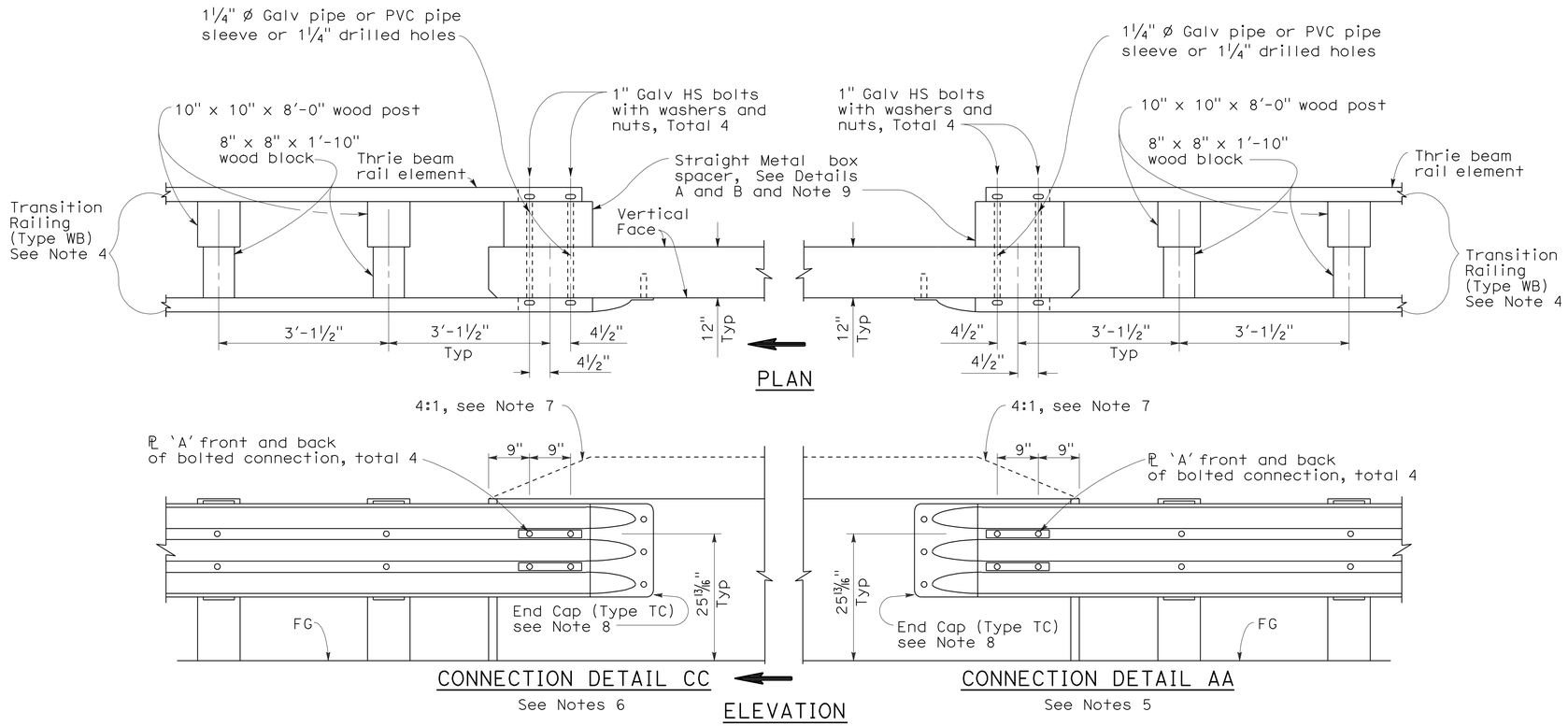

GUARD RAILING CONNECTION TO BRIDGE RAILING WITHOUT SIDEWALK

NOTES:

1. See Revised Standard Plan RSP A77J1 for additional connection details to bridges without sidewalks.
2. Additional details of posts, blocks and hardware are shown on Standard Plan A77B1, A77C1 and A77C2.
3. Direction of adjacent traffic indicated by ⟹.
4. For additional details of Transition Railing (Type WB), see Standard Plan A77J4. Transition Railing (Type WB) transitions the 12 gage w-beam standard railing section of guard railing to a heavier gage nested thrie beam railing section which is connected to the concrete bridge railing.
5. For typical use of Connection Detail AA, see Layout Types 12A and 12B on Revised Standard Plan RSP A77F1, Layout Types 12C and 12D on Standard Plan A77F2, and Layout Type 12E on Revised Standard Plan RSP A77F3.
6. For typical use of Connection Detail CC, see Layout Types 12AA and 12BB on Standard Plan A77F4 and Layout Type 12CC on Standard Plan A77F5.
7. Where the height of the bridge railing exceeds the height of the thrie beam railing by more than 1" at Connection Detail AA and connection Detail CC, taper the top of the end of the bridge railing at 4:1 to match the top elevation of the thrie beam railing.
8. For details of End Cap (Type TC), see Standard Plans A77J4.
9. See Standard Plans A77J4 for additional details regarding depth dimension for straight metal box spacer.

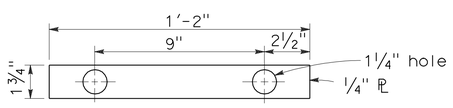

PLATE 'A'

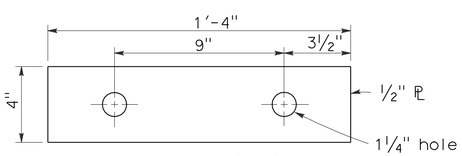

PLATE 'B'
(For backside of connection BB)

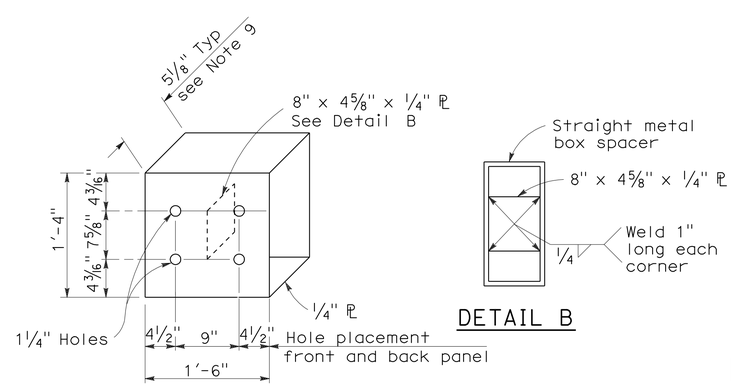

DETAIL A

DETAIL B

STRAIGHT METAL BOX SPACER

STATE OF CALIFORNIA
DEPARTMENT OF TRANSPORTATION

METAL BEAM GUARD RAILING CONNECTIONS TO BRIDGE RAILINGS WITHOUT SIDEWALKS DETAILS No.2

NO SCALE

RSP A77J2 DATED JUNE 6, 2008 SUPERSEDES STANDARD PLAN A77J2 DATED MAY 1, 2006 - PAGE 73 OF THE STANDARD PLANS BOOK DATED MAY 2006.

REVISED STANDARD PLAN RSP A77J2

2006 REVISED STANDARD PLAN RSP A77J2

12-10-07

Dist	COUNTY	ROUTE	POST MILES TOTAL PROJECT	SHEET No.	TOTAL SHEETS
05	SCr	1	17.5/26.0	44	61

Randell D. Hiatt
REGISTERED CIVIL ENGINEER

May 20, 2011
PLANS APPROVAL DATE

REGISTERED PROFESSIONAL ENGINEER Randell D. Hiatt No. C50200 Exp. 6-30-11 CIVIL STATE OF CALIFORNIA

To accompany plans dated 2-21-12

The State of California or its officers or agents shall not be responsible for the accuracy or completeness of electronic copies of this plan sheet.

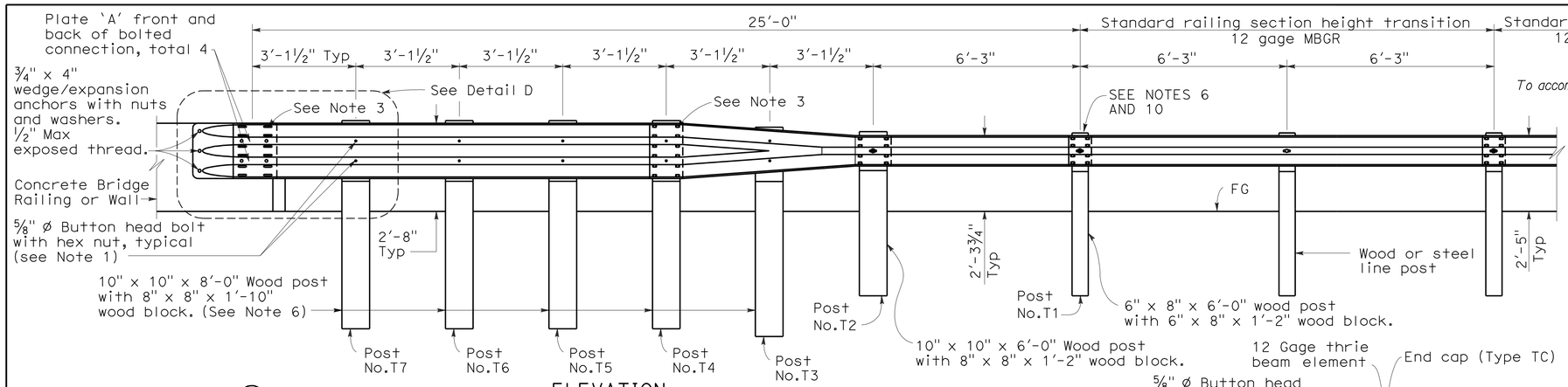

ELEVATION

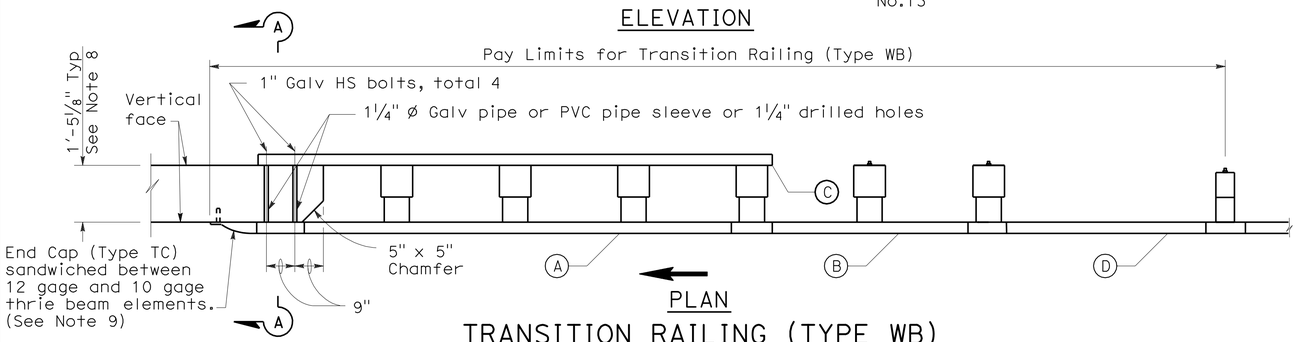

PLAN

TRANSITION RAILING (TYPE WB)

(No Blockout Attachment)

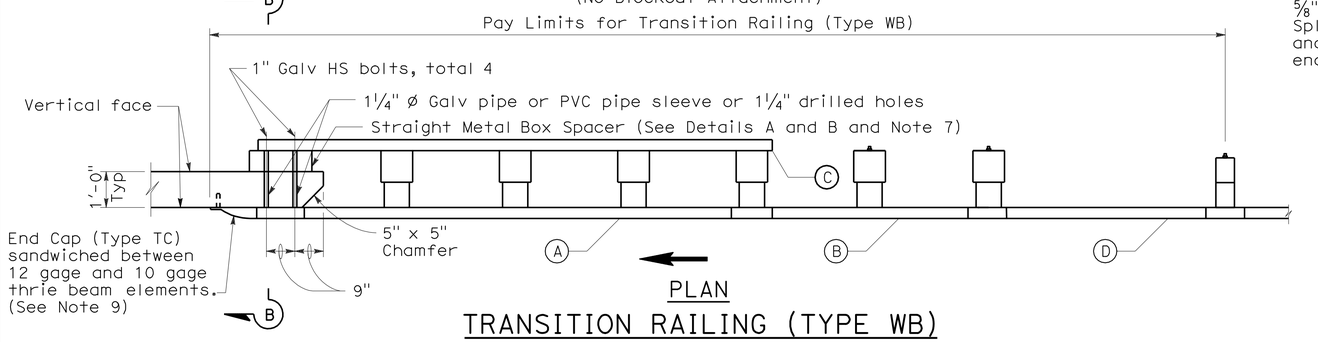

PLAN

TRANSITION RAILING (TYPE WB)

(Blockout Attachment)

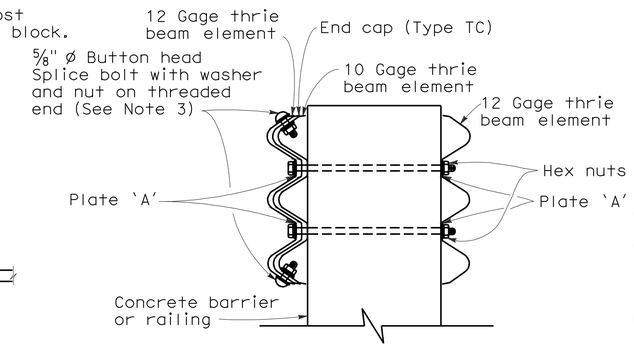

SECTION A-A

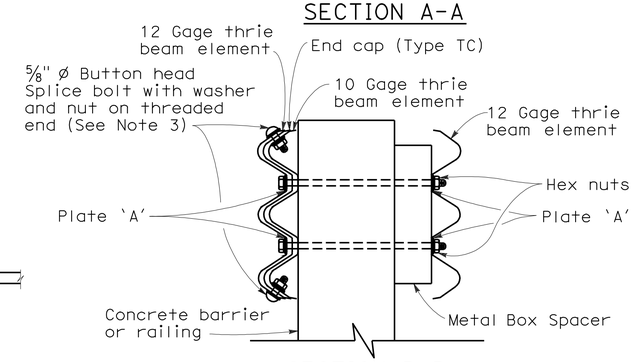

SECTION B-B

NOTES:

1. Use ⅝" ø Button head bolts and hex nuts for connections to posts. No washer on rail face for bolted connections to post.
2. The nested rail elements, end cap, and 'W' beam to thrie beam element may be spliced together prior to bolting the elements to the wood post and concrete barrier or railing.
3. Exterior splice bolt holes for rail element splices at Post No. T4 and the connection to the concrete barrier or railing shall be the standard 29/32" x 1⅛" slot size. Interior splice bolt holes at these locations may be increased up to 1¼" ø. Only the top 2 and the bottom 2 splice bolts with washers and nuts are required for rail splices at Post No. T4 and the connection to the concrete barrier or railing.
4. Direction of adjacent traffic indicated by →.
5. The top elevation of Posts No. T2 through No. T7 shall not project more than 1" above the top elevation of the rail element.
6. Typically, the railing connected to Transition Railing (Type WB) will be either standard railing section of metal beam guard railing with height transition ratio of 120:1 or an approved Caltrans end treatment attached to Post No. T1.
7. The depth of the metal box spacer varies from the 5⅛" to 1½" and is dependent on the width of the concrete railing or wall. The combined dimension for the depth of the metal box spacer plus the width of railing or wall is typically 17⅛". Where the space between the backside of the concrete railing or wall and the rear thrie beam element is less than 1½", metal plates similar to Plate 'A' are to be used as spacers.
8. Where the width of the concrete railing or wall is greater than 17⅛", wood blocks are to be used to fill the space created between the backside of Posts No. T4 through No. T7 and the rear thrie beam element. These wood blocks shall be 8" in width and 1'-2" in length. The dimension between the front thrie beam element and the rear thrie beam element is to match the width of the concrete railing or wall.
9. End cap may be installed over 12 gage and 10 gage thrie beam elements where transition railing is installed on the departure end of bridge railing.
10. Conform standard railing section height to 2'-3¾" at Post No. T1 using height transition ratio of 120:1.

LEGEND

(A) Nested thrie beam elements (one 12 gage element nested over one 10 gage element).

(B) One 10 gage "W" beam to thrie beam element.

(C) One 12 gage thrie beam element.

(D) One 10 gage "W" beam rail element (7'-3½" length)

10 gage = 0.135" thick

12 gage = 0.108" thick

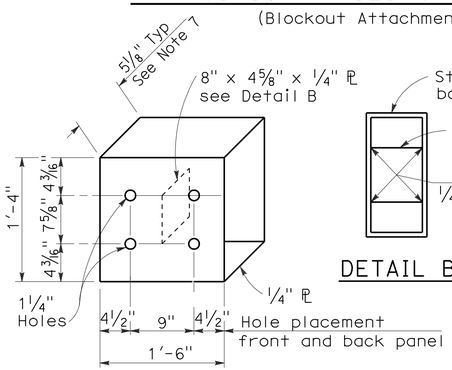

DETAIL A

STRAIGHT METAL BOX SPACER

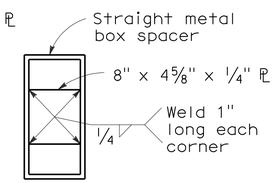

DETAIL B

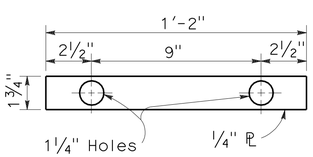

DETAIL C

PLATE 'A'

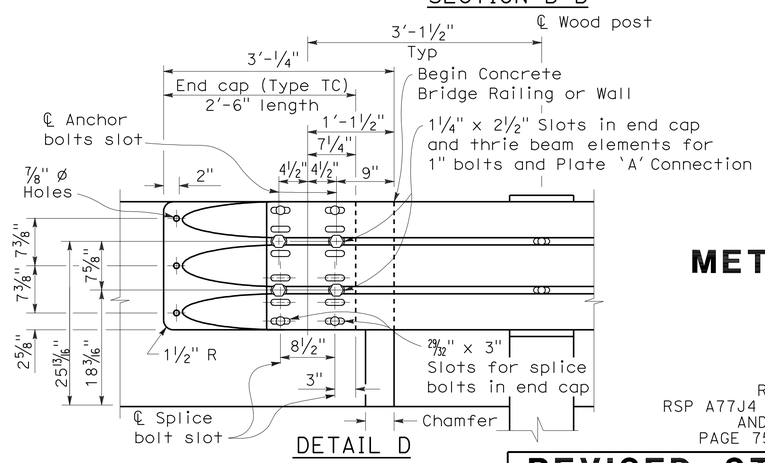

DETAIL D

STATE OF CALIFORNIA
DEPARTMENT OF TRANSPORTATION

METAL BEAM GUARD RAILING TRANSITION RAILING (TYPE WB)

NO SCALE

RSP A77J4 DATED MAY 20, 2011 SUPERSEDES
RSP A77J4 DATED JUNE 5, 2009, RSP A77J4 DATED JUNE 6, 2008
AND STANDARD PLAN A77J4 DATED MAY 1, 2006 -
PAGE 75 OF THE STANDARD PLANS BOOK DATED MAY 2006.

REVISED STANDARD PLAN RSP A77J4

2006 REVISED STANDARD PLAN RSP A77J4

5-14-09

DIST	COUNTY	ROUTE	POST MILES TOTAL PROJECT	SHEET NO.	TOTAL SHEETS
05	SCr	1	17.5/26.0	45	61

Robert B Schott
LICENSED LANDSCAPE ARCHITECT

April 3, 2009
PLANS APPROVAL DATE

The State of California or its officers or agents shall not be responsible for the accuracy or completeness of electronic copies of this plan sheet.

LICENSED LANDSCAPE ARCHITECT — Robert B. Schott — Signature — 11-30-10 Renewal Date — 2-25-09 Date — STATE OF CALIFORNIA

To accompany plans dated 2-21-12

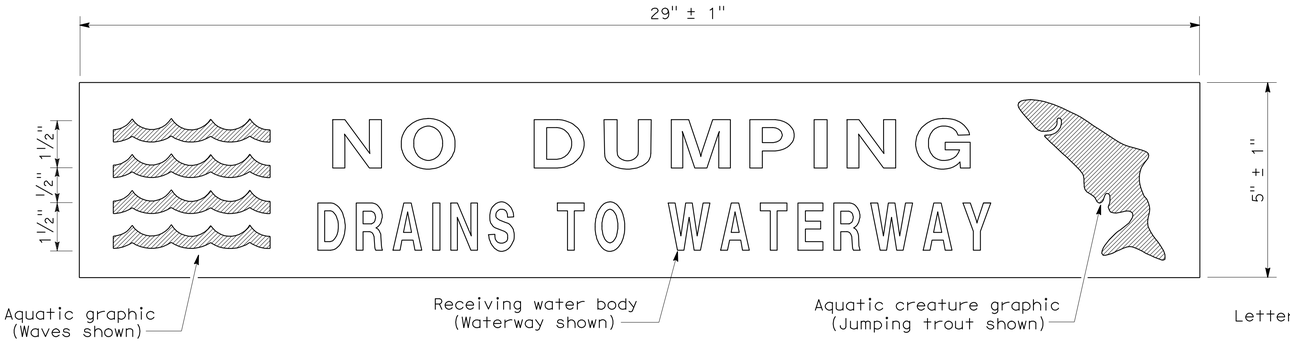

PLAN
DRAINAGE INLET MARKER
(PREFABRICATED THERMOPLASTIC)

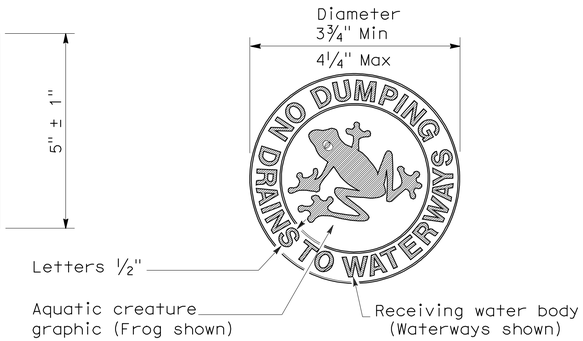

PLAN
DRAINAGE INLET MARKER
(MEDALLION)

PLAN
DRAINAGE INLET MARKER
(STAMPED CONCRETE IMPRINT)

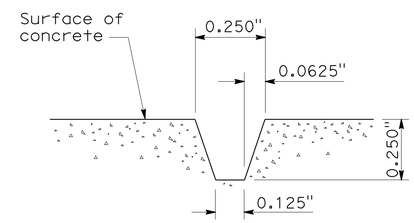

SECTION A-A
STAMPED CONCRETE
IMPRINT DETAIL

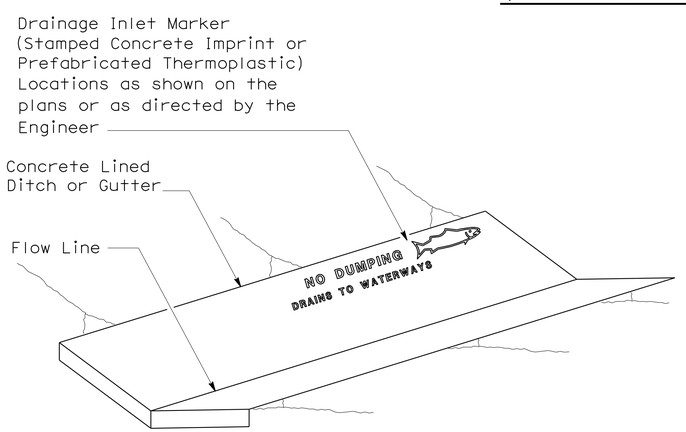

PERSPECTIVE
DRAINAGE INLET MARKER ON
CONCRETE LINED DITCH

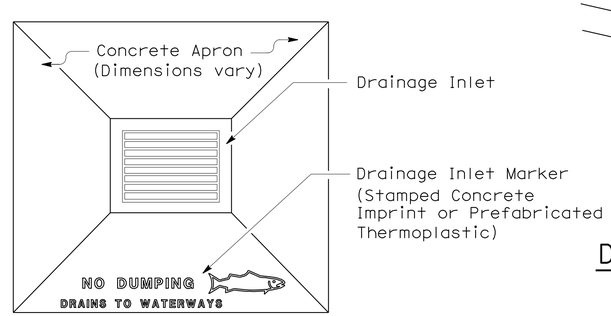

PLAN
DRAINAGE INLET MARKER ON
DRAINAGE INLET APRON

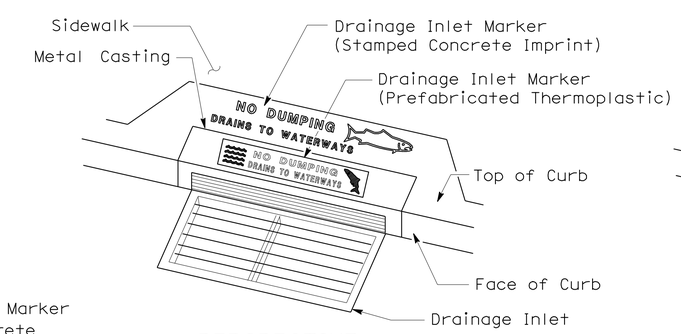

PERSPECTIVE
DRAINAGE INLET MARKER ON
DRAINAGE INLET

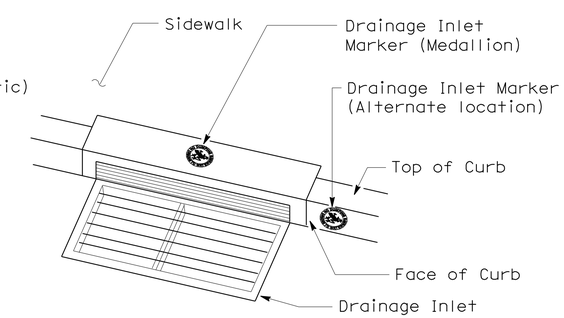

PERSPECTIVE
DRAINAGE INLET MARKER (MEDALLION)
ON DRAINAGE INLET

STATE OF CALIFORNIA
DEPARTMENT OF TRANSPORTATION

DRAINAGE INLET MARKERS

NO SCALE

NSP D71 DATED APRIL 3, 2009 SUPPLEMENTS
THE STANDARD PLANS BOOK DATED MAY 2006.

NEW STANDARD PLAN NSP D71

2006 NEW STANDARD PLAN NSP D71

7-24-08

DIST	COUNTY	ROUTE	POST MILES TOTAL PROJECT	SHEET NO.	TOTAL SHEETS
05	SCr	1	17.5/26.0	46	61

Raymond Don Tsztoo
REGISTERED CIVIL ENGINEER

June 6, 2008
PLANS APPROVAL DATE

REGISTERED PROFESSIONAL ENGINEER
Raymond Don Tsztoo
No. C37332
Exp. 6-30-08
CIVIL
STATE OF CALIFORNIA

The State of California or its officers or agents shall not be responsible for the accuracy or completeness of electronic copies of this plan sheet.

To accompany plans dated 2-21-12

ANNULAR AND HELICAL PROFILE

COUPLING TYPE	PIPE CORRUGATION	PIPE SIZE	W OR A	PIPE WALL THICKNESS		BAND THICKNESS		BAR AND STRAP (CSP ONLY)			ANGLE						
											DIMENSIONS		BOLTS (No.- Dia)		RIVETS ANGLE TO BAND		SPOT WELDS ANGLE TO BAND
				CSP	CAP	CSP	CAP	STRAP THICKNESS	BOLTS Dia	BAR Dia	CSP	CAP	CSP	CAP	CSP	CAP	CSP
TWO PIECE INTEGRAL FLANGE	1½′ × ¼″	6″	7″	0.064″-0.168″		0.052″							3-⅜″				
	1½′ × ¼″	8″-10″	7″	0.064″-0.168″	0.060″-0.164″	0.064″	0.060″						3-⅜″	3-⅜″			
ANNULAR	2⅔″ × ½″	THROUGH 24″	12″	0.064″-0.168″	0.060″-0.164″	0.064″	0.060″				2″ × 2″ × 3/16″	2″ × 2″ × 3/16″	3-½″	3-½″	3-⅜″	3-⅜″	3-½″
HUGGER	2⅔″ × ½″ REROLLED END	THROUGH 24″	10½″	0.064″-0.168″		0.064″		0.079″	½″	⅞″							

SPIRAL RIB PROFILE

COUPLING TYPE	PIPE CORRUGATION	PIPE SIZE	W	PIPE WALL THICKNESS		BAND THICKNESS		BAR AND STRAP (SSRP ONLY)			ANGLE						
											DIMENSIONS		BOLTS (No.- Dia)		RIVETS ANGLE TO BAND		SPOT WELDS ANGLE TO BAND
				SSRP	ASRP	SSRP	ASRP	STRAP THICKNESS	BOLTS Dia	BAR Dia	SSRP	ASRP	SSRP	ASRP	SSRP	ASRP	SSRP
ANNULAR	2⅔″ × ½″ * REROLLED END	24″	12″	0.064″-0.168″	0.060″-0.164″	0.064″	0.060″				2″ × 2″ × 3/16″	2″ × 2″ × 3/16″	3-½″	3-½″	3-⅜″	3-⅜″	3-½″
HUGGER	2⅔″ × ½″ * REROLLED END	24″	10½″	0.064″-0.168″		0.064″		0.079″	½″	⅞″							

* See Note 12.

NOTES:

1. All ferrous metal coupling band connection hardware shall be galvanized or electro-plated in accordance with the Standard Specifications.
2. For helically corrugated coupling bands, the connection angles may be oriented parallel to the pipe axis, provided connecting holes are slotted lengthwise sufficiently to allow adjustment for the helix angle.
3. Tension strap may be connected to band with either spot welds or fillet welds that develop minimum required strength of strap.
4. Use 1¼″ gage line dimension on attached angle leg for rivets and spot welds.
5. Band thickness shall not be less than:
   a. 3 standard thicknesses lighter than the thickness of the pipe for Corrugated Steel Pipe.
   b. 2 standard thicknesses lighter than the thickness of the pipe and in no case lighter than 0.060″ for Corrugated Aluminum Pipe.
6. Dimensions, thicknesses and strengths shown are minimum.
7. For pipe arches use same width band as for round pipe of equal periphery.
8. Fillet welds of equivalent strenght may be substituted for spot welds or rivets.
9. Spot welds shall develop minimum required strength of strap.
10. Pipe with rerolled ends having at least two 2⅔″ × ½″ annular corrugations at each end with or without an upturned flange may be connected with any of the annular coupling bands shown for pipe of the same diameter and wall thickness and having 2⅔″ × ½″ corrugations.
11. For downdrain applications, two piece integral flange couplers shall have factory applied sleeve type rubber gaskets with a minimum length of 7″ measured along the length of the pipe.
12. All profiles of Spiral Rib Pipe (¾″ × ¾″ ribs at 7½″ pitch and ¾″ × 1″ ribs at 11½″ pitch in both steel and aluminum and ¾″ × 1″ ribs at 8½″ pitch in steel only) shall be manufactured with rerolled ends. Corrugation profile of the rerolled ends shall be 2⅔″ × ½″ annual corrugations with a minimum of two full corrugations at each end.

STATE OF CALIFORNIA
DEPARTMENT OF TRANSPORTATION

CORRUGATED METAL PIPE COUPLING DETAILS No. 7 DOWNDRAIN

NO SCALE

RSP D97G DATED JUNE 6, 2008 SUPERSEDES STANDARD PLAN D97G
DATED MAY 1, 2006 - PAGE 189 OF THE STANDARD PLANS BOOK DATED MAY 2006.

REVISED STANDARD PLAN RSP D97G

2006 REVISED STANDARD PLAN RSP D97G

4-4-08

DIST	COUNTY	ROUTE	POST MILES TOTAL PROJECT	SHEET NO.	TOTAL SHEETS
05	SCr	1	17.5/26.0	47	61

Randell D. Hiatt
REGISTERED CIVIL ENGINEER

June 6, 2008
PLANS APPROVAL DATE

REGISTERED PROFESSIONAL ENGINEER
Randell D. Hiatt
No. C50200
Exp. 6-30-09
CIVIL
STATE OF CALIFORNIA

The State of California or its officers or agents shall not be responsible for the accuracy or completeness of electronic copies of this plan sheet.

To accompany plans dated 2-21-12

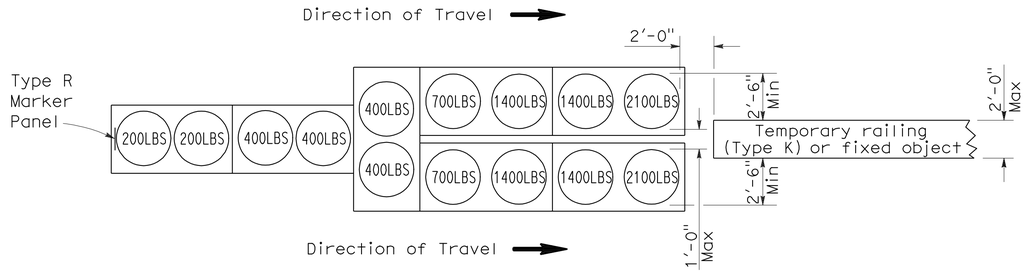

ARRAY `TU14'

Approach speed 45 mph or more

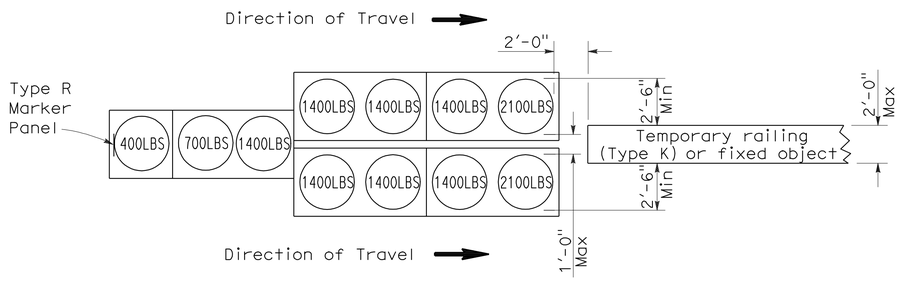

ARRAY `TU11'

Approach speed less than 45 mph

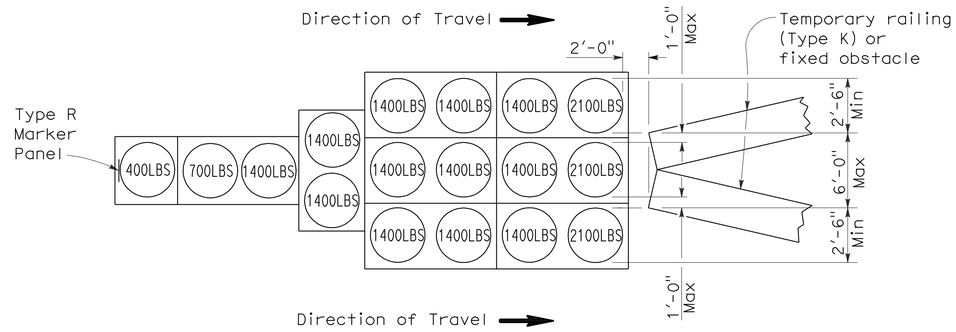

ARRAY `TU17'

Approach speed less than 45 mph

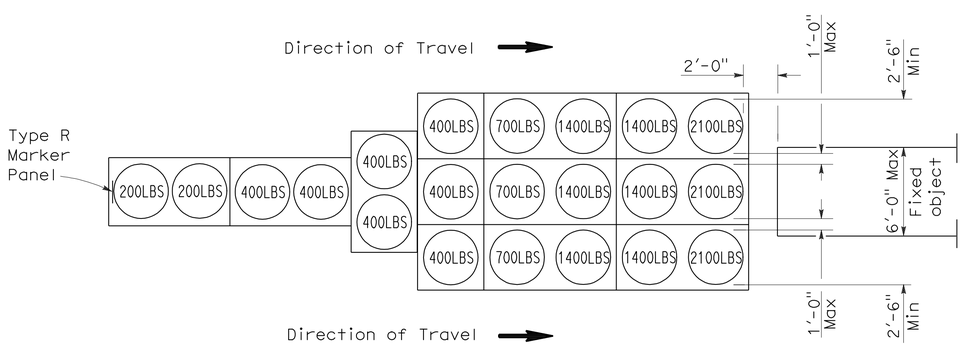

ARRAY `TU21'

Approach speed 45 mph or more

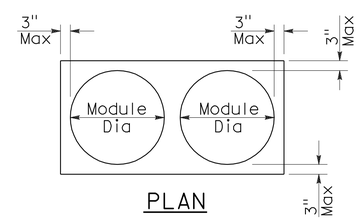

PLAN

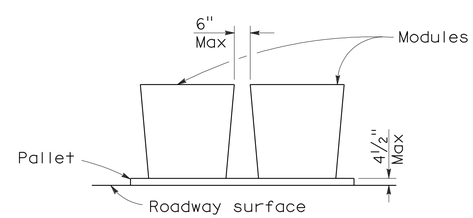

ELEVATION

CRASH CUSHION PALLET DETAIL

See Note 7

NOTES:

1. (XXX) Indicates sand filled module location and weight of sand in pounds for each module. Module spacing is based on the greater diameter of the module.
2. All sand weights are nominal.
3. Temporary crash cushion arrays shall not encroach on the traveled way.
4. Place the top of Type R marker panel 1" below the module lid.
5. Refer to Standard Plan A73B for marker details.
6. Approach speeds indicated conform to NCHRP 350 Report criteria.
7. Use of pallets is optional.

STATE OF CALIFORNIA
DEPARTMENT OF TRANSPORTATION

TEMPORARY CRASH CUSHION, SAND FILLED (UNIDIRECTIONAL)

NO SCALE

RSP T1A DATED JUNE 6, 2008 SUPERSEDES STANDARD PLAN T1A
DATED MAY 1, 2006 - PAGE 211 OF THE STANDARD PLANS BOOK DATED MAY 2006.

REVISED STANDARD PLAN RSP T1A

2006 REVISED STANDARD PLAN RSP T1A

5-15-08

DIST	COUNTY	ROUTE	POST MILES TOTAL PROJECT	SHEET NO.	TOTAL SHEETS
05	SCr	1	17.5/26.0	48	61

Randell D. Hiatt
REGISTERED CIVIL ENGINEER

June 6, 2008
PLANS APPROVAL DATE

REGISTERED PROFESSIONAL ENGINEER
Randell D. Hiatt
No. C50200
Exp. 6-30-09
CIVIL
STATE OF CALIFORNIA

The State of California or its officers or agents shall not be responsible for the accuracy or completeness of electronic copies of this plan sheet.

To accompany plans dated 2-21-12

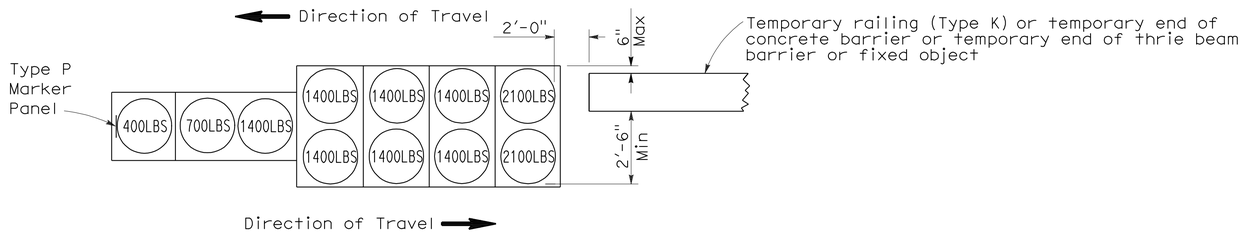

ARRAY 'TB11'

Approach speed less than 45 mph

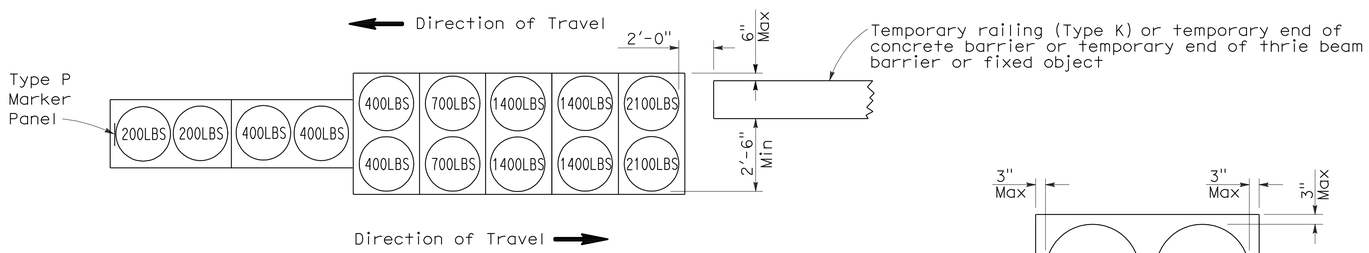

ARRAY 'TB14'

Approach speed 45 mph or more

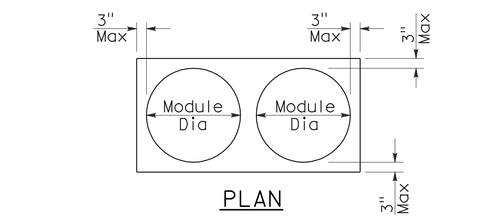

PLAN

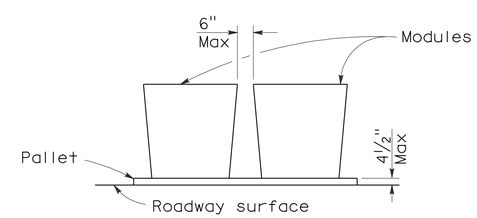

ELEVATION

CRASH CUSHION PALLET DETAIL

See Note 7

NOTES:

1. (XXX) Indicates sand filled module location and weight of sand in pounds for each module. Module spacing is based on the greater diameter of the module.
2. All sand weights are nominal.
3. Temporary crash cushion arrays shall not encroach on the traveled way.
4. Place the Type P marker panel so that the bottom of the panel rests upon the pallet.
5. Refer to Standard Plan A73B for marker details.
6. Approach speeds indicated conform to NCHRP 350 Report criteria.
7. Use of pallets is optional.

STATE OF CALIFORNIA
DEPARTMENT OF TRANSPORTATION

TEMPORARY CRASH CUSHION, SAND FILLED (BIDIRECTIONAL)

NO SCALE

RSP T1B DATED JUNE 6, 2008 SUPERSEDES STANDARD PLAN T1B
DATED MAY 1, 2006 - PAGE 212 OF THE STANDARD PLANS BOOK DATED MAY 2006.

REVISED STANDARD PLAN RSP T1B

2006 REVISED STANDARD PLAN RSP T1B

5-15-08

DIST	COUNTY	ROUTE	POST MILES TOTAL PROJECT	SHEET NO.	TOTAL SHEETS
05	SCr	1	17.5/26.0	49	61

Randell D. Hiatt
REGISTERED CIVIL ENGINEER

June 6, 2008
PLANS APPROVAL DATE

REGISTERED PROFESSIONAL ENGINEER
Randell D. Hiatt
No. C50200
Exp. 6-30-09
CIVIL
STATE OF CALIFORNIA

The State of California or its officers or agents shall not be responsible for the accuracy or completeness of electronic copies of this plan sheet.

To accompany plans dated 2-21-12

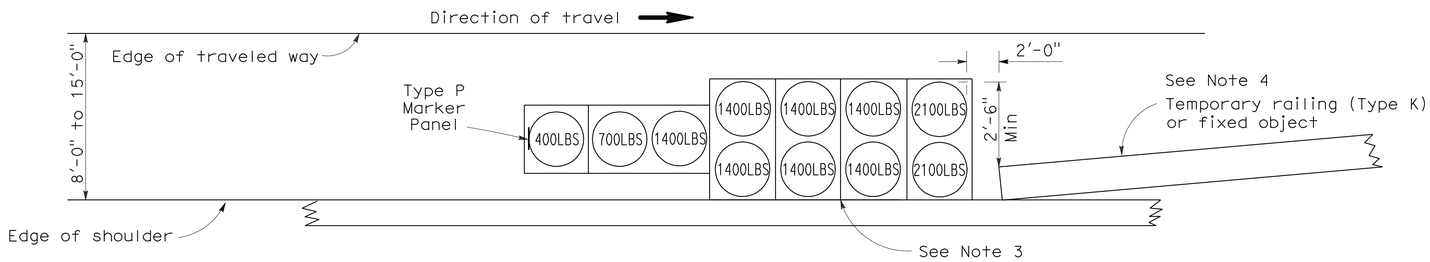

ARRAY 'TS11'

Approach speed less than 45 mph
See Note 9

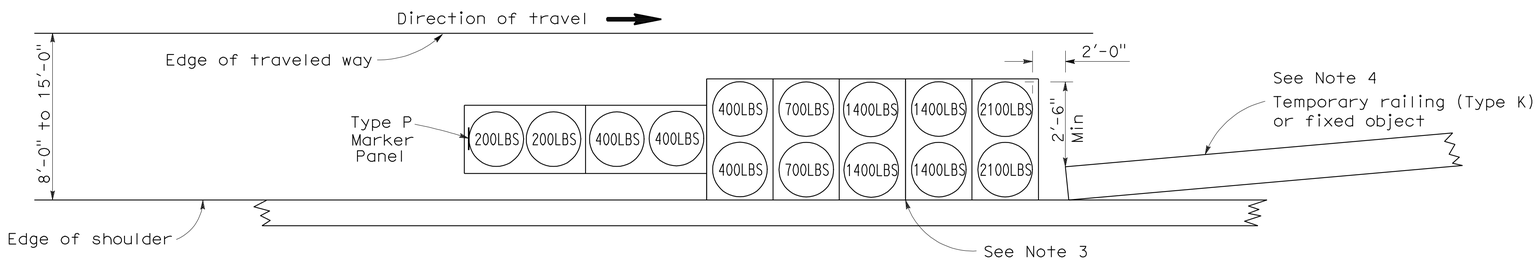

ARRAY 'TS14'

Approach speed 45 mph or more
See Note 9

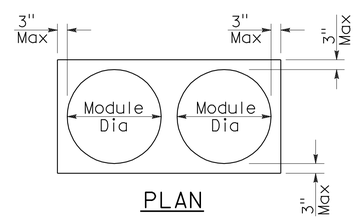

PLAN

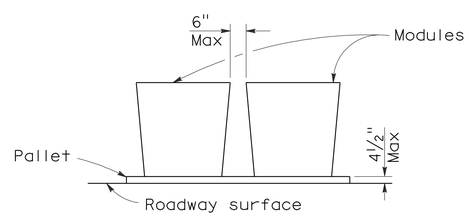

ELEVATION

CRASH CUSHION PALLET DETAIL

See Note 11

NOTES:

1. (XXX) Indicates sand filled module location and weight of sand in pounds for each module. Module spacing is based on the greater diameter of the module.
2. All sand weights are nominal.
3. The temporary crash cushion arrays shown on this plan shall be used only in locations where there will be traffic on one side of the temporary crash cushion array.
4. If the fixed object or approach end of the temporary railing is less than 15'-0" from the edge of traveled way, a temporary crash cushion is required in a construction or work zone.
5. Temporary crash cushion arrays shall not encroach on the traveled way.
6. Arrays for median shoulders shall conform to details shown on this plan for outside shoulders.
7. Place the Type P marker panel so that the bottom of the panel rests upon the pallet and faces traffic.
8. Refer to Standard Plan A73B for marker details.
9. For shoulder widths less than 8'-0", appropriate approved crash cushion protection, other than sand filled modules, shall be provided at fixed objects and at approach ends of temporary railing. The specific type of crash cushion shall be as shown on the project plans or as specified in the Special Provisions, or if not shown on the project plans or specified in the Special Provisions, shall be as approved by the Engineer.
10. Approach speeds indicated conform to NCHRP 350 Report criteria.
11. Use of pallets is optional.

STATE OF CALIFORNIA
DEPARTMENT OF TRANSPORTATION

TEMPORARY CRASH CUSHION, SAND FILLED (SHOULDER INSTALLATIONS)

NO SCALE

RSP T2 DATED JUNE 6, 2008 SUPERSEDES STANDARD PLAN T2
DATED MAY 1, 2006 - PAGE 213 OF THE STANDARD PLANS BOOK DATED MAY 2006.

REVISED STANDARD PLAN RSP T2

2006 REVISED STANDARD PLAN RSP T2

5-15-08

Dist	COUNTY	ROUTE	POST MILES TOTAL PROJECT	SHEET No.	TOTAL SHEETS
05	SCr	1	17.5/26.0	50	61

Randell D. Hiatt
REGISTERED CIVIL ENGINEER

May 20, 2011
PLANS APPROVAL DATE

REGISTERED PROFESSIONAL ENGINEER
Randell D. Hiatt
No. C50200
Exp. 6-30-11
CIVIL
STATE OF CALIFORNIA

The State of California or its officers or agents shall not be responsible for the accuracy or completeness of electronic copies of this plan sheet.

To accompany plans dated 2-21-12

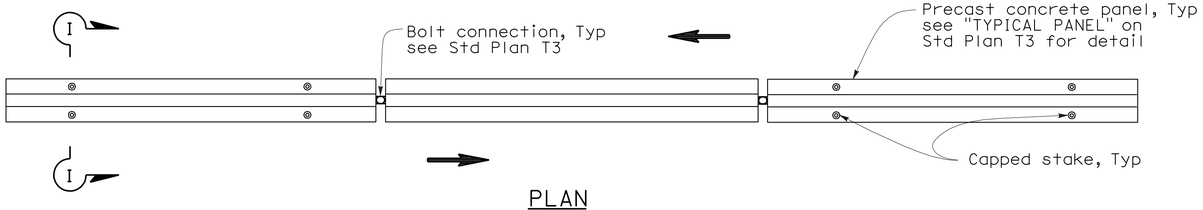

PLAN

RAILING STAKING CONFIGURATION FOR TWO-WAY TRAFFIC

See Note 1

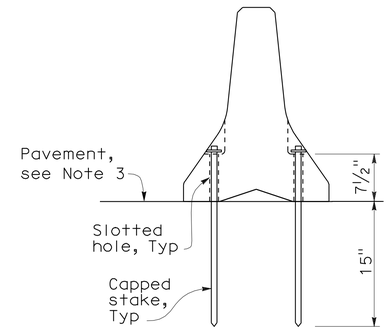

SECTION I-I

NOTES:

1. Where Type K Temporary Railing is placed as a temporary or long term barrier in two-way traffic on highways with less than 24" from the edge of traveled way, use four capped stakes per every other panel with end panels staked.
2. Where Type K Temporary Railing is placed 3" to 24" from the edge of an excavation on highways, use two capped stakes per panel along the traffic side.
3. Staked Type K Temporary Railing must be supported by at least 4" thick concrete, hot mix asphalt or existing asphalt concrete pavement.
4. The minimum yield strength for the washer must be 60,000 psi.
5. Direction of adjacent traffic indicated by ⟹.

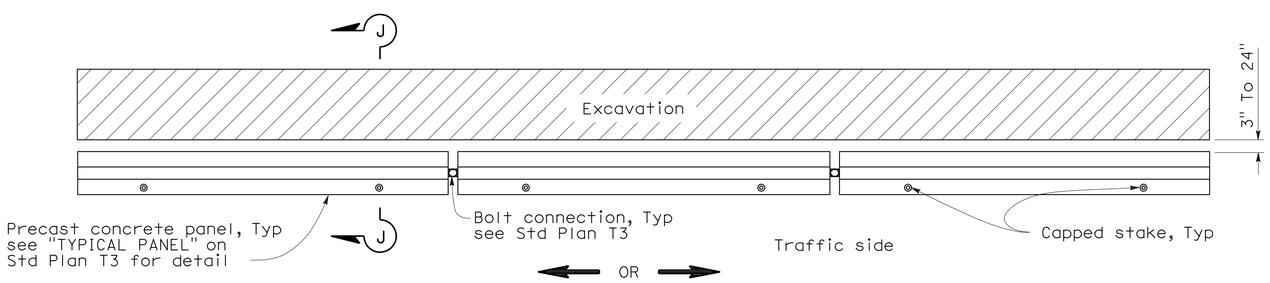

PLAN

RAILING STAKING CONFIGURATION ADJACENT TO AN EXCAVATION

See Note 2

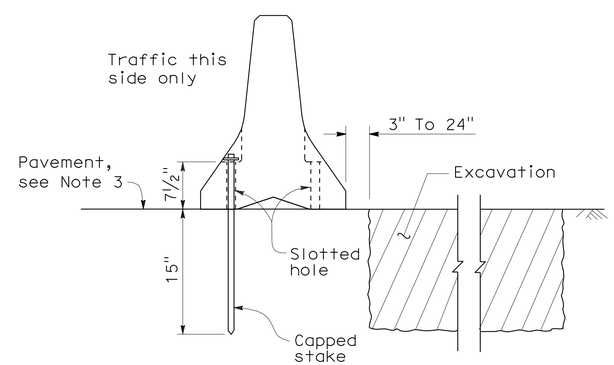

SECTION J-J

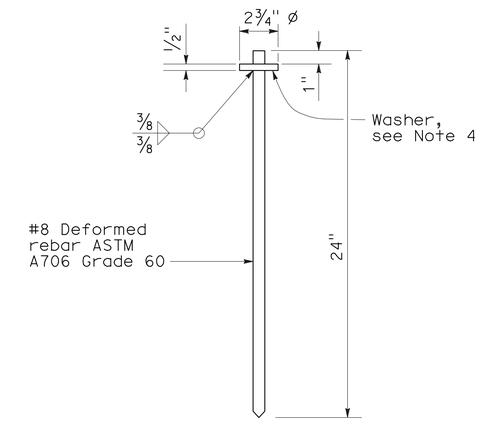

CAPPED STAKE DETAIL

STATE OF CALIFORNIA
DEPARTMENT OF TRANSPORTATION

TEMPORARY RAILING (TYPE K)

NO SCALE

NSP T3A DATED MAY 20, 2011 SUPPLEMENTS THE STANDARD PLANS BOOK DATED MAY 2006.

NEW STANDARD PLAN NSP T3A

2006 NEW STANDARD PLAN NSP T3A

DIST	COUNTY	ROUTE	POST MILES TOTAL PROJECT	SHEET NO.	TOTAL SHEETS
05	SCr	1	17.5/26.0	51	61

REGISTERED ELECTRICAL ENGINEER

October 5, 2007
PLANS APPROVAL DATE

REGISTERED PROFESSIONAL ENGINEER Jeffery G. McRae No. E14512 Exp. 6-30-08 ELECTRICAL STATE OF CALIFORNIA

The State of California or its officers or agents shall not be responsible for the accuracy or completeness of electronic copies of this plan sheet.

To accompany plans dated 2-21-12

ELECTROLIERS

STANDARD TYPES
15, 15D
15 STRUCTURE
21, 21D STRUCTURE
30
31
32
35
36-20A

High mast light pole

Double Arm lighting standard

Existing electrolier

Electrolier foundation (Future installation)

NOTES:

1. Luminaires shall be 310 W HPS when installed on Type 21, 21D, 30, 31, 32, 35 and 36-20A Standards, unless otherwise specified. Luminaires shall be 200 W HPS when installed on other type standards or poles, unless otherwise specified.
2. Luminaires shall be the cutoff type, ANSI Type Ⅲ medium cutoff lighting distribution, unless otherwise specified.
3. Variations noted adjacent to symbol on project plans.

Electrolier (see project notes or project plans)

Luminaire on wood pole

STANDARD NOTES:

- AB — Abandon. If applied to conduit, remove conductors.
- BC — Install pull box in existing conduit run.
- BP — Pedestrian barricade, type as indicated on plan.
- CB — Install conduit into existing pull box.
- CC — Connect new and existing conduit. Remove existing conductors and install conductors as indicated.
- CF — Conduit to remain for future use. Remove conductors. Install pull wire or rope.
- DH — Detector handhole.
- FA — Foundation to be abandoned.
- IS — Install sign on signal mast arm.
- NS — No slip base on standard.
- PEC — Photoelectric control.
- PEU — Photoelectric unit.
- RC — Equipment or material to be removed and become the property of the Contractor.
- RE — Remove electrolier, fuses and ballast. Tape ends of conductors.
- RL — Relocate equipment.
- RR — Remove and reuse equipment.
- RS — Remove and salvage equipment.
- SC — Splice new to existing conductors.
- SD — Service disconnect.
- SF — Standard to remain for future use. Remove luminaire, pole conductors, fuses and ballast.
- TSP — Telephone service point.

ABBREVIATIONS AND EQUIPMENT DESIGNATIONS

PROPOSED	EXISTING	
BBS	bbs	Battery backup system
BC	bc	Bolt circle
C	C	Conduit
CCTV	cctv	Closed circuit television
CKT	ckt	Circuit
CMS	cms	Changeable message sign
DLC	dlc	Loop detector lead-in cable
EMS	ems	Extinguishable message sign
EVC	evc	Emergency vehicle cable
EVD	evd	Emergency vehicle detector
FB	fb	Flashing beacon
FBCA	fbca	Flashing beacon control assembly
FBS	fbs	Flashing beacon with slip base
FO	fo	Fiber optic
G	G	Ground (Equipment Grounding Conductor)
GFCI	GFCI	Ground fault circuit interrupt
HAR	har	Highway advisory radio
HEX	hex	Hexagonal
HPS	hps	High pressure sodium
IISNS	iisns	Internally illuminated street name sign
ISL	isl	Induction sign lighting
LED	led	Light emitting diode
LMA	lma	Luminaire mast arm
LPS	lps	Low pressure sodium
LTG	ltg	Lighting
LUM	lum	Luminaire
MAT	mat	Mast arm mounting vehicle signal faces, top attachment
MAS	mas	Mast arm mounting vehicle signal faces, side attachment
MAS-4A	mas-4A	Mast arm mounting vehicle signal faces, side attachment - 4 signal section
MAS-4B	mas-4B	
MAS-4C	mas-4C	
MAS-5A	mas-5A	Mast arm mounting vehicle signal faces, side attachment - 5 signal section
MAS-5B	mas-5B	
MC	mc	Mercury contactor
M/M	m/m	Multiple to multiple transformer
MT	mt	Conduit with pull wire or rope only
MTG	mtg	Mounting
	mv	Mercury vapor lighting fixture
N	N	Neutral (Grounded Conductor)
NC	NC	Normally closed
NO	NO	Normally open
PB	pb	Pull box
PEC	pec	Photoelectric control (Type Ⅰ, Ⅱ, Ⅲ, Ⅳ or Ⅴ as shown)
PED	ped	Pedestrian
PEU	peu	Photoelectric unit
PPB	ppb	Pedestrian push button
RL		Relocated equipment
RM	rm	Ramp metering
SB	sb	Slip base
SIC	sic	Signal interconnect cable
SIG	sig	Signal
SMA	sma	Signal mast arm
SNS	sns	Street name sign
SP	sp	Service point
TDC	tdc	Telephone demarcation cabinet
TMS	tms	Traffic monitoring station
TOS	tos	Traffic Operations System
VEH	veh	Vehicle
XFMR	xfmr	Transformer
COMM	comm	Communication
RWIS	rwis	Roadway weather information system

SOFFIT AND WALL MOUNTED LUMINAIRES

Pendant, 70 W HPS unless otherwise specified.

Flush, 70 W HPS unless otherwise specified.

Wall surface, 70 W HPS unless otherwise specified.

Existing soffit or wall luminaire to remain unmodified.

Existing soffit or wall luminaire to be modified as specified.

NOTE:

Arrow indicates "street side" of luminaire.

STATE OF CALIFORNIA
DEPARTMENT OF TRANSPORTATION

ELECTRICAL SYSTEMS (SYMBOLS AND ABBREVIATIONS)

NO SCALE

RSP ES-1A DATED OCTOBER 5, 2007 SUPERSEDES STANDARD PLAN ES-1A DATED MAY 1, 2006 - PAGE 400 OF THE STANDARD PLANS BOOK DATED MAY 2006.

REVISED STANDARD PLAN RSP ES-1A

2006 REVISED STANDARD PLAN RSP ES-1A

DIST	COUNTY	ROUTE	POST MILES TOTAL PROJECT	SHEET NO.	TOTAL SHEETS
05	SCr	1	17.5/26.0	52	61

REGISTERED ELECTRICAL ENGINEER

October 5, 2007
PLANS APPROVAL DATE

REGISTERED PROFESSIONAL ENGINEER Jeffery G. McRae No. E14512 Exp. 6-30-08 ELECTRICAL STATE OF CALIFORNIA

The State of California or its officers or agents shall not be responsible for the accuracy or completeness of electronic copies of this plan sheet.

To accompany plans dated 2-21-12

CONDUIT

PROPOSED	EXISTING	
		Lighting Conduit, unless otherwise indicated or noted
		Traffic signal conduit
C	c	Communication conduit
T	t	Telephone conduit
F	f	Fire alarm conduit
FO	fo	Fiber optic conduit
		Conduit termination (RSP ES-9A C)
R	r	Conduit riser in/on structure or service pole

SERVICE EQUIPMENT

PROPOSED	EXISTING	
OH	oh	Overhead lines
U	U	Wood pole "U" indicates utility owned
		Pole guy with anchor
		Utility transformer - ground mounted
III		Service equipment enclosure type
		Service equipment enclosure door indicates front of enclosure
T	t	Telephone demarcation cabinet

POLE-MOUNTED SERVICE DESIGNATION

Type of installation

TYPE H SERVICE - 28'-10" ← Pole height above grade

ILLUMINATED OVERHEAD SIGN

PROPOSED	EXISTING	
		Overhead sign - Single post
		Overhead sign - Two post
		Overhead sign - Mounted on structure
		Overhead sign with electrolier

SIGNAL EQUIPMENT

PROPOSED	EXISTING	
		Pedestrian signal face
		Pedestrian push button post
		Pedestrian barricade
		Vehicle signal face (with backplate, 3-Section: red, yellow and green)
		Vehicle signal face with angle visors
PV	PV	Modifications of basic symbols: "L" indicates all non-arrow sections louvered "LG" indicates louvered green section only "PV" indicates 12" programmed visibility sections "8" indicates all 8" sections (only when specified)
		Type 15TS and Vehicle signal face
		Vehicle signal face with red, yellow and green left arrow sections
		Vehicle signal face with red and yellow sections and up green arrow
		Vehicle signal face (5 Section) with red, yellow and green sections and yellow and green right arrows
		Type 1 Standard and attached vehicle signal faces
		Standard with signal mast arm only and attached vehicle signal faces and internally illuminated street name sign
		Type 33 Standard, Left-turn vehicle signal face and sign
		Standard with luminaire and signal mast arms and attached vehicle signal faces
		Cantilever flashing beacon Type 9 Frame, with a sign unless otherwise specified or indicated
		Type 15-FBS Standard with two vehicle signal face sections with lens, backplate and visor with a sign
R	Y	Flashing beacon. One vehicle signal face section with lens, backplate and visor. "R" indicates red indication, "Y" indicates yellow indication
		Controller assembly. Door indicates front of cabinet

SIGNAL EQUIPMENT Cont

PROPOSED	EXISTING	
		Guard post
		Type 1 Standard with "Meter On" sign
		Emergency Vehicle detector

NOTES:

1. All signal sections shall be 12" unless shown otherwise.
2. Signal heads shall be provided with backplates unless shown otherwise.
3. Signal indication shall be LED.

STATE OF CALIFORNIA
DEPARTMENT OF TRANSPORTATION

ELECTRICAL SYSTEMS (SYMBOLS AND ABBREVIATIONS)

NO SCALE

RSP ES-1B DATED OCTOBER 5, 2007 SUPERCEDES STANDARD PLAN ES-1B DATED MAY 1, 2006 - PAGE 401 OF THE STANDARD PLANS BOOK DATED MAY 2006.

REVISED STANDARD PLAN RSP ES-1B

2006 REVISED STANDARD PLAN RSP ES-1B

DIST	COUNTY	ROUTE	POST MILES TOTAL PROJECT	SHEET NO.	TOTAL SHEETS
05	SCr	1	17.5/26.0	53	61

REGISTERED ELECTRICAL ENGINEER

October 5, 2007
PLANS APPROVAL DATE

REGISTERED PROFESSIONAL ENGINEER Jeffery G. McRae No. E14512 Exp. 6-30-08 ELECTRICAL STATE OF CALIFORNIA

The State of California or its officers or agents shall not be responsible for the accuracy or completeness of electronic copies of this plan sheet.

To accompany plans dated 2-21-12

2006 REVISED STANDARD PLAN RSP ES-1C

EQUIPMENT IDENTIFICATION

ILLUMINATED SIGN IDENTIFICATION NUMBER:

Sign No. 12345 — Sign number - Place on post or structure

10 ISL SCI 1.0

- 1.0 — Transformer rating (kVA)
- SCI — Lighting control type
- ISL — Number and type of fixtures

Do NOT place on standard or structure

ELECTROLIER OR EQUIPMENT IDENTIFICATION NUMBER:

12345 - 15'-0"

- 15'-0" — Mast arm length, if shown. Do not place on standard or structure.
- 12345 — Equipment number - Place on standard or structure. Existing equipment numbers are shown in parenthesis

CONDUIT AND CONDUCTOR IDENTIFICATION:

1½"C, 2#10, 15#14, 2 DLC

- 2#10, 15#14, 2 DLC — Number and size of conductors and cables
- 1½"C — Size of conduit in inches

Ø1, Ø2, Ø2P, etc.	Traffic phase identification for signal faces, detectors and phase diagrams
1 2 3	Project note numbers
A B C	Equipment description, installation or item numbers
1 2 3	Conduit run numbers

SIGNAL AND LIGHTING STANDARD (TYPICAL DESIGNATION):

19A - 3 - 100

- 100 — Wind velocity = 100 mph
- 3 — Case 3 arm loading
- 19A — Standard type
- Standard Plan sheet number
- Detail number or letter

MISCELLANEOUS EQUIPMENT

PROPOSED	EXISTING	
CMS	cms	Changeable message sign
		Closed circuit television camera
		Highway advisory radio pole and antenna
EMS	ems	Extinguishable message sign
M V	m v	Detection device M = Microwave sensor V = Video image sensor

WIRING DIAGRAM LEGEND

P	Pole
CB	Circuit breaker
A	Ampere
V	Volt
M	Metered
UM	Unmetered
NB	Neutral bus
GB	Ground bus
G	Equipment grounding conductor
N	Grounded conductor (Neutral)

- External conductor
- Conductor or bus
- Tie point
- Contactor coil
- Contactor, Contact NO
- Terminal blocks
- Contactor, Contact NC
- Enclosure bond
- Grounding electrode
- Circuit breaker
- Receptacle

PULL BOXES

PROPOSED	EXISTING	
		Pull box-No. 5 unless otherwise indicated or noted.
3	9A(21)	Pull box-Additional designations or descriptions

3 = No. 3½ pull box
5 = No. 5 pull box
6 = No. 6 pull box
7 = No. 7 (Ceiling pull box)
8 = No. 8 (Pendant soffit pull box)
9 = No. 9 pull box
9A = No. 9A pull box

(C) = Communications pull box
(E) = Pull box with extension
(S) = Sprinkler control pull box
(21) = Anchor bolts and conduit for future installation of Type 21 Standard
(T) = Traffic pull box

VEHICLE DETECTORS

5 J 9 U

- U = Upper
- L = Lower
- Slot number in input file
- Input file (I or J)
- Phase

PROPOSED	EXISTING	
		Type A detector loop. Outline of sawcut shown.
		Type B detector loop. Outline of sawcut shown.
		Type C detector loop. Outline of sawcut shown.
		Type D detector loop. Outline of sawcut shown.
		Type E detector loop. Outline of sawcut shown.
		Type Q detector loop. Outline of sawcut shown.
		Magnetic detector
DH	dh	Detector handhole
		Microwave or video detection zone

STATE OF CALIFORNIA
DEPARTMENT OF TRANSPORTATION

ELECTRICAL SYSTEMS (SYMBOLS AND ABBREVIATIONS)

NO SCALE

RSP ES-1C DATED OCTOBER 5, 2007 SUPERCEDES STANDARD PLAN ES-1C DATED MAY 1, 2006 - PAGE 402 OF THE STANDARD PLANS BOOK DATED MAY 2006.

REVISED STANDARD PLAN RSP ES-1C

DIST	COUNTY	ROUTE	POST MILES TOTAL PROJECT	SHEET NO.	TOTAL SHEETS
05	SCr	1	17.5/26.0	54	61

REGISTERED CIVIL ENGINEER

October 5, 2007
PLANS APPROVAL DATE

REGISTERED PROFESSIONAL ENGINEER
Stanley P. Johnson
No. C57793
Exp. 3-31-08
CIVIL
STATE OF CALIFORNIA

The State of California or its officers or agents shall not be responsible for the accuracy or completeness of electronic copies of this plan sheet.

To accompany plans dated 2-21-12

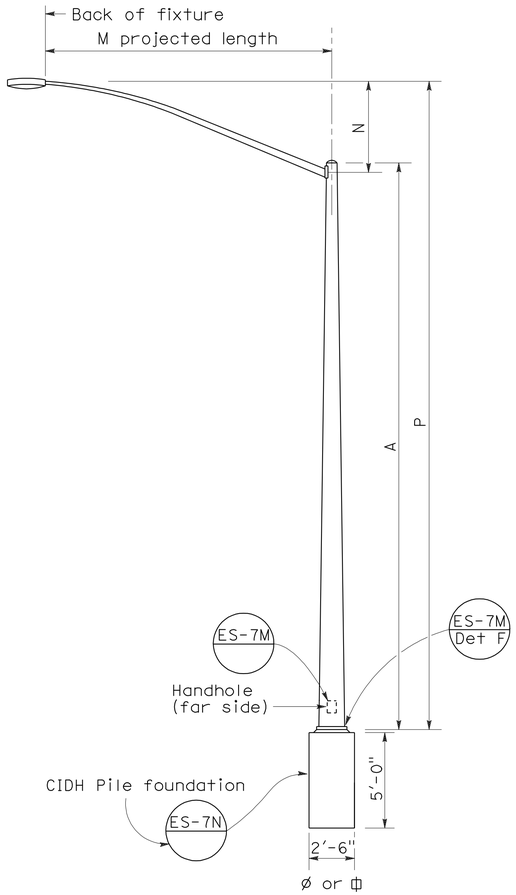

ELEVATION
TYPE 15 AND TYPE 21

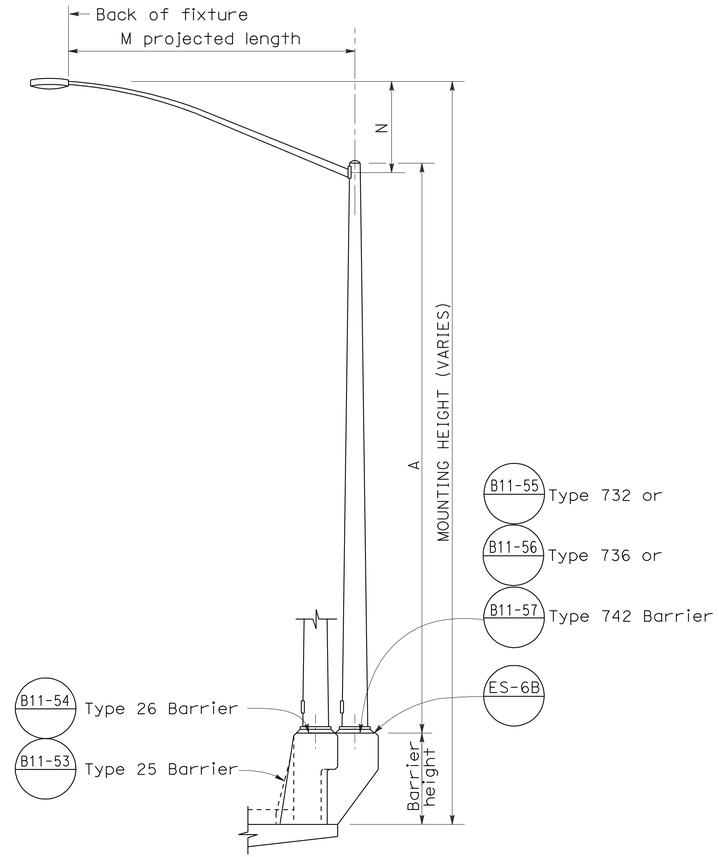

ELEVATION
TYPE 15 AND TYPE 21 BARRIER RAIL MOUNTED

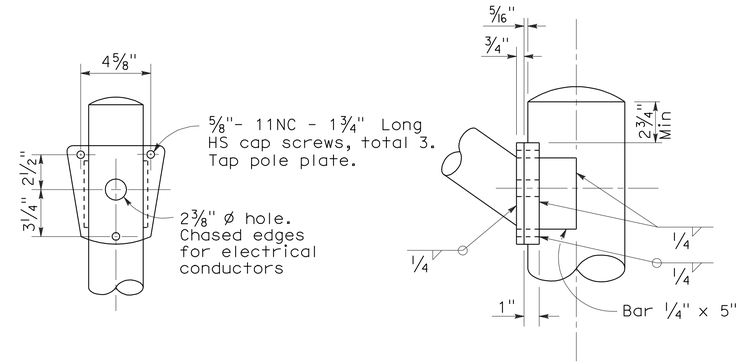

DETAIL R
LUMINAIRE ARM CONNECTION

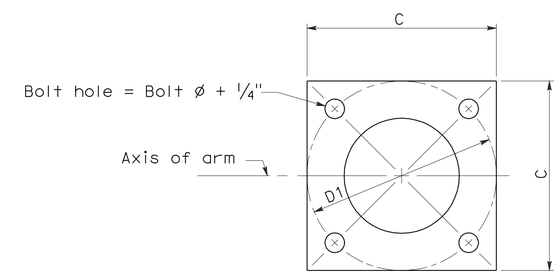

BASE PLATE

POLE TYPE	POLE DATA				BASE PLATE DATA				LUMINAIRE ARM
	A Height	Min OD Base	Min OD Top	Wall Thickness	C	D1 Bolt Circle	Thick-ness	Anchor Bolts Size	
15	30'	8"	3 7/8"	0.1196"	1'-0"	1'-0"	1"	1" ø x 3'-0" x 4"*	6' - 15' [12']
21	35'	8 5/8"	3 7/8"	0.1196"	1'-0"	1'-0"	1"	1 1/4"ø x 3'-0" x 4"*	6' - 15' [12']

* For barrier rail bolts, see Standard Plan ES-6B.

LUMINAIRE ARM DATA					
M Projected Length	N Rise	Min OD At Pole	Nominal Thickness	P Type 15	P Type 21
6'-0"	2'-0"±	3 1/4"	0.1196"	31'-6"±	36'-6"±
8'-0"	2'-6"±	3 1/2"	0.1196"	32'-0"±	37'-0"±
10'-0"	3'-3"±	3 7/8"	0.1196"	32'-9"±	37'-9"±
12'-0"	4'-3"±	3 7/8"	0.1196"	33'-9"±	38'-9"±
15'-0"	4'-9"±	4 1/4"	0.1196"	34'-3"±	39'-3"±

NOTES:

1. ☐ Indicates arm length to be used unless otherwise noted on the plans.
2. For Type 15-SB, use Type 15 standard with Type 30 slip base plate details, see Standard Plan ES-6F.
3. For additional notes, see Standard Plan ES-7M and ES-7N.

STATE OF CALIFORNIA
DEPARTMENT OF TRANSPORTATION

ELECTRICAL SYSTEMS (LIGHTING STANDARD TYPES 15 AND 21)

NO SCALE

RSP ES-6A DATED OCTOBER 5, 2007 SUPERCEDES STANDARD PLAN ES-6A DATED MAY 1, 2006 - PAGE 427 OF THE STANDARD PLANS BOOK DATED MAY 2006.

REVISED STANDARD PLAN RSP ES-6A

2006 REVISED STANDARD PLAN RSP ES-6A

DIST	COUNTY	ROUTE	POST MILES TOTAL PROJECT	SHEET NO.	TOTAL SHEETS
05	SCr	1	17.5/26.0	55	61

REGISTERED CIVIL ENGINEER

October 5, 2007
PLANS APPROVAL DATE

REGISTERED PROFESSIONAL ENGINEER
Stanley P. Johnson
No. C57793
Exp. 3-31-08
CIVIL
STATE OF CALIFORNIA

The State of California or its officers or agents shall not be responsible for the accuracy or completeness of electronic copies of this plan sheet.

To accompany plans dated 2-21-12

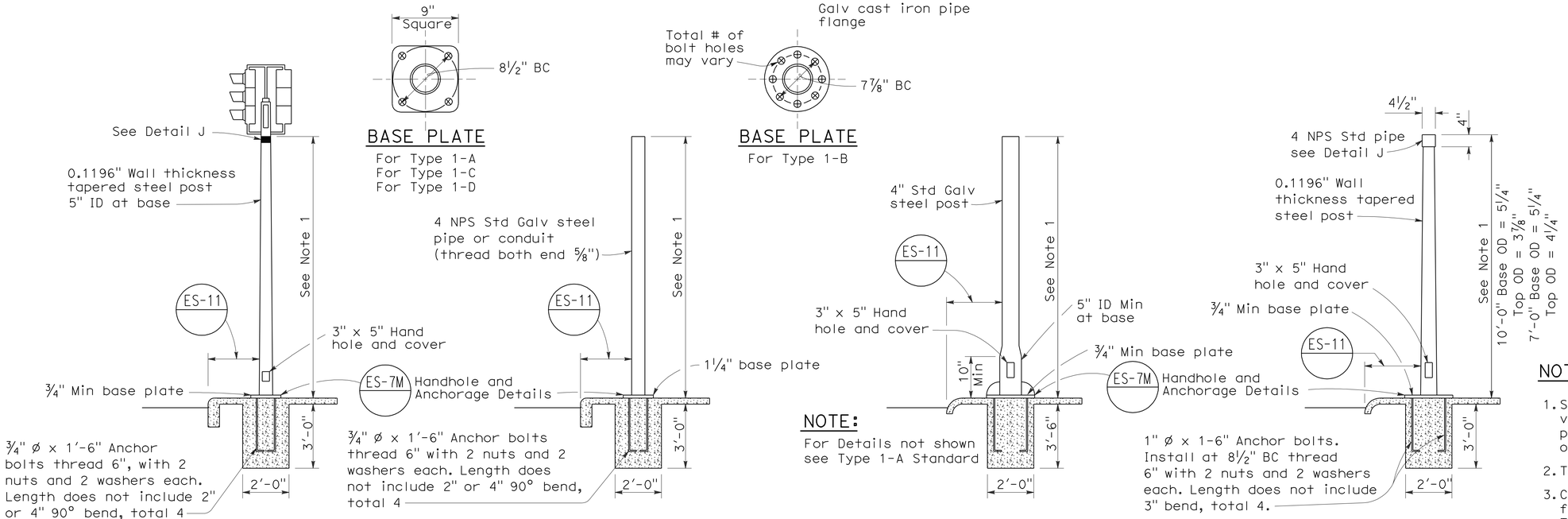

TYPE 1 SIGNAL STANDARDS

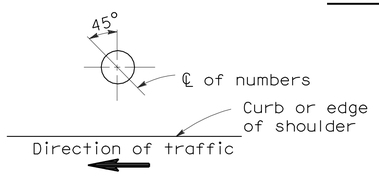

PLAN

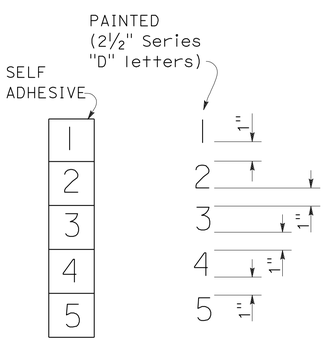

NUMBER DETAIL

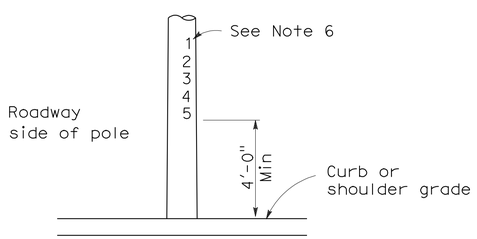

TYPICAL NUMBER FORMAT

LOCATION OF EQUIPMENT NUMBERS ON STANDARDS AND POSTS

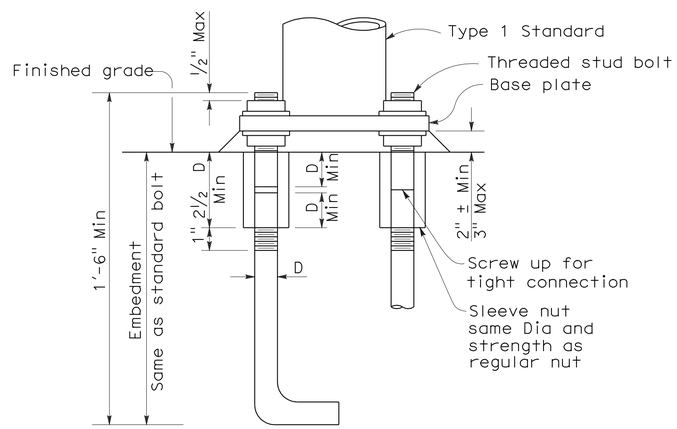

ANCHOR BOLTS WITH SLEEVE NUTS

Sleeve nuts to be used only when shown or specified on Project Plans

D = Diameter of anchor bolt

NOTES:

1. Standards shall be 10'-0" ± 2" for vehicle signals and 7'-0" ± 2" for pedestrian signals unless otherwise noted on plans.
2. Top of standards shall be 4½" OD.
3. Conduits shall extend 2" maximum above finished surface of foundation and for Types 1-A, 1-C and 1-D shall be sloped toward handhole.
4. Anchor bolts shall be bonded to conduit or grounding conductor.
5. Conduit between standard and adjacent pull box shall be 2" minimum.
6. Paint numbers on roadway side facing traffic when electrolier or post is left of direction of traffic.

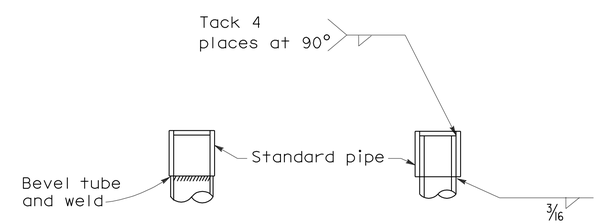

DETAIL J

Tube may be inserted into pipe or butted as required

STATE OF CALIFORNIA
DEPARTMENT OF TRANSPORTATION

ELECTRICAL SYSTEMS (SIGNAL AND LIGHTING STANDARD TYPE 1 STANDARD AND EQUIPMENT NUMBERING)

NO SCALE

RSP ES-7B DATED OCTOBER 5, 2007 SUPERCEDES STANDARD PLAN ES-7B DATED MAY 1, 2006 - PAGE 438 OF THE STANDARD PLANS BOOK DATED MAY 2006.

REVISED STANDARD PLAN RSP ES-7B

2006 REVISED STANDARD PLAN RSP ES-7B

7-10-07

DIST	COUNTY	ROUTE	POST MILES TOTAL PROJECT	SHEET NO.	TOTAL SHEETS
05	SCr	1	17.5/26.0	56	61

REGISTERED ELECTRICAL ENGINEER

January 20, 2012
PLANS APPROVAL DATE

REGISTERED PROFESSIONAL ENGINEER Jeffery G. McRae No. E14512 Exp. 6-30-12 ELECTRICAL STATE OF CALIFORNIA

The State of California or its officers or agents shall not be responsible for the accuracy or completeness of electronic copies of this plan sheet.

To accompany plans dated 2-21-12

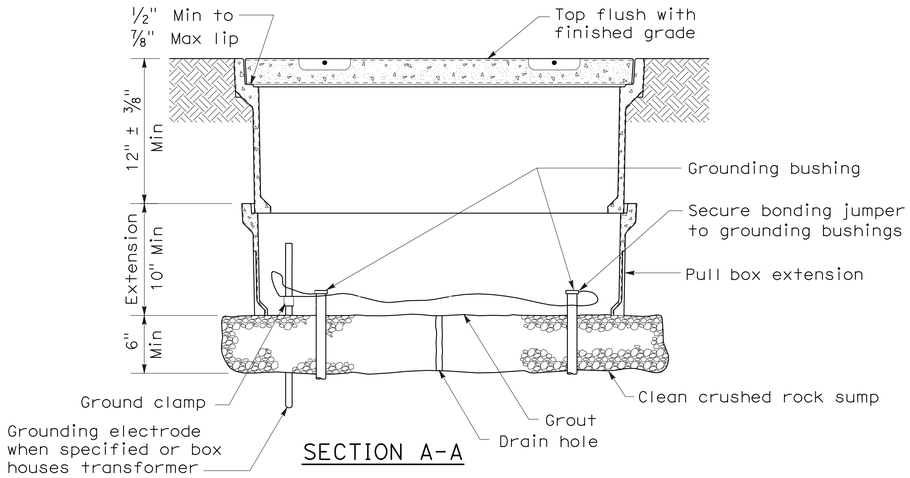

SECTION A-A

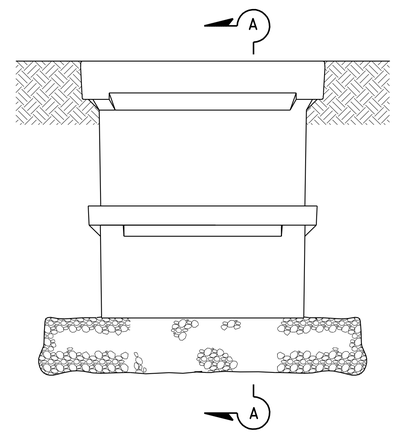

SIDE VIEW

INSTALLATION DETAILS

DETAIL A

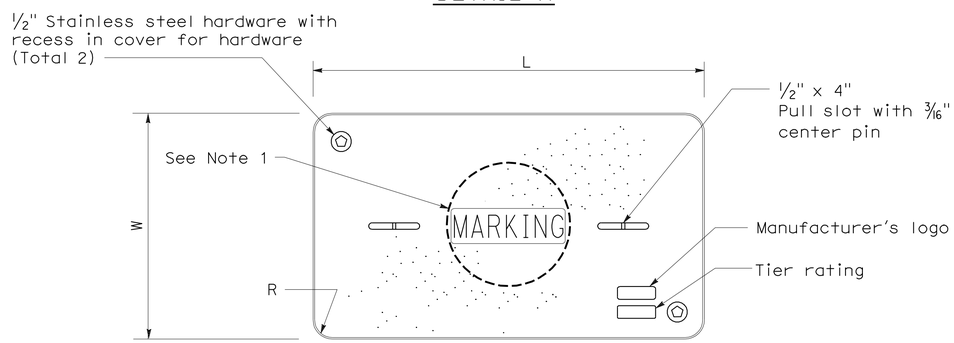

COVER TOP VIEW

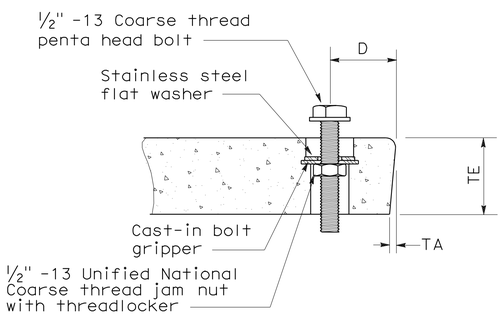

TYPICAL COVER CAPTIVE BOLT

(Or similar)

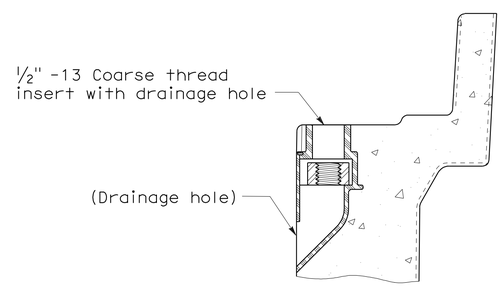

TYPICAL THREADED INSERT

(Or similar)

DIMENSION TABLE										
PULL BOX	PULL BOX			COVER						
	Minimum Depth Box	Minimum Depth Extension	Maximum Weight	L	W	R	TE	TA	D	Maximum Weight
No. 3 1/2	12"	N/A	40 lb	1' - 3 3/8"	10 1/8"	1 3/8"	2"	1/8"	1 3/4"	30 lb
No. 5	12"	10"	55 lb	1' - 11 1/4"	1' - 1 3/4"	1 3/8"	2"	1/8"	1 3/4"	60 lb
No. 6	12"	10"	70 lb	2' - 6 1/2"	1' - 5 1/2"	1 3/8"	2"	1/8"	2"	85 lb

NOTES ON PULL BOXES:

1. Pull box covers must be marked as follows: "SERVICE" Service circuits between service point and service disconnect; "SPRINKLER-CONTROL" sprinkler control circuits, 50 V or less; "CALTRANS" on all pull boxes, except pull boxes marked "SPRINKLER-CONTROL"; and "TELEPHONE" Telephone service;

   A) No. 3 1/2 pull box.
      1) "SIGNAL" - Traffic signal circuits with or without street or sign lighting circuits.
      2) "ST LIGHTING" - Street or sign lighting circuits where voltage is under 600 V.

   B) No. 5, 6, 9 or 9A pull box.
      1) "TRAFFIC SIGNAL" - Traffic signal circuits with or without street or sign lighting circuits.
      2) "STREET LIGHTING" - Street or sign lighting circuits where voltage is under 600 V.
      3) "STREET LIGHTING-HIGH VOLTAGE" - Street or sign lighting circuits where voltage is above 600 V.
      4) "IRRIGATION" - Circuits to irrigation controller 120 V or more.
      5) "RAMP METER" - Ramp meter circuits.
      6) "COUNT STATION" - Count or speed monitor circuits.
      7) "COMMUNICATIONS" - Communication circuits.
      8) "TOS COMMUNICATIONS" - TOS communication line.
      9) "TOS POWER" -TOS power.
      10) "TDC POWER" - Telephone demarcation cabinet power.
      11) "CCTV" - Closed circuit television circuits.
      12) "TMS" - Traffic monitoring station circuits.
      13) "CMS" - Changeable message sign circuits.
      14) "HAR" - Highway advisory radio circuits.

2. The nominal dimensions of the opening in which the cover sets must be the same as the cover dimensions (L and W) plus 1/8" or greater.

3. Covers and boxes must be interchangeable with California Standard. When interchanged with a standard, the top surfaces must be flush within 1/8". Top outside radius of covers and pull boxes must have a 1/8" radius.

4. Pull box extension may be another pull box as long as the bottom edge of the pull box can fit into the cover opening.

STATE OF CALIFORNIA
DEPARTMENT OF TRANSPORTATION

ELECTRICAL SYSTEMS (PULL BOX)

NO SCALE

NSP ES-8A DATED JANUARY 20, 2012 SUPPLEMENTS THE STANDARD PLANS BOOK DATED MAY 2006.

NEW STANDARD PLAN NSP ES-8A

2006 NEW STANDARD PLAN NSP ES-8A

9-28-11

DIST	COUNTY	ROUTE	POST MILES TOTAL PROJECT	SHEET No.	TOTAL SHEETS
05	SCr	1	17.5/26.0	57	61

REGISTERED CIVIL ENGINEER 9/28/11 DATE

2-21-12
PLANS APPROVAL DATE

REGISTERED PROFESSIONAL ENGINEER JOEL MAGAÑA No. C61500 Exp. 6/30/13 CIVIL STATE OF CALIFORNIA

The State of California or its officers or agents shall not be responsible for the accuracy or completeness of electronic copies of this plan sheet.

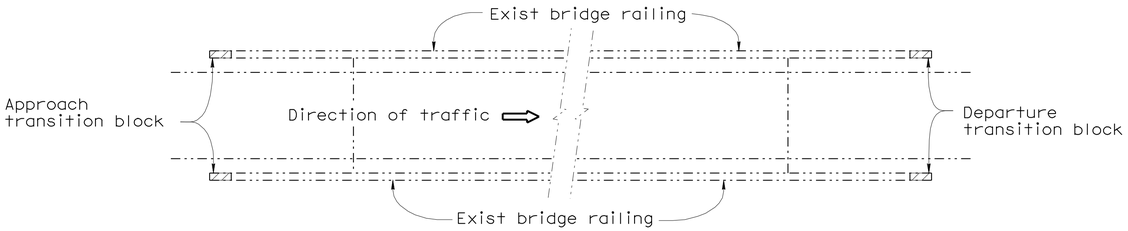

ONE WAY BRIDGES (PLAN A)

NO SCALE

Note:

For MBGR see ROADWAY PLANS

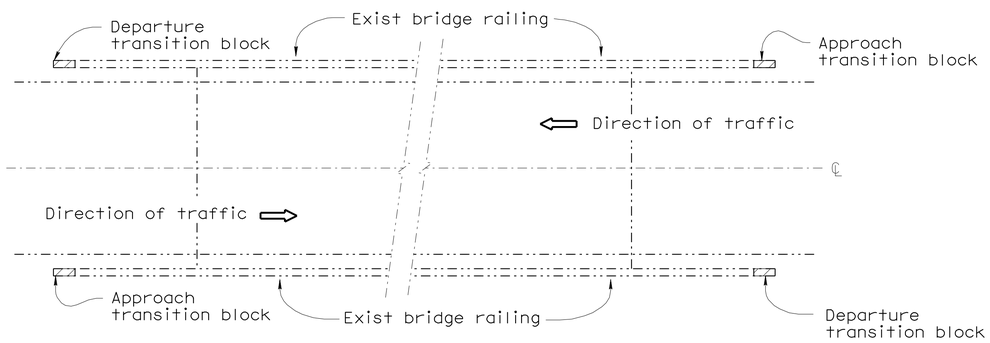

TWO WAY BRIDGES (PLAN B)

NO SCALE

INDEX TO PLANS

Sheet No.	Title
1.	TRANSITION BLOCKS GENERAL PLAN, INDEX
2.	TRANSITION BLOCK CONNECTIONS LOCATION PLAN
3.	CONCRETE BALUSTER (LOC 1) TRANSITION BLOCK DETAILS
4.	CONCRETE BALUSTER (LOC 2) TRANSITION BLOCK DETAILS
5.	HIGH STREET PEDESTRIAN O.C. (LOC 5) TRANSITION BLOCK DETAILS

STANDARD PLANS DATED MAY 2006

A10A	ACRONYMS AND ABBREVIATIONS (A-L)
A10B	ACRONYMS AND ABBREVIATIONS (M-Z)
A62C	LIMITS OF PAYMENT FOR EXCAVATION AND BACKFILL - BRIDGE
RSP A77J2	METAL BEAM GUARD RAILING CONNECTIONS TO BRIDGE RAILING DETAILS

TRANSITION BLOCKS — BRIDGE No. VARIOUS

QUANTITIES

STRUCTURE EXCAVATION (BRIDGE)	7 CY
STRUCTURE BACKFILL (BRIDGE)	4 CY
STRUCTURAL CONCRETE (BARRIER TRANSITION BLOCK)	7 CY
DRILL AND BOND DOWEL	15 LF
BAR REINFORCING STEEL (EPOXY COATED) (BRIDGE)	594 LB

LEGEND:

INDICATES EXISTING STRUCTURE

INDICATES NEW STRUCTURE

X
DESIGN ENGINEER

DESIGN	BY J MAGANA	CHECKED X N KANEPATHIPILLAI	LOAD & RESISTANCE FACTOR DESIGN — LIVE LOADING: HL93 W/"LOW-BOY"; PERMIT DESIGN VEHICLE
DETAILS	BY H NGUYEN	CHECKED X J MAGANA	LAYOUT — BY — CHECKED X
QUANTITIES	BY N KANEPATHIPILLAI	CHECKED X J MAGANA	SPECIFICATIONS — BY — PLANS AND SPECS COMPARED X

ORIGINAL SCALE IN INCHES FOR REDUCED PLANS 0 1 2 3

STATE OF CALIFORNIA
DEPARTMENT OF TRANSPORTATION

DIVISION OF ENGINEERING SERVICES
STRUCTURE DESIGN
SPECIAL DESIGN BRANCH B

BRIDGE NO. VARIES
POST MILE VARIES

TRANSITION BLOCKS GENERAL PLAN, INDEX

UNIT: 3625
PROJECT NUMBER & PHASE: 0500000203
CONTRACT NO.: 05-0M9701

DISREGARD PRINTS BEARING EARLIER REVISION DATES

REVISION DATES: ~~2/21/11~~ 9/27/11

SHEET 1 OF 5

STRUCTURES DESIGN GENERAL PLAN SHEET (ENGLISH) (REV.09-01-10)

FILE => index.dgn

USERNAME => s121614 DATE PLOTTED => 24-AUG-2012 TIME PLOTTED => 08:12

DIST	COUNTY	ROUTE	POST MILES TOTAL PROJECT	SHEET No.	TOTAL SHEETS
05	SCr	1	17.5/26.0	58	61

REGISTERED CIVIL ENGINEER 9/28/11 DATE

2-21-12
PLANS APPROVAL DATE

REGISTERED PROFESSIONAL ENGINEER JOEL MAGANA No. C61500 Exp. 6/30/13 CIVIL STATE OF CALIFORNIA

The State of California or its officers or agents shall not be responsible for the accuracy or completeness of electronic copies of this plan sheet.

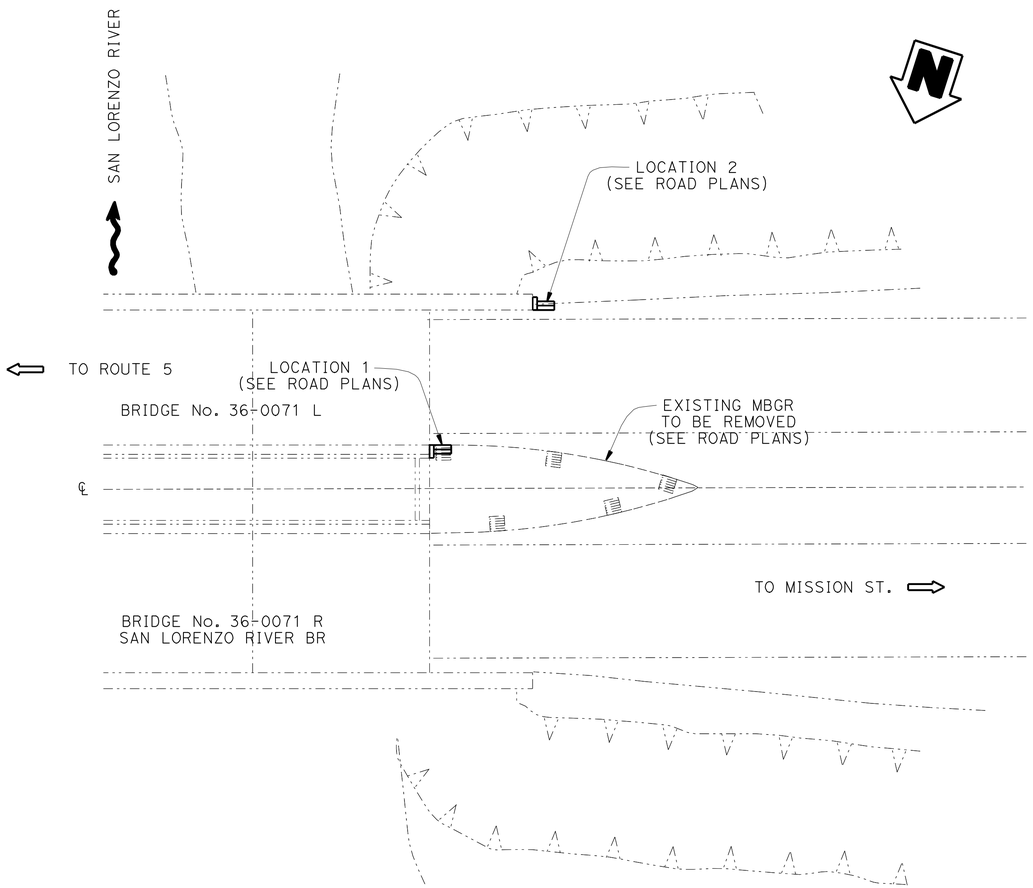

PLAN
No Scale

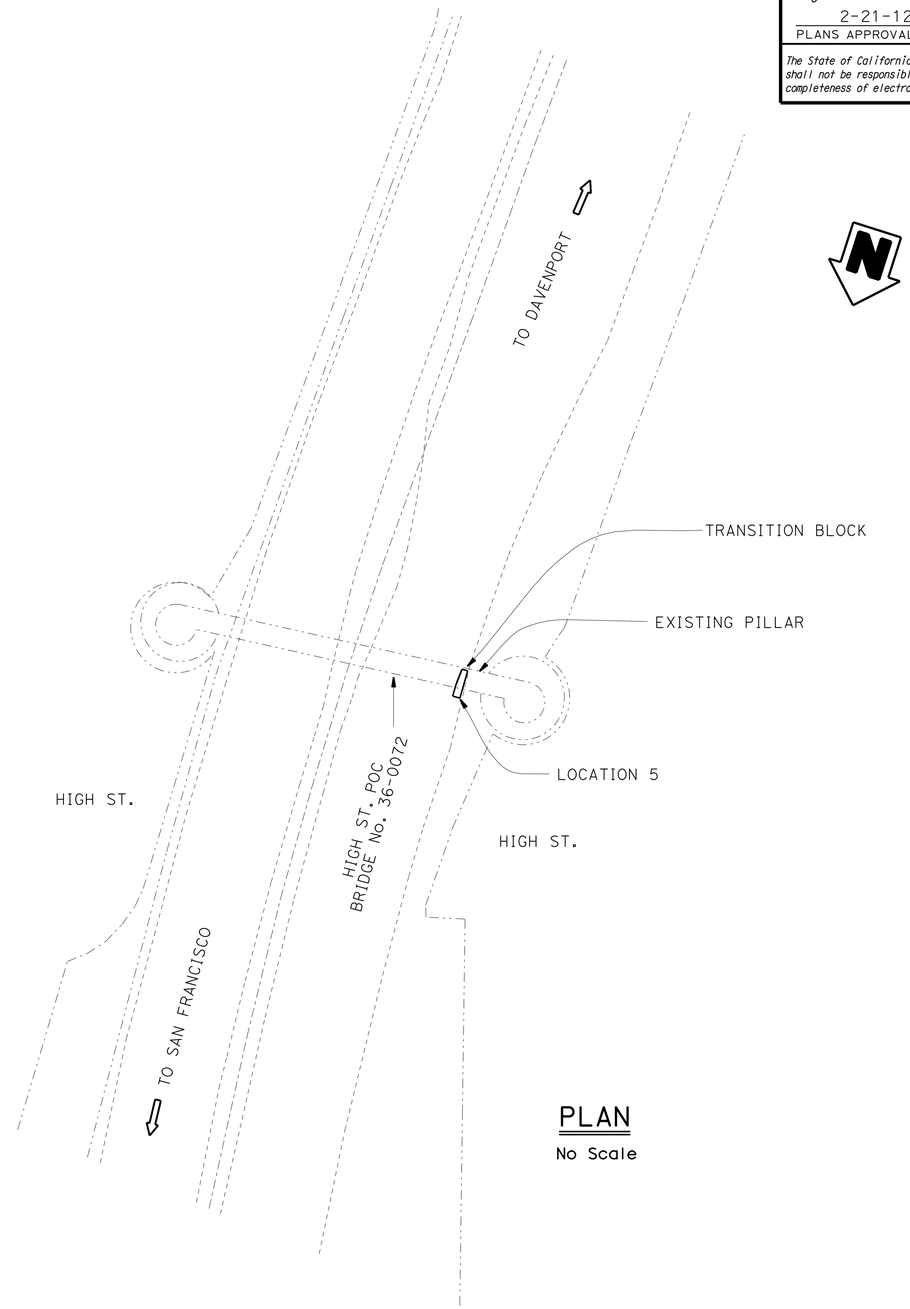

PLAN
No Scale

DESIGN	BY J MAGANA	CHECKED N KANEPATHIPILLAI	
DETAILS	BY H NGUYEN	CHECKED J MAGANA	
QUANTITIES	BY N KANEPATHIPILLAI	CHECKED J MAGANA	

STATE OF CALIFORNIA
DEPARTMENT OF TRANSPORTATION

DIVISION OF ENGINEERING SERVICES
STRUCTURE DESIGN
SPECIAL DESIGN BRANCH B

BRIDGE NO. VARIES
POST MILE VARIES

TRANSITION BLOCK CONNECTIONS
LOCATION PLAN

STRUCTURES DESIGN DETAIL SHEET (ENGLISH) (REV. 09-01-10)

ORIGINAL SCALE IN INCHES FOR REDUCED PLANS 0 1 2 3

UNIT: 3625
PROJECT NUMBER & PHASE: 0500000203
CONTRACT NO.: 05-0M9701

DISREGARD PRINTS BEARING EARLIER REVISION DATES

REVISION DATES: 2/27/11 9/27/11

SHEET 2 OF 5

FILE => location.dgn

USERNAME => s119571 DATE PLOTTED => 23-AUG-2012 TIME PLOTTED => 07:45

DIST	COUNTY	ROUTE	POST MILES TOTAL PROJECT	SHEET No.	TOTAL SHEETS
05	SCr	1	17.5/26.0	59	61

REGISTERED CIVIL ENGINEER 9/28/11 DATE

2-21-12
PLANS APPROVAL DATE

REGISTERED PROFESSIONAL ENGINEER JOEL MAGAÑA No. C61500 Exp. 6/30/13 CIVIL STATE OF CALIFORNIA

The State of California or its officers or agents shall not be responsible for the accuracy or completeness of electronic copies of this plan sheet.

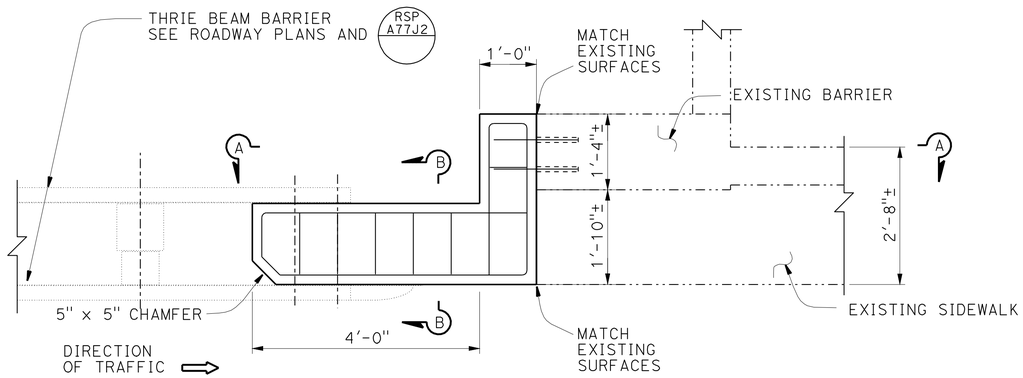

PLAN
3/4" = 1'-0"

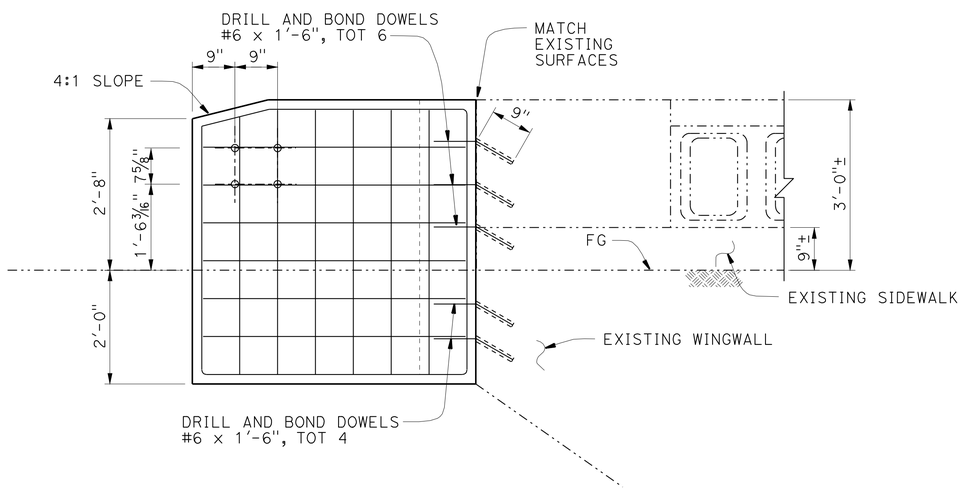

ELEVATION
3/4" = 1'-0"

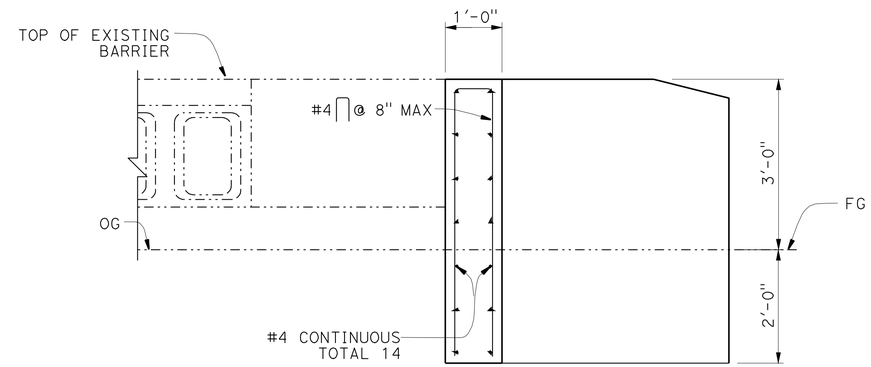

SECTION A-A
3/4" = 1'-0"

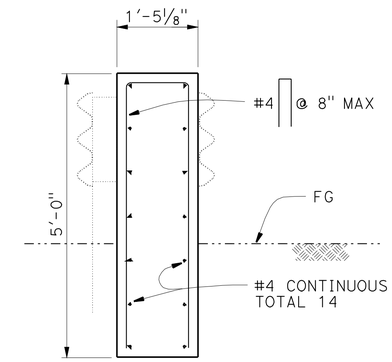

SECTION B-B
3/4" = 1'-0"

LOCATION TABLE

Bridge No.	Bridge Name	Route	Post Mile	Direction	Approach	Departure	Plan Type
36-0071L	San Lorenzo River	1	17.4	SB	1		B

NOTES:

1. See "General Plan" (GP) for identification of Plan Type.
2. For limits of excavation and backfill, see 2006 Standard Plans A62C, SECTION E-E.
3. See "ROADWAY PLANS" for site locations.
4. Minimum 2" cover, typical.
5. For details not shown, see STANDARD PLANS A77J4.
6. All reinforcement must be epoxy coated.

THE CONTRACTOR SHALL VERIFY ALL CONTROLLING FIELD DIMENSIONS BEFORE ORDERING OR FABRICATION ANY MATERIAL.

	BY	CHECKED
DESIGN	J MAGANA	X N KANEPATHIPILLAI
DETAILS	H NGUYEN	X J MAGANA
QUANTITIES	N KANEPATHIPILLAI	X J MAGANA

STATE OF CALIFORNIA
DEPARTMENT OF TRANSPORTATION

DIVISION OF ENGINEERING SERVICES
STRUCTURE DESIGN
SPECIAL DESIGN BRANCH B

BRIDGE NO. 36-0071L
POST MILE 17.41

CONCRETE BALUSTER (LOC 1)
TRANSITION BLOCK DETAILS

STRUCTURES DESIGN DETAIL SHEET (ENGLISH) (REV. 09-01-10)

ORIGINAL SCALE IN INCHES FOR REDUCED PLANS 0 1 2 3

UNIT: 3625
PROJECT NUMBER & PHASE: 0500000203
CONTRACT NO.: 05-0M9701

DISREGARD PRINTS BEARING EARLIER REVISION DATES

REVISION DATES 1/24/11 9/27/11

SHEET 3 OF 5

FILE => mgbr loc1.dgn

USERNAME => s119571 DATE PLOTTED => 23-AUG-2012 TIME PLOTTED => 07:46

DIST	COUNTY	ROUTE	POST MILES TOTAL PROJECT	SHEET No.	TOTAL SHEETS
05	SCr	1	17.5/26.0	60	61

REGISTERED CIVIL ENGINEER 9/28/11 DATE

2-21-12
PLANS APPROVAL DATE

REGISTERED PROFESSIONAL ENGINEER JOEL MAGAÑA No. C61500 Exp. 6/30/13 CIVIL STATE OF CALIFORNIA

The State of California or its officers or agents shall not be responsible for the accuracy or completeness of electronic copies of this plan sheet.

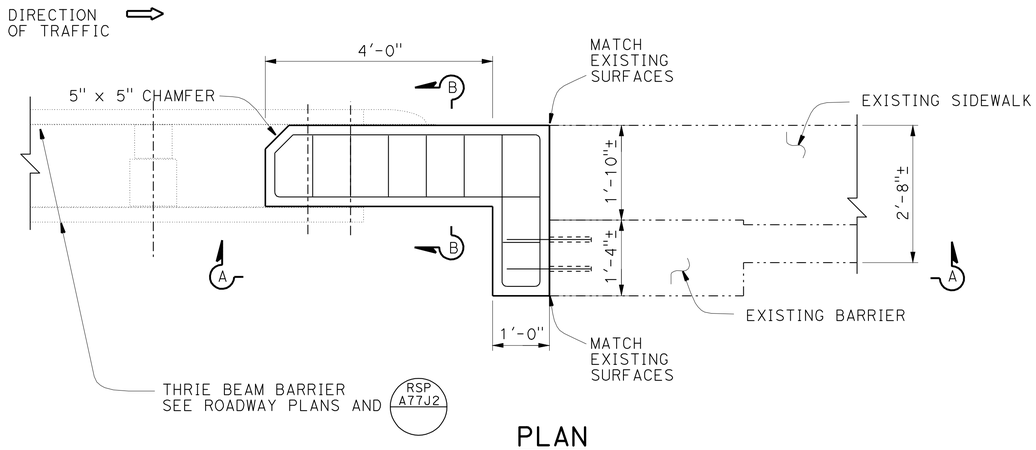

PLAN
¾" = 1'-0"

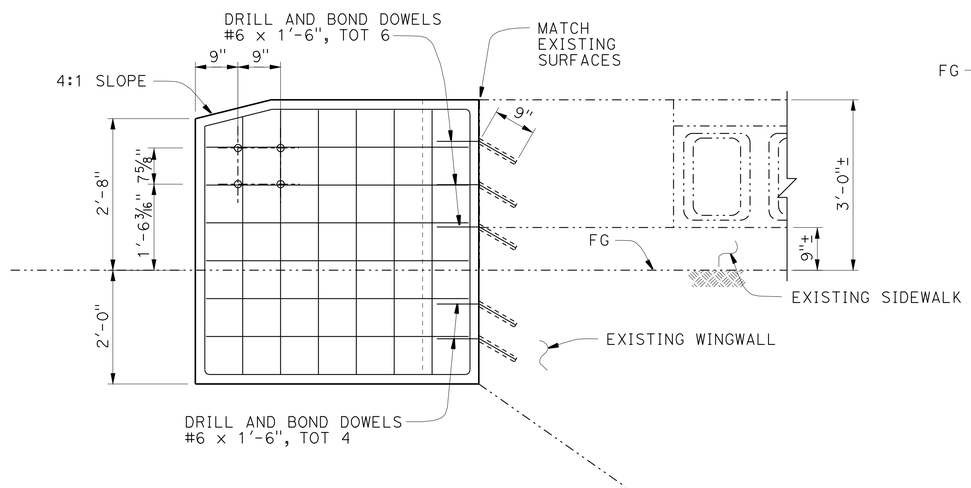

ELEVATION
¾" = 1'-0"

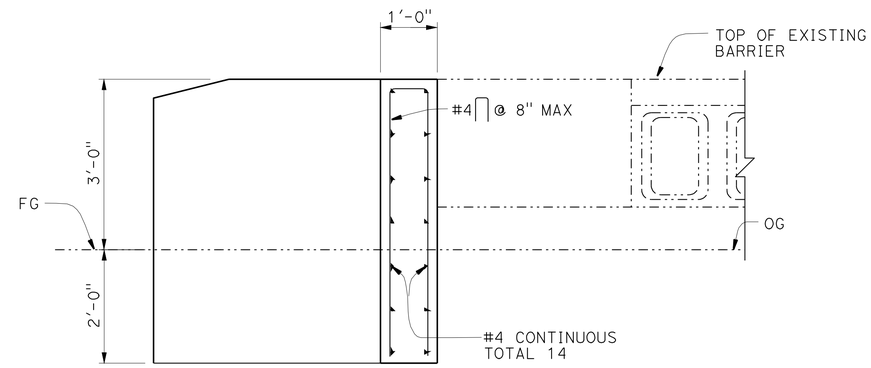

SECTION A-A
¾" = 1'-0"

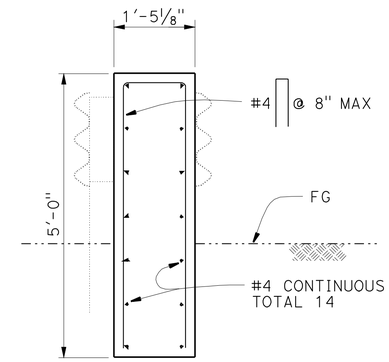

SECTION B-B
¾" = 1'-0"

LOCATION TABLE

Bridge No.	Bridge Name	Route	Post Mile	Direction	Approach	Departure	Plan Type
36-0071L	San Lorenzo River	1	17.4	SB	1		B

NOTES:

1. See "General Plan" (GP) for identification of Plan Type.
2. For limits of excavation and backfill, see 2006 Standard Plans A62C, SECTION E-E.
3. See "ROADWAY PLANS" for site locations.
4. Minimum 2" cover, typical.
5. For details not shown, see STANDARD PLANS A77J4.
6. All reinforcement must be epoxy coated.

THE CONTRACTOR SHALL VERIFY ALL CONTROLLING FIELD DIMENSIONS BEFORE ORDERING OR FABRICATION ANY MATERIAL.

	BY	CHECKED
DESIGN	J MAGANA	X N KANEPATHIPILLAI
DETAILS	H NGUYEN	X J MAGANA
QUANTITIES	N KANEPATHIPILLAI	X J MAGANA

STATE OF CALIFORNIA
DEPARTMENT OF TRANSPORTATION

DIVISION OF ENGINEERING SERVICES
STRUCTURE DESIGN
SPECIAL DESIGN BRANCH B

BRIDGE NO. 36-0071L
POST MILE 17.41

CONCRETE BALUSTER (LOC 2)
TRANSITION BLOCK DETAILS

STRUCTURES DESIGN DETAIL SHEET (ENGLISH) (REV. 09-01-10)

ORIGINAL SCALE IN INCHES FOR REDUCED PLANS 0 1 2 3

UNIT: 3625
PROJECT NUMBER & PHASE: 0500000203
CONTRACT NO.: 05-0M9701

DISREGARD PRINTS BEARING EARLIER REVISION DATES

REVISION DATES 3/27/11 9/27/11

SHEET 4 OF 5

FILE => mgbr loc2.dgn

USERNAME => s119571 DATE PLOTTED => 23-AUG-2012 TIME PLOTTED => 07:46

DIST	COUNTY	ROUTE	POST MILES TOTAL PROJECT	SHEET No.	TOTAL SHEETS
05	SCr	1	17.5/26.0	61	61

REGISTERED CIVIL ENGINEER 9/28/11 DATE

2-21-12
PLANS APPROVAL DATE

REGISTERED PROFESSIONAL ENGINEER JOEL MAGAÑA No. C61500 Exp. 6/30/13 CIVIL STATE OF CALIFORNIA

The State of California or its officers or agents shall not be responsible for the accuracy or completeness of electronic copies of this plan sheet.

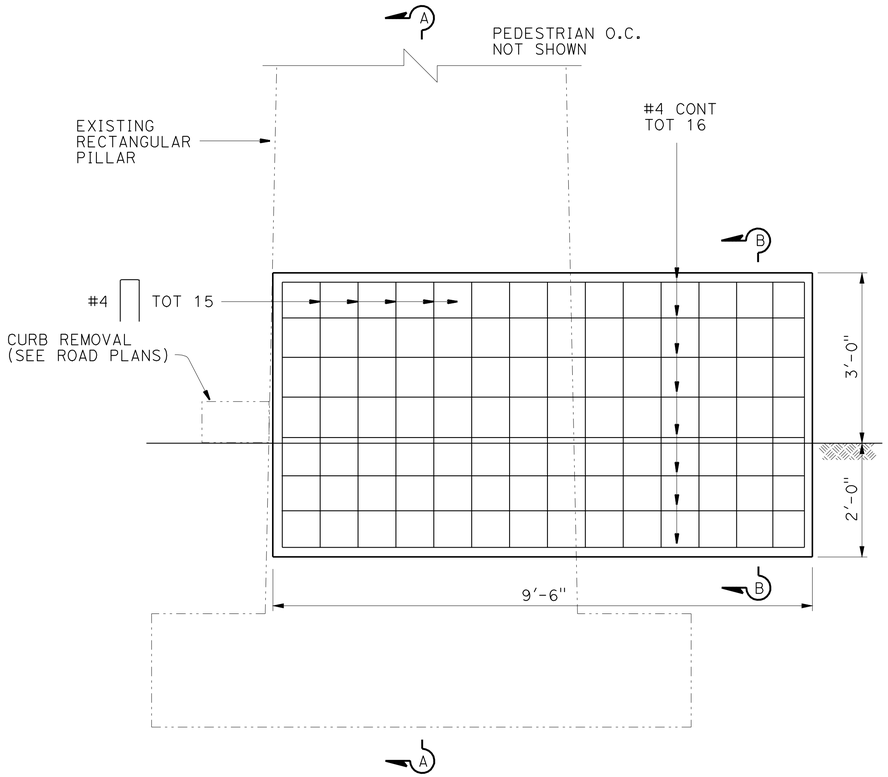

ELEVATION
¾" = 1'-0"

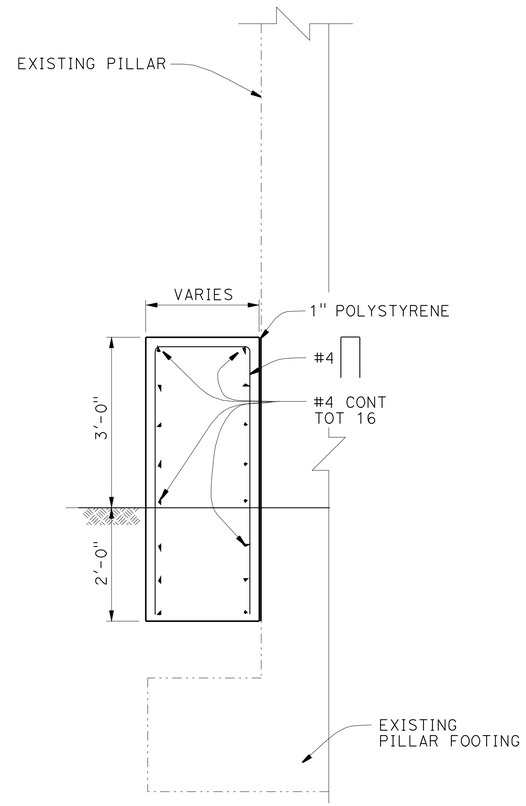

SECTION A-A
¾" = 1'-0"

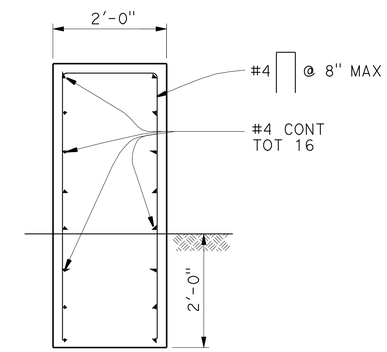

SECTION B-B
¾" = 1'-0"

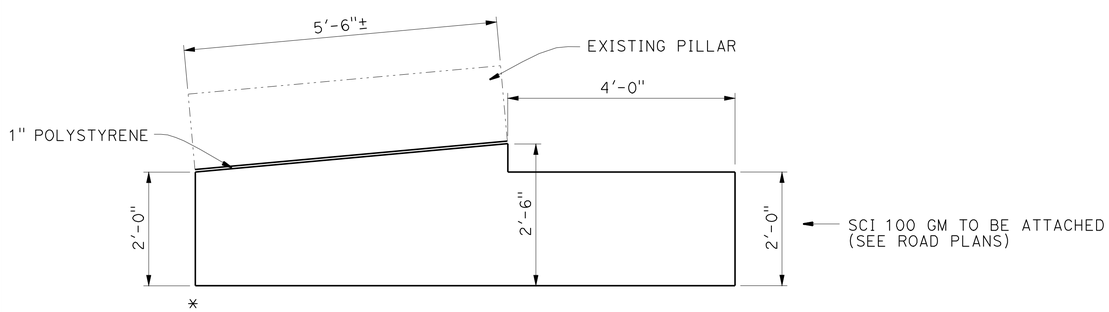

PLAN
¾" = 1'-0"

⇦ DIRECTION OF TRAFFIC

*CURB REMOVAL NOT SHOWN FOR CLARITY

NOTES:

1. For limits of excavation and backfill, see 2006 Standard Plans A62C, SECTION E-E.
2. See "ROADWAY PLANS" for site locations.
3. Minimum 2" cover, typical.
4. All reinforcement must be epoxy coated.

	BY	CHECKED
DESIGN	N KANEPATHIPILLAI	J MAGANA
DETAILS	H NGUYEN	N KANEPATHIPILLAI
QUANTITIES	N KANEPATHIPILLAI	J MAGANA

STATE OF CALIFORNIA
DEPARTMENT OF TRANSPORTATION

DIVISION OF ENGINEERING SERVICES
STRUCTURE DESIGN
SPECIAL DESIGN BRANCH B

BRIDGE NO. 36-0072
POST MILE 18.2

HIGH STREET PEDESTRIAN O.C. (LOC 5)
TRANSITION BLOCK DETAILS

STRUCTURES DESIGN DETAIL SHEET (ENGLISH) (REV. 09-01-10)

ORIGINAL SCALE IN INCHES FOR REDUCED PLANS 0 1 2 3

UNIT: 3625
PROJECT NUMBER & PHASE: 0500000203
CONTRACT NO.: 05-0M9701

DISREGARD PRINTS BEARING EARLIER REVISION DATES → ~~1/27/11~~ ~~1/31/11~~ 9/21/11

SHEET 5 OF 5

FILE => nanbl det01.dgn

USERNAME => s119571 DATE PLOTTED => 23-AUG-2012 TIME PLOTTED => 07:46