Dist	COUNTY	ROUTE	POST MILES TOTAL PROJECT	SHEET No.	TOTAL SHEETS
04	SM	84	21.6	31	100

Rodrigo Puente 2/5/15
REGISTERED CIVIL ENGINEER DATE

6-1-15
PLANS APPROVAL DATE

REGISTERED PROFESSIONAL ENGINEER Rodrigo Puente No. 58612 Exp. 12-31-16 CIVIL STATE OF CALIFORNIA

THE STATE OF CALIFORNIA OR ITS OFFICERS OR AGENTS SHALL NOT BE RESPONSIBLE FOR THE ACCURACY OR COMPLETENESS OF SCANNED COPIES OF THIS PLAN SHEET.

ROADWAY QUANTITIES

ASPHALT BINDER (GEOSYNTHETIC 1

STATION	COLD PLANE ASPHALT CONCRETE PAVEMENT	HOT MIX ASPHALT (TYPE A)	TACK COAT	~~PAVING ASPHALT (BINDER GEOSYNTHETIC~~ PAVEMENT INTERLAYER)	GEOSYNTHETIC PAVEMENT INTERLATER (PAVING GRID)
	SQYD	TON			SQYD
"WR" 15+90 TO 22+10	1918				
"WR" 14+92 TO 22+10		557.6	0.7	1.7	1615
SUBTOTAL FROM DIKE		2.3			
TOTAL	1918	559.9	0.7	1.7	1615

EARTHWORK

STATION	ROADWAY EXCAVATION	EMBANKMENT (N)
	CY	
"WR" 14+92 TO 22+10	927.4	24
TOTAL	927.4	24

(N) NOT A SEPARATE PAY ITEM, FOR INFORMATION ONLY

PLACE HOT MIX ASPHALT DIKE

STATION	TYPE C (N)		TYPE F (N)	
	LF	TON	LF	TON
Lt "WR" 14+92 TO 16+09			117	1.6
Lt "WR" 21+30 TO 22+10	83	0.7		
TOTAL	83	0.7	117	1.6

(N) NOT A SEPARATE PAY ITEM, FOR INFORMATION ONLY

MIDWEST GUARDRAIL SYSTEM (WOOD POST)

STATION	MGS	MGS TRANSITION (N)
	LF	
Lt "WR" 14+88.8 TO 16+09	121	28.1

(N) NOT A SEPARATE PAY ITEM, FOR INFORMATION ONLY

CHAIN LINK FENCE (TYPE CL-6)

STATION	LF
Lt "WR" 19+81.53 TO 20+74.34	93

CONCRETE BARRIER (TYPE 60)

STATION	LF
Lt "WR" 20+80 TO 21+30	49

ALTERNATIVE CRASH CUSHION

STATION	EA
Lt "WR" 21+30	1

VEGETATION CONTROL (MINOR CONCRETE)

SHEET No.	STATION	LF
L-1	Lt "WR" 14+88.8 TO 16+09	56
TOTAL		56

REMOVE CHAIN LINK FENCE

STATION	LF
Lt "WR" 19+81.53 TO 20+97.1	117

REMOVE ASPHALT CONCRETE DIKE

STATION	LF
Lt "WR" 14+92 TO 16+09	117
Lt "WR" 20+80 TO 22+10	128
TOTAL	245

REMOVE GUARDRAIL

STATION	LF
"WR" 14+88.8 TO 20+91	590

1 **REPLACED PER ADDENDUM No. 1 DATED OCTOBER 14, 2015**

SUMMARY OF QUANTITIES

Q-1

STATE OF CALIFORNIA - DEPARTMENT OF TRANSPORTATION
Caltrans DESIGN

FUNCTIONAL SUPERVISOR: JAIME GUITERREZ
CALCULATED-DESIGNED BY: RODRIGO PUENTE
CHECKED BY: RAFAEL RAVELO
REVISED BY: RP
DATE REVISED: 2/4/15

LAST REVISION 02-05-15
DATE PLOTTED => 12-OCT-2015
TIME PLOTTED => 12:28

DIST	COUNTY	ROUTE	POST MILES TOTAL PROJECT	SHEET No.	TOTAL SHEETS
04	SM	84	21.6	84	100

REGISTERED CIVIL ENGINEER — DATE 02-25-15

6-1-15
PLANS APPROVAL DATE

REGISTERED PROFESSIONAL ENGINEER — Philip E. Lutz No. C55839 Exp. 12-31-16 CIVIL — STATE OF CALIFORNIA

The State of California or its officers or agents shall not be responsible for the accuracy or completeness of scanned copies of this plan sheet.

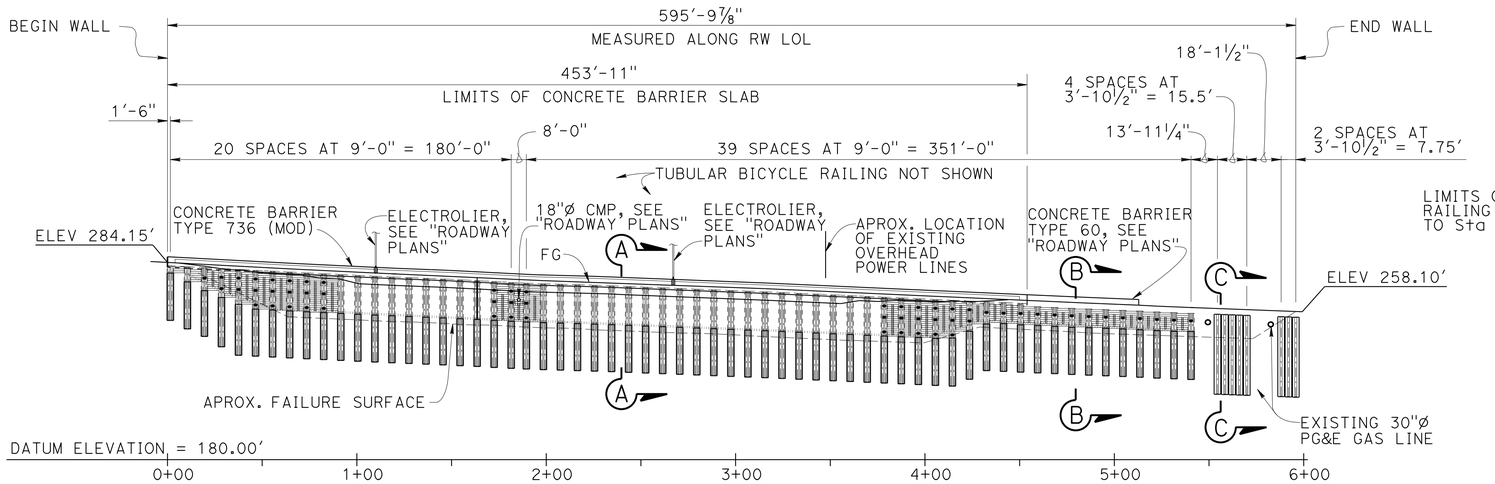

MIRRORED DEVELOPED ELEVATION

1" = 40'

NOTE:
TIMBER LAGGING NOT ALL SHOWN.

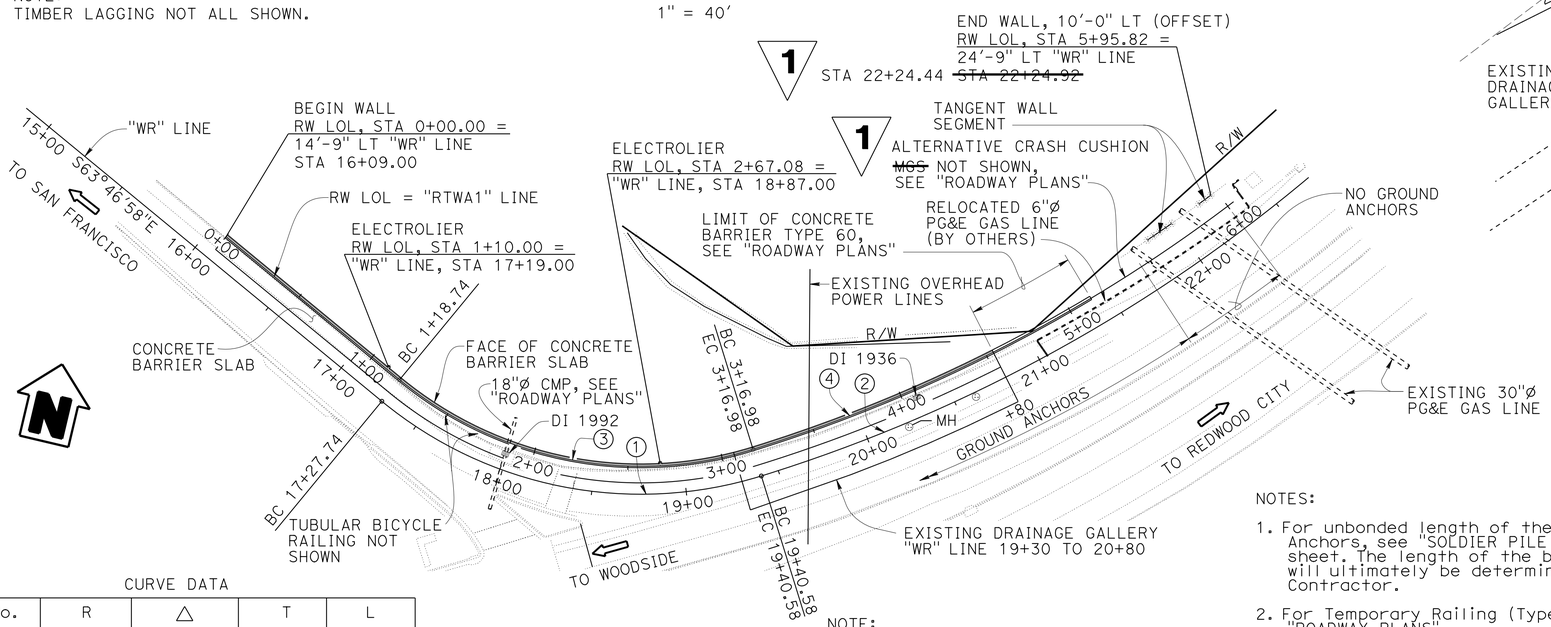

PLAN

1" = 40'

CURVE DATA

No.	R	△	T	L
1	215.00'	56°43'13"	116.06'	212.84'
2	834.00'	31°33'44"	235.70'	459.42'
3	200.25'	56°43'13"	118.09'	198.24'
4	819.25'	31°33'44"	231.53'	451.30'

NOTE:
Multiple existing utilities which are not shown are located within the limits of the wall. All utilities not shown are to be relocated. See "ROADWAY PLANS" for utility relocations.

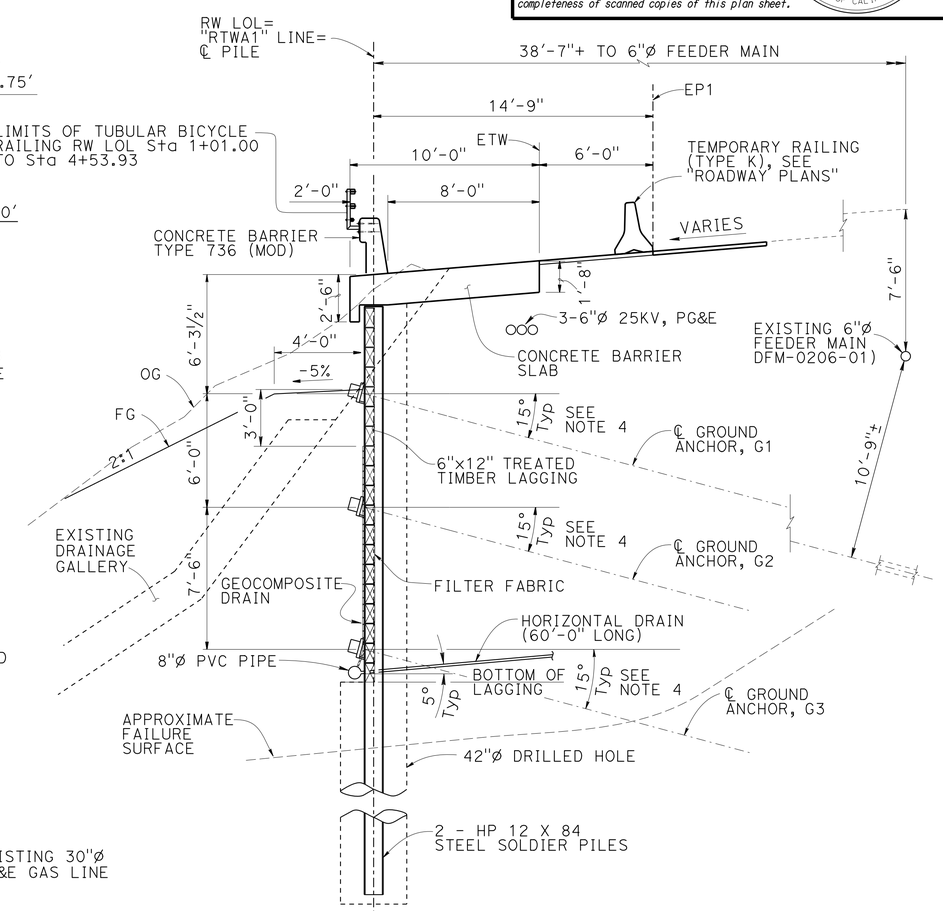

TYPICAL SECTION (SECTION A-A)

¼" = 1'-0"

NOTES:

1. For unbonded length of the Ground Anchors, see "SOLDIER PILE DATA TABLE" sheet. The length of the bonded zone will ultimately be determined by the Contractor.
2. For Temporary Railing (Type K), see "ROADWAY PLANS".
3. For "SECTION B-B", "SECTION C-C", AND Quantities see "GENERAL PLAN NO. 2" sheet.
4. For piles #45 and #61, Ground anchor angle = 20°.

1 REPLACED PER ADDENDUM No. 1 DATED OCTOBER 14, 2015

Gordon Danke
DESIGN ENGINEER

	BY	CHECKED
DESIGN	P. Lutz	R. Candiotti
DETAILS	P. Lutz / C. Cancino	R. Candiotti
QUANTITIES	P. Lutz	R. Candiotti

LOAD & RESISTANCE FACTOR DESIGN — LIVE LOADING: HL93 W/"LOW-BOY"; PERMIT DESIGN VEHICLE

	BY	CHECKED
LAYOUT	P. Lutz	R. Candiotti
SPECIFICATIONS	T. Chen	PLANS AND SPECS COMPARED P. Lutz

STATE OF CALIFORNIA
DEPARTMENT OF TRANSPORTATION

DIVISION OF ENGINEERING SERVICES
STRUCTURE DESIGN
DESIGN BRANCH 9

BRIDGE NO. 35E0047
POST MILE 21.6

WOODSIDE II RETAINING WALL
GENERAL PLAN NO. 1

ORIGINAL SCALE IN INCHES FOR REDUCED PLANS 0 1 2 3

UNIT: 3594
PROJECT NUMBER & PHASE: 0412000622 1 CONTRACT NO.: 04-4G6404

DISREGARD PRINTS BEARING EARLIER REVISION DATES → 01-05-14 04-24-15 01-09-15

SHEET 1 OF 17

STRUCTURES DESIGN GENERAL PLAN SHEET (ENGLISH) (REV.09-01-10)

FILE => 35e0047-a-gp01.add

USERNAME => s114360 DATE PLOTTED => 12-OCT-2015 TIME PLOTTED => 12:28

DIST	COUNTY	ROUTE	POST MILES TOTAL PROJECT	SHEET No	TOTAL SHEETS
04	SM	84	21.6	90	100

REGISTERED CIVIL ENGINEER 02-25-15 DATE

6-1-15
PLANS APPROVAL DATE

REGISTERED PROFESSIONAL ENGINEER Philip E. Lutz No. C55839 Exp. 12-31-16 CIVIL STATE OF CALIFORNIA

The State of California or its officers or agents shall not be responsible for the accuracy or completeness of electronic copies of this plan sheet.

To get to the Caltrans web site, go to: http://www.dot.ca.gov

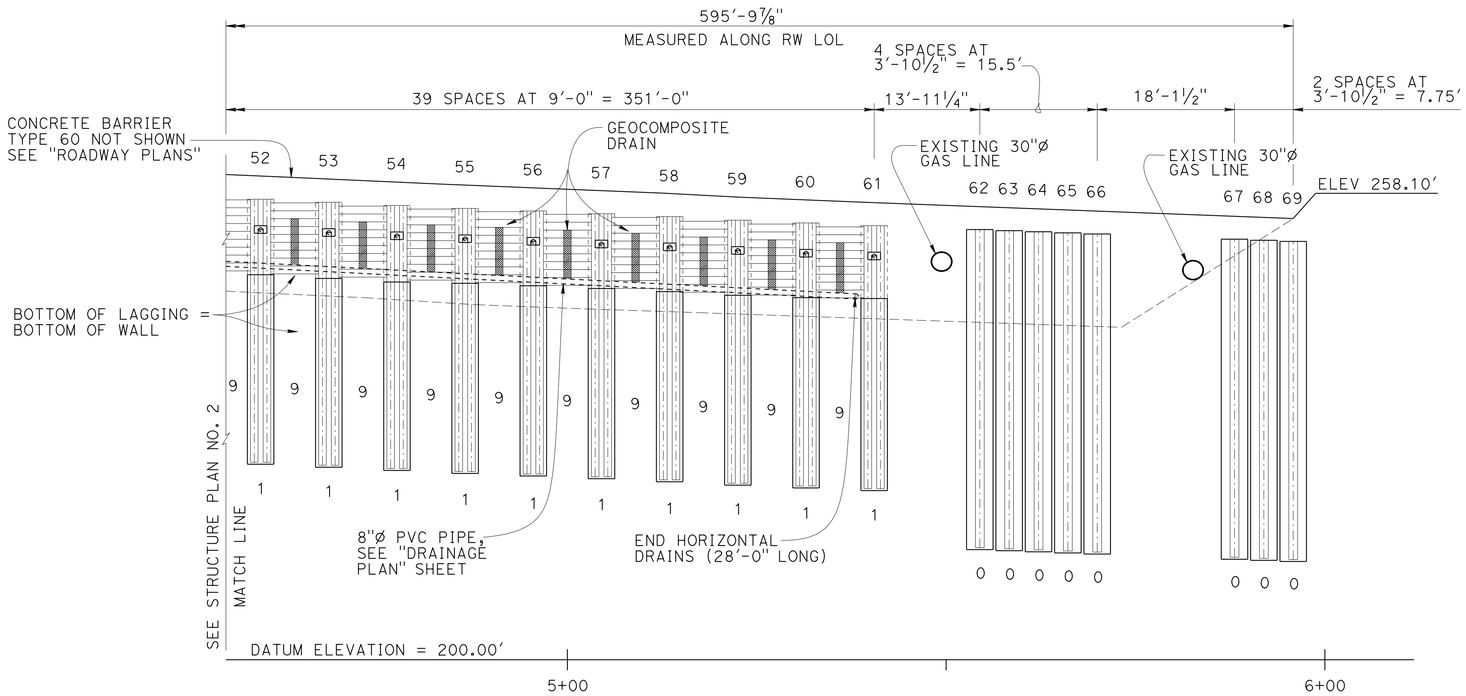

MIRRORED DEVELOPED ELEVATION

1" = 10'

NOTES:

1. For horizontal drains, see "DRAINAGE PLAN" sheet.
2. For pile length, pile size and pile type and other data not shown, see "PILE DATA TABLE" at "SOLDIER PILE DATA TABLE" sheet.

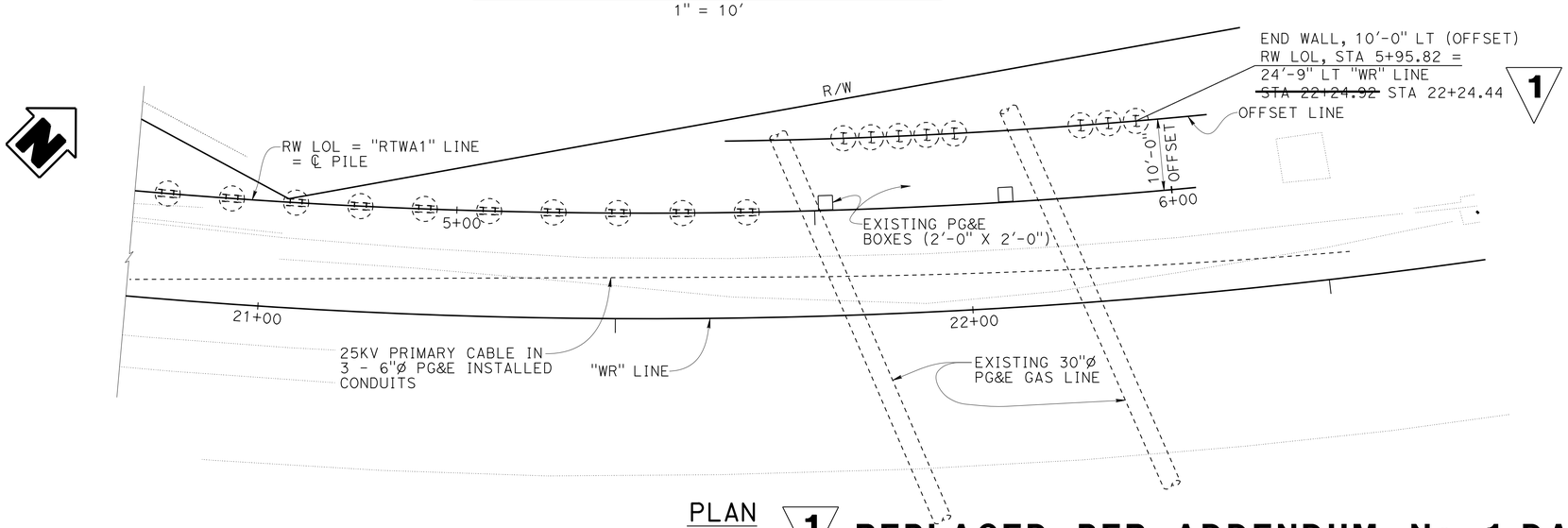

PLAN

1" = 10'

1 **REPLACED PER ADDENDUM No. 1 DATED OCTOBER 14, 2015**

DESIGN	BY P. Lutz	CHECKED R. Candiotti	
DETAILS	BY P. Lutz / C. Cancino	CHECKED R. Candiotti	
QUANTITIES	BY P. Lutz	CHECKED R. Candiotti	

STATE OF CALIFORNIA
DEPARTMENT OF TRANSPORTATION

DIVISION OF ENGINEERING SERVICES
STRUCTURE DESIGN
DESIGN BRANCH 9

BRIDGE NO. 35E0047
POST MILE 21.6

WOODSIDE II RETAINING WALL
STRUCTURE PLAN NO. 3

STRUCTURES DESIGN DETAIL SHEET (ENGLISH) (REV. 10/25/05)

ORIGINAL SCALE IN INCHES FOR REDUCED PLANS 0 1 2 3

UNIT: 3594
PROJECT NUMBER & PHASE: 0412000622 1
CONTRACT NO.: 04-4G6404

DISREGARD PRINTS BEARING EARLIER REVISION DATES

REVISION DATES: ~~05-09-14~~ 04-16-15 ~~12-14-14~~

SHEET 7 OF 17

FILE => 35e0047-c-strplan03.add

USERNAME => s114360 DATE PLOTTED => 12-OCT-2015 TIME PLOTTED => 12:28

DIST	COUNTY	ROUTE	POST MILES TOTAL PROJECT	SHEET No	TOTAL SHEETS
04	SM	84	21.6	95	100

REGISTERED CIVIL ENGINEER 02-25-15 DATE

6-1-15
PLANS APPROVAL DATE

REGISTERED PROFESSIONAL ENGINEER Philip E. Lutz No. C55839 Exp. 12-31-16 CIVIL STATE OF CALIFORNIA

The State of California or its officers or agents shall not be responsible for the accuracy or completeness of electronic copies of this plan sheet.

To get to the Caltrans web site, go to: http://www.dot.ca.gov

NOTES:
1. Timber lagging not all shown.
2. Filter fabric and geocomposite drain not all shown.
3. For "SECTION D-D", see "DRAINAGE DETAIL" on "WALL DETAILS NO. 3" sheet.

1 **REPLACED PER ADDENDUM No. 1 DATED OCTOBER 14, 2015**

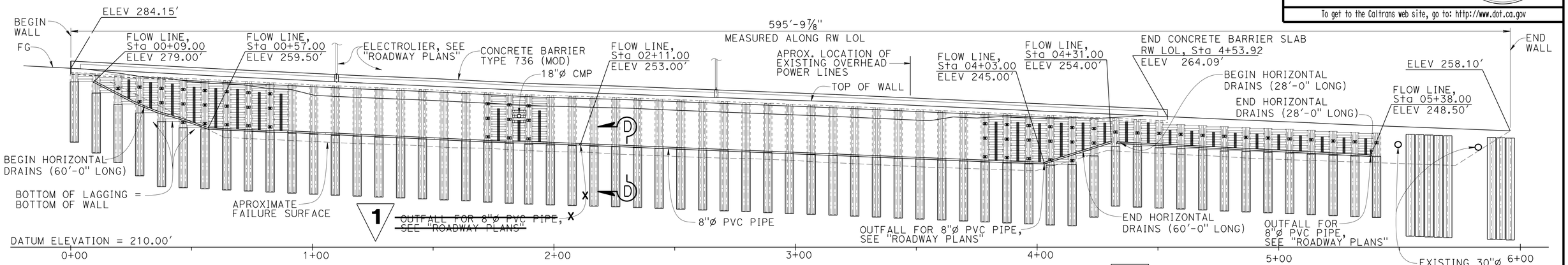

MIRRORED DEVELOPED ELEVATION

1" = 20'

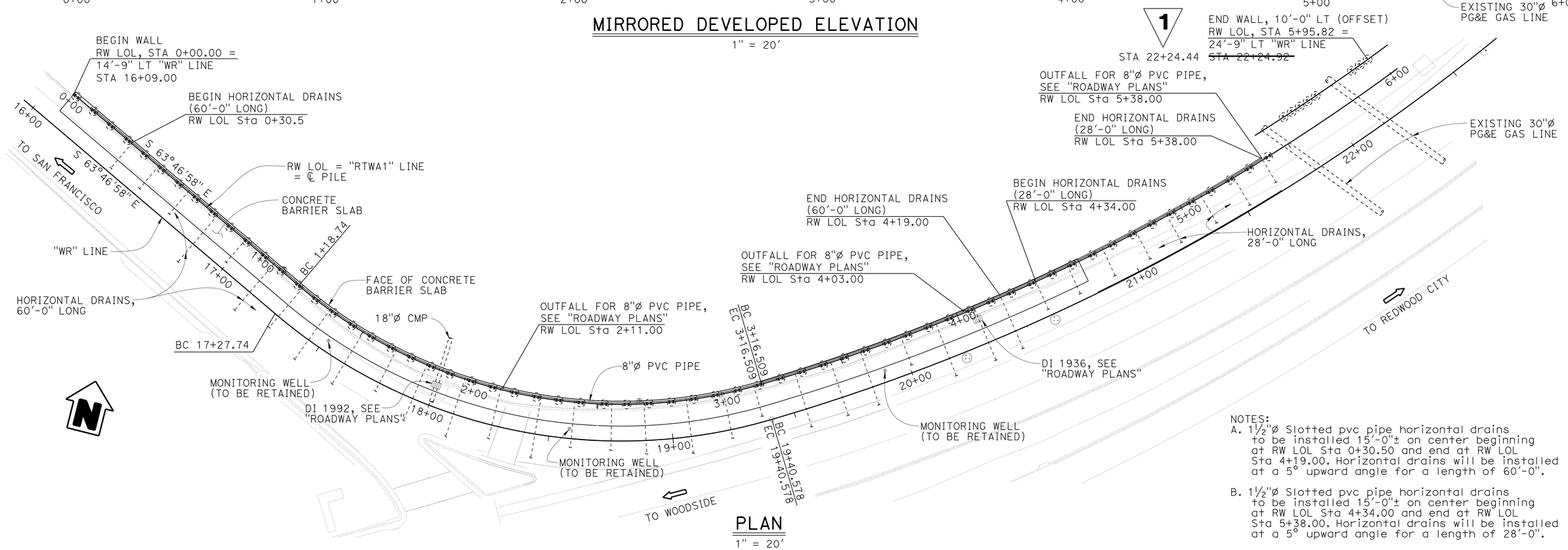

PLAN

1" = 20'

NOTES:

A. 1½"Ø Slotted pvc pipe horizontal drains to be installed 15'-0"± on center beginning at RW LOL Sta 0+30.50 and end at RW LOL Sta 4+19.00. Horizontal drains will be installed at a 5° upward angle for a length of 60'-0".

B. 1½"Ø Slotted pvc pipe horizontal drains to be installed 15'-0"± on center beginning at RW LOL Sta 4+34.00 and end at RW LOL Sta 5+38.00. Horizontal drains will be installed at a 5° upward angle for a length of 28'-0".

	BY	CHECKED
DESIGN	P. Lutz	R. Candiotti
DETAILS	P. Lutz / C. Cancino	R. Candiotti
QUANTITIES	P. Lutz	R. Candiotti

STATE OF CALIFORNIA
DEPARTMENT OF TRANSPORTATION

DIVISION OF ENGINEERING SERVICES
STRUCTURE DESIGN
DESIGN BRANCH 9

BRIDGE NO. 35E0047
POST MILE 21.6

WOODSIDE II RETAINING WALL
DRAINAGE PLAN

STRUCTURES DESIGN DETAIL SHEET (ENGLISH) (REV. 10/25/05)

ORIGINAL SCALE IN INCHES FOR REDUCED PLANS 0 1 2 3

UNIT: 3594
PROJECT NUMBER & PHASE: 0412000622 1
CONTRACT NO.: 04-4G6404

DISREGARD PRINTS BEARING EARLIER REVISION DATES

REVISION DATES: ~~08-18-14~~ 12-02-14 ~~09-15-14~~

SHEET 12 OF 17

FILE => 35e0047-g-drain01.add

USERNAME => s14360 DATE PLOTTED => 12-OCT-2015 TIME PLOTTED => 12:28