Dist	COUNTY	ROUTE	POST MILES TOTAL PROJECT	SHEET No.	TOTAL SHEETS
04	SF	280	R5.2/R6.0	1	51

STATE OF CALIFORNIA

DEPARTMENT OF TRANSPORTATION

NHPI-280-1(136)E

PROJECT PLANS FOR CONSTRUCTION ON

STATE HIGHWAY

IN THE CITY AND COUNTY OF SAN FRANCISCO AT VARIOUS LOCATIONS

INDEX OF PLANS

SHEET No.	DESCRIPTION
1	TITLE AND LOCATION MAP
2-5	LAYOUTS
6	EROSION CONTROL PLAN, DETAILS AND QUANTITIES
7-9	UTILITY PLANS, DETAILS AND QUANTITIES
10-17	CONSTRUCTION AREA SIGNS
18-20	TRAFFIC HANDLING PLANS, DETAILS AND QUANTITIES
21-24	PAVEMENT DELINEATION PLANS, DETAILS AND QUANTITIES
25	SUMMARY OF QUANTITIES
26-30	REVISED STANDARD PLANS

STRUCTURE PLANS

31-51	SOUTHERN FREEWAY VIADUCT (RECONSTRUCT HINGES) Br No. 34-0046

THE STANDARD PLANS LIST APPLICABLE TO THIS CONTRACT IS INCLUDED IN THE NOTICE TO BIDDERS AND SPECIAL PROVISIONS BOOK.

TO BE SUPPLEMENTED BY STANDARD PLANS DATED 2010

LOCATION MAP

End Work
Sta 480+50

LOCATION OF CONSTRUCTION
Br No. 34-0046 PM R5.3

SAN FRANCISCO

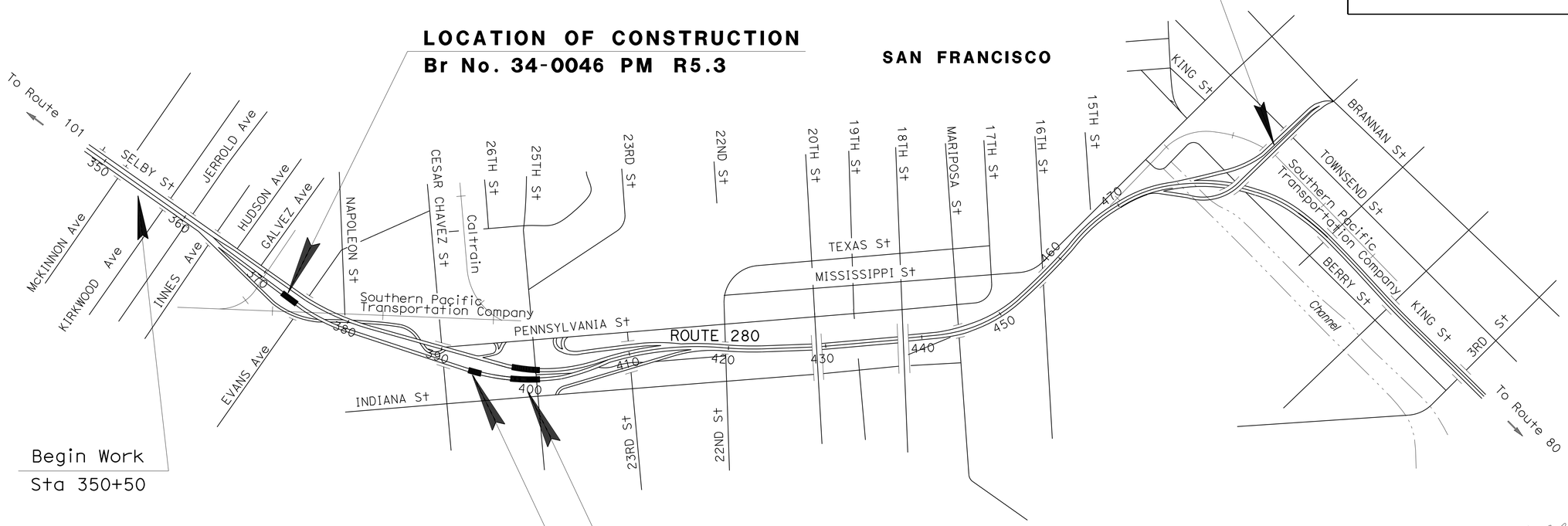

Begin Work
Sta 350+50

LOCATION OF CONSTRUCTION
Br No. 34-0046 PM R5.6

LOCATION OF CONSTRUCTION
Br No. 34-0046 PM R5.8

NO SCALE

PROJECT ENGINEER REGISTERED CIVIL ENGINEER — DATE 3-26-13

REGISTERED PROFESSIONAL ENGINEER — Hossein Khodabakhsh — No. 71650 — Exp. 12-31-13 — CIVIL — STATE OF CALIFORNIA

June 24, 2013
PLANS APPROVAL DATE

THE STATE OF CALIFORNIA OR ITS OFFICERS OR AGENTS SHALL NOT BE RESPONSIBLE FOR THE ACCURACY OR COMPLETENESS OF SCANNED COPIES OF THIS PLAN SHEET.

PROJECT MANAGER: JOON KANG
DESIGN MANAGER: AMIR SANATKAR

THE CONTRACTOR SHALL POSSESS THE CLASS (OR CLASSES) OF LICENSE AS SPECIFIED IN THE "NOTICE TO BIDDERS."

CONTRACT No.	04-4A5104
PROJECT ID	0400001138

LAST REVISION 05-21-13 — DATE PLOTTED => 07-AUG-2013 — TIME PLOTTED => 05:59

Dist	COUNTY	ROUTE	POST MILES TOTAL PROJECT	SHEET No.	TOTAL SHEETS
04	SF	280	R5.2/R6.0	2	51

REGISTERED CIVIL ENGINEER 5-24-13 DATE

6-24-13
PLANS APPROVAL DATE

REGISTERED PROFESSIONAL ENGINEER
Hossein Khodabakhsh
No. 71650
Exp. 12-31-13
CIVIL
STATE OF CALIFORNIA

THE STATE OF CALIFORNIA OR ITS OFFICERS OR AGENTS SHALL NOT BE RESPONSIBLE FOR THE ACCURACY OR COMPLETENESS OF SCANNED COPIES OF THIS PLAN SHEET.

NOTE:

FOR ACCURATE RIGHT OF WAY DATA, CONTACT RIGHT OF WAY ENGINEERING AT THE DISTRICT OFFICE.

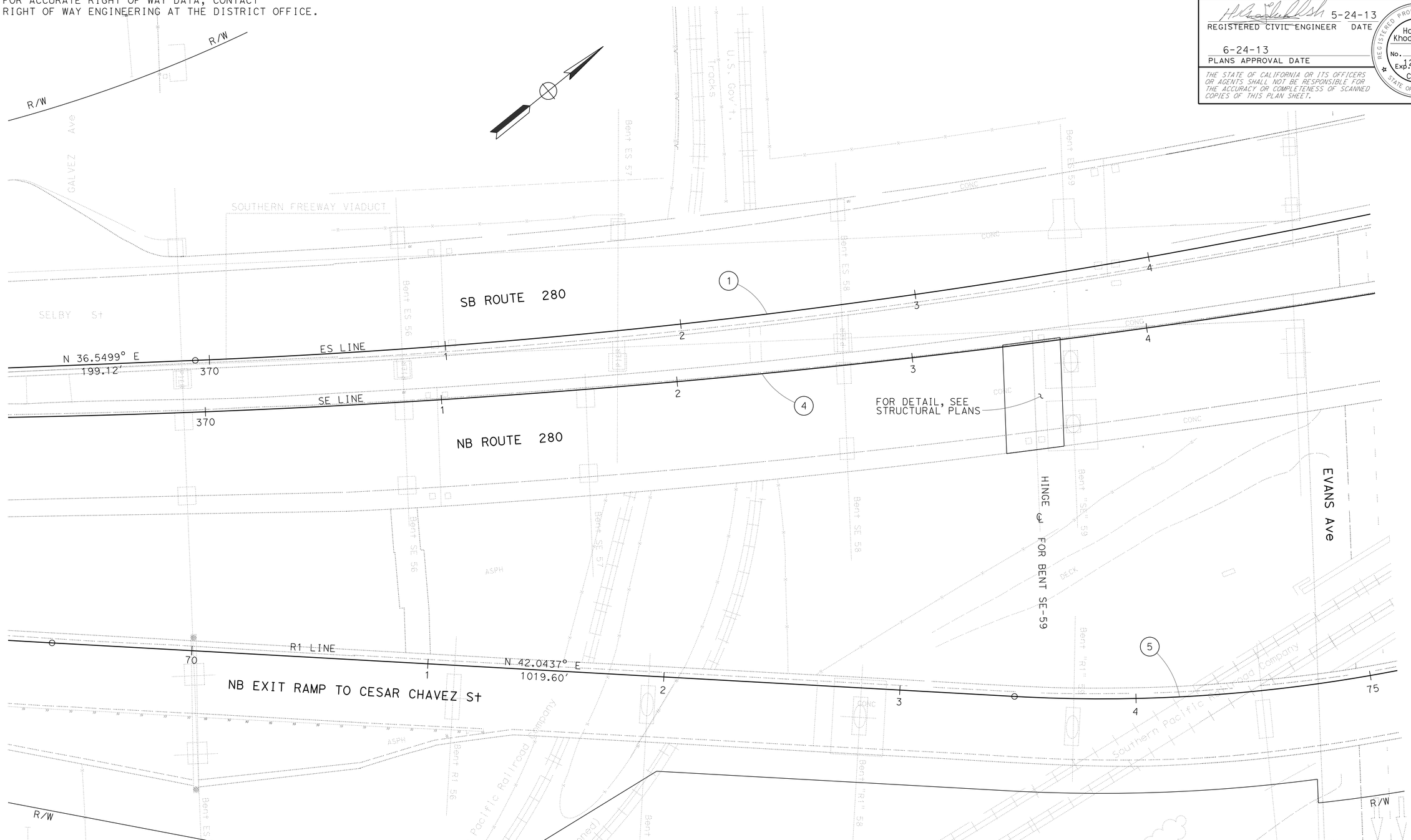

CURVE DATA

No. ⓡ	R	Δ	T	L	N-COORDINATE	E-COORDINATE
1	7500'	09° 32' 09"	625.57'	1248.25'	2106371.79	6009782.30
4	10000'	07° 06' 27"	621.04'	1240.49'	2107846.51	6007831.70
5	1650'	06° 45' 32"	97.43'	194.64'	2103461.32	6015401.86

LAYOUT

SCALE: 1" = 20'

L-1

STATE OF CALIFORNIA - DEPARTMENT OF TRANSPORTATION
Caltrans®
DESIGN

FUNCTIONAL SUPERVISOR: AMIR SANATKAR
CALCULATED-DESIGNED BY: HOSSEIN KHODABAKHSH
CHECKED BY: MAX HOVHANESSIAN
REVISED BY: MH
DATE REVISED: 4/26/13

LAST REVISION 05-21-13
DATE PLOTTED => 25-JUN-2013
TIME PLOTTED => 07:14

Dist	COUNTY	ROUTE	POST MILES TOTAL PROJECT	SHEET No.	TOTAL SHEETS
04	SF	280	R5.2/R6.0	3	51

REGISTERED CIVIL ENGINEER DATE 5-24-13

PLANS APPROVAL DATE 6-24-13

REGISTERED PROFESSIONAL ENGINEER Hossein Khodabakhsh No. 71650 Exp. 12-31-13 CIVIL STATE OF CALIFORNIA

THE STATE OF CALIFORNIA OR ITS OFFICERS OR AGENTS SHALL NOT BE RESPONSIBLE FOR THE ACCURACY OR COMPLETENESS OF SCANNED COPIES OF THIS PLAN SHEET.

NOTE:

FOR ACCURATE RIGHT OF WAY DATA, CONTACT RIGHT OF WAY ENGINEERING AT THE DISTRICT OFFICE.

CURVE DATA

No. ⊕	R	Δ	T	L	N-COORDINATE	E-COORDINATE
2	5125′	08° 21′ 07″	146′	293′	2104800.00	6011692.00
6	5500′	15° 48′ 20″	763′	1517′	2104674.00	6011373.00
7	5750′	01° 54′ 09″	95.47′	190.92′	2106298.05	6011915.65
8	1250′	12° 47′ 35″	140.13′	279.10′	2103573.59	6015503.98

FOR NOTES, ABBREVIATIONS AND LEGEND, SEE SHEET L-1

LAYOUT

SCALE: 1″ = 20′

L-2

STATE OF CALIFORNIA - DEPARTMENT OF TRANSPORTATION

Caltrans

DESIGN

FUNCTIONAL SUPERVISOR: AMIR SANATKAR

CALCULATED-DESIGNED BY: HOSSEIN KHODABAKHSH

CHECKED BY: MAX HOVHANESSIAN

REVISED BY: MH

DATE REVISED: 4/26/13

LAST REVISION DATE PLOTTED => 25-JUN-2013 TIME PLOTTED => 07:14

05-21-13

Dist	COUNTY	ROUTE	POST MILES TOTAL PROJECT	SHEET No.	TOTAL SHEETS
04	SF	280	R5.2/R6.0	4	51

REGISTERED CIVIL ENGINEER 5-24-13 DATE

6-24-13
PLANS APPROVAL DATE

REGISTERED PROFESSIONAL ENGINEER Hossein Khodabakhsh No. 71650 Exp. 12-31-13 CIVIL STATE OF CALIFORNIA

THE STATE OF CALIFORNIA OR ITS OFFICERS OR AGENTS SHALL NOT BE RESPONSIBLE FOR THE ACCURACY OR COMPLETENESS OF SCANNED COPIES OF THIS PLAN SHEET.

NOTE:

FOR ACCURATE RIGHT OF WAY DATA, CONTACT RIGHT OF WAY ENGINEERING AT THE DISTRICT OFFICE.

CURVE DATA

No. Ⓗ	R	Δ	T	L	N-COORDINATE	E-COORDINATE
2	5125′	08° 21′ 07"	146′	293′	2104800.00	6011692.00
3	5625′	12° 18′ 39"	607′	1209′	2105077.00	6011276.00
6	5500′	15° 48′ 20"	763′	1517′	2104674.00	6011373.00

FOR NOTES, ABBREVIATIONS AND LEGEND, SEE SHEET L-1

LAYOUT

SCALE: 1" = 20′

L-3

STATE OF CALIFORNIA - DEPARTMENT OF TRANSPORTATION
Caltrans DESIGN

FUNCTIONAL SUPERVISOR: AMIR SANATKAR
CALCULATED-DESIGNED BY: HOSSEIN KHODABAKHSH
CHECKED BY: MAX HOVHANESSIAN
REVISED BY: MH
DATE REVISED: 2/21/13

LAST REVISION 05-21-13 | DATE PLOTTED => 25-JUN-2013 | TIME PLOTTED => 07:14

Dist	COUNTY	ROUTE	POST MILES TOTAL PROJECT	SHEET No.	TOTAL SHEETS
04	SF	280	R5.2/R6.0	5	51

REGISTERED CIVIL ENGINEER 3-26-13 DATE

6-24-13
PLANS APPROVAL DATE

REGISTERED PROFESSIONAL ENGINEER Hossein Khodabakhsh No. 71650 Exp. 12-31-13 CIVIL STATE OF CALIFORNIA

THE STATE OF CALIFORNIA OR ITS OFFICERS OR AGENTS SHALL NOT BE RESPONSIBLE FOR THE ACCURACY OR COMPLETENESS OF SCANNED COPIES OF THIS PLAN SHEET.

NOTE:

FOR ACCURATE RIGHT OF WAY DATA, CONTACT RIGHT OF WAY ENGINEERING AT THE DISTRICT OFFICE.

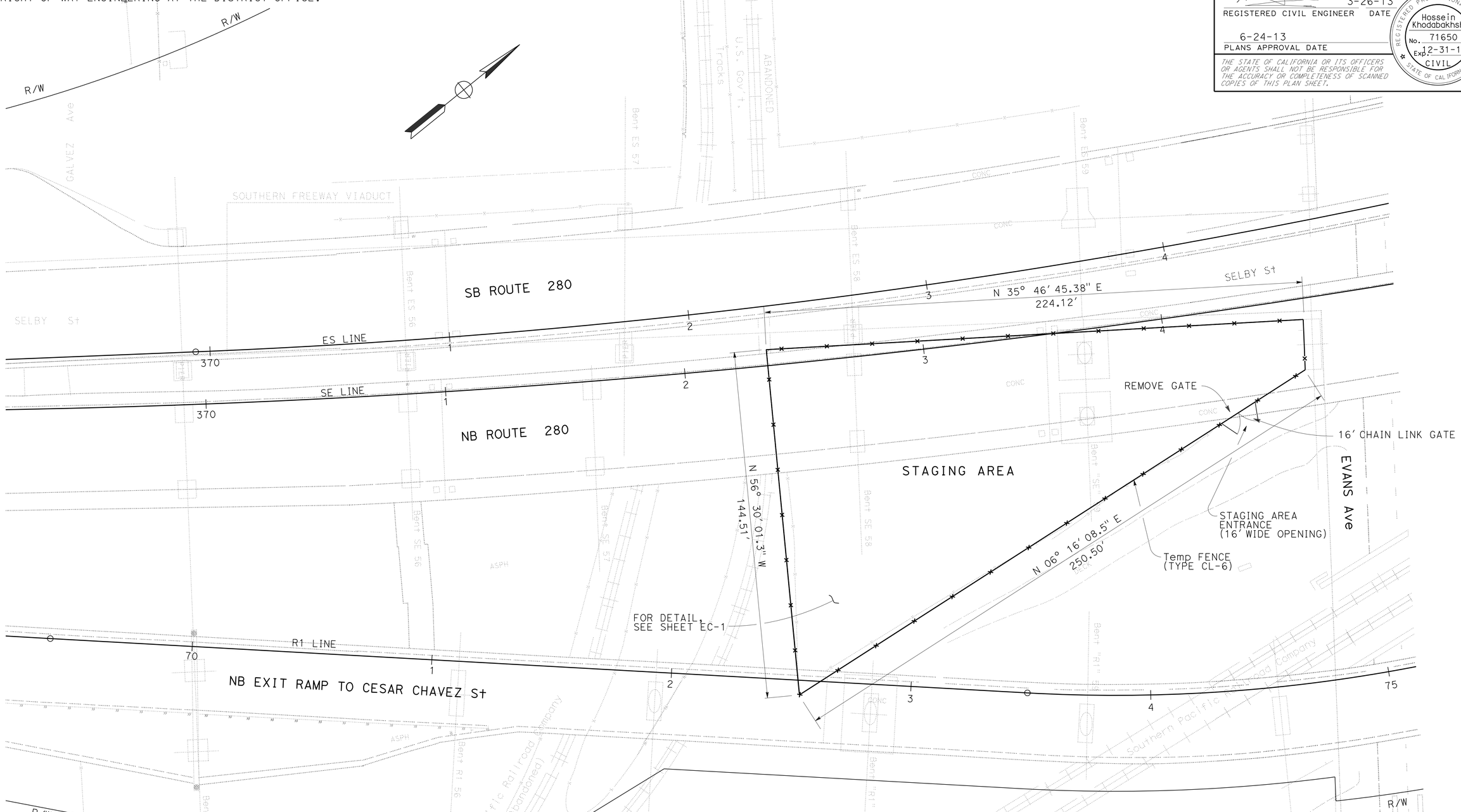

FOR NOTES, ABBREVIATIONS AND LEGEND, SEE SHEET C-1

LAYOUT
(AREA FOR CONTRACTOR'S USE)

SCALE: 1" = 20'

L-4

REVISED BY	MH
DATE REVISED	2/21/13
HOSSEIN KHODABAKHSH	
MAX HOVHANESSIAN	
CALCULATED-DESIGNED BY	
CHECKED BY	
FUNCTIONAL SUPERVISOR	
AMIR SANATKAR	

STATE OF CALIFORNIA - DEPARTMENT OF TRANSPORTATION

Caltrans®

DESIGN

LAST REVISION 05-21-13 | DATE PLOTTED => 25-JUN-2013 | TIME PLOTTED => 07:30

Dist	COUNTY	ROUTE	POST MILES TOTAL PROJECT	SHEET No.	TOTAL SHEETS
04	SF	280	R5.2/R6.0	6	51

Alex Mcdonald
LICENSED LANDSCAPE ARCHITECT

6-24-13
PLANS APPROVAL DATE

LICENSED LANDSCAPE ARCHITECT
ALEXANDER K. I. MCDONALD No. 5342
Alex Mcdonald
Signature
8-31-14
Renewal Date
1-1-13
Date
STATE OF CALIFORNIA

THE STATE OF CALIFORNIA OR ITS OFFICERS OR AGENTS SHALL NOT BE RESPONSIBLE FOR THE ACCURACY OR COMPLETENESS OF SCANNED COPIES OF THIS PLAN SHEET.

NOTE:

FOR ACCURATE RIGHT OF WAY DATA, CONTACT RIGHT OF WAY ENGINEERING AT THE DISTRICT OFFICE.

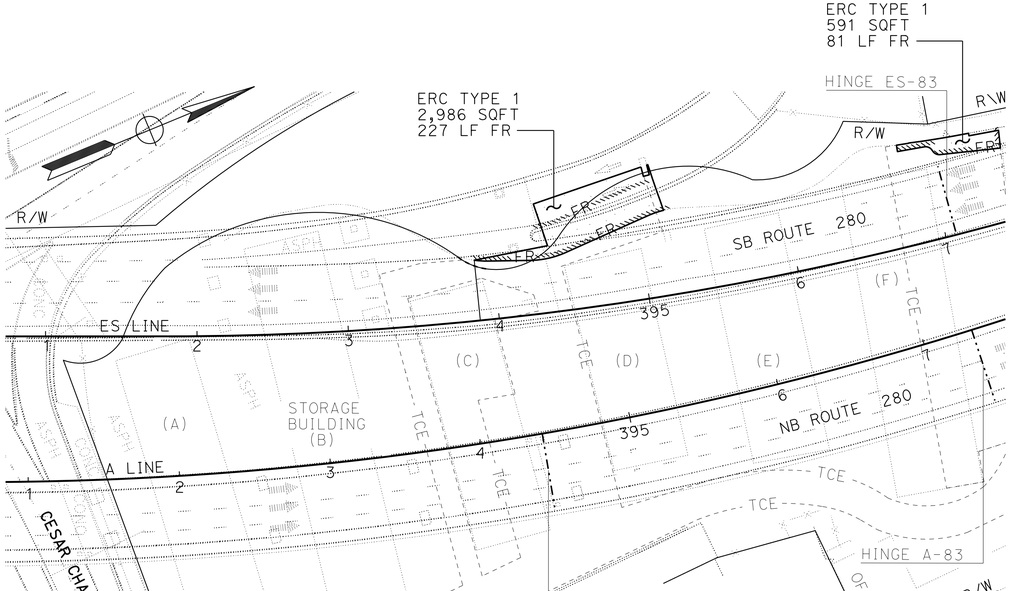

LEGEND:

EROSION CONTROL TYPE 1
DISTURBED SOIL AREAS

ABBREVIATIONS

ERC	EROSION CONTROL
FR	FIBER ROLLS
TCE	TEMPORARY CONSTRUCTION EASEMENT (WITHIN LESSEE AREA)

SEED MIX

SEED	BOTANICAL NAME (COMMON NAME)	PERCENT GERMINATION (MINIMUM)	POUNDS PURE LIVE SEED PER ACRE (SLOPE MEASUREMENT)
MIX 1	ELYMUS X TRITICUM (HYBRID STERILE WHEATGRASS)	50	38
	HORDEUM BRACHYANTHERUM (MEADOW BARLEY)	40	6
	NASSELLA PULCHRA (PURPLE NEEDLEGRASS)	35	12
	TRIFOLIUM TRIDENTATUM (TOMCAT CLOVER)	50	4

EROSION CONTROL TYPE 1

SEQUENCE	ITEM	MATERIAL DESCRIPTION	MATERIAL TYPE	APPLICATION RATE	REMARKS
STEP 1	FIBER ROLLS	FIBER ROLL	TYPE B 8" TO 10" Dia		Type 1 Fiber Roll installation
STEP 2	HYDROSEED	SEED	MIX 1	60 LB/ACRE	
		FIBER	ALTERNATE	1,500 LB/ACRE	
		FERTILIZER	ORGANIC	800 LB/ACRE	
STEP 3	HYDROMULCH	FIBER	ALTERNATE	1,500 LB/ACRE	
		TACKIFIER	PSYLLIUM	200 LB/ACRE	

EROSION CONTROL QUANTITIES

SHEET No.	STATION	HYDROSEED	HYDROMULCH	FIBER ROLLS
		SQFT	SQFT	LF
EC-1	R1 72+32 TO 74+87	16,739	16,739	579
EC-1	ES 393+87 TO 397+53	3,577	3,577	308
	TOTAL	20,316	20,316	887

EROSION CONTROL PLAN

SCALE: 1'' = 50'

APPROVED FOR EROSION CONTROL WORK ONLY

EC-1

STATE OF CALIFORNIA - DEPARTMENT OF TRANSPORTATION
Caltrans® WATER QUALITY

SENIOR LANDSCAPE ARCHITECT: DAVID W. YAM
CALCULATED-DESIGNED BY: ALEX MCDONALD
CHECKED BY: CHRIS PADICK
REVISED BY: AKM
DATE REVISED: 10/4/12

LAST REVISION 05-21-13
DATE PLOTTED => 25-JUN-2013
TIME PLOTTED => 07:15

Dist	COUNTY	ROUTE	POST MILES TOTAL PROJECT	SHEET No.	TOTAL SHEETS
04	SF	280	R5.2/R6.0	7	51

REGISTERED CIVIL ENGINEER 3-26-13 DATE

6-24-13
PLANS APPROVAL DATE

REGISTERED PROFESSIONAL ENGINEER Hossein Khodabakhsh No. 71650 Exp. 12-31-13 CIVIL STATE OF CALIFORNIA

THE STATE OF CALIFORNIA OR ITS OFFICERS OR AGENTS SHALL NOT BE RESPONSIBLE FOR THE ACCURACY OR COMPLETENESS OF SCANNED COPIES OF THIS PLAN SHEET.

NOTE:

1. LOCATION OF UTILITY FACILITIES SHOWN IN THESE PLANS ARE APPROXIMATE AND SHALL BE VERIFIED BY THE CONTRACTOR.

LEGEND:

HP HIGH PRESSURE
LP LOW PRESSURE
PG&E PACIFIC GAS AND ELECTRIC
SFDPW CITY/COUNTY OF SAN FRANCISCO, DEPARTMENT OF PUBLIC WORKS
TP TEFLON PIPE
SD STORM DRAIN

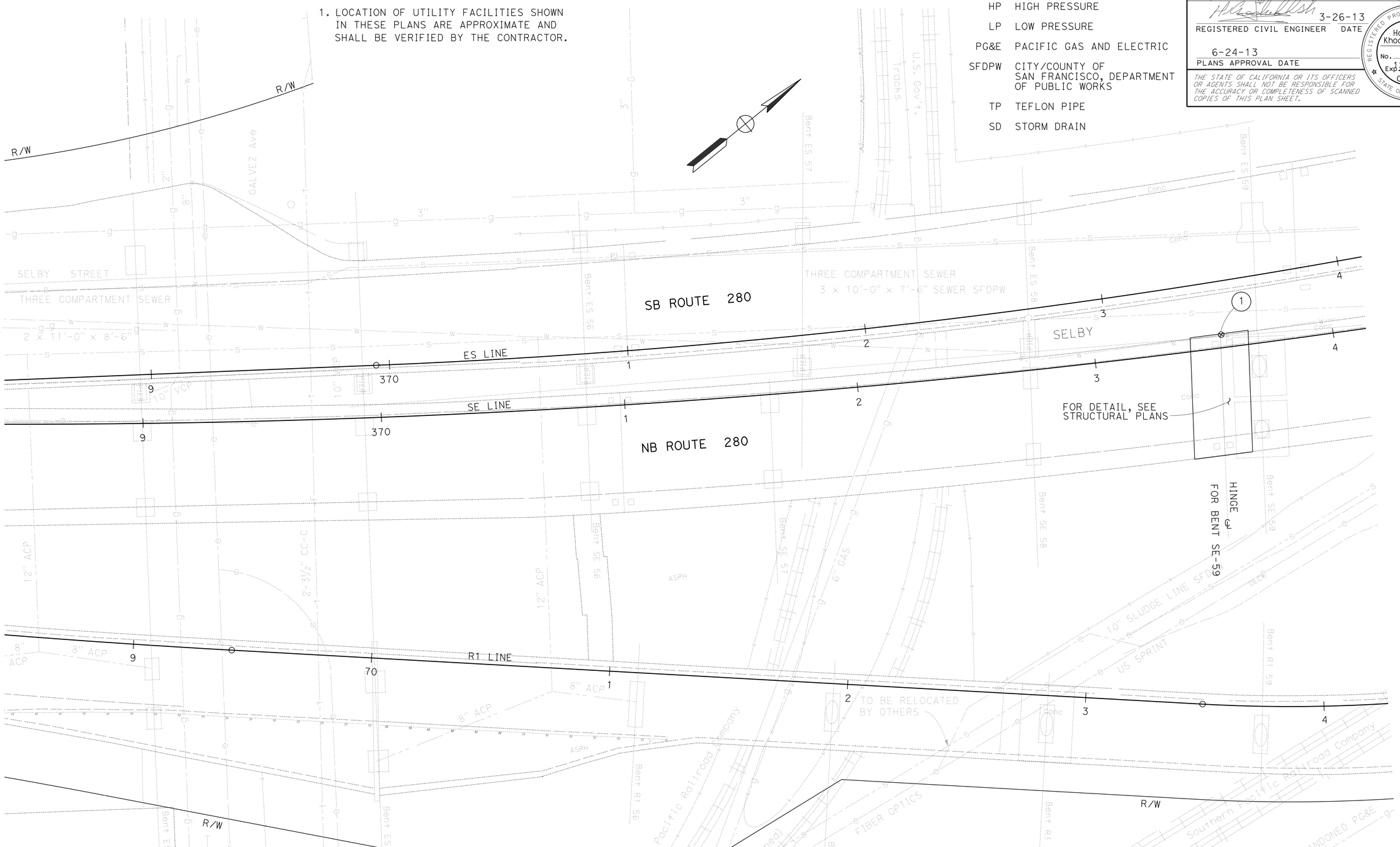

POSITIVE LOCATION INFORMATION

No.	UTILITY	LOCATION	DEPTH BELOW GRADE TOP OF PIPE
1	WATER	13.5' Lt SE 373+56	55"

UTILITY PLAN

SCALE: 1" = 20'

APPROVED FOR UTILITY INFORMATION ONLY

U-1

STATE OF CALIFORNIA - DEPARTMENT OF TRANSPORTATION
Caltrans® **DESIGN**

FUNCTIONAL SUPERVISOR: AMIR SANATKAR
CALCULATED-DESIGNED BY: HOSSEIN KHODABAKHSH
CHECKED BY: MAX HOVHANESSIAN
REVISED BY: MH
DATE REVISED: 2/21/13

LAST REVISION 05-21-13 | DATE PLOTTED => 25-JUN-2013 | TIME PLOTTED => 07:15

Dist	COUNTY	ROUTE	POST MILES TOTAL PROJECT	SHEET No.	TOTAL SHEETS
04	SF	280	R5.2/R6.0	8	51

REGISTERED CIVIL ENGINEER DATE 3-26-13

PLANS APPROVAL DATE 6-24-13

REGISTERED PROFESSIONAL ENGINEER Hossein Khodabakhsh No. 71650 Exp. 12-31-13 CIVIL STATE OF CALIFORNIA

THE STATE OF CALIFORNIA OR ITS OFFICERS OR AGENTS SHALL NOT BE RESPONSIBLE FOR THE ACCURACY OR COMPLETENESS OF SCANNED COPIES OF THIS PLAN SHEET.

POSITIVE LOCATION INFORMATION

No.	UTILITY	LOCATION	DEPTH BELOW GRADE TOP OF PIPE
1	STORM DRAIN	26' R+ A2 394+38	13"

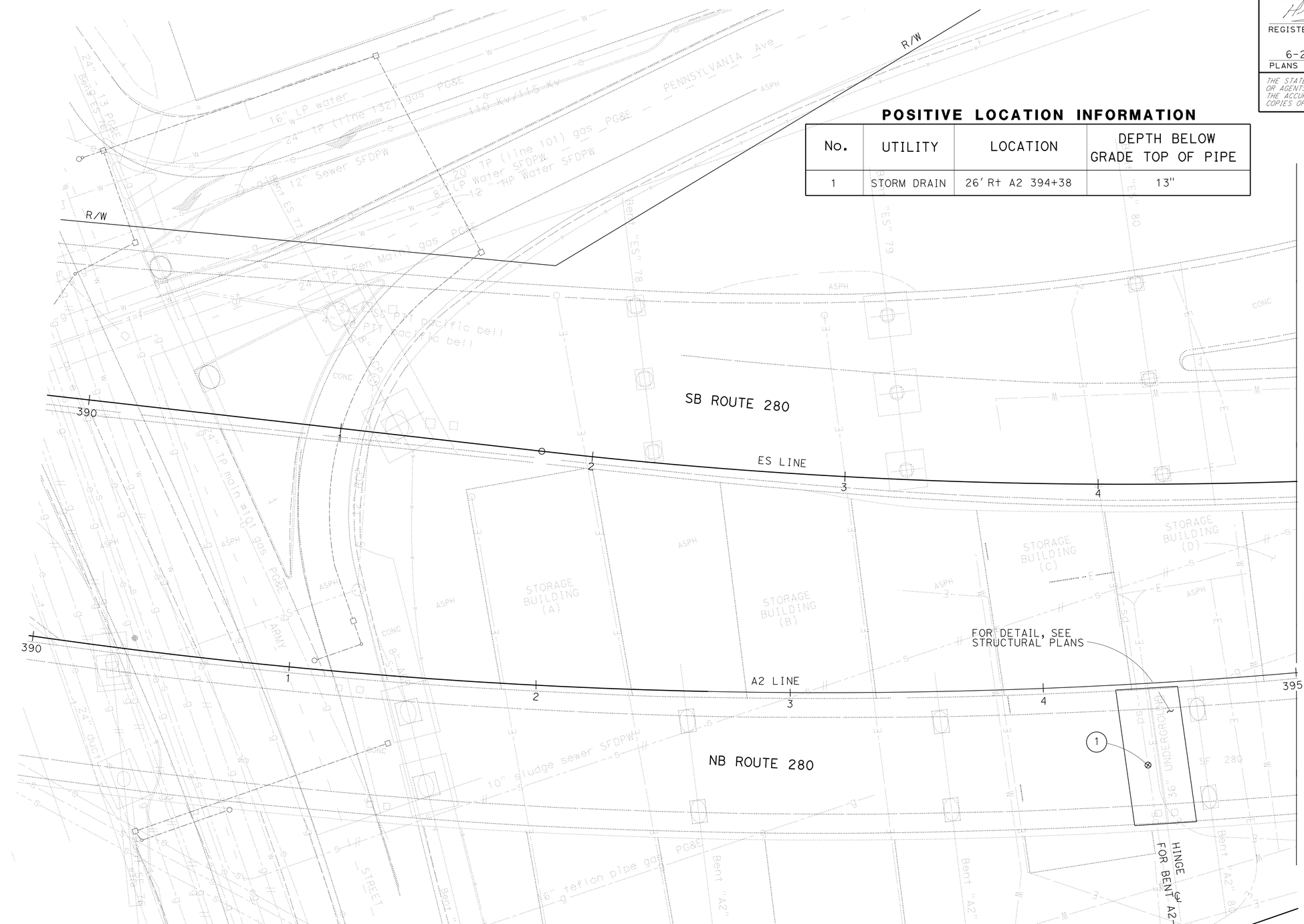

APPROVED FOR UTILITY INFORMATION ONLY

FOR NOTES, ABBREVIATIONS AND LEGEND, SEE SHEET U-1

UTILITY PLAN

SCALE: 1" = 20'

U-2

STATE OF CALIFORNIA - DEPARTMENT OF TRANSPORTATION

Caltrans

DESIGN

FUNCTIONAL SUPERVISOR: AMIR SANATKAR

CALCULATED-DESIGNED BY: HOSSEIN KHODABAKHSH

CHECKED BY: MAX HOVHANESSIAN

REVISED BY: MH

DATE REVISED: 2/21/13

LAST REVISION 05-21-13

DATE PLOTTED => 25-JUN-2013

TIME PLOTTED => 07:36

Dist	COUNTY	ROUTE	POST MILES TOTAL PROJECT	SHEET No.	TOTAL SHEETS
04	SF	280	R5.2/R6.0	9	51

REGISTERED CIVIL ENGINEER DATE 3-26-13

PLANS APPROVAL DATE 6-24-13

REGISTERED PROFESSIONAL ENGINEER Hossein Khodabakhsh No. 71650 Exp. 12-31-13 CIVIL STATE OF CALIFORNIA

THE STATE OF CALIFORNIA OR ITS OFFICERS OR AGENTS SHALL NOT BE RESPONSIBLE FOR THE ACCURACY OR COMPLETENESS OF SCANNED COPIES OF THIS PLAN SHEET.

POSITIVE LOCATION INFORMATION

No.	UTILITY	LOCATION	DEPTH BELOW GRADE TOP OF PIPE
1	STORM DRAIN	17' L+ ES 397+03	18"
2	STORM DRAIN	39' R+ ES 397+03	26"
3	STORM DRAIN	27' R+ A2 397+03	30"
4	WATER	50' L+ ES 397+12	37"

UTILITY PLAN

SCALE: 1" = 20'

APPROVED FOR UTILITY INFORMATION ONLY

FOR NOTES, ABBREVIATIONS AND LEGEND, SEE SHEET U-1

U-3

STATE OF CALIFORNIA - DEPARTMENT OF TRANSPORTATION

Caltrans DESIGN

FUNCTIONAL SUPERVISOR: AMIR SANATKAR

CALCULATED-DESIGNED BY: HOSSEIN KHODABAKHSH

CHECKED BY: MAX HOVHANESSIAN

REVISED BY: MH

DATE REVISED: 2/21/13

LAST REVISION 05-21-13

DATE PLOTTED => 25-JUN-2013

TIME PLOTTED => 07:17

Dist	COUNTY	ROUTE	POST MILES TOTAL PROJECT	SHEET No.	TOTAL SHEETS
04	SF	280	R5.2/R6.0	10	51

REGISTERED CIVIL ENGINEER 2-21-13 DATE

6-24-13
PLANS APPROVAL DATE

REGISTERED PROFESSIONAL ENGINEER Jerilyn L. Struven No. 49964 Exp. 12-31-14 CIVIL STATE OF CALIFORNIA

THE STATE OF CALIFORNIA OR ITS OFFICERS OR AGENTS SHALL NOT BE RESPONSIBLE FOR THE ACCURACY OR COMPLETENESS OF SCANNED COPIES OF THIS PLAN SHEET.

LEGEND:

No. CONSTRUCTION AREA SIGN NUMBER

NOTE:

1. LOCATION OF CONSTRUCTION AREA SIGNS SHOWN ARE APPROXIMATE. EXACT LOCATION TO BE DETERMINED BY THE ENGINEER.

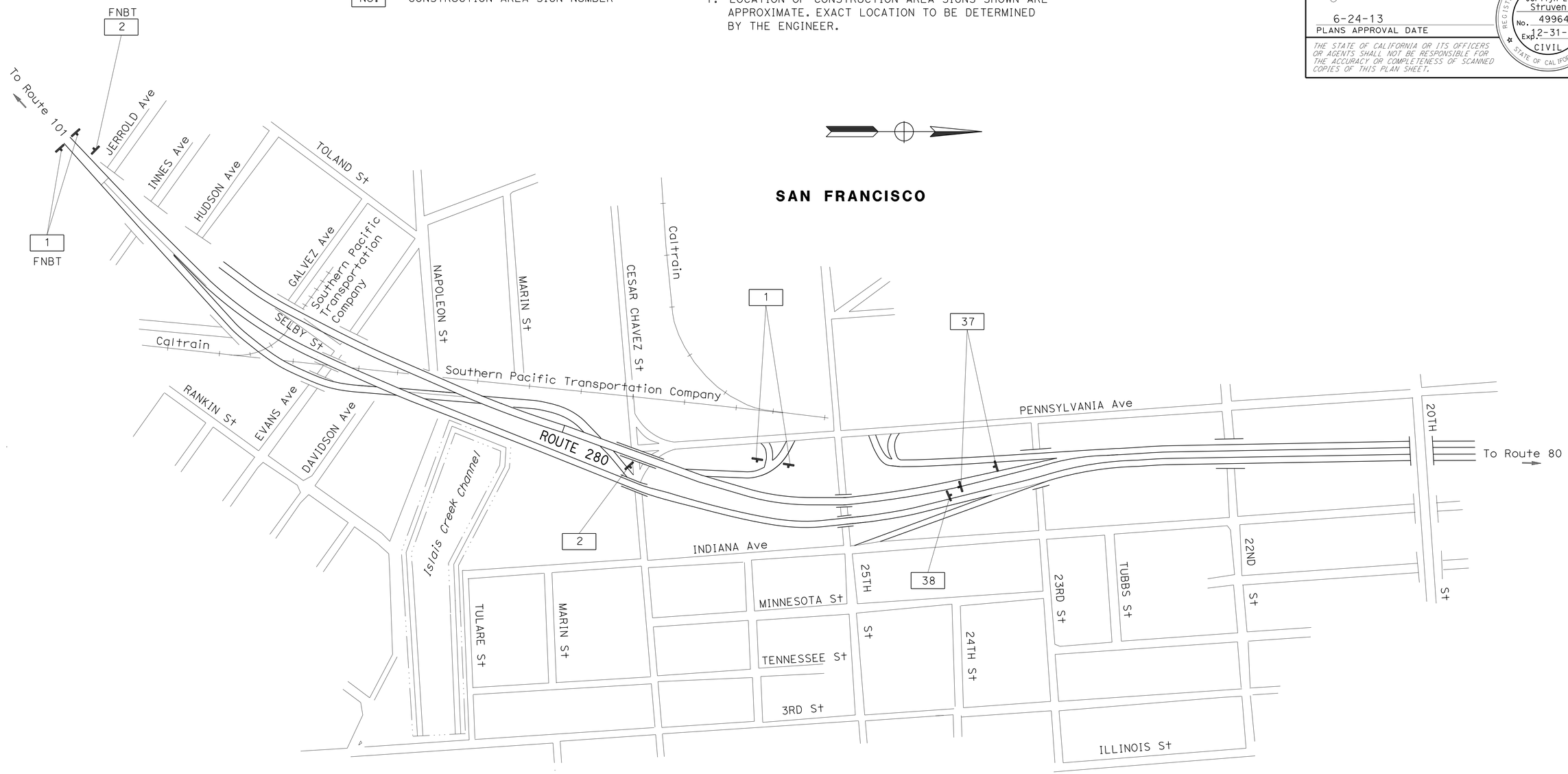

CONSTRUCTION AREA SIGNS

NO SCALE

APPROVED FOR CONSTRUCTION AREA SIGN WORK ONLY

CS-1

REVISED BY	UV
DATE REVISED	1/28/13
CALCULATED-DESIGNED BY	ULICES VEGA
CHECKED BY	JERILYN L. STRUVEN
FUNCTIONAL SUPERVISOR	ROLAND AU-YEUNG

STATE OF CALIFORNIA - DEPARTMENT OF TRANSPORTATION

Caltrans

TRAFFIC

LAST REVISION 05-21-13

DATE PLOTTED => 25-JUN-2013
TIME PLOTTED => 07:17

Dist	COUNTY	ROUTE	POST MILES TOTAL PROJECT	SHEET No.	TOTAL SHEETS
04	SF	280	R5.2/R6.0	11	51

REGISTERED CIVIL ENGINEER 2-21-13 DATE

6-24-13
PLANS APPROVAL DATE

REGISTERED PROFESSIONAL ENGINEER Jerilyn L. Struven No. 49964 Exp. 12-31-14 CIVIL STATE OF CALIFORNIA

THE STATE OF CALIFORNIA OR ITS OFFICERS OR AGENTS SHALL NOT BE RESPONSIBLE FOR THE ACCURACY OR COMPLETENESS OF SCANNED COPIES OF THIS PLAN SHEET.

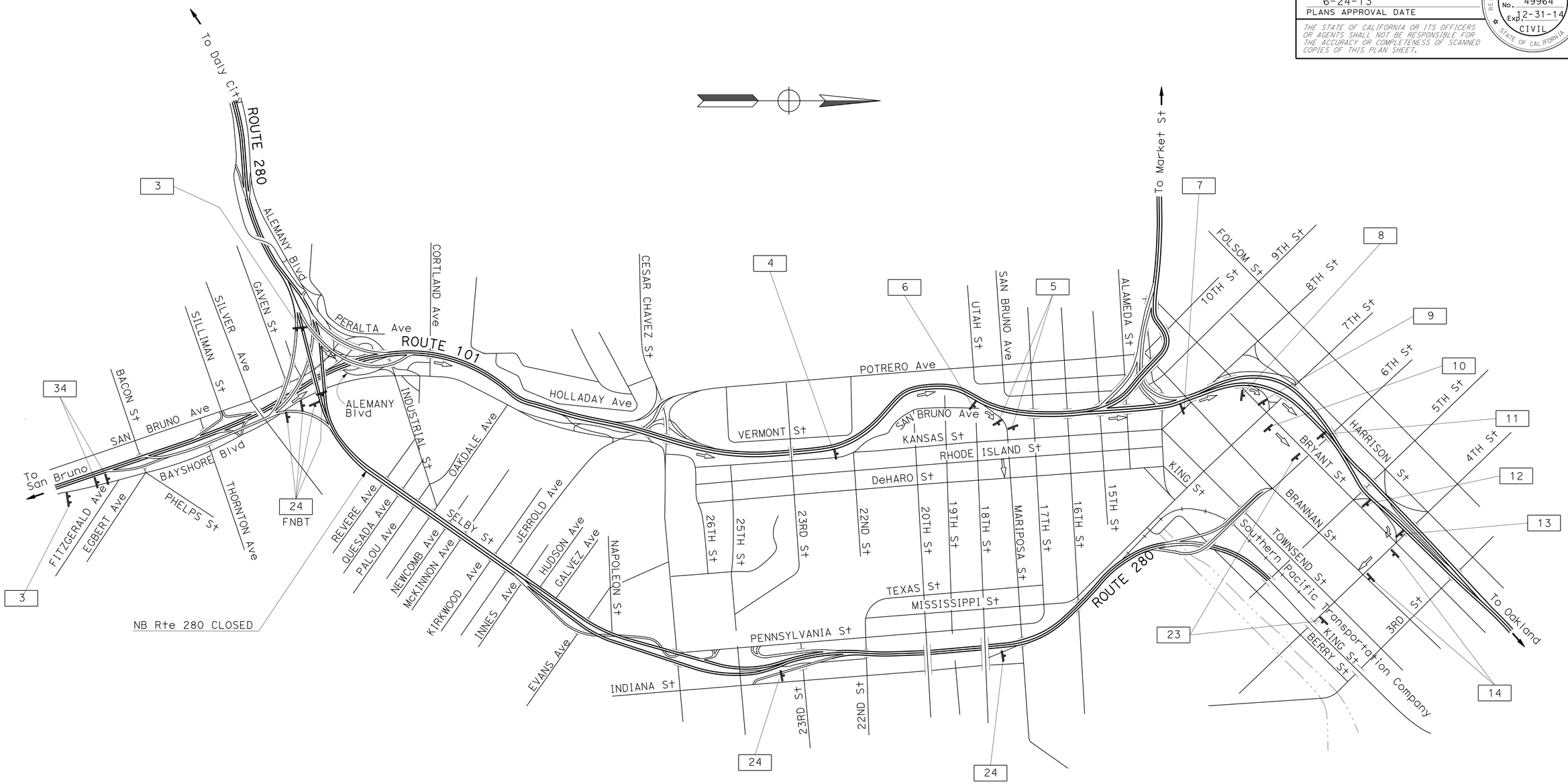

DETOUR-1
NB Rte 280 FULL CLOSURE
D-SF280N3

CONSTRUCTION AREA SIGNS
NO SCALE

APPROVED FOR CONSTRUCTION AREA SIGN WORK ONLY

FOR NOTES, ABBREVIATIONS AND LEGEND, SEE SHEET CS-1

CS-2

STATE OF CALIFORNIA - DEPARTMENT OF TRANSPORTATION	TRAFFIC	FUNCTIONAL SUPERVISOR: ROLAND AU-YEUNG	CALCULATED-DESIGNED BY: ULICES VEGA / CHECKED BY: JERILYN L. STRUVEN	REVISED BY: UV / DATE REVISED: 1/28/13

LAST REVISION 05-24-13 | DATE PLOTTED => 25-JUN-2013 | TIME PLOTTED => 07:17

BORDER LAST REVISED 7/2/2010 | USERNAME => s109858 | DGN FILE => 04000011381a002.dgn | RELATIVE BORDER SCALE IS IN INCHES 0 1 2 3 | UNIT 0703 | PROJECT NUMBER & PHASE 04000011381

Dist	COUNTY	ROUTE	POST MILES TOTAL PROJECT	SHEET No.	TOTAL SHEETS
04	SF	280	R5.2/R6.0	12	51

REGISTERED CIVIL ENGINEER DATE 2-21-13

6-24-13
PLANS APPROVAL DATE

REGISTERED PROFESSIONAL ENGINEER Jerilyn L. Struven No. 49964 Exp. 12-31-14 CIVIL STATE OF CALIFORNIA

THE STATE OF CALIFORNIA OR ITS OFFICERS OR AGENTS SHALL NOT BE RESPONSIBLE FOR THE ACCURACY OR COMPLETENESS OF SCANNED COPIES OF THIS PLAN SHEET.

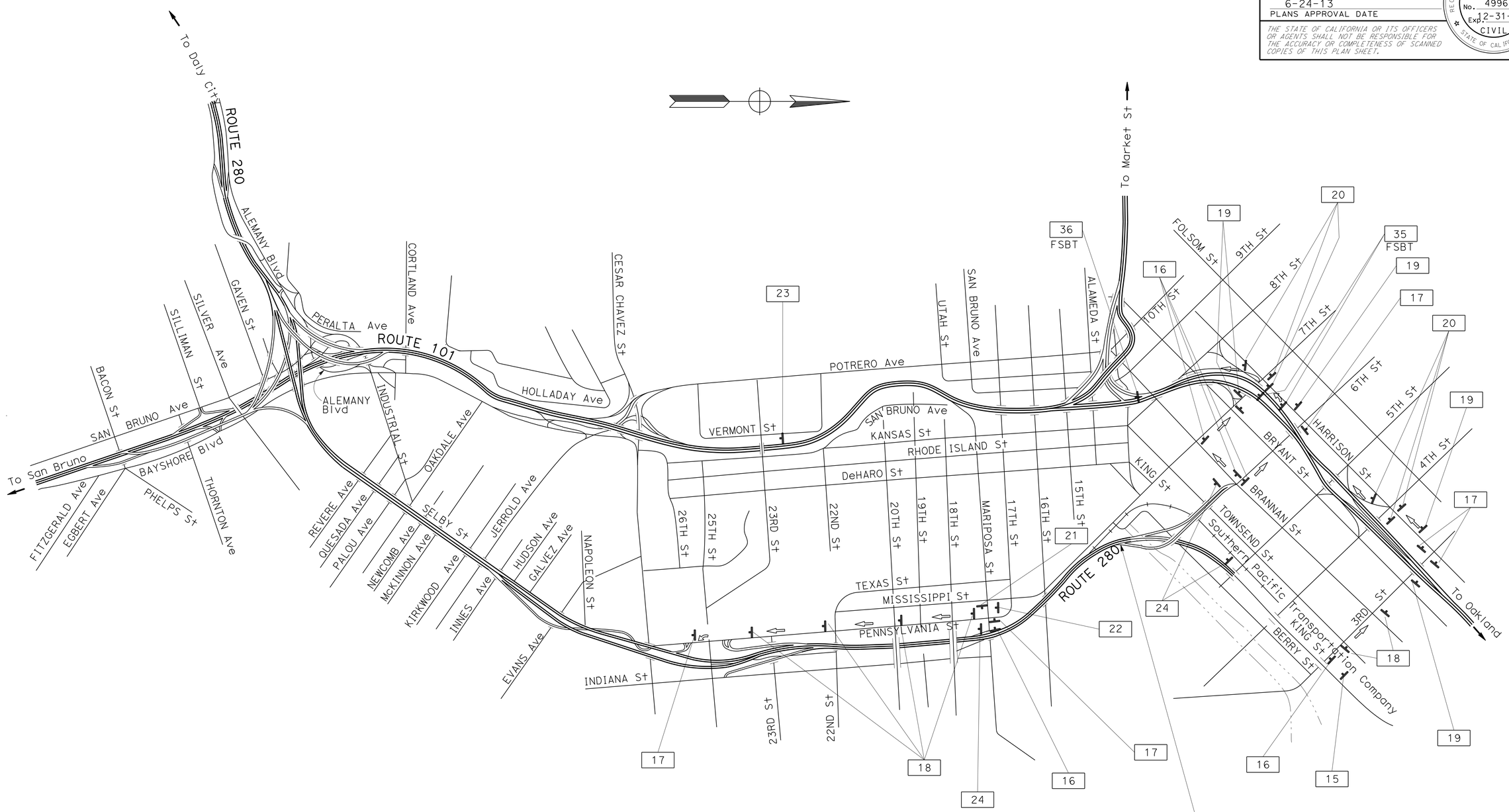

DETOUR-2
SB Rte 280 FULL CLOSURE
D-SF280S4

CONSTRUCTION AREA SIGNS
NO SCALE

APPROVED FOR CONSTRUCTION AREA SIGN WORK ONLY

FOR NOTES, ABBREVIATIONS AND LEGEND, SEE SHEET CS-1

CS-3

FUNCTIONAL SUPERVISOR	CALCULATED-DESIGNED BY	CHECKED BY	REVISED BY	DATE REVISED
ROLAND AU-YEUNG	ULICES VEGA	JERILYN L. STRUVEN	UV	1/28/13

STATE OF CALIFORNIA - DEPARTMENT OF TRANSPORTATION
Caltrans
TRAFFIC

LAST REVISION 05-24-13 | DATE PLOTTED => 25-JUN-2013 | TIME PLOTTED => 07:17

Dist	COUNTY	ROUTE	POST MILES TOTAL PROJECT	SHEET No.	TOTAL SHEETS
04	SF	280	R5.2/R6.0	13	51

REGISTERED CIVIL ENGINEER 2-21-13 DATE

6-24-13
PLANS APPROVAL DATE

REGISTERED PROFESSIONAL ENGINEER
Jerilyn L. Struven
No. 49964
Exp. 12-31-14
CIVIL
STATE OF CALIFORNIA

THE STATE OF CALIFORNIA OR ITS OFFICERS OR AGENTS SHALL NOT BE RESPONSIBLE FOR THE ACCURACY OR COMPLETENESS OF SCANNED COPIES OF THIS PLAN SHEET.

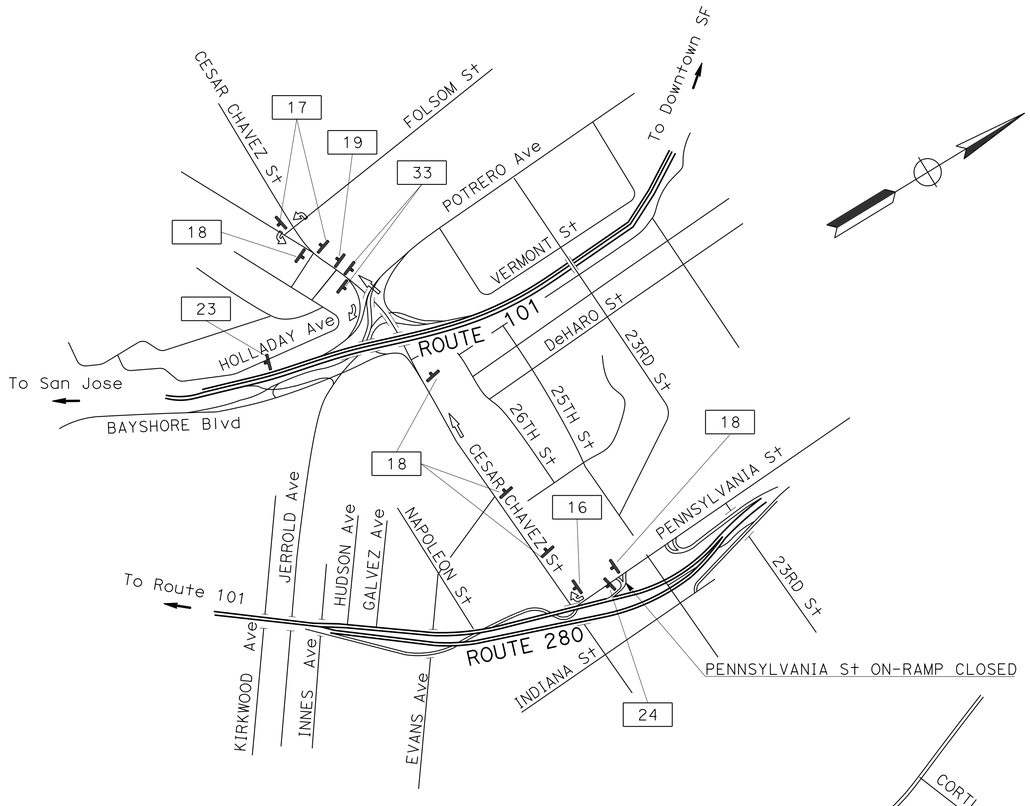

DETOUR-4
PENNSYLVANIA St TO SB ROUTE 280
D-SF280S3

PENNSYLVANIA St ON-RAMP CLOSED

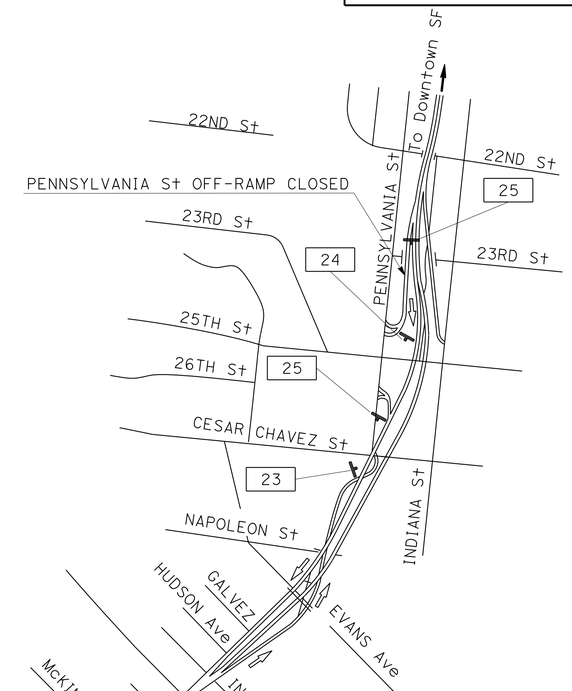

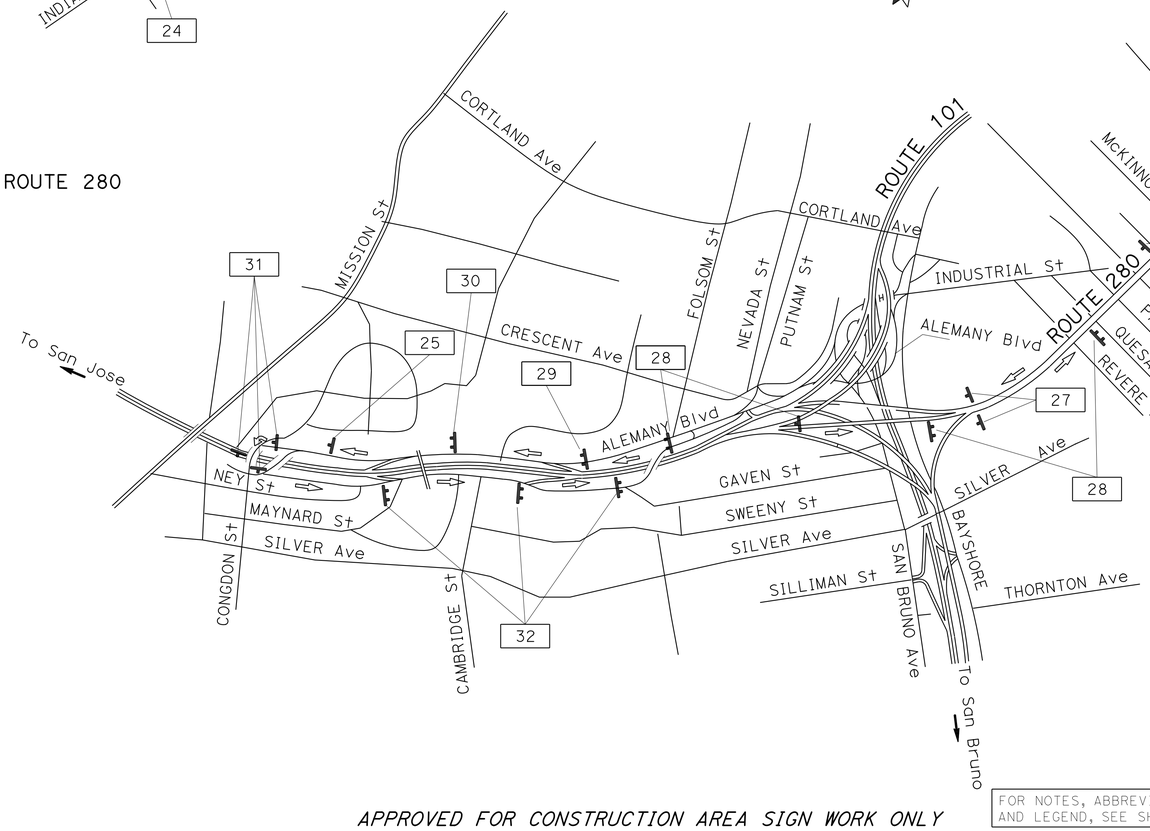

DETOUR-3
SB ROUTE 280 TO PENNSYLVANIA St
D-SF280S2

APPROVED FOR CONSTRUCTION AREA SIGN WORK ONLY

FOR NOTES, ABBREVIATIONS AND LEGEND, SEE SHEET CS-1

CONSTRUCTION AREA SIGNS
NO SCALE

CS-4

REVISED BY	DATE REVISED
UV	1/28/13

ULICES VEGA
JERILYN L. STRUVEN
CALCULATED-DESIGNED BY
CHECKED BY
FUNCTIONAL SUPERVISOR
ROLAND AU-YEUNG

STATE OF CALIFORNIA - DEPARTMENT OF TRANSPORTATION
Caltrans
TRAFFIC

LAST REVISION 05-24-13
DATE PLOTTED => 25-JUN-2013
TIME PLOTTED => 07:17

Dist	COUNTY	ROUTE	POST MILES TOTAL PROJECT	SHEET No.	TOTAL SHEETS
04	SF	280	R5.2/R6.0	14	51

REGISTERED CIVIL ENGINEER 2-21-13 DATE

6-24-13
PLANS APPROVAL DATE

REGISTERED PROFESSIONAL ENGINEER Jerilyn L. Struven No. 49964 Exp. 12-31-14 CIVIL STATE OF CALIFORNIA

THE STATE OF CALIFORNIA OR ITS OFFICERS OR AGENTS SHALL NOT BE RESPONSIBLE FOR THE ACCURACY OR COMPLETENESS OF SCANNED COPIES OF THIS PLAN SHEET.

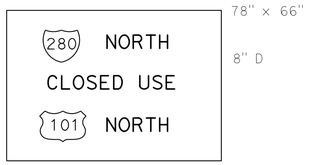

78" x 66"
8" D

SPEC 1

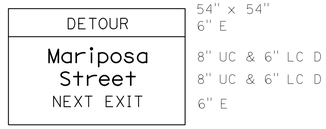

54" x 54"
6" E
8" UC & 6" LC D
8" UC & 6" LC D
6" E

SPEC 2

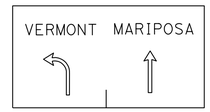

54" x 36"
5" C

SPEC 3

54" x 60"
6" E
8" UC & 6" LC D
8" UC & 6" LC D

SPEC 4

54" x 54"
6" E
8" UC & 6" LC E
6" E

SPEC 5

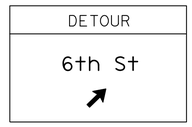

54" x 54"
6" E
8" UC & 6" LC E

SPEC 6

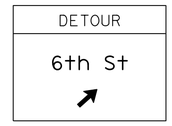

42" x 42"
5" E
6" UC & 4½" LC E

SPEC 7

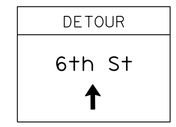

42" x 42"
5" E
6" UC & 4½" LC E

SPEC 8

54" x 42"
6" E
8" E
6" E
6" E

SPEC 9

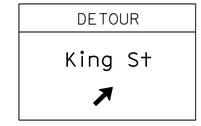

54" x 48"
6" E
8" UC & 6" LC E

SPEC 10

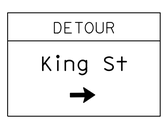

42" x 36"
5" E
6" UC & 4½" LC E

SPEC 11

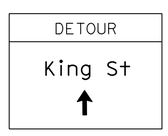

42" x 42"
5" E
6" UC & 4½" LC E

SPEC 12

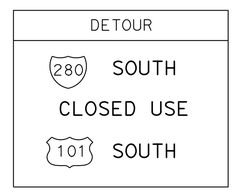

66" x 66"
6" D

SPEC 13

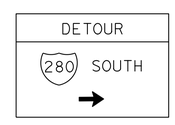

48" x 36"
5" D

SPEC 14

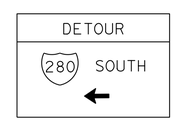

48" x 36"
5" D

SPEC 15

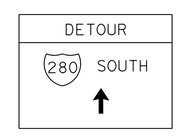

48" x 42"
5" D

SPEC 16

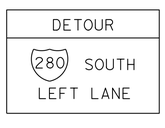

48" x 36"
5" D

SPEC 17

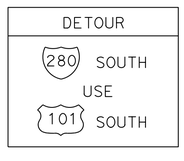

48" x 54"
5" D

SPEC 18

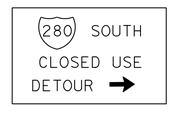

48" x 42"
5" D

SPEC 19

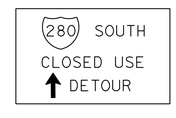

48" x 42"
5" D

SPEC 20

CONSTRUCTION AREA SIGNS

NO SCALE

APPROVED FOR CONSTRUCTION AREA SIGN WORK ONLY

FOR NOTES, ABBREVIATIONS AND LEGEND, SEE SHEET CS-1

CS-5

STATE OF CALIFORNIA - DEPARTMENT OF TRANSPORTATION
Caltrans
TRAFFIC

FUNCTIONAL SUPERVISOR: ROLAND AU-YEUNG
CALCULATED-DESIGNED BY: ULICES VEGA
CHECKED BY: JERILYN L. STRUVEN
REVISED BY: UV
DATE REVISED: 1/28/13

LAST REVISION 05-21-13
DATE PLOTTED => 25-JUN-2013
TIME PLOTTED => 07:17

Dist	COUNTY	ROUTE	POST MILES TOTAL PROJECT	SHEET No.	TOTAL SHEETS
04	SF	280	R5.2/R6.0	15	51

REGISTERED CIVIL ENGINEER 2-21-13 DATE

6-24-13
PLANS APPROVAL DATE

REGISTERED PROFESSIONAL ENGINEER
Jerilyn L. Struven
No. 49964
Exp. 12-31-14
CIVIL
STATE OF CALIFORNIA

THE STATE OF CALIFORNIA OR ITS OFFICERS OR AGENTS SHALL NOT BE RESPONSIBLE FOR THE ACCURACY OR COMPLETENESS OF SCANNED COPIES OF THIS PLAN SHEET.

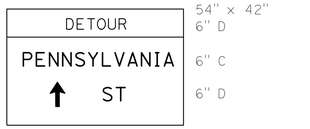

SPEC 21

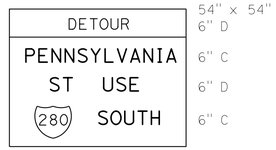

SPEC 22

SPEC 23

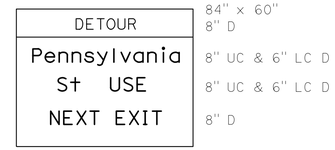

SPEC 24

SPEC 25

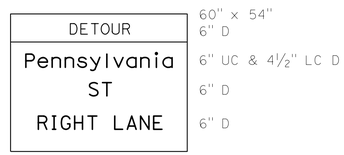

SPEC 26

SPEC 27

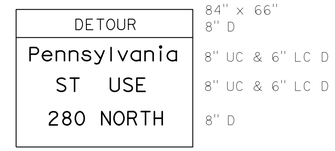

SPEC 28

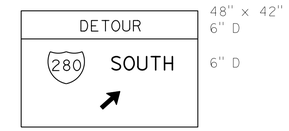

SPEC 29

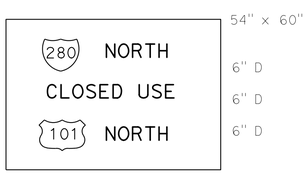

SPEC 30

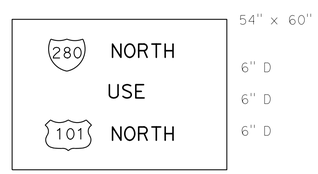

SPEC 31

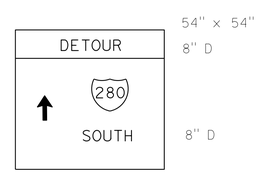

SPEC 32

CONSTRUCTION AREA SIGNS

NO SCALE

APPROVED FOR CONSTRUCTION AREA SIGN WORK ONLY

FOR NOTES, ABBREVIATIONS AND LEGEND, SEE SHEET CS-1

CS-6

REVISED BY	DATE REVISED
UV	1/28/13

ULICES VEGA
JERILYN L. STRUVEN

CALCULATED-DESIGNED BY
CHECKED BY

FUNCTIONAL SUPERVISOR
ROLAND AU-YEUNG

STATE OF CALIFORNIA - DEPARTMENT OF TRANSPORTATION
Caltrans
TRAFFIC

LAST REVISION 05-21-13
DATE PLOTTED => 25-JUN-2013
TIME PLOTTED => 07:17

STATIONARY MOUNTED CONSTRUCTION AREA SIGNS

SIGN No. X	SIGN CODE	PANEL SIZE	SIGN MESSAGE	NUMBER OF POSTS AND SIZE (EA)	(N) NUMBER OF SIGNS	REMARKS
1	W20-1	48" x 48"	ROAD WORK AHEAD	1 - 4" x 6"	4	
2	G20-2	48" x 24"	END ROAD WORK	1 - 4" x 4"	2	
3	SPEC 1	78" x 66"	280 NORTH-CLOSED USE-101 NORTH	2 - 4" x 6"	2	
4	SPEC 2	54" x 54"	DETOUR-Mariposa-Street-NEXT EXIT	1 - 6" x 6"	1	
5	SPEC 3	54" x 36"	VERMONT-MARIPOSA	1 - 4" x 6"	2	
6	SPEC 4	54" x 60"	DETOUR-Mariposa-Street	1 - 6" x 6"	1	
7	SPEC 5	54" x 54"	DETOUR-6th St-NEXT EXIT		1	SSBM
8	SPEC 6	54" x 54"	DETOUR-6th St		1	SSBM
9	SPEC 7	42" x 42"	DETOUR-6th St	1 - 4" x 6"	1	
10	SPEC 8	42" x 42"	DETOUR-6th St		1	SSBM
11	SPEC 9	54" x 42"	DETOUR-King St-NEXT EXIT		1	SSBM
12	SPEC 10	54" x 48"	DETOUR-King St		1	SSBM
13	SPEC 11	42" x 36"	DETOUR-King St	1 - 4" x 6"	1	
14	SPEC 12	42" x 42"	DETOUR-King St		2	SSBM
15	SPEC 13	66" x 66"	DETOUR-280 SOUTH-CLOSED USE-101 SOUTH	2 - 4" x 6"	1	
16	SPEC 14	48" x 36"	DETOUR-280 SOUTH	1 - 4" x 6"	6	
17	SPEC 15	48" x 36"	DETOUR-280 SOUTH	1 - 4" x 6"	7	
18	SPEC 16	48" x 42"	DETOUR-280 SOUTH	1 - 4" x 6"	11	
19	SPEC 17	48" x 36"	DETOUR-280 SOUTH-LEFT LANE	1 - 4" x 6"	6	
20	SPEC 18	48" x 54"	DETOUR-280 SOUTH USE-101 SOUTH	1 - 6" x 6"	6	
21	SPEC 19	48" x 42"	280 SOUTH-CLOSED USE-DETOUR	1 - 4" x 6"	1	
22	SPEC 20	48" x 42"	280 SOUTH-CLOSED USE-DETOUR	1 - 4" x 6"	1	
23	M4-8a	24" x 18"	END DETOUR	1 - 4" x 4"	5	
24	SC6-4(CA)	48" x 60"	ROAD (RAMP)-CLOSED-(DATES)	1 - 6" x 6"	16	
25	SPEC 21	54" x 42"	DETOUR-PENNSYLVANIA-St		3	SSBM
26	SPEC 22	54" x 54"	DETOUR-PENNSYLVANIA-St USE...		2	SSBM
27	SPEC 23	54" x 42"	DETOUR-PENNSYLVANIA-St		2	SSBM
28	SPEC 24	84" x 60"	DETOUR-Pennsylvania-St USE...	2 - 6" x 6"	3	
29	SPEC 25	84" x 54"	DETOUR-Pennsylvania-St	2 - 6" x 6"	1	
30	SPEC 26	60" x 54"	DETOUR-Pennsylvania-St...	2 - 4" x 6"	1	
31	SPEC 27	54" x 42"	DETOUR-PENNSYLVANIA-St	1 - 6" x 6"	3	
32	SPEC 28	84" x 66"	DETOUR-PENNSYLVANIA-St USE...	2 - 6" x 6"	3	
33	SPEC 29	48" x 42"	DETOUR-280 SOUTH		2	SSBM

(N) - NOT A SEPARATE PAY ITEM, FOR INFORMATION ONLY

APPROVED FOR CONSTRUCTION AREA SIGN WORK ONLY

FOR NOTES, ABBREVIATIONS AND LEGEND, SEE SHEET CS-1

Dist	COUNTY	ROUTE	POST MILES TOTAL PROJECT	SHEET No.	TOTAL SHEETS
04	SF	280	R5.2/R6.0	16	51

REGISTERED CIVIL ENGINEER 2-21-13 DATE

6-24-13
PLANS APPROVAL DATE

REGISTERED PROFESSIONAL ENGINEER Jerilyn L. Struven No. 49964 Exp. 12-31-14 CIVIL STATE OF CALIFORNIA

THE STATE OF CALIFORNIA OR ITS OFFICERS OR AGENTS SHALL NOT BE RESPONSIBLE FOR THE ACCURACY OR COMPLETENESS OF SCANNED COPIES OF THIS PLAN SHEET.

STATE OF CALIFORNIA - DEPARTMENT OF TRANSPORTATION
Caltrans
TRAFFIC

FUNCTIONAL SUPERVISOR: ROLAND AU-YEUNG
CALCULATED-DESIGNED BY: ULICES VEGA
CHECKED BY: JERILYN L. STRUVEN
REVISED BY: UV
DATE REVISED: 1/28/13

CONSTRUCTION AREA SIGNS
CS-7

LAST REVISION 05-21-13
DATE PLOTTED => 25-JUN-2013
TIME PLOTTED => 09:27

Dist	COUNTY	ROUTE	POST MILES TOTAL PROJECT	SHEET No.	TOTAL SHEETS
04	SF	280	R5.2/R6.0	17	51

REGISTERED CIVIL ENGINEER 2-21-13 DATE

6-24-13
PLANS APPROVAL DATE

REGISTERED PROFESSIONAL ENGINEER
Jerilyn L. Struven
No. 49964
Exp. 12-31-14
CIVIL
STATE OF CALIFORNIA

THE STATE OF CALIFORNIA OR ITS OFFICERS OR AGENTS SHALL NOT BE RESPONSIBLE FOR THE ACCURACY OR COMPLETENESS OF SCANNED COPIES OF THIS PLAN SHEET.

STATIONARY MOUNTED CONSTRUCTION AREA SIGNS

SIGN No. X	SIGN CODE	PANEL SIZE	SIGN MESSAGE	NUMBER OF POSTS AND SIZE (EA)	(N) NUMBER OF SIGNS	REMARKS
34	SPEC 30	54" x 60"	280 NORTH-CLOSED USE ...		2	SSBM
35	SPEC 31	54" x 60"	280 SOUTH-USE-101 NORTH		2	SSBM
36	SPEC 32	54" x 54"	DETOUR-280-SOUTH		1	SSBM
37	W20-1	48" x 48"	ROAD WORK AHEAD		2	SSBM
38	G20-2	48" x 24"	END ROAD WORK		1	SSBM

(N) - NOT A SEPARATE PAY ITEM, FOR INFORMATION ONLY

APPROVED FOR CONSTRUCTION AREA SIGN WORK ONLY

FOR NOTES, ABBREVIATIONS AND LEGEND, SEE SHEET CS-1

CONSTRUCTION AREA SIGNS
CS-8

STATE OF CALIFORNIA - DEPARTMENT OF TRANSPORTATION
Caltrans
TRAFFIC

FUNCTIONAL SUPERVISOR: ROLAND AU-YEUNG
CALCULATED-DESIGNED BY: ULICES VEGA
CHECKED BY: JERILYN L. STRUVEN
REVISED BY: UV
DATE REVISED: 1/28/13

LAST REVISION 05-21-13
DATE PLOTTED => 25-JUN-2013
TIME PLOTTED => 09:27

Dist	COUNTY	ROUTE	POST MILES TOTAL PROJECT	SHEET No.	TOTAL SHEETS
04	SF	280	R5.2/R6.0	18	51

REGISTERED CIVIL ENGINEER 3-26-13 DATE

6-24-13
PLANS APPROVAL DATE

REGISTERED PROFESSIONAL ENGINEER Hossein Khodabakhsh No. 71650 Exp. 12-31-13 CIVIL STATE OF CALIFORNIA

THE STATE OF CALIFORNIA OR ITS OFFICERS OR AGENTS SHALL NOT BE RESPONSIBLE FOR THE ACCURACY OR COMPLETENESS OF SCANNED COPIES OF THIS PLAN SHEET.

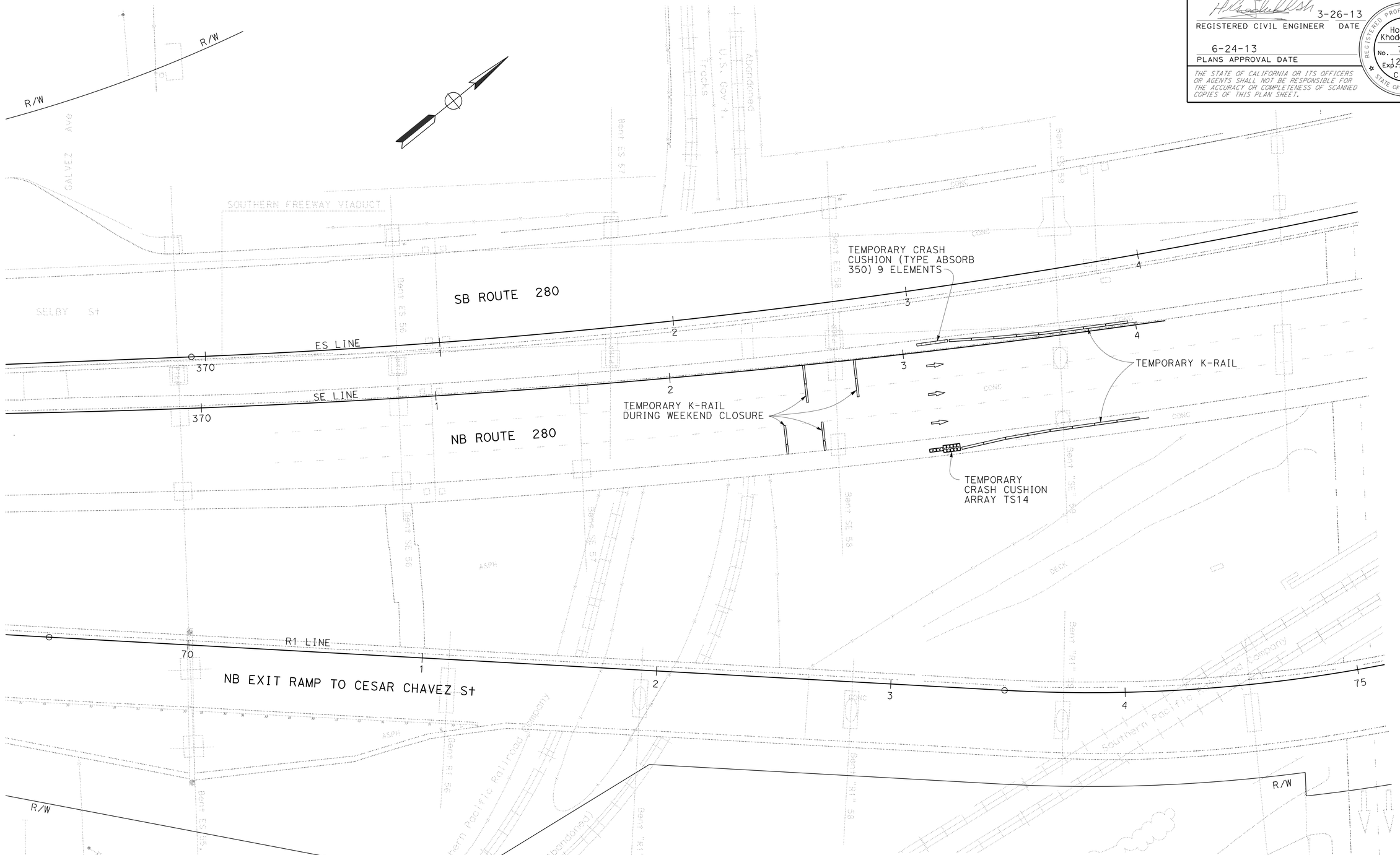

TRAFFIC HANDLING PLAN

SCALE: 1" = 20'

APPROVED FOR TRAFFIC HANDLING WORK ONLY

TH-1

STATE OF CALIFORNIA - DEPARTMENT OF TRANSPORTATION
Caltrans® **DESIGN**

FUNCTIONAL SUPERVISOR: AMIR SANATKAR
CALCULATED-DESIGNED BY: HOSSEIN KHODABAKHSH
CHECKED BY: MAX HOVHANESSIAN
REVISED BY: MH
DATE REVISED: 2/21/13

LAST REVISION 05-21-13
DATE PLOTTED => 25-JUN-2013
TIME PLOTTED => 07:17

Dist	COUNTY	ROUTE	POST MILES TOTAL PROJECT	SHEET No.	TOTAL SHEETS
04	SF	280	R5.2/R6.0	19	51

REGISTERED CIVIL ENGINEER DATE 3-26-13

PLANS APPROVAL DATE 6-24-13

REGISTERED PROFESSIONAL ENGINEER Hossein Khodabakhsh No. 71650 Exp. 12-31-13 CIVIL STATE OF CALIFORNIA

THE STATE OF CALIFORNIA OR ITS OFFICERS OR AGENTS SHALL NOT BE RESPONSIBLE FOR THE ACCURACY OR COMPLETENESS OF SCANNED COPIES OF THIS PLAN SHEET.

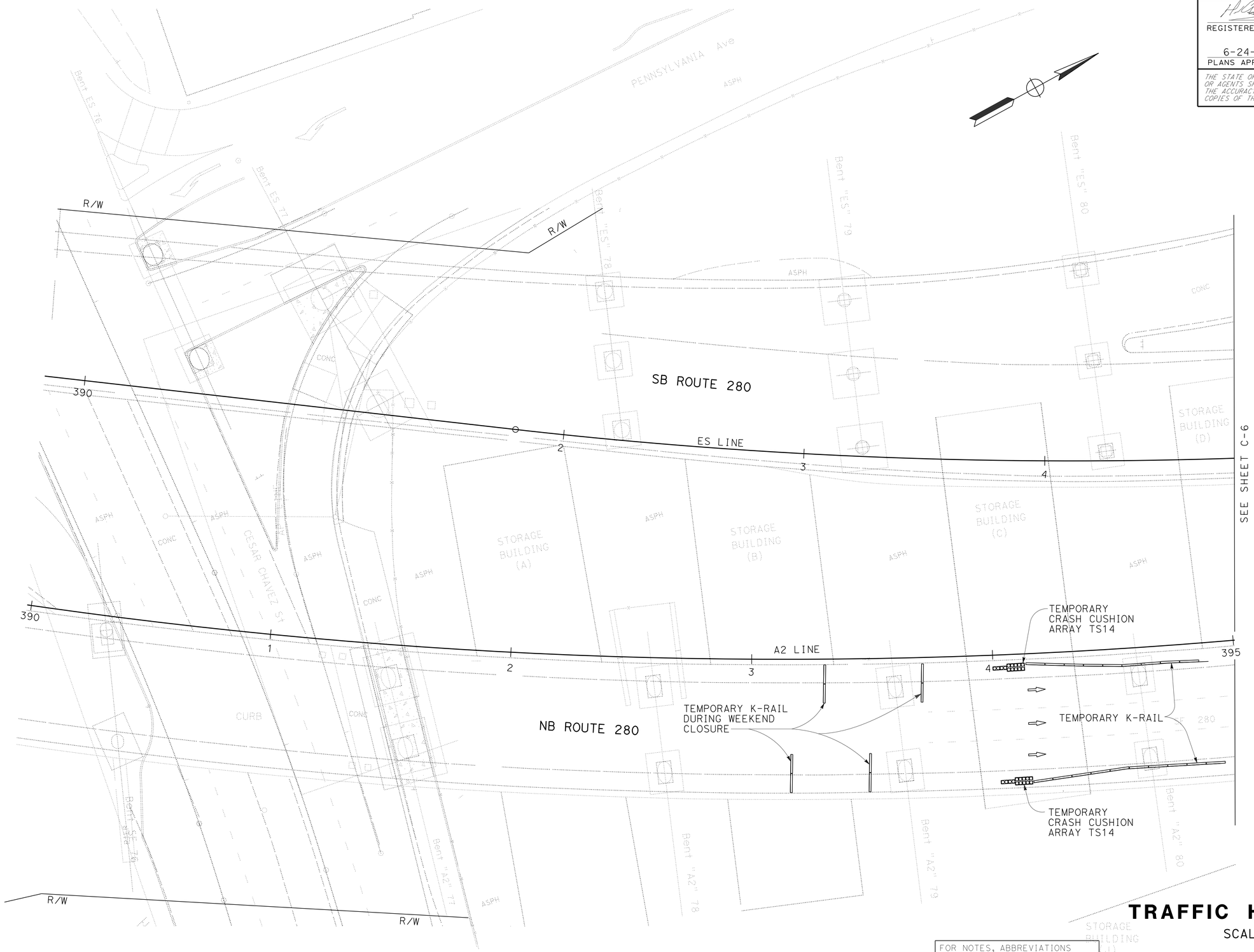

TRAFFIC HANDLING PLAN

SCALE: 1" = 20'

APPROVED FOR TRAFFIC HANDLING WORK ONLY

FOR NOTES, ABBREVIATIONS AND LEGEND, SEE SHEET TH-1

TH-2

STATE OF CALIFORNIA - DEPARTMENT OF TRANSPORTATION

Caltrans

DESIGN

FUNCTIONAL SUPERVISOR: AMIR SANATKAR

CALCULATED-DESIGNED BY: HOSSEIN KHODABAKHSH

CHECKED BY: MAX HOVHANESSIAN

REVISED BY: MH

DATE REVISED: 2/21/13

LAST REVISION DATE PLOTTED => 25-JUN-2013 TIME PLOTTED => 07:17

05-21-13

Dist	COUNTY	ROUTE	POST MILES TOTAL PROJECT	SHEET No.	TOTAL SHEETS
04	SF	280	R5.2/R6.0	20	51

REGISTERED CIVIL ENGINEER 3-26-13 DATE

6-24-13
PLANS APPROVAL DATE

REGISTERED PROFESSIONAL ENGINEER
Hossein Khodabakhsh
No. 71650
Exp. 12-31-13
CIVIL
STATE OF CALIFORNIA

THE STATE OF CALIFORNIA OR ITS OFFICERS OR AGENTS SHALL NOT BE RESPONSIBLE FOR THE ACCURACY OR COMPLETENESS OF SCANNED COPIES OF THIS PLAN SHEET.

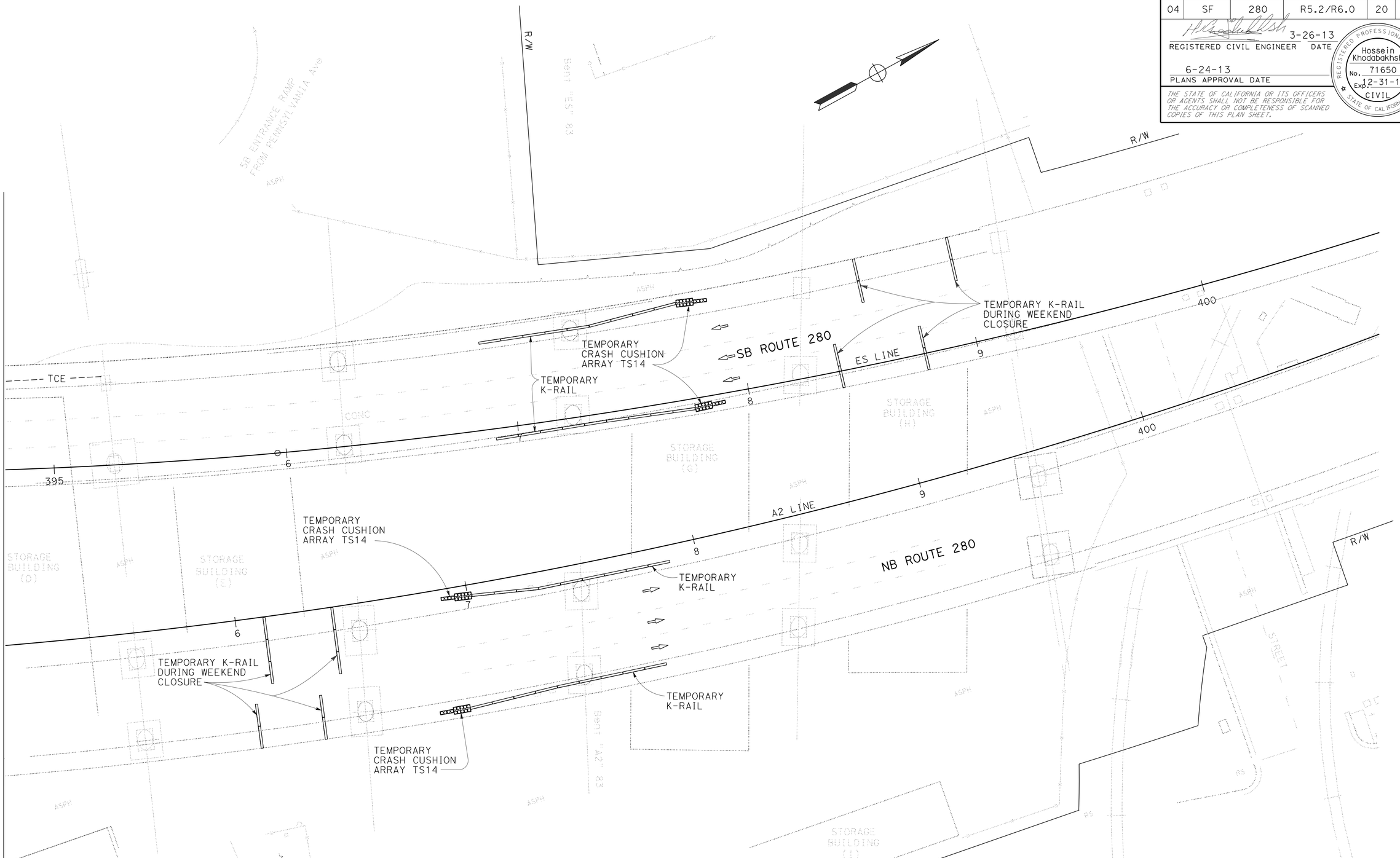

TRAFFIC HANDLING PLAN

SCALE: 1" = 20'

APPROVED FOR TRAFFIC HANDLING WORK ONLY

FOR NOTES, ABBREVIATIONS AND LEGEND, SEE SHEET TH-1

TH-3

STATE OF CALIFORNIA - DEPARTMENT OF TRANSPORTATION
Caltrans
DESIGN

FUNCTIONAL SUPERVISOR: AMIR SANATKAR
CALCULATED-DESIGNED BY: HOSSEIN KHODABAKHSH
CHECKED BY: MAX HOVHANESSIAN
REVISED BY: MH
DATE REVISED: 2/21/13

LAST REVISION 05-21-13
DATE PLOTTED => 25-JUN-2013
TIME PLOTTED => 07:17

Dist	COUNTY	ROUTE	POST MILES TOTAL PROJECT	SHEET No.	TOTAL SHEETS
04	SF	280	R5.2/R6.0	21	51

REGISTERED CIVIL ENGINEER 3-26-13 DATE

6-24-13
PLANS APPROVAL DATE

REGISTERED PROFESSIONAL ENGINEER Hossein Khodabakhsh No. 71650 Exp. 12-31-13 CIVIL STATE OF CALIFORNIA

THE STATE OF CALIFORNIA OR ITS OFFICERS OR AGENTS SHALL NOT BE RESPONSIBLE FOR THE ACCURACY OR COMPLETENESS OF SCANNED COPIES OF THIS PLAN SHEET.

NOTE:

1. PAVEMENT DELINEATION SHALL BE REPLACED IN KIND AND PLACED ON THE SAME ALIGNMENT AND LOCATION AS EXISTING PAVEMENT DELINEATION OR AS DIRECTED BY THE ENGINEER.

LEGEND:

No. PAVEMENT DELINEATION DETAIL NUMBER

DIRECTION OF TRAFFIC

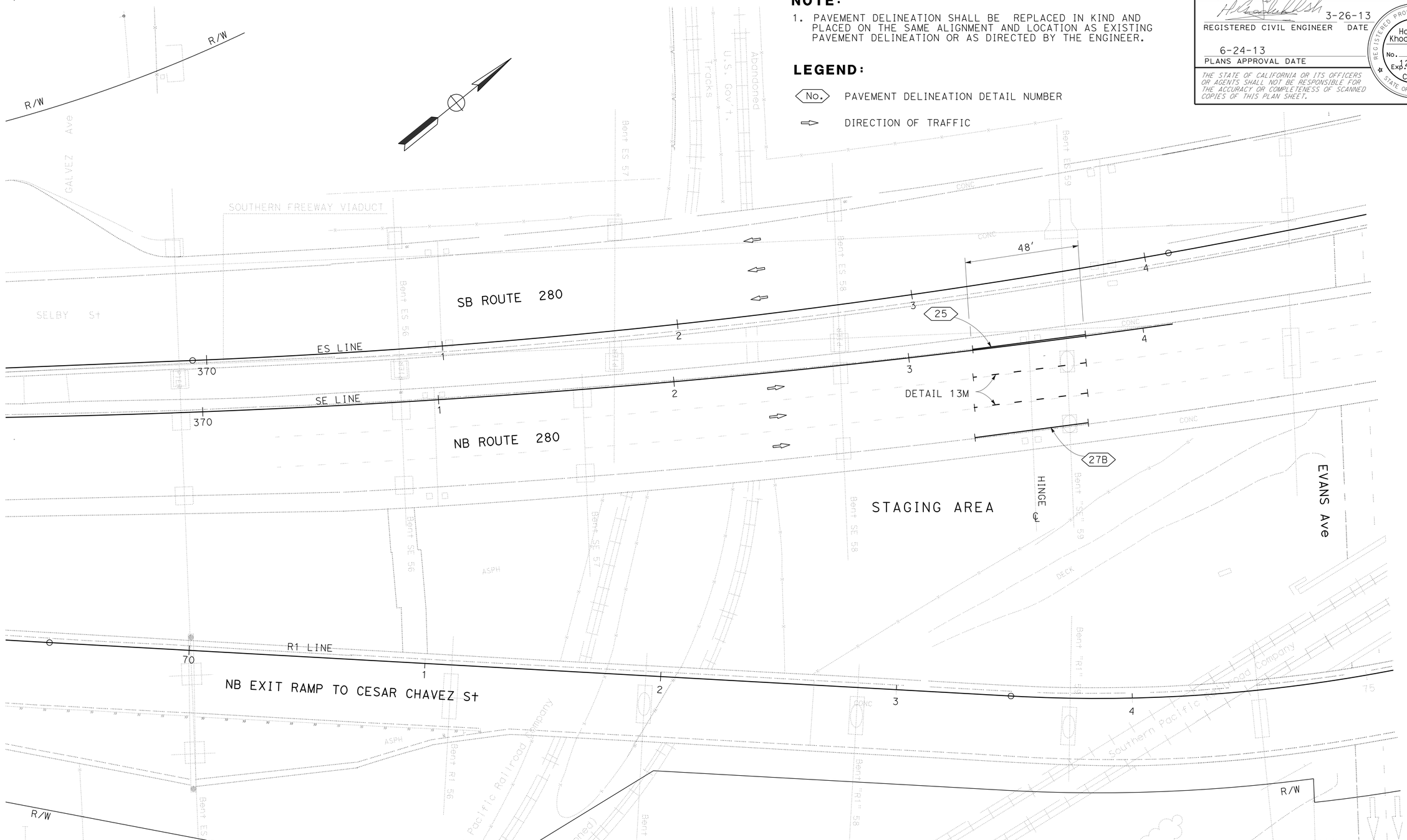

PAVEMENT DELINEATION PLAN

SCALE: 1" = 20'

APPROVED FOR PAVEMENT DELINEATION WORK ONLY

PD-1

STATE OF CALIFORNIA - DEPARTMENT OF TRANSPORTATION	Caltrans®
DESIGN	
FUNCTIONAL SUPERVISOR	AMIR SANATKAR
CALCULATED-DESIGNED BY	HOSSEIN KHODABAKHSH
CHECKED BY	MAX HOVHANESSIAN
REVISED BY	MH
DATE REVISED	2/21/13

LAST REVISION 05-21-13 | DATE PLOTTED => 26-JUN-2013 | TIME PLOTTED => 07:17

Dist	COUNTY	ROUTE	POST MILES TOTAL PROJECT	SHEET No.	TOTAL SHEETS
04	SF	280	R5.2/R6.0	22	51

REGISTERED CIVIL ENGINEER 3-26-13 DATE

6-24-13
PLANS APPROVAL DATE

REGISTERED PROFESSIONAL ENGINEER
Hossein Khodabakhsh
No. 71650
Exp. 12-31-13
CIVIL
STATE OF CALIFORNIA

THE STATE OF CALIFORNIA OR ITS OFFICERS OR AGENTS SHALL NOT BE RESPONSIBLE FOR THE ACCURACY OR COMPLETENESS OF SCANNED COPIES OF THIS PLAN SHEET.

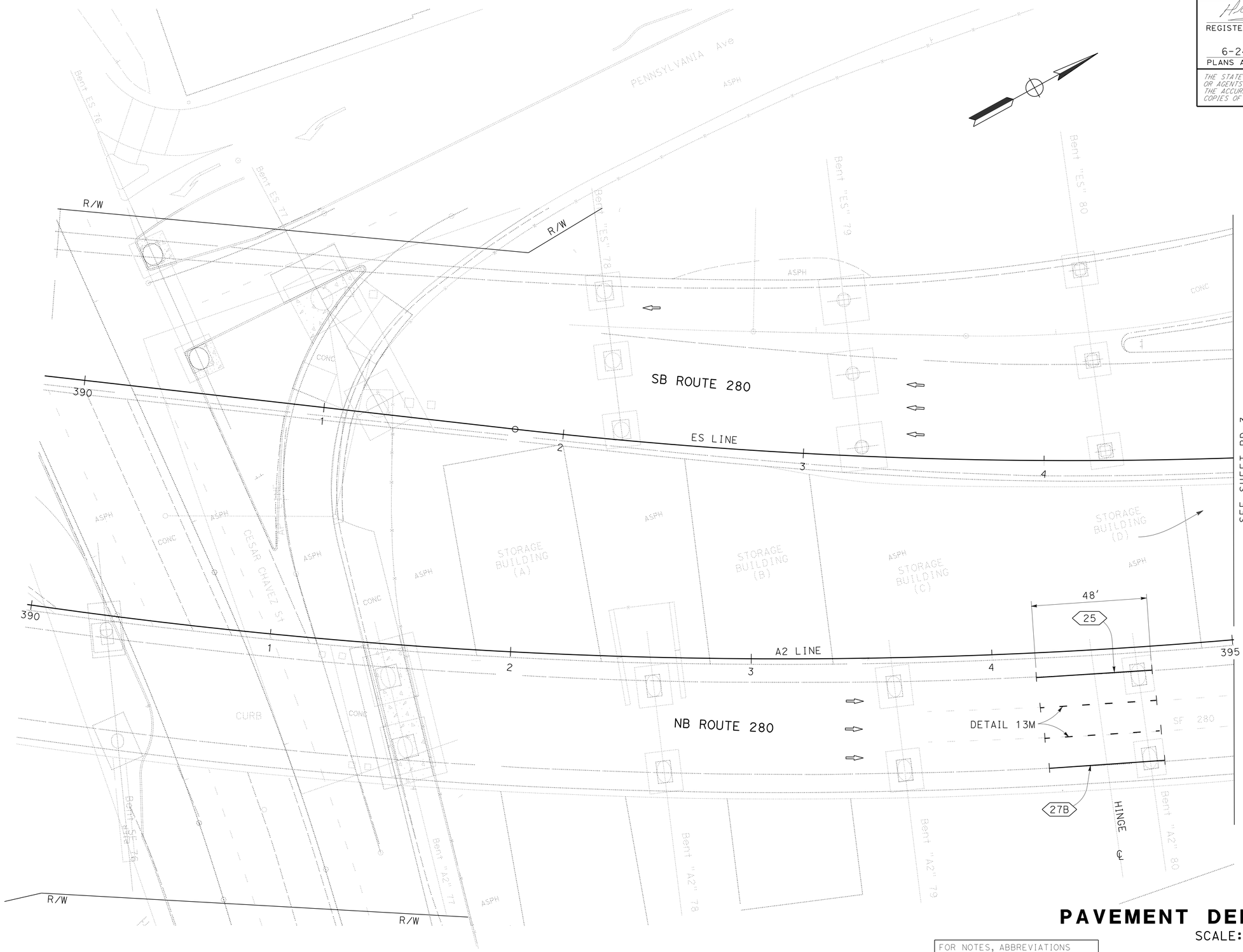

PAVEMENT DELINEATION PLAN

SCALE: 1" = 20'

APPROVED FOR PAVEMENT DELINEATION WORK ONLY

FOR NOTES, ABBREVIATIONS AND LEGEND, SEE SHEET PD-1

PD-2

STATE OF CALIFORNIA - DEPARTMENT OF TRANSPORTATION
Caltrans
DESIGN

FUNCTIONAL SUPERVISOR: AMIR SANATKAR
CALCULATED-DESIGNED BY: HOSSEIN KHODABAKHSH
CHECKED BY: MAX HOVHANESSIAN
REVISED BY: MH
DATE REVISED: 2/21/13

LAST REVISION 05-21-13 | DATE PLOTTED => 25-JUN-2013 | TIME PLOTTED => 07:18

Dist	COUNTY	ROUTE	POST MILES TOTAL PROJECT	SHEET No.	TOTAL SHEETS
04	SF	280	R5.2/R6.0	23	51

REGISTERED CIVIL ENGINEER 3-26-13 DATE

6-24-13
PLANS APPROVAL DATE

REGISTERED PROFESSIONAL ENGINEER
Hossein Khodabakhsh
No. 71650
Exp. 12-31-13
CIVIL
STATE OF CALIFORNIA

THE STATE OF CALIFORNIA OR ITS OFFICERS OR AGENTS SHALL NOT BE RESPONSIBLE FOR THE ACCURACY OR COMPLETENESS OF SCANNED COPIES OF THIS PLAN SHEET.

PAVEMENT DELINEATION PLAN

SCALE: 1" = 20'

APPROVED FOR PAVEMENT DELINEATION WORK ONLY

FOR NOTES, ABBREVIATIONS AND LEGEND, SEE SHEET PD-1

PD-3

STATE OF CALIFORNIA - DEPARTMENT OF TRANSPORTATION
Caltrans®
DESIGN

FUNCTIONAL SUPERVISOR: AMIR SANATKAR
CALCULATED-DESIGNED BY: HOSSEIN KHODABAKHSH
CHECKED BY: MAX HOVHANESSIAN
REVISED BY: MH
DATE REVISED: 2/21/13

LAST REVISION 05-21-13
DATE PLOTTED => 25-JUN-2013
TIME PLOTTED => 07:18

Dist	COUNTY	ROUTE	POST MILES TOTAL PROJECT	SHEET No.	TOTAL SHEETS
04	SF	280	R5.2/R6.0	24	51

REGISTERED CIVIL ENGINEER 3-26-13 DATE

6-24-13
PLANS APPROVAL DATE

REGISTERED PROFESSIONAL ENGINEER Hossein Khodabakhsh No. 71650 Exp. 12-31-13 CIVIL STATE OF CALIFORNIA

THE STATE OF CALIFORNIA OR ITS OFFICERS OR AGENTS SHALL NOT BE RESPONSIBLE FOR THE ACCURACY OR COMPLETENESS OF SCANNED COPIES OF THIS PLAN SHEET.

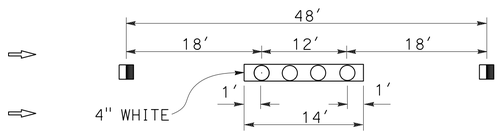

DETAIL 13M
(SEE NOTE 2)

LEGEND:

- TYPE A WHITE NON-REFLECTIVE MARKER
- TYPE G ONE-WAY CLEAR REFLECTIVE MARKER
- 4" WHITE
- DIRECTION OF TRAVEL

NOTES:

1. DETAIL 13M IS MODIFIED PAVEMENT DELINEATION DETAIL 13.
2. INSTALL 4" WHITE AFTER INSTALLING PAVEMENT MARKERS.
3. FOR DETAIL NOT SHOWN, SEE Std PLAN.

TRAFFIC STRIPES, PAVEMENT MARKINGS AND PAVEMENT MARKERS

SHEET No.	STATION	DIRECTION	DETAIL No. OR PAVEMENT MARKING	REMOVE THERMOPLASTIC TRAFFIC STRIPE	PAVEMENT MARKER			THERMOPLASTIC TRAFFIC STRIPE		TEMPORARY TRAFFIC STRIP (PAINT)	TEMPORARY PAVEMENT MARKER
					NON-REFLECTIVE	RETROREFLECTIVE					
				4" YELLOW HAZARDOUS WASTE	TYPE A	TYPE G	TYPE H	4" YELLOW	4" WHITE	(N)	(N)
				LF	EA			LF			EA
PD-1	SE 373+42 TO 373+90	NB	25	48			2	48		48	2
	SE 373+42 TO 373+90		27B						48	48	
	SE 373+42 TO 373+90		13M		8	4			96	96	12
PD-2	A2 394+38 TO 394+86	NB	25	48			2	48		48	2
	A2 394+38 TO 394+86		27B						48	48	
	A2 394+38 TO 394+86		13M		8	4			96	96	12
PD-3	A2 397+38 TO 397+86	NB	25	48			2	48		48	2
	A2 397+38 TO 397+86		27B						48	48	
	A2 397+38 TO 397+86		13M		8	4			96	96	12
	ES 397+10 TO 397+58	SB	25	48			2	48		48	2
	ES 397+10 TO 397+58		27B						48	48	
	ES 397+10 TO 397+58		13M		8	4			96	96	12
SUBTOTAL				192	32	16	8	192	576	768	56
TOTAL				192	32	24		768		768	56

(N) - NOT A SEPARATE PAY ITEM, FOR INFORMATION ONLY.

PAVEMENT DELINEATION QUANTITIES

PDQ-1

STATE OF CALIFORNIA - DEPARTMENT OF TRANSPORTATION
Caltrans® DESIGN

FUNCTIONAL SUPERVISOR: AMIR SANATKAR
CALCULATED-DESIGNED BY: HOSSEIN KHODABAKHSH
CHECKED BY: MAX HOVHANESSIAN
REVISED BY: MH
DATE REVISED: 2/21/13

LAST REVISION 06-05-13 | DATE PLOTTED => 25-JUN-2013 | TIME PLOTTED => 07:18

Dist	COUNTY	ROUTE	POST MILES TOTAL PROJECT	SHEET No.	TOTAL SHEETS
04	SF	280	R5.2/R6.0	25	51

REGISTERED CIVIL ENGINEER 3-26-13 DATE

PLANS APPROVAL DATE 6-24-13

REGISTERED PROFESSIONAL ENGINEER Hossein Khodabakhsh No. 71650 Exp. 12-31-13 CIVIL STATE OF CALIFORNIA

THE STATE OF CALIFORNIA OR ITS OFFICERS OR AGENTS SHALL NOT BE RESPONSIBLE FOR THE ACCURACY OR COMPLETENESS OF SCANNED COPIES OF THIS PLAN SHEET.

TEMPORARY RAILING (TYPE K)

SHEET No.	STATION	DIRECTION	LF
TH-1	SE 373+20 TO 374+00	NB	380
TH-2	A2 394+14 TO 394+94	NB	380
TH-3	ES 396+92 TO 397+72	NB	380
TH-3	A2 397+00 TO 397+80	SB	380
TOTAL			1520

TEMPORARY FENCE AND GATE (TYPE CL-6)

SHEET No.	STATION	16' CHAIN LINK GATE (TYPE CL-6)	TEMPORARY FENCE (TYPE CL-6)
		EA	LF
C-4	SE 372+38 TO 374+62	1	603
TOTAL		1	603

TEMPORARY CRASH CUSHION

SHEET No.	STATION	ARRAY TYPE	MODULE	MODULE 350
			EA	
TH-1	SE 373+20	T2	14	
TH-1	SE 373+20	ABSORB		1
TH-2	A2 394+14	T2	28	
TH-3	A2 397+00	T2	28	
TH-3	ES 397+76	T2	28	
TOTAL			98	1

REMOVE GATE

SHEET No.	STATION	REMOVE EXISTING GATE
		EA
C-4	SE 372+38 TO 374+62	1
TOTAL		1

TEMPORARY WATER POLLUTION CONTROL QUANTITY

SHEET No.	STATION	TEMPORARY DRAINAGE INLET PROTECTION	TEMPORARY GRAVEL BAG
		EA	LF
PD-2	A2 R294+10	1	300
PD-3	ES L397+00	1	300

SUMMARY OF QUANTITIES

Q-1

STATE OF CALIFORNIA - DEPARTMENT OF TRANSPORTATION

Caltrans DESIGN

FUNCTIONAL SUPERVISOR: AMIR SANATKAR

CALCULATED-DESIGNED BY: HOSSEIN KHODABAKHSH

CHECKED BY: MAX HOVHANESSIAN

REVISED BY: MH

DATE REVISED: 2/21/13

LAST REVISION 05-21-13

DATE PLOTTED => 25-JUN-2013

TIME PLOTTED => 07:04

Dist	COUNTY	ROUTE	POST MILES TOTAL PROJECT	SHEET No.	TOTAL SHEETS
04	SF	280	R5.2/R6.0	26	51

REGISTERED CIVIL ENGINEER

October 19, 2012
PLANS APPROVAL DATE

REGISTERED PROFESSIONAL ENGINEER
Glenn DeCou
No. C34547
Exp. 9-30-13
CIVIL
STATE OF CALIFORNIA

THE STATE OF CALIFORNIA OR ITS OFFICERS OR AGENTS SHALL NOT BE RESPONSIBLE FOR THE ACCURACY OR COMPLETENESS OF SCANNED COPIES OF THIS PLAN SHEET.

TO ACCOMPANY PLANS DATED 6-24-13

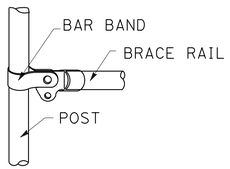

BRACE RAIL

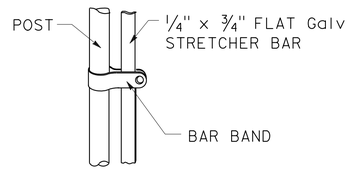

STRETCHER BAR

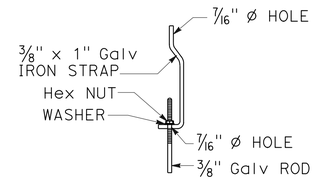

TRUSS TIGHTENER

NOTES:

1. All material for abutment connection to be galvanized.
2. The chain link fabric shall be replaced by barbed wire strands at 12" maximum centers between the double posts.
3. When the width of the culvert makes it necessary to anchor a post to the top of the culvert, a cast iron shoe or other device approved by the Engineer shall be used.
4. Fencing over stream and around headwall may also use Barbed Wire or Wire Mesh fencing with either wood post or steel post installation.
5. See Standard Plan A85 for Chain Link fence dimensions. See Standard Plan A86 for Barbed Wire and Wire Mesh fence dimensions and for wood post and steel post installation.

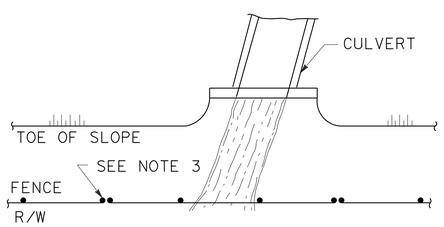

PLAN

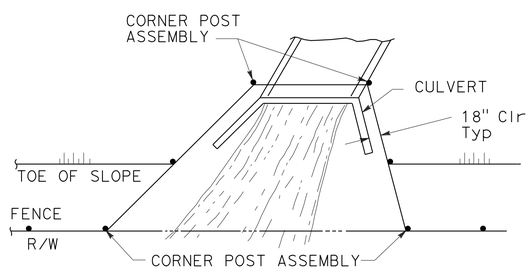

PLAN

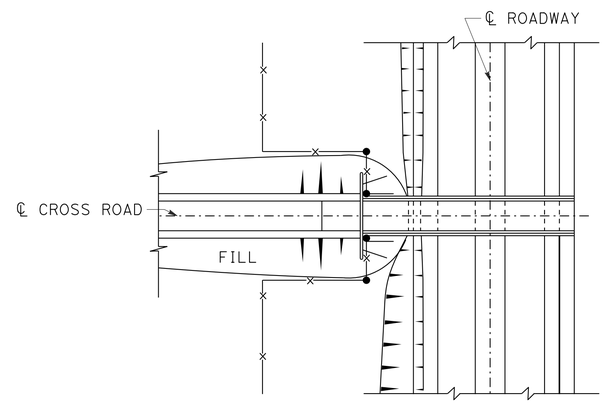

PLAN OF ROADWAY - OVERCROSSING

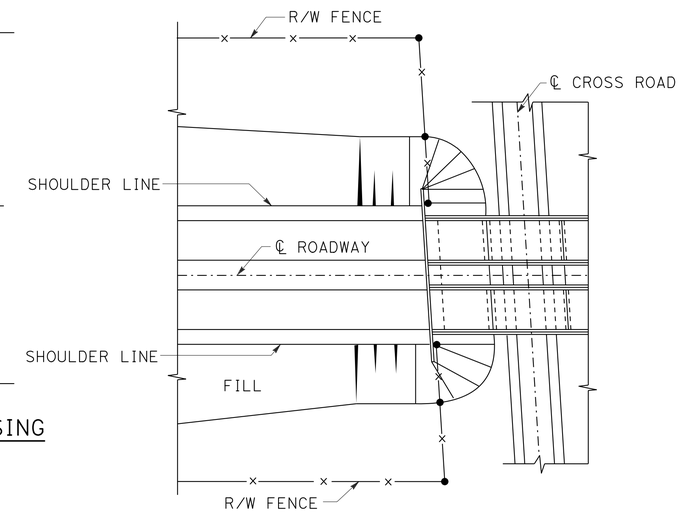

PLAN OF ROADWAY - UNDERCROSSING

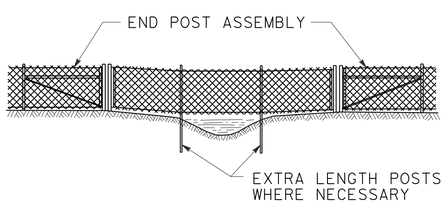

ELEVATION

INSTALLATION OVER STREAM

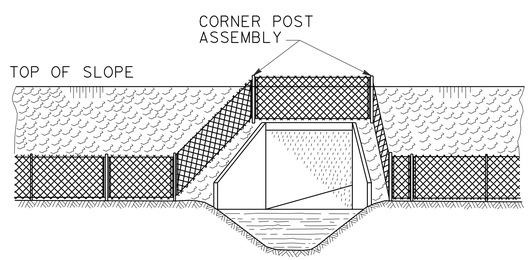

ELEVATION

INSTALLATION AROUND HEADWALL

See Note 4

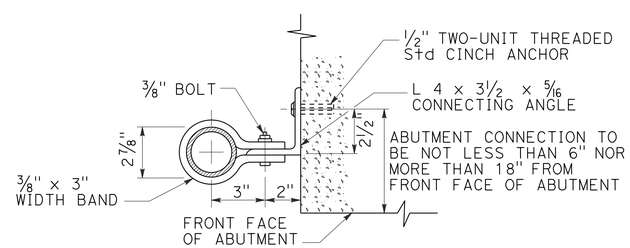

ABUTMENT CONNECTION

TYPICAL INSTALLATION AT BRIDGES

STATE OF CALIFORNIA
DEPARTMENT OF TRANSPORTATION

CHAIN LINK FENCE DETAILS

NO SCALE

RSP A85B DATED OCTOBER 19, 2012 SUPERSEDES STANDARD PLAN A85B
DATED MAY 20, 2011 - PAGE 114 OF THE STANDARD PLANS BOOK DATED 2010.

REVISED STANDARD PLAN RSP A85B

2010 REVISED STANDARD PLAN RSP A85B

7-19-12

Dist	COUNTY	ROUTE	POST MILES TOTAL PROJECT	SHEET No.	TOTAL SHEETS
04	SF	280	R5.2/R6.0	27	51

REGISTERED CIVIL ENGINEER

April 19, 2013
PLANS APPROVAL DATE

REGISTERED PROFESSIONAL ENGINEER
Gurinderpal Bhullar
No. C48815
Exp. 9-30-14
CIVIL
STATE OF CALIFORNIA

THE STATE OF CALIFORNIA OR ITS OFFICERS OR AGENTS SHALL NOT BE RESPONSIBLE FOR THE ACCURACY OR COMPLETENESS OF SCANNED COPIES OF THIS PLAN SHEET.

TO ACCOMPANY PLANS DATED 6-24-13

2010 REVISED STANDARD PLAN RSP T9

TABLE 1

TAPER LENGTH CRITERIA AND CHANNELIZING DEVICE SPACING

SPEED (S)	MINIMUM TAPER LENGTH * FOR WIDTH OF OFFSET 12 FEET (W)				MAXIMUM CHANNELIZING DEVICE SPACING		
					X	Y	Z **
	TANGENT 2L	MERGING L	SHIFTING L/2	SHOULDER L/3	TAPER	TANGENT	CONFLICT
mph	ft	ft	ft	ft	ft	ft	ft
20	160	80	40	27	20	40	10
25	250	125	63	42	25	50	12
30	360	180	90	60	30	60	15
35	490	245	123	82	35	70	17
40	640	320	160	107	40	80	20
45	1080	540	270	180	45	90	22
50	1200	600	300	200	50	100	25
55	1320	660	330	220	55	110	27
60	1440	720	360	240	60	120	30
65	1560	780	390	260	65	130	32
70	1680	840	420	280	70	140	35

* - For other offsets, use the following merging taper length formula for L:
For speed of 40 mph or less, $L = WS^2/60$
For speed of 45 mph or more, $L = WS$

Where: L = Taper length in feet
W = Width of offset in feet
S = Posted speed limit, off-peak 85th-percentile speed prior to work starting, or the anticipated operating speed in mph

** - Use for taper and tangent sections where there are no pavement markings or where there is a conflict between existing pavement markings and channelizers (CA).

TABLE 2

LONGITUDINAL BUFFER SPACE AND FLAGGER STATION SPACING

SPEED *	Min D **	DOWNGRADE Min D ***		
		-3%	-6%	-9%
mph	ft	ft	ft	ft
20	115	116	120	126
25	155	158	165	173
30	200	205	215	227
35	250	257	271	287
40	305	315	333	354
45	360	378	400	427
50	425	446	474	507
55	495	520	553	593
60	570	598	638	686
65	645	682	728	785
70	730	771	825	891

* - Speed is posted speed limit, off-peak 85th-percentile speed prior to work starting, or the anticipated operating speed in mph

** - Longitudinal buffer space or flagger station spacing

*** - Use on sustained downgrade steeper than -3 percent and longer than 1 mile.

TABLE 3

ADVANCE WARNING SIGN SPACING

ROAD TYPE	DISTANCE BETWEEN SIGNS *		
	A	B	C
	ft	ft	ft
URBAN - 25 mph OR LESS	100	100	100
URBAN - MORE THAN 25 mph TO 40 mph	250	250	250
URBAN - MORE THAN 40 mph	350	350	350
RURAL	500	500	500
EXPRESSWAY / FREEWAY	1000	1500	2640

* - The distances are approximate, are intended for guidance purposes only, and should be applied with engineering judgment. These distances should be adjusted by the Engineer for field conditions, if necessary, by increasing or decreasing the recommmended distances.

STATE OF CALIFORNIA
DEPARTMENT OF TRANSPORTATION

TRAFFIC CONTROL SYSTEM FOR LANE CLOSURE ON FREEWAYS AND EXPRESSWAYS

NO SCALE

RSP T9 DATED APRIL 19, 2013 SUPPLEMENTS THE STANDARD PLANS BOOK DATED 2010.

REVISED STANDARD PLAN RSP T9

1-23-13

Dist	COUNTY	ROUTE	POST MILES TOTAL PROJECT	SHEET No.	TOTAL SHEETS
04	SF	280	R5.2/R6.0	28	51

REGISTERED CIVIL ENGINEER

April 19, 2013
PLANS APPROVAL DATE

REGISTERED PROFESSIONAL ENGINEER Gurinderpal Bhullar No. C48815 Exp. 9-30-14 CIVIL STATE OF CALIFORNIA

THE STATE OF CALIFORNIA OR ITS OFFICERS OR AGENTS SHALL NOT BE RESPONSIBLE FOR THE ACCURACY OR COMPLETENESS OF SCANNED COPIES OF THIS PLAN SHEET.

TO ACCOMPANY PLANS DATED 6-24-13

NOTES:

See Revised Standard Plan RSP T9 for tables.

Use cone spacing X for taper segment, Y for tangent segment or Z for conflict situations, as approriate, per Table 1, unless X, Y, or Z cone spacing is shown on this sheet.

Unless otherwise specified in the special provisions, all temporary warning signs shall have black legend on fluorescent orange background.

California codes are designated by (CA). Otherwise, Federal (MUTCD) codes are shown.

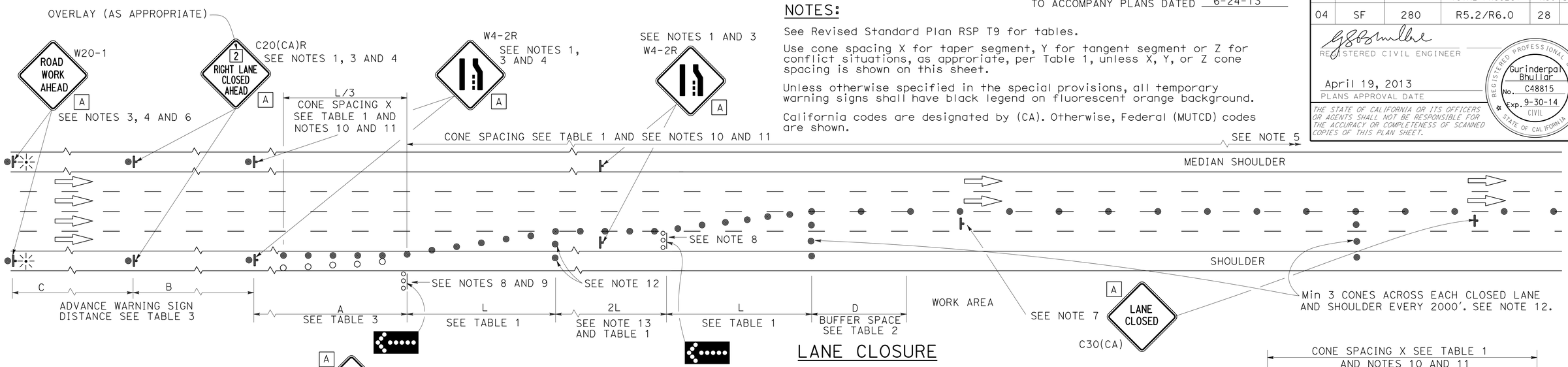

LANE CLOSURE

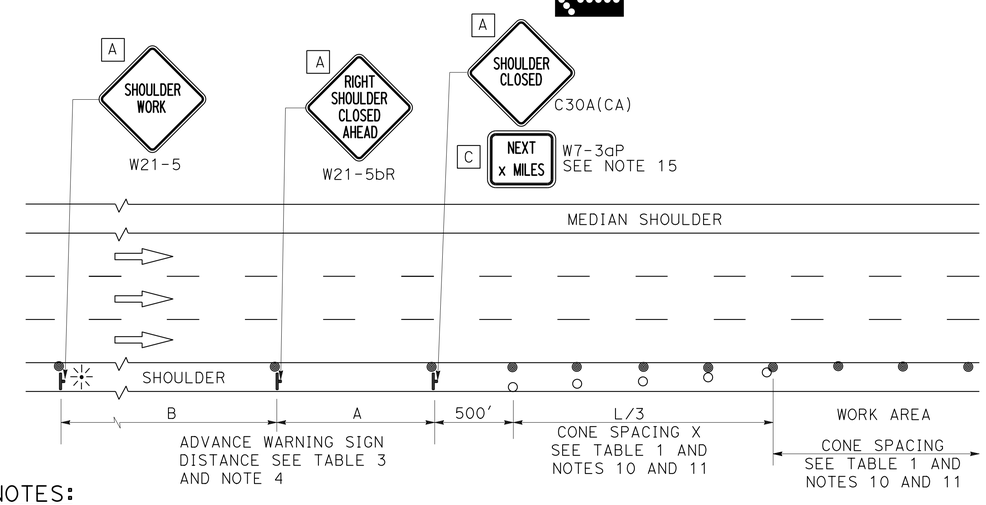

SHOULDER CLOSURE

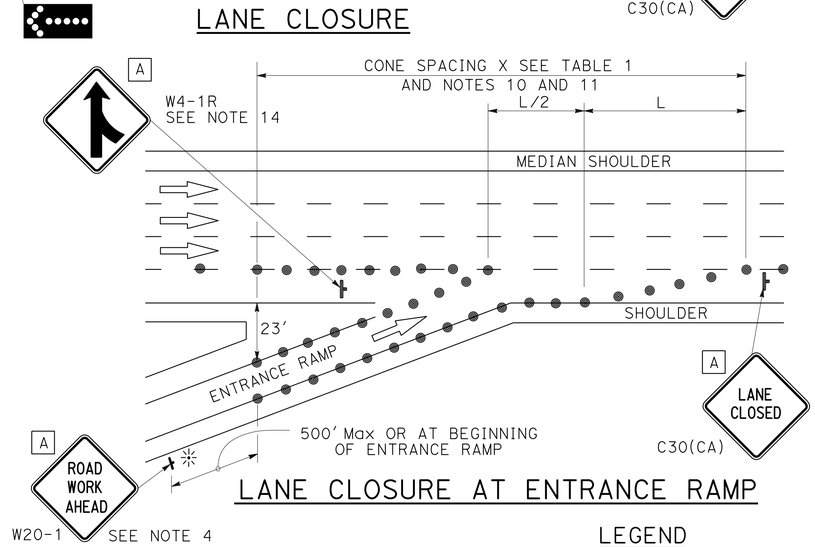

LANE CLOSURE AT ENTRANCE RAMP

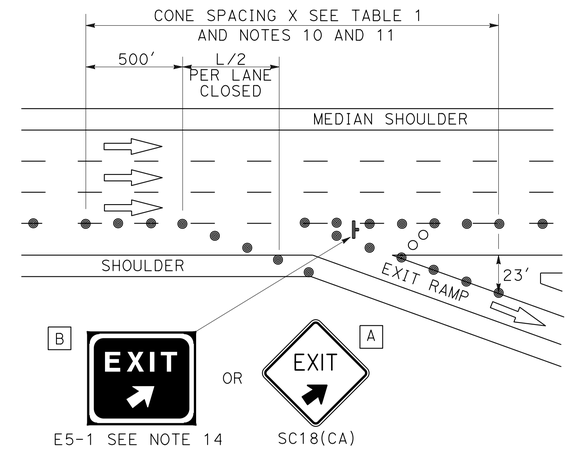

LANE CLOSURE AT EXIT RAMP

NOTES:

1. Median lane closures shall conform to the details as shown except that C20(CA)L and W4-2L signs shall be used.
2. At least one person shall be assigned to provide full time maintenance of traffic control devices for lane closures.
3. Duplicate sign installations are not required:
   a) On opposite shoulder if at least one-half of the available lanes remain open to traffic.
   b) In the median if the width of the median shoulder is less than 8' and the outside lanes are to be closed.
4. Each advance warning sign on each side of the roadway shall be equipped with at least two flags for daytime closure. Each flag shall be at least 16" x 16" in size and shall be orange or fluorescent red-orange in color. Flashing beacons shall be placed at the locations indicated for lane closure during hours of darkness.
5. A G20-2 "END ROAD WORK" sign, with minimum size of 48" x 24" as appropriate, shall be placed at the end of the lane closure unless the end of work area is obvious or ends within a larger project's limits.
6. If the W20-1 sign would follow within 2000' of a stationary W20-1 or G20-1 "ROAD WORK NEXT _____ MILES", use a C20(CA) sign for the first advance warning sign.
7. Place a C30(CA) sign every 2000' throughout length of lane closure.
8. One flashing arrow sign for each lane closed. The flashing arrow signs shall be Type I.
9. A minimum 1500' of sight distance shall be provided where possible for vehicles approaching the first flashing arrow sign. Lane closures shall not begin at top of crest vertical curve or on a horizontal curve.
10. All cones used for lane closures during the hours of darkness shall be fitted with retroreflective bands (or sleeves) as specified in the specifications.
11. Portable delineators, placed at one-half the spacing indicated for traffic cones may be used instead of cones for daytime closures only.
12. Unless otherwise specified in the special provisions, a minimum of 3 cones shall be placed transversely across each closed lane and shoulder at each location where a taper across a traffic lane ends and every 2000' as shown on the "Lane Closure" detail. Two Type II barricades may be used instead of the 3 cones. The transverse alignment of the cones or barricades on the closed shoulder may be shifted from the transverse alignment to provide access to the work.
13. Unless otherwise specified in the special provisions, the 2L tangent shown along lane lines shall be used between the L tapers required for each closed traffic lane.
14. Unless otherwise specified in the special provisions, the E5-1 or SC18(CA) and W4-1 signs shall be used as shown.
15. A W7-3aP "NEXT____ MILES" plaque must be used if theshoulder closure extends beyond the distance that can be perceived by road users.

LEGEND

- TRAFFIC CONE
- TRAFFIC CONE (OPTIONAL TAPER)
- TEMPORARY TRAFFIC CONTROL SIGN
- FLASHING ARROW SIGN (FAS)
- FAS SUPPORT OR TRAILER
- PORTABLE FLASHING BEACON

SIGN PANEL SIZE (Min)

A	48" x 48"
B	72" x 60"
C	36" x 30"

STATE OF CALIFORNIA
DEPARTMENT OF TRANSPORTATION

TRAFFIC CONTROL SYSTEM FOR LANE CLOSURE ON FREEWAYS AND EXPRESSWAYS

NO SCALE

RSP T10 DATED APRIL 19, 2013 SUPERSEDES STANDARD PLAN T10 DATED MAY 20, 2011 - PAGE 237 OF THE STANDARD PLANS BOOK DATED 2010.

REVISED STANDARD PLAN RSP T10

2010 REVISED STANDARD PLAN RSP T10

12-18-12

TO ACCOMPANY PLANS DATED 6-24-13

Dist	COUNTY	ROUTE	POST MILES TOTAL PROJECT	SHEET No.	TOTAL SHEETS
04	SF	280	R5.2/R6.0	29	51

REGISTERED CIVIL ENGINEER

April 19, 2013
PLANS APPROVAL DATE

REGISTERED PROFESSIONAL ENGINEER Gurinderpal Bhullar No. C48815 Exp. 9-30-14 CIVIL STATE OF CALIFORNIA

THE STATE OF CALIFORNIA OR ITS OFFICERS OR AGENTS SHALL NOT BE RESPONSIBLE FOR THE ACCURACY OR COMPLETENESS OF SCANNED COPIES OF THIS PLAN SHEET.

NOTES: See Revised Standard Plan RSP T9 for tables.

Use cone spacing X for taper segment, Y for tangent segment or Z for conflict situations, as approriate, per Table 1, unless X, Y, or Z cone spacing is shown on this sheet.

Unless otherwise specified in the special provisions, all temporary warning signs shall have black legend on fluorescent orange background.

California codes are designated by (CA). Otherwise, Federal (MUTCD) codes are shown.

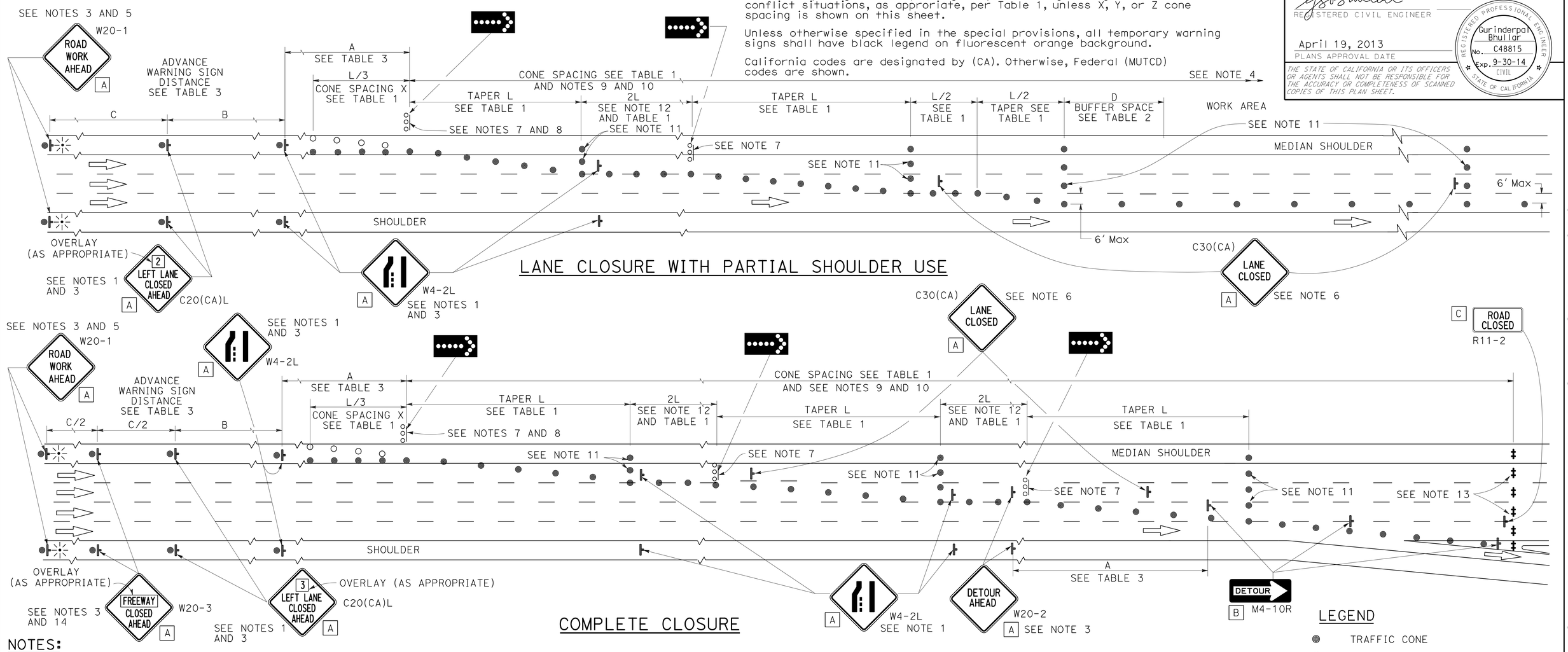

LANE CLOSURE WITH PARTIAL SHOULDER USE

COMPLETE CLOSURE

NOTES:

1. Lane closures on the right side using partial median shoulder as a traffic lane shall conform to the details as shown except that C20(CA)R and W4-2R signs shall be used.
2. At least one person shall be assigned to provide full time maintenance of traffic control devices for lane closures.
3. Each advance warning sign on each side of the roadway shall be equipped with at least two flags for daytime closure. Each flag shall be at least 16" X 16" in size and shall be orange or fluorescent red-orange in color. Flashing beacons shall be placed at the locations indicated for lane closure during hours of darkness.
4. A G20-2 "END ROAD WORK" sign, with minimum size of 48" x 24" as appropriate, shall be placed at the end of the lane closure unless the end of work area is obvious or ends within a larger project's limits.
5. If the W20-1 sign would follow within 2000' of a stationary W20-1 or G20-1 "ROAD WORK NEXT ___ MILES", use a C20(CA) sign for the first advance warning sign.
6. Place a C30(CA) sign every 2000' throughout length of lane closure.
7. One flashing arrow sign for each lane closed. The flashing arrow signs shall be Type I.
8. A minimum 1500' of sight distance shall be provided where possible for vehicles approaching the first flashing arrow sign. Lane closures shall not begin at the top of crest vertical curve or on a horizontal curve.
9. All cones used for lane closures during the hours of darkness shall be fitted with retroreflective bands (or sleeves) as specified in the specifications.
10. Portable delineators, placed at one-half the spacing indicated for traffic cones, may be used instead of cones for daytime closures only.
11. Unless otherwise specified in the special provisions, a minimum of 3 cones shall be placed transversely across each closed lane and shoulder at each location where a taper across a traffic lane ends and every 2000' as shown on the "Lane Closure With Partial Shoulder Use" detail. Two Type II barricades may be used instead of the 3 cones. The transverse alignment of the cones or barricades on the closed shoulder may be shifted from the transverse alignment to provide access to the work.
12. Unless otherwise specified in the special provisions, the 2L tangent shown along lane lines shall be used between the L tapers required for each closed traffic lane.
13. A minimum of Two Type II or III barricades shall be placed across each closed lane and shoulder at the location shown and every 2000' within the complete closure area. Within the complete closure area, the transverse alignment of the barricades on the closed shoulder may be shifted from the transverse alignment to provide access to the work.
14. When specified in the special provisions, a W20-2 "DETOUR AHEAD" sign is to be used in place of the W20-3 "FREEWAY CLOSED AHEAD" sign.

SIGN PANEL SIZE (Min)

A	48" x 48"
B	48" x 18"
C	48" x 30"

LEGEND

- TRAFFIC CONE
- TRAFFIC CONE (OPTIONAL TAPER)
- TEMPORARY TRAFFIC CONTROL SIGN
- FLASHING ARROW SIGN (FAS)
- FAS SUPPORT OR TRAILER
- PORTABLE FLASHING BEACON

STATE OF CALIFORNIA
DEPARTMENT OF TRANSPORTATION

TRAFFIC CONTROL SYSTEM FOR LANE CLOSURES ON FREEWAYS AND EXPRESSWAYS

NO SCALE

RSP T10A DATED APRIL 19, 2013 SUPERSEDES STANDARD PLAN T10A DATED MAY 20, 2011 - PAGE 238 OF THE STANDARD PLANS BOOK DATED 2010.

REVISED STANDARD PLAN RSP T10A

2010 REVISED STANDARD PLAN RSP T10A

12-18-12

Dist	COUNTY	ROUTE	POST MILES TOTAL PROJECT	SHEET No.	TOTAL SHEETS
04	SF	280	R5.2/R6.0	30	51

REGISTERED CIVIL ENGINEER

April 19, 2013
PLANS APPROVAL DATE

REGISTERED PROFESSIONAL ENGINEER Gurinderpal Bhullar No. C48815 Exp. 9-30-14 CIVIL STATE OF CALIFORNIA

THE STATE OF CALIFORNIA OR ITS OFFICERS OR AGENTS SHALL NOT BE RESPONSIBLE FOR THE ACCURACY OR COMPLETENESS OF SCANNED COPIES OF THIS PLAN SHEET.

TO ACCOMPANY PLANS DATED 6-24-13

TYPICAL RAMP CLOSURES

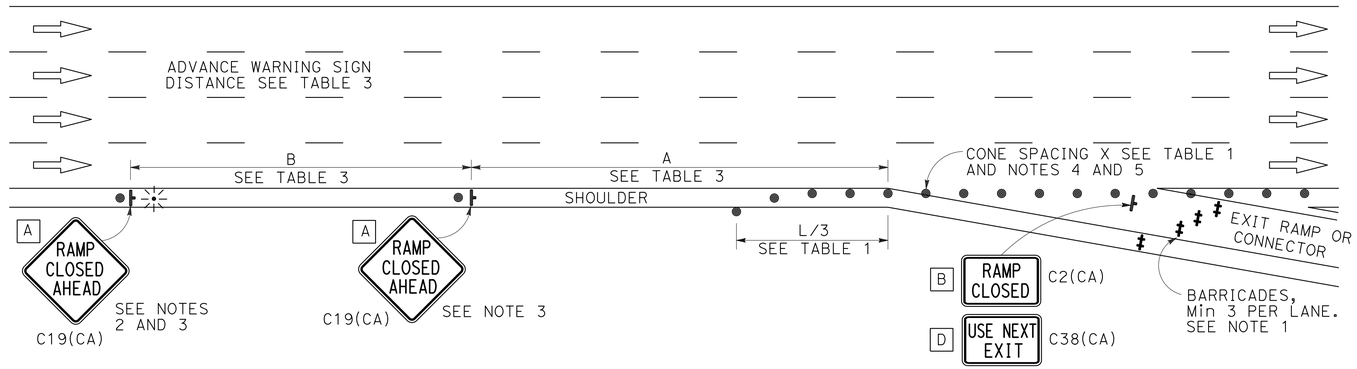

EXIT RAMP OR CONNECTOR

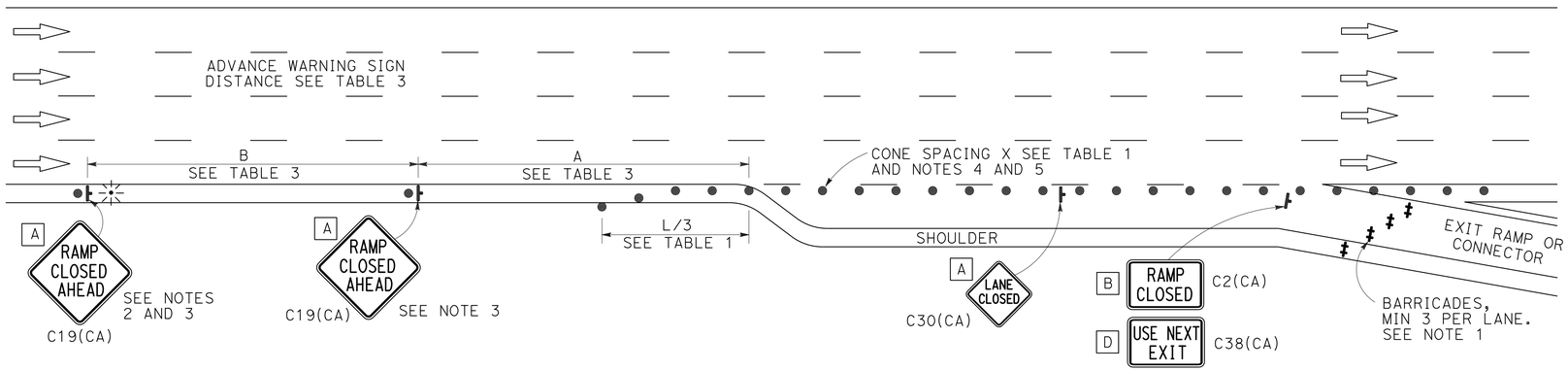

EXIT RAMP OR CONNECTOR WITH ADDITIONAL LANE

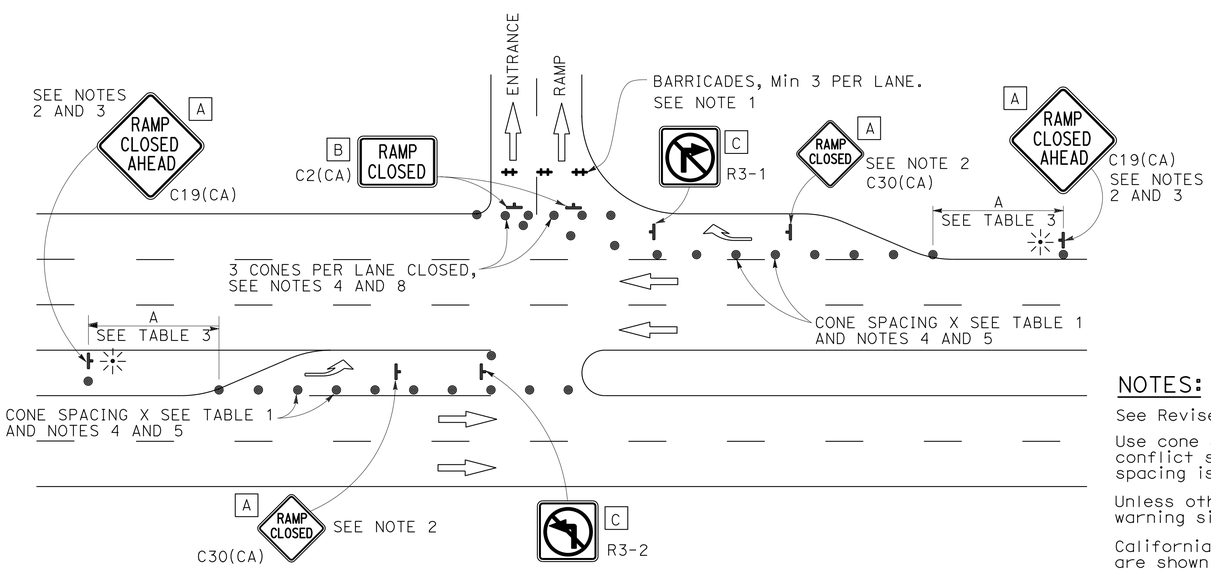

ENTRANCE RAMP WITH TURNING POCKETS

SIGN PANEL SIZE (Min)

- A 48" x 48"
- B 48" x 30"
- C 36" x 36"
- D 48" x 36"

LEGEND

- TRAFFIC CONE
- TEMPORARY TRAFFIC CONTROL SIGN
- BARRICADES
- PORTABLE FLASHING BEACON

NOTES:

1. Barricades shall be Type I, II, or III for closures lasting one week or less and Type III for closures lasting longer than one week.
2. In addition to placing the C19(CA) "RAMP CLOSED AHEAD" and C30(CA) "RAMP CLOSED" signs, black on orange overlay plates with the word "CLOSED" may be mounted, as directed by the Engineer, on all guide signs that refer to the closed ramp. The letter size on the overlay shall be the same as the guide sign.
3. Each advance C19(CA) "RAMP CLOSED AHEAD" sign shall be equipped with at least two flags for daytime closure. Each flag shall be at least 16" x 16" in size and shall be orange or fluorescent red-orange in color. A flashing beacon shall be placed on top of the first C19(CA) sign during hours of darkness.
4. All cones used for ramp closures during the hours of darkness shall be fitted with retroreflective bands (or sleeves) as specified in the specifications.
5. Portable delineators, placed at one-half the spacing indicated for traffic cones, may be used instead of cones for daytime ramp closures only.
6. At least one person shall be assigned to provide full time maintenance of traffic control devices, unless otherwise directed by the Engineer.
7. The existing "EXIT" signs shall be covered during ramp closures.
8. A minimum of 3 cones shall be placed transversely across each closed lane and shoulder.

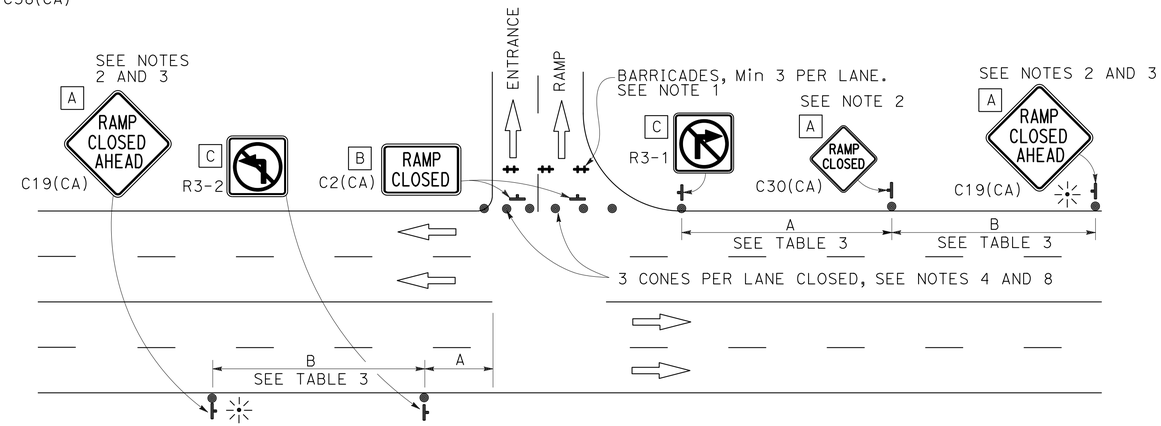

ENTRANCE RAMP WITHOUT TURNING POCKETS

NOTES:

See Revised Standard Plan RSP T9 for tables.

Use cone spacing X for taper segment, Y for tangent segment or Z for conflict situations, as approriate, per Table 1, unless X, Y, or Z cone spacing is shown on this sheet.

Unless otherwise specified in the special provisions, all temporary warning signs shall have black legend on fluorescent orange background.

California codes are designated by (CA). Otherwise, Federal (MUTCD) codes are shown.

STATE OF CALIFORNIA
DEPARTMENT OF TRANSPORTATION

TRAFFIC CONTROL SYSTEM FOR RAMP CLOSURE

NO SCALE

RSP T14 DATED APRIL 19, 2013 SUPERSEDES STANDARD PLAN T14 DATED MAY 20, 2011 - PAGE 242 OF THE STANDARD PLANS BOOK DATED 2010.

REVISED STANDARD PLAN RSP T14

2010 REVISED STANDARD PLAN RSP T14

12-18-12

DIST	COUNTY	ROUTE	POST MILES TOTAL PROJECT	SHEET No.	TOTAL SHEETS
04	SF	280	R5.2/R6.0	31	51

Charles R Hutchinson 1-24-13
REGISTERED CIVIL ENGINEER DATE

6-24-13
PLANS APPROVAL DATE

REGISTERED PROFESSIONAL ENGINEER CHARLES R. HUTCHINSON No. C 54226 Exp. 12-31-13 CIVIL STATE OF CALIFORNIA

The State of California or its officers or agents shall not be responsible for the accuracy or completeness of electronic copies of this plan sheet.

INDEX TO PLANS

SHEET No.	TITLE
1	GENERAL PLAN
2	QUANTITIES
3	TEMPORARY SUPPORT DETAILS No. 1
4	TEMPORARY SUPPORT DETAILS No. 2
5	EXISTING HINGE DETAILS No. 1
6	EXISTING HINGE DETAILS No. 2
7	EXISTING HINGE DETAILS No. 3
8	RECONSTRUCTED HINGE DETAILS No. 1
9	RECONSTRUCTED HINGE DETAILS No. 2
10	RECONSTRUCTED HINGE DETAILS No. 3
11	RECONSTRUCTED HINGE DETAILS No. 4
12	TYPICAL SECTIONS
13	EXISTING TOP & BOTTOM SLAB REINFORCEMENT No. 1
14	EXISTING TOP & BOTTOM SLAB REINFORCEMENT No. 2
15	EXISTING TOP & BOTTOM SLAB REINFORCEMENT No. 3
16	EXISTING TOP & BOTTOM SLAB REINFORCEMENT No. 4
17	EXISTING TOP & BOTTOM SLAB REINFORCEMENT No. 5
18	BARRIER RAILING TYPE 1 DETAILS
19	CABLE RESTRAINER UNIT - TYPE 2
20	CABLE RESTRAINER ADJUSTMENT HARDWARE
21	DECK AND SOFFIT OPENINGS

STANDARD PLANS DATED 2010

SHEET No.	TITLE
A10A	ABBREVIATIONS (SHEET 1 OF 2)
A10B	ABBREVIATIONS (SHEET 2 OF 2)
B0-3	BRIDGE DETAILS
B0-5	BRIDGE DETAILS
B0-13	BRIDGE DETAILS
B6-21	JOINT SEALS (MAXIMUM MOVEMENT RATING = 2")
B7-1	BOX GIRDER DETAILS

NOTES: (APPLY TO ALL SHEETS)

···–··–··– Indicates existing.

THE CONTRACTOR SHALL VERIFY ALL CONTROLLING FIELD DIMENSIONS BEFORE ORDERING OR FABRICATING ANY MATERIAL.

STANDARD PLAN SHEET NUMBER
DETAIL NUMBER

NOTES: (APPLY TO THIS SHEET ONLY)

1. Indicates location of reconstruct existing hinge.

2. Compressive strength between first and second lift shall not be less than 1,200 psi.

3. Compressive strength of of deck shall reach 3,250 psi prior to opening of deck to traffic.

Contractor may install all temporary supports at all locations at the same time.

Temporary supports and formwork will not be released until concrete compressive strength of 3,600 psi has been attained.

See "QUANTITIES" sheet for "QUANTITIES" and "GENERAL NOTES".

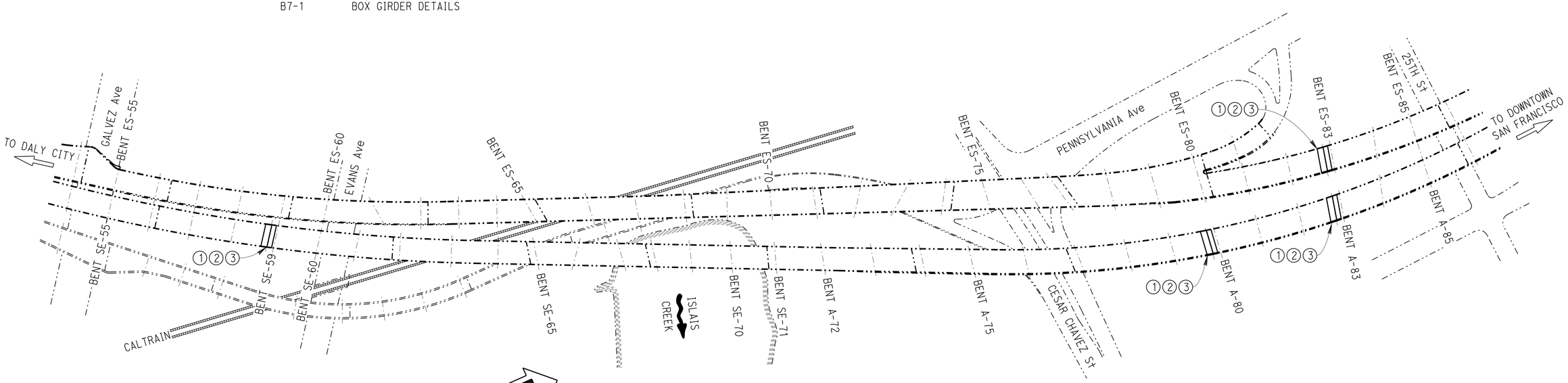

PLAN
NO SCALE

Michael J. Lee 1-24-13
DESIGN ENGINEER

	BY	CHECKED
DESIGN	KHANH TRUONG	CHARLES HUTCHINSON
DETAILS	G.F. BIDWELL	CHARLES HUTCHINSON
QUANTITIES	KHANH TRUONG	CHARLES HUTCHINSON

LOAD FACTOR DESIGN — LIVE LOADING: HS20-44 AND ALTERNATIVE AND PERMIT DESIGN LOAD
LAYOUT — BY G.F. BIDWELL — CHECKED CHARLES HUTCHINSON
SPECIFICATIONS — BY MARY KOPSA — PLANS AND SPECS COMPARED MARY KOPSA

STATE OF CALIFORNIA
DEPARTMENT OF TRANSPORTATION

DIVISION OF MAINTENANCE
STRUCTURE MAINTENANCE DESIGN

BRIDGE No. 34-0046
POST MILE R4.40

SOUTHERN FREEWAY VIADUCT (RECONSTRUCT HINGES)
GENERAL PLAN

STRUCTURES MAINTENANCE GENERAL PLAN SHEET (ENGLISH) (REV. 09-01-10)

ORIGINAL SCALE IN INCHES FOR REDUCED PLANS 0 1 2 3

UNIT: 3488
PROJECT NUMBER & PHASE: 0400001138 1
CONTRACT NO.: 04-4A5101

DISREGARD PRINTS BEARING EARLIER REVISION DATES
REVISION DATES: 10-5-11 1-31-12 12-12-12 1-25-13 5-17-13
SHEET 1 OF 21

FILE => 04-4a5101_01gp.dgn

USERNAME => s128843 DATE PLOTTED => 25-JUN-2013 TIME PLOTTED => 07:06

DIST	COUNTY	ROUTE	POST MILES TOTAL PROJECT	SHEET No.	TOTAL SHEETS
04	SF	280	R5.2/R6.0	32	51

Charles R Hutchinson 1-24-13
REGISTERED CIVIL ENGINEER DATE

6-24-13
PLANS APPROVAL DATE

REGISTERED PROFESSIONAL ENGINEER CHARLES R. HUTCHINSON No. C 54226 Exp. 12-31-13 CIVIL STATE OF CALIFORNIA

The State of California or its officers or agents shall not be responsible for the accuracy or completeness of electronic copies of this plan sheet.

HINGE ES-83 BRIDGE NO. 34-0046

QUANTITIES

BRIDGE REMOVAL (PORTION)	LUMP	SUM
RECONSTRUCT METAL RAILING (BRIDGE)	48	LF
TEMPORARY SUPPORT	LUMP	SUM
STRUCTURAL CONCRETE, BRIDGE	111	CY
JOINT SEAL (MR 2")	54	LF
BAR REINFORCING STEEL (BRIDGE)	37,564	LB
MISCELLANEOUS METAL (RESTRAINER - CORROSION PROTECTION CABLE TYPE)	1,900	LB
MISCELLANEOUS METAL (BRIDGE)	855	LB
TYPE 1 BARRIER RAILING (REINFORCED CONCRETE PARAPET)	48	LF

HINGE A-80 BRIDGE NO. 34-0046

QUANTITIES

BRIDGE REMOVAL (PORTION)	LUMP	SUM
RECONSTRUCT METAL RAILING (BRIDGE)	48	LF
TEMPORARY SUPPORT	LUMP	SUM
STRUCTURAL CONCRETE, BRIDGE	110	CY
JOINT SEAL (MR 2")	54	LF
BAR REINFORCING STEEL (BRIDGE)	39,345	LB
MISCELLANEOUS METAL (RESTRAINER - CORROSION PROTECTION CABLE TYPE)	1,900	LB
MISCELLANEOUS METAL (BRIDGE)	855	LB
TYPE 1 BARRIER RAILING (REINFORCED CONCRETE PARAPET)	48	LF

HINGE A-83 BRIDGE NO. 34-0046

QUANTITIES

BRIDGE REMOVAL (PORTION)	LUMP	SUM
RECONSTRUCT METAL RAILING (BRIDGE)	48	LF
TEMPORARY SUPPORT	LUMP	SUM
STRUCTURAL CONCRETE, BRIDGE	110	CY
JOINT SEAL (MR 2")	54	LF
BAR REINFORCING STEEL (BRIDGE)	39,993	LB
MISCELLANEOUS METAL (RESTRAINER - CORROSION PROTECTION CABLE TYPE)	1,900	LB
MISCELLANEOUS METAL (BRIDGE)	855	LB
TYPE 1 BARRIER RAILING (REINFORCED CONCRETE PARAPET)	48	LF

HINGE SE-59 BRIDGE NO. 34-0046

QUANTITIES

BRIDGE REMOVAL (PORTION)	LUMP	SUM
RECONSTRUCT METAL RAILING (BRIDGE)	48	LF
TEMPORARY SUPPORT	LUMP	SUM
STRUCTURAL CONCRETE, BRIDGE	100	CY
JOINT SEAL (MR 1½")	54	LF
BAR REINFORCING STEEL (BRIDGE)	37,716	LB
MISCELLANEOUS METAL (RESTRAINER - CORROSION PROTECTION CABLE TYPE)	1,900	LB
MISCELLANEOUS METAL (BRIDGE)	855	LB
TYPE 1 BARRIER RAILING (REINFORCED CONCRETE PARAPET)	48	LF

GENERAL NOTES
LOAD FACTOR DESIGN

DESIGN:	BRIDGE DESIGN SPECIFICATIONS (1996 AASHTO with Interims and Revisions by CALTRANS)
DEAD LOAD:	Includes 35 psf for future wearing surface.
LIVE LOADING:	HS20-44 alternative
REINFORCED CONCRETE:	fy = 60 ksi f'c = 3.6 ksi n = 8
HIGH STRENGTH RODS:	ASTM A449
HIGH STRENGTH BARS:	ASTM A722

	BY	CHECKED
DESIGN	KHANH TRUONG	CHARLES HUTCHINSON
DETAILS	G.F. BIDWELL	CHARLES HUTCHINSON
QUANTITIES	KHANH TRUONG	CHARLES HUTCHINSON

STATE OF CALIFORNIA
DEPARTMENT OF TRANSPORTATION

DIVISION OF MAINTENANCE
STRUCTURE MAINTENANCE DESIGN

BRIDGE No. 34-0046
POST MILE R4.40

SOUTHERN FREEWAY VIADUCT (RECONSTRUCT HINGES)
QUANTITIES

STRUCTURES MAINTENANCE GENERAL PLAN SHEET (ENGLISH) (REV. 09-01-10)

ORIGINAL SCALE IN INCHES FOR REDUCED PLANS 0 1 2 3

UNIT: 3488
PROJECT NUMBER & PHASE: 0400001138 1
CONTRACT NO.: 04-4A5101

DISREGARD PRINTS BEARING EARLIER REVISION DATES
REVISION DATES: ~~1-25-13~~ 5-17-13

SHEET 2 OF 21

FILE => 04-4a5101_02quantities.dgn

USERNAME => s128843 DATE PLOTTED => 25-JUN-2013 TIME PLOTTED => 07:06

DIST	COUNTY	ROUTE	POST MILES TOTAL PROJECT	SHEET No.	TOTAL SHEETS
04	SF	280	R5.2/R6.0	33	51

Charles R. Hutchinson 1-24-13
REGISTERED CIVIL ENGINEER DATE

6-24-13
PLANS APPROVAL DATE

REGISTERED PROFESSIONAL ENGINEER CHARLES R. HUTCHINSON No. C 54226 Exp. 12-31-13 CIVIL STATE OF CALIFORNIA

The State of California or its officers or agents shall not be responsible for the accuracy or completeness of electronic copies of this plan sheet.

NOTES: (APPLY TO THIS SHEET ONLY)

Indicates limits of reconstruct existing hinge.

Indicates region temporary supports may be placed.

TEMPORARY SUPPORT NOTES:

All footings for temporary supports shall not exceed a soil bearing pressure of 3,500 psf.

The maximum allowable transverse displacement of the superstructure measured at the bottom of soffit relative to the base of the temporary support is 1". The differential vertical lift between jacks shall not exceed 1/16". The temporary support shall be jacked to provide a snug fit with the bridge girders.

Temporary supports contact points shall be centered under the girders.

TEMPORARY SUPPORT TABLE

LOCATION	DEAD LOAD (K)	INITIAL JACKING LOAD[1]	LL + I REACTION (K)	MINIMUM LATERAL TEMPORARY SUPPORT DESIGN FORCE (K)
SPAN SE 58	355		282	36
SPAN SE 59		750	298	35
SPAN A 79	420		308	42
SPAN A 80		500	282	25
SPAN A 82	395		307	40
SPAN A 83		500	282	25
SPAN ES 82	423		310	42
SPAN ES 83		500	298	25

(1) Jacking load listed is for the optimum location. The Engineer will provide the jacking load for temporary support locations other than the optimum. Loads shown are unfactored.

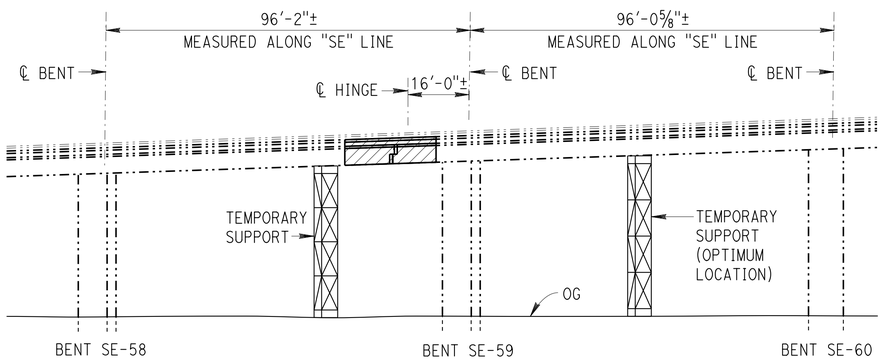

ELEVATION

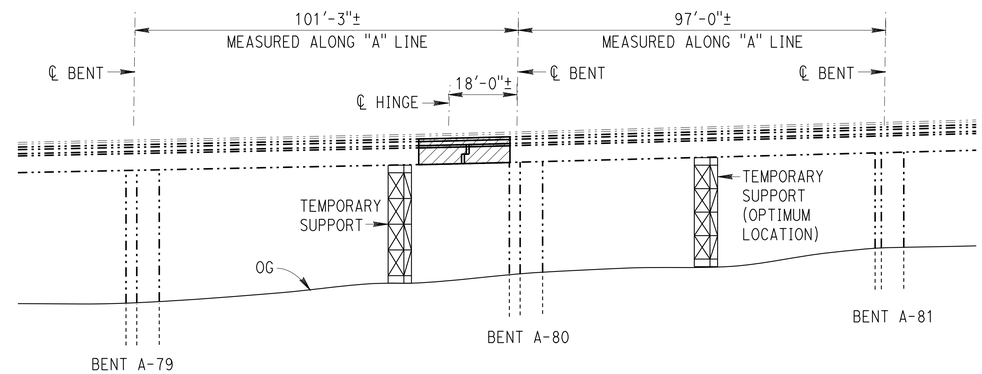

ELEVATION

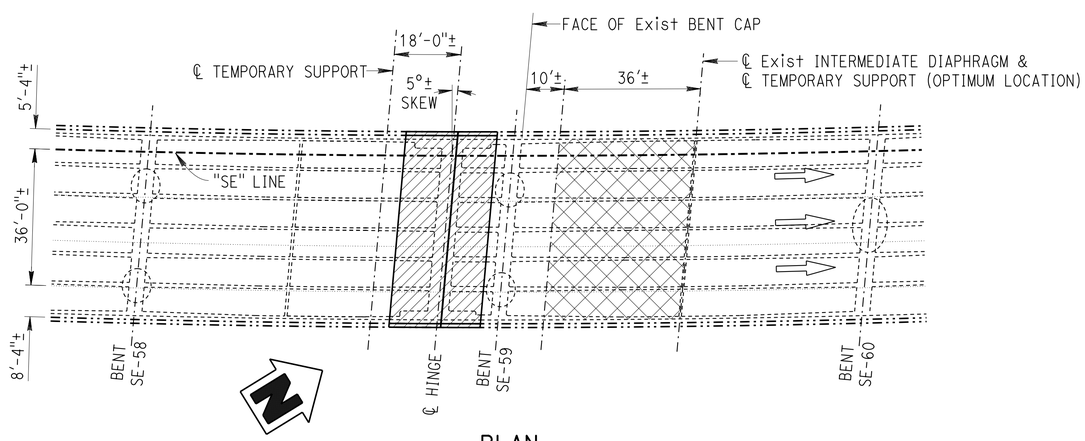

PLAN

BENT SE-59

1" = 20'

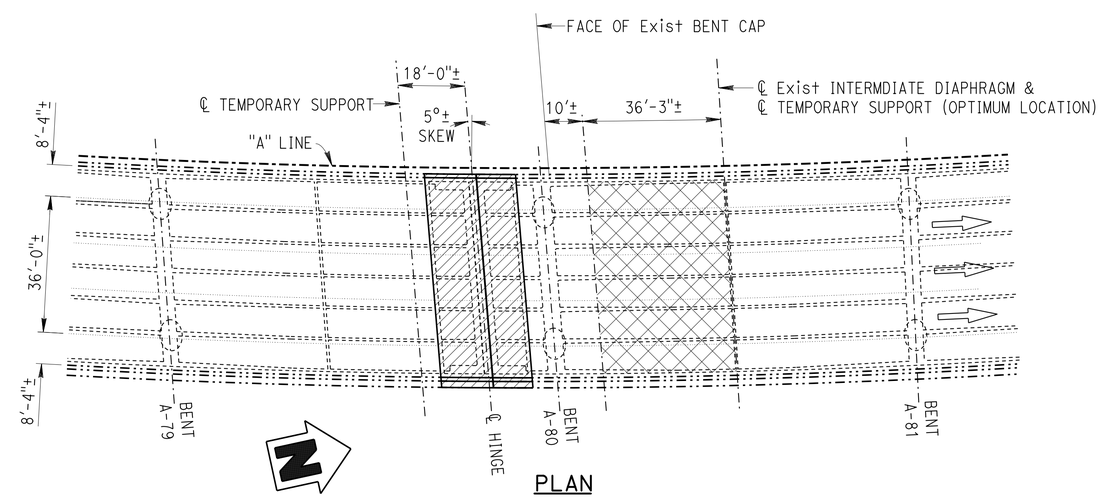

PLAN

BENT A-80

1" = 20'

DESIGN	BY KHANH TRUONG	CHECKED CHARLES HUTCHINSON	
DETAILS	BY G.F. BIDWELL	CHECKED CHARLES HUTCHINSON	
QUANTITIES	BY KHANH TRUONG	CHECKED CHARLES HUTCHINSON	

STATE OF CALIFORNIA
DEPARTMENT OF TRANSPORTATION

DIVISION OF MAINTENANCE
STRUCTURE MAINTENANCE DESIGN

BRIDGE No. 34-0046
POST MILE R4.40

SOUTHERN FREEWAY VIADUCT (RECONSTRUCT HINGES)

TEMPORARY SUPPORT DETAILS No. 1

STRUCTURES MAINTENANCE GENERAL PLAN SHEET (ENGLISH) (REV. 09-01-10)

ORIGINAL SCALE IN INCHES FOR REDUCED PLANS 0 1 2 3

UNIT: 3488
PROJECT NUMBER & PHASE: 0400001138 1
CONTRACT NO.: 04-4A5101

DISREGARD PRINTS BEARING EARLIER REVISION DATES → REVISION DATES 10-5-11 1-31-12 12-12-12 1-25-13 5-17-13

SHEET 3 OF 21

FILE => 04-4a5101_03tempsup1.dgn

USERNAME => s128843 DATE PLOTTED => 25-JUN-2013 TIME PLOTTED => 07:06

DIST	COUNTY	ROUTE	POST MILES TOTAL PROJECT	SHEET No.	TOTAL SHEETS
04	SF	280	R5.2/R6.0	34	51

Charles R Hutchinson 1-24-13
REGISTERED CIVIL ENGINEER DATE

6-24-13
PLANS APPROVAL DATE

REGISTERED PROFESSIONAL ENGINEER CHARLES R. HUTCHINSON No. C 54226 Exp. 12-31-13 CIVIL STATE OF CALIFORNIA

The State of California or its officers or agents shall not be responsible for the accuracy or completeness of electronic copies of this plan sheet.

NOTES: (APPLY TO THIS SHEET ONLY)

Indicates limits of reconstruct existing hinge.

Indicates region temporary supports may be placed.

Temporary supports contact points shall be centered under the girders.

See "TEMPORARY SUPPORT DETAILS No. 1" sheet for "TEMPORARY SUPPORT TABLE" and "TEMPORARY SUPPORT NOTES".

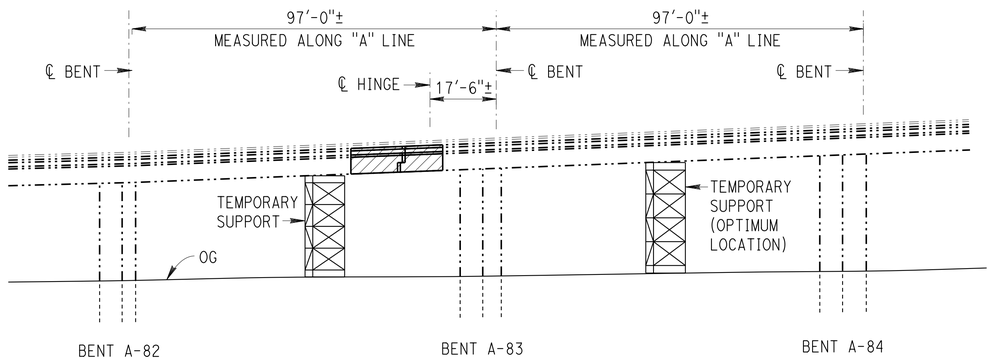

ELEVATION

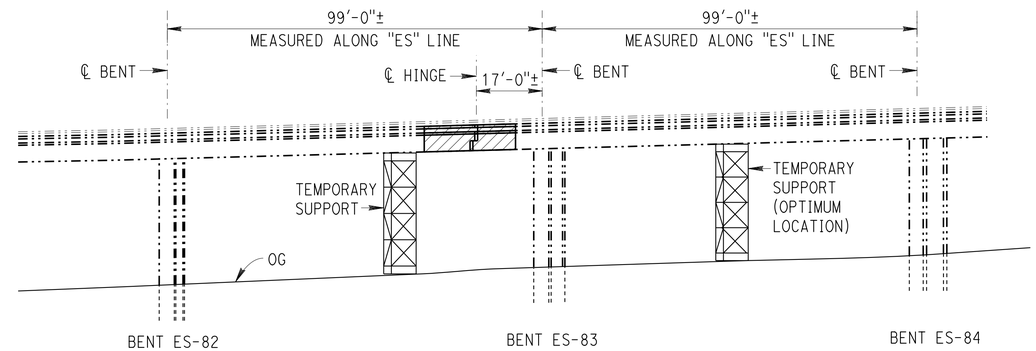

ELEVATION

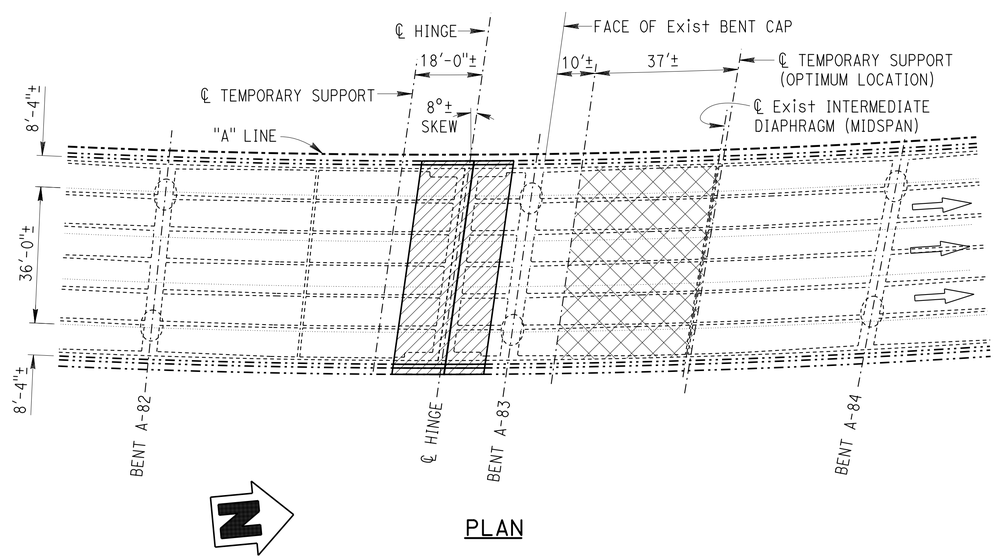

PLAN

BENT A-83

1" = 20'

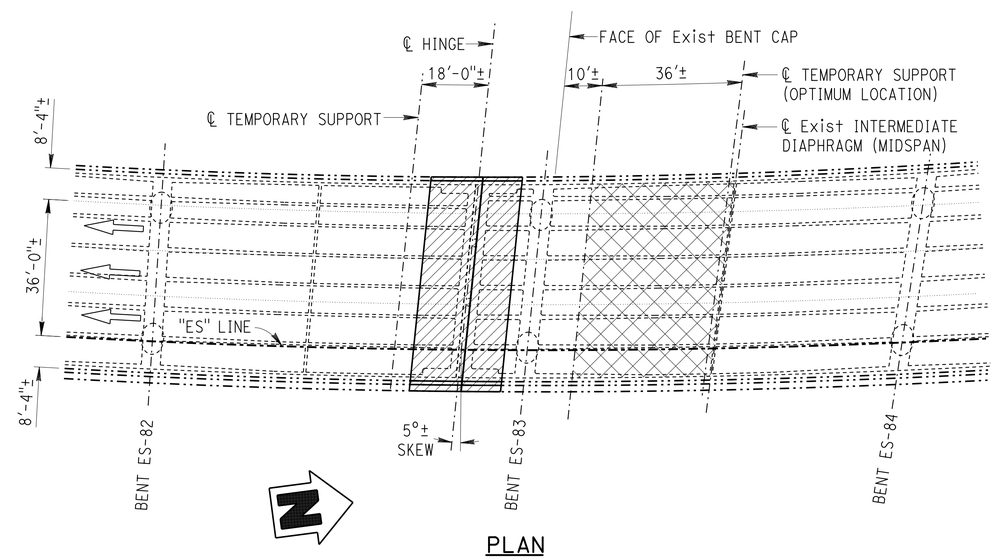

PLAN

BENT ES-83

1" = 20'

DESIGN	BY KHANH TRUONG	CHECKED CHARLES HUTCHINSON	
DETAILS	BY G.F. BIDWELL	CHECKED CHARLES HUTCHINSON	
QUANTITIES	BY KHANH TRUONG	CHECKED CHARLES HUTCHINSON	

STATE OF CALIFORNIA
DEPARTMENT OF TRANSPORTATION

DIVISION OF MAINTENANCE
STRUCTURE MAINTENANCE DESIGN

BRIDGE No. 34-0046
POST MILE R4.40

SOUTHERN FREEWAY VIADUCT (RECONSTRUCT HINGES)

TEMPORARY SUPPORT DETAILS No. 2

STRUCTURES MAINTENANCE GENERAL PLAN SHEET (ENGLISH) (REV. 09-01-10)

ORIGINAL SCALE IN INCHES FOR REDUCED PLANS 0 1 2 3

UNIT: 3488
PROJECT NUMBER & PHASE: 0400001138 1
CONTRACT NO.: 04-4A5101

DISREGARD PRINTS BEARING EARLIER REVISION DATES

REVISION DATES: 10-5-11 1-31-12 12-12-12 1-25-13 5-17-13

SHEET 4 OF 21

FILE => 04-4a5101_04tempsup2.dgn

USERNAME => s128843 DATE PLOTTED => 25-JUN-2013 TIME PLOTTED => 07:06

DIST	COUNTY	ROUTE	POST MILES TOTAL PROJECT	SHEET No.	TOTAL SHEETS
04	SF	280	R5.2/R6.0	35	51

Charles R Hutchinson 1-24-13
REGISTERED CIVIL ENGINEER DATE

6-24-13
PLANS APPROVAL DATE

REGISTERED PROFESSIONAL ENGINEER CHARLES R. HUTCHINSON No. C 54226 Exp. 12-31-13 CIVIL STATE OF CALIFORNIA

The State of California or its officers or agents shall not be responsible for the accuracy or completeness of electronic copies of this plan sheet.

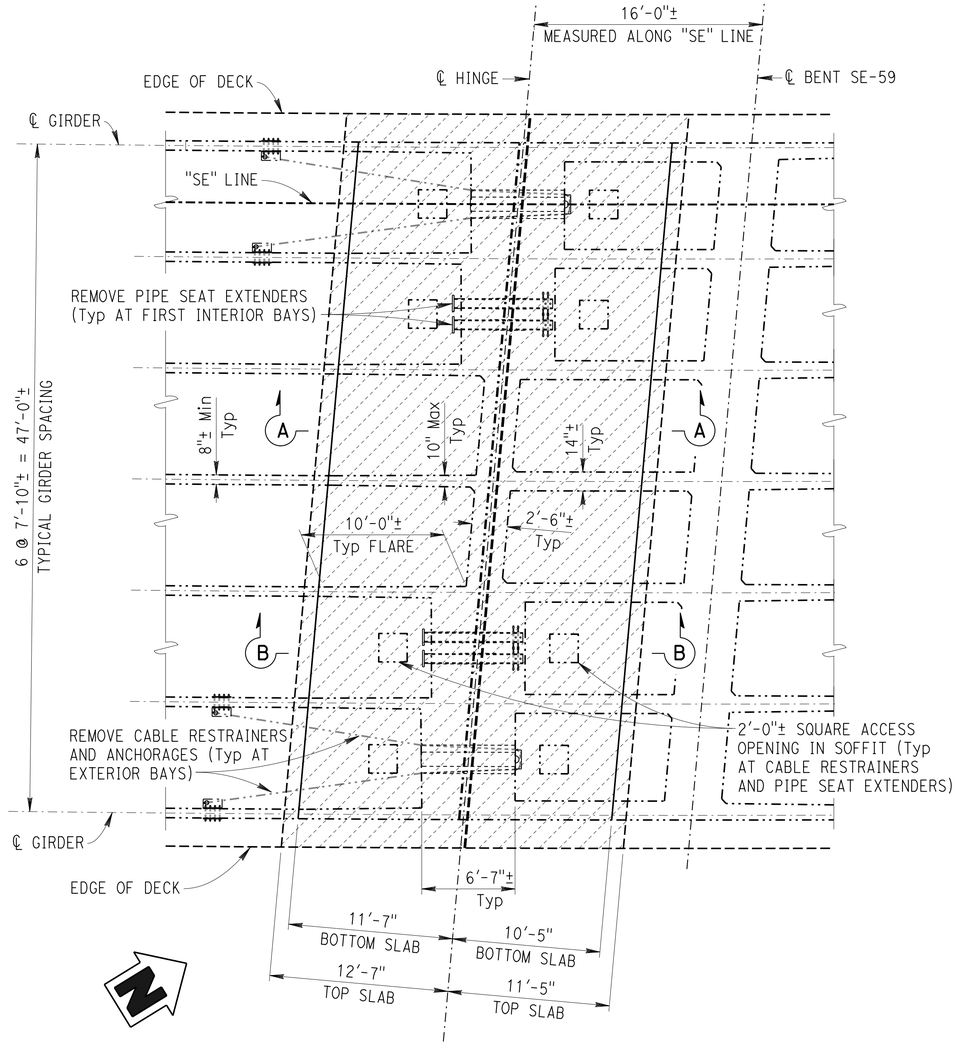

EXISTING
PARTIAL GIRDER LAYOUT AT BENT SE-59

3/16" = 1'

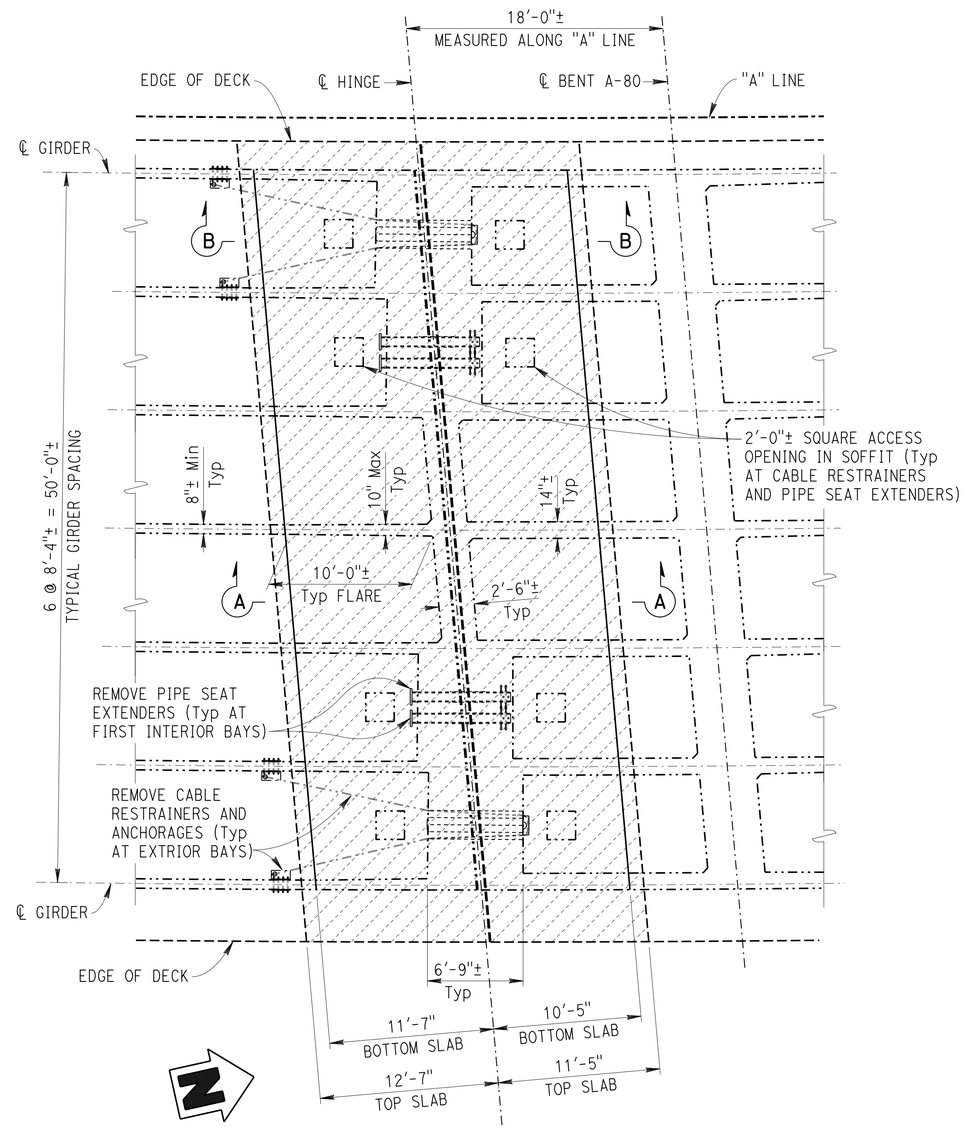

EXISTING
PARTIAL GIRDER LAYOUT AT BENT A-80

3/16" = 1'

NOTES: (APPLY TO THIS SHEET ONLY)

Indicates limits of remove existing barrier railing, concrete deck, bottom slab, girder and hinge. Retain sufficent length for splicing existing longitudinal reinforcement in the concrete deck, bottom slab and girder. Retain metal tube railing and posts.

See "EXISTING HINGE DETAILS No. 3" sheet for "SECTION A-A" and "SECTION B-B".

	BY	CHECKED
DESIGN	KHANH TRUONG	CHARLES HUTCHINSON
DETAILS	G.F. BIDWELL	CHARLES HUTCHINSON
QUANTITIES	KHANH TRUONG	CHARLES HUTCHINSON

STATE OF CALIFORNIA
DEPARTMENT OF TRANSPORTATION

DIVISION OF MAINTENANCE
STRUCTURE MAINTENANCE DESIGN

BRIDGE No. 34-0046
POST MILE R4.40

SOUTHERN FREEWAY VIADUCT (RECONSTRUCT HINGES)

EXISTING HINGE DETAILS No. 1

STRUCTURES MAINTENANCE GENERAL PLAN SHEET (ENGLISH) (REV. 09-01-10)

ORIGINAL SCALE IN INCHES FOR REDUCED PLANS 0 1 2 3

UNIT: 3488
PROJECT NUMBER & PHASE: 0400001138 1
CONTRACT NO.: 04-4A5101

DISREGARD PRINTS BEARING EARLIER REVISION DATES
REVISION DATES: 10-5-11 1-31-12 12-12-12 1-25-13 5-17-13

SHEET 5 OF 21

FILE => 04-4a5101_05existhinge1.dgn

USERNAME => s128843 DATE PLOTTED => 25-JUN-2013 TIME PLOTTED => 07:06

DIST	COUNTY	ROUTE	POST MILES TOTAL PROJECT	SHEET No.	TOTAL SHEETS
04	SF	280	R5.2/R6.0	36	51

Charles R Hutchinson 1-24-13
REGISTERED CIVIL ENGINEER DATE

6-24-13
PLANS APPROVAL DATE

REGISTERED PROFESSIONAL ENGINEER CHARLES R. HUTCHINSON No. C 54226 Exp. 12-31-13 CIVIL STATE OF CALIFORNIA

The State of California or its officers or agents shall not be responsible for the accuracy or completeness of electronic copies of this plan sheet.

NOTES: (APPLY TO THIS SHEET ONLY)

Indicates limits of remove existing barrier railing, concrete deck, bottom slab, girder and hinge. Retain sufficent length for splicing existing longitudinal reinforcement in the concrete deck, bottom slab and girder. Retain metal tube railing and posts.

See "EXISTING HINGE DETAILS No. 3" sheet for "SECTION A-A" and "SECTION B-B".

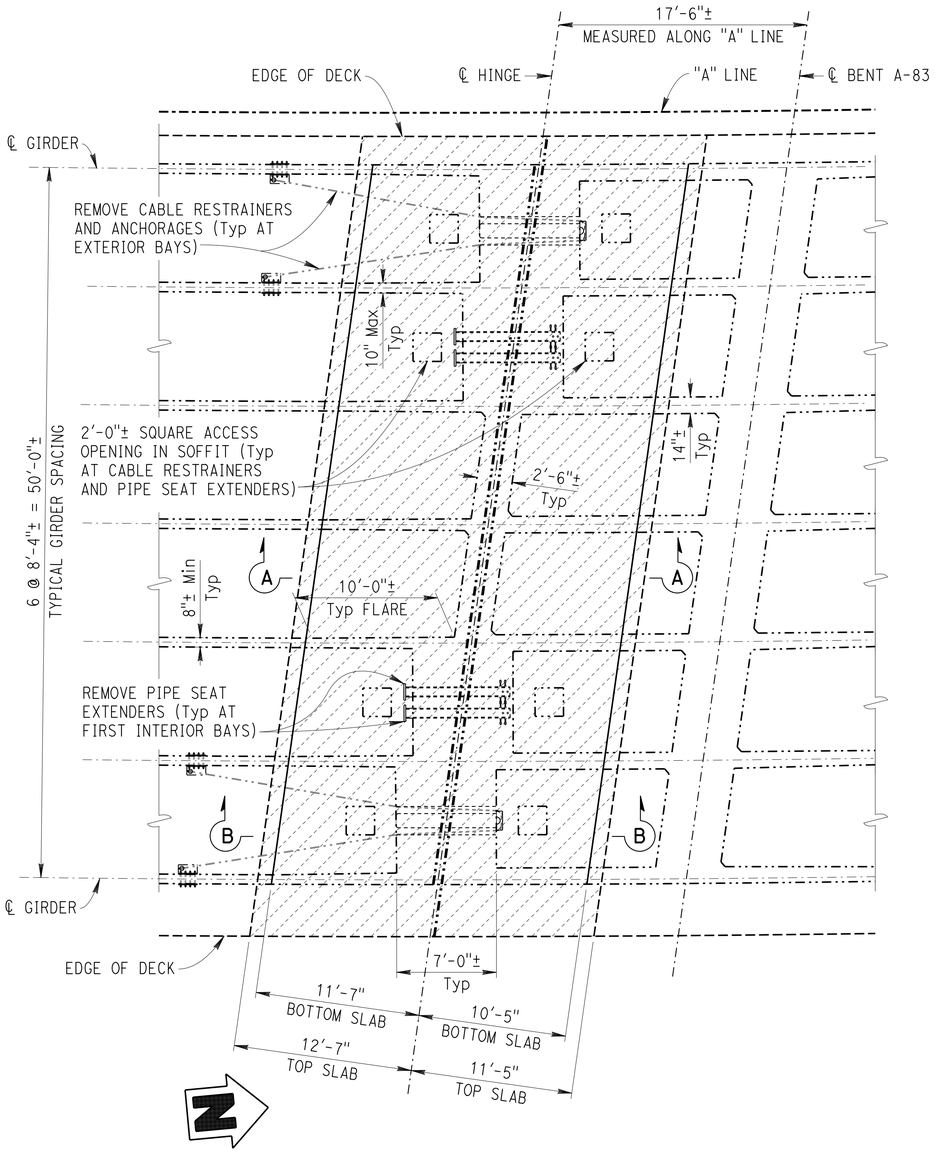

EXISTING
PARTIAL GIRDER LAYOUT AT BENT A-83

3/16" = 1'

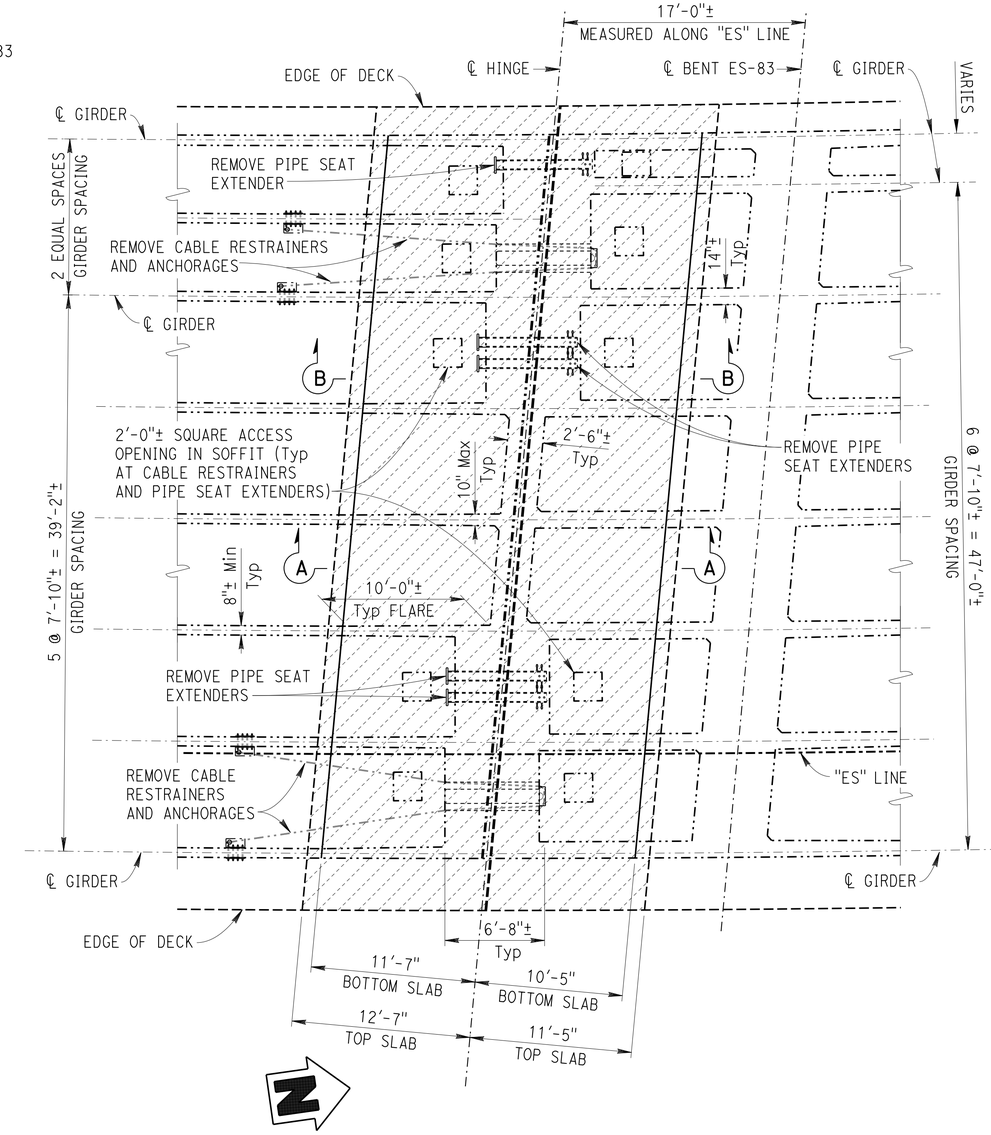

EXISTING
PARTIAL GIRDER LAYOUT AT BENT ES-83

3/16" = 1'

DESIGN	BY KHANH TRUONG	CHECKED CHARLES HUTCHINSON	
DETAILS	BY G.F. BIDWELL	CHECKED CHARLES HUTCHINSON	
QUANTITIES	BY KHANH TRUONG	CHECKED CHARLES HUTCHINSON	

STATE OF CALIFORNIA
DEPARTMENT OF TRANSPORTATION

DIVISION OF MAINTENANCE
STRUCTURE MAINTENANCE DESIGN

BRIDGE No. 34-0046
POST MILE R4.40

SOUTHERN FREEWAY VIADUCT (RECONSTRUCT HINGES)

EXISTING HINGE DETAILS No. 2

STRUCTURES MAINTENANCE GENERAL PLAN SHEET (ENGLISH) (REV. 09-01-10)

ORIGINAL SCALE IN INCHES FOR REDUCED PLANS 0 1 2 3

UNIT: 3488
PROJECT NUMBER & PHASE: 0400001138 1
CONTRACT NO.: 04-4A5101

DISREGARD PRINTS BEARING EARLIER REVISION DATES

REVISION DATES: 10-5-11 1-31-12 12-12-12 1-25-13 5-17-13

SHEET 6 OF 21

FILE => 04-4a5101_06existhinge2.dgn

USERNAME => s128843 DATE PLOTTED => 25-JUN-2013 TIME PLOTTED => 07:06

DIST	COUNTY	ROUTE	POST MILES TOTAL PROJECT	SHEET No.	TOTAL SHEETS
04	SF	280	R5.2/R6.0	37	51

Charles R. Hutchinson 1-24-13
REGISTERED CIVIL ENGINEER DATE

6-24-13
PLANS APPROVAL DATE

REGISTERED PROFESSIONAL ENGINEER CHARLES R. HUTCHINSON No. C 54226 Exp. 12-31-13 CIVIL STATE OF CALIFORNIA

The State of California or its officers or agents shall not be responsible for the accuracy or completeness of electronic copies of this plan sheet.

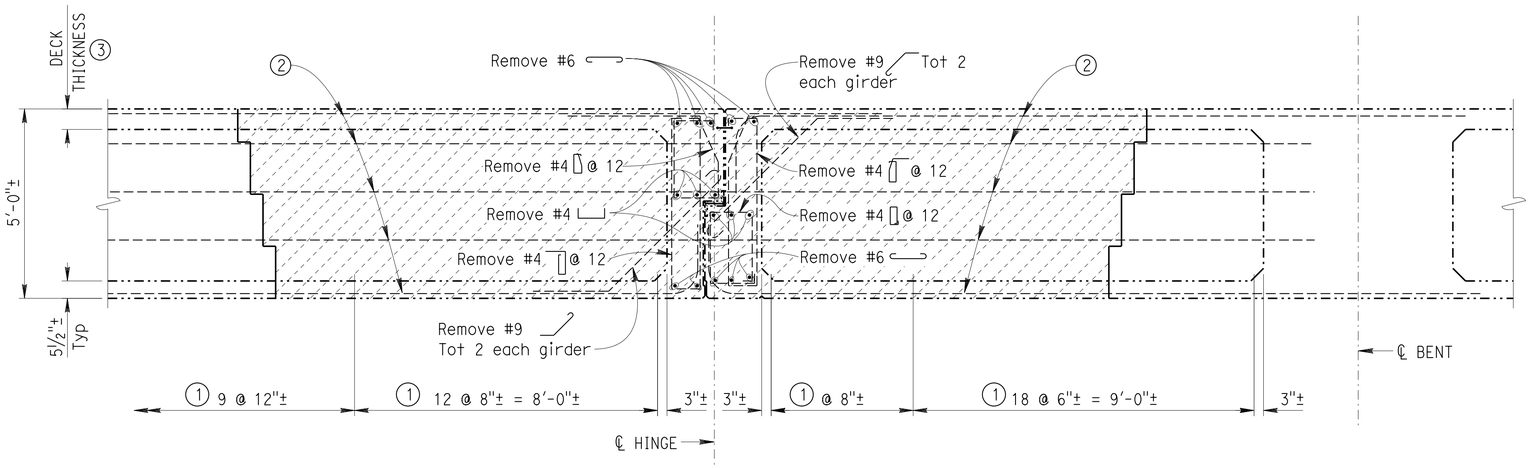

SECTION A-A

DETAILS SIMILAR TO "SECTION B-B"
EXCEPT WHERE SHOWN OTHERWISE.
½" = 1'

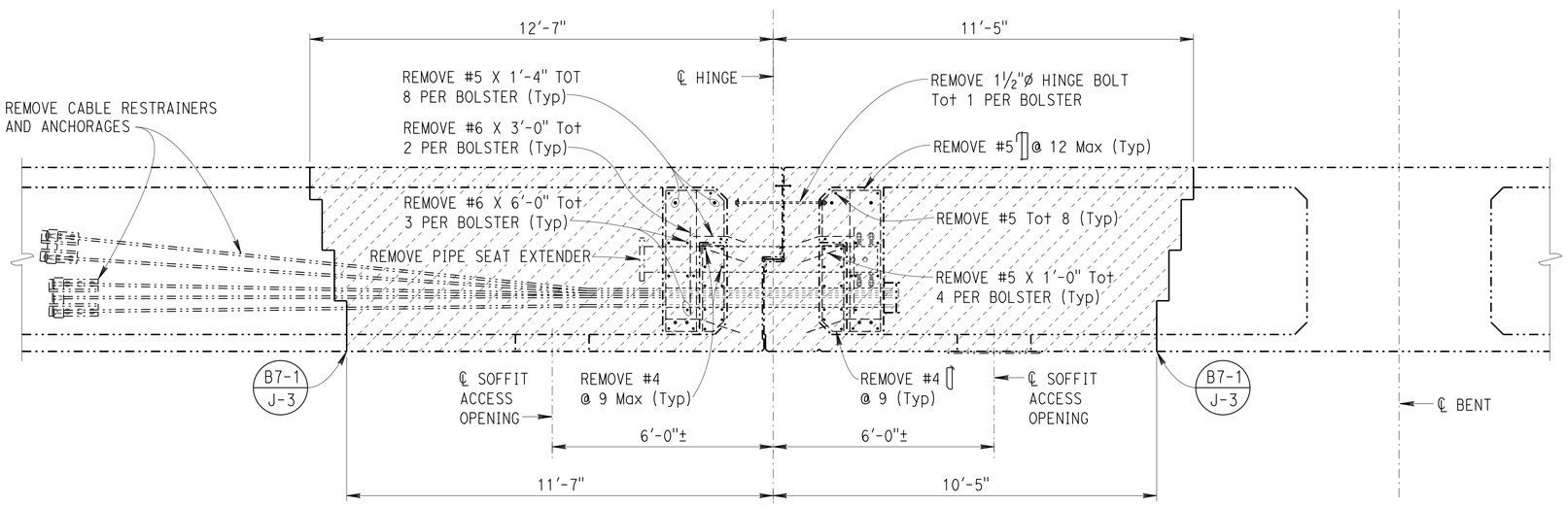

SECTION B-B

DETAILS SIMILAR TO "SECTION A-A"
EXCEPT WHERE SHOWN OTHERWISE.
½" = 1'

NOTES: (APPLY TO THIS SHEET ONLY)

Indicates limits of remove existing concrete deck, bottom slab, girder and hinge. Retain existing longitudinal reinforcement in the concrete deck, bottom slab and girder.

① Existing #5][stirrup spacing, typical for all girders.

② Retain sufficent length for splicing existing longitudinal #4, #5, #6, #8 and #11 deck, girder and bottom slab reinforcement. Splices must be mechanical butt and staggered.

③ Deck thickness:
6½"± where girder spacing is 7'-10"± and varies.
6¾"± where girder spacing is 8'-4"± and varies.

DESIGN	BY KHANH TRUONG	CHECKED CHARLES HUTCHINSON	
DETAILS	BY G.F. BIDWELL	CHECKED CHARLES HUTCHINSON	
QUANTITIES	BY KHANH TRUONG	CHECKED CHARLES HUTCHINSON	

STATE OF CALIFORNIA
DEPARTMENT OF TRANSPORTATION

DIVISION OF MAINTENANCE
STRUCTURE MAINTENANCE DESIGN

BRIDGE No. 34-0046
POST MILE R4.40

SOUTHERN FREEWAY VIADUCT (RECONSTRUCT HINGES)
EXISTING HINGE DETAILS No. 3

STRUCTURES MAINTENANCE GENERAL PLAN SHEET (ENGLISH) (REV. 09-01-10)

ORIGINAL SCALE IN INCHES FOR REDUCED PLANS 0 1 2 3

UNIT: 3488
PROJECT NUMBER & PHASE: 0400001138 1
CONTRACT NO.: 04-4A5101

DISREGARD PRINTS BEARING EARLIER REVISION DATES
REVISION DATES: 10-5-11 1-31-12 12-12-12 1-25-13 5-17-13
SHEET 7 OF 21

FILE => 04-4a5101_07existhinge3.dgn

USERNAME => s128843 DATE PLOTTED => 25-JUN-2013 TIME PLOTTED => 07:06

DIST	COUNTY	ROUTE	POST MILES TOTAL PROJECT	SHEET No.	TOTAL SHEETS
04	SF	280	R5.2/R6.0	38	51

Charles R. Hutchinson 1-24-13
REGISTERED CIVIL ENGINEER DATE

6-24-13
PLANS APPROVAL DATE

REGISTERED PROFESSIONAL ENGINEER CHARLES R. HUTCHINSON No. C 54226 Exp. 12-31-13 CIVIL STATE OF CALIFORNIA

The State of California or its officers or agents shall not be responsible for the accuracy or completeness of electronic copies of this plan sheet.

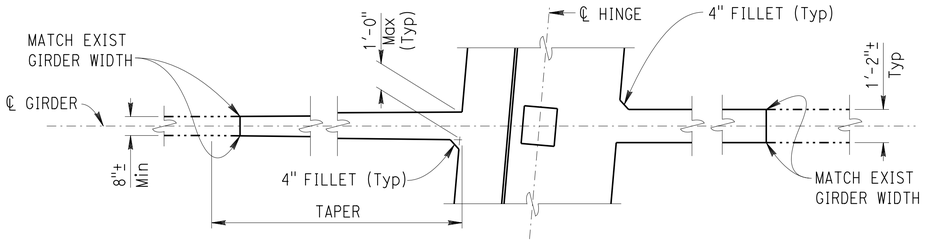

DETAIL A

DETAILS TYPICAL FOR ALL GIRDERS
NO SCALE

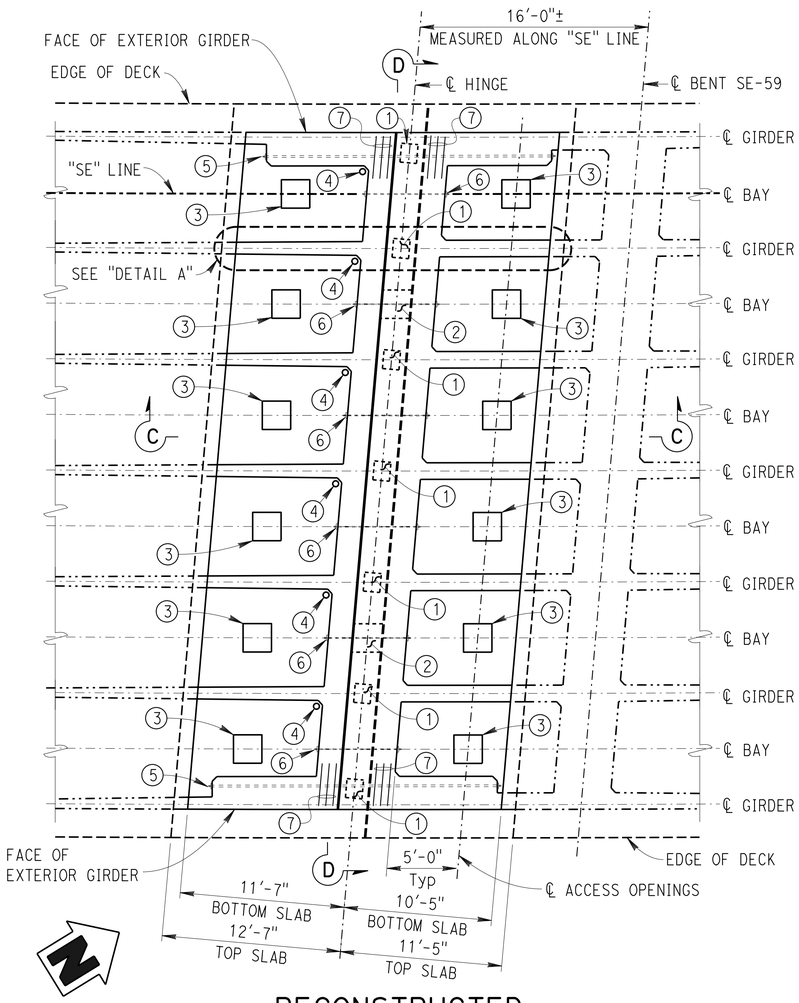

RECONSTRUCTED PARTIAL GIRDER LAYOUT AT BENT SE-59

3/16" = 1'

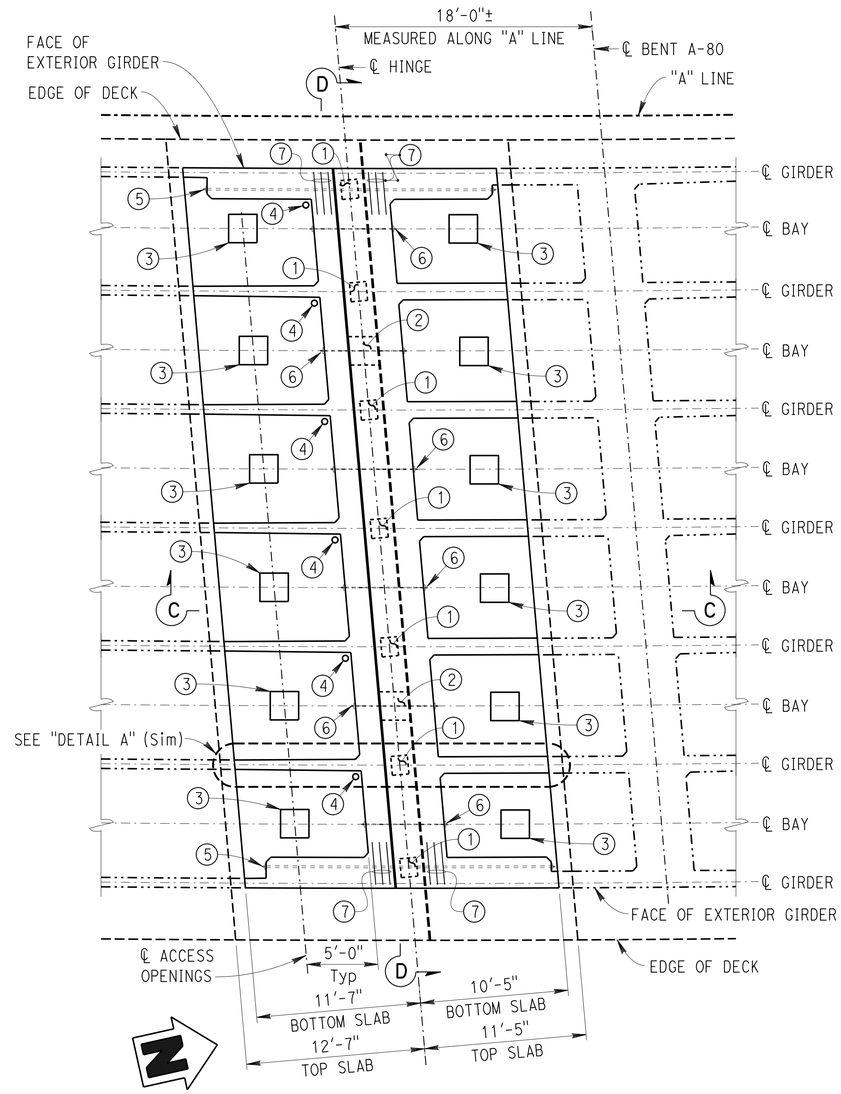

RECONSTRUCTED PARTIAL GIRDER LAYOUT AT BENT A-80

3/16" = 1'

NOTES: (APPLY TO THIS SHEET ONLY)

1. 10" x 12" x 3" steel reinforced elastomeric bearing pad. For details see "RECONSTRUCTED HINGE DETAILS No. 4" sheet.
2. Key at centerline of bay. See "RECONSTRUCTED HINGE DETAILS No. 3" sheet.
3. 2'-0" x 2'-0" access opening in bottom slab at centerline of bay. For details see "DECK AND SOFFIT OPENINGS" sheet.
4. Place 5" ø vent holes at low side of bottom slab, see B7-1 / V-1
5. Longitudinal hinge restrainer at exterior girder in exterior bays, total 2 units. For details see "CABLE RESTRAINER UNIT - TYPE 2" sheet.
6. Equalizing bolt at centerline bay. For details see "EQUALIZING BOLT DETAIL" on "RECONSTRUCTED HINGE DETAILS No. 4" sheet.
7. #6 3'-0" @ 9

   See "RECONSTRUCTED HINGE DETAILS No. 3" sheet for "SECTION C-C" and "SECTION D-D".

	BY	CHECKED
DESIGN	KHANH TRUONG	CHARLES HUTCHINSON
DETAILS	G.F. BIDWELL	CHARLES HUTCHINSON
QUANTITIES	KHANH TRUONG	CHARLES HUTCHINSON

STATE OF CALIFORNIA
DEPARTMENT OF TRANSPORTATION

DIVISION OF MAINTENANCE
STRUCTURE MAINTENANCE DESIGN

BRIDGE No. 34-0046
POST MILE R4.40

SOUTHERN FREEWAY VIADUCT (RECONSTRUCT HINGES)

RECONSTRUCTED HINGE DETAILS No. 1

STRUCTURES MAINTENANCE GENERAL PLAN SHEET (ENGLISH) (REV. 09-01-10)

ORIGINAL SCALE IN INCHES FOR REDUCED PLANS 0 1 2 3

UNIT: 3488
PROJECT NUMBER & PHASE: 0400001138 1
CONTRACT NO.: 04-4A5101

DISREGARD PRINTS BEARING EARLIER REVISION DATES

REVISION DATES: 10-5-11 1-31-12 12-12-12 1-25-13 5-17-13

SHEET 8 OF 21

FILE => 04-4a5101_08reconhinge1.dgn

USERNAME => s128843 DATE PLOTTED => 25-JUN-2013 TIME PLOTTED => 07:08

DIST	COUNTY	ROUTE	POST MILES TOTAL PROJECT	SHEET No.	TOTAL SHEETS
04	SF	280	R5.2/R6.0	39	51

Charles R Hutchinson 1-24-13
REGISTERED CIVIL ENGINEER DATE

6-24-13
PLANS APPROVAL DATE

REGISTERED PROFESSIONAL ENGINEER CHARLES R. HUTCHINSON No. C 54226 Exp. 12-31-13 CIVIL STATE OF CALIFORNIA

The State of California or its officers or agents shall not be responsible for the accuracy or completeness of electronic copies of this plan sheet.

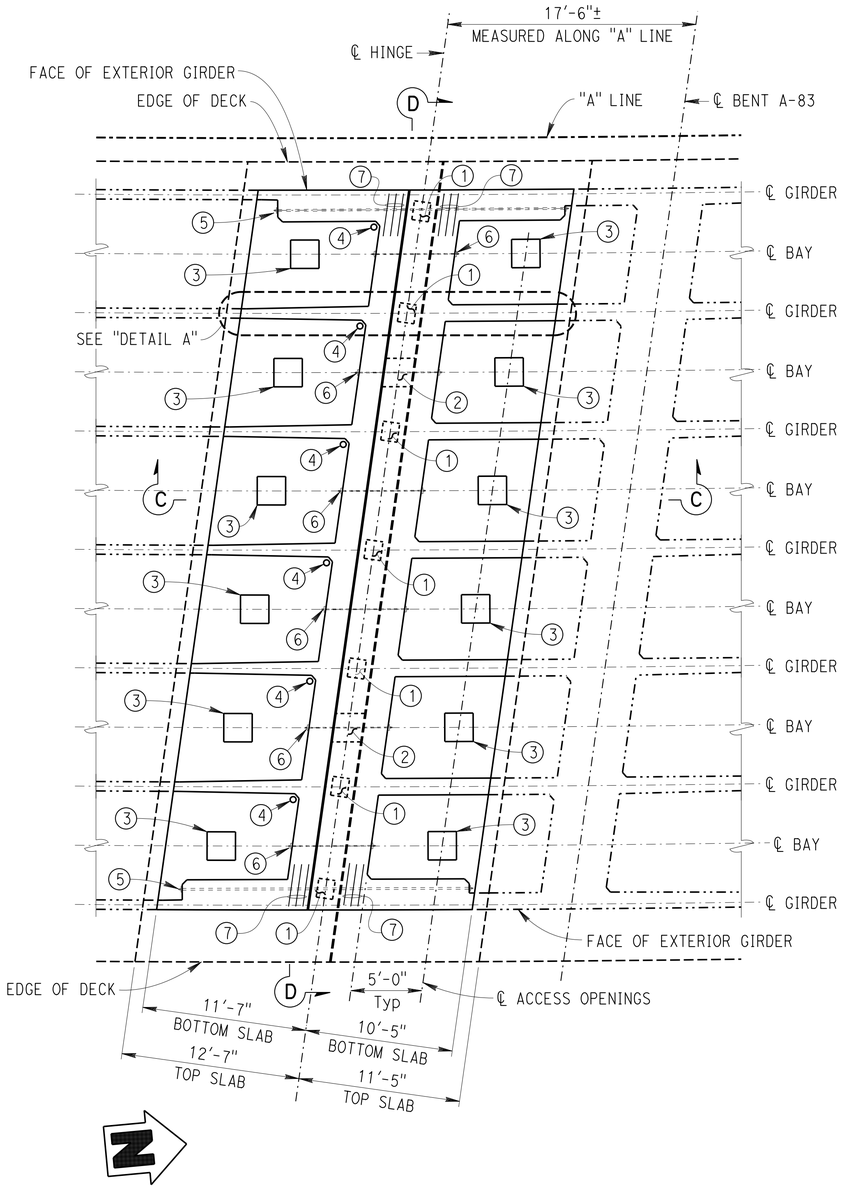

RECONSTRUCTED
PARTIAL GIRDER LAYOUT AT BENT A-83

3/16" = 1'

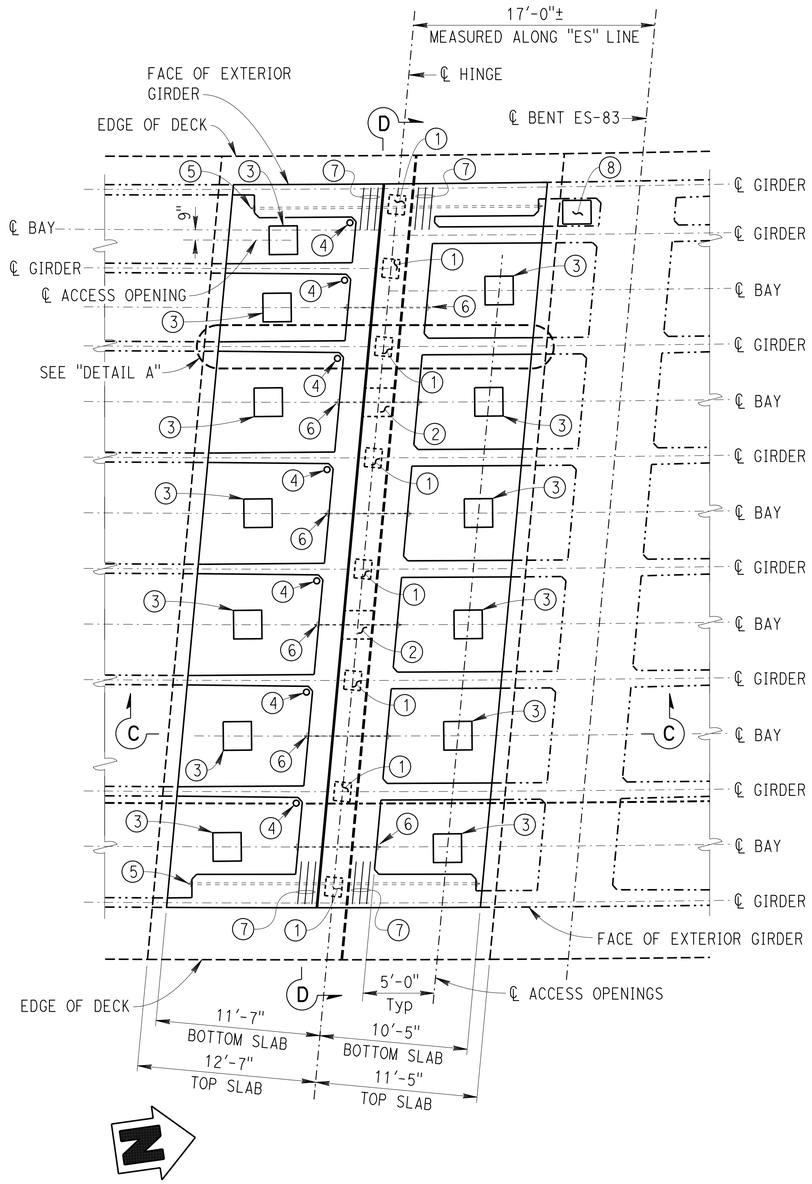

RECONSTRUCTED
PARTIAL GIRDER LAYOUT AT BENT ES-83

3/16" = 1'

NOTES: (APPLY TO THIS SHEET ONLY)

1. 10" x 12" x 3" steel reinforced elastomeric bearing pad. For details see "RECONSTRUCTED HINGE DETAILS No. 4" sheet.
2. Key at centerline of bay. See "RECONSTRUCTED HINGE DETAILS No. 3" sheet.
3. 2'-0" x 2'-0" access opening in bottom slab at centerline of bay. For details see "DECK AND SOFFIT OPENINGS" sheet.
4. Place 5" ø vent holes at low side of bottom slab, see B7-1 / V-1
5. Longitudinal hinge restrainer at exterior girder in exterior bays, total 2 units. For details see "CABLE RESTRAINER UNIT - TYPE 2" sheet.
6. Equalizing bolt at centerline bay. For details see "EQUALIZING BOLT DETAIL" on "RECONSTRUCTED HINGE DETAILS No. 4" sheet.
7. #6 3'-0" @ 9
8. 1'-8" x 2'-0" access opening in bottom slab (location to be determined by the Engineer). For details see "DECK AND SOFFIT OPENINGS" sheet.

See RECONSTRUCTED HINGE DETAILS No. 1" sheet for "DETAIL A".

See "RECONSTRUCTED HINGE DETAILS No. 3" sheet for "SECTION C-C" and "SECTION D-D".

	BY	CHECKED
DESIGN	KHANH TRUONG	CHARLES HUTCHINSON
DETAILS	G.F. BIDWELL	CHARLES HUTCHINSON
QUANTITIES	KHANH TRUONG	CHARLES HUTCHINSON

STATE OF CALIFORNIA
DEPARTMENT OF TRANSPORTATION

DIVISION OF MAINTENANCE
STRUCTURE MAINTENANCE DESIGN

BRIDGE No. 34-0046
POST MILE R4.40

SOUTHERN FREEWAY VIADUCT (RECONSTRUCT HINGES)
RECONSTRUCTED HINGE DETAILS No. 2

STRUCTURES MAINTENANCE GENERAL PLAN SHEET (ENGLISH) (REV. 09-01-10)

ORIGINAL SCALE IN INCHES FOR REDUCED PLANS 0 1 2 3

UNIT: 3488
PROJECT NUMBER & PHASE: 0400001138 1
CONTRACT NO.: 04-4A5101

DISREGARD PRINTS BEARING EARLIER REVISION DATES
REVISION DATES: 10-5-11 1-31-12 12-12-12 1-25-13 5-17-13

SHEET 9 OF 21

FILE => 04-4a5101_09reconhinge2.dgn

USERNAME => s128843 DATE PLOTTED => 25-JUN-2013 TIME PLOTTED => 07:06

DIST	COUNTY	ROUTE	POST MILES TOTAL PROJECT	SHEET No.	TOTAL SHEETS
04	SF	280	R5.2/R6.0	40	51

Charles R Hutchinson 1-24-13
REGISTERED CIVIL ENGINEER DATE

6-24-13
PLANS APPROVAL DATE

REGISTERED PROFESSIONAL ENGINEER CHARLES R. HUTCHINSON No. C 54226 Exp. 12-31-13 CIVIL STATE OF CALIFORNIA

The State of California or its officers or agents shall not be responsible for the accuracy or completeness of electronic copies of this plan sheet.

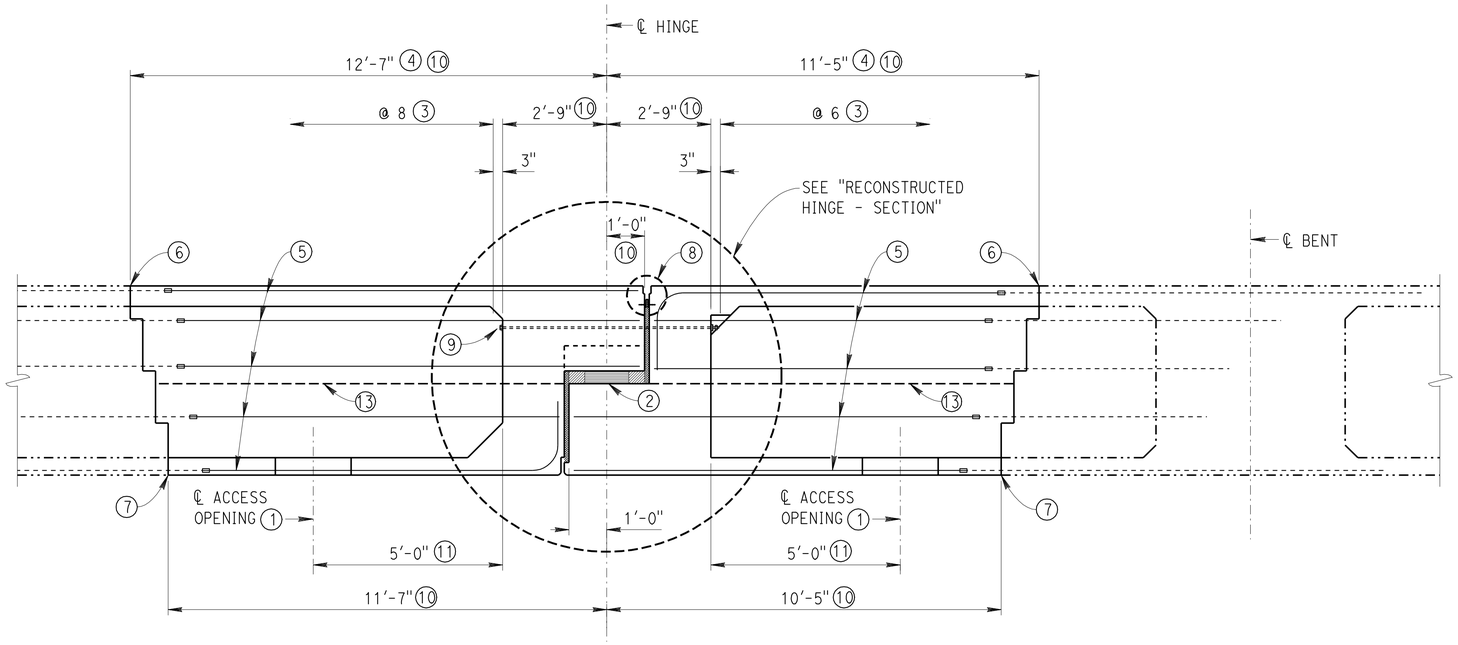

SECTION C-C

NO SCALE

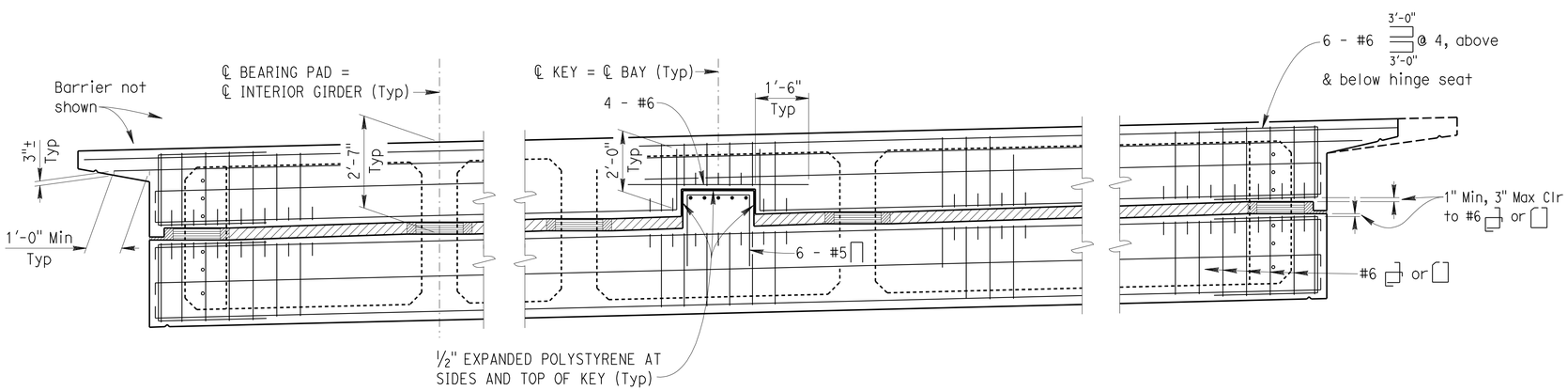

SECTION D-D

NO SCALE

NOTES: (APPLY TO THIS SHEET ONLY)

1. 2'-0" x 2'-0" access opening in bottom slab. For details see "DECK AND SOFFIT OPENINGS" sheet.
2. 10" x 12" x 3" steel reinforced elastomeric bearing pad. For details see "RECONSTRUCTED HINGE DETAILS No. 4" sheet.
3. New #5][stirrup spacing, typical for all girders.
4. Limits of distribution reinforcement and B0-5 / 5-10
5. New longitudinal #4, #5, #6, #8 and #11 bars spliced to existing longitudinal #4, #5, #6, #8 and #11 deck, girder and bottom slab reinforcement, typical. Splices must be mechanical butt and staggered.
6. Match new concrete deck elevation and slab thickness with existing concrete deck elevation and slab thickness.
7. Match new concrete soffit elevation and slab thickness with existing soffit elevation and slab thickness.
8. New joint seal Type B and waterstop. See "JOINT SEAL TABLE" on "RECONSTRUCTED HINGE DETAILS No. 4" sheet. B0-3 / 3-6 B6-21
9. New equalizing bolt at centerline of each bay. For details see "EQUALIZING BOLT DETAIL" on "RECONSTRUCTED HINGE DETAILS No. 4" sheet.
10. Dimension measured perpendicular to centerline hinge.
11. Dimension measured along centerline bay.
12. All longitudinal steel shall be service splices.
13. Optional construction joint.

For "RECONSTRUCTED HINGE - SECTION" see "RECONSTRUCTED HINGE DETAILS No. 4" sheet.

	BY	CHECKED
DESIGN	KHANH TRUONG	CHARLES HUTCHINSON
DETAILS	G.F. BIDWELL	CHARLES HUTCHINSON
QUANTITIES	KHANH TRUONG	CHARLES HUTCHINSON

STATE OF CALIFORNIA DEPARTMENT OF TRANSPORTATION

DIVISION OF MAINTENANCE STRUCTURE MAINTENANCE DESIGN

BRIDGE No. 34-0046 POST MILE R4.40

SOUTHERN FREEWAY VIADUCT (RECONSTRUCT HINGES)

RECONSTRUCTED HINGE DETAILS No. 3

STRUCTURES MAINTENANCE GENERAL PLAN SHEET (ENGLISH) (REV. 09-01-10)

ORIGINAL SCALE IN INCHES FOR REDUCED PLANS 0 1 2 3

UNIT: 3488
PROJECT NUMBER & PHASE: 0400001138 1 CONTRACT NO.: 04-4A5101

DISREGARD PRINTS BEARING EARLIER REVISION DATES

REVISION DATES 10-5-11 1-31-12 12-12-12 1-25-13 5-17-13

SHEET 10 OF 21

FILE => 04-4a5101_10reconhinge3.dgn

USERNAME => s114640 DATE PLOTTED => 25-JUN-2013 TIME PLOTTED => 06:54

DIST	COUNTY	ROUTE	POST MILES TOTAL PROJECT	SHEET No.	TOTAL SHEETS
04	SF	280	R5.2/R6.0	41	51

Charles R. Hutchinson 1-24-13
REGISTERED CIVIL ENGINEER DATE

6-24-13
PLANS APPROVAL DATE

REGISTERED PROFESSIONAL ENGINEER CHARLES R. HUTCHINSON No. C 54226 Exp. 12-31-13 CIVIL STATE OF CALIFORNIA

The State of California or its officers or agents shall not be responsible for the accuracy or completeness of electronic copies of this plan sheet.

EXPANDED POLYSTYRENE WASHER THICKNESS TABLE	
Temperature ° F	Dimension (inches)
-19	1/2
37	1 1/8
55	1 7/8
73	2 5/8
90	3 1/4

DESIGN LOADING DATA				
Girder Depth (in.)	Maximum Factored Hinge Seat Load k/ft)		Key Size and Maximum Transverse Load	
	Vertical	Longitudinal	Depth (in.)	Load/Key (k)
5'-0"	37	8	12	170

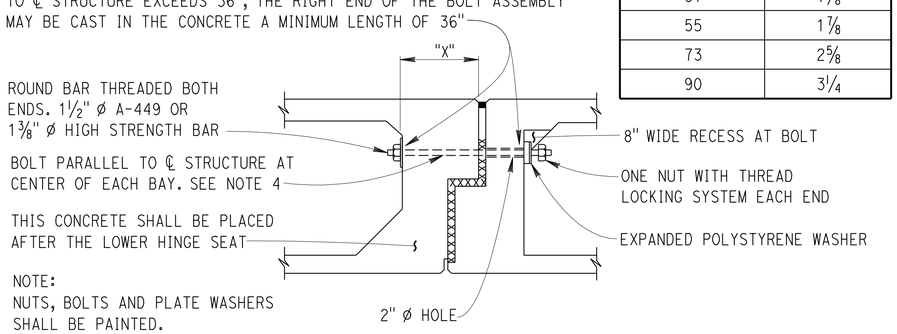

EQUALIZING BOLT DETAIL

NO SCALE

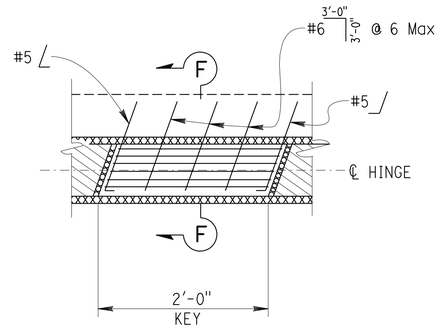

KEY - PLAN

NO SCALE

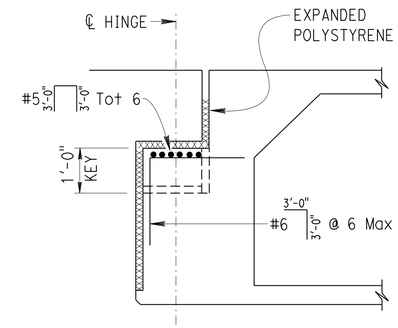

SECTION F-F

NO SCALE

NOTES: (APPLY TO THIS SHEET ONLY)

1) See Standard Plans B0-13 13-1 & B0-13 13-2

2) To provide for free movement of the completed hinge, concrete is to be excluded from the joint by sealing all openings.

3) Bars may be placed with hooks horizontal if required for clearance.

4) When the key interferes with the placement of the equalizing bolt, place two bolts at 36" centers in either adjacent cell.

5) Adjust angle of bars at key to clear.

6) Reinforcement shall be spaced along centerline of hinge and placed parallel to centerline of structure.

7) Roughen optional construction joint surface to approximately 1/4" amplitude.

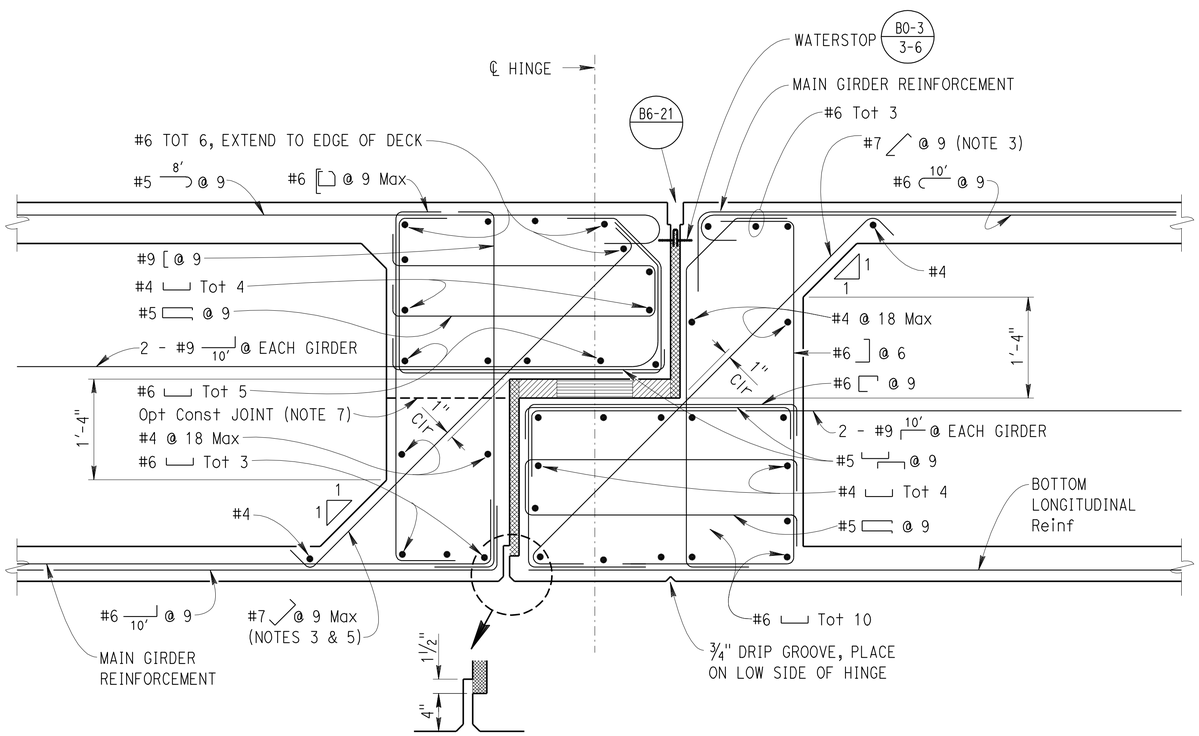

RECONSTRUCTED HINGE - SECTION

1" = 1'

JOINT SEAL TABLE					
LOCATION		MINIMUM "MR" (inches)	APPROXIMATE LENGTH (feet)	WATERSTOP	EXPANSION JOINT DEPTH (inches)
SPAN SE 58	H	1 1/2	50.8	Yes	8.0
SPAN A 79	H	2	53.8	Yes	8.0
SPAN A 82	H	2	54.2	Yes	8.0
SPAN ES 82	H	2	54.2	Yes	8.0

LEGEND:
H = Hinge

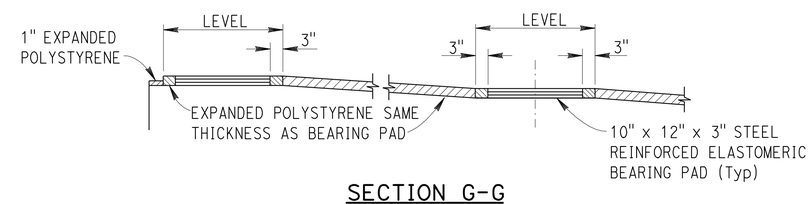

SECTION G-G

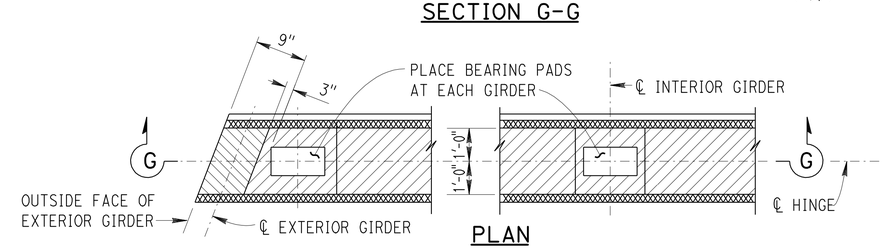

PLAN

TYPICAL BEARING DETAIL

NO SCALE

DESIGN	BY KHANH TRUONG	CHECKED CHARLES HUTCHINSON	
DETAILS	BY G.F. BIDWELL	CHECKED CHARLES HUTCHINSON	
QUANTITIES	BY KHANH TRUONG	CHECKED CHARLES HUTCHINSON	

STATE OF CALIFORNIA
DEPARTMENT OF TRANSPORTATION

DIVISION OF MAINTENANCE
STRUCTURE MAINTENANCE DESIGN

BRIDGE No. 34-0046
POST MILE R4.40

SOUTHERN FREEWAY VIADUCT (RECONSTRUCT HINGES)

RECONSTRUCTED HINGE DETAILS No. 4

STRUCTURES MAINTENANCE GENERAL PLAN SHEET (ENGLISH) (REV. 09-01-10)

ORIGINAL SCALE IN INCHES FOR REDUCED PLANS 0 1 2 3

UNIT: 3488
PROJECT NUMBER & PHASE: 0400001138 1
CONTRACT NO.: 04-4A5101

DISREGARD PRINTS BEARING EARLIER REVISION DATES

REVISION DATES 10-5-11 1-31-12 12-12-12 1-25-13 5-17-13

SHEET 11 OF 21

FILE => 04-4a5101_11reconhinge4.dgn

USERNAME => s114640 DATE PLOTTED => 25-JUN-2013 TIME PLOTTED => 06:54

DIST	COUNTY	ROUTE	POST MILES TOTAL PROJECT	SHEET No.	TOTAL SHEETS
04	SF	280	R5.2/R6.0	42	51

Charles R. Hutchinson 1-24-13
REGISTERED CIVIL ENGINEER DATE

6-24-13
PLANS APPROVAL DATE

REGISTERED PROFESSIONAL ENGINEER CHARLES R. HUTCHINSON No. C 54226 Exp. 12-31-13 CIVIL STATE OF CALIFORNIA

The State of California or its officers or agents shall not be responsible for the accuracy or completeness of electronic copies of this plan sheet.

NOTES: (APPLY TO THIS SHEET ONLY)

1. For details see "BARRIER RAILING TYPE 1 DETAILS" sheet.
2. Splice new bars to existing longitudinal girder or deck reinforcing bars of similar size.
3. For details see "EXISTING TOP & BOTTOM SLAB REINFORCEMENT No. 1" thru "EXISTING TOP & BOTTOM SLAB REINFORCEMENT No. 5" sheets.
4. Temporary Railing Type K to be placed prior to opening deck to traffic. For details see "TYPE K RAILING ATTACHMENT DETAIL".

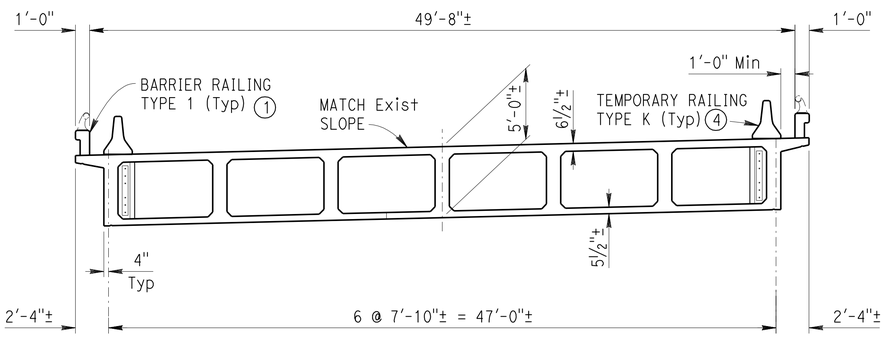

TYPICAL SECTION AT BENT SE-59

3/16" = 1'

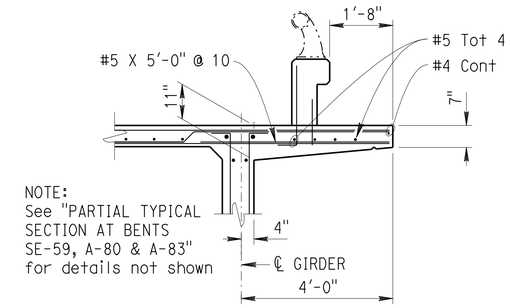

4' OVERHANG

½" = 1'

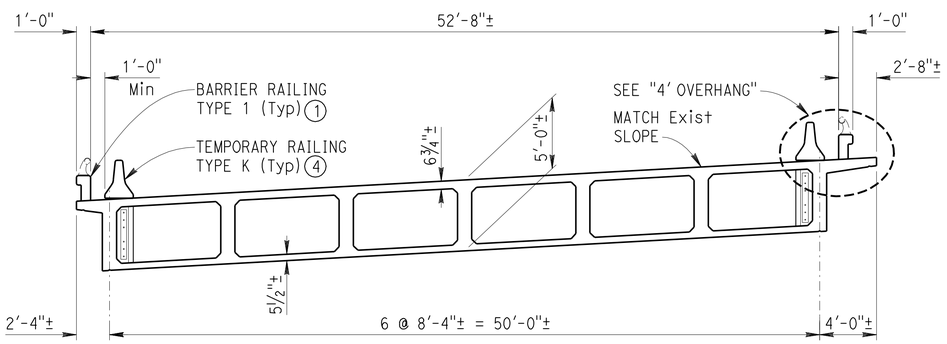

TYPICAL SECTION AT BENTS A-80 & A-83

3/16" = 1'

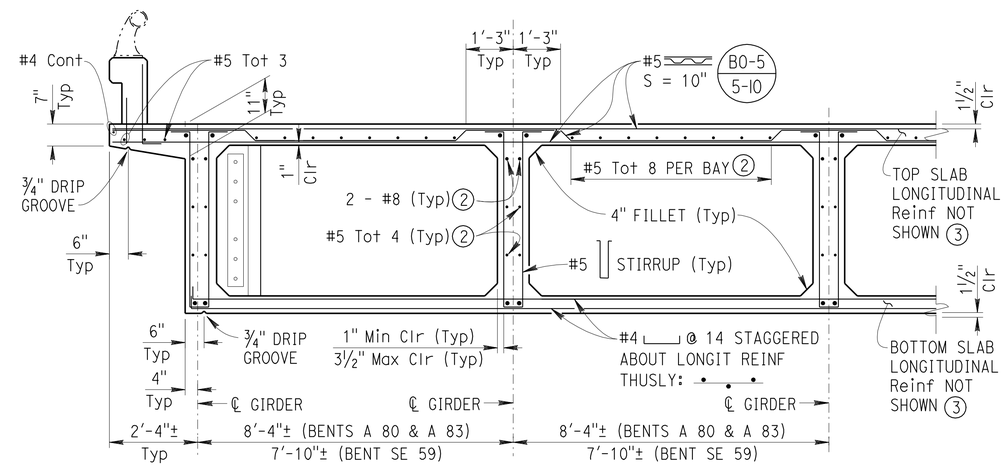

PARTIAL TYPICAL SECTION AT BENTS SE-59, A-80 & A-83

½" = 1'

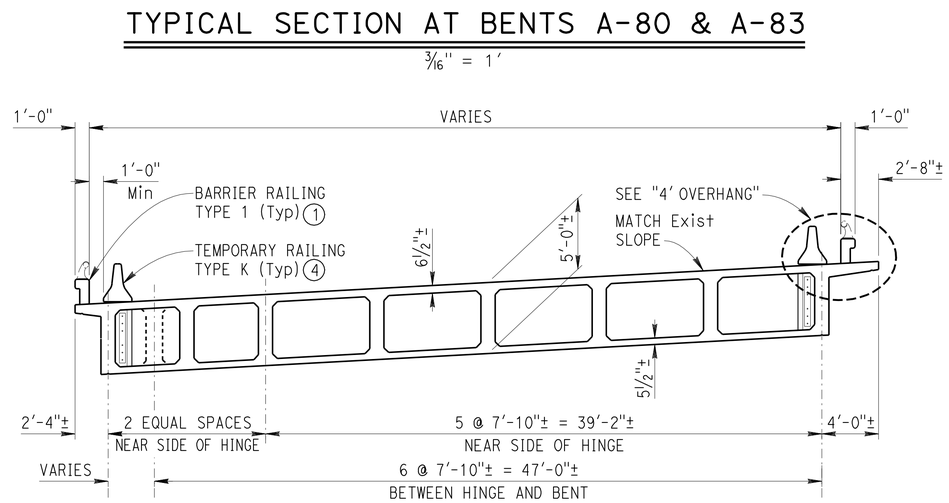

TYPICAL SECTION AT BENT ES-83

3/16" = 1'

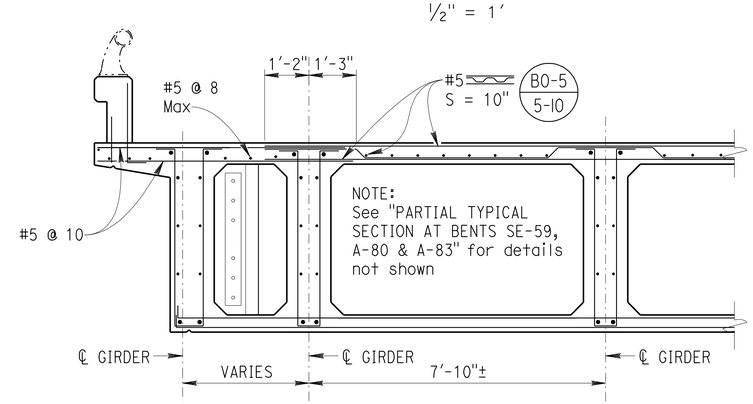

PARTIAL TYPICAL SECTION AT BENT ES-83

SECTION BETWEEN HINGE AND BENT SHOWN;
DETAILS SIMILAR AT OPPOSITE SIDE OF HINGE

½" = 1'

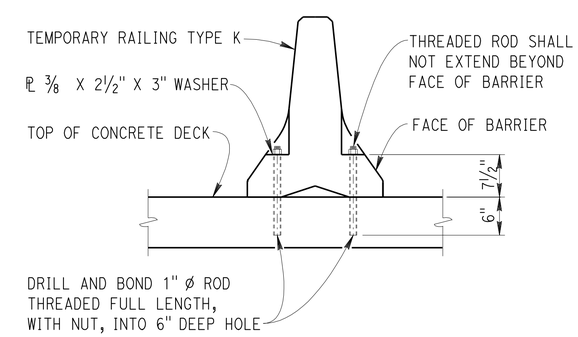

TYPE K RAILING ATTACHMENT DETAIL

NO SCALE

	BY	CHECKED
DESIGN	KHANH TRUONG	CHARLES HUTCHINSON
DETAILS	G.F. BIDWELL	CHARLES HUTCHINSON
QUANTITIES	KHANH TRUONG	CHARLES HUTCHINSON

STATE OF CALIFORNIA
DEPARTMENT OF TRANSPORTATION

DIVISION OF MAINTENANCE
STRUCTURE MAINTENANCE DESIGN

BRIDGE No. 34-0046
POST MILE R4.40

SOUTHERN FREEWAY VIADUCT (RECONSTRUCT HINGES)

TYPICAL SECTIONS

STRUCTURES MAINTENANCE GENERAL PLAN SHEET (ENGLISH) (REV. 09-01-10)

ORIGINAL SCALE IN INCHES FOR REDUCED PLANS 0 1 2 3

UNIT: 3488
PROJECT NUMBER & PHASE: 0400001138 1
CONTRACT NO.: 04-4A5101

DISREGARD PRINTS BEARING EARLIER REVISION DATES
REVISION DATES: 10-5-11 1-31-12 12-12-12 1-25-13 5-17-13

SHEET 12 OF 21

FILE => 04-4a5101_12typsect.dgn

USERNAME => s114640 DATE PLOTTED => 25-JUN-2013 TIME PLOTTED => 06:54

DIST	COUNTY	ROUTE	POST MILES TOTAL PROJECT	SHEET No.	TOTAL SHEETS
04	SF	280	R5.2/R6.0	43	51

Charles R Hutchinson 1-24-13
REGISTERED CIVIL ENGINEER DATE

6-24-13
PLANS APPROVAL DATE

REGISTERED PROFESSIONAL ENGINEER CHARLES R. HUTCHINSON No. C 54226 Exp. 12-31-13 CIVIL STATE OF CALIFORNIA

The State of California or its officers or agents shall not be responsible for the accuracy or completeness of electronic copies of this plan sheet.

NOTES: (APPLY TO THIS SHEET ONLY)

Indicates limits of remove existing concrete.

Numbers at ends of bars indicate distance in feet from ℄ bent. All bars are #11 except where noted otherwise.

See "EXISTING TOP & BOTTOM SLAB REINFORCEMENT No. 4" sheet for "TOP SLAB TRANSVERSE REINFORCEMENT AT HINGE".

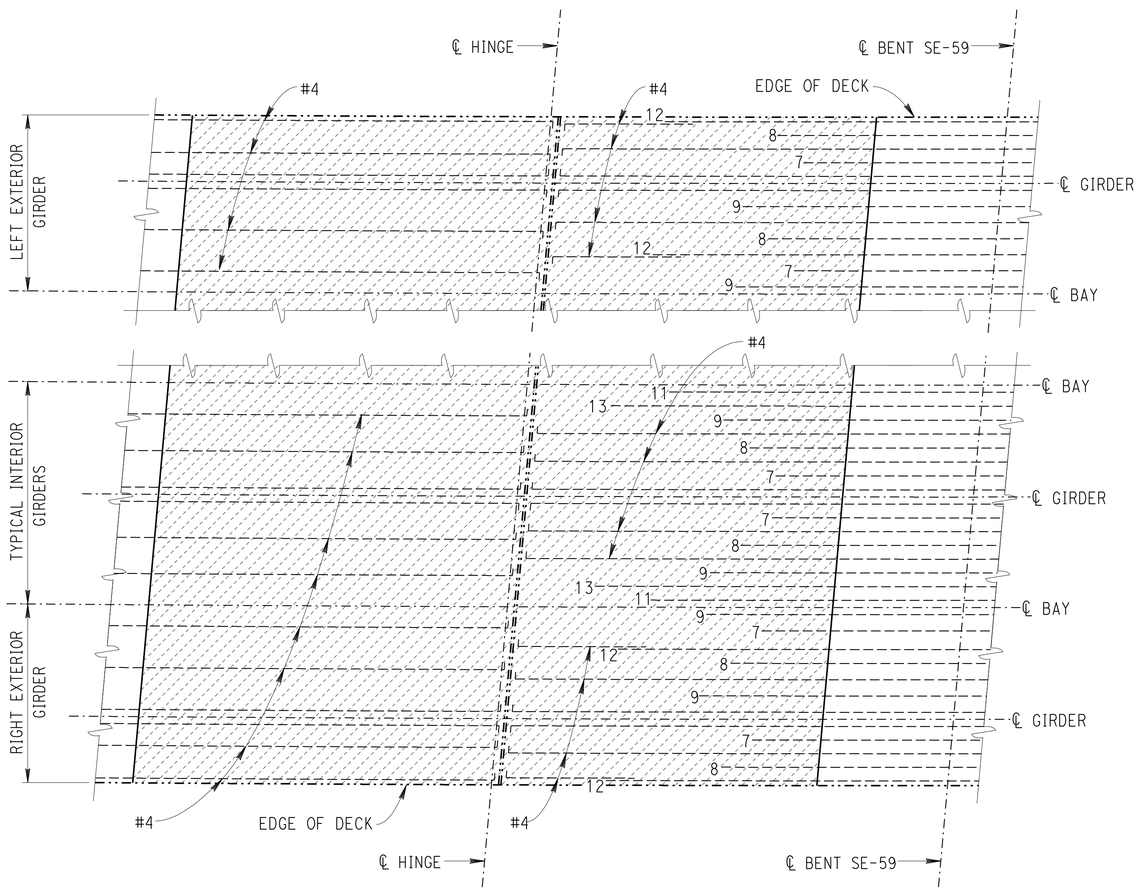

TOP SLAB REINFORCEMENT AT BENT SE-59

NO SCALE

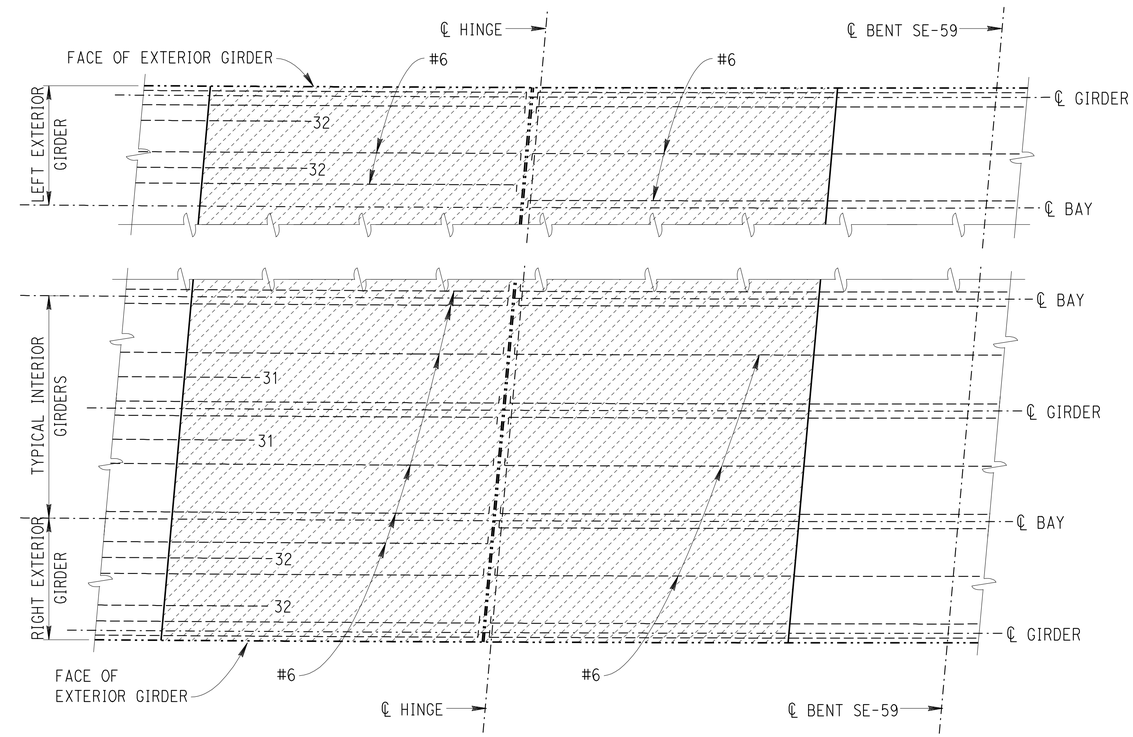

BOTTOM SLAB REINFORCEMENT AT BENT SE-59

NO SCALE

DESIGN	BY KHANH TRUONG	CHECKED CHARLES HUTCHINSON	
DETAILS	BY G.F. BIDWELL	CHECKED CHARLES HUTCHINSON	
QUANTITIES	BY KHANH TRUONG	CHECKED CHARLES HUTCHINSON	

STATE OF CALIFORNIA DEPARTMENT OF TRANSPORTATION

DIVISION OF MAINTENANCE STRUCTURE MAINTENANCE DESIGN

BRIDGE No. 34-0046
POST MILE R4.40

SOUTHERN FREEWAY VIADUCT (RECONSTRUCT HINGES)

EXISTING TOP & BOTTOM SLAB REINFORCEMENT No. 1

STRUCTURES MAINTENANCE GENERAL PLAN SHEET (ENGLISH) (REV. 09-01-10)

ORIGINAL SCALE IN INCHES FOR REDUCED PLANS 0 1 2 3

UNIT: 3488
PROJECT NUMBER & PHASE: 0400001138 1
CONTRACT NO.: 04-4A5101

DISREGARD PRINTS BEARING EARLIER REVISION DATES

REVISION DATES: 10-5-11 1-31-12 12-12-12 1-25-13 5-17-13

SHEET 13 OF 21

FILE => 04-4a5101_13slabreinf1.dgn

USERNAME => s114640 DATE PLOTTED => 25-JUN-2013 TIME PLOTTED => 06:55

DIST	COUNTY	ROUTE	POST MILES TOTAL PROJECT	SHEET No.	TOTAL SHEETS
04	SF	280	R5.2/R6.0	44	51

Charles R. Hutchinson 1-24-13
REGISTERED CIVIL ENGINEER DATE

6-24-13
PLANS APPROVAL DATE

REGISTERED PROFESSIONAL ENGINEER CHARLES R. HUTCHINSON No. C 54226 Exp. 12-31-13 CIVIL STATE OF CALIFORNIA

The State of California or its officers or agents shall not be responsible for the accuracy or completeness of electronic copies of this plan sheet.

NOTES: (APPLY TO THIS SHEET ONLY)

Indicates limits of remove existing concrete.

Indicates existing bundled reinforcing steel.

Numbers at ends of bars indicate distance in feet from ℄ bent. All bars are #11 except where noted otherwise.

See "EXISTING TOP & BOTTOM SLAB REINFORCEMENT No. 4" sheet for "TOP SLAB TRANSVERSE REINFORCEMENT AT HINGE".

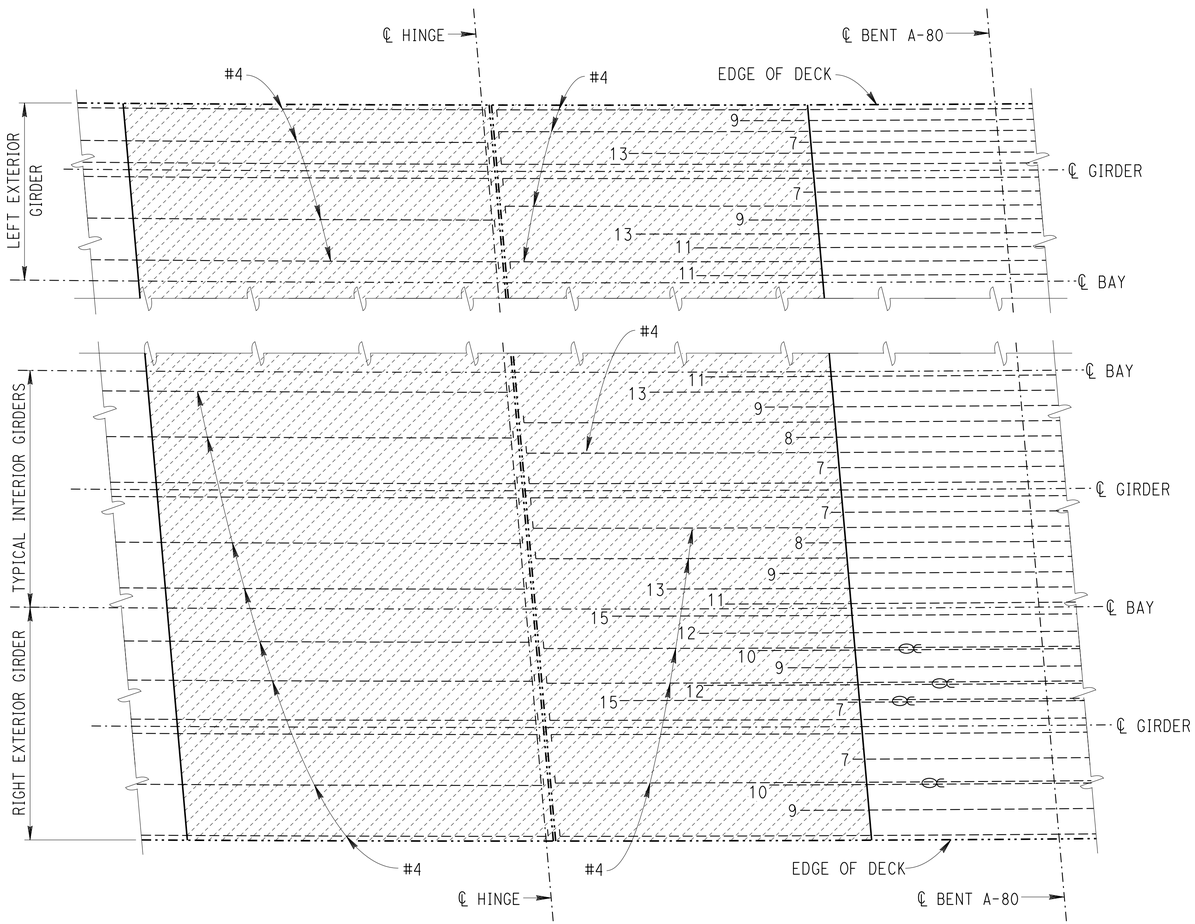

TOP SLAB REINFORCEMENT AT BENT A-80

NO SCALE

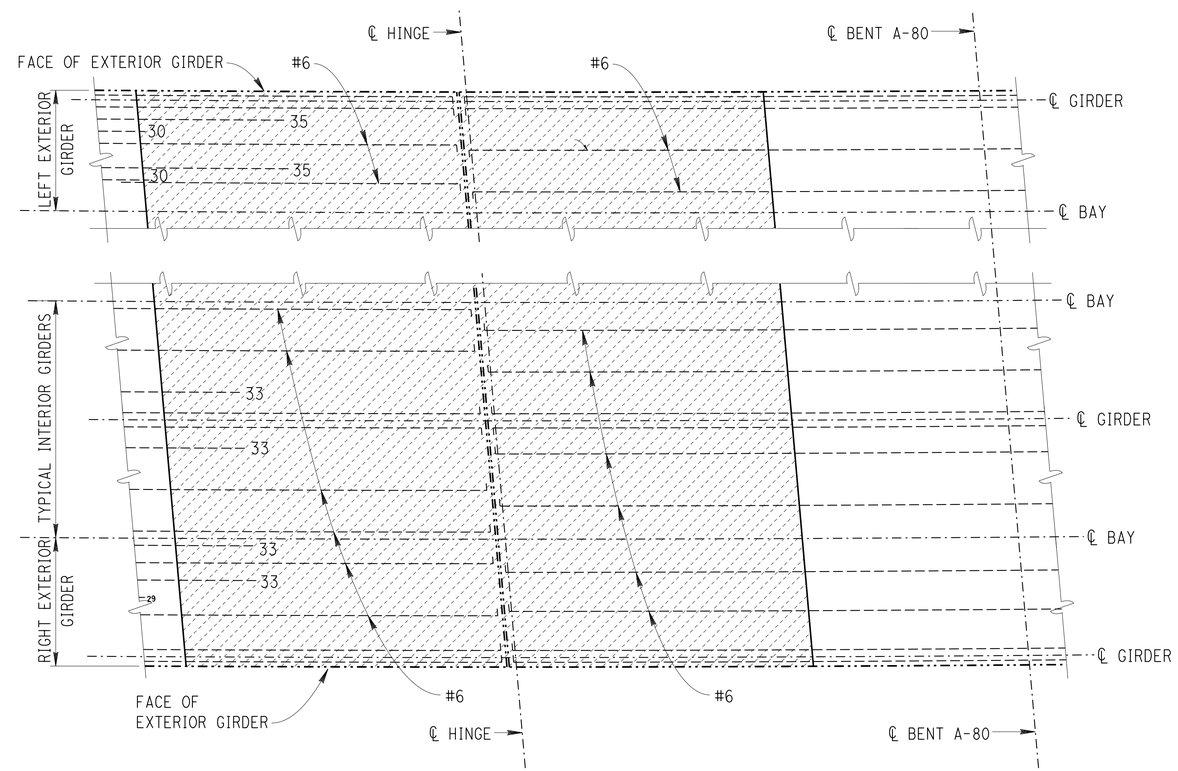

BOTTOM SLAB REINFORCEMENT AT BENT A-80

NO SCALE

DESIGN	BY KHANH TRUONG	CHECKED CHARLES HUTCHINSON	
DETAILS	BY G.F. BIDWELL	CHECKED CHARLES HUTCHINSON	
QUANTITIES	BY KHANH TRUONG	CHECKED CHARLES HUTCHINSON	

STATE OF CALIFORNIA DEPARTMENT OF TRANSPORTATION

DIVISION OF MAINTENANCE STRUCTURE MAINTENANCE DESIGN

BRIDGE No. 34-0046 POST MILE R4.40

SOUTHERN FREEWAY VIADUCT (RECONSTRUCT HINGES)

EXISTING TOP & BOTTOM SLAB REINFORCEMENT No. 2

STRUCTURES MAINTENANCE GENERAL PLAN SHEET (ENGLISH) (REV. 09-01-10)

ORIGINAL SCALE IN INCHES FOR REDUCED PLANS 0 1 2 3

UNIT: 3488
PROJECT NUMBER & PHASE: 0400001138 1
CONTRACT NO.: 04-4A5101

DISREGARD PRINTS BEARING EARLIER REVISION DATES

REVISION DATES: 10-5-11 1-31-12 12-12-12 1-25-13 5-17-13

SHEET 14 OF 21

FILE => 04-4a5101_14slabreinf2.dgn

USERNAME => s113571 DATE PLOTTED => 25-JUN-2013 TIME PLOTTED => 07:14

DIST	COUNTY	ROUTE	POST MILES TOTAL PROJECT	SHEET No.	TOTAL SHEETS
04	SF	280	R5.2/R6.0	45	51

Charles R. Hutchinson 1-24-13
REGISTERED CIVIL ENGINEER DATE

6-24-13
PLANS APPROVAL DATE

REGISTERED PROFESSIONAL ENGINEER CHARLES R. HUTCHINSON No. C 54226 Exp. 12-31-13 CIVIL STATE OF CALIFORNIA

The State of California or its officers or agents shall not be responsible for the accuracy or completeness of electronic copies of this plan sheet.

NOTES: (APPLY TO THIS SHEET ONLY)

Indicates limits of remove existing concrete.

Indicates existing bundled reinforcing steel.

Numbers at ends of bars indicate distance in feet from ℄ bent. All bars are #11 except where noted otherwise.

See "EXISTING TOP & BOTTOM SLAB REINFORCEMENT No. 4" sheet for "TOP SLAB TRANSVERSE REINFORCEMENT AT HINGE".

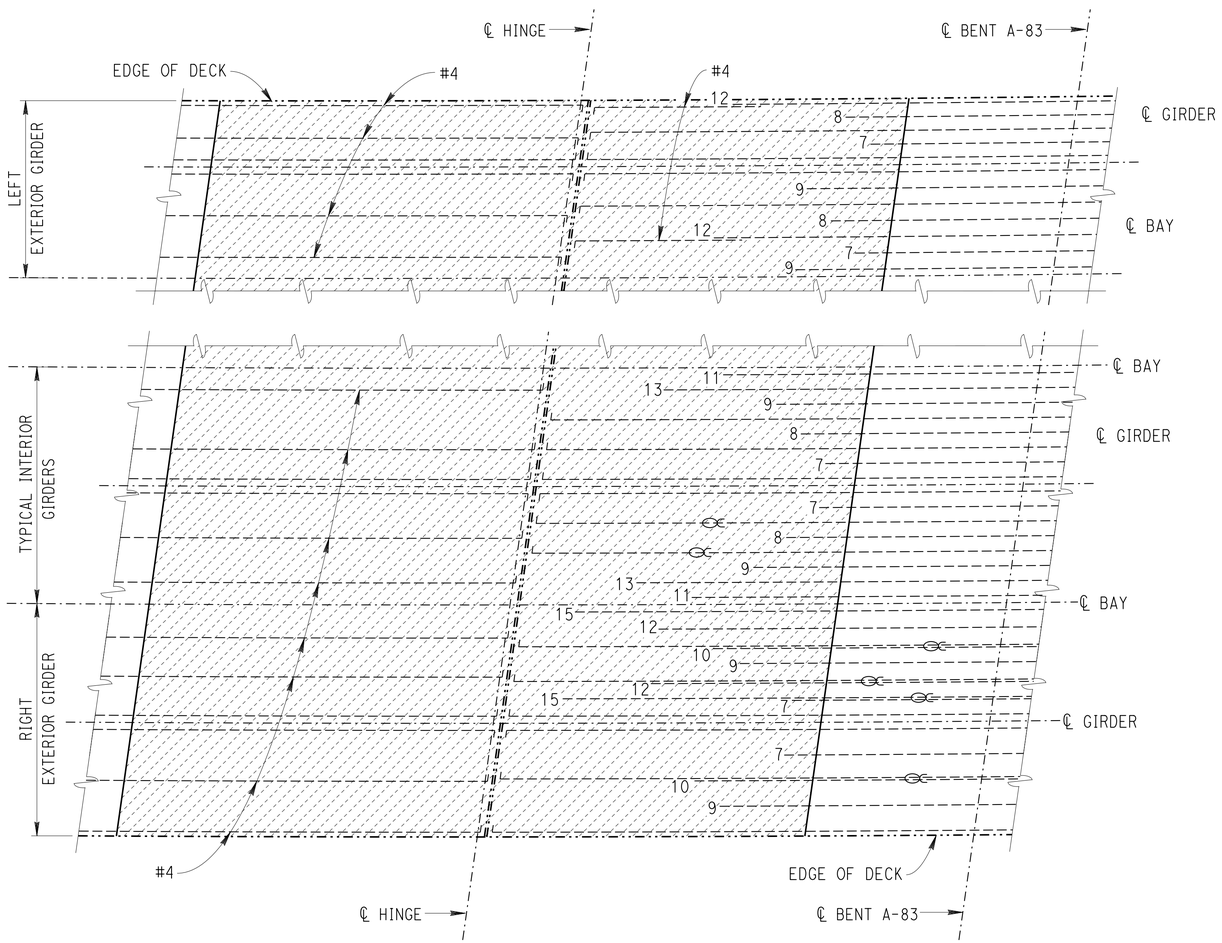

TOP SLAB REINFORCEMENT AT BENT A-83

NO SCALE

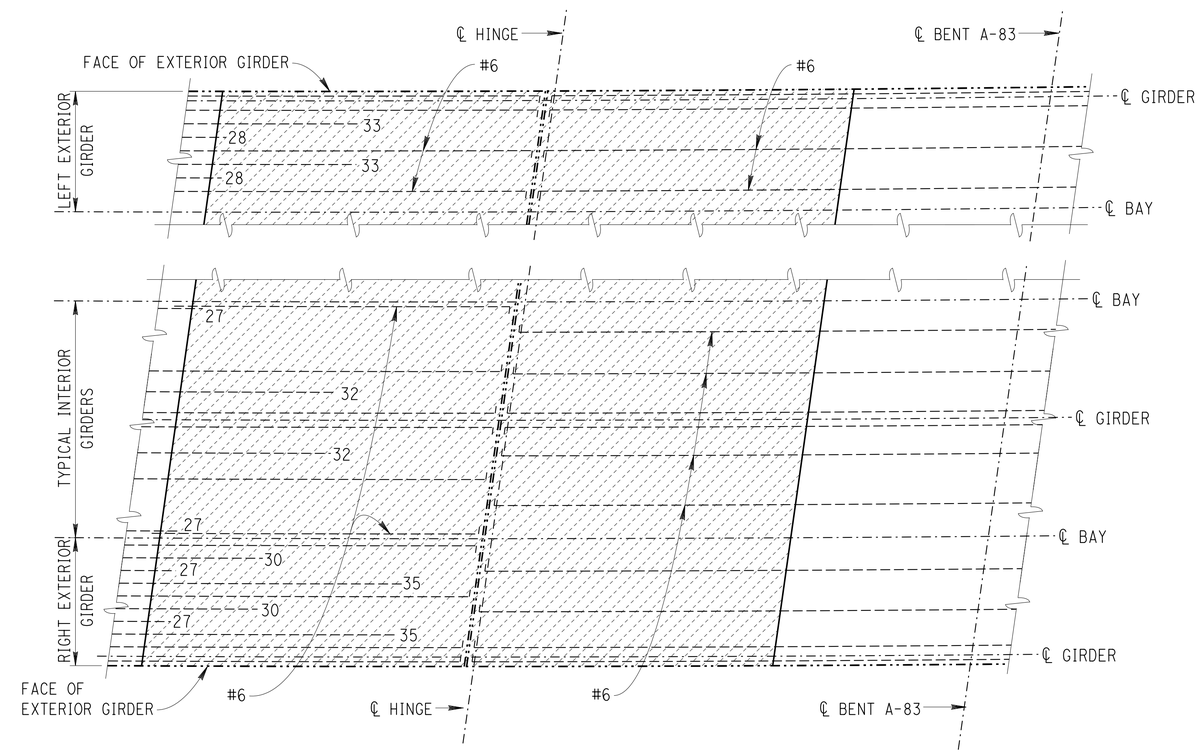

BOTTOM SLAB REINFORCEMENT AT BENT A-83

NO SCALE

	BY	CHECKED
DESIGN	KHANH TRUONG	CHARLES HUTCHINSON
DETAILS	G.F. BIDWELL	CHARLES HUTCHINSON
QUANTITIES	KHANH TRUONG	CHARLES HUTCHINSON

STATE OF CALIFORNIA
DEPARTMENT OF TRANSPORTATION

DIVISION OF MAINTENANCE
STRUCTURE MAINTENANCE DESIGN

BRIDGE No. 34-0046
POST MILE R4.40

SOUTHERN FREEWAY VIADUCT (RECONSTRUCT HINGES)

EXISTING TOP & BOTTOM SLAB REINFORCEMENT No. 3

STRUCTURES MAINTENANCE GENERAL PLAN SHEET (ENGLISH) (REV. 09-01-10)

ORIGINAL SCALE IN INCHES FOR REDUCED PLANS 0 1 2 3

UNIT: 3488
PROJECT NUMBER & PHASE: 0400001138 1
CONTRACT NO.: 04-4A5101

DISREGARD PRINTS BEARING EARLIER REVISION DATES

REVISION DATES: 10-5-11 1-31-12 12-12-12 1-25-13 5-17-13

SHEET 15 OF 21

FILE => 04-4a5101_15slabreinf3.dgn

USERNAME => s113571 DATE PLOTTED => 25-JUN-2013 TIME PLOTTED => 07:14

DIST	COUNTY	ROUTE	POST MILES TOTAL PROJECT	SHEET No.	TOTAL SHEETS
04	SF	280	R5.2/R6.0	46	51

Charles R Hutchinson 1-24-13
REGISTERED CIVIL ENGINEER DATE

6-24-13
PLANS APPROVAL DATE

REGISTERED PROFESSIONAL ENGINEER CHARLES R. HUTCHINSON No. C 54226 Exp. 12-31-13 CIVIL STATE OF CALIFORNIA

The State of California or its officers or agents shall not be responsible for the accuracy or completeness of electronic copies of this plan sheet.

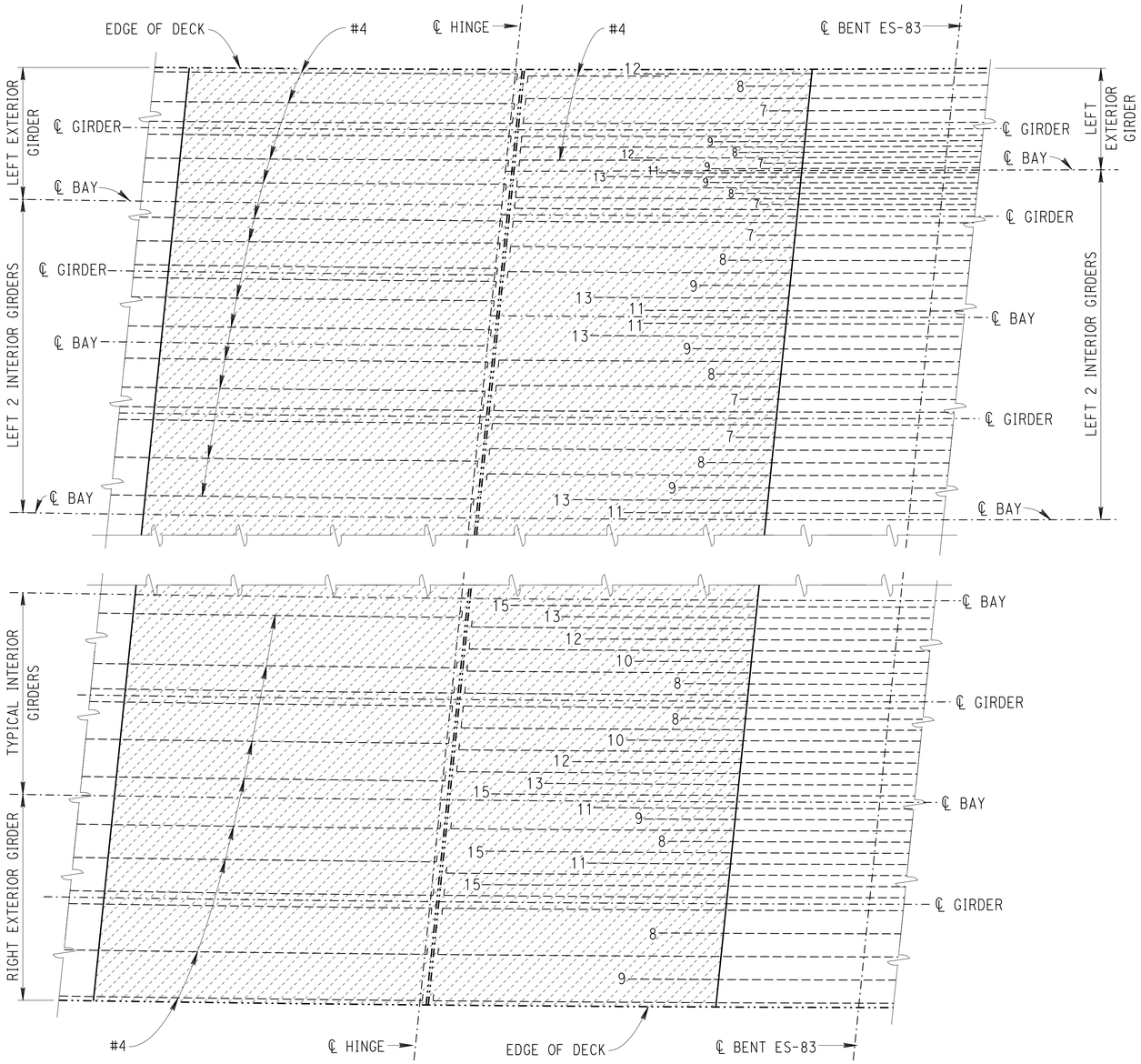

TOP SLAB REINFORCEMENT AT BENT ES-83

NO SCALE

NOTES: (APPLY TO THIS SHEET ONLY)

Indicates limits of remove existing concrete.

Numbers at ends of bars indicate distance in feet from ℄ bent. All bars are #11 except where noted otherwise.

See "EXISTING TOP & BOTTOM SLAB REINFORCEMENT No. 5" sheet for "BOTTOM SLAB REINFORCEMENT AT BENT ES-83".

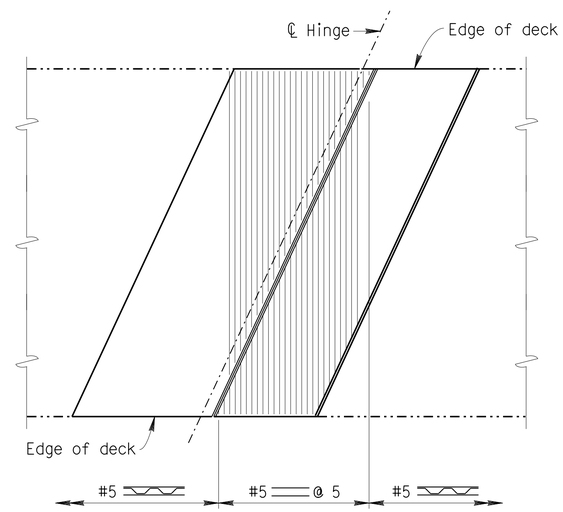

TOP SLAB TRANSVERSE REINFORCEMENT AT HINGE - PLAN

NO SCALE

DESIGN	BY KHANH TRUONG	CHECKED CHARLES HUTCHINSON	
DETAILS	BY G.F. BIDWELL	CHECKED CHARLES HUTCHINSON	
QUANTITIES	BY KHANH TRUONG	CHECKED CHARLES HUTCHINSON	

STATE OF CALIFORNIA
DEPARTMENT OF TRANSPORTATION

DIVISION OF MAINTENANCE
STRUCTURE MAINTENANCE DESIGN

BRIDGE No. 34-0046
POST MILE R4.40

SOUTHERN FREEWAY VIADUCT (RECONSTRUCT HINGES)
EXISTING TOP & BOTTOM SLAB REINFORCEMENT No. 4

STRUCTURES MAINTENANCE GENERAL PLAN SHEET (ENGLISH) (REV. 09-01-10)

ORIGINAL SCALE IN INCHES FOR REDUCED PLANS 0 1 2 3

UNIT: 3488
PROJECT NUMBER & PHASE: 0400001138 1
CONTRACT NO.: 04-4A5101

DISREGARD PRINTS BEARING EARLIER REVISION DATES
REVISION DATES 10-5-11 1-31-12 12-12-12 1-25-13 5-17-13

SHEET 16 OF 21

FILE => 04-4a5101_16slabreinf4.dgn

USERNAME => s113571 DATE PLOTTED => 25-JUN-2013 TIME PLOTTED => 07:14

DIST	COUNTY	ROUTE	POST MILES TOTAL PROJECT	SHEET No.	TOTAL SHEETS
04	SF	280	R5.2/R6.0	47	51

Charles R Hutchinson 1-24-13
REGISTERED CIVIL ENGINEER DATE

6-24-13
PLANS APPROVAL DATE

REGISTERED PROFESSIONAL ENGINEER CHARLES R. HUTCHINSON No. C 54226 Exp. 12-31-13 CIVIL STATE OF CALIFORNIA

The State of California or its officers or agents shall not be responsible for the accuracy or completeness of electronic copies of this plan sheet.

NOTES: (APPLY TO THIS SHEET ONLY)

Indicates limits of remove existing concrete.

Numbers at ends of bars indicate distance in feet from ℄ bent. All bars are #11 except where noted otherwise.

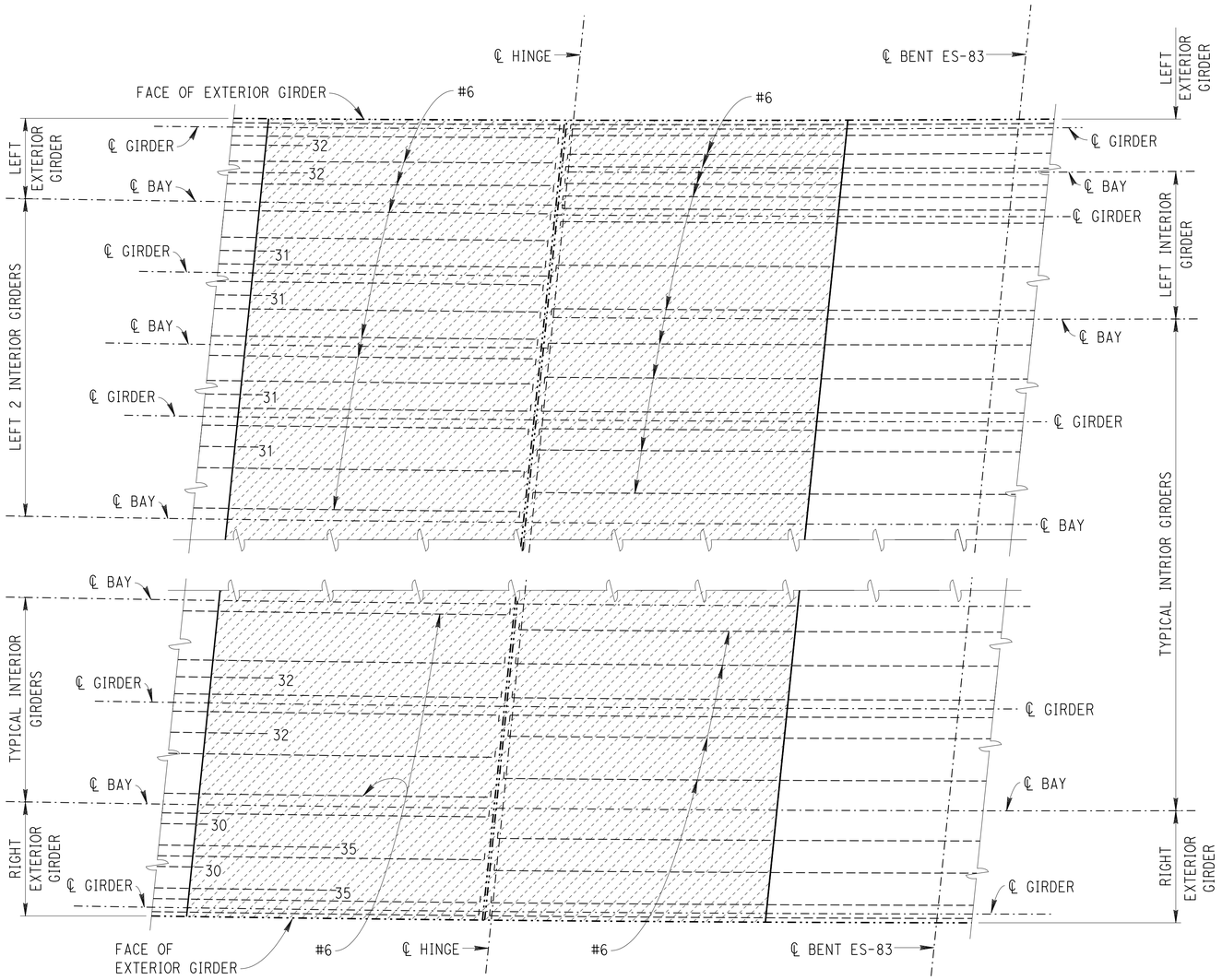

BOTTOM SLAB REINFORCEMENT AT BENT ES-83

NO SCALE

DESIGN	BY KHANH TRUONG	CHECKED CHARLES HUTCHINSON	
DETAILS	BY G.F. BIDWELL	CHECKED CHARLES HUTCHINSON	
QUANTITIES	BY KHANH TRUONG	CHECKED CHARLES HUTCHINSON	

STATE OF CALIFORNIA DEPARTMENT OF TRANSPORTATION

DIVISION OF MAINTENANCE STRUCTURE MAINTENANCE DESIGN

BRIDGE No. 34-0046
POST MILE R4.40

SOUTHERN FREEWAY VIADUCT (RECONSTRUCT HINGES)

EXISTING TOP & BOTTOM SLAB REINFORCEMENT No. 5

STRUCTURES MAINTENANCE GENERAL PLAN SHEET (ENGLISH) (REV. 09-01-10)

ORIGINAL SCALE IN INCHES FOR REDUCED PLANS 0 1 2 3

UNIT: 3488
PROJECT NUMBER & PHASE: 0400001138 1 CONTRACT NO.: 04-4A5101

DISREGARD PRINTS BEARING EARLIER REVISION DATES → REVISION DATES 10-5-11 1-31-12 12-12-12 1-25-13 5-17-13

SHEET 17 OF 21

FILE => 04-4a5101_17slabreinf5.dgn

USERNAME => s119571 DATE PLOTTED => 25-JUN-2013 TIME PLOTTED => 07:14

DIST	COUNTY	ROUTE	POST MILES TOTAL PROJECT	SHEET No.	TOTAL SHEETS
04	SF	280	R5.2/R6.0	48	51

Charles R Hutchinson 1-24-13
REGISTERED CIVIL ENGINEER DATE

6-24-13
PLANS APPROVAL DATE

REGISTERED PROFESSIONAL ENGINEER CHARLES R. HUTCHINSON No. C 54226 Exp. 12-31-13 CIVIL STATE OF CALIFORNIA

The State of California or its officers or agents shall not be responsible for the accuracy or completeness of electronic copies of this plan sheet.

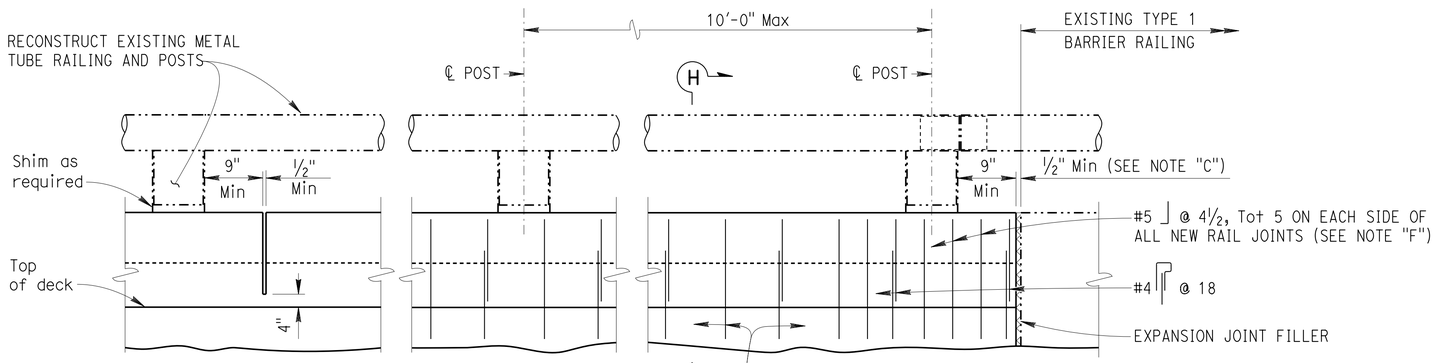

BARRIER RAIL ELEVATION

NO SCALE

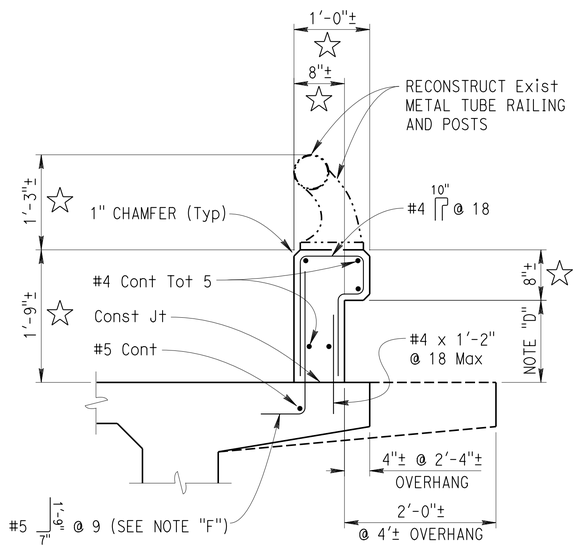

SECTION H-H

NO SCALE

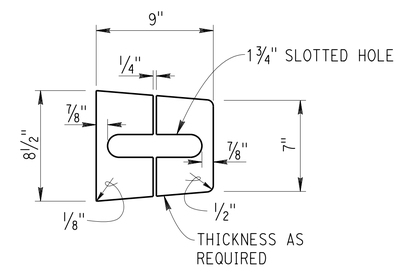

SHIM DETAIL

NO SCALE

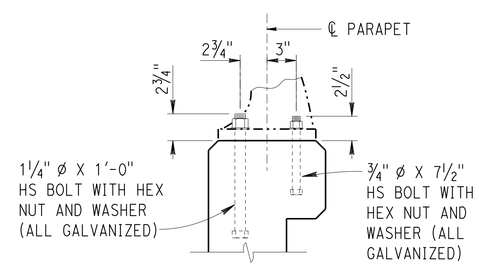

RAIL POST ANCHOR BOLT DETAIL

NO SCALE

NOTES: (APPLY TO THIS SHEET ONLY)

A. Railing shall conform to horizontal and vertical alignment.

B. Posts shall be normal to railing.

C. New rail joint locations shall be similar to the existing locations (40'-0" maximum spacing). Joint size to be ½" minimum.

D. Dimension will vary with cross-slope of deck (match existing dimensions).

E. Clearance to reinforcing steel in curb and railing to be 1". Longitudinal railing reinforcement to stop at all joints in the railing.

F. Reinforcing to be in place before deck concrete is placed.

☆ Indicates match existing dimensions.

DESIGN	BY KHANH TRUONG	CHECKED CHARLES HUTCHINSON	
DETAILS	BY G.F. BIDWELL	CHECKED CHARLES HUTCHINSON	
QUANTITIES	BY KHANH TRUONG	CHECKED CHARLES HUTCHINSON	

STATE OF CALIFORNIA
DEPARTMENT OF TRANSPORTATION

DIVISION OF MAINTENANCE
STRUCTURE MAINTENANCE DESIGN

BRIDGE No. 34-0046
POST MILE R4.40

SOUTHERN FREEWAY VIADUCT (RECONSTRUCT HINGES)

BARRIER RAILING TYPE 1 DETAILS

STRUCTURES MAINTENANCE GENERAL PLAN SHEET (ENGLISH) (REV. 09-01-10)

ORIGINAL SCALE IN INCHES FOR REDUCED PLANS 0 1 2 3

UNIT: 3488
PROJECT NUMBER & PHASE: 0400001138 1
CONTRACT NO.: 04-4A5101

DISREGARD PRINTS BEARING EARLIER REVISION DATES

REVISION DATES: 10-5-11 1-31-12 12-12-12 1-25-13 5-17-13

SHEET 18 OF 21

FILE => 04-4a5101_18bardets.dgn

USERNAME => s119571 DATE PLOTTED => 25-JUN-2013 TIME PLOTTED => 07:14

DIST	COUNTY	ROUTE	POST MILES TOTAL PROJECT	SHEET No.	TOTAL SHEETS
04	SF	280	R5.2/R6.0	49	51

Charles R. Hutchinson 1-24-13
REGISTERED CIVIL ENGINEER DATE

6-24-13
PLANS APPROVAL DATE

REGISTERED PROFESSIONAL ENGINEER CHARLES R. HUTCHINSON No. C 54226 Exp. 12-31-13 CIVIL STATE OF CALIFORNIA

The State of California or its officers or agents shall not be responsible for the accuracy or completeness of electronic copies of this plan sheet.

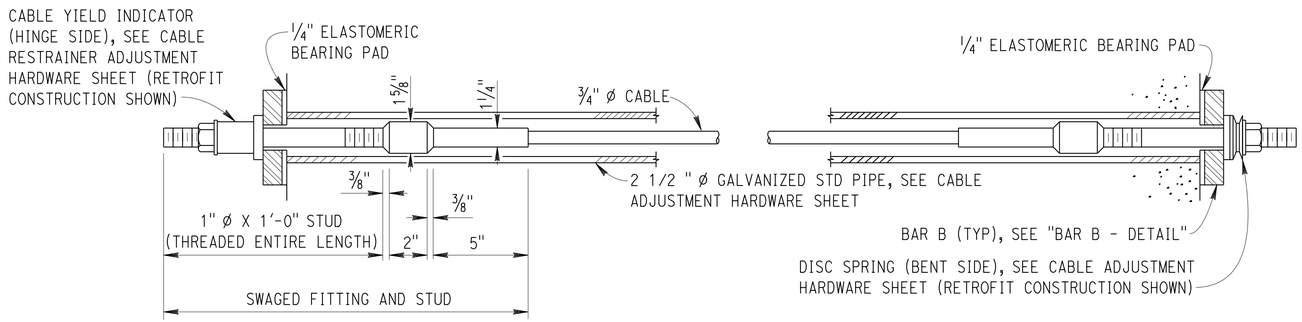

CABLE RESTRAINER UNIT

NO SCALE

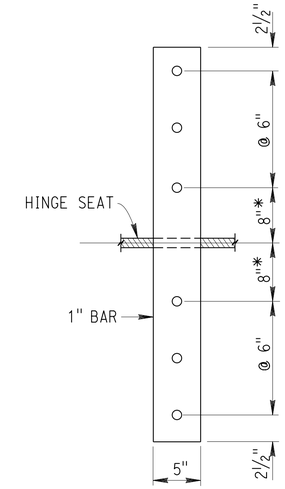

* DIMENSION MAY BE ADJUSTED TO CLEAR REINFORCEMENT

BAR B - DETAIL

NO SCALE

CABLE RESTRAINER UNIT NOTES:

Restrainer units to be on tangent alignment.

See other sheets for location and number of longitudinal and vertical hinge restrainers, and table of joint openings.

Contractor may install restrainers in horizontal arrangement with approval of the Engineer. The location shall be in the middle 1/3 depth of the structure.

An alternative is to place restrainers in two horizontal layers, equally located above and below the mid structure depth. The number of restrainers in each layer shall not differ by more than one.

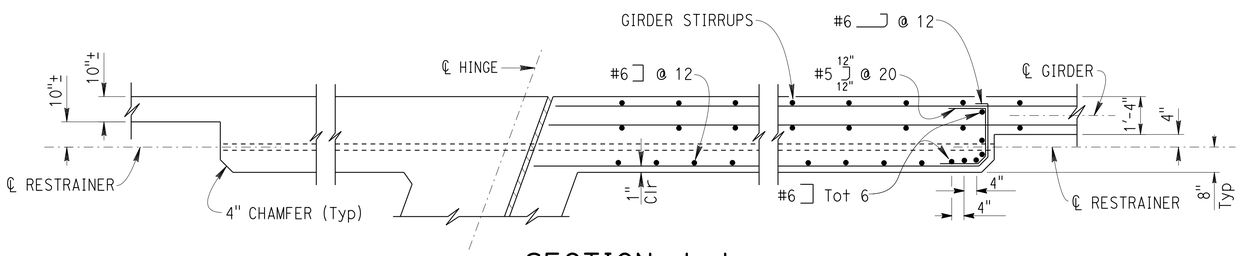

SECTION J-J

NO SCALE

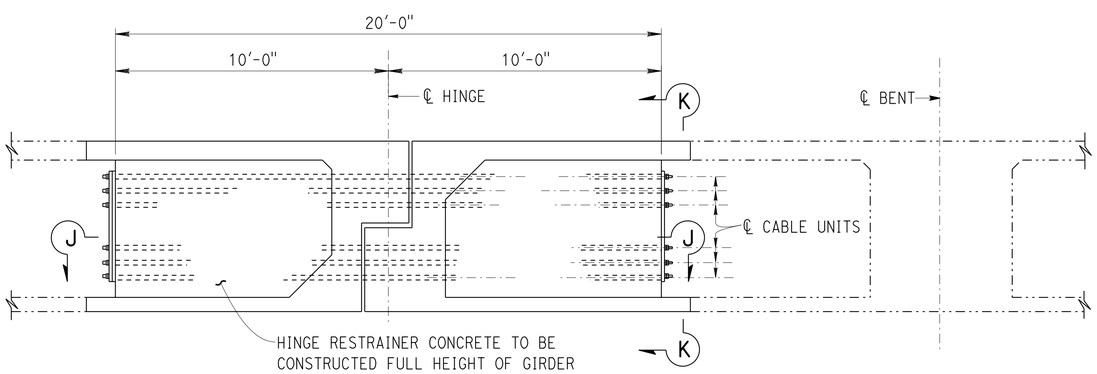

LONGITUDINAL HINGE RESTRAINER

NO SCALE

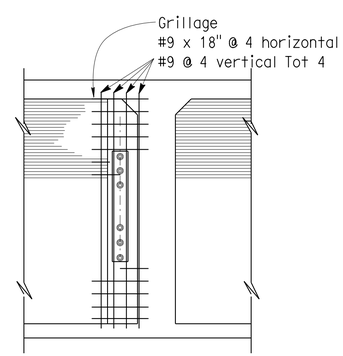

SECTION K-K

NO SCALE

DESIGN	BY KHANH TRUONG	CHECKED CHARLES HUTCHINSON	
DETAILS	BY G.F. BIDWELL	CHECKED CHARLES HUTCHINSON	
QUANTITIES	BY KHANH TRUONG	CHECKED CHARLES HUTCHINSON	

STATE OF CALIFORNIA
DEPARTMENT OF TRANSPORTATION

DIVISION OF MAINTENANCE
STRUCTURE MAINTENANCE DESIGN

BRIDGE No. 34-0046
POST MILE R4.40

SOUTHERN FREEWAY VIADUCT (RECONSTRUCT HINGES)

CABLE RESTRAINER UNIT - TYPE 2

STRUCTURES MAINTENANCE GENERAL PLAN SHEET (ENGLISH) (REV. 09-01-10)

ORIGINAL SCALE IN INCHES FOR REDUCED PLANS 0 1 2 3

UNIT: 3488
PROJECT NUMBER & PHASE: 0400001138 1
CONTRACT NO.: 04-4A5101

DISREGARD PRINTS BEARING EARLIER REVISION DATES

REVISION DATES: 10-5-11 1-31-12 12-12-12 1-25-13 5-17-13

SHEET 19 OF 21

FILE => 04-4a5101_19cable.dgn

USERNAME => s119571 DATE PLOTTED => 25-JUN-2013 TIME PLOTTED => 07:14

DIST	COUNTY	ROUTE	POST MILES TOTAL PROJECT	SHEET No.	TOTAL SHEETS
04	SF	280	R5.2/R6.0	50	51

Charles R Hutchinson 1-24-13
REGISTERED CIVIL ENGINEER DATE

6-24-13
PLANS APPROVAL DATE

REGISTERED PROFESSIONAL ENGINEER CHARLES R. HUTCHINSON No. C 54226 Exp. 12-31-13 CIVIL STATE OF CALIFORNIA

The State of California or its officers or agents shall not be responsible for the accuracy or completeness of electronic copies of this plan sheet.

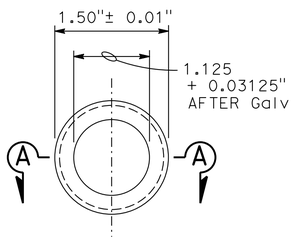

END VIEW

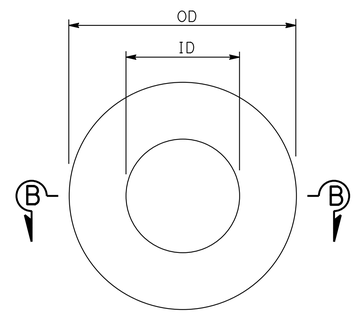

PLAN

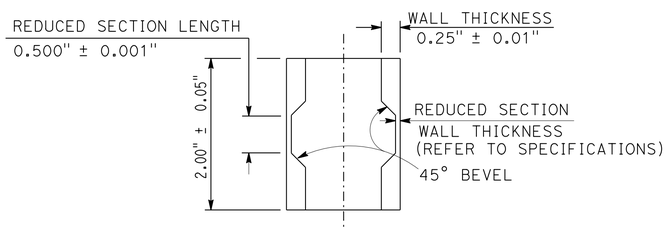

SECTION A-A

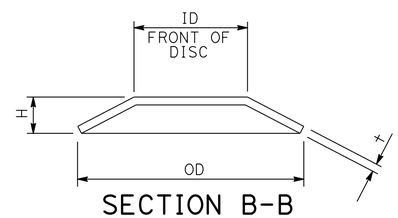

SECTION B-B
(SINGLE SPRING)

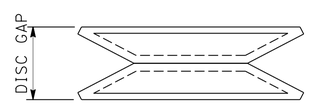

AS INSTALLED ON STUD

"ALL DIMENSIONS ARE BEFORE GALVANIZING EXCEPT AS NOTED"

CABLE YIELD INDICATOR

NOTE: FOR DIMENSIONS NOT SHOWN, SEE TABLE

DISC SPRING

DISC SPRINGS AND WASHERS

ALL DIMENSIONS IN INCHES, EXCEPT AS NOTED

	DISC SPRING					STEEL SPHERICAL WASHER			THICK WASHER		
L*	ID	OD	†	H	COLOR CODE	ID	OD	NOMINAL THICKNESS	ID	OD	†**
00.0 - 25.0	1.00	2.00	0.065	0.130	WHITE	1.19	2.25	0.50	1.03	2.00	0.25
25.1 - 31.9	1.00	2.00	0.084	0.136	RED	1.19	2.25	0.50	1.03	2.00	0.25
32.0 - 37.9	1.00	2.00	0.097	0.145	BLUE	1.19	2.25	0.50	1.03	2.00	0.25
38.0 - 45.0	1.25	2.50	0.120	0.180	YELLOW	1.31	2.50	0.50	1.16	2.00	0.25

* For limits of length L (ft), use effective length of cable, from face-to-face outer surfaces of anchorage plate or bearing bar. Refer to Bridge detail sheets for approximate length required.

** MINIMUM VALUE

NOTE: All OD and ID dimensions for washers and disc springs shall meet the dimensional tolerances for hardened steel washers, ASTM F436

RESTRAINER UNIT INSTALLATION PROCEDURE

1a. For typical 'girder to opposite girder' or 'bent cap to girder' restrainers with one adjustment end:

Place nut, washer and Thread Locking System on fixed end stud prior to tightening the cable

The adjustment end shall be at the same end of the cable for all restrainers at a specific hinge or bent

Tighten the nuts on the cable from the Adjustment End of restrainer until the disc springs collapse and there is no disc gap remaining between the discs

1b. For typical "U" or "V" shaped restrainers units with two adjustment ends: Install Cable Yield Indicator, spherical washers, disc springs, washers and nuts on both adjustment ends of cable type restrainers

The ends of the cable must be adjusted simultaneously.
Tighten the nuts on the cable from the adjustment ends of restrainer until the disc springs collapse and there is no disc gap remaining between the discs on either end of the cable

2. Place thread locking system on adjustment end(s) after tightening the cable but before backing off the nut(s)

Back off the nut(s) at the adjustable anchorage(s) a distance equal to the maximum additional amount that the hinge is expected to open, relative to existing ambient conditions, as shown on the plans for movement rating

STANDARD DRAWING
FILE NO. xs7-090
APPROVAL DATE July 2011

STATE OF CALIFORNIA
DEPARTMENT OF TRANSPORTATION

DIVISION OF ENGINEERING SERVICES

BRIDGE No. 34-0046
POST MILE R4.40

SOUTHERN FREEWAY VIADUCT (RECONSTRUCT HINGES)
CABLE RESTRAINER ADJUSTMENT HARDWARE

DS OSD 2147A (ENGLISH STANDARD DRAWING "XS" BORDER REV. (02-02-11)

ORIGINAL SCALE IN INCHES FOR REDUCED PLANS 0 1 2 3

UNIT: 3488
PROJECT NUMBER & PHASE: 0400001138 1
CONTRACT NO.: 04-4A5101

DISREGARD PRINTS BEARING EARLIER REVISION DATES

REVISION DATES 10-5-11 1-31-12 12-12-12 1-25-13 5-17-13

SHEET 20 OF 21

FILE => 04-4a5101_20xs7-050.dgn

USERNAME => s119571 DATE PLOTTED => 25-JUN-2013 TIME PLOTTED => 07:14

DIST	COUNTY	ROUTE	POST MILES TOTAL PROJECT	SHEET No.	TOTAL SHEETS
04	SF	280	R5.2/R6.0	51	51

Charles R Hutchinson 1-24-13
REGISTERED CIVIL ENGINEER DATE

6-24-13
PLANS APPROVAL DATE

REGISTERED PROFESSIONAL ENGINEER CHARLES R. HUTCHINSON No. C 54226 Exp. 12-31-13 CIVIL STATE OF CALIFORNIA

The State of California or its officers or agents shall not be responsible for the accuracy or completeness of electronic copies of this plan sheet.

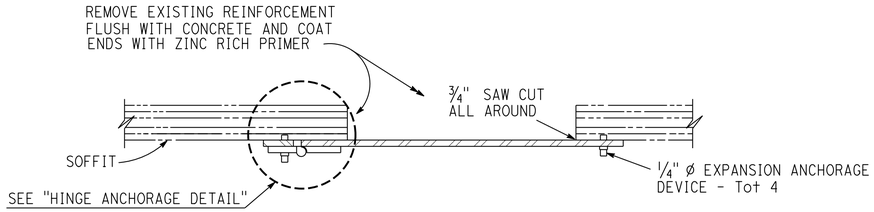

SECTION A-A

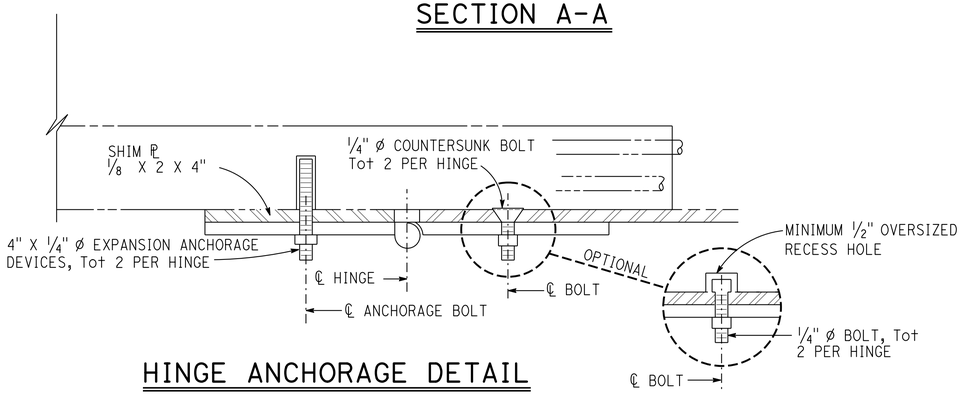

HINGE ANCHORAGE DETAIL

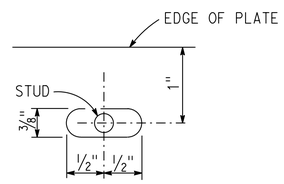

DETAIL A

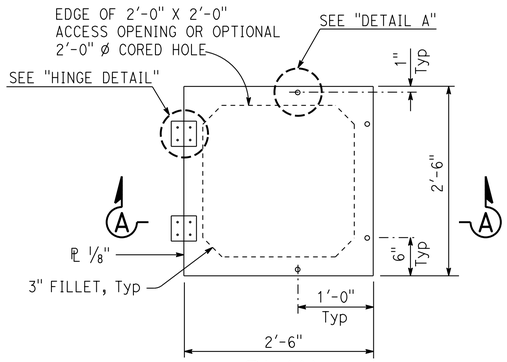

PLAN

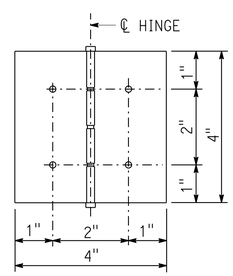

HINGE DETAIL

NOTES:

1. Non-removable pin in hinge
2. Hinge assembly to be galvanized, brass or stainless steel
3. Use thread locking system for all hinge nuts
4. Hinge assembly to be minimum 1/8" Thick

SOFFIT ACCESS DOOR ASSEMBLY

NOTE: SOFFIT ACCESS DOOR OPENING DIRECTION TO BE DETERMINED BY THE ENGINEER

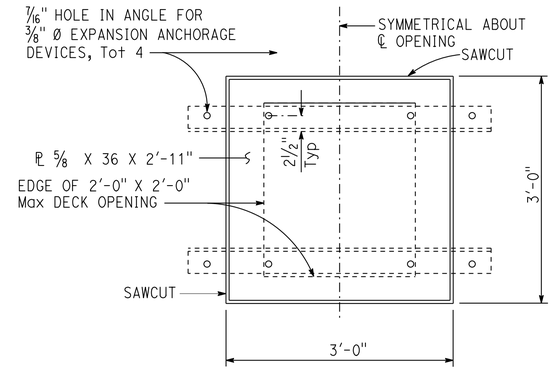

PLAN

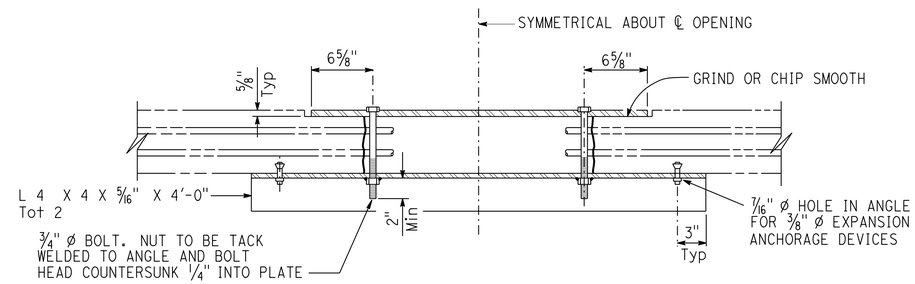

TEMPORARY DECK COVER PLATE

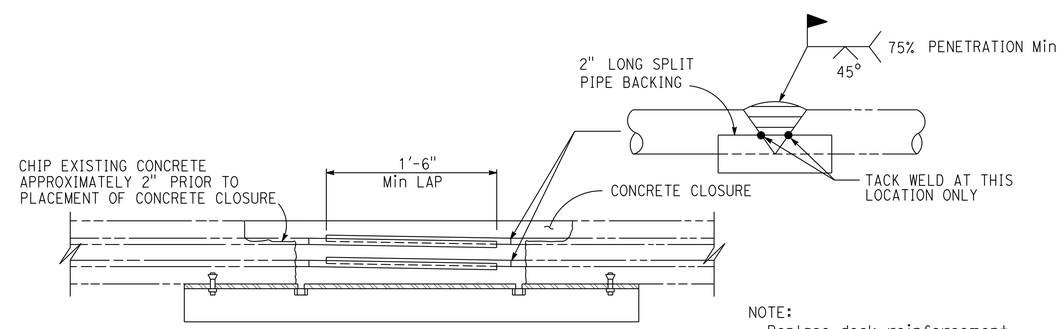

NOTE:
Replace deck reinforcement. Butt weld to existing

DECK CLOSURE

NO SCALE

STANDARD DRAWING		STATE OF CALIFORNIA DEPARTMENT OF TRANSPORTATION	DIVISION OF ENGINEERING SERVICES	BRIDGE No. 34-0046	SOUTHERN FREEWAY VIADUCT (RECONSTRUCT HINGES)
FILE No. xs7-110	APPROVAL DATE July 2011			POST MILE R4.40	DECK AND SOFFIT OPENINGS

DS OSD 2147A (ENGLISH STANDARD DRAWING "XS" BORDER REV. (02-02-11))

ORIGINAL SCALE IN INCHES FOR REDUCED PLANS 0 1 2 3

UNIT: 3488
PROJECT NUMBER & PHASE: 0400001138 1 CONTRACT NO.: 04-4A5101

DISREGARD PRINTS BEARING EARLIER REVISION DATES → REVISION DATES 10-5-11 1-31-12 12-12-12 1-25-13 5-17-13 SHEET 21 OF 21

FILE => 04-4a5101_21soffit.dgn

USERNAME => s128843 DATE PLOTTED => 25-JUN-2013 TIME PLOTTED => 09:37