Dist	COUNTY	ROUTE	POST MILES TOTAL PROJECT	SHEET No.	TOTAL SHEETS
04	Sol	680	R4.7	1	28

STATE OF CALIFORNIA

DEPARTMENT OF TRANSPORTATION

PROJECT PLANS FOR CONSTRUCTION ON

STATE HIGHWAY

IN SOLANO COUNTY
NEAR BENICIA
AT 0.3 MILE WEST OF
PARRISH ROAD OVERCROSSING

TO BE SUPPLEMENTED BY STANDARD PLANS DATED MAY 2006

INDEX OF PLANS

SHEET No.	DESCRIPTION
1	TITLE AND LOCATION MAP
2	LAYOUT
3-4	CONSTRUCTION DETAILS
5	EROSION CONTROL PLAN
6-14	DRAINAGE PLAN, PROFILES, DETAILS AND QUANTITIES
15	UTILITY PLAN
16	CONSTRUCTION AREA SIGNS
17	STAGE CONSTRUCTION PLAN
18	TRAFFIC HANDLING PLAN
19	SUMMARY OF QUANTITIES
20-21	HIGHWAY PLANTING
22-28	REVISED AND NEW STANDARD PLANS

THE STANDARD PLANS LIST APPLICABLE TO THIS CONTRACT IS INCLUDED IN THE NOTICE TO BIDDERS AND SPECIAL PROVISIONS BOOK.

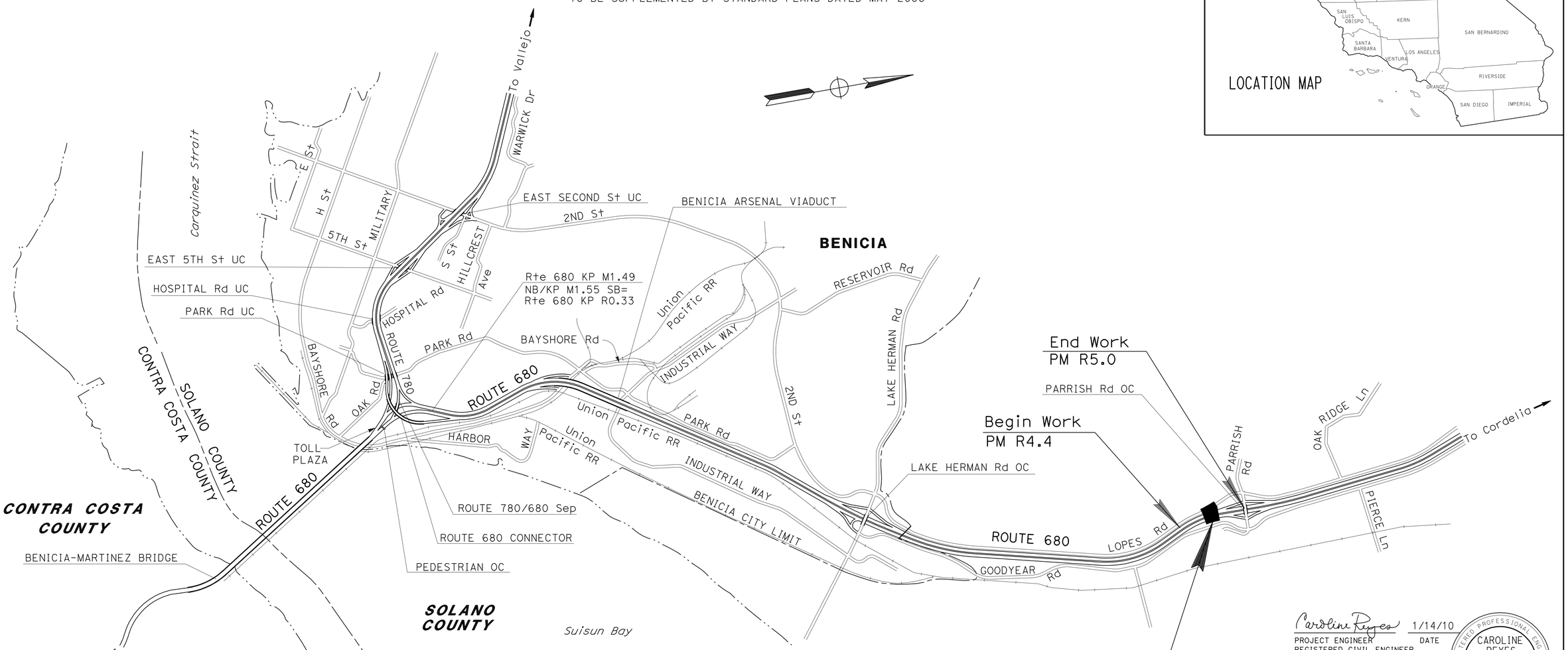

LOCATION MAP

Caltrans

Caroline Reyes 1/14/10
PROJECT ENGINEER DATE
REGISTERED CIVIL ENGINEER

March 1, 2010
PLANS APPROVAL DATE

REGISTERED PROFESSIONAL ENGINEER
CAROLINE REYES
No. 66004
Exp. 6/30/10
CIVIL
STATE OF CALIFORNIA

THE STATE OF CALIFORNIA OR ITS OFFICERS OR AGENTS SHALL NOT BE RESPONSIBLE FOR THE ACCURACY OR COMPLETENESS OF SCANNED COPIES OF THIS PLAN SHEET.

THE CONTRACTOR SHALL POSSESS THE CLASS (OR CLASSES) OF LICENSE AS SPECIFIED IN THE "NOTICE TO BIDDERS."

PROJECT MANAGER JASON MAC

DESIGN ENGINEER TERRY OGLE

LAST REVISION 00-00-00

DATE PLOTTED => 04-MAR-2010
TIME PLOTTED => 08:43

CONTRACT No. **04-3S7214**

Dist	COUNTY	ROUTE	POST MILES TOTAL PROJECT	SHEET No.	TOTAL SHEETS
04	Sol	680	R4.7	2	28

Caroline Reyes 1/14/10
REGISTERED CIVIL ENGINEER DATE

3-1-10
PLANS APPROVAL DATE

REGISTERED PROFESSIONAL ENGINEER CAROLINE REYES No. 66004 Exp 6/30/10 CIVIL STATE OF CALIFORNIA

THE STATE OF CALIFORNIA OR ITS OFFICERS OR AGENTS SHALL NOT BE RESPONSIBLE FOR THE ACCURACY OR COMPLETENESS OF SCANNED COPIES OF THIS PLAN SHEET.

NOTES:

1. FOR ACCURATE RIGHT OF WAY AND ACCESS DATA, CONTACT RIGHT OF WAY ENGINEERING AT THE DISTRICT OFFICE.
2. FOR TEMPORARY FENCE (TYPE ESA) LOCATIONS, SEE C-1 AND EROSION CONTROL SHEETS.

ABBREVIATIONS:

BCDC - BAY CONSERVATION AND DEVELOPMENT COMMISSION
PDE - PERMANENT DRAINAGE EASEMENT
AFTS - ALTERNATIVE FLARED TERMINAL SYSTEM

LEGEND

CULVERT REPLACEMENT AREA
BCDC SUISUN MARSH PROTECTION BOUNDARY LINE (APPROXIMATE)
PDE

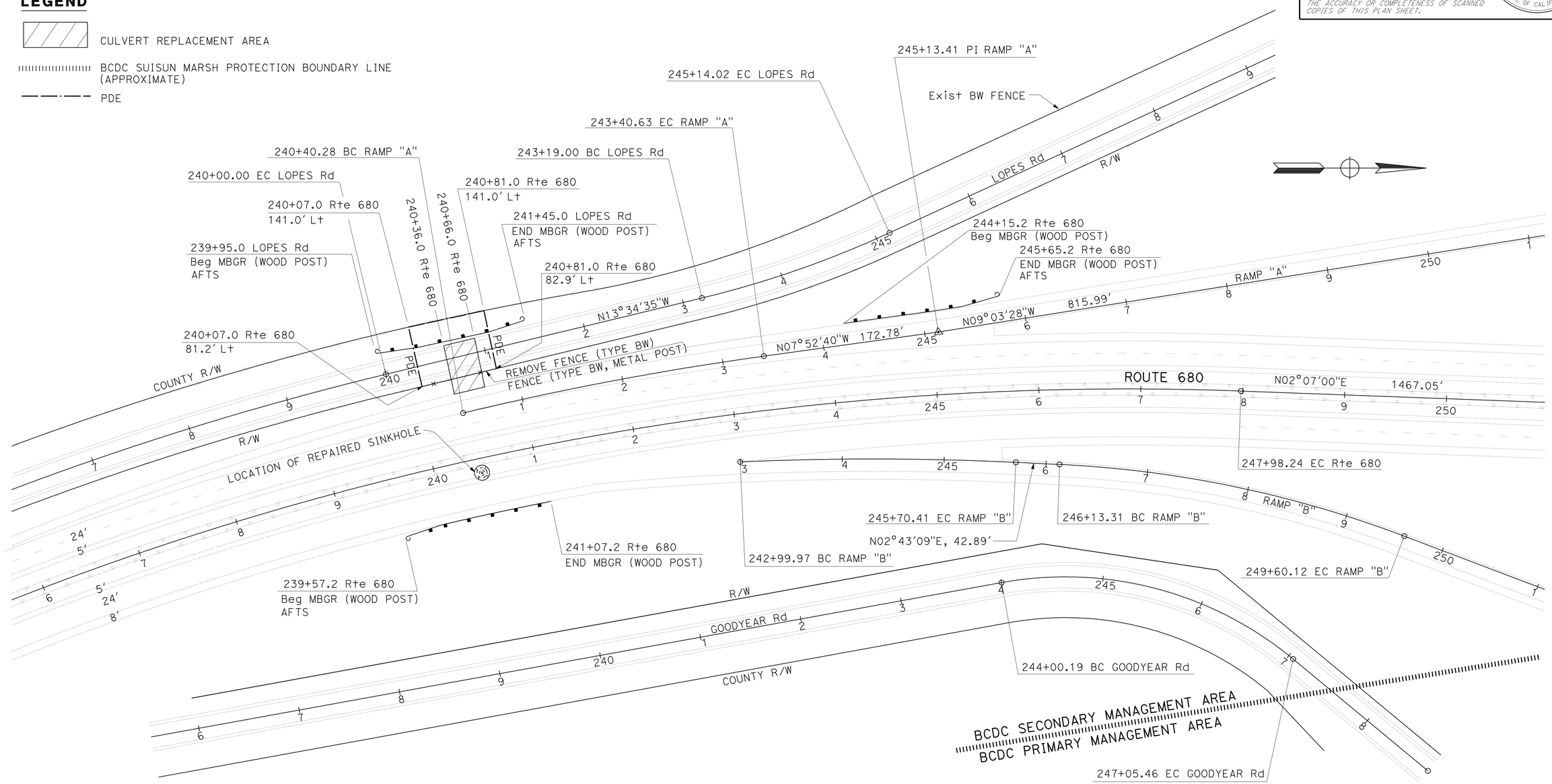

LAYOUT
SCALE: 1" = 50'

L-1

REVISED BY	DATE REVISED	CALCULATED-DESIGNED BY	CHECKED BY	FUNCTIONAL SUPERVISOR
RB	1/7/10	RICHARD BOYER	CAROLINE REYES	TERRY OGLE

STATE OF CALIFORNIA - DEPARTMENT OF TRANSPORTATION
Caltrans
10-DESIGN

LAST REVISION 00-00-00 | DATE PLOTTED => 04-MAR-2010 | TIME PLOTTED => 08:43

Dist	COUNTY	ROUTE	POST MILES TOTAL PROJECT	SHEET No.	TOTAL SHEETS
04	Sol	680	R4.7	3	28

Caroline Reyes 1/14/10
REGISTERED CIVIL ENGINEER DATE

3-1-10
PLANS APPROVAL DATE

REGISTERED PROFESSIONAL ENGINEER
CAROLINE REYES
No. 66004
Exp 6/30/10
CIVIL
STATE OF CALIFORNIA

THE STATE OF CALIFORNIA OR ITS OFFICERS OR AGENTS SHALL NOT BE RESPONSIBLE FOR THE ACCURACY OR COMPLETENESS OF SCANNED COPIES OF THIS PLAN SHEET.

NOTES:
1. STAGING AREA DIMENSIONS ARE APPROXIMATE. FINAL AREA NEEDED WILL BE DETERMINED BY THE ENGINEER AND CONTRACTOR.
2. APPLY EROSION CONTROL (HYDROSEED) TO DISTURBED SOIL AREAS AFTER CONSTRUCTION.

LEGEND

BCDC SUISUN MARSH PROTECTION BOUNDARY LINE (APPROXIMATE)

TFESA

EROSION CONTROL (HYDROSEED)

ABBREVIATIONS:

BCDC - BAY CONSERVATION AND DEVELOPMENT COMMISSION
TFESA - Temp FENCE (TYPE ESA)

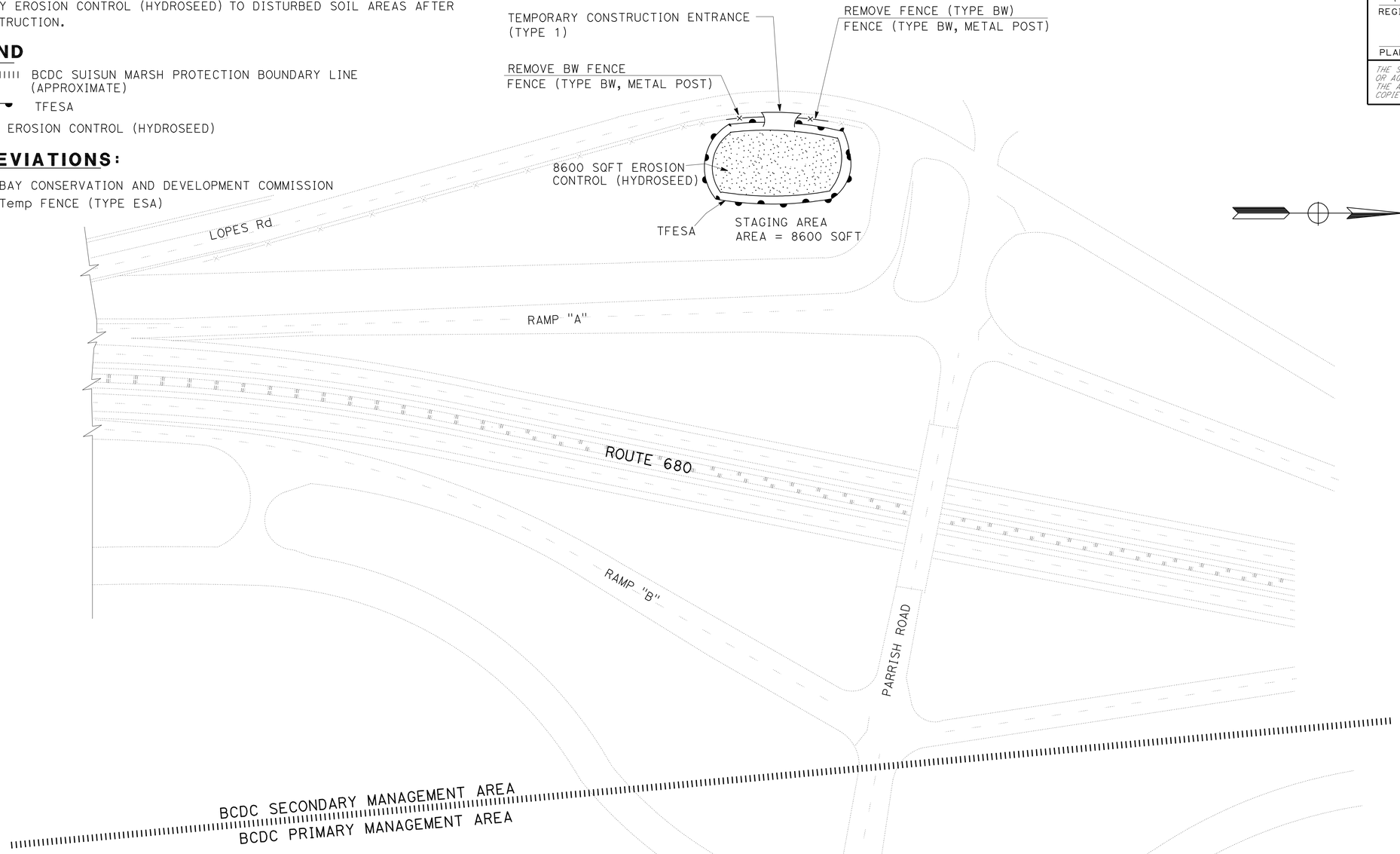

CONSTRUCTION DETAILS

NO SCALE

C-1

RB	11/18/09
REVISED BY	DATE REVISED
RICHARD BOYER	CAROLINE REYES
CALCULATED-DESIGNED BY	CHECKED BY
FUNCTIONAL SUPERVISOR	TERRY OGLE

STATE OF CALIFORNIA - DEPARTMENT OF TRANSPORTATION
Caltrans
10-DESIGN

LAST REVISION 00-00-00
DATE PLOTTED => 04-MAR-2010
TIME PLOTTED => 08:43

Dist	COUNTY	ROUTE	POST MILES TOTAL PROJECT	SHEET No.	TOTAL SHEETS
04	Sol	680	R4.7	4	28

Caroline Reyes 1/14/10
REGISTERED CIVIL ENGINEER DATE

3-1-10
PLANS APPROVAL DATE

REGISTERED PROFESSIONAL ENGINEER
CAROLINE REYES
No. 66004
Exp 6/30/10
CIVIL
STATE OF CALIFORNIA

THE STATE OF CALIFORNIA OR ITS OFFICERS OR AGENTS SHALL NOT BE RESPONSIBLE FOR THE ACCURACY OR COMPLETENESS OF SCANNED COPIES OF THIS PLAN SHEET.

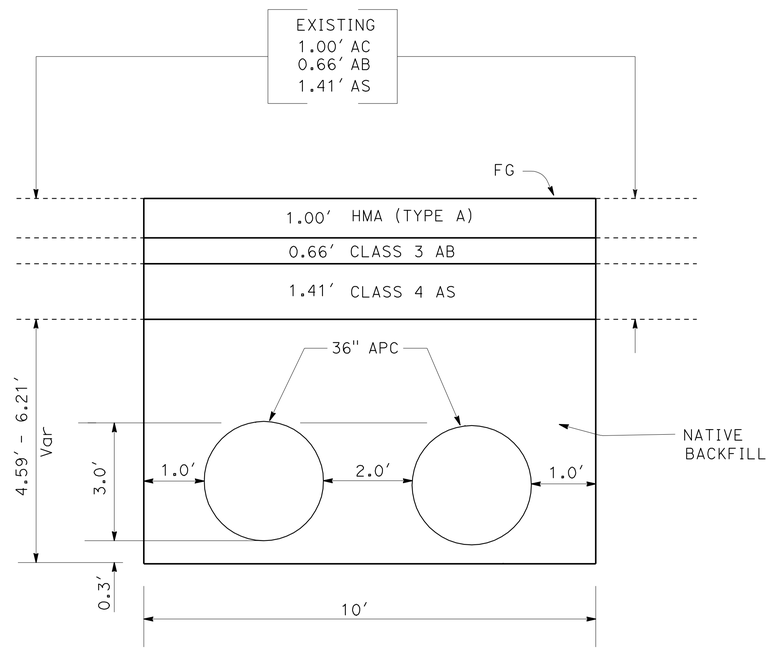

LOPES ROAD
TRENCH SECTION

CONSTRUCTION DETAILS

NO SCALE

C-2

STATE OF CALIFORNIA - DEPARTMENT OF TRANSPORTATION
Caltrans
10-DESIGN

FUNCTIONAL SUPERVISOR	CALCULATED-DESIGNED BY	CHECKED BY	REVISED BY	DATE REVISED
TERRY OGLE	RICHARD BOYER	CAROLINE REYES	RB	11/18/09

LAST REVISION 00-00-00 | DATE PLOTTED => 04-MAR-2010 | TIME PLOTTED => 08:43

NOTE: FOR ACCURATE RIGHT OF WAY AND ACCESS DATA, CONTACT RIGHT OF WAY ENGINEERING AT THE DISTRICT OFFICE.

Dist	COUNTY	ROUTE	POST MILES TOTAL PROJECT	SHEET No.	TOTAL SHEETS
04	Sol	680	R4.7	5	28

LICENSED LANDSCAPE ARCHITECT

3-1-10
PLANS APPROVAL DATE

LICENSED LANDSCAPE ARCHITECT — ALEXANDER K. McDONALD No. 5392 — Signature — 08-31-10 Renewal Date — Date — STATE OF CALIFORNIA

THE STATE OF CALIFORNIA OR ITS OFFICERS OR AGENTS SHALL NOT BE RESPONSIBLE FOR THE ACCURACY OR COMPLETENESS OF SCANNED COPIES OF THIS PLAN SHEET.

LEGEND

- TEMPORARY SILT FENCE
- ROLLED EROSION CONTROL PRODUCT (NETTING) AND EROSION CONTROL (HYDROSEED)
- EROSION CONTROL (HYDROSEED)
- TEMPORARY FENCE (TYPE ESA)
- PERMANENT DRAINAGE EASEMENT
- EXISTING TREE

ABBREVIATIONS:

TFESA - TEMPORARY FENCE (TYPE ESA)
PDE - PERMANENT DRAINAGE EASEMENT

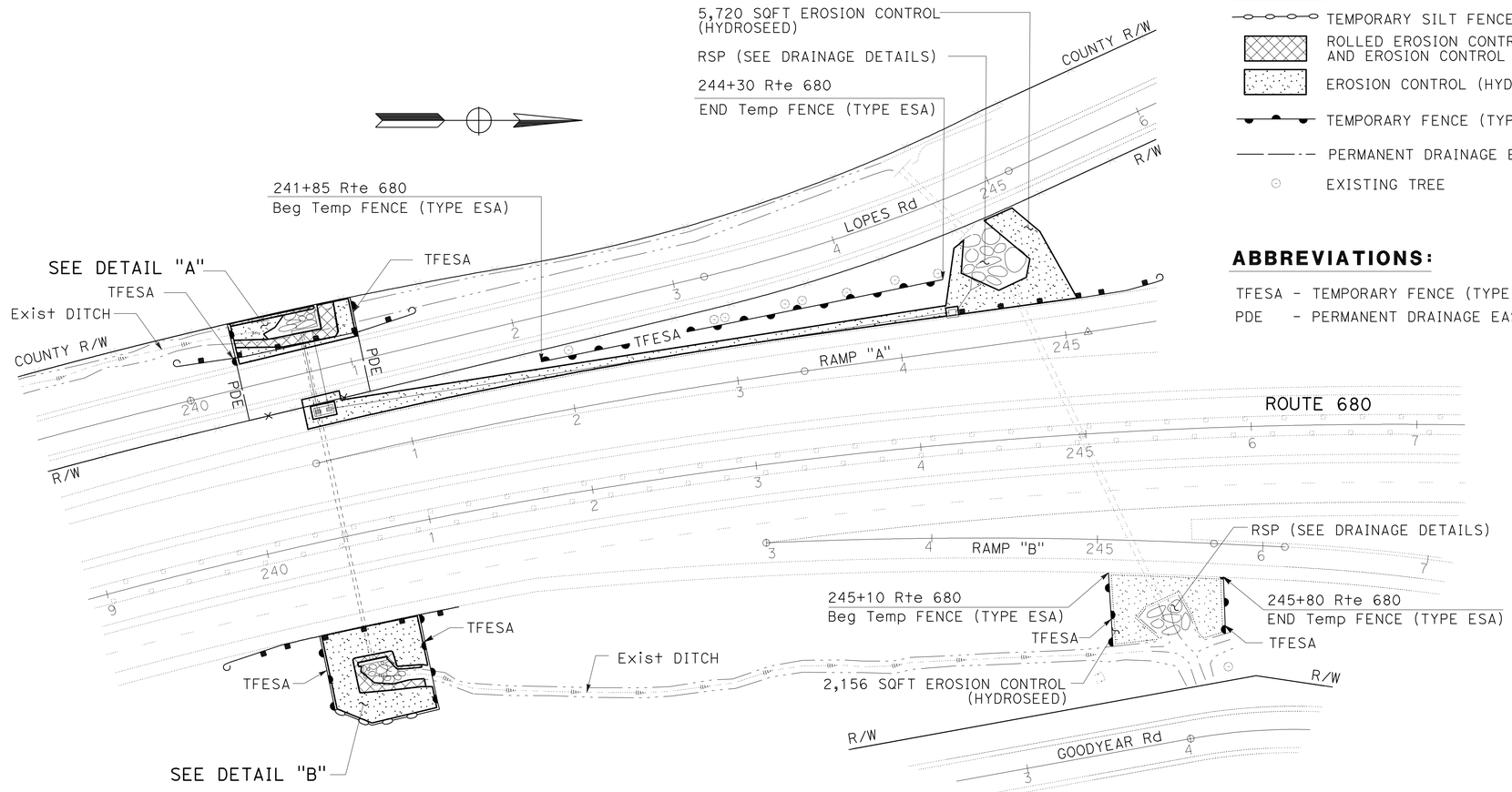

PLAN

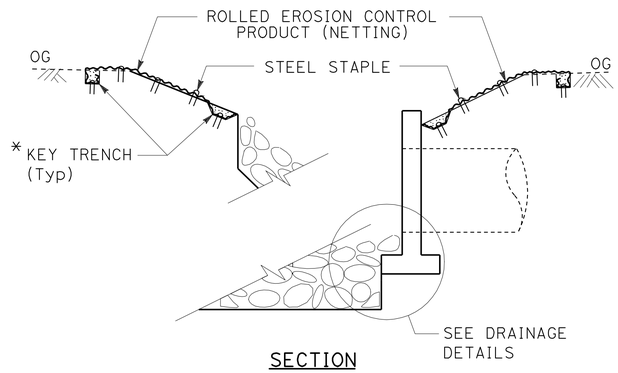

SECTION

ROLLED EROSION CONTROL PRODUCT (NETTING) ON SLOPE

* SEE Std PLAN NSP H53 FOR KEY TRENCH DETAILS

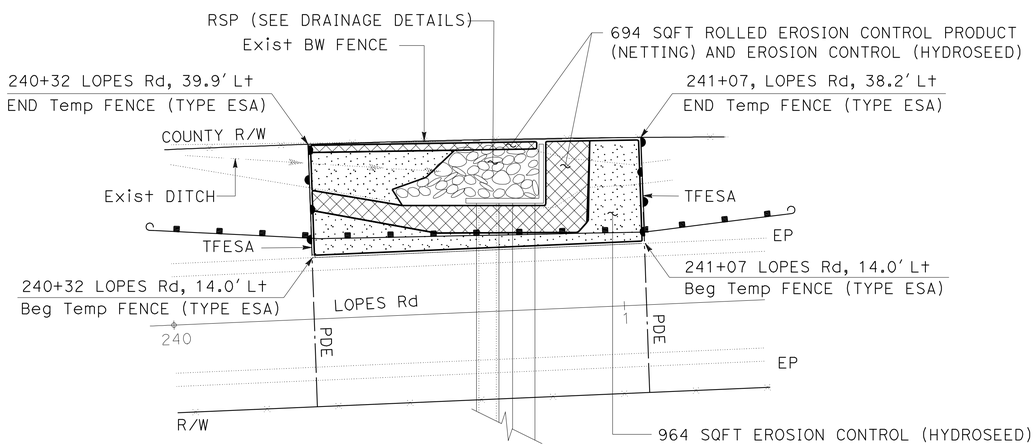

DETAIL "A"

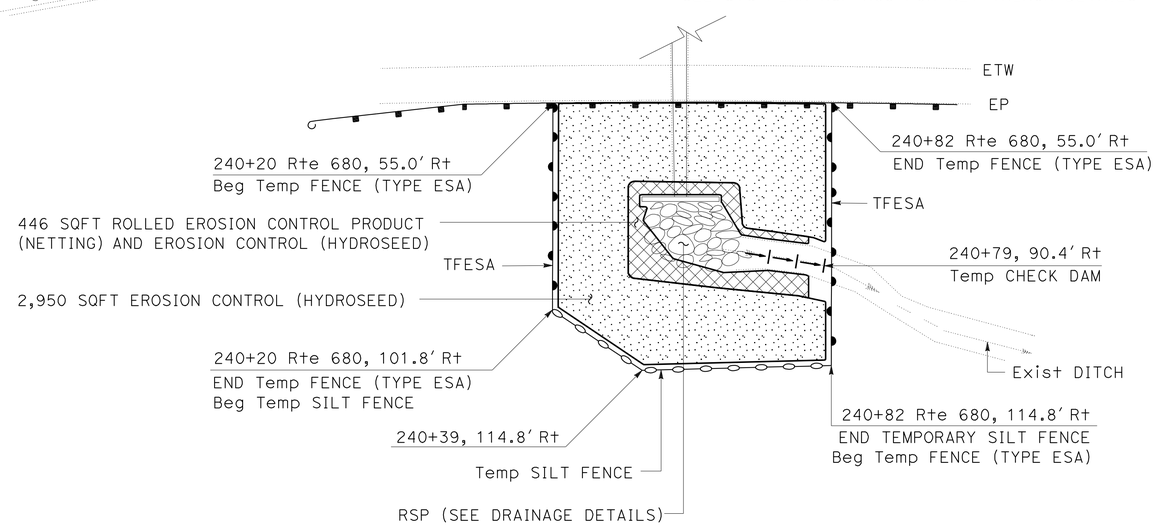

DETAIL "B"

DRAINAGE SYSTEM EROSION CONTROL

EROSION CONTROL PLAN

NO SCALE

EC-1

THIS PLAN ACCURATE FOR WATER POLLUTION AND EROSION CONTROL WORK ONLY.

STATE OF CALIFORNIA - DEPARTMENT OF TRANSPORTATION
Caltrans® WATER QUALITY

SENIOR LANDSCAPE ARCHITECT: DAVID W. YAM
CALCULATED-DESIGNED BY: Alex McDonald
CHECKED BY: Jennifer Egawa
REVISED BY: AM
DATE REVISED: 2/24/10

LAST REVISION 02-24-10
DATE PLOTTED => 04-MAR-2010
TIME PLOTTED => 08:43

Dist	COUNTY	ROUTE	POST MILES TOTAL PROJECT	SHEET No.	TOTAL SHEETS
04	Sol	680	R4.7	6	28

Caroline Reyes 1/14/10
REGISTERED CIVIL ENGINEER DATE

3-1-10
PLANS APPROVAL DATE

REGISTERED PROFESSIONAL ENGINEER CAROLINE REYES No. 66004 Exp 6/30/10 CIVIL STATE OF CALIFORNIA

THE STATE OF CALIFORNIA OR ITS OFFICERS OR AGENTS SHALL NOT BE RESPONSIBLE FOR THE ACCURACY OR COMPLETENESS OF SCANNED COPIES OF THIS PLAN SHEET.

NOTE: FOR ACCURATE RIGHT OF WAY AND ACCESS DATA, CONTACT RIGHT OF WAY ENGINEERING AT THE DISTRICT OFFICE.

LEGEND

- DRAINAGE SYSTEM No.
- DRAINAGE UNIT
- FLOW DIRECTION
- BCDC SUISUN MARSH PROTECTION BOUNDARY LINE (APPROXIMATE)
- PDE

ABBREVIATIONS:

BCDC - BAY CONSERVATION AND DEVELOPMENT COMMISSION
PDE - PERMANENT DRAINAGE EASEMENT
S - SLOPE
CIPP - CURED IN PLACE PIPE

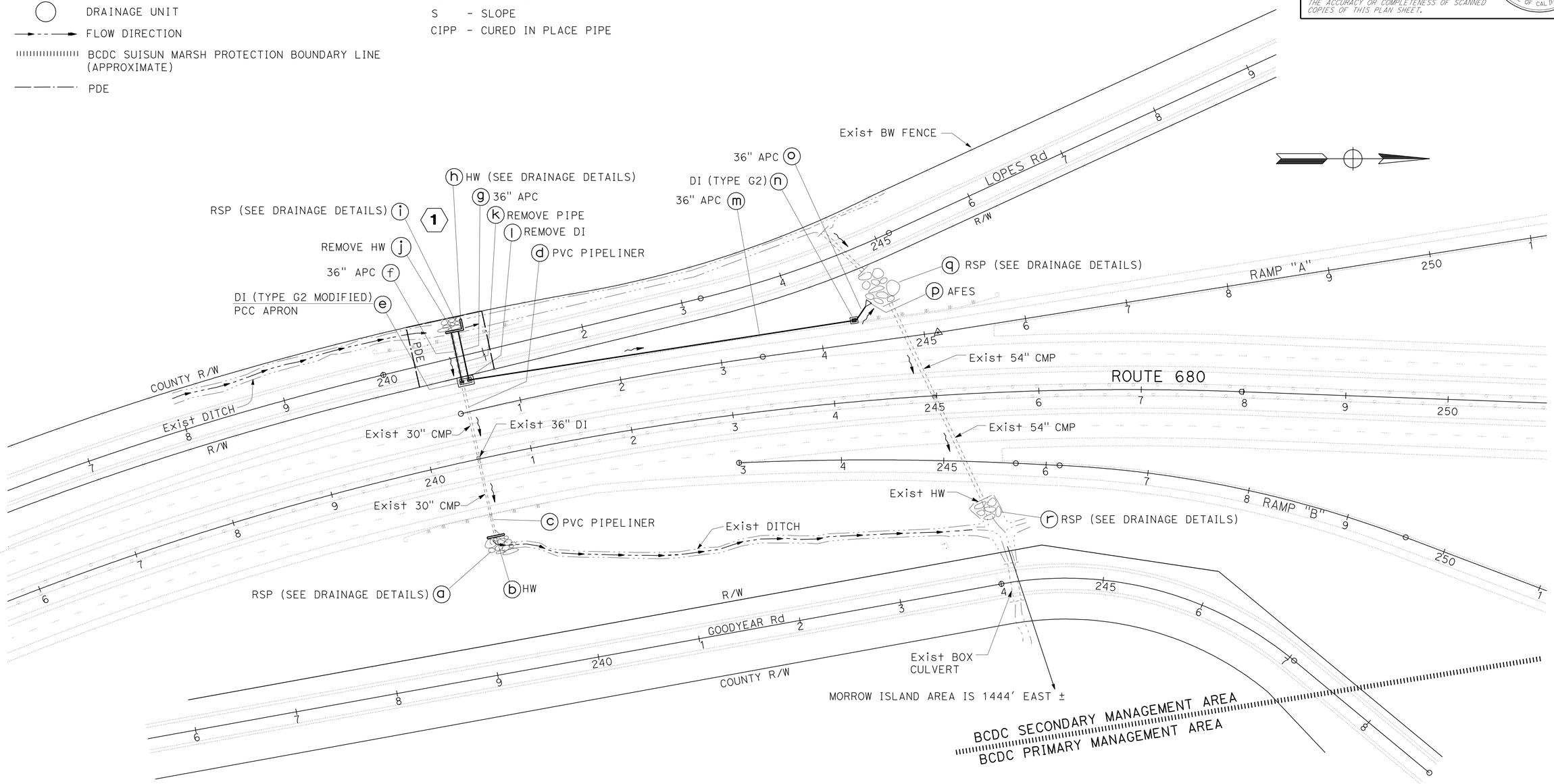

THIS PLAN ACCURATE FOR DRAINAGE WORK ONLY.

DRAINAGE PLAN

SCALE: 1" = 50'

D-1

REVISED BY	DATE REVISED
RB	1/10/10

RICHARD BOYER
CAROLINE REYES
CALCULATED-DESIGNED BY
CHECKED BY
FUNCTIONAL SUPERVISOR
TERRY OGLE

STATE OF CALIFORNIA - DEPARTMENT OF TRANSPORTATION
Caltrans
10-DESIGN

LAST REVISION 00-00-00
DATE PLOTTED => 04-MAR-2010
TIME PLOTTED => 08:43

Dist	COUNTY	ROUTE	POST MILES TOTAL PROJECT	SHEET No.	TOTAL SHEETS
04	Sol	680	R4.7	7	28

Caroline Reyes — REGISTERED CIVIL ENGINEER — 1/14/10 DATE

3-1-10 PLANS APPROVAL DATE

REGISTERED PROFESSIONAL ENGINEER — CAROLINE REYES No. 66004 Exp 6/30/10 CIVIL — STATE OF CALIFORNIA

THE STATE OF CALIFORNIA OR ITS OFFICERS OR AGENTS SHALL NOT BE RESPONSIBLE FOR THE ACCURACY OR COMPLETENESS OF SCANNED COPIES OF THIS PLAN SHEET.

NOTE: ALL STATIONING BASED OFF ROUTE 680 CENTER LINE.

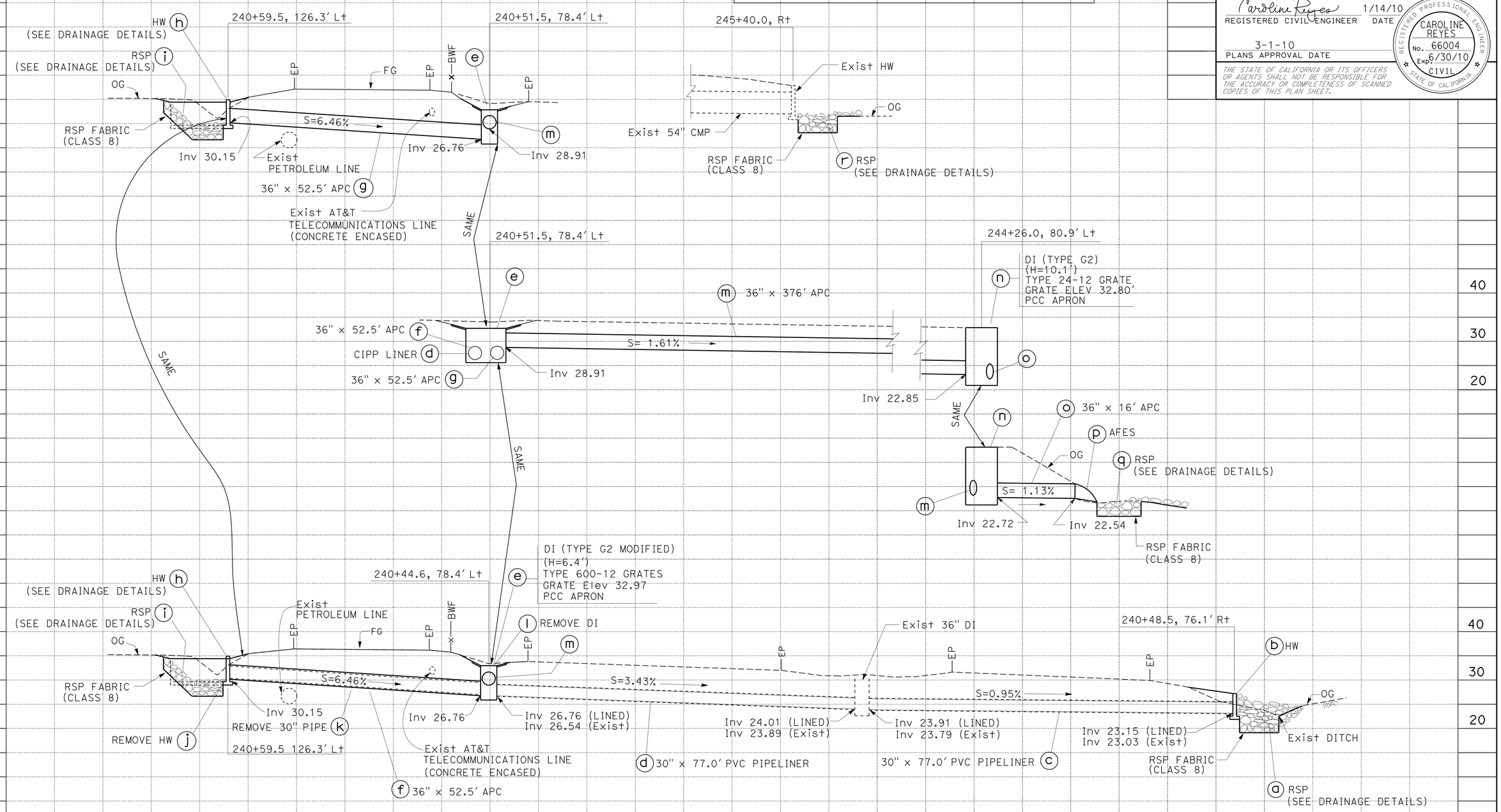

DRAINAGE SYSTEM No. 1
ROUTE 680

DRAINAGE PROFILES

SCALE: Horiz 1" = 10′
Vert 1" = 10′

DP-1

STATION		TOTAL
CY	Exc	
	Emb	

REVISED BY	DATE REVISED	CALCULATED-DESIGNED BY	CHECKED BY	FUNCTIONAL SUPERVISOR
RB	1/11/10	RICHARD BOYER	CAROLINE REYES	TERRY OGLE

STATE OF CALIFORNIA - DEPARTMENT OF TRANSPORTATION — 10-DESIGN — Caltrans

LAST REVISION 00-00-00 — DATE PLOTTED => 04-MAR-2010 — TIME PLOTTED => 08:43

Dist	COUNTY	ROUTE	POST MILES TOTAL PROJECT	SHEET No.	TOTAL SHEETS
04	Sol	680	R4.7	8	28

Caroline Reyes 1/14/10
REGISTERED CIVIL ENGINEER DATE

3-1-10
PLANS APPROVAL DATE

REGISTERED PROFESSIONAL ENGINEER CAROLINE REYES No. 66004 Exp 6/30/10 CIVIL STATE OF CALIFORNIA

THE STATE OF CALIFORNIA OR ITS OFFICERS OR AGENTS SHALL NOT BE RESPONSIBLE FOR THE ACCURACY OR COMPLETENESS OF SCANNED COPIES OF THIS PLAN SHEET.

NOTE:

REFER TO PLANTING PLANS AND DETAILS FOR PLANT TO BE LOCATED IN ROCK SLOPE PROTECTION.

LEGEND

- ROCK SLOPE PROTECTION PLACEMENT (1/4 TON METHOD B)
- ROCK SLOPE PROTECTION PLACEMENT (1/4 TON METHOD A)

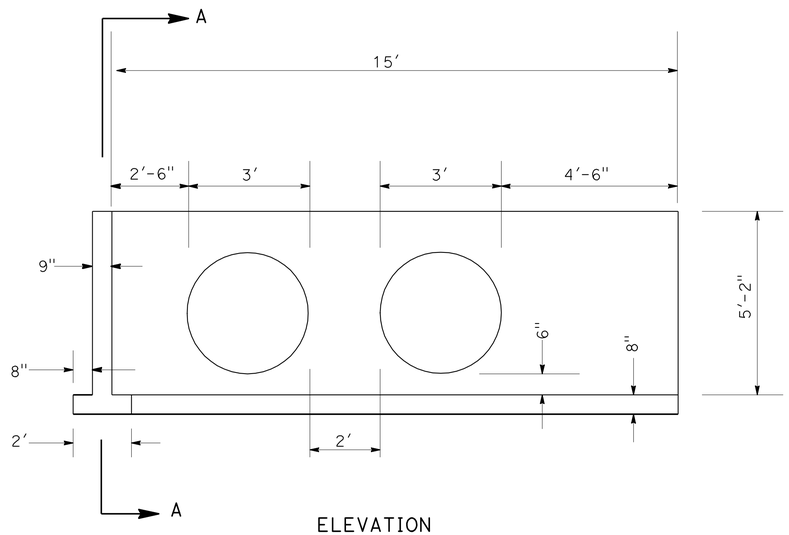

ELEVATION

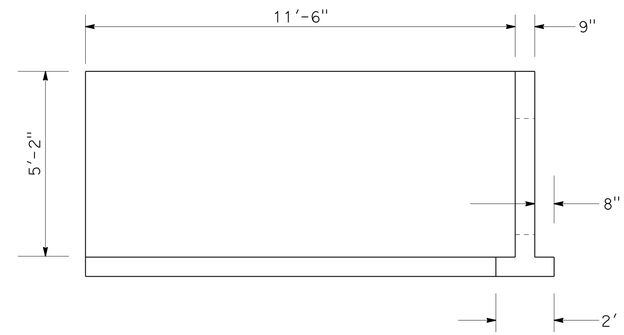

SECTION A-A

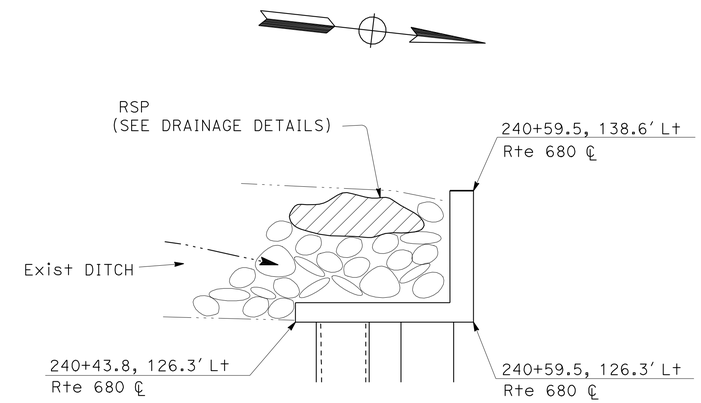

PLAN

"L" HEADWALL - INLET

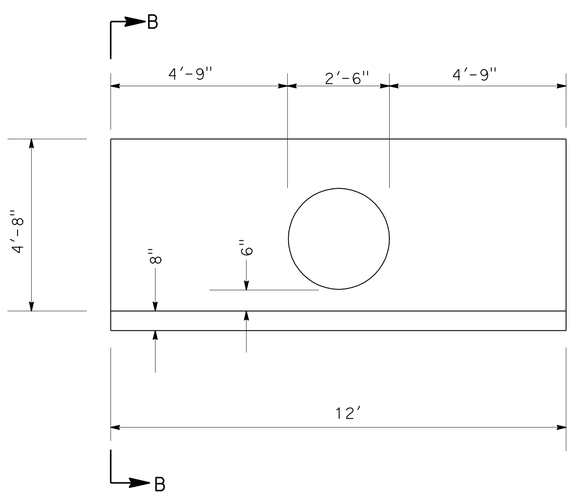

ELEVATION

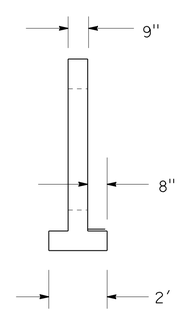

SECTION B-B

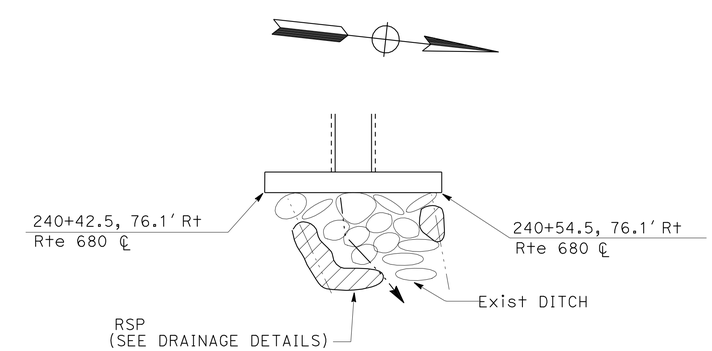

PLAN

HEADWALL - OUTLET

DRAINAGE SYSTEM No. 1

DRAINAGE DETAILS

NO SCALE

DD-1

REVISED BY	DATE REVISED
RB	1/11/10

CALCULATED-DESIGNED BY	CHECKED BY
RICHARD BOYER	CAROLINE REYES

FUNCTIONAL SUPERVISOR: TERRY OGLE

STATE OF CALIFORNIA - DEPARTMENT OF TRANSPORTATION

Caltrans®

10-DESIGN

LAST REVISION 00-00-00 | DATE PLOTTED => 04-MAR-2010 | TIME PLOTTED => 08:44

Dist	COUNTY	ROUTE	POST MILES TOTAL PROJECT	SHEET No.	TOTAL SHEETS
04	Sol	680	R4.7	9	28

Caroline Reyes 1/14/10
REGISTERED CIVIL ENGINEER DATE

3-1-10
PLANS APPROVAL DATE

REGISTERED PROFESSIONAL ENGINEER CAROLINE REYES No. 66004 Exp. 6/30/10 CIVIL STATE OF CALIFORNIA

THE STATE OF CALIFORNIA OR ITS OFFICERS OR AGENTS SHALL NOT BE RESPONSIBLE FOR THE ACCURACY OR COMPLETENESS OF SCANNED COPIES OF THIS PLAN SHEET.

NOTE:

REFER TO PLANTING PLANS AND DETAILS FOR PLANT TO BE LOCATED IN ROCK SLOPE PROTECTION.

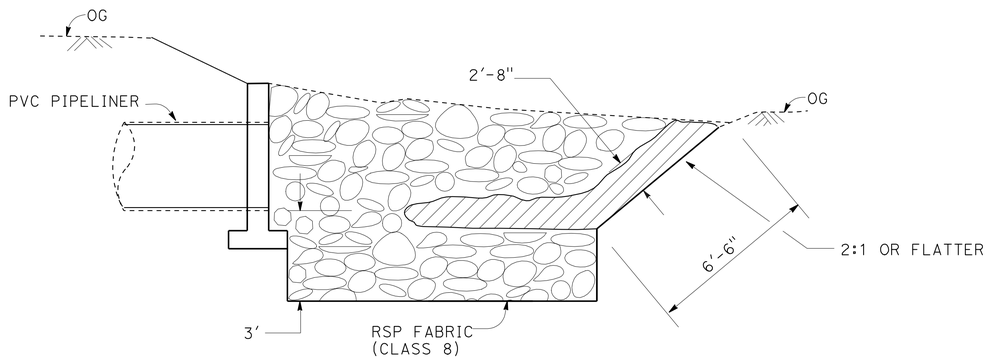

SECTION A-A

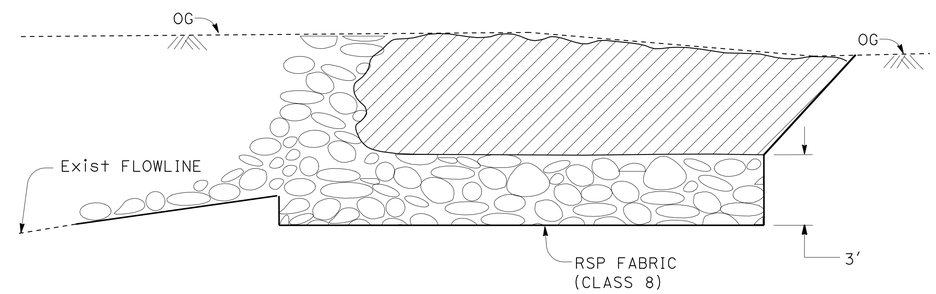

SECTION C-C

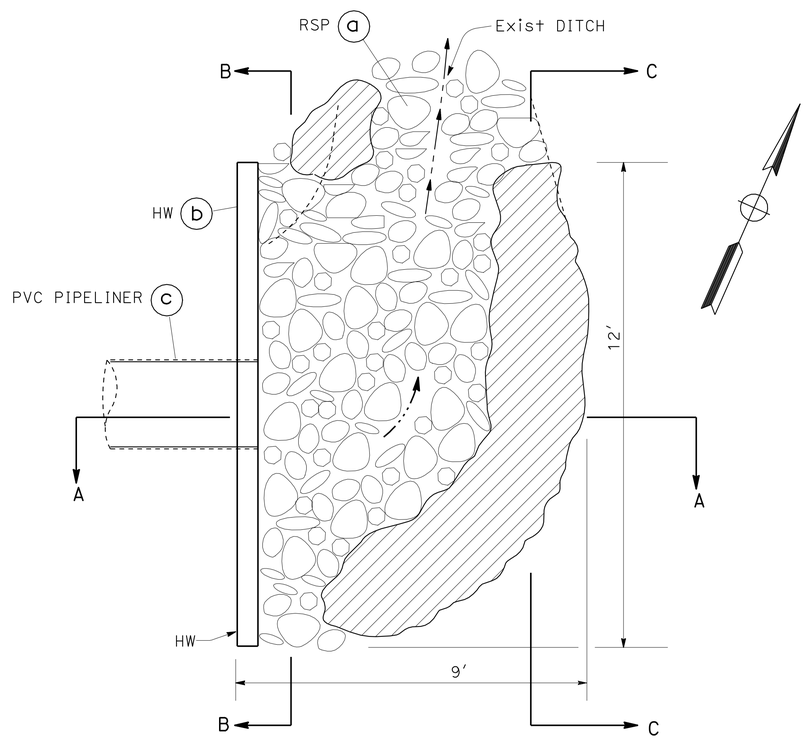

PLAN

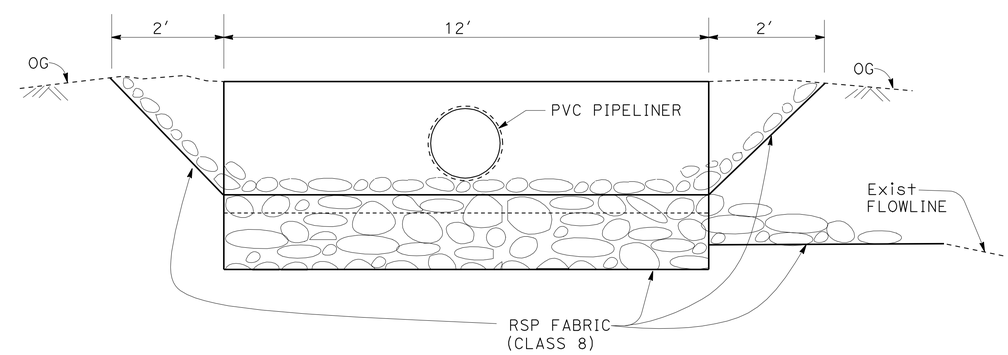

SECTION B-B

ROCK SLOPE PROTECTION - OUTLET

DRAINAGE SYSTEM No. 1

DRAINAGE DETAILS

NO SCALE

DD-2

STATE OF CALIFORNIA - DEPARTMENT OF TRANSPORTATION
Caltrans
10-DESIGN

FUNCTIONAL SUPERVISOR: TERRY OGLE
CALCULATED-DESIGNED BY: RICHARD BOYER
CHECKED BY: CAROLINE REYES
REVISED BY: RB
DATE REVISED: 1/10/10

LAST REVISION 00-00-00
DATE PLOTTED => 04-MAR-2010
TIME PLOTTED => 08:44

NOTE:

REFER TO PLANTING PLANS AND DETAILS FOR PLANT TO BE LOCATION IN ROCK SLOPE PROTECTION.

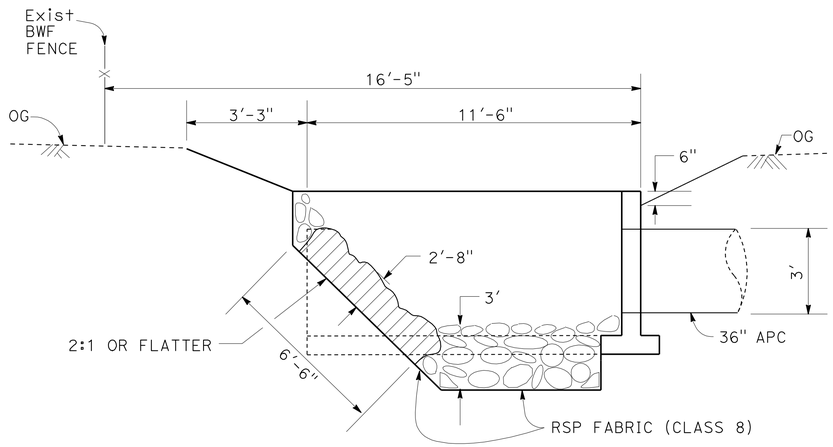

SECTION A-A

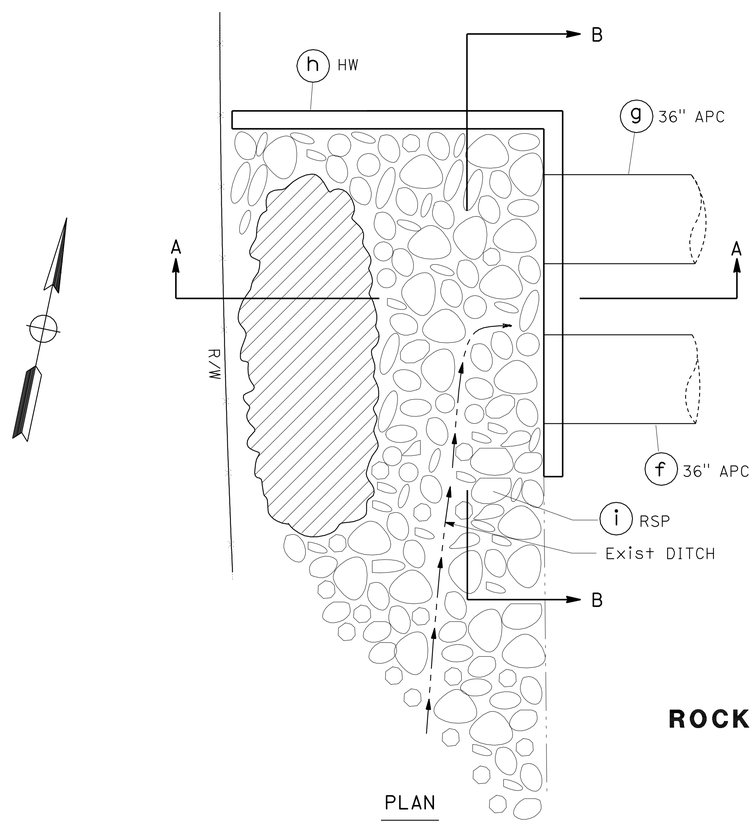

PLAN

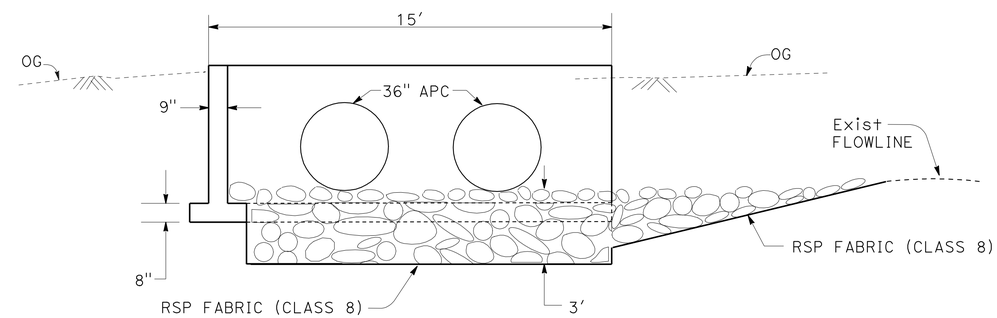

SECTION B-B

ROCK SLOPE PROTECTION - INLET

DRAINAGE SYSTEM No. 1

Dist	COUNTY	ROUTE	POST MILES TOTAL PROJECT	SHEET No.	TOTAL SHEETS
04	Sol	680	R4.7	10	28

Caroline Reyes 1/14/10
REGISTERED CIVIL ENGINEER DATE

3-1-10
PLANS APPROVAL DATE

REGISTERED PROFESSIONAL ENGINEER CAROLINE REYES No. 66004 Exp. 6/30/10 CIVIL STATE OF CALIFORNIA

THE STATE OF CALIFORNIA OR ITS OFFICERS OR AGENTS SHALL NOT BE RESPONSIBLE FOR THE ACCURACY OR COMPLETENESS OF SCANNED COPIES OF THIS PLAN SHEET.

STATE OF CALIFORNIA - DEPARTMENT OF TRANSPORTATION
Caltrans
10-DESIGN

FUNCTIONAL SUPERVISOR: TERRY OGLE
CALCULATED-DESIGNED BY: RICHARD BOYER
CHECKED BY: CAROLINE REYES
REVISED BY: RB
DATE REVISED: 1/11/10

DRAINAGE DETAILS

NO SCALE

DD-3

LAST REVISION 00-00-00
DATE PLOTTED => 04-MAR-2010
TIME PLOTTED => 08:44

NOTE:

REFER TO PLANTING PLANS AND DETAILS FOR PLANT TO BE LOCATION IN ROCK SLOPE PROTECTION.

Dist	COUNTY	ROUTE	POST MILES TOTAL PROJECT	SHEET No.	TOTAL SHEETS
04	Sol	680	R4.7	11	28

Caroline Reyes 1/14/10
REGISTERED CIVIL ENGINEER DATE

3-1-10
PLANS APPROVAL DATE

REGISTERED PROFESSIONAL ENGINEER CAROLINE REYES No. 66004 Exp 6/30/10 CIVIL STATE OF CALIFORNIA

THE STATE OF CALIFORNIA OR ITS OFFICERS OR AGENTS SHALL NOT BE RESPONSIBLE FOR THE ACCURACY OR COMPLETENESS OF SCANNED COPIES OF THIS PLAN SHEET.

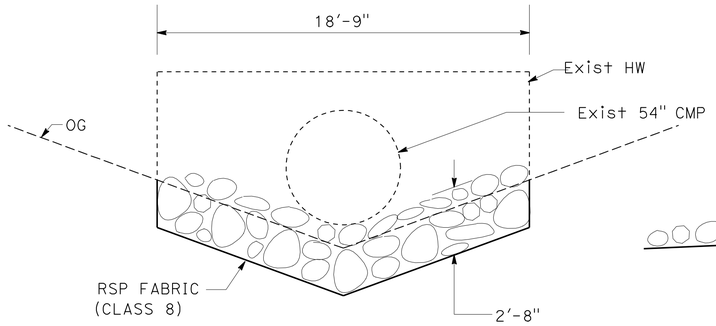

SECTION A-A

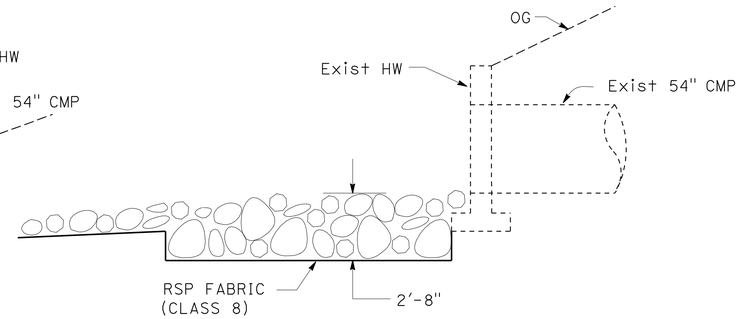

SECTION B-B

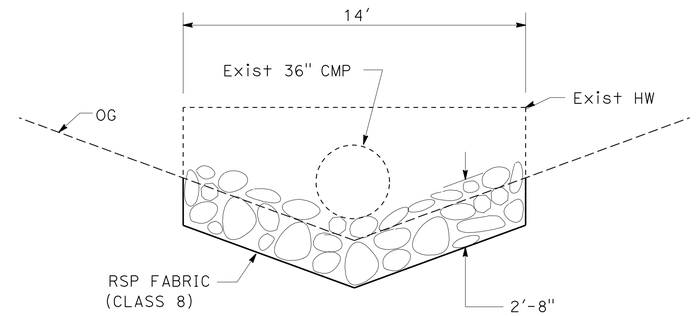

SECTION D-D

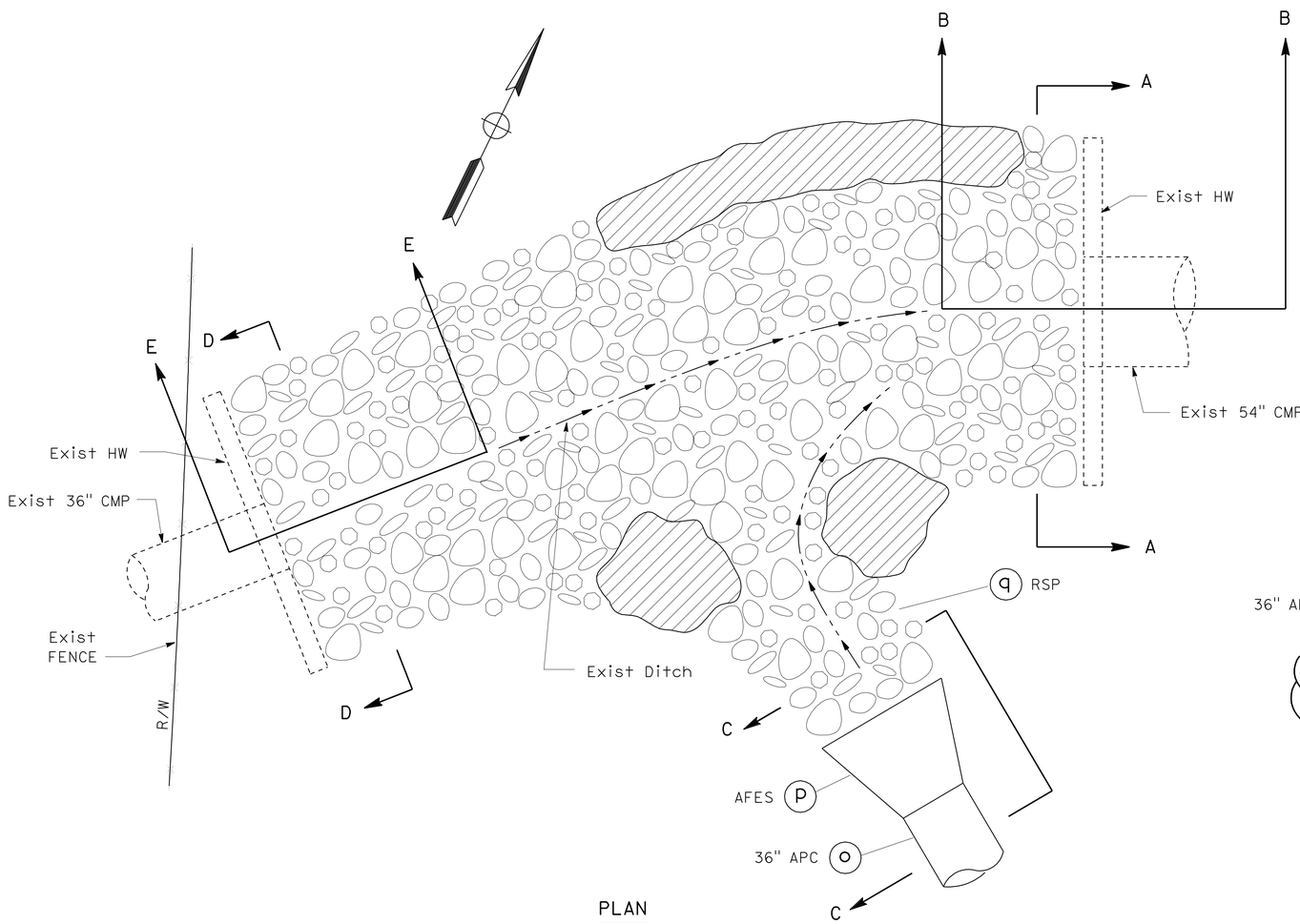

PLAN

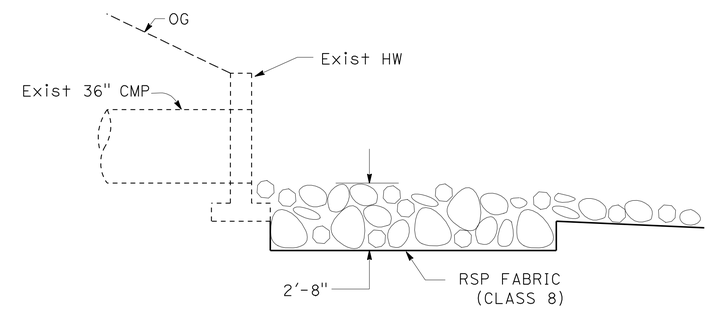

SECTION E-E

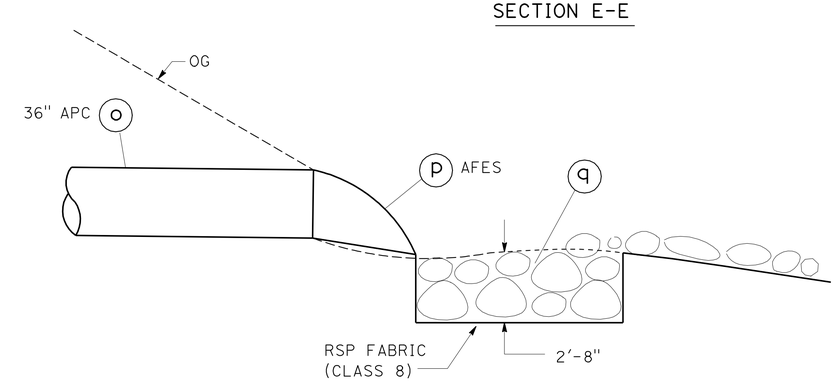

SECTION C-C

DRAINAGE SYSTEM No. 1

DRAINAGE DETAILS

NO SCALE

DD-4

RB	1/12/10
REVISED BY	DATE REVISED
RICHARD BOYER	CAROLINE REYES
CALCULATED-DESIGNED BY	CHECKED BY
FUNCTIONAL SUPERVISOR	TERRY OGLE

STATE OF CALIFORNIA - DEPARTMENT OF TRANSPORTATION

Caltrans

10-DESIGN

LAST REVISION 00-00-00 DATE PLOTTED => 04-MAR-2010 TIME PLOTTED => 08:44

Dist	COUNTY	ROUTE	POST MILES TOTAL PROJECT	SHEET No.	TOTAL SHEETS
04	Sol	680	R4.7	12	28

Caroline Reyes 1/14/10
REGISTERED CIVIL ENGINEER DATE

3-1-10
PLANS APPROVAL DATE

REGISTERED PROFESSIONAL ENGINEER CAROLINE REYES No. 66004 Exp 6/30/10 CIVIL STATE OF CALIFORNIA

THE STATE OF CALIFORNIA OR ITS OFFICERS OR AGENTS SHALL NOT BE RESPONSIBLE FOR THE ACCURACY OR COMPLETENESS OF SCANNED COPIES OF THIS PLAN SHEET.

NOTE:

REFER TO PLANTING PLANS AND DETAILS FOR PLANT TO BE LOCATION IN ROCK SLOPE PROTECTION.

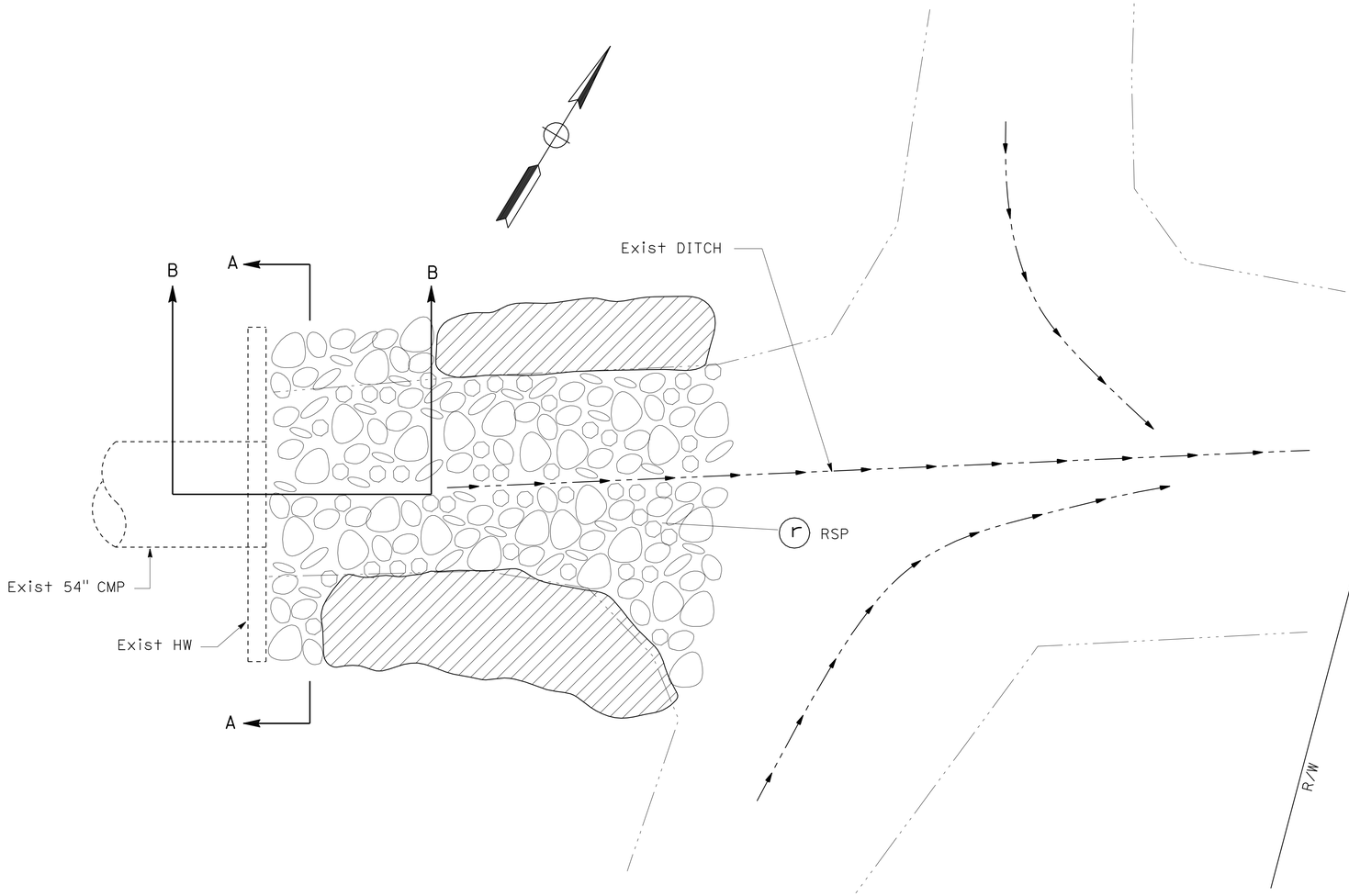

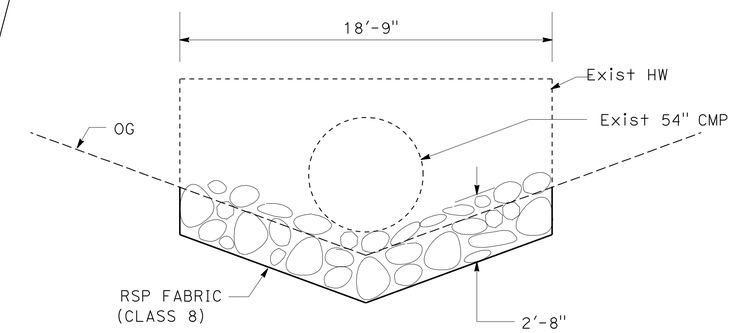

SECTION A-A

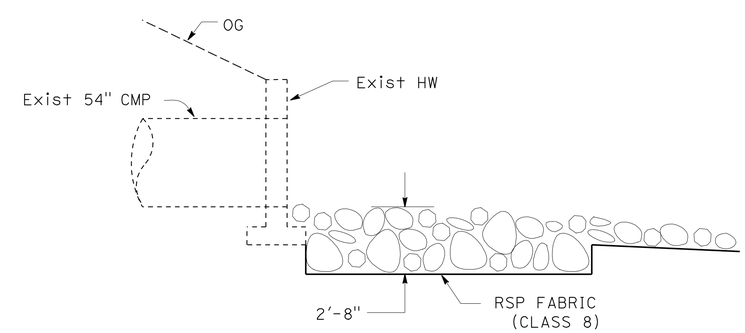

SECTION B-B

DRAINAGE SYSTEM No. 1

DRAINAGE DETAILS

NO SCALE

DD-5

RB	1/12/10
REVISED BY	DATE REVISED
RICHARD BOYER	CAROLINE REYES
CALCULATED-DESIGNED BY	CHECKED BY
FUNCTIONAL SUPERVISOR	TERRY OGLE

STATE OF CALIFORNIA - DEPARTMENT OF TRANSPORTATION

Caltrans

10-DESIGN

LAST REVISION 00-00-00 | DATE PLOTTED => 04-MAR-2010 | TIME PLOTTED => 08:44

Dist	COUNTY	ROUTE	POST MILES TOTAL PROJECT	SHEET No.	TOTAL SHEETS
04	Sol	680	R4.7	13	28

Joseph E. Peterson 11/16/09
REGISTERED CIVIL ENGINEER DATE

3-1-10
PLANS APPROVAL DATE

REGISTERED PROFESSIONAL ENGINEER J.E. Peterson No. 42777 Exp. 3-31-10 CIVIL STATE OF CALIFORNIA

THE STATE OF CALIFORNIA OR ITS OFFICERS OR AGENTS SHALL NOT BE RESPONSIBLE FOR THE ACCURACY OR COMPLETENESS OF SCANNED COPIES OF THIS PLAN SHEET.

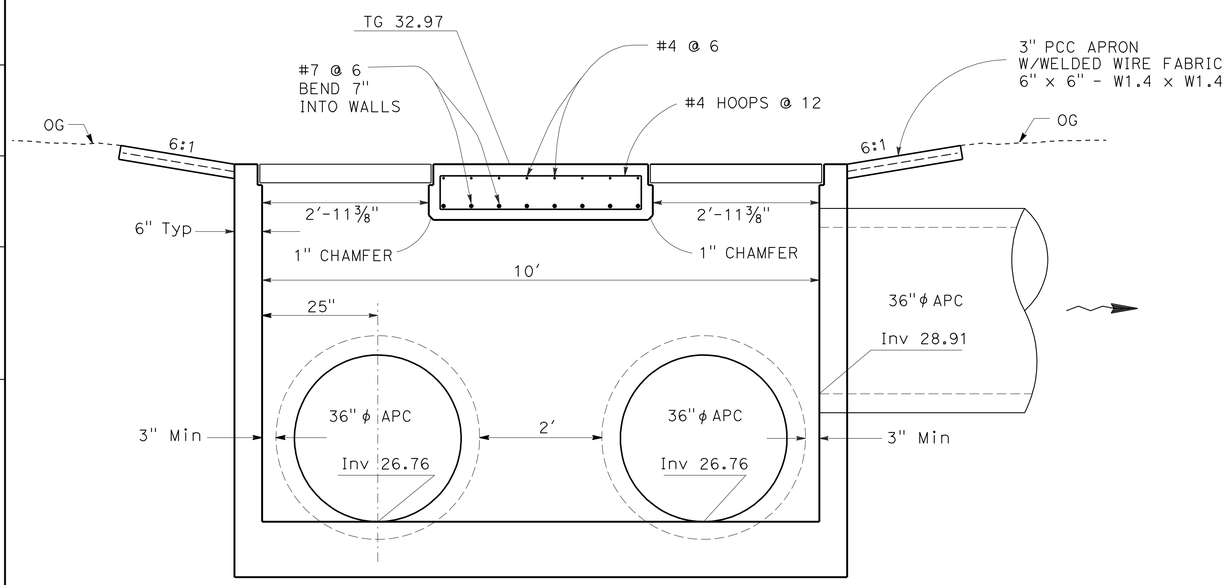

SECTION A-A

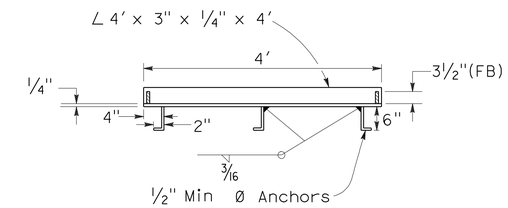

CROSS SECTION
(THRU FRAME)

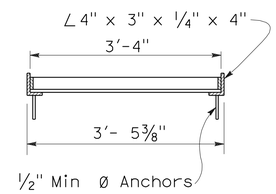

LONGITUDINAL SECTION
(THRU FRAME & GRATE)

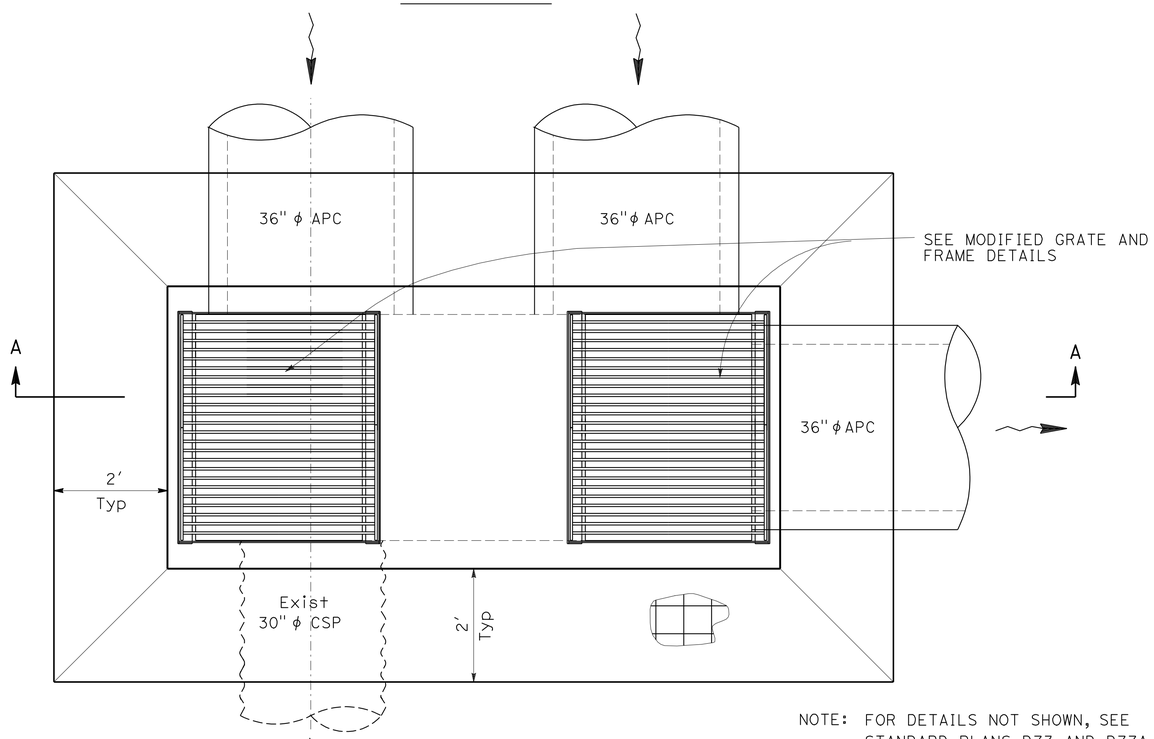

PLAN VIEW

DRAINAGE INLET (TYPE G2 MODIFIED)

NOTE: FOR DETAILS NOT SHOWN, SEE STANDARD PLANS D73 AND D77A.

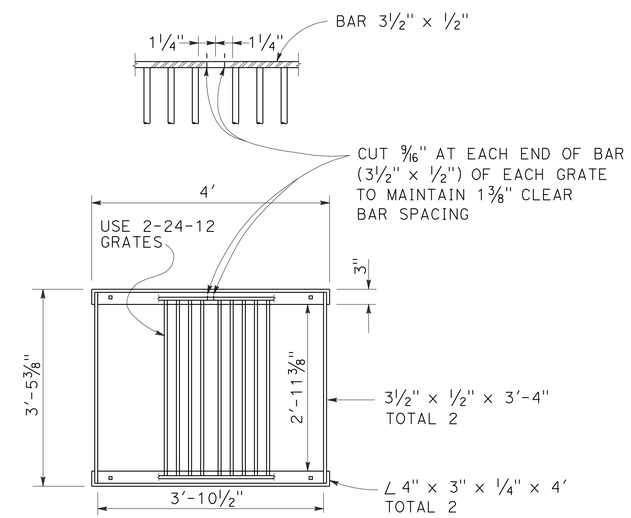

PLAN

MODIFIED GRATE FRAME DETAIL

DRAINAGE SYSTEM No. 1 e

DRAINAGE DETAILS

NO SCALE

DD-6

STATE OF CALIFORNIA - DEPARTMENT OF TRANSPORTATION
Caltrans®
10-DESIGN

FUNCTIONAL SUPERVISOR: TERRY OGLE
CALCULATED-DESIGNED BY: RICHARD BOYER
CHECKED BY: JOSEPH PETERSON
REVISED BY: RB
DATE REVISED: 1/11/10

LAST REVISION 00-00-00
DATE PLOTTED => 04-MAR-2010
TIME PLOTTED => 08:44

Dist	COUNTY	ROUTE	POST MILES TOTAL PROJECT	SHEET No.	TOTAL SHEETS
04	Sol	680	R4.7	14	28

Caroline Reyes 1/14/10
REGISTERED CIVIL ENGINEER DATE

3-1-10
PLANS APPROVAL DATE

REGISTERED PROFESSIONAL ENGINEER CAROLINE REYES No. 66004 Exp 6/30/10 CIVIL STATE OF CALIFORNIA

THE STATE OF CALIFORNIA OR ITS OFFICERS OR AGENTS SHALL NOT BE RESPONSIBLE FOR THE ACCURACY OR COMPLETENESS OF SCANNED COPIES OF THIS PLAN SHEET.

APC ALLOWABLE PIPE MATERIAL AND PROTECTION

DESIGNATION	RCP	PLASTIC PIPE	
	SIZE	SIZE	TYPE
36" APC	36"	36"	SMOOTH INTERIOR
36" APC	36"	36"	SMOOTH INTERIOR

NOTE:
(N) - NOT A SEPARATE PAY ITEM, FOR INFORMATION ONLY.

DRAINAGE ITEMS

DRAINAGE SYSTEM No.	DRAINAGE UNIT	REMOVE HEADWALL (EA)	REMOVE INLET (EA)	MINOR CONCRETE (MINOR STRUCTURE) (CY)	Misc IRON AND STEEL (LB)	REMOVE PIPE (LF)	36" APC (LF)	36" AFES (EA)	RSP (1/4 TON, METHOD A) (CY)	RSP (1/4 TON, METHOD B)	RSP FABRIC (CLASS 8) (SQYD)	30" MACHINE SPIRAL WOUND PVC PIPELINER (EXPANDABLE DIAMETER) (LF)	(N) HEIGHT OF INLET "H" (LF)	DESCRIPTION	STATION	DRAINAGE PLAN SHEET No.	DRAINAGE SYSTEM No.	DRAINAGE UNIT
1	a								3	6	11			RSP	240+48.5 R+	D-1	1	a
	b			2.0	395									HEADWALL	240+48.5, 76.1' R+			b
	c											77		Exist 30" CMP/PVC PIPELINER, PROFILE TYPE 2				c
	d											77		Exist 30" CMP/PVC PIPELINER, PROFILE TYPE 2				d
	e			11.0	752								6.4	DI (TYPE G2 MODIFIED), GRATE 24-12, PCC APRON	240+48.5, 78.4' L+			e
	f						52.5							36" APC				f
	g						52.5							36" APC				g
	h			5.0	910									HEADWALL	240+59.5, 126.3' L+			h
	i								5	10	18			RSP	240+59.5			i
	j	1												REMOVE HEADWALL	240+48.5, 126.3' L+			j
	k					52.5								REMOVE PIPE	240+48.5			k
	l		1											REMOVE INLET	240+48.5, 78.4' R+			l
	m						376.0							36" APC				m
	n			5.5	326								10.1	DI (TYPE G2), GRATE 24-12, PCC APRON	244+26.0, 80.9' L+			n
	o						16.0							36" APC				o
	p							1						36" AFES				p
	q								10	71	97			RSP	244+40.0, L+			q
	r								17	23	48			RSP	245+40.0, R+			r
TOTAL		1	1	23.5	2383	52.5	497.0	1	35	110	174	154						

DRAINAGE QUANTITIES
DQ-1

REVISED BY	DATE REVISED
RB	1/12/10

CALCULATED-DESIGNED BY: RICHARD BOYER
CHECKED BY: CAROLINE REYES
FUNCTIONAL SUPERVISOR: TERRY OGLE

STATE OF CALIFORNIA - DEPARTMENT OF TRANSPORTATION
Caltrans
10-DESIGN

LAST REVISION 00-00-00
DATE PLOTTED => 04-MAR-2010
TIME PLOTTED => 08:44

Dist	COUNTY	ROUTE	POST MILES TOTAL PROJECT	SHEET No.	TOTAL SHEETS
04	Sol	680	R4.7	15	28

Caroline Reyes 1/14/10
REGISTERED CIVIL ENGINEER DATE

3-1-10
PLANS APPROVAL DATE

REGISTERED PROFESSIONAL ENGINEER CAROLINE REYES No. 66004 Exp 6/30/10 CIVIL STATE OF CALIFORNIA

THE STATE OF CALIFORNIA OR ITS OFFICERS OR AGENTS SHALL NOT BE RESPONSIBLE FOR THE ACCURACY OR COMPLETENESS OF SCANNED COPIES OF THIS PLAN SHEET.

NOTES:

1. FOR ACCURATE RIGHT OF WAY AND ACCESS DATA, CONTACT RIGHT OF WAY ENGINEERING AT THE DISTRICT OFFICE.
2. LOCATIONS OF UTILLITY FACILITIES SHOWN ON THESE PLANS ARE APPROXIMATE AND SHALL BE VERIFIED BY THE CONTRACTOR PRIOR TO CONSTRUCTION.
3. ALL ELEVATIONS SHOWN REFER TO THE TOP OF PIPE ELEVATION UNLESS OTHERWISE INDICATED.

LEGEND

POTHOLE LOCATIONS

BCDC SUISUN MARSH PROTECTION BOUNDARY LINE (APPROXIMATE)

PDE

ABBREVIATIONS:

BCDC - BAY CONSERVATION AND DEVELOPMENT COMMISSION

PDE - PERMANENT DRAINAGE EASEMENT

POTHOLE LOCATION TABLE

No.	STATION	℄ OFFSET	SURFACE ELEVATION	UTILITY ELEVATION	
1	240+40.0	120.4′ Lt	36.85	28.68 (TOP)	
2	240+71.4	120.4′ Lt	36.85	28.68 (TOP)	
3	240+40.0	86.0′ Lt	37.04	33.20 (TOP)	31.96 (BOTTOM)
4	240+71.4	86.0′ Lt	37.04	33.20 (TOP)	31.96 (BOTTOM)

UTILITY OWNERSHIP

—e—(oh)— OVERHEAD ELECTRICAL (PG&E)

—fo— UNDERGROUND FIBER OPTIC (AT&T)

—o— HIGH PRESSURE PETROLEUM LINE (KINDER MORGAN)

—e— UNDERGROUND ELECTRICAL (CALTRANS)

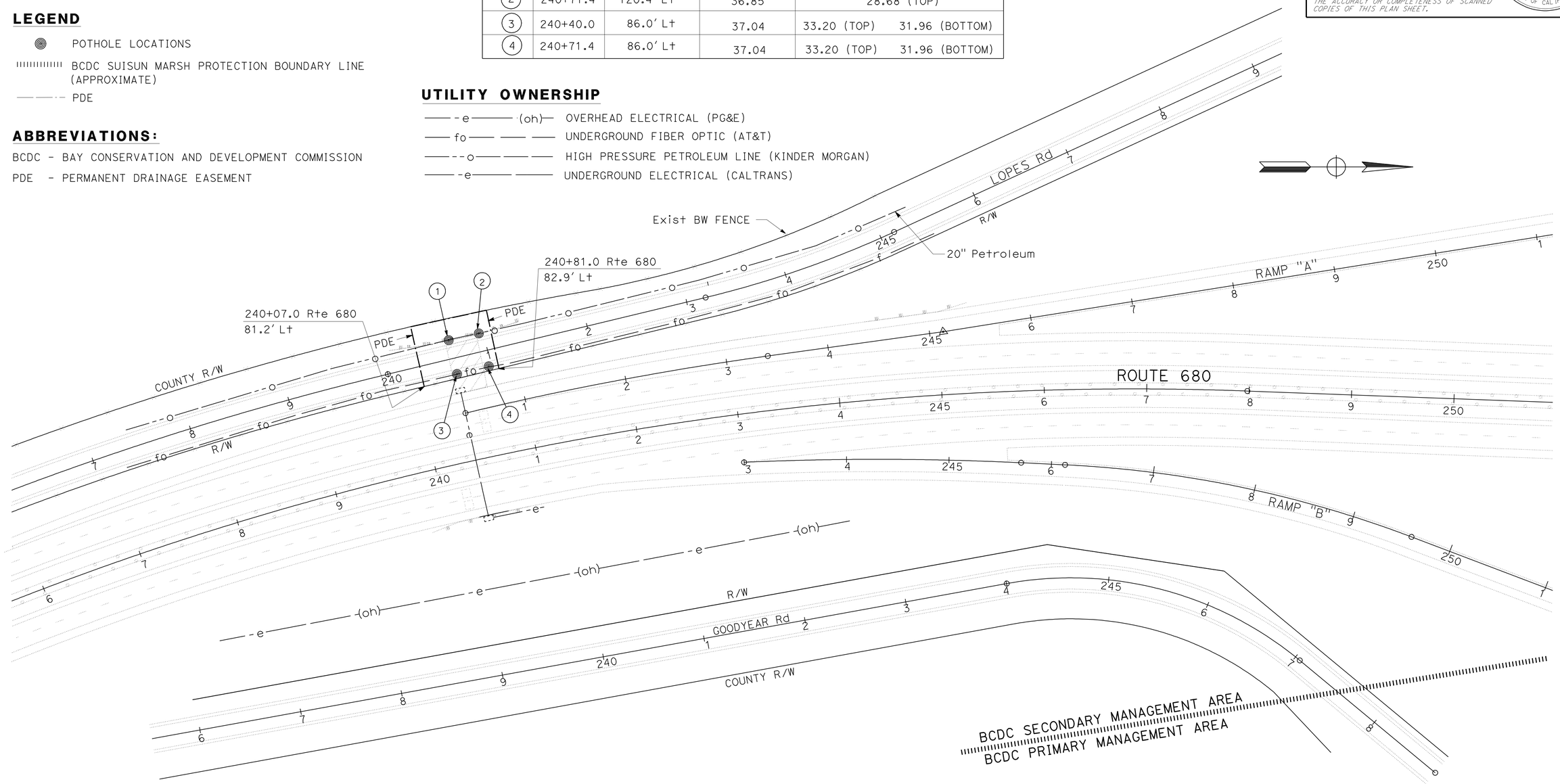

THIS PLAN FOR UTILITY INFORMATION ONLY.

UTILITY PLAN

SCALE: 1" = 50′

U-1

STATE OF CALIFORNIA - DEPARTMENT OF TRANSPORTATION
Caltrans
10-DESIGN

FUNCTIONAL SUPERVISOR: TERRY OGLE
CALCULATED-DESIGNED BY: RICHARD BOYER
CHECKED BY: CAROLINE REYES
REVISED BY: RB
DATE REVISED: 1/12/10

LAST REVISION 00-00-00
DATE PLOTTED => 04-MAR-2010
TIME PLOTTED => 08:44

Dist	COUNTY	ROUTE	POST MILES TOTAL PROJECT	SHEET No.	TOTAL SHEETS
04	Sol	680	R4.7	16	28

Caroline Reyes 1/14/10
REGISTERED CIVIL ENGINEER DATE

3-1-10
PLANS APPROVAL DATE

REGISTERED PROFESSIONAL ENGINEER
CAROLINE REYES
No. 66004
Exp 6/30/10
CIVIL
STATE OF CALIFORNIA

THE STATE OF CALIFORNIA OR ITS OFFICERS OR AGENTS SHALL NOT BE RESPONSIBLE FOR THE ACCURACY OR COMPLETENESS OF SCANNED COPIES OF THIS PLAN SHEET.

STATIONARY MOUNTED CONSTRUCTION AREA SIGNS

SIGN No. (#)	SIGN CODE	PANEL SIZE	SIGN MESSAGE	No. OF POSTS AND SIZE	No. OF SIGNS
A	W20-1	48" x 48"	ROAD WORK AHEAD	1 - 4" x 6"	5
B	G20-2	48" x 24"	END ROAD WORK	1 - 4" x 6"	4

NOTE: EXACT SIGN LOCATIONS WILL BE DETERMINED BY THE ENGINEER.

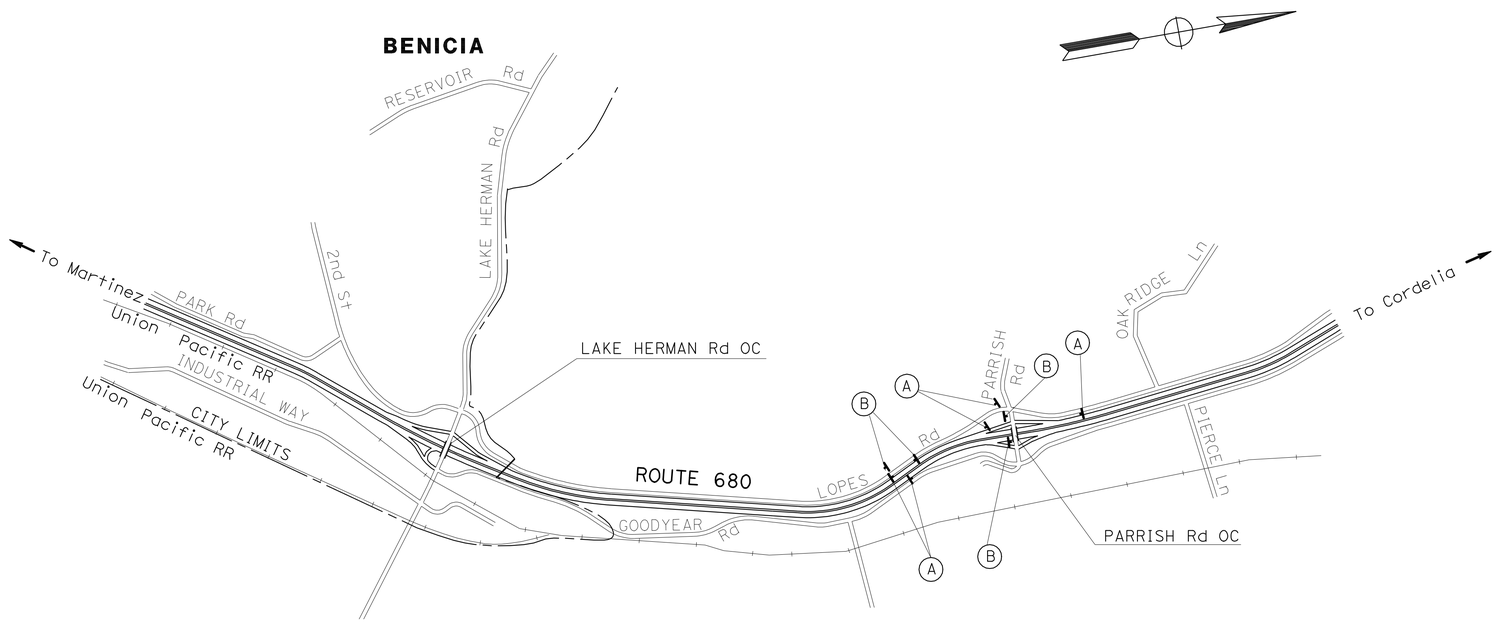

THIS PLAN IS ACCURATE FOR CONSTRUCTION AREA SIGNS ONLY.

CONSTRUCTION AREA SIGNS

NO SCALE

CS-1

STATE OF CALIFORNIA - DEPARTMENT OF TRANSPORTATION
Caltrans
10-DESIGN

FUNCTIONAL SUPERVISOR: TERRY OGLE
CALCULATED-DESIGNED BY: RICHARD BOYER
CHECKED BY: CAROLINE REYES
REVISED BY: RB
DATE REVISED: 11/18/09

LAST REVISION 00-00-00
DATE PLOTTED => 04-MAR-2010
TIME PLOTTED => 08:44

Dist	COUNTY	ROUTE	POST MILES TOTAL PROJECT	SHEET No.	TOTAL SHEETS
04	Sol	680	R4.7	17	28

Caroline Reyes 1/14/10
REGISTERED CIVIL ENGINEER DATE

3-1-10
PLANS APPROVAL DATE

REGISTERED PROFESSIONAL ENGINEER
CAROLINE REYES
No. 66004
Exp 6/30/10
CIVIL
STATE OF CALIFORNIA

THE STATE OF CALIFORNIA OR ITS OFFICERS OR AGENTS SHALL NOT BE RESPONSIBLE FOR THE ACCURACY OR COMPLETENESS OF SCANNED COPIES OF THIS PLAN SHEET.

NOTE:

FOR ACCURATE RIGHT OF WAY AND ACCESS DATA,
CONTACT RIGHT OF WAY ENGINEERING AT THE DISTRICT OFFICE.

ABBREVIATIONS:

BCDC - BAY CONSERVATION AND DEVELOPMENT COMMISSION
PDE - PERMANENT DRAINAGE EASEMENT

LEGEND

STAGE 1
STAGE 2
STAGE 3
BCDC SUISUN MARSH PROTECTION BOUNDARY LINE (APPROXIMATE)
PDE

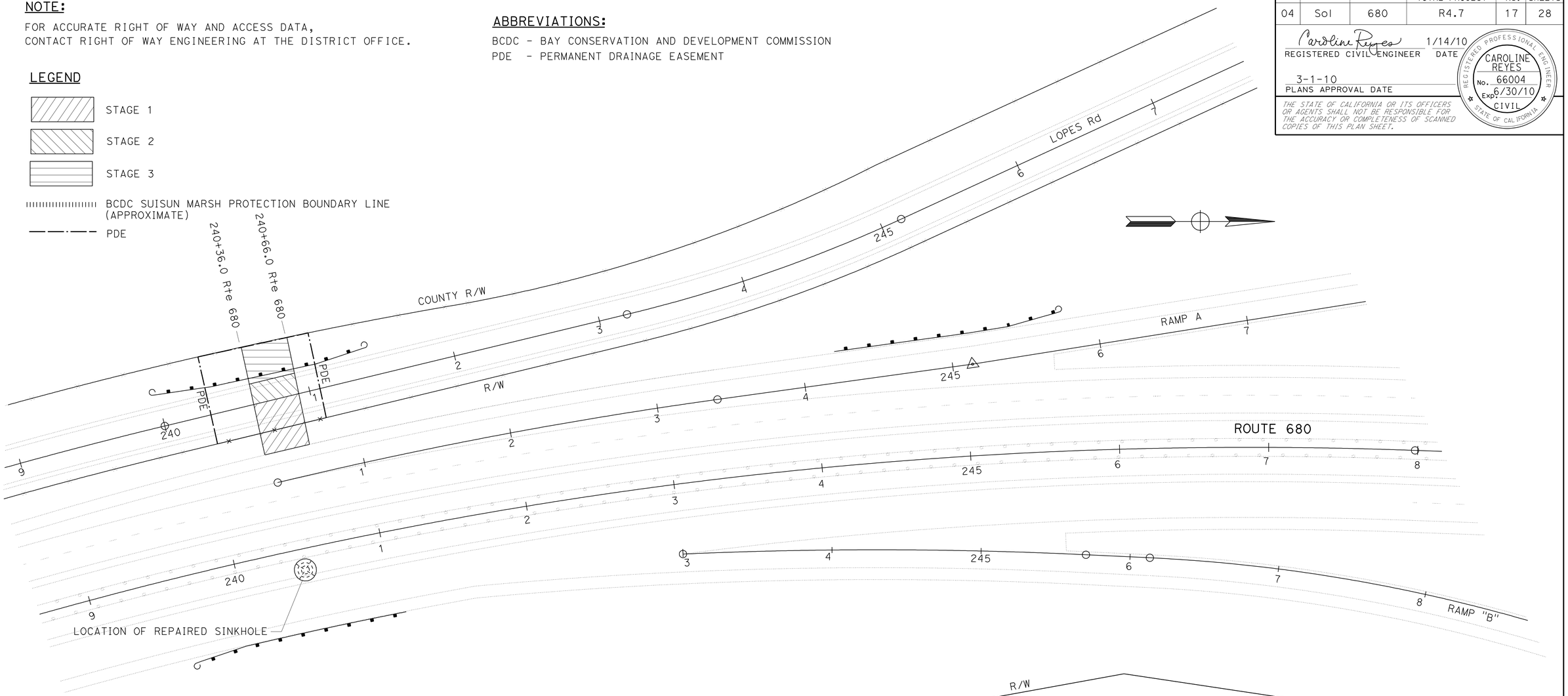

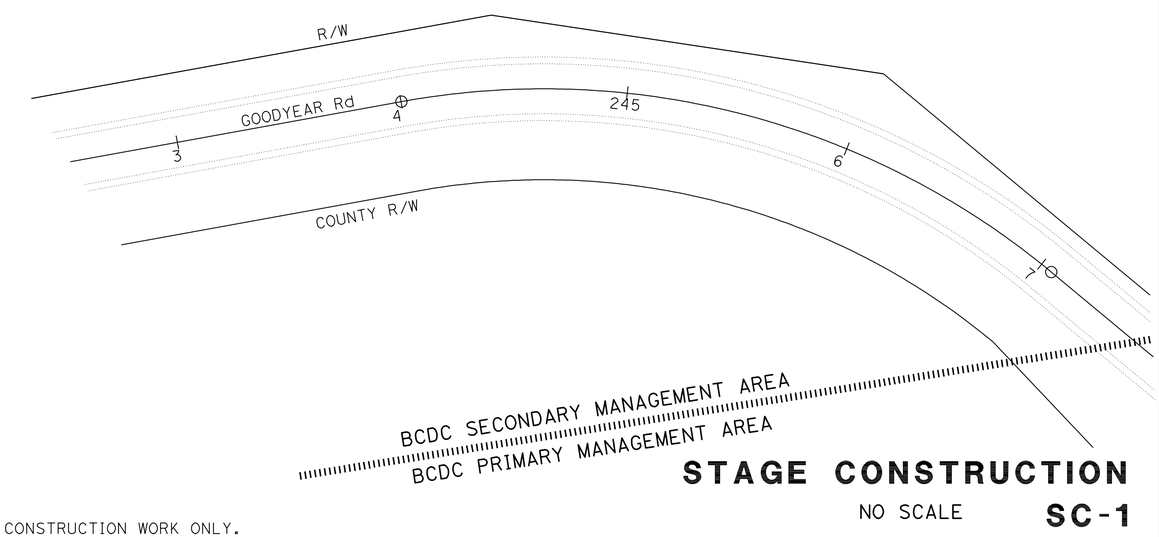

STAGE 1

REMOVE EXISTING DI.
INSTALL NEW G2 DI PER DRAINAGE DETAILS.
REMOVE EXISTING CULVERT SECTION.
INSTALL NEW CULVERT SECTIONS.
MAINTAIN ONE WAY TRAFFIC CONTROL DURING CONSTRUCTION.

STAGE 2

REMOVE EXISTING CULVERT SECTION AND EXISTING HEADWALL.
INSTALL NEW CULVERT SECTIONS.
MAINTAIN ONE WAY TRAFFIC CONTROL DURING CONSTRUCTION.

STAGE 3

INSTALL NEW HEADWALL, ROCK SLOPE PROTECTION AND EROSION CONTROL.
MAINTAIN ONE WAY TRAFFIC CONTROL DURING CONSTRUCTION.

THIS PLAN ACCURATE FOR STAGE CONSTRUCTION WORK ONLY.

STAGE CONSTRUCTION

NO SCALE **SC-1**

REVISED BY	DATE REVISED
RB	1/13/10

CALCULATED-DESIGNED BY: RICHARD BOYER
CHECKED BY: CAROLINE REYES
FUNCTIONAL SUPERVISOR: TERRY OGLE

STATE OF CALIFORNIA - DEPARTMENT OF TRANSPORTATION
Caltrans
10-DESIGN

LAST REVISION 00-00-00
DATE PLOTTED => 04-MAR-2010
TIME PLOTTED => 08:44

Dist	COUNTY	ROUTE	POST MILES TOTAL PROJECT	SHEET No.	TOTAL SHEETS
04	Sol	680	R4.7	18	28

Caroline Reyes 1/14/10
REGISTERED CIVIL ENGINEER DATE

3-1-10
PLANS APPROVAL DATE

REGISTERED PROFESSIONAL ENGINEER CAROLINE REYES No. 66004 Exp 6/30/10 CIVIL STATE OF CALIFORNIA

THE STATE OF CALIFORNIA OR ITS OFFICERS OR AGENTS SHALL NOT BE RESPONSIBLE FOR THE ACCURACY OR COMPLETENESS OF SCANNED COPIES OF THIS PLAN SHEET.

CONSTRUCTION AREA SIGNS (PORTABLE)

SIGN No. (#)	SIGN CODE	PANEL SIZE	No. OF POSTS AND SIZE	DESCRIPTION
1	M4-10(L†)	48" x 48"	1 - 4" x 4"	DETOUR (ARROW)
2	M4-10(R†)			DETOUR (ARROW)
	G27-2(680)	24" x 24"	1 - 4" x 4"	"680" MARKER
	M3-3	30" x 15"		"WEST"

TRAFFIC DETOUR PLAN

WB ROUTE 680 ON-RAMP CLOSED
CONTINUE ON LOPES ROAD
LEFT ONTO LAKE HERMAN ROAD
TAKE WB ON-RAMP TO WB ROUTE 680

NOTES:

1. EXACT SIGN LOCATIONS WILL BE DETERMINED BY ENGINEER.
2. WHEN DETOUR IS NOT IN USE, COVER ALL CONSTRUCTION AREA SIGNS AND CONFLICTING ROADSIDE SIGNS.
3. DURING CLOSURE, THE PCMS MESSAGE AT (A) SHOULD READ...

1ST FRAME	2ND FRAME
WB ROUTE 680 ON-RAMP CLOSED	USE LOPES ROAD

LEGEND:

- (◯) - SIGN No.
- - CONSTRUCTION AREA SIGNS (PORTABLE)
- → - DIRECTION OF TRAFFIC
- ▯ - PORTABLE CHANGEABLE SIGN (PCMS)

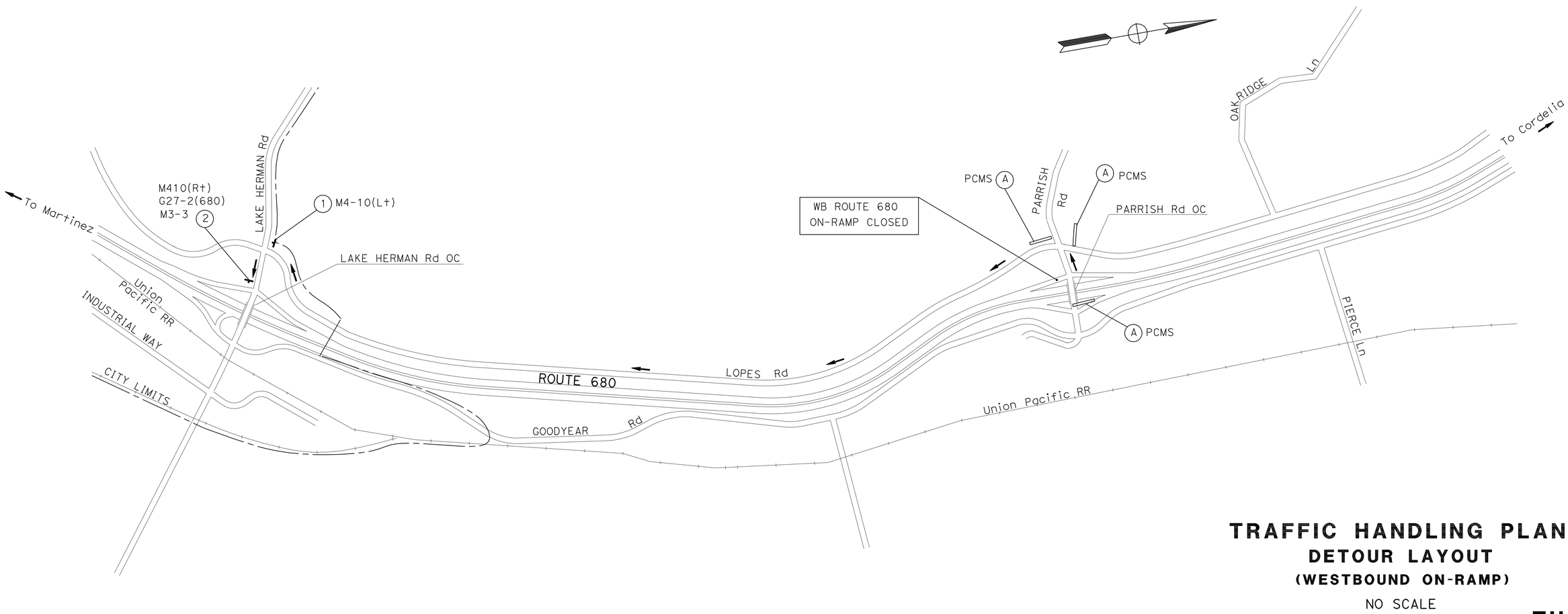

TRAFFIC HANDLING PLAN
DETOUR LAYOUT
(WESTBOUND ON-RAMP)

NO SCALE

THIS PLAN ACCURATE FOR TRAFFIC HANDLING WORK ONLY.

TH-1

STATE OF CALIFORNIA - DEPARTMENT OF TRANSPORTATION
Caltrans® 10-DESIGN
FUNCTIONAL SUPERVISOR: TERRY OGLE
CALCULATED-DESIGNED BY: RICHARD BOYER
CHECKED BY: CAROLINE REYES
REVISED BY: RB
DATE REVISED: 11/18/09

LAST REVISION: 00-00-00
DATE PLOTTED => 04-MAR-2010
TIME PLOTTED => 08:44

Dist	COUNTY	ROUTE	POST MILES TOTAL PROJECT	SHEET No.	TOTAL SHEETS
04	Sol	680	R4.7	19	28

Caroline Reyes 1/14/10
REGISTERED CIVIL ENGINEER DATE

3-1-10
PLANS APPROVAL DATE

REGISTERED PROFESSIONAL ENGINEER CAROLINE REYES No. 66004 Exp 6/30/10 CIVIL STATE OF CALIFORNIA

THE STATE OF CALIFORNIA OR ITS OFFICERS OR AGENTS SHALL NOT BE RESPONSIBLE FOR THE ACCURACY OR COMPLETENESS OF SCANNED COPIES OF THIS PLAN SHEET.

METAL BEAM GUARD RAIL ITEMS

LOCATION	LAYOUT	MBGR (WOOD POST)	ALTERNATIVE FLARED TERMINAL SYSTEM
		LF	EA
239+95.0 TO 241+45.0 Lt LOPES Rd	TYPE 11B	112.5	1
239+57.2 TO 241+07.2 Rt Rte 680	TYPE 16E	75.0	2
244+15.2 TO 245+65.2 Lt Rte 680	TYPE 11B	112.5	1
TOTAL		300.0	4

ROADWAY ITEMS

LOCATION	ROADWAY EXCAVATION *	HOT MIX ASPHALT (TYPE A)	CLASS 3 AGGREGATE BASE	CLASS 4 AGGREGATE SUBBASE	LOCAL TOPSOIL (N)
	CY	TON	CY	CY	CY
240+36.0 TO 240+66.0 LOPES Rd	200	24	8	17	
240+51.5 TO 244+40.0	210				
240+59.5, 126.3 Lt	16				1.1
240+48.5, 76.1 Rt	15				1.8
244+40.0, 93.6 Lt	65				1.8
245+40.0, 103.8 Rt	55				1.8
TOTAL	561				

* INCLUDES LOCAL TOPSOIL QUANTITY
(N) NOT A SEPARATE PAY ITEM, FOR INFORMATION ONLY.

WATER POLLUTION CONTROL ITEMS

LOCATION	TEMPORARY SILT FENCE	TEMPORARY CHECK DAM	TEMPORARY FENCE (TYPE ESA)
	LF	LF	LF
240+32 TO 241+07 Lt, LOPES Rd			50
240+79 Rt, Rte 680		20	
240+20 TO 240+82 Rt, Rte 680	68		108
241+85 TO 244+30 Lt, Rte 680			248
245+10 TO 245+80 Rt, Rte 680			78
STAGING AREA			314
TOTAL	68	20	798

FENCE ITEMS

LOCATION	REMOVE FENCE (TYPE BW)	FENCE (TYPE BW, METAL POST)
	LF	LF
240+07.0 TO 240+81.0 Lt, Rte 680	75	75
STAGING AREA	90	90
TOTAL	165	165

PERMANENT EROSION CONTROL ITEMS

LOCATION	ROLLED EROSION CONTROL PRODUCT (NETTING)	EROSION CONTROL (HYDROSEED)
	SQFT	SQFT
240+32 TO 241+07 Lt, LOPES Rd	694	1658
240+20 TO 240+82 Rt, Rte 680	446	3396
240+40 TO 245+00 Lt, Rte 680		5720
245+10 TO 245+80 Rt, Rte 680		2156
STAGING AREA		8600
TOTAL	1140	21,530

PAVEMENT DELINEATION ITEMS

LOCATION	THERMOPLASTIC TRAFFIC STRIPE	
	4" WHITE	
	DETAIL 22	DETAIL 27B
	LF	
LOPES ROAD	25	46
TOTAL	69	

SUMMARY OF QUANTITIES
Q-1

CALCULATED-DESIGNED BY	RICHARD BOYER	REVISED BY	RB
CHECKED BY	CAROLINE REYES	DATE REVISED	12/1/09
FUNCTIONAL SUPERVISOR	TERRY OGLE		

STATE OF CALIFORNIA - DEPARTMENT OF TRANSPORTATION
Caltrans 10-DESIGN

LAST REVISION 00-00-00 DATE PLOTTED => 04-MAR-2010 TIME PLOTTED => 08:45

Dist	COUNTY	ROUTE	POST MILES TOTAL PROJECT	SHEET No.	TOTAL SHEETS
04	Sol	680	R4.7	20	28

Alex McDonald
LICENSED LANDSCAPE ARCHITECT

3-1-10
PLANS APPROVAL DATE

THE STATE OF CALIFORNIA OR ITS OFFICERS OR AGENTS SHALL NOT BE RESPONSIBLE FOR THE ACCURACY OR COMPLETENESS OF SCANNED COPIES OF THIS PLAN SHEET.

LICENSED LANDSCAPE ARCHITECT — ALEXANDER K. MCDONALD No. 4382 — Signature — 08-31-10 Renewal Date — 02-09-10 Date — STATE OF CALIFORNIA

ABBREVIATIONS:

AMEND — AMENDMENT
B & B — BALLED AND BURLAPPED
DIA — DIAMETER
EA — EACH
g — GRAM
Kg — KILOGRAM
m — METER
m² — SQUARE METER
m³ — CUBIC METER
MAX — MAXIMUM
MIN — MINIMUM
mm — MILLIMETER
No — NUMBER
Pkt — PACKET
PLT ESTB — PLANT ESTABLISHMENT
PVMT — PAVEMENT
R/W — RIGHT OF WAY
SF — STATE FURNISHED
TRVD — TRAVELED

APPLICABLE WHEN CIRCLED:

1 - QUANTITIES SHOWN ARE "PER PLANT" UNLESS SHOWN AS m² APPLICATION RATES.
2 - SUFFICIENT TO RECEIVE ROOT BALL.
3 - DOES NOT APPLY TO MULCH AREAS.
4 - AS SHOWN ON PLANS.
5 - UNLESS OTHERWISE SHOWN ON PLANS.
6 - SEE DETAIL.
7 - SEE SPECIAL PROVISIONS.

PLANT LIST AND PLANTING SPECIFICATIONS

PLANT GROUP	PLANT No	SYMBOL	BOTANICAL NAME	COMMON NAME	SIZE	QUANTITY EACH	HOLE SIZE (mm) DIA	HOLE SIZE (mm) DEPTH	IMPORTED TOPSOIL 1	SOIL AMEND 1	COMMERCIAL FERTILIZER 1 PLANTING	COMMERCIAL FERTILIZER 1 PLT ESTB	BASIN MULCH (CY)	STAKING	PLANTING LIMITS MINIMUM DISTANCE (LF) FROM TRVD WAY	PVMT	FENCE	WALL	PAVED DITCH	EARTH DITCH	ON CENTER (LF)	REMARKS
M	1	⊛	SALIX LASIOLEPIS	ARROYO WILLOW	LINER 7	54	2		7	7	1 Pkt	--	--	--	30	--	20	20	--	--	4	3 LINERS IN 1 TUBE @ EACH LOCATION 6

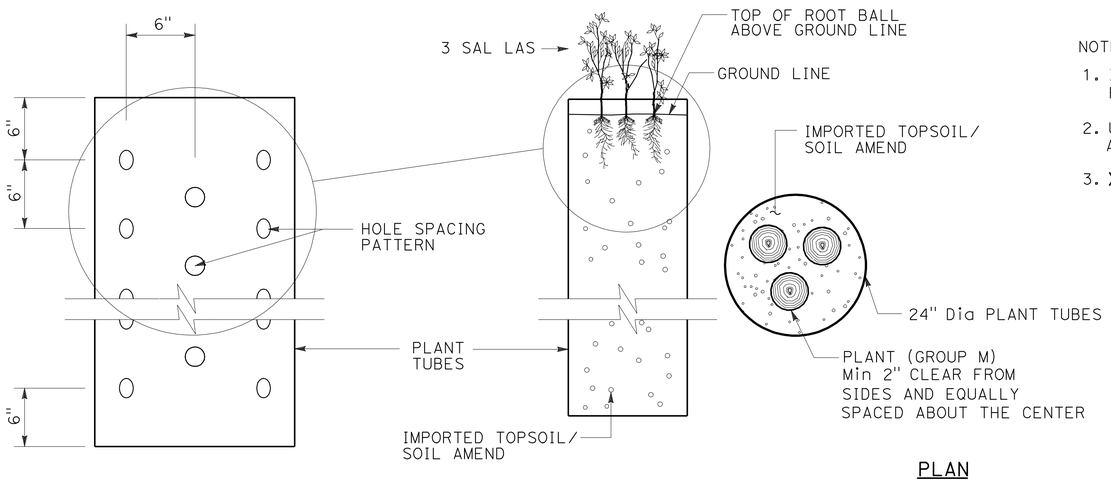

SECTION/ELEVATION

PLAN

PLANT (GROUP M) IN PLANT TUBES

NOTES:

1. INSTALL PLANT TUBES DURING PLACEMENT OF ROCK SLOPE PROTECTION.
2. UNDERLINED PORTIONS OF BOTANICAL NAME INDICATE ABBREVIATIONS USED ON PLANTING PLANS.
3. X DENOTES REQUIREMENT.

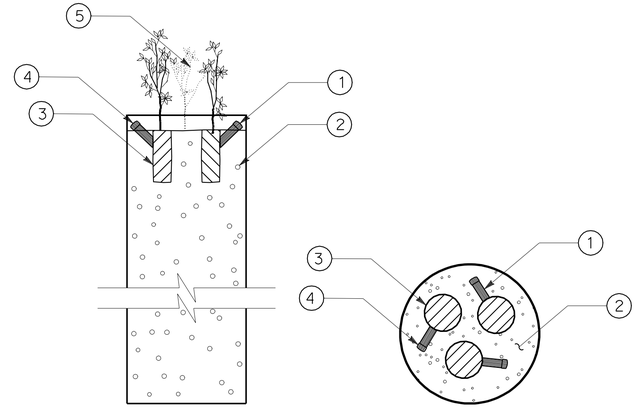

SECTION

PLAN

1. EVENLY SPACED TIME RELEASE WATER ASSEMBLY, TYPICAL
2. IMPORTED TOPSOIL/ SOIL AMEND IN PLANT TUBES, WATER THOROUGHLY PRIOR TO TIME RELEASE WATER ASSEMBLY INSTALLATION
3. ROOT BALL
4. INSTALL TIME RELEASE WATER ASSEMBLY SO THAT BOTTOM IS IN CONTACT WITH THE ROOT BALL, AS PER THE SPECIAL PROVISIONS.
5. WILLOW BEYOND

TIME RELEASE WATER ASSEMBLY IN PLANT TUBES

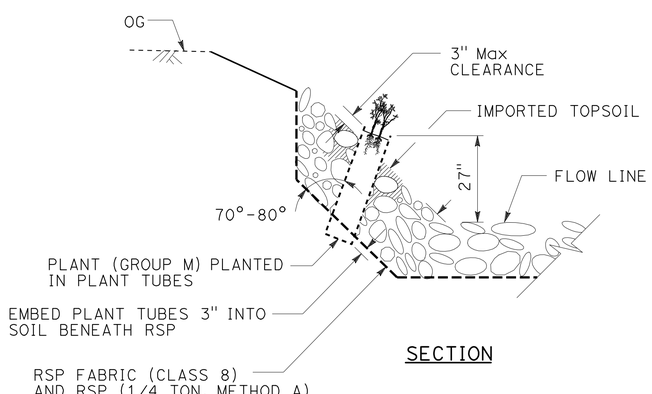

SECTION

PLANT TUBES IN ROCK SLOPE PROTECTION

PLANT LIST AND DETAILS

NO SCALE

PL-1

STATE OF CALIFORNIA - DEPARTMENT OF TRANSPORTATION
Caltrans® WATER QUALITY
SENIOR LANDSCAPE ARCHITECT: DAVID W. YAM
CALCULATED-DESIGNED BY: Alex McDonald
CHECKED BY: Jennifer Egawa
REVISED BY: AM
DATE REVISED: 2/8/10

LAST REVISION 02-08-10 | DATE PLOTTED => 04-MAR-2010 | TIME PLOTTED => 08:45

NOTE: FOR ACCURATE RIGHT OF WAY AND ACCESS DATA, CONTACT RIGHT OF WAY ENGINEERING AT THE DISTRICT OFFICE.

Dist	COUNTY	ROUTE	POST MILES TOTAL PROJECT	SHEET No.	TOTAL SHEETS
04	Sol	680	R4.7	21	28

Alex McDonald
LICENSED LANDSCAPE ARCHITECT

3-1-10
PLANS APPROVAL DATE

LICENSED LANDSCAPE ARCHITECT
ALEXANDER K. MCDONALD No. 5392
Alex McDonald
Signature
08-31-10
Renewal Date
Date
STATE OF CALIFORNIA

THE STATE OF CALIFORNIA OR ITS OFFICERS OR AGENTS SHALL NOT BE RESPONSIBLE FOR THE ACCURACY OR COMPLETENESS OF SCANNED COPIES OF THIS PLAN SHEET.

LEGEND

- PLANT (GROUP M) PLANTED IN PLANT TUBES
- TEMPORARY FENCE (TYPE ESA)
- PLANTING ZONE FOR SAL LAS
- ORDINARY HIGH WATER MARK
- PERMANENT DRAINAGE EASEMENT

ABBREVIATIONS:

TFESA - TEMPORARY FENCE (TYPE ESA)
PDE - PERMANENT DRAINAGE EASEMENT

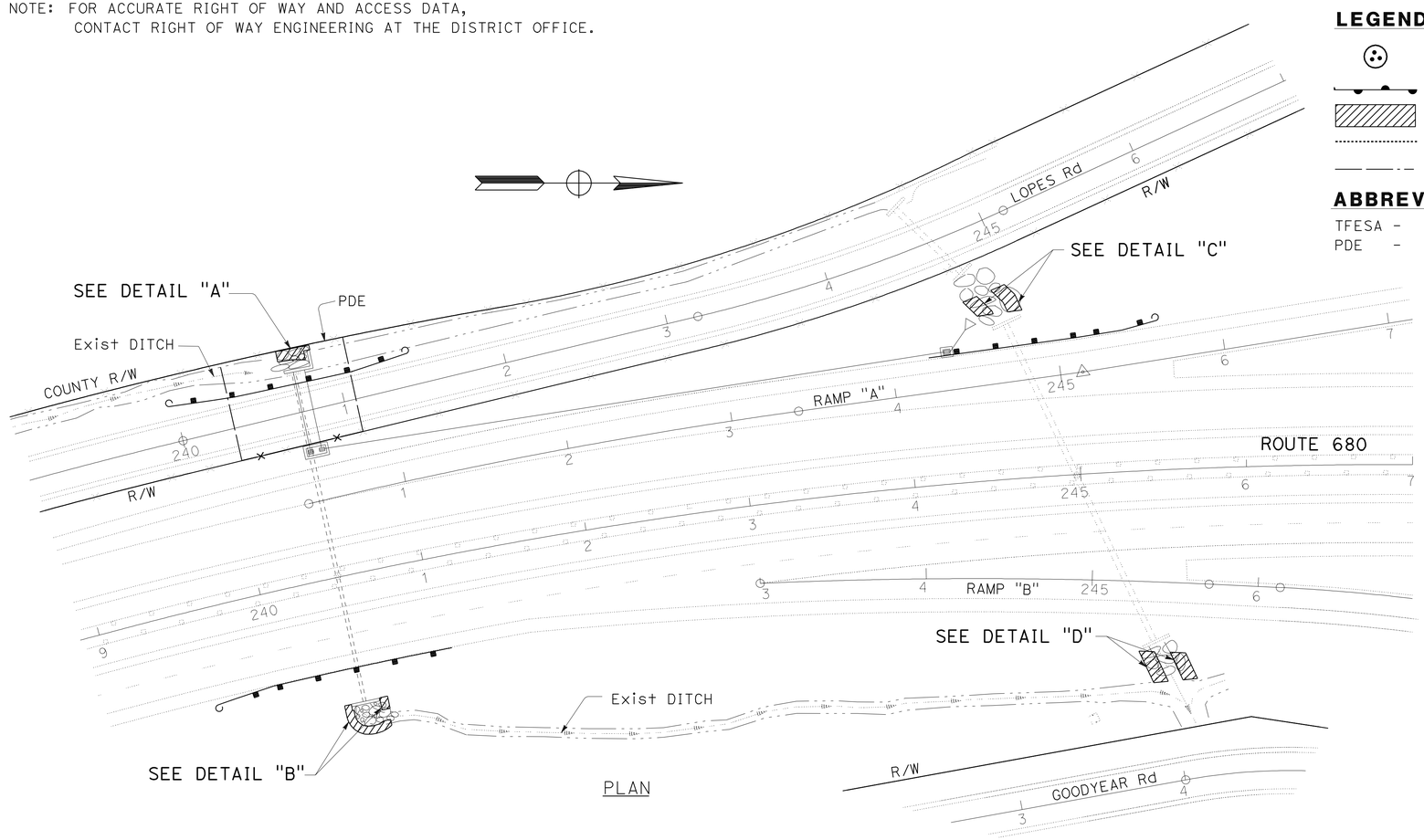

PLAN

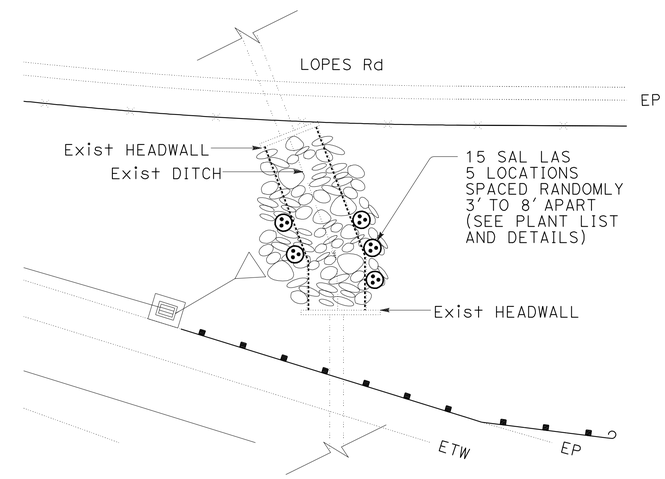

DETAIL "C"

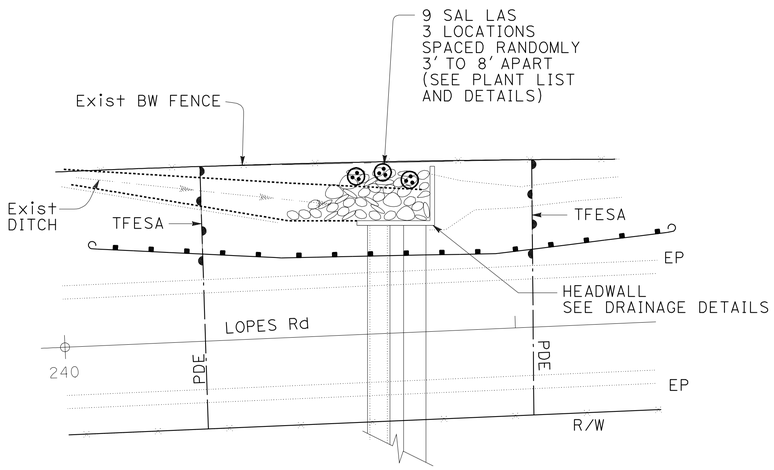

DETAIL "A"

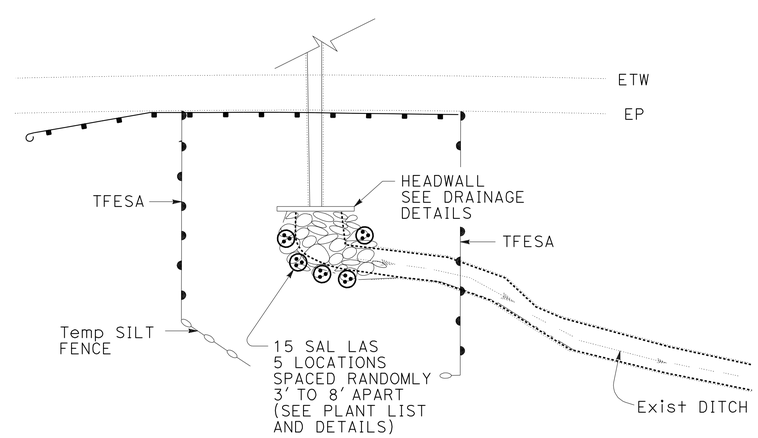

DETAIL "B"

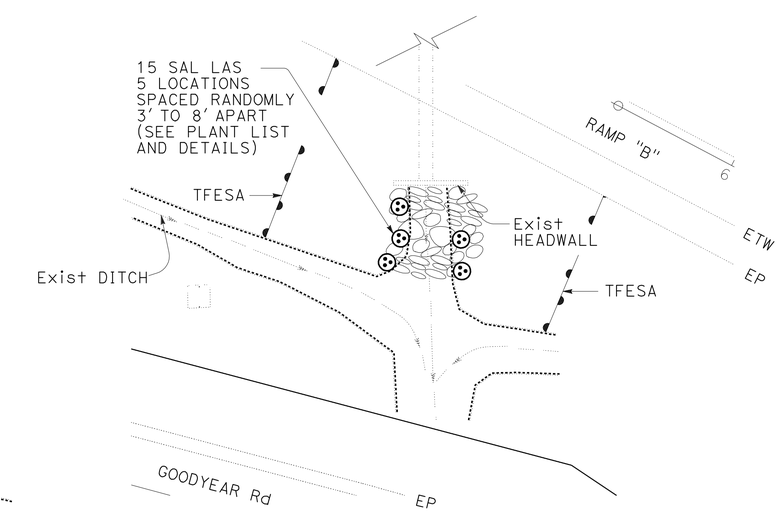

DETAIL "D"

PLANTING PLAN

NO SCALE

PP-1

THIS PLAN ACCURATE FOR HIGHWAY PLANTING WORK ONLY.

STATE OF CALIFORNIA - DEPARTMENT OF TRANSPORTATION
Caltrans® WATER QUALITY

SENIOR LANDSCAPE ARCHITECT: DAVID W. YAM
CALCULATED-DESIGNED BY: Alex McDonald
CHECKED BY: Jennifer Egawa
REVISED BY: AM
DATE REVISED: 2/24/10

LAST REVISION 02-24-10
DATE PLOTTED => 04-MAR-2010
TIME PLOTTED => 08:45

DIST	COUNTY	ROUTE	POST MILES TOTAL PROJECT	SHEET NO.	TOTAL SHEETS
04	Sol	680	R4.7	22	28

REGISTERED CIVIL ENGINEER

November 17, 2006
PLANS APPROVAL DATE

REGISTERED PROFESSIONAL ENGINEER Dallas Forester No. C37765 Exp. 12-31-06 CIVIL STATE OF CALIFORNIA

The State of California or its officers or agents shall not be responsible for the accuracy or completeness of electronic copies of this plan sheet.

To accompany plans dated 3-1-10

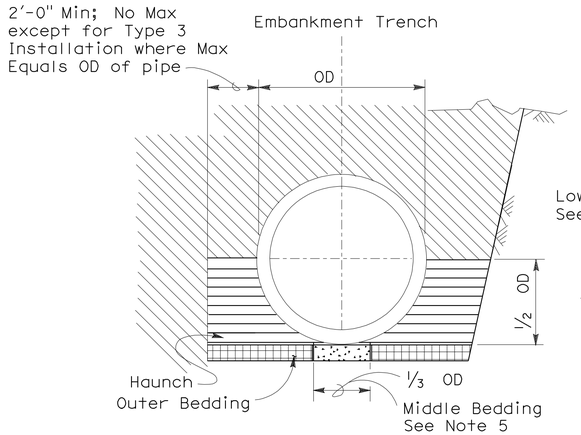

BACKFILL

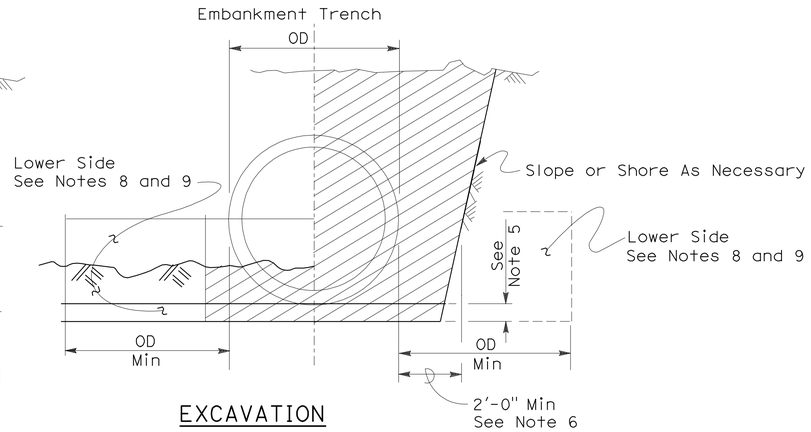

EXCAVATION

Roadway Embankment

Structure Backfill (Culvert) See Note 6

Structure Backfill (Culvert) See Note 6

Loose Backfill

Excavation Structure (Culvert)

TYPE 1 INSTALLATION:

The haunch and outer bedding shall be compacted to a minimum 90 percent relative compaction. In addition, the minimum sand equivalent in these areas shall be 30 and the maximum percentage passing the 75 μm sieve size shall be 12.

TYPE 2 INSTALLATION:

The haunch and outer bedding shall be compacted to a minimum 90 percent relative compaction. In addition, the minimum sand equivalent in these areas shall be 25.

TYPE 3 INSTALLATION:

The haunch and outer bedding shall be compacted to a minimum 85 percent relative compaction. 90 percent relative compaction will be required where the fill over the pipe is less than 4'-0" or 1/2 OD.

NOTES:

1. Unless otherwise shown on the plans or specified in the special provision, the Contractor shall have the option of selecting the class of RCP and the type of installation to be used, provided the height of cover does not exceed the value shown for the RCP selected.
   Example: 24" RCP culvert with maximum cover of 19'-0" the options are:
   a) Class III or stronger with Installation Type 1.
   b) Class III Special or stronger with Installation Type 2.
   c) Class IV Special or stronger with Installation Type 3.
   Cover is defined as the maximum vertical distance from top of the pipe to finished grade within the length of any given culvert.
2. The class of RCP and Installation Type selected shall be the same throughout the length of any given culvert.
3. The "length of any culvert" is defined as the culvert between:
   a) Successive drainage structure (inlets, junction boxes, headwalls, etc.).
   b) A drainage structure and the inlet or outlet end of the culvert.
   c) The inlet and outlet end of the culvert when there are no intervening drainage structures.
4. Oval and arch shaped RCP shall not be used.
5. 1/25 OD Min, not less than 3".
6. Slurry cement backfill may be substituted for backfill in the outer bedding and haunch areas. If slurry is used the outer and middle beddings shall be omitted. Prior to installation the soil under the middle 1/3 of the outside diameter of the pipe shall be softened by scarifying or other means to a minimum depth of 1/25 OD, but not less than 3". Where slurry cement backfill is used clear distance to trench wall may be reduced as set forth in Section 19-3.062 of the Standard Specifications.
7. Backfill shall be placed full width of excavation except where dimensions are shown for backfill width or thickness. Dimensions shown are minimums.
8. Lower side shall be suitable material as determined by the Engineer. Otherwise it shall be considered unsuitable as set forth in Section 19-2.02 of the Standard Specifications. See Note 9.
9. Where the pipe is placed in a trench, if the trench walls are sloped at 5 vertical to 1 horizontal or steeper for at least 90 percent of the trench height or up to not less than 12" from the grading plane, the firmness of the soil in the lower side need not be considered.
10. Non-reinforced precast concrete pipe sizes 3'-0" or smaller may be placed under installation Types 1, 2 or 3.

INSTALLATION TYPE 1

MINIMUM CLASS AND D-LOAD	COVER	
	108" Dia AND SMALLER	OVER 108" Dia
Class II 1000D	14.9'	12.9'
Class III 1350D	15.0' - 20.9'	13.0' - 18.9'
Class III Special 1700D	21.0' - 26.9'	19.0' - 24.9'
Class IV 2000D	27.0' - 31.9'	25.0' - 29.9'
Class IV Special 2500D	32.0' - 40.9'	30.0' - 38.9'
Class V 3000D	41.0' - 49.9'	39.0' - 46.9'
Class V Special 3600D	50.0' - 59.0'	47.0' - 58.0'

INSTALLATION TYPE 2

MINIMUM CLASS AND D-LOAD	COVER
Class II 1000D	9.9'
Class III 1350D	10.0'- 14.9'
Class III Special 1700D	15.0' - 19.9'
Class IV 2000D	20.0' - 24.9'
Class IV Special 2500D	25.0' - 31.9'
Class V 3000D	32.0' - 38.9'
Class V Special 3600D	39.0' - 47.0'

INSTALLATION TYPE 3

MINIMUM CLASS AND D-LOAD	COVER	
	48" Dia AND SMALLER	OVER 48" Dia
Class II 1000D	7.9'	5.9'
Class III 1350D	8.0' - 10.9'	6.0' - 8.9'
Class III Special 1700D	11.0' - 14.9'	9.0' - 12.9'
Class IV 2000D	15.0' - 17.9'	13.0' - 15.9'
Class IV Special 2500D	18.0' - 21.9'	16.0' - 19.9'
Class V 3000D	22.0' - 26.9'	20.0' - 24.9'
Class V Special 3600D	30.0' - 33.0'	25.0' - 31.0'

STATE OF CALIFORNIA
DEPARTMENT OF TRANSPORTATION

EXCAVATION AND BACKFILL CONCRETE PIPE CULVERTS

NO SCALE

RSP A62DA DATED NOVEMBER 17, 2006 SUPERSEDES STANDARD PLAN A62DA DATED MAY 1, 2006 - PAGE 20 OF THE STANDARD PLANS BOOK DATED MAY 2006.

REVISED STANDARD PLAN RSP A62DA

2006 REVISED STANDARD PLAN RSP A62DA

10-26-06

DIST	COUNTY	ROUTE	POST MILES TOTAL PROJECT	SHEET NO.	TOTAL SHEETS
04	Sol	680	R4.7	23	28

Raymond Don Tsztoo
REGISTERED CIVIL ENGINEER

January 18, 2008
PLANS APPROVAL DATE

REGISTERED PROFESSIONAL ENGINEER
Raymond Don Tsztoo
No. C37332
Exp. 6-30-08
CIVIL
STATE OF CALIFORNIA

The State of California or its officers or agents shall not be responsible for the accuracy or completeness of electronic copies of this plan sheet.

To accompany plans dated 3-1-10

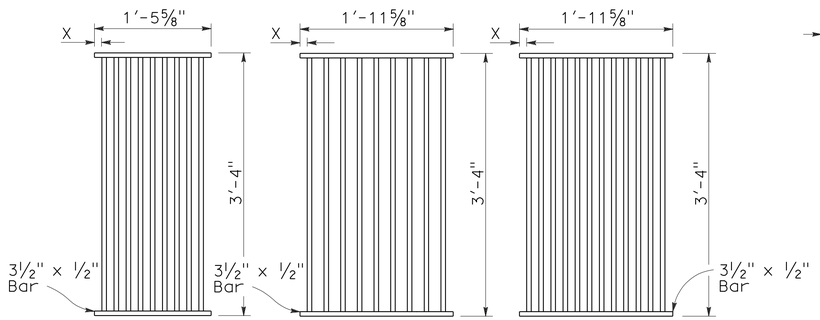

TYPE 18-9

1⅜" Clear spacing. Use within the roadbed on highways where bicycles and pedestrians are excluded.

TYPE 24-9

2" Clear spacing. Use in locations off the roadbed on all types of highways.

TYPE 24-12

1⅜" Clear spacing. Use within the roadbed on highways where bicycles and pedestrians are excluded.

RECTANGULAR GRATE DETAILS

(See table below)

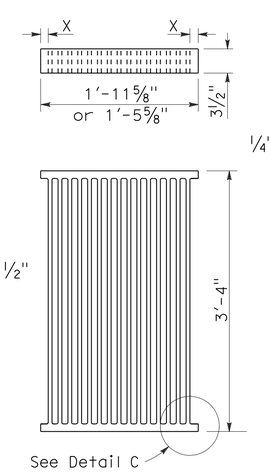

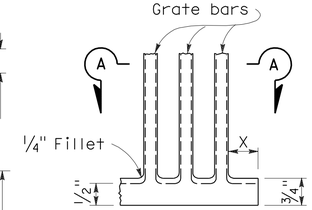

DETAIL C

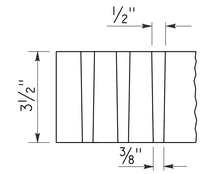

SECTION A-A

ALTERNATIVE CAST NODULAR IRON GRATE OR CAST STEEL GRATE

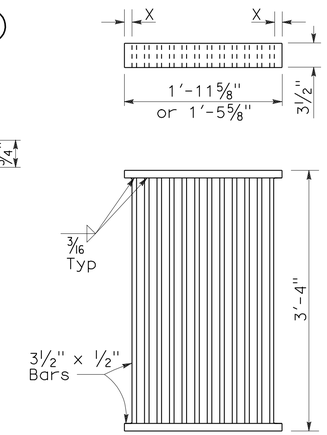

ALTERNATIVE WELDED GRATE

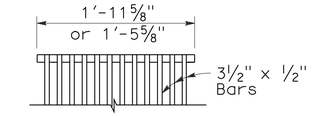

CAST END BLOCK

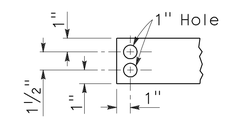

END OF BAR

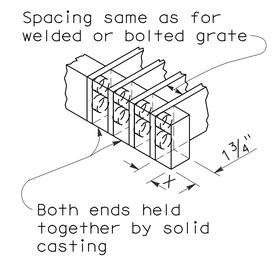

ALTERNATIVE CAST NODULAR IRON OR CAST STEEL END BLOCK GRATE

NOTES:

1. Grate type numbers refer to approximate width of grate in inches and number of bars, respectively.
2. Contractor has the option of using cast nodular iron, cast steel, welded, bolted, or cast end block grate.
3. See Special Provisions for requirements pertaining to galvanizing or asphalt dipping of grates and frames.
4. Rounded top of bars optional on all grates.
5. Pipe inlets with a grate shall be placed so that bars parallel direction of principle surface flow.
6. Full penetration butt welds may be substituted for the fillet welds on all anchors.
7. Standard square, hexagon, round or equivalent headed anchors may be substituted for the right angle hooks on the anchors shown on this plan.
8. Grate and frame weights are based on welded grates (weights of face angles, steps, protection bars, etc. are not included).

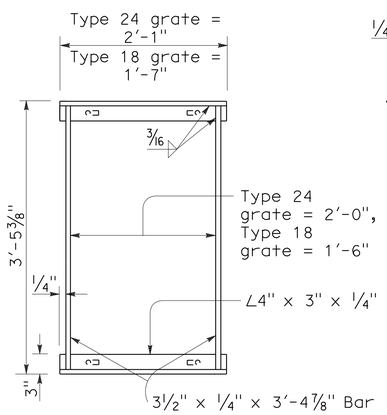

TYPICAL FRAME

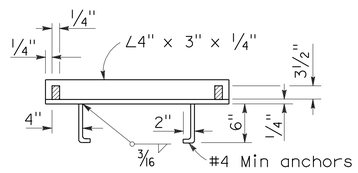

CROSS SECTION

(Thru frame)

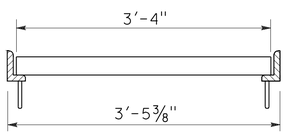

LONGITUDINAL SECTION

(Thru frame and grate)

RECTANGULAR FRAME DETAILS

(For all rectangular grates)

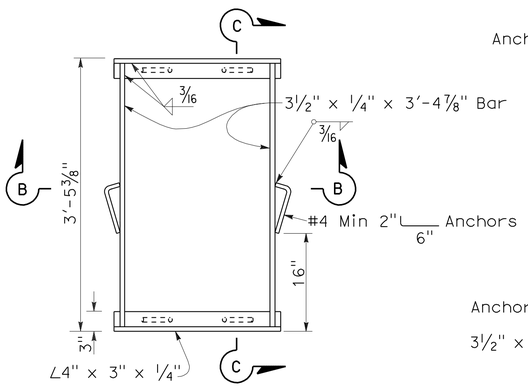

TYPICAL FRAME

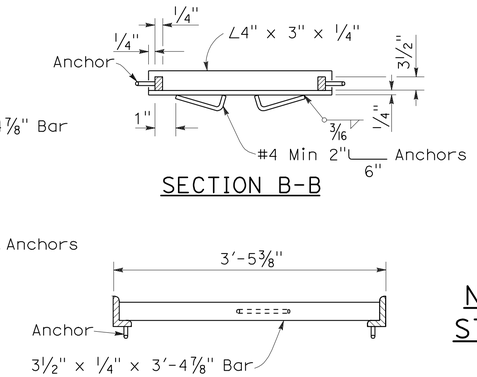

SECTION B-B

SECTION C-C

ALTERNATIVE ANCHOR FOR RECTANGULAR FRAME

(For details not shown, See Rectangular Frame Details)

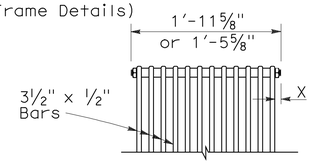

BOLTED END BLOCK

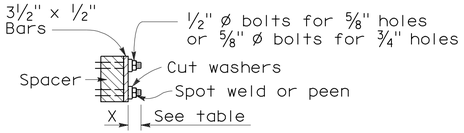

BOLTING DETAIL

ALTERNATIVE BOLTED GRATE

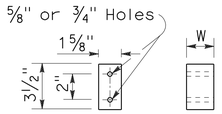

BAR SPACER

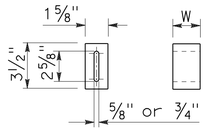

ALTERNATIVE SPACER

W = 1⅜" or 2"

GRATE BAR SPACING TABLE

TYPE	No. OF BARS	CLEAR BAR SPACING	X
18-9	9	1⅜"	1 1/16"
24-9	9	2"	1 9/16"
24-12	12	1⅜"	1¼"

INLET TYPE	COVER TYPE	WEIGHT LB
OS	PLATE	174
OL-7	PLATE	170
OL-10	PLATE	170
OL-14	PLATE	170
OL-21	PLATE	170
OCP	PLATE	112
OCPI	PLATE	112
OCPI	REDWOOD	42
OMP	PLATE	177
OMPI	PLATE	177

INLET TYPE	GRATE TYPE	No. OF GRATES	WEIGHT LB
GDO	24-12	2	634
GOL-7	24-12	1	326
GOL-10	24-12	1	326
GO,G1,G2,G3,G4 (TYPE 24)	24-9	1	263
	24-12	1	326
G4 (TYPE 18),G5,G6	18-9	1	249
GT1	18-9	2	498
GT2	18-9	2	498
GT3	24-12	2	652
GT4	24-12	2	652
TRASH RACK			22

BASIS FOR MISC IRON & STEEL FINAL PAY WEIGHTS FOR DRAINAGE INLETS

(See General Notes, No 8)

STATE OF CALIFORNIA
DEPARTMENT OF TRANSPORTATION

GRATE DETAILS

NO SCALE

RSP D77A DATED JANUARY 18, 2008 SUPERSEDES STANDARD PLAN D77A DATED MAY 1, 2006 - PAGE 155 OF THE STANDARD PLANS BOOK DATED MAY 2006.

REVISED STANDARD PLAN RSP D77A

2006 REVISED STANDARD PLAN RSP D77A

12-14-07

DIST	COUNTY	ROUTE	POST MILES TOTAL PROJECT	SHEET NO.	TOTAL SHEETS
04	Sol	680	R4.7	24	28

Gregory A Balzer
LICENSED LANDSCAPE ARCHITECT

June 5, 2009
PLANS APPROVAL DATE

LICENSED LANDSCAPE ARCHITECT
Gregory A. Balzer 2576
Signature
2-28-11
Renewal Date
5-14-09
Date
STATE OF CALIFORNIA

The State of California or its officers or agents shall not be responsible for the accuracy or completeness of electronic copies of this plan sheet.

To accompany plans dated 3-1-10

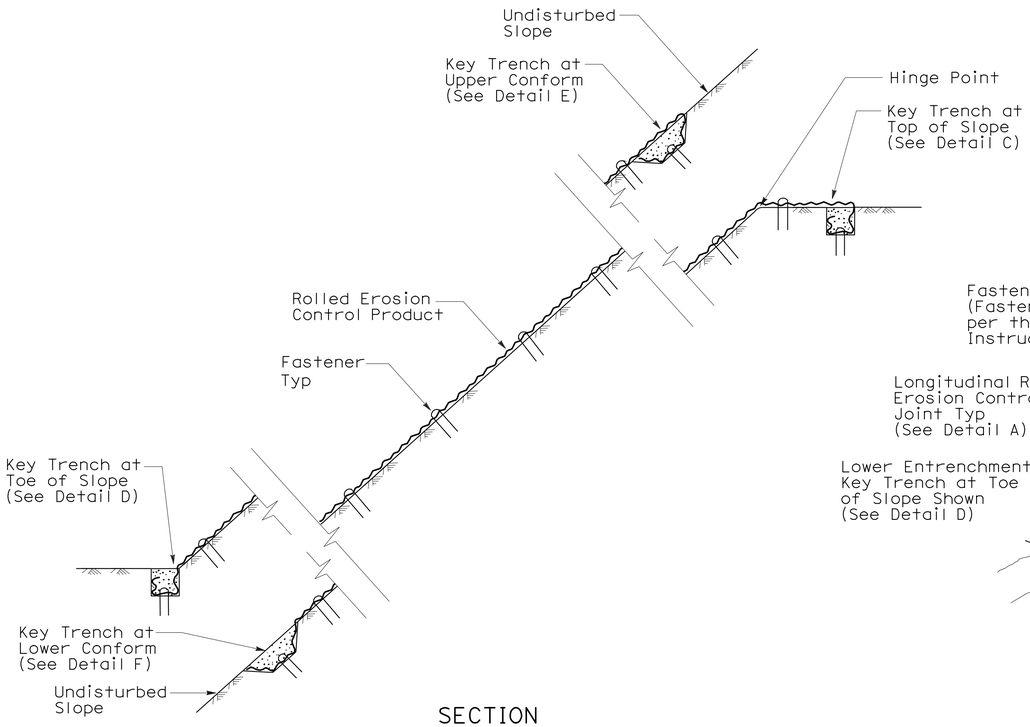

SECTION

ROLLED EROSION CONTROL PRODUCT
ON SLOPE WITH VARIOUS KEY ENTRENCHMENTS

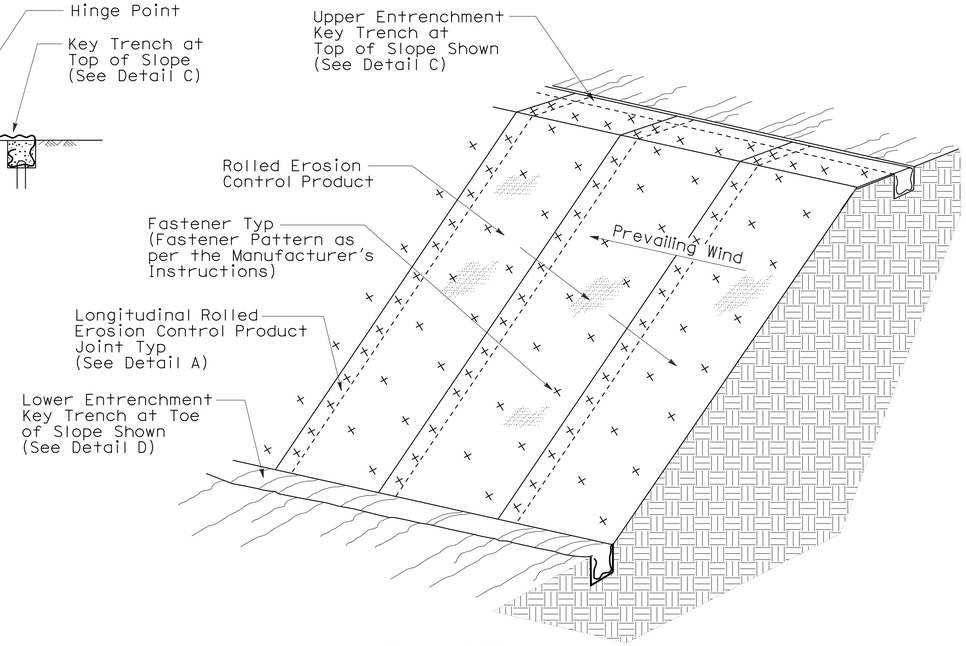

ISOMETRIC

ROLLED EROSION CONTROL PRODUCT
ON SLOPE

NOTE:

1. Fiber Roll/Compost Sock shown for reference purposes only.
2. If transverse rolled erosion control product joints are required on slopes, see Detail B.

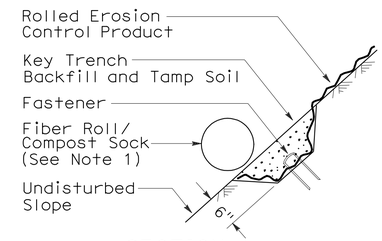

SECTION

DETAIL F
KEY TRENCH AT
LOWER CONFORM

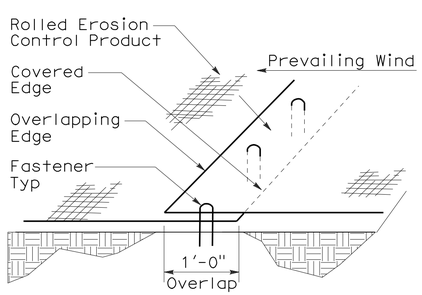

PERSPECTIVE

DETAIL A
LONGITUDINAL ROLLED EROSION
CONTROL PRODUCT JOINT

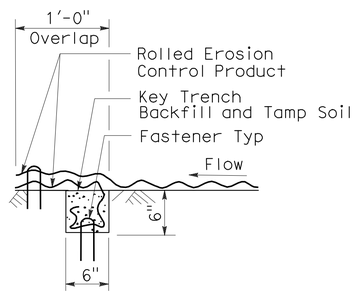

SECTION

DETAIL B
TRANSVERSE ROLLED EROSION
CONTROL PRODUCT JOINT

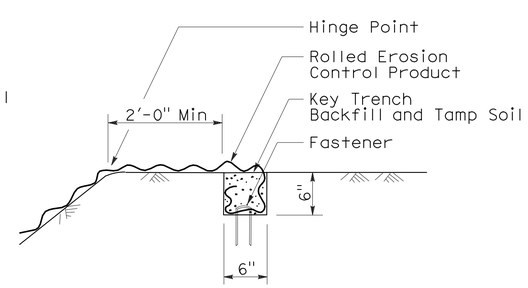

SECTION

DETAIL C
KEY TRENCH AT
TOP OF SLOPE

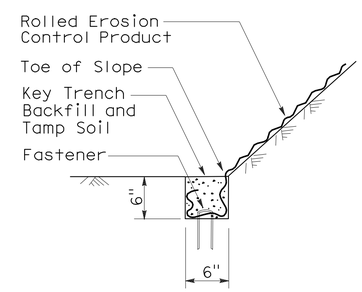

SECTION

DETAIL D
KEY TRENCH AT
TOE OF SLOPE

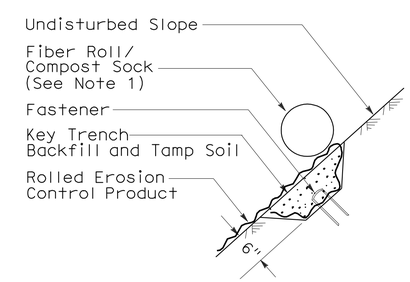

SECTION

DETAIL E
KEY TRENCH AT
UPPER CONFORM

STATE OF CALIFORNIA
DEPARTMENT OF TRANSPORTATION

ROLLED EROSION CONTROL PRODUCT

NO SCALE

NSP H53 DATED JUNE 5, 2009 SUPPLEMENTS
THE STANDARD PLANS BOOK DATED MAY 2006.

NEW STANDARD PLAN NSP H53

2006 NEW STANDARD PLAN NSP H53

3-4-09

DIST	COUNTY	ROUTE	POST MILES TOTAL PROJECT	SHEET NO.	TOTAL SHEETS
04	Sol	680	R4.7	25	28

Randell D. Hiatt
REGISTERED CIVIL ENGINEER

June 6, 2008
PLANS APPROVAL DATE

REGISTERED PROFESSIONAL ENGINEER
Randell D. Hiatt
No. C50200
Exp. 6-30-09
CIVIL
STATE OF CALIFORNIA

The State of California or its officers or agents shall not be responsible for the accuracy or completeness of electronic copies of this plan sheet.

To accompany plans dated 3-1-10

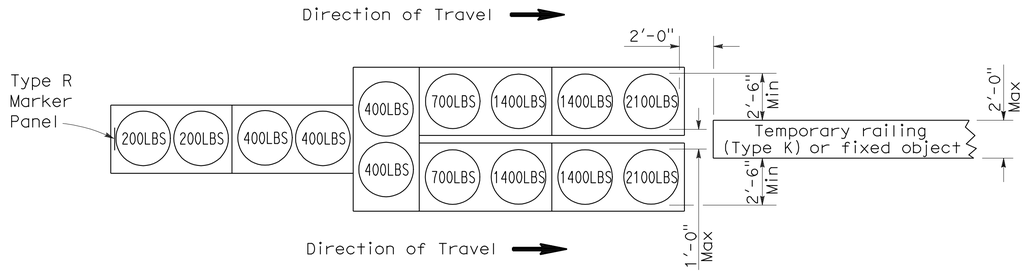

ARRAY 'TU14'

Approach speed 45 mph or more

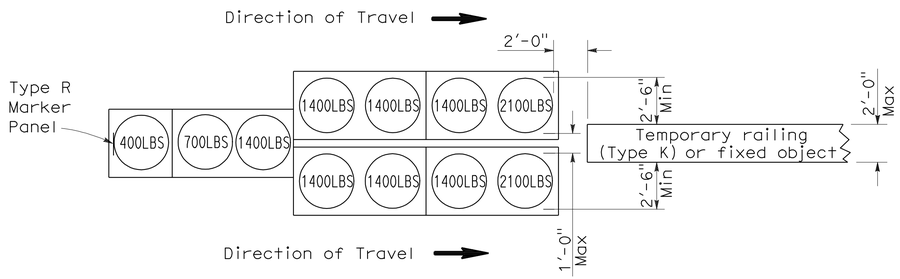

ARRAY 'TU11'

Approach speed less than 45 mph

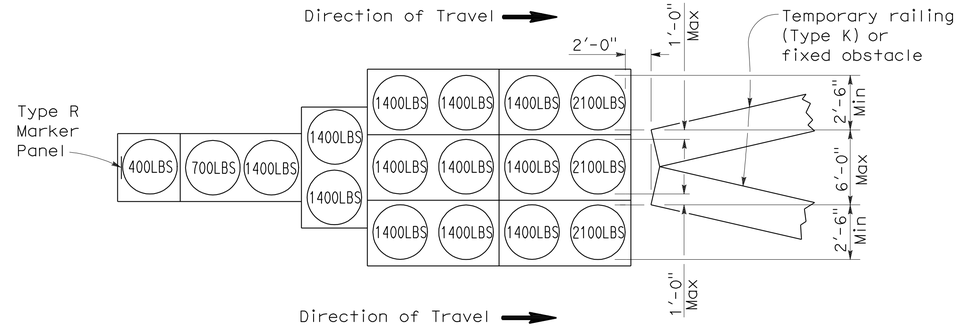

ARRAY 'TU17'

Approach speed less than 45 mph

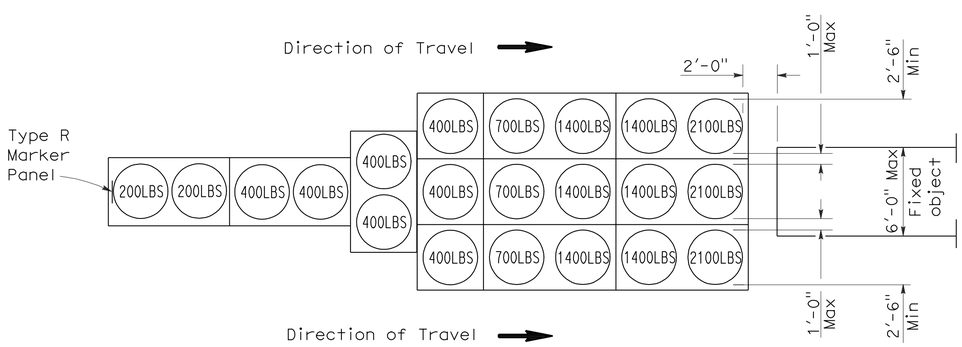

ARRAY 'TU21'

Approach speed 45 mph or more

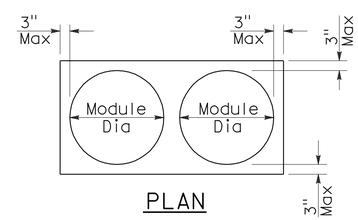

PLAN

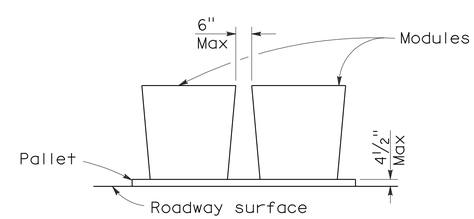

ELEVATION

CRASH CUSHION PALLET DETAIL

See Note 7

NOTES:

1. (XXX) Indicates sand filled module location and weight of sand in pounds for each module. Module spacing is based on the greater diameter of the module.
2. All sand weights are nominal.
3. Temporary crash cushion arrays shall not encroach on the traveled way.
4. Place the top of Type R marker panel 1" below the module lid.
5. Refer to Standard Plan A73B for marker details.
6. Approach speeds indicated conform to NCHRP 350 Report criteria.
7. Use of pallets is optional.

STATE OF CALIFORNIA
DEPARTMENT OF TRANSPORTATION

TEMPORARY CRASH CUSHION, SAND FILLED (UNIDIRECTIONAL)

NO SCALE

RSP T1A DATED JUNE 6, 2008 SUPERSEDES STANDARD PLAN T1A
DATED MAY 1, 2006 - PAGE 211 OF THE STANDARD PLANS BOOK DATED MAY 2006.

REVISED STANDARD PLAN RSP T1A

2006 REVISED STANDARD PLAN RSP T1A

DIST	COUNTY	ROUTE	POST MILES TOTAL PROJECT	SHEET NO.	TOTAL SHEETS
04	Sol	680	R4.7	26	28

Randell D. Hiatt
REGISTERED CIVIL ENGINEER

June 6, 2008
PLANS APPROVAL DATE

REGISTERED PROFESSIONAL ENGINEER
Randell D. Hiatt
No. C50200
Exp. 6-30-09
CIVIL
STATE OF CALIFORNIA

The State of California or its officers or agents shall not be responsible for the accuracy or completeness of electronic copies of this plan sheet.

To accompany plans dated 3-1-10

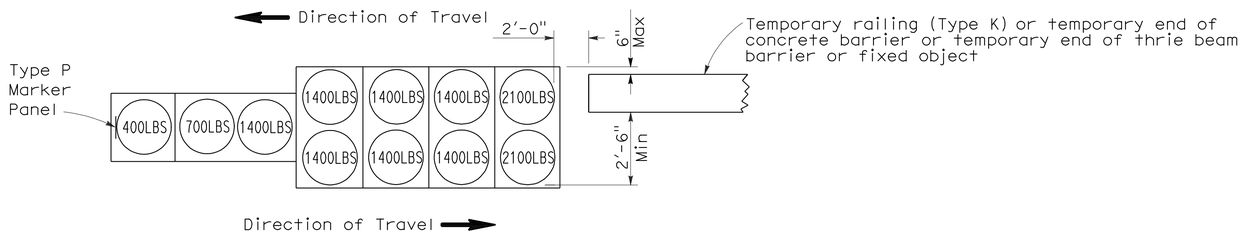

ARRAY 'TB11'

Approach speed less than 45 mph

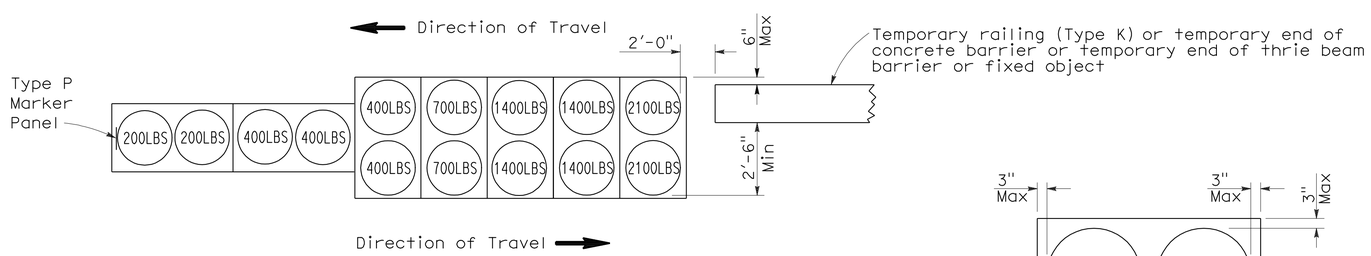

ARRAY 'TB14'

Approach speed 45 mph or more

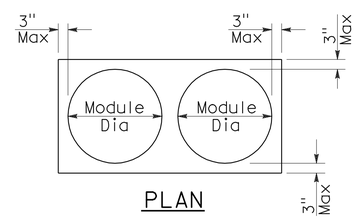

PLAN

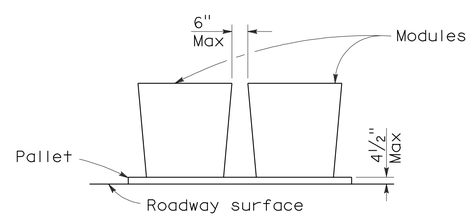

ELEVATION

CRASH CUSHION PALLET DETAIL

See Note 7

NOTES:

1. (XXX) Indicates sand filled module location and weight of sand in pounds for each module. Module spacing is based on the greater diameter of the module.
2. All sand weights are nominal.
3. Temporary crash cushion arrays shall not encroach on the traveled way.
4. Place the Type P marker panel so that the bottom of the panel rests upon the pallet.
5. Refer to Standard Plan A73B for marker details.
6. Approach speeds indicated conform to NCHRP 350 Report criteria.
7. Use of pallets is optional.

STATE OF CALIFORNIA
DEPARTMENT OF TRANSPORTATION

TEMPORARY CRASH CUSHION, SAND FILLED (BIDIRECTIONAL)

NO SCALE

RSP T1B DATED JUNE 6, 2008 SUPERSEDES STANDARD PLAN T1B
DATED MAY 1, 2006 - PAGE 212 OF THE STANDARD PLANS BOOK DATED MAY 2006.

REVISED STANDARD PLAN RSP T1B

2006 REVISED STANDARD PLAN RSP T1B

5-15-08

DIST	COUNTY	ROUTE	POST MILES TOTAL PROJECT	SHEET NO.	TOTAL SHEETS
04	Sol	680	R4.7	27	28

Randell D. Hiatt
REGISTERED CIVIL ENGINEER

June 6, 2008
PLANS APPROVAL DATE

REGISTERED PROFESSIONAL ENGINEER
Randell D. Hiatt
No. C50200
Exp. 6-30-09
CIVIL
STATE OF CALIFORNIA

The State of California or its officers or agents shall not be responsible for the accuracy or completeness of electronic copies of this plan sheet.

To accompany plans dated 3-1-10

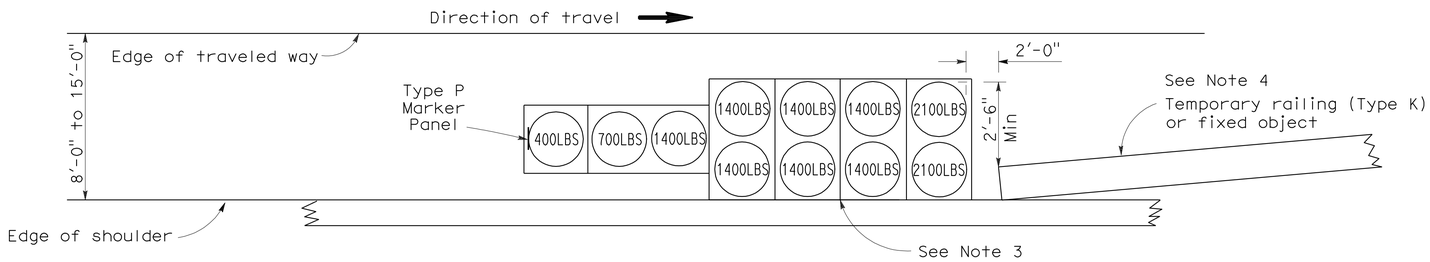

ARRAY 'TS11'

Approach speed less than 45 mph
See Note 9

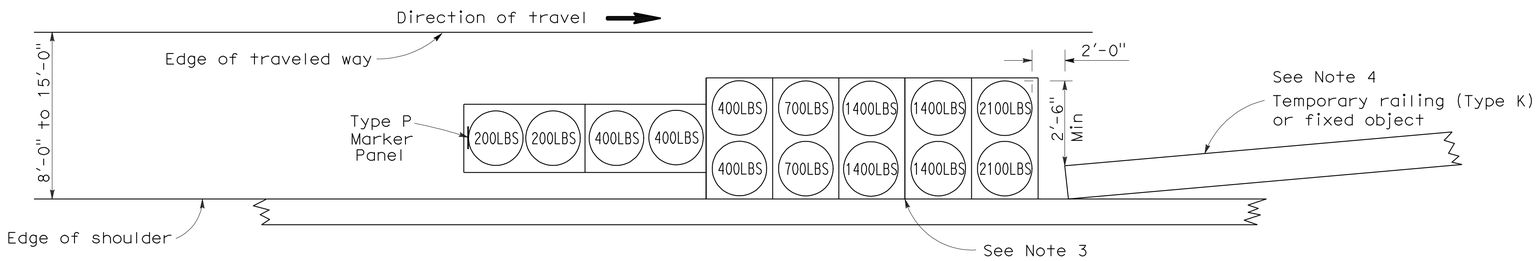

ARRAY 'TS14'

Approach speed 45 mph or more
See Note 9

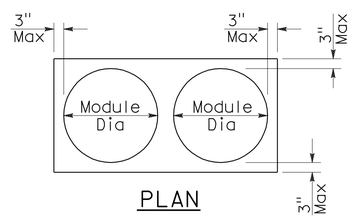

PLAN

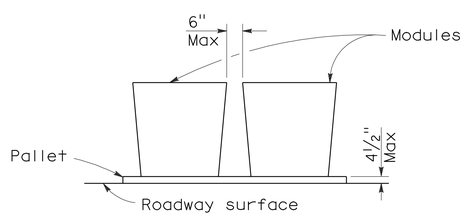

ELEVATION

CRASH CUSHION PALLET DETAIL

See Note 11

NOTES:

1. (XXX) Indicates sand filled module location and weight of sand in pounds for each module. Module spacing is based on the greater diameter of the module.
2. All sand weights are nominal.
3. The temporary crash cushion arrays shown on this plan shall be used only in locations where there will be traffic on one side of the temporary crash cushion array.
4. If the fixed object or approach end of the temporary railing is less than 15'-0" from the edge of traveled way, a temporary crash cushion is required in a construction or work zone.
5. Temporary crash cushion arrays shall not encroach on the traveled way.
6. Arrays for median shoulders shall conform to details shown on this plan for outside shoulders.
7. Place the Type P marker panel so that the bottom of the panel rests upon the pallet and faces traffic.
8. Refer to Standard Plan A73B for marker details.
9. For shoulder widths less than 8'-0", appropriate approved crash cushion protection, other than sand filled modules, shall be provided at fixed objects and at approach ends of temporary railing. The specific type of crash cushion shall be as shown on the project plans or as specified in the Special Provisions, or if not shown on the project plans or specified in the Special Provisions, shall be as approved by the Engineer.
10. Approach speeds indicated conform to NCHRP 350 Report criteria.
11. Use of pallets is optional.

STATE OF CALIFORNIA
DEPARTMENT OF TRANSPORTATION

TEMPORARY CRASH CUSHION, SAND FILLED (SHOULDER INSTALLATIONS)

NO SCALE

RSP T2 DATED JUNE 6, 2008 SUPERSEDES STANDARD PLAN T2
DATED MAY 1, 2006 - PAGE 213 OF THE STANDARD PLANS BOOK DATED MAY 2006.

REVISED STANDARD PLAN RSP T2

2006 REVISED STANDARD PLAN RSP T2

5-15-08

DIST	COUNTY	ROUTE	POST MILES TOTAL PROJECT	SHEET NO.	TOTAL SHEETS
04	Sol	680	R4.7	28	28

LICENSED LANDSCAPE ARCHITECT

April 3, 2009
PLANS APPROVAL DATE

LICENSED LANDSCAPE ARCHITECT
Robert B. Schott 3025
Signature
11-30-10
Renewal Date
2-25-09
Date
STATE OF CALIFORNIA

The State of California or its officers or agents shall not be responsible for the accuracy or completeness of electronic copies of this plan sheet.

To accompany plans dated 3-1-10

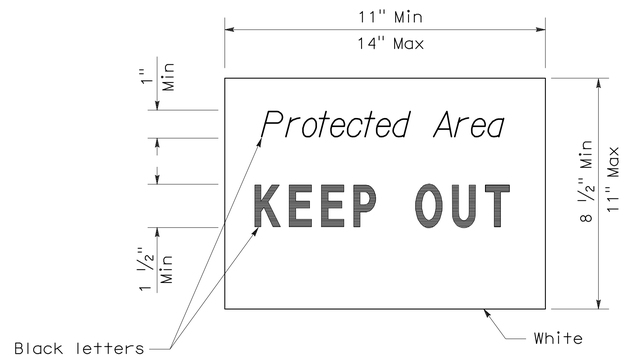

SIGN DETAIL

NOTE:

1. Temporary silt fence and temporary straw bale barrier shown for reference purposes only.

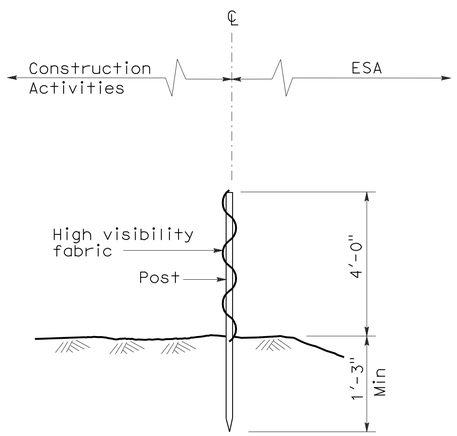

SECTION
TEMPORARY FENCE (TYPE ESA)

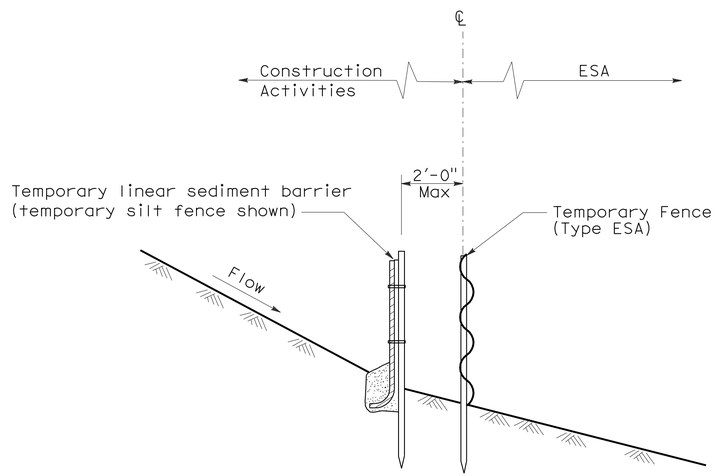

SECTION
PLACEMENT DETAIL
FOR TEMPORARY LINEAR SEDIMENT BARRIER
USED WITH TEMPORARY
FENCE (TYPE ESA)
(See Note 1)

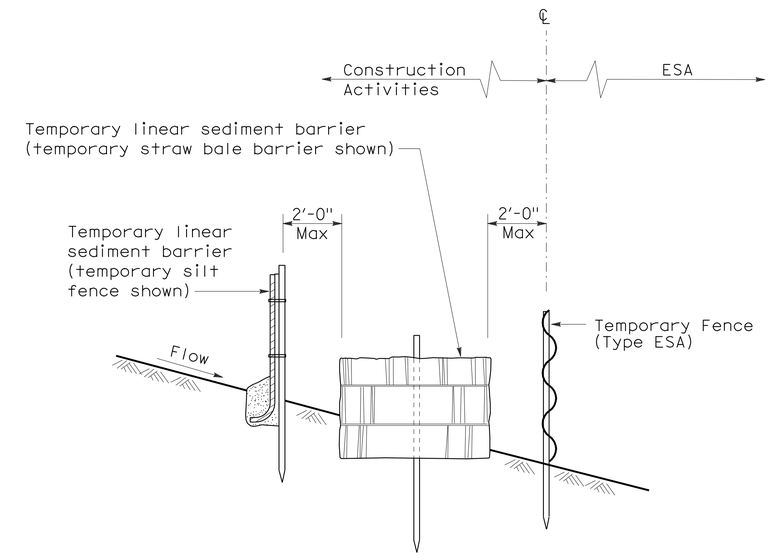

SECTION
PLACEMENT DETAIL
FOR TEMPORARY SILT FENCE
AND TEMPORARY STRAW BALE BARRIER
USED WITH TEMPORARY FENCE (TYPE ESA)
(See Note 1)

STATE OF CALIFORNIA
DEPARTMENT OF TRANSPORTATION

TEMPORARY WATER POLLUTION CONTROL DETAILS [TEMPORARY FENCE (TYPE ESA)]

NO SCALE

NSP T65 DATED APRIL 3, 2009 SUPPLEMENTS
THE STANDARD PLANS BOOK DATED MAY 2006.

NEW STANDARD PLAN NSP T65

2006 NEW STANDARD PLAN NSP T65

1-7-09