Dist	COUNTY	ROUTE	POST MILES TOTAL PROJECT	SHEET No.	TOTAL SHEETS
04	Son	116	39.8	1	34

STATE OF CALIFORNIA

DEPARTMENT OF TRANSPORTATION

ACSTP-P116(047)E

PROJECT PLANS FOR CONSTRUCTION ON

STATE HIGHWAY

IN SONOMA COUNTY
NEAR PETALUMA
AT 0.5 MILE EAST OF LAKEVILLE HIGHWAY

TO BE SUPPLEMENTED BY STANDARD PLANS DATED 2010

INDEX OF PLANS

SHEET No.	DESCRIPTION
1	TITLE SHEET AND LOCATION MAP
2	LAYOUT
3	TEMPORARY WATER POLLUTION CONTROL PLAN
4 - 5	DRAINAGE PLAN, PROFILE, DETAILS AND QUANTITIES
6	CONSTRUCTION AREA SIGNS
7	TRAFFIC HANDLING PLAN
8	SUMMARY OF QUANTITIES
9 - 11	EROSION CONTROL LEGEND, PLAN, DETAILS AND QUANTITIES
12 - 19	ELECTRICAL PLANS
20 - 26	SPECIAL ELECTRICAL STRUCTURES
27 - 34	REVISED STANDARD PLANS

THE STANDARD PLANS LIST APPLICABLE TO THIS CONTRACT IS INCLUDED IN THE NOTICE TO BIDDERS AND SPECIAL PROVISIONS BOOK.

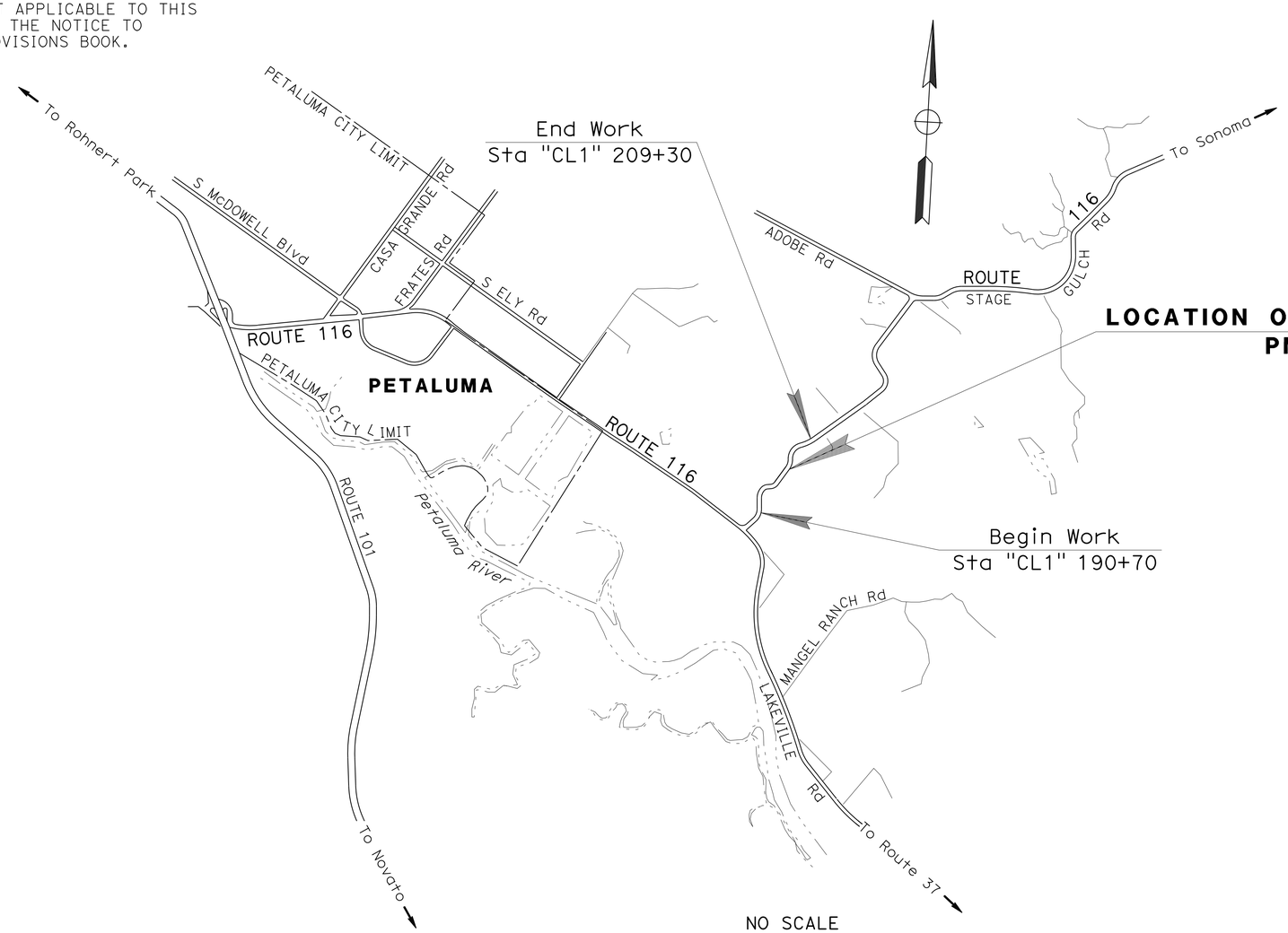

LOCATION OF CONSTRUCTION
PM 39.8

LOCATION MAP

PROJECT MANAGER: ERIC SCHEN

DESIGN MANAGER: JONATHAN LEE

Jonathan Lee 4/6/15
PROJECT ENGINEER DATE
REGISTERED CIVIL ENGINEER

April 6, 2015
PLANS APPROVAL DATE

REGISTERED PROFESSIONAL ENGINEER
Jonathan C. Lee
No. 47520
Exp. 12-31-15
CIVIL
STATE OF CALIFORNIA

THE STATE OF CALIFORNIA OR ITS OFFICERS OR AGENTS SHALL NOT BE RESPONSIBLE FOR THE ACCURACY OR COMPLETENESS OF SCANNED COPIES OF THIS PLAN SHEET.

THE CONTRACTOR SHALL POSSESS THE CLASS (OR CLASSES) OF LICENSE AS SPECIFIED IN THE "NOTICE TO BIDDERS."

CONTRACT No.	04-3G1104
PROJECT ID	0400021275

LAST REVISION 03-16-15 | DATE PLOTTED => 15-JUN-2015 | TIME PLOTTED => 12:31

Dist	COUNTY	ROUTE	POST MILES TOTAL PROJECT	SHEET No.	TOTAL SHEETS
04	Son	116	39.8	2	34

REGISTERED CIVIL ENGINEER 4/6/15 DATE

4-6-15
PLANS APPROVAL DATE

REGISTERED PROFESSIONAL ENGINEER Jonathan C. Lee No. 47520 Exp. 12-31-15 CIVIL STATE OF CALIFORNIA

THE STATE OF CALIFORNIA OR ITS OFFICERS OR AGENTS SHALL NOT BE RESPONSIBLE FOR THE ACCURACY OR COMPLETENESS OF SCANNED COPIES OF THIS PLAN SHEET.

NOTE:

FOR ACCURATE RIGHT OF WAY DATA, CONTACT RIGHT OF WAY ENGINEERING AT THE DISTRICT OFFICE.

LEGEND:

(No.) CURVE DATA NUMBER

DELINEATOR, TYPE E (TWO-SIDED RETROREFLECTIVE)

ESA —×——×— TEMPORARY FENCE, ENVIRONMENTALLY SENSITIVE AREA (IN PARALLEL WITH TEMPORARY SILT FENCE) (SEE NOTE 5)

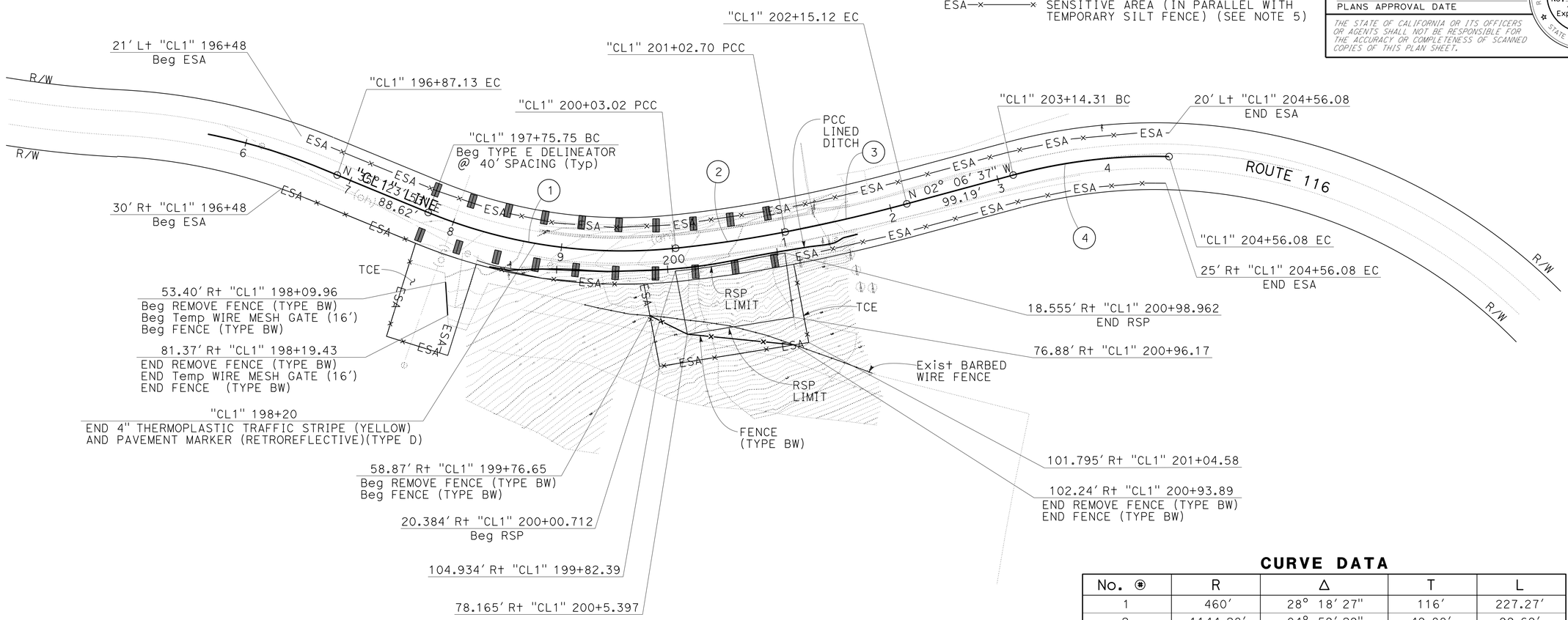

CURVE DATA

No. ⊛	R	Δ	T	L
1	460'	28° 18' 27"	116'	227.27'
2	1144.28'	04° 59' 29"	49.88'	99.69'
3	1530'	04° 12' 35"	56.23'	112.42'
4	485'	16° 44' 53"	71.39'	141.77'

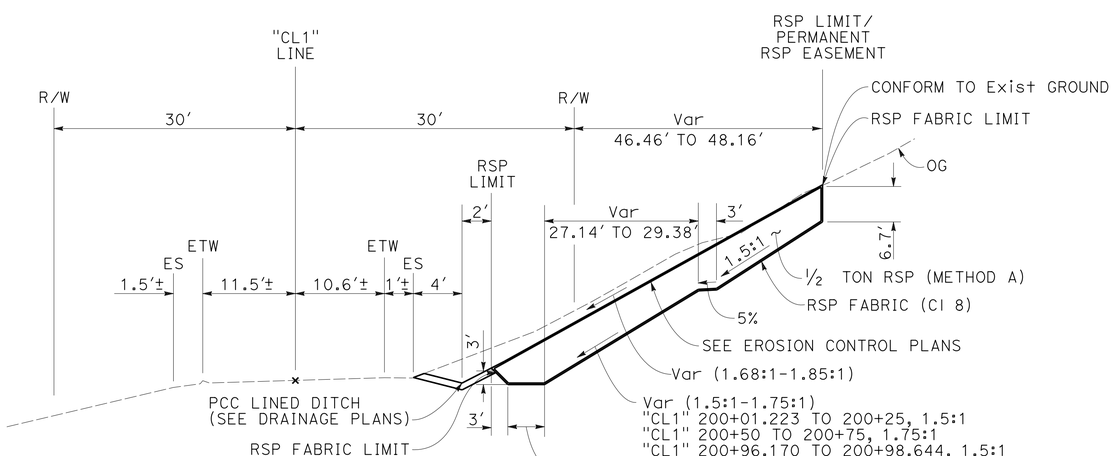

DETAIL 1

26.331' Rt "CL1" 200+01.223 TO 24.932' Rt "CL1" 200+98.644

NOTES:

1. FOR COMPLETE TCE DIMENSIONS, SEE SHEET SC-1.
2. UTILITY OWNERSHIP:
   ELECTRICAL- PACIFIC GAS AND ELECTRIC (PG&E).
3. UTILITIES SHOWN ON THIS PLAN ARE APPROXIMATE AND SHALL BE VERIFIED BY THE CONTRACTOR PRIOR TO CONSTRUCTION.
4. FINAL STAGE- PLACE 4" THERMOPLASTIC TRAFFIC STRIPE (DETAIL 22):
   A- FROM "CL1" 195+80 TO 198+20
   B- FROM "CL1" 202+30 TO 204+30
5. CONTRACTOR TO PLACE Temp SILT FENCE PARALLEL WITH Temp FENCE, ENVIRONMENTALLY SENSITIVE AREA PER Std PLAN T65.

LAYOUT

SCALE: 1" = 50'

L-1

REVISED BY	DATE REVISED
RN	4/23/14

CALCULATED-DESIGNED BY	CHECKED BY
RON GESTUVO	RODNEY NODA

FUNCTIONAL SUPERVISOR: JONATHAN C LEE

STATE OF CALIFORNIA - DEPARTMENT OF TRANSPORTATION

Caltrans® DESIGN

LAST REVISION 04-02-15 | DATE PLOTTED => 13-APR-2015 | TIME PLOTTED => 07:44

Dist	COUNTY	ROUTE	POST MILES TOTAL PROJECT	SHEET No.	TOTAL SHEETS
04	Son	116	39.8	3	34

REGISTERED CIVIL ENGINEER 2/2/15 DATE

4-6-15
PLANS APPROVAL DATE

REGISTERED PROFESSIONAL ENGINEER Jeng G. Tsai No. 62753 Exp. 6-30-16 CIVIL STATE OF CALIFORNIA

THE STATE OF CALIFORNIA OR ITS OFFICERS OR AGENTS SHALL NOT BE RESPONSIBLE FOR THE ACCURACY OR COMPLETENESS OF SCANNED COPIES OF THIS PLAN SHEET.

NOTE:

FOR ACCURATE RIGHT OF WAY DATA, CONTACT RIGHT OF WAY ENGINEERING AT THE DISTRICT OFFICE.

NOTE:

1. TEMPORARY BMP LOCATIONS ARE DESIGNED BASED ON DISTURBED AREAS AND WATER FLOW PATTERNS INFORMATION AVAILABLE AT DESIGN PHASE. CONTRACTOR IS RESPONSIBLE TO DEVELOP A WPCP THAT STABILIZES ALL DISTURBED AREAS INCLUDING AREAS THAT WERE NOT EXPECTED TO BE DISTURBED AND COMPLIES WITH PERMITS, LICENSES, AGREEMENTS AND CERTIFICATIONS (PLACS).

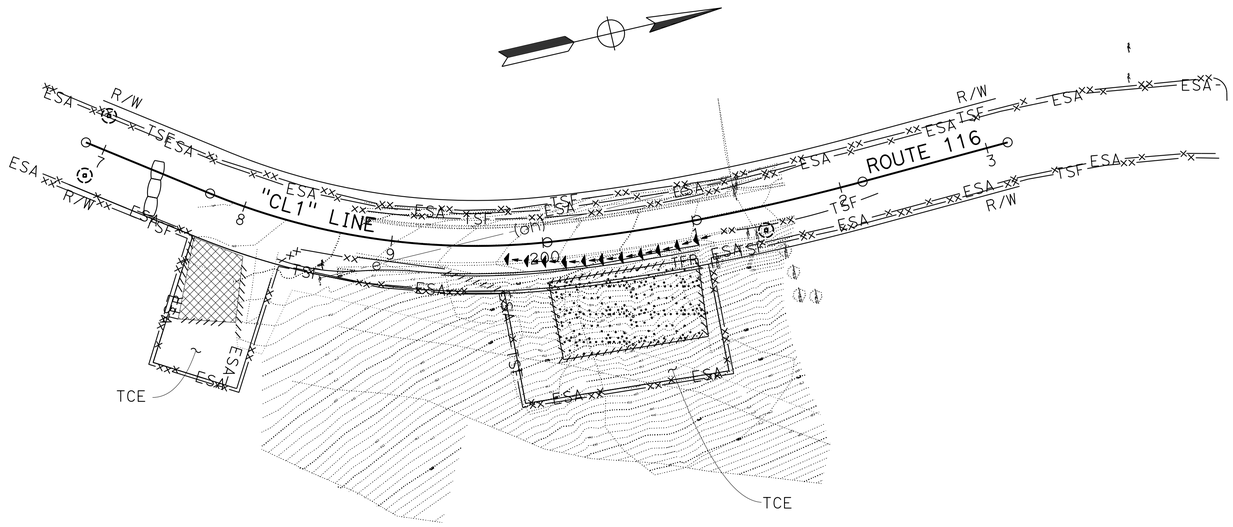

LEGEND:

STAGING AREA

TEMPORARY GRAVEL BERM BAG

TEMPORARY HYDRAULIC MULCH (BONDED FIBER MATRIX)

ESA—×——— ESA FENCE

TEMPORARY WATER POLLUTION CONTROL QUANTITIES

LOCATION	TEMPORARY FIBER ROLL	TEMPORARY DRAINAGE INLET PROTECTION	TEMPORARY CHECK DAM	TEMPORARY SILT FENCE	TEMPORARY GRAVEL BERM BAG	TEMPORARY HYDRAULIC MULCH (BONDED FIBER MATRIX)
	LF	EA	LF			SQYD
TOTAL	650	3	70	600	50	580

TEMPORARY WATER POLLUTION CONTROL PLAN

NO SCALE

THIS PLAN ACCURATE FOR TEMPORARY WATER POLLUTION CONTROL WORK ONLY

WPC-1

STATE OF CALIFORNIA - DEPARTMENT OF TRANSPORTATION
Caltrans® WATER QUALITY

FUNCTIONAL SUPERVISOR: KAMRAN NAKHJIRI

CALCULATED-DESIGNED BY: JENG TSAI
CHECKED BY: KAMRAN NAKHJIRI

REVISED BY: JT
DATE REVISED: 4/23/14

LAST REVISION 03-27-15 | DATE PLOTTED => 13-APR-2015 | TIME PLOTTED => 07:45

Dist	COUNTY	ROUTE	POST MILES TOTAL PROJECT	SHEET No.	TOTAL SHEETS
04	Son	116	39.8	4	34

REGISTERED CIVIL ENGINEER 4/6/15 DATE

4-6-15
PLANS APPROVAL DATE

REGISTERED PROFESSIONAL ENGINEER Tom Jiang No. 81747 Exp. 3-31-16 CIVIL STATE OF CALIFORNIA

THE STATE OF CALIFORNIA OR ITS OFFICERS OR AGENTS SHALL NOT BE RESPONSIBLE FOR THE ACCURACY OR COMPLETENESS OF SCANNED COPIES OF THIS PLAN SHEET.

NOTE:

FOR ACCURATE RIGHT OF WAY DATA, CONTACT RIGHT OF WAY ENGINEERING AT THE DISTRICT OFFICE.

NOTES:

1. CUT-OFF WALL REQUIRED AT THE BEGINNING AND END OF ALL PCC LINED DITCHES.
2. CONSTRUCT KEY AT "CL1" 199+75.

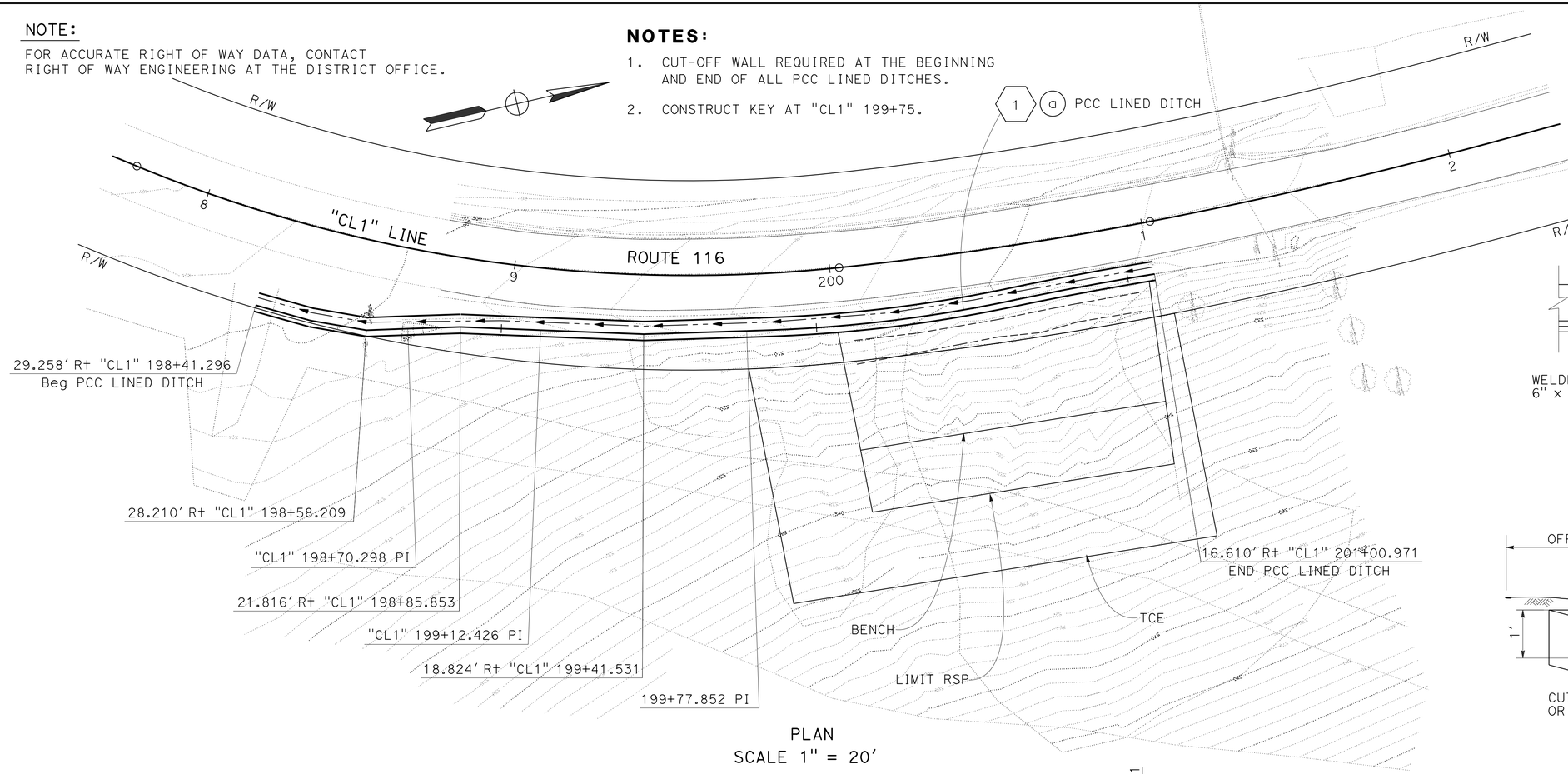

PLAN
SCALE 1" = 20'

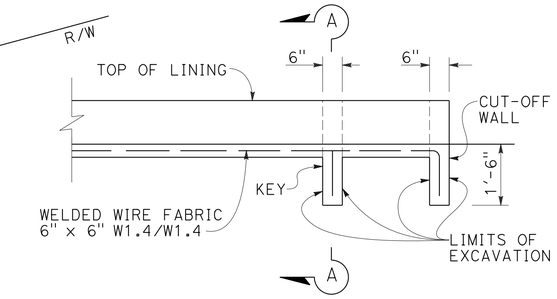

LONGITUDINAL SECTION
PCC LINED DITCH

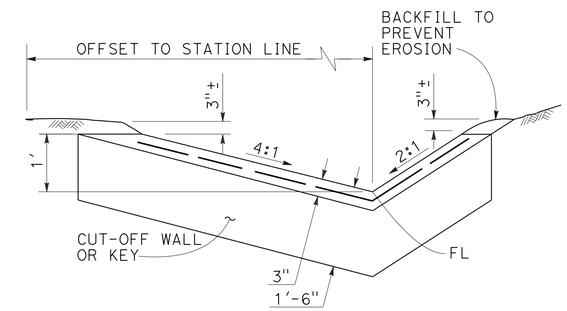

SECTION A-A

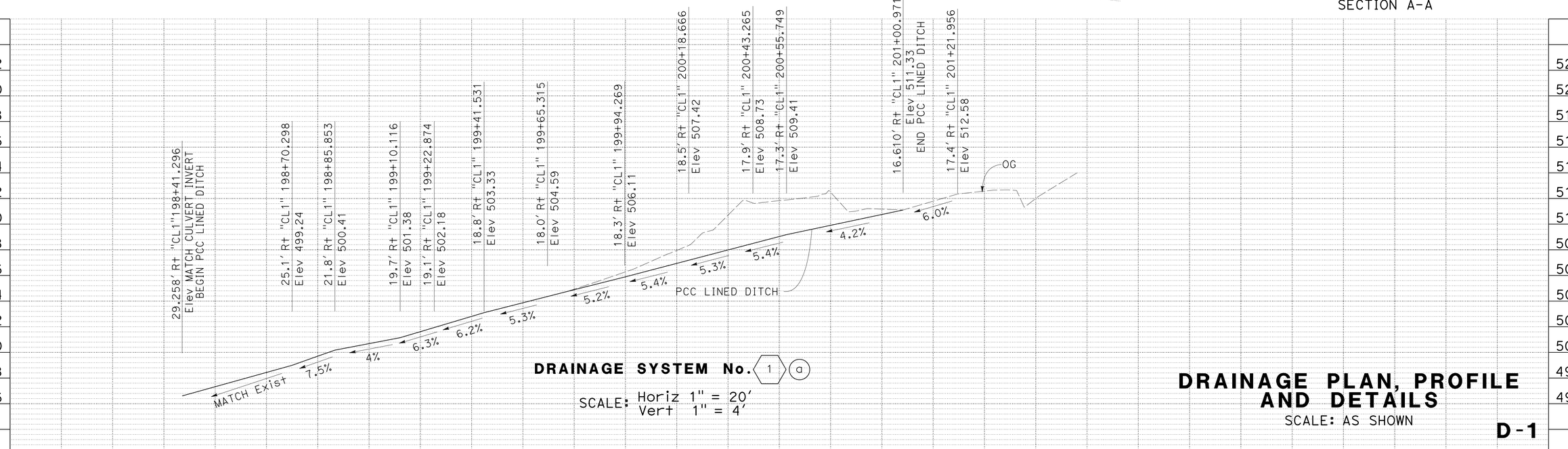

DRAINAGE SYSTEM No. 1 a

SCALE: Horiz 1" = 20'
Vert 1" = 4'

DRAINAGE PLAN, PROFILE AND DETAILS

SCALE: AS SHOWN

D-1

REVISED BY	DATE REVISED
RN	4/23/14

CALCULATED-DESIGNED BY: TOM JIANG
CHECKED BY: RON GESTUVO
FUNCTIONAL SUPERVISOR: KATHLEEN REILLY

STATE OF CALIFORNIA - DEPARTMENT OF TRANSPORTATION
Caltrans® HYDRAULICS

LAST REVISION 03-27-15
DATE PLOTTED => 13-APR-2015
TIME PLOTTED => 07:45

Dist	COUNTY	ROUTE	POST MILES TOTAL PROJECT	SHEET No.	TOTAL SHEETS
04	Son	116	39.8	5	34

REGISTERED CIVIL ENGINEER 4/6/15 DATE

4-6-15
PLANS APPROVAL DATE

REGISTERED PROFESSIONAL ENGINEER Jonathan C. Lee No. 47520 Exp. 12-31-15 CIVIL STATE OF CALIFORNIA

THE STATE OF CALIFORNIA OR ITS OFFICERS OR AGENTS SHALL NOT BE RESPONSIBLE FOR THE ACCURACY OR COMPLETENESS OF SCANNED COPIES OF THIS PLAN SHEET.

DRAINAGE QUANTITIES

DRAINAGE SHEET No.	DRAINAGE SYSTEM No. ⬡	DRAINAGE UNIT ◯	CONCRETE (DITCH LINING) CY	DESCRIPTION	STATION
D-1	1	a	17	PCC LINED DITCH	29.258′ R+ "CL1" 198+41.296 TO 16.610′ R+ 201+00.971
TOTAL			17		

STATE OF CALIFORNIA - DEPARTMENT OF TRANSPORTATION
Caltrans DESIGN

FUNCTIONAL SUPERVISOR: JONATHAN C LEE
CALCULATED-DESIGNED BY: RON GESTUVO
CHECKED BY: RODNEY NODA
REVISED BY: RN
DATE REVISED: 4/23/14

DRAINAGE QUANTITIES
DQ-1

LAST REVISION 03-16-15
DATE PLOTTED => 13-APR-2015
TIME PLOTTED => 07:45

Dist	COUNTY	ROUTE	POST MILES TOTAL PROJECT	SHEET No.	TOTAL SHEETS
04	Son	116	39.8	6	34

REGISTERED CIVIL ENGINEER 4/6/15 DATE

4-6-15
PLANS APPROVAL DATE

REGISTERED PROFESSIONAL ENGINEER Jerilyn L. Struven No. 49964 Exp. 12-31-16 CIVIL STATE OF CALIFORNIA

THE STATE OF CALIFORNIA OR ITS OFFICERS OR AGENTS SHALL NOT BE RESPONSIBLE FOR THE ACCURACY OR COMPLETENESS OF SCANNED COPIES OF THIS PLAN SHEET.

LEGEND:

CONSTRUCTION AREA SIGN DESIGNATION

NOTES:

1. EXACT LOCATION AND POSITION OF ROADSIDE SIGNS TO BE DETERMINED BY THE ENGINEER.
2. POST SIZE AND LENGTH GIVEN ARE APPROXIMATE. EXACT SIZE AND LENGTH TO BE DETERMINED BY THE ENGINEER.

STATIONARY MOUNTED CONSTRUCTION AREA SIGNS

SIGN No.	MUTCD CODE	SIGN MESSAGE	PANEL SIZE	NUMBER OF POSTS AND SIZE	NUMBER OF SIGNS
A	W20-1	ROAD WORK AHEAD	48" x 48"	(ONE) 4" x 6"	2
B	G20-2	END ROAD WORK	36" x 18"	(ONE) 4" x 4"	2

APPROVED FOR CONSTRUCTION AREA SIGN WORK ONLY

CONSTRUCTION AREA SIGNS

NO SCALE

CS-1

STATE OF CALIFORNIA - DEPARTMENT OF TRANSPORTATION
Caltrans
TRAFFIC

FUNCTIONAL SUPERVISOR: ROLAND AU-YEUNG
CALCULATED-DESIGNED BY: HENRY TAM
CHECKED BY: JERILYN STRUVEN
REVISED BY: HT
DATE REVISED: 4/23/14

LAST REVISION 12-15-14
DATE PLOTTED => 13-APR-2015
TIME PLOTTED => 07:45

Dist	COUNTY	ROUTE	POST MILES TOTAL PROJECT	SHEET No.	TOTAL SHEETS
04	Son	116	39.8	7	34

REGISTERED CIVIL ENGINEER 4/6/15 DATE

4-6-15
PLANS APPROVAL DATE

REGISTERED PROFESSIONAL ENGINEER Jonathan C. Lee No. 47520 Exp. 12-31-15 CIVIL STATE OF CALIFORNIA

THE STATE OF CALIFORNIA OR ITS OFFICERS OR AGENTS SHALL NOT BE RESPONSIBLE FOR THE ACCURACY OR COMPLETENESS OF SCANNED COPIES OF THIS PLAN SHEET.

NOTE:

FOR ACCURATE RIGHT OF WAY DATA, CONTACT RIGHT OF WAY ENGINEERING AT THE DISTRICT OFFICE.

NOTE:

1. LOCATION OF PORTABLE CHANGEABLE MESSAGE SIGN (2 EA) TO BE DETERMINED BY THE ENGINEER.

LEGEND:

- CHANNELIZER (SURFACE MOUNTED)
- CONSTRUCTION AREA
- (No.) TEMPORARY PAVEMENT DELINEATION DETAIL

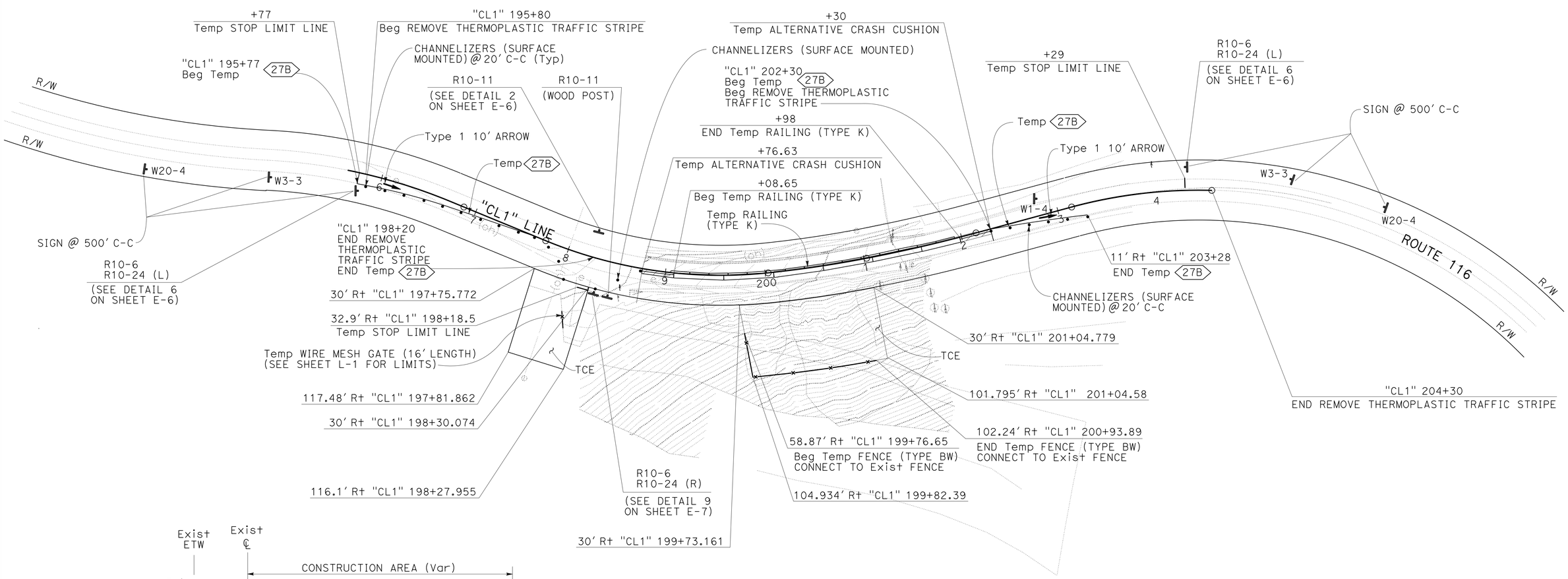

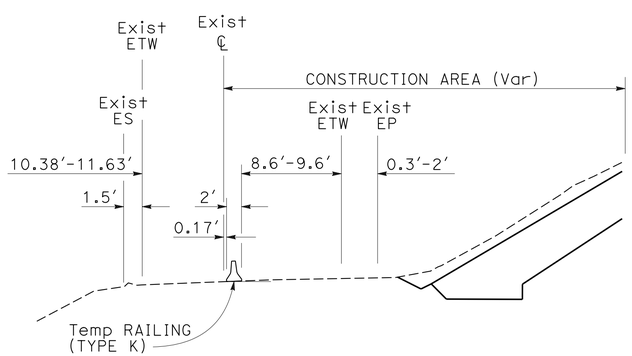

"CL1" 199+08.65 TO 201+98

CONSTRUCTION AREA SIGNS (TRAFFIC HANDLING)

SIGN No.	PANEL SIZE	NUMBER OF POSTS AND SIZE	NUMBER OF SIGNS
W3-3	36" x 36"	1 - 4" x 6"	2
R10-6	24" x 36"	ON SIGNAL POLE	3
R10-24	9" x 15"		
W20-4	48" x 48"	2 - 4" x 6"	2
W1-4	30" x 30"	1 - 4" x 4"	1
R10-11	24" x 30"	ON SIGNAL POLE	1
R10-11	24" x 30"	1 - 4" x 6"	1

TRAFFIC HANDLING PLAN

SCALE: 1" = 50'

APPROVED FOR STAGE CONSTRUCTION AND TRAFFIC HANDLING WORK ONLY

TH-1

REVISED BY	DATE REVISED
RN	4/23/14

CALCULATED-DESIGNED BY: RON GESTUVO
CHECKED BY: RODNEY NODA
FUNCTIONAL SUPERVISOR: JONATHAN C LEE

STATE OF CALIFORNIA - DEPARTMENT OF TRANSPORTATION
Caltrans
DESIGN

LAST REVISION 03-27-15
DATE PLOTTED => 13-APR-2015
TIME PLOTTED => 07:45

Dist	COUNTY	ROUTE	POST MILES TOTAL PROJECT	SHEET No.	TOTAL SHEETS
04	Son	116	39.8	8	34

REGISTERED CIVIL ENGINEER 4/6/15 DATE

4-6-15
PLANS APPROVAL DATE

REGISTERED PROFESSIONAL ENGINEER Jonathan C. Lee No. 47520 Exp. 12-31-15 CIVIL STATE OF CALIFORNIA

THE STATE OF CALIFORNIA OR ITS OFFICERS OR AGENTS SHALL NOT BE RESPONSIBLE FOR THE ACCURACY OR COMPLETENESS OF SCANNED COPIES OF THIS PLAN SHEET.

TRAFFIC HANDLING (TEMPORARY)

SHEET No.	STATION	DETAIL No.	TEMPORARY TRAFFIC STRIPE (PAINT)	CHANNELIZER (SURFACE MOUNTED)	TEMPORARY PAVEMENT MARKING (PAINT)		TEMPORARY CRASH CUSHION (ALTERNATIVE)	TEMPORARY RAILING (TYPE K)
					ARROW TYPE 1 (10')	24" LIMIT LINE		
			LF	EA	SQFT		EA	LF
TH-1	"CL1" 195+77					22		
	"CL1" 195+77 to 198+20	27B	242					
	"CL1" 195+77 to 198+20			13				
	"CL1" 196+00				14			
	32.9' R+ "CL1" 198+18.5					22		
	"CL1" 198+76.63			3			1	
	"CL1" 202+30						1	
	"CL1" 203+00				14			
	"CL1" 202+30 to 203+28	27B	98	5				
	"CL1" 204+29					22		
	"CL1" 199+08.65 to 201+98							300
SUBTOTAL			340	21	28	66	2	300
TOTAL			340	21	94		2	300

DELINEATOR

STATION	CLASS 2 TYPE E
	EA
30' R+ "CL1" 197+75.75 TO 201+17	10
30' L+ "CL1" 197+75.75 TO 201+17	10
TOTAL	20

ROCK SLOPE PROTECTION

STATION	ROCK SLOPE PROTECTION (1/2 T METHOD A)	ROCK SLOPE PROTECTION FABRIC (CLASS 8)
	CY	SQYD
"CL1" 200+01.223 TO 200+98.644	1460	830
TOTAL	1460	830

TEMPORARY FENCE AND GATE

SHEET No.	STATION	SILT FENCE	TYPE ESA	TYPE BW	FENCE (TYPE CL-6)	4' CHAIN LINK GATE (TYPE CL-6)	16' WIRE MESH GATE
		LF				EA	
L-1	30' R+ "CL1" 196+48 TO 204+56	1180	1180				
	30' L+ "CL1" 196+48 TO 204+56	800	800				
	58.87' R+ "CL1" 199+76.65 TO 104.93' R+ 199+82.39			50			
	104.93' R+ "CL1" 199+82.39 TO 102.24' R+ 200+93.89			130			
	53.40' R+ "CL1" 198+09.96						1
E-3	SEE SHEET E-3				53	1	
WPC-1	FROM WPC PLANS	600					
TOTAL		2580	1980	180	53	1	1

FENCE

STATION	REMOVE FENCE (TYPE BW)	FENCE (TYPE BW 5 STRAND METAL POST)
	LF	
58.87' R+ "CL1" 199+76.65 TO 102.24' R+ 200+93.89	134	144
53.40' R+ "CL1" 198+09.96 TO 81.37' R+ 198+19.43	16	16
TOTAL	150	160

EXCAVATION

STATION	DITCH EXCAVATION	ROADWAY EXCAVATION (SLIDE REMOVAL)
	CY	
29.258' R+ "CL1" 198+41.296 TO 26.331' R+ 200+01.223	10	
26.331' R+ "CL1" 200+01.223 TO 24.932' R+ 200+98.644		1803
24.932' R+ "CL1" 200+98.644 TO 16.610' R+ 201+00.971	1	
TOTAL	11	1803

PAVEMENT DELINEATION

STATION	DETAIL	REMOVE YELLOW THERMOPLASTIC TRAFFIC STRUPE	REMOVE PAVEMENT MARKER	4" THERMOPLASTIC TRAFFIC STRIPE (YELLOW)	PAVEMENT MARKER (RETROREFLECTIVE) (TYPE D)
		LF	EA	LF	EA
"CL1" 195+80 TO 198+20	22	480	22	480	22
"CL1" 202+30 TO 204+30	22	400	20	400	20
TOTAL		880	42	880	42

SUMMARY OF QUANTITIES

Q-1

REVISED BY	DATE REVISED
RN	4/23/14

CALCULATED-DESIGNED BY	CHECKED BY
RON GESTUVO	RODNEY NODA

FUNCTIONAL SUPERVISOR: JONATHAN C LEE

STATE OF CALIFORNIA - DEPARTMENT OF TRANSPORTATION

Caltrans® DESIGN

LAST REVISION 03-27-15 | DATE PLOTTED => 13-APR-2015 TIME PLOTTED => 07:45

Dist	COUNTY	ROUTE	POST MILES TOTAL PROJECT	SHEET No.	TOTAL SHEETS
04	Son	116	39.8	9	34

LICENSED LANDSCAPE ARCHITECT

4-6-15
PLANS APPROVAL DATE

LICENSED LANDSCAPE ARCHITECT
CHRIS PADICK No. 4255
Signature
11-30-16
Renewal Date
1-28-15
Date
STATE OF CALIFORNIA

THE STATE OF CALIFORNIA OR ITS OFFICERS OR AGENTS SHALL NOT BE RESPONSIBLE FOR THE ACCURACY OR COMPLETENESS OF SCANNED COPIES OF THIS PLAN SHEET.

EROSION CONTROL TYPE 1

SEQUENCE	ITEM	MATERIAL		APPLICATION RATE	DEPTH
		DESCRIPTION	TYPE		
STEP 1	COMPOST	COMPOST	MEDIUM	124 CY/ACRE	
STEP 2	INCORPORATE MATERIALS	COMPOST			4"
STEP 3	HYDROSEED	SEED	MIX 1	64 LB/ACRE	
		FIBER	WOOD	2000 LB/ACRE	
STEP 4	HYDROMULCH	FIBER	WOOD	2000 LB/ACRE	
		TACKIFIER	PSYLLIUM	200 LB/ACRE	

EROSION CONTROL TYPE 2

SEQUENCE	ITEM	MATERIAL		APPLICATION RATE	DEPTH
		DESCRIPTION	TYPE		
STEP 1	COMPOST	COMPOST	MEDIUM	62 CY/ACRE	
STEP 2	ROLLED EROSION CONTROL PRODUCT (NETTING)		A		
STEP 3	HYDROSEED	SEED	MIX 1	64 LB/ACRE	
		FIBER	WOOD	2000 LB/ACRE	
STEP 4	HYDROMULCH	FIBER	WOOD	2000 LB/ACRE	
		TACKIFIER	PSYLLIUM	200 LB/ACRE	

FIBER ROLLS

SEQUENCE	ITEM	MATERIAL		REMARKS
		DESCRIPTION	TYPE	
FIBER ROLLS MUST BE INSTALLED AFTER COMPOST AND ROLLED EROSION CONTROL PRODUCT (NETTING) AND BEFORE HYDROSEEDING.	FIBER ROLLS	FIBER ROLL	TYPE B 8" TO 10" Dia	TYPE 2 FIBER ROLL INSTALLATION

SEED MIX TYPE 1

SEED	BOTANICAL NAME (COMMON NAME)	PERCENT GERMINATION (MINIMUM)	POUNDS PURE LIVE SEED PER ACRE (SLOPE MEASUREMENT)
MIX 1	ACHILLEA MILLEFOLIUM[1] (WESTERN YARROW)	56	7
	BROMUS CARINATUS[1] (CALIFORNIA BROME)	75	9
	ELYMUS GLAUCUS, BERKELEY[1] (BLUE WILDRYE, BERKELEY)	56	10
	HORDEUM BRACHYANTHERUM[1] (MEADOW BARLEY)	53	10
	NASSELLA CERNUA (NODDING NEEDLEGRASS)	46	8
	NASSELLA PULCHRA (PURPLE NEEDLEGRASS)	53	10
	TRIFOLIUM WILDENOVII (TOMCAT CLOVER)	53	5
	VULPIA MICROSTACHYS (SMALL FESCUE)	53	5
	TOTALS		64

[1] SEED PRODUCED IN CALIFORNIA ONLY.

EROSION CONTROL LEGEND
ECL-1

STATE OF CALIFORNIA - DEPARTMENT OF TRANSPORTATION
Caltrans® WATER QUALITY

SENIOR LANDSCAPE ARCHITECT: DAVID YAM
CALCULATED-DESIGNED BY: CHRIS PADICK
CHECKED BY: ALEX MCDONALD
REVISED BY: CP
DATE REVISED: 1/8/15

LAST REVISION 01-08-15
DATE PLOTTED => 13-APR-2015
TIME PLOTTED => 07:45

Dist	COUNTY	ROUTE	POST MILES TOTAL PROJECT	SHEET No.	TOTAL SHEETS
04	Son	116	39.8	10	34

LICENSED LANDSCAPE ARCHITECT

4-6-15
PLANS APPROVAL DATE

LICENSED LANDSCAPE ARCHITECT
CHRIS PADICK No. 4255
Signature
11-30-16
Renewal Date
1-28-15
Date
STATE OF CALIFORNIA

THE STATE OF CALIFORNIA OR ITS OFFICERS OR AGENTS SHALL NOT BE RESPONSIBLE FOR THE ACCURACY OR COMPLETENESS OF SCANNED COPIES OF THIS PLAN SHEET.

NOTE:

FOR ACCURATE RIGHT OF WAY DATA, CONTACT
RIGHT OF WAY ENGINEERING AT THE DISTRICT OFFICE.

LEGEND:

EROSION CONTROL TYPE 1

COMPOST
INCORPORATE MATERIAL
HYDROSEED (SEED MIX 1)
HYDROMULCH

EROSION CONTROL TYPE 2

COMPOST
ROLLED EROSION CONTROL PRODUCT (NETTING)
HYDROSEED (SEED MIX 1)
HYDROMULCH

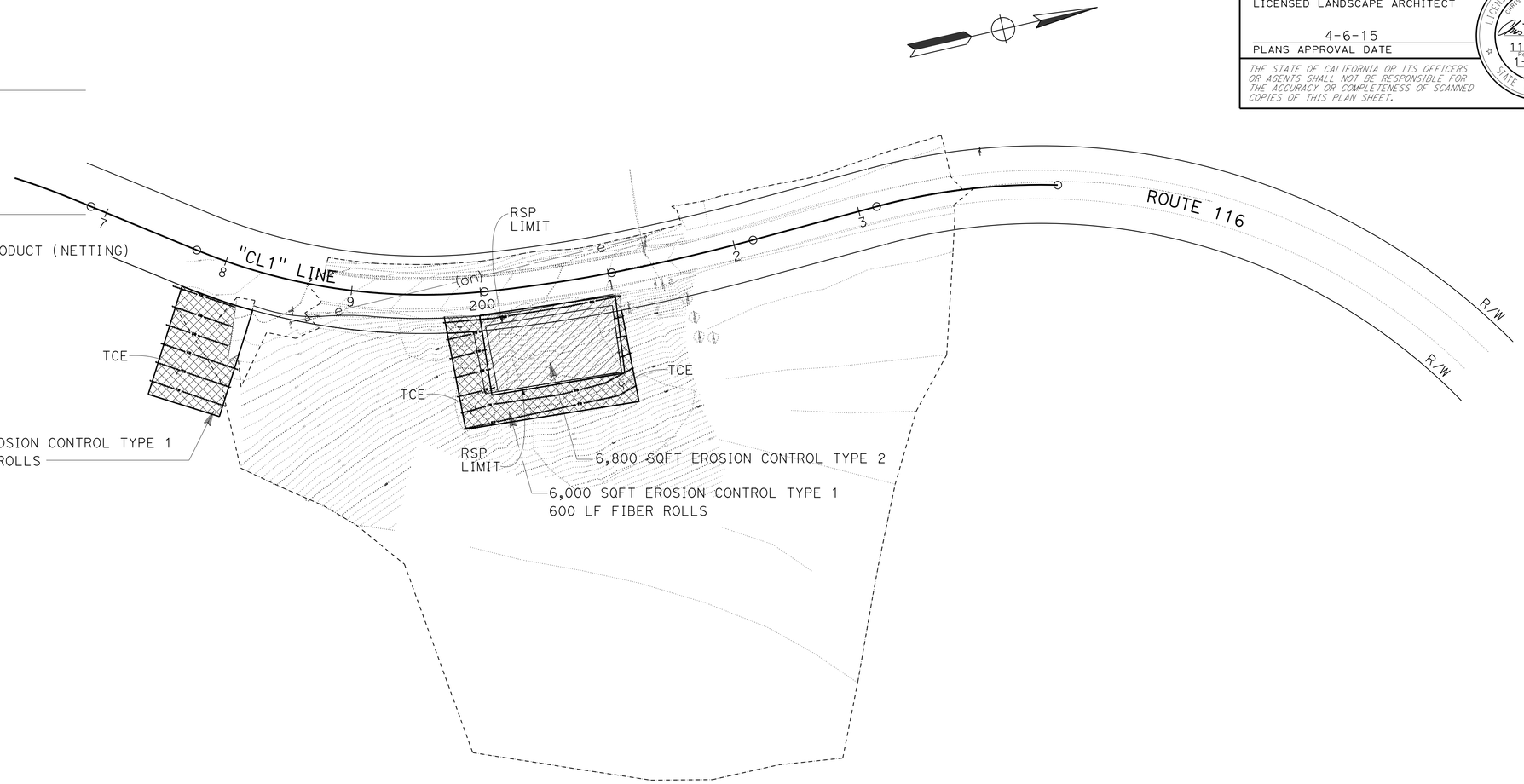

APPROVED FOR EROSION CONTROL WORK ONLY

EROSION CONTROL PLAN

SCALE 1" = 50'

EC-1

REVISED BY	DATE REVISED
CP	3/2/15

CHRIS PADICK — ALEX MCDONALD

CALCULATED-DESIGNED BY — CHECKED BY

SENIOR LANDSCAPE ARCHITECT — DAVID YAM

STATE OF CALIFORNIA - DEPARTMENT OF TRANSPORTATION
Caltrans® WATER QUALITY

LAST REVISION 03-02-15 | DATE PLOTTED => 13-APR-2015 | TIME PLOTTED => 07:45

Dist	COUNTY	ROUTE	POST MILES TOTAL PROJECT	SHEET No.	TOTAL SHEETS
04	Son	116	39.8	11	34

LICENSED LANDSCAPE ARCHITECT

4-6-15
PLANS APPROVAL DATE

LICENSED LANDSCAPE ARCHITECT CHRIS PADICK No. 4755 STATE OF CALIFORNIA
Signature
11-30-16
Renewal Date
1-28-15
Date

THE STATE OF CALIFORNIA OR ITS OFFICERS OR AGENTS SHALL NOT BE RESPONSIBLE FOR THE ACCURACY OR COMPLETENESS OF SCANNED COPIES OF THIS PLAN SHEET.

NOTES:

1. STOCKPILE THE EXISTING TOP 18" OF SELECT MATERIAL (LOCAL TOP SOIL).
2. DURING PLACEMENT OF RSP, USE STOCKPILED MATERIAL TO COVER AND FILL VOIDS AND INTERSTICES WITHIN TOP 18" OF RSP-SEE DETAIL 'CROSS SECTION-SOIL COVERED ROCK SLOPE PROTECTION' THIS SHEET.
3. RSP SHALL BE TAN/BROWN IN COLOR AS DIRECTED BY THE ENGINEER.

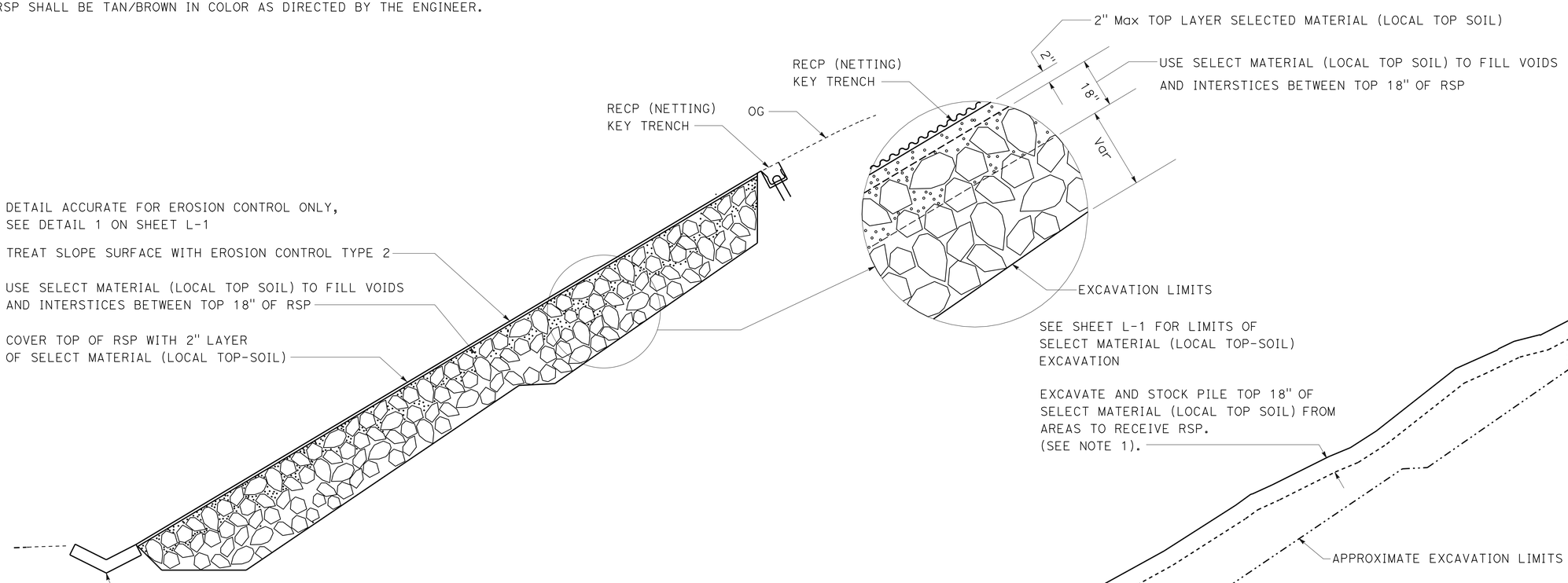

CROSS SECTION-SOIL COVERED ROCK SLOPE PROTECTION

CROSS SECTION-SELECT MATERIAL (LOCAL TOP SOIL) EXCAVATION LIMIT

EROSION CONTROL QUANTITIES

SHEET	LOCATION	HYDROSEED	HYDROMULCH	COMPOST	INCORPORATE MATERIAL	ROLLED EROSION CONTROL PRODUCT (NETTING)	FIBER ROLL	MOVE-IN/MOVE-OUT (EROSION CONTROL)
		SQFT					LF	EA
EC-1	"CL1" 197+70 TO 198+30	5000	5000	5000	5000		350	
EC-1	"CL1" 199+65 TO 201+10	6000	6000	6000	6000		600	
	"CL1" 199+95 TO 201+10	6800	6800	6800		6800		
TOTAL		17800	17800	17800	11000	6800	950	4

APPROVED FOR EROSION CONTROL WORK ONLY

EROSION CONTROL DETAILS AND QUANTITIES

NO SCALE

ECD-1

STATE OF CALIFORNIA - DEPARTMENT OF TRANSPORTATION
Caltrans® WATER QUALITY

SENIOR LANDSCAPE ARCHITECT: DAVID YAM
CALCULATED-DESIGNED BY: CHRIS PADICK
CHECKED BY: ALEX MCDONALD
REVISED BY: CP
DATE REVISED: 3/2/15

LAST REVISION 03-16-15
DATE PLOTTED => 13-APR-2015
TIME PLOTTED => 07:45

Dist	COUNTY	ROUTE	POST MILES TOTAL PROJECT	SHEET No.	TOTAL SHEETS
04	Son	116	39.8	12	34

Elaine Wong 4/6/15
REGISTERED ELECTRICAL ENGINEER DATE

4-6-15
PLANS APPROVAL DATE

REGISTERED PROFESSIONAL ENGINEER Elaine T. Wong No. 13753 Exp. 6-30-15 ELECTRICAL STATE OF CALIFORNIA

THE STATE OF CALIFORNIA OR ITS OFFICERS OR AGENTS SHALL NOT BE RESPONSIBLE FOR THE ACCURACY OR COMPLETENESS OF SCANNED COPIES OF THIS PLAN SHEET.

ELECTRICAL INDEX

SHEET No.	TITLE
E-1	ELECTRICAL INDEX, NOTES, LEGEND AND ABBREVIATIONS
E-2 TO E-5	TEMPORARY SIGNAL SYSTEMS
E-6 TO E-7	ELECTRICAL DETAILS
E-8	ELECTRICAL QUANTITIES

NOTES:

1. PROVIDE GUY WIRE, GUY GUARDS, AND ANCHOR AS REQUIRED.
2. ESTABLISH CONTINUOUS GROUND WITH SYSTEM GROUND TO ALL METAL PARTS IN SYSTEMS BY BONDING JUMPERS AND CONDUITS.
3. A GROUND ROD SHALL BE INSTALLED IN THE PULL BOX ADJACENT TO WOOD POLES AND BOND TO RIGID METAL CONDUIT.
4. REFER TO SES SHEETS FOR TEMPORARY WOOD POLE DETAILS.

LEGEND:

1. INSTALL DEPARTMENT-FURNISHED MODEL 2070 CONTROLLER ASSEMBLY WITH MODEL 332 CABINET. SEE TEMPORARY FOUNDATION PLATFORM DETAIL ON SHEET E-6.
2. INSTALL WOOD POLE WITH 165 WATT LED LUMINAIRE, TYPE B PBA WITH SIGN FOR BICYCLIST. SEE APPLICABLE DETAIL 6 ON SHEET E-6. THE WOOD POLE MUST HAVE A MINIMUM RADIAL CENTERLINE CLEARANCE OF 10 FEET FROM EXISTING PG&E OVERHEAD LINE.
3. INSTALL 2#8 (120 V EB FLASHING BEACON).
4. INSTALL 2#8 (120 V EB FLASHING BEACON),1 DLC.
5. INSTALL 2#8 (120 V EB FLASHING BEACON),
   2#8 (240 V LIGHTING),
   1#10 (120 V SIGNAL NEUTRAL),
   8#12 (3-Ø1, 2-PBA(Ø1), 3-SPARES),
   2 DLC.
6. INSTALL 2#8 (120 V EB FLASHING BEACON)
   2 DLC.
7. INSTALL 2#8 (120 V EB FLASHING BEACON)
   2#8 (240 V LIGHTING),
   1#10 (120 V SIGNAL NEUTRAL),
   16#12 (3-Ø1, 2-PBA(Ø1), 3-Ø3, 2-PBA(Ø3), 6-SPARES),
   2 DLC.
8. INSTALL 2#8 (120 V WB FLASHING BEACON).
9. INSTALL 2#8 (120 V WB FLASHING BEACON),
   1 DLC.
10. INSTALL 2#8 (120 V WB FLASHING BEACON),
    2#8 (240 V LIGHTING),
    1#10 (120 V SIGNAL NEUTRAL),
    8#12 (3-Ø2, 2-PBA(Ø2), 3-SPARES),
    2 DLC.
11. INSTALL 2"C, 2#6 (120 V SERVICE TO CONTROLLER),
    2#8 (120 V EB FLASHING BEACON),
    2#8 (120 V WB FLASHING BEACON),
    2#8 (240 V LIGHTING),
    1#10 (120 V SIGNAL NEUTRAL).
12. INSTALL 2"C, 2#6 (120 V SERVICE TO CONTROLLER),
    3#10 (120 V SIGNAL NEUTRAL),
    21#12 (3-Ø1, 2-PBA(Ø1), 3-Ø2, 2-PBA(Ø2), 3-Ø3,
    2-PBA(Ø3), 6-SPARES),
    4 DLC.
13. INSTALL 5 TURNS TYPE D LOOP.
14. INSTALL 4 FEET TEMPORARY GATE (TYPE CL-6),
    53 FEET TEMPORARY FENCE (TYPE CL-6),
    PART OF ROADWAY PAY ITEM.
15. INSTALL 1#10 (120 V SIGNAL NEUTRAL),
    6#12 (3-Ø2, 3-SPARES).
16. INSTALL 2#8 (240 V LIGHTING),
    1#10 (120 V SIGNAL NEUTRAL),
    6#12 (3-Ø2, 3-SPARES).
17. INSTALL 1#10 (120 V SIGNAL NEUTRAL),
    6#12 (3-Ø1,3-SPARES).
18. INSTALL 1#10 (120 V SIGNAL NEUTRAL),
    9#12 (3-Ø1,3-Ø3, 3-SPARES).
19. INSTALL 3"C, 2#8 (120 V WB FLASHING BEACON),
    2#8 (240 V LIGHTING).
    2#10 (120 V SIGNAL NEUTRAL),
    17#12 (3-Ø1, 3-Ø2, 3-Ø3, 2-PBA(Ø2), 6-SPARES),
    2 DLC.
20. INSTALL, 2#8 (120 V EB FLASHING BEACON),
    2#8 (120 V WB FLASHING BEACON),
    2#8 (240 V LIGHTING),
    3#10 (120 V SIGNAL NEUTRAL),
    21#12 (3-Ø1, 3-Ø2, 3-Ø3, 2-PBA(*1), 2-PBA(Ø2),
    2-PBA(Ø3), 6-SPARES),
    4 DLC.
21. INSTALL, 2"C, 3#4, 1#8 (G).
22. INSTALL WOOD POLE WITH SIGNAL HEAD, SEE APPLICABLE DETAIL 3 ON SHEET E-6 . THE WOOD POLE MUST HAVE A MINIMUM RADIAL CENTERLINE CLEARANCE OF 10 FEET FROM EXISTING PG&E OVERHEAD LINE.
23. INSTALL WOOD POLE WITH SIGNAL HEAD, AND PBA FOR BICYCLIST, SEE APPLICABLE DETAIL 9 ON SHEET E-7. THE WOOD POLE MUST HAVE A MINIMUM RADIAL CENTERLINE CLEARANCE OF 10 FEET FROM EXISTING PG&E OVERHEAD LINE.
24. INSTALL WOOD POLE WITH 165 WATT LED LUMINAIRE. SEE APPLICABLE DETAIL 2 ON SHEET E-6 . THE WOOD POLE MAST ARM AND FIXTURE MUST HAVE A MINIMUM RADIAL CENTERLINE CLEARANCE OF 10 FEET FROM EXISTING PG&E OVERHEAD LINE.
25. SEE DETAIL 4 ON SHEET E-6.
26. INSTALL 2"C, 2#8 (240 V LIGHTING),
    1#10 (120 V SIGNAL NEUTRAL),
    6#12 (3-Ø2, 3-SPARES).
27. INSTALL WOOD POLE WITH 165 WATT LED LUMINAIRE AND R10-11 SIGN, SEE APPLICABLE DETAIL 2 ON SHEET E-6. THE WOOD POLE MAST ARM AND FIXTURE MUST HAVE A MINIMUM RADIAL CENTERLINE CLEARANCE OF 10 FEET FROM EXISTING PG&E OVERHEAD.
28. INSTALL WOOD POLE WITH SIGNAL HEAD AND PBA, SEE APPLICABLE DETAIL 9 ON SHEET E-7 EXCEPT INSTALL R10-4 SIGN IN PLACE OF R10-24 SIGN. THE WOOD POLE MUST HAVE A MINIMUM RADIAL CENTERLINE CLEARANCE OF 10 FEET FROM EXISTING PG&E OVERHEAD LINE.

PROPOSED

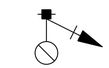
WOOD POLE WITH 165 W LED LUMINAIRE (ON MASTARM), SIGNAL HEAD, PBA, R10-6 SIGN AND CONDUIT RISER. SEE DETAIL 6 ON SHEET E-6.

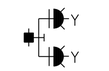

ADVANCE FLASHING BEACON WITH A W3-3 SIGN AND SIGN LIGHTING MOUNTED ON A WOOD POLE. SEE APPLICABLE DETAIL 1 ON SHEET E-6.

(G) GENERATOR WITH A BACK-UP GENERATOR

(FUEL) FUEL TANK

—×———×— TEMPORARY CHAIN LINK FENCE (TYPE CL-6) WITH 4' CHAIN LINK GATE (TYPE CL-6)

—— F —— FUEL LINE

—— DB —— DIRECT BURIAL CABLE

ABBREVIATION:

UPS UNINTERRUPTIBLE POWER SUPPLY

ELECTRICAL INDEX, NOTES, LEGEND, AND ABBREVIATIONS

E-1

REVISED BY	DATE REVISED
AK	1/8/15

CALCULATED-DESIGNED BY: ALEX KHOO
CHECKED BY: ELAINE WONG
FUNCTIONAL SUPERVISOR: BEHZAD GOLEMOHAMMADI

STATE OF CALIFORNIA - DEPARTMENT OF TRANSPORTATION
Caltrans
ELECTRICAL

LAST REVISION 01-08-15 | DATE PLOTTED => 13-APR-2015 | TIME PLOTTED => 07:45

NOTE:

FOR ACCURATE RIGHT OF WAY DATA, CONTACT
RIGHT OF WAY ENGINEERING AT THE DISTRICT OFFICE.

Dist	COUNTY	ROUTE	POST MILES TOTAL PROJECT	SHEET No.	TOTAL SHEETS
04	Son	116	39.8	13	34

REGISTERED ELECTRICAL ENGINEER — DATE 4/6/15

PLANS APPROVAL DATE 4-6-15

REGISTERED PROFESSIONAL ENGINEER — Elaine T. Wong — No. 13753 — Exp. 6-30-15 — ELECTRICAL — STATE OF CALIFORNIA

THE STATE OF CALIFORNIA OR ITS OFFICERS OR AGENTS SHALL NOT BE RESPONSIBLE FOR THE ACCURACY OR COMPLETENESS OF SCANNED COPIES OF THIS PLAN SHEET.

Ø1 → ← Ø2 ↑ Ø3

TRAFFIC PHRASE DIAGRAM

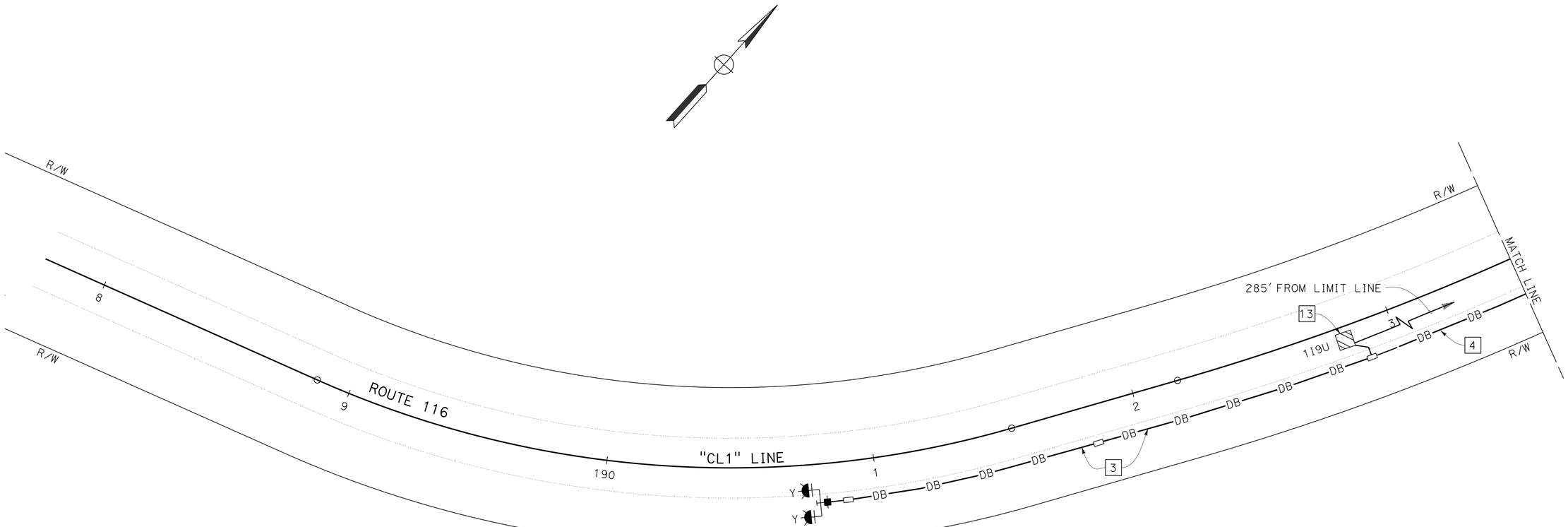

TEMPORARY SIGNAL SYSTEMS

SCALE: 1" = 20'

FOR NOTES, ABBREVIATIONS AND LEGEND, SEE SHEET E-1

E-2

REVISED BY	AK
DATE REVISED	1/8/15
CALCULATED-DESIGNED BY	ALEX KHOO
CHECKED BY	ELAINE WONG
FUNCTIONAL SUPERVISOR	BEHZAD GOLEMOHAMMADI

STATE OF CALIFORNIA - DEPARTMENT OF TRANSPORTATION

Caltrans

ELECTRICAL

LAST REVISION | DATE PLOTTED => 13-APR-2015
10-27-14 | TIME PLOTTED => 07:45

Dist	COUNTY	ROUTE	POST MILES TOTAL PROJECT	SHEET No.	TOTAL SHEETS
04	Son	116	39.8	14	34

REGISTERED ELECTRICAL ENGINEER 4/6/15 DATE

4-6-15
PLANS APPROVAL DATE

REGISTERED PROFESSIONAL ENGINEER Elaine T. Wong No. 13753 Exp. 6-30-15 ELECTRICAL STATE OF CALIFORNIA

THE STATE OF CALIFORNIA OR ITS OFFICERS OR AGENTS SHALL NOT BE RESPONSIBLE FOR THE ACCURACY OR COMPLETENESS OF SCANNED COPIES OF THIS PLAN SHEET.

NOTE:

FOR ACCURATE RIGHT OF WAY DATA, CONTACT RIGHT OF WAY ENGINEERING AT THE DISTRICT OFFICE.

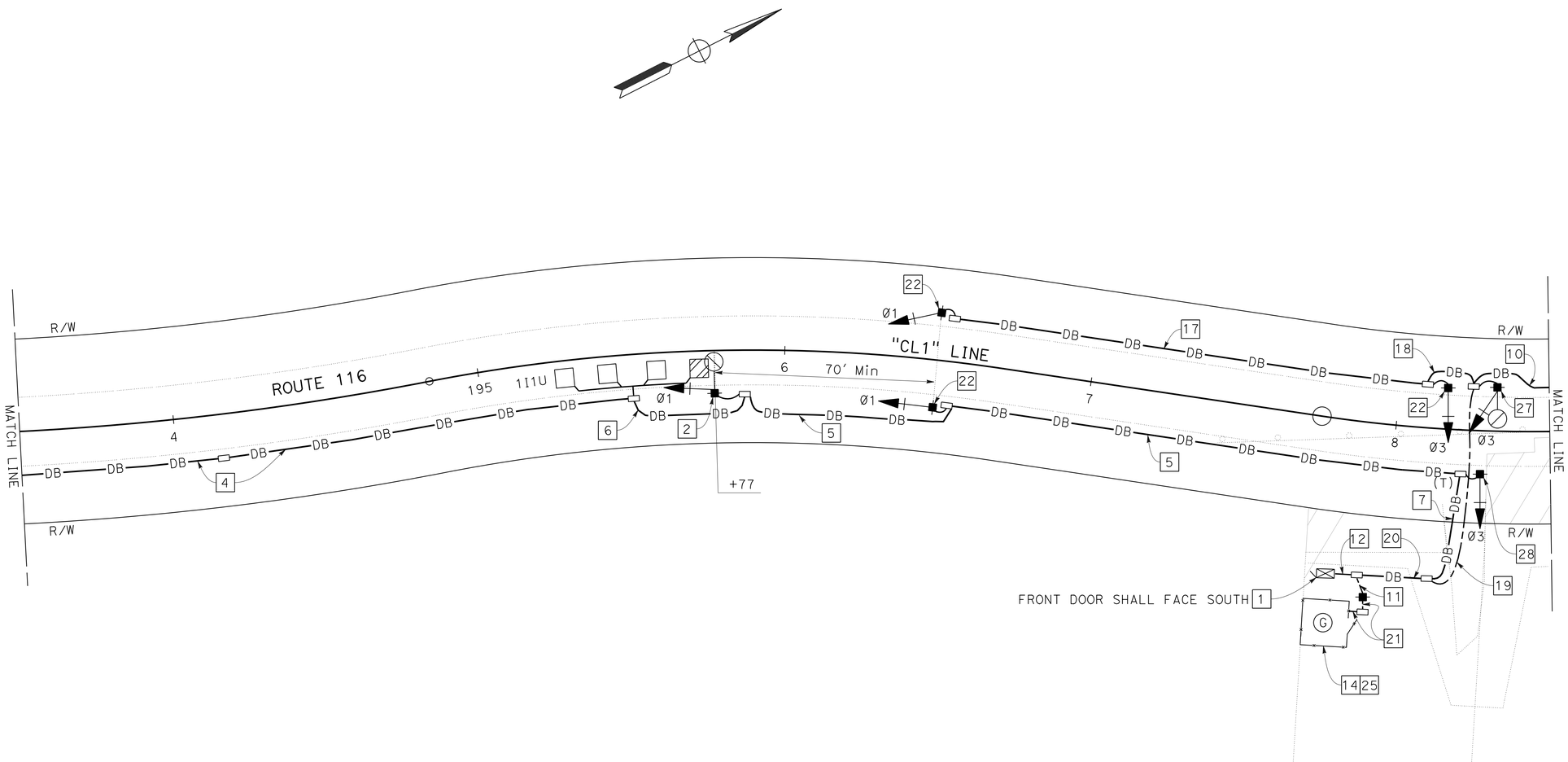

TEMPORARY SIGNAL SYSTEMS

SCALE: 1" = 20'

FOR NOTES, ABBREVIATIONS AND LEGEND, SEE SHEET E-1

E-3

STATE OF CALIFORNIA - DEPARTMENT OF TRANSPORTATION

Caltrans®

ELECTRICAL

FUNCTIONAL SUPERVISOR: BEHZAD GOLEMOHAMMADI

CALCULATED-DESIGNED BY: ALEX KHOO

CHECKED BY: ELAINE WONG

REVISED BY: AK

DATE REVISED: 1/8/15

LAST REVISION: 10-09-14

DATE PLOTTED => 13-APR-2015

TIME PLOTTED => 07:45

Dist	COUNTY	ROUTE	POST MILES TOTAL PROJECT	SHEET No.	TOTAL SHEETS
04	Son	116	39.8	15	34

REGISTERED ELECTRICAL ENGINEER — DATE 4/6/15

PLANS APPROVAL DATE 4-6-15

REGISTERED PROFESSIONAL ENGINEER — Elaine T. Wong — No. 13753 — Exp. 6-30-15 — ELECTRICAL — STATE OF CALIFORNIA

THE STATE OF CALIFORNIA OR ITS OFFICERS OR AGENTS SHALL NOT BE RESPONSIBLE FOR THE ACCURACY OR COMPLETENESS OF SCANNED COPIES OF THIS PLAN SHEET.

NOTE:

FOR ACCURATE RIGHT OF WAY DATA, CONTACT RIGHT OF WAY ENGINEERING AT THE DISTRICT OFFICE.

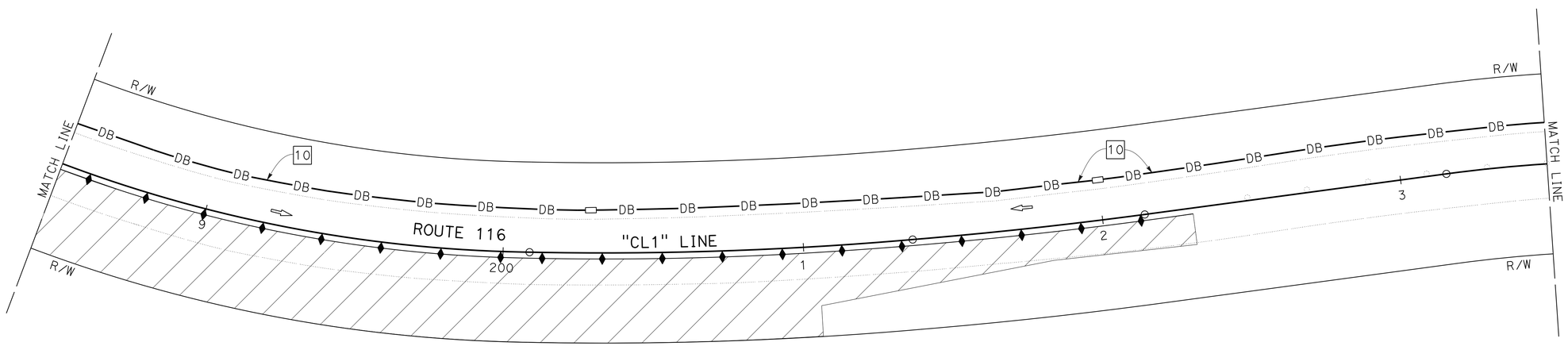

TEMPORARY SIGNAL SYSTEMS

SCALE: 1" = 20'

FOR NOTES, ABBREVIATIONS AND LEGEND, SEE SHEET E-1

E-4

STATE OF CALIFORNIA - DEPARTMENT OF TRANSPORTATION

Caltrans

ELECTRICAL

FUNCTIONAL SUPERVISOR: BEHZAD GOLEMOHAMMADI

CALCULATED-DESIGNED BY: ALEX KHOO

CHECKED BY: ELAINE WONG

REVISED BY: AK

DATE REVISED: 1/8/15

LAST REVISION: 10-27-14

DATE PLOTTED => 13-APR-2015

TIME PLOTTED => 07:45

Dist	COUNTY	ROUTE	POST MILES TOTAL PROJECT	SHEET No.	TOTAL SHEETS
04	Son	116	39.8	16	34

REGISTERED ELECTRICAL ENGINEER 4/6/15 DATE

4-6-15
PLANS APPROVAL DATE

REGISTERED PROFESSIONAL ENGINEER Elaine T. Wong No. 13753 Exp. 6-30-15 ELECTRICAL STATE OF CALIFORNIA

THE STATE OF CALIFORNIA OR ITS OFFICERS OR AGENTS SHALL NOT BE RESPONSIBLE FOR THE ACCURACY OR COMPLETENESS OF SCANNED COPIES OF THIS PLAN SHEET.

NOTE:

FOR ACCURATE RIGHT OF WAY DATA, CONTACT RIGHT OF WAY ENGINEERING AT THE DISTRICT OFFICE.

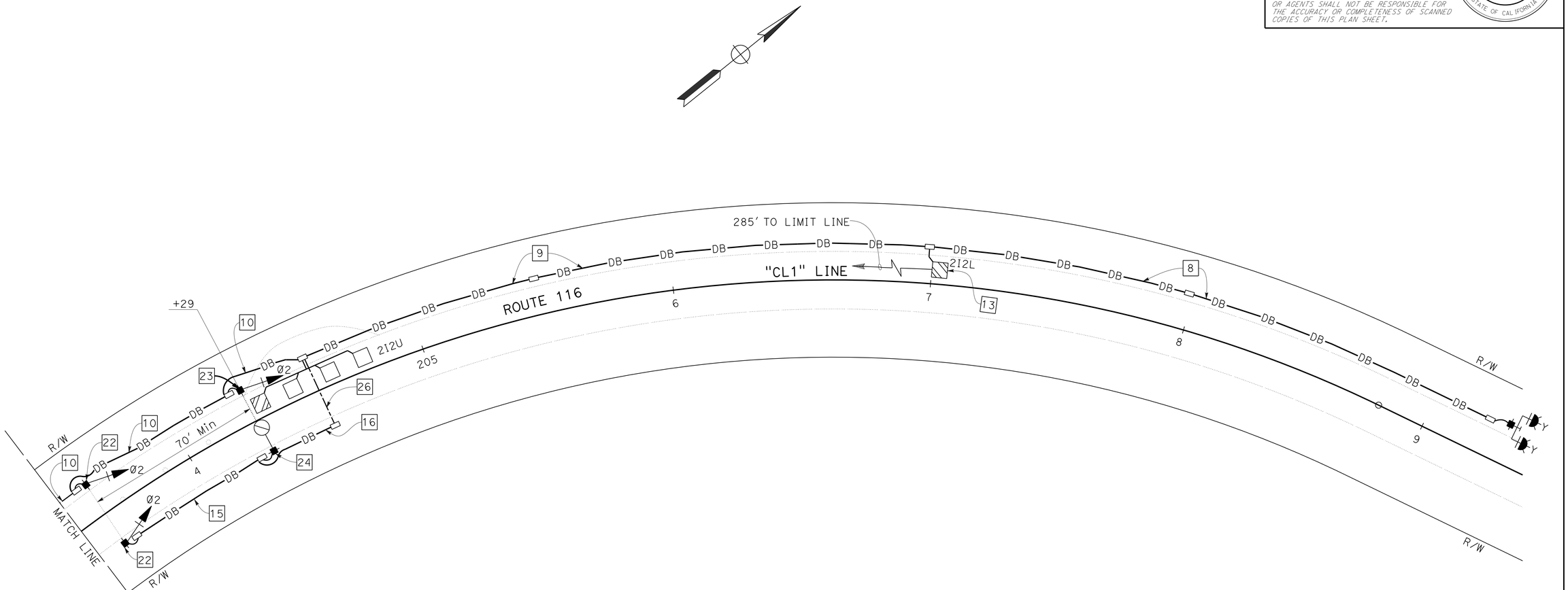

TEMPORARY SIGNAL SYSTEMS

SCALE: 1" = 20'

FOR NOTES, ABBREVIATIONS AND LEGEND, SEE SHEET E-1

E-5

CALCULATED-DESIGNED BY	ALEX KHOO	REVISED BY	AK
CHECKED BY	ELAINE WONG	DATE REVISED	1/8/15
FUNCTIONAL SUPERVISOR	BEHZAD GOLEMOHAMMADI		

STATE OF CALIFORNIA - DEPARTMENT OF TRANSPORTATION

Caltrans®

ELECTRICAL

LAST REVISION 10-27-14 | DATE PLOTTED => 13-APR-2015 | TIME PLOTTED => 07:45

Dist	COUNTY	ROUTE	POST MILES TOTAL PROJECT	SHEET No.	TOTAL SHEETS
04	Son	116	39.8	17	34

Elaine Wong 4/6/15
REGISTERED ELECTRICAL ENGINEER DATE

4-6-15
PLANS APPROVAL DATE

REGISTERED PROFESSIONAL ENGINEER Elaine T. Wong No. 13753 Exp. 6-30-15 ELECTRICAL STATE OF CALIFORNIA

THE STATE OF CALIFORNIA OR ITS OFFICERS OR AGENTS SHALL NOT BE RESPONSIBLE FOR THE ACCURACY OR COMPLETENESS OF SCANNED COPIES OF THIS PLAN SHEET.

NOTE:

1. FOR DETAILS, REFER TO STRUCTURE SHEETS.

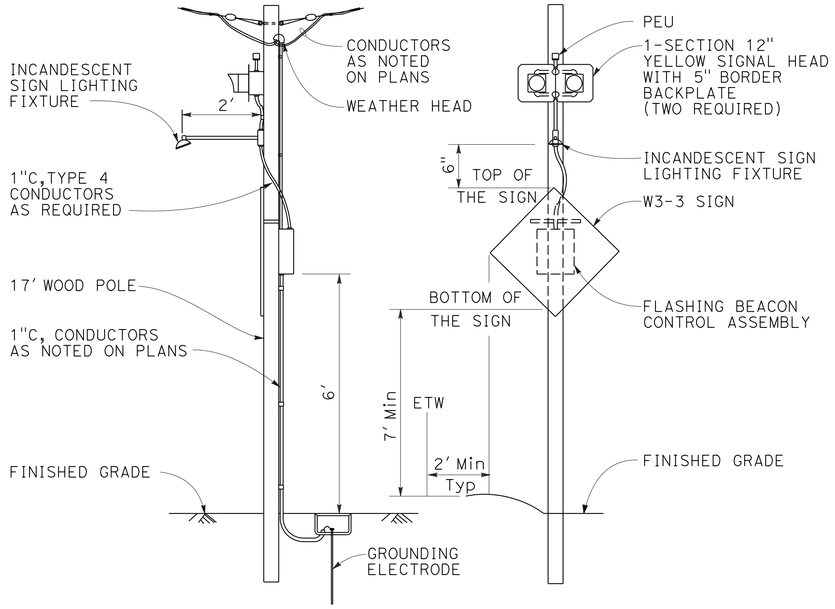

TEMPORARY FLASHING BEACON INSTALLATION
DETAIL 1

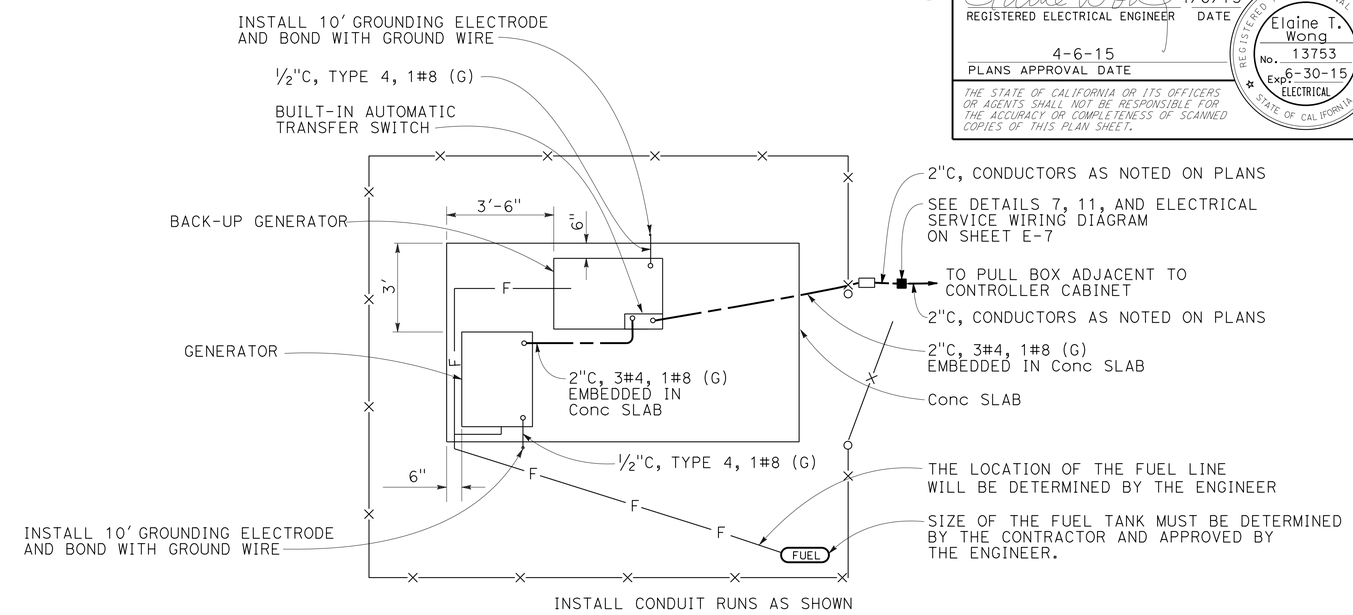

GENERATOR WITH BACK-UP GENERATOR
DETAIL 4

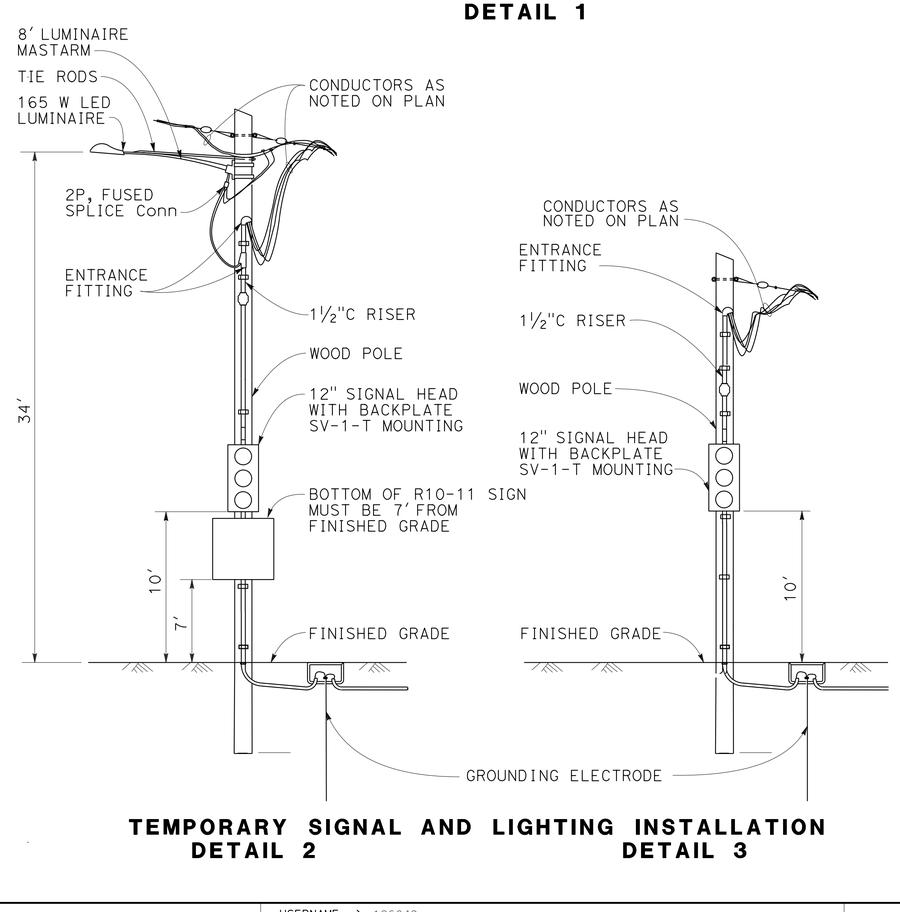

TEMPORARY SIGNAL AND LIGHTING INSTALLATION
DETAIL 2 **DETAIL 3**

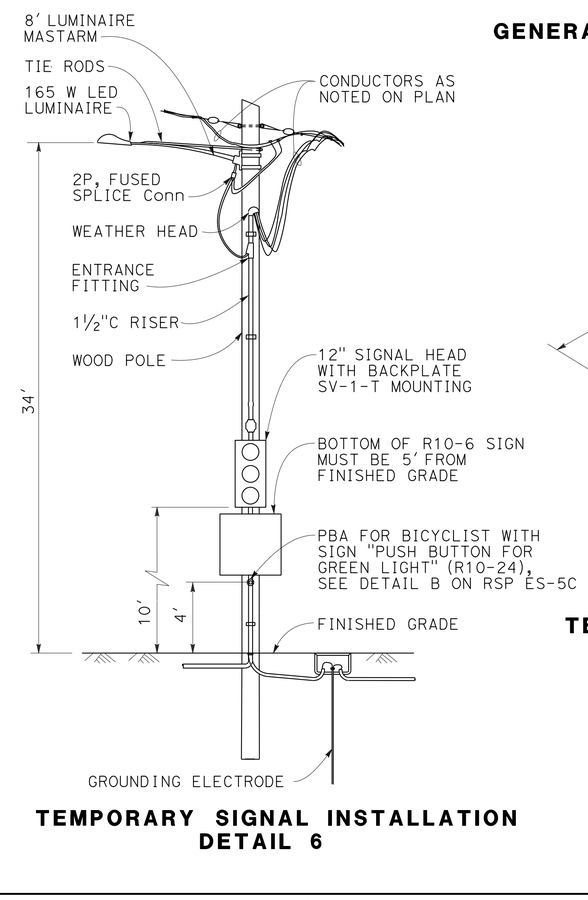

TEMPORARY SIGNAL INSTALLATION
DETAIL 6

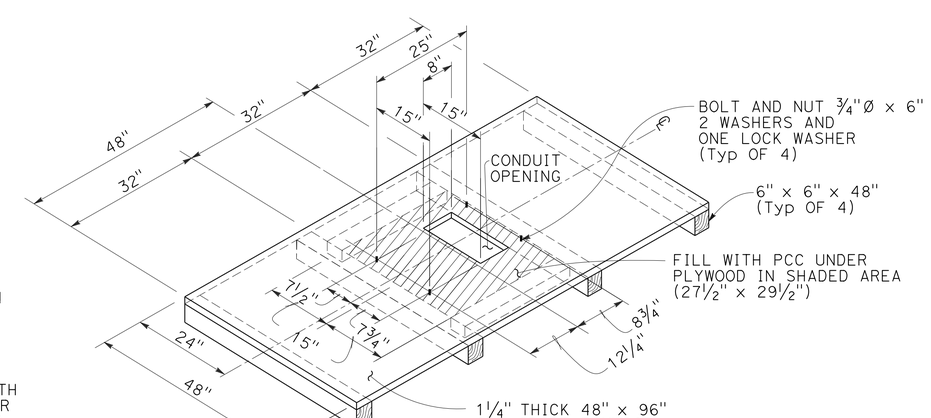

TEMPORARY MODEL 332 CABINET FOUNDATION PLATFORM
DETAIL 5

TEMPORARY SIGNAL SYSTEMS
(ELECTRICAL DETAILS)
NO SCALE

E-6

REVISED BY	AK
DATE REVISED	1/8/15
ALEX KHOO	ELAINE WONG
CALCULATED-DESIGNED BY	CHECKED BY
FUNCTIONAL SUPERVISOR	BEHZAD GOLEMOHAMMADI

STATE OF CALIFORNIA - DEPARTMENT OF TRANSPORTATION
Caltrans
ELECTRICAL

LAST REVISION 01-08-15 | DATE PLOTTED => 13-APR-2015 | TIME PLOTTED => 07:45

Dist	COUNTY	ROUTE	POST MILES TOTAL PROJECT	SHEET No.	TOTAL SHEETS
04	Son	116	39.8	18	34

REGISTERED ELECTRICAL ENGINEER — DATE 4/6/15

PLANS APPROVAL DATE 4-6-15

REGISTERED PROFESSIONAL ENGINEER Elaine T. Wong No. 13753 Exp. 6-30-15 ELECTRICAL STATE OF CALIFORNIA

THE STATE OF CALIFORNIA OR ITS OFFICERS OR AGENTS SHALL NOT BE RESPONSIBLE FOR THE ACCURACY OR COMPLETENESS OF SCANNED COPIES OF THIS PLAN SHEET.

NOTE:

1. FOR DETAILS, REFER TO STRUCTURE SHEETS.

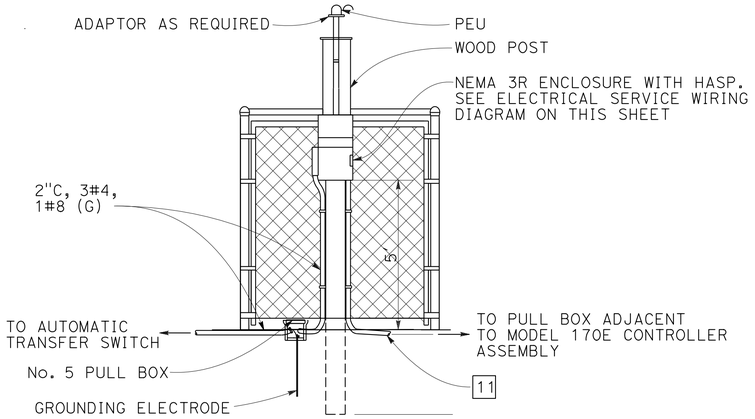

ELECTRICAL SERVICE FRONT VIEW
DETAIL 7

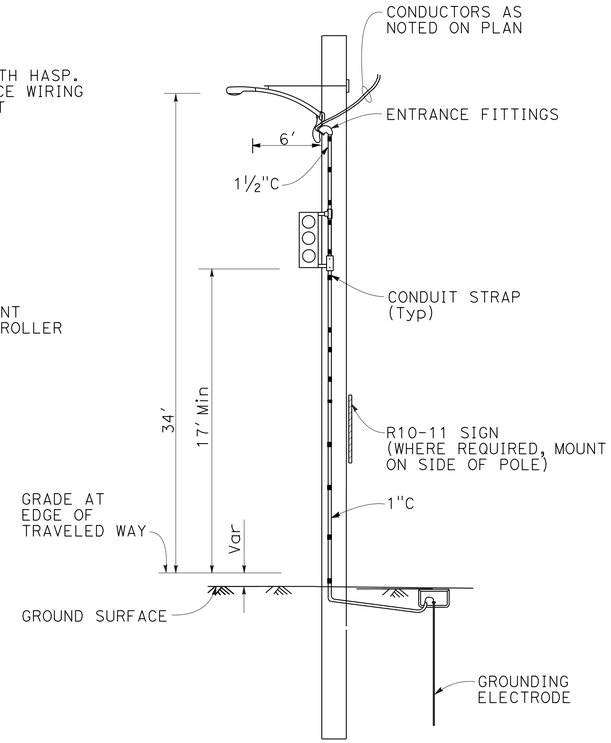

TEMPORARY SIGNAL AND LIGHTING INSTALLATION ON WOOD POLE
DETAIL 8

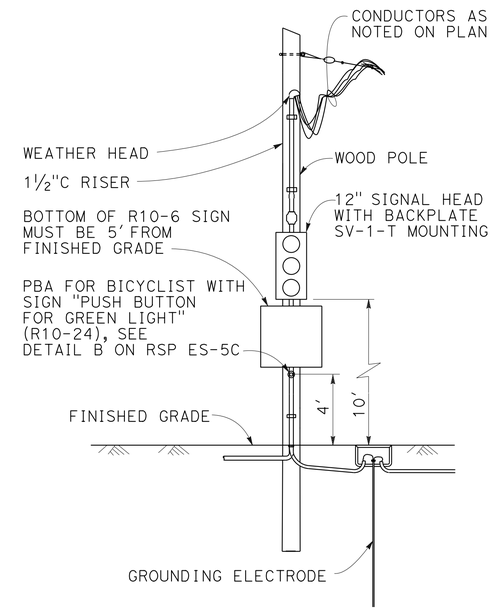

TEMPORARY SIGNAL INSTALLATION ON WOOD POLE
DETAIL 9

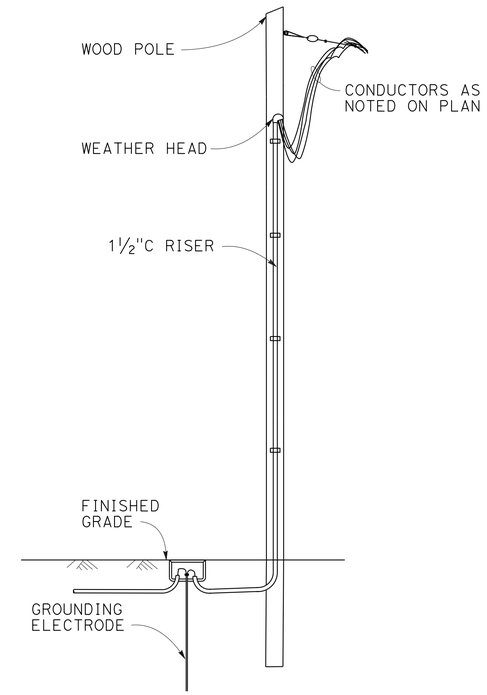

TEMPORARY WOOD POLE INSTALLATION
DETAIL 10

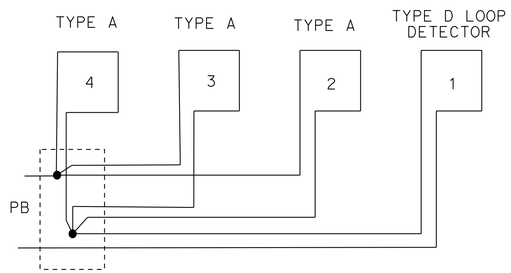

1D + 3A LOOP CONNECTION
DETAIL A

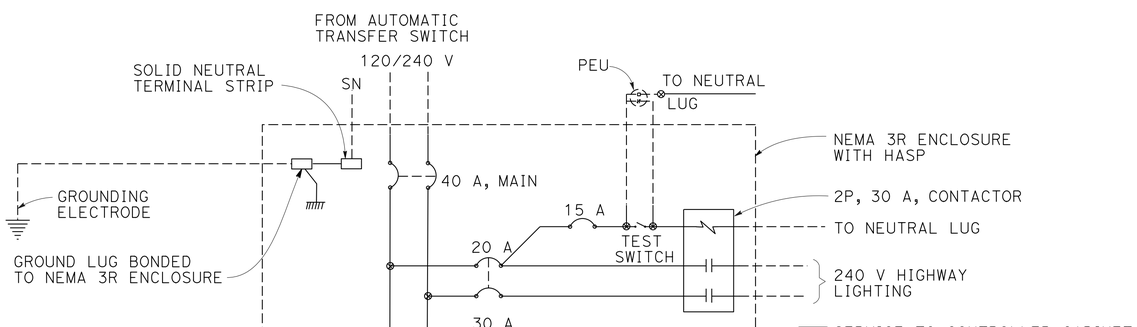

ELECTRICAL SERVICE WIRING DIAGRAM

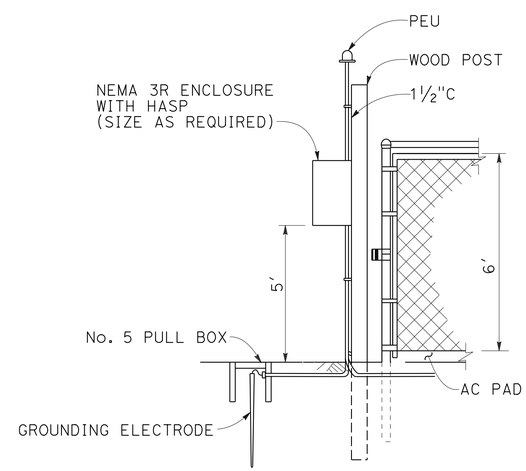

ELECTRICAL SERVICE SIDE VIEW
DETAIL 11

TEMPORARY SIGNAL SYSTEMS
(ELECTRICAL DETAILS)

NO SCALE

E-7

STATE OF CALIFORNIA - DEPARTMENT OF TRANSPORTATION
Caltrans
ELECTRICAL

FUNCTIONAL SUPERVISOR: BEHZAD GOLEMOHAMMADI
CALCULATED-DESIGNED BY: ALEX KHOO
CHECKED BY: ELAINE WONG
REVISED BY: AK
DATE REVISED: 1/8/15

LAST REVISION 12-29-14 | DATE PLOTTED => 13-APR-2015 | TIME PLOTTED => 07:45

Dist	COUNTY	ROUTE	POST MILES TOTAL PROJECT	SHEET No.	TOTAL SHEETS
04	Son	116	39.8	19	34

Elaine Wong 4/6/15
REGISTERED ELECTRICAL ENGINEER DATE

4-6-15
PLANS APPROVAL DATE

REGISTERED PROFESSIONAL ENGINEER
Elaine T. Wong
No. 13753
Exp. 6-30-15
ELECTRICAL
STATE OF CALIFORNIA

THE STATE OF CALIFORNIA OR ITS OFFICERS OR AGENTS SHALL NOT BE RESPONSIBLE FOR THE ACCURACY OR COMPLETENESS OF SCANNED COPIES OF THIS PLAN SHEET.

TEMPORARY SIGNAL SYSTEMS

SHEET No.	NEW A 3R ENCLOSURE	GENERATOR WITH BACK-UP GENERATOR	WOOD POLE WITH FLASHING BEACON	WOOD POLE	WOOD POLE WITH LUMINAIRE AND SIGNAL	WOOD POLE WITH SIGNAL	LOOP DETECTOR	PULL BOX	CONDUIT		DIRECT BURIAL CABLE					DLC
									2"	3"	No. 4	No. 6	No. 8	No. 10	No. 12	
	EA								FT							
E-2			1				1	3					540			70
E-3	1	1		1	2	4	4	11	30	80	70	70	2780	970	7010	1490
E-4								2					4120	540	4320	1080
E-5			1		1	3	5	10	50				2050	300	4990	565
TOTAL	1	1	2	1	3	7	10	26	80	80	70	70	9490	1810	16320	3205

ITEMS SHOWN IN THIS TABLE ARE NOT A SEPARATE PAY ITEM, FOR INFORMATION ONLY.

ELECTRICAL QUANTITIES

E-8

REVISED BY	DATE REVISED
AK	1/8/15

CALCULATED-DESIGNED BY: ALEX KHOO
CHECKED BY: ELAINE WONG
FUNCTIONAL SUPERVISOR: BEHZAD GOLEMOHAMMADI

STATE OF CALIFORNIA - DEPARTMENT OF TRANSPORTATION
Caltrans
ELECTRICAL

LAST REVISION 01-05-15
DATE PLOTTED => 13-APR-2015
TIME PLOTTED => 07:45

DIST	COUNTY	ROUTE	POST MILES TOTAL PROJECT	SHEET No.	TOTAL SHEETS
04	Son	116	39.8	20	34

REGISTERED CIVIL ENGINEER 4/6/15 DATE

4-6-15
PLANS APPROVAL DATE

REGISTERED PROFESSIONAL ENGINEER Jonathan C. Lee No. 47520 Exp. 12-31-15 CIVIL STATE OF CALIFORNIA

The State of California or its officers or agents shall not be responsible for the accuracy or completeness of electronic copies of this plan sheet.

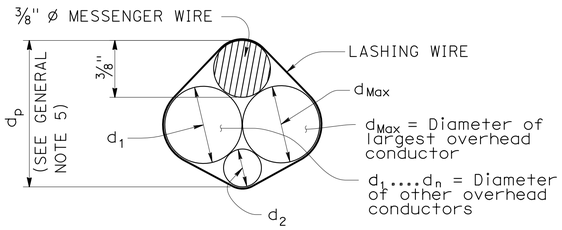

$$d_p = 3/8'' + d_{Max} + 0.30 * (d_1 + d_2 + \ldots d_n)$$

PROJECTED DEPTH OF OVERHEAD BUNDLE, (d_p)

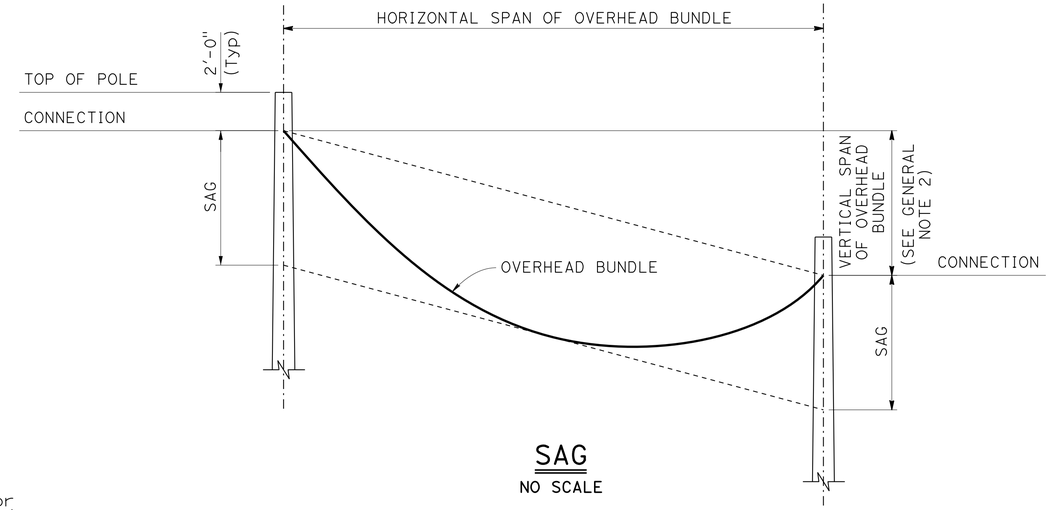

SAG

NO SCALE

Design: AASHTO Standard Specifications for Structural Supports for Highway Signs, Luminaires and Traffic Signals, Fifth Edition (LTS-5).

GROUP LOAD COMBINATIONS:

I Dead Load
II Dead Load + Wind Load
III Dead Load + 0.5 (Wind Load) + Ice Load
IV Fatigue: Not used

LOADING:

Wind Loading: 100 mph (3-second gust)
Wind Recurrence Interval: 10 years
Combined height, exposure, and elevated terrain factor = 1.05
(Exposure C, structure is not located on or over the top half of a ridge, hill, or escarpment)

Ice Loading: 3.0 psf on surfaces, 0.60 in radial thickness of ice at a unit weight of 60 pcf on overhead bundles

BASIC DESIGN VALUES:

Timber Poles: Fb = 1850 psi
Fv = 110 psi
Fcp = 230 psi
Fc = 950 psi
E = 1500 x 10^3 psi

DESIGN WIRE BREAKING STRENGTHS:

ASTM A475, Utilities Grade, 7 strand modified by termination efficiency factor of 0.8

FOUNDATION DESIGN NOTES:

1. Pole embedment depth design is based on Broms' approximate procedure as described in Article 13.6 of AASHTO LTS-5.

2. Embedment depth is calculated based on following soil parameters,
Cohesive Soil:
Shear strength of soil c = 1500 psf.
Cohesionless Soil:
Ø = 30 deg, γ = 120 pcf.
Soil assumed to be unsaturated.

3. An overload factor of 2.0 and an undercapacity factor of 0.7 were used for safety factor of 2.86.

4. Allowable vertical bearing pressure at the end bearing of poles is 3000 psf at 6 feet or more embedment.

5. Guy wire anchor minimum allowable tension capacity, "Qa" = 8,900 lbs.

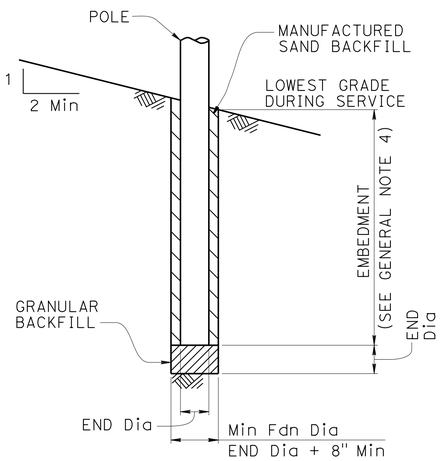

POLE FOUNDATION

GENERAL NOTES:

1. The messenger wire and any combination of overhead conductors must not exceed either a self weight of 3.0 lb/ft or the maximum d in the pole selection tables.

2. The maximum vertical span is 10% of the horizontal span.

3. For poles with adjacent unbalanced horizontal spans, the shortest horizontal span must be at least 50% of the largest horizontal span.

4. Add 2'-0" for slopes above 1V:4H.

5. For a pole supporting multiple spans, calculate d_p for each span and use the largest value.

6. Do not exceed the attachments shown.

DIAMETERS AND SELF WEIGHT OF OVERHEAD CONDUCTORS

CONDUCTOR OR CABLE TYPE	DIAMETER d (in)	WEIGHT w (plf)
3 CONDUCTOR SIGNAL CABLE (3CSC)	0.400	0.0980
5 CONDUCTOR SIGNAL CABLE (5CSC)	0.500	0.1560
9 CONDUCTOR SIGNAL CABLE (9CSC)	0.650	0.2760
12 CONDUCTOR SIGNAL CABLE (12CSC)	0.800	0.3970
28 CONDUCTOR SIGNAL CABLE (28CSC)	0.900	0.6490
1-#14	0.166	0.0235
1-#12	0.185	0.0330
1-#10	0.210	0.0476
1-#8	0.271	0.0774
1-#6	0.310	0.1130
1-#4	0.359	0.1690
1-#3	0.388	0.2080
1-#2	0.420	0.2560
1-#1	0.498	0.3340
6-CONDUCTOR SIGNAL INTERCONNECT CABLE (SIC)	0.350	0.0860
12-CONDUCTOR SIGNAL INTERCONNECT CABLE (SIC)	0.500	0.1440
DETECTOR LEAD-IN CABLE (DLC)	0.310	0.0440
12 to 48-STRAND FIBER OPTIC CABLE (48FOC)	0.424	0.0600
72-STRAND FIBER OPTIC CABLE (72FOC)	0.484	0.0770
96-STRAND FIBER OPTIC CABLE (96FOC)	0.535	0.1050
144-STRAND FIBER OPTIC CABLE (144FOC)	0.670	0.1890
3/8" Ø MESSENGER WIRE	0.375	0.2730

NO SCALE

STANDARD DRAWING
FILE NO. xs18-010
APPROVAL DATE July 2014

STATE OF CALIFORNIA DEPARTMENT OF TRANSPORTATION
DIVISION OF ENGINEERING SERVICES
BRIDGE NO. X
POST MILE X

TEMPORARY WOOD POLES
GENERAL NOTES

SES-1

DS OSD 2147A (ENGLISH STANDARD DRAWING "XS" BORDER REV. (02-02-11)

ORIGINAL SCALE IN INCHES FOR REDUCED PLANS 0 1 2 3

UNIT: X
PROJECT NUMBER & PHASE: X
CONTRACT NO.: X

DISREGARD PRINTS BEARING EARLIER REVISION DATES
REVISION DATES 6-19-14
SHEET X OF X

FILE => xs18-010.dgn

USERNAME => s126849 DATE PLOTTED => 13-APR-2015 TIME PLOTTED => 07:45

DIST	COUNTY	ROUTE	POST MILES TOTAL PROJECT	SHEET No.	TOTAL SHEETS
04	Son	116	39.8	21	34

REGISTERED CIVIL ENGINEER 4/6/15 DATE

4-6-15
PLANS APPROVAL DATE

REGISTERED PROFESSIONAL ENGINEER Jonathan C. Lee No. 47520 Exp. 12-31-15 CIVIL STATE OF CALIFORNIA

The State of California or its officers or agents shall not be responsible for the accuracy or completeness of electronic copies of this plan sheet.

LEGEND

- Wood Pole No Attachments
- A Wood Pole with Attachments
- —OH— Overhead Bundle

POLE SELECTION TABLE

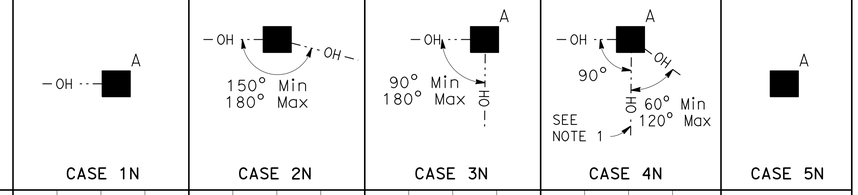

			CASE 1N				CASE 2N				CASE 3N				CASE 4N				CASE 5N
		MAXIMUM d_p	1"	1.5"	2.0"	2.5"	1"	1.5"	2.0"	2.5"	1.0"	1.5"	2.0"	2.5"	1"	1.5"	2.0"	2.5"	N/A
OVERHEAD BUNDLE HORIZONTAL SPAN (Max)	50'	MINIMUM POLE CLASS	H-1	H-2	H-2	H-2	4	3	2	1	H-2	H-2	H-3	H-3	H-4	H-4	H-4	H-5	CLASS 1 E = 10'
		POLE EMBEDMENT (E)	11'				10'				11'				12'				
	100'	MINIMUM POLE CLASS	H-2	H-3	H-4	H-5	1	H-1	H-2	H-3	H-4	H-5	H-5	H-6	H-5	H-5	H-6		
		POLE EMBEDMENT (E)	12'				11'				12'				12'				
	150'	MINIMUM POLE CLASS	H-4	H-5	H-6		H-1	H-2	H-3	H-5	H-6				H-6				
		POLE EMBEDMENT (E)	12'				12'				12'				12'				
	200'	MINIMUM POLE CLASS	H-5	H-6			H-2	H-3	H-5										
		POLE EMBEDMENT (E)	12'				12'												

1. CCTV camera assembly or vehicle detection system
2. Overhead bundle consisting of a 3/8" ø messenger wire, overhead conductors, and lashing wire
3. Luminaire with mast arm
4. Pedestrian push button assembly or accessible push button assembly
5. Signal face with 3 indications or single sheet sign panel (10 SQFT Max)
6. Riser with weather head as required
7. Pull box as required
8. Grounding as required
9. Single flashing beacon or single sheet sign panel (4 SQFT Max)
10. Single sheet sign panel (4' x 4' Max) or signal face with 3 indications
11. Flashing beacon control assembly
12. NEMA 3R enclosure, 26"(W) x 56"(H) x 12"(D) Max dimensions. Max weight including batteries, 450 lbs
13. 25' SQFT Max total photovoltaic panels mounted as shown as required
14. 2-12" flashing beacons

NOTES:

1. In addition to other restrictions on maximum horizontal span, this horizontal span must not exceed 100'.
2. Cases 1N, 3N and 4N may substitute the attachments shown in Case 5N if the photovoltaic panel is not included.
3. For Case 1N without an overhead bundle (item 2) use minimum pole class H-1 with E=11'.

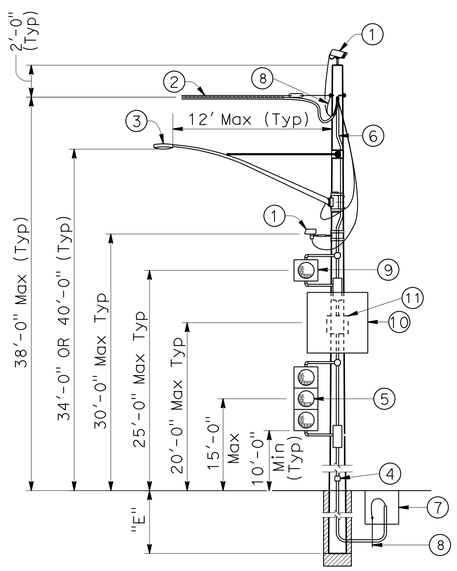

CASE 1N
POLE AT DEAD END WITH ATTACHMENTS
SEE NOTE 2

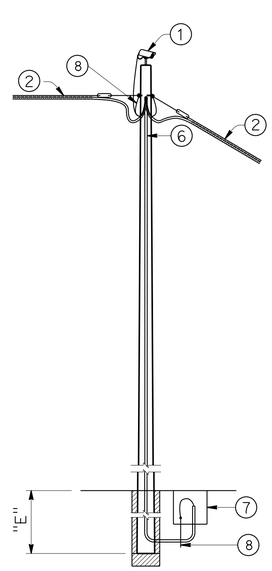

CASE 2N
POLE AT TANGENT WITHOUT ATTACHMENTS

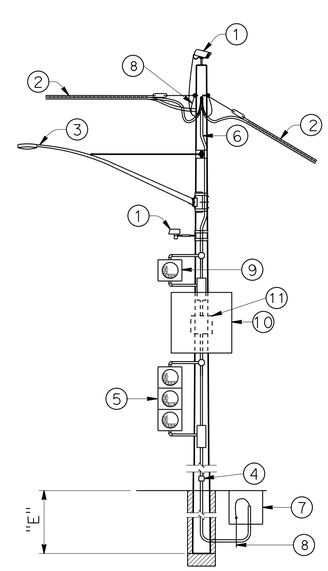

CASE 3N
POLE AT TANGENT OR CORNER WITH ATTACHMENTS
SEE NOTE 2

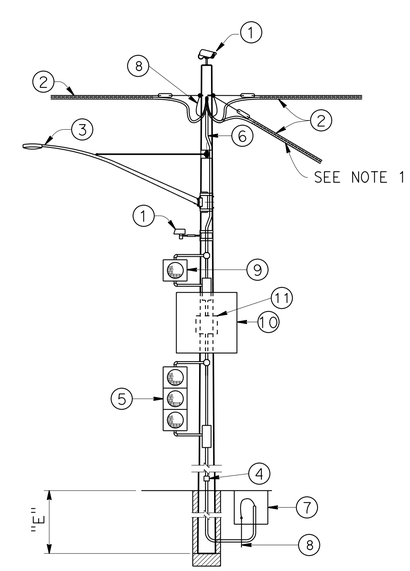

CASE 4N
POLE AT JUNCTION WITH ATTACHMENTS
SEE NOTE 2

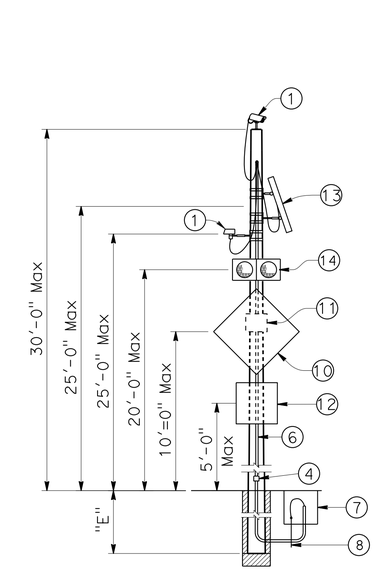

CASE 5N
POLE WITHOUT OVERHEAD BUNDLE WITH ATTACHMENTS

NO SCALE

STANDARD DRAWING
FILE NO. xs18-020
APPROVAL DATE July 2014

STATE OF CALIFORNIA DEPARTMENT OF TRANSPORTATION

DIVISION OF ENGINEERING SERVICES

BRIDGE NO. X
POST MILE X

TEMPORARY WOOD POLES
NON-GUYED - NO SIGNALS ON SPANS

SES-2

DS OSD 2147A (ENGLISH STANDARD DRAWING "XS" BORDER REV. (02-02-11)

ORIGINAL SCALE IN INCHES FOR REDUCED PLANS 0 1 2 3

UNIT: X
PROJECT NUMBER & PHASE: X
CONTRACT NO.: X

DISREGARD PRINTS BEARING EARLIER REVISION DATES

REVISION DATES 6-19-14

SHEET X OF X

FILE => xs18-020.dgn

USERNAME => s126849 DATE PLOTTED => 13-APR-2015 TIME PLOTTED => 07:45

DIST	COUNTY	ROUTE	POST MILES TOTAL PROJECT	SHEET No.	TOTAL SHEETS
04	Son	116	39.8	22	34

REGISTERED CIVIL ENGINEER — DATE 4/6/15

PLANS APPROVAL DATE 4-6-15

The State of California or its officers or agents shall not be responsible for the accuracy or completeness of electronic copies of this plan sheet.

REGISTERED PROFESSIONAL ENGINEER — Jonathan C. Lee — No. 47520 — Exp. 12-31-15 — CIVIL — STATE OF CALIFORNIA

LEGEND

- A — Wood Pole with Attachments
- —OH··— Overhead Bundle
- ——→ Guy Anchor

POLE SELECTION TABLE

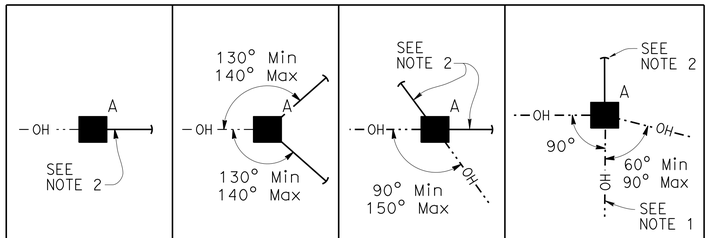

		MAXIMUM d_p	1"	1.5"	2.0"	2.5"	1"	1.5"	2.0"	2.5"	1"	1.5"	2.0"	2.5"	1"	1.5"	2.0"	2.5"
OVERHEAD BUNDLE HORIZONTAL SPAN (Max)	50′	MINIMUM POLE CLASS	H-1	H-1	H-2	H-2	1	1	1	1	1	1	1	H-1	H-2	H-2	H-3	H-3
		POLE EMBEDMENT (E)	10′				9′				9′				11′			
	100′	MINIMUM POLE CLASS	H-2	H-2	H-3	H-4	1	H-1	H-1	H-1	1	H-1	H-2	H-2	H-3	H-3	H-4	H-4
		POLE EMBEDMENT (E)	11′				9′				9′				12′			
	150′	MINIMUM POLE CLASS	H-3	H-3	H-4	H-5	H-1	H-1	H-2	H-2	H-2	H-3	H-3	H-3	H-4	H-5	H-5	H-6
		POLE EMBEDMENT (E)	11′				9′				9′				12′			
	200′	MINIMUM POLE CLASS	H-4	H-4	H-5	H-6	H-1	H-2	H-3	H-3	H-3	H-3	H-4	H-4	H-5	H-6		
		POLE EMBEDMENT (E)	11′				9′				9′				12′			

1. CCTV camera assembly or vehicle detection system
2. Overhead bundle consisting of a ⅜" Ø messenger wire, overhead conductors, and lashing wire
3. Luminaire with mast arm
4. Pedestrian push button assembly or accessible push button assembly
5. Signal face with 3 indications or single sheet sign panel (10 SQFT Max)
6. Riser with weather head as required
7. Pull box as required
8. Grounding as required
9. Single flashing beacon or single sheet sign panel (4 SQFT Max)
10. Single sheet sign panel (4′ x 4′ Max) or signal face with 3 indications
11. Flashing beacon control assembly
12. ½" Ø guy wire with white guy marker and strain insulator (for anchorage see "TEMPORARY WOOD POLES-DETAILS No. 2" sheet)

NOTES:

1. In addition to other restrictions on maximum horizontal span, this horizontal span must not exceed 100′.
2. Guy wire in line with opposing span ± 5°.

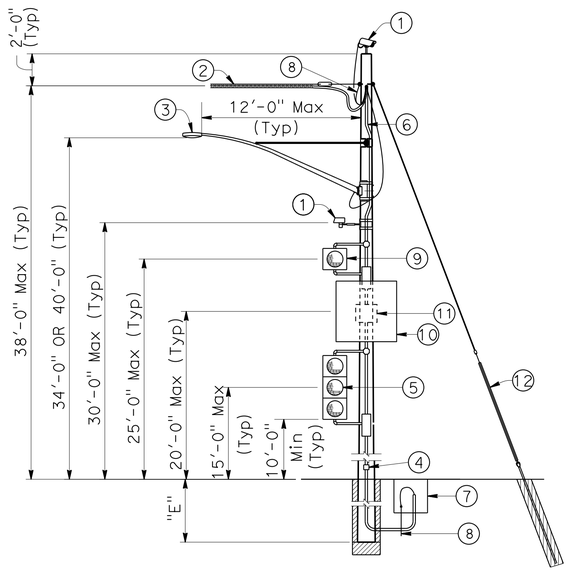

CASE 1G
POLE AT DEAD END
WITH ATTACHMENTS

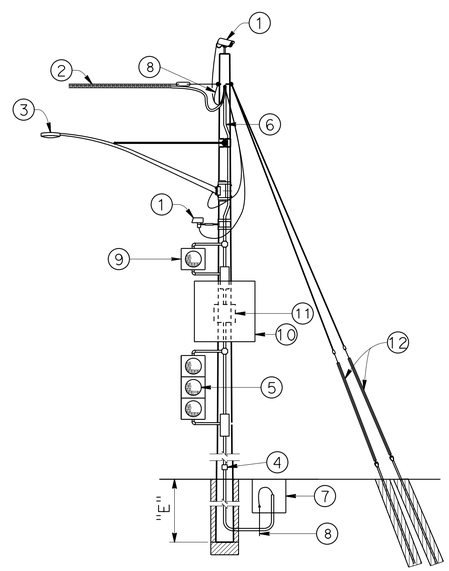

CASE 2G
POLE AT DEAD END
WITH ATTACHMENTS

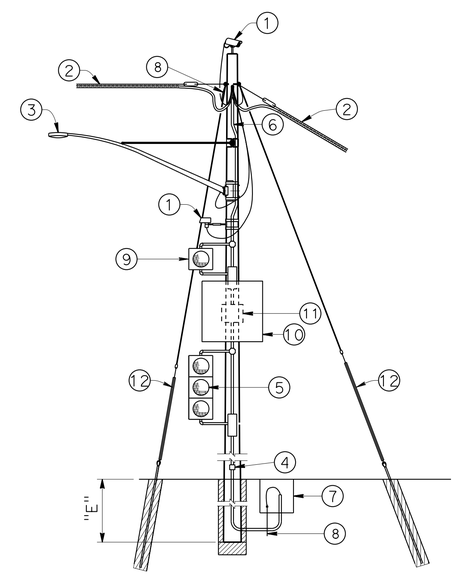

CASE 3G
POLE AT CORNER
WITH ATTACHMENTS

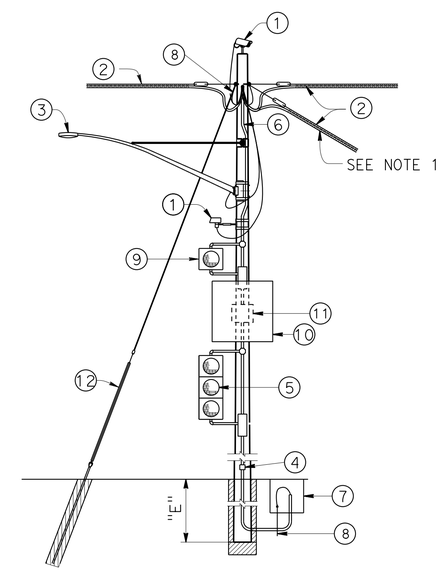

CASE 4G
POLE AT JUNCTION
WITH ATTACHMENTS

NO SCALE

STANDARD DRAWING
FILE NO. xs18-030
APPROVAL DATE July 2014

STATE OF CALIFORNIA
DEPARTMENT OF TRANSPORTATION

DIVISION OF ENGINEERING SERVICES

BRIDGE NO. X
POST MILE X

TEMPORARY WOOD POLES
GUYED - NO SIGNALS ON SPANS

SES-3

DS OSD 2147A (ENGLISH STANDARD DRAWING "XS" BORDER REV. (02-02-11)

ORIGINAL SCALE IN INCHES FOR REDUCED PLANS 0 1 2 3

UNIT: X
PROJECT NUMBER & PHASE: X
CONTRACT NO.: X

DISREGARD PRINTS BEARING EARLIER REVISION DATES

REVISION DATES 6-27-14

SHEET X OF X

FILE => xs18-030.dgn

USERNAME => s126849 DATE PLOTTED => 13-APR-2015 TIME PLOTTED => 07:45

DIST	COUNTY	ROUTE	POST MILES TOTAL PROJECT	SHEET No.	TOTAL SHEETS
04	Son	116	39.8	23	34

REGISTERED CIVIL ENGINEER 4/6/15 DATE

4-6-15
PLANS APPROVAL DATE

REGISTERED PROFESSIONAL ENGINEER Jonathan C. Lee No. 47520 Exp. 12-31-15 CIVIL STATE OF CALIFORNIA

The State of California or its officers or agents shall not be responsible for the accuracy or completeness of electronic copies of this plan sheet.

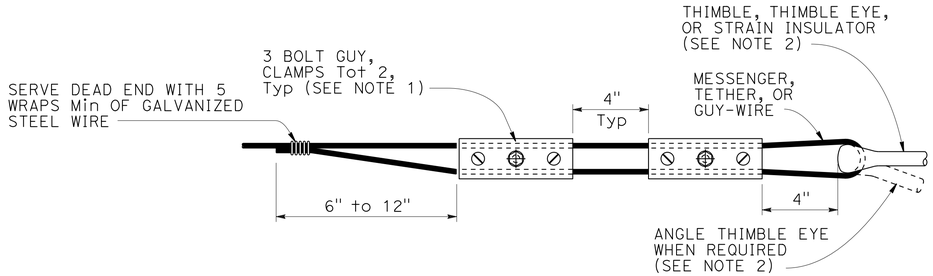

ALTERNATIVE TERMINATION OF MESSENGER WIRES USING GUY CLAMPS

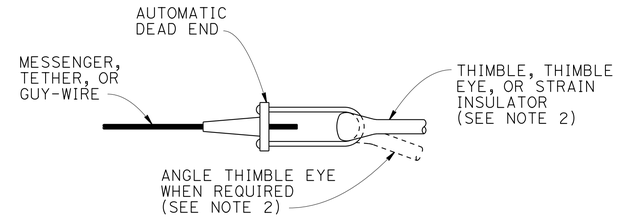

TERMINATION OF WIRES USING AUTOMATIC DEAD END

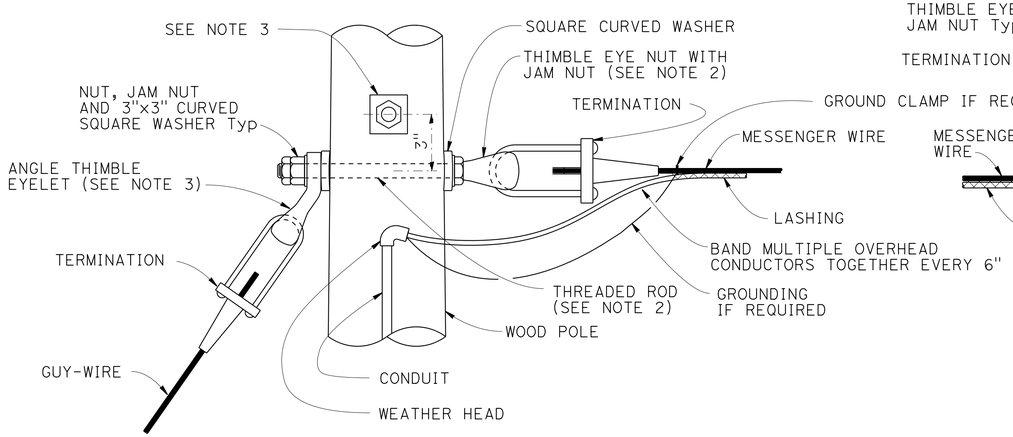

POLE AT DEAD END WITH GUY-WIRE CONNECTION

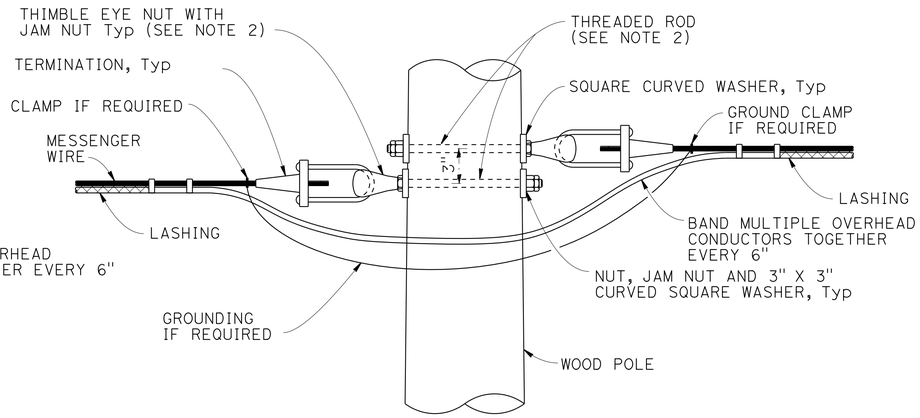

POLE AT TANGENT OR CORNER CONNECTION

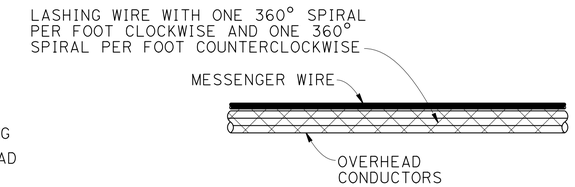

DOUBLE LASHING DETAIL

USE IF d_p IS GREATER THAN 1½"

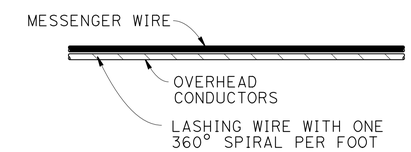

TYPICAL LASHING DETAIL

USE IF d_p IS 1½" OR LESS

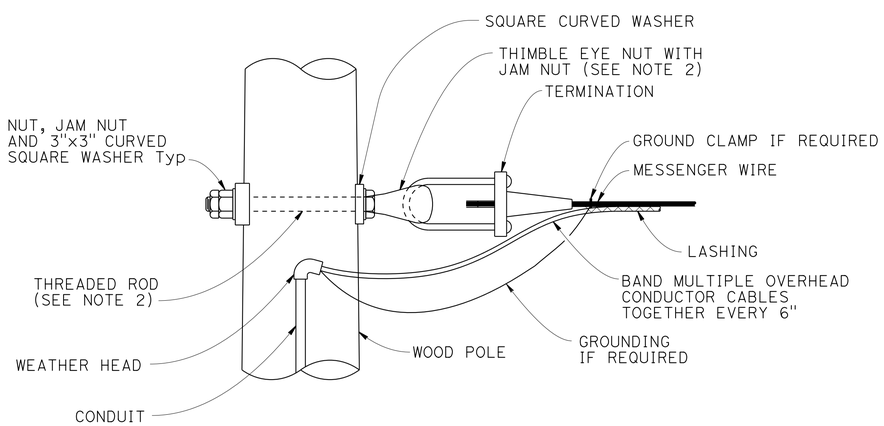

POLE AT DEAD END CONNECTION

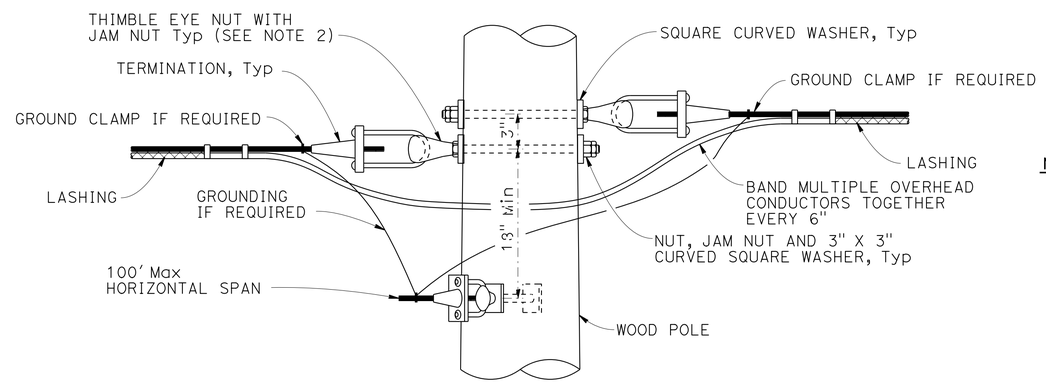

POLE AT JUNCTION CONNECTION

NOTES:

1. For guy wires use 3 clamps.
2. Use ⅝" ø except ¾" ø at guyed wires
3. Install additional angle thimble eyelet at poles with two guy wires.

NO SCALE

STANDARD DRAWING		STATE OF CALIFORNIA DEPARTMENT OF TRANSPORTATION	DIVISION OF ENGINEERING SERVICES	BRIDGE NO. X / POST MILE X	TEMPORARY WOOD POLES DETAILS No. 1	SES-4
FILE NO. xs18-080-1	APPROVAL DATE July 2014					

DS OSD 2147A (ENGLISH STANDARD DRAWING "XS" BORDER REV. (02-02-11))

ORIGINAL SCALE IN INCHES FOR REDUCED PLANS 0 1 2 3

UNIT: X
PROJECT NUMBER & PHASE: X
CONTRACT NO.: X

DISREGARD PRINTS BEARING EARLIER REVISION DATES → 6-27-14

SHEET X OF X

FILE => xs18-080-1.dgn

USERNAME => s126849 DATE PLOTTED => 13-APR-2015 TIME PLOTTED => 07:45

DIST	COUNTY	ROUTE	POST MILES TOTAL PROJECT	SHEET No.	TOTAL SHEETS
04	Son	116	39.8	24	34

REGISTERED CIVIL ENGINEER 4/6/15 DATE

4-6-15
PLANS APPROVAL DATE

REGISTERED PROFESSIONAL ENGINEER Jonathan C. Lee No. 47520 Exp. 12-31-15 CIVIL STATE OF CALIFORNIA

The State of California or its officers or agents shall not be responsible for the accuracy or completeness of electronic copies of this plan sheet.

NOTE:

1. For minimum allowable tension capacity of anchors see "Temporary Wood Poles - General Notes" sheet.

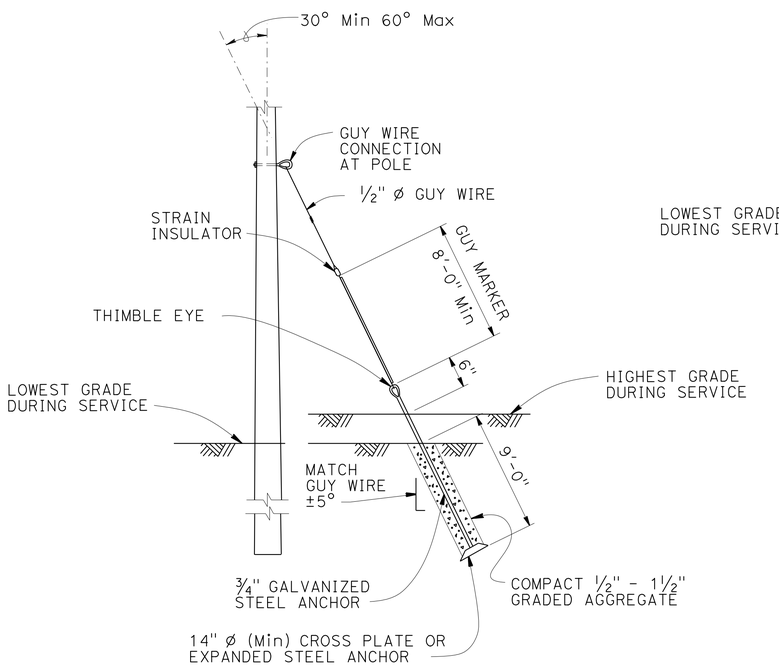

NOTE:

Helical anchor detail may be used in place of expanded steel anchors.

EXPANDED STEEL ANCHOR DETAIL

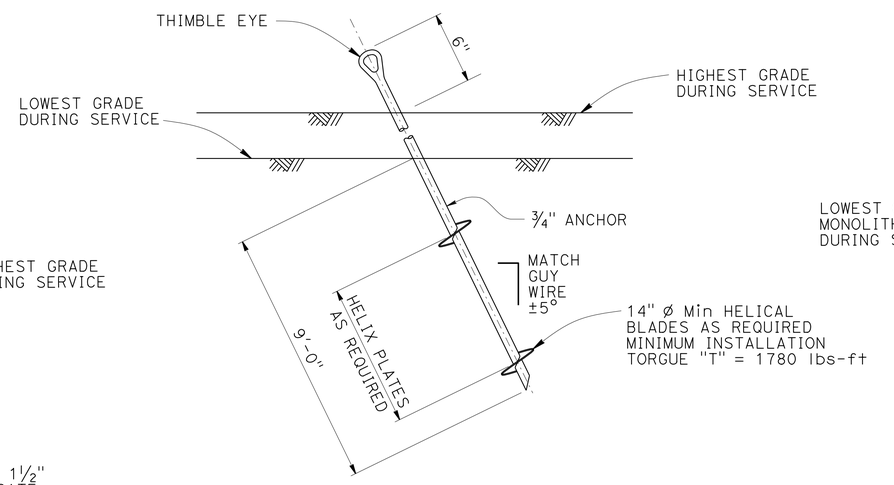

HELICAL ANCHOR DETAIL

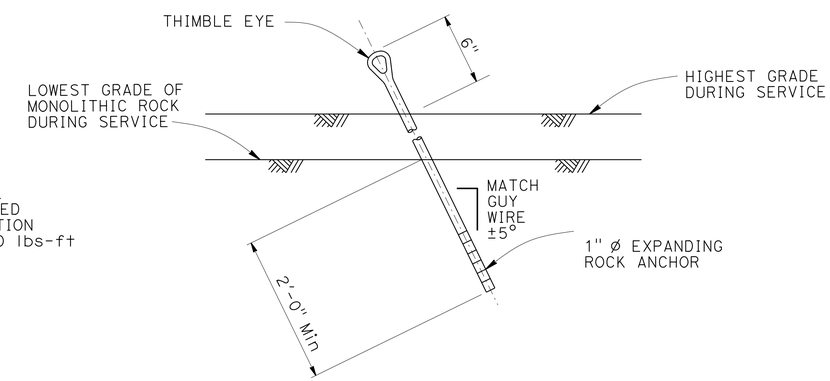

EXPANDING ROCK ANCHOR DETAIL

NO SCALE

STANDARD DRAWING		STATE OF CALIFORNIA DEPARTMENT OF TRANSPORTATION	DIVISION OF ENGINEERING SERVICES	BRIDGE NO. X / POST MILE X	TEMPORARY WOOD POLES DETAILS No. 2	SES-5
FILE NO. xs18-080-2	APPROVAL DATE July 2014					

DS OSD 2147A (ENGLISH STANDARD DRAWING "XS" BORDER REV. (02-02-11)

ORIGINAL SCALE IN INCHES FOR REDUCED PLANS 0 1 2 3

UNIT: X
PROJECT NUMBER & PHASE: X
CONTRACT NO.: X

DISREGARD PRINTS BEARING EARLIER REVISION DATES → REVISION DATES 6-27-14 SHEET X OF X

FILE => xs18-080-2.dgn

USERNAME => s126849 DATE PLOTTED => 13-APR-2015 TIME PLOTTED => 07:45

DIST	COUNTY	ROUTE	POST MILES TOTAL PROJECT	SHEET No.	TOTAL SHEETS
04	Son	116	39.8	25	34

REGISTERED CIVIL ENGINEER — DATE 4/6/15

PLANS APPROVAL DATE 4-6-15

The State of California or its officers or agents shall not be responsible for the accuracy or completeness of electronic copies of this plan sheet.

REGISTERED PROFESSIONAL ENGINEER — Jonathan C. Lee — No. 47520 — Exp. 12-31-15 — CIVIL — STATE OF CALIFORNIA

NOTES:

1. Luminaire mast arms must be in compliance with Standard Plan ES-6D with noted modifications.
2. Verify pole dimensions at tie-rod attachment height. Fabricate 8" flat bar with "L" Dimension to maintain an open gap between flanges in finished installation.
3. Not all screw heads and bolt heads are shown for clarity.
4. Mast arm not shown for clarity.

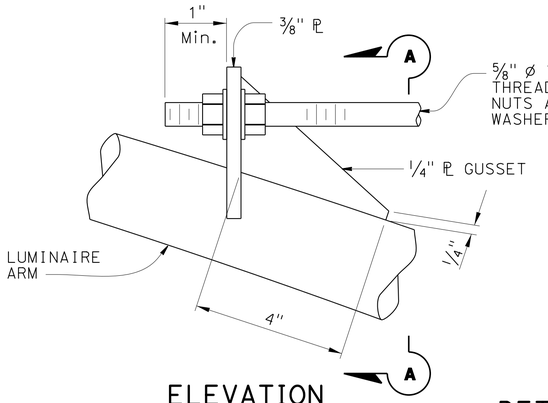

ELEVATION

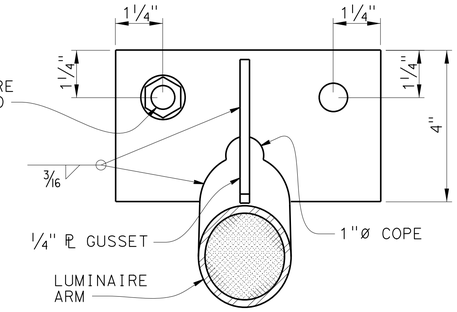

SECTION A-A

DETAIL A
TIE-ROD AT LUMINAIRE ARM

NO SCALE

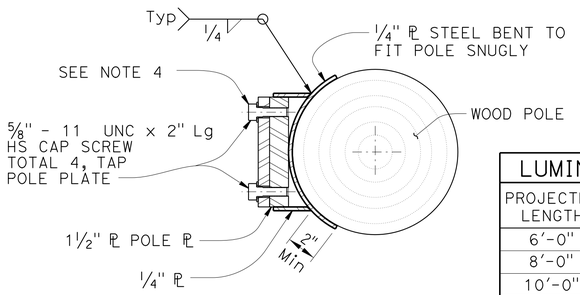

SECTION E-E

LUMINAIRE MAST ARM DATA			
PROJECTED LENGTH	N RISE	Min OD AT POLE	NOMINAL THICKNESS
6'-0"	2'-0"±	3 1/4"	0.1196"
8'-0"	2'-6"±	3 1/2"	
10'-0"	3'-3"±	3 7/8"	
12'-0"	4'-3"±		

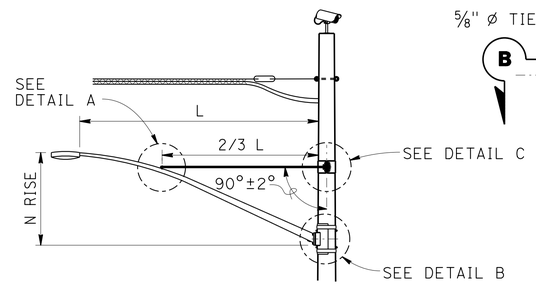

LUMINAIRE MAST ARM

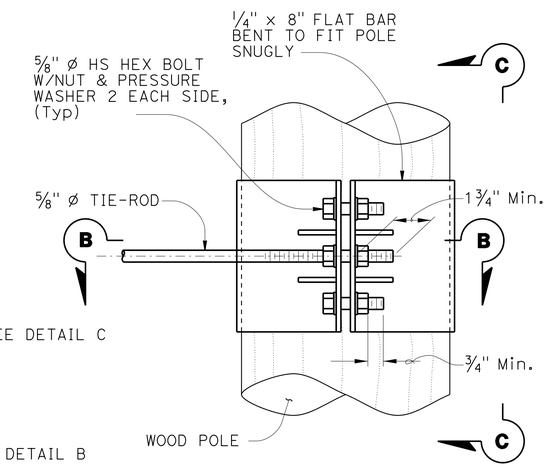

ELEVATION

NOTE:
Not all screw and bolt heads shown for clarity.

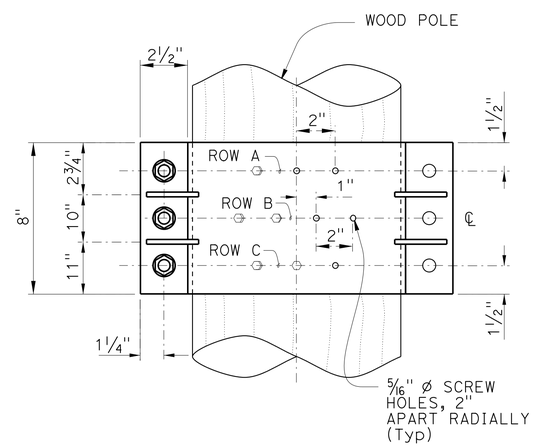

VIEW C-C

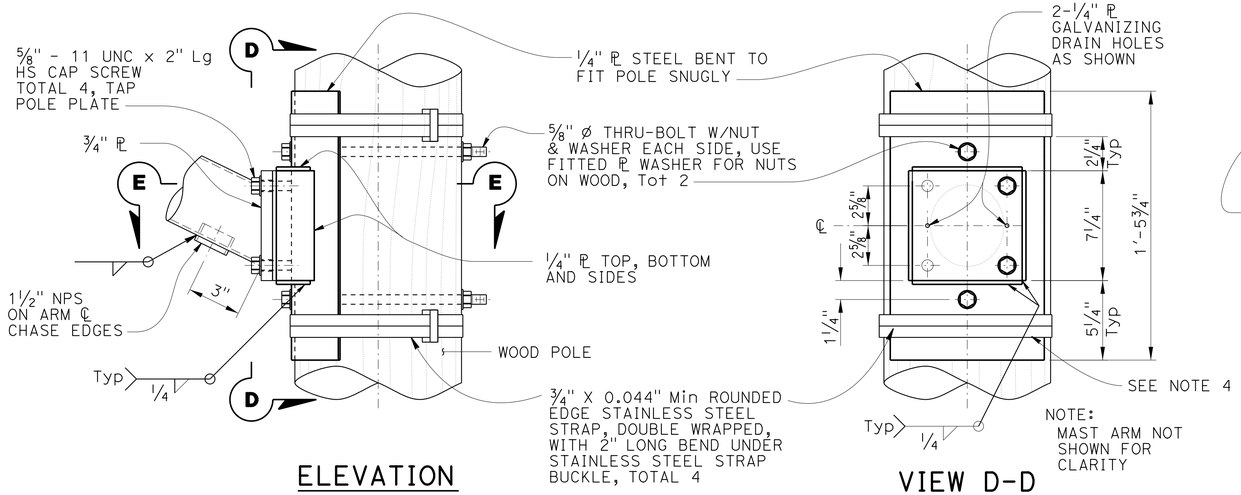

ELEVATION

VIEW D-D

DETAIL B
ARM CONNECTION DETAILS

NO SCALE

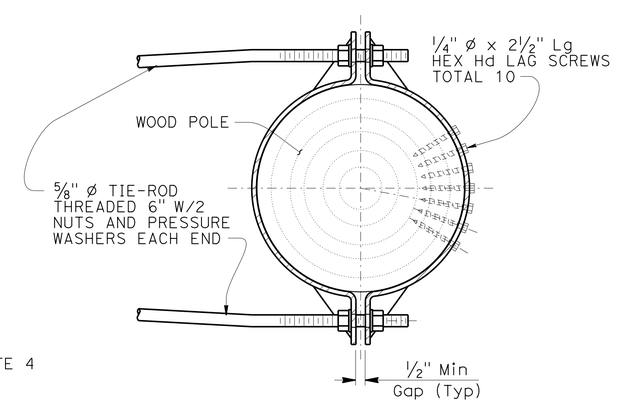

SECTION B-B

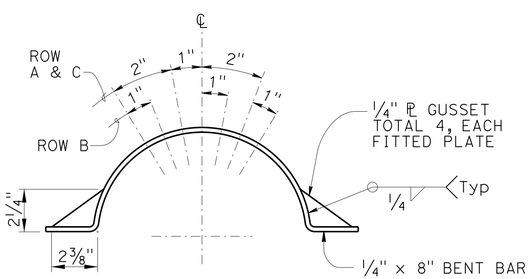

LAG SCREW AND GUSSET PLATE LAYOUT

DETAIL C
TIE-ROD AT POLE

NO SCALE

STANDARD DRAWING						
FILE NO. xs18-080-3	APPROVAL DATE July 2014	STATE OF CALIFORNIA DEPARTMENT OF TRANSPORTATION	DIVISION OF ENGINEERING SERVICES	BRIDGE NO. X / POST MILE X	TEMPORARY WOOD POLES DETAILS No. 3	SES-6

DS OSD 2147A (ENGLISH STANDARD DRAWING "XS" BORDER REV. (02-02-11))

ORIGINAL SCALE IN INCHES FOR REDUCED PLANS 0 1 2 3

UNIT: X
PROJECT NUMBER & PHASE: X
CONTRACT NO.: X

DISREGARD PRINTS BEARING EARLIER REVISION DATES

REVISION DATES: 6-27-14

SHEET X OF X

FILE => xs18-080-3.dgn

USERNAME => s126849 DATE PLOTTED => 13-APR-2015 TIME PLOTTED => 07:45

DIST	COUNTY	ROUTE	POST MILES TOTAL PROJECT	SHEET No.	TOTAL SHEETS
04	Son	116	39.8	26	34

REGISTERED CIVIL ENGINEER 4/6/15 DATE

4-6-15
PLANS APPROVAL DATE

REGISTERED PROFESSIONAL ENGINEER Jonathan C. Lee No. 47520 Exp. 12-31-15 CIVIL STATE OF CALIFORNIA

The State of California or its officers or agents shall not be responsible for the accuracy or completeness of electronic copies of this plan sheet.

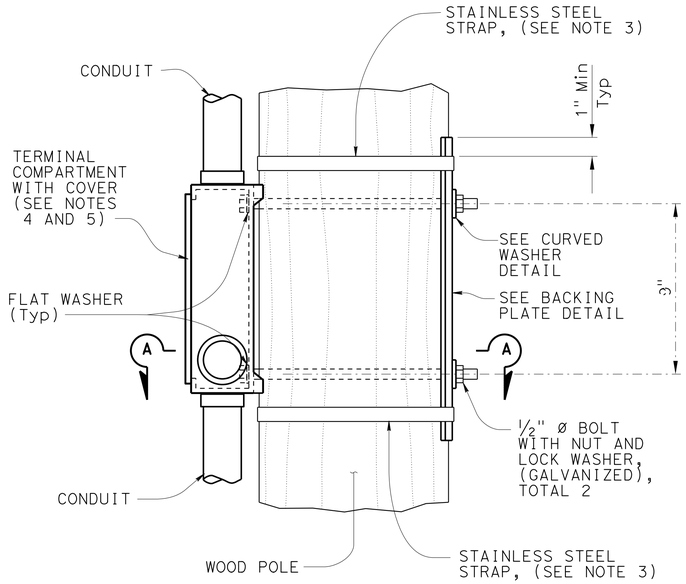

ELEVATION

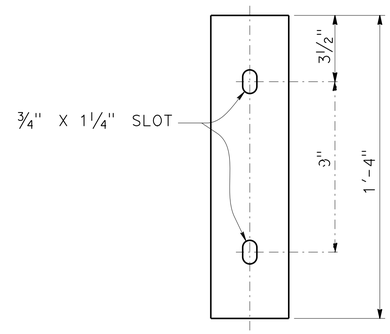

ELEVATION

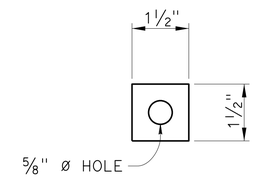

ELEVATION

PLAN

BACKING PLATE DETAIL

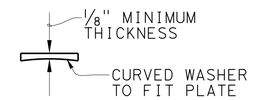

PLAN

CURVED WASHER DETAIL

NOTES:

1. Verify pole dimensions at terminal compartment for fabrication of backing plate and curved washer.
2. Backing plate to be galvanized after fabrication.
3. ¾" x 0.044" minimum, rounded edge stainless steel straps, double wrapped with 2" long bend under stainless steel strap buckle.
4. For miscellaneous details for signal mounting not shown see Standard Plan ES-4D.
5. If the terminal compartment has a cable entry guide on the rear face, remove the cable entry guide to a level that will not interfere with the wood post. Close any unused cable entry locations with raintight cap.

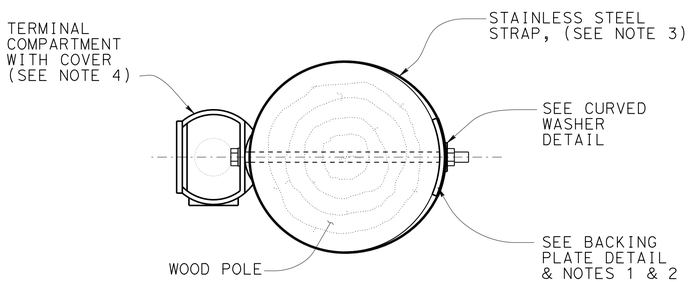

SECTION A-A

SIDE MOUNTING TERMINAL COMPARTMENT

NO SCALE

STANDARD DRAWING

FILE NO. xs18-080-4

APPROVAL DATE July 2014

STATE OF CALIFORNIA DEPARTMENT OF TRANSPORTATION

DIVISION OF ENGINEERING SERVICES

BRIDGE NO. X

POST MILE X

TEMPORARY WOOD POLES DETAILS No. 4

SES-7

DS OSD 2147A (ENGLISH STANDARD DRAWING "XS" BORDER REV. (02-02-11)

ORIGINAL SCALE IN INCHES FOR REDUCED PLANS 0 1 2 3

UNIT: X
PROJECT NUMBER & PHASE: X
CONTRACT NO.: X

DISREGARD PRINTS BEARING EARLIER REVISION DATES

REVISION DATES 6-27-14

SHEET X OF X

FILE => xs18-080-4.dgn

USERNAME => s126849 DATE PLOTTED => 13-APR-2015 TIME PLOTTED => 07:45

M

Maint	MAINTENANCE
Max	MAXIMUM
MB	METAL BEAM
MBB	METAL BEAM BARRIER
MBGR	METAL BEAM GUARD RAILING
Med	MEDIAN
MGS	MIDWEST GUARDRAIL SYSTEM
MH	MANHOLE
Min	MINIMUM
Misc	MISCELLANEOUS
Misc I & S	MISCELLANEOUS IRON AND STEEL
Mkr	MARKER
Mod	MODIFIED,
	MODIFY
Mon	MONUMENT
MP	METAL PLATE
MPGR	METAL PLATE GUARD RAILING
MR	MOVEMENT RATING
MSE	MECHANICALLY STABILIZED EMBANKMENT
Mt	MOUNTAIN, MOUNT
Mtl	MATERIAL
MVP	MAINTENANCE VEHICLE PULLOUT

N

N	NORTH
NB	NORTHBOUND
No.	NUMBER (MUST HAVE PERIOD)
Nos.	NUMBERS (MUST HAVE PERIOD)
NPS	NOMINAL PIPE SIZE
NS	NEAR SIDE
NSP	NEW STANDARD PLAN
NTS	NOT TO SCALE

O

Oblr	OBLITERATE
OC	OVERCROSSING
OD	OUTSIDE DIAMETER
OF	OUTSIDE FACE
OG	ORIGINAL GROUND
OGAC	OPEN GRADED ASPHALT CONCRETE
OGFC	OPEN GRADED FRICTION COURSE
OH	OVERHEAD
OHWM	ORDINARY HIGH WATER MARK
O-O	OUT TO OUT
Opp	OPPOSITE
OSD	OVERSIDE DRAIN

P

P	PAGE
PAP	PERFORATED ALUMINUM PIPE
PB	PULL BOX
PC	POINT OF CURVATURE,
	PRECAST
PCC	POINT OF COMPOUND CURVE,
	PORTLAND CEMENT CONCRETE
PCMS	PORTABLE CHANGEABLE MESSAGE SIGN
PCP	PERFORATED CONCRETE PIPE,
	PRESTRESSED CONCRETE PIPE
PCVC	POINT OF COMPOUND VERTICAL CURVE
PEC	PERMIT TO ENTER AND CONSTRUCT
Ped	PEDESTRIAN
Ped OC	PEDESTRIAN OVERCROSSING
Ped UC	PEDESTRIAN UNDERCROSSING
Perm Mtl	PERMEABLE MATERIAL

P continued

PG	PROFILE GRADE
PI	POINT OF INTERSECTION
PJP	PARTIAL JOINT PENETRATION
Pkwy	PARKWAY
ℙ,PL	PLATE
P/L	PROPERTY LINE
PM	POST MILE,
	TIME FROM NOON TO MIDNIGHT
PN	PAVING NOTCH
POC	POINT OF HORIZONTAL CURVE
POT	POINT OF TANGENT
POVC	POINT OF VERTICAL CURVE
PP	PIPE PILE,
	PLASTIC PIPE,
	POWER POLE
PPL	PREFORMED PERMEABLE LINER
PPP	PERFORATED PLASTIC PIPE
PRC	POINT OF REVERSE CURVE
PRF	PAVEMENT REINFORCING FABRIC
PRVC	POINT OF REVERSE VERTICAL CURVE
PS&E	PLANS, SPECIFICATIONS AND ESTIMATES
PS, P/S	PRESTRESSED
PSP	PERFORATED STEEL PIPE
PT	POINT OF TANGENCY
PVC	POLYVINYL CHLORIDE
Pvmt	PAVEMENT

Q

Qty	QUANTITY

R

R	RADIUS
R & D	REMOVE AND DISPOSE
R & S	REMOVE AND SALVAGE
R/C	RATE OF CHANGE
RCA	REINFORCED CONCRETE ARCH
RCB	REINFORCED CONCRETE BOX
RCP	REINFORCED CONCRETE PIPE
RCPA	REINFORCED CONCRETE PIPE ARCH
Rd	ROAD
Reinf	REINFORCED,
	REINFORCEMENT,
	REINFORCING
Rel	RELOCATE
Repl	REPLACEMENT
Ret	RETAINING
Rev	REVISED, REVISION
Rdwy	ROADWAY
RHMA	RUBBERIZED HOT MIX ASPHALT
Riv	RIVER
RM	ROAD-MIXED
RP	RADIUS POINT,
	REFERENCE POINT
RR	RAILROAD
RSP	ROCK SLOPE PROTECTION,
	REVISED STANDARD PLAN
Rt	RIGHT
Rte	ROUTE
RW	REDWOOD,
	RETAINING WALL
R/W	RIGHT OF WAY
Rwy	RAILWAY

S

S	SOUTH,
	SUPPLEMENT
SAE	STRUCTURE APPROACH EMBANKMENT
Salv	SALVAGE
SAPP	STRUCTURAL ALUMINUM PLATE PIPE
SB	SOUTHBOUND
SC	SAND CUSHION
SCSP	SLOTTED CORRUGATED STEEL PIPE
SD	STORM DRAIN
Sec	SECOND,
	SECTION
Sep	SEPARATION
SG	SUBGRADE
Shld	SHOULDER
Sht	SHEET
Sim	SIMILAR
℄	STATION LINE
SM	SELECTED MATERIAL
Spec	SPECIAL,
	SPECIFICATIONS
SPP	SLOTTED PLASTIC PIPE
SS	SLOPE STAKE
SSBM	STRAP AND SADDLE BRACKET METHOD
SSD	STRUCTURAL SECTION DRAIN
SSPA	STRUCTURAL STEEL PLATE ARCH
SSPP	STRUCTURAL STEEL PLATE PIPE
SSPPA	STRUCTURAL STEEL PLATE PIPE ARCH
SSRP	STEEL SPIRAL RIB PIPE
St	STREET
Sta	STATION
STBB	SINGLE THRIE BEAM BARRIER
Std	STANDARD
Str	STRUCTURE
Surf	SURFACING
SW	SIDEWALK,
	SOUND WALL
Swr	SEWER
Sym	SYMMETRICAL
S4S	SURFACE 4 SIDES

T

T	SEMI-TANGENT
Tan	TANGENT
TBB	THRIE BEAM BARRIER
Tbr	TIMBER
TC	TOP OF CURB
TCB	TRAFFIC CONTROL BOX
TCE	TEMPORARY CONSTRUCTION EASEMENT
Tel	TELEPHONE
Temp	TEMPORARY
TG	TOP OF GRADE
Tot	TOTAL
TP	TELEPHONE POLE
TPB	TREATED PERMEABLE BASE
TPM	TREATED PERMEABLE MATERIAL
Trans	TRANSITION

T continued

TS	TRANSVERSE,
	TRAFFIC SIGNAL,
	TUBULAR STEEL
Typ	TYPICAL

U

UC	UNDERCROSSING
UD	UNDERDRAIN
UG	UNDERGROUND
UON	UNLESS OTHERWISE NOTED
UP	UNDERPASS

V

V	VALVE,
	DESIGN SPEED
Var	VARIABLE,
	VARIES
VC	VERTICAL CURVE
VCP	VITRIFIED CLAY PIPE
Vert	VERTICAL
Via	VIADUCT
Vol	VOLUME

W

W	WEST,
	WIDTH
WB	WESTBOUND
WH	WEEP HOLE
WM	WIRE MESH
WS	WATER SURFACE
WSP	WELDED STEEL PIPE
Wt	WEIGHT
WV	WATER VALVE
WW	WINGWALL
WWLOL	WINGWALL LAYOUT LINE

X

X Sec	CROSS SECTION
Xing	CROSSING

Y

Yr	YEAR
Yrs	YEARS

Dist	COUNTY	ROUTE	POST MILES TOTAL PROJECT	SHEET No.	TOTAL SHEETS
04	Son	116	39.8	27	34

Grace M. Tsushima
REGISTERED CIVIL ENGINEER

July 19, 2013
PLANS APPROVAL DATE

REGISTERED PROFESSIONAL ENGINEER Grace M. Tsushima No. C49814 Exp. 9-30-14 CIVIL STATE OF CALIFORNIA

THE STATE OF CALIFORNIA OR ITS OFFICERS OR AGENTS SHALL NOT BE RESPONSIBLE FOR THE ACCURACY OR COMPLETENESS OF SCANNED COPIES OF THIS PLAN SHEET.

TO ACCOMPANY PLANS DATED 4-6-15

UNIT OF MEASUREMENT SYMBOLS:

Some of the symbols used in the project plan quantity tables and in the Bid Item List are:

TABLE A

SYMBOL USED	DEFINITIONS
ACRE	ACRE
CF	CUBIC FOOT
CY	CUBIC YARD
EA	EACH
GAL	GALLON
LB	POUND
LF	LINEAR FOOT
SQFT	SQUARE FOOT
SQYD	SQUARE YARD
STA	100 FEET
TAB	TABLET
TON	2,000 POUNDS

Some of the symbols used in the plans other than in the project plan quantity tables are:

TABLE B

SYMBOL USED	DEFINITIONS
ksi	KIPS PER SQUARE INCH
ksf	KIPS PER SQUARE FOOT
psi	POUNDS PER SQUARE INCH
psf	POUNDS PER SQUARE FOOT
lb/ft^3, pcf	POUNDS PER CUBIC FOOT
tsf	TONS PER SQUARE FOOT
mph, MPH *	MILES PER HOUR
ø	NOMINAL DIAMETER
oz	OUNCE
lb	POUND
kip	1,000 POUNDS
cal	CALORIE
ft	FOOT OR FEET
gal	GALLON

* For use on a sign panel only

STATE OF CALIFORNIA
DEPARTMENT OF TRANSPORTATION

ABBREVIATIONS (SHEET 2 OF 2)

NO SCALE

RSP A10B DATED JULY 19, 2013 SUPERSEDES STANDARD PLAN A10B DATED MAY 20, 2011 - PAGE 2 OF THE STANDARD PLANS BOOK DATED 2010.

REVISED STANDARD PLAN RSP A10B

2010 REVISED STANDARD PLAN RSP A10B

6-7-13

Dist	COUNTY	ROUTE	POST MILES TOTAL PROJECT	SHEET No.	TOTAL SHEETS
04	Son	116	39.8	28	34

REGISTERED CIVIL ENGINEER

April 20, 2012
PLANS APPROVAL DATE

REGISTERED PROFESSIONAL ENGINEER
Roberta L. McLaughlin
No. C40375
Exp. 3-31-13
CIVIL
STATE OF CALIFORNIA

THE STATE OF CALIFORNIA OR ITS OFFICERS OR AGENTS SHALL NOT BE RESPONSIBLE FOR THE ACCURACY OR COMPLETENESS OF SCANNED COPIES OF THIS PLAN SHEET.

TO ACCOMPANY PLANS DATED 4-6-15

2010 REVISED STANDARD PLAN RSP A24A

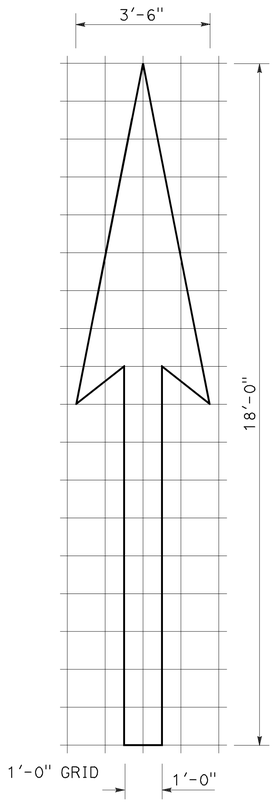

A=25 ft^2

TYPE I 18'-0" ARROW

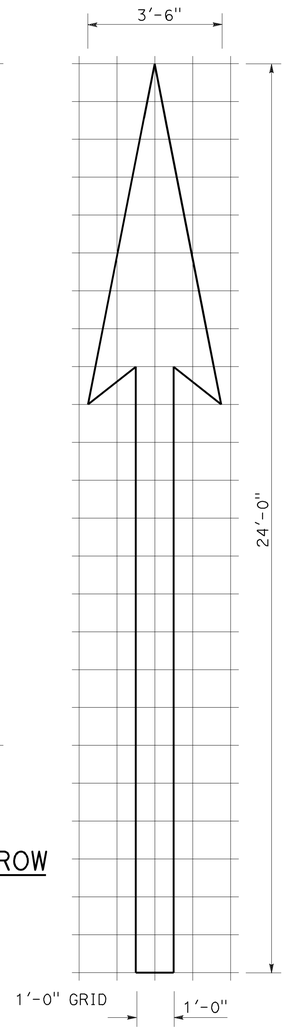

A=31 ft^2

TYPE I 24'-0" ARROW

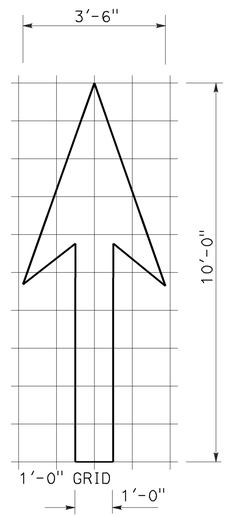

A=14 ft^2

TYPE I 10'-0" ARROW

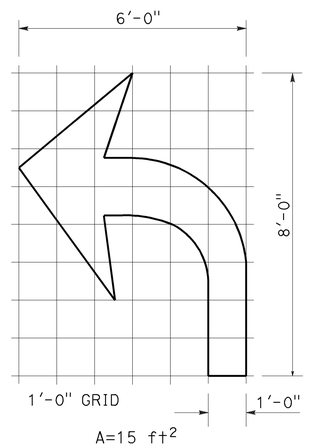

A=15 ft^2

TYPE IV (L) ARROW

(For Type IV (R) arrow, use mirror image)

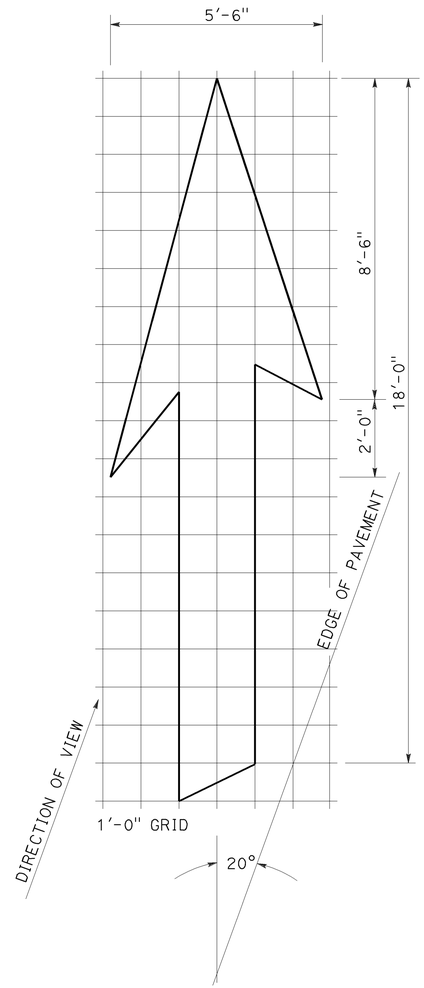

A=42 ft^2

TYPE VI ARROW

Right lane drop arrow
(For left lane, use mirror image)

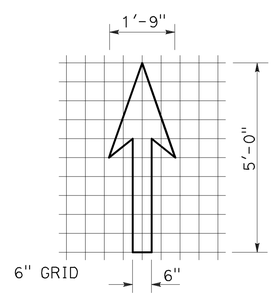

A=3.5 ft^2

BIKE LANE ARROW

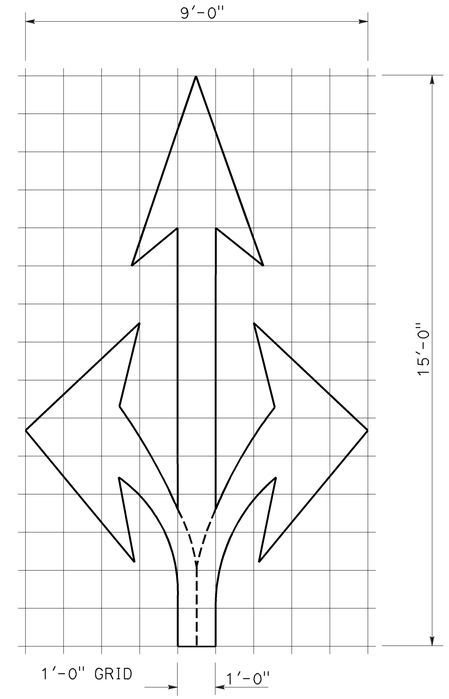

A=36 ft^2

TYPE VIII ARROW

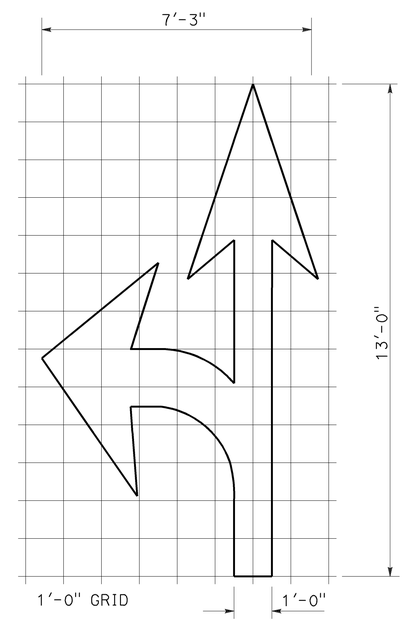

A=27 ft^2

TYPE VII (L) ARROW

(For Type VII (R) arrow, use mirror image)

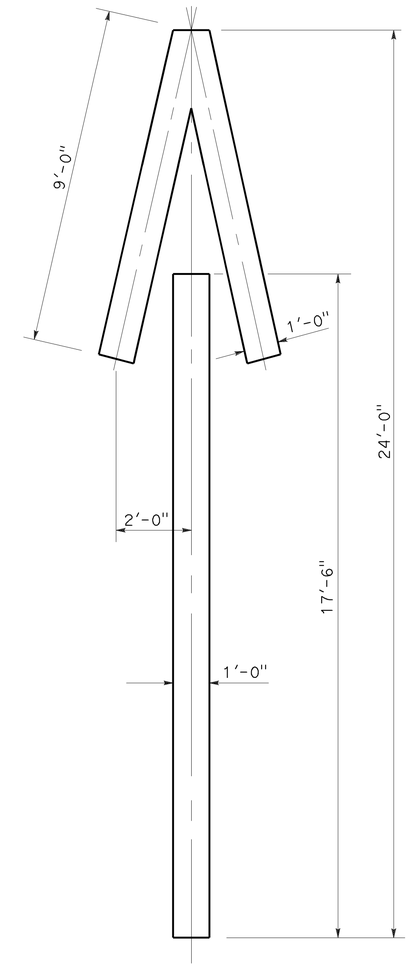

A=33 ft^2

TYPE V ARROW

NOTE:
Minor variations in dimensions may be accepted by the Engineer.

STATE OF CALIFORNIA
DEPARTMENT OF TRANSPORTATION

PAVEMENT MARKINGS ARROWS

NO SCALE

RSP A24A DATED APRIL 20, 2012 SUPERSEDES STANDARD PLAN A24A DATED MAY 20, 2011 - PAGE 13 OF THE STANDARD PLANS BOOK DATED 2010.

REVISED STANDARD PLAN RSP A24A

3-14-12

Dist	COUNTY	ROUTE	POST MILES TOTAL PROJECT	SHEET No.	TOTAL SHEETS
04	Son	116	39.8	29	34

REGISTERED CIVIL ENGINEER

July 20, 2012
PLANS APPROVAL DATE

REGISTERED PROFESSIONAL ENGINEER
Roberta L. McLaughlin
No. C40375
Exp. 3-31-13
CIVIL
STATE OF CALIFORNIA

THE STATE OF CALIFORNIA OR ITS OFFICERS OR AGENTS SHALL NOT BE RESPONSIBLE FOR THE ACCURACY OR COMPLETENESS OF SCANNED COPIES OF THIS PLAN SHEET.

TO ACCOMPANY PLANS DATED 4-6-15

2010 REVISED STANDARD PLAN RSP A24E

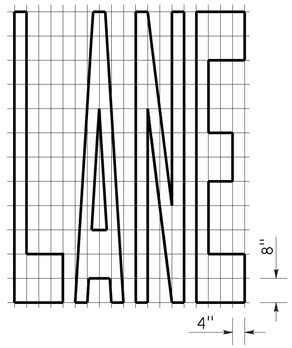

A=24 ft^2

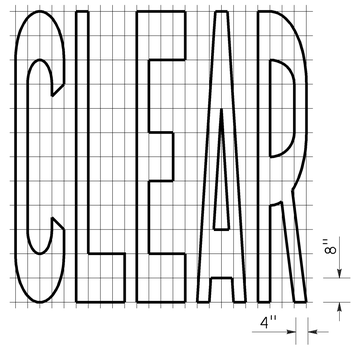

A=27 ft^2

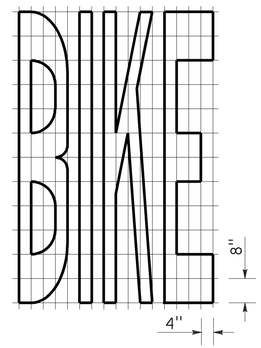

A=21 ft^2

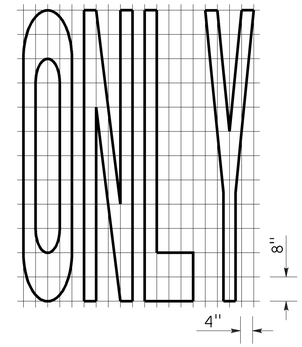

A=22 ft^2

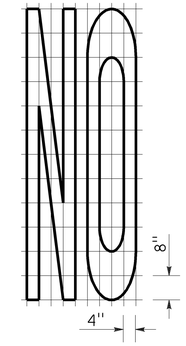

A=14 ft^2

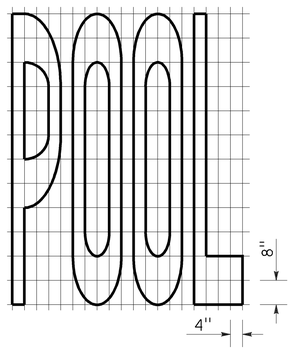

A=23 ft^2

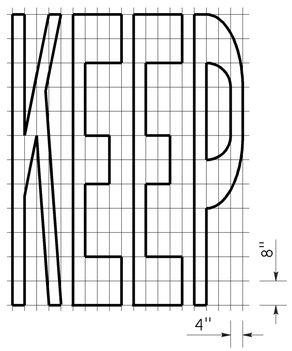

A=24 ft^2

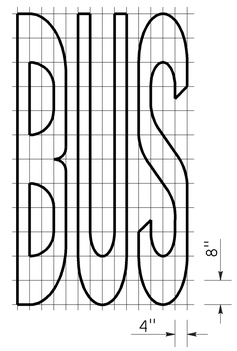

A=20 ft^2

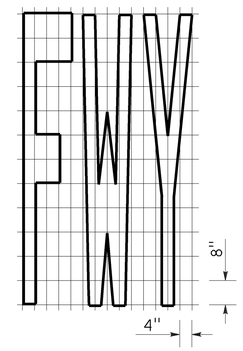

A=16 ft^2

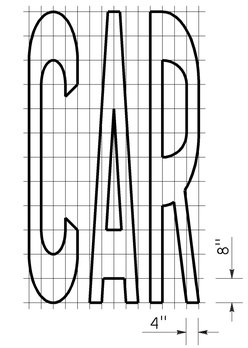

A=17 ft^2

WORD MARKINGS			
ITEM	ft^2	ITEM	ft^2
LANE	24	NO	14
POOL	23	BIKE	21
CAR	17	BUS	20
CLEAR	27	ONLY	22
KEEP	24	FWY	16

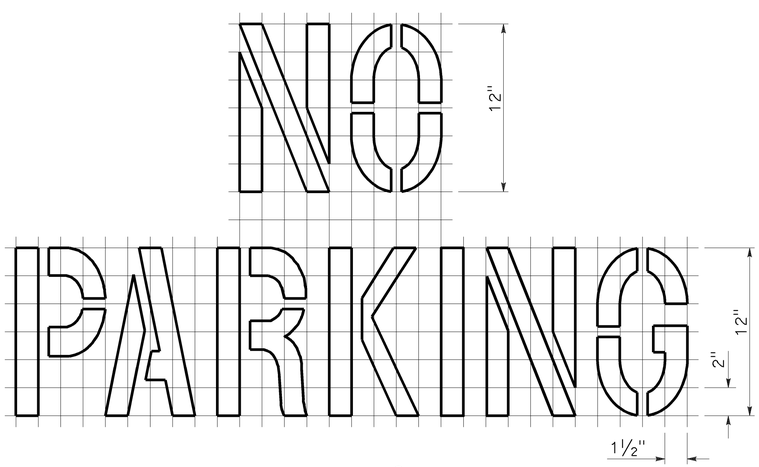

A=2 ft^2

See Notes 6 and 7

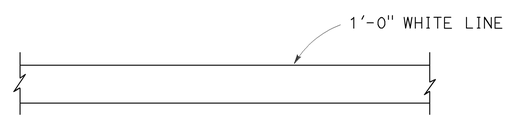

LIMIT LINE (STOP LINE)

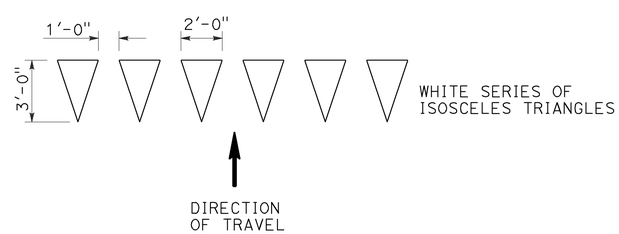

YIELD LINE

NOTES:

1. If a message consists of more than one word, it should read "UP", i.e., the first word should be nearest the driver.
2. The space between words should be at least four times the height of the characters for low speed roads, but not more than ten times the height of the characters. The space may be reduced appropriately where there is limited space because of local conditions.
3. Minor variations in dimensions may be accepted by the Engineer.
4. Portions of a letter, number or symbol may be separated by connecting segments not to exceed 2" in width.
5. The words "NO PARKING" pavement marking is to be used for parking facilities. For typical locations of markings, see Standard Plans A90A and A90B.
6. The words "NO PARKING", shall be painted in white letters no less than 1'-0" high on a contrasting background and located so that it is visible to traffic enforcement officials.

STATE OF CALIFORNIA
DEPARTMENT OF TRANSPORTATION

PAVEMENT MARKINGS WORDS, LIMIT AND YIELD LINES

NO SCALE

RSP A24E DATED JULY 20, 2012 SUPERSEDES STANDARD PLAN A24E
DATED MAY 20, 2011 - PAGE 17 OF THE STANDARD PLANS BOOK DATED 2010.

REVISED STANDARD PLAN RSP A24E

6-12-12

Dist	COUNTY	ROUTE	POST MILES TOTAL PROJECT	SHEET No.	TOTAL SHEETS
04	Son	116	39.8	30	34

Raymond Don Tsztoo
REGISTERED CIVIL ENGINEER

October 19, 2012
PLANS APPROVAL DATE

REGISTERED PROFESSIONAL ENGINEER
Raymond Don Tsztoo
No. C37332
Exp. 6-30-14
CIVIL
STATE OF CALIFORNIA

THE STATE OF CALIFORNIA OR ITS OFFICERS OR AGENTS SHALL NOT BE RESPONSIBLE FOR THE ACCURACY OR COMPLETENESS OF SCANNED COPIES OF THIS PLAN SHEET.

TO ACCOMPANY PLANS DATED 4-6-15

2010 REVISED STANDARD PLAN RSP A86D

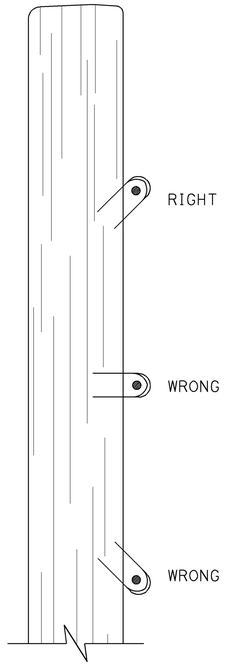

DRIVE STAPLES AT ANGLE

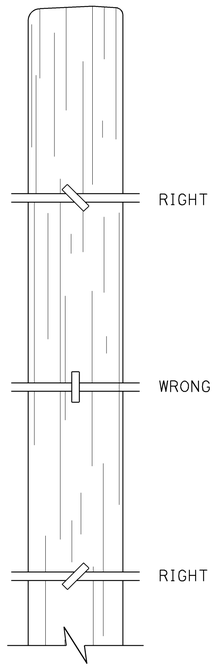

DO NOT DRIVE STAPLES PARALLEL TO SIDE OF POST

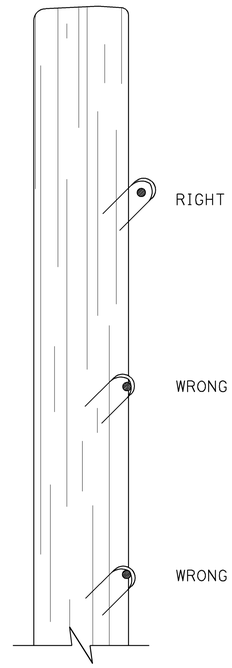

LEAVE WIRE LOOSE IN STAPLE

LINE POST STAPLING DETAILS

(Apply to rectangular/square and round posts)
Do not staple vertical wire in wire mesh.

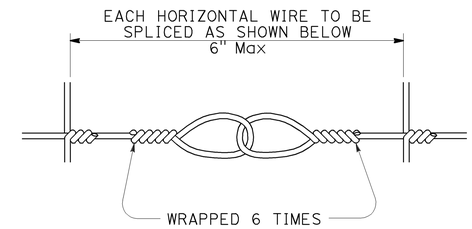

SPLICE DETAIL FOR BARBED WIRE/WIRE MESH FENCE

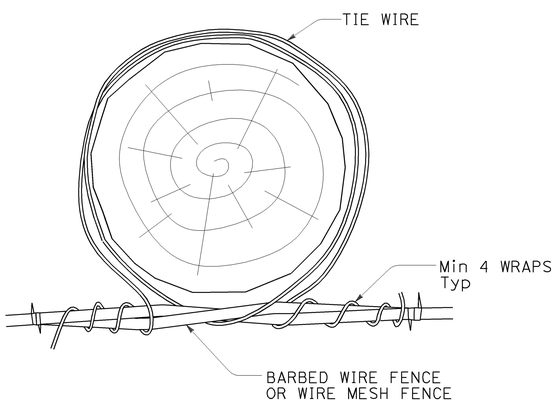

OPTION A

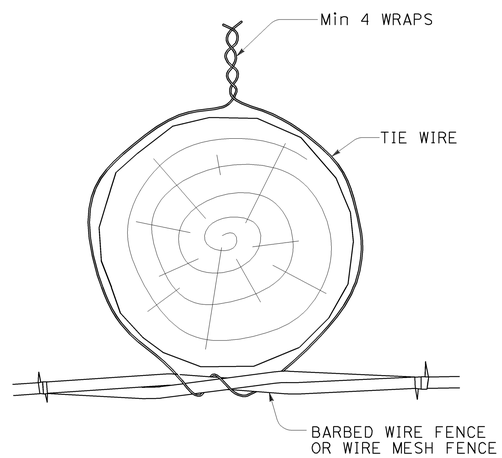

OPTION B

LINE POST WIRE TIE OPTION DETAILS

(Option details also apply to rectangular/square posts)

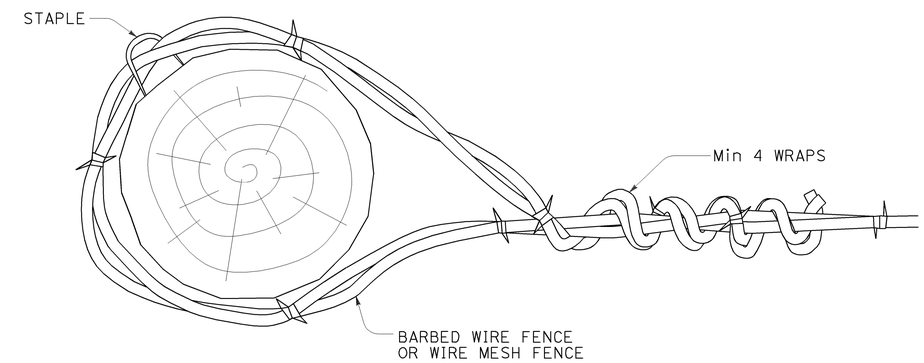

END, LATCH, PULL, AND CORNER POST DETAIL

(Also applies to rectangular/square posts)

STATE OF CALIFORNIA
DEPARTMENT OF TRANSPORTATION

BARBED WIRE AND WIRE MESH FENCE - MISCELLANEOUS DETAILS

NO SCALE

RSP A86D DATED OCTOBER 19, 2012 SUPPLEMENTS THE STANDARD PLANS BOOK DATED 2010.

REVISED STANDARD PLAN RSP A86D

10-9-12

Dist	COUNTY	ROUTE	POST MILES TOTAL PROJECT	SHEET No.	TOTAL SHEETS
04	Son	116	39.8	31	34

LICENSED LANDSCAPE ARCHITECT

July 19, 2013
PLANS APPROVAL DATE

THE STATE OF CALIFORNIA OR ITS OFFICERS OR AGENTS SHALL NOT BE RESPONSIBLE FOR THE ACCURACY OR COMPLETENESS OF SCANNED COPIES OF THIS PLAN SHEET.

LICENSED LANDSCAPE ARCHITECT — Gregory A. Balzer — 2576 — 02-28-15 Renewal Date — 7-19-13 Date — STATE OF CALIFORNIA

TO ACCOMPANY PLANS DATED 4-6-15

A

AB	AGGREGATE BASE
ABS	ACRYLONITRILE-BUTADIENE-STYRENE
AC	ASPHALT CONCRETE
ACC	ARMOR-CLAD CONDUCTORS
Adj	ADJACENT/ADJUSTABLE
AIC	AUXILIARY IRRIGATION CONTROLLER
Alt	ALTERNATIVE
AMEND	AMENDMENT
ARV	AIR RELEASE VALVE
AUTO	AUTOMATIC
AUX	AUXILIARY
AVB	ATMOSPHERIC VACUUM BREAKER

B

B&B	BALLED AND BURLAPPED
B/B	BRASS/BRONZE
B/B/PL	BRASS/BRONZE/PLASTIC
B/PL	BRASS/PLASTIC
BFM	BONDED FIBER MATRIX
Bit Ctd	BITUMINOUS COATED
BP	BOOSTER PUMP
BPA	BACKFLOW PREVENTER ASSEMBLY
BPE	BACKFLOW PREVENTER ENCLOSURE
BV	BALL VALVE

C

C	CONDUIT
CAP	CORRUGATED ALUMINUM PIPE
CARV	COMBINATION AIR RELEASE VALVE
CB	COUPLING BAND
CCA	CAM COUPLER ASSEMBLY
CEC	CONTROLLER ENCLOSURE CABINET
CHDPE	CORRUGATED HIGH DENSITY POLYETHYLENE
CL	CHAIN LINK
CNC	CONTROL AND NEUTRAL CONDUCTORS
Conc	CONCRETE
CP	COPPER PIPE
CS	COMPOST SOCK
CSP	CORRUGATED STEEL PIPE
CST	CENTER STRIP
CV	CHECK VALVE

D

Dia	DIAMETER
DIP	DUCTILE IRON PIPE
DIT	DRIP IRRIGATION TUBING
DG	DECOMPOSED GRANITE
DN	DIAMETER NOMINAL
DVA	DRIP VALVE ASSEMBLY

E

EC	EROSION CONTROL
ECTC	EROSION CONTROL TECHNOLOGY COUNCIL
Elect	ELECTRIC/ELECTRICAL
Elev	ELEVATION
ELL	ELBOW
ENCL	ENCLOSURE
EP	EDGE OF PAVEMENT
ES	EDGE OF SHOULDER
EST	END STRIP
ESTB	ESTABLISHMENT
ETW	EDGE OF TRAVELED WAY

F

F	FULL CIRCLE
F/P	FULL/PART CIRCLE
FCV	FLOW CONTROL VALVE
FERT	FERTILIZER
FG	FINISHED GRADE
FH	FLEXIBLE HOSE
FIPT	FEMALE IRON PIPE THREAD
FIS	FERTILIZER INJECTOR SYSTEM
FL	FLOW LINE
FR	FIBER ROLL
FS	FLOW SENSOR
FSC	FLOW SENSOR CABLE
FV	FLUSH VALVE

G

Galv	GALVANIZED
GARV	GARDEN VALVE
GARVA	GARDEN VALVE ASSEMBLY
GM	GRAVEL MULCH
GPH	GALLONS PER HOUR
GPM	GALLONS PER MINUTE
GSP	GALVANIZED STEEL PIPE
GV	GATE VALVE

H

H	HALF CIRCLE
HDPE	HIGH DENSITY POLYETHYLENE
HP	HORSEPOWER/HINGE POINT
HPL	HIGH PRESSURE LINE
Hwy	HIGHWAY

I

IC	IRRIGATION CONTROLLER
ICC	IRRIGATION CONTROLLER(S) IN CONTROLLER ENCLOSURE CABINET
ID	INSIDE DIAMETER
IFS	IRRIGATION FILTRATION SYSTEM
IPS	IRON PIPE SIZE
IPT	IRON PIPE THREAD
Irr	IRRIGATION

L

L	LENGTH

M

Max	MAXIMUM
MBGR	METAL BEAM GUARD RAILING
MCV	MANUAL CONTROL VALVE
MIC	MASTER IRRIGATION CONTROLLER
Min	MINIMUM
MIPT	MALE IRON PIPE THREAD
Misc	MISCELLANEOUS
Mtl	MATERIAL
MVP	MAINTENANCE VEHICLE PULLOUT

N

NCN	NO COMMON NAME
NL	NOZZLE LINE
No.	NUMBER
NPT	NATIONAL PIPE THREAD

O

O/C	ON CENTER
OD	OUTSIDE DIAMETER
OL	OVERLAP

P

P	PART CIRCLE
PB	PULL BOX
PCC	PORTLAND CEMENT CONCRETE
PE	POLYETHYLENE
Pkt	PACKET
PL	PLASTIC
PLS	PURE LIVE SEED
PLT	PLANT/PLANTING
PLT ESTB	PLANT ESTABLISHMENT
PM	POST MILE
PR	PRESSURE RATED
PRLV	PRESSURE RELIEF VALVE
PRV	PRESSURE REGULATING VALVE
PVC	POLYVINYL CHLORIDE
Pvmt	PAVEMENT

Q

Q	QUARTER CIRCLE
QCV	QUICK COUPLING VALVE

R

R	RADIUS
RCP	REINFORCED CONCRETE PIPE
RCV	REMOTE CONTROL VALVE
RCVM	REMOTE CONTROL VALVE (MASTER)
RCVMF	REMOTE CONTROL VALVE (MASTER) W/FLOW SENSOR
RCVP	REMOTE CONTROL VALVE W/PRESSURE REGULATOR
RCW	RECYCLED WATER
RECP	ROLLED EROSION CONTROL PRODUCT
REQ	REQUIRED
RICS	REMOTE IRRIGATION CONTROL SYSTEM
R/W	RIGHT OF WAY

S

S	SLIP
SCH	SCHEDULE
SF	STATE-FURNISHED
Shld	SHOULDER
Sq	SQUARE
SST	SIDE STRIP
Sta	STATION
Std	STANDARD
SW	SIDEWALK/SOUND WALL

T

T	THIRD CIRCLE/THREAD
TLS	TRUCK LOADING STANDPIPE
TQ	THREE QUARTER CIRCLE
TRM	TURF REINFORCEMENT MAT
TT	TWO-THIRDS CIRCLE
TWSA	TREE WELL SPRINKLER ASSEMBLY
Typ	TYPICAL

U

UG	UNDERGROUND

W

W	WIDTH
W/	WITH
WM	WATER METER
WS	WYE STRAINER
WSA	WYE STRAINER ASSEMBLY
WSP	WELDED STEEL PIPE
WWM	WELDED WIRE MESH

NOTE:
For additional abbreviations, see Standard Plans A10A and A10B.

STATE OF CALIFORNIA
DEPARTMENT OF TRANSPORTATION

LANDSCAPE AND EROSION CONTROL ABBREVIATIONS

NO SCALE

RSP H1 DATED JULY 19, 2013 SUPERSEDES STANDARD PLAN H1 DATED MAY 20, 2011 - PAGE 218 OF THE STANDARD PLANS BOOK DATED 2010.

REVISED STANDARD PLAN RSP H1

2010 REVISED STANDARD PLAN RSP H1

6-28-13

Dist	COUNTY	ROUTE	POST MILES TOTAL PROJECT	SHEET No.	TOTAL SHEETS
04	Son	116	39.8	32	34

LICENSED LANDSCAPE ARCHITECT

November 15, 2013
PLANS APPROVAL DATE

LICENSED LANDSCAPE ARCHITECT Gregory A. Balzer 2576 OF CALIFORNIA 2-28-15 Renewal Date 11-15-13 Date

THE STATE OF CALIFORNIA OR ITS OFFICERS OR AGENTS SHALL NOT BE RESPONSIBLE FOR THE ACCURACY OR COMPLETENESS OF SCANNED COPIES OF THIS PLAN SHEET.

TO ACCOMPANY PLANS DATED 4-6-15

EXISTING	NEW	ITEM DESCRIPTION
		WATER METER (WM)
		BACKFLOW PREVENTER ASSEMBLY (BPA)
		BACKFLOW PREVENTER ENCLOSURE (BPE)
		BOOSTER PUMP (BP)
		TRUCK LOADING STANDPIPE (TLS)
	FS	FLOW SENSOR (FS)
		MASTER IRRIGATION CONTROLLER (MIC)
		AUXILIARY IRRIGATION CONTROLLER (AIC)
		IRRIGATION CONTROLLER (IC) IRRIGATION CONTROLLER (IC) (BATTERY) IRRIGATION CONTROLLER (IC) (SOLAR) IRRIGATION CONTROLLER (IC) (TWO WIRE) IRRIGATION CONTROLLER(S) IN CONTROLLER ENCLOSURE CABINET (ICC)
acc	ACC	ARMOR-CLAD CONDUCTORS (ACC)
cnc	CNC	CONTROL AND NEUTRAL CONDUCTORS (CNC)
		IRRIGATION CONDUIT
		EXTEND IRRIGATION CONDUIT
dip	DIP	DUCTILE IRON PIPE (SUPPLY LINE) (MAIN) (DIP)
		GALVANIZED STEEL PIPE (SUPPLY LINE) (MAIN) (GSP)
		GALVANIZED STEEL PIPE (SUPPLY LINE) (LATERAL) (GSP)
		PLASTIC PIPE (SUPPLY LINE) (MAIN)
		PLASTIC PIPE (SUPPLY LINE) (LATERAL)
cp	CP	COPPER PIPE (SUPPLY LINE)
dit	DIT	DRIP IRRIGATION TUBING
		REMOTE CONTROL VALVE (RCV) REMOTE CONTROL VALVE (MASTER) (RCVM) REMOTE CONTROL VALVE (MASTER) W/FLOW METER (RCVMF)
P	P	REMOTE CONTROL VALVE W/PRESSURE REGULATOR (RCVP)
		EXISTING MANUAL CONTROL VALVE (MCV)
	V	DRIP VALVE ASSEMBLY (DVA)
	Y	WYE STRAINER ASSEMBLY (WSA)

EXISTING	NEW	ITEM DESCRIPTION
		GATE VALVE (GV)
		BALL VALVE (BV)
		QUICK COUPLING VALVE (QCV)
		CAM COUPLER ASSEMBLY (CCA)
		GARDEN VALVE ASSEMBLY (GARVA)
		PRESSURE REGULATING VALVE (PRV)
		PRESSURE RELIEF VALVE (PRLV)
		FLOW CONTROL VALVE (FCV)
		COMBINATION AIR RELEASE VALVE (CARV)
		CHECK VALVE (CV)
		FLUSH VALVE (FV)
		EXISTING NOZZLE LINE W/TURNING UNION
		EXISTING IRRIGATION SYSTEM
		EXISTING IRRIGATION SYSTEM TO BE REMOVED
		CHAIN LINK GATE
		QUICK COUPLING VALVE W/SPRINKLER PROTECTOR
3	3	SPRINKLER W/SPRINKLER PROTECTOR
	C	CONNECT TO EXISTING SYSTEM
		CAP
		CAP EXISTING
	FR	FIBER ROLL
	CS	COMPOST SOCK

- RCV SIZE
- IRRIGATION CONTROLLER
- CONTROLLER STATION
- VALVE IN PARALLEL (IF APPLICABLE)
- GPM
- QUANTITY OF SPRINKLERS (WHEN SHOWN)

* 2½"-A-2b-40-60

VALVE CODE

* VALVE CODES FOR EXISTING VALVES ARE SHOWN IN A DASHED ENCLOSURE.

STATE OF CALIFORNIA
DEPARTMENT OF TRANSPORTATION

LANDSCAPE AND EROSION CONTROL SYMBOLS

NO SCALE

RSP H2 DATED NOVEMBER 15, 2013 SUPERSEDES RSP H2 DATED JULY 19, 2013 AND STANDARD PLAN H2 DATED MAY 20, 2011 - PAGE 219 OF THE STANDARD PLANS BOOK DATED 2010.

REVISED STANDARD PLAN RSP H2

2010 REVISED STANDARD PLAN RSP H2

10-9-13

Dist	COUNTY	ROUTE	POST MILES TOTAL PROJECT	SHEET No.	TOTAL SHEETS
04	Son	116	39.8	33	34

Devinder Singh
REGISTERED CIVIL ENGINEER

October 17, 2014
PLANS APPROVAL DATE

REGISTERED PROFESSIONAL ENGINEER
Devinder Singh
No. C50470
Exp. 6-30-15
CIVIL
STATE OF CALIFORNIA

THE STATE OF CALIFORNIA OR ITS OFFICERS OR AGENTS SHALL NOT BE RESPONSIBLE FOR THE ACCURACY OR COMPLETENESS OF SCANNED COPIES OF THIS PLAN SHEET.

TO ACCOMPANY PLANS DATED 4-6-15

NOTES:

See Revised Standard Plan RSP T9 for tables.

Use cone spacing X for taper segment, Y for tangent segment or Z for conflict situations, as approriate, per Table 1, unless X, Y, or Z cone spacing is shown on this sheet.

Unless otherwise specified in the special provisions, all temporary warning signs shall have black legend on fluorescent orange background.

California codes are designated by (CA). Otherwise, Federal (MUTCD) codes are shown.

TYPICAL LANE CLOSURE WITH REVERSIBLE CONTROL

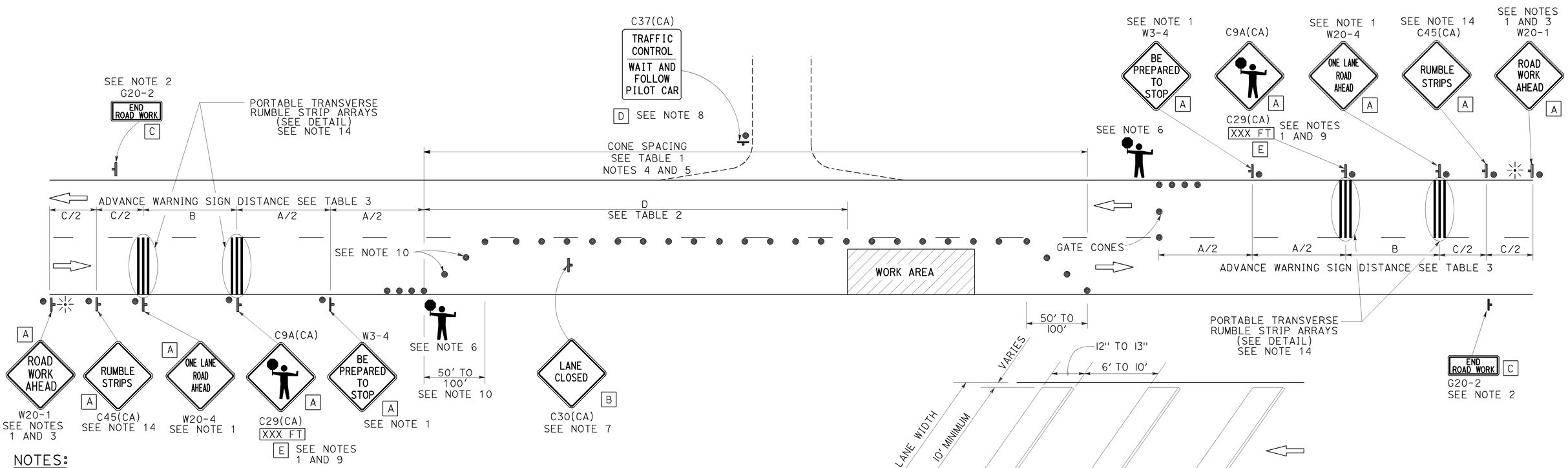

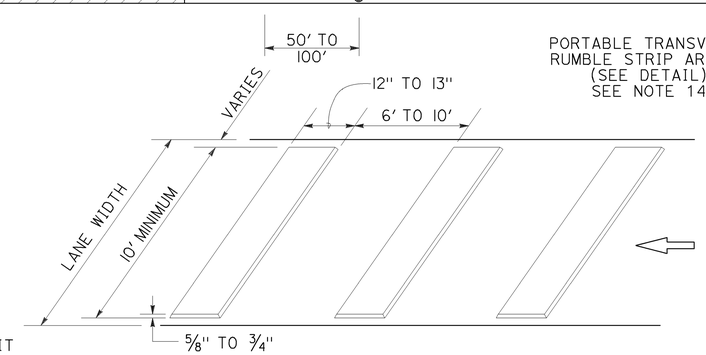

PORTABLE TRANSVERSE RUMBLE STRIP ARRAY DETAIL

NOTES:

1. Each advance warning sign in each direction of travel shall be equipped with at least two flags for daytime closure. Each flag shall be at least 16" x 16" in size and shall be orange or fluorescent red-orange in color. Flashing beacons shall be placed at the locations indicated for lane closure during hours of darkness.
2. A G20-2 "END ROAD WORK" sign, as appropriate, shall be placed at the end of the lane control unless the end of work area is obvious, or ends within a larger project's limits.
3. If the W20-1 sign would follow within 2000' of a stationary W20-1 or G20-1 "ROAD WORK NEXT _____ MILES", use a W20-4 sign for the first advance warning sign.
4. All cones used for lane closures during the hours of darkness shall be fitted with retroreflective bands (or sleeves) as specified in the specifications.
5. Portable delineators, placed at one-half the spacing indicated for traffic cones, may be used instead of cones for daytime closures only.
6. Additional advance flaggers may be required. Flagger should stand in a conspicuous place, be visible to approaching traffic as well as approaching vehicles after the first vehicle has stopped. During the hours of darkness, the flagging-station and flagger shall be illuminated and clearly visible to approaching traffic. The illumination footprint of the lighting on the ground shall be at least 20' in diameter. Place a minimum of four cones at 50' intervals in advance of flagger station as shown.
7. Place C30(CA) "LANE CLOSED" sign at 500' to 1000' intervals throughout extended work areas. They are optional if the work area is visible from the flagger station.
8. When a pilot car is used, place a C37(CA) "TRAFFIC CONTROL-WAIT AND FOLLOW PILOT CAR" sign with black legend on white background at all intersections, driveways and alleys without a flagger within traffic control area. Signs shall be clean and visible at all times. Where traffic can not be effectively self-regulated, at least one flagger shall be used at each intersection within traffic control area.
9. An optional C29(CA) sign may be placed below the C9A(CA) sign.
10. Either traffic cones or barricades shall be placed on the taper. Barricades shall be Type I, II, or III.
11. The color of the portable transverse rumble strips shall be black or orange. Use 2 arrays, each array shall consist of 3 rumble strips.
12. Portable transverse rumble strips shall not be placed on sharp horizontal or vertical curves nor shall they be placed through pedestrian crossings.
13. If the portable transverse rumble strips become out of alignment (skewed) by more than 6 inches, measured from one end to the other, they shall be readjusted to bring the placement back to the original location.
14. Portable transverse rumble strips are not required if any one of the following conditions is satisfied:
    A. Work duration occupies a location for four hours or less
    B. Posted speed limit is below 45 MPH
    C. Work is of emergency nature
    D. Work zone is in snow or icy weather conditions

LEGEND

- TRAFFIC CONE
- TEMPORARY TRAFFIC CONTROL SIGN
- PORTABLE FLASHING BEACON
- FLAGGER

SIGN PANEL SIZE (Min)

A	48" x 48"
B	30" x 30"
C	36" x 18"
D	36" x 42"
E	20" x 7"

STATE OF CALIFORNIA
DEPARTMENT OF TRANSPORTATION

TRAFFIC CONTROL SYSTEM FOR LANE CLOSURE ON TWO LANE CONVENTIONAL HIGHWAYS

NO SCALE

RSP T13 DATED OCTOBER 17, 2014 SUPERSEDES RSP T13 DATED JULY 18, 2014 AND RSP T13 DATED APRIL 19, 2013 AND STANDARD PLAN T13 DATED MAY 20, 2011 - PAGE 241 OF THE STANDARD PLANS BOOK DATED 2010.

REVISED STANDARD PLAN RSP T13

2010 REVISED STANDARD PLAN RSP T13

9-26-14

Dist	COUNTY	ROUTE	POST MILES TOTAL PROJECT	SHEET No.	TOTAL SHEETS
04	Son	116	39.8	34	34

Theresa Gabriel
REGISTERED ELECTRICAL ENGINEER

July 19, 2013
PLANS APPROVAL DATE

REGISTERED PROFESSIONAL ENGINEER
Theresa Aziz Gabriel
No. E15129
Exp. 6-30-14
ELECTRICAL
STATE OF CALIFORNIA

THE STATE OF CALIFORNIA OR ITS OFFICERS OR AGENTS SHALL NOT BE RESPONSIBLE FOR THE ACCURACY OR COMPLETENESS OF SCANNED COPIES OF THIS PLAN SHEET.

TO ACCOMPANY PLANS DATED 4-6-15

2010 REVISED STANDARD PLAN RSP ES-5C

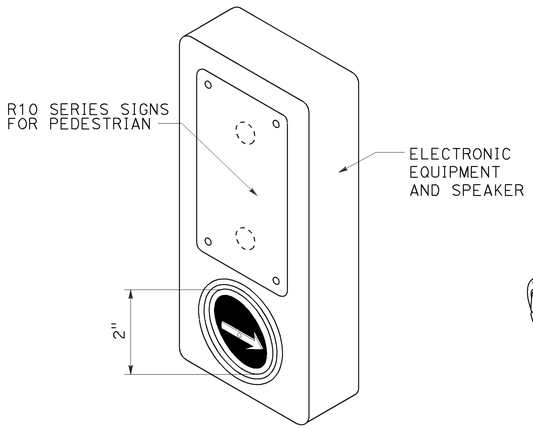

ACCESSIBLE PEDESTRIAN SIGNAL

DETAIL A
(See note 1 to 4)

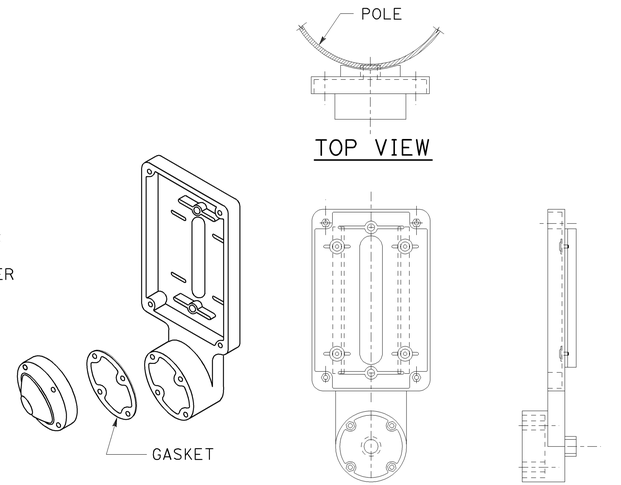

TYPE B PUSH BUTTON ASSEMBLY

DETAIL B
(See note 1 to 4)

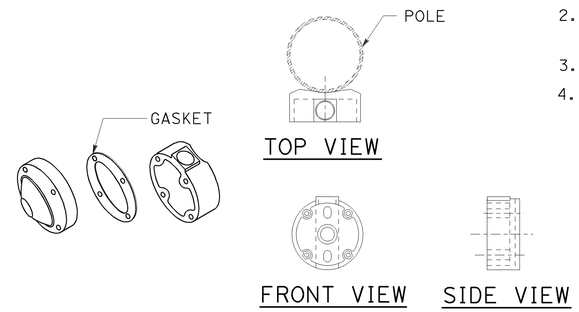

TYPE C PUSH BUTTON ASSEMBLY

DETAIL C
(See note 1 to 4)

NOTES:

1. Back casting shape to fit curvature of pole.
2. Provide cover fitting for top of post, when PBA is mounted on push button assembly post.
3. Install push button on crosswalk side of standard.
4. Use R10 series regulatory signs and plaques for pedestrian and bicycle facilities.

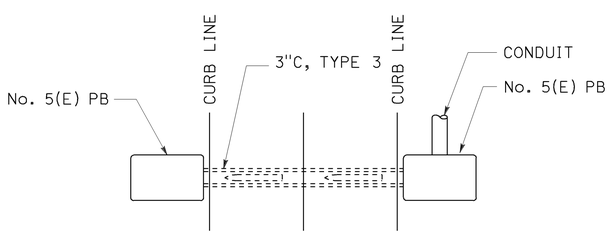

PLAN

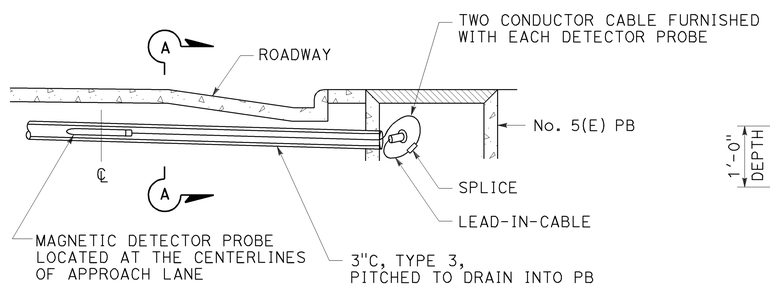

ELEVATION

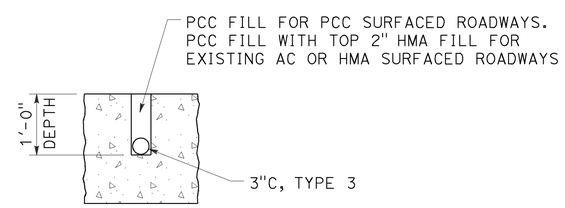

SECTION A-A

MAGNETIC VEHICLE DETECTOR

INSTALLATION DETAILS

DETAIL D

STATE OF CALIFORNIA
DEPARTMENT OF TRANSPORTATION

ELECTRICAL SYSTEMS (ACCESSIBLE PEDESTRIAN SIGNAL, PUSH BUTTON ASSEMBLIES AND MAGNETIC VEHICLE DETECTOR)

NO SCALE

RSP ES-5C DATED JULY 19, 2013 SUPERSEDES STANDARD PLAN ES-5C
DATED MAY 20, 2011 - PAGE 450 OF THE STANDARD PLANS BOOK DATED 2010.

REVISED STANDARD PLAN RSP ES-5C