INFORMATION HANDOUT

For Contract No. 04-2G5404
At 04-SCl-82-14.8/18.1

Identified by
Project ID 0400021004

MATERIALS INFORMATION

Recycled Water for Construction Use, City of Sunnyvale

Battery Backup System

CHAPTER 4

RECYCLED WATER FOR CONSTRUCTION USE

Permits

The use of recycled water for construction purposes must be approved by the City of Sunnyvale Environmental Services Department. The permit must be obtained from the Water Division before construction begins. Recycled water is obtained from a permanent water tanker filling station. The permit application and forms are attached at the end of this chapter.

Construction Uses

Recycled water for construction use may only be used for street sweeping operations (cleaning roads, sidewalks, and outdoor work areas), mixing concrete, soil compaction during grading operations, dust control on roads and streets, and backfill consolidation and compaction of backfill in trenches for nonpotable water, sanitary sewer, storm drain, gas and electric pipelines.

Recycled water may not be used for water jetting and consolidation or compaction of backfill in trenches for potable water pipelines.

Equipment

Equipment operators must be instructed about the requirements stated here and the potential health hazards involved with the use of recycled water. Water trucks, hoses, drop tanks, etc., must be identified as containing recycled water not suitable for use as drinking water.

Recycled water may not be introduced into any potable water piping system. No unprotected connection may be made between equipment containing recycled water and any part of a potable water system.

Equipment and Facilities Cleaning

Any equipment or facilities such as storage ponds, tanks, temporary piping or valves, and portable pumps used with recycled water must be cleaned and disinfected before being removed from the approved use area for use at another jobsite. Disinfection and cleaning ensure the protection of public health. The disinfection process must be performed in the representative's presence.

City of Sunnyvale
Environmental Services Department
Water Division
Permanent Water Tanker Filling Station
Recycled Water Service Guidelines

1. Notify and/or call the City of Sunnyvale Recycled Water Program Coordinator for information when applying for the Recycled Water Service Construction Permit at telephone number (408) 730-7663 or (408) 730-7561.

2. A Contractor and/or customer interested in using recycled water must complete an application for recycled water use according to the City of Sunnyvale Department Rules and Regulations for Reclaimed Water, a copy of which is attached.

3. All tanker trucks carrying non-potable water shall be labeled with appropriate signage indicating the use of recycled water, with the wording "**RECYCLED WATER – DO NOT DRINK**" " and the international symbol similar to shown in Figure 60310-A of Section 60310 (g), Article 4, Title 22, California Code of Regulations (CCR).

4. The Contractor and/or customer must have a person knowledgeable in the safe and proper use of recycled water. Before the use of recycled water begins, the Contractor and/or customer and the City of Sunnyvale representative must hold a tailgate safety meeting, prior to issuing the permit.

5. Prior to filling operations, the Contractor and/or customer are required to check in at the Sunnyvale Water Pollution Plant Administrative Office and sign in for every load taken.

6. The City of Sunnyvale may make periodic site inspections to ensure that state guidelines are being applied in a manner that does not jeopardize the safety of workers or the general public.

1.0 Introduction

The City is permitted under Regional Water Quality Control Board (RWQCB) Order NO. 94-069, and currently operates two recycled water truck fill stations located at its Donald M. Somers Water Pollution Control Plant. The City's proposal to use recycled water for additional uses is allowed under Section 60307, Title 22 California Code of Regulations.

The recycled water truck fill stations are located at the:

Donald M. Somers Water Pollution Control Plant
1444 Borregas Avenue
Sunnyvale, CA 94089

At this site, tanker trucks and street sweeping vehicles are able to fill from two separate fill stations that are designated for recycled water use only (see Attachment A). In addition, the truck fill station connections are locked-out to ensure added security, and a daily usage log is completed by users for every fill that is performed. All of the recycled water is metered.

2.0 Rules and Regulations

State regulations require the separation of all potable and nonpotable water systems. In order to comply with this regulatory requirement, the City's recycled water truck fill stations have been posted with signage, with the wording "**RECYCLED WATER – DO NOT DRINK**." All nonpotable piping is purple in color, and all of the valves have recycled water tags.

The City requires that all vehicles with tanks be outfitted with two separate filling systems, in order to prevent cross-connections between potable and nonpotable water. Each of the two filling system are identified either potable or nonpotable, and both systems will be required to have approved air gaps, per City Standard Detail Drawings. All nonpotable piping shall be purple in color, all valves shall have recycled water tags, and all vehicles shall have posted signage, with the wording "**RECYCLED WATER – DO NOT DRINK**."

3.0 Other Uses of Recycled Water

The other uses of recycled water are approved methods under Section 60307, Title 22 California Code of Regulations. All vehicles utilizing recycled water will be required to comply with the prohibitions in Section B, RWQCB Order #94-069 (see Attachment B).

3.1 Street Cleaning and Dust Control

<u>Street Cleaning Operations:</u>

Street sweeping operations (cleaning roads, sidewalks and outdoor areas) will be performed on public streets, roadways, parking lots, and construction sites that are surrounded by residential, commercial, and industrial land use areas.

All street sweeping vehicles shall be retrofitted in order to comply with state regulations requiring the separation of potable and nonpotable water systems. Street sweeping vehicles shall utilize the designated recycled water filling stations located at the Donald M. Somers Water Pollution Control Plant to fill sweepers with recycled water for their cleaning operations.

The street sweeper trucks will be fitted with two sets of filler pipes that will be color coded purple for recycled water and blue for potable water. Air gaps must be visible and approved by the City's Cross-Connection Control Specialist prior to being authorized to utilize recycled water. The hoses, hydrants, and risers for each supply shall have separate and unique fittings, such that the potable water system cannot accidentally be used on the recycled water system and vice versa.

During street sweeping operations, residual water will be minimized to the extent practicable. In general, street sweepers utilize a system of nozzles that distribute water to the street surface in order to control dust in conjunction with a rotating brush for cleaning. The rotating brushes move accumulated materials into a holding tank for disposal. This cleaning process leaves behind only a minimal amount of water on the street surface. The residual water is rapidly evaporated from the street surface leaving no opportunity for large pools of recycled water to form on the street surface or pose a threat to the general public.

Street sweepers shall be operated in a manner that prevents overspray, ponding, or run off of recycled water.

Recycled water shall not be applied where it could contact or enter passing vehicles, buildings, areas where food is handled or eaten, or storm drains.

All street sweepers carrying non-potable water shall be labeled with appropriate signage indicating the use of recycled water, with the wording "**RECYCLED WATER – DO NOT DRINK**" and the international symbol similar to shown in Figure 60310-A of Section 60310 (g), Article 4, Title 22, California Code of Regulations (CCR).

<u>Dust Control:</u>

Dust control shall only be allowed in construction work zones that are protected from the general public in areas surrounded by residential, commercial, and industrial land use areas.

Vehicles used for dust control shall be required to have tanks and be retrofitted in order to comply with state regulations requiring the separation of potable and nonpotable water systems. Tanker trucks will be fitted with two sets of filler pipes that will be color coded purple for recycled water and blue for potable water. Air gaps must be visible and approved by the City's Cross-Connection Control Specialist prior to being authorized to utilize recycled water. The hoses, hydrants, and risers for each supply shall have separate and unique fittings, such that the potable water system cannot accidentally be used on the recycled water system and vice versa.

Vehicles used for dust control operations shall have nozzles that distribute water in a manner that prevents overspray, ponding, or run off of recycled water from the authorized recycled water use

area unless it is specifically allowed by the Regional Water Quality Control Board or by an attachment to the Recycled Water for Construction Use Permit issued by the City.

There shall be no irrigation or impoundment of recycled water within a minimum of 50 feet of any domestic (drinking water) well.

Vehicles used for transportation and distribution of recycled water must have water-tight valves and fittings, must not leak, and tanks must be cleaned of contaminants prior to use. A truck or tank that has contained material from a septic tank or cesspool shall not be used to convey recycled water.

Recycled water must not be introduced into any permanent piping system and no connection shall be made between the tanker truck and any part of a potable water system.

Tanker trucks used to transport recycled water shall not be used to carry potable water unless a thorough cleaning and disinfection process has been completed.

Recycled water shall not be allowed to spray onto external drinking water fountains.

Recycled water shall not be applied where it could contact or enter passing vehicles, buildings, areas where food is handled or eaten, or storm drains.

All tanker trucks carrying non-potable water shall be labeled with appropriate signage indicating the use of recycled water, with the wording "**RECYCLED WATER – DO NOT DRINK**" " and the international symbol similar to shown in Figure 60310-A of Section 60310 (g), Article 4, Title 22, California Code of Regulations (CCR).

3.2 Soil Compaction, Mixing Concrete, and the Consolidation and Compaction of Backfill in Trenches for Nonpotable Water, Sanitary Sewer, Storm Drain, Gas and Electric Pipelines

<u>Soil Compaction and the Consolidation and Compaction of Backfill in Trenches:</u>

Recycled water used for these activities shall only be allowed in construction work zones that are protected from the general public in areas surrounded by residential, commercial, and industrial land use areas.

During these processes, recycled water shall be applied in a manner that minimizes overspray, ponding, or run off of recycled water.

There shall be no irrigation or impoundment of recycled water within a minimum of 50 feet of any domestic (drinking water) well.

The jetting of recycled water and the consolidation and compaction of backfill for potable water pipelines shall not be allowed.

Appropriate signage indicating the use of recycled water shall be used at the site of where these construction activities are occurring, with the wording "**RECYCLED WATER – DO NOT DRINK**" and the international symbol similar to shown in Figure 60310-A of Section 60310 (g), Article 4, Title 22, California Code of Regulations (CCR).

Mixing Concrete:

Recycled water used for the mixing of concrete shall only be allowed in construction work zones that are protected from the general public in areas surrounded by residential, commercial, and industrial land use areas.

During the concrete mixing process, recycled water shall be applied in a manner that minimizes overspray, ponding, or run off of recycled water.

The use of recycled water for mixing concrete is an acceptable use, provided it is not used for making concrete for drinking water reservoirs or any drinking water-related purpose that will result in its contact with the drinking water.

Appropriate signage indicating the use of recycled water shall be used at the site of where these construction activities are occurring with the wording "**RECYCLED WATER – DO NOT DRINK**" and the international symbol similar to shown in Figure 60310-A of Section 60310 (g), Article 4, Title 22, California Code of Regulations (CCR).

4.0 Recycled Water Prohibitions

The uses of recycled water in any of the manners listed below are strictly prohibited under Section B, RWQCB Order #94-069.

4.1 No recycled water shall be applied during periods of rainfall or when soils are saturated such that runoff occurs.

4.2 No recycled water shall be allowed to escape to areas outside the designated use areas by surface flow or by airborne spray.

4.3 Spray, mist, or runoff shall not enter a dwelling, food handling facility, or a place where the public may be present and shall not contact any drinking fountain.

4.4 Recycled water shall not be used as a domestic or animal water supply.

4.5 There shall be no cross-connections between the potable water supply and pipes containing recycled water.

4.6 Supplementing recycled water with water used for domestic supply shall not be allowed except through an air-gap separation.

4.7 Recycled water and spray shall be confined to the authorized use area.

4.8 Use or installation of hose bibs on the recycled water system shall not be permitted.

4.9 There shall be no recycled water irrigation or impoundment within 100 feet of any well used for domestic supply.

5.0 Following Conditions

The City's use of tertiary-treated recycled water for the above-mentioned uses - 1) Street sweeping operations (cleaning roads, sidewalks and outdoor work areas), 2) Soil compaction, 3) Dust control on roads and streets, 4) Mixing concrete and 5) Backfill consolidation (in trenches) around non-potable piping (e.g., sanitary sewer, storm drain, gas and electric pipelines) - shall also be subject to the following conditions:

5.1 The operation must be conducted in a way that minimizes exposure to workers.

5.2 The operation must involve no misting or spray.

5.3 The operation must be performed so that water does not drip onto workers or people in the area.

5.4 The operation must be performed so as to minimize incidental runoff.

6.0 Inspections and Monitoring

The City will perform annual visual inspections on an annual basis to confirm compliance with public notification systems, signage, and the on-site supervisor requirement. Records will be kept regarding any deficiencies discovered in order to insure timely compliance. The City will conduct periodic cross-connection tests to confirm the integrity of the water systems as well as the items addressed during the annual visual inspections.

7.0 Training

The City will conduct an initial training session with the on-site supervisor, third party contractor, or any affected City personnel prior to commencing any authorized use of recycled water in order to provide employees with the necessary training and information to properly handle recycled water.

Thereafter, the designated Site Supervisor at the recycled water use site is responsible for all training, and for ensuring that the requirements specified in the City's Reclaimed Water Program Guidance Manual are followed at all times. The City will provide training assistance and the necessary training materials to the Site Supervisor upon request.

Third-party contractors, wishing to use recycled water at an existing recycled water use site, must file a recycled water permit application with the City and be trained in the safe and proper use of the recycled water. The permit will be effective for one year and must be renewed thereafter.

As part of a Customer's Agreement with the City for the use of recycled water, the Customer must have a designated Site Supervisor who has completed the City's Site Supervisor Training. It is the Site Supervisor's or the City's responsibility to train the third-party contractor and to ensure that the City's requirements are followed at all times. The City will provide training assistance and the necessary training materials to the Site Supervisor upon request.

Training will emphasize, but not be limited to:

7.1 General attributes of recycled water.

7.2 Proper use of the water.

7.3 Practice of good hygiene.

7.4 Minimizing worker exposure.

7.5 Prevention of cross-connections and cross-contamination (e.g., any equipment used on the recycled water system must not be then used on the potable water system).

7.6 Implementation of any required Best Management Practices (BMPs).

On an annual basis during the permit renewal process, additional training will be provided as a refresher course.

ATTACHMENT A

ATTACHMENT B

CALIFORNIA REGIONAL WATER QUALITY CONTROL BOARD
SAN FRANCISCO BAY REGION
ORDER NO. 94-069

City of Sunnyvale

RECYCLED WATER FOR CONSTRUCTION USE PERMIT

Environmental Services Division
221 Commercial Street, Sunnyvale, CA 94088
(408) 730-7633

APPLICANT INFORMATION

CONTRACTOR: _____

CONTRACTOR'S DESIGNATED RECYLED WATER REPRESNTATIVE'S NAME: _____ SIGNATURE: _____

PHONE NUMBER: _____

EMAIL: _____

DATE: _____

PROPOSED START: _____ PROPOSED FINISH: _____

JOB SITE LOCATION/ADDRESS: _____

PROJECT NUMBER: _____ CITY PROJECT? ☐ ENCROACHMENT PERMIT? ☐

TERMS & CONDITIONS

The above named applicant is hereby authorized to use recycled water subject to compliance with a) the City of Sunnyvale's *Rules and Regulations for Recycled Water*, b) applicable state regulations related to the use of recycled water, and c) the attached additional terms and conditions.

The applicant shall report any changes (permanent or temporary) to the premises or operation that significantly change the volume or uses of reclaimed water, or any change in ownership of the facility.

This permit may be revoked prior to the expiration date if found to have been obtained through submittal of false information or if there is unapproved deviation from the terms and conditions under which it has been granted. This permit is issued solely to the user named above for the operation and ownership in effect at the time of the application and is not transferable.

Recycled water for construction use may only be used for street cleaning operations, soil compaction during grading operations, dust control, mixing concrete, cleaning roads, sidewalks, and streets and the consolidation and compaction of backfill in trenches for non-potable water, sanitary sewer, storm drain, gas and electric pipelines.

Recycled water shall not be used for water jetting and consolidation or compaction of backfill in trenches for potable water pipelines.

Recycled water is only available from the hours of 7am to 4pm, Monday through Friday, excepting City Holidays.

CITY USE ONLY

Approved for Recycled Water Use per Terms and Conditions listed above.

_____ _____

City of Sunnyvale – Cross-Connection Specialist **John Ramirez, Water Operations Manager**

cc: ☐ John Lunetta, Land Development
☐ Kim Pineda, Project Administration

Reclaimed Water Supervisor:

Name: _____

Address: _____

24-hour contact telephone number: (_____) _____-_____

1. Estimated demand: Total quality: _____ gallons per year

   Max psi: _____
   Hours/Day: _____
   Days/Week: _____

2. Date of service start: _____

3. Duration of service: _____

4. Additional information: _____

   _____

5. Items to be submitted with the Initial Application:

   Location and vicinity map showing the demarcation of the recycled water use area.

I, the User, have read and understand the City's Rules and Regulations for Recycled Water use and distribution and agree to restrict recycled water use for the purposes described in this application. I agree to use recycled water in accordance with these Rules and Regulations and all other applicable documents. I understand that recycled water may not be compatible with certain types of vegetation because of its chemical composition. I agree that the City will not be liable for damages that may occur to vegetation or for damages that may occur due to uses of recycled water for purposes not included in this application.

User's name: _____ Date: _____
(print)

Signature: _____

Dist	COUNTY	LOCATION CODE	POST MILES TOTAL PROJECT	SHEET No.	TOTAL SHEETS

Theresa Gabriel 12-20-07
REGISTERED CIVIL ENGINEER DATE

PLANS APPROVAL DATE

REGISTERED PROFESSIONAL ENGINEER Theresa A. Gabriel No. E15129 Exp. 6-30-10 ELECT STATE OF CALIFORNIA

THE STATE OF CALIFORNIA OR ITS OFFICERS OR AGENTS SHALL NOT BE RESPONSIBLE FOR THE ACCURACY OR COMPLETENESS OF SCANNED COPIES OF THIS PLAN SHEET.

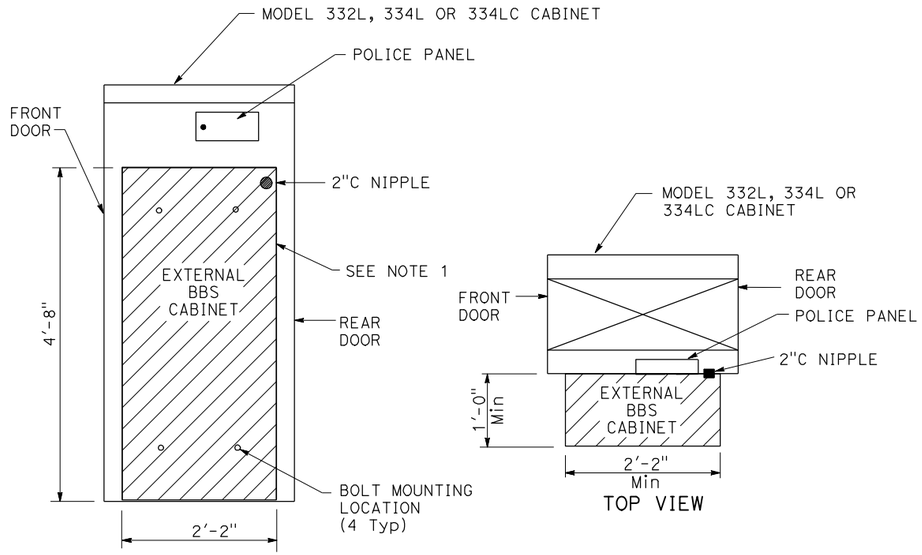

SIDE VIEW

EXTERNAL BBS CABINET MOUNTED TO THE MODEL 332L, 334L OR 334LC CABINET

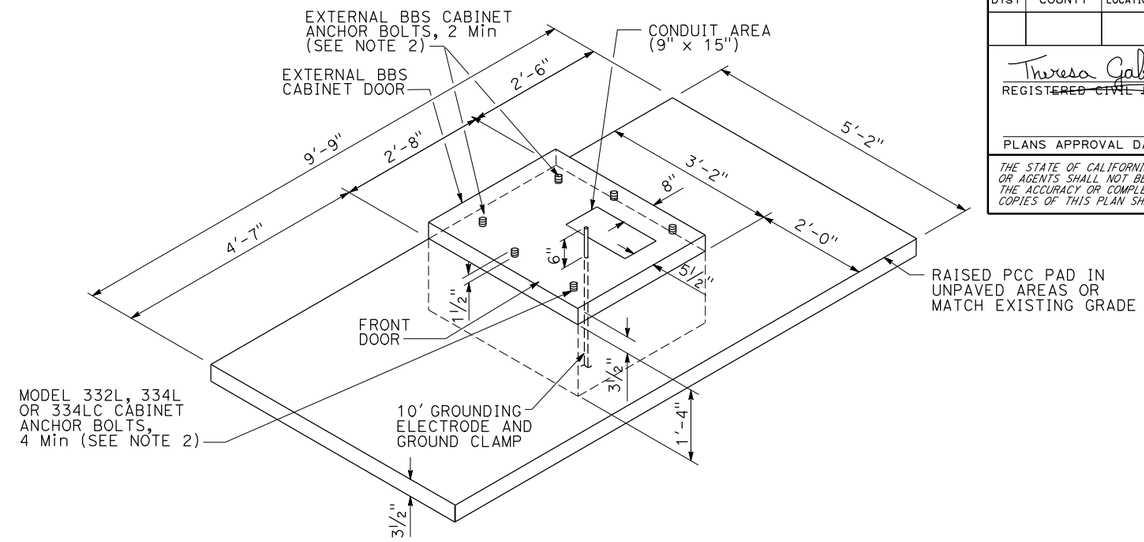

LEFT-HAND INSTALLATION DETAIL A

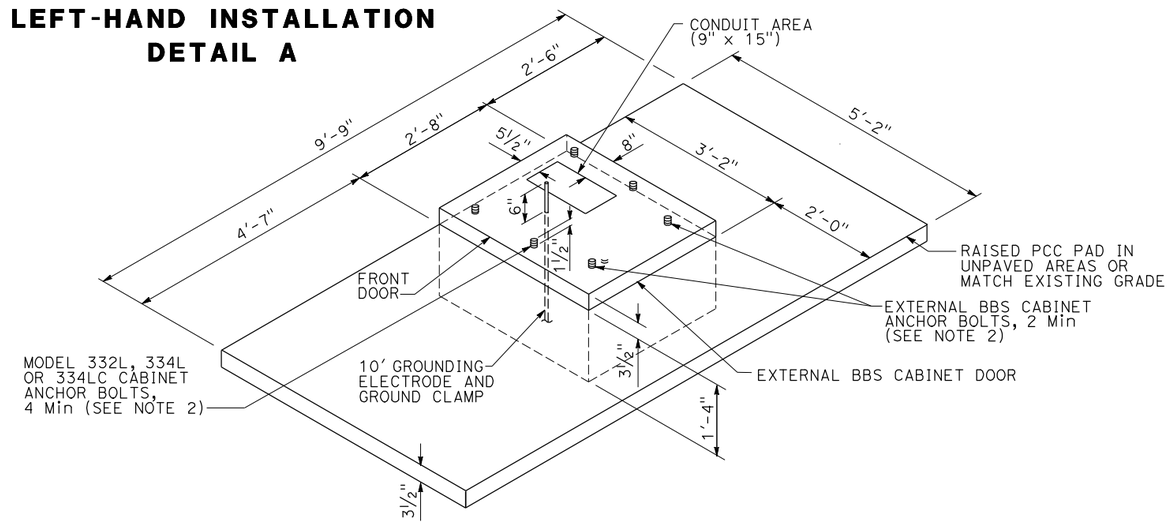

RIGHT-HAND INSTALLATION DETAIL B

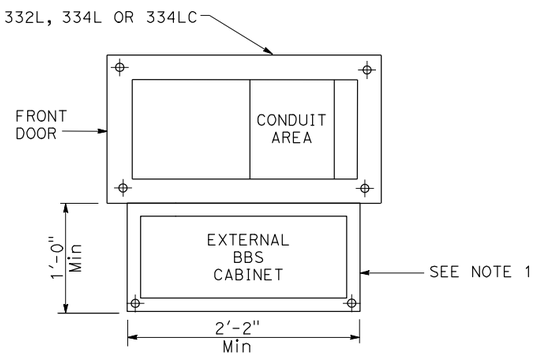

BASE PLAN FOR BBS MOUNTED TO THE MODEL 332L, 334L OR 334LC CABINET

(FOR DIMENSIONS AND DETAILS NOT SHOWN, SEE SHEET A6-1 TO A6-4, CABINET HOUSING DETAILS OF THE TRANSPORTATION ELECTRICAL EQUIPMENT SPECIFICATION (TEES))

MODIFIED MODEL 332L, 334L OR 334LC CABINET FOUNDATION DETAIL FOR BATTERY BACKUP SYSTEM (BBS)

(FOR ADDITIONAL NOTES, SEE SHEET ES-3C OF THE STANDARD PLANS FOR MODEL 332L, 334L OR 334LC CABINETS)

NOTES: (THIS SHEET ONLY)

1. THE EXTERNAL BBS CABINET SHALL BE MOUNTED TO THE MODEL 332L, 334L OR 334LC CABINET WITH FOUR 18-8 STAINLESS STEEL Hex HEAD, FULLY-THREADED, 3/8"-16 x 1" BOLTS; TWO WASHERS PER BOLT, DESIGNED FOR 3/8" BOLTS AND ARE 18-8 STAINLESS STEEL, 1" OUTSIDE DIAMETER, ROUND, AND FLAT; AND ONE K-LOCK NUT PER BOLT THAT IS 18-8 STAINLESS STEEL AND A Hex-NUT. THE ENGINEER WILL HAVE TO APPROVE THE BOLT MOUNTING LOCATION PRIOR TO INSTALLATION.
2. THE ANCHOR BOLTS SHALL BE 3/4" Dia x 15" WITH A 2"-90° BEND. THE CABINET MANUFACTURER'S SPECIFICATION SHALL DETERMINE THE LOCATION OF THE ANCHOR BOLTS IN THE FOUNDATION. THE ENGINEER WILL HAVE TO APPROVE THE ANCHOR BOLTS AND ITS LOCATION IN THE FOUNDATION PRIOR TO CONSTRUCTION.
3. THE CONTRACTOR SHALL VERIFY THE DIMENSIONS OF THE BBS CABINET PRIOR TO CONSTRUCTING THE FOUNDATION OF THE Std MODEL 332L, 334L OR 334LC CABINET FOUNDATION. THE ENGINEER WILL HAVE TO APPROVE ANY NECESSARY DEVIATIONS PRIOR TO CONSTRUCTION.
4. ALL DIMENSIONS ARE NOMINAL.

ELECTRICAL SYSTEMS
(BATTERY BACKUP SYSTEM FOUNDATION DETAILS)

NO SCALE

STATE OF CALIFORNIA - DEPARTMENT OF TRANSPORTATION
Caltrans

FUNCTIONAL SUPERVISOR | CALCULATED-DESIGNED BY | CHECKED BY | REVISED BY | DATE REVISED

LAST REVISION 2-2-09 | DATE PLOTTED => 05-JUN-2012 | TIME PLOTTED => 09:02

Dist	COUNTY	LOCATION CODE	POST MILES TOTAL PROJECT	SHEET No.	TOTAL SHEETS

Theresa Gabriel 12-20-07
REGISTERED CIVIL ENGINEER DATE

PLANS APPROVAL DATE

REGISTERED PROFESSIONAL ENGINEER Theresa A. Gabriel No. E15129 Exp. 6-30-10 ELECT STATE OF CALIFORNIA

THE STATE OF CALIFORNIA OR ITS OFFICERS OR AGENTS SHALL NOT BE RESPONSIBLE FOR THE ACCURACY OR COMPLETENESS OF SCANNED COPIES OF THIS PLAN SHEET.

ABBREVIATIONS: (THIS SHEET ONLY)

PTS = POWER TRANSFER SWITCH
UPS = UNINTERRUPTIBLE POWER SUPPLY
UPSC = UNINTERRUPTIBLE POWER SUPPLY CONTROLLER
UPSM = UPS MODE
BP = BYPASS
MBPS = MANUAL BYPASS SWITCH
AC+ = UNGROUNDED CONDUCTOR
AC- = GROUNDED CONDUCTOR
C = COMMON
Grn = GREEN
Blk = BLACK
Wht = WHITE
SF = STATE-FURNISHED
TB = TERMINAL BOARD
Cntl = CONTROL
Gnd = GROUND
Temp = TEMPERATURE
Batt = BATTERY

NOTES: (THIS SHEET ONLY)

1. TYPE A REFERS TO THE BBS EQUIPMENT FROM MANUFACTURER A.
2. CASE-1 REFERS TO THE SITUATION WHEN THE ENTIRE BBS EQUIPMENT INCLUDING THE BATTERIES ARE INSTALLED IN THE BBS CABINET.
3. THE LOCATION OF THE 2"C NIPPLE WILL BE DETERMINED BY THE ENGINEER IN THE FIELD.
4. THE CONTRACTOR SHALL FURNISH AND INSTALL A NEMA-1 ENCLOSURE WITH 30 A, 1P, 120/240 VOLTS RATED CIRCUIT BREAKER MANUFACTURED PER UL STANDARD 489.
5. A TEMPERATURE PROBE SHALL BE ATTACHED TO THE BATTERY BY TAPE OR ATTACHED TO THE NEGATIVE TERMINAL OF THE BATTERY.
6. THE ELECTRICAL POWER FOR THE COOLING FAN FOR THE BBS CABINET SHALL BE TAPPED FROM THE BOTTOM OF THE TB IN THE CONTROLLER CABINET.
7. THE CONTRACTOR SHALL PROVIDE A 9-WIRE WIRING HARNESS OR BUNDLED 9 MULTICOLOR CONDUCTORS, #18 AWG WIRES FROM THE RELAY ON THE INVERTER/CHARGER UNIT TO THE CONTROLLER. THE ENDS OF THE CONDUCTORS SHALL BE INSULATED WITH TAPE AND A SIX-FOOT COIL ON EACH END.

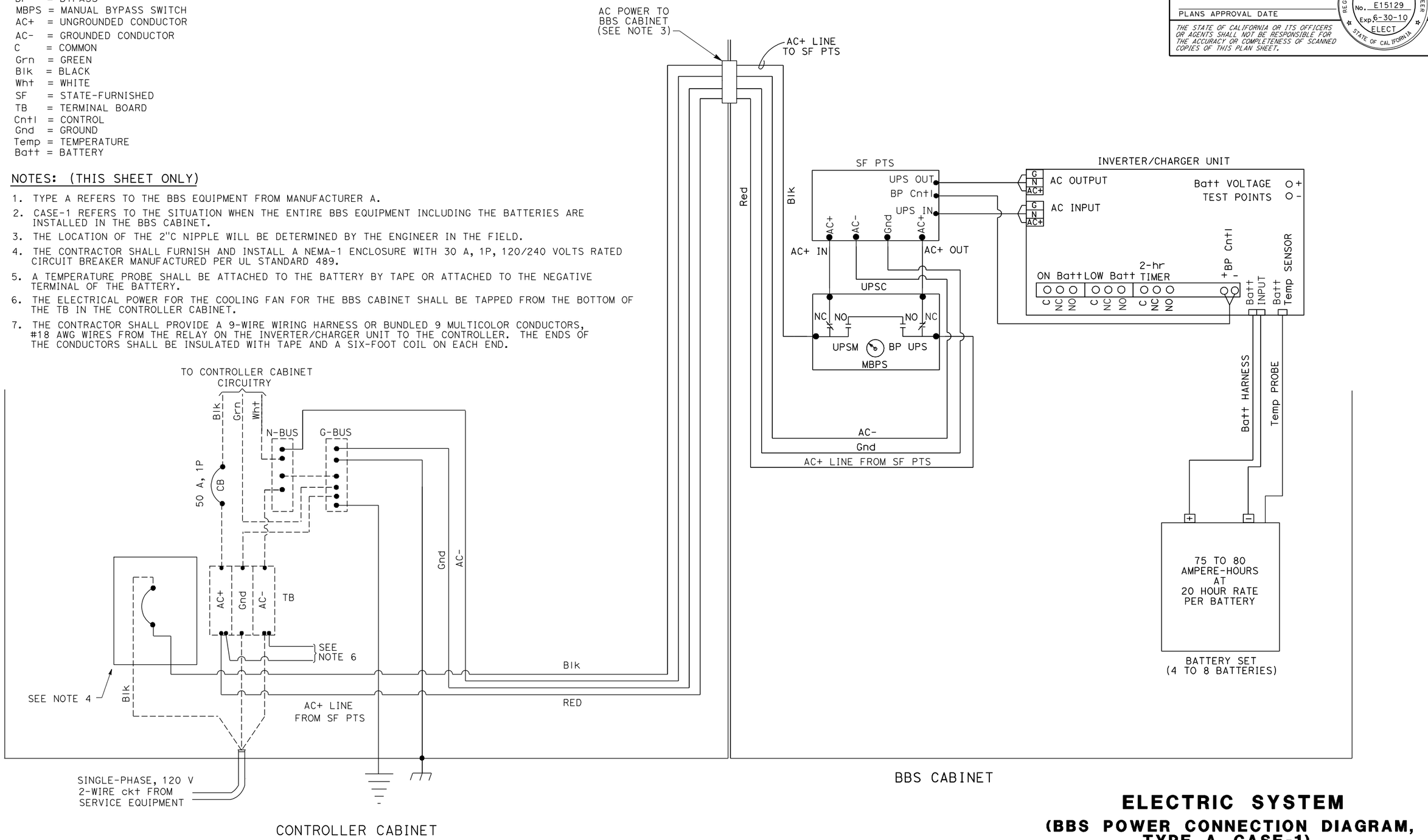

ELECTRIC SYSTEM
(BBS POWER CONNECTION DIAGRAM, TYPE A, CASE-1)

REVISED BY | DATE REVISED
CALCULATED-DESIGNED BY | CHECKED BY
FUNCTIONAL SUPERVISOR
STATE OF CALIFORNIA - DEPARTMENT OF TRANSPORTATION
Caltrans

LAST REVISION 3-11-09
DATE PLOTTED => 05-JUN-2012
TIME PLOTTED => 08:59

Dist	COUNTY	LOCATION CODE	POST MILES TOTAL PROJECT	SHEET No.	TOTAL SHEETS

Theresa Gabriel 12-20-07
REGISTERED CIVIL ENGINEER DATE

PLANS APPROVAL DATE

REGISTERED PROFESSIONAL ENGINEER Theresa A. Gabriel No. E15129 Exp. 6-30-10 ELECT STATE OF CALIFORNIA

THE STATE OF CALIFORNIA OR ITS OFFICERS OR AGENTS SHALL NOT BE RESPONSIBLE FOR THE ACCURACY OR COMPLETENESS OF SCANNED COPIES OF THIS PLAN SHEET.

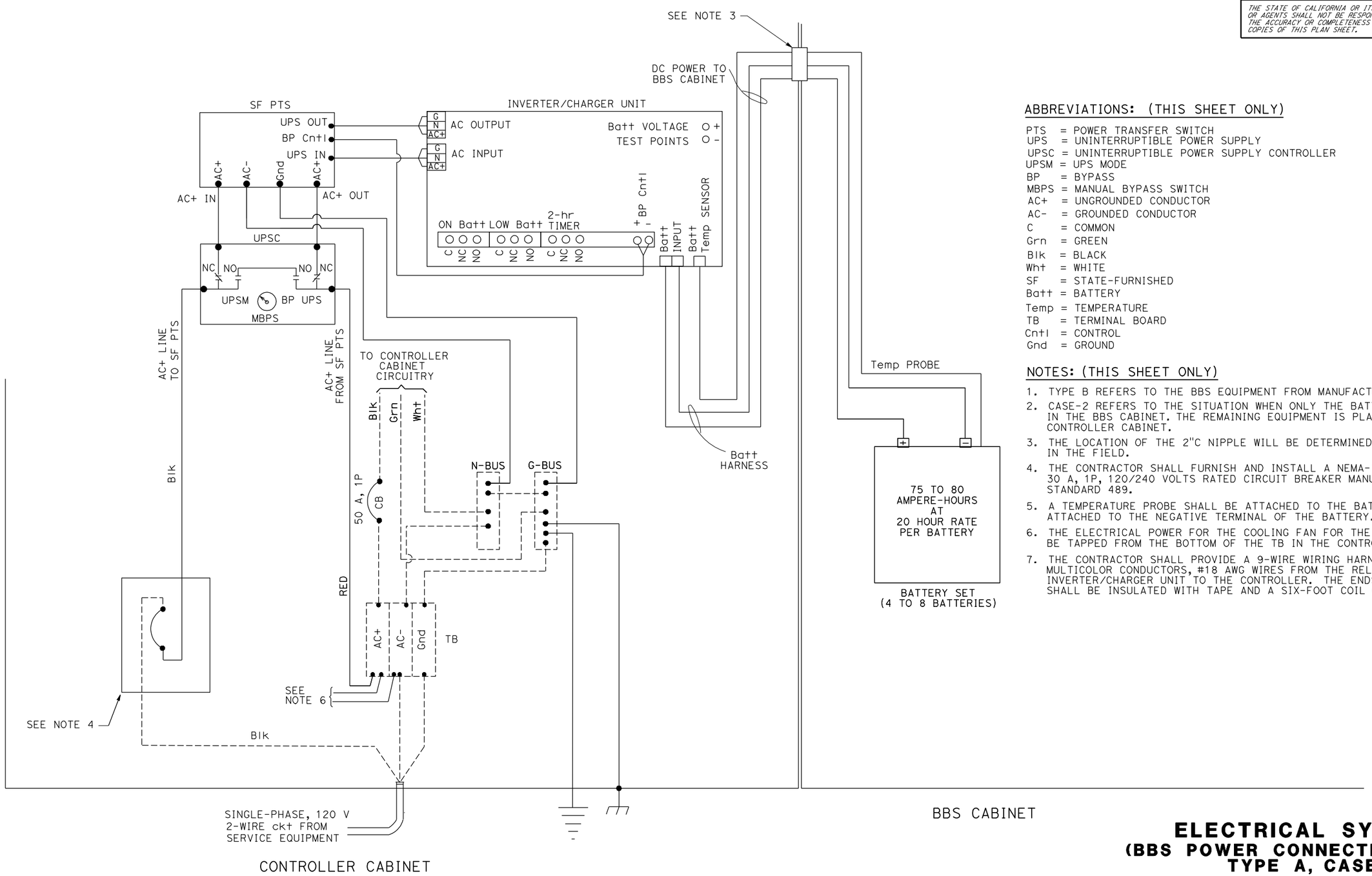

ABBREVIATIONS: (THIS SHEET ONLY)

PTS = POWER TRANSFER SWITCH
UPS = UNINTERRUPTIBLE POWER SUPPLY
UPSC = UNINTERRUPTIBLE POWER SUPPLY CONTROLLER
UPSM = UPS MODE
BP = BYPASS
MBPS = MANUAL BYPASS SWITCH
AC+ = UNGROUNDED CONDUCTOR
AC- = GROUNDED CONDUCTOR
C = COMMON
Grn = GREEN
Blk = BLACK
Wht = WHITE
SF = STATE-FURNISHED
Batt = BATTERY
Temp = TEMPERATURE
TB = TERMINAL BOARD
Cntl = CONTROL
Gnd = GROUND

NOTES: (THIS SHEET ONLY)

1. TYPE B REFERS TO THE BBS EQUIPMENT FROM MANUFACTURER B.
2. CASE-2 REFERS TO THE SITUATION WHEN ONLY THE BATTERIES ARE INSTALLED IN THE BBS CABINET. THE REMAINING EQUIPMENT IS PLACED IN THE CONTROLLER CABINET.
3. THE LOCATION OF THE 2"C NIPPLE WILL BE DETERMINED BY THE ENGINEER IN THE FIELD.
4. THE CONTRACTOR SHALL FURNISH AND INSTALL A NEMA-1 ENCLOSURE WITH 30 A, 1P, 120/240 VOLTS RATED CIRCUIT BREAKER MANUFACTURED PER UL STANDARD 489.
5. A TEMPERATURE PROBE SHALL BE ATTACHED TO THE BATTERY BY TAPE OR ATTACHED TO THE NEGATIVE TERMINAL OF THE BATTERY.
6. THE ELECTRICAL POWER FOR THE COOLING FAN FOR THE BBS CABINET SHALL BE TAPPED FROM THE BOTTOM OF THE TB IN THE CONTROLLER CABINET.
7. THE CONTRACTOR SHALL PROVIDE A 9-WIRE WIRING HARNESS OR BUNDLED 9 MULTICOLOR CONDUCTORS, #18 AWG WIRES FROM THE RELAY ON THE INVERTER/CHARGER UNIT TO THE CONTROLLER. THE ENDS OFTHE CONDUCTORS SHALL BE INSULATED WITH TAPE AND A SIX-FOOT COIL ON EACH END.

ELECTRICAL SYSTEMS
(BBS POWER CONNECTION DIAGRAM, TYPE A, CASE-2)

NO SCALE

REVISED BY | DATE REVISED
CALCULATED-DESIGNED BY | CHECKED BY
FUNCTIONAL SUPERVISOR

STATE OF CALIFORNIA - DEPARTMENT OF TRANSPORTATION
Caltrans

LAST REVISION 2-2-09
DATE PLOTTED => 05-JUN-2012
TIME PLOTTED => 09:00

Dist	COUNTY	LOCATION CODE	POST MILES TOTAL PROJECT	SHEET No.	TOTAL SHEETS

Theresa Gabriel 12-20-07
REGISTERED CIVIL ENGINEER DATE

PLANS APPROVAL DATE

REGISTERED PROFESSIONAL ENGINEER Theresa A. Gabriel No. E15129 Exp. 6-30-10 ELECT STATE OF CALIFORNIA

THE STATE OF CALIFORNIA OR ITS OFFICERS OR AGENTS SHALL NOT BE RESPONSIBLE FOR THE ACCURACY OR COMPLETENESS OF SCANNED COPIES OF THIS PLAN SHEET.

ABBREVIATIONS: (THIS SHEET ONLY)

PTS = POWER TRANSFER SWITCH
UPS = UNINTERRUPTIBLE POWER SUPPLY
UPSC = UNINTERRUPTIBLE POWER SUPPLY CONTROLLER
UPSM = UPS MODE
BP = BYPASS
MBPS = MANUAL BYPASS SWITCH
AC+ = UNGROUNDED CONDUCTOR
AC- = GROUNDED CONDUCTOR
C = COMMON
Grn = GREEN
Blk = BLACK
Wht = WHITE
SF = STATE-FURNISHED
Batt = BATTERY
Temp = TEMPERATURE
TB = TERMINAL BOARD
Cntl = CONTROL
Gnd = GROUND

NOTES: (THIS SHEET ONLY)

1. TYPE B REFERS TO THE BBS EQUIPMENT FROM MANUFACTURER B.
2. CASE-1 REFERS TO THE SITUATION WHEN THE ENTIRE BBS EQUIPMENT INCLUDING THE BATTERIES ARE INSTALLED IN THE BBS CABINET.
3. THE LOCATION OF THE 2"C NIPPLE WILL BE DETERMINED BY THE ENGINEER IN THE FIELD.
4. THE CONTRACTOR SHALL FURNISH AND INSTALL A NEMA-1 ENCLOSURE WITH 30 A, 1P, 120/240 VOLTS RATED CIRCUIT BREAKER MANUFACTURED PER UL STANDARD 489.
5. A TEMPERATURE PROBE SHALL BE ATTACHED TO THE BATTERY BY TAPE OR ATTACHED TO THE NEGATIVE TERMINAL OF THE BATTERY.
6. THE ELECTRICAL POWER FOR THE COOLING FAN FOR THE BBS CABINET SHALL BE TAPPED FROM THE BOTTOM OF THE TB IN THE CONTROLLER CABINET.
7. THE CONTRACTOR SHALL PROVIDE A 9-WIRE WIRING HARNESS OR BUNDLED 9 MULTICOLOR CONDUCTORS, #18 AWG WIRES FROM THE RELAY ON THE INVERTER/CHARGER UNIT TO THE CONTROLLER. THE ENDS OF THE CONDUCTORS SHALL BE INSULATED WITH TAPE AND A SIX-FOOT COIL ON EACH END.

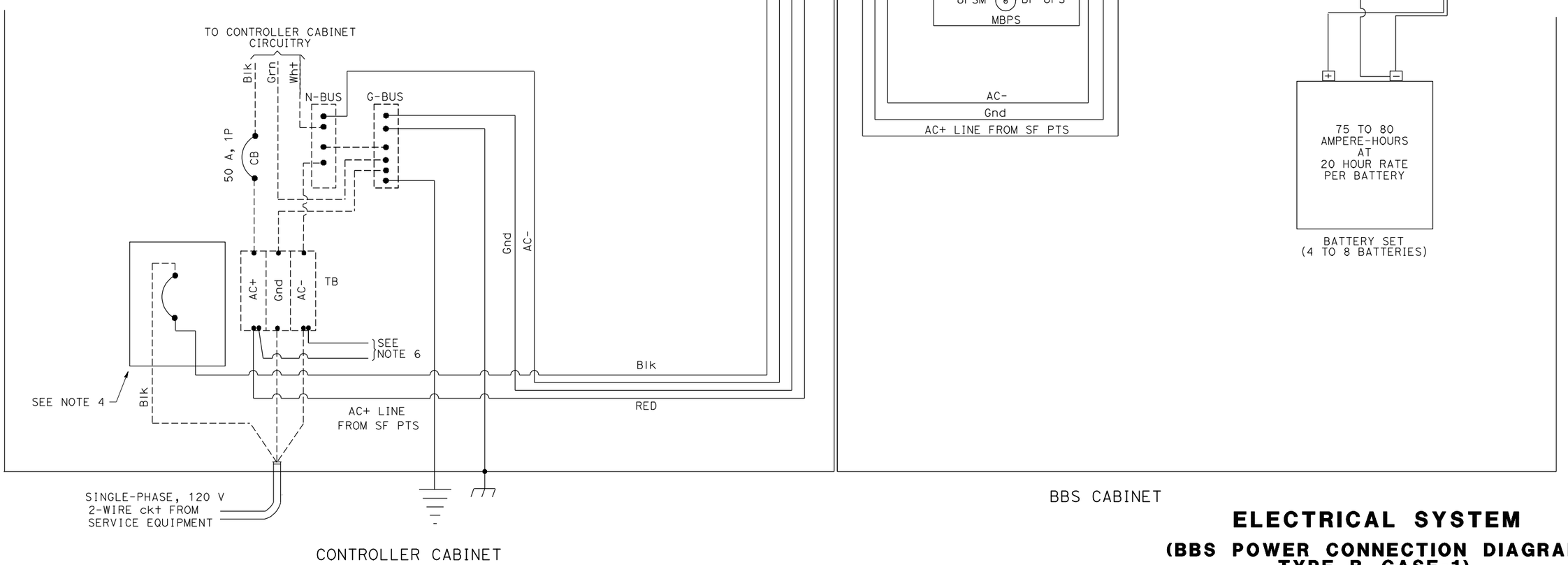

ELECTRICAL SYSTEM

(BBS POWER CONNECTION DIAGRAM, TYPE B, CASE-1)

STATE OF CALIFORNIA - DEPARTMENT OF TRANSPORTATION
Caltrans

FUNCTIONAL SUPERVISOR
CALCULATED-DESIGNED BY
CHECKED BY
REVISED BY
DATE REVISED

LAST REVISION 3-11-09
DATE PLOTTED => 05-JUN-2012
TIME PLOTTED => 09:01

Dist	COUNTY	LOCATION CODE	POST MILES TOTAL PROJECT	SHEET No.	TOTAL SHEETS

Theresa Gabriel 12-20-07
REGISTERED CIVIL ENGINEER DATE

PLANS APPROVAL DATE

REGISTERED PROFESSIONAL ENGINEER Theresa A. Gabriel No. E15129 Exp. 6-30-10 ELECT STATE OF CALIFORNIA

THE STATE OF CALIFORNIA OR ITS OFFICERS OR AGENTS SHALL NOT BE RESPONSIBLE FOR THE ACCURACY OR COMPLETENESS OF SCANNED COPIES OF THIS PLAN SHEET.

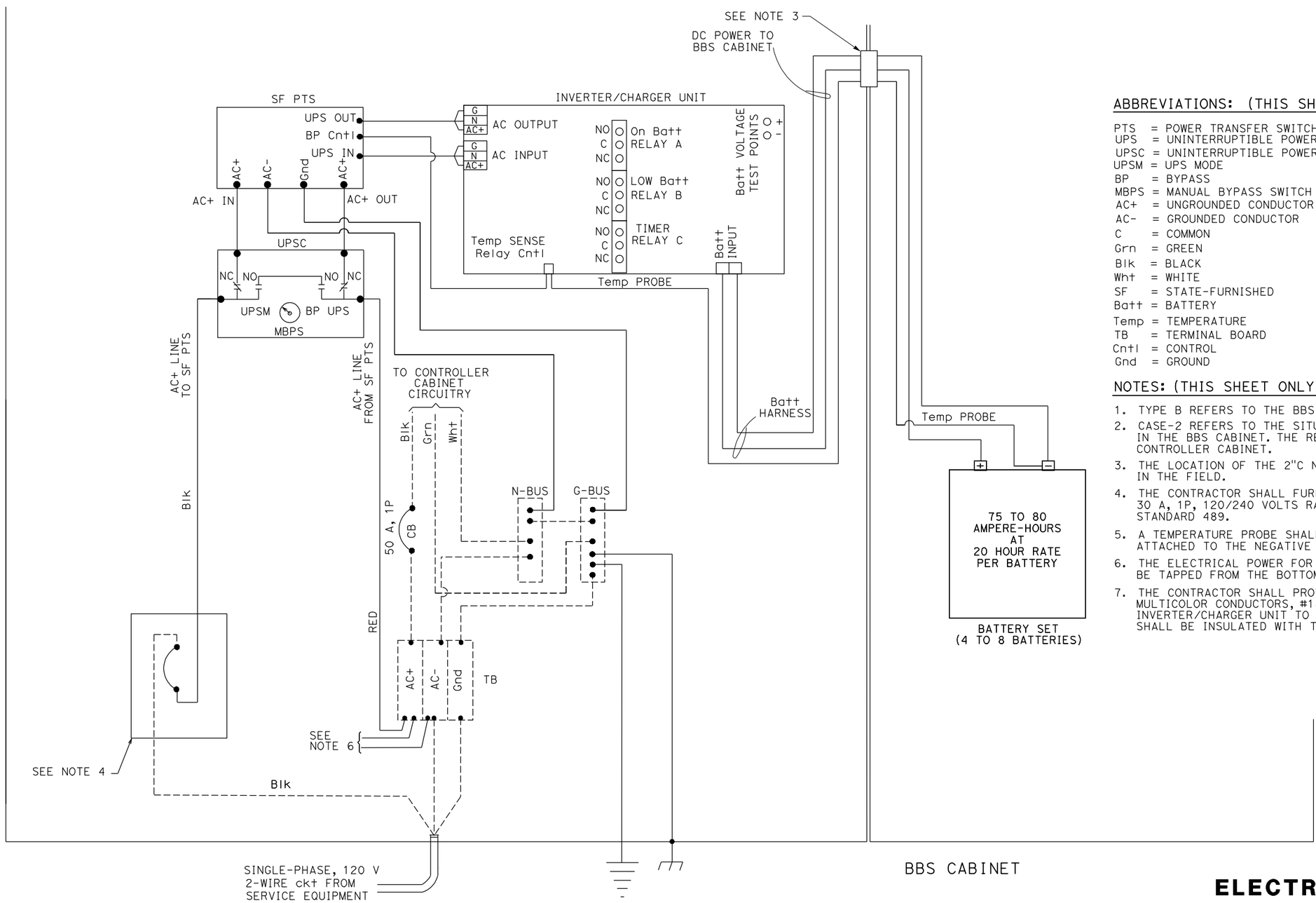

ABBREVIATIONS: (THIS SHEET ONLY)

PTS = POWER TRANSFER SWITCH
UPS = UNINTERRUPTIBLE POWER SUPPLY
UPSC = UNINTERRUPTIBLE POWER SUPPLY CONTROLLER
UPSM = UPS MODE
BP = BYPASS
MBPS = MANUAL BYPASS SWITCH
AC+ = UNGROUNDED CONDUCTOR
AC- = GROUNDED CONDUCTOR
C = COMMON
Grn = GREEN
Blk = BLACK
Wht = WHITE
SF = STATE-FURNISHED
Batt = BATTERY
Temp = TEMPERATURE
TB = TERMINAL BOARD
Cntl = CONTROL
Gnd = GROUND

NOTES: (THIS SHEET ONLY)

1. TYPE B REFERS TO THE BBS EQUIPMENT FROM MANUFACTURER B.
2. CASE-2 REFERS TO THE SITUATION WHEN ONLY THE BATTERIES ARE INSTALLED IN THE BBS CABINET. THE REMAINING EQUIPMENT IS PLACED IN THE CONTROLLER CABINET.
3. THE LOCATION OF THE 2"C NIPPLE WILL BE DETERMINED BY THE ENGINEER IN THE FIELD.
4. THE CONTRACTOR SHALL FURNISH AND INSTALL A NEMA-1 ENCLOSURE WITH 30 A, 1P, 120/240 VOLTS RATED CIRCUIT BREAKER MANUFACTURED PER UL STANDARD 489.
5. A TEMPERATURE PROBE SHALL BE ATTACHED TO THE BATTERY BY TAPE OR ATTACHED TO THE NEGATIVE TERMINAL OF THE BATTERY.
6. THE ELECTRICAL POWER FOR THE COOLING FAN FOR THE BBS CABINET SHALL BE TAPPED FROM THE BOTTOM OF THE TB IN THE CONTROLLER CABINET.
7. THE CONTRACTOR SHALL PROVIDE A 9-WIRE WIRING HARNESS OR BUNDLED 9 MULTICOLOR CONDUCTORS, #18 AWG WIRES FROM THE RELAY ON THE INVERTER/CHARGER UNIT TO THE CONTROLLER. THE ENDS OFTHE CONDUCTORS SHALL BE INSULATED WITH TAPE AND A SIX-FOOT COIL ON EACH END.

ELECTRICAL SYSTEM

(BBS POWER CONNECTION DIAGRAM, TYPE B, CASE-2)

REVISED BY | DATE REVISED
CALCULATED-DESIGNED BY | CHECKED BY
FUNCTIONAL SUPERVISOR

STATE OF CALIFORNIA - DEPARTMENT OF TRANSPORTATION
Caltrans

LAST REVISION 3-11-09
DATE PLOTTED => 05-JUN-2012
TIME PLOTTED => 09:02