Dist	COUNTY	ROUTE	POST MILES TOTAL PROJECT	SHEET No.	TOTAL SHEETS
04	Nap	128	19.1/34.3	1	15

INDEX OF PLANS

SHEET No.	DESCRIPTION
1	TITLE SHEET AND LOCATION MAP
2	TYPICAL CROSS SECTIONS
3	CONSTRUCTION AREA SIGNS
4	PAVEMENT DELINEATION QUANTITIES
5 - 7	SUMMARY OF QUANTITIES
8 - 15	REVISED AND NEW STANDARD PLANS

THE STANDARD PLANS LIST APPLICABLE TO THIS CONTRACT IS INCLUDED IN THE NOTICE TO BIDDERS AND SPECIAL PROVISIONS BOOK.

STATE OF CALIFORNIA

DEPARTMENT OF TRANSPORTATION

PROJECT PLANS FOR CONSTRUCTION ON

STATE HIGHWAY

IN NAPA COUNTY
NEAR NAPA
FROM KNOXVILLE ROAD TO SOLANO COUNTY LINE

TO BE SUPPLEMENTED BY STANDARD PLANS DATED MAY 2006

LOCATION MAP

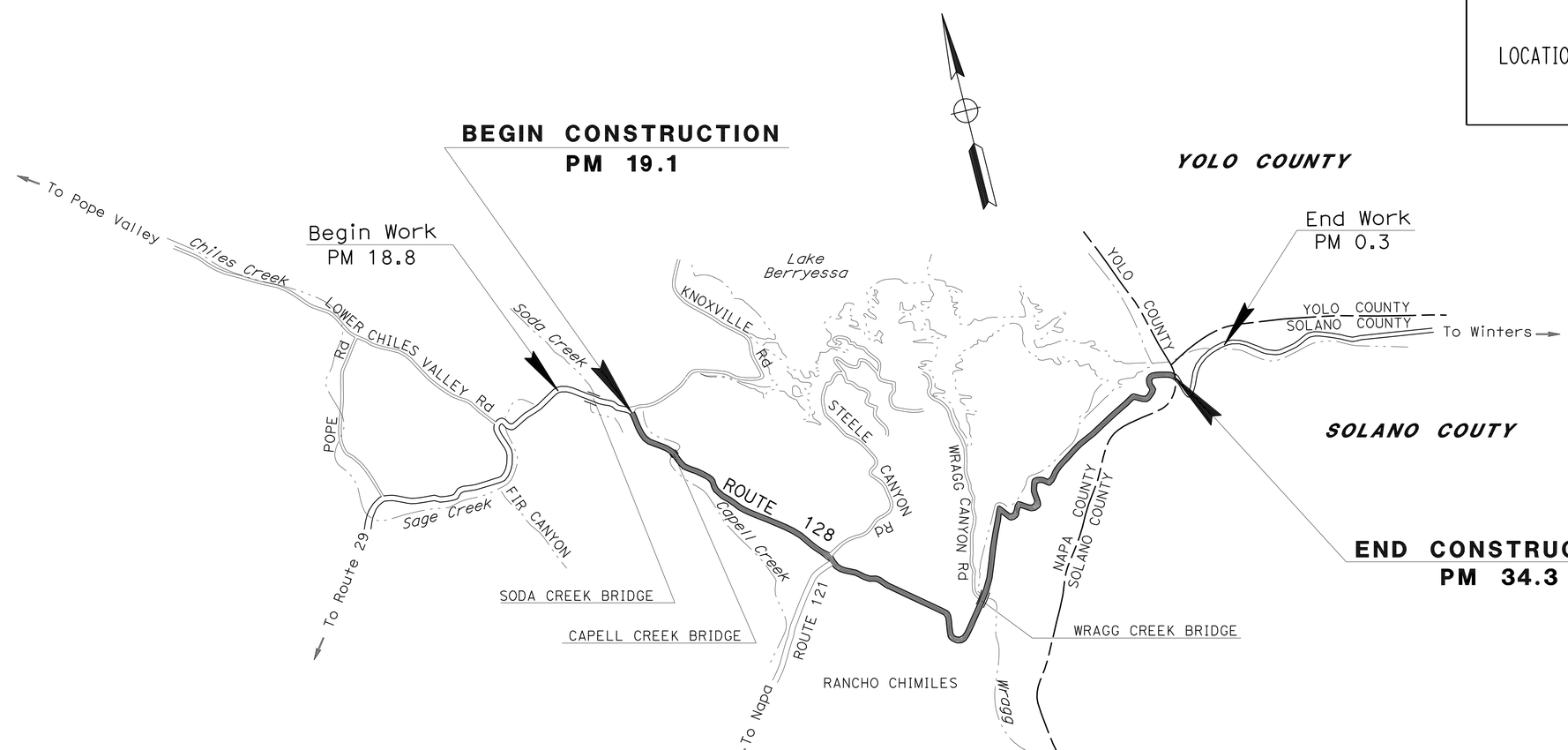

NO SCALE

THE CONTRACTOR SHALL POSSESS THE CLASS (OR CLASSES) OF LICENSE AS SPECIFIED IN THE "NOTICE TO BIDDERS."

PROJECT MANAGER: RAMSES SARGISS

DESIGN ENGINEER: RONNIE CHUA

PROJECT ENGINEER REGISTERED CIVIL ENGINEER — DATE: 1-05-12

Md Mustaqur Rahman No. 75824 Exp. 6-30-12 CIVIL — REGISTERED PROFESSIONAL ENGINEER — STATE OF CALIFORNIA

January 17, 2012
PLANS APPROVAL DATE

THE STATE OF CALIFORNIA OR ITS OFFICERS OR AGENTS SHALL NOT BE RESPONSIBLE FOR THE ACCURACY OR COMPLETENESS OF SCANNED COPIES OF THIS PLAN SHEET.

CONTRACT No.	04-2E5804
PROJECT ID	0400021224

LAST REVISION 01-12-12 — DATE PLOTTED => 12-JAN-2012 TIME PLOTTED => 11:19

Dist	COUNTY	ROUTE	POST MILES TOTAL PROJECT	SHEET No.	TOTAL SHEETS
04	Nap	128	19.1/34.3	2	15

REGISTERED CIVIL ENGINEER 1-05-12 DATE

1-17-12
PLANS APPROVAL DATE

REGISTERED PROFESSIONAL ENGINEER
Md Mustaqur Rahman
No. 75824
Exp. 6-30-12
CIVIL
STATE OF CALIFORNIA

THE STATE OF CALIFORNIA OR ITS OFFICERS OR AGENTS SHALL NOT BE RESPONSIBLE FOR THE ACCURACY OR COMPLETENESS OF SCANNED COPIES OF THIS PLAN SHEET.

NOTES:

1. DIMENSIONS OF THE PAVEMENT STRUCTURES (STRUCTURAL SECTIONS) ARE SUBJECT TO TOLERANCES SPECIFIED IN THE STANDARD SPECIFICATIONS.
2. EXISTING UTILITY FACILITIES ARE NOT PLOTTED ON THESE PLANS.
3. FOR ACCURATE RIGHT OF WAY DATA, CONTACT RIGHT OF WAY ENGINEERING AT THE DISTRICT OFFICE.

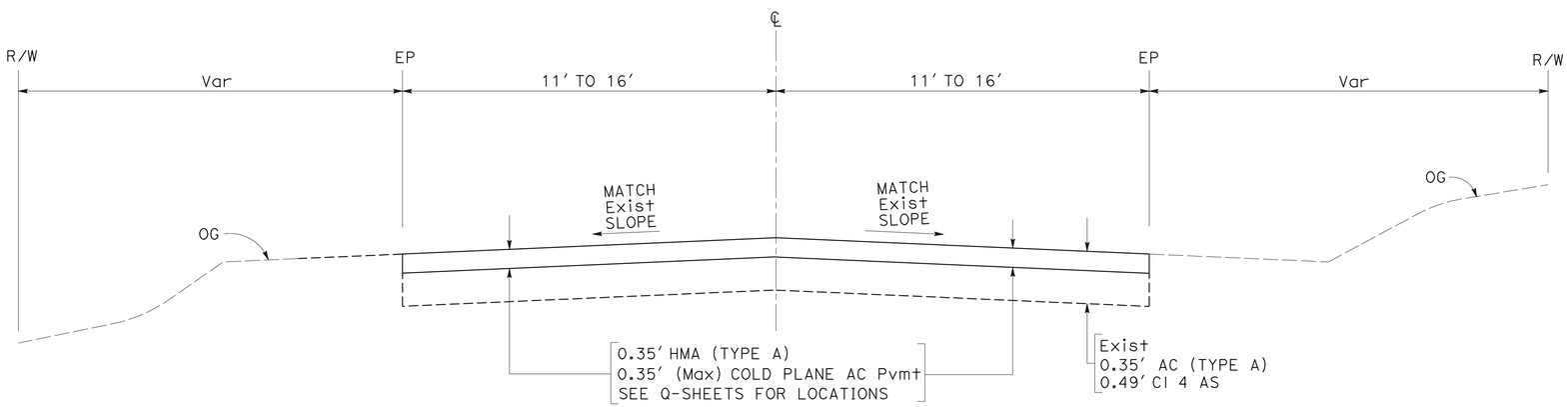

PM 19.1/34.3

TYPICAL CROSS SECTIONS

NO SCALE

X-1

STATE OF CALIFORNIA - DEPARTMENT OF TRANSPORTATION
Caltrans
DESIGN

FUNCTIONAL SUPERVISOR: RONNIE CHUA
CALCULATED-DESIGNED BY: MD MUSTAQUR RAHMAN
CHECKED BY: RONNIE CHUA
REVISED BY: MR
DATE REVISED: 6/10/11

LAST REVISION 01-12-12
DATE PLOTTED => 12-JAN-2012
TIME PLOTTED => 11:20

Dist	COUNTY	ROUTE	POST MILES TOTAL PROJECT	SHEET No.	TOTAL SHEETS
04	Nap	128	19.1/34.3	3	15

REGISTERED CIVIL ENGINEER 1-05-12 DATE

1-17-12
PLANS APPROVAL DATE

REGISTERED PROFESSIONAL ENGINEER Jerilyn L. Struven No. 49964 Exp. 12-31-12 CIVIL STATE OF CALIFORNIA

THE STATE OF CALIFORNIA OR ITS OFFICERS OR AGENTS SHALL NOT BE RESPONSIBLE FOR THE ACCURACY OR COMPLETENESS OF SCANNED COPIES OF THIS PLAN SHEET.

LEGEND:

[ ] CONSTRUCTION AREA SIGN NUMBER

NOTES:

1. EXACT LOCATION AND POSITION OF SIGN TO BE DETERMINED BY THE ENGINEER.
2. DIMENSIONS FOR SIGN PANEL AND POST ARE IN INCHES.
3. LETTERING SIZES FOR SIGN PANEL ARE IN INCHES.

STATIONARY MOUNTED CONSTRUCTION AREA SIGNS

SIGN No.	SIGN CODE		PANEL SIZE	SIGN MESSAGE	NUMBER OF POSTS AND SIZE	NUMBER OF SIGNS
	FEDERAL	CALIFORNIA				
A	W20-1		24" x 24"	ROAD WORK AHEAD	(ONE) 4" x 4"	6
B	G20-2		36" x 18"	END ROAD WORK	(ONE) 4" x 4"	6
C	G20-1(30)		60" x 36"	ROAD CONSTRUCTION NEXT 15 MILES	(TWO) 4" x 4"	2
D		C40(CA)	72" x 36"	TRAFFIC FINES DOUBLED IN CONSTRUCTION ZONE	(TWO) 4" x 6"	2
TOTAL						16

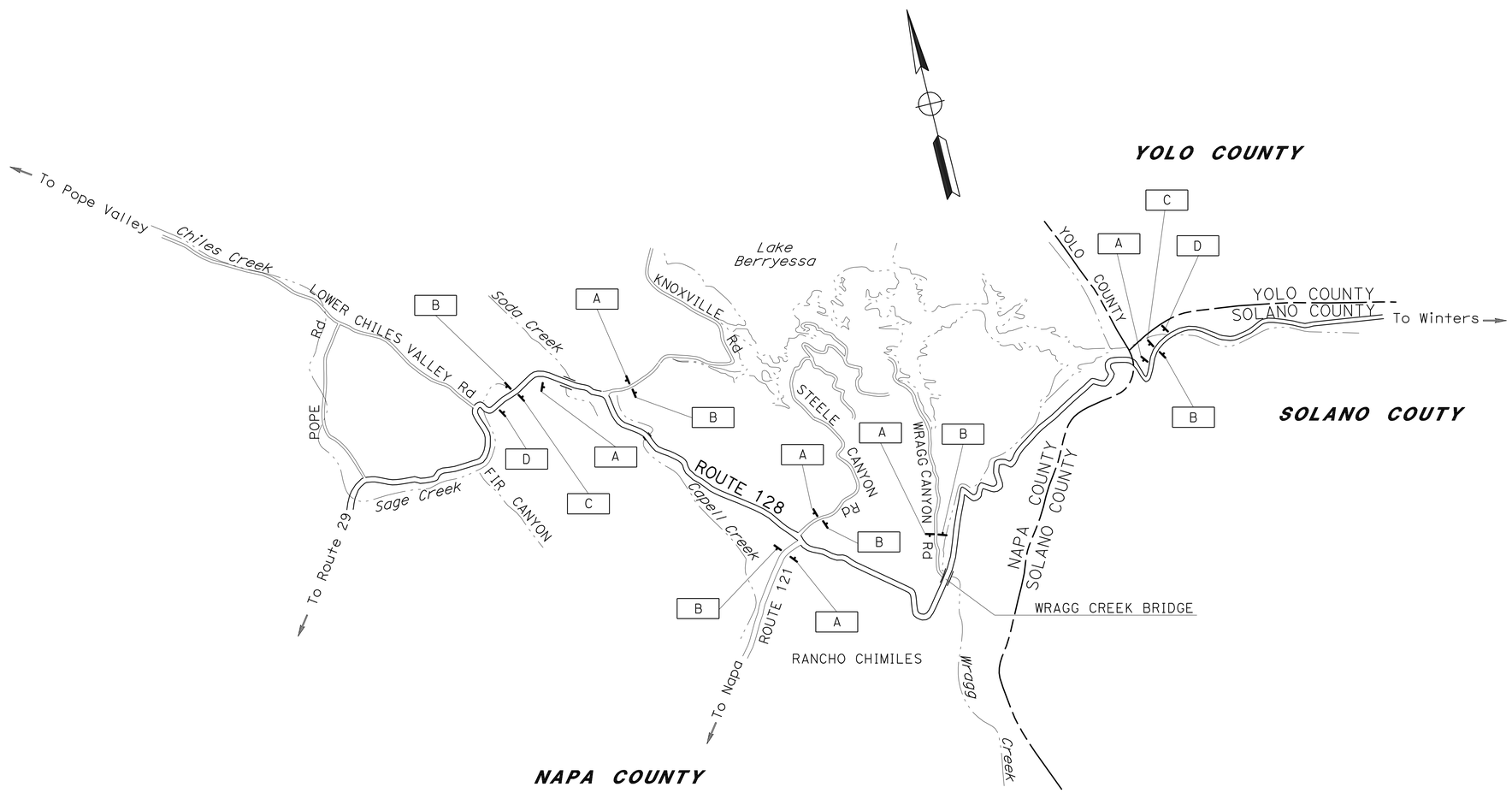

CONSTRUCTION AREA SIGNS

NO SCALE

APPROVED FOR CONSTRUCTION AREA SIGN WORK ONLY

CS-1

REVISED BY	DATE REVISED
DV	8/23/11

CALCULATED-DESIGNED BY: DUC VO
CHECKED BY: JERILYN L. STRUVEN
FUNCTIONAL SUPERVISOR: ROLAND AU-YEUNG

STATE OF CALIFORNIA - DEPARTMENT OF TRANSPORTATION
Caltrans
TRAFFIC

LAST REVISION 01-12-12
DATE PLOTTED => 12-JAN-2012
TIME PLOTTED => 11:20

Dist	COUNTY	ROUTE	POST MILES TOTAL PROJECT	SHEET No.	TOTAL SHEETS
04	Nap	128	19.1/34.3	4	15

REGISTERED CIVIL ENGINEER 1-05-12 DATE

1-17-12
PLANS APPROVAL DATE

REGISTERED PROFESSIONAL ENGINEER
Md Mustaqur Rahman
No. 75824
Exp. 6-30-12
CIVIL
STATE OF CALIFORNIA

THE STATE OF CALIFORNIA OR ITS OFFICERS OR AGENTS SHALL NOT BE RESPONSIBLE FOR THE ACCURACY OR COMPLETENESS OF SCANNED COPIES OF THIS PLAN SHEET.

NOTE:
ALL EXISTING PAVEMENT DELINEATION REMOVED SHALL BE REPLACED IN KIND AT THE SAME LOCATION AS THE EXISTING

TRAFFIC STRIPES AND PAVEMENT MARKERS

LOCATION (PM)		DIRECTION	DETAIL No.	4" THERMOPLASTIC TRAFFIC STRIPE			RETROREFLECTIVE PAVEMENT MARKER			
FROM	TO			YELLOW	WHITE	YELLOW (BROKEN 17-7)	TYPE D	TYPE H	TYPE D (RECESSED)	TYPE H (RECESSED)
				LF			EA			
19.10	28.20	EB/WB	22	14325			755			
			6			600	14			
			19	1437		1437	31	61		
		EB	27B		5224					
		WB	27B		4599					
28.20	34.3	EB/WB	22	29403					1355	
			19	950		950			21	41
		EB	27B		8031					
		WB	27B		8974					
SUBTOTAL				46115	26829	2987	799	61	1376	41
TOTAL				75931			860		1417	

PAVEMENT DELINEATION QUANTITIES

PDQ-1

STATE OF CALIFORNIA - DEPARTMENT OF TRANSPORTATION
Caltrans
DESIGN

FUNCTIONAL SUPERVISOR: RONNIE CHUA
CALCULATED-DESIGNED BY: MD MUSTAQUR RAHMAN
CHECKED BY: RONNIE CHUA
REVISED BY: MR
DATE REVISED: 6/10/11

LAST REVISION 01-12-12
DATE PLOTTED => 12-JAN-2012
TIME PLOTTED => 11:20

Dist	COUNTY	ROUTE	POST MILES TOTAL PROJECT	SHEET No.	TOTAL SHEETS
04	Nap	128	19.1/34.3	5	15

REGISTERED CIVIL ENGINEER 1-05-12 DATE

PLANS APPROVAL DATE 1-17-12

REGISTERED PROFESSIONAL ENGINEER Md Mustaqur Rahman No. 75824 Exp. 6-30-12 CIVIL STATE OF CALIFORNIA

THE STATE OF CALIFORNIA OR ITS OFFICERS OR AGENTS SHALL NOT BE RESPONSIBLE FOR THE ACCURACY OR COMPLETENESS OF SCANNED COPIES OF THIS PLAN SHEET.

COLD PLANE AC PAVEMENT (0.35' Max) AND PLACE HMA (TYPE A)

PM FROM	PM TO	DIRECTION	COLD PLANE AC PAVEMENT (0.35' Max) LENGTH	WIDTH	AREA	HOT MIX ASPHALT (TYPE A)	TACK COAT
			LF (N)		SQYD	TON	
19.03	19.04	EB	50	20	111	26.25	0.05
19.15			50	6	33	7.88	0.01
19.25	19.27		100	12	133	31.50	0.06
19.30	19.31		30	12	40	9.45	0.02
19.39			50	12	67	15.75	0.03
19.95			50	12	67	15.75	0.03
20.08	20.11		150	12	200	47.25	0.09
20.26	20.28		100	12	133	31.50	0.06
20.80			50	12	67	15.75	0.03
20.92	20.94		100	12	133	31.50	0.06
21.98	22.00		100	12	133	31.50	0.06
22.15	22.19		200	12	267	63.00	0.11
23.19	23.21		100	12	133	31.50	0.06
23.33	23.35		100	12	133	31.50	0.06
23.40			50	12	67	15.75	0.03
23.70	23.72		100	12	133	31.50	0.06
23.85	23.87		100	12	133	31.50	0.06
23.89	23.91		100	12	133	31.50	0.06
23.95	23.97		100	12	133	31.50	0.06
24.10	24.12		100	12	133	31.50	0.06
24.22	24.24		100	12	133	31.50	0.06
24.37	24.39		100	12	133	31.50	0.06
24.66	24.68		100	12	133	31.50	0.06
24.72	24.74		100	12	133	31.50	0.06
24.80			40	12	53	12.60	0.02
24.84			50	12	67	15.75	0.03
24.98			50	12	67	15.75	0.03
25.05			30	12	40	9.45	0.02
25.10	25.12		100	12	133	31.50	0.06
25.15			50	12	67	15.75	0.03
25.20	25.22		100	12	133	31.50	0.06
25.47			30	12	40	9.45	0.02
25.56			40	12	53	12.60	0.02
25.60			30	12	40	9.45	0.02
25.67			50	12	67	15.75	0.03
25.69			30	12	40	9.45	0.02
25.72			30	12	40	9.45	0.02
25.80			36	12	48	11.34	0.02
25.85			20	6	13	3.15	0.01
TOTAL					3819	902.00	2.00

(N) NOT A SEPARATE PAY ITEM, FOR INFORMATION ONLY

COLD PLANE AC PAVEMENT (0.35' Max) AND PLACE HMA (TYPE A)

PM FROM	PM TO	DIRECTION	COLD PLANE AC PAVEMENT (0.35' Max) LENGTH	WIDTH	AREA	HOT MIX ASPHALT (TYPE A)	TACK COAT
			LF (N)		SQYD	TON	
19.10		WB	50	12	67	15.75	0.03
19.20			50	12	67	22.50	0.06
19.50			50	12	67	22.50	0.06
19.80			30	12	40	13.50	0.03
20.10			30	12	40	13.50	0.03
20.20			20	12	27	9.00	0.02
20.60			50	12	67	22.50	0.06
21.60			40	12	53	18.00	0.05
22.00			50	12	67	22.50	0.06
22.30			30	12	40	13.50	0.03
22.50			20	12	27	9.00	0.02
22.89			20	12	27	9.00	0.02
22.98			20	12	27	9.00	0.02
23.38			20	12	27	9.00	0.02
23.80			20	12	27	9.00	0.02
24.28	24.35		370	12	493	116.42	0.21
24.37			50	12	67	15.75	0.03
24.41			50	12	67	15.75	0.03
24.60			50	12	67	15.75	0.03
24.66			20	12	27	6.30	0.01
24.71	24.78		370	12	493	116.42	0.21
24.84			30	6	20	4.73	0.01
24.88			50	6	33	7.88	0.01
24.92	25.05		686	12	915	216.22	0.39
25.13	25.16		150	12	200	47.25	0.09
25.25	25.27		100	12	133	31.50	0.06
25.30			50	12	67	15.75	0.03
25.34	25.40		300	12	400	94.50	0.17
25.63	25.67		211	12	282	66.53	0.12
25.72			20	6	13	3.15	0.01
25.85	25.91		300	12	400	94.50	0.17
26.07			50	12	67	15.75	0.03
26.15	26.19		211	12	282	66.53	0.12
26.30			30	12	40	9.45	0.02
26.31			50	12	67	15.75	0.03
26.35			50	12	67	15.75	0.03
26.48	26.5		106	12	141	33.26	0.06
26.56	26.62		317	12	422	99.79	0.18
26.96	27.02		317	12	422	99.79	0.18
TOTAL					5850	1442.72	2.74

(N) NOT A SEPARATE PAY ITEM, FOR INFORMATION ONLY

SUMMARY OF QUANTITIES

Q-1

REVISED BY	DATE REVISED
MR	6/10/11

CALCULATED-DESIGNED BY: MD MUSTAQUR RAHMAN
CHECKED BY: RONNIE CHUA
FUNCTIONAL SUPERVISOR: RONNIE CHUA

STATE OF CALIFORNIA - DEPARTMENT OF TRANSPORTATION
Caltrans
DESIGN

LAST REVISION 01-12-12 | DATE PLOTTED => 12-JAN-2012 | TIME PLOTTED => 11:20

Dist	COUNTY	ROUTE	POST MILES TOTAL PROJECT	SHEET No.	TOTAL SHEETS
04	Nap	128	19.1/34.3	6	15

REGISTERED CIVIL ENGINEER 1-05-12 DATE

1-17-12
PLANS APPROVAL DATE

REGISTERED PROFESSIONAL ENGINEER Md Mustaqur Rahman No. 75824 Exp. 6-30-12 CIVIL STATE OF CALIFORNIA

THE STATE OF CALIFORNIA OR ITS OFFICERS OR AGENTS SHALL NOT BE RESPONSIBLE FOR THE ACCURACY OR COMPLETENESS OF SCANNED COPIES OF THIS PLAN SHEET.

COLD PLANE AC PAVEMENT (0.35' Max) AND PLACE HMA (TYPE A)

PM FROM	PM TO	DIRECTION	COLD PLANE AC PAVEMENT (0.35' Max) LENGTH LF (N)	WIDTH LF (N)	AREA SQYD	HOT MIX ASPHALT (TYPE A) TON	TACK COAT TON
25.88	25.91	EB	150	12	200	47.25	0.09
26.00	26.02		100	12	133	31.50	0.06
26.10			30	12	40	9.45	0.02
26.15			24	12	32	7.56	0.01
26.19	26.21		100	12	133	31.50	0.06
26.22			60	12	80	18.90	0.03
26.38			50	6	33	7.88	0.01
26.45			24	12	32	7.56	0.01
26.50			18	12	24	5.67	0.01
26.65			50	12	67	15.75	0.03
26.72	26.75		150	12	200	47.25	0.09
26.80	26.82		100	12	133	31.50	0.06
26.85	26.87		100	12	133	31.50	0.06
26.90			50	12	67	15.75	0.03
26.95	26.97		100	12	133	31.50	0.06
27.10	27.17		350	12	467	110.25	0.20
27.35			50	6	33	7.88	0.01
27.50			50	6	33	7.88	0.01
27.60	27.63		150	6	100	23.63	0.04
27.70	27.79		500	12	667	157.50	0.28
28.10	28.12		100	12	133	31.50	0.06
28.20	28.24		200	12	267	63.00	0.11
28.30			30	12	40	9.45	0.02
28.37			50	12	67	15.75	0.03
28.41	28.43		100	12	133	31.50	0.06
28.51	28.55		200	12	267	63.00	0.11
28.67	28.76		500	12	667	157.50	0.28
29,00	29.10		200	12	267	63.00	0.11
29.26	29.28		100	12	133	31.50	0.06
TOTAL					4715	1114.00	2.00

(N) NOT A SEPARATE PAY ITEM, FOR INFORMATION ONLY

COLD PLANE AC PAVEMENT (0.35' Max) AND PLACE HMA (TYPE A)

PM FROM	PM TO	DIRECTION	COLD PLANE AC PAVEMENT (0.35' Max) LENGTH LF (N)	WIDTH LF (N)	AREA SQYD	HOT MIX ASPHALT (TYPE A) TON	TACK COAT TON
27.27		WB	15	12	20	4.73	0.01
27.50	27.52		100	12	133	31.50	0.06
27.74	27.76		100	12	133	31.50	0.06
28.25			50	12	67	15.75	0.03
28.30			50	12	67	15.75	0.03
28.50			50	12	67	15.75	0.03
28.65	28.68		150	12	200	47.25	0.09
29.05			30	12	40	9.45	0.02
29.20	29.34		750	12	1000	236.25	0.43
29.61			30	12	40	9.45	0.02
29.75	29.77		100	12	133	31.50	0.06
29.90	30.07		898	12	1197	282.74	0.51
30.16	30.20		200	12	267	63.00	0.11
30.40			50	12	67	15.75	0.03
30.42	30.55		686	12	915	216.22	0.39
30.70			50	12	67	15.75	0.03
30.75	30.77		100	12	133	31.50	0.06
30.80	30.82		100	12	133	31.50	0.06
31.17			50	12	67	15.75	0.03
31.24			50	12	67	15.75	0.03
31.31	31.38		370	6	246	58.21	0.10
31.46	31.51		264	6	176	41.58	0.07
31.61			50	6	33	7.88	0.01
31.64			50	6	33	7.88	0.01
31.66	31.77		581	6	387	91.48	0.16
31.86			50	12	67	15.75	0.03
31.95	32.03		422	12	563	133.06	0.24
32.22	32.26		211	12	282	66.53	0.12
32.40	32.44		200	12	267	63.00	0.11
TOTAL					6866	1622.19	2.92

(N) NOT A SEPARATE PAY ITEM, FOR INFORMATION ONLY

SUMMARY OF QUANTITIES

Q-2

REVISED BY	DATE REVISED
MR	6/10/11

CALCULATED-DESIGNED BY: MD MUSTAQUR RAHMAN
CHECKED BY: RONNIE CHUA
FUNCTIONAL SUPERVISOR: RONNIE CHUA

STATE OF CALIFORNIA - DEPARTMENT OF TRANSPORTATION
Caltrans DESIGN

LAST REVISION 01-12-12
DATE PLOTTED => 12-JAN-2012
TIME PLOTTED => 11:20

Dist	COUNTY	ROUTE	POST MILES TOTAL PROJECT	SHEET No.	TOTAL SHEETS
04	Nap	128	19.1/34.3	7	15

REGISTERED CIVIL ENGINEER 1-05-12 DATE

1-17-12
PLANS APPROVAL DATE

REGISTERED PROFESSIONAL ENGINEER Md Mustaqur Rahman No. 75824 Exp 6-30-12 CIVIL STATE OF CALIFORNIA

THE STATE OF CALIFORNIA OR ITS OFFICERS OR AGENTS SHALL NOT BE RESPONSIBLE FOR THE ACCURACY OR COMPLETENESS OF SCANNED COPIES OF THIS PLAN SHEET.

COLD PLANE AC PAVEMENT (0.35' Max) AND PLACE HMA (TYPE A)

PM FROM	PM TO	DIRECTION	COLD PLANE AC PAVEMENT (0.35' Max) LENGTH LF (N)	WIDTH LF (N)	AREA SQYD	HOT MIX ASPHALT (TYPE A) TON	TACK COAT TON
29.40		EB	30	12	40	9.45	0.02
29.41	29.43		100	12	133	31.50	0.06
29.45	29.54		500	12	667	157.50	0.28
29.80			50	12	67	15.75	0.03
29.95	29.99		200	12	267	63.00	0.11
30.10	30.19		500	12	667	157.50	0.28
30.30	30.34		211	12	282	66.53	0.12
30.42			60	12	80	18.90	0.03
30.56	30.64		400	12	533	126.00	0.23
30.94	30.98		200	12	267	63.00	0.11
31.11	31.17		300	12	400	94.50	0.17
31.24	31.28		200	12	267	63.00	0.11
31.37	31.43		300	12	400	94.50	0.17
31.53	31.60		350	12	467	110.25	0.20
31.77			50	12	67	15.75	0.03
31.80			40	12	53	12.60	0.02
31.85	31.88		150	12	200	47.25	0.09
31.95	32.03		400	12	533	126.00	0.23
32.20	32.27		350	12	467	110.25	0.20
32.37	32.46		500	12	667	157.50	0.28
32.77			50	12	67	15.75	0.03
32.85	32.87		100	12	133	31.50	0.06
33.10	33.15		250	12	333	78.75	0.14
33.25			50	12	67	15.75	0.03
33.36			60	12	80	18.90	0.03
33.39	33.48		500	12	667	157.50	0.28
33.75	33.81		300	12	400	94.50	0.17
33.91			50	12	67	15.75	0.03
33.92	33.94		100	12	133	31.50	0.06
33.95	33.99		200	12	267	63.00	0.11
34.24			50	12	67	15.75	0.03
34.25			50	12	67	15.75	0.03
TOTAL					8868	2095.13	3.77

(N) NOT A SEPARATE PAY ITEM, FOR INFORMATION ONLY

CRACK TREATMENT

PM	DIRECTION	LNMI
19.1/34.3	EB & WB	6

COLD PLANE AC PAVEMENT (0.35' Max) AND PLACE HMA (TYPE A)

PM FROM	PM TO	DIRECTION	COLD PLANE AC PAVEMENT (0.35' Max) LENGTH LF (N)	WIDTH LF (N)	AREA SQYD	HOT MIX ASPHALT (TYPE A) TON	TACK COAT TON
32.48	32.52	WB	200	12	267	63.00	0.11
32.55	32.57		100	12	133	31.50	0.06
32.60	32.63		150	12	200	47.25	0.09
32.65	32.67		100	12	133	31.50	0.06
32.89	32.92		150	12	200	47.25	0.09
33.10	33.14		200	12	267	63.00	0.11
33.20	33.24		200	12	267	63.00	0.11
33.20	33.24		200	12	267	63.00	0.11
33.45			50	12	67	15.75	0.03
33.60	33.70		528	12	704	166.32	0.30
33.80			50	12	67	15.75	0.03
33.90	34.21		1637	12	2182	515.59	0.93
34.23			10	12	13	3.15	0.01
TOTAL					4766	1126.06	2.03

(N) NOT A SEPARATE PAY ITEM, FOR INFORMATION ONLY

SUMMARY OF QUANTITIES

SHEET TOTAL	COLD PLANE AC PAVEMENT (0.35' Max) SQYD	HOT MIX ASPHALT (TYPE A) TON	TACK COAT TON
TOTAL FROM SHEET Q-1 (EB)	3819	902.00	2.00
TOTAL FROM SHEET Q-1 (WB)	5850	1442.72	2.74
TOTAL FROM SHEET Q-2 (EB)	4715	1114.00	2.00
TOTAL FROM SHEET Q-2 (WB)	6866	1622.19	2.92
TOTAL FROM SHEET Q-3 (EB)	8868	2095.13	3.77
TOTAL FROM SHEET Q-3 (WB)	4766	1126.06	2.03
GRAND TOTAL	34884	8302.10	15.46

SUMMARY OF QUANTITIES

Q-3

MR	6/10/11	MD MUSTAQUR RAHMAN	RONNIE CHUA
REVISED BY	DATE REVISED	CALCULATED-DESIGNED BY	CHECKED BY
FUNCTIONAL SUPERVISOR	RONNIE CHUA		

STATE OF CALIFORNIA - DEPARTMENT OF TRANSPORTATION

Caltrans DESIGN

LAST REVISION 01-12-12 | DATE PLOTTED => 12-JAN-2012 | TIME PLOTTED => 11:20

DIST	COUNTY	ROUTE	POST MILES TOTAL PROJECT	SHEET NO.	TOTAL SHEETS
04	Nap	128	19.1/34.3	8	15

Randell D. Hiatt
REGISTERED CIVIL ENGINEER

June 6, 2008
PLANS APPROVAL DATE

REGISTERED PROFESSIONAL ENGINEER
Randell D. Hiatt
No. C50200
Exp. 6-30-09
CIVIL
STATE OF CALIFORNIA

The State of California or its officers or agents shall not be responsible for the accuracy or completeness of electronic copies of this plan sheet.

To accompany plans dated 1-17-12

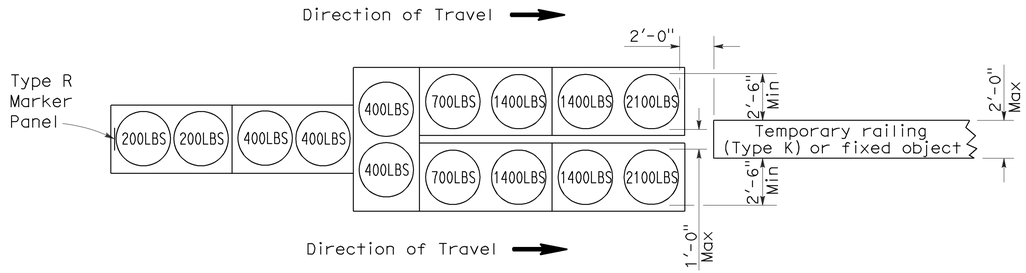

ARRAY 'TU14'

Approach speed 45 mph or more

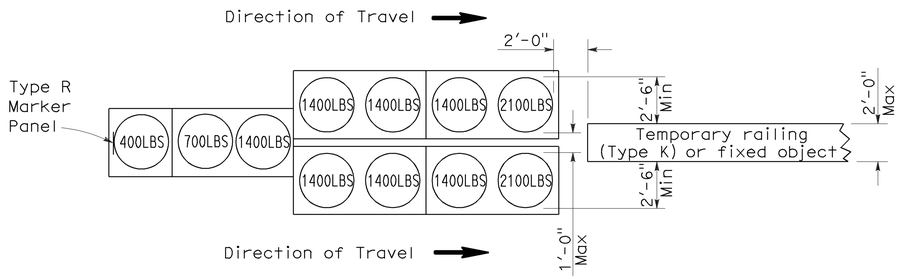

ARRAY 'TU11'

Approach speed less than 45 mph

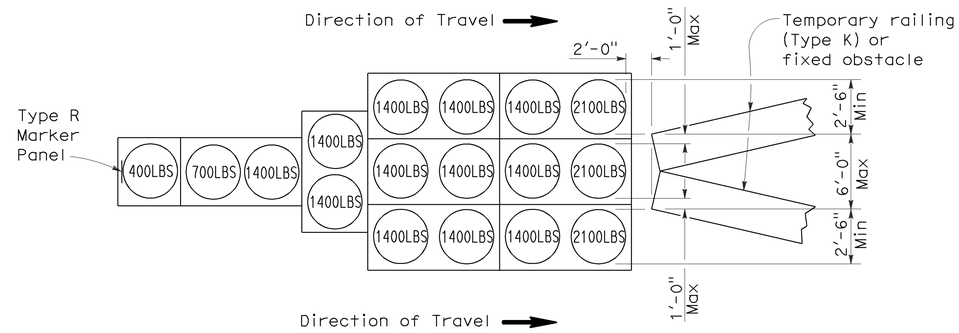

ARRAY 'TU17'

Approach speed less than 45 mph

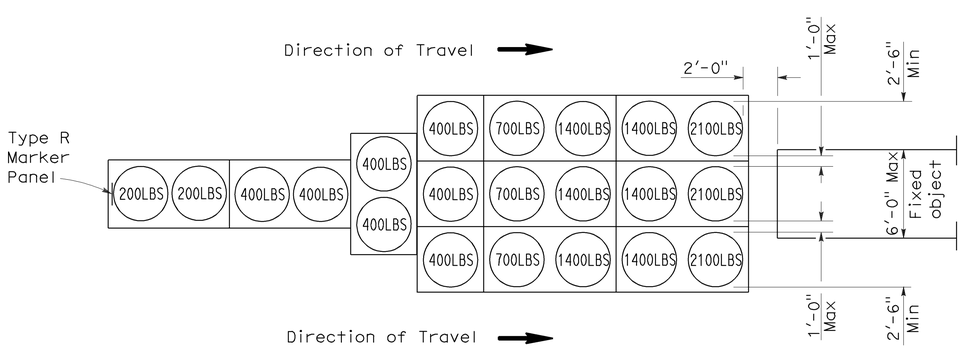

ARRAY 'TU21'

Approach speed 45 mph or more

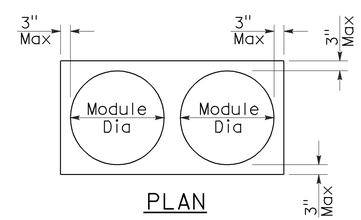

PLAN

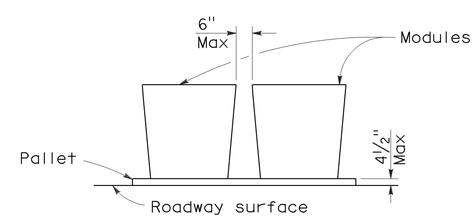

ELEVATION

CRASH CUSHION PALLET DETAIL

See Note 7

NOTES:

1. (XXX) Indicates sand filled module location and weight of sand in pounds for each module. Module spacing is based on the greater diameter of the module.
2. All sand weights are nominal.
3. Temporary crash cushion arrays shall not encroach on the traveled way.
4. Place the top of Type R marker panel 1" below the module lid.
5. Refer to Standard Plan A73B for marker details.
6. Approach speeds indicated conform to NCHRP 350 Report criteria.
7. Use of pallets is optional.

STATE OF CALIFORNIA
DEPARTMENT OF TRANSPORTATION

TEMPORARY CRASH CUSHION, SAND FILLED (UNIDIRECTIONAL)

NO SCALE

RSP T1A DATED JUNE 6, 2008 SUPERSEDES STANDARD PLAN T1A
DATED MAY 1, 2006 - PAGE 211 OF THE STANDARD PLANS BOOK DATED MAY 2006.

REVISED STANDARD PLAN RSP T1A

2006 REVISED STANDARD PLAN RSP T1A

5-15-08

DIST	COUNTY	ROUTE	POST MILES TOTAL PROJECT	SHEET NO.	TOTAL SHEETS
04	Nap	128	19.1/34.3	9	15

Randell D. Hiatt
REGISTERED CIVIL ENGINEER

June 6, 2008
PLANS APPROVAL DATE

REGISTERED PROFESSIONAL ENGINEER
Randell D. Hiatt
No. C50200
Exp. 6-30-09
CIVIL
STATE OF CALIFORNIA

The State of California or its officers or agents shall not be responsible for the accuracy or completeness of electronic copies of this plan sheet.

To accompany plans dated 1-17-12

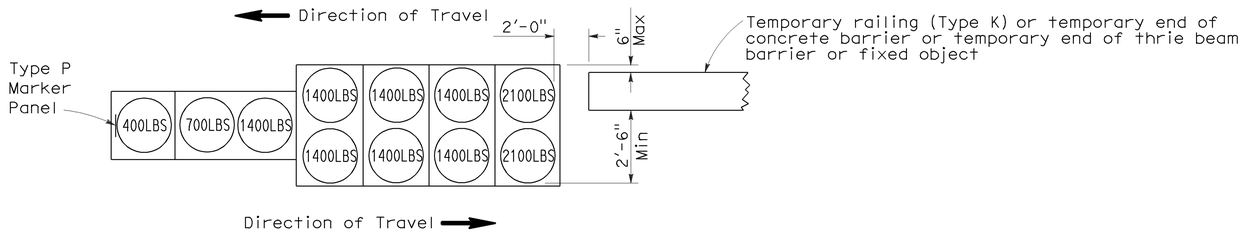

ARRAY 'TB11'

Approach speed less than 45 mph

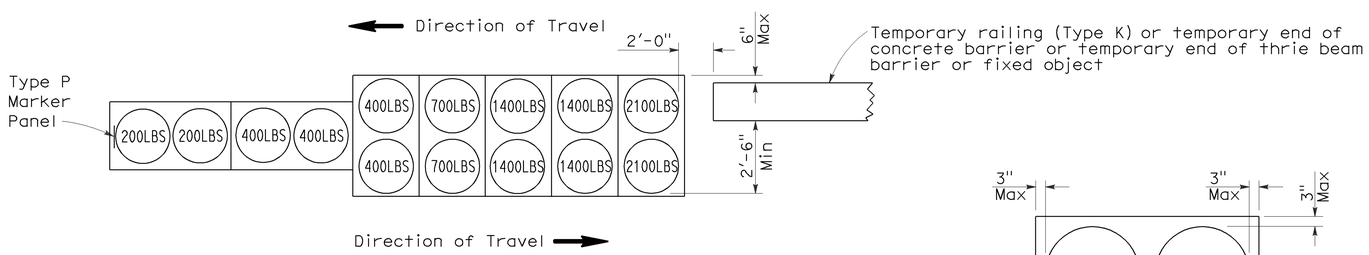

ARRAY 'TB14'

Approach speed 45 mph or more

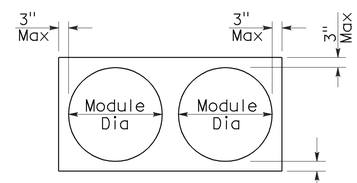

PLAN

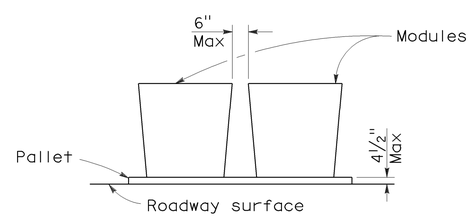

ELEVATION

CRASH CUSHION PALLET DETAIL

See Note 7

NOTES:

1. (XXX) Indicates sand filled module location and weight of sand in pounds for each module. Module spacing is based on the greater diameter of the module.
2. All sand weights are nominal.
3. Temporary crash cushion arrays shall not encroach on the traveled way.
4. Place the Type P marker panel so that the bottom of the panel rests upon the pallet.
5. Refer to Standard Plan A73B for marker details.
6. Approach speeds indicated conform to NCHRP 350 Report criteria.
7. Use of pallets is optional.

STATE OF CALIFORNIA
DEPARTMENT OF TRANSPORTATION

TEMPORARY CRASH CUSHION, SAND FILLED (BIDIRECTIONAL)

NO SCALE

RSP T1B DATED JUNE 6, 2008 SUPERSEDES STANDARD PLAN T1B
DATED MAY 1, 2006 - PAGE 212 OF THE STANDARD PLANS BOOK DATED MAY 2006.

REVISED STANDARD PLAN RSP T1B

2006 REVISED STANDARD PLAN RSP T1B

5-15-08

DIST	COUNTY	ROUTE	POST MILES TOTAL PROJECT	SHEET NO.	TOTAL SHEETS
04	Nap	128	19.1/34.3	10	15

Randell D. Hiatt
REGISTERED CIVIL ENGINEER

June 6, 2008
PLANS APPROVAL DATE

REGISTERED PROFESSIONAL ENGINEER
Randell D. Hiatt
No. C50200
Exp. 6-30-09
CIVIL
STATE OF CALIFORNIA

The State of California or its officers or agents shall not be responsible for the accuracy or completeness of electronic copies of this plan sheet.

To accompany plans dated 1-17-12

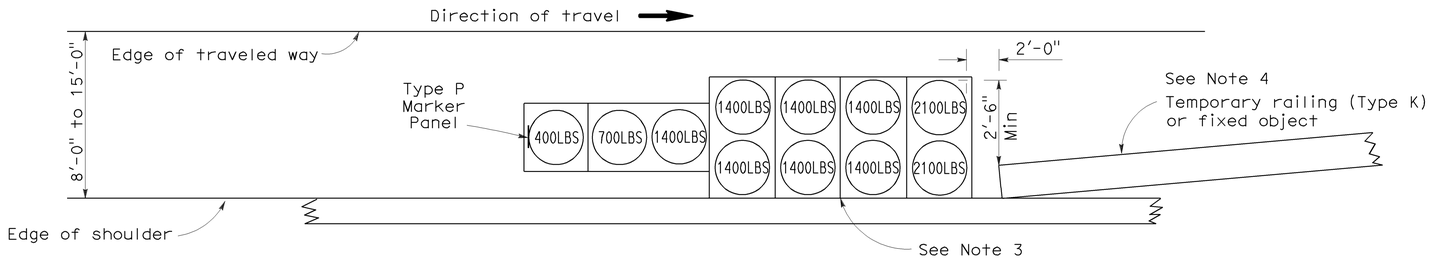

ARRAY 'TS11'

Approach speed less than 45 mph
See Note 9

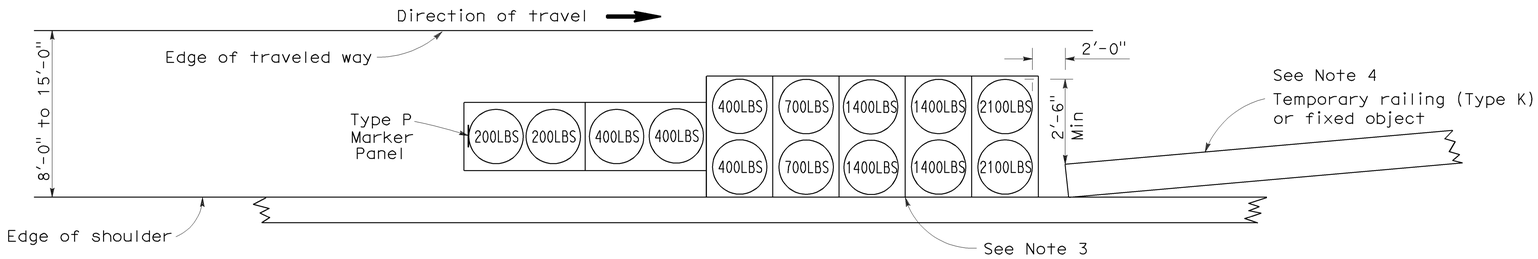

ARRAY 'TS14'

Approach speed 45 mph or more
See Note 9

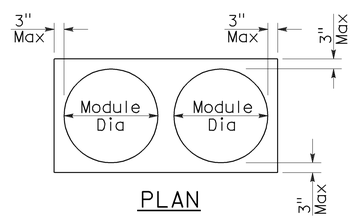

PLAN

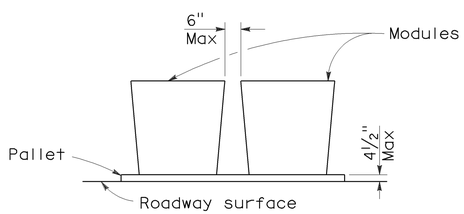

ELEVATION

CRASH CUSHION PALLET DETAIL

See Note 11

NOTES:

1. (XXX) Indicates sand filled module location and weight of sand in pounds for each module. Module spacing is based on the greater diameter of the module.
2. All sand weights are nominal.
3. The temporary crash cushion arrays shown on this plan shall be used only in locations where there will be traffic on one side of the temporary crash cushion array.
4. If the fixed object or approach end of the temporary railing is less than 15'-0" from the edge of traveled way, a temporary crash cushion is required in a construction or work zone.
5. Temporary crash cushion arrays shall not encroach on the traveled way.
6. Arrays for median shoulders shall conform to details shown on this plan for outside shoulders.
7. Place the Type P marker panel so that the bottom of the panel rests upon the pallet and faces traffic.
8. Refer to Standard Plan A73B for marker details.
9. For shoulder widths less than 8'-0", appropriate approved crash cushion protection, other than sand filled modules, shall be provided at fixed objects and at approach ends of temporary railing. The specific type of crash cushion shall be as shown on the project plans or as specified in the Special Provisions, or if not shown on the project plans or specified in the Special Provisions, shall be as approved by the Engineer.
10. Approach speeds indicated conform to NCHRP 350 Report criteria.
11. Use of pallets is optional.

STATE OF CALIFORNIA
DEPARTMENT OF TRANSPORTATION

TEMPORARY CRASH CUSHION, SAND FILLED (SHOULDER INSTALLATIONS)

NO SCALE

RSP T2 DATED JUNE 6, 2008 SUPERSEDES STANDARD PLAN T2
DATED MAY 1, 2006 - PAGE 213 OF THE STANDARD PLANS BOOK DATED MAY 2006.

REVISED STANDARD PLAN RSP T2

2006 REVISED STANDARD PLAN RSP T2

5-15-08

Dist	COUNTY	ROUTE	POST MILES TOTAL PROJECT	SHEET No.	TOTAL SHEETS
04	Nap	128	19.1/34.3	11	15

Randell D. Hiatt
REGISTERED CIVIL ENGINEER

May 20, 2011
PLANS APPROVAL DATE

REGISTERED PROFESSIONAL ENGINEER
Randell D. Hiatt
No. C50200
Exp. 6-30-11
CIVIL
STATE OF CALIFORNIA

The State of California or its officers or agents shall not be responsible for the accuracy or completeness of electronic copies of this plan sheet.

To accompany plans dated 1-17-12

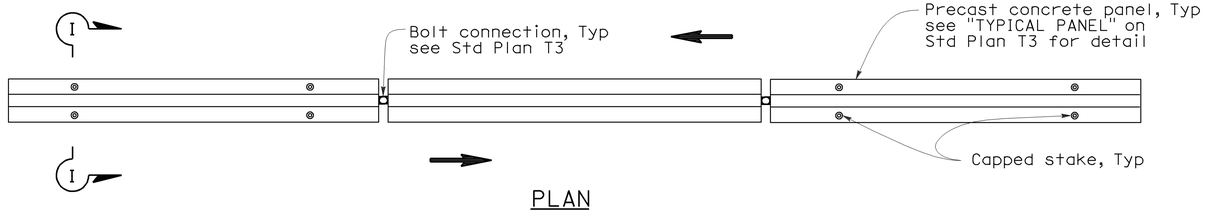

PLAN

RAILING STAKING CONFIGURATION FOR TWO-WAY TRAFFIC

See Note 1

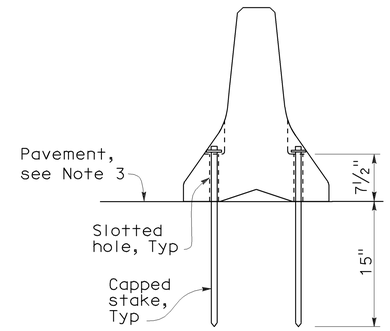

SECTION I-I

NOTES:

1. Where Type K Temporary Railing is placed as a temporary or long term barrier in two-way traffic on highways with less than 24" from the edge of traveled way, use four capped stakes per every other panel with end panels staked.
2. Where Type K Temporary Railing is placed 3" to 24" from the edge of an excavation on highways, use two capped stakes per panel along the traffic side.
3. Staked Type K Temporary Railing must be supported by at least 4" thick concrete, hot mix asphalt or existing asphalt concrete pavement.
4. The minimum yield strength for the washer must be 60,000 psi.
5. Direction of adjacent traffic indicated by ⟹.

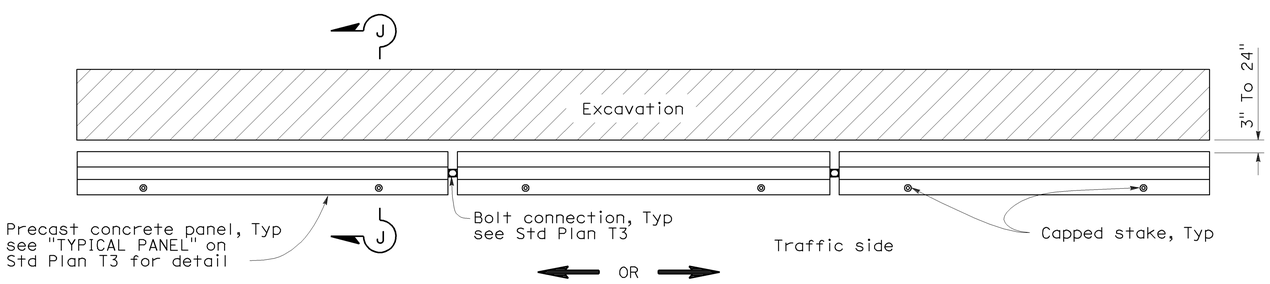

PLAN

RAILING STAKING CONFIGURATION ADJACENT TO AN EXCAVATION

See Note 2

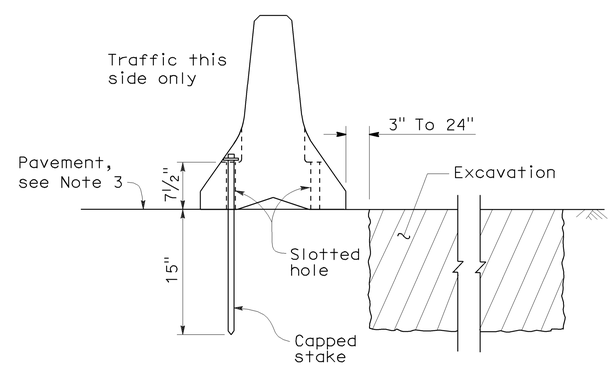

SECTION J-J

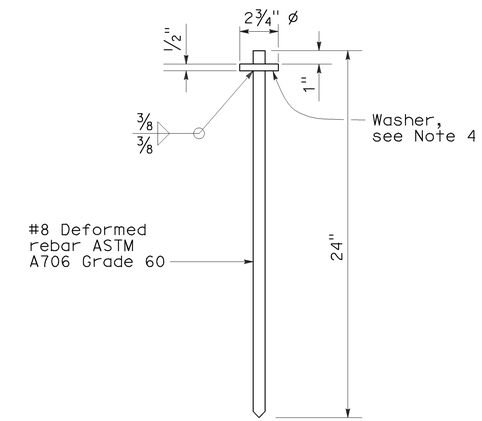

CAPPED STAKE DETAIL

STATE OF CALIFORNIA
DEPARTMENT OF TRANSPORTATION

TEMPORARY RAILING (TYPE K)

NO SCALE

NSP T3A DATED MAY 20, 2011 SUPPLEMENTS
THE STANDARD PLANS BOOK DATED MAY 2006.

NEW STANDARD PLAN NSP T3A

2006 NEW STANDARD PLAN NSP T3A

DIST	COUNTY	ROUTE	POST MILES TOTAL PROJECT	SHEET NO.	TOTAL SHEETS
04	Nap	128	19.1/34.3	12	15

Robert B Schott
LICENSED LANDSCAPE ARCHITECT

August 15, 2008
PLANS Approval DATE

LICENSED LANDSCAPE ARCHITECT
Robert B. Schott 3635
Robert B Schott
Signature
11-04-08
Renewal Date
08-11-08
Date
STATE OF CALIFORNIA

The State of California or its officers or agents shall not be responsible for the accuracy or completeness of electronic copies of this plan sheet.

To accompany plans dated 1-17-12

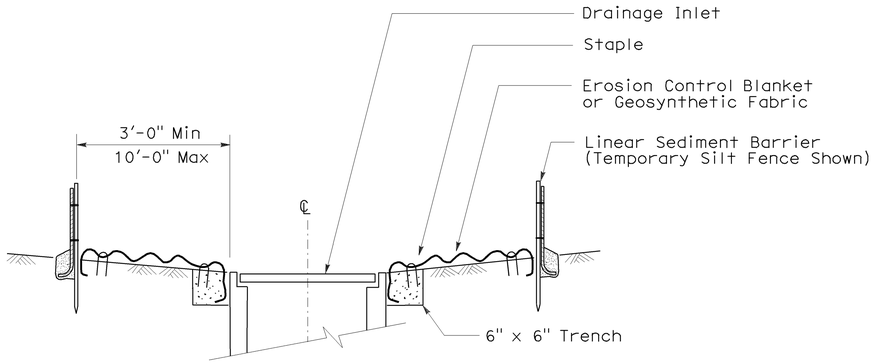

SECTION A-A

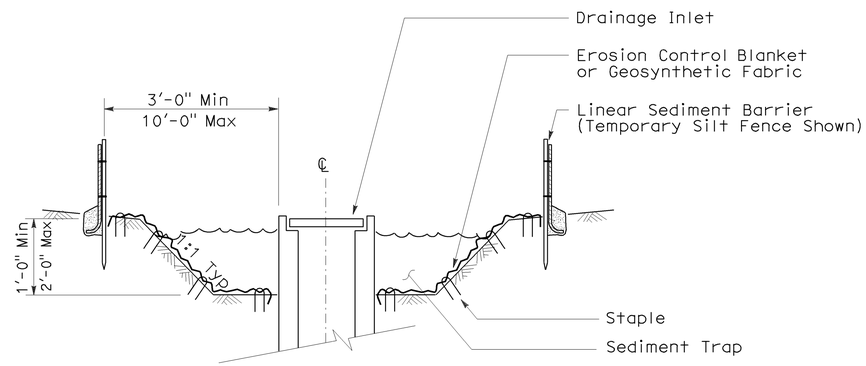

SECTION B-B

NOTES:

1. See Standard Plan T51 for Temporary Silt Fence.
2. Dimensions may vary to fit field conditions.

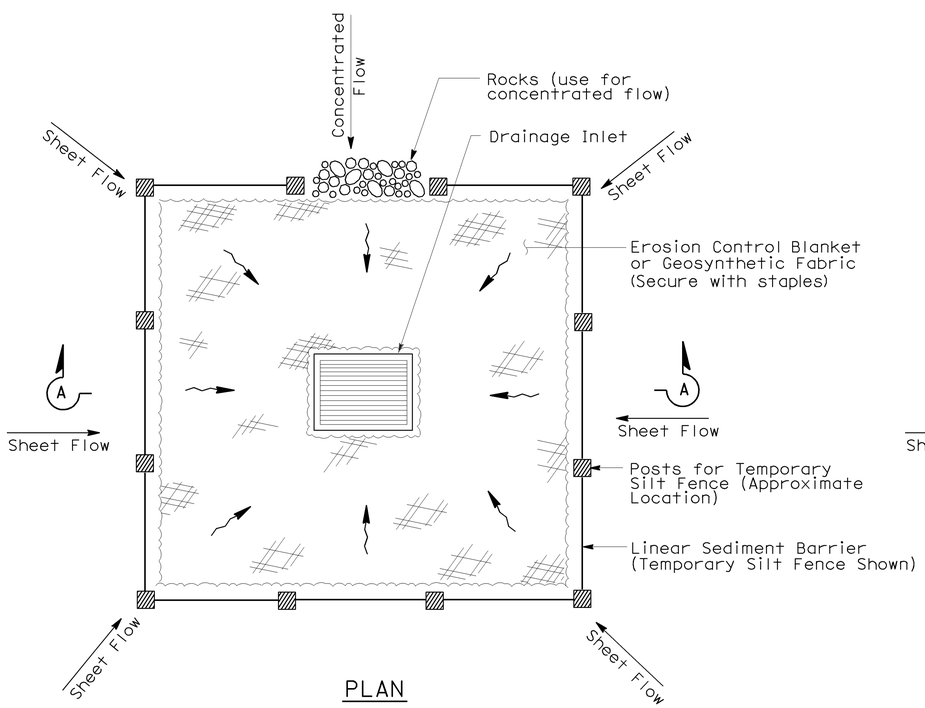

PLAN

TEMPORARY DRAINAGE
INLET PROTECTION (TYPE 1)

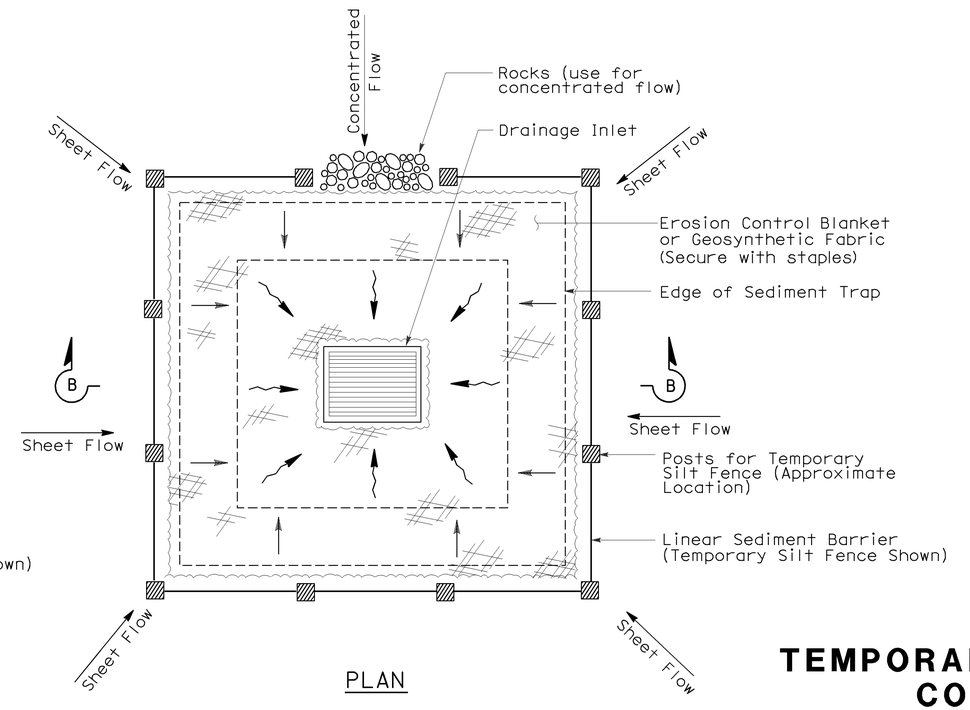

PLAN

TEMPORARY DRAINAGE
INLET PROTECTION (TYPE 2)
(EXCAVATED SEDIMENT TRAP)

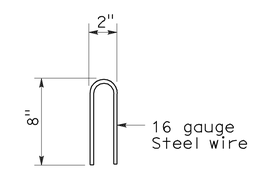

STAPLE DETAIL

STATE OF CALIFORNIA
DEPARTMENT OF TRANSPORTATION

TEMPORARY WATER POLLUTION CONTROL DETAILS (TEMPORARY DRAINAGE INLET PROTECTION)

NO SCALE

Nsp t61 dated august 15, 2008 supplements the standard plans book dated may 2006.

NEW STANDARD PLAN NSP T61

2006 NEW STANDARD PLAN NSP T61

7-11-08

DIST	COUNTY	ROUTE	POST MILES TOTAL PROJECT	SHEET NO.	TOTAL SHEETS
04	Nap	128	19.1/34.3	13	15

LICENSED LANDSCAPE ARCHITECT

August 15, 2008
PLANS APPROVAL DATE

The State of California or its officers or agents shall not be responsible for the accuracy or completeness of electronic copies of this plan sheet.

LICENSED LANDSCAPE ARCHITECT Robert B. Schott 3635 Signature 11-04-08 Renewal Date 08-11-08 Date STATE OF CALIFORNIA

To accompany plans dated 1-17-12

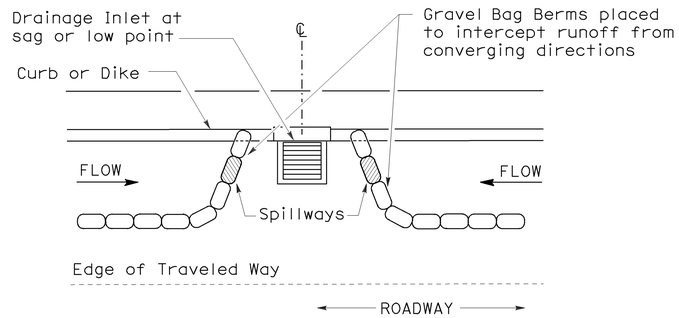

PLAN

CONFIGURATION FOR SAG POINT INLET (GRAVEL BAG BERM)

GRAVEL BAG BERM (TYPE 3A) SPACING TABLE

SLOPE OF ROADWAY (PERCENT)	1 to 3.9	4 to 5.9	6 to 7.9	8 to 10	10+
INTERVAL BETWEEN BERM	100′	75′	50′	25′	12′

For slope of less than 1%, install barriers only if erosion/sediment is prevalent

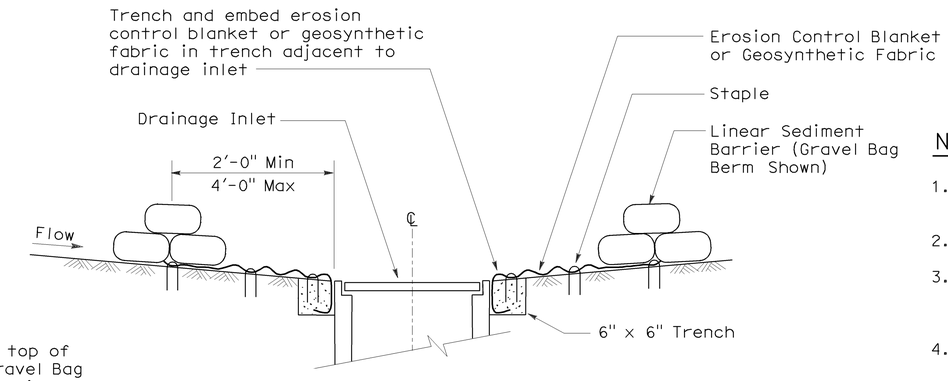

SECTION A-A

NOTES:

1. Place safety cones adjacent to drainage inlet protection.
2. Dimensions may vary to fit field conditions.
3. Install a minimum of 3 gravel bag berms upstream of each drainage inlet to be protected.
4. Position erosion control blanket or geosynthetic fabric at edge of concrete apron and secure in trench.
5. Erosion control blanket or geosynthetic fabric is not required if the area adjacent to the drainage inlet is vegetated or paved.

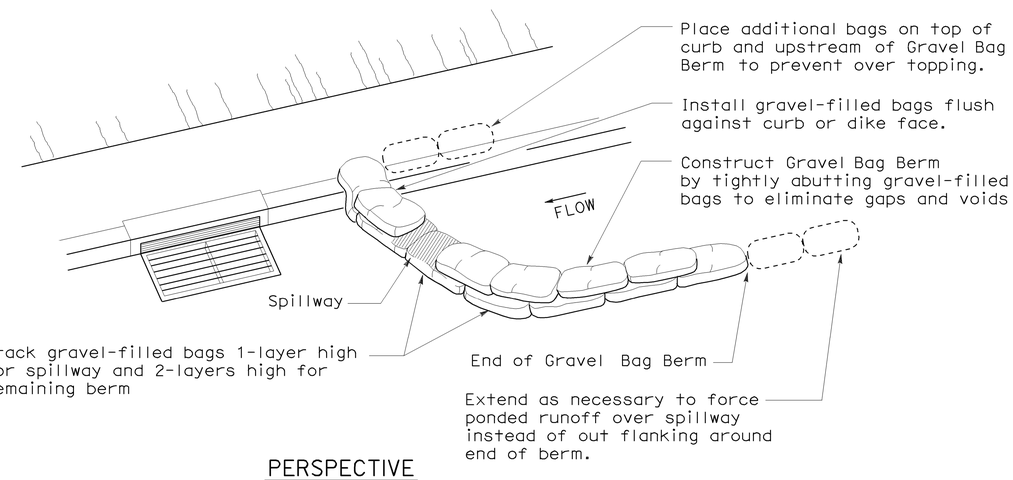

PERSPECTIVE

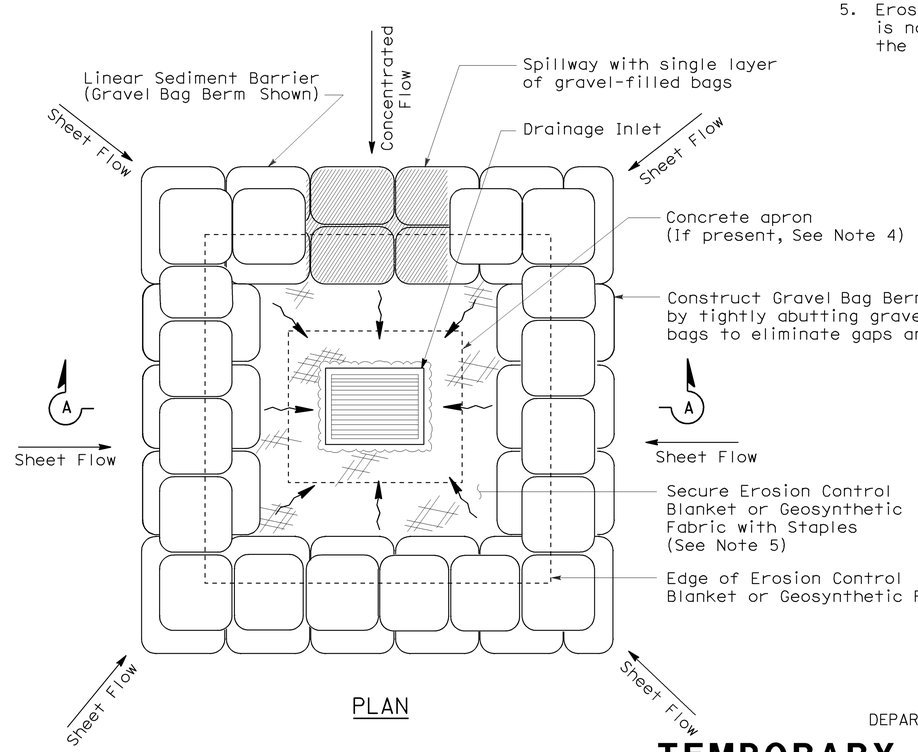

PLAN

TEMPORARY DRAINAGE INLET PROTECTION (TYPE 3B)

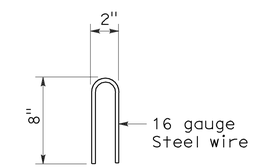

STAPLE DETAIL

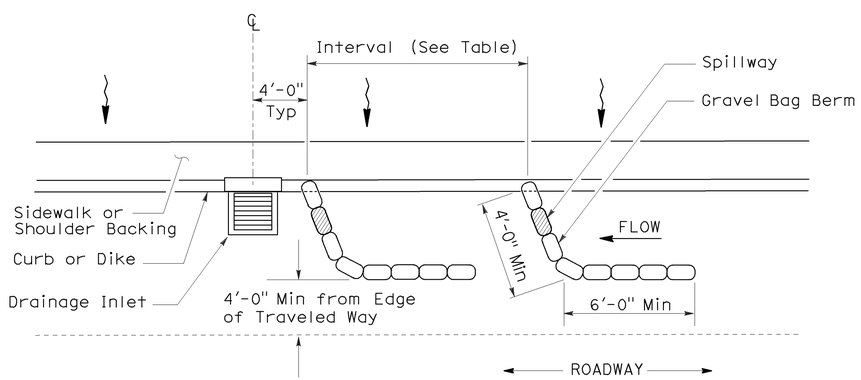

PLAN

TEMPORARY DRAINAGE INLET PROTECTION (TYPE 3A) (GRAVEL BAG BERM)

STATE OF CALIFORNIA
DEPARTMENT OF TRANSPORTATION

TEMPORARY WATER POLLUTION CONTROL DETAILS (TEMPORARY DRAINAGE INLET PROTECTION)

NO SCALE

NSP T62 DATED AUGUST 15, 2008 SUPPLEMENTS THE STANDARD PLANS BOOK DATED MAY 2006.

NEW STANDARD PLAN NSP T62

2006 NEW STANDARD PLAN NSP T62

7-11-08

DIST	COUNTY	ROUTE	POST MILES TOTAL PROJECT	SHEET NO.	TOTAL SHEETS
04	Nap	128	19.1/34.3	14	15

Robert B Schott
LICENSED LANDSCAPE ARCHITECT

August 15, 2008
PLANS APPROVAL DATE

LICENSED LANDSCAPE ARCHITECT
Robert B. Schott 3695
Signature
11-04-08
Renewal Date
08-11-08
Date
STATE OF CALIFORNIA

The State of California or its officers or agents shall not be responsible for the accuracy or completeness of electronic copies of this plan sheet.

To accompany plans dated 1-17-12

FLEXIBLE SEDIMENT BARRIER SPACING TABLE

SLOPE OF ROADWAY (PERCENT)	0 to 0.9	1 to 1.9	2 to 2.9	3 to 4	5+
INTERVAL BETWEEN BARRIERS	50′	35′	30′	25′	20′
ANGLE FROM FACE OF CURB	70°	70°	70°	45°	45°
SUGGESTED BARRIER LENGTH	6′	6′	6′	6′	6′

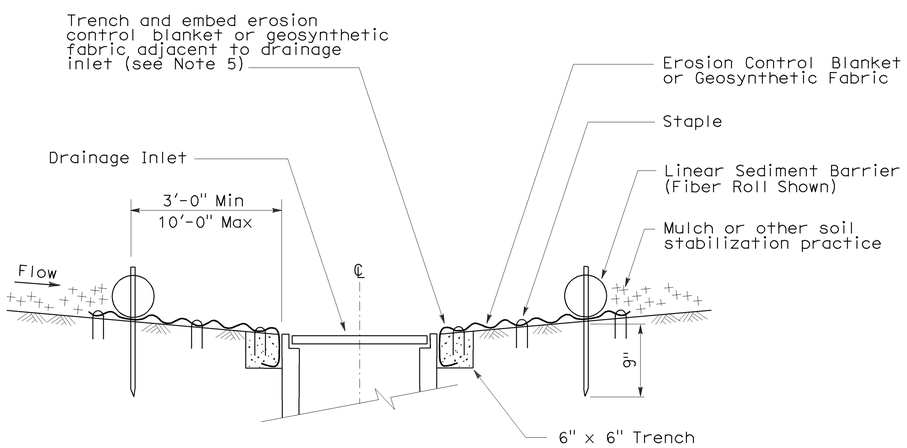

SECTION A-A

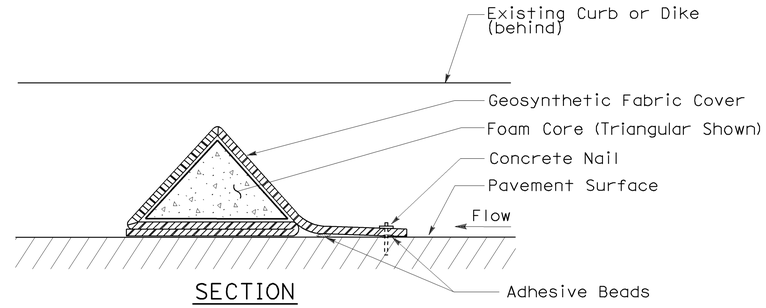

SECTION

FLEXIBLE SEDIMENT BARRIER DETAIL
(FOAM BARRIER SHOWN)

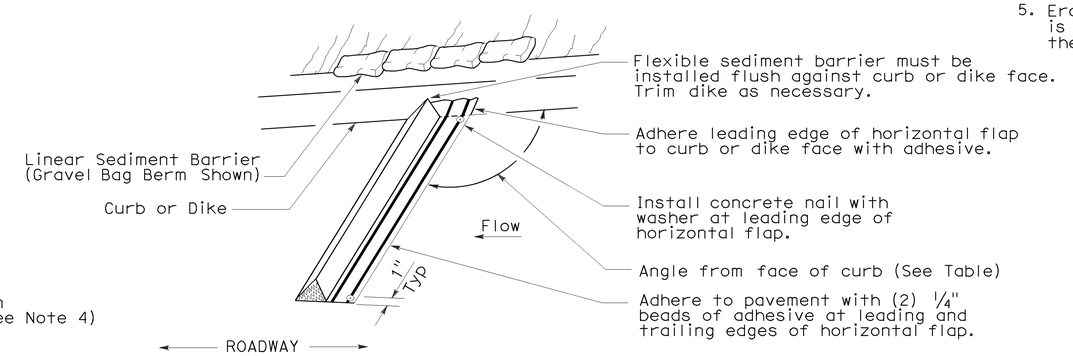

PERSPECTIVE

NOTES:

1. See Standard Plan T51 for Temporary Silt Fence.
2. Dimensions may vary to fit field conditions.
3. Install a minimum of 3 flexible sediment barriers upstream of each drainage inlet to be protected.
4. Position erosion control blanket or geosynthetic fabric at edge of concrete apron and secure in trench.
5. Erosion control blanket or geosynthetic fabric is not required if the area adjacent to the drainage inlet is vegetated.

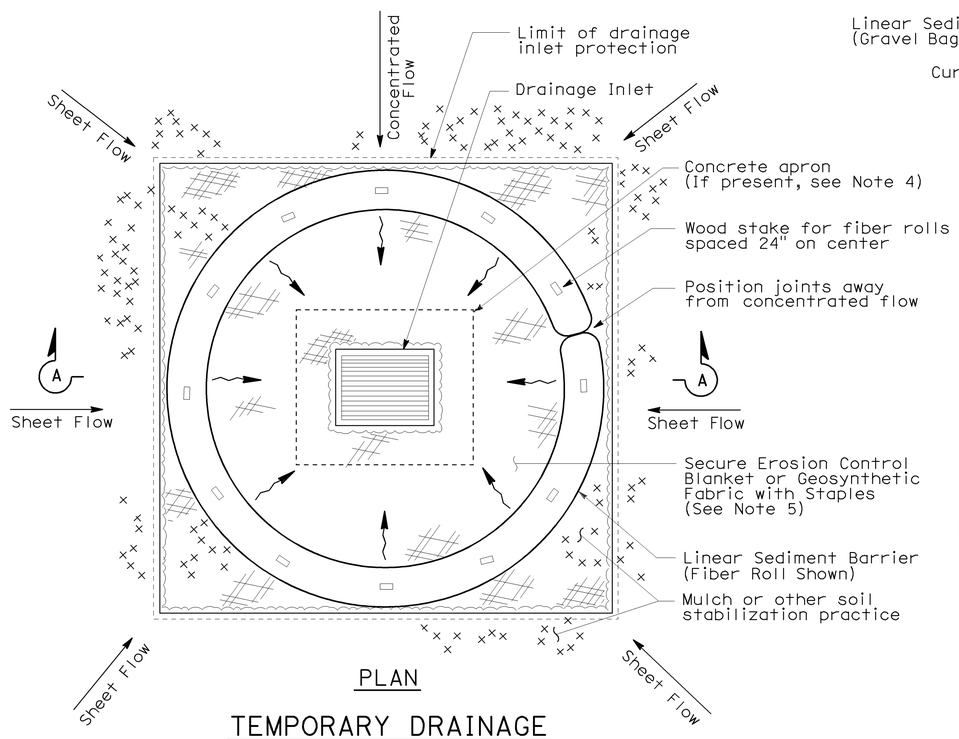

PLAN

TEMPORARY DRAINAGE
INLET PROTECTION (TYPE 4A)

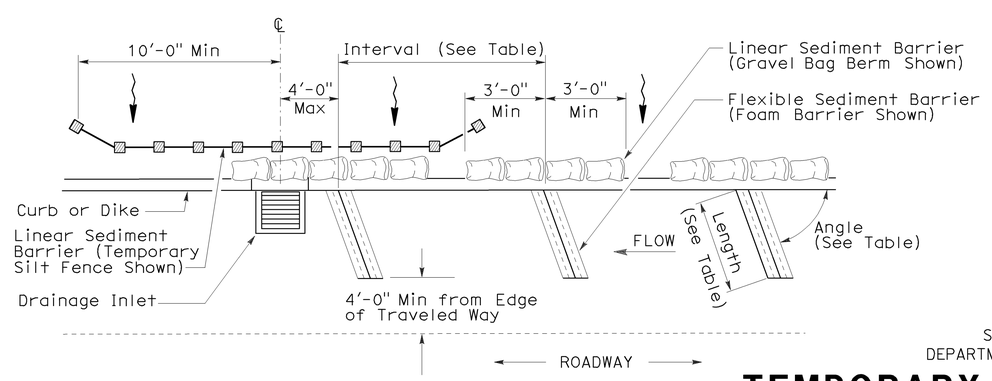

PLAN

TEMPORARY DRAINAGE
INLET PROTECTION (TYPE 4B)
FLEXIBLE SEDIMENT BARRIER

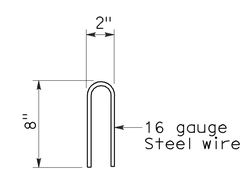

STAPLE DETAIL

STATE OF CALIFORNIA
DEPARTMENT OF TRANSPORTATION

TEMPORARY WATER POLLUTION CONTROL DETAILS (TEMPORARY DRAINAGE INLET PROTECTION)

NO SCALE

NSP T63 DATED AUGUST 15, 2008 SUPPLEMENTS
THE STANDARD PLANS BOOK DATED MAY 2006.

NEW STANDARD PLAN NSP T63

2006 NEW STANDARD PLAN NSP T63

7-11-08

DIST	COUNTY	ROUTE	POST MILES TOTAL PROJECT	SHEET NO.	TOTAL SHEETS
04	Nap	128	19.1/34.3	15	15

LICENSED LANDSCAPE ARCHITECT

August 15, 2008
PLANS APPROVAL DATE

LICENSED LANDSCAPE ARCHITECT Robert B. Schott 3635 Signature 11-04-08 Renewal Date 08-11-08 Date STATE OF CALIFORNIA

The State of California or its officers or agents shall not be responsible for the accuracy or completeness of electronic copies of this plan sheet.

To accompany plans dated 1-17-12

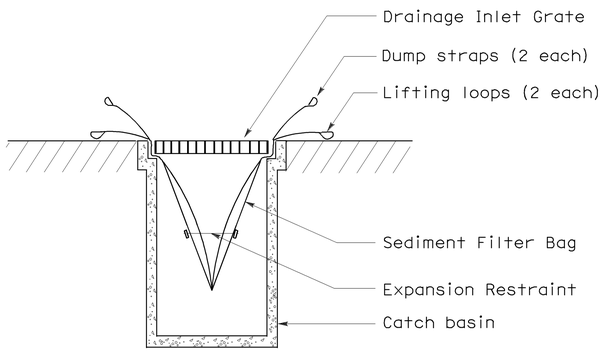

SECTION B-B

SEDIMENT FILTER BAG DETAIL

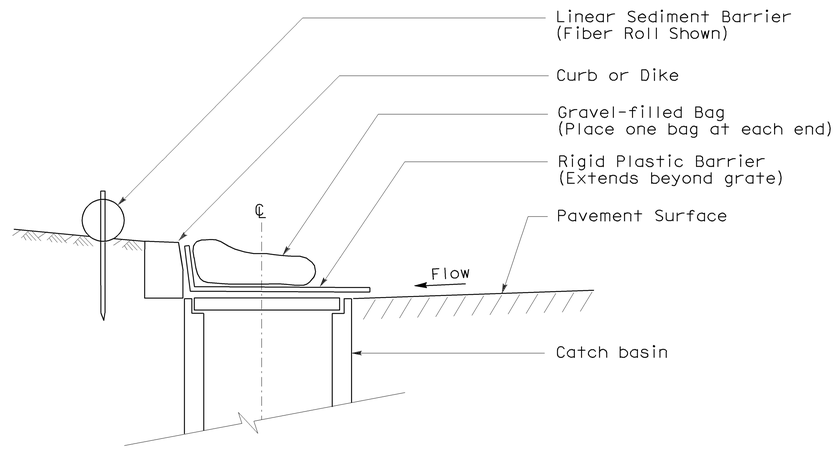

SECTION

TEMPORARY DRAINAGE INLET PROTECTION (TYPE 6A) (CATCH BASIN WITH GRATE)

NOTES:

1. See Standard Plan T51 for Temporary Silt Fence.
2. Dimensions may vary to fit field conditions.

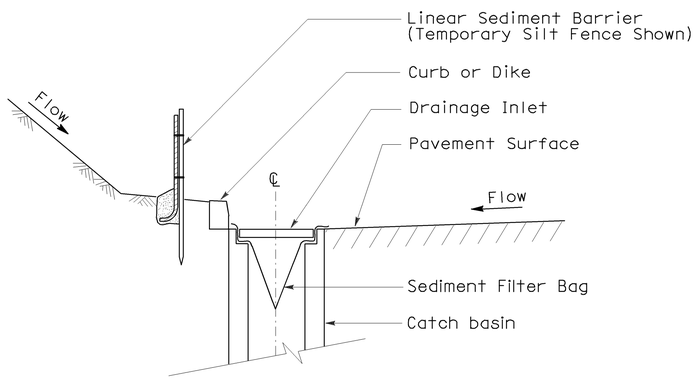

SECTION A-A

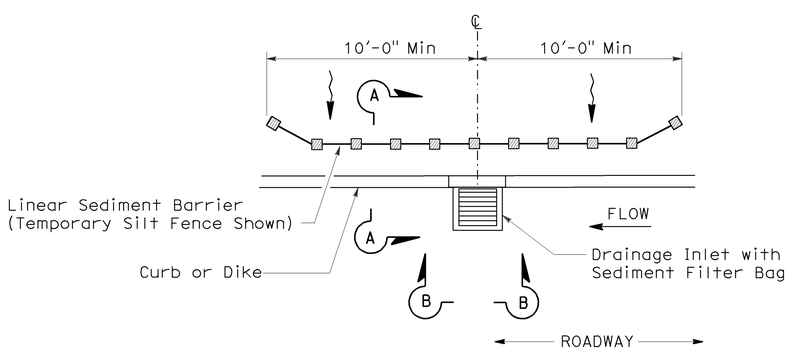

PLAN

TEMPORARY DRAINAGE INLET PROTECTION (TYPE 5) (SEDIMENT FILTER BAG)

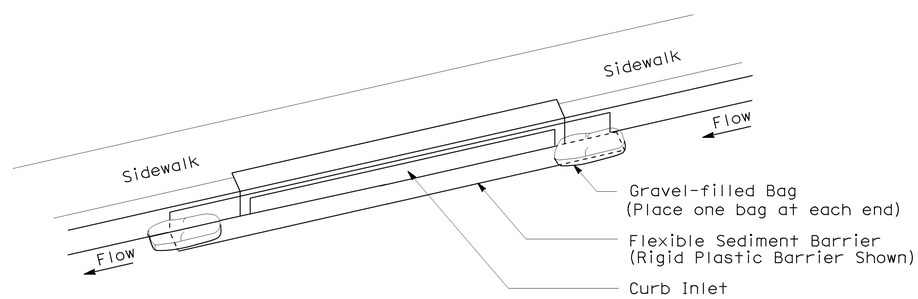

PERSPECTIVE

TEMPORARY DRAINAGE INLET PROTECTION (TYPE 6B) (CURB INLET WITHOUT GRATE)

STATE OF CALIFORNIA
DEPARTMENT OF TRANSPORTATION

TEMPORARY WATER POLLUTION CONTROL DETAILS (TEMPORARY DRAINAGE INLET PROTECTION)

NO SCALE

NSP T64 DATED AUGUST 15, 2008 SUPPLEMENTS THE STANDARD PLANS BOOK DATED MAY 2006.

NEW STANDARD PLAN NSP T64

2006 NEW STANDARD PLAN NSP T64

7-11-08