Dist	COUNTY	ROUTE	POST MILES TOTAL PROJECT	SHEET No.	TOTAL SHEETS
04	Ala	80,84,580	Var	1	19

INDEX OF PLANS

SHEET No.	DESCRIPTION
1	TITLE SHEET AND LOCATION MAP
2 - 3	CONSTRUCTION AREA SIGNS
4 - 6	DETOUR PLANS
7	PAVEMENT DELINEATION DETAILS AND QUANTITIES
8 -12	REVISED AND NEW STANDARD PLANS
	STRUCTURE PLANS
13-17	GENERAL PLAN
18	DECK REPAIR & DETAILS
19	JOINT SEAL TABLE & DETAILS

THE STANDARD PLANS LIST APPLICABLE TO THIS CONTRACT IS INCLUDED IN THE NOTICE TO BIDDERS AND SPECIAL PROVISIONS BOOK.

STATE OF CALIFORNIA

DEPARTMENT OF TRANSPORTATION

PROJECT PLANS FOR CONSTRUCTION ON STATE HIGHWAY

IN ALAMEDA COUNTY AT VARIOUS LOCATIONS

TO BE SUPPLEMENTED BY STANDARD PLANS DATED MAY 2006

LOCATION MAP

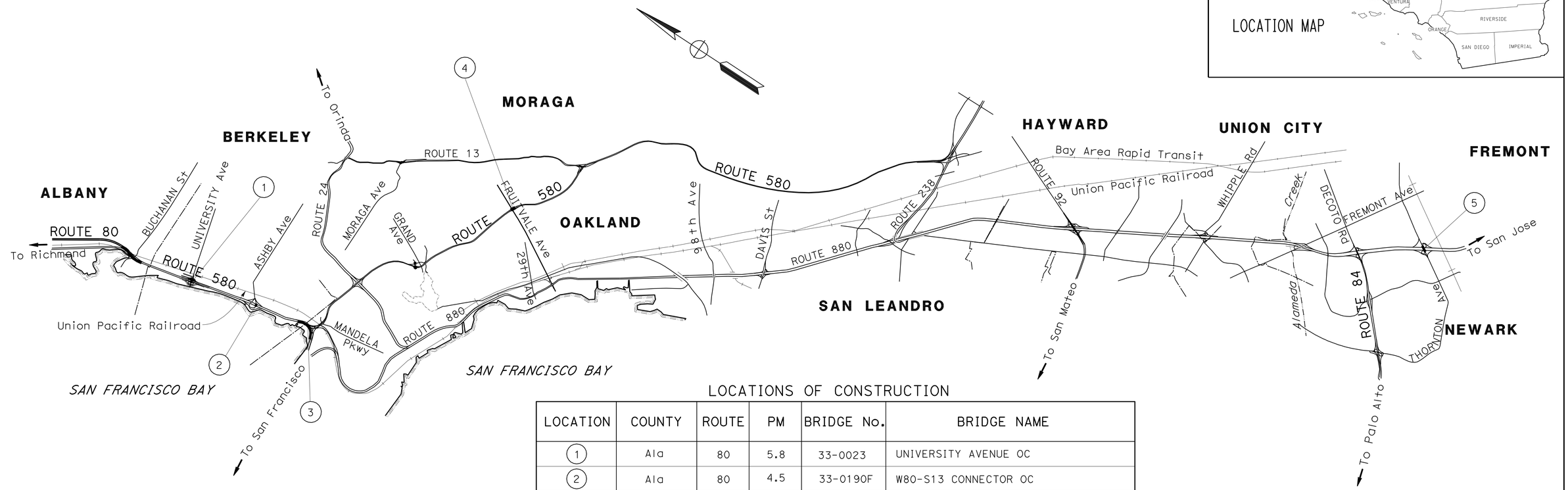

LOCATIONS OF CONSTRUCTION

LOCATION	COUNTY	ROUTE	PM	BRIDGE No.	BRIDGE NAME
1	Ala	80	5.8	33-0023	UNIVERSITY AVENUE OC
2	Ala	80	4.5	33-0190F	W80-S13 CONNECTOR OC
3	Ala	80	C3	33-0601	BAY BRIDGE HOVL SEPARATION
4	Ala	580	R41.4	33-0324	FRUITVALE AVENUE UC
5	Ala	84	6.9	33-0264	THORNTON AVENUE (84/880) SEPARATION

PROJECT ENGINEER
REGISTERED CIVIL ENGINEER

8/3/11
DATE

REGISTERED PROFESSIONAL ENGINEER
Fuk Nyan Kurniawan
No. 64659
Exp. 6-30-13
CIVIL
STATE OF CALIFORNIA

October 3, 2011
PLANS APPROVAL DATE

THE STATE OF CALIFORNIA OR ITS OFFICERS OR AGENTS SHALL NOT BE RESPONSIBLE FOR THE ACCURACY OR COMPLETENESS OF SCANNED COPIES OF THIS PLAN SHEET.

PROJECT MANAGER: RAMSES SARGISS

DESIGN ENGINEER: FUK NYAN KURNIAWAN

THE CONTRACTOR SHALL POSSESS THE CLASS (OR CLASSES) OF LICENSE AS SPECIFIED IN THE "NOTICE TO BIDDERS."

NO SCALE

CONTRACT No.	04-2E2404
PROJECT ID	0400020049

LAST REVISION 08-01-11

DATE PLOTTED => 29-SEP-2011
TIME PLOTTED => 10:08

Dist	COUNTY	ROUTE	POST MILES TOTAL PROJECT	SHEET No.	TOTAL SHEETS
04	Ala	80,84,580	Var	2	19

Florante P. Perez 8/3/11
REGISTERED CIVIL ENGINEER DATE

10-3-11
PLANS APPROVAL DATE

REGISTERED PROFESSIONAL ENGINEER Florante P. Perez No. 41030 Exp. 3-31-13 CIVIL STATE OF CALIFORNIA

THE STATE OF CALIFORNIA OR ITS OFFICERS OR AGENTS SHALL NOT BE RESPONSIBLE FOR THE ACCURACY OR COMPLETENESS OF SCANNED COPIES OF THIS PLAN SHEET.

NOTES:

1. LOCATION OF CONSTRUCTION AREA SIGNS SHOWN ARE APPROXIMATE, EXACT LOCATION AND POSITION OF SIGN TO BE DETERMINED BY THE ENGINEER.
2. LETTERING SIZES FOR SIGN PANEL ARE IN INCHES.

LEGEND:

[L] CONSTRUCTION AREA SIGN LETTER

(No.) LOCATION OF CONSTRUCTION

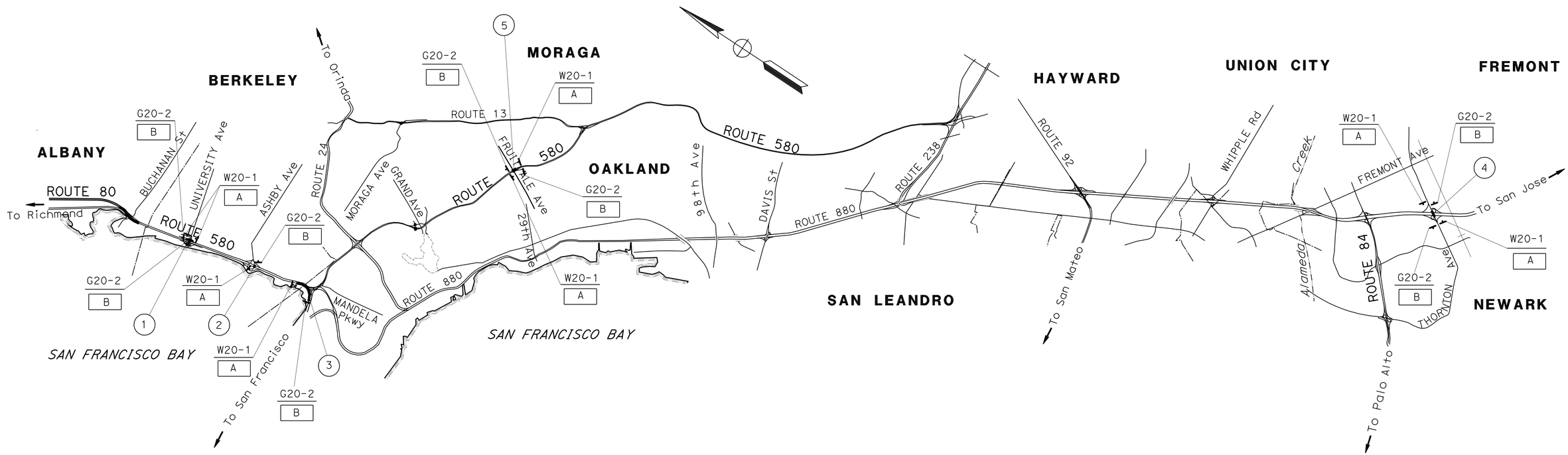

CONSTRUCTION AREA SIGNS

NO SCALE

APPROVED FOR CONSTRUCTION AREA SIGN WORK ONLY

CS-1

STATE OF CALIFORNIA - DEPARTMENT OF TRANSPORTATION
Caltrans TRAFFIC

FUNCTIONAL SUPERVISOR: LOURDES DAVID

CALCULATED-DESIGNED BY: LEOPOLDO G. BONGATO
CHECKED BY: FLORANTE P. PEREZ

REVISED BY: LGB
DATE REVISED: 8/1/11

LAST REVISION 08-01-11 | DATE PLOTTED => 29-SEP-2011 | TIME PLOTTED => 10:08

Dist	COUNTY	ROUTE	POST MILES TOTAL PROJECT	SHEET No.	TOTAL SHEETS
04	Ala	80,84,580	Var	3	19

REGISTERED CIVIL ENGINEER — DATE 8/3/11

10-3-11
PLANS APPROVAL DATE

REGISTERED PROFESSIONAL ENGINEER — Florante P. Perez — No. 41030 — Exp. 3-31-13 — CIVIL — STATE OF CALIFORNIA

THE STATE OF CALIFORNIA OR ITS OFFICERS OR AGENTS SHALL NOT BE RESPONSIBLE FOR THE ACCURACY OR COMPLETENESS OF SCANNED COPIES OF THIS PLAN SHEET.

STATIONARY MOUNTED CONSTRUCTION AREA SIGNS

SIGN	SIGN CODE	MESSAGE	PANEL SIZE (INCH x INCH)	NUMBER OF POST AND SIZE (EA-INCH x INCH)	No. OF SIGNS
A	W20-1	ROAD WORK AHEAD	60 x 60	2 - 4 x 6	8
B	G20-2	END ROAD WORK	36 x 18	1 - 4 x 4	8
C	SPECIAL	UNIVERSITY CLOSED	30 x 18	1 - 4 x 4	1
D	W20-2	DETOUR AHEAD	48 x 48	1 - 4 x 6	5
E	SPECIAL	UNIVERSITY	24 x 25	1 - 4 x 6	1
	SC3(↑) (CA)	DETOUR UP ARROW	21 x 15		
F	M4-8a	END DETOUR	30 x 18	1 - 4 x 4	5
G	SC6-4 (CA)	RAMP CLOSURE NOTICE	48 x 60	1 - 4 x 6	5
H	SPECIAL	UNIVERSITY	24 x 25	1 - 4 x 6	1
	SC3(↗) (CA)	DETOUR UP-RIGHT ARROW	21 x 15		
I	SPECIAL	UNIVERSITY	24 x 25	1 - 4 x 6	1
	M4-10(R+)	DETOUR RIGHT ARROW	21 x 15		
J	M4-8	DETOUR	24 x 12	1 - 4 x 6	1
	G27-2(80) (CA)	ROUTE 80	21 x 18		
	M3-4	WEST	24 x 12		
	M6-3(↑)	UP ARROW	21 x 15		
K	M4-8	DETOUR	24 x 12	1 - 4 x 6	1
	G27-2(80) (CA)	ROUTE 80	21 x 18		
	M3-4	WEST	24 x 12		
	M6-1(←)	LEFT ARROW	21 x 15		
L	SPECIAL	ROUTE 80 CLOSED	48 x 48	1 - 4 x 4	1
M	M4-8	DETOUR	24 x 12	1 - 4 x 6	1
	G27-2(80) (CA)	ROUTE 80	21 x 18		
	M3-4	WEST	24 x 12		
	M6-1(→)	RIGHT ARROW	21 x 15		
N	M4-8	DETOUR	24 x 12	1 - 4 x 6	2
	G27-2(80) (CA)	ROUTE 80	21 x 18		
	M3-2	EAST	24 x 12		
	M6-3(↑)	UP ARROW	21 x 15		
O	M4-8	DETOUR	24 x 12	1 - 4 x 6	2
	G27-2(80) (CA)	ROUTE 80	21 x 18		
	M3-2	EAST	24 x 12		
	M6-1(→)	RIGHT ARROW	21 x 15		
P	M4-8	DETOUR	24 x 12	1 - 4 x 6	2
	G27-2(880) (CA)	ROUTE 880	30 x 25		
	M3-3	SOUTH	24 x 12		
	M6-3(↑)	UP ARROW	21 x 15		
Q	M4-8	DETOUR	24 x 12	1 - 4 x 6	2
	G27-2(880) (CA)	ROUTE 880	30 x 25		
	M3-3	SOUTH	24 x 12		
	M6-1(←)	LEFT ARROW	21 x 15		
R	M4-8	DETOUR	24 x 12	1 - 4 x 6	1
	G27-2(880) (CA)	ROUTE 880	30 x 25		
	M3-3	SOUTH	24 x 12		
	M6-1(→)	RIGHT ARROW	21 x 15		

STATIONARY MOUNTED CONSTRUCTION AREA SIGNS

SIGN	SIGN CODE	MESSAGE	PANEL SIZE (INCH x INCH)	NUMBER OF POST AND SIZE (EA-INCH x INCH)	No. OF SIGNS
S	M4-8	DETOUR	24 x 12	1 - 4 x 6	3
	G27-2(880) (CA)	ROUTE 880	30 x 25		
	M3-1	SOUTH	24 x 12		
	M6-3(↑)	UP ARROW	21 x 15		
T	M4-8	DETOUR	24 x 12	1 - 4 x 6	2
	G27-2(880) (CA)	ROUTE 880	30 x 25		
	M3-1	NORTH	24 x 12		
	M6-1(→)	RIGHT ARROW	21 x 15		

APPROVED FOR CONSTRUCTION AREA SIGN WORK ONLY

FOR NOTES, ABBREVIATIONS AND LEGEND, SEE SHEET CS-1

CONSTRUCTION AREA SIGNS

CS-2

STATE OF CALIFORNIA - DEPARTMENT OF TRANSPORTATION
Caltrans
TRAFFIC

FUNCTIONAL SUPERVISOR: LOURDES DAVID
CALCULATED-DESIGNED BY: LEOPOLDO G. BONGATO
CHECKED BY: FLORANTE P. PEREZ
REVISED BY: LGB
DATE REVISED: 8/1/11

LAST REVISION 08-03-11
DATE PLOTTED => 29-SEP-2011
TIME PLOTTED => 10:08

Dist	COUNTY	ROUTE	POST MILES TOTAL PROJECT	SHEET No.	TOTAL SHEETS
04	Ala	80,84,580	Var	4	19

Florante P. Perez 8/3/11
REGISTERED CIVIL ENGINEER DATE

10-3-11
PLANS APPROVAL DATE

REGISTERED PROFESSIONAL ENGINEER Florante P. Perez No. 41030 Exp. 3-31-13 CIVIL STATE OF CALIFORNIA

THE STATE OF CALIFORNIA OR ITS OFFICERS OR AGENTS SHALL NOT BE RESPONSIBLE FOR THE ACCURACY OR COMPLETENESS OF SCANNED COPIES OF THIS PLAN SHEET.

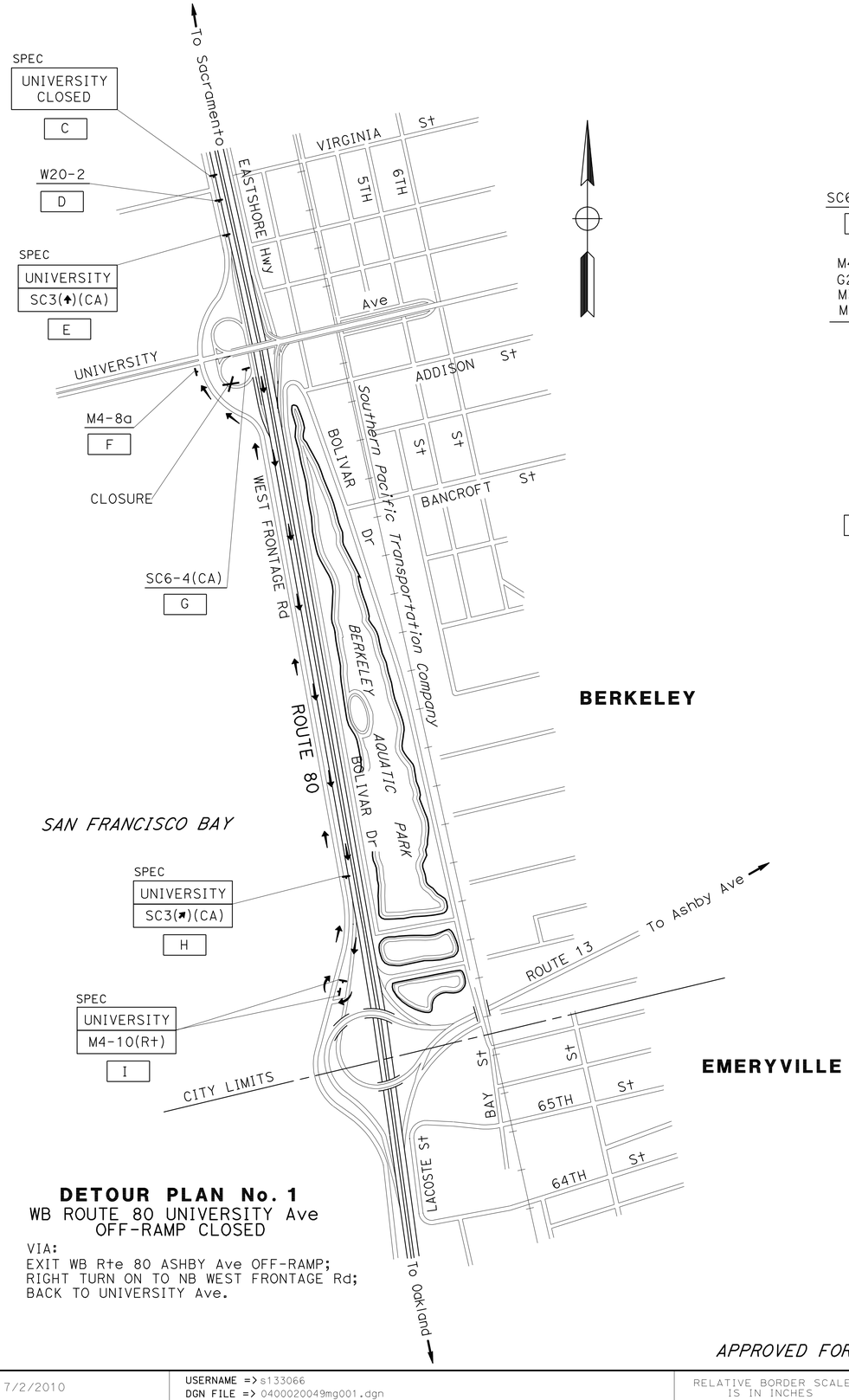

DETOUR PLAN No. 1
WB ROUTE 80 UNIVERSITY Ave
OFF-RAMP CLOSED

VIA:
EXIT WB Rte 80 ASHBY Ave OFF-RAMP;
RIGHT TURN ON TO NB WEST FRONTAGE Rd;
BACK TO UNIVERSITY Ave.

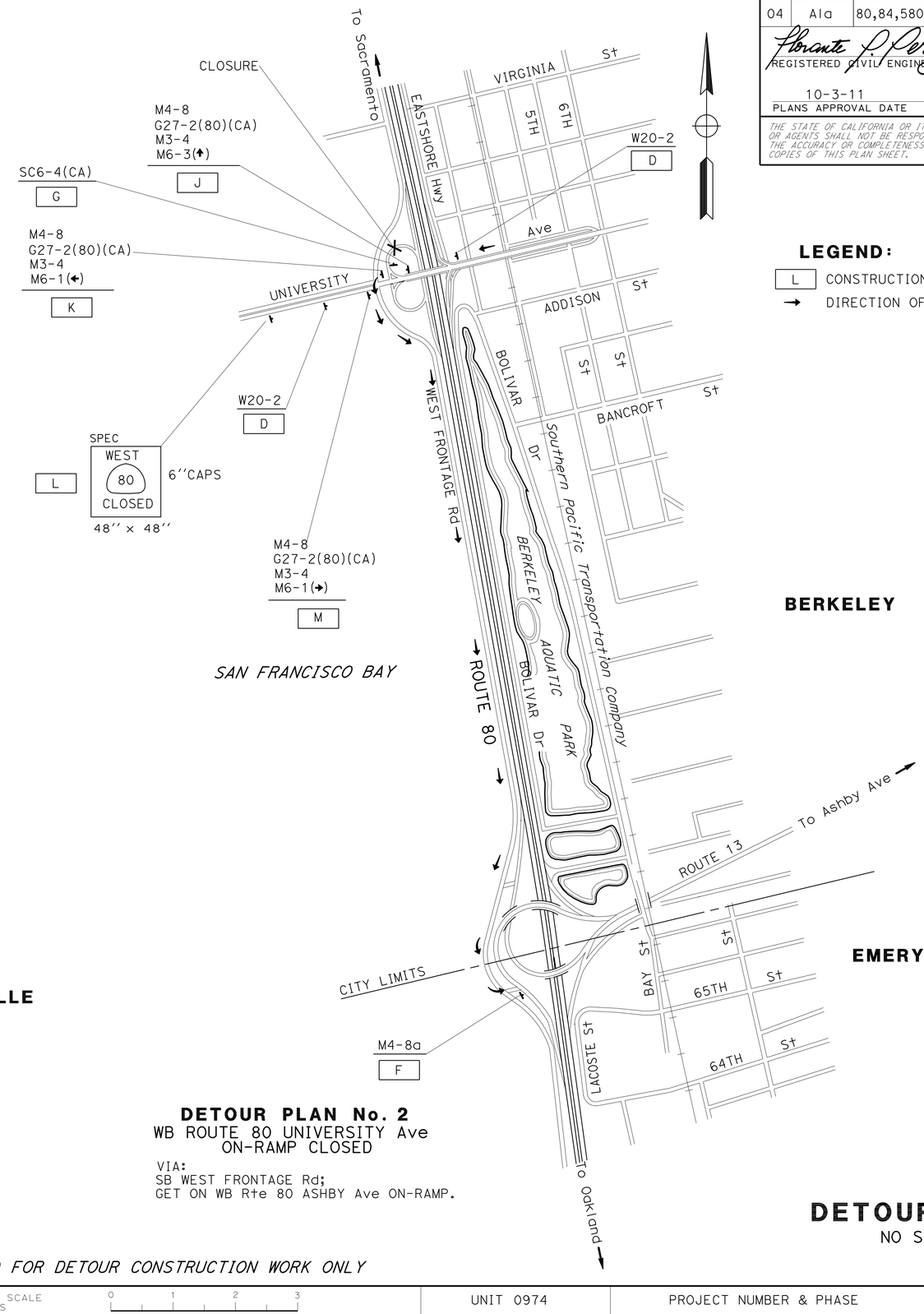

DETOUR PLAN No. 2
WB ROUTE 80 UNIVERSITY Ave
ON-RAMP CLOSED

VIA:
SB WEST FRONTAGE Rd;
GET ON WB Rte 80 ASHBY Ave ON-RAMP.

LEGEND:

L CONSTRUCTION AREA SIGNS
→ DIRECTION OF TRAFFIC

DETOUR PLAN
NO SCALE

APPROVED FOR DETOUR CONSTRUCTION WORK ONLY

DE-1

STATE OF CALIFORNIA - DEPARTMENT OF TRANSPORTATION
Caltrans
DESIGN
FUNCTIONAL SUPERVISOR: FUK NYAN KURNIAWAN
CALCULATED-DESIGNED BY: LEOPOLDO G. BONGATO
CHECKED BY: FLORANTE P. PEREZ
REVISED BY: LGB
DATE REVISED: 8/1/11

LAST REVISION 08-01-11
DATE PLOTTED => 29-SEP-2011
TIME PLOTTED => 10:08

Dist	COUNTY	ROUTE	POST MILES TOTAL PROJECT	SHEET No.	TOTAL SHEETS
04	Ala	80,84,580	Var	5	19

REGISTERED CIVIL ENGINEER Florante P. Perez 8/3/11 DATE

10-3-11
PLANS APPROVAL DATE

REGISTERED PROFESSIONAL ENGINEER Florante P. Perez No. 41030 Exp. 3-31-13 CIVIL STATE OF CALIFORNIA

THE STATE OF CALIFORNIA OR ITS OFFICERS OR AGENTS SHALL NOT BE RESPONSIBLE FOR THE ACCURACY OR COMPLETENESS OF SCANNED COPIES OF THIS PLAN SHEET.

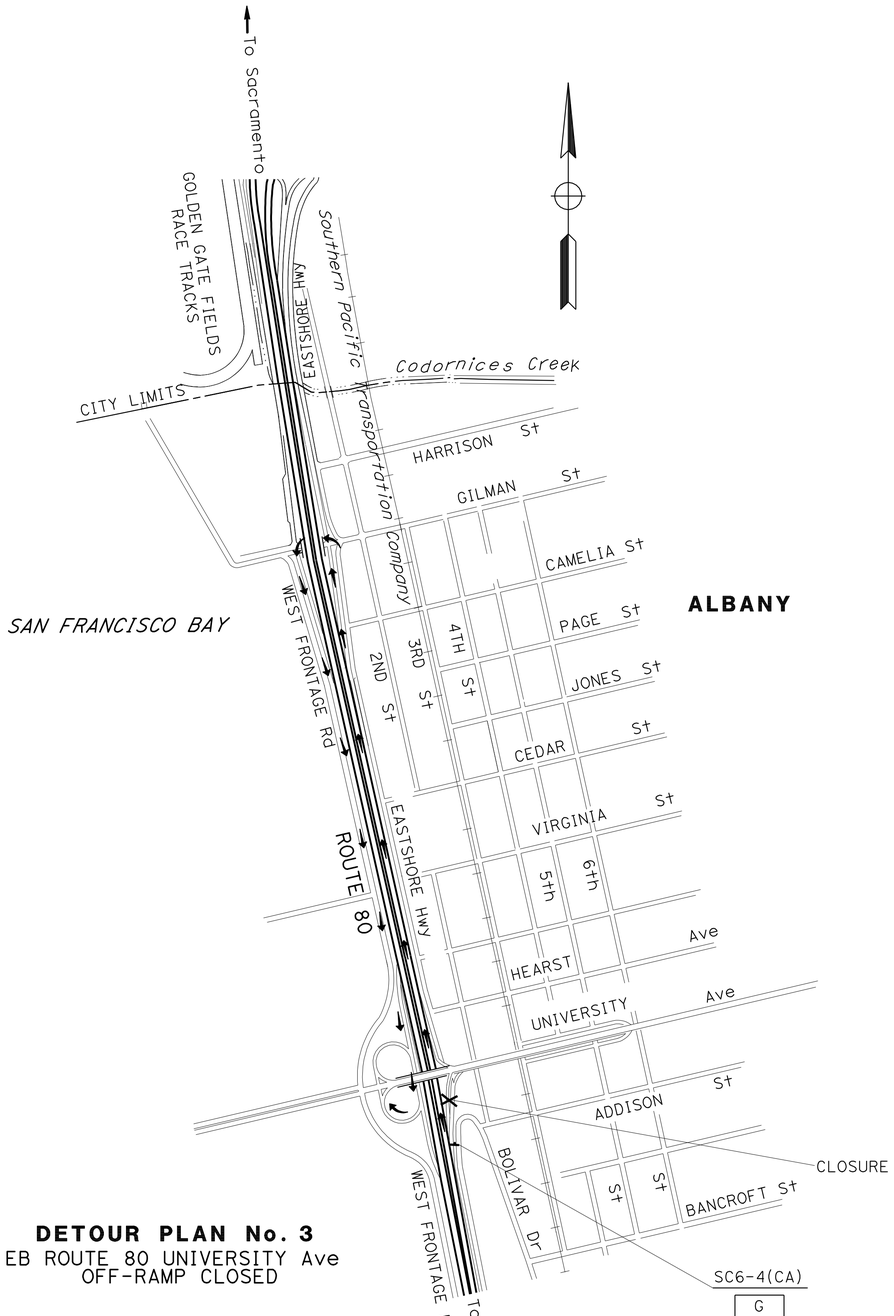

DETOUR PLAN No. 3
EB ROUTE 80 UNIVERSITY Ave
OFF-RAMP CLOSED

VIA:
EXIT EB Rte 80 GILMAN St OFF-RAMP;
LEFT TURN ON GILMAN St;
LEFT TURN ON TO WB Rte 80 GILMAN St ON-RAMP;
EXIT WB Rte 80 UNIVERSITY OFF-RAMP;
RIGHT TURN TO UNIVERSITY Ave.

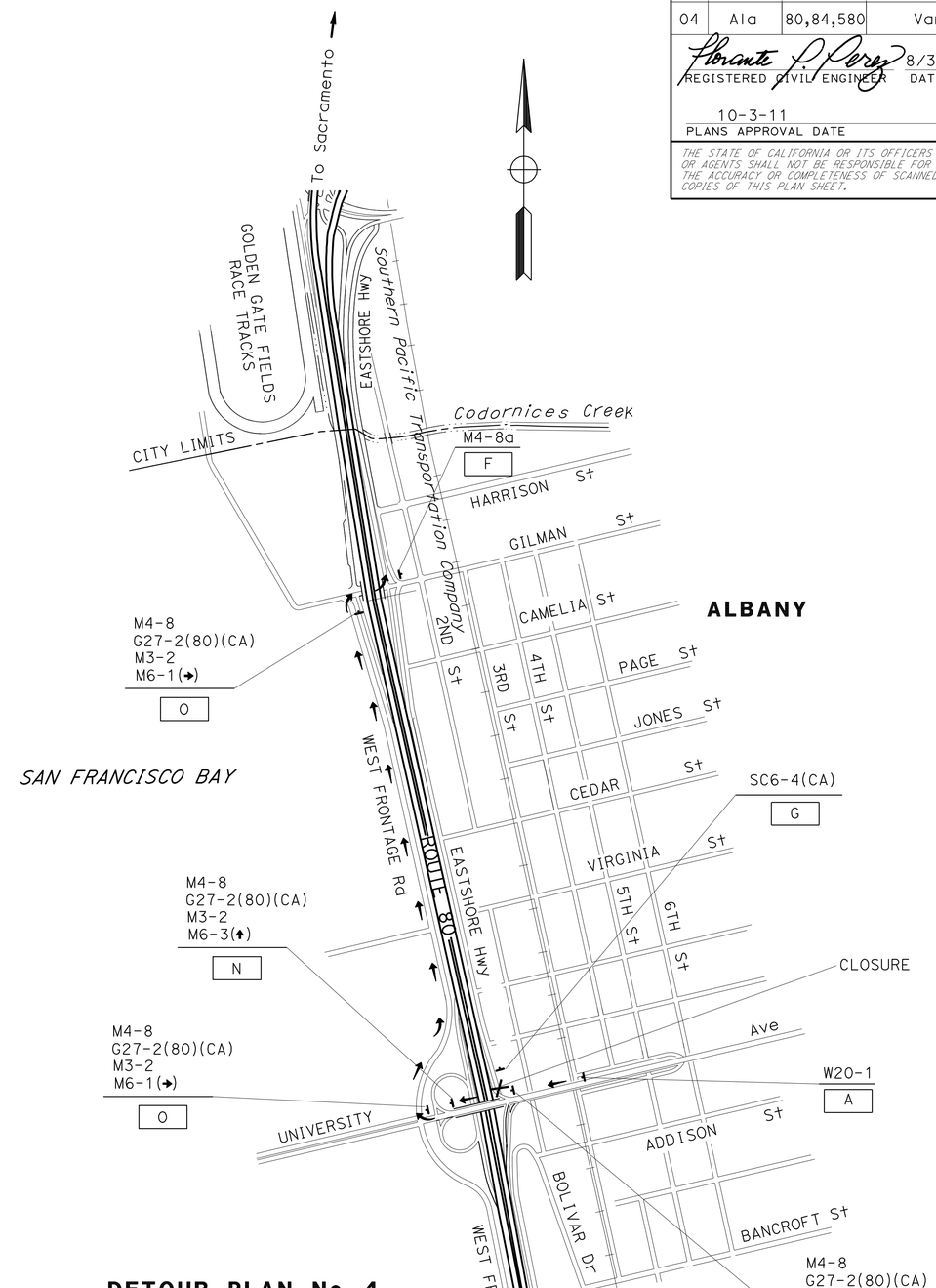

DETOUR PLAN No. 4
EB ROUTE 80 UNIVERSITY
ON-RAMP CLOSED

VIA:
TURN RIGHT TO NB WEST FRONTAGE Rd;
TURN RIGHT TO GILMAN St;
TURN LEFT ON TO EB Rte 80 GILMAN St ON-RAMP.

DETOUR PLAN
NO SCALE

APPROVED FOR DETOUR CONSTRUCTION WORK ONLY

FOR NOTES, ABBREVIATIONS AND LEGEND, SEE SHEET DE-1

DE-2

STATE OF CALIFORNIA - DEPARTMENT OF TRANSPORTATION
Caltrans®
DESIGN

FUNCTIONAL SUPERVISOR: FUK NYAN KURNIAWAN
CALCULATED-DESIGNED BY: LEOPOLDO G. BONGATO
CHECKED BY: FLORANTE P. PEREZ
REVISED BY: LGB
DATE REVISED: 8/1/11

LAST REVISION 08-01-11
DATE PLOTTED => 29-SEP-2011
TIME PLOTTED => 10:08

Dist	COUNTY	ROUTE	POST MILES TOTAL PROJECT	SHEET No.	TOTAL SHEETS
04	Ala	80,84,580	Var	6	19

Florante P. Perez 8/3/11
REGISTERED CIVIL ENGINEER DATE

10-3-11
PLANS APPROVAL DATE

REGISTERED PROFESSIONAL ENGINEER Florante P. Perez No. 41030 Exp. 3-31-13 CIVIL STATE OF CALIFORNIA

THE STATE OF CALIFORNIA OR ITS OFFICERS OR AGENTS SHALL NOT BE RESPONSIBLE FOR THE ACCURACY OR COMPLETENESS OF SCANNED COPIES OF THIS PLAN SHEET.

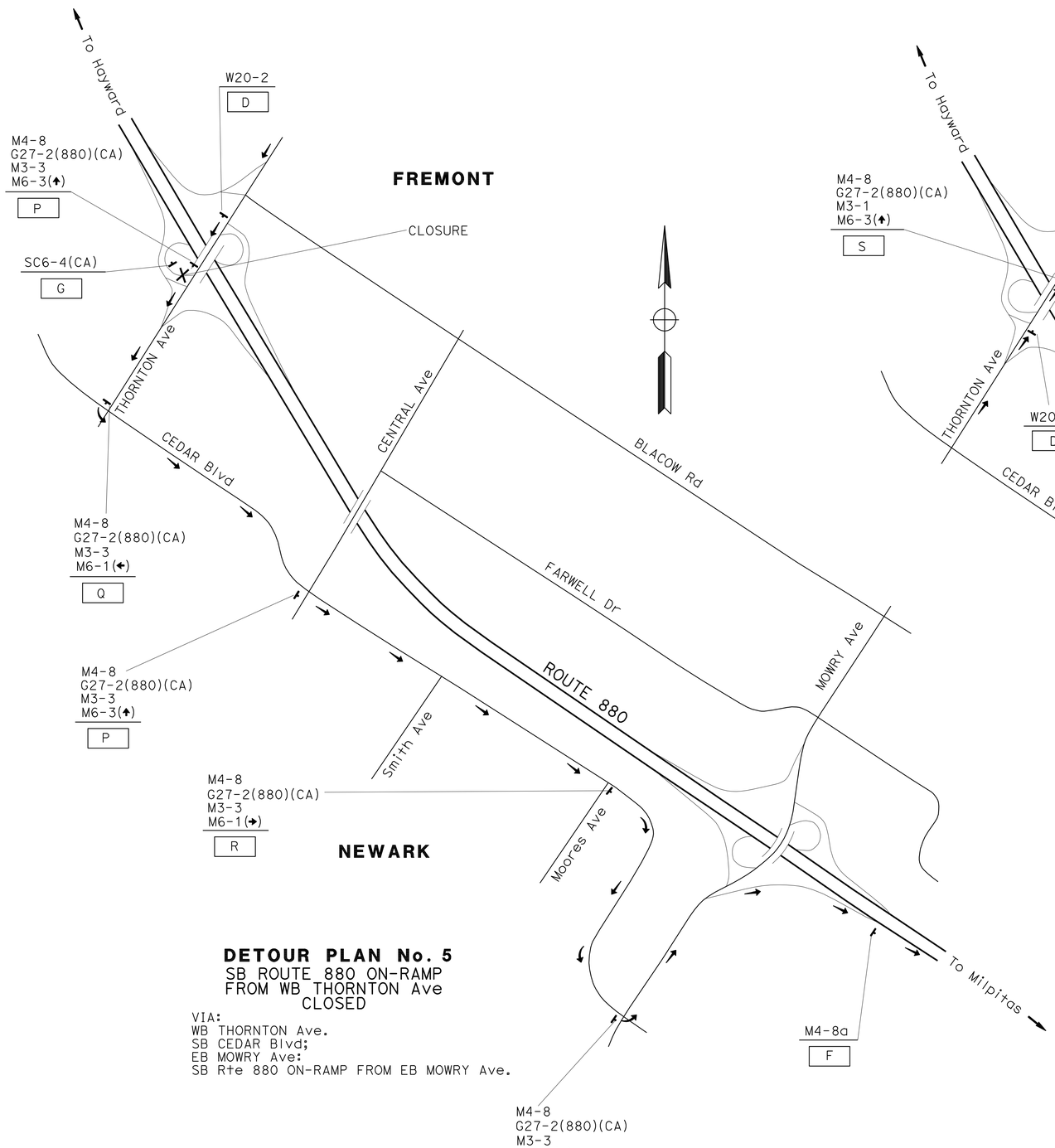

DETOUR PLAN No. 5
SB ROUTE 880 ON-RAMP
FROM WB THORNTON Ave
CLOSED

VIA:
WB THORNTON Ave.
SB CEDAR Blvd;
EB MOWRY Ave:
SB Rte 880 ON-RAMP FROM EB MOWRY Ave.

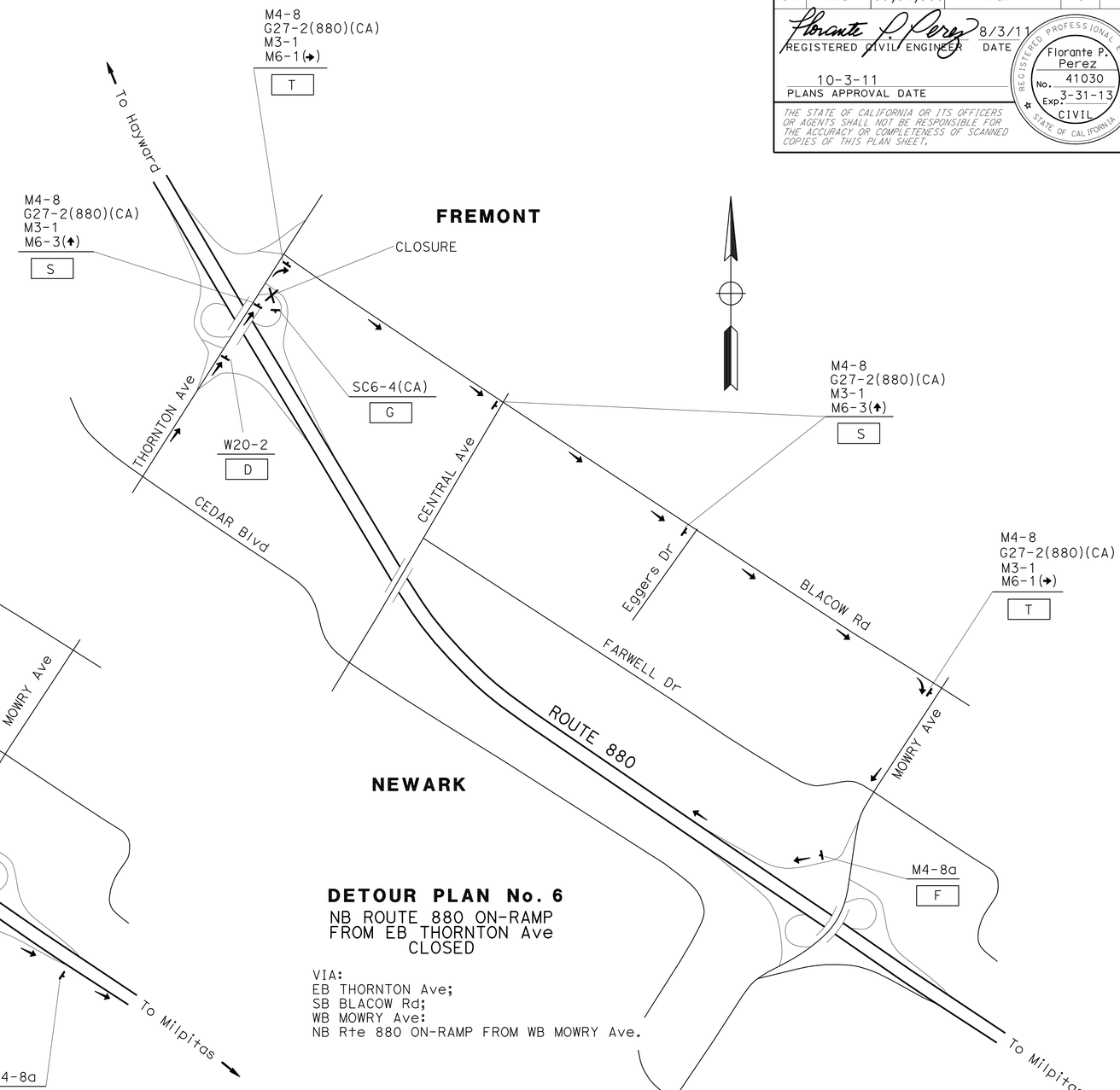

DETOUR PLAN No. 6
NB ROUTE 880 ON-RAMP
FROM EB THORNTON Ave
CLOSED

VIA:
EB THORNTON Ave;
SB BLACOW Rd;
WB MOWRY Ave:
NB Rte 880 ON-RAMP FROM WB MOWRY Ave.

APPROVED FOR DETOUR CONSTRUCTION WORK ONLY

FOR NOTES, ABBREVIATIONS AND LEGEND, SEE SHEET DE-1

DETOUR PLAN
NO SCALE

DE-3

REVISED BY	DATE REVISED
LGB	8/1/11

LEOPOLDO G. BONGATO — FLORANTE P. PEREZ
CALCULATED-DESIGNED BY — CHECKED BY
FUNCTIONAL SUPERVISOR: FUK NYAN KURNIAWAN

STATE OF CALIFORNIA - DEPARTMENT OF TRANSPORTATION
Caltrans DESIGN

LAST REVISION 08-03-11 | DATE PLOTTED => 29-SEP-2011 | TIME PLOTTED => 10:09

Dist	COUNTY	ROUTE	POST MILES TOTAL PROJECT	SHEET No.	TOTAL SHEETS
04	Ala	80,84,580	Var	7	19

REGISTERED CIVIL ENGINEER 8/3/11 DATE

10-3-11
PLANS APPROVAL DATE

REGISTERED PROFESSIONAL ENGINEER Fuk Nyan Kurniawan No. 64659 Exp. 6-30-13 CIVIL STATE OF CALIFORNIA

THE STATE OF CALIFORNIA OR ITS OFFICERS OR AGENTS SHALL NOT BE RESPONSIBLE FOR THE ACCURACY OR COMPLETENESS OF SCANNED COPIES OF THIS PLAN SHEET.

NOTES:

1. ALL EXISTING PAVEMENT DELINEATION REMOVED SHALL BE REPLACED AT THE EXACT LOCATION OF EXISTING OR AS DIRECTED BY THE ENGINEER.
2. INSTALL 4'' WHITE LINE AFTER INSTALLING PAVEMENT MARKERS.
3. ONE (1) TYPE I ARROW SHALL BE PLACED ON THE ON-RAMP OF EASTBOUND ROUTE 80 AND ONE (1) TYPE V ARROW ON THE OFF-RAMP OF EASTBOUND ROUTE 80.

LEGEND:

- TYPE A WHITE NONREFLECTIVE MARKER
- TYPE G ONE WAY CLEAR RETROREFLECTIVE MARKER
- 4'' WHITE LINE
- DIRECTION OF TRAVEL

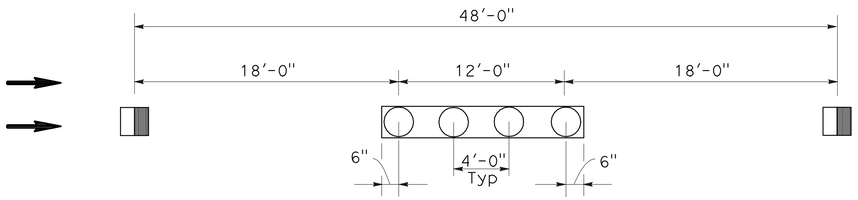

DETAIL 13M
PAVEMENT DELINEATION DETAIL

TRAFFIC STRIPES, PAVEMENT MARKINGS AND PAVEMENT MARKERS

LOCATION	BRIDGE NAME	BRIDGE No.	DETAIL No./ PAVEMENT MARKING	REMOVE: THERMOPLASTIC TRAFFIC STRIPE WHITE	REMOVE: THERMOPLASTIC TRAFFIC STRIPE YELLOW	REMOVE: PAVEMENT MARKER	REMOVE: THERMOPLASTIC PAVEMENT MARKING	THERMOPLASTIC TRAFFIC STRIPE: 4" WHITE	THERMOPLASTIC TRAFFIC STRIPE: 4" YELLOW	THERMOPLASTIC TRAFFIC STRIPE: 8" WHITE	THERMOPLASTIC TRAFFIC STRIPE: 4" WHITE (BROKEN 35'-13')	THERMOPLASTIC TRAFFIC STRIPE: 4" WHITE (BROKEN 17'-7')	THERMOPLASTIC TRAFFIC STRIPE: 8" WHITE (BROKEN 12'-3')	PAVEMENT MARKER: NON-REFLECTIVE TYPE A	PAVEMENT MARKER: RETROREFLECTIVE TYPE C	PAVEMENT MARKER: RETROREFLECTIVE TYPE G	PAVEMENT MARKER: RETROREFLECTIVE TYPE H	THERMOPLASTIC PAVEMENT MARKING
				LF		EA	SQFT	LF						EA				SQFT
1	UNIVERSITY AVENUE OC	33-0023	9	448		11						140				11		
			25A		1107	52			1107								52	
			27B	1197				1197										
			TYPE I 24'-0" ARROW															31(SEE NOTE 3)
			TYPE V ARROW															33(SEE NOTE 3)
5	THORNTON AVENUE (84/880) SEPARATION	33-0264	13M	632		80					182			64		16		
			25		632	16			632								16	
			27B	632				632										
			36	384		12				192						12		
			37	1080		40							108		40			
			TYPE III (R) ARROW				84											84
			SUBTOTAL	4373	1739	211	84	1829	1739	192	182	140	108	64	40	39	68	148
			TOTAL	4373	1739	211	84	3568		192	182	140	108	64	147			148

PAVEMENT DELINEATION DETAILS AND QUANTITIES

NO SCALE

PDD-1

REVISED BY	DATE REVISED
DTA	8/1/11

CALCULATED-DESIGNED BY: DARO T. ARUGAY
CHECKED BY: FUK NYAN KURNIAWAN
FUNCTIONAL SUPERVISOR: FUK NYAN KURNIAWAN

STATE OF CALIFORNIA - DEPARTMENT OF TRANSPORTATION
Caltrans®
DESIGN

LAST REVISION 08-01-11
DATE PLOTTED => 29-SEP-2011
TIME PLOTTED => 10:09

DIST	COUNTY	ROUTE	POST MILES TOTAL PROJECT	SHEET NO.	TOTAL SHEETS
04	Ala	80,84,580	Var	8	19

REGISTERED CIVIL ENGINEER

October 5, 2007
PLANS APPROVAL DATE

REGISTERED PROFESSIONAL ENGINEER Efthymios Delis No. C51434 Exp. 6-30-08 CIVIL STATE OF CALIFORNIA

The State of California or its officers or agents shall not be responsible for the accuracy or completeness of electronic copies of this plan sheet.

To accompany plans dated 10-3-11

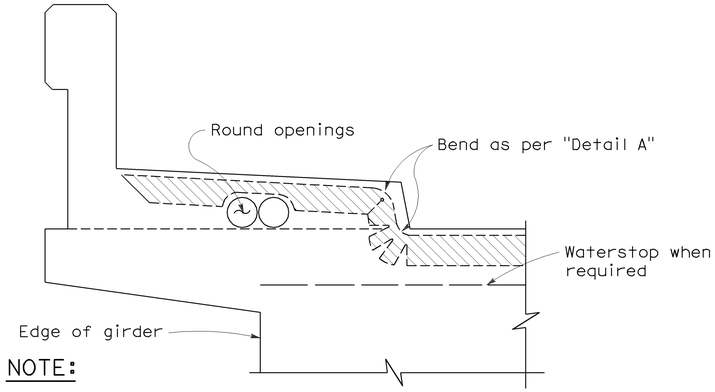

NOTE:

Type "B" seal shown. Type "A" seals to comform to the general path of seal shown, cuts for bending not required. Bend Type "A" seals 3" up into curb or barrier rail on only the low end of the seal.

CONCRETE BARRIER AND SIDEWALK

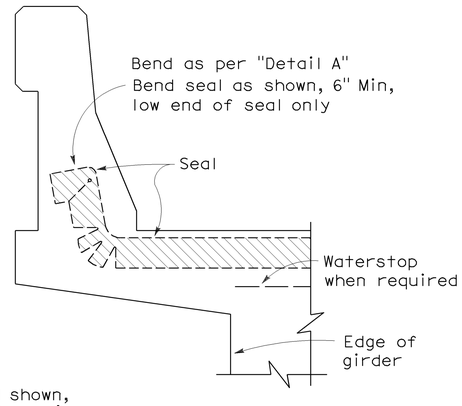

CONCRETE BARRIER

JOINT SEALS DETAILS

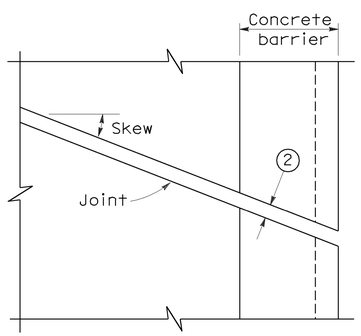

PLAN OF JOINT (SKEW ≤ 20°)

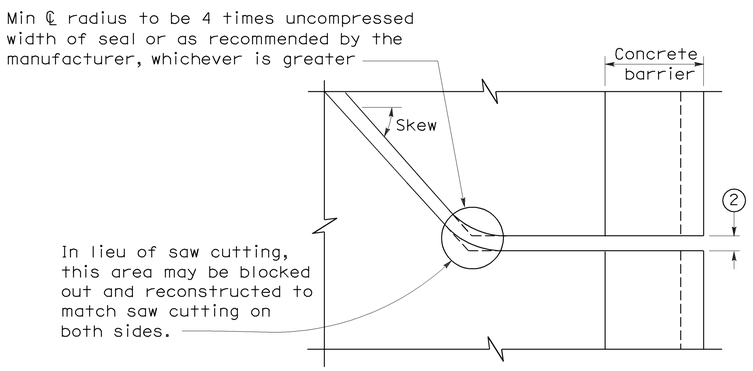

PLAN OF JOINT (SKEW > 20°)

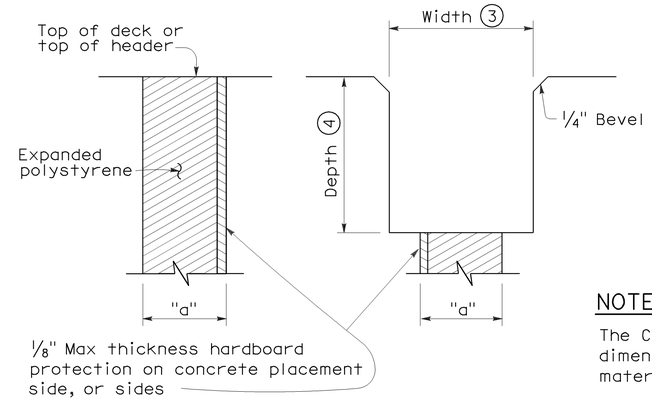

FORMING DETAIL SAWCUT DETAIL

NOTE:

The Contractor shall verify all controlling field dimensions before ordering or fabricatiing any material.

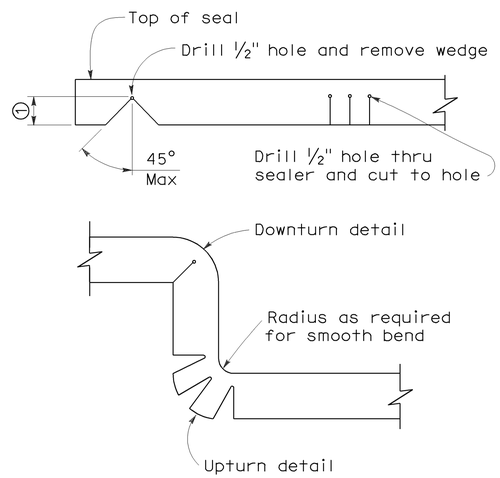

DETAIL A

NOTES:

1. Make smooth cuts from the bottom of seal to 1½" clear of top leaving at least one complete cell between the top of the cut and top of the seal. When necessary cut back of seal to clear conduit and round openings.
2. Opening in barrier to match width of sawn deck joint.
3. Sawcut groove widths shall be as ordered by the Engineer.
4. Depth of sawcut: Type A - Depth to be 2" minimum.
   Type B - Depth to be equal to or greater than the depth of seal measured along the contact surface, when compressed to minimum width position (W_2) plus dimensions shown.
5. MR (movement rating) as shown on other plan sheets.
6. Other depths must be approved by the Engineer.

DIMENSIONS "a" OF JOINT REQUIRED

Movement Rating (MR) 5	Bridge Type	"a" Dimension Deck Concrete Placed		
		Winter	Fall-Spring	Summer
2"	All except CIP/PS	1½"	1¼"	¾"
	CIP/PS	1¼"	1"	½"
1½"	All except CIP/PS	1¼"	1"	½"
	CIP/PS	1"	¾"	½"
1"	All except CIP/PS	1"	¾"	½"
	CIP/PS	¾"	½"	½"
½"	All except CIP/PS	¾"	¾"	½"
	CIP/PS	½"	½"	½"

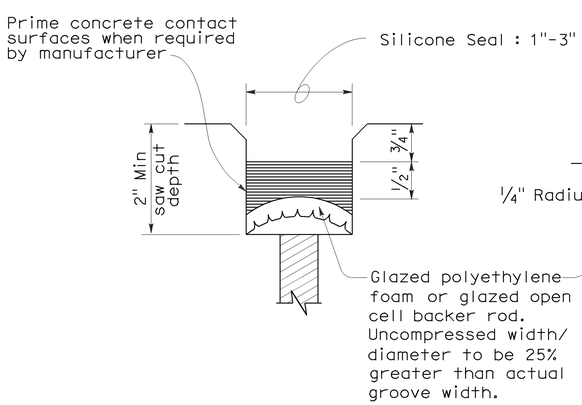

TYPE A SEAL

Movement rating : Silicone = 1" Max

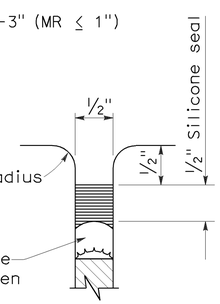

TYPE AL SEAL

Longitudinal joints only

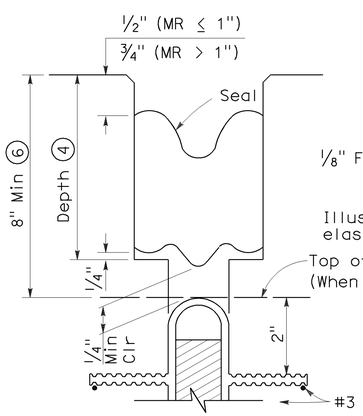

TYPE B JOINT SEAL
IN MINIMUM WIDTH POSITION (W_2)

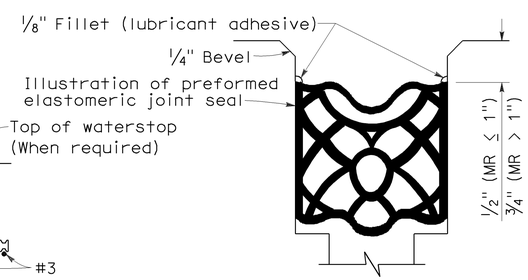

TYPE B SEAL

Movement Rating ≤ 2"

STATE OF CALIFORNIA
DEPARTMENT OF TRANSPORTATION

JOINT SEALS (MAXIMUM MOVEMENT RATING = 2")

NO SCALE

RSP B6-21 DATED OCTOBER 5, 2007 SUPERSEDES STANDARD PLAN B6-21 DATED MAY 1, 2006 - PAGE 258 OF THE STANDARD PLANS BOOK DATED MAY 2006.

REVISED STANDARD PLAN RSP B6-21

2006 REVISED STANDARD PLAN RSP B6-21

5-8-07

DIST	COUNTY	ROUTE	POST MILES TOTAL PROJECT	SHEET NO.	TOTAL SHEETS
04	Ala	80,84,580	Var	9	19

Randell D. Hiatt
REGISTERED CIVIL ENGINEER

June 6, 2008
PLANS APPROVAL DATE

REGISTERED PROFESSIONAL ENGINEER
Randell D. Hiatt
No. C50200
Exp. 6-30-09
CIVIL
STATE OF CALIFORNIA

The State of California or its officers or agents shall not be responsible for the accuracy or completeness of electronic copies of this plan sheet.

To accompany plans dated 10-3-11

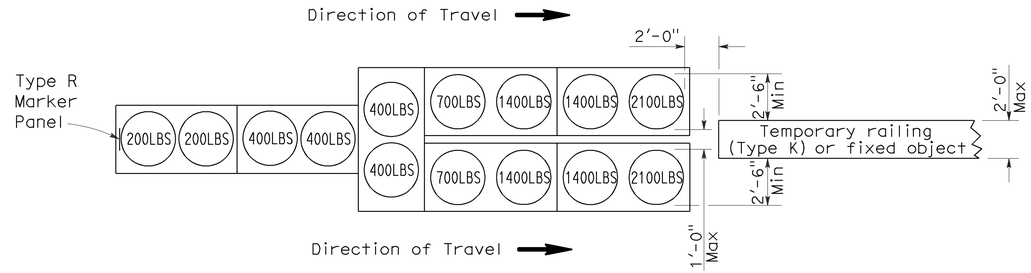

ARRAY 'TU14'

Approach speed 45 mph or more

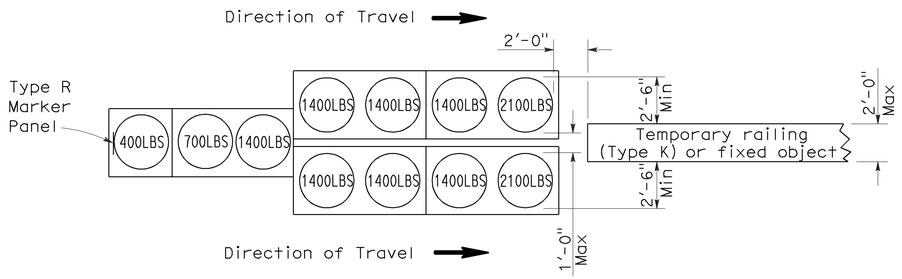

ARRAY 'TU11'

Approach speed less than 45 mph

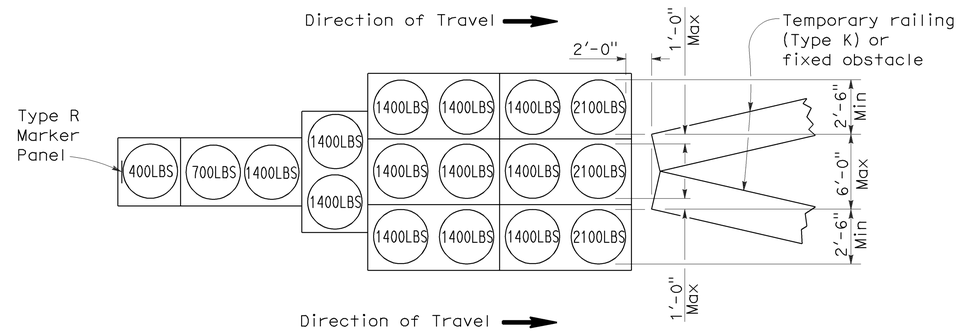

ARRAY 'TU17'

Approach speed less than 45 mph

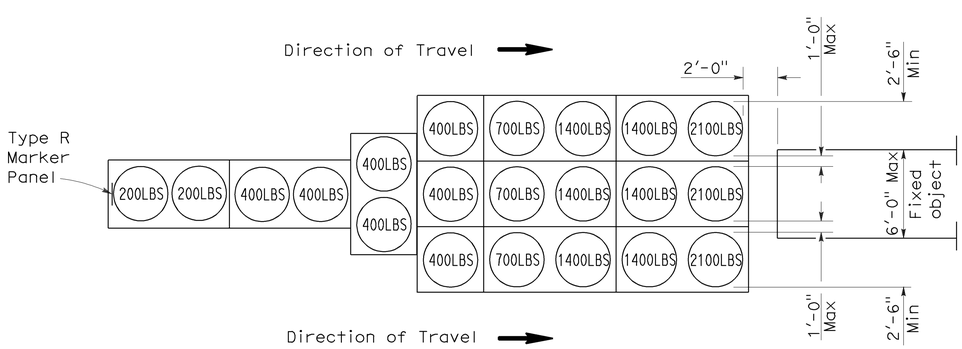

ARRAY 'TU21'

Approach speed 45 mph or more

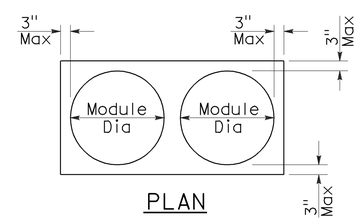

PLAN

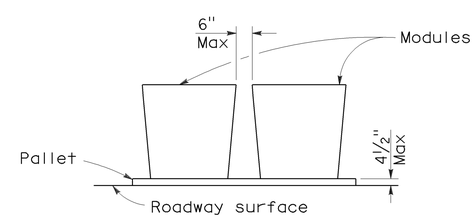

ELEVATION

CRASH CUSHION PALLET DETAIL

See Note 7

NOTES:

1. (XXX) Indicates sand filled module location and weight of sand in pounds for each module. Module spacing is based on the greater diameter of the module.
2. All sand weights are nominal.
3. Temporary crash cushion arrays shall not encroach on the traveled way.
4. Place the top of Type R marker panel 1" below the module lid.
5. Refer to Standard Plan A73B for marker details.
6. Approach speeds indicated conform to NCHRP 350 Report criteria.
7. Use of pallets is optional.

STATE OF CALIFORNIA
DEPARTMENT OF TRANSPORTATION

TEMPORARY CRASH CUSHION, SAND FILLED (UNIDIRECTIONAL)

NO SCALE

RSP T1A DATED JUNE 6, 2008 SUPERSEDES STANDARD PLAN T1A
DATED MAY 1, 2006 - PAGE 211 OF THE STANDARD PLANS BOOK DATED MAY 2006.

REVISED STANDARD PLAN RSP T1A

2006 REVISED STANDARD PLAN RSP T1A

DIST	COUNTY	ROUTE	POST MILES TOTAL PROJECT	SHEET NO.	TOTAL SHEETS
04	Ala	80,84,580	Var	10	19

Randell D. Hiatt
REGISTERED CIVIL ENGINEER

June 6, 2008
PLANS APPROVAL DATE

REGISTERED PROFESSIONAL ENGINEER
Randell D. Hiatt
No. C50200
Exp. 6-30-09
CIVIL
STATE OF CALIFORNIA

The State of California or its officers or agents shall not be responsible for the accuracy or completeness of electronic copies of this plan sheet.

To accompany plans dated 10-3-11

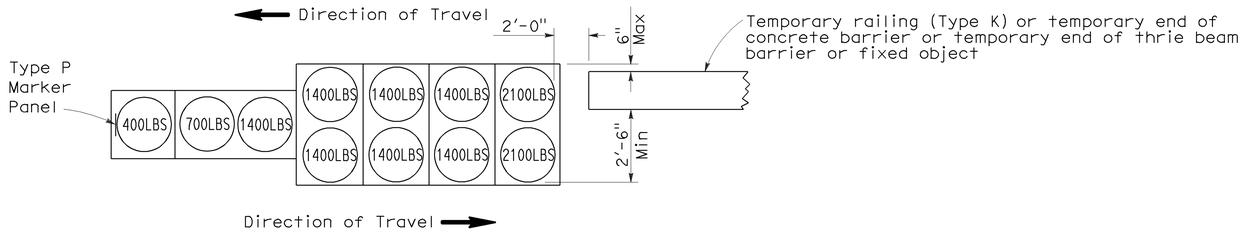

ARRAY 'TB11'

Approach speed less than 45 mph

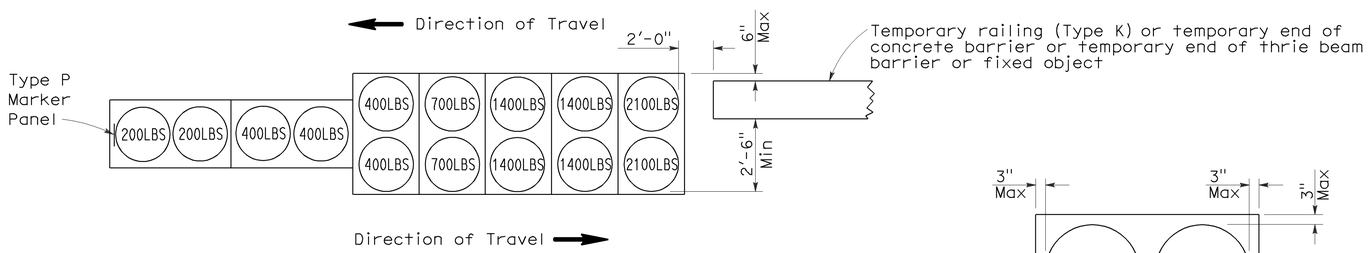

ARRAY 'TB14'

Approach speed 45 mph or more

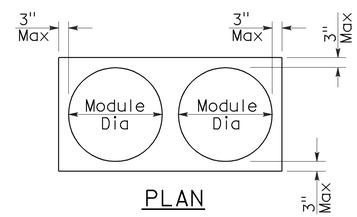

PLAN

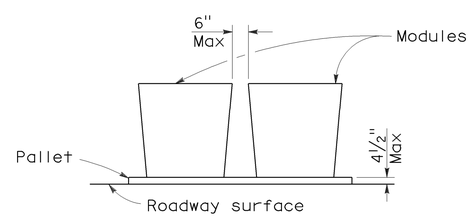

ELEVATION

CRASH CUSHION PALLET DETAIL

See Note 7

NOTES:

1. (XXX) Indicates sand filled module location and weight of sand in pounds for each module. Module spacing is based on the greater diameter of the module.
2. All sand weights are nominal.
3. Temporary crash cushion arrays shall not encroach on the traveled way.
4. Place the Type P marker panel so that the bottom of the panel rests upon the pallet.
5. Refer to Standard Plan A73B for marker details.
6. Approach speeds indicated conform to NCHRP 350 Report criteria.
7. Use of pallets is optional.

STATE OF CALIFORNIA
DEPARTMENT OF TRANSPORTATION

TEMPORARY CRASH CUSHION, SAND FILLED (BIDIRECTIONAL)

NO SCALE

RSP T1B DATED JUNE 6, 2008 SUPERSEDES STANDARD PLAN T1B
DATED MAY 1, 2006 - PAGE 212 OF THE STANDARD PLANS BOOK DATED MAY 2006.

REVISED STANDARD PLAN RSP T1B

2006 REVISED STANDARD PLAN RSP T1B

5-15-08

DIST	COUNTY	ROUTE	POST MILES TOTAL PROJECT	SHEET NO.	TOTAL SHEETS
04	Ala	80,84,580	Var	11	19

Randell D. Hiatt
REGISTERED CIVIL ENGINEER

June 6, 2008
PLANS APPROVAL DATE

REGISTERED PROFESSIONAL ENGINEER
Randell D. Hiatt
No. C50200
Exp. 6-30-09
CIVIL
STATE OF CALIFORNIA

The State of California or its officers or agents shall not be responsible for the accuracy or completeness of electronic copies of this plan sheet.

To accompany plans dated 10-3-11

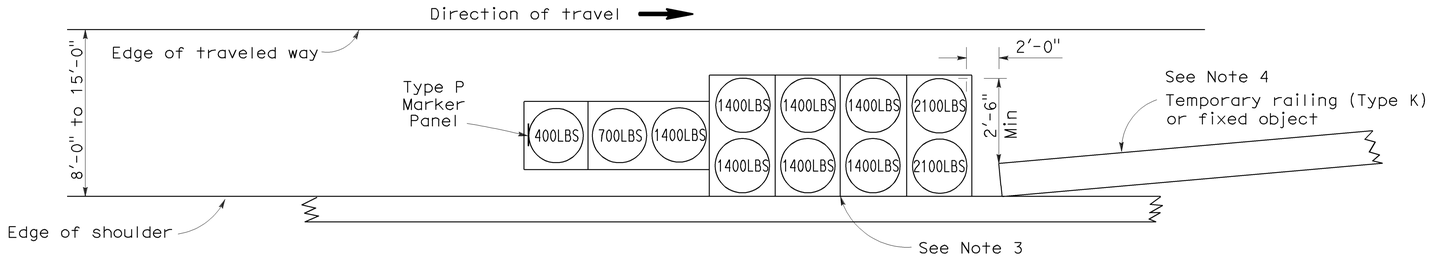

ARRAY 'TS11'

Approach speed less than 45 mph
See Note 9

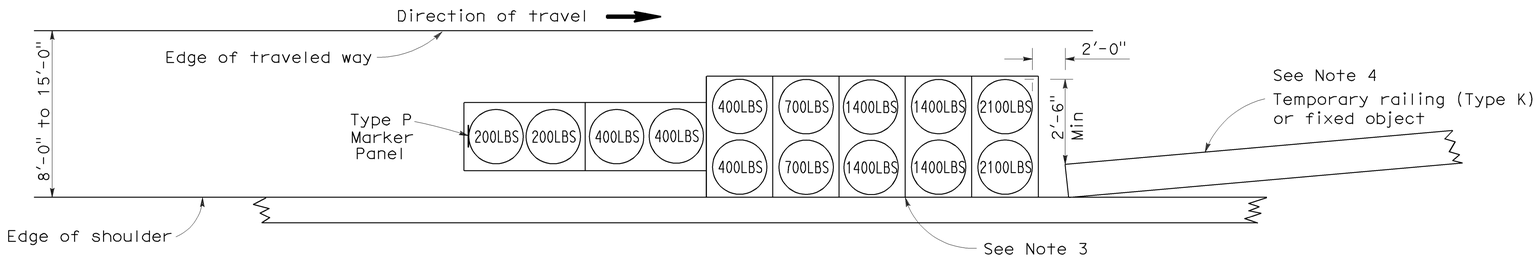

ARRAY 'TS14'

Approach speed 45 mph or more
See Note 9

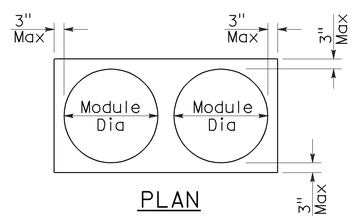

PLAN

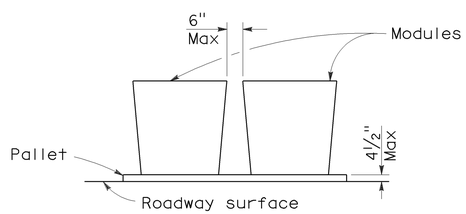

ELEVATION

CRASH CUSHION PALLET DETAIL

See Note 11

NOTES:

1. (XXX) Indicates sand filled module location and weight of sand in pounds for each module. Module spacing is based on the greater diameter of the module.
2. All sand weights are nominal.
3. The temporary crash cushion arrays shown on this plan shall be used only in locations where there will be traffic on one side of the temporary crash cushion array.
4. If the fixed object or approach end of the temporary railing is less than 15'-0" from the edge of traveled way, a temporary crash cushion is required in a construction or work zone.
5. Temporary crash cushion arrays shall not encroach on the traveled way.
6. Arrays for median shoulders shall conform to details shown on this plan for outside shoulders.
7. Place the Type P marker panel so that the bottom of the panel rests upon the pallet and faces traffic.
8. Refer to Standard Plan A73B for marker details.
9. For shoulder widths less than 8'-0", appropriate approved crash cushion protection, other than sand filled modules, shall be provided at fixed objects and at approach ends of temporary railing. The specific type of crash cushion shall be as shown on the project plans or as specified in the Special Provisions, or if not shown on the project plans or specified in the Special Provisions, shall be as approved by the Engineer.
10. Approach speeds indicated conform to NCHRP 350 Report criteria.
11. Use of pallets is optional.

STATE OF CALIFORNIA
DEPARTMENT OF TRANSPORTATION

TEMPORARY CRASH CUSHION, SAND FILLED (SHOULDER INSTALLATIONS)

NO SCALE

RSP T2 DATED JUNE 6, 2008 SUPERSEDES STANDARD PLAN T2
DATED MAY 1, 2006 - PAGE 213 OF THE STANDARD PLANS BOOK DATED MAY 2006.

REVISED STANDARD PLAN RSP T2

2006 REVISED STANDARD PLAN RSP T2

5-15-08

Dist	COUNTY	ROUTE	POST MILES TOTAL PROJECT	SHEET No.	TOTAL SHEETS
04	Ala	80,84,580	Var	12	19

Randell D. Hiatt
REGISTERED CIVIL ENGINEER

May 20, 2011
PLANS APPROVAL DATE

REGISTERED PROFESSIONAL ENGINEER
Randell D. Hiatt
No. C50200
Exp. 6-30-11
CIVIL
STATE OF CALIFORNIA

The State of California or its officers or agents shall not be responsible for the accuracy or completeness of electronic copies of this plan sheet.

To accompany plans dated 10-3-11

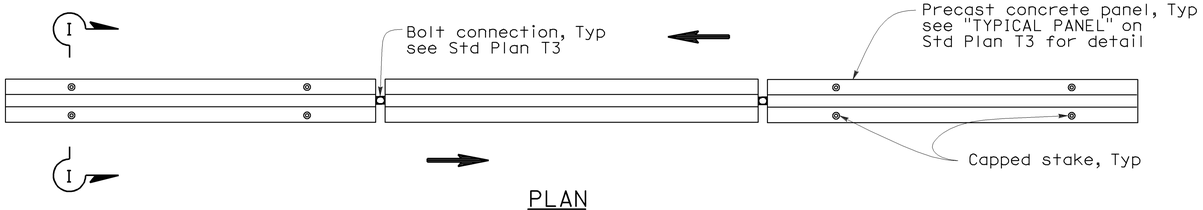

PLAN

RAILING STAKING CONFIGURATION FOR TWO-WAY TRAFFIC

See Note 1

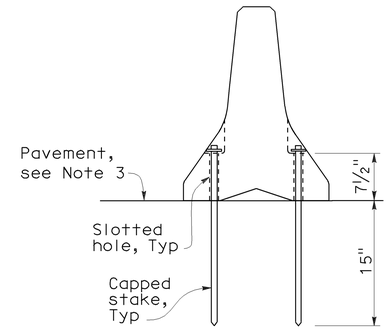

SECTION I-I

NOTES:

1. Where Type K Temporary Railing is placed as a temporary or long term barrier in two-way traffic on highways with less than 24" from the edge of traveled way, use four capped stakes per every other panel with end panels staked.
2. Where Type K Temporary Railing is placed 3" to 24" from the edge of an excavation on highways, use two capped stakes per panel along the traffic side.
3. Staked Type K Temporary Railing must be supported by at least 4" thick concrete, hot mix asphalt or existing asphalt concrete pavement.
4. The minimum yield strength for the washer must be 60,000 psi.
5. Direction of adjacent traffic indicated by ⟹.

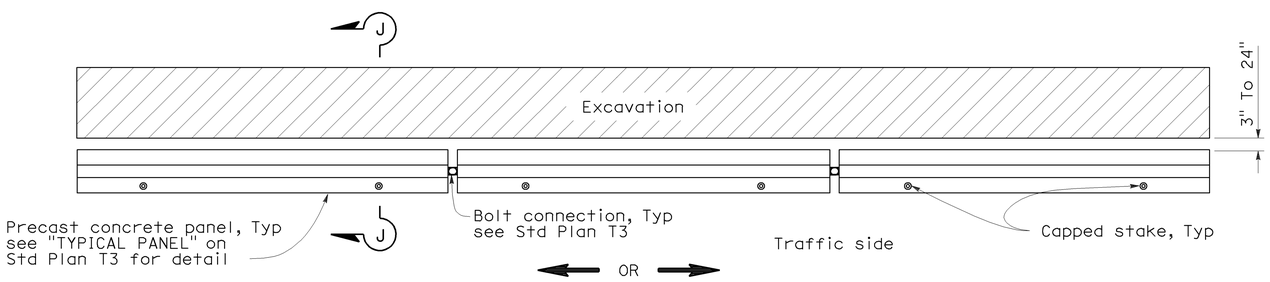

PLAN

RAILING STAKING CONFIGURATION ADJACENT TO AN EXCAVATION

See Note 2

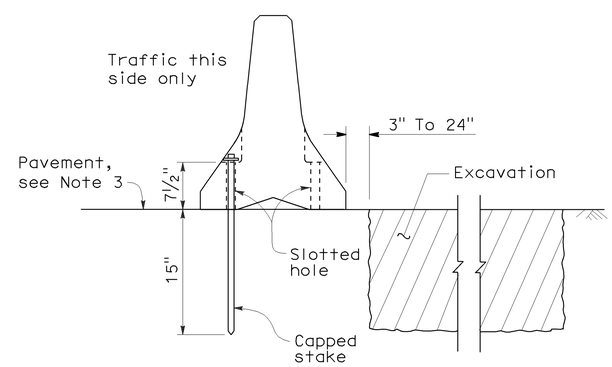

SECTION J-J

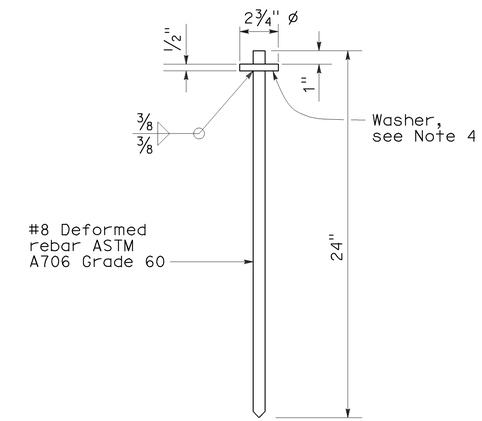

CAPPED STAKE DETAIL

STATE OF CALIFORNIA
DEPARTMENT OF TRANSPORTATION

TEMPORARY RAILING (TYPE K)

NO SCALE

NSP T3A DATED MAY 20, 2011 SUPPLEMENTS
THE STANDARD PLANS BOOK DATED MAY 2006.

NEW STANDARD PLAN NSP T3A

2006 NEW STANDARD PLAN NSP T3A

DIST	COUNTY	ROUTE	POST MILES TOTAL PROJECT	SHEET No.	TOTAL SHEETS
04	Ala	80,84,580	Var	13	19

REGISTERED CIVIL ENGINEER 07-20-11 DATE

10-3-11
PLANS APPROVAL DATE

REGISTERED PROFESSIONAL ENGINEER REYNALDO J. CASTRO No. C36231 Exp. 6-30-12 CIVIL STATE OF CALIFORNIA

The State of California or its officers or agents shall not be responsible for the accuracy or completeness of electronic copies of this plan sheet.

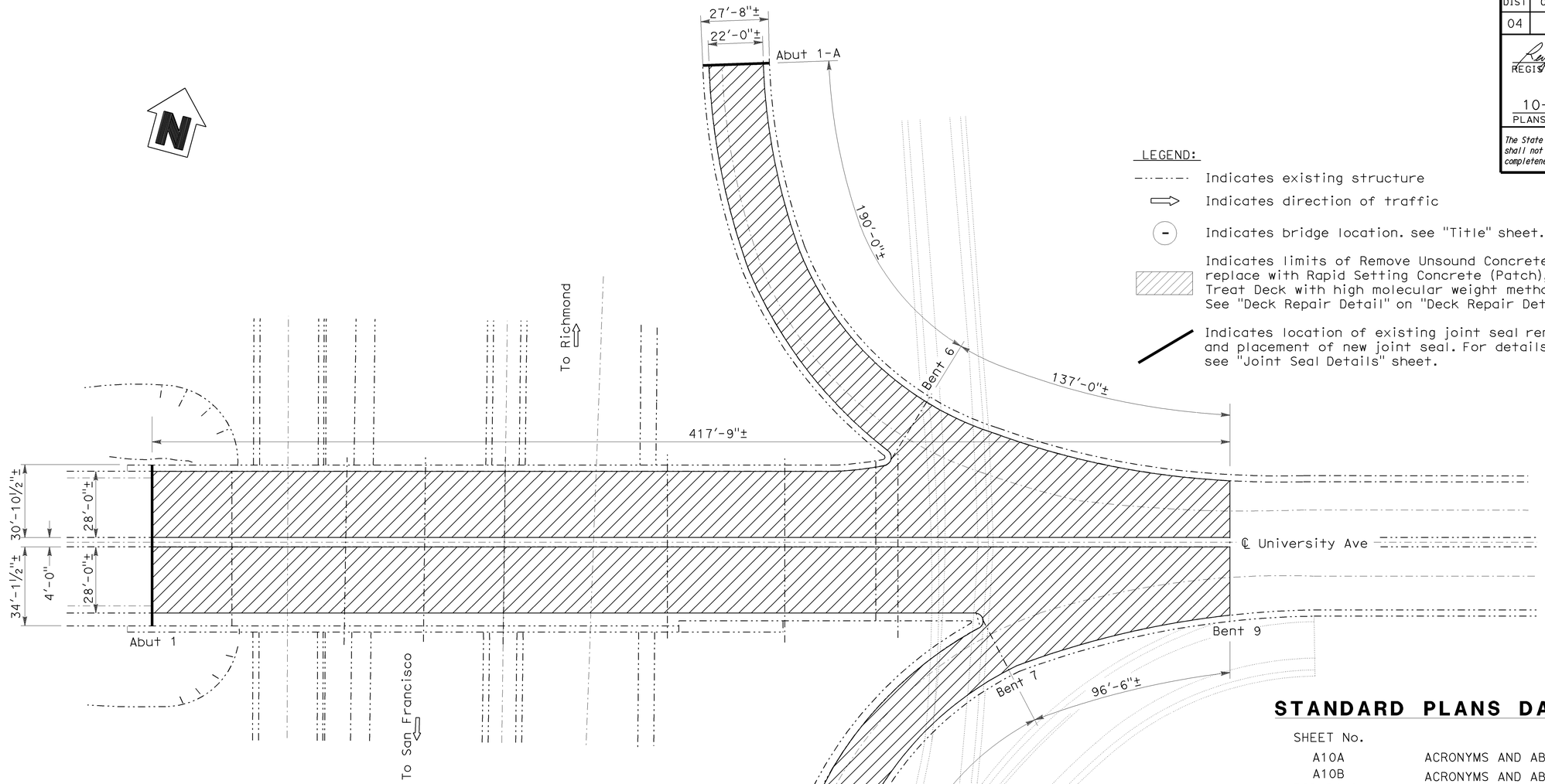

LEGEND:

- Indicates existing structure
- Indicates direction of traffic
- Indicates bridge location. see "Title" sheet.
- Indicates limits of Remove Unsound Concrete and replace with Rapid Setting Concrete (Patch), Clean and Treat Deck with high molecular weight methacrylate. See "Deck Repair Detail" on "Deck Repair Details" sheet.
- Indicates location of existing joint seal removal and placement of new joint seal. For details see "Joint Seal Details" sheet.

1 UNIVERSITY AVENUE OC

Br No. 33-0023, Rte 80, PM 5.80
No Scale

UNIVERSITY AVENUE OC (BR# 33-0023)

QUANTITIES

REMOVE UNSOUND CONCRETE	86	CF
CLEAN BRIDGE DECK	34,337	SQFT
CLEAN EXPANSION JOINT	126	LF
RAPID SETTING CONCRETE (PATCH)	86	CF
JOINT SEAL (MR 1")	126	LF
TREAT BRIDGE DECK	34,337	SQFT
FURNISH BRIDGE DECK TREATMENT MATERIAL	382	GAL
PUBLIC SAFETY PLAN	LUMP SUM	

NOTE:

THE CONTRACTOR SHALL VERIFY ALL CONTROLLING FIELD DIMENSIONS BEFORE ORDERING OR FABRICATING ANY MATERIAL.

STANDARD PLANS DATED MAY 2006

SHEET No.	TITLE
A10A	ACRONYMS AND ABBREVIATIONS (SHEET 1 OF 2)
A10B	ACRONYMS AND ABBREVIATIONS (SHEET 2 OF 2)
RSP B6-21	JOINT SEALS (MAXIMUM MR = 2")

INDEX TO PLANS

SHEET No.	TITLE
1	GENERAL PLAN No. 1
2	GENERAL PLAN No. 2
3	GENERAL PLAN No. 3
4	GENERAL PLAN No. 4
5	GENERAL PLAN No. 5
6	DECK REPAIR & DETAILS
7	JOINT SEAL TABLE & DETAILS

REPLACE JOINT SEALS & TREAT BRIDGE DECKS

UNIVERSITY AVENUE OC
GENERAL PLAN 1

	BY	CHECKED
DESIGN	R. Castro	L. Ellis
DETAILS	B. Ballesteros	R. Castro
QUANTITIES	R. Castro	L. Ellis

LOAD FACTOR DESIGN — LIVE LOADING: HS20-44 AND ALTERNATIVE AND PERMIT DESIGN LOAD
LAYOUT — BY B. Ballesteros — CHECKED R. Castro
SPECIFICATIONS — BY — PLANS AND SPECS COMPARED

DESIGN ENGINEER 07-20-11

STATE OF CALIFORNIA
DEPARTMENT OF TRANSPORTATION

DIVISION OF MAINTENANCE
STRUCTURE MAINTENANCE AND INVESTIGATIONS

BRIDGE NO. 33-0023
POST MILE 5.80

STRUCTURES MAINTENANCE GENERAL PLAN SHEET (ENGLISH) (REV. 09-01-10)

ORIGINAL SCALE IN INCHES FOR REDUCED PLANS 0 1 2 3

UNIT: 0989
PROJECT NUMBER & PHASE: 04000200491
CONTRACT NO.: 04-2E2401

DISREGARD PRINTS BEARING EARLIER REVISION DATES → 05-06-11

REVISION DATES | SHEET 1 OF 7

FILE => 0400020049ggp01.dgn

USERNAME => s114592 DATE PLOTTED => 16-AUG-2011 TIME PLOTTED => 09:23

DIST	COUNTY	ROUTE	POST MILES TOTAL PROJECT	SHEET No.	TOTAL SHEETS
04	Ala	80,84,580	Var	14	19

REGISTERED CIVIL ENGINEER 07-20-11 DATE

10-3-11
PLANS APPROVAL DATE

REGISTERED PROFESSIONAL ENGINEER REYNALDO J. CASTRO No. C36231 Exp. 6-30-12 CIVIL STATE OF CALIFORNIA

The State of California or its officers or agents shall not be responsible for the accuracy or completeness of electronic copies of this plan sheet.

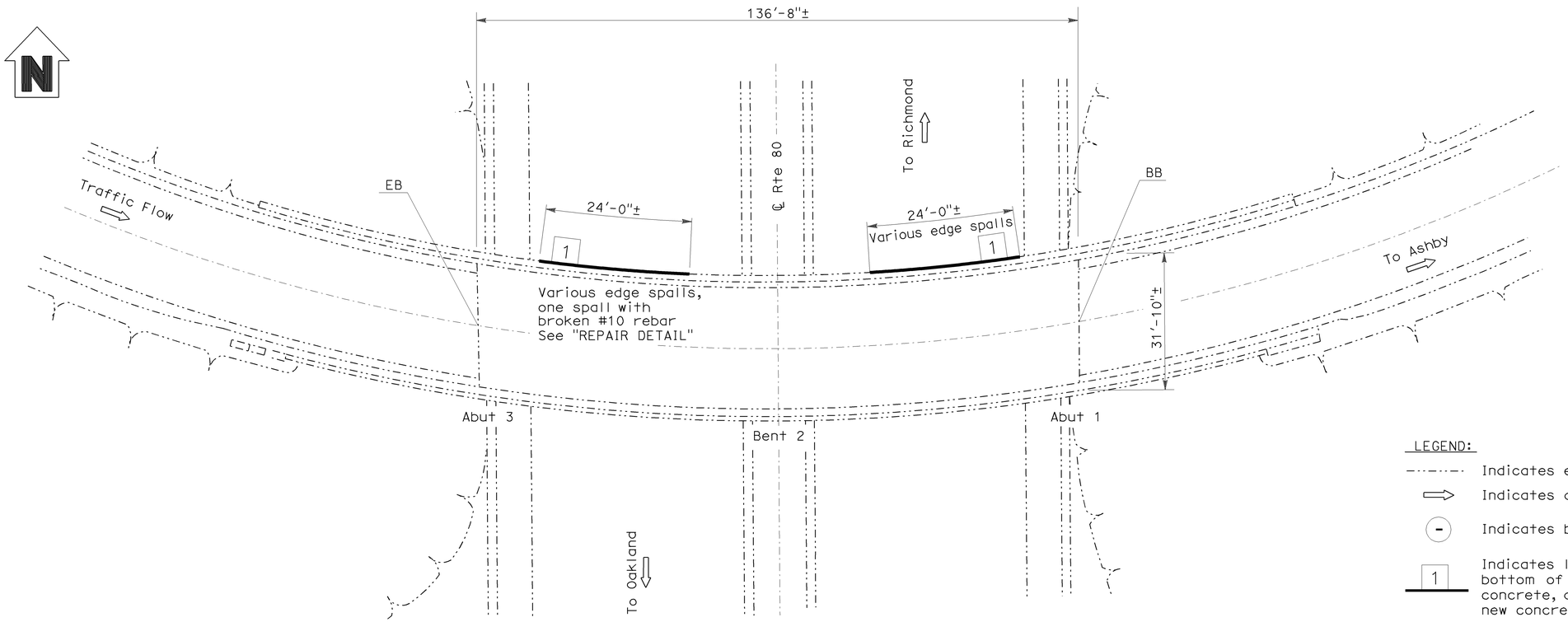

LEGEND:

- Indicates existing structure
- Indicates direction of traffic
- Indicates bridge location. see "Title" sheet.
- 1 — Indicates location of edge spall repair at the bottom of box girder, remove spalled and loose concrete, add new #10 reinforcement and place new concrete.

② W80-S13 CONNECTOR OC

Br No. 33-0190F, Rte 80, PM 4.50
No Scale

W80-S13 CONNECTOR OC (BR# 33-0190F)

QUANTITIES

REPAIR SPALLED SURFACE AREA	72	SQFT

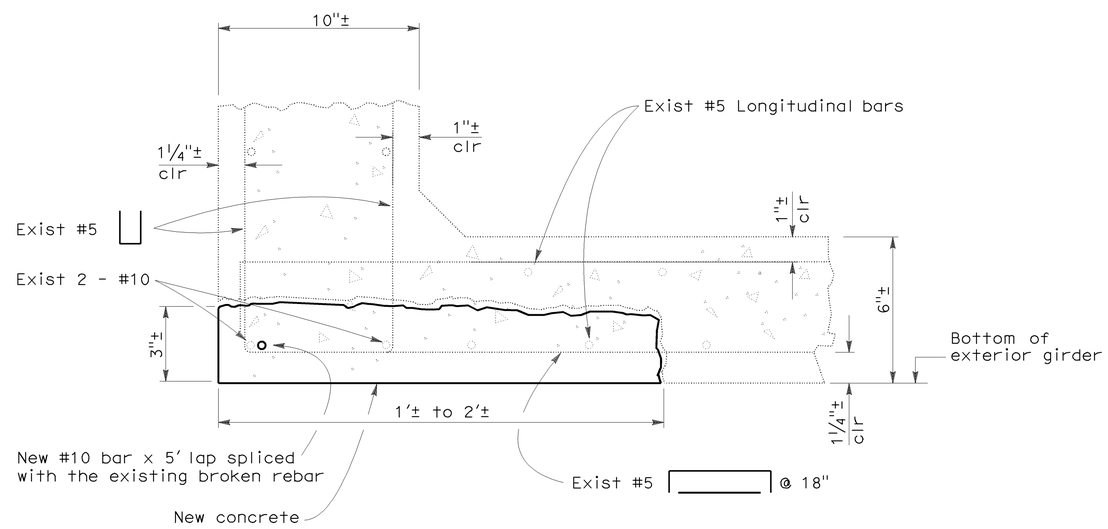

REPAIR DETAIL

NO SCALE

NOTE:

THE CONTRACTOR SHALL VERIFY ALL CONTROLLING FIELD DIMENSIONS BEFORE ORDERING OR FABRICATING ANY MATERIAL.

REPLACE JOINT SEALS & TREAT BRIDGE DECKS

	BY	CHECKED			
DESIGN	R. Castro	L. Ellis	LOAD FACTOR DESIGN	LIVE LOADING: HS20-44 AND ALTERNATIVE AND PERMIT DESIGN LOAD	
DETAILS	B. Ballesteros	R. Castro	LAYOUT	B. Ballesteros	R. Castro
QUANTITIES	R. Castro	L. Ellis	SPECIFICATIONS		PLANS AND SPECS COMPARED

DESIGN ENGINEER 07-20-11

STATE OF CALIFORNIA DEPARTMENT OF TRANSPORTATION

DIVISION OF MAINTENANCE STRUCTURE MAINTENANCE AND INVESTIGATIONS

BRIDGE NO. 33-0190F
POST MILE 4.50

W80-S13 CONNECTOR OC
GENERAL PLAN 2

STRUCTURES MAINTENANCE GENERAL PLAN SHEET (ENGLISH) (REV. 09-01-10)

ORIGINAL SCALE IN INCHES FOR REDUCED PLANS 0 1 2 3

UNIT: 0989
PROJECT NUMBER & PHASE: 04000200491
CONTRACT NO.: 04-2E2401

DISREGARD PRINTS BEARING EARLIER REVISION DATES

REVISION DATES 05-06-11 07-18-11

SHEET 2 OF 7

FILE => 0400020049ggp02.dgn

USERNAME => s114592 DATE PLOTTED => 16-AUG-2011 TIME PLOTTED => 09:23

DIST	COUNTY	ROUTE	POST MILES TOTAL PROJECT	SHEET No.	TOTAL SHEETS
04	Ala	80,84,580	Var	15	19

REGISTERED CIVIL ENGINEER 07-20-11 DATE

10-3-11
PLANS APPROVAL DATE

REGISTERED PROFESSIONAL ENGINEER REYNALDO J. CASTRO No. C36231 Exp. 6-30-12 CIVIL STATE OF CALIFORNIA

The State of California or its officers or agents shall not be responsible for the accuracy or completeness of electronic copies of this plan sheet.

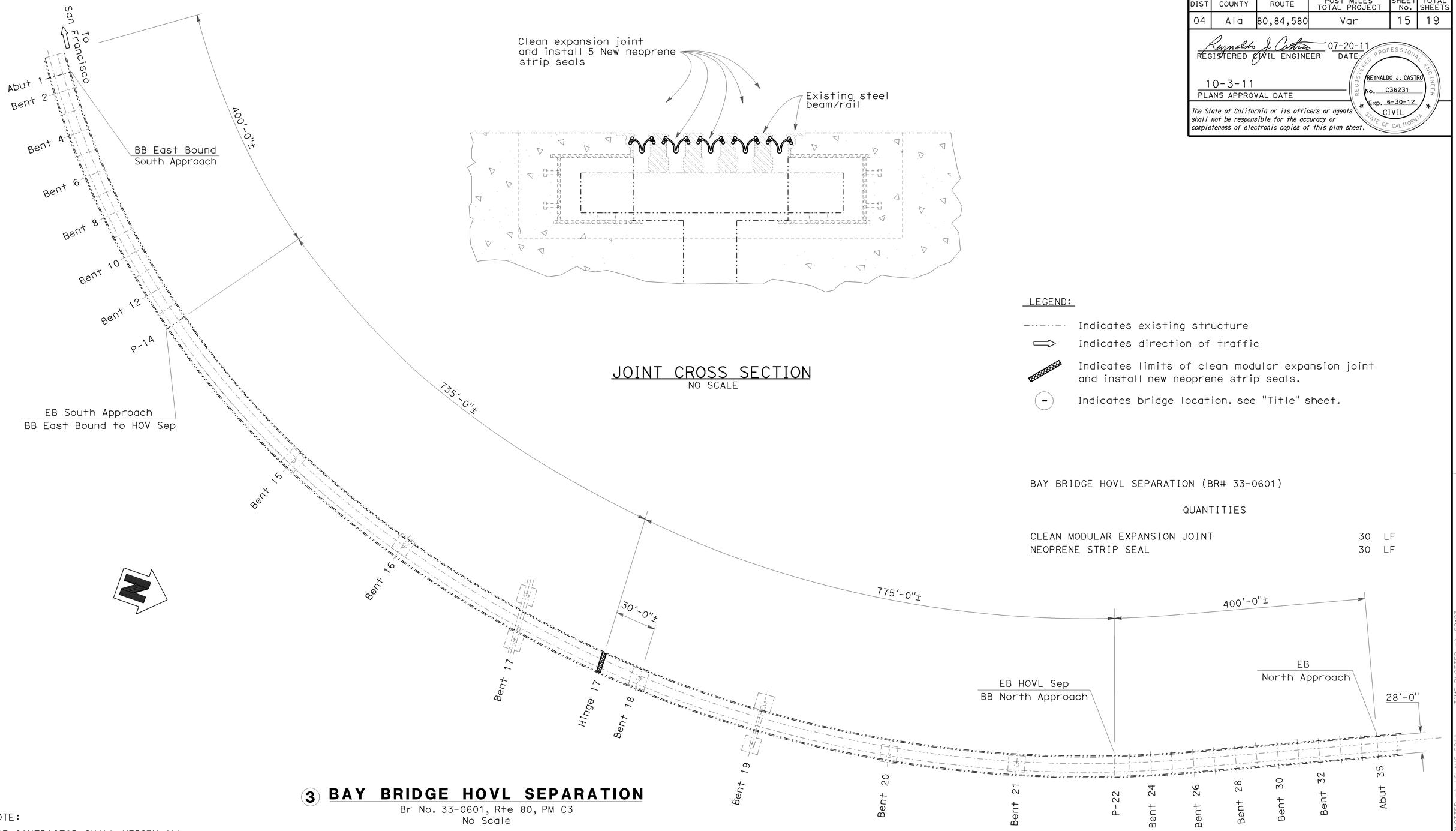

JOINT CROSS SECTION
NO SCALE

LEGEND:

- Indicates existing structure
- Indicates direction of traffic
- Indicates limits of clean modular expansion joint and install new neoprene strip seals.
- Indicates bridge location. see "Title" sheet.

BAY BRIDGE HOVL SEPARATION (BR# 33-0601)

QUANTITIES

CLEAN MODULAR EXPANSION JOINT	30 LF
NEOPRENE STRIP SEAL	30 LF

3 BAY BRIDGE HOVL SEPARATION
Br No. 33-0601, Rte 80, PM C3
No Scale

NOTE:

THE CONTRACTOR SHALL VERIFY ALL CONTROLLING FIELD DIMENSIONS BEFORE ORDERING OR FABRICATING ANY MATERIAL.

REPLACE JOINT SEALS & TREAT BRIDGE DECKS

DESIGN	BY R. Castro	CHECKED L. Ellis	LOAD FACTOR DESIGN	LIVE LOADING: HS20-44 AND ALTERNATIVE AND PERMIT DESIGN LOAD	
DETAILS	BY B. Ballesteros	CHECKED R. Castro	LAYOUT	BY B. Ballesteros	CHECKED R. Castro
QUANTITIES	BY R. Castro	CHECKED L. Ellis	SPECIFICATIONS	BY	PLANS AND SPECS COMPARED

DESIGN ENGINEER 07-20-11

STATE OF CALIFORNIA
DEPARTMENT OF TRANSPORTATION

DIVISION OF MAINTENANCE
STRUCTURE MAINTENANCE AND INVESTIGATIONS

BRIDGE NO. 33-0601
POST MILE C3

BAY BRIDGE HOVL SEPARATION
GENERAL PLAN 3

STRUCTURES MAINTENANCE GENERAL PLAN SHEET (ENGLISH) (REV. 09-01-10)

ORIGINAL SCALE IN INCHES FOR REDUCED PLANS 0 1 2 3

UNIT: 0989
PROJECT NUMBER & PHASE: 04000200491
CONTRACT NO.: 04-2E2401

DISREGARD PRINTS BEARING EARLIER REVISION DATES

REVISION DATES 07-18-11

SHEET 3 OF 7

FILE => 0400020049ggp03.dgn

USERNAME => s114592 DATE PLOTTED => 16-AUG-2011 TIME PLOTTED => 09:23

DIST	COUNTY	ROUTE	POST MILES TOTAL PROJECT	SHEET No.	TOTAL SHEETS
04	Ala	80,84,580	Var	16	19

REGISTERED CIVIL ENGINEER 07-20-11 DATE

10-3-11
PLANS APPROVAL DATE

REGISTERED PROFESSIONAL ENGINEER
REYNALDO J. CASTRO
No. C36231
Exp. 6-30-12
CIVIL
STATE OF CALIFORNIA

The State of California or its officers or agents shall not be responsible for the accuracy or completeness of electronic copies of this plan sheet.

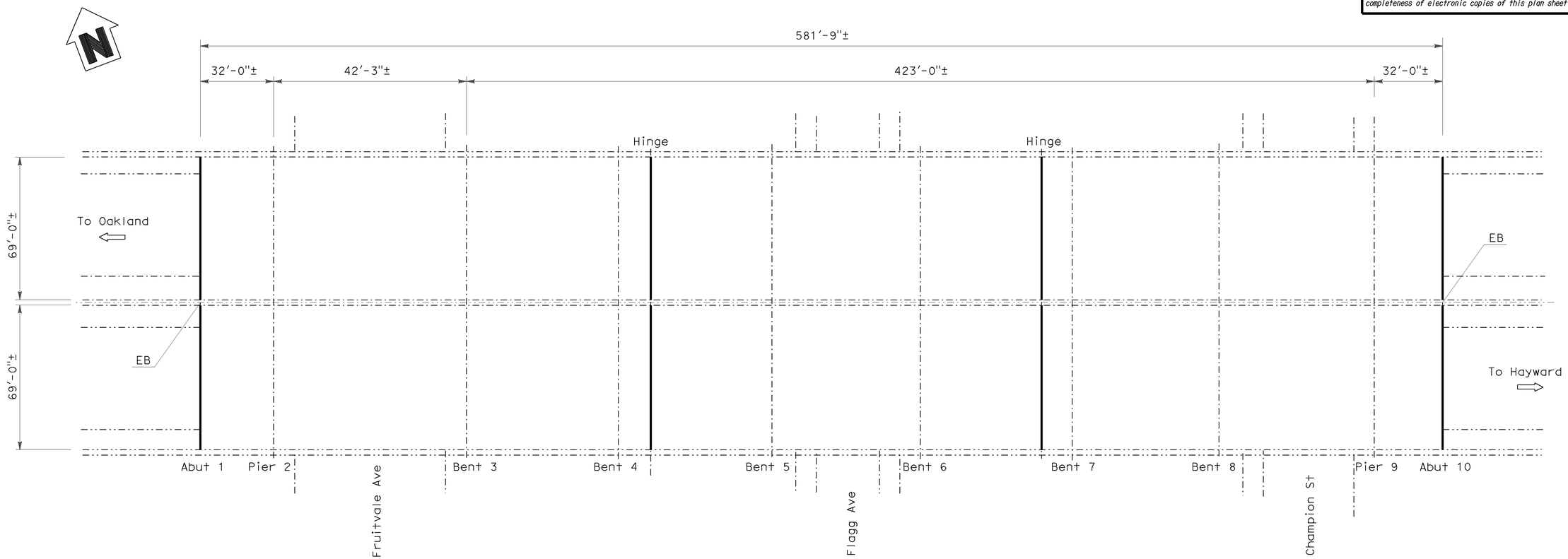

④ FRUITVALE AVENUE UC

Br No. 33-0324, Rte 580, PM R41.40
No Scale

LEGEND:

- Indicates existing structure
- Indicates direction of traffic
- Indicates location of existing joint seal removal and placement of new joint seal. For details see "Joint Seal Table and Details" sheet.
- (-) Indicates bridge location. see "Title" sheet.

FRUITVALE AVENUE UC (BR# 33-0324)

QUANTITIES

CLEAN EXPANSION JOINT	284	LF
JOINT SEAL (MR 1")	284	LF

NOTE:

THE CONTRACTOR SHALL VERIFY ALL CONTROLLING FIELD DIMENSIONS BEFORE ORDERING OR FABRICATING ANY MATERIAL.

REPLACE JOINT SEALS & TREAT BRIDGE DECKS

	BY	CHECKED			
DESIGN	R. Castro	L. Ellis	LOAD FACTOR DESIGN	LIVE LOADING: HS20-44 AND ALTERNATIVE AND PERMIT DESIGN LOAD	
DETAILS	B. Ballesteros	R. Castro	LAYOUT	B. Ballesteros	R. Castro
QUANTITIES	R. Castro	L. Ellis	SPECIFICATIONS	BY	PLANS AND SPECS COMPARED

Kenneth R Brown
DESIGN ENGINEER 07-20-11

STATE OF CALIFORNIA
DEPARTMENT OF TRANSPORTATION

DIVISION OF MAINTENANCE
STRUCTURE MAINTENANCE AND INVESTIGATIONS

BRIDGE NO. 33-0324
POST MILE R41.40

FRUITVALE AVENUE UC
GENERAL PLAN 4

STRUCTURES MAINTENANCE GENERAL PLAN SHEET (ENGLISH) (REV. 09-01-10)

ORIGINAL SCALE IN INCHES FOR REDUCED PLANS 0 1 2 3

UNIT: 0989
PROJECT NUMBER & PHASE: 04000200491
CONTRACT NO.: 04-2E2401

DISREGARD PRINTS BEARING EARLIER REVISION DATES

REVISION DATES

SHEET 4 OF 7

FILE => 0400020049ggp04.dgn

USERNAME => s114592 DATE PLOTTED => 16-AUG-2011 TIME PLOTTED => 09:23

DIST	COUNTY	ROUTE	POST MILES TOTAL PROJECT	SHEET No.	TOTAL SHEETS
04	Ala	80,84,580	Var	17	19

REGISTERED CIVIL ENGINEER 07-20-11 DATE

10-3-11
PLANS APPROVAL DATE

REGISTERED PROFESSIONAL ENGINEER REYNALDO J. CASTRO No. C36231 Exp. 6-30-12 CIVIL STATE OF CALIFORNIA

The State of California or its officers or agents shall not be responsible for the accuracy or completeness of electronic copies of this plan sheet.

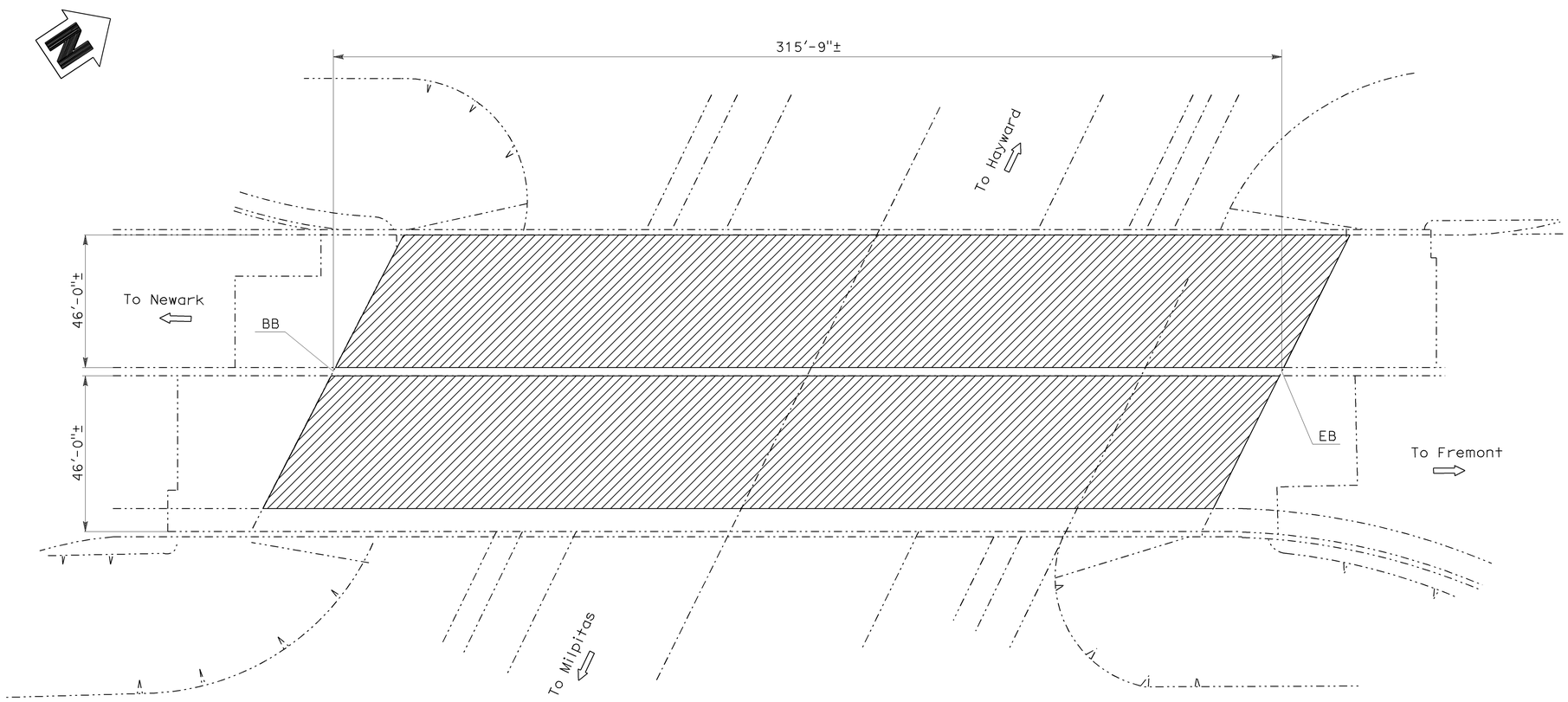

(5) THORNTON AVENUE (84/880) SEPARATION

Br No. 33-0264, Rte 84, PM 6.90
No Scale

LEGEND:

- Indicates existing structure
- Indicates direction of traffic
- (-) Indicates bridge location. see "Title" sheet.
- Indicates limits of Remove Unsound Concrete and replace with Rapid Setting Concrete (Patch), Clean and Treat Deck with high molecular weight methacrylate. See "Deck Repair Detail" on "Deck Repair Details" sheet.

NOTE:

THE CONTRACTOR SHALL VERIFY ALL CONTROLLING FIELD DIMENSIONS BEFORE ORDERING OR FABRICATING ANY MATERIAL.

THORNTON AVENUE (84/880) SEPARATION (BR# 33-0264)

QUANTITIES

REMOVE UNSOUND CONCRETE	73	CF
CLEAN BRIDGE DECK	29,072	SQFT
RAPID SETTING CONCRETE (PATCH)	73	CF
TREAT BRIDGE DECK	29,072	SQFT
FURNISH BRIDGE DECK TREATMENT MATERIAL	323	GAL
PUBLIC SAFETY PLAN	LUMP SUM	

REPLACE JOINT SEALS & TREAT BRIDGE DECKS

THORNTON AVENUE (84/880) SEPARATION
GENERAL PLAN 5

	BY	CHECKED		BY	CHECKED
DESIGN	R. Castro	L. Ellis	LOAD FACTOR DESIGN	LIVE LOADING: HS20-44 AND ALTERNATIVE AND PERMIT DESIGN LOAD	
DETAILS	B. Ballesteros	R. Castro	LAYOUT	B. Ballesteros	R. Castro
QUANTITIES	R. Castro	L. Ellis	SPECIFICATIONS		PLANS AND SPECS COMPARED

DESIGN ENGINEER 07-20-11

STATE OF CALIFORNIA
DEPARTMENT OF TRANSPORTATION

DIVISION OF MAINTENANCE
STRUCTURE MAINTENANCE AND INVESTIGATIONS

BRIDGE NO. 33-0264
POST MILE 6.90

STRUCTURES MAINTENANCE GENERAL PLAN SHEET (ENGLISH) (REV. 09-01-10)

ORIGINAL SCALE IN INCHES FOR REDUCED PLANS 0 1 2 3

UNIT: 0989
PROJECT NUMBER & PHASE: 04000200491
CONTRACT NO.: 04-2E2401

DISREGARD PRINTS BEARING EARLIER REVISION DATES

REVISION DATES

SHEET 5 OF 7

FILE => 0400020049ggp05.dgn

USERNAME => s114592 DATE PLOTTED => 16-AUG-2011 TIME PLOTTED => 09:24

DIST	COUNTY	ROUTE	POST MILES TOTAL PROJECT	SHEET No.	TOTAL SHEETS
04	Ala	80,84,580	Var	18	19

REGISTERED CIVIL ENGINEER 07-20-11 DATE

10-3-11
PLANS APPROVAL DATE

REGISTERED PROFESSIONAL ENGINEER REYNALDO J. CASTRO No. C36231 Exp. 6-30-12 CIVIL STATE OF CALIFORNIA

The State of California or its officers or agents shall not be responsible for the accuracy or completeness of electronic copies of this plan sheet.

DECK REPAIR TABLE

BRIDGE LOCATION NO.	BRIDGE NAME	BRIDGE NUMBER	APPROXIMATE AREA DAMAGED (percent)	APPROXIMATE DEPTH DAMAGED (inches)
1	University Avenue OC	33-0023	1	3
5	Thornton Avenue (84/880) Separation	33-0264	1	3

DECK REPAIR NOTES:

1. For bridge locations, see Title Sheet.
2. Locations of deck repair will be determined by the Engineer.
3. Reinforcement may be encountered during deck unsound concrete removal
4. Existing reinforcement shall be protected in place during unsound concrete removal and patching operations.
5. It is the responsibility of the contractor to repair any reinforcement that is accidentally cut by saw cutting operations.
6. When existing transverse reinforcement is exposed in the deck surface, saw cutting shall be waived with the approval of the Engineer.
7. The saw cut depth shall not exceed 1 inch or the concrete cover over the top steel reinforcing bars, whichever is less.

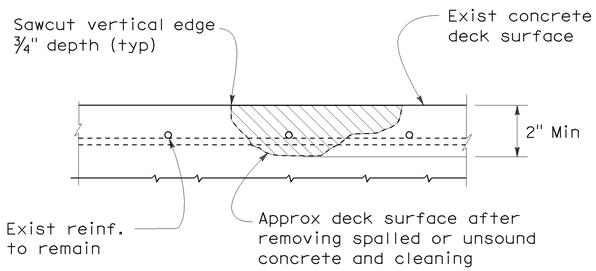

DECK DAMAGE REPAIR DETAIL

Note: Reinforcement may be encountered during deck concrete removal

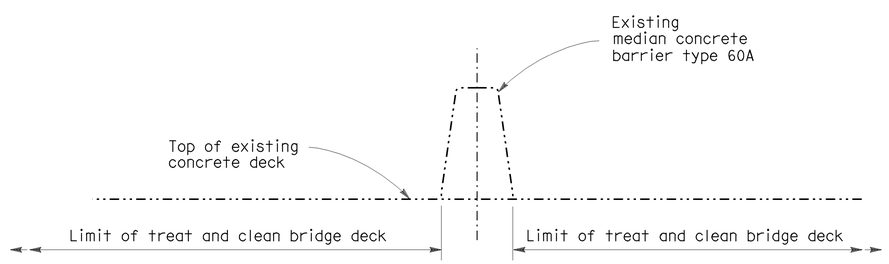

MEDIAN BARRIER

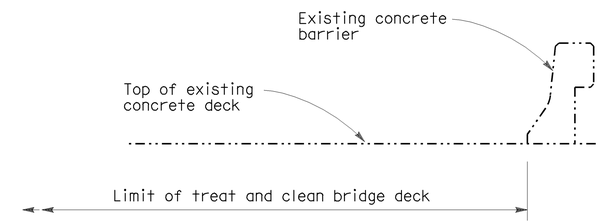

EOD BARRIER

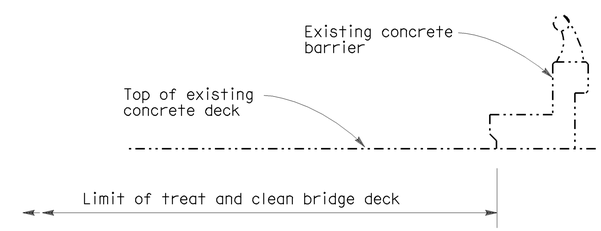

SIDEWALK BARRIER TYPE 2

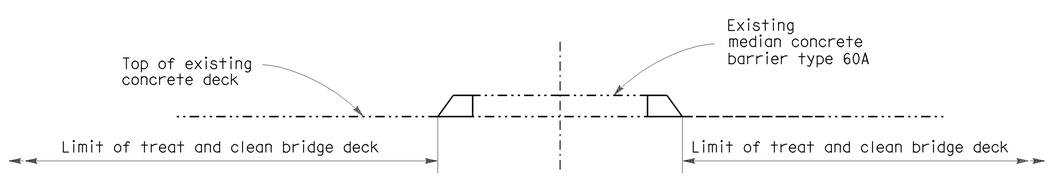

RAISED MEDIAN

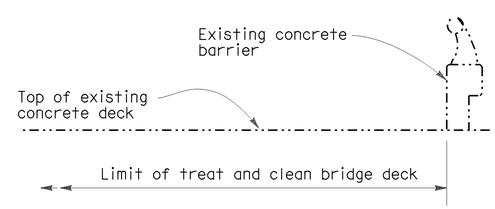

SIDEWALK BARRIER TYPE 1

TYPICAL LIMITS OF DECK WORK

NO SCALE

NOTE:

THE CONTRACTOR SHALL VERIFY ALL CONTROLLING FIELD DIMENSIONS BEFORE ORDERING OR FABRICATING ANY MATERIAL.

REPLACE JOINT SEALS & TREAT BRIDGE DECKS

	BY	CHECKED
DESIGN	R. CASTRO	L. ELLIS
DETAILS	B. BALLESTEROS	R. CASTRO
QUANTITIES	R. CASTRO	L. ELLIS

STATE OF CALIFORNIA
DEPARTMENT OF TRANSPORTATION

DIVISION OF MAINTENANCE
STRUCTURE MAINTENANCE DESIGN

BRIDGE NO.: Various
POST MILE: Var

VARIOUS BRIDGES

DECK REPAIR & DETAILS

STRUCTURES MAINTENANCE DETAIL SHEET (ENGLISH) (REV. 09-01-10)

ORIGINAL SCALE IN INCHES FOR REDUCED PLANS 0 1 2 3

UNIT: 0989
PROJECT NUMBER & PHASE: 04000200491
CONTRACT NO.: 04-2E2401

DISREGARD PRINTS BEARING EARLIER REVISION DATES

REVISION DATES

SHEET 6 OF 7

FILE => 0400020049ddt01.dgn

USERNAME => s114592 DATE PLOTTED => 22-SEP-2011 TIME PLOTTED => 15:20

DIST	COUNTY	ROUTE	POST MILES TOTAL PROJECT	SHEET No.	TOTAL SHEETS
04	Ala	80,84,580	Var	19	19

REGISTERED CIVIL ENGINEER — DATE 07-20-11

10-3-11
PLANS APPROVAL DATE

REGISTERED PROFESSIONAL ENGINEER — REYNALDO J. CASTRO — No. C36231 — Exp. 6-30-12 — CIVIL — STATE OF CALIFORNIA

The State of California or its officers or agents shall not be responsible for the accuracy or completeness of electronic copies of this plan sheet.

JOINT SEAL TABLE

BRIDGE LOCATION NO.	BRIDGE NUMBER	BRIDGE NAME	LOCATION	Min. "MR" (in)	APPROX. LENGTH (ft)	EXISTING WATERSTOP	APPROX. DEPTH TO CLEAN JOINTS
1	33-0023	UNIVERSITY AVENUE OC	Abut 1	1"	69	no	12"
			Abut 1A	1"	29	no	12"
			Abut 1B	1"	29	no	12"
3	33-0601	BAY BRIDGE HOVL SEPARATION	Hinge 17	5"	5 @ 30	yes	3"
4	33-0324	FRUITVALE AVENUE UC	Abut 1	1"	71	no	12"
			Hinge 4	1"	71	yes	6"
			Hinge 6	1"	71	yes	6"
			Abut 10	1"	71	no	12"

The following notes apply to JOINT SEAL TYPE A:

Install Type A joint seal 3" up into curb or rail on the low side of the deck where joint matches curb or rail joint. For details not shown see Sheet 11.

The following notes apply to JOINT SEAL TYPE B:

1) Seal must satisfy both minimum Movement Rating (MR) and minimum W1 requirements.

2) Minimum W1 is the calculated maximum width of the joint based on field measurements. After the joints have been cleaned, minimum W1 is to be calculated by the Engineer.

3) W1 shall be the smaller of the values determined as follows:

   A) 0.85 times the manufacturer's designed minimum uncompressed width of the seal.

   B) The width of the seal on the third succesive test cycle of the pressure deflection test, when compressed to an average pressure of 3 psi.

4) Bend Type B joint seal 6" up into curb or rail on the low side of the deck where deck joint matches curb or rail joint.

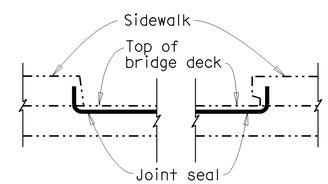

SIDEWALK

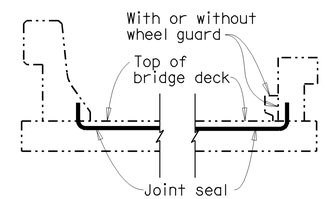

BARRIER RAIL

JOINT SEAL AT LOW SIDE OF DECK

Details shown for illustration purposes only.
For use only where deck joint matches sidewalk, curb or barrier rail joint.
NO SCALE

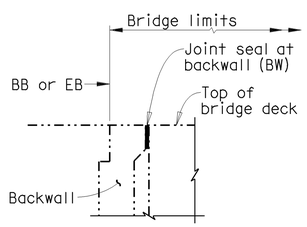

ABUTMENT WITH BACKWALL

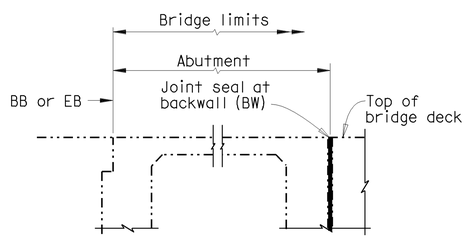

BIN TYPE ABUTMENT

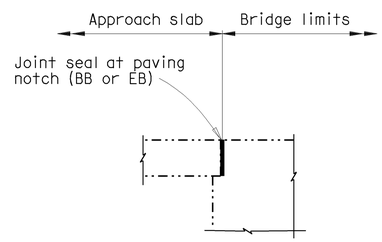

DIAPHRAGM ABUTMENT

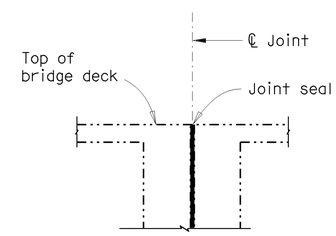

BENT

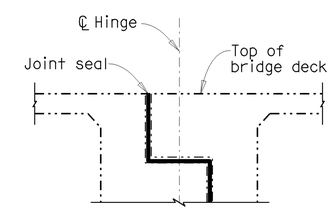

HINGE

JOINT SEAL LOCATION

NO SCALE

NOTE:

THE CONTRACTOR SHALL VERIFY ALL CONTROLLING FIELD DIMENSIONS BEFORE ORDERING OR FABRICATING ANY MATERIAL.

REPLACE JOINT SEALS & TREAT BRIDGE DECKS

	BY	CHECKED
DESIGN	R. CASTRO	L. ELLIS
DETAILS	B. BALLESTEROS	R. CASTRO
QUANTITIES	R. CASTRO	L. ELLIS

STATE OF CALIFORNIA
DEPARTMENT OF TRANSPORTATION

DIVISION OF MAINTENANCE
STRUCTURE MAINTENANCE DESIGN

BRIDGE NO.: Various
POST MILE: Var

VARIOUS BRIDGES
JOINT SEAL TABLE & DETAILS

STRUCTURES MAINTENANCE DETAIL SHEET (ENGLISH) (REV. 09-01-10)

ORIGINAL SCALE IN INCHES FOR REDUCED PLANS 0 1 2 3

UNIT: 0989
PROJECT NUMBER & PHASE: 04000200491
CONTRACT NO.: 04-2E2401

DISREGARD PRINTS BEARING EARLIER REVISION DATES

REVISION DATES

SHEET 7 OF 7

FILE => 0400020049ddt02.dgn

USERNAME => s114592 DATE PLOTTED => 16-AUG-2011 TIME PLOTTED => 08:24