Dist	COUNTY	ROUTE	POST MILES TOTAL PROJECT	SHEET No.	TOTAL SHEETS
04	Nap	128	R7.4/19.1	1	14

ACSTP-S128(045)E

STATE OF CALIFORNIA
DEPARTMENT OF TRANSPORTATION

PROJECT PLANS FOR CONSTRUCTION ON
STATE HIGHWAY

IN NAPA COUNTY
NEAR CALISTOGA AND YOUNTVILLE
FROM SILVERADO TRAIL
TO KNOXVILLE ROAD

TO BE SUPPLEMENTED BY STANDARD PLANS DATED MAY 2006

INDEX OF PLANS

SHEET No.	DESCRIPTION
1	TITLE SHEET AND LOCATION MAP
2	TYPICAL CROSS SECTIONS
3	CONSTRUCTION DETAILS
4	CONSTRUCTION AREA SIGNS
5 & 6	PAVEMENT DELINEATION PLAN AND QUANTITIES
7	SUMMARY OF QUANTITIES
8 - 14	REVISED AND NEW STANDARD PLANS

THE STANDARD PLANS LIST APPLICABLE TO THIS CONTRACT IS INCLUDED IN THE NOTICE TO BIDDERS AND SPECIAL PROVISIONS BOOK.

LOCATION MAP

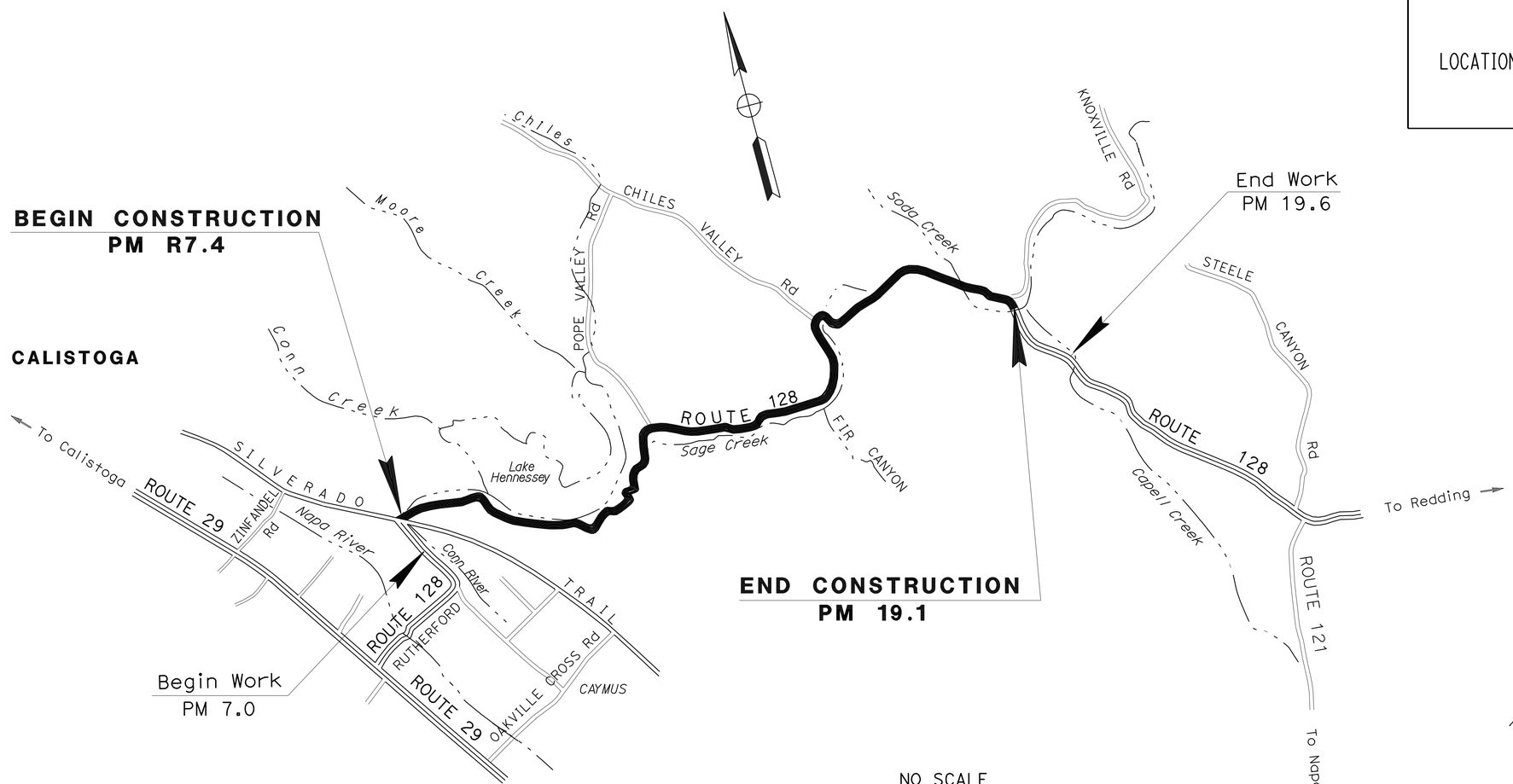

THE CONTRACTOR SHALL POSSESS THE CLASS (OR CLASSES) OF LICENSE AS SPECIFIED IN THE "NOTICE TO BIDDERS."

12-20-10
PROJECT ENGINEER DATE
REGISTERED CIVIL ENGINEER

December 20, 2010
PLANS APPROVAL DATE

REGISTERED PROFESSIONAL ENGINEER
Mir Nassabeh
No. 62625
Exp. 6-30-12
CIVIL
STATE OF CALIFORNIA

THE STATE OF CALIFORNIA OR ITS OFFICERS OR AGENTS SHALL NOT BE RESPONSIBLE FOR THE ACCURACY OR COMPLETENESS OF SCANNED COPIES OF THIS PLAN SHEET.

CONTRACT No.	04-2E1004
PROJECT ID	0400020163

PROJECT MANAGER: RAMSES SARGISS
DESIGN ENGINEER: RONNIE CHUA

LAST REVISION 08-24-10
DATE PLOTTED => 02-MAR-2011
TIME PLOTTED => 1505

Dist	COUNTY	ROUTE	POST MILES TOTAL PROJECT	SHEET No.	TOTAL SHEETS
04	Nap	128	R7.4/19.1	2	14

REGISTERED CIVIL ENGINEER 12-20-10 DATE

12-20-10
PLANS APPROVAL DATE

REGISTERED PROFESSIONAL ENGINEER Mir Nassabeh No. 62625 Exp. 6-30-12 CIVIL STATE OF CALIFORNIA

THE STATE OF CALIFORNIA OR ITS OFFICERS OR AGENTS SHALL NOT BE RESPONSIBLE FOR THE ACCURACY OR COMPLETENESS OF SCANNED COPIES OF THIS PLAN SHEET.

NOTES:

1. DIMENSIONS OF THE PAVEMENT STRUCTURES (STRUCTURAL SECTIONS) ARE SUBJECT TO TOLERANCES SPECIFIED IN THE STANDARD SPECIFICATIONS.
2. EXISTING UTLIITY FACILITIES HAVE NOT BEEN PLOTTED ON THESE PLANS.
3. EXACT LIMITS OF COLD PLANE ASPHALT CONCRETE PAVEMENT, CRACK TREATMENT AND SHOULDER BACKING TO BE DETERMINED BY THE ENGINEER. SEE SHEET Q-1 FOR LOCATIONS.
4. FOR ACCURATE RIGHT OF WAY AND ACCESS DATA, CONTACT RIGHT OF WAY ENGINEERING AT THE DISTRICT OFFICE.
5. COLD PLANING SHOULD BE LIMITED WITHIN ASPHALT CONCRETE (Max 0.45').
6. SHOULDER BACKING SHALL BE PLACED PER DIRECTION OF THE ENGINEER.
7. SUPERELEVATIONS AS SHOWN OR AS DIRECTED BY THE ENGINEER.
8. SEE SHEET Q-1 FOR LOCATIONS, QUANTITIES AND TYPE OF HMA DIKES.

ABBREVIATION:

HMA (BWC-G) - HOT MIX ASPHALT (BONDED WEARING COURSE-GAP GRADED)

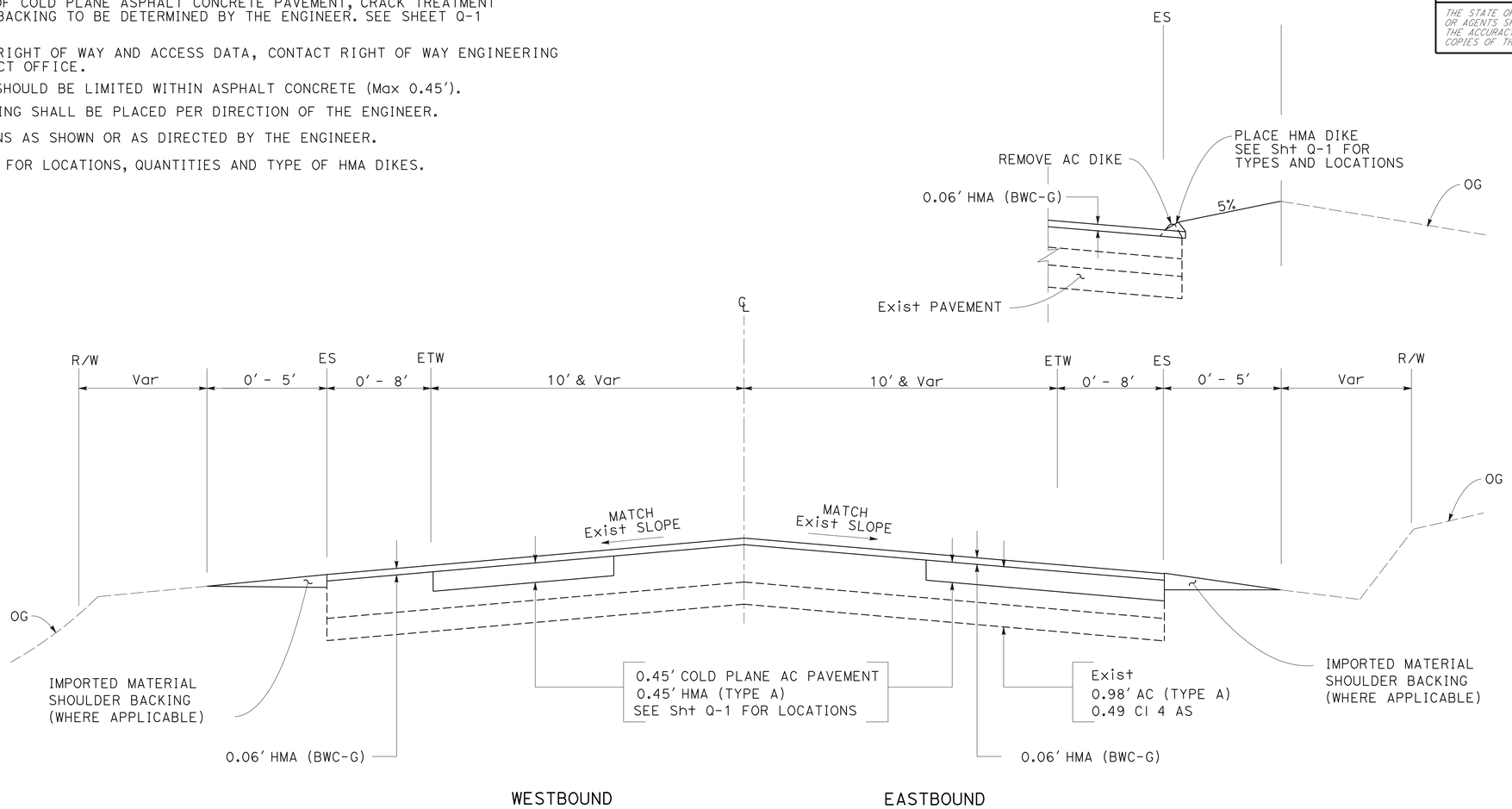

TYPICAL CROSS SECTION

PM R7.4/19.1

TYPICAL CROSS SECTIONS

NO SCALE

X-1

REVISED BY	DATE REVISED
MN	6/01/10

MIR NASSABEH — CALCULATED-DESIGNED BY
RONNIE CHUA — CHECKED BY
RONNIE CHUA — FUNCTIONAL SUPERVISOR

STATE OF CALIFORNIA - DEPARTMENT OF TRANSPORTATION
Caltrans
DESIGN

LAST REVISION 09-21-10 | DATE PLOTTED => 02-MAR-2011 | TIME PLOTTED => 15:05

Dist	COUNTY	ROUTE	POST MILES TOTAL PROJECT	SHEET No.	TOTAL SHEETS
04	Nap	128	R7.4/19.1	3	14

REGISTERED CIVIL ENGINEER 12-20-10 DATE

12-20-10
PLANS APPROVAL DATE

REGISTERED PROFESSIONAL ENGINEER Mir Nassabeh No. 62625 Exp. 6-30-12 CIVIL STATE OF CALIFORNIA

THE STATE OF CALIFORNIA OR ITS OFFICERS OR AGENTS SHALL NOT BE RESPONSIBLE FOR THE ACCURACY OR COMPLETENESS OF SCANNED COPIES OF THIS PLAN SHEET.

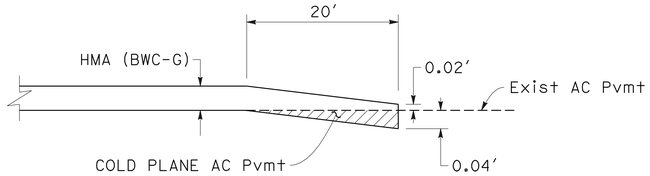

PAVING CONFORM DETAIL A

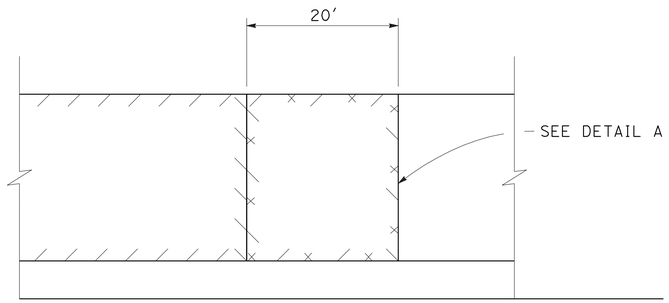

LONGITUDINAL PAVING CONFORM AT BEGINNING AND END OF CONSTRUCTION

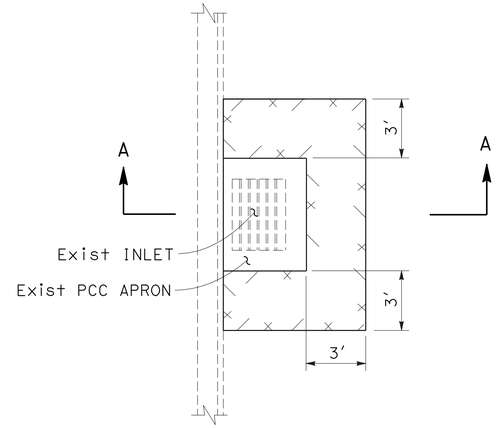

PLAN

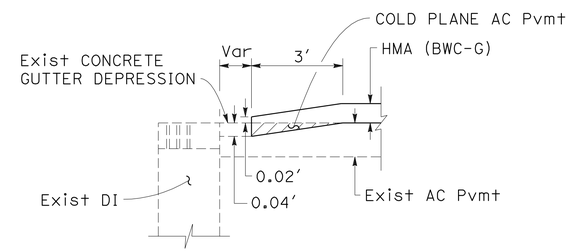

SECTION A-A

PAVING CONFORM AT DRAINAGE INLET

LEGEND:

- COLD PLANE AC Pvmt
- LIMIT OF HMA (BWC-G)
- LIMIT OF COLD PLANE AC Pvmt AND HMA (BWC-G)

ABBREVIATION:

HMA (BWC-G) - HOT MIX ASPHALT (BONDED WEARING COURSE-GAP GRADED)

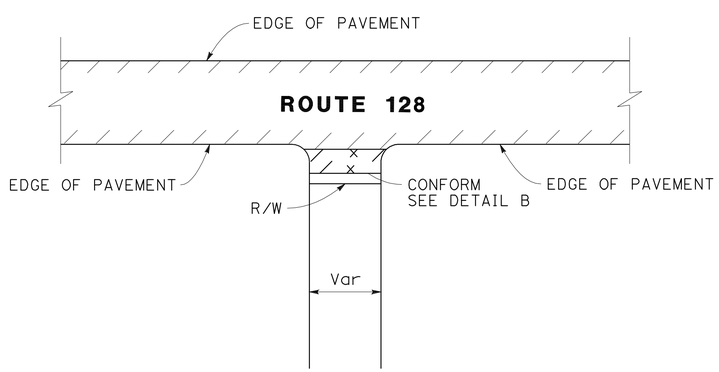

LIMIT OF PAVING CONFORM AT INTERSECTION

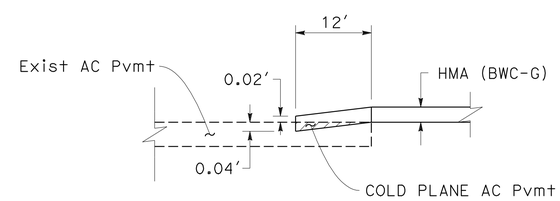

PAVING CONFORM DETAIL B

CONSTRUCTION DETAILS

NO SCALE

C-1

REVISED BY	DATE REVISED
MN	6/01/10

CALCULATED-DESIGNED BY: MIR NASSABEH
CHECKED BY: RONNIE CHUA
FUNCTIONAL SUPERVISOR: RONNIE CHUA

STATE OF CALIFORNIA - DEPARTMENT OF TRANSPORTATION
Caltrans
DESIGN

LAST REVISION 08-12-10
DATE PLOTTED => 02-MAR-2011
TIME PLOTTED => 15:05

Dist	COUNTY	ROUTE	POST MILES TOTAL PROJECT	SHEET No.	TOTAL SHEETS
04	Nap	128	R7.4/19.1	4	14

Lily Ting 12-20-10
REGISTERED CIVIL ENGINEER DATE

12-20-10
PLANS APPROVAL DATE

REGISTERED PROFESSIONAL ENGINEER Lily Y. Ting No. 37330 Exp. 6-30-12 CIVIL STATE OF CALIFORNIA

THE STATE OF CALIFORNIA OR ITS OFFICERS OR AGENTS SHALL NOT BE RESPONSIBLE FOR THE ACCURACY OR COMPLETENESS OF SCANNED COPIES OF THIS PLAN SHEET.

LEGEND:

CONSTRUCTION AREA SIGN LETTER

NOTES:

1. EXACT LOCATION AND POSITION OF SIGNS TO BE DETERMINED BY THE ENGINEER.
2. CONSTRUCTION AREA SIGNS TO BE STATIONARY MOUNTED UNLESS OTHERWISE NOTED.
3. ALL DIMENSIONS ARE IN INCHES UNLESS OTHERWISE SHOWN.

CONSTRUCTION AREA SIGNS

SIGN	SIGN CODE	MESSAGE	PANEL SIZE (INCH x INCH)	NUMBER OF POST AND SIZE (EA-INCH x INCH)	QUANTITY
A	W20-1	ROAD WORK AHEAD	48 x 48	1 - 6 x 6	5
B	G20-2	END ROAD WORK	36 x 18	1 - 4 x 6	7
C	C40 (CA)	TRAFFIC FINES DOUBLE	72 x 36	2 - 4 x 6	2
D	G20-1 (Mod)	ROAD WORK NEXT 12 MILES	54 x 24	2 - 4 x 6	2

54" x 24"

ROAD WORK
NEXT 12 MILES

5" C CAPS
BLACK ON ORANGE

G20-1 (Mod)

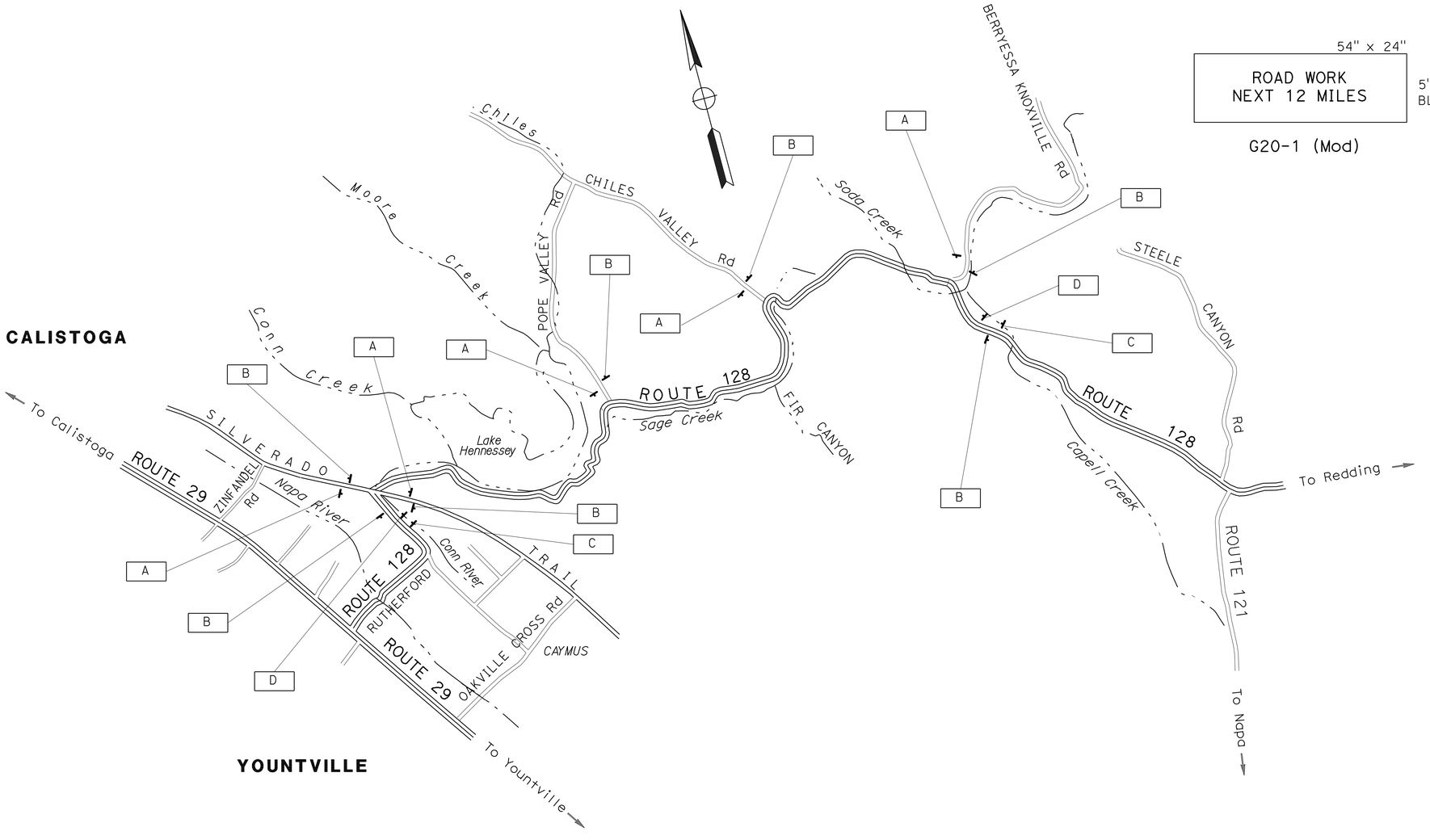

CONSTRUCTION AREA SIGNS

NO SCALE

THIS PLAN ACCURATE FOR
CONSTRUCTION AREA SIGN WORK ONLY

CS-1

STATE OF CALIFORNIA - DEPARTMENT OF TRANSPORTATION
Caltrans
TRAFFIC

FUNCTIONAL SUPERVISOR: JERILYN STRUVEN

CALCULATED-DESIGNED BY: LILY TING
CHECKED BY: JERILYN STRUVEN

REVISED BY: LT
DATE REVISED: 6/01/10

LAST REVISION 08-03-10
DATE PLOTTED => 02-MAR-2011
TIME PLOTTED => 15:05

Dist	COUNTY	ROUTE	POST MILES TOTAL PROJECT	SHEET No.	TOTAL SHEETS
04	Nap	128	R7.4/19.1	5	14

REGISTERED CIVIL ENGINEER 12-20-10 DATE

12-20-10
PLANS APPROVAL DATE

REGISTERED PROFESSIONAL ENGINEER Mir Nassabeh No. 62625 Exp. 6-30-12 CIVIL STATE OF CALIFORNIA

THE STATE OF CALIFORNIA OR ITS OFFICERS OR AGENTS SHALL NOT BE RESPONSIBLE FOR THE ACCURACY OR COMPLETENESS OF SCANNED COPIES OF THIS PLAN SHEET.

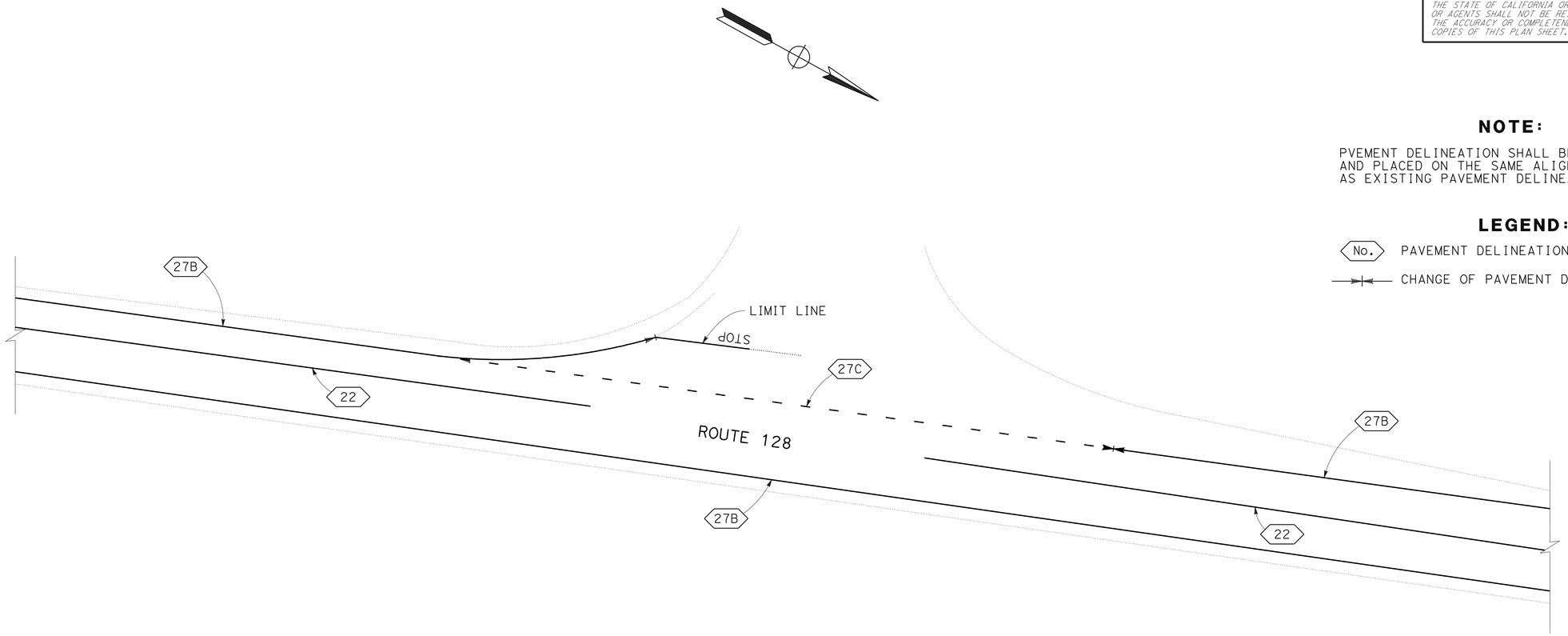

NOTE:

PVEMENT DELINEATION SHALL BE REPLACED IN KIND AND PLACED ON THE SAME ALIGNMENT AND LOCATION AS EXISTING PAVEMENT DELINEATION.

LEGEND:

No. PAVEMENT DELINEATION DETAIL

CHANGE OF PAVEMENT DELINEATION DETAILS

PAVEMENT DELINEATION PLAN
(TYPICAL)

NO SCALE

THIS PLAN ACCURATE FOR PAVEMENT DELINEATION WORK ONLY

PD-1

STATE OF CALIFORNIA - DEPARTMENT OF TRANSPORTATION
Caltrans® DESIGN

FUNCTIONAL SUPERVISOR: RONNIE CHUA
CALCULATED-DESIGNED BY: MIR NASSABEH
CHECKED BY: RONNIE CHUA
REVISED BY: MN
DATE REVISED: 6/01/10

LAST REVISION 08-03-10
DATE PLOTTED => 02-MAR-2011
TIME PLOTTED => 15:06

Dist	COUNTY	ROUTE	POST MILES TOTAL PROJECT	SHEET No.	TOTAL SHEETS
04	Nap	128	R7.4/19.1	6	14

REGISTERED CIVIL ENGINEER 12-20-10 DATE

12-20-10
PLANS APPROVAL DATE

REGISTERED PROFESSIONAL ENGINEER Mir Nassabeh No. 62625 Exp. 6-30-12 CIVIL STATE OF CALIFORNIA

THE STATE OF CALIFORNIA OR ITS OFFICERS OR AGENTS SHALL NOT BE RESPONSIBLE FOR THE ACCURACY OR COMPLETENESS OF SCANNED COPIES OF THIS PLAN SHEET.

TRAFFIC STRIPES, PAVEMENT MARKINGS AND PAVEMENT MARKERS

DESCRIPTION	DETAIL No. OR PAVEMENT MARKING	REMOVE PAVEMENT MARKER	REMOVE THERMOPLASTIC			PAVEMENT MARKER RETROREFLECTIVE TYPE D	THERMO-PLASTIC PAVEMENT MARKING WHITE	THERMOPLASTIC TRAFFIC STRIPE		
			PAVEMENT MARKING	YELLOW 4 INCH SOLID	WHITE 4 INCH SOLID			YELLOW 4 INCH SOLID	WHITE 4 INCH (BROKEN 12-3)	WHITE 4 INCH SOLID
		EA	SQFT	LF		EA	SQFT	LF		
EASTBOUND & WESTBOUND	22 *	5300		123600		5300		123600		
	27B				123350					123350
	27C				50				250	
	LL		135				135			
	STOP		154				154			
	AHEAD		31				31			
TOTAL		5300	320	123600	123400	5300	320	247200		

* DETAIL 22 HAD BEEN MODIFIED BY PLACING TYPE D MARKERS 4' APART FOR 288' WITHIN THE LIMITS OF THE CURVE AT APPROXIMATELY PM 16.45.

PAVEMENT DELINEATION QUANTITIES

PDQ-1

STATE OF CALIFORNIA - DEPARTMENT OF TRANSPORTATION
Caltrans DESIGN

FUNCTIONAL SUPERVISOR: RONNIE CHUA
CALCULATED-DESIGNED BY: MIR NASSABEH
CHECKED BY: RONNIE CHUA
REVISED BY: MN
DATE REVISED: 6/01/10

LAST REVISION 09-29-10 | DATE PLOTTED => 02-MAR-2011 | TIME PLOTTED => 15:06

Dist	COUNTY	ROUTE	POST MILES TOTAL PROJECT	SHEET No.	TOTAL SHEETS
04	Nap	128	R7.4/19.1	7	14

REGISTERED CIVIL ENGINEER 12-20-10 DATE

12-20-10
PLANS APPROVAL DATE

REGISTERED PROFESSIONAL ENGINEER Mir Nassabeh No. 62625 Exp. 6-30-12 CIVIL STATE OF CALIFORNIA

THE STATE OF CALIFORNIA OR ITS OFFICERS OR AGENTS SHALL NOT BE RESPONSIBLE FOR THE ACCURACY OR COMPLETENESS OF SCANNED COPIES OF THIS PLAN SHEET.

COLD PLANE AC PAVEMENT AND HMA (TYPE A) (EASTBOUND)

LOCATION		LENGTH (N)	WIDTH (N)	COLD PLANE AC PAVEMENT	HMA (TYPE A)	TACK COAT
PM	DIRECTION	LF		SQYD	TON	
7.4	EASTBOUND	200	10	222	67.6	0.18
8.4		50	10	56	16.9	0.05
9.7		100	10	111	33.8	0.09
9.8		30	10	33	10.1	0.03
10		100	10	111	33.8	0.09
1.1		100	10	111	33.8	0.09
10.5		50	10	56	16.9	0.05
10.6		70	10	78	23.7	0.06
10.7		50	6	33	10.1	0.03
10.8		70	10	78	23.7	0.06
10.9		20	6	13	4.1	0.01
11.1		30	6	20	6.1	0.02
11.2		20	6	13	4.1	0.01
11.3		50	10	56	16.9	0.05
12.9		50	6	33	10.1	0.03
15.5		50	10	56	16.9	0.05
15.8		50	10	56	16.9	0.05
15.9		50	6	33	10.1	0.03
16.6		50	10	56	16.9	0.05
17.4		20	10	22	6.8	0.02
17.8		50	10	56	16.9	0.05
18.3		20	6	13	4.1	0.01
18.5		50	10	56	16.9	0.05
18.7		50	10	56	16.9	0.05
SUBTOTAL				1203	366	1.2

(N) = NOT A SEPARATE PAY ITEM, FOR INFORMATION ONLY.

HMA DIKE

LOCATION		REMOVE AC DIKE	HOT MIX ASPHALT DIKE				MINOR HOT MIX ASPHALT
			TYPE A	TYPE C	TYPE D	TYPE E	
PM	DIRECTION	LF					TON
8.77	WB	430	430				11.8
18.31	WB	160				160	4.2
19.00	WB	100				100	2.6
19.07	WB	130				130	3.4
18.71	EB	330		60	270		16.5
19.05	EB	250		140		110	4.0
TOTAL (EB+WB)		1400	430	200	270	500	42.5

COLD PLANE AC PAVEMENT AND HMA (TYPE A) (WESTBOUND)

LOCATION		LENGTH (N)	WIDTH (N)	COLD PLANE AC PAVEMENT	HMA (TYPE A)	TACK COAT
PM	DIRECTION	LF		SQYD	TON	
19	WESTBOUND	50	10	56	16.9	0.05
18.3		30	6	20	6.1	0.02
18		100	10	111	33.8	0.09
17.9		100	10	111	33.8	0.09
17.7		50	10	56	16.9	0.05
17.6		60	10	67	20.3	0.06
17.5		50	10	56	16.9	0.05
17.4		30	10	33	10.1	0.03
17.2		50	10	56	16.9	0.05
16.7		100	10	111	33.8	0.09
16.6		50	10	56	16.9	0.05
15.9		30	6	20	6.1	0.02
15.8		30	10	33	10.1	0.03
15.7		30	10	33	10.1	0.03
10.9		30	10	33	10.1	0.03
10.6		100	6	67	20.3	0.06
10.1		50	10	56	16.9	0.05
10		50	10	56	16.9	0.05
9.9		30	10	33	10.1	0.03
8.9		30	10	33	10.1	0.03
7.4		150	10	167	50.7	0.14
SUBTOTAL				1261	384	1.1

(N) = NOT A SEPARATE PAY ITEM, FOR INFORMATION ONLY.

SUMMARY OF QUANTITIES

LOCATION		COLD PLANE AC PAVEMENT		HOT MIX ASPHALT (TYPE A)	TACK COAT	ASPHALT EMULSION MEMBRANE (BONDED WEARING COURSE)	HOT MIX ASPHALT (BONDED WEARING COURSE-GAP GRADED)	CRACK TREATMENT	IMPORTED MATERIAL (SHOULDER BACKING)
		ON MAINLINE	AT INTERSECTIONS, BEGINNING AND END OF PROJECT						
PM	DIRECTION	SQYD		TON				LNMI	TON
R7.4/19.1	EASTBOUND & WESTBOUND	2464	480	750	2.3	130	7310	10	940
		2944							

NOTE: THE HOT MIX ASPHALT AND ASPHALT EMULSION MEMBRANE QUANTITIES SHOWN IN THE TABLE ARE FOR THE MAINLINE AND MAINTENANCE VEHICLES PULLOUT AREA AT PM 8.7

SUMMARY OF QUANTITIES

Q-1

STATE OF CALIFORNIA - DEPARTMENT OF TRANSPORTATION
Caltrans DESIGN

FUNCTIONAL SUPERVISOR: RONNIE CHUA
CALCULATED-DESIGNED BY: MIR NASSABEH
CHECKED BY: RONNIE CHUA
REVISED BY: MN
DATE REVISED: 6/01/10

LAST REVISION 12-14-10
DATE PLOTTED => 02-MAR-2011
TIME PLOTTED => 15:06

DIST	COUNTY	ROUTE	POST MILES TOTAL PROJECT	SHEET NO.	TOTAL SHEETS
04	Nap	128	R7.4/19.1	8	14

Randell D. Hiatt
REGISTERED CIVIL ENGINEER

June 6, 2008
PLANS APPROVAL DATE

REGISTERED PROFESSIONAL ENGINEER
Randell D. Hiatt
No. C50200
Exp. 6-30-09
CIVIL
STATE OF CALIFORNIA

The State of California or its officers or agents shall not be responsible for the accuracy or completeness of electronic copies of this plan sheet.

To accompany plans dated 12-20-10

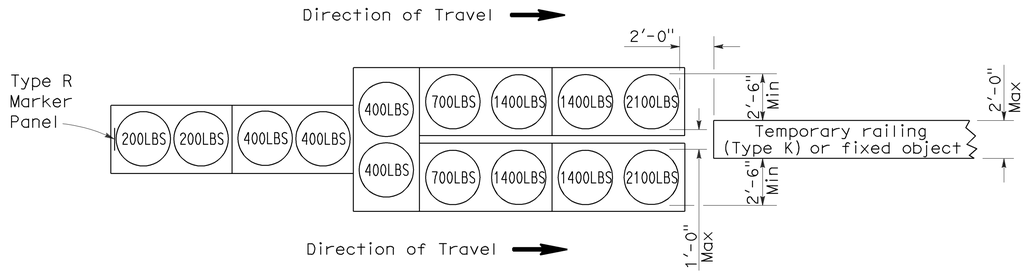

ARRAY 'TU14'

Approach speed 45 mph or more

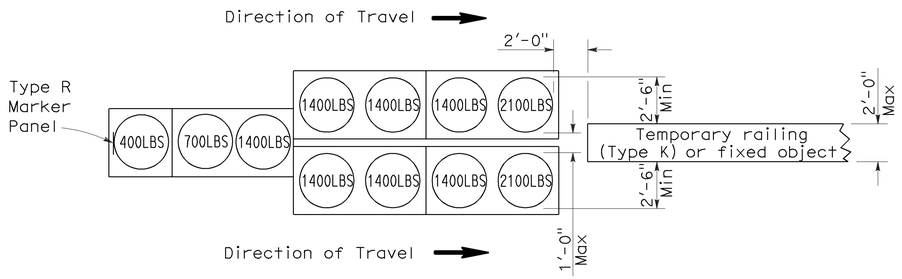

ARRAY 'TU11'

Approach speed less than 45 mph

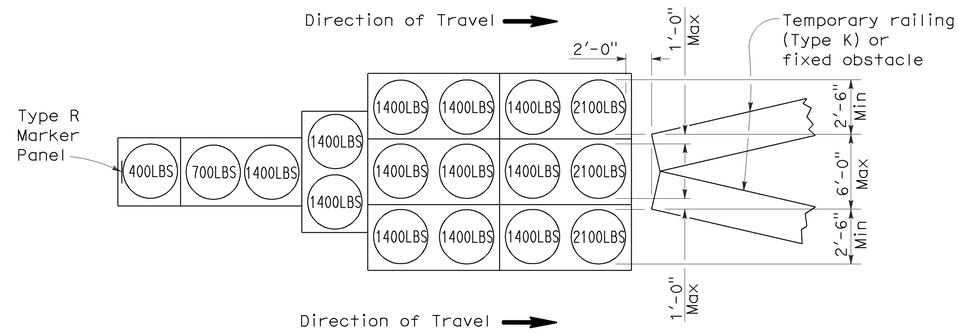

ARRAY 'TU17'

Approach speed less than 45 mph

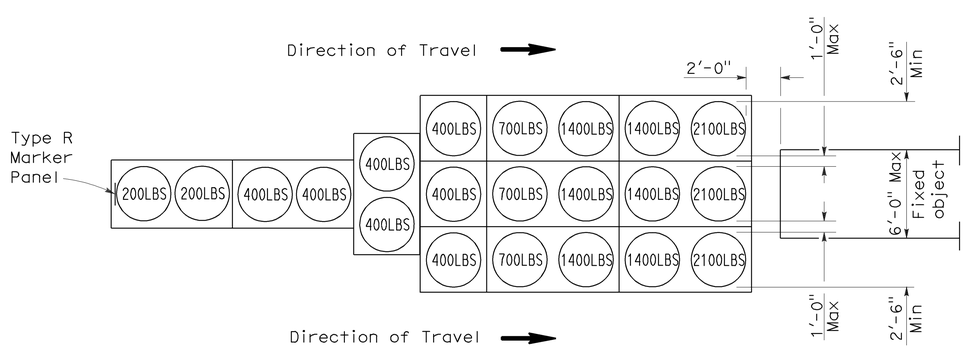

ARRAY 'TU21'

Approach speed 45 mph or more

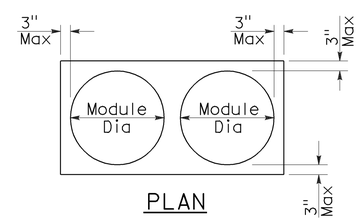

PLAN

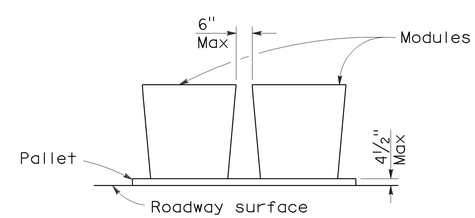

ELEVATION

CRASH CUSHION PALLET DETAIL

See Note 7

NOTES:

1. (XXX) Indicates sand filled module location and weight of sand in pounds for each module. Module spacing is based on the greater diameter of the module.
2. All sand weights are nominal.
3. Temporary crash cushion arrays shall not encroach on the traveled way.
4. Place the top of Type R marker panel 1" below the module lid.
5. Refer to Standard Plan A73B for marker details.
6. Approach speeds indicated conform to NCHRP 350 Report criteria.
7. Use of pallets is optional.

STATE OF CALIFORNIA
DEPARTMENT OF TRANSPORTATION

TEMPORARY CRASH CUSHION, SAND FILLED (UNIDIRECTIONAL)

NO SCALE

RSP T1A DATED JUNE 6, 2008 SUPERSEDES STANDARD PLAN T1A
DATED MAY 1, 2006 - PAGE 211 OF THE STANDARD PLANS BOOK DATED MAY 2006.

REVISED STANDARD PLAN RSP T1A

2006 REVISED STANDARD PLAN RSP T1A

5-15-08

DIST	COUNTY	ROUTE	POST MILES TOTAL PROJECT	SHEET NO.	TOTAL SHEETS
04	Nap	128	R7.4/19.1	9	14

Randell D. Hiatt
REGISTERED CIVIL ENGINEER

June 6, 2008
PLANS APPROVAL DATE

REGISTERED PROFESSIONAL ENGINEER
Randell D. Hiatt
No. C50200
Exp. 6-30-09
CIVIL
STATE OF CALIFORNIA

The State of California or its officers or agents shall not be responsible for the accuracy or completeness of electronic copies of this plan sheet.

To accompany plans dated 12-20-10

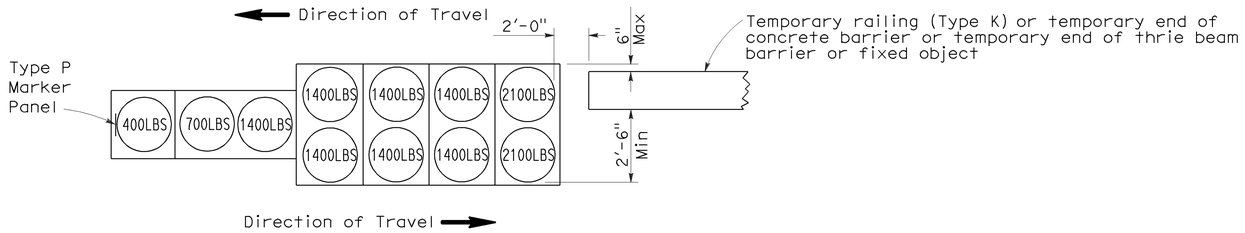

ARRAY 'TB11'

Approach speed less than 45 mph

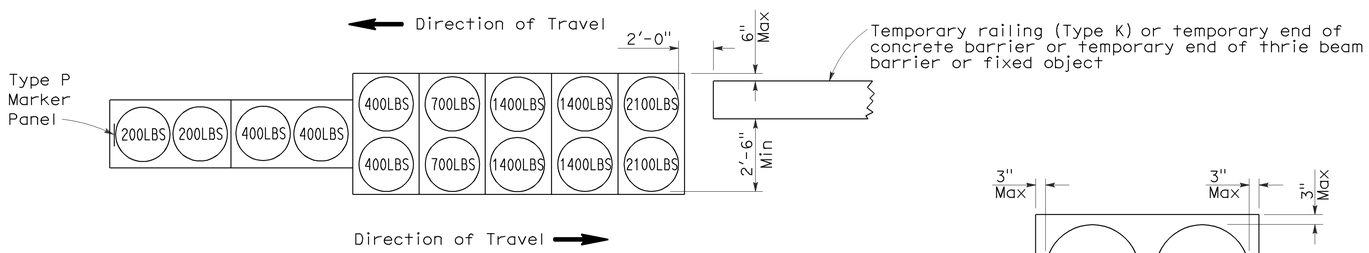

ARRAY 'TB14'

Approach speed 45 mph or more

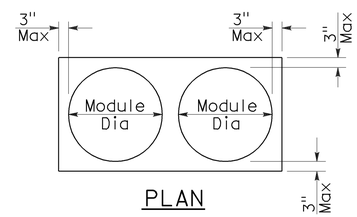

PLAN

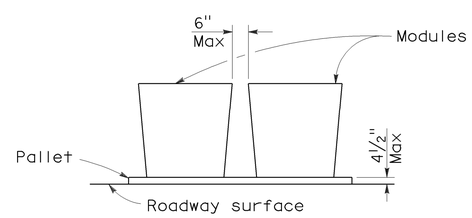

ELEVATION

CRASH CUSHION PALLET DETAIL

See Note 7

NOTES:

1. (XXX) Indicates sand filled module location and weight of sand in pounds for each module. Module spacing is based on the greater diameter of the module.
2. All sand weights are nominal.
3. Temporary crash cushion arrays shall not encroach on the traveled way.
4. Place the Type P marker panel so that the bottom of the panel rests upon the pallet.
5. Refer to Standard Plan A73B for marker details.
6. Approach speeds indicated conform to NCHRP 350 Report criteria.
7. Use of pallets is optional.

STATE OF CALIFORNIA
DEPARTMENT OF TRANSPORTATION

TEMPORARY CRASH CUSHION, SAND FILLED (BIDIRECTIONAL)

NO SCALE

RSP T1B DATED JUNE 6, 2008 SUPERSEDES STANDARD PLAN T1B
DATED MAY 1, 2006 - PAGE 212 OF THE STANDARD PLANS BOOK DATED MAY 2006.

REVISED STANDARD PLAN RSP T1B

2006 REVISED STANDARD PLAN RSP T1B

5-15-08

DIST	COUNTY	ROUTE	POST MILES TOTAL PROJECT	SHEET NO.	TOTAL SHEETS
04	Nap	128	R7.4/19.1	10	14

Randell D. Hiatt
REGISTERED CIVIL ENGINEER

June 6, 2008
PLANS APPROVAL DATE

REGISTERED PROFESSIONAL ENGINEER
Randell D. Hiatt
No. C50200
Exp. 6-30-09
CIVIL
STATE OF CALIFORNIA

The State of California or its officers or agents shall not be responsible for the accuracy or completeness of electronic copies of this plan sheet.

To accompany plans dated 12-20-10

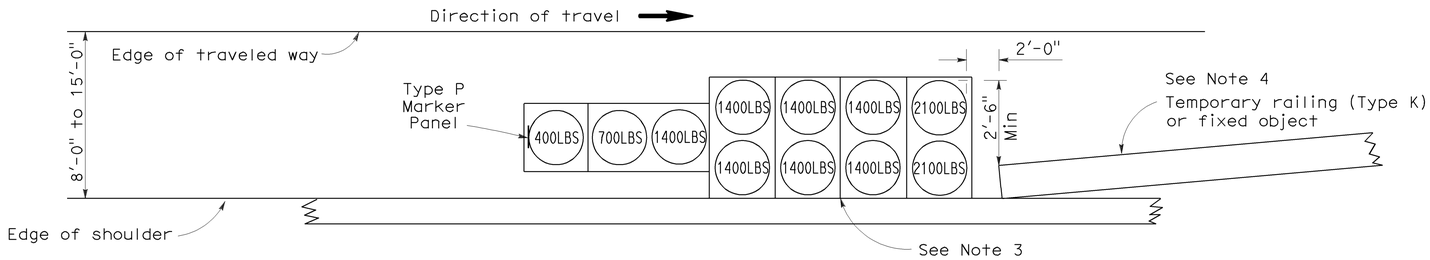

ARRAY 'TS11'

Approach speed less than 45 mph
See Note 9

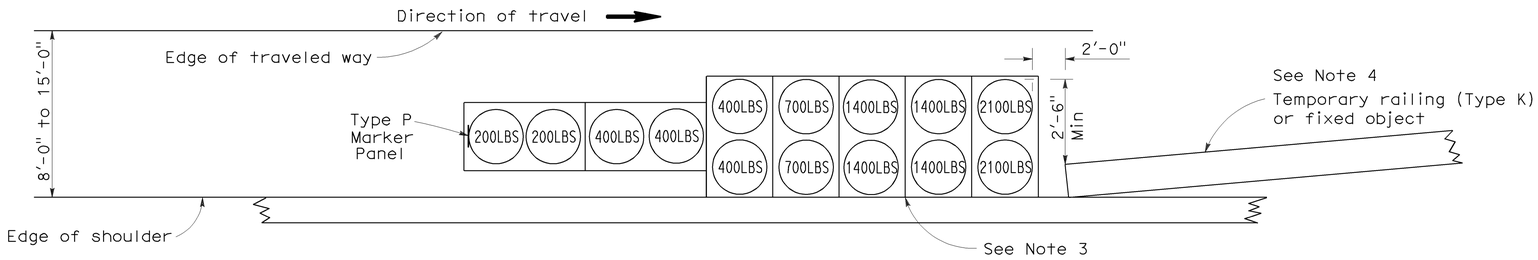

ARRAY 'TS14'

Approach speed 45 mph or more
See Note 9

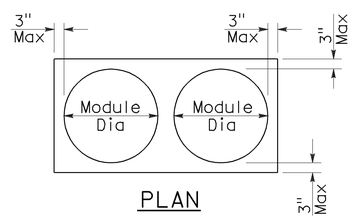

PLAN

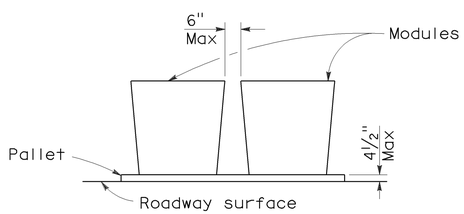

ELEVATION

CRASH CUSHION PALLET DETAIL

See Note 11

NOTES:

1. (XXX) Indicates sand filled module location and weight of sand in pounds for each module. Module spacing is based on the greater diameter of the module.
2. All sand weights are nominal.
3. The temporary crash cushion arrays shown on this plan shall be used only in locations where there will be traffic on one side of the temporary crash cushion array.
4. If the fixed object or approach end of the temporary railing is less than 15'-0" from the edge of traveled way, a temporary crash cushion is required in a construction or work zone.
5. Temporary crash cushion arrays shall not encroach on the traveled way.
6. Arrays for median shoulders shall conform to details shown on this plan for outside shoulders.
7. Place the Type P marker panel so that the bottom of the panel rests upon the pallet and faces traffic.
8. Refer to Standard Plan A73B for marker details.
9. For shoulder widths less than 8'-0", appropriate approved crash cushion protection, other than sand filled modules, shall be provided at fixed objects and at approach ends of temporary railing. The specific type of crash cushion shall be as shown on the project plans or as specified in the Special Provisions, or if not shown on the project plans or specified in the Special Provisions, shall be as approved by the Engineer.
10. Approach speeds indicated conform to NCHRP 350 Report criteria.
11. Use of pallets is optional.

STATE OF CALIFORNIA
DEPARTMENT OF TRANSPORTATION

TEMPORARY CRASH CUSHION, SAND FILLED (SHOULDER INSTALLATIONS)

NO SCALE

RSP T2 DATED JUNE 6, 2008 SUPERSEDES STANDARD PLAN T2
DATED MAY 1, 2006 - PAGE 213 OF THE STANDARD PLANS BOOK DATED MAY 2006.

REVISED STANDARD PLAN RSP T2

2006 REVISED STANDARD PLAN RSP T2

5-15-08

DIST	COUNTY	ROUTE	POST MILES TOTAL PROJECT	SHEET NO.	TOTAL SHEETS
04	Nap	128	R7.4/19.1	11	14

LICENSED LANDSCAPE ARCHITECT

August 15, 2008
PLANS Approval DATE

The State of California or its officers or agents shall not be responsible for the accuracy or completeness of electronic copies of this plan sheet.

LICENSED LANDSCAPE ARCHITECT
Robert B. Schott 3635
Signature
11-04-08
Renewal Date
08-11-08
Date
STATE OF CALIFORNIA

To accompany plans dated 12-20-10

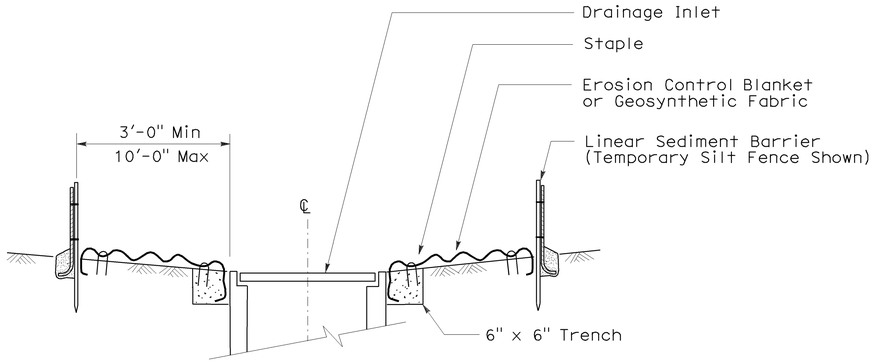

SECTION A-A

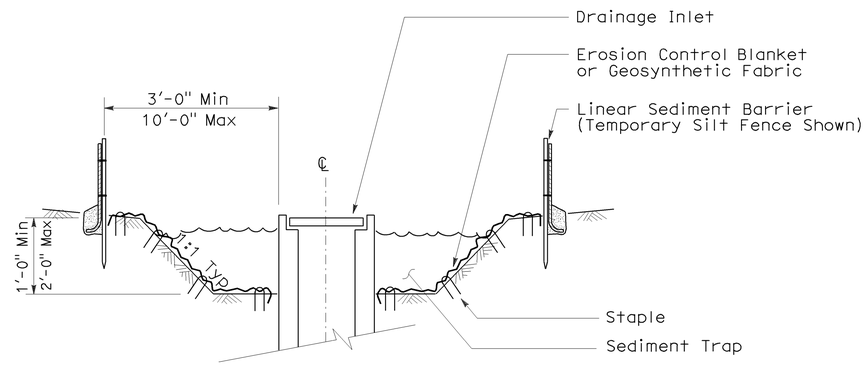

SECTION B-B

NOTES:

1. See Standard Plan T51 for Temporary Silt Fence.
2. Dimensions may vary to fit field conditions.

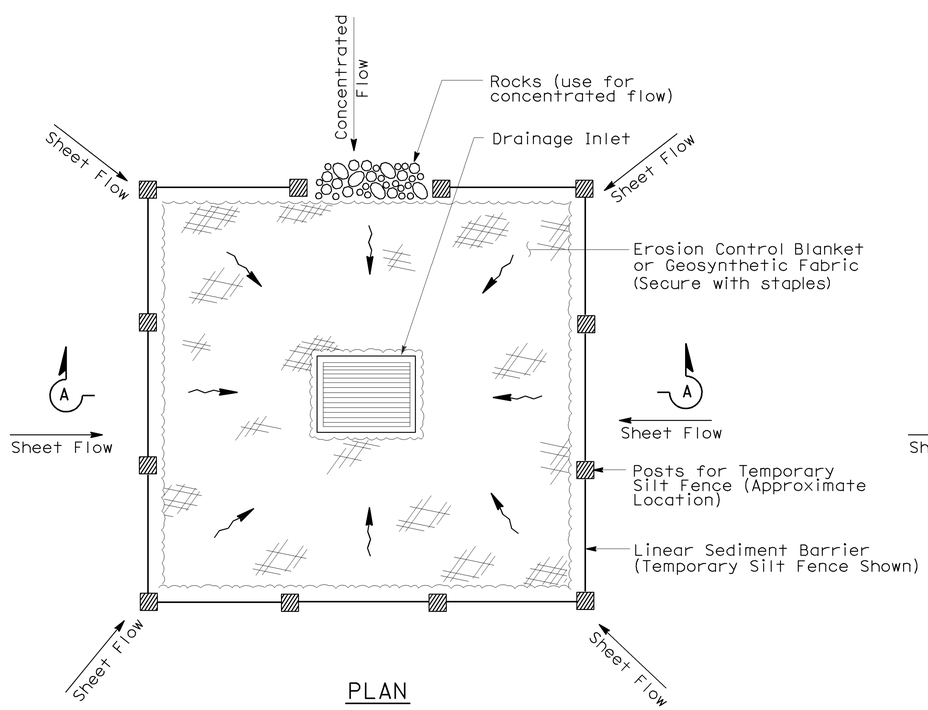

PLAN

TEMPORARY DRAINAGE INLET PROTECTION (TYPE 1)

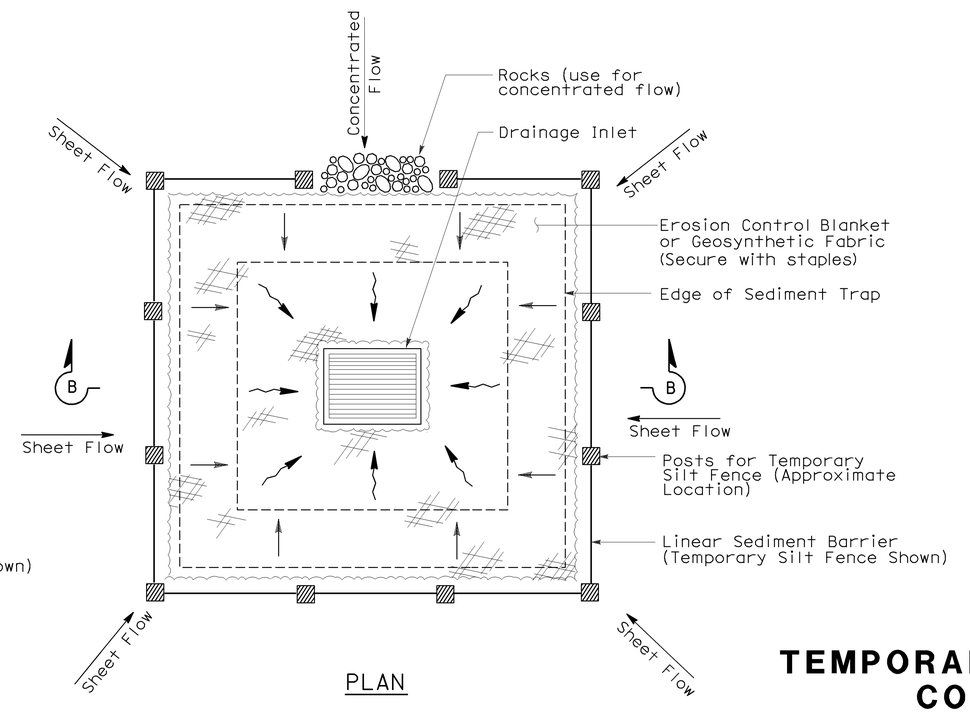

PLAN

TEMPORARY DRAINAGE INLET PROTECTION (TYPE 2) (EXCAVATED SEDIMENT TRAP)

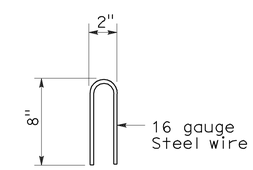

STAPLE DETAIL

STATE OF CALIFORNIA
DEPARTMENT OF TRANSPORTATION

TEMPORARY WATER POLLUTION CONTROL DETAILS (TEMPORARY DRAINAGE INLET PROTECTION)

NO SCALE

Nsp t61 dated august 15, 2008 supplements the standard plans book dated may 2006.

NEW STANDARD PLAN NSP T61

2006 NEW STANDARD PLAN NSP T61

7-11-08

DIST	COUNTY	ROUTE	POST MILES TOTAL PROJECT	SHEET NO.	TOTAL SHEETS
04	Nap	128	R7.4/19.1	12	14

LICENSED LANDSCAPE ARCHITECT

August 15, 2008
PLANS APPROVAL DATE

The State of California or its officers or agents shall not be responsible for the accuracy or completeness of electronic copies of this plan sheet.

LICENSED LANDSCAPE ARCHITECT Robert B. Schott 3635 Signature 11-04-08 Renewal Date 08-11-08 Date STATE OF CALIFORNIA

To accompany plans dated 12-20-10

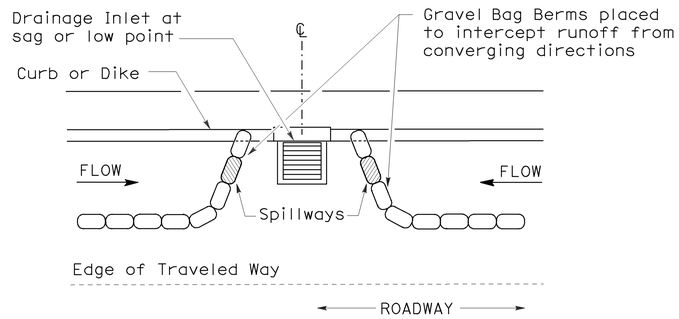

PLAN

CONFIGURATION FOR SAG POINT INLET (GRAVEL BAG BERM)

GRAVEL BAG BERM (TYPE 3A) SPACING TABLE

SLOPE OF ROADWAY (PERCENT)	1 to 3.9	4 to 5.9	6 to 7.9	8 to 10	10+
INTERVAL BETWEEN BERM	100′	75′	50′	25′	12′

For slope of less than 1%, install barriers only if erosion/sediment is prevalent

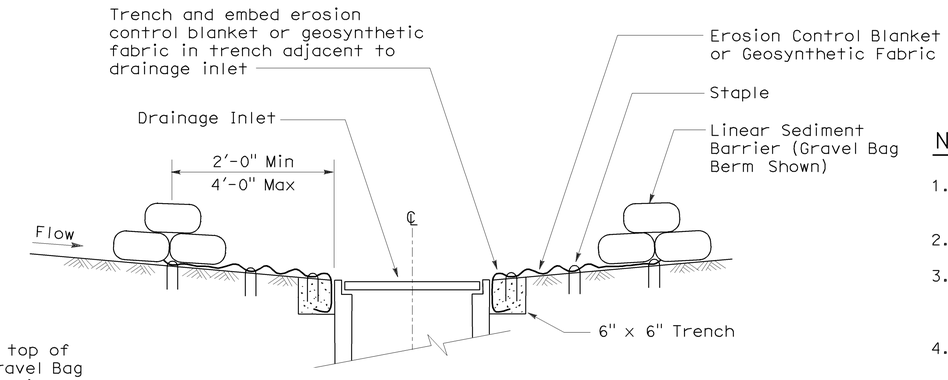

SECTION A-A

NOTES:

1. Place safety cones adjacent to drainage inlet protection.
2. Dimensions may vary to fit field conditions.
3. Install a minimum of 3 gravel bag berms upstream of each drainage inlet to be protected.
4. Position erosion control blanket or geosynthetic fabric at edge of concrete apron and secure in trench.
5. Erosion control blanket or geosynthetic fabric is not required if the area adjacent to the drainage inlet is vegetated or paved.

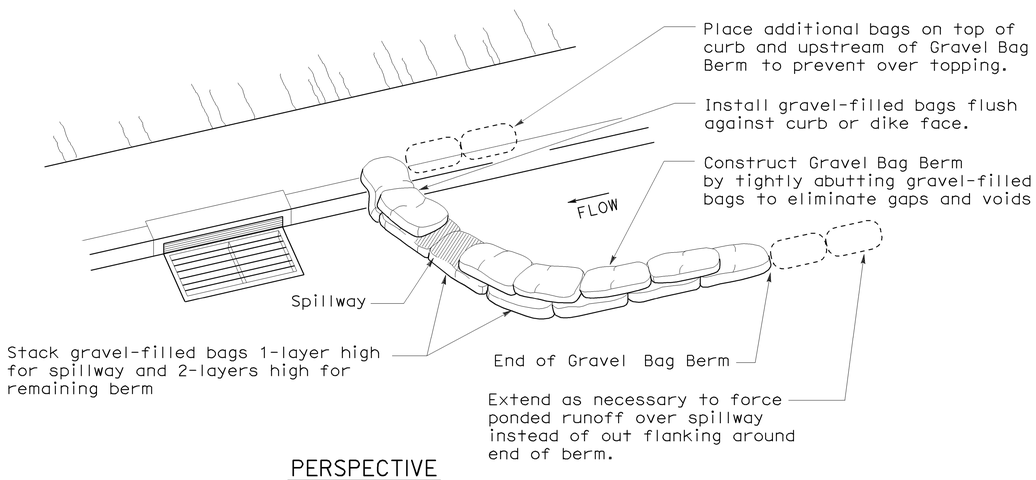

PERSPECTIVE

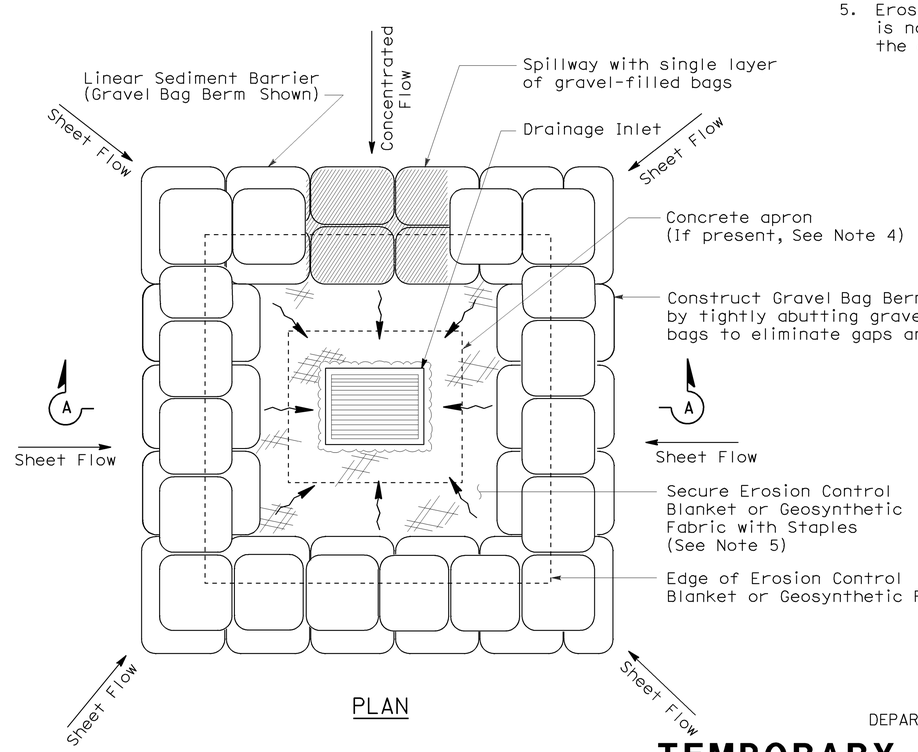

PLAN

TEMPORARY DRAINAGE INLET PROTECTION (TYPE 3B)

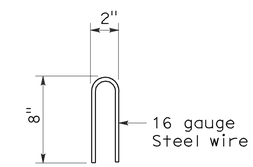

STAPLE DETAIL

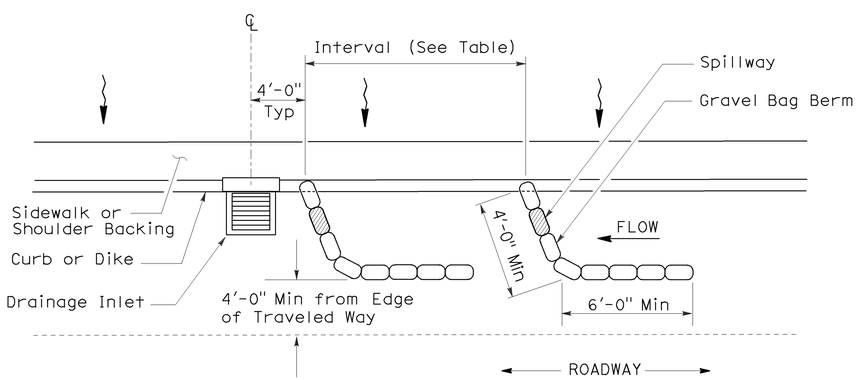

PLAN

TEMPORARY DRAINAGE INLET PROTECTION (TYPE 3A) (GRAVEL BAG BERM)

STATE OF CALIFORNIA
DEPARTMENT OF TRANSPORTATION

TEMPORARY WATER POLLUTION CONTROL DETAILS (TEMPORARY DRAINAGE INLET PROTECTION)

NO SCALE

NSP T62 DATED AUGUST 15, 2008 SUPPLEMENTS THE STANDARD PLANS BOOK DATED MAY 2006.

NEW STANDARD PLAN NSP T62

2006 NEW STANDARD PLAN NSP T62

7-11-08

DIST	COUNTY	ROUTE	POST MILES TOTAL PROJECT	SHEET NO.	TOTAL SHEETS
04	Nap	128	R7.4/19.1	13	14

Robert B. Schott
LICENSED LANDSCAPE ARCHITECT

August 15, 2008
PLANS APPROVAL DATE

LICENSED LANDSCAPE ARCHITECT Robert B. Schott 3895 Signature 11-04-08 Renewal Date 08-11-08 Date STATE OF CALIFORNIA

The State of California or its officers or agents shall not be responsible for the accuracy or completeness of electronic copies of this plan sheet.

To accompany plans dated 12-20-10

2006 NEW STANDARD PLAN NSP T63

FLEXIBLE SEDIMENT BARRIER SPACING TABLE

SLOPE OF ROADWAY (PERCENT)	0 to 0.9	1 to 1.9	2 to 2.9	3 to 4	5+
INTERVAL BETWEEN BARRIERS	50′	35′	30′	25′	20′
ANGLE FROM FACE OF CURB	70°	70°	70°	45°	45°
SUGGESTED BARRIER LENGTH	6′	6′	6′	6′	6′

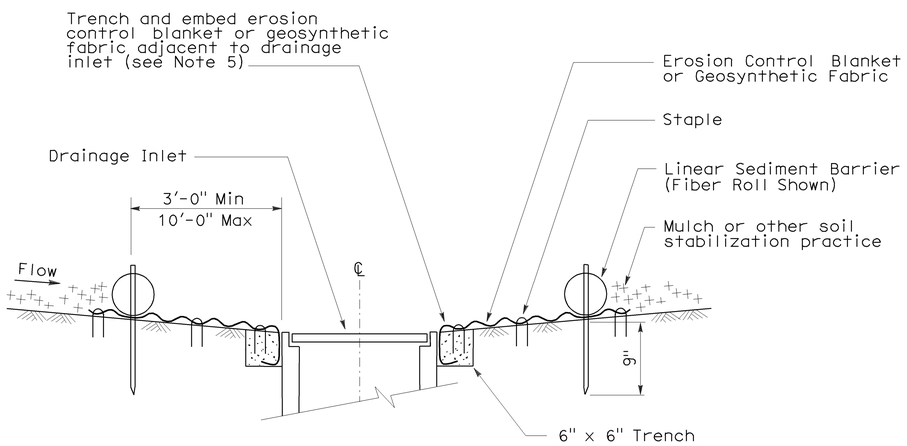

SECTION A-A

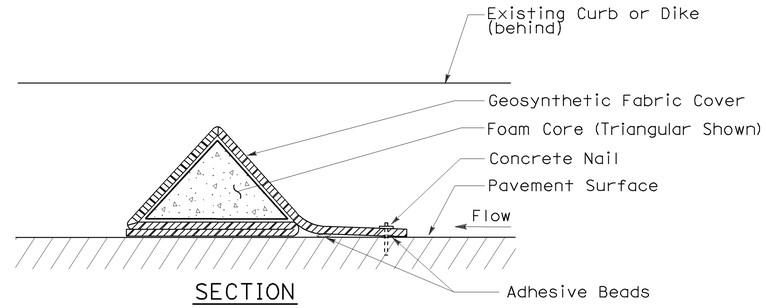

SECTION

FLEXIBLE SEDIMENT BARRIER DETAIL (FOAM BARRIER SHOWN)

NOTES:

1. See Standard Plan T51 for Temporary Silt Fence.
2. Dimensions may vary to fit field conditions.
3. Install a minimum of 3 flexible sediment barriers upstream of each drainage inlet to be protected.
4. Position erosion control blanket or geosynthetic fabric at edge of concrete apron and secure in trench.
5. Erosion control blanket or geosynthetic fabric is not required if the area adjacent to the drainage inlet is vegetated.

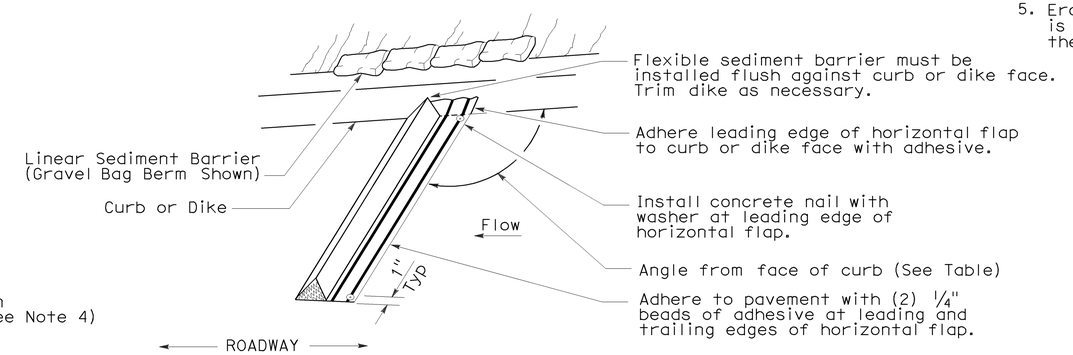

PERSPECTIVE

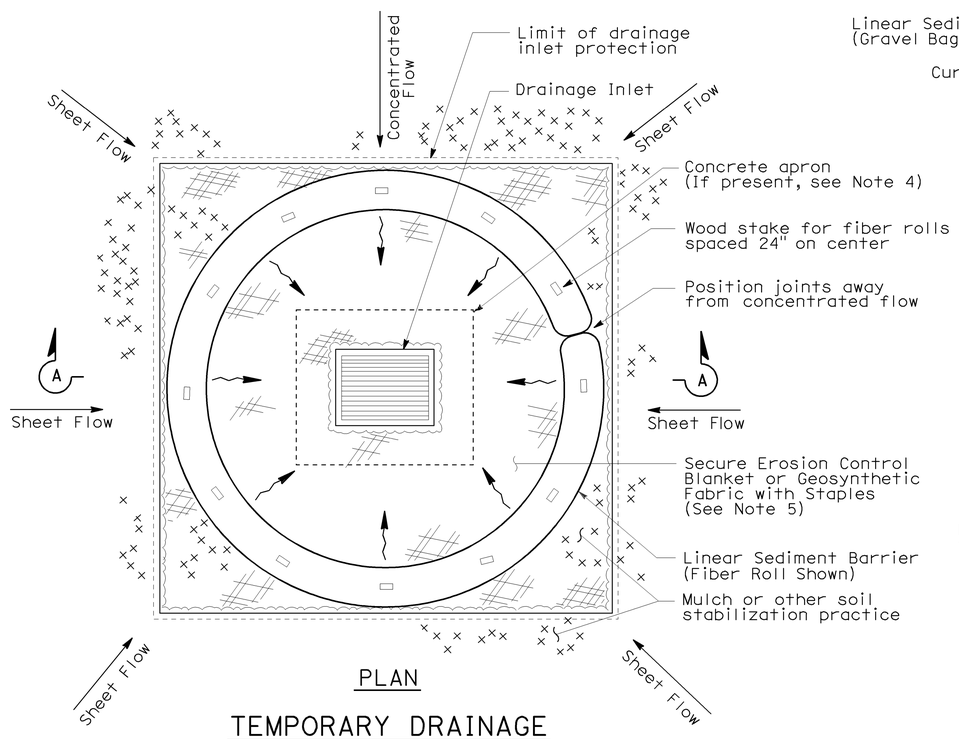

PLAN

TEMPORARY DRAINAGE INLET PROTECTION (TYPE 4A)

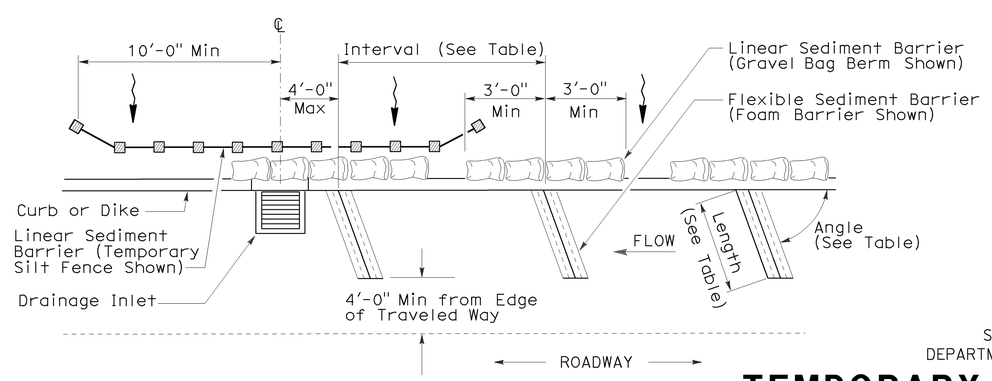

PLAN

TEMPORARY DRAINAGE INLET PROTECTION (TYPE 4B) FLEXIBLE SEDIMENT BARRIER

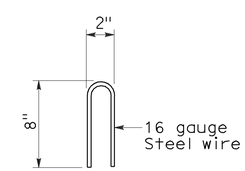

STAPLE DETAIL

STATE OF CALIFORNIA
DEPARTMENT OF TRANSPORTATION

TEMPORARY WATER POLLUTION CONTROL DETAILS (TEMPORARY DRAINAGE INLET PROTECTION)

NO SCALE

NSP T63 DATED AUGUST 15, 2008 SUPPLEMENTS THE STANDARD PLANS BOOK DATED MAY 2006.

NEW STANDARD PLAN NSP T63

7-11-08

DIST	COUNTY	ROUTE	POST MILES TOTAL PROJECT	SHEET NO.	TOTAL SHEETS
04	Nap	128	R7.4/19.1	14	14

LICENSED LANDSCAPE ARCHITECT

August 15, 2008
PLANS APPROVAL DATE

LICENSED LANDSCAPE ARCHITECT — Robert B. Schott 3635 — Signature — 11-04-08 Renewal Date — 08-11-08 Date — STATE OF CALIFORNIA

The State of California or its officers or agents shall not be responsible for the accuracy or completeness of electronic copies of this plan sheet.

To accompany plans dated 12-20-10

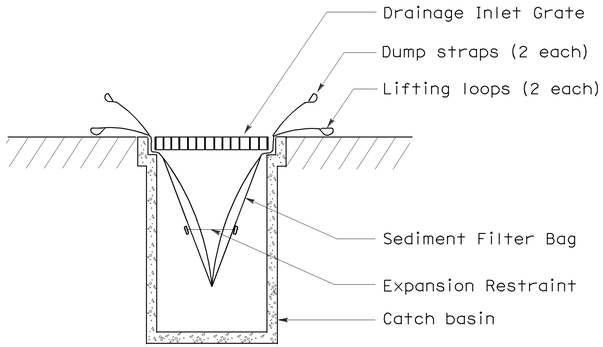

SECTION B-B

SEDIMENT FILTER BAG DETAIL

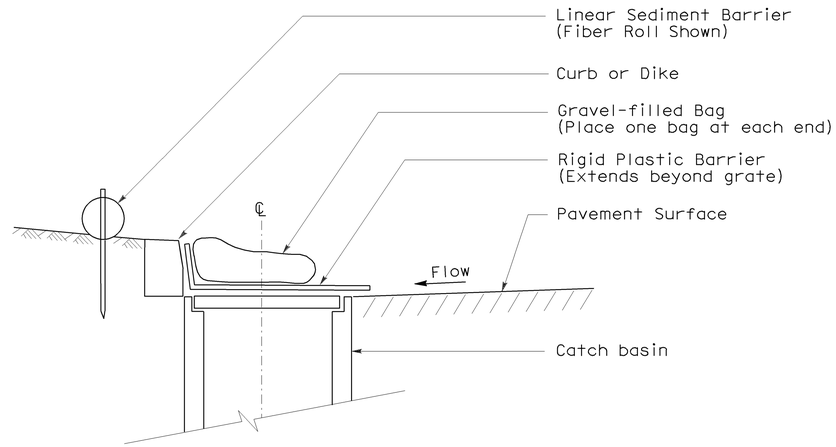

SECTION

TEMPORARY DRAINAGE INLET PROTECTION (TYPE 6A) (CATCH BASIN WITH GRATE)

NOTES:

1. See Standard Plan T51 for Temporary Silt Fence.
2. Dimensions may vary to fit field conditions.

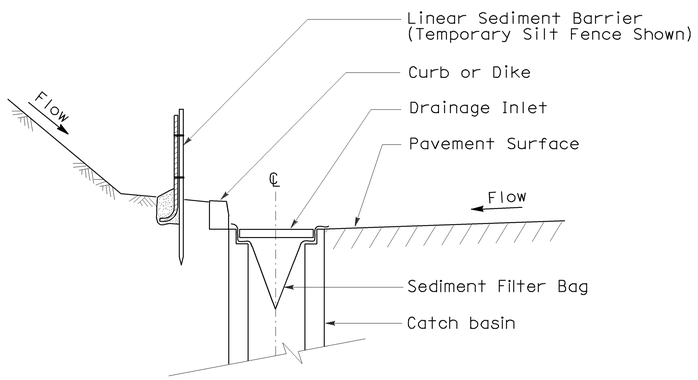

SECTION A-A

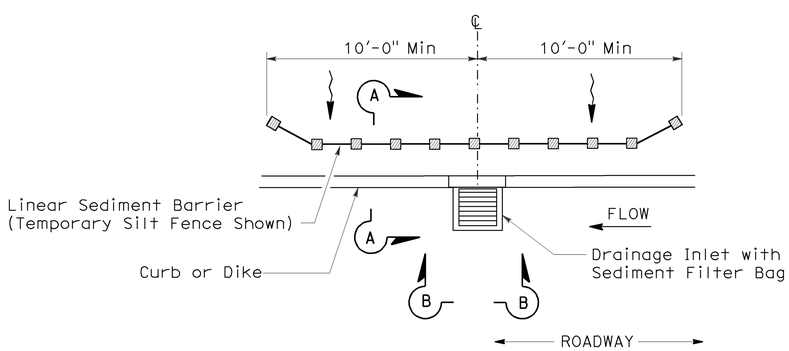

PLAN

TEMPORARY DRAINAGE INLET PROTECTION (TYPE 5) (SEDIMENT FILTER BAG)

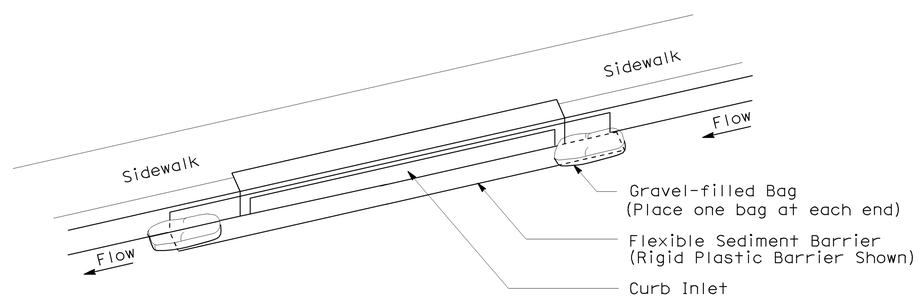

PERSPECTIVE

TEMPORARY DRAINAGE INLET PROTECTION (TYPE 6B) (CURB INLET WITHOUT GRATE)

STATE OF CALIFORNIA
DEPARTMENT OF TRANSPORTATION

TEMPORARY WATER POLLUTION CONTROL DETAILS (TEMPORARY DRAINAGE INLET PROTECTION)

NO SCALE

NSP T64 DATED AUGUST 15, 2008 SUPPLEMENTS THE STANDARD PLANS BOOK DATED MAY 2006.

NEW STANDARD PLAN NSP T64

2006 NEW STANDARD PLAN NSP T64

7-11-08