DIST	COUNTY	ROUTE	POST MILES TOTAL PROJECT	SHEET No.	TOTAL SHEETS
04	SCI	152	0.1/5.2	301	416

REGISTERED CIVIL ENGINEER 08-01-12 DATE

6-17-13
PLANS APPROVAL DATE

REGISTERED PROFESSIONAL ENGINEER
Sameh Hegazi
No. C64899
Exp. 09-30-2013
CIVIL
STATE OF CALIFORNIA

The State of California or its officers or agents shall not be responsible for the accuracy or completeness of electronic copies of this plan sheet.

CURVE DATA

Alignment	R	Δ	T	L
"C1" LINE Ⓐ	345.00	45°50′38"	145.89	276.04
"C1" LINE ①	300.00	20°11′29"	53.41	105.72
"C1" LINE ②	750.00	12°01′21"	78.98	157.38
"W2A3" LINE ③	277.00	20°11′29"	49.32	97.62

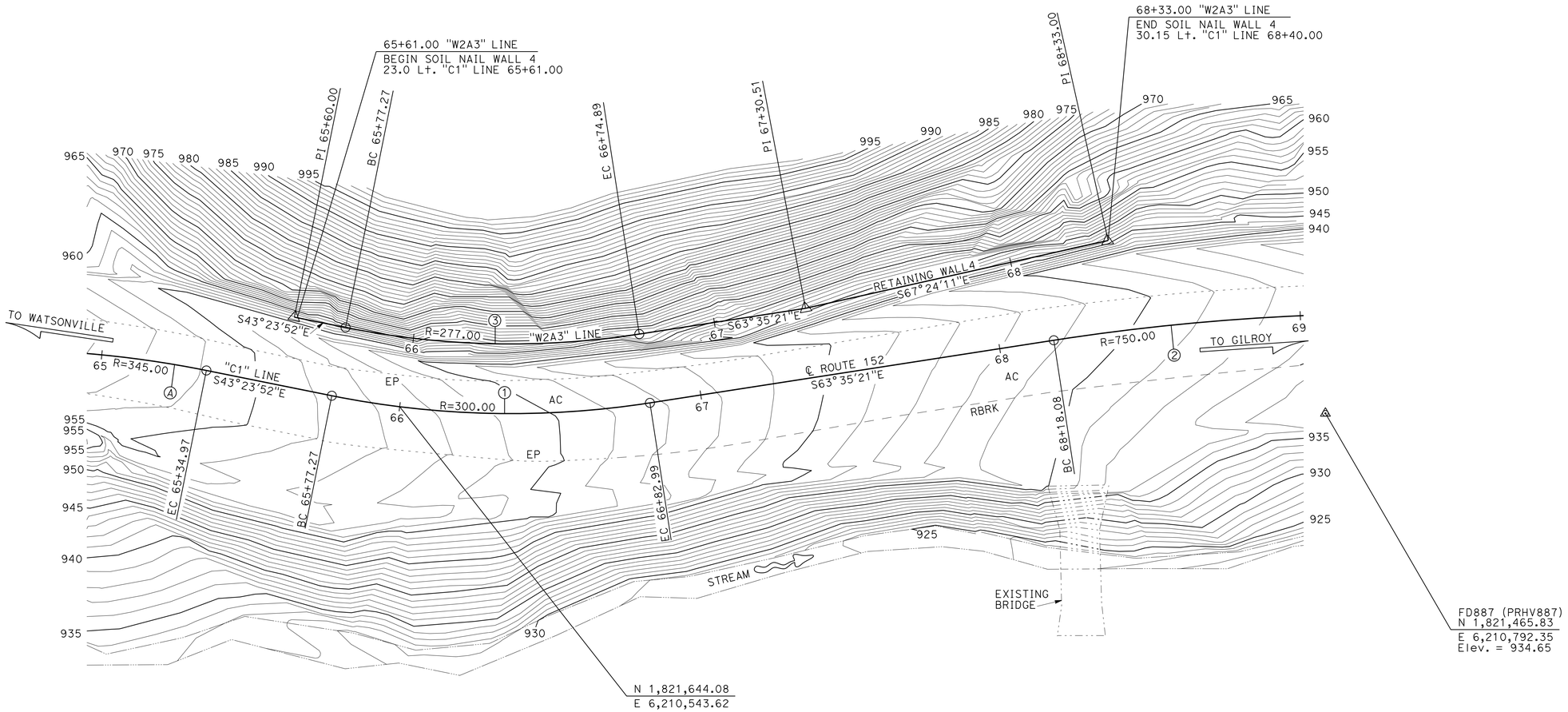

SURVEY CONTROL

FD886 (PRHV886) (NOT SHOWN)
1" I.P w/CT PP & T
28.87 Ft Rt. "C" Line, ℄ ROUTE 152
Sta. 62+78.65
N 1,821,769.04
E 6,210,269.90
Elev. = 965.90

FD887 (PRHV887)
1" I.P w/CT PP & T
32.55 Ft Rt. "C" Line, ℄ ROUTE 152
Sta. 69+07.18
N 1,821,465.83
E 6,210,792.35
Elev. = 934.65

PRELIMINARY INVESTIGATION SECTION

SCALE	VERT.DATUM NAVD88	PHOTOGRAMMETRY AS OF: X			
1"=20′	HORZ.DATUM NAD83(92) (1991.35)	SURVEYED	BY DISTRICT	CHECKED	BY J. Pallares 06/2011
ALIGNMENT TIES Dist. Traverse Sheet		DRAFTED	BY J. Zhou 06/2011	CHECKED	BY T. Zolnikov 06/2011

	BY	CHECKED
DESIGN	Sameh Hegazi	Rangina Amir
DETAILS	Antonio Carreon	S Hegazi/R Amir
QUANTITIES	Rangina Amir	Sameh Hegazi

STATE OF CALIFORNIA
DEPARTMENT OF TRANSPORTATION

DIVISION OF ENGINEERING SERVICES
STRUCTURE DESIGN
DESIGN BRANCH 8

BRIDGE NO. 37E0115
POST MILE 1.24/1.30

HECKER PASS SOIL NAIL WALL NO. 4
FOUNDATION PLAN

STRUCTURES FOUNDATION PLAN SHEET (ENGLISH) (REV. 09-01-10)

ORIGINAL SCALE IN INCHES FOR REDUCED PLANS 0 1 2 3

UNIT: 3593
PROJECT NUMBER & PHASE: 04000008131
CONTRACT NO.: 04-2A2501

DISREGARD PRINTS BEARING EARLIER REVISION DATES

REVISION DATES: 07-20-12 ~~02-29-12~~ ~~05-24-12~~

SHEET 3 OF 17

FILE => 37e0115-b-fpl01.dgn

SCHEDULE A	BAR SIZE #7	
NO. OF SOIL NAIL ROWS	2	
ROW NO. TOP TO BOTTOM	1	2
EMBEDMENT LENGTH (ft)	10	10

SCHEDULE B	BAR SIZE #7		
NO. OF SOIL NAIL ROWS	3		
ROW NO. TOP TO BOTTOM	1	2	3
EMBEDMENT LENGTH (ft)	15	12	10

SCHEDULE C	BAR SIZE #7			
NO. OF SOIL NAIL ROWS	4			
ROW NO. TOP TO BOTTOM	1	2	3	4
EMBEDMENT LENGTH (ft)	17	15	12	10

SCHEDULE D	BAR SIZE #7				
NO. OF SOIL NAIL ROWS	5				
ROW NO. TOP TO BOTTOM	1	2	3	4	5
EMBEDMENT LENGTH (ft)	17	15	12	10	10

DIST	COUNTY	ROUTE	POST MILES TOTAL PROJECT	SHEET No.	TOTAL SHEETS
04	SCI	152	0.1/5.2	302	416

REGISTERED CIVIL ENGINEER 08-01-12 DATE

6-17-13
PLANS APPROVAL DATE

REGISTERED PROFESSIONAL ENGINEER
Sameh Hegazi
No. C64899
Exp. 09-30-2013
CIVIL
STATE OF CALIFORNIA

The State of California or its officers or agents shall not be responsible for the accuracy or completeness of electronic copies of this plan sheet.

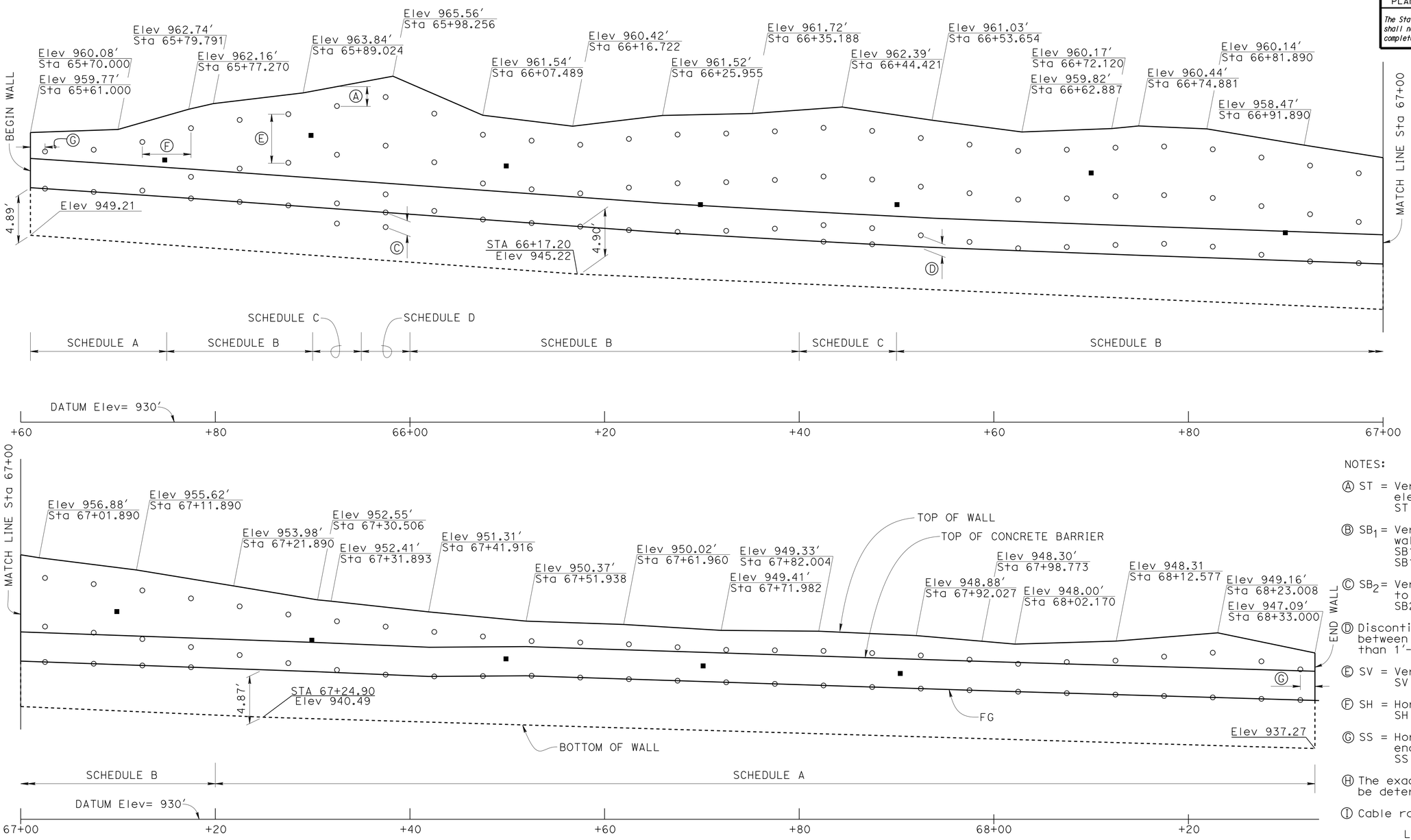

DEVELOPED ELEVATION

3/16″=1

NOTES:

Ⓐ ST = Vertical distance from top of wall elevation to top level of soil nails, ST = 2′-0″.

Ⓑ SB_1 = Vertical distance from bottom of wall to bottom level of the soil nails, SB1 (Min) = 2′-0″, SB1 (Max) = 3′-0″.

Ⓒ SB_2 = Vertical distance from finished grade to bottom level of the soil nails, SB2 (Max) = 1′-6″.

Ⓓ Discontinue row when vertical distance between soil nails are less than 1′-6″.

Ⓔ SV = Vertical spacing of soil nails, SV (Min) = 1′-6″, SV (Max) = 5′-0″.

Ⓕ SH = Horizontal spacing of soil nails, SH (Min) = 1′-6″, SH (Max) = 5′-0″.

Ⓖ SS = Horizontal distance between the begin / end wall and first/last soil nail, SS (Min) = 1′-6″, SS (Max) = 2′-6″.

Ⓗ The exact location of the test soil nails to be determined by the Engineer.

Ⓘ Cable railing posts are not shown for clarity.

LEGEND:
○ Indicates approximate location of soil nails.
■ Indicates approximate location of proof test nails.

	BY	CHECKED
DESIGN	Sameh Hegazi	Rangina Amir
DETAILS	Antonio Carreon	S Hegazi/R Amir
QUANTITIES	Rangina Amir	Sameh Hegazi

STATE OF CALIFORNIA
DEPARTMENT OF TRANSPORTATION

DIVISION OF ENGINEERING SERVICES
STRUCTURE DESIGN
DESIGN BRANCH 8

BRIDGE NO. 37E0115
POST MILE 1.24/1.30

HECKER PASS SOIL NAIL WALL NO. 4
STRUCTURE ELEVATION

STRUCTURES DESIGN DETAIL SHEET (ENGLISH) (REV. 09-01-10)

ORIGINAL SCALE IN INCHES FOR REDUCED PLANS 0 1 2 3

UNIT: 3593
PROJECT NUMBER & PHASE: 0400000813-1
CONTRACT NO.: 04-2A2501

DISREGARD PRINTS BEARING EARLIER REVISION DATES

REVISION DATES 05-24-12 07-20-12 02-28-13

SHEET 4 OF 17

FILE => 37e0115-c-se.dgn

USERNAME => s124496 DATE PLOTTED => 21-JUN-2013 TIME PLOTTED => 07:30

DIST	COUNTY	ROUTE	POST MILES TOTAL PROJECT	SHEET No.	TOTAL SHEETS
04	SCI	152	0.1/5.2	303	416

REGISTERED CIVIL ENGINEER 05-15-13 DATE

6-17-13
PLANS APPROVAL DATE

REGISTERED PROFESSIONAL ENGINEER
Sameh Hegazi
No. C64899
Exp. 09-30-2013
CIVIL
STATE OF CALIFORNIA

The State of California or its officers or agents shall not be responsible for the accuracy or completeness of electronic copies of this plan sheet.

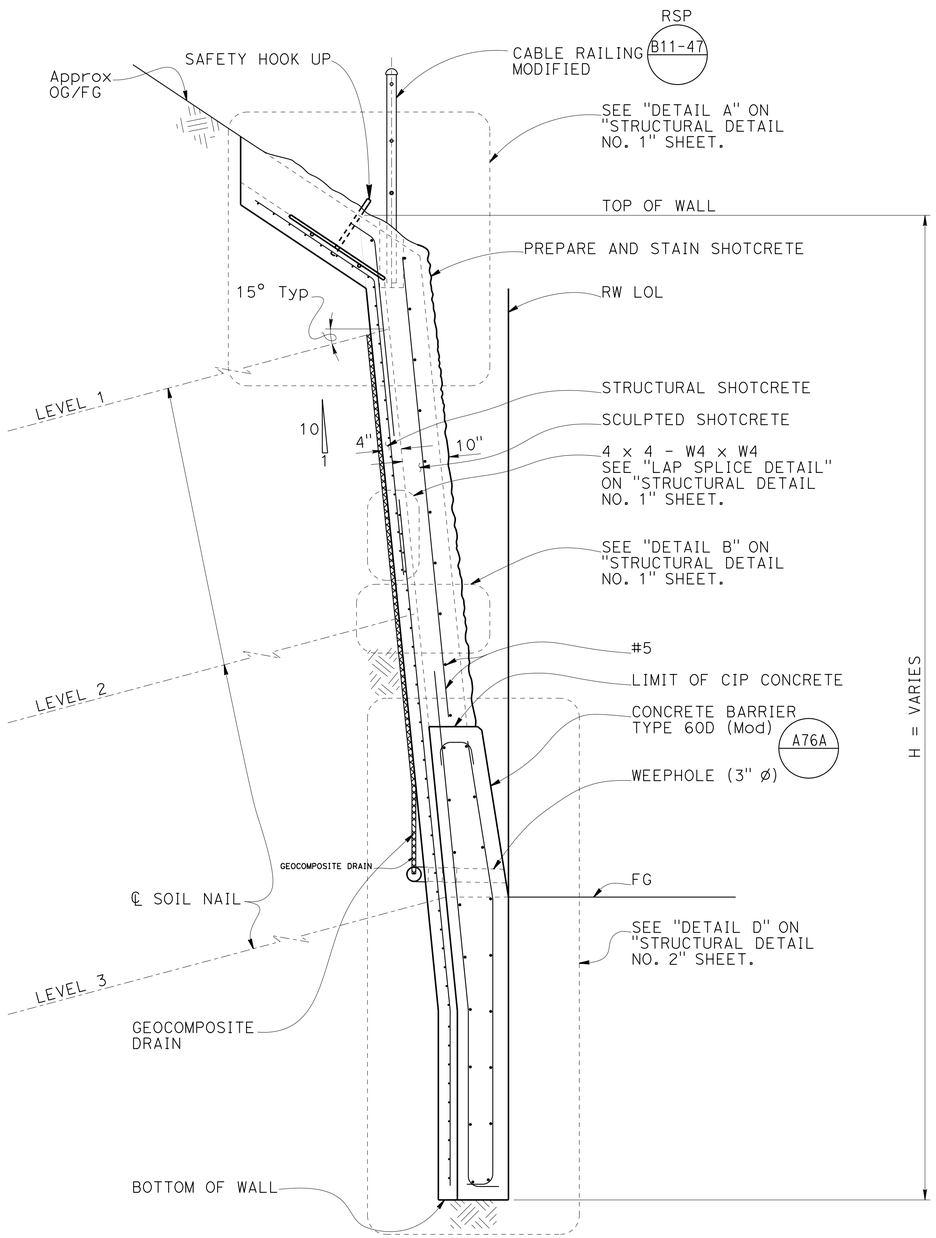

TYPICAL SECTION AT FOUNDATION DROP

3/4" = 1'-0"

NOTES:

1. For "PRODUCTION SOIL NAIL DETAIL" and "PROOF TEST SOIL NAIL DETAIL", see "STRUCTURAL DETAIL NO.3" sheet.
2. For sculpted shotcrete treatment, see "SCULPTED SHOTCRETE TREATMENT" sheet.
3. For geocomposite drain detail, see "DRAINAGE DETAILS NO. 2" sheet.

	BY	CHECKED
DESIGN	Sameh Hegazi	Rangina Amir
DETAILS	Antonio Carreon	S Hegazi/R Amir
QUANTITIES	Rangina Amir	Sameh Hegazi

STATE OF CALIFORNIA
DEPARTMENT OF TRANSPORTATION

DIVISION OF ENGINEERING SERVICES
STRUCTURE DESIGN
DESIGN BRANCH 8

BRIDGE NO. 37E0115
POST MILE 1.24/1.30

HECKER PASS SOIL NAIL WALL NO. 4
TYPICAL SECTION

STRUCTURES DESIGN DETAIL SHEET (ENGLISH) (REV. 09-01-10)

ORIGINAL SCALE IN INCHES FOR REDUCED PLANS 0 1 2 3

UNIT: 3593
PROJECT NUMBER & PHASE: 0400000813-1
CONTRACT NO.: 04-2A2501

DISREGARD PRINTS BEARING EARLIER REVISION DATES

REVISION DATES: 05-10-13 ~~05-24-12~~ ~~01-20-12~~

SHEET 5 OF 17

FILE => 37e0115-f-typ.dgn

USERNAME => s124496 DATE PLOTTED => 21-JUN-2013 TIME PLOTTED => 07:30

DIST	COUNTY	ROUTE	POST MILES TOTAL PROJECT	SHEET No.	TOTAL SHEETS
04	SCI	152	0.1/5.2	304	416

REGISTERED CIVIL ENGINEER 05-15-13 DATE

6-17-13
PLANS APPROVAL DATE

REGISTERED PROFESSIONAL ENGINEER Sameh Hegazi No. C64899 Exp. 09-30-2013 CIVIL STATE OF CALIFORNIA

The State of California or its officers or agents shall not be responsible for the accuracy or completeness of electronic copies of this plan sheet.

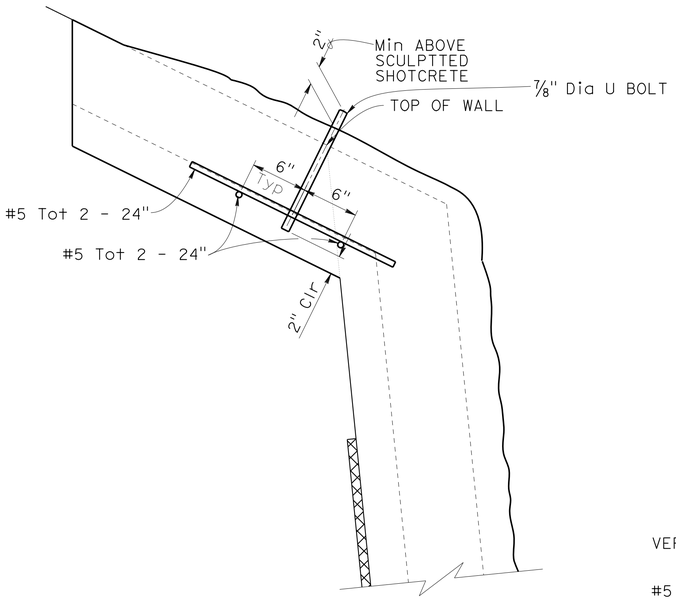

SAFETY HOOKUP DETAIL
No Scale

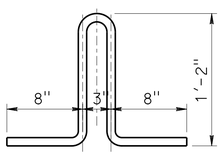

7/8" U BOLT DETAILS
1½" = 1'

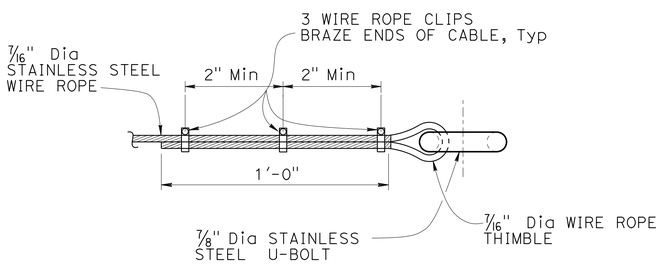

SAFETY WIRE ROPE DETAIL
No Scale

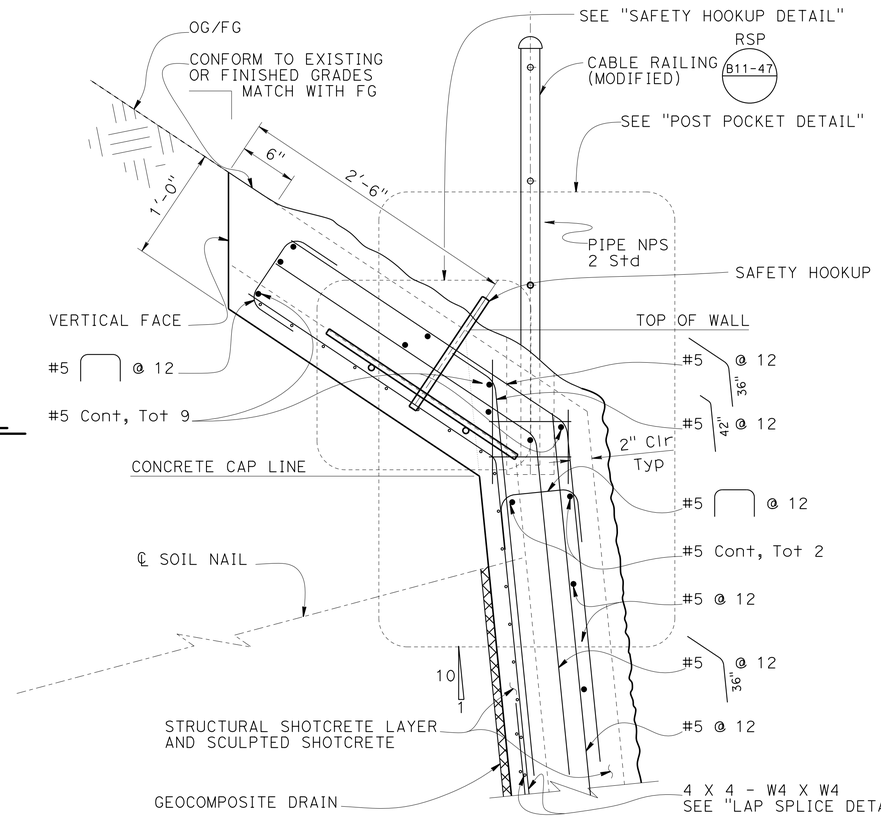

DETAIL A
1½" = 1'-0"

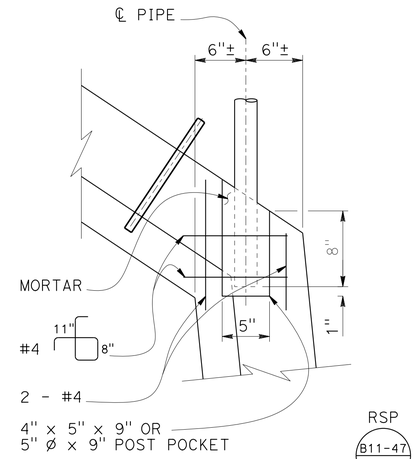

POST POCKET DETAIL
No Scale

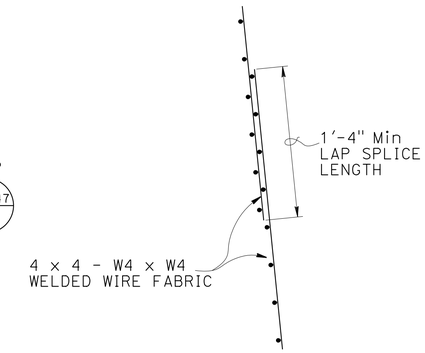

LAP SPLICE DETAIL
No Scale

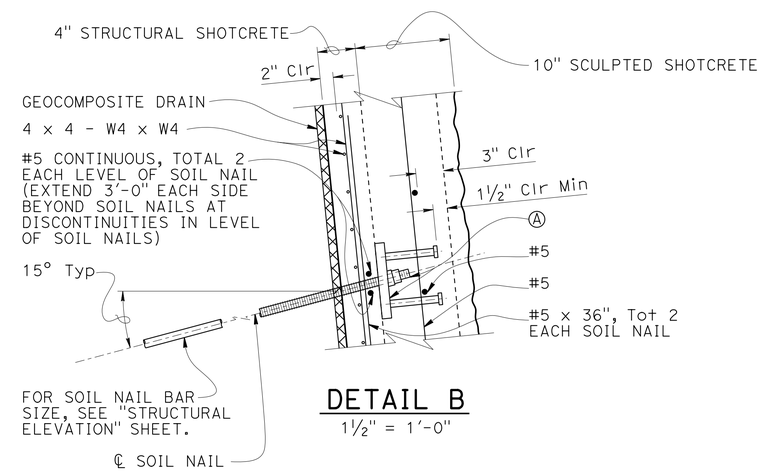

DETAIL B
1½" = 1'-0"

NOTE:

Ⓐ For bearing plate and soil nail details not shown, see "STRUCTURAL DETAILS NO. 3" sheet.

1. Safety hookups shall be placed behind cable railing posts with 10'-0" Max spacing.
2. Safety wire rope shall be extended between safety hookups at top of wall.
3. Safety wire rope and safety hookups shall be placed at locations where wall heights from top of wall to finished grade exceed 5 feet.

	BY	CHECKED
DESIGN	Sameh Hegazi	Rangina Amir
DETAILS	Antonio Carreon	S Hegazi/R Amir
QUANTITIES	Rangina Amir	Sameh Hegazi

STATE OF CALIFORNIA
DEPARTMENT OF TRANSPORTATION

DIVISION OF ENGINEERING SERVICES
STRUCTURE DESIGN
DESIGN BRANCH 8

BRIDGE NO. 37E0115
POST MILE 1.24/1.30

HECKER PASS SOIL NAIL WALL NO. 4
STRUCTURAL DETAILS NO. 1

STRUCTURES DESIGN DETAIL SHEET (ENGLISH) (REV. 09-01-10)

ORIGINAL SCALE IN INCHES FOR REDUCED PLANS 0 1 2 3

UNIT: 3593
PROJECT NUMBER & PHASE: 0400000813-1
CONTRACT NO.: 04-2A2501

DISREGARD PRINTS BEARING EARLIER REVISION DATES

REVISION DATES: 05-10-13 | 05-24-12 | 07-26-12

SHEET 6 OF 17

FILE => 37e0115-g-rwdt01.dgn

USERNAME => s124496 DATE PLOTTED => 21-JUN-2013 TIME PLOTTED => 07:30

DIST	COUNTY	ROUTE	POST MILES TOTAL PROJECT	SHEET No.	TOTAL SHEETS
04	SCI	152	0.1/5.2	305	416

REGISTERED CIVIL ENGINEER 05-15-13 DATE

6-17-13
PLANS APPROVAL DATE

REGISTERED PROFESSIONAL ENGINEER
Sameh Hegazi
No. C64899
Exp. 09-30-2013
CIVIL
STATE OF CALIFORNIA

The State of California or its officers or agents shall not be responsible for the accuracy or completeness of electronic copies of this plan sheet.

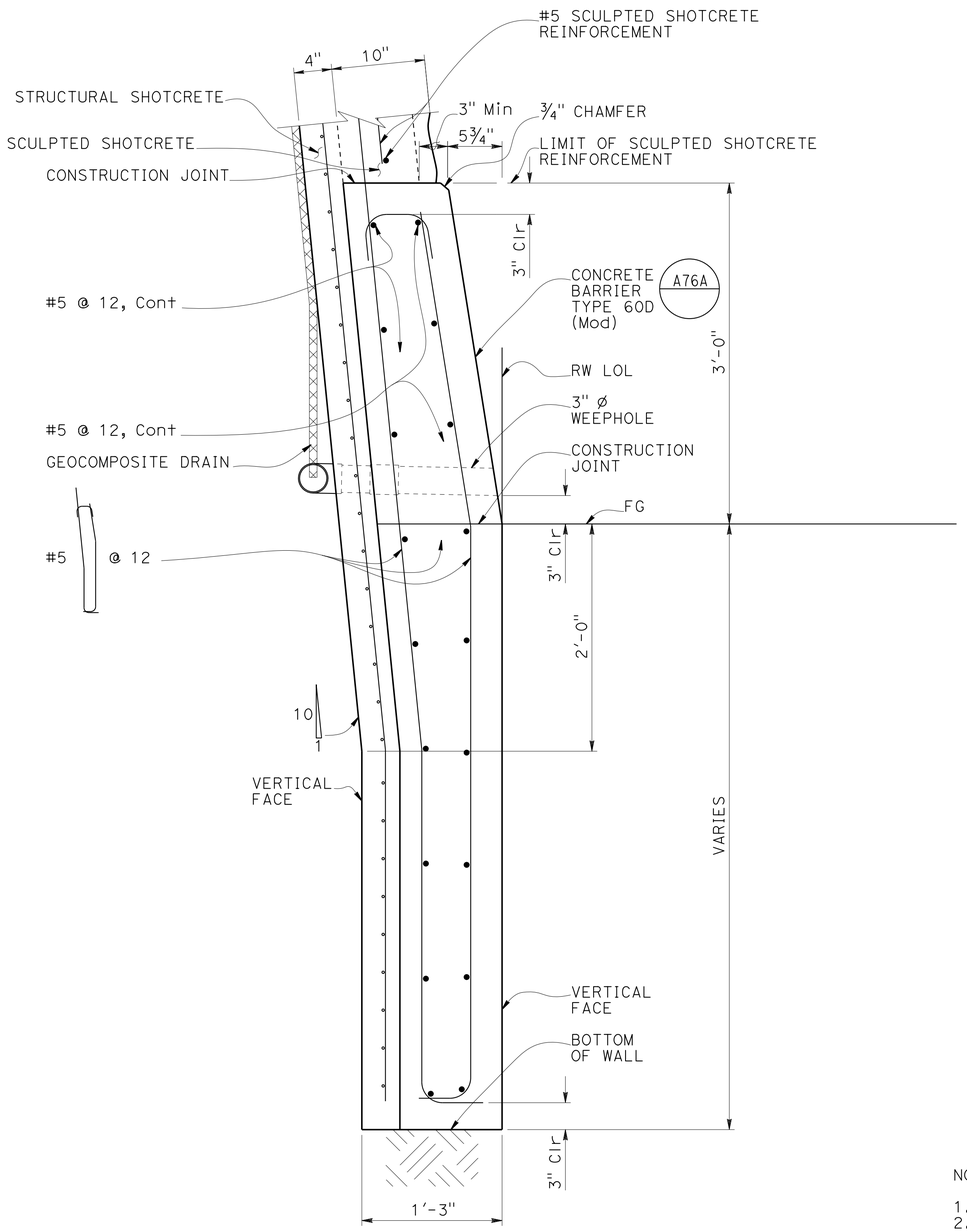

DETAIL D
1 1/2" = 1'-0"

NOTE:

1. Soil nails not shown for clarity.
2. Concrete barrier shall be integrally colored.

DESIGN	BY Sameh Hegazi	CHECKED Rangina Amir	
DETAILS	BY Antonio Carreon	CHECKED S Hegazi/R Amir	
QUANTITIES	BY Rangina Amir	CHECKED Sameh Hegazi	

STATE OF CALIFORNIA
DEPARTMENT OF TRANSPORTATION

DIVISION OF ENGINEERING SERVICES
STRUCTURE DESIGN
DESIGN BRANCH 8

BRIDGE NO. 37E0115
POST MILE 1.24/1.30

HECKER PASS SOIL NAIL WALL NO. 4
STRUCTURAL DETAILS NO. 2

STRUCTURES DESIGN DETAIL SHEET (ENGLISH) (REV. 09-01-10)

ORIGINAL SCALE IN INCHES FOR REDUCED PLANS 0 1 2 3

UNIT: 3593
PROJECT NUMBER & PHASE: 0400000813-1
CONTRACT NO.: 04-2A2501

DISREGARD PRINTS BEARING EARLIER REVISION DATES

REVISION DATES: 05-10-13 ~~05-24-12~~ ~~07-20-12~~

SHEET 7 OF 17

FILE => 37e0115-g-rwdt02.dgn

USERNAME => s124496 DATE PLOTTED => 21-JUN-2013 TIME PLOTTED => 07:30

DIST	COUNTY	ROUTE	POST MILES TOTAL PROJECT	SHEET No.	TOTAL SHEETS
04	SCI	152	0.1/5.2	306	416

REGISTERED CIVIL ENGINEER 08-01-12 DATE

6-17-13
PLANS APPROVAL DATE

REGISTERED PROFESSIONAL ENGINEER
Sameh Hegazi
No. C64899
Exp. 09-30-2013
CIVIL
STATE OF CALIFORNIA

The State of California or its officers or agents shall not be responsible for the accuracy or completeness of electronic copies of this plan sheet.

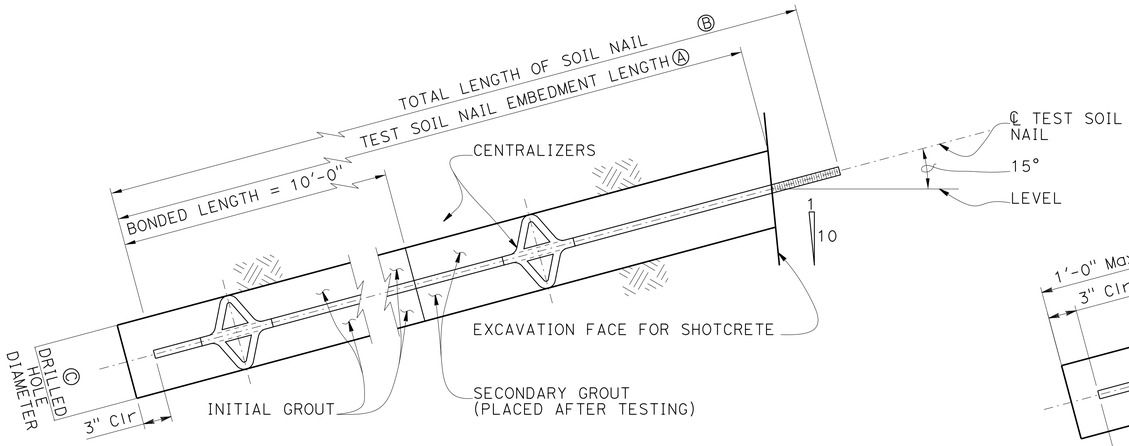

PROOF TEST SOIL NAIL DETAIL

No Scale

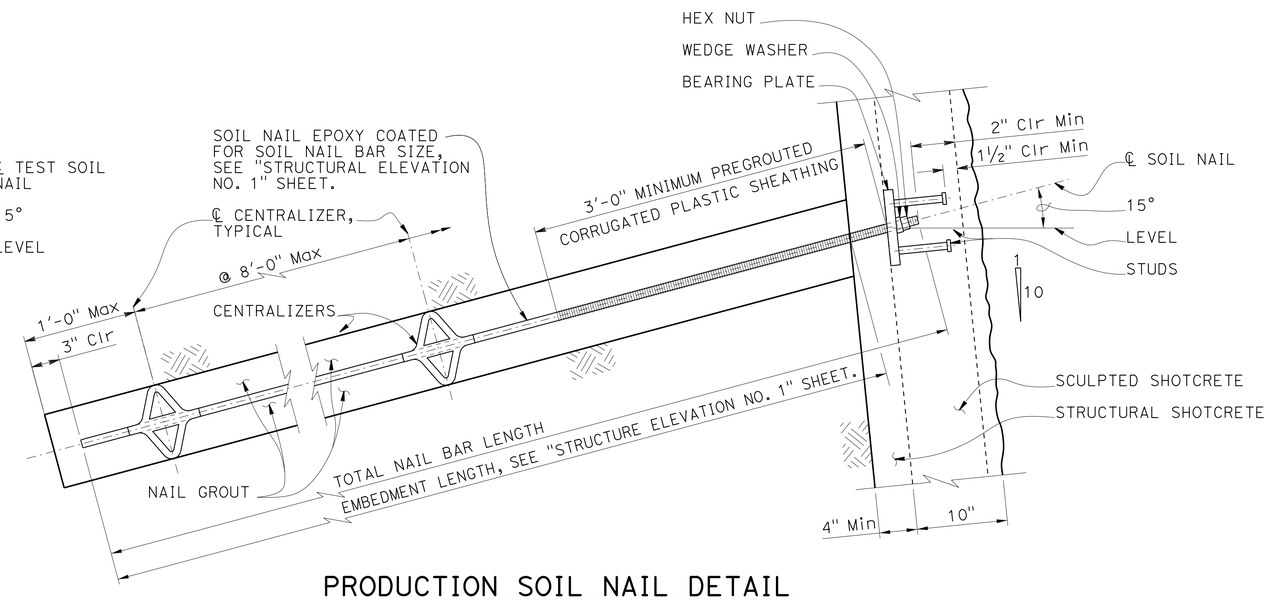

PRODUCTION SOIL NAIL DETAIL

No Scale

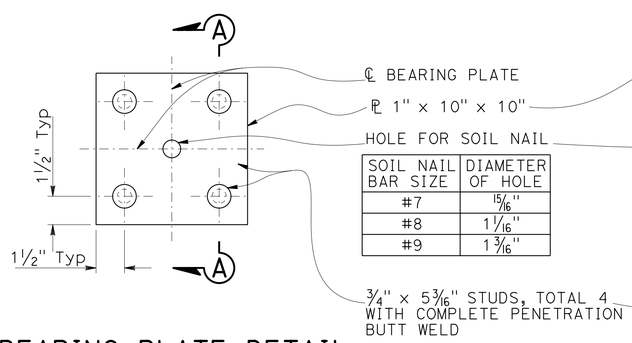

SOIL NAIL BAR SIZE	DIAMETER OF HOLE
#7	15/16"
#8	1 1/16"
#9	1 3/16"

BEARING PLATE DETAIL

No Scale

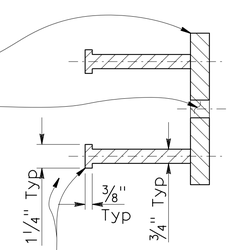

SECTION A-A

No Scale

NOTES:
1. Geocomposite drain not shown for clarity.
2. Wall reinforcement not shown for clarity.
3. Finished grout surface to be normal to the bar

Ⓐ Embedment length of test soil nails equals 2/3 of embedment length of adjacent production soil nails, but not less than 12'-0".

Ⓑ Total length of test soil nail equals embedment length plus length required for jacking equipment.

Ⓒ Contractor to determine drilled hole diameter.

	BY	CHECKED
DESIGN	Sameh Hegazi	Rangina Amir
DETAILS	Antonio Carreon	S Hegazi/R Amir
QUANTITIES	Rangina Amir	Sameh Hegazi

STATE OF CALIFORNIA
DEPARTMENT OF TRANSPORTATION

DIVISION OF ENGINEERING SERVICES
STRUCTURE DESIGN
DESIGN BRANCH 8

BRIDGE NO. 37E0115
POST MILE 1.24/1.30

HECKER PASS SOIL NAIL WALL NO. 4
STRUCTURAL DETAILS NO. 3

STRUCTURES DESIGN DETAIL SHEET (ENGLISH) (REV. 09-01-10)

ORIGINAL SCALE IN INCHES FOR REDUCED PLANS 0 1 2 3

UNIT: 3593
PROJECT NUMBER & PHASE: 0400000813-1
CONTRACT NO.: 04-2A2501

DISREGARD PRINTS BEARING EARLIER REVISION DATES

REVISION DATES: 02-24-12 04-24-12 07-20-12

SHEET 8 OF 17

FILE => 37e0115-g-rwdt03.dgn

USERNAME => s124496 DATE PLOTTED => 21-JUN-2013 TIME PLOTTED => 07:30

DIST	COUNTY	ROUTE	POST MILES TOTAL PROJECT	SHEET No.	TOTAL SHEETS
04	SCI	152	0.1/5.2	307	416

REGISTERED CIVIL ENGINEER 05-15-13 DATE

6-17-13
PLANS APPROVAL DATE

REGISTERED PROFESSIONAL ENGINEER
Sameh Hegazi
No. C64899
Exp. 09-30-2013
CIVIL
STATE OF CALIFORNIA

The State of California or its officers or agents shall not be responsible for the accuracy or completeness of electronic copies of this plan sheet.

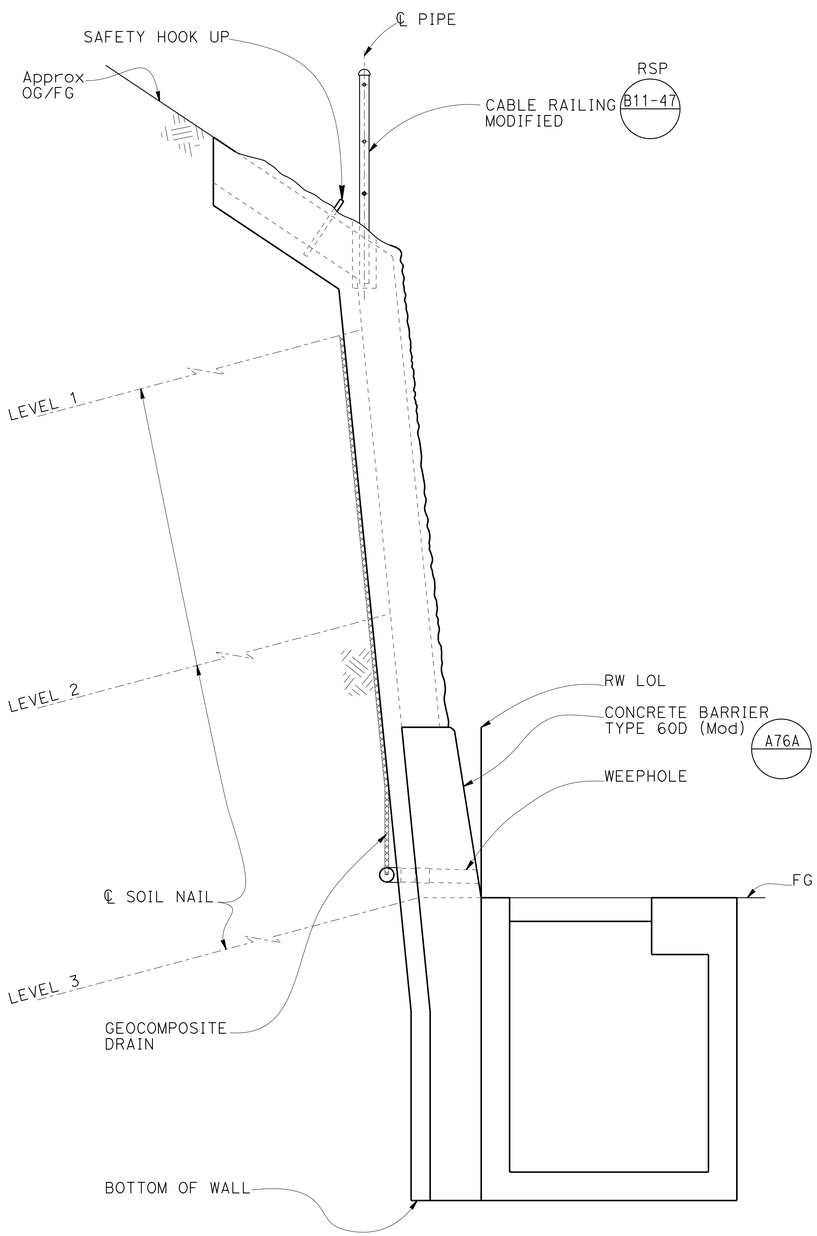

TYPICAL SECTION WITH DROP INLET

No Scale

NOTES:
1. For drainage details not shown, see "ROADWAY PLANS".
2. For drop inlet type, locations and elevations, see "ROAD PLANS".
3 Engineer must adjust bottom elevation to accommodate drainage system shown on "ROAD PLANS".
4. Bottom of wall to be placed against undisturbed material.
5. Drop inlets shall be centered vertically between soil nails.

	BY	CHECKED
DESIGN	Sameh Hegazi	Rangina Amir
DETAILS	Antonio Carreon	S Hegazi/R Amir
QUANTITIES	Rangina Amir	Sameh Hegazi

STATE OF CALIFORNIA
DEPARTMENT OF TRANSPORTATION

DIVISION OF ENGINEERING SERVICES
STRUCTURE DESIGN
DESIGN BRANCH 8

BRIDGE NO. 37E0115
POST MILE 1.24/1.30

HECKER PASS SOIL NAIL WALL NO. 4
DRAINAGE DETAILS NO.1

STRUCTURES DESIGN DETAIL SHEET (ENGLISH) (REV. 09-01-10)

ORIGINAL SCALE IN INCHES FOR REDUCED PLANS 0 1 2 3

UNIT: 3593
PROJECT NUMBER & PHASE: 0400000813-1
CONTRACT NO.: 04-2A2501

DISREGARD PRINTS BEARING EARLIER REVISION DATES

REVISION DATES: 05-10-13 | 05-24-12 | 07-20-12

SHEET 9 OF 17

FILE => 37e0115-r-ddet01.dgn

USERNAME => s124496 DATE PLOTTED => 21-JUN-2013 TIME PLOTTED => 07:30

DIST	COUNTY	ROUTE	POST MILES TOTAL PROJECT	SHEET No.	TOTAL SHEETS
04	SCI	152	0.1/5.2	308	416

REGISTERED CIVIL ENGINEER 08-01-12 DATE

6-17-13
PLANS APPROVAL DATE

REGISTERED PROFESSIONAL ENGINEER Sameh Hegazi No. C64899 Exp. 09-30-2013 CIVIL STATE OF CALIFORNIA

The State of California or its officers or agents shall not be responsible for the accuracy or completeness of electronic copies of this plan sheet.

NOTES:
1. Wall reinforcement not shown for clarity.

Ⓐ Indicates soil nail locations.

Ⓑ Center of geocomposite strips shall be centered vertically between soil nails.

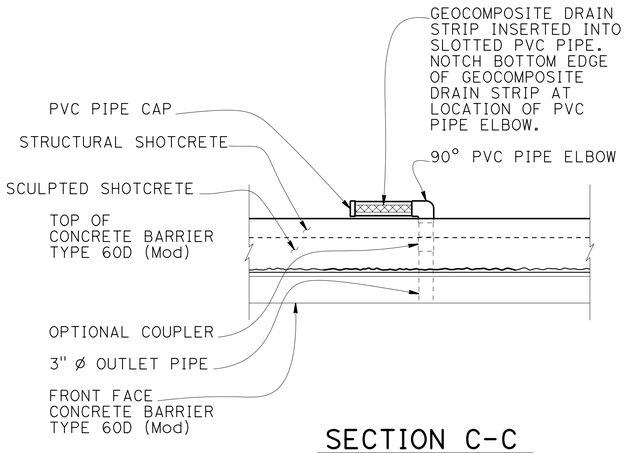

SECTION C-C
No Scale

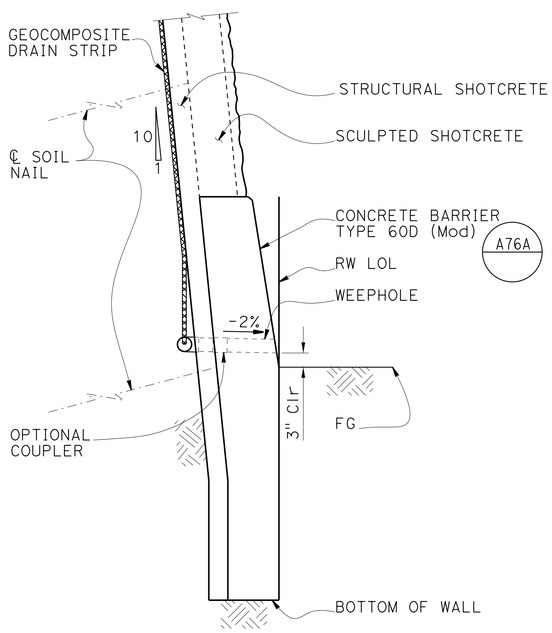

SECTION B-B
No Scale

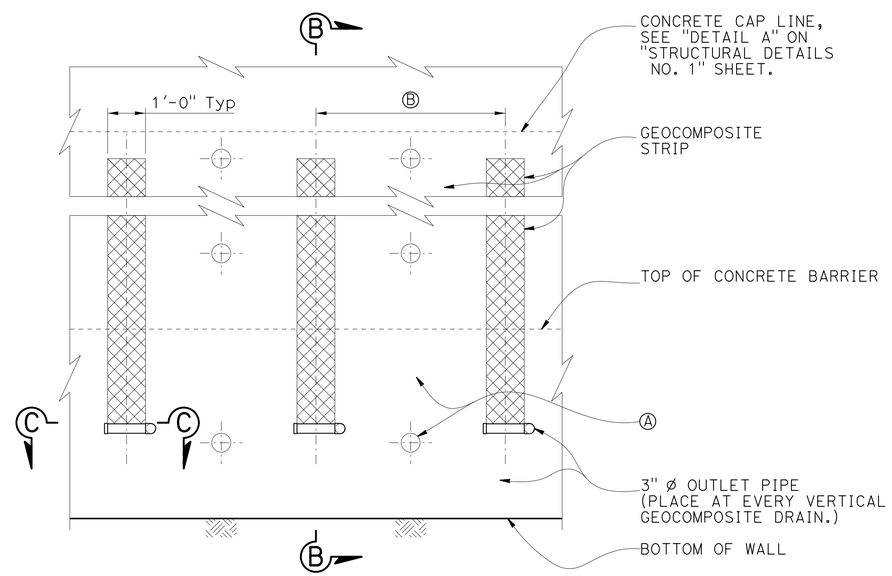

WALL PART ELEVATION
No Scale

DESIGN	BY Sameh Hegazi	CHECKED Rangina Amir	
DETAILS	BY Antonio Carreon	CHECKED S Hegazi/R Amir	
QUANTITIES	BY Rangina Amir	CHECKED Sameh Hegazi	

STATE OF CALIFORNIA
DEPARTMENT OF TRANSPORTATION

DIVISION OF ENGINEERING SERVICES
STRUCTURE DESIGN
DESIGN BRANCH 8

BRIDGE NO. 37E0115
POST MILE 1.24/1.30

HECKER PASS SOIL NAIL WALL NO. 4
DRAINAGE DETAILS NO.2

STRUCTURES DESIGN DETAIL SHEET (ENGLISH) (REV. 09-01-10)

ORIGINAL SCALE IN INCHES FOR REDUCED PLANS 0 1 2 3

UNIT: 3593
PROJECT NUMBER & PHASE: 0400000813-1
CONTRACT NO.: 04-2A2501

DISREGARD PRINTS BEARING EARLIER REVISION DATES

REVISION DATES 02-28-12 05-24-12 07-20-12

SHEET 10 OF 17

FILE => 37e0115-r-ddet02.dgn

USERNAME => s124496 DATE PLOTTED => 21-JUN-2013 TIME PLOTTED => 07:30

DIST	COUNTY	ROUTE	POST MILES TOTAL PROJECT	SHEET No.	TOTAL SHEETS
04	SCI	152	0.1/5.2	309	416

REGISTERED CIVIL ENGINEER 08-01-12 DATE

6-17-13
PLANS APPROVAL DATE

REGISTERED PROFESSIONAL ENGINEER Sameh Hegazi No. C64899 Exp. 09-30-2013 CIVIL STATE OF CALIFORNIA

The State of California or its officers or agents shall not be responsible for the accuracy or completeness of electronic copies of this plan sheet.

LEGEND:

1. PRIMARY STRATA LINES

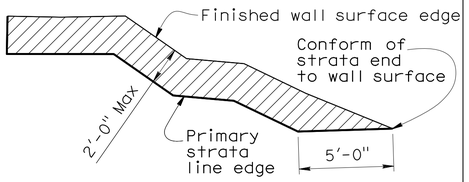

2. SECONDARY STRATA LINES

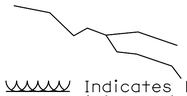

3. Indicates location of weakend planes joint. Joints should not be placed within 18 inches of a nail head. For details, see B0-3 / 3-2

NOTES:

1. Primary strata lines drawn on the front elevation are to be used as a guide for layout of primary strata line reinforcement. See "SCULPTED SHOTCRETE TREATMENT DETAILS NO. 1" and "SCULPTED SHOTCRETE TREATMENT DETAILS NO. 2" sheets.
2. Secondary strata lines drawn on the front elevation are to be used as a general guide. Strata lines shall be sculpted to mimic local geology.
3. This sheet is accurate for sculpted shotcrete treatment only.
4. Sculpted shotcrete surface treatment shall be continuous throughout the face of the wall.
5. Additional shotcrete needed for carving the primary strata lines to be reinforced as shown on "SCULPTED SHOTCRETE TREATMENT DETAILS NO. 1" and "SCULPTED SHOTCRETE TREATMENT DETAILS NO. 2" sheets.
6. Primary strata lines to be tapered into the top and bottom of wall.
7. Secondary strata lines are not to exceed 2" amplitude.
8. 3" Ø weepholes not shown
9. Cable railing not shown for clarity.

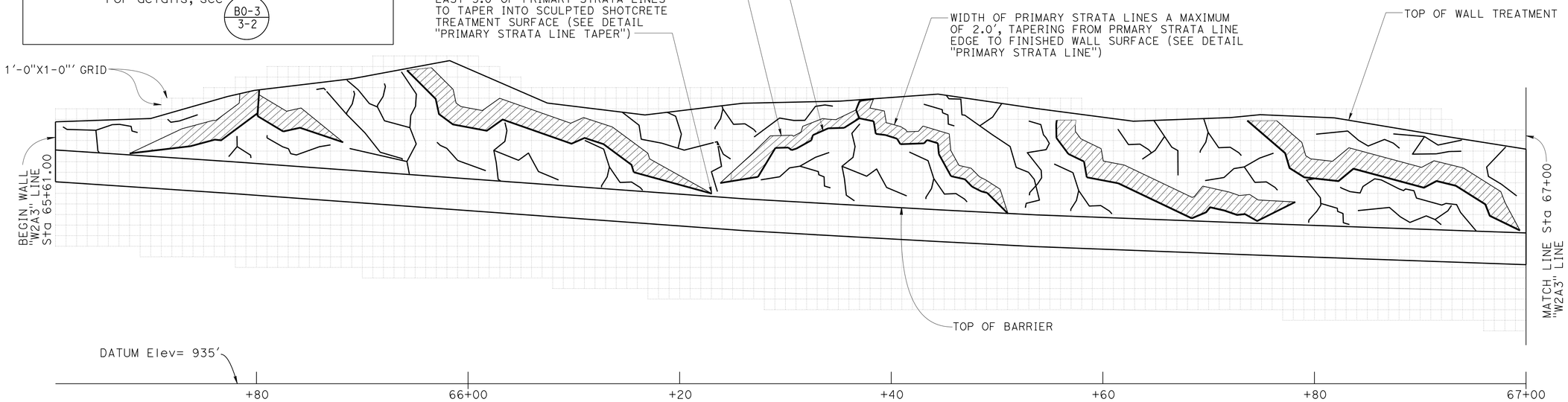

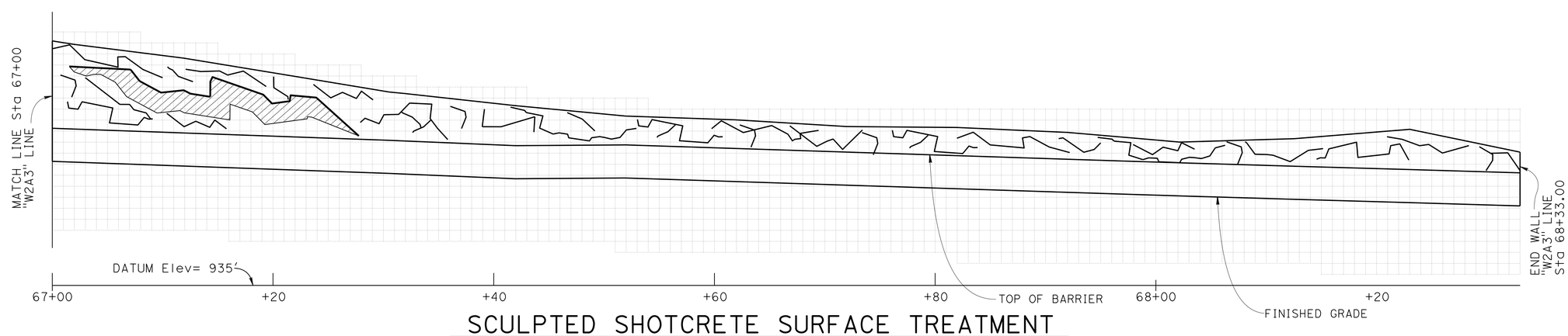

SCULPTED SHOTCRETE SURFACE TREATMENT

3/16"=1

DESIGN	BY Sameh Hegazi	CHECKED Rangina Amir	
DETAILS	BY Antonio Carreon	CHECKED S Hegazi/R Amir	
QUANTITIES	BY Rangina Amir	CHECKED Sameh Hegazi	

STATE OF CALIFORNIA DEPARTMENT OF TRANSPORTATION

DIVISION OF ENGINEERING SERVICES STRUCTURE DESIGN DESIGN BRANCH 8

BRIDGE NO. 37E0115 POST MILE 1.24/1.30

HECKER PASS SOIL NAIL WALL NO. 4
SCULPTED SHOTCRETE TREATMENT

STRUCTURES DESIGN DETAIL SHEET (ENGLISH) (REV. 09-01-10)

ORIGINAL SCALE IN INCHES FOR REDUCED PLANS 0 1 2 3

UNIT: 3593
PROJECT NUMBER & PHASE: 0400000813-1 CONTRACT NO.: 04-2A2501

DISREGARD PRINTS BEARING EARLIER REVISION DATES

REVISION DATES 02-24-12 05-24-12 07-20-12

SHEET 11 OF 17

FILE => 37e0115-u-ato1.dgn

USERNAME => s124496 DATE PLOTTED => 21-JUN-2013 TIME PLOTTED => 07:30

DIST	COUNTY	ROUTE	POST MILES TOTAL PROJECT	SHEET No.	TOTAL SHEETS
04	SCI	152	0.1/5.2	310	416

REGISTERED CIVIL ENGINEER 08-01-12 DATE

6-17-13
PLANS APPROVAL DATE

REGISTERED PROFESSIONAL ENGINEER Sameh Hegazi No. C64899 Exp. 09-30-2013 CIVIL STATE OF CALIFORNIA

The State of California or its officers or agents shall not be responsible for the accuracy or completeness of electronic copies of this plan sheet.

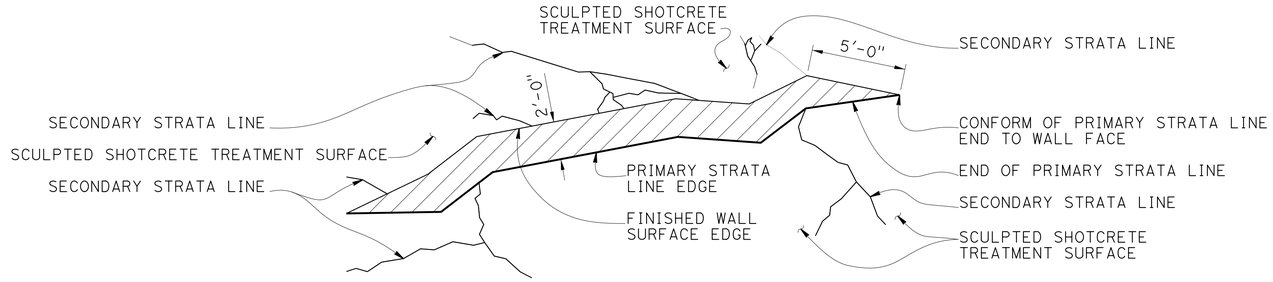

PRIMARY STRATA LINE ELEVATION DETAIL

No Scale

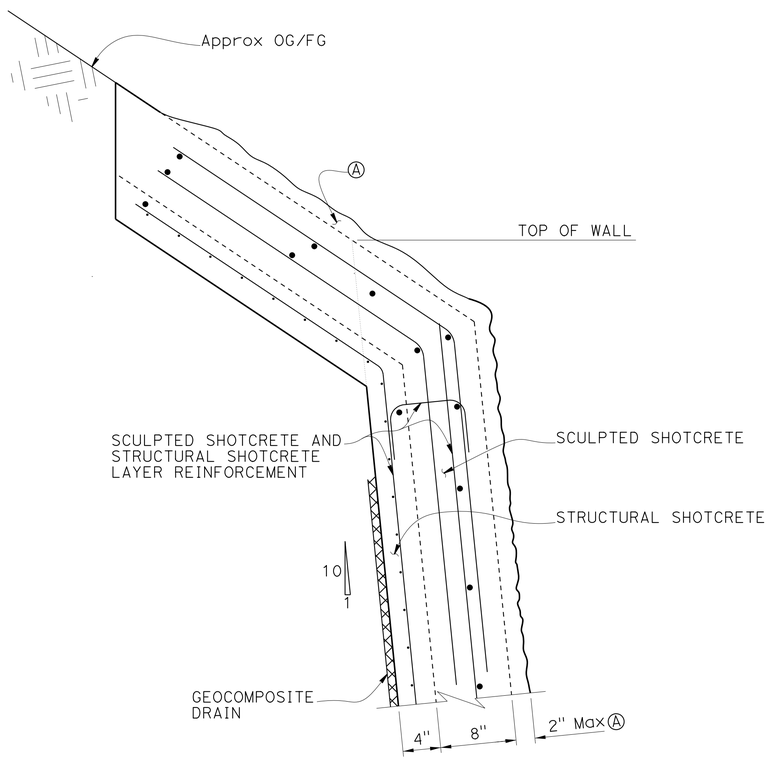

TOP OF WALL SCUPLTED SHOTCRETE TREATMENT REINFORCEMENT

No Scale

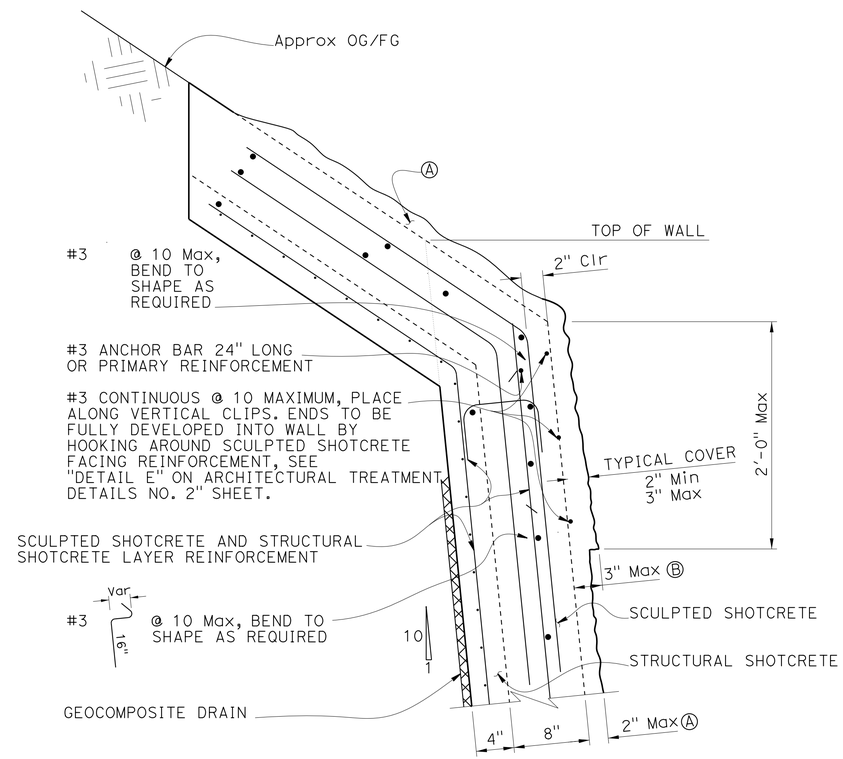

PRIMARY STRATA LINE AT TOP OF WALL SCULPTED SHOTCRETE TREATMENT REINFORCEMENT

No Scale

NOTES:
1. See also "SCULPTED SHOTCRETE TREATMENT DETAILS NO. 2" sheet for reinforcement.
2. Soil nail not shown for clarity.
3. Longitudinal bars shall taper to a point and be flush with the finished wall surface at primary strata line ends where it transitions into the wall face.
4. Cable railing post not shown for clarity.

Ⓐ Max 2" thick unreinforced sculpted shotcrete zone for sculpted shotcrete treatment.

Ⓑ Max 3" thick reinforced sculpted shotcrete zone for top of wall sculpted shotcrete treatment.

	BY	CHECKED
DESIGN	Sameh Hegazi	Rangina Amir
DETAILS	Antonio Carreon	S Hegazi/R Amir
QUANTITIES	Rangina Amir	Sameh Hegazi

STATE OF CALIFORNIA DEPARTMENT OF TRANSPORTATION

DIVISION OF ENGINEERING SERVICES STRUCTURE DESIGN DESIGN BRANCH 8

BRIDGE NO. 37E0115
POST MILE 1.24/1.30

HECKER PASS SOIL NAIL WALL NO. 4

SCULPTED SHOTCRETE TREATMENT DETAILS NO. 1

STRUCTURES DESIGN DETAIL SHEET (ENGLISH) (REV. 09-01-10)

ORIGINAL SCALE IN INCHES FOR REDUCED PLANS 0 1 2 3

UNIT: 3593
PROJECT NUMBER & PHASE: 0400000813-1
CONTRACT NO.: 04-2A2501

DISREGARD PRINTS BEARING EARLIER REVISION DATES

REVISION DATES 02-24-12 05-24-12 07-20-12

SHEET 12 OF 17

FILE => 37e0115-u-ato2.dgn

USERNAME => s124496 DATE PLOTTED => 21-JUN-2013 TIME PLOTTED => 07:30

DIST	COUNTY	ROUTE	POST MILES TOTAL PROJECT	SHEET No.	TOTAL SHEETS
04	SCI	152	0.1/5.2	311	416

REGISTERED CIVIL ENGINEER 08-01-12 DATE

6-17-13
PLANS APPROVAL DATE

REGISTERED PROFESSIONAL ENGINEER
Sameh Hegazi
No. C64899
Exp. 09-30-2013
CIVIL
STATE OF CALIFORNIA

The State of California or its officers or agents shall not be responsible for the accuracy or completeness of electronic copies of this plan sheet.

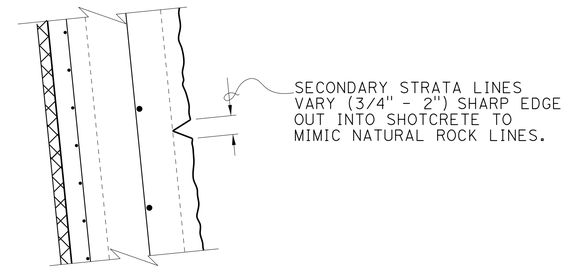

CROSS SECTION SECONDARY STRATA LINE

No Scale

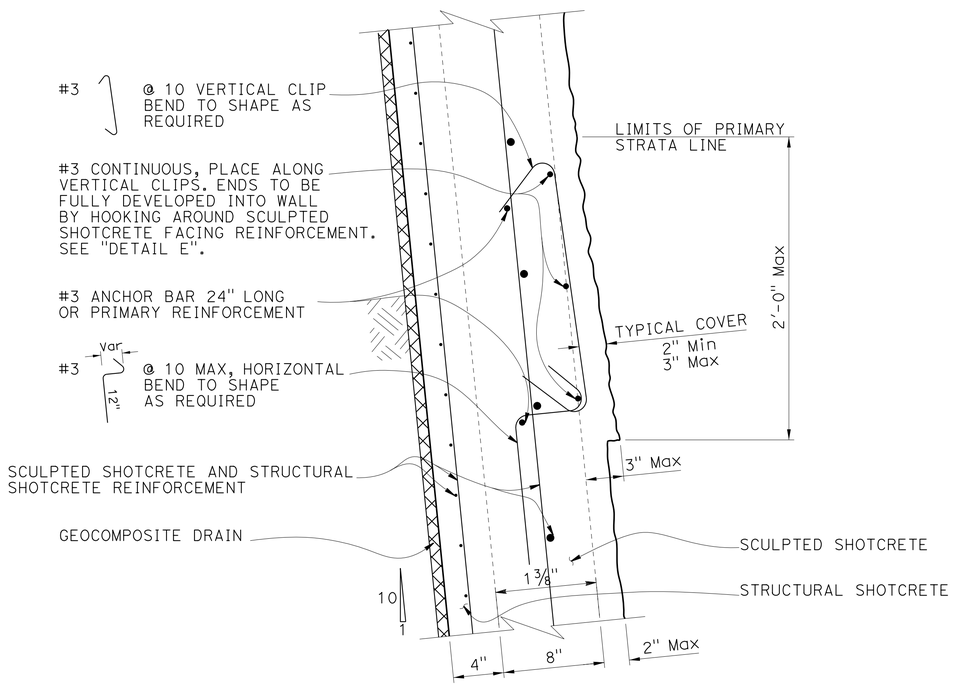

PRIMARY STRATA LINE SCULPTED SHOTCRETE TREATMENT REINFORCEMENT

No Scale

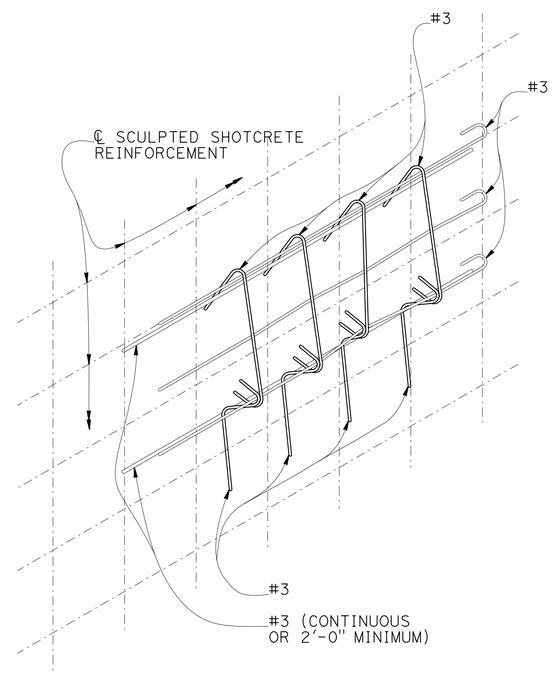

DETAIL E

No Scale

DESIGN	BY Sameh Hegazi	CHECKED Rangina Amir	
DETAILS	BY Antonio Carreon	CHECKED S Hegazi/R Amir	
QUANTITIES	BY Rangina Amir	CHECKED Sameh Hegazi	

STATE OF CALIFORNIA
DEPARTMENT OF TRANSPORTATION

DIVISION OF ENGINEERING SERVICES
STRUCTURE DESIGN
DESIGN BRANCH 8

BRIDGE NO. 37E0115
POST MILE 1.24/1.30

HECKER PASS SOIL NAIL WALL NO. 4

SCULPTED SHOTCRETE TREATMENT DETAILS NO. 2

STRUCTURES DESIGN DETAIL SHEET (ENGLISH) (REV. 09-01-10)

ORIGINAL SCALE IN INCHES FOR REDUCED PLANS 0 1 2 3

UNIT: 3593
PROJECT NUMBER & PHASE: 0400000813-1
CONTRACT NO.: 04-2A2501

DISREGARD PRINTS BEARING EARLIER REVISION DATES

REVISION DATES 09-07-11 02-28-12 05-24-12 07-20-12

SHEET 13 OF 17

FILE => 37e0115-u-ato3.dgn

USERNAME => s124436 DATE PLOTTED => 21-JUN-2013 TIME PLOTTED => 07:30

DIST	COUNTY	ROUTE	POST MILES TOTAL PROJECT	SHEET No	TOTAL SHEETS
04	SCI	152	0.1/5.2	312	416

Ali Kaddoura 02-15-12
REGISTERED CIVIL ENGINEER

6-17-13
PLANS APPROVAL DATE

REGISTERED PROFESSIONAL ENGINEER
Ali K. Kaddoura
No. 55710
Exp. 12-31-12
CIVIL
STATE OF CALIFORNIA

The State of California or its officers or agents shall not be responsible for the accuracy or completeness of electronic copies of this plan sheet.

This LOTB sheet was prepared in accordance with the Caltrans Soil & Rock Logging, Classification, & Presentation Manual (2010 Edition).

NOTE: 1. This LOTB sheet was prepared in accordance with the Caltrans Soil & Rock Logging, Classification, and Presentation Manual (April 2010).

2. PP=unconfined compressive strength (tsf) as measured by pocket penetrometer.

3. *NR: Not Recorded.

BENCH MARK

FD887 (PRHV887)

1" I.P. w/CT PP & T
32.55 Ft Rt. "C" Line, ℄ Rte 152
Sta. 69+07.18
N 1,821,465.83
E 6,210,792.35
Elev.=934.65

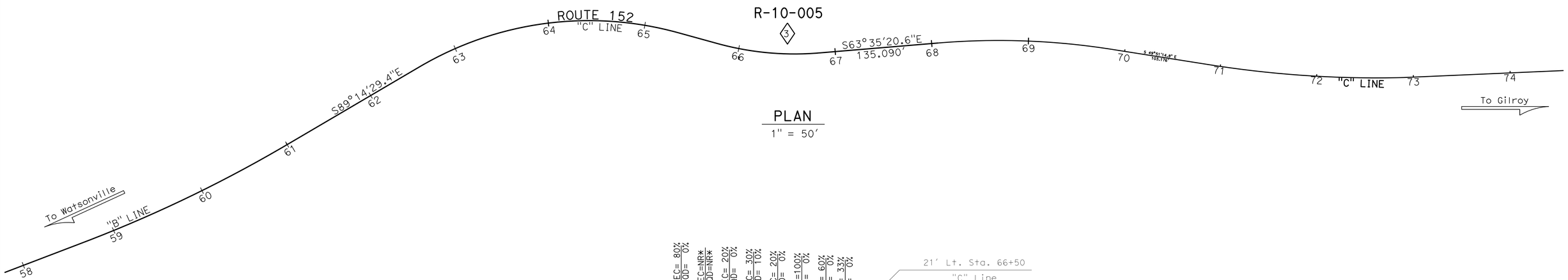

PLAN
1" = 50'

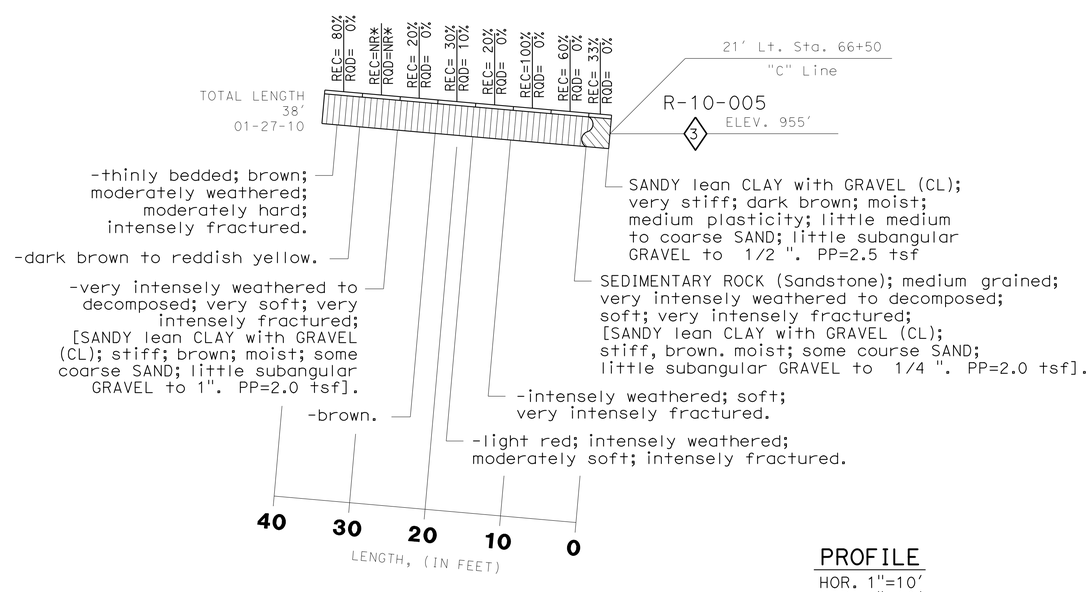

PROFILE
HOR. 1"=10'
VER. 1"=10'

ENGINEERING SERVICES		GEOTECHNICAL SERVICES	STATE OF CALIFORNIA DEPARTMENT OF TRANSPORTATION	DIVISION OF ENGINEERING SERVICES OFFICE OF GEOTECHNICAL DESIGN BRANCH	BRIDGE NO. 37E0115 / POST MILES 1.24/1.30	HECKER PASS SOIL NAIL WALL NO. 4
FUNCTIONAL SUPERVISOR	DRAWN BY: M. Reynolds 10/10	FIELD INVESTIGATION BY: A. Kaddoura				LOG OF TEST BORINGS 1 OF 4
NAME:	CHECKED BY: M. Gaffney					

ORIGINAL SCALE IN INCHES FOR REDUCED PLANS 0 1 2 3

CU 04
EA 2A2501

DISREGARD PRINTS BEARING EARLIER REVISION DATES 03-08-12 05-24-12

REVISION DATES

SHEET 14 OF 17

FILE => 37e0115-z-litb01.dgn

USERNAME => s124496 DATE PLOTTED => 21-JUN-2013 TIME PLOTTED => 07:30

DIST	COUNTY	ROUTE	POST MILES TOTAL PROJECT	SHEET No	TOTAL SHEETS
04	SCI	152	0.1/5.2	313	416

Ali Kaddoura 02-15-12
REGISTERED CIVIL ENGINEER DATE

6-17-13
PLANS APPROVAL DATE

REGISTERED PROFESSIONAL ENGINEER Ali K. Kaddoura No. 55710 Exp. 12-31-12 CIVIL STATE OF CALIFORNIA

The State of California or its officers or agents shall not be responsible for the accuracy or completeness of electronic copies of this plan sheet.

REFERENCE: CALTRANS SOIL & ROCK LOGGING, CLASSIFICATION, AND PRESENTATION MANUAL (JUNE 2007)

CEMENTATION

Description	Criteria
Weak	Crumbles or breaks with handling or little finger pressure.
Moderate	Crumbles or breaks with considerable finger pressure.
Strong	Will not crumble or break with finger pressure.

CONSISTENCY OF COHESIVE SOILS

Description	Unconfined Compressive Strength (tsf)	Pocket Penetrometer Measurement (tsf)	Torvane Measurement (tsf)	Field Approximation
Very Soft	< 0.25	< 0.25	< 0.12	Easily penetrated several inches by fist
Soft	0.25 to 0.50	0.25 to 0.50	0.12 to 0.25	Easily penetrated several inches by thumb
Medium Stiff	0.50 to 1.0	0.50 to 1.0	0.25 to 0.50	Penetrated several inches by thumb with moderate effort
Stiff	1 to 2	1 to 2	0.50 to 1.0	Readily indented by thumb but penetrated only with great effort
Very Stiff	2 to 4	2 to 4	1.0 to 2.0	Readily indented by thumbnail
Hard	> 4.0	> 4.0	> 2.0	Indented by thumbnail with difficulty

BOREHOLE IDENTIFICATION

Symbol	Hole Type	Description
Size	A	Auger Boring
Size	R P	Rotary drilled boring Rotary percussion boring (air)
Size	R	Rotary drilled diamond core
Size	HD HA	Hand driven (1-inch soil tube) Hand Auger
●	D	Dynamic Cone Penetration Boring
▲	CPT	Cone Penetration Test (ASTM D 5778-95)
⬚	O	Other

Note: Size in inches.

PLASTICITY OF FINE-GRAINED SOILS

Description	Criteria
Nonplastic	A 1/8-inch thread cannot be rolled at any water content.
Low	The thread can barely be rolled and the lump cannot be formed when drier than the plastic limit.
Medium	The thread is easy to roll and not much time is required to reach the plastic limit. The thread cannot be rerolled after reaching the plastic limit. The lump crumbles when drier than the plastic limit.
High	It takes considerable time rolling and kneading to reach the plastic limit. The thread can be rerolled several times after reaching the plastic limit. The lump can be formed without crumbling when drier than the plastic limit.

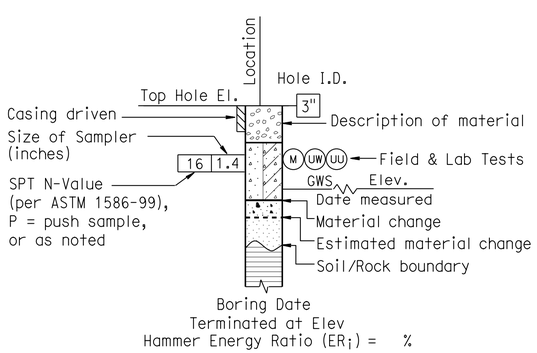

ROTARY BORING

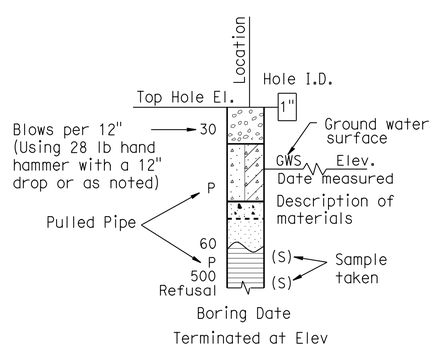

HAND BORING

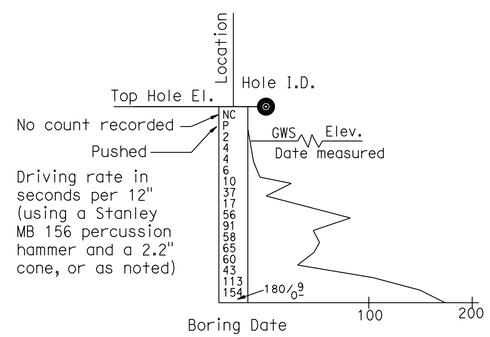

DYNAMIC CONE PENETRATION BORING

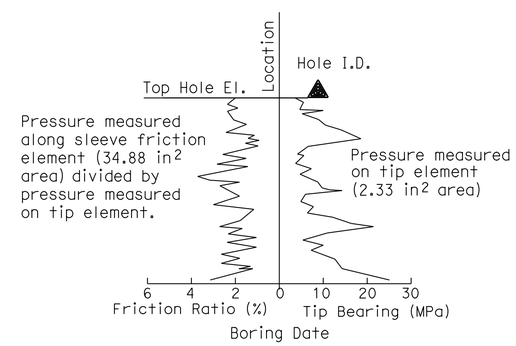

CONE PENETRATION TEST (CPT) SOUNDING

ENGINEERING SERVICES				GEOTECHNICAL SERVICES
FUNCTIONAL SUPERVISOR	PREPARED BY	M. Reynolds	10/10	FIELD INVESTIGATION BY:
NAME:	CHECKED BY	M. Gaffney		A. Kaddoura C. Risden

STATE OF CALIFORNIA DEPARTMENT OF TRANSPORTATION

DIVISION OF ENGINEERING SERVICES OFFICE OF GEOTECHNICAL DESIGN BRANCH

BRIDGE NO. 37E0115
POST MILE 1.24/1.30

HECKER PASS SOIL NAIL WALL NO. 2

LOG OF TEST BORINGS 2 OF 4

GS LOTB SOIL LEGEND

ORIGINAL SCALE IN INCHES FOR REDUCED PLANS 0 1 2 3

CU 04
EA 2A2501

DISREGARD PRINTS BEARING EARLIER REVISION DATES 03-08-12 05-24-12

REVISION DATES

SHEET 15 OF 17

FILE => 37e0115-z-ltb02.dgn

USERNAME => s124496 DATE PLOTTED => 21-JUN-2013 TIME PLOTTED => 07:30

REFERENCE: CALTRANS SOIL & ROCK LOGGING, CLASSIFICATION, AND PRESENTATION MANUAL (JUNE 2007)

DIST	COUNTY	ROUTE	POST MILES TOTAL PROJECT	SHEET No	TOTAL SHEETS
04	SCI	152	0.1/5.2	314	416

Ali Kaddoura 02-15-12
REGISTERED CIVIL ENGINEER DATE

6-17-13
PLANS APPROVAL DATE

REGISTERED PROFESSIONAL ENGINEER Ali K. Kaddoura No. 55710 Exp. 12-31-12 CIVIL STATE OF CALIFORNIA

The State of California or its officers or agents shall not be responsible for the accuracy or completeness of electronic copies of this plan sheet.

GROUP SYMBOLS AND NAMES

Graphic/Symbol	Group Names
GW	Well-graded GRAVEL Well-graded GRAVEL with SAND
GP	Poorly graded GRAVEL Poorly graded GRAVEL with SAND
GW-GM	Well-graded GRAVEL with SILT Well-graded GRAVEL with SILT and SAND
GW-GC	Well-graded GRAVEL with CLAY (or SILTY CLAY) Well-graded GRAVEL with CLAY and SAND (or SILTY CLAY and SAND)
GP-GM	Poorly graded GRAVEL with SILT Poorly graded GRAVEL with SILT and SAND
GP-GC	Poorly graded GRAVEL with CLAY (or SILTY CLAY) Poorly graded GRAVEL with CLAY and SAND (or SILTY CLAY and SAND)
GM	SILTY GRAVEL SILTY GRAVEL with SAND
GC	CLAYEY GRAVEL CLAYEY GRAVEL with SAND
GC-GM	SILTY, CLAYEY GRAVEL SILTY, CLAYEY GRAVEL with SAND
SW	Well-graded SAND Well-graded SAND with GRAVEL
SP	Poorly graded SAND Poorly graded SAND with GRAVEL
SW-SM	Well-graded SAND with SILT Well-graded SAND with SILT and GRAVEL
SW-SC	Well-graded SAND with CLAY (or SILTY CLAY) Well-graded SAND with CLAY and GRAVEL (or SILTY CLAY and GRAVEL)
SP-SM	Poorly graded SAND with SILT Poorly graded SAND with SILT and GRAVEL
SP-SC	Poorly graded SAND with CLAY (or SILTY CLAY) Poorly graded SAND with CLAY and GRAVEL (or SILTY CLAY and GRAVEL)
SM	SILTY SAND SILTY SAND with GRAVEL
SC	CLAYEY SAND CLAYEY SAND with GRAVEL
SC-SM	SILTY, CLAYEY SAND SILTY, CLAYEY SAND with GRAVEL
PT	PEAT
	COBBLES COBBLES and BOULDERS BOULDERS

Graphic/Symbol	Group Names
CL	Lean CLAY Lean CLAY with SAND Lean CLAY with GRAVEL SANDY lean CLAY SANDY lean CLAY with GRAVEL GRAVELLY lean CLAY GRAVELLY lean CLAY with SAND
CL-ML	SILTY CLAY SILTY CLAY with SAND SILTY CLAY with GRAVEL SANDY SILTY CLAY SANDY SILTY CLAY with GRAVEL GRAVELLY SILTY CLAY GRAVELLY SILTY CLAY with SAND
ML	SILT SILT with SAND SILT with GRAVEL SANDY SILT SANDY SILT with GRAVEL GRAVELLY SILT GRAVELLY SILT with SAND
OL	ORGANIC lean CLAY ORGANIC lean CLAY with SAND ORGANIC lean CLAY with GRAVEL SANDY ORGANIC lean CLAY SANDY ORGANIC lean CLAY with GRAVEL GRAVELLY ORGANIC lean CLAY GRAVELLY ORGANIC lean CLAY with SAND
OL	ORGANIC SILT ORGANIC SILT with SAND ORGANIC SILT with GRAVEL SANDY ORGANIC SILT SANDY ORGANIC SILT with GRAVEL GRAVELLY ORGANIC SILT GRAVELLY ORGANIC SILT with SAND
CH	Fat CLAY Fat CLAY with SAND Fat CLAY with GRAVEL SANDY fat CLAY SANDY fat CLAY with GRAVEL GRAVELLY fat CLAY GRAVELLY fat CLAY with SAND
MH	Elastic SILT Elastic SILT with SAND Elastic SILT with GRAVEL SANDY elastic SILT SANDY elastic SILT with GRAVEL GRAVELLY elastic SILT GRAVELLY elastic SILT with SAND
OH	ORGANIC fat CLAY ORGANIC fat CLAY with SAND ORGANIC fat CLAY with GRAVEL SANDY ORGANIC fat CLAY SANDY ORGANIC fat CLAY with GRAVEL GRAVELLY ORGANIC fat CLAY GRAVELLY ORGANIC fat CLAY with SAND
OH	ORGANIC elastic SILT ORGANIC elastic SILT with SAND ORGANIC elastic SILT with GRAVEL SANDY ORGANIC elastic SILT SANDY ORGANIC elastic SILT with GRAVEL GRAVELLY ORGANIC elastic SILT GRAVELLY ORGANIC elastic SILT with SAND
OL/OH	ORGANIC SOIL ORGANIC SOIL with SAND ORGANIC SOIL with GRAVEL SANDY ORGANIC SOIL SANDY ORGANIC SOIL with GRAVEL GRAVELLY ORGANIC SOIL GRAVELLY ORGANIC SOIL with SAND

FIELD AND LABORATORY TESTING

- (C) Consolidation (ASTM D 2435)
- (CL) Collapse Potential (ASTM D 5333)
- (CP) Compaction Curve (CTM 216)
- (CR) Corrosivity Testing (CTM 643, CTM 422, CTM 417)
- (CU) Consolidated Undrained Triaxial (ASTM D 4767)
- (DS) Direct Shear (ASTM D 3080)
- (EI) Expansion Index (ASTM D 4829)
- (M) Moisture Content (ASTM D 2216)
- (OC) Organic Content-% (ASTM D 2974)
- (P) Permeability (CTM 220)
- (PA) Particle Size Analysis (ASTM D 422)
- (PI) Plasticity Index (AASHTO T 90) Liquid Limit (AASHTO T 89)
- (PL) Point Load Index (ASTM D 5731)
- (PM) Pressure Meter
- (PP) Pocket Penetrometer
- (R) R-Value (CTM 301)
- (SE) Sand Equivalent (CTM 217)
- (SG) Specific Gravity (AASHTO T 100)
- (SL) Shrinkage Limit (ASTM D 427)
- (SW) Swell Potential (ASTM D 4546)
- (TV) Pocket Torvane
- (UC) Unconfined Compression-Soil (ASTM D 2166) Unconfined Compression-Rock (ASTM D 2938)
- (UU) Unconsolidated Undrained Triaxial (ASTM D 2850)
- (UW) Unit Weight (ASTM D 4767)
- (VS) Vane Shear (AASHTO T 223)

APPARENT DENSITY OF COHESIONLESS SOILS

Description	SPT N_{60} (Blows / 12 inches)
Very loose	0 - 4
Loose	5 - 10
Medium Dense	11 - 30
Dense	31 - 50
Very Dense	> 50

MOISTURE

Description	Criteria
Dry	Absence of moisture, dusty, dry to the touch
Moist	Damp but no visible water
Wet	Visible free water, usually soil is below water table

PERCENT OR PROPORTION OF SOILS

Description	Criteria
Trace	Particles are present but estimated to be less than 5%
Few	5 to 10%
Little	15 to 25%
Some	30 to 45%
Mostly	50 to 100%

PARTICLE SIZE

Description		Size
Boulder		> 12"
Cobble		3" to 12"
Gravel	Coarse	3/4" to 3"
	Fine	No. 4 to 3/4"
Sand	Coarse	No. 10 to No. 4
	Medium	No. 40 to No. 10
	Fine	No. 200 to No. 40

ENGINEERING SERVICES			
FUNCTIONAL SUPERVISOR	PREPARED BY	M. Reynolds	10/10
NAME:	CHECKED BY	M. Gaffney	

GEOTECHNICAL SERVICES
FIELD INVESTIGATION BY:
A. Kadoura
C. Risden

STATE OF CALIFORNIA
DEPARTMENT OF TRANSPORTATION

DIVISION OF ENGINEERING SERVICES
OFFICE OF GEOTECHNICAL
DESIGN BRANCH

BRIDGE NO. 37E0115
POST MILE 1.24/1.30

HECKER PASS SOIL NAIL WALL NO. 4
LOG OF TEST BORINGS 3 OF 4

GS LOTB SOIL LEGEND

ORIGINAL SCALE IN INCHES FOR REDUCED PLANS 0 1 2 3

CU 04
EA 2A2501

DISREGARD PRINTS BEARING EARLIER REVISION DATES
REVISION DATES: 03-09-12 05-24-12

SHEET 16 OF 17

FILE => 37e0115-z-ltb03.dgn

USERNAME => s124496 DATE PLOTTED => 21-JUN-2013 TIME PLOTTED => 07:30

REFERENCE: CALTRANS SOIL & ROCK LOGGING, CLASSIFICATION, AND PRESENTATION MANUAL (JUNE 2007)

DIST	COUNTY	ROUTE	POST MILES TOTAL PROJECT	SHEET No	TOTAL SHEETS
04	SCI	152	0.1/5.2	315	416

Ali Kaddoura 02-15-12
REGISTERED CIVIL ENGINEER DATE

6-17-13
PLANS APPROVAL DATE

REGISTERED PROFESSIONAL ENGINEER Ali K. Kaddoura No. 55710 Exp. 12-31-12 CIVIL STATE OF CALIFORNIA

The State of California or its officers or agents shall not be responsible for the accuracy or completeness of electronic copies of this plan sheet.

PERCENT CORE RECOVERY (REC) & ROCK QUALITY DESIGNATION (RQD)

$$REC = \frac{\sum \text{Length of the recovered core pieces (inches)}}{\text{Total length of core run (inches)}} \times 100\%$$

$$RQD = \frac{\sum \text{Length of intact core pieces} \geq 4''}{\text{Total length of core run (inches)}} \times 100\%$$

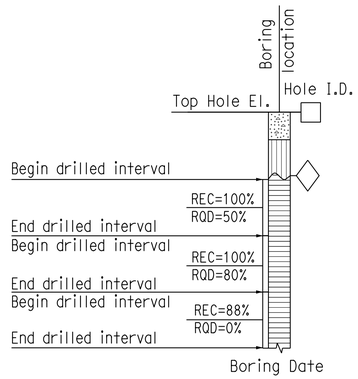

RELATIVE STRENGTH OF INTACT ROCK

Term	Uniaxial Compressive Strength (PSI)
Extremely Strong	> 30,000
Very Strong	14,500 - 30,000
Strong	7,000 - 14,500
Medium Strong	3,500 - 7,000
Weak	700 - 3,500
Very Weak	150 - 700
Extremely Weak	< 150

BEDDING SPACING

Description	Thickness / Spacing
Massive	Greater than 10 ft
Very thickly bedded	3 to 10 ft
Thickly bedded	1 to 3 ft
Moderately bedded	3-5/8" to 1 ft
Thinly bedded	1-1/4" to 3-5/8"
Very thinly bedded	3/8" to 1-1/4"
Laminated	Less than 3/8"

LEGEND OF ROCK MATERIALS

- IGNEOUS ROCK
- SEDIMENTARY ROCK
- METAMORPHIC ROCK

ROCK HARDNESS

Description	Criteria
Extremely Hard	Specimen cannot be scratched with a pocket knife or sharp pick; can only be chipped with repeated heavy hammer blows.
Very Hard	Specimen cannot be scratched with a pocket knife or sharp pick. Breaks with repeated heavy hammer blows.
Hard	Specimen can be scratched with a pocket knife or sharp pick with difficulty (heavy pressure). Heavy hammer blows required to break specimen.
Moderately Hard	Specimen can be scratched with pocket knife or sharp pick with light or moderate pressure. Core breaks with moderate hammer pressure.
Moderately Soft	Specimen can be grooved 1/6" deep with a pocket knife or sharp pick with moderate or heavy pressure. Breaks with light hammer blow or heavy manual pressure.
Soft	Specimen can be grooved or gouged easily by a pocket knife or sharp pick with light pressure, can be scratched with fingernail. Breaks with light to moderate manual pressure.
Very Soft	Specimen can be readily indented, grooved or gouged with fingernail, or carved with a pocket knife. Breaks with light manual pressure.

FRACTURE DENSITY

Description	Observed Fracture Density
Unfractured	No fractures.
Very slightly fractured	Lengths greater than 3 feet.
Slightly fractured	Lengths from 1 to 3 feet with few lengths less than 1 foot or greater than 3 feet.
Moderately fractured	Lengths mostly in 4" to 1 foot range with most lengths about 8"
Intensely fractured	Lengths average from 1 to 4" with scattered fragmented intervals with lengths less than 4"
Very intensely fractured	Mostly chips and fragments with a few scattered short core lengths.

Combination descriptors (such as "Very intensely to intensely fractured") are used where equal distribution of both fracture density characteristics is present over a significant interval or exposure, or where characteristics are "in between" the descriptor definitions. Only two adjacent descriptors may be combined.

WEATHERING DESCRIPTORS FOR INTACT ROCK

Description	Diagnostic features					General Characteristics
	Chemical Weathering-Discoloration and/or oxidation		Mechanical Weathering-Grain boundary conditions (disaggregation) primarily for granitics and some coarse-grained sediments	Texture and Solutioning		
	Body of Rock	Fracture Surfaces		Texture	Solutioning	
Fresh	No discoloration, not oxidized.	No discoloration or oxidation.	No separation, intact (tight).	No change.	No solutioning.	Hammer rings when crystalline rocks are struck.
Slightly Weathered	Discoloration or oxidation is limited to surface of, or short distance from, fractures; some feldspar crystals are dull.	Minor to complete discoloration or oxidation of most surfaces.	No visible separation, intact (tight).	Preserved.	Minor leaching of some soluble minerals may be noted.	Hammer rings when crystalline rocks are struck. Body of rock not weakened.
Moderately Weathered	Discoloration or oxidation extends from fractures usually throughout; Fe-Mg minerals are "rusty," feldspar crystals are "cloudy."	All fracture surfaces are discolored or oxidized.	Partial separation of boundaries visible.	Generally preserved.	Soluble minerals may be mostly leached.	Hammer does not ring when rock is struck. Body of rock is slightly weakened.
Intensely Weathered	Discoloration or oxidation throughout; all feldspars and Fe-Mg minerals are altered to clay to some extent; or chemical alteration produces in-situ disaggregation, see grain boundary conditions.	All fracture surfaces are discolored or oxidized, surfaces friable.	Partial separation, rock is friable; in semiarid conditions granitics are disaggregated.	Texture altered by chemical disintegration (hydration, argillation).	Leaching of soluble minerals may be complete.	Dull sound when struck with hammer, usually can be broken with moderate to heavy manual pressure or by light hammer blow without reference to planes of weakness such as incipient or hairline fractures, or veinlets. Rock is significantly weakened.
Decomposed	Discolored or oxidized throughout, but resistant minerals such as quartz may be unaltered; all feldspars and Fe-Mg minerals are completely altered to clay.		Complete separation of grain boundaries (disaggregated).	Resembles a soil, partial or complete remnant rock structure may be preserved; leaching of soluble minerals usually complete.		Can be granulated by hand. Resistant minerals such as quartz may be present as "stringers" or "dikes."

Combination descriptors (such as "slightly weathered to fresh") are permissible where equal distribution of both weathering characteristics is present over significant intervals or where characteristics present are "in between" the diagnostic feature. However, combination descriptors should not be used where significant, identifiable zones can be delineated. Only two adjacent descriptors may be combined. "Very intensely weathered" is the combination descriptor for "intensely weathered to decomposed."

ENGINEERING SERVICES				GEOTECHNICAL SERVICES
FUNCTIONAL SUPERVISOR	PREPARED BY	M. Reynolds	10/10	FIELD INVESTIGATION BY:
NAME:	CHECKED BY	M. Gaffney		A. Kaddoura C. Risden

GS LOTB ROCK LEGEND

ORIGINAL SCALE IN INCHES FOR REDUCED PLANS 0 1 2 3

STATE OF CALIFORNIA DEPARTMENT OF TRANSPORTATION

DIVISION OF ENGINEERING SERVICES OFFICE OF GEOTECHNICAL DESIGN BRANCH

CU 04
EA 2A2501

BRIDGE NO. 37E0115
POST MILE 1.24/1.30

HECKER PASS SOIL NAIL WALL NO. 4

LOG OF TEST BORINGS 4 OF 4

DISREGARD PRINTS BEARING EARLIER REVISION DATES → 03-08-12 05-24-12

REVISION DATES

SHEET 17 OF 17

FILE => 37e0115-z-ltb04.dgn

USERNAME => s124496 DATE PLOTTED => 21-JUN-2013 TIME PLOTTED => 07:31

DIST	COUNTY	ROUTE	POST MILES TOTAL PROJECT	SHEET No.	TOTAL SHEETS
04	SCI	152	0.1/5.2	316	416

REGISTERED CIVIL ENGINEER 05-15-13 DATE

6-17-13
PLANS APPROVAL DATE

REGISTERED PROFESSIONAL ENGINEER Sameh Hegazi No. C64899 Exp.06-30-2013 CIVIL STATE OF CALIFORNIA

The State of California or its officers or agents shall not be responsible for the accuracy or completeness of electronic copies of this plan sheet.

LEGEND:
- ○ Indicates approximate location of soil nails
- ■ Indicates approximate location of proof test nails

NOTE:
Not all approximate location of soil nails, proof test nails, cable railing posts, and weepholes shown.

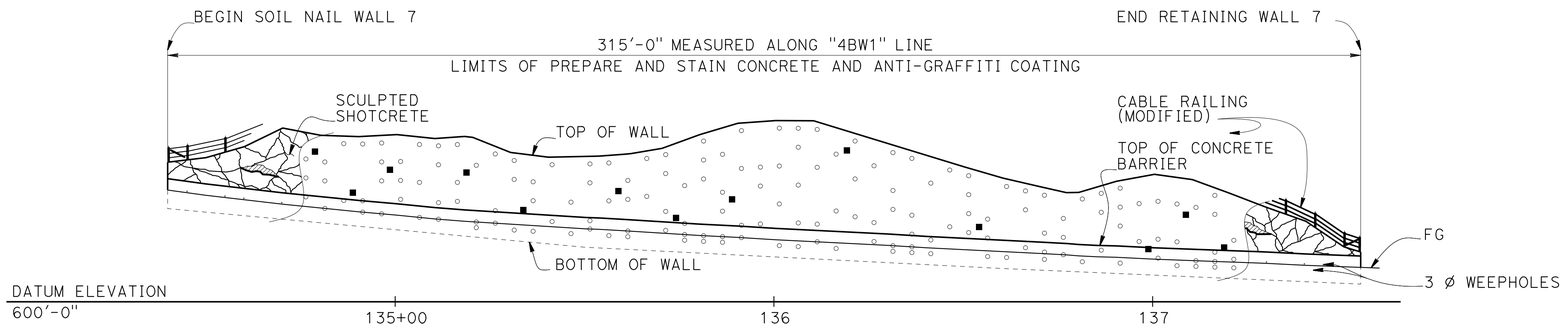

DEVELOPED ELEVATION

1" = 20'

NOTES:
1. Top of the wall elevations shall be verified in the field.
2. Soil nail inclination = 15° typical.
3. The exact locations of the Test Soil Nail to be determined by the Engineer in the field.
4. All soil nail levels are parallel to top of wall except the bottom level which is parallel to bottom of wall.
5. Soil nails shall be placed normal to shotcrete surface in the plan view.
6. The contractor shall field locate all utilities before drilling soil nails.
7. The contractor shall provide and maintain stable soil slopes above and below the soil nail walls.
8. Bottom of wall shall be placed against undisturbed soil material.
9. Prepare and stain sculpted shotcrete surface.
10. Concrete barrier shall be integrally colored and applied with anti-graffiti coating from top of barrier to 6 inches below finished grade.

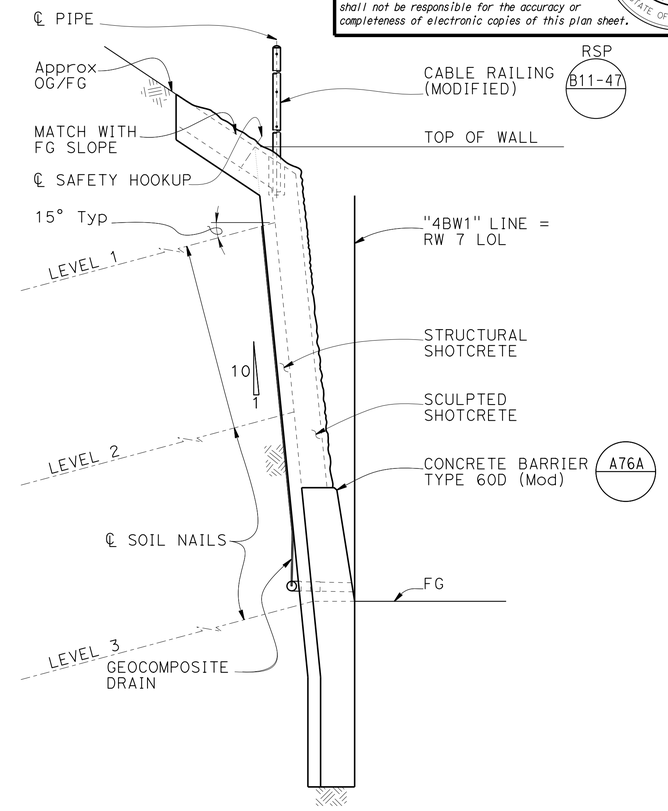

TYPICAL SECTION

½" = 1'

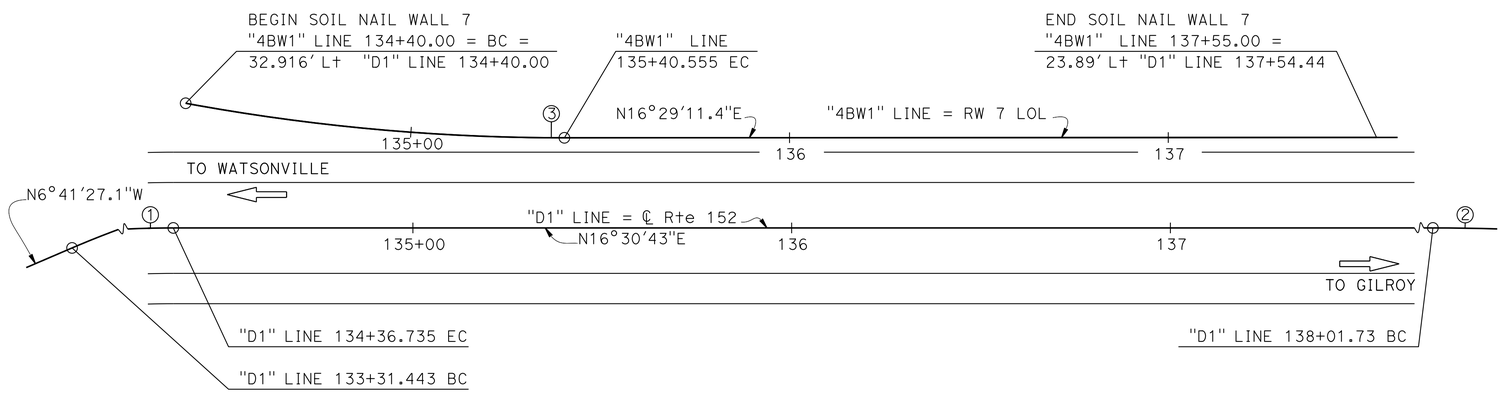

PLAN

1" = 20'

CURVE DATA

Alignment	R	Δ	T	L
"D1" LINE ①	260'	23°12'11"	53.38'	105.29'
"D1" LINE ②	550'	11°35'50"	55.85'	111.32'
"4BW1" LINE ③	550'	10°28'31"	50.42'	100.56'

QUANTITIES

STRUCTURE EXCAVATION (SOIL NAIL WALL)	1,004	CY
STRUCTURE BACKFILL (SOIL NAIL WALL)	64	CY
SOIL NAIL	7,460	LF
BAR REINFORCING STEEL (RETAINING WALL)	26,490	LB
STRUCTURAL SHOTCRETE	106	CY
SCULPTED SHOTCRETE	193	CY
PREPARE AND STAIN SCULPTED SHOTCRETE	6,088	SQF
ANTI-GRAFFITI COATING	945	SQFT
MISCELLANEOUS METAL (SAFETY HOOK)	345	LB
CABLE RAILING (MODIFIED)	315	LF
CONCRETE BARRIER (TYPE 60D MODIFIED)	315	LF

NOTE:
THE CONTRACTOR SHALL VERIFY ALL CONTROLLING FIELD DIMENSIONS BEFORE ORDERING OR FABRICATING ANY MATERIAL.

BRIAN MORI
DESIGN ENGINEER

	BY	CHECKED
DESIGN	S. Hegazi	R. Amir
DETAILS	T. Kusumi	R. Amir / S. Hegazi
QUANTITIES	R. Amir	S. Hegazi

LOAD & RESISTANCE FACTOR DESIGN — LIVE LOADING: HL93 W/"LOW-BOY": PERMIT DESIGN VEHICLE

	BY	CHECKED
LAYOUT	S. Hegazi	A. Menke
SPECIFICATIONS	T. Chen	PLANS AND SPECS COMPARED T. Chen

ORIGINAL SCALE IN INCHES FOR REDUCED PLANS 0 1 2 3

STATE OF CALIFORNIA
DEPARTMENT OF TRANSPORTATION

DIVISION OF ENGINEERING SERVICES
STRUCTURE DESIGN
DESIGN BRANCH 8

BRIDGE NO. 37E0116
POST MILE 2.55/2.61

HECKER PASS SOIL NAIL WALL NO. 7
GENERAL PLAN

UNIT: 3593
PROJECT NUMBER & PHASE: 0400000813-1
CONTRACT NO.: 04-2A2501

DISREGARD PRINTS BEARING EARLIER REVISION DATES

REVISION DATES: 03-26-11 07-18-12 05-08-13

SHEET 1 OF 19

STRUCTURES DESIGN GENERAL PLAN SHEET (ENGLISH) (REV.09-01-10)

FILE => 37e0116-a-gp.dgn

USERNAME => s124496 DATE PLOTTED => 21-JUN-2013 TIME PLOTTED => 09:04

DIST	COUNTY	ROUTE	POST MILES TOTAL PROJECT	SHEET No.	TOTAL SHEETS
04	SCI	152	0.1/5.2	317	416

REGISTERED CIVIL ENGINEER 05-15-13 DATE

6-17-13
PLANS APPROVAL DATE

REGISTERED PROFESSIONAL ENGINEER
Sameh Hegazi
No. C64899
Exp. 06-30-2013
CIVIL
STATE OF CALIFORNIA

The State of California or its officers or agents shall not be responsible for the accuracy or completeness of electronic copies of this plan sheet.

GENERAL NOTES

LOAD AND RESISTANCE FACTOR DESIGN:
AASHTO LRFD Bridge Design Specifications, 4th Editions and the Caltrans Amendments; preface dated Dec., 2009.

FHWA Publication No. FHWA-IF-03-017, Manual for Design and Construction Monitoring of Soil Nail Walls.

REINFORCED CONCRETE & SHOTCRETE:
F'c = 3.6 ksi
Fy = 60 ksi

STRUCTURAL STEEL:
Plates and shapes shall conform to ASTM Designation A709 Grade (36 ksi)

SOIL NAILS:
Soil nails shall conform to ASTM Designation A615, Grade 60, fs = 60 ksi, #7 bars, #8 bars, and #10 bars.

PUNCHING SHEAR:
Ps = 45 Kips

SOIL DESIGN PARAMETERS IN NAILING ZONES:

NAIL DATA TABLE

Zone	"4BW1" Line Station	Unit Weight (lb/ft^3)	Friction Angle Degrees	Cohesion (lb/ft^2)	Design Pull out Resistance (kip/ft)	Upper Elev (ft)	Lower Elev (ft)
1	134+40.00 - 136+00.00	125	32	700	2.0	648	630
2	134+40.00 - 136+00.00	125	32	700	2.0	630	615
3	136+00.00 - 137+55.00	125	32	700	2.0	648	625
4	136+00.00 - 137+55.00	125	32	700	2.0	628	608

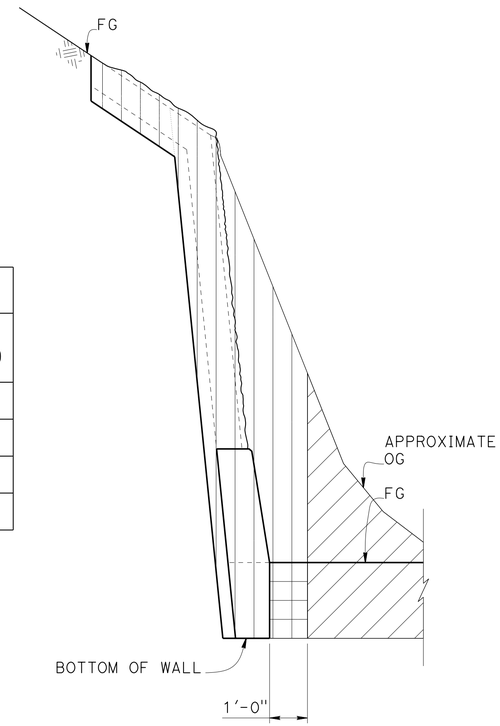

LEGEND:

Structure excavation (Soil Nail Wall)

Structure backfill (Soil Nail Wall)

Roadway excavation (See "ROAD PLANS.")

LIMITS OF PAYMENT FOR EXCAVATION AND BACKFILL

No Scale

INDEX TO PLANS

SHEET NO.	TITLE
1	GENERAL PLAN
2	INDEX TO PLANS
3	FOUNDATION PLAN
4	STRUCTURE ELEVATION NO. 1
5	STRUCTURE ELEVATION NO. 2
6	TYPICAL SECTION
7	STRUCTURAL DETAILS NO. 1
8	STRUCTURAL DETAILS NO. 2
9	STRUCTURAL DETAILS NO. 3
10	DRAINAGE DETAILS NO. 1
11	DRAINAGE DETAILS NO. 2
12	SCULPTED SHOTCRETE TREATMENT NO. 1
13	SCULPTED SHOTCRETE TREATMENT NO. 2
14	SCULPTED SHOTCRETE TREATMENT DETAILS NO. 1
15	SCULPTED SHOTCRETE TREATMENT DETAILS NO. 2
16	LOG OF TEST BORINGS 1 OF 4
17	LOG OF TEST BORINGS 2 OF 4
18	LOG OF TEST BORINGS 3 OF 4
19	LOG OF TEST BORINGS 4 OF 4

STANDARD PLANS DATED MAY 2010

DETAIL	DESCRIPTION
A10A	ABBREVIATIONS (SHEET 1 OF 2)
A10B	ABBREVIATIONS (SHEET 2 OF 2)
A10C	LINES AND SYMBOLS (SHEET 1 OF 3)
A10D	LINES AND SYMBOLS (SHEET 2 OF 3)
A10E	LINES AND SYMBOLS (SHEET 3 OF 3)
A76A	CONCRETE BARRIER TYPE 60
B0-3	BRIDGE DETAILS
RSP B11-47	CABLE RAILING

STANDARD PLAN SHEET NO.

DETAIL NO.

DESIGN	BY S. Hegazi	CHECKED R. Amir	
DETAILS	BY T. Kusumi	CHECKED R. Amir / S. Hegazi	
QUANTITIES	BY R. Amir	CHECKED S. Hegazi	

STATE OF CALIFORNIA
DEPARTMENT OF TRANSPORTATION

DIVISION OF ENGINEERING SERVICES
STRUCTURE DESIGN
DESIGN BRANCH 8

BRIDGE NO. 37E0116
POST MILE 2.55/2.61

HECKER PASS SOIL NAIL WALL NO. 7
INDEX TO PLANS

STRUCTURES DESIGN DETAIL SHEET (ENGLISH) (REV. 09-01-10)

ORIGINAL SCALE IN INCHES FOR REDUCED PLANS 0 1 2 3

UNIT: 3593
PROJECT NUMBER & PHASE: 0400000813-1
CONTRACT NO.: 04-2A2501

DISREGARD PRINTS BEARING EARLIER REVISION DATES

REVISION DATES: 06-10-11 07-18-12 05-10-13

SHEET 2 OF 19

FILE => 37e0116-a-itp.dgn

USERNAME => s124496 DATE PLOTTED => 21-JUN-2013 TIME PLOTTED => 07:31

DIST	COUNTY	ROUTE	POST MILES TOTAL PROJECT	SHEET No.	TOTAL SHEETS
04	SCI	152	0.1/5.2	318	416

REGISTERED CIVIL ENGINEER 08-01-12 DATE

6-17-13
PLANS APPROVAL DATE

REGISTERED PROFESSIONAL ENGINEER
Sameh Hegazi
No. C64899
Exp. 06-30-2013
CIVIL
STATE OF CALIFORNIA

The State of California or its officers or agents shall not be responsible for the accuracy or completeness of electronic copies of this plan sheet.

CURVE DATA

Alignment	R	Δ	T	L
"D1" Line ①	260.00	23°12′11"	53.38	105.29
"D1" Line ②	550.00	11°35′50"	55.85	111.32
"4BW1" Line ③	550.00	10°28′31"	50.42	100.56

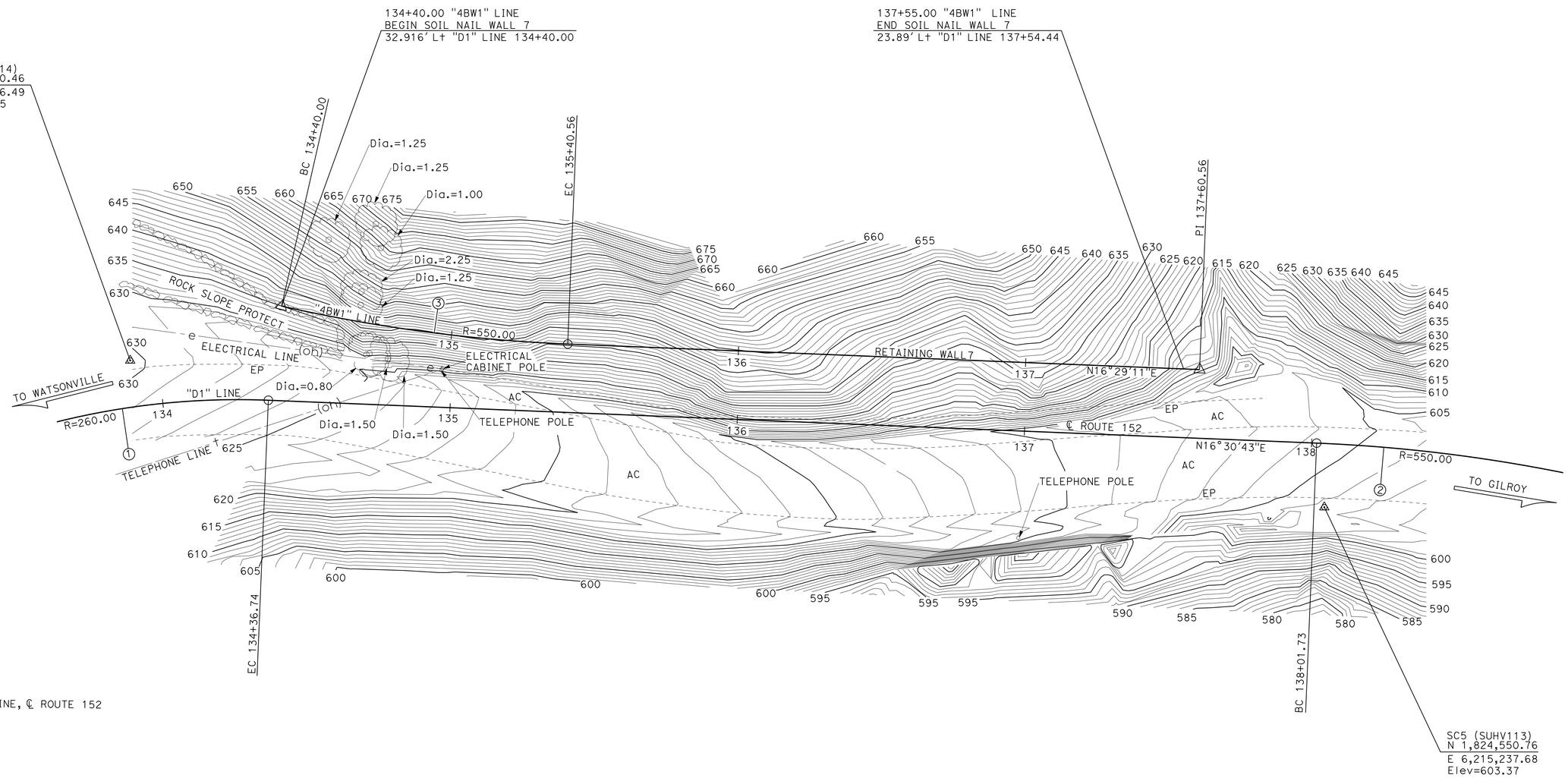

SURVEY CONTROL

SC5 (SUHV113)
1" I.P w/CT PP&T
22.16 Ft Rt "D1" LINE, ℄ ROUTE 152
Sta. 138+05.46
N 1,824,550.76
E 6,215,237.68
EL.=603.37

SC6 (SUHV114)
1" I.P w/CT PP&T
16.16 Ft Lt "D1" LINE, ℄ ROUTE 152
Sta. 133+90.74
N 1,824,160.46
E 6,215,086.49
EL.=630.05

PRELIMINARY INVESTIGATION SECTION

SCALE 1"=20′	VERT.DATUM NAVD88	PHOTOGRAMMETRY AS OF: X		
	HORZ.DATUM NAD83(92) (1991.35)	SURVEYED BY District	CHECKED BY J. Pallares 06/2011	
	ALIGNMENT TIES Dist. Traverse Sheet	DRAFTED BY J. Zhou 06/2011	CHECKED BY T. Zolnikov 06/2011	

STRUCTURES FOUNDATION PLAN SHEET (ENGLISH) (REV. 09-01-10)

DESIGN	BY S. Hegazi	CHECKED R. Amir
DETAILS	BY T. Kusumi	CHECKED R. Amir / S. Hegazi
QUANTITIES	BY R. Amir	CHECKED S. Hegazi

ORIGINAL SCALE IN INCHES FOR REDUCED PLANS 0 1 2 3

STATE OF CALIFORNIA
DEPARTMENT OF TRANSPORTATION

DIVISION OF ENGINEERING SERVICES
STRUCTURE DESIGN
DESIGN BRANCH 08

BRIDGE NO. 37E0116
POST MILE 2.55/2.61

HECKER PASS SOIL NAIL WALL NO.7
FOUNDATION PLAN

UNIT: 3646
PROJECT NUMBER & PHASE: 01000001831
CONTRACT NO.: 04-2A2501

DISREGARD PRINTS BEARING EARLIER REVISION DATES

REVISION DATES: 06-23-11 05-25-12 02-06-13

SHEET 3 OF 19

FILE => 37e0116-e-fpl01.dgn

USERNAME => s124196 DATE PLOTTED => 21-JUN-2013 TIME PLOTTED => 07:31

DIST	COUNTY	ROUTE	POST MILES TOTAL PROJECT	SHEET No.	TOTAL SHEETS
04	SCI	152	0.1/5.2	319	416

REGISTERED CIVIL ENGINEER — DATE 08-01-12

6-17-13
PLANS APPROVAL DATE

REGISTERED PROFESSIONAL ENGINEER — Sameh Hegazi — No. C64899 — Exp. 06-30-2013 — CIVIL — STATE OF CALIFORNIA

The State of California or its officers or agents shall not be responsible for the accuracy or completeness of electronic copies of this plan sheet.

SCHEDULE D	BAR SIZE: #8				
NO. OF SOIL NAIL ROWS	5				
ROW NO. TOP TO BOTTOM	1	2	3	4	5
EMBEDMENT LENGTH (FT)	24	19	15	12	10

SCHEDULE E	BAR SIZE: #9					
NO. OF SOIL NAIL ROWS	6					
ROW NO. TOP TO BOTTOM	1	2	3	4	5	6
EMBEDMENT LENGTH (FT)	30	30	25	20	15	10

SCHEDULE A	BAR SIZE: #7	
NO. OF SOIL NAIL ROWS	2	
ROW NO. TOP TO BOTTOM	1	2
EMBEDMENT LENGTH (FT)	10	10

SCHEDULE F	BAR SIZE: #9						
NO. OF SOIL NAIL ROWS	7						
ROW NO. TOP TO BOTTOM	1	2	3	4	5	6	7
EMBEDMENT LENGTH (FT)	37	33	33	25	25	20	15

SCHEDULE B	BAR SIZE: #7		
NO. OF SOIL NAIL ROWS	3		
ROW NO. TOP TO BOTTOM	1	2	3
EMBEDMENT LENGTH (FT)	15	12	10

SCHEDULE G	BAR SIZE: #9							
NO. OF SOIL NAIL ROWS	8							
ROW NO. TOP TO BOTTOM	1	2	3	4	5	6	7	8
EMBEDMENT LENGTH (FT)	37	33	33	25	25	20	15	10

SCHEDULE C	BAR SIZE: #7			
NO. OF SOIL NAIL ROWS	4			
ROW NO. TOP TO BOTTOM	1	2	3	4
EMBEDMENT LENGTH (FT)	17	15	12	10

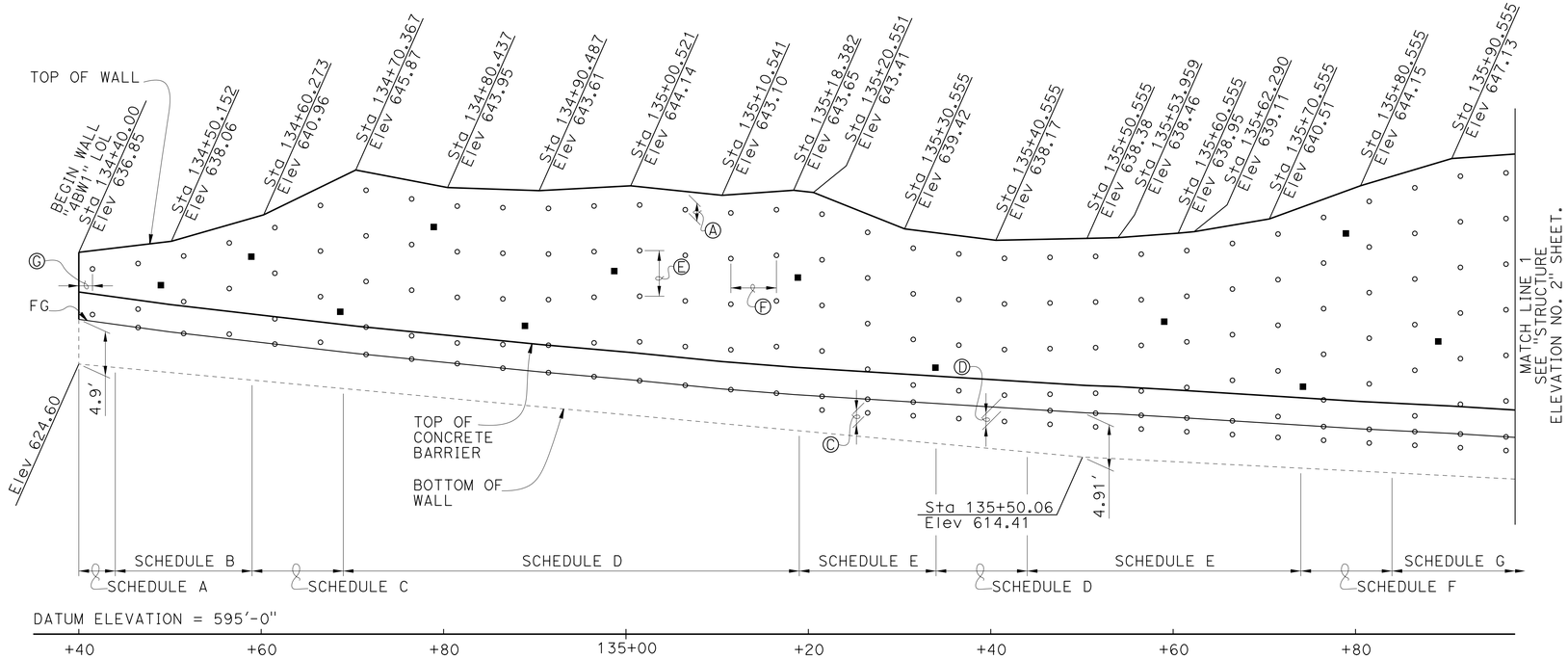

DEVELOPED ELEVATION

1/8" = 1'-0"

NOTES:

Ⓐ ST = Vertical distance from top of wall elevation to top level of soil nails, ST = 2'-0"

Ⓑ SB_1 = Vertical distance from bottom of wall to bottom level of the soil nails, SB1 (Min) = 2'-0", SB1 (Max) = 3'-6".

Ⓒ SB_2 = Vertical distance from finished grade to bottom level of the soil nails, SB2 (Max) = 1'-6".

Ⓓ Discontinue row when vertical distance between soil nails are less than 1'-6".

Ⓔ SV = Vertical spacing of soil nails, SV (Min) = 1'-6", SV (Max) = 5'-0".

Ⓕ SH = Horizontal spacing of soil nails, SH (Min) = 1'-6", SH (Max) = 5'-0".

Ⓖ SS = Horizontal distance between the begin/end wall and first/last soil nails, SS (Min) = 1'-6", SS (Max) = 2'-6".

Ⓗ The exact location of the test soil nails to be determined by the Engineer.

1. Cable railing posts are not shown for clarity.

LEGEND:
○ Indicates approximate location of soil nails
■ Indicates approximate location of proof test nails

FOR COMPLETE RIGHT OF WAY DATA, SEE RIGHT OF WAY RECORDS MAPS AT DISTRICT OFFICE.

	BY	CHECKED
DESIGN	S. Hegazi	R. Amir
DETAILS	T. Kusumi	R. Amir / S. Hegazi
QUANTITIES	R. Amir	S. Hegazi

STATE OF CALIFORNIA
DEPARTMENT OF TRANSPORTATION

DIVISION OF ENGINEERING SERVICES
STRUCTURE DESIGN
DESIGN BRANCH 8

BRIDGE NO. 37E0116
POST MILE 2.55/2.61

HECKER PASS SOIL NAIL WALL NO. 7
STRUCTURE ELEVATION NO. 1

STRUCTURES DESIGN DETAIL SHEET (ENGLISH) (REV. 09-01-10)

ORIGINAL SCALE IN INCHES FOR REDUCED PLANS 0 1 2 3

UNIT: 3593
PROJECT NUMBER & PHASE: 0400000813-1
CONTRACT NO.: 04-2A2501

DISREGARD PRINTS BEARING EARLIER REVISION DATES

REVISION DATES: 07-06-11 03-06-12 05-01-12

SHEET 4 OF 19

FILE => 37e0116-f-structelv01.dgn

USERNAME => s124496 DATE PLOTTED => 21-JUN-2013 TIME PLOTTED => 07:31

DIST	COUNTY	ROUTE	POST MILES TOTAL PROJECT	SHEET No.	TOTAL SHEETS
04	SCI	152	0.1/5.2	320	416

REGISTERED CIVIL ENGINEER 08-01-12 DATE

6-17-13
PLANS APPROVAL DATE

REGISTERED PROFESSIONAL ENGINEER
Sameh Hegazi
No. C64899
Exp. 06-30-2013
CIVIL
STATE OF CALIFORNIA

The State of California or its officers or agents shall not be responsible for the accuracy or completeness of electronic copies of this plan sheet.

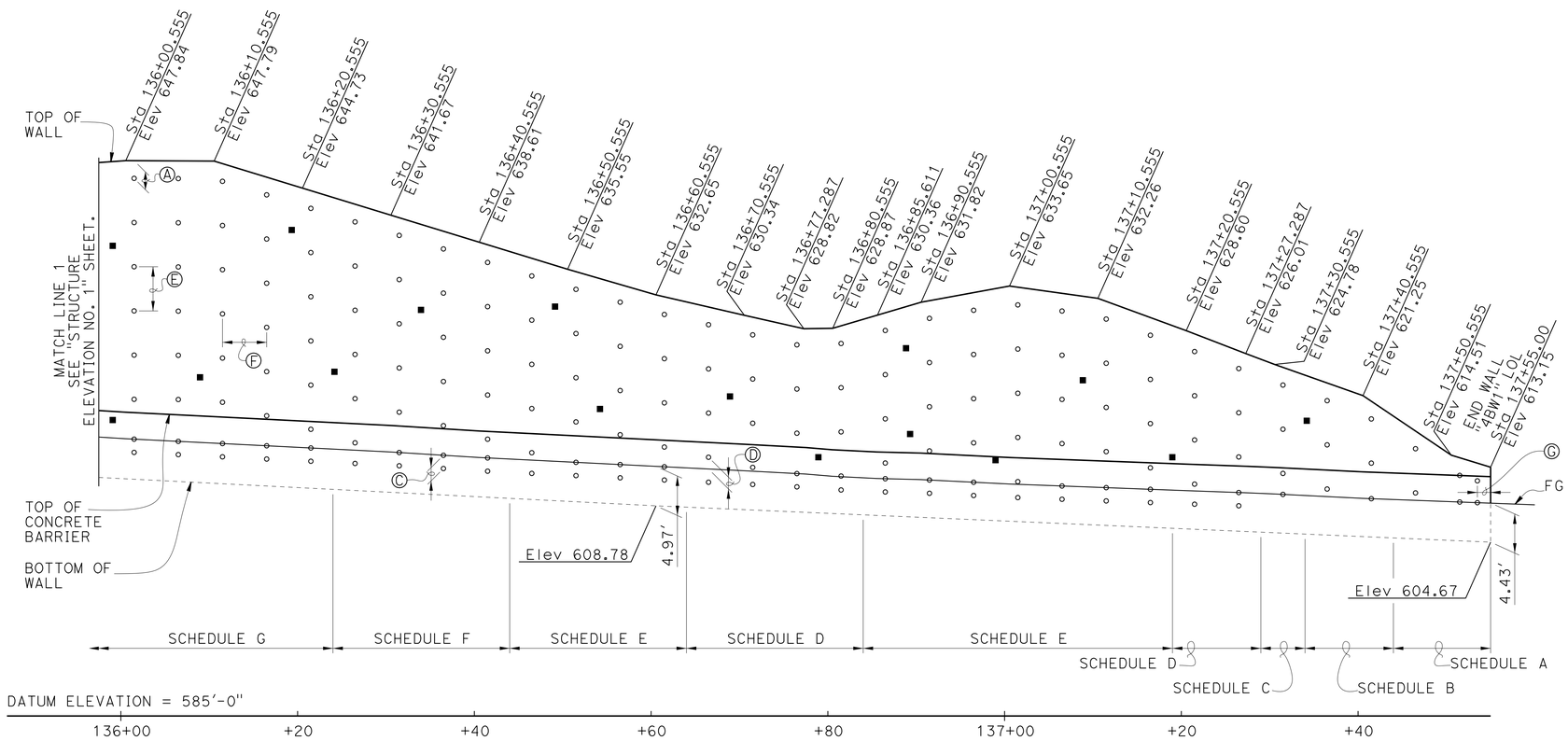

DEVELOPED ELEVATION

1/8" = 1'-0"

NOTE:
1. For production nails schedules and notes, see "STRUCTURE ELEVATION NO. 1" sheet.

LEGEND:
- ○ Indicates approximate location of soil nails
- ■ Indicates approximate location of proof test nails

	BY	CHECKED
DESIGN	S. Hegazi	R. Amir
DETAILS	T. Kusumi	R. Amir / S. Hegazi
QUANTITIES	R. Amir	S. Hegazi

STATE OF CALIFORNIA
DEPARTMENT OF TRANSPORTATION

DIVISION OF ENGINEERING SERVICES
STRUCTURE DESIGN
DESIGN BRANCH 8

BRIDGE NO. 37E0116
POST MILE 2.55/2.61

HECKER PASS SOIL NAIL WALL NO. 7
STRUCTURE ELEVATION NO. 2

STRUCTURES DESIGN DETAIL SHEET (ENGLISH) (REV. 09-01-10)

ORIGINAL SCALE IN INCHES FOR REDUCED PLANS 0 1 2 3

UNIT: 3593
PROJECT NUMBER & PHASE: 0400000813-1
CONTRACT NO.: 04-2A2501

DISREGARD PRINTS BEARING EARLIER REVISION DATES

REVISION DATES: 07-08-11 09-12-11 02-02-12 05-01-12

SHEET 5 OF 19

FILE => 37e0116-f-structelv02.dgn

USERNAME => s124496 DATE PLOTTED => 21-JUN-2013 TIME PLOTTED => 07:31

DIST	COUNTY	ROUTE	POST MILES TOTAL PROJECT	SHEET No.	TOTAL SHEETS
04	SCI	152	0.1/5.2	321	416

REGISTERED CIVIL ENGINEER 05-15-13 DATE

6-17-13
PLANS APPROVAL DATE

REGISTERED PROFESSIONAL ENGINEER
Sameh Hegazi
No. C64899
Exp. 06-30-2013
CIVIL
STATE OF CALIFORNIA

The State of California or its officers or agents shall not be responsible for the accuracy or completeness of electronic copies of this plan sheet.

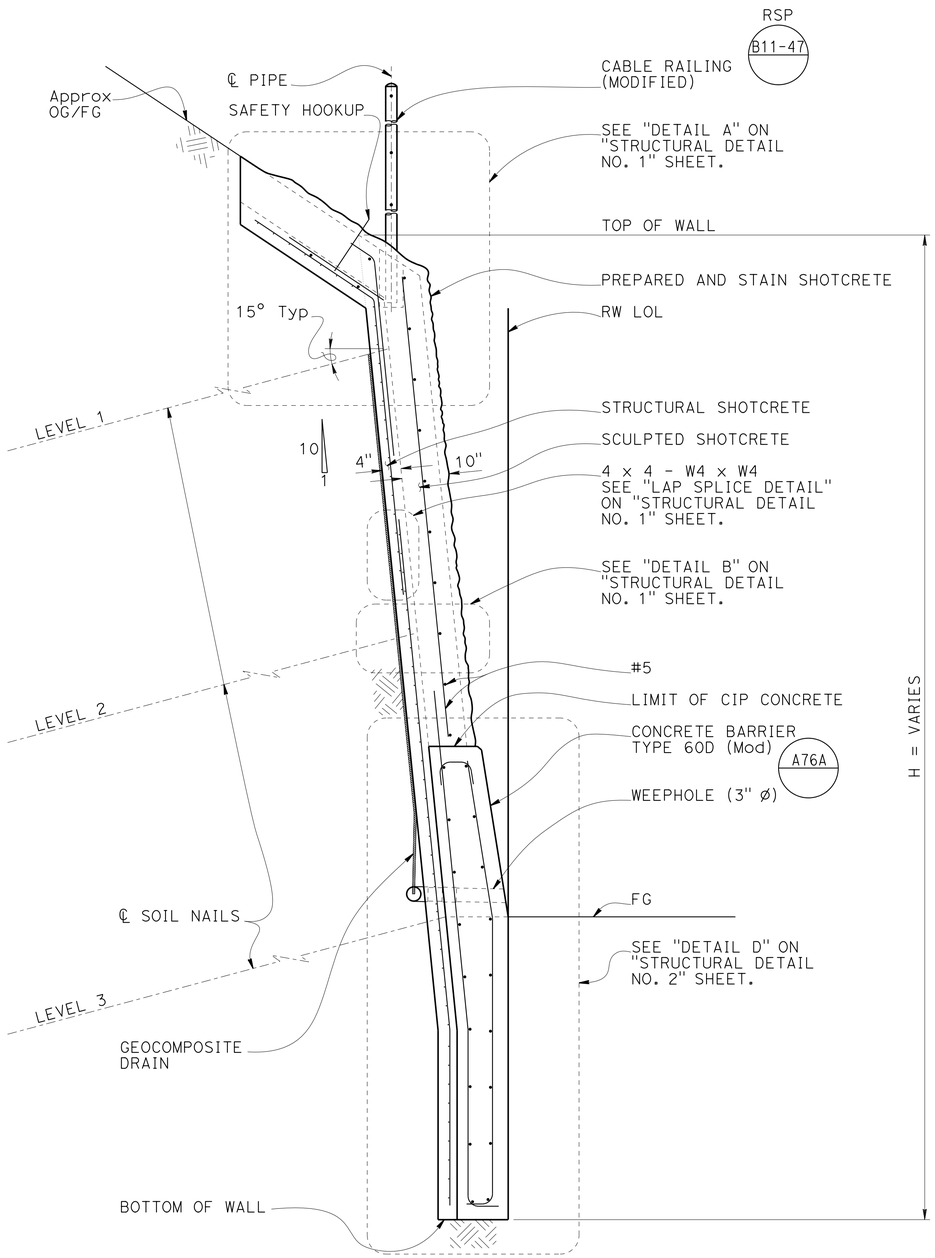

TYPICAL SECTION AT FOUNDATION DROP

3/4" = 1'-0"

NOTES:
1. For "PRODUCTION SOIL NAIL DETAIL" and "PROOF TEST SOIL NAIL DETAIL", see "STRUCTURAL DETAIL NO.3" sheet.
2. For sculpted shotcrete treatment, see "SCULPTED SHOTCRETE TREATMENT" sheets.
3 For geocomposite drain detail, see "DRAINAGE DETAILS NO. 2" sheet.

	BY	CHECKED
DESIGN	S. Hegazi	R. Amir
DETAILS	T. Kusumi	R. Amir / S. Hegazi
QUANTITIES	R. Amir	S. Hegazi

STATE OF CALIFORNIA
DEPARTMENT OF TRANSPORTATION

DIVISION OF ENGINEERING SERVICES
STRUCTURE DESIGN
DESIGN BRANCH 8

BRIDGE NO. 37E0116
POST MILE 2.55/2.61

HECKER PASS SOIL NAIL WALL NO. 7
TYPICAL SECTION

STRUCTURES DESIGN DETAIL SHEET (ENGLISH) (REV. 09-01-10)

ORIGINAL SCALE IN INCHES FOR REDUCED PLANS 0 1 2 3

UNIT: 3593
PROJECT NUMBER & PHASE: 0400000813-1
CONTRACT NO.: 04-2A2501

DISREGARD PRINTS BEARING EARLIER REVISION DATES

REVISION DATES: 06-16-11 07-18-12 05-10-13

SHEET 6 OF 19

FILE => 37e0116-g-_ts.dgn

USERNAME => s124436 DATE PLOTTED => 21-JUN-2013 TIME PLOTTED => 07:31

DIST	COUNTY	ROUTE	POST MILES TOTAL PROJECT	SHEET No.	TOTAL SHEETS
04	SCI	152	0.1/5.2	322	416

REGISTERED CIVIL ENGINEER 05-15-13 DATE

6-17-13
PLANS APPROVAL DATE

REGISTERED PROFESSIONAL ENGINEER Sameh Hegazi No. C64899 Exp. 06-30-2013 CIVIL STATE OF CALIFORNIA

The State of California or its officers or agents shall not be responsible for the accuracy or completeness of electronic copies of this plan sheet.

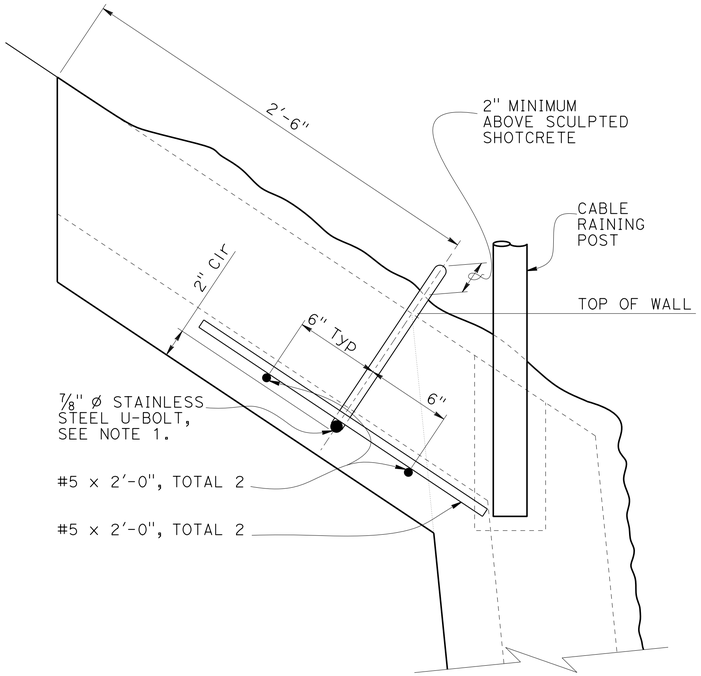

SAFETY HOOKUP DETAIL

No Scale

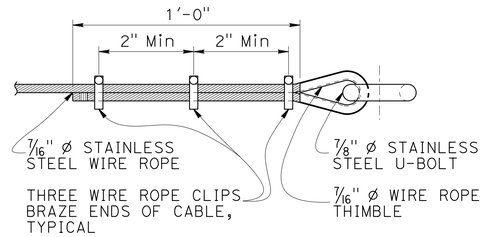

SAFETY WIRE ROPE DETAIL

No Scale

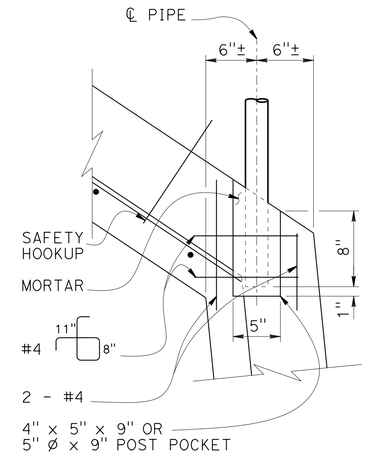

POST POCKET DETAIL

No Scale

RSP B11-47

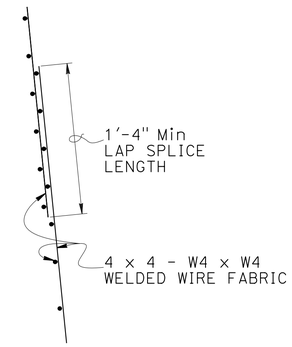

LAP SPLICE DETAIL

No Scale

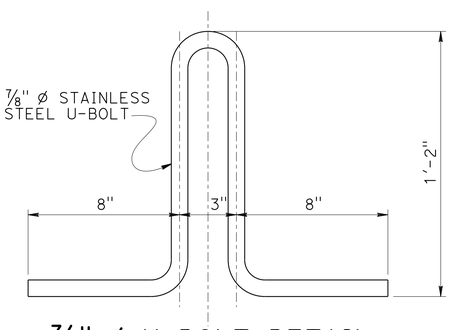

7/8" Ø U-BOLT DETAIL

3" = 1'-0"

NOTE:

Ⓐ For bearing plate and soil nail details not shown, see "STRUCTURAL DETAILS NO. 3" sheet.

1. Safety hookups shall be placed behind cable railing posts with 10'-0" Max spacing.
2. Safety wire rope shall be extended between safety hookups at top of wall.
3. Safety wire rope and safety hookups shall be placed at locations where wall heights from top of wall to finished grade exceed 5 feet.

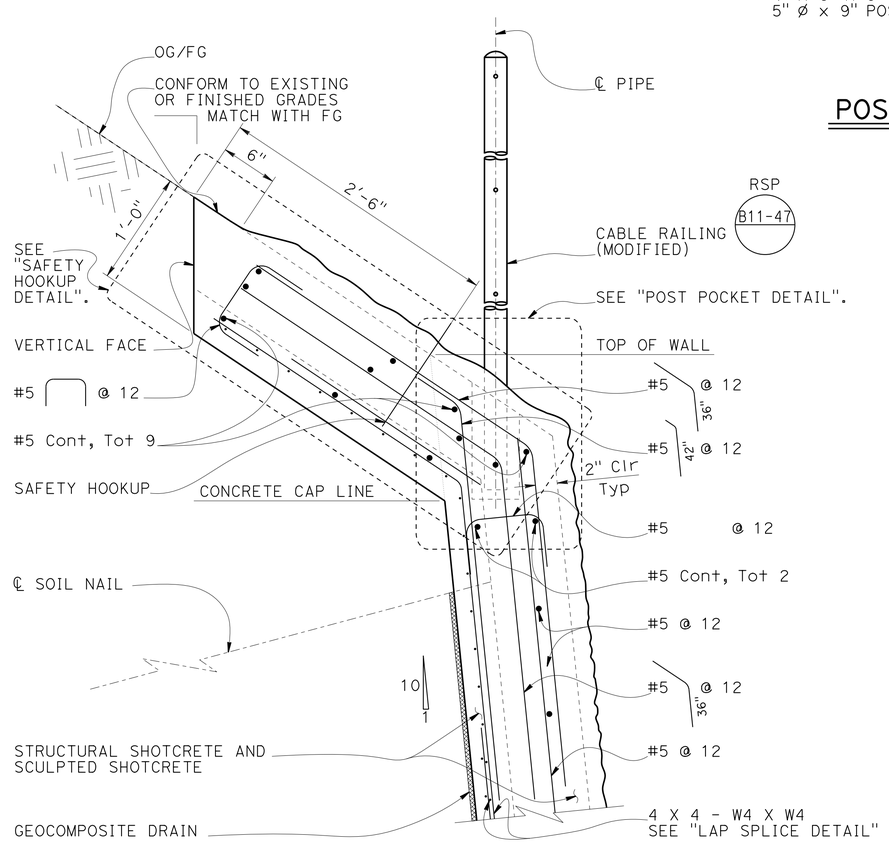

DETAIL A

1½" = 1'-0"

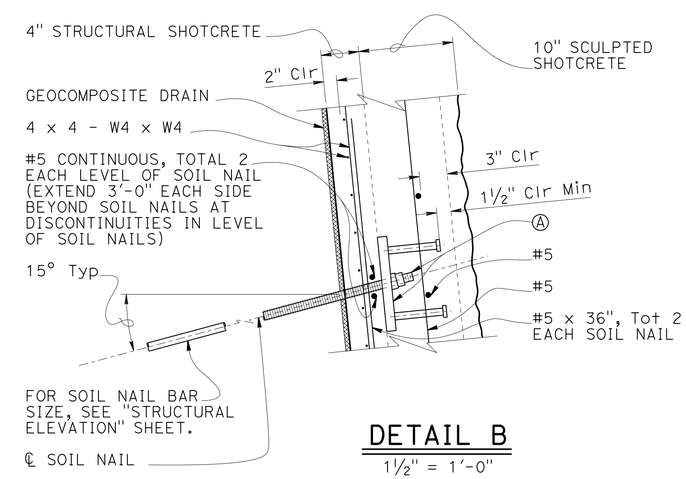

DETAIL B

1½" = 1'-0"

DESIGN	BY S. Hegazi	CHECKED R. Amir	
DETAILS	BY T. Kusumi	CHECKED R. Amir / S. Hegazi	
QUANTITIES	BY R. Amir	CHECKED S. Hegazi	

STATE OF CALIFORNIA
DEPARTMENT OF TRANSPORTATION

DIVISION OF ENGINEERING SERVICES
STRUCTURE DESIGN
DESIGN BRANCH 8

BRIDGE NO. 37E0116
POST MILE 2.55/2.61

HECKER PASS SOIL NAIL WALL NO. 7
STRUCTURAL DETAILS NO. 1

STRUCTURES DESIGN DETAIL SHEET (ENGLISH) (REV. 09-01-10)

ORIGINAL SCALE IN INCHES FOR REDUCED PLANS 0 1 2 3

UNIT: 3593
PROJECT NUMBER & PHASE: 0400000813-1
CONTRACT NO.: 04-2A2501

DISREGARD PRINTS BEARING EARLIER REVISION DATES

REVISION DATES: 06-09-11 05-10-13 07-19-13

SHEET 7 OF 19

FILE => 37e0116-g-stdt01.dgn

USERNAME => s124496 DATE PLOTTED => 21-JUN-2013 TIME PLOTTED => 07:31

DIST	COUNTY	ROUTE	POST MILES TOTAL PROJECT	SHEET No.	TOTAL SHEETS
04	SCI	152	0.1/5.2	323	416

REGISTERED CIVIL ENGINEER 05-15-13 DATE

6-17-13
PLANS APPROVAL DATE

REGISTERED PROFESSIONAL ENGINEER
Sameh Hegazi
No. C64899
Exp. 06-30-2013
CIVIL
STATE OF CALIFORNIA

The State of California or its officers or agents shall not be responsible for the accuracy or completeness of electronic copies of this plan sheet.

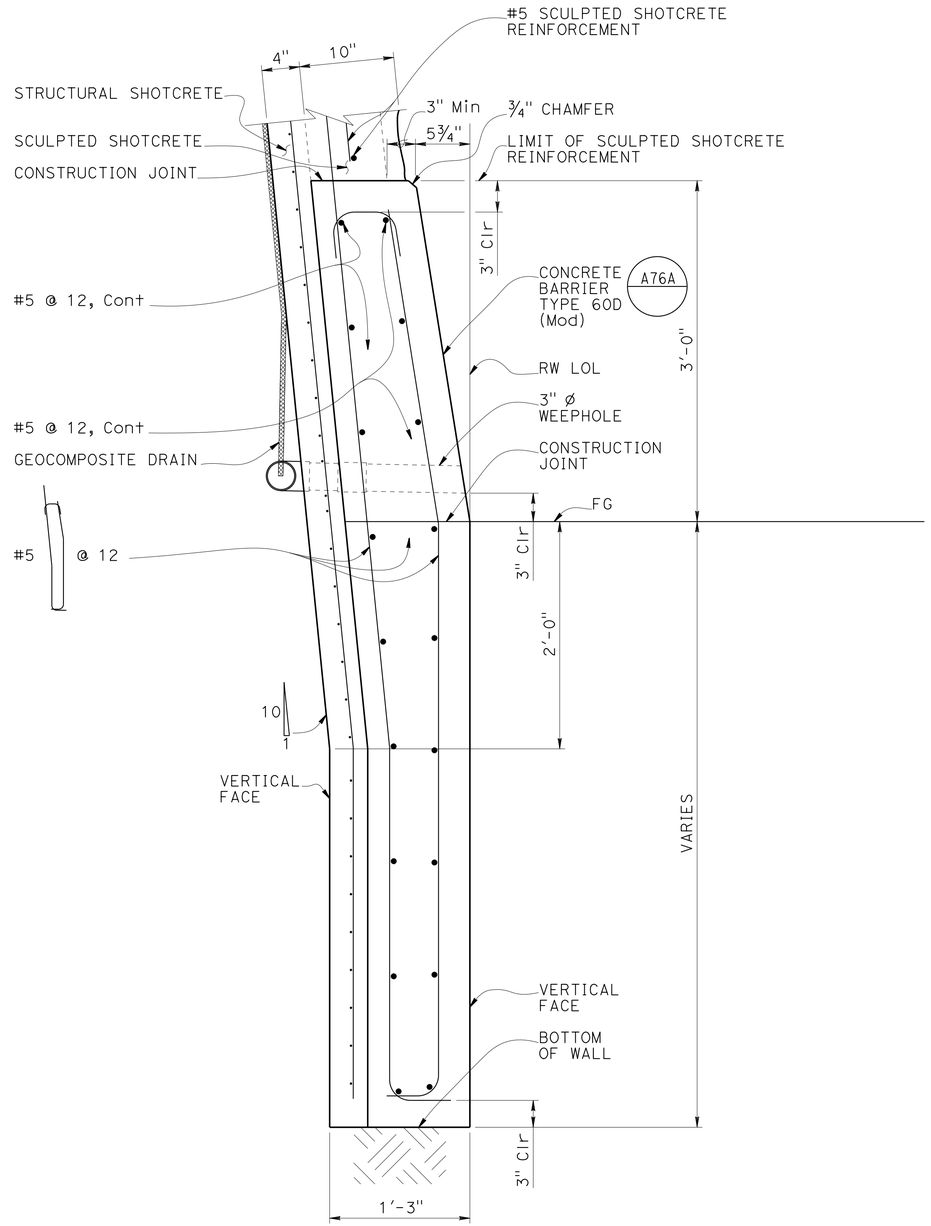

DETAIL D

1 1/2" = 1'-0"

NOTE:
1. Soil nails not shown for clarity.
2. Concrete barrier shall be integrally colored.

	BY	CHECKED
DESIGN	S. Hegazi	R. Amir
DETAILS	T. Kusumi	R. Amir / S. Hegazi
QUANTITIES	R. Amir	S. Hegazi

STATE OF CALIFORNIA
DEPARTMENT OF TRANSPORTATION

DIVISION OF ENGINEERING SERVICES
STRUCTURE DESIGN
DESIGN BRANCH 8

BRIDGE NO. 37E0116
POST MILE 2.55/2.61

HECKER PASS SOIL NAIL WALL NO. 7
STRUCTURAL DETAILS NO. 2

STRUCTURES DESIGN DETAIL SHEET (ENGLISH) (REV. 09-01-10)

ORIGINAL SCALE IN INCHES FOR REDUCED PLANS 0 1 2 3

UNIT: 3593
PROJECT NUMBER & PHASE: 0400000813-1
CONTRACT NO.: 04-2A2501

DISREGARD PRINTS BEARING EARLIER REVISION DATES

REVISION DATES: 06-10-11 07-19-12 05-10-13

SHEET 8 OF 19

FILE => 37e0116-g-stdt02.dgn

USERNAME => s124436 DATE PLOTTED => 21-JUN-2013 TIME PLOTTED => 07:31

DIST	COUNTY	ROUTE	POST MILES TOTAL PROJECT	SHEET No.	TOTAL SHEETS
04	SCI	152	0.1/5.2	324	416

REGISTERED CIVIL ENGINEER 08-01-12 DATE

6-17-13
PLANS APPROVAL DATE

REGISTERED PROFESSIONAL ENGINEER
Sameh Hegazi
No. C64899
Exp. 06-30-2013
CIVIL
STATE OF CALIFORNIA

The State of California or its officers or agents shall not be responsible for the accuracy or completeness of electronic copies of this plan sheet.

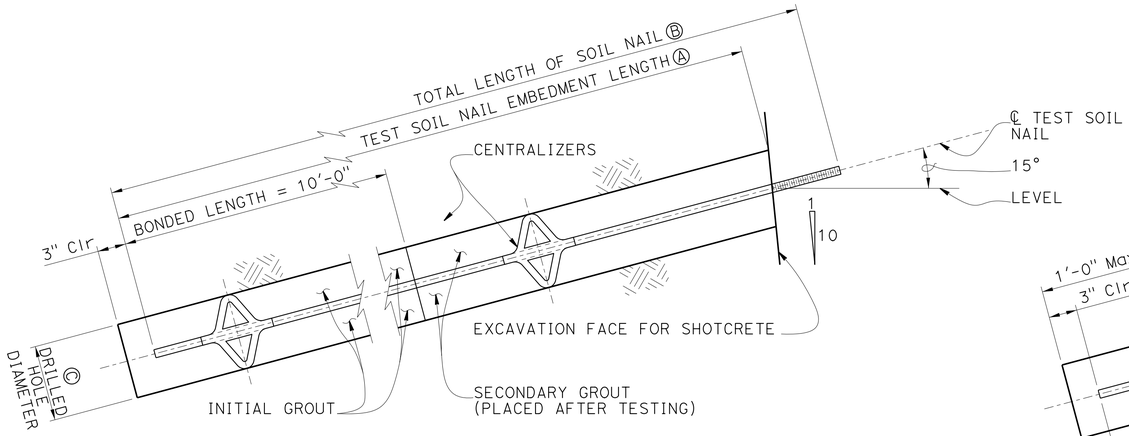

PROOF TEST SOIL NAIL DETAIL

No Scale

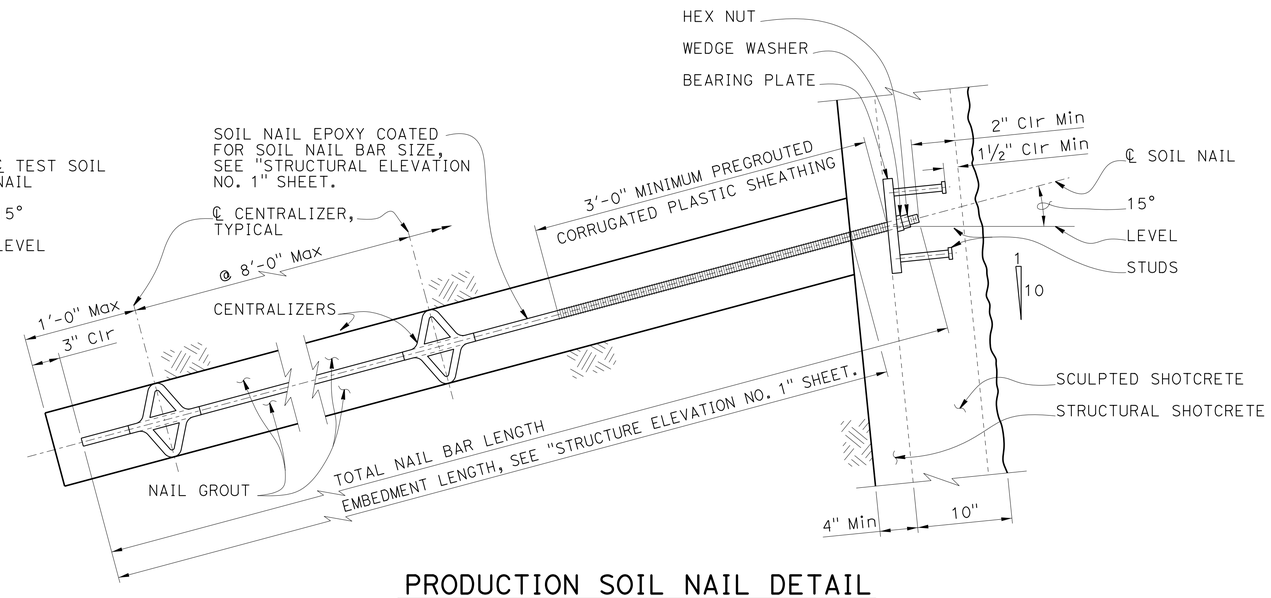

PRODUCTION SOIL NAIL DETAIL

No Scale

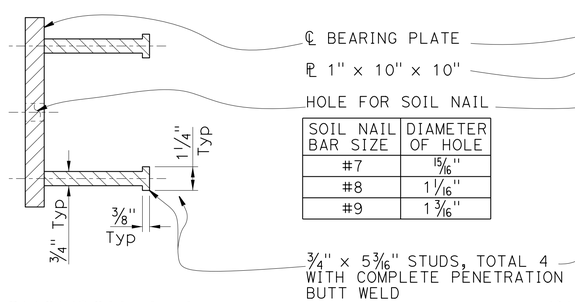

SECTION A-A

No Scale

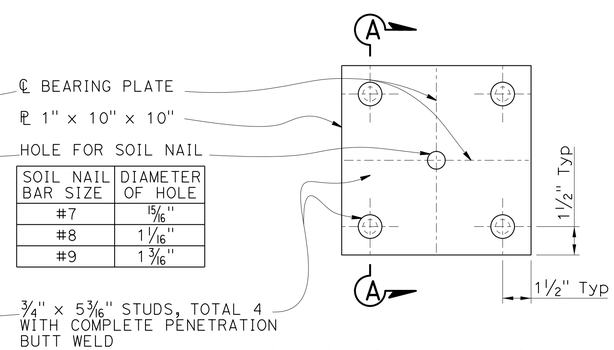

SOIL NAIL BAR SIZE	DIAMETER OF HOLE
#7	15/16"
#8	1 1/16"
#9	1 3/16"

BEARING PLATE DETAIL

No Scale

NOTES:
1. Geocomposite drain not shown for clarity.
2. Wall reinforcement not shown for clarity.
3. Finished grout surface to be normal to the bar

Ⓐ Embedment length of test soil nails equals 2/3 of embedment length of adjacent production soil nails, but not less than 12'-0".

Ⓑ Total length of test soil nail equals embedment length plus length required for jacking equipment.

Ⓒ Contractor to determine drilled hole diameter.

DESIGN	BY S. Hegazi	CHECKED R. Amir	
DETAILS	BY T. Kusumi	CHECKED R. Amir / S. Hegazi	
QUANTITIES	BY R. Amir	CHECKED S. Hegazi	

STATE OF CALIFORNIA
DEPARTMENT OF TRANSPORTATION

DIVISION OF ENGINEERING SERVICES
STRUCTURE DESIGN
DESIGN BRANCH 8

BRIDGE NO. 37E0116
POST MILE 2.55/2.61

HECKER PASS SOIL NAIL WALL NO. 7
STRUCTURAL DETAILS NO. 3

STRUCTURES DESIGN DETAIL SHEET (ENGLISH) (REV. 09-01-10)

ORIGINAL SCALE IN INCHES FOR REDUCED PLANS 0 1 2 3

UNIT: 3593
PROJECT NUMBER & PHASE: 0400000813-1
CONTRACT NO.: 04-2A2501

DISREGARD PRINTS BEARING EARLIER REVISION DATES

REVISION DATES: 06-30-11 06-26-12 05-01-13

SHEET 9 OF 19

FILE => 37e0116-g-stdt03.dgn

USERNAME => s124436 DATE PLOTTED => 21-JUN-2013 TIME PLOTTED => 07:31

DIST	COUNTY	ROUTE	POST MILES TOTAL PROJECT	SHEET No.	TOTAL SHEETS
04	SCI	152	0.1/5.2	325	416

REGISTERED CIVIL ENGINEER 05-15-13 DATE

6-17-13
PLANS APPROVAL DATE

REGISTERED PROFESSIONAL ENGINEER
Sameh Hegazi
No. C64899
Exp. 06-30-2013
CIVIL
STATE OF CALIFORNIA

The State of California or its officers or agents shall not be responsible for the accuracy or completeness of electronic copies of this plan sheet.

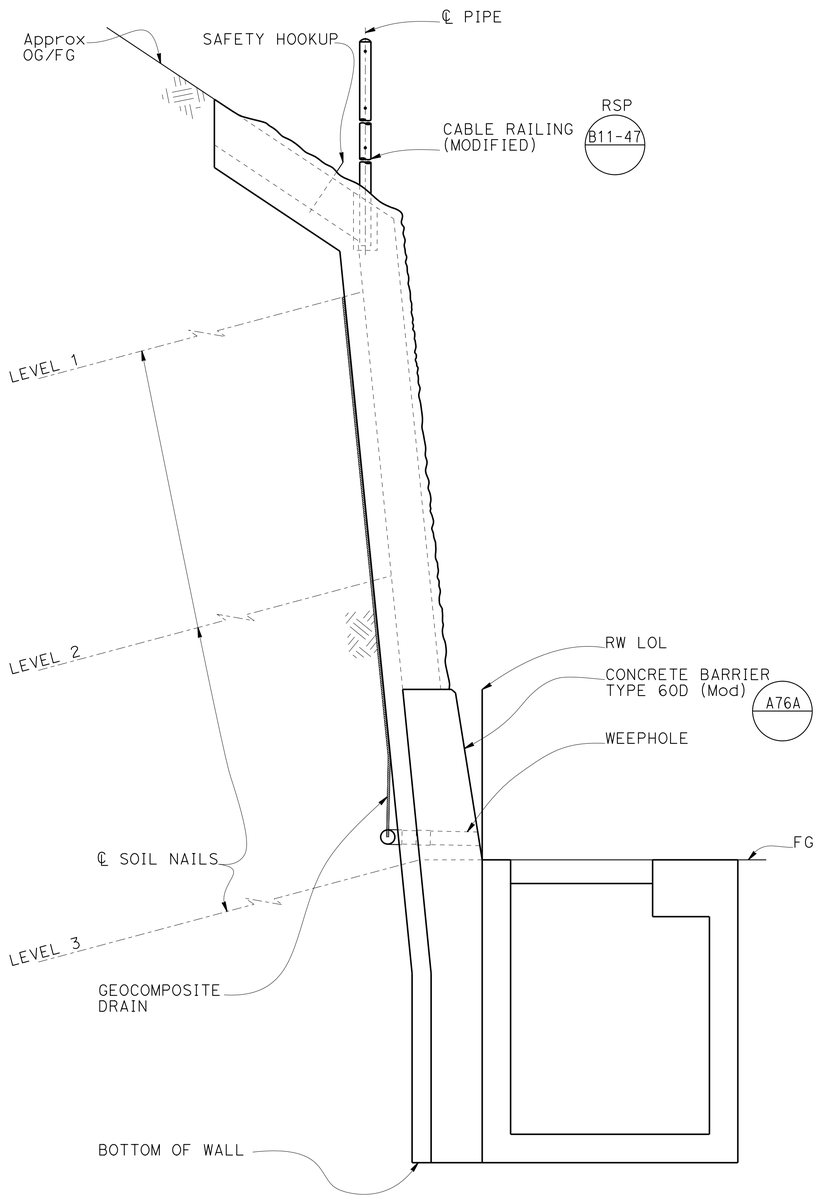

TYPICAL SECTION WITH DROP INLET

No Scale

NOTES:
1. For drainage details not shown, see "ROADWAY PLANS".
2. For drop inlet type, locations and elevations, see "ROADWAY PLANS".
3 Engineer must adjust bottom elevation to accommodate drainage system shown on "ROADWAY PLANS".
4. Bottom of wall to be placed against undisturbed material.
5. Drop inlets shall be centered vertically between soil nails.

	BY	CHECKED
DESIGN	S. Hegazi	R. Amir
DETAILS	T. Kusumi	R. Amir / S. Hegazi
QUANTITIES	R. Amir	S. Hegazi

STATE OF CALIFORNIA
DEPARTMENT OF TRANSPORTATION

DIVISION OF ENGINEERING SERVICES
STRUCTURE DESIGN
DESIGN BRANCH 8

BRIDGE NO. 37E0116
POST MILE 2.55/2.61

HECKER PASS SOIL NAIL WALL NO. 7
DRAINAGE DETAIL NO. 1

STRUCTURES DESIGN DETAIL SHEET (ENGLISH) (REV. 09-01-10)

ORIGINAL SCALE IN INCHES FOR REDUCED PLANS 0 1 2 3

UNIT: 3593
PROJECT NUMBER & PHASE: 0400000813-1
CONTRACT NO.: 04-2A2501

DISREGARD PRINTS BEARING EARLIER REVISION DATES

REVISION DATES: 06-17-11 07-18-12 05-10-13

SHEET 10 OF 19

FILE => 37e0116-r-dd101.dgn

USERNAME => s124496 DATE PLOTTED => 21-JUN-2013 TIME PLOTTED => 07:31

DIST	COUNTY	ROUTE	POST MILES TOTAL PROJECT	SHEET No.	TOTAL SHEETS
04	SCI	152	0.1/5.2	326	416

REGISTERED CIVIL ENGINEER 08-01-12 DATE

6-17-13
PLANS APPROVAL DATE

REGISTERED PROFESSIONAL ENGINEER
Sameh Hegazi
No. C64899
Exp. 06-30-2013
CIVIL
STATE OF CALIFORNIA

The State of California or its officers or agents shall not be responsible for the accuracy or completeness of electronic copies of this plan sheet.

NOTES:
1. Wall reinforcement not shown for clarity.

Ⓐ ⊕ Indicates soil nail locations.

Ⓑ Center of geocomposite strips shall be centered vertically between soil nails.

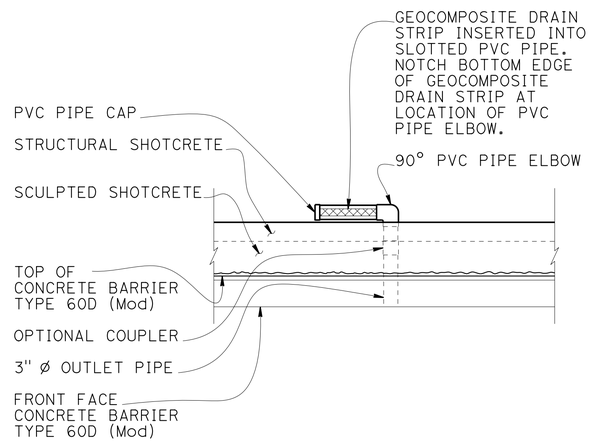

SECTION C-C

No Scale

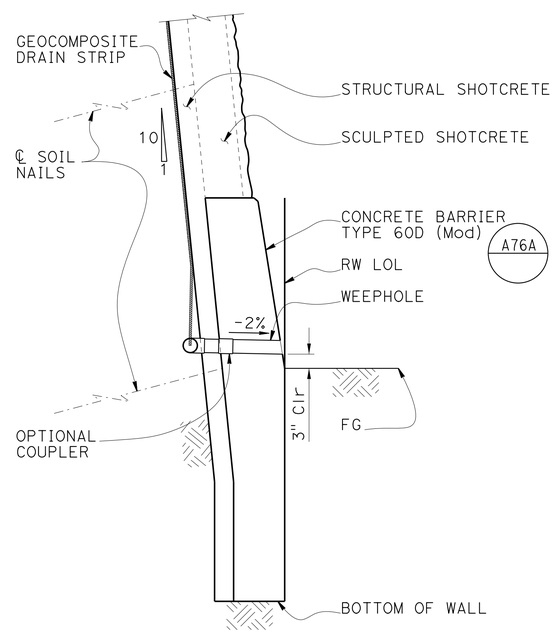

SECTION B-B

No Scale

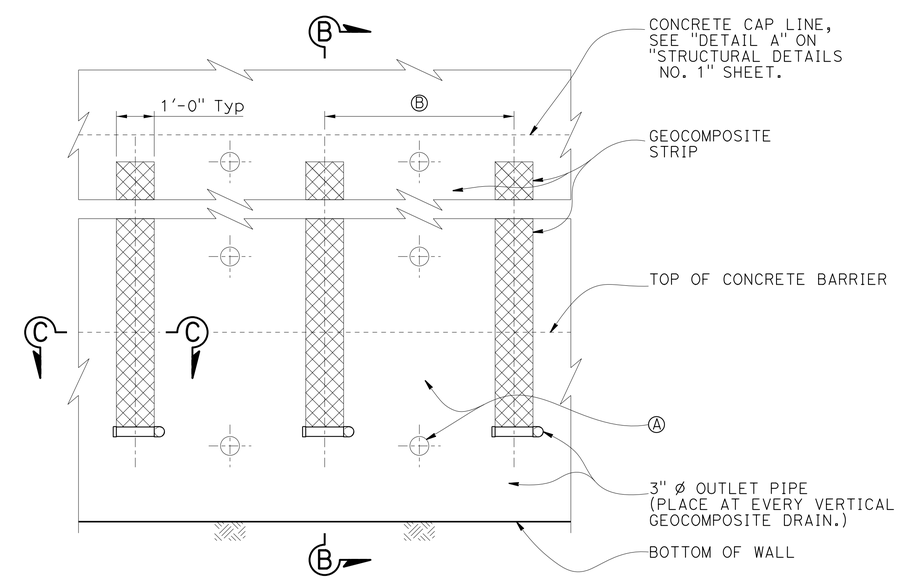

WALL PART ELEVATION

No Scale

DESIGN	BY S. Hegazi	CHECKED R. Amir	
DETAILS	BY T. Kusumi	CHECKED R. Amir / S. Hegazi	
QUANTITIES	BY R. Amir	CHECKED S. Hegazi	

STATE OF CALIFORNIA
DEPARTMENT OF TRANSPORTATION

DIVISION OF ENGINEERING SERVICES
STRUCTURE DESIGN
DESIGN BRANCH 8

BRIDGE NO. 37E0116
POST MILE 2.55/2.61

HECKER PASS SOIL NAIL WALL NO. 7
DRAINAGE DETAILS NO. 2

STRUCTURES DESIGN DETAIL SHEET (ENGLISH) (REV. 09-01-10)

ORIGINAL SCALE IN INCHES FOR REDUCED PLANS 0 1 2 3

UNIT: 3593
PROJECT NUMBER & PHASE: 0400000813-1
CONTRACT NO.: 04-2A2501

DISREGARD PRINTS BEARING EARLIER REVISION DATES

REVISION DATES: 06-17-11 07-19-12 05-01-13

SHEET 11 OF 19

FILE => 37e0116-r-dd+02.dgn

USERNAME => s124496 DATE PLOTTED => 21-JUN-2013 TIME PLOTTED => 07:31

DIST	COUNTY	ROUTE	POST MILES TOTAL PROJECT	SHEET No.	TOTAL SHEETS
04	SCI	152	0.1/5.2	327	416

REGISTERED CIVIL ENGINEER 08-01-12 DATE

6-17-13
PLANS APPROVAL DATE

REGISTERED PROFESSIONAL ENGINEER
Sameh Hegazi
No. C64899
Exp. 06-30-2013
CIVIL
STATE OF CALIFORNIA

The State of California or its officers or agents shall not be responsible for the accuracy or completeness of electronic copies of this plan sheet.

NOTES:

1. Primary strata lines drawn on the front elevation are to be used as a guide for layout of primary strata line reinforcement. See "SCULPTED SHOTCRETE TREATMENT DETAILS NO. 1" and "SCULPTED SHOTCRETE TREATMENT DETAILS NO. 2" sheets.
2. Secondary strata lines drawn on the front elevation are to be used as a general guide. Strata lines shall be sculpted to mimic local geology.
3. This sheet is accurate for sculpted shotcrete treatment only.
4. Sculpted shotcrete surface treatment shall be continuous throughout the face of the wall.
5. Additional shotcrete needed for carving the primary strata lines to be reinforced as shown on "SCULPTED SHOTCRETE TREATMENT DETAILS NO. 1" and "SCULPTED SHOTCRETE TREATMENT DETAILS NO. 2" sheets.
6. Primary strata lines to be tapered into the top and bottom of wall.
7. Secondary strata lines are not to exceed 2" amplitude.
8. 3" Ø weepholes are not shown.
9. Cable railing is not shown.

LEGEND:

1. PRIMARY STRATA LINES

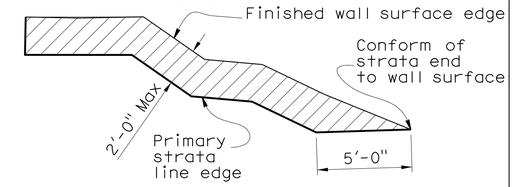

2. SECONDARY STRATA LINES

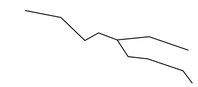

3. Indicates location of weakened planes joint. Joints should not be placed within 18 inches of a nail head. For details, see B0-3 / 3-2

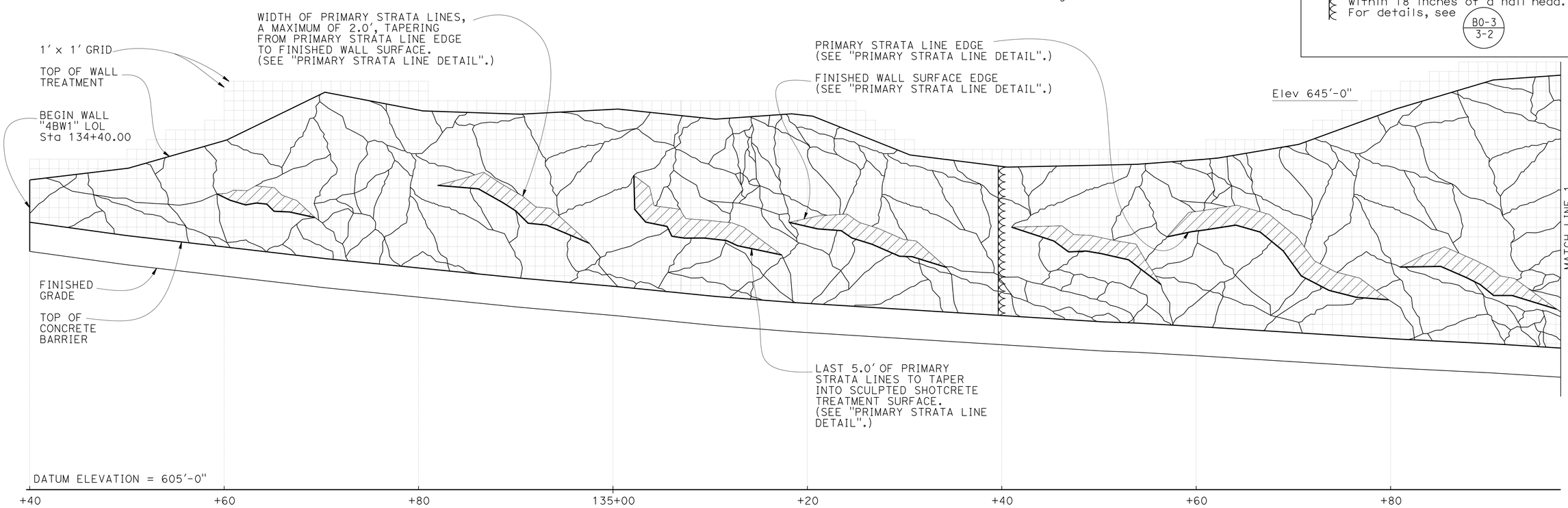

SCULPTED SHOTCRETE SURFACE TREATMENT

3/16" = 1'-0"

	BY	CHECKED
DESIGN	S. Hegazi	R. Amir
DETAILS	T. Kusumi	R. Amir / S. Hegazi
QUANTITIES	R. Amir	S. Hegazi

STATE OF CALIFORNIA
DEPARTMENT OF TRANSPORTATION

DIVISION OF ENGINEERING SERVICES
STRUCTURE DESIGN
DESIGN BRANCH 8

BRIDGE NO. 37E0116
POST MILE 2.55/2.61

HECKER PASS SOIL NAIL WALL NO. 7
SCULPTED SHOTCRETE TREATMENT NO. 1

STRUCTURES DESIGN DETAIL SHEET (ENGLISH) (REV. 09-01-10)

ORIGINAL SCALE IN INCHES FOR REDUCED PLANS 0 1 2 3

UNIT: 3593
PROJECT NUMBER & PHASE: 0400000813-1
CONTRACT NO.: 04-2A2501

DISREGARD PRINTS BEARING EARLIER REVISION DATES

REVISION DATES: 07-06-11 07-19-12 02-26-13

SHEET 12 OF 19

FILE => 37e0116-u-arch01.dgn

USERNAME => s124496 DATE PLOTTED => 21-JUN-2013 TIME PLOTTED => 07:31

DIST	COUNTY	ROUTE	POST MILES TOTAL PROJECT	SHEET No.	TOTAL SHEETS
04	SCI	152	0.1/5.2	328	416

REGISTERED CIVIL ENGINEER 08-01-12 DATE

6-17-13
PLANS APPROVAL DATE

REGISTERED PROFESSIONAL ENGINEER
Sameh Hegazi
No. C64899
Exp. 06-30-2013
CIVIL
STATE OF CALIFORNIA

The State of California or its officers or agents shall not be responsible for the accuracy or completeness of electronic copies of this plan sheet.

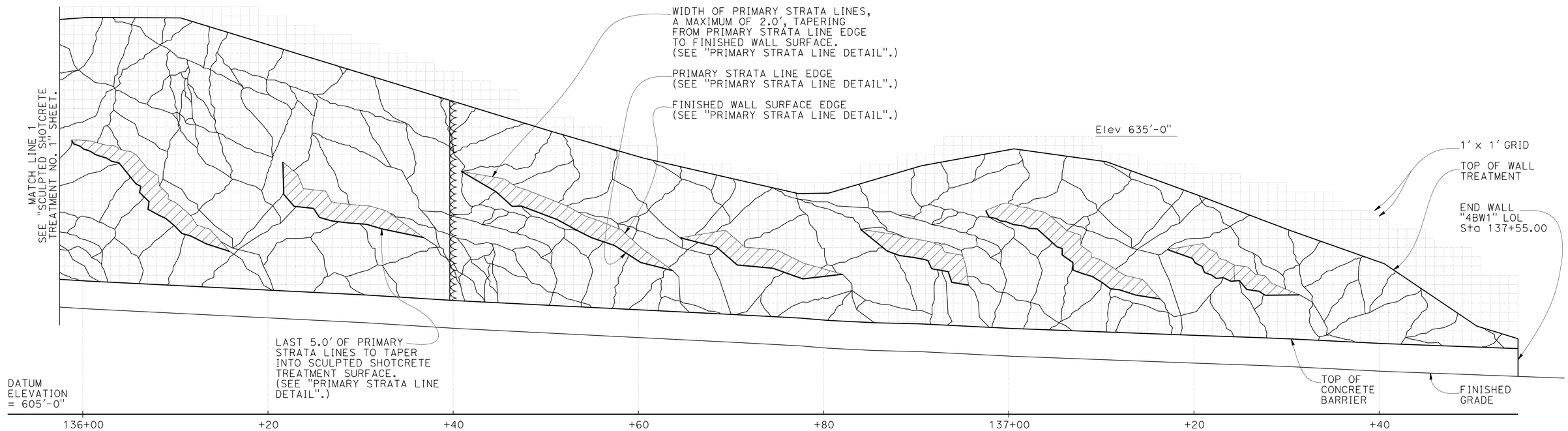

SCULPTED SHOTCRETE SURFACE TREATMENT

3/16" = 1'-0"

NOTE:
For notes and legend, see "SCULPTED SHOTCRETE TREATMENT NO. 1" sheet.

	BY	CHECKED
DESIGN	S. Hegazi	R. Amir
DETAILS	T. Kusumi	R. Amir / S. Hegazi
QUANTITIES	R. Amir	S. Hegazi

STATE OF CALIFORNIA
DEPARTMENT OF TRANSPORTATION

DIVISION OF ENGINEERING SERVICES
STRUCTURE DESIGN
DESIGN BRANCH 8

BRIDGE NO. 37E0116
POST MILE 2.55/2.61

HECKER PASS SOIL NAIL WALL NO. 7
SCULPTED SHOTCRETE TREATMENT NO. 2

STRUCTURES DESIGN DETAIL SHEET (ENGLISH) (REV. 09-01-10)

ORIGINAL SCALE IN INCHES FOR REDUCED PLANS 0 1 2 3

UNIT: 3593
PROJECT NUMBER & PHASE: 0400000813-1
CONTRACT NO.: 04-2A2501

DISREGARD PRINTS BEARING EARLIER REVISION DATES

REVISION DATES: 07-06-11 02-02-12 07-19-13

SHEET 13 OF 19

FILE => 37e0116-u-arch02.dgn

USERNAME => s124496 DATE PLOTTED => 21-JUN-2013 TIME PLOTTED => 07:32

DIST	COUNTY	ROUTE	POST MILES TOTAL PROJECT	SHEET No.	TOTAL SHEETS
04	SCI	152	0.1/5.2	329	416

REGISTERED CIVIL ENGINEER 08-01-12 DATE

6-17-13
PLANS APPROVAL DATE

REGISTERED PROFESSIONAL ENGINEER Sameh Hegazi No. C64899 Exp. 06-30-2013 CIVIL STATE OF CALIFORNIA

The State of California or its officers or agents shall not be responsible for the accuracy or completeness of electronic copies of this plan sheet.

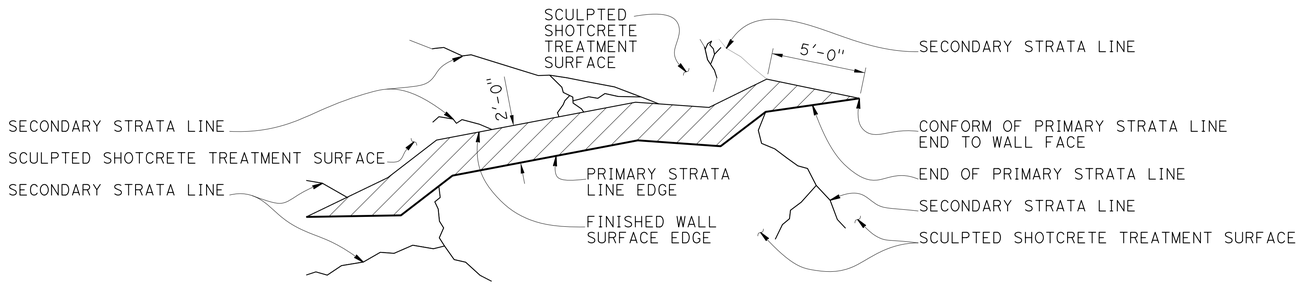

PRIMARY STRATA LINE ELEVATION DETAIL

No Scale

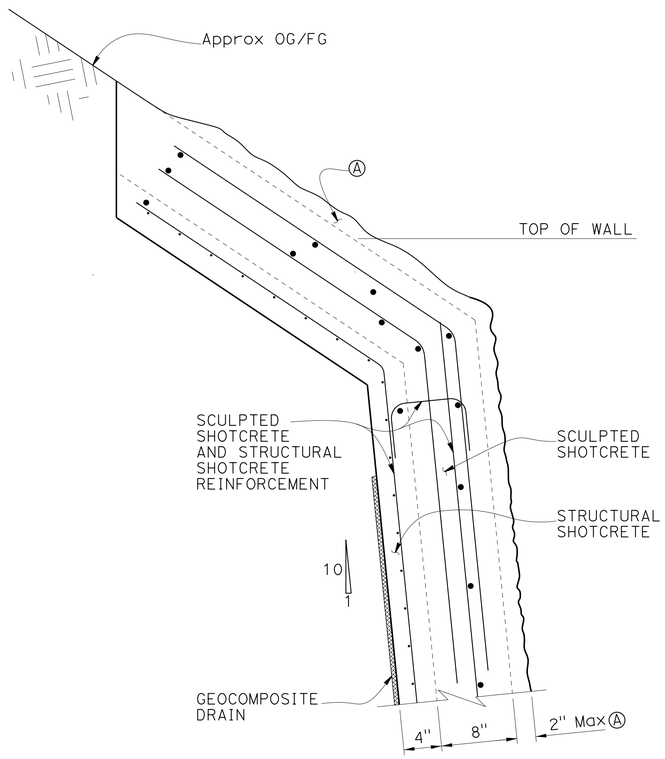

TOP OF WALL SCULPTED SHOTCRETE TREATMENT REINFORCEMENT

No Scale

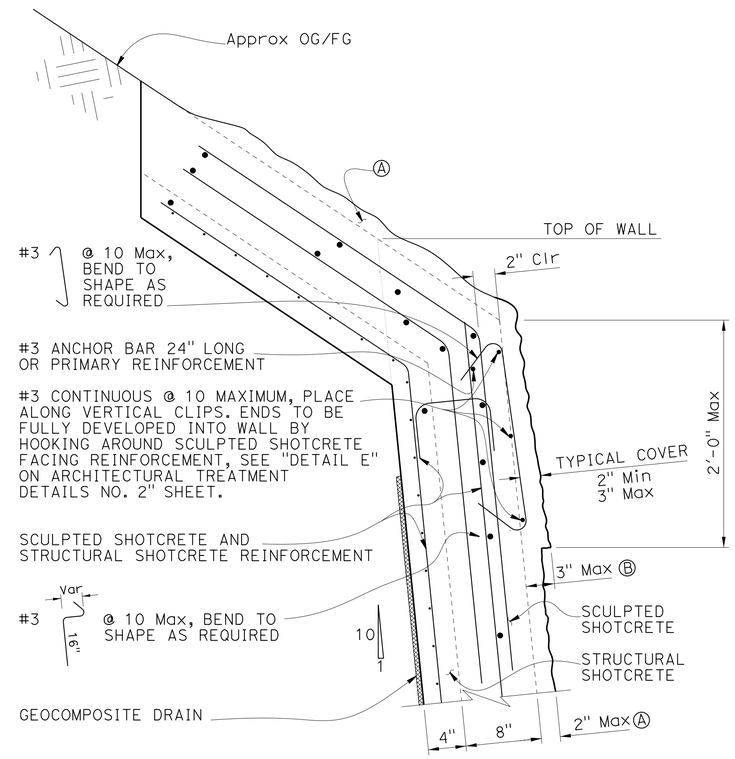

PRIMARY STRATA LINE AT TOP OF WALL SCULPTED SHOTCRETE TREATMENT REINFORCEMENT

No Scale

NOTES:

1. See also "SCULPTED SHOTCRETE TREATMENT DETAILS NO. 2" sheet for reinforcement.
2. Soil nail not shown for clarity.
3. Longitudinal bars shall taper to a point and be flush with the finished wall surface at primary strata line ends where it transitions into the wall face.
4. Cable railing post pocket and safety hookup are not shown for clarity.

Ⓐ Max 2" thick unreinforced sculpted shotcrete zone for sculpted shotcrete treatment.

Ⓑ Max 3" thick reinforced sculpted shotecrete zone for top of wall sculpted shotcrete treatment.

	BY	CHECKED
DESIGN	S. Hegazi	R. Amir
DETAILS	T. Kusumi	R. Amir / S. Hegazi
QUANTITIES	R. Amir	S. Hegazi

STATE OF CALIFORNIA DEPARTMENT OF TRANSPORTATION

DIVISION OF ENGINEERING SERVICES STRUCTURE DESIGN DESIGN BRANCH 8

BRIDGE NO. 37E0116
POST MILE 2.55/2.61

HECKER PASS SOIL NAIL WALL NO. 7
SCULPTED SHOTCRETE TREATMENT DETAILS NO. 1

STRUCTURES DESIGN DETAIL SHEET (ENGLISH) (REV. 09-01-10)

ORIGINAL SCALE IN INCHES FOR REDUCED PLANS 0 1 2 3

UNIT: 3593
PROJECT NUMBER & PHASE: 0400000813-1
CONTRACT NO.: 04-2A2501

DISREGARD PRINTS BEARING EARLIER REVISION DATES

REVISION DATES 06-08-11 06-21-12 07-19-12

SHEET 14 OF 19

FILE => 37e0116-u-archdt01.dgn

USERNAME => s124496 DATE PLOTTED => 21-JUN-2013 TIME PLOTTED => 07:32

DIST	COUNTY	ROUTE	POST MILES TOTAL PROJECT	SHEET No.	TOTAL SHEETS
04	SCI	152	0.1/5.2	330	416

REGISTERED CIVIL ENGINEER 08-01-12 DATE

6-17-13
PLANS APPROVAL DATE

REGISTERED PROFESSIONAL ENGINEER
Sameh Hegazi
No. C64899
Exp. 06-30-2013
CIVIL
STATE OF CALIFORNIA

The State of California or its officers or agents shall not be responsible for the accuracy or completeness of electronic copies of this plan sheet.

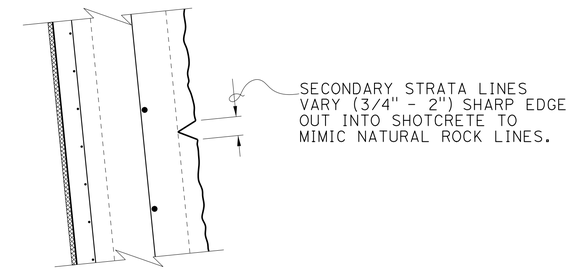

SECONDARY STRATA LINE

No Scale

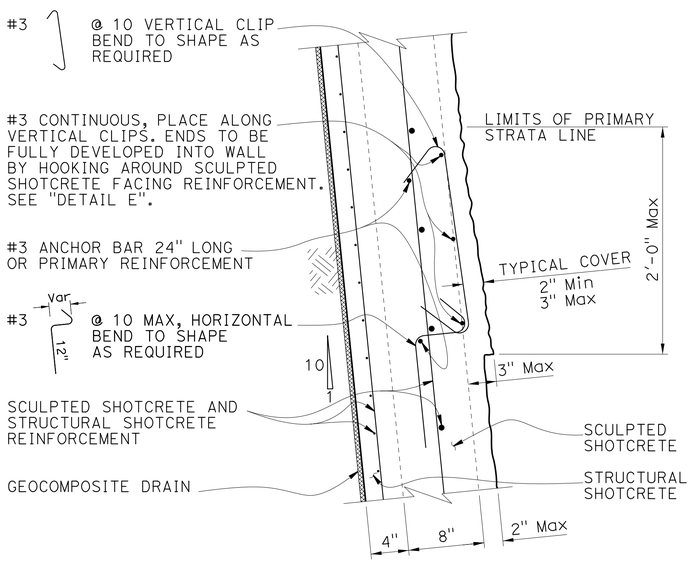

PRIMARY STRATA LINE
SCULPTED SHOTCRETE TREATMENT REINFORCEMENT

No Scale

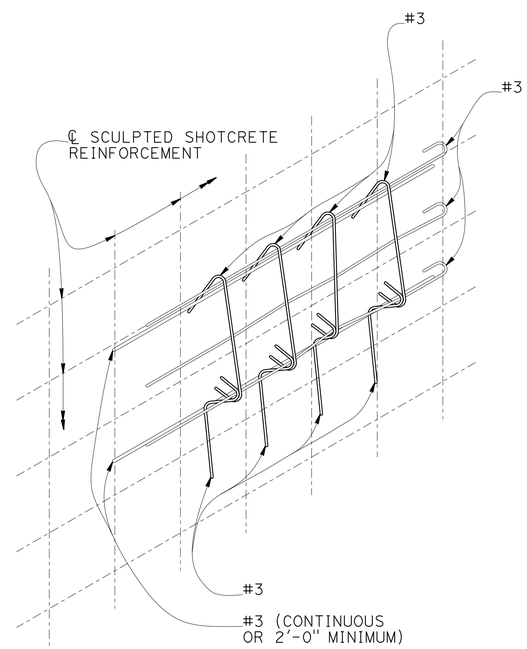

DETAIL E

No Scale

DESIGN	BY S. Hegazi	CHECKED R. Amir	
DETAILS	BY T. Kusumi	CHECKED R. Amir / S. Hegazi	
QUANTITIES	BY R. Amir	CHECKED S. Hegazi	

STATE OF CALIFORNIA
DEPARTMENT OF TRANSPORTATION

DIVISION OF ENGINEERING SERVICES
STRUCTURE DESIGN
DESIGN BRANCH 8

BRIDGE NO. 37E0116
POST MILE 2.55/2.61

HECKER PASS SOIL NAIL WALL NO. 7
SCULPTED SHOTCRETE TREATMENT DETAILS NO. 2

STRUCTURES DESIGN DETAIL SHEET (ENGLISH) (REV. 09-01-10)

ORIGINAL SCALE IN INCHES FOR REDUCED PLANS 0 1 2 3

UNIT: 3593
PROJECT NUMBER & PHASE: 0400000813-1
CONTRACT NO.: 04-2A2501

DISREGARD PRINTS BEARING EARLIER REVISION DATES

REVISION DATES: 06-09-11 05-01-12 07-19-12

SHEET 15 OF 19

FILE => 37e0116-u-arcnd+02.dgn

USERNAME => s124496 DATE PLOTTED => 21-JUN-2013 TIME PLOTTED => 07:32

DIST	COUNTY	ROUTE	POST MILES TOTAL PROJECT	SHEET No	TOTAL SHEETS
04	SCI	152	0.1/5.2	331	416

Ali Kaddoura 02-15-12
REGISTERED CIVIL ENGINEER

6-17-13
PLANS APPROVAL DATE

REGISTERED PROFESSIONAL ENGINEER Ali K. Kaddoura No. 55710 Exp. 12-31-12 CIVIL STATE OF CALIFORNIA

The State of California or its officers or agents shall not be responsible for the accuracy or completeness of electronic copies of this plan sheet.

This LOTB sheet was prepared in accordance with the Caltrans Soil & Rock Logging, Classification, & Presentation Manual (2010 Edition).

BENCH MARK

SC6 (SUHV114)

1" I.P. w/ CT PP&T
16.16 Ft Lt. "D1" Line, ℄ Rte 152
Sta. 133+90.74
N 1,824,160.46
E 6,215,086.49
EL.=630.05

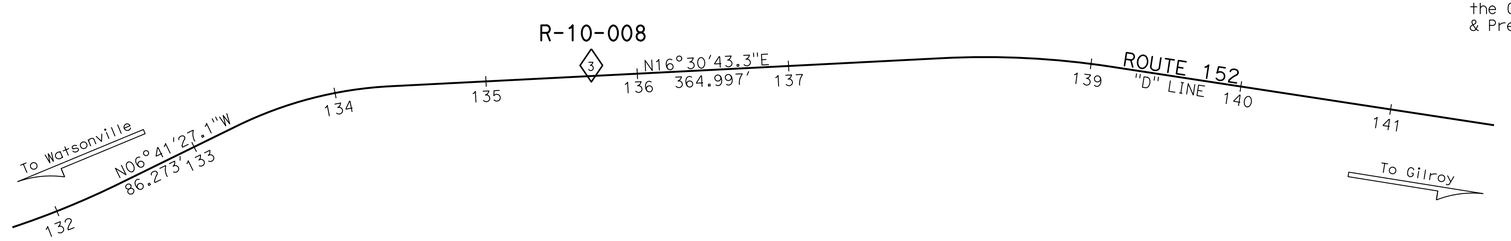

PLAN

1" = 50'

NOTE: 1. This LOTB sheet was prepared in accordance with the Caltrans Soil & Rock Logging, Classification, and Presentation Manual (April 2010).

2. PP=unconfined compressive strength (tsf) as measured by pocket penetrometer.

3. *NR: Not Recorded.

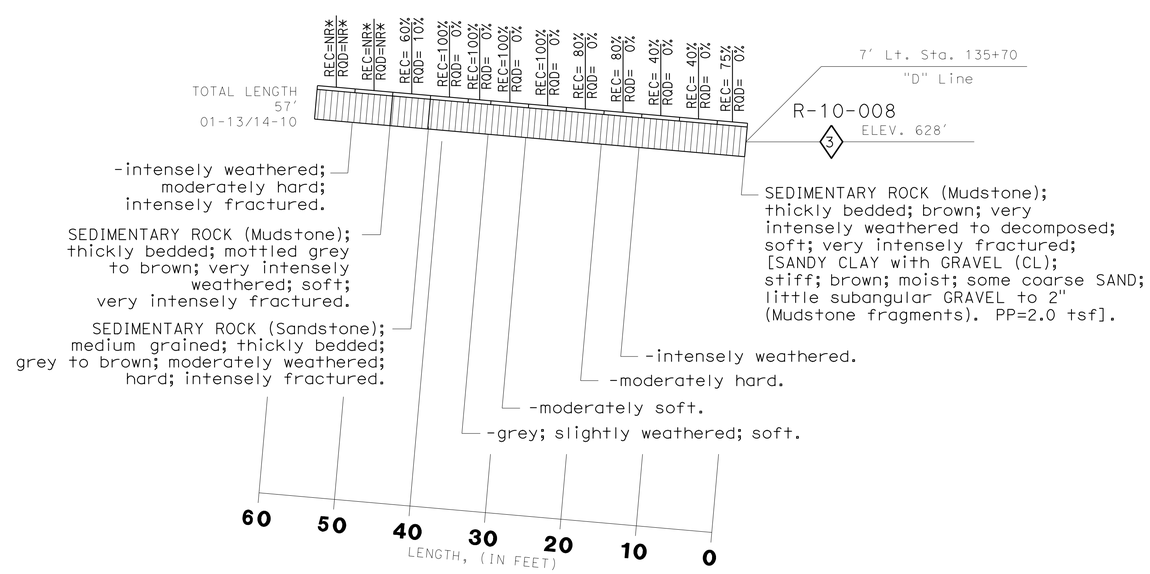

PROFILE

HOR. 1"=20'
VER. 1"=10'

ENGINEERING SERVICES	GEOTECHNICAL SERVICES	STATE OF CALIFORNIA DEPARTMENT OF TRANSPORTATION	DIVISION OF ENGINEERING SERVICES OFFICE OF GEOTECHNICAL DESIGN BRANCH 8	BRIDGE NO. 37E0116 / POST MILES 2.55/2.61	HECKER PASS SOIL NAIL WALL NO. 7
FUNCTIONAL SUPERVISOR / NAME: N. Name	DRAWN BY: M. Reynolds 10/10 / CHECKED BY: M. Gaffney	FIELD INVESTIGATION BY: A. Kaddoura	CU 04 / EA 2A2500		LOG OF TEST BORINGS 1 of 4

ORIGINAL SCALE IN INCHES FOR REDUCED PLANS 0 1 2 3

DISREGARD PRINTS BEARING EARLIER REVISION DATES → 01-06-12 05-25-12

REVISION DATES | SHEET 16 OF 19

FILE => 37e0116-z-1tb01.dgn

USERNAME => s124396 DATE PLOTTED => 21-JUN-2013 TIME PLOTTED => 07:32

DIST	COUNTY	ROUTE	POST MILES TOTAL PROJECT	SHEET No	TOTAL SHEETS
04	SCI	152	0.1/5.2	332	416

Ali Kaddoura 02-15-12
REGISTERED CIVIL ENGINEER DATE

6-17-13
PLANS APPROVAL DATE

REGISTERED PROFESSIONAL ENGINEER Ali K. Kaddoura No. 55710 Exp. 12-31-12 CIVIL STATE OF CALIFORNIA

The State of California or its officers or agents shall not be responsible for the accuracy or completeness of electronic copies of this plan sheet.

REFERENCE: CALTRANS SOIL & ROCK LOGGING, CLASSIFICATION, AND PRESENTATION MANUAL (JUNE 2007)

CEMENTATION

Description	Criteria
Weak	Crumbles or breaks with handling or little finger pressure.
Moderate	Crumbles or breaks with considerable finger pressure.
Strong	Will not crumble or break with finger pressure.

CONSISTENCY OF COHESIVE SOILS

Description	Unconfined Compressive Strength (tsf)	Pocket Penetrometer Measurement (tsf)	Torvane Measurement (tsf)	Field Approximation
Very Soft	< 0.25	< 0.25	< 0.12	Easily penetrated several inches by fist
Soft	0.25 to 0.50	0.25 to 0.50	0.12 to 0.25	Easily penetrated several inches by thumb
Medium Stiff	0.50 to 1.0	0.50 to 1.0	0.25 to 0.50	Penetrated several inches by thumb with moderate effort
Stiff	1 to 2	1 to 2	0.50 to 1.0	Readily indented by thumb but penetrated only with great effort
Very Stiff	2 to 4	2 to 4	1.0 to 2.0	Readily indented by thumbnail
Hard	> 4.0	> 4.0	> 2.0	Indented by thumbnail with difficulty

BOREHOLE IDENTIFICATION

Symbol	Hole Type	Description
Size	A	Auger Boring
Size	R P	Rotary drilled boring Rotary percussion boring (air)
Size	R	Rotary drilled diamond core
Size	HD HA	Hand driven (1-inch soil tube) Hand Auger
●	D	Dynamic Cone Penetration Boring
▲	CPT	Cone Penetration Test (ASTM D 5778-95)
⬚	O	Other

Note: Size in inches.

PLASTICITY OF FINE-GRAINED SOILS

Description	Criteria
Nonplastic	A 1/8-inch thread cannot be rolled at any water content.
Low	The thread can barely be rolled and the lump cannot be formed when drier than the plastic limit.
Medium	The thread is easy to roll and not much time is required to reach the plastic limit. The thread cannot be rerolled after reaching the plastic limit. The lump crumbles when drier than the plastic limit.
High	It takes considerable time rolling and kneading to reach the plastic limit. The thread can be rerolled several times after reaching the plastic limit. The lump can be formed without crumbling when drier than the plastic limit.

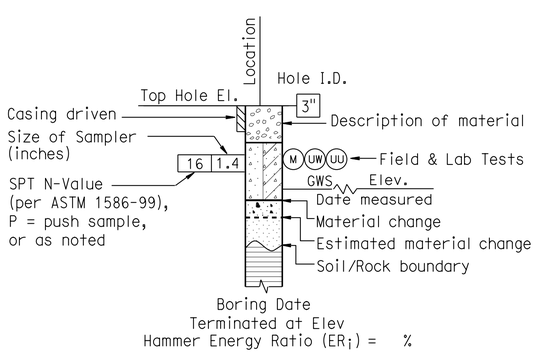

ROTARY BORING

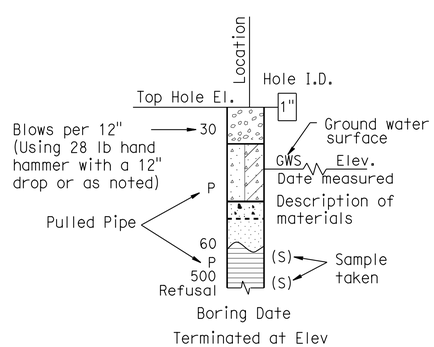

HAND BORING

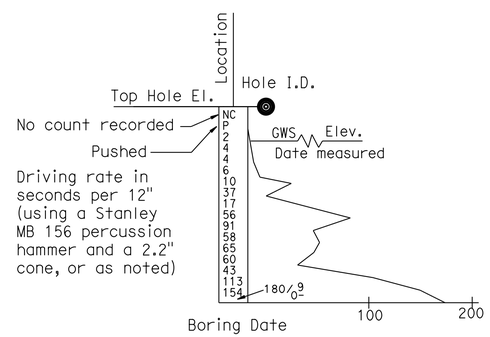

DYNAMIC CONE PENETRATION BORING

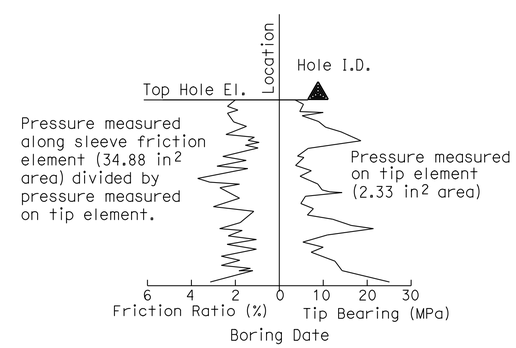

CONE PENETRATION TEST (CPT) SOUNDING

ENGINEERING SERVICES				GEOTECHNICAL SERVICES	STATE OF CALIFORNIA DEPARTMENT OF TRANSPORTATION	DIVISION OF ENGINEERING SERVICES OFFICE OF GEOTECHNICAL DESIGN BRANCH 8	BRIDGE NO. 37E0116 / POST MILE 2.55/2.61	HECKER PASS SOIL NAIL WALL NO. 7
FUNCTIONAL SUPERVISOR	PREPARED BY	M. Reynolds	10/10	FIELD INVESTIGATION BY:				LOG OF TEST BORINGS 2 of 4
NAME:	CHECKED BY	M. Gaffney		A. Kaddoura C. Risden				
GS LOTB SOIL LEGEND				ORIGINAL SCALE IN INCHES FOR REDUCED PLANS 0 1 2 3		CU 04 EA 2A2500	DISREGARD PRINTS BEARING EARLIER REVISION DATES	REVISION DATES 03-08-12 05-25-12 — SHEET 17 OF 19

FILE => 37e0116-z-ltb02.dgn

USERNAME => s124496 DATE PLOTTED => 21-JUN-2013 TIME PLOTTED => 07:32

REFERENCE: CALTRANS SOIL & ROCK LOGGING, CLASSIFICATION, AND PRESENTATION MANUAL (JUNE 2007)

DIST	COUNTY	ROUTE	POST MILES TOTAL PROJECT	SHEET No	TOTAL SHEETS
04	SCI	152	0.1/5.2	333	416

Ali Kaddoura 02-15-12
REGISTERED CIVIL ENGINEER DATE

6-17-13
PLANS APPROVAL DATE

REGISTERED PROFESSIONAL ENGINEER Ali K. Kaddoura No. 55710 Exp. 12-31-12 CIVIL STATE OF CALIFORNIA

The State of California or its officers or agents shall not be responsible for the accuracy or completeness of electronic copies of this plan sheet.

GROUP SYMBOLS AND NAMES

Graphic/Symbol	Group Names	Graphic/Symbol	Group Names
GW	Well-graded GRAVEL Well-graded GRAVEL with SAND	CL	Lean CLAY Lean CLAY with SAND Lean CLAY with GRAVEL SANDY lean CLAY SANDY lean CLAY with GRAVEL GRAVELLY lean CLAY GRAVELLY lean CLAY with SAND
GP	Poorly graded GRAVEL Poorly graded GRAVEL with SAND		
GW-GM	Well-graded GRAVEL with SILT Well-graded GRAVEL with SILT and SAND	CL-ML	SILTY CLAY SILTY CLAY with SAND SILTY CLAY with GRAVEL SANDY SILTY CLAY SANDY SILTY CLAY with GRAVEL GRAVELLY SILTY CLAY GRAVELLY SILTY CLAY with SAND
GW-GC	Well-graded GRAVEL with CLAY (or SILTY CLAY) Well-graded GRAVEL with CLAY and SAND (or SILTY CLAY and SAND)		
GP-GM	Poorly graded GRAVEL with SILT Poorly graded GRAVEL with SILT and SAND	ML	SILT SILT with SAND SILT with GRAVEL SANDY SILT SANDY SILT with GRAVEL GRAVELLY SILT GRAVELLY SILT with SAND
GP-GC	Poorly graded GRAVEL with CLAY (or SILTY CLAY) Poorly graded GRAVEL with CLAY and SAND (or SILTY CLAY and SAND)		
GM	SILTY GRAVEL SILTY GRAVEL with SAND	OL	ORGANIC lean CLAY ORGANIC lean CLAY with SAND ORGANIC lean CLAY with GRAVEL SANDY ORGANIC lean CLAY SANDY ORGANIC lean CLAY with GRAVEL GRAVELLY ORGANIC lean CLAY GRAVELLY ORGANIC lean CLAY with SAND
GC	CLAYEY GRAVEL CLAYEY GRAVEL with SAND		
GC-GM	SILTY, CLAYEY GRAVEL SILTY, CLAYEY GRAVEL with SAND	OL	ORGANIC SILT ORGANIC SILT with SAND ORGANIC SILT with GRAVEL SANDY ORGANIC SILT SANDY ORGANIC SILT with GRAVEL GRAVELLY ORGANIC SILT GRAVELLY ORGANIC SILT with SAND
SW	Well-graded SAND Well-graded SAND with GRAVEL		
SP	Poorly graded SAND Poorly graded SAND with GRAVEL	CH	Fat CLAY Fat CLAY with SAND Fat CLAY with GRAVEL SANDY fat CLAY SANDY fat CLAY with GRAVEL GRAVELLY fat CLAY GRAVELLY fat CLAY with SAND
SW-SM	Well-graded SAND with SILT Well-graded SAND with SILT and GRAVEL		
SW-SC	Well-graded SAND with CLAY (or SILTY CLAY) Well-graded SAND with CLAY and GRAVEL (or SILTY CLAY and GRAVEL)	MH	Elastic SILT Elastic SILT with SAND Elastic SILT with GRAVEL SANDY elastic SILT SANDY elastic SILT with GRAVEL GRAVELLY elastic SILT GRAVELLY elastic SILT with SAND
SP-SM	Poorly graded SAND with SILT Poorly graded SAND with SILT and GRAVEL		
SP-SC	Poorly graded SAND with CLAY (or SILTY CLAY) Poorly graded SAND with CLAY and GRAVEL (or SILTY CLAY and GRAVEL)	OH	ORGANIC fat CLAY ORGANIC fat CLAY with SAND ORGANIC fat CLAY with GRAVEL SANDY ORGANIC fat CLAY SANDY ORGANIC fat CLAY with GRAVEL GRAVELLY ORGANIC fat CLAY GRAVELLY ORGANIC fat CLAY with SAND
SM	SILTY SAND SILTY SAND with GRAVEL		
SC	CLAYEY SAND CLAYEY SAND with GRAVEL	OH	ORGANIC elastic SILT ORGANIC elastic SILT with SAND ORGANIC elastic SILT with GRAVEL SANDY ORGANIC elastic SILT SANDY ORGANIC elastic SILT with GRAVEL GRAVELLY ORGANIC elastic SILT GRAVELLY ORGANIC elastic SILT with SAND
SC-SM	SILTY, CLAYEY SAND SILTY, CLAYEY SAND with GRAVEL		
PT	PEAT	OL/OH	ORGANIC SOIL ORGANIC SOIL with SAND ORGANIC SOIL with GRAVEL SANDY ORGANIC SOIL SANDY ORGANIC SOIL with GRAVEL GRAVELLY ORGANIC SOIL GRAVELLY ORGANIC SOIL with SAND
	COBBLES COBBLES and BOULDERS BOULDERS		

FIELD AND LABORATORY TESTING

- (C) Consolidation (ASTM D 2435)
- (CL) Collapse Potential (ASTM D 5333)
- (CP) Compaction Curve (CTM 216)
- (CR) Corrosivity Testing (CTM 643, CTM 422, CTM 417)
- (CU) Consolidated Undrained Triaxial (ASTM D 4767)
- (DS) Direct Shear (ASTM D 3080)
- (EI) Expansion Index (ASTM D 4829)
- (M) Moisture Content (ASTM D 2216)
- (OC) Organic Content-% (ASTM D 2974)
- (P) Permeability (CTM 220)
- (PA) Particle Size Analysis (ASTM D 422)
- (PI) Plasticity Index (AASHTO T 90) Liquid Limit (AASHTO T 89)
- (PL) Point Load Index (ASTM D 5731)
- (PM) Pressure Meter
- (PP) Pocket Penetrometer
- (R) R-Value (CTM 301)
- (SE) Sand Equivalent (CTM 217)
- (SG) Specific Gravity (AASHTO T 100)
- (SL) Shrinkage Limit (ASTM D 427)
- (SW) Swell Potential (ASTM D 4546)
- (TV) Pocket Torvane
- (UC) Unconfined Compression-Soil (ASTM D 2166) Unconfined Compression-Rock (ASTM D 2938)
- (UU) Unconsolidated Undrained Triaxial (ASTM D 2850)
- (UW) Unit Weight (ASTM D 4767)
- (VS) Vane Shear (AASHTO T 223)

APPARENT DENSITY OF COHESIONLESS SOILS

Description	SPT N_{60} (Blows / 12 inches)
Very loose	0 - 4
Loose	5 - 10
Medium Dense	11 - 30
Dense	31 - 50
Very Dense	> 50

MOISTURE

Description	Criteria
Dry	Absence of moisture, dusty, dry to the touch
Moist	Damp but no visible water
Wet	Visible free water, usually soil is below water table

PERCENT OR PROPORTION OF SOILS

Description	Criteria
Trace	Particles are present but estimated to be less than 5%
Few	5 to 10%
Little	15 to 25%
Some	30 to 45%
Mostly	50 to 100%

PARTICLE SIZE

Description		Size
Boulder		> 12"
Cobble		3" to 12"
Gravel	Coarse	3/4" to 3"
	Fine	No. 4 to 3/4"
Sand	Coarse	No. 10 to No. 4
	Medium	No. 40 to No. 10
	Fine	No. 200 to No. 40

ENGINEERING SERVICES				GEOTECHNICAL SERVICES
FUNCTIONAL SUPERVISOR	PREPARED BY	M. Reynolds	10/10	FIELD INVESTIGATION BY:
NAME:	CHECKED BY	M. Gaffney		A. Kadoura C. Risden

GS LOTB SOIL LEGEND

ORIGINAL SCALE IN INCHES FOR REDUCED PLANS 0 1 2 3

STATE OF CALIFORNIA DEPARTMENT OF TRANSPORTATION

DIVISION OF ENGINEERING SERVICES OFFICE OF GEOTECHNICAL DESIGN BRANCH 8

CU 04
EA 2A2500

BRIDGE NO. 37E0116
POST MILE 2.55/2.61

HECKER PASS SOIL NAIL WALL NO. 7

LOG OF TEST BORINGS 3 of 4

DISREGARD PRINTS BEARING EARLIER REVISION DATES → 01-08-12 05-25-12

REVISION DATES

SHEET 18 OF 19

FILE => 37e0116-z-ltb03.dgn

USERNAME => s124496 DATE PLOTTED => 21-JUN-2013 TIME PLOTTED => 07:32

REFERENCE: CALTRANS SOIL & ROCK LOGGING, CLASSIFICATION, AND PRESENTATION MANUAL (JUNE 2007)

DIST	COUNTY	ROUTE	POST MILES TOTAL PROJECT	SHEET No	TOTAL SHEETS
04	SCI	152	0.1/5.2	334	416

Ali Kaddoura 02-15-12
REGISTERED CIVIL ENGINEER DATE

6-17-13
PLANS APPROVAL DATE

REGISTERED PROFESSIONAL ENGINEER Ali K. Kaddoura No. 55710 Exp. 12-31-12 CIVIL STATE OF CALIFORNIA

The State of California or its officers or agents shall not be responsible for the accuracy or completeness of electronic copies of this plan sheet.

PERCENT CORE RECOVERY (REC) & ROCK QUALITY DESIGNATION (RQD)

$$REC = \frac{\sum \text{Length of the recovered core pieces (inches)}}{\text{Total length of core run (inches)}} \times 100\%$$

$$RQD = \frac{\sum \text{Length of intact core pieces} \geq 4''}{\text{Total length of core run (inches)}} \times 100\%$$

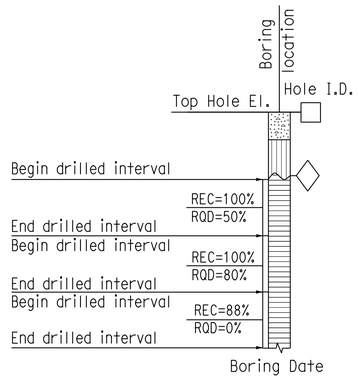

RELATIVE STRENGTH OF INTACT ROCK

Term	Uniaxial Compressive Strength (PSI)
Extremely Strong	> 30,000
Very Strong	14,500 - 30,000
Strong	7,000 - 14,500
Medium Strong	3,500 - 7,000
Weak	700 - 3,500
Very Weak	150 - 700
Extremely Weak	< 150

BEDDING SPACING

Description	Thickness / Spacing
Massive	Greater than 10 ft
Very thickly bedded	3 to 10 ft
Thickly bedded	1 to 3 ft
Moderately bedded	3-5/8" to 1 ft
Thinly bedded	1-1/4" to 3-5/8"
Very thinly bedded	3/8" to 1-1/4"
Laminated	Less than 3/8"

LEGEND OF ROCK MATERIALS

- IGNEOUS ROCK
- SEDIMENTARY ROCK
- METAMORPHIC ROCK

ROCK HARDNESS

Description	Criteria
Extremely Hard	Specimen cannot be scratched with a pocket knife or sharp pick; can only be chipped with repeated heavy hammer blows.
Very Hard	Specimen cannot be scratched with a pocket knife or sharp pick. Breaks with repeated heavy hammer blows.
Hard	Specimen can be scratched with a pocket knife or sharp pick with difficulty (heavy pressure). Heavy hammer blows required to break specimen.
Moderately Hard	Specimen can be scratched with pocket knife or sharp pick with light or moderate pressure. Core breaks with moderate hammer pressure.
Moderately Soft	Specimen can be grooved 1/6" deep with a pocket knife or sharp pick with moderate or heavy pressure. Breaks with light hammer blow or heavy manual pressure.
Soft	Specimen can be grooved or gouged easily by a pocket knife or sharp pick with light pressure, can be scratched with fingernail. Breaks with light to moderate manual pressure.
Very Soft	Specimen can be readily indented, grooved or gouged with fingernail, or carved with a pocket knife. Breaks with light manual pressure.

FRACTURE DENSITY

Description	Observed Fracture Density
Unfractured	No fractures.
Very slightly fractured	Lengths greater than 3 feet.
Slightly fractured	Lengths from 1 to 3 feet with few lengths less than 1 foot or greater than 3 feet.
Moderately fractured	Lengths mostly in 4" to 1 foot range with most lengths about 8"
Intensely fractured	Lengths average from 1 to 4" with scattered fragmented intervals with lengths less than 4"
Very intensely fractured	Mostly chips and fragments with a few scattered short core lengths.

Combination descriptors (such as "Very intensely to intensely fractured") are used where equal distribution of both fracture density characteristics is present over a significant interval or exposure, or where characteristics are "in between" the descriptor definitions. Only two adjacent descriptors may be combined.

WEATHERING DESCRIPTORS FOR INTACT ROCK

Description	Diagnostic features					General Characteristics
	Chemical Weathering-Discoloration and/or oxidation		Mechanical Weathering-Grain boundary conditions (disaggregation) primarily for granitics and some coarse-grained sediments	Texture and Solutioning		
	Body of Rock	Fracture Surfaces		Texture	Solutioning	
Fresh	No discoloration, not oxidized.	No discoloration or oxidation.	No separation, intact (tight).	No change.	No solutioning.	Hammer rings when crystalline rocks are struck.
Slightly Weathered	Discoloration or oxidation is limited to surface of, or short distance from, fractures; some feldspar crystals are dull.	Minor to complete discoloration or oxidation of most surfaces.	No visible separation, intact (tight).	Preserved.	Minor leaching of some soluble minerals may be noted.	Hammer rings when crystalline rocks are struck. Body of rock not weakened.
Moderately Weathered	Discoloration or oxidation extends from fractures usually throughout; Fe-Mg minerals are "rusty," feldspar crystals are "cloudy."	All fracture surfaces are discolored or oxidized.	Partial separation of boundaries visible.	Generally preserved.	Soluble minerals may be mostly leached.	Hammer does not ring when rock is struck. Body of rock is slightly weakened.
Intensely Weathered	Discoloration or oxidation throughout; all feldspars and Fe-Mg minerals are altered to clay to some extent; or chemical alteration produces in-situ disaggregation, see grain boundary conditions.	All fracture surfaces are discolored or oxidized, surfaces friable.	Partial separation, rock is friable; in semiarid conditions granitics are disaggregated.	Texture altered by chemical disintegration (hydration, argillation).	Leaching of soluble minerals may be complete.	Dull sound when struck with hammer, usually can be broken with moderate to heavy manual pressure or by light hammer blow without reference to planes of weakness such as incipient or hairline fractures, or veinlets. Rock is significantly weakened.
Decomposed	Discolored or oxidized throughout, but resistant minerals such as quartz may be unaltered; all feldspars and Fe-Mg minerals are completely altered to clay.		Complete separation of grain boundaries (disaggregated).	Resembles a soil, partial or complete remnant rock structure may be preserved; leaching of soluble minerals usually complete.		Can be granulated by hand. Resistant minerals such as quartz may be present as "stringers" or "dikes."

Combination descriptors (such as "slightly weathered to fresh") are permissible where equal distribution of both weathering characteristics is present over significant intervals or where characteristics present are "in between" the diagnostic feature. However, combination descriptors should not be used where significant, identifiable zones can be delineated. Only two adjacent descriptors may be combined. "Very intensely weathered" is the combination descriptor for "intensely weathered to decomposed."

ENGINEERING SERVICES				GEOTECHNICAL SERVICES
FUNCTIONAL SUPERVISOR	PREPARED BY	M. Reynolds	10/10	FIELD INVESTIGATION BY:
NAME:	CHECKED BY	M. Gaffney		A. Kaddoura C. Risden

GS LOTB ROCK LEGEND

ORIGINAL SCALE IN INCHES FOR REDUCED PLANS 0 1 2 3

STATE OF CALIFORNIA DEPARTMENT OF TRANSPORTATION

DIVISION OF ENGINEERING SERVICES OFFICE OF GEOTECHNICAL DESIGN BRANCH 8

CU 04
EA 2A2500

BRIDGE NO. 37E0116
POST MILE 2.55/2.61

HECKER PASS SOIL NAIL WALL NO. 7

LOG OF TEST BORINGS 4 of 4

DISREGARD PRINTS BEARING EARLIER REVISION DATES → 03-08-12 05-25-12

REVISION DATES

SHEET 19 OF 19

FILE => 37e0116-z-ltb04.dgn

USERNAME => s124496 DATE PLOTTED => 21-JUN-2013 TIME PLOTTED => 07:32

DIST	COUNTY	ROUTE	POST MILES TOTAL PROJECT	SHEET No.	TOTAL SHEETS
04	SCI	152	0.1/5.2	335	416

REGISTERED CIVIL ENGINEER 05-15-13 DATE

6-17-13
PLANS APPROVAL DATE

REGISTERED PROFESSIONAL ENGINEER Sameh Hegazi No. C64899 Exp.06-30-2013 CIVIL STATE OF CALIFORNIA

The State of California or its officers or agents shall not be responsible for the accuracy or completeness of electronic copies of this plan sheet.

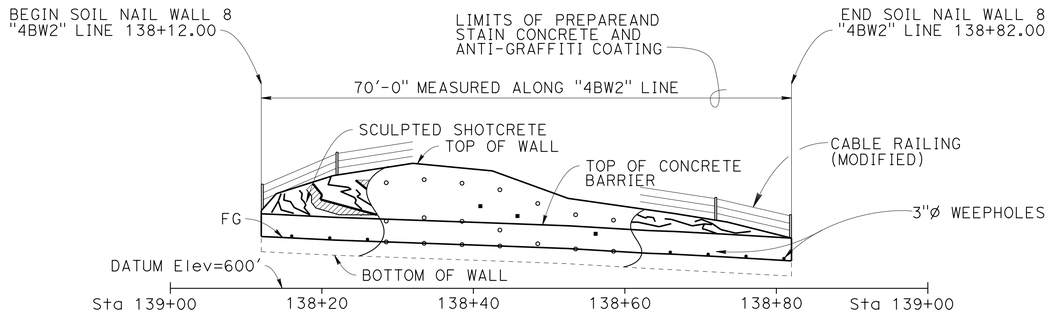

DEVELOPED ELEVATION

1" = 10

LEGEND:

- ○ Indicates approximate location of soil nails
- ■ Indicates approximate location of proof test nails

NOTE:

Not all approximate location of soil nails, proof test nails, cable railing posts and weepholes shown.

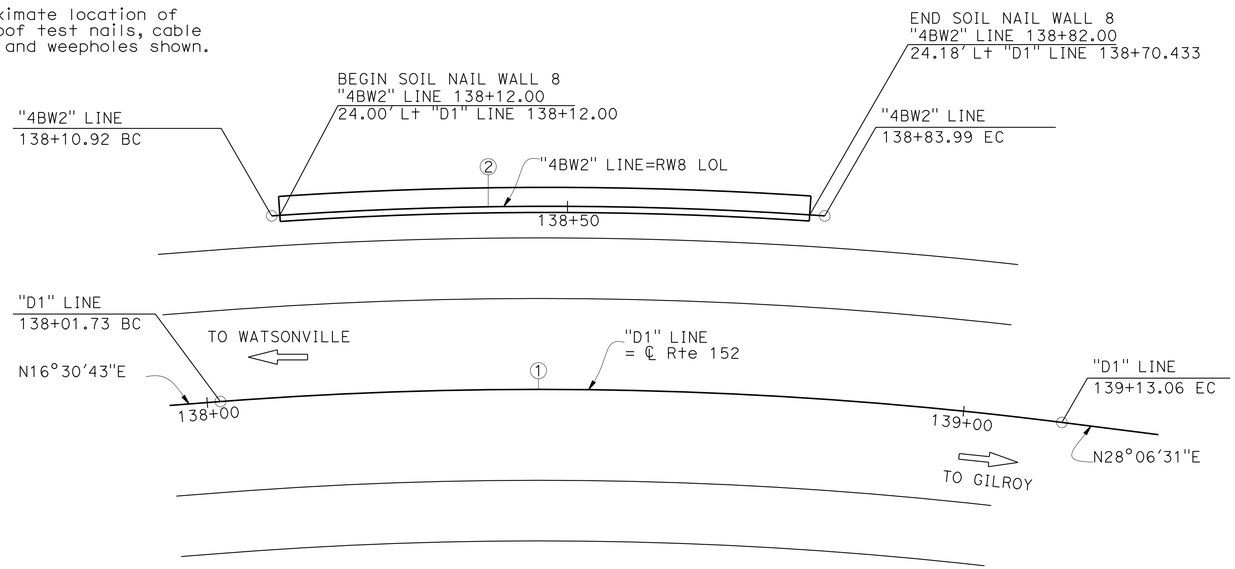

PLAN

1" = 10'

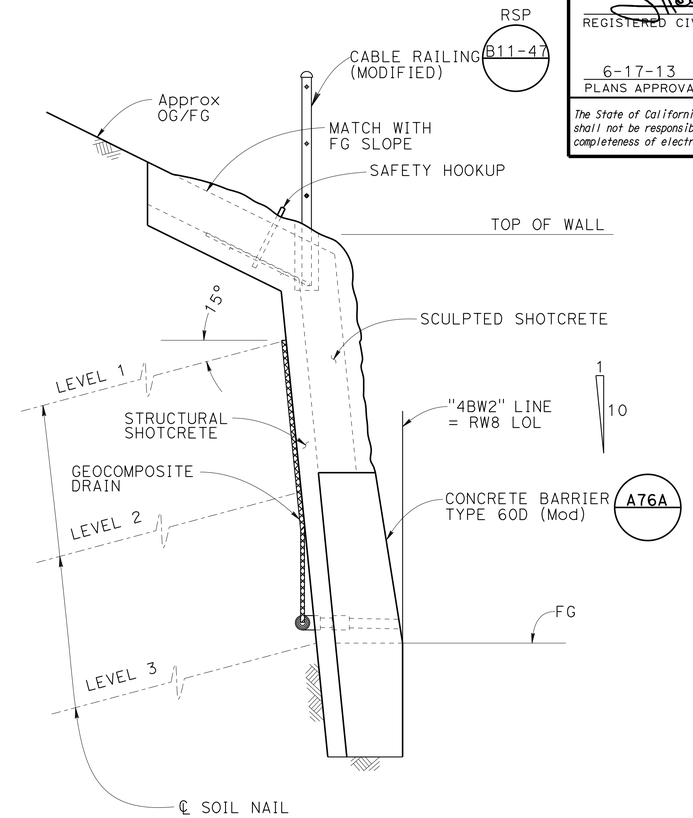

TYPICAL SECTION

3/4" = 1'

NOTES:

1. Top of the wall elevations shall be verified in the field.
2. Soil nail inclination = 15° typical.
3. The exact locations of the Test Soil Nail to be determined by the Engineer in the field.
4. All soil nail levels are parallel to top of cut except the bottom level which is parallel to bottom of wall.
5. Soil nails shall be placed normal to shotcrete surface in the plan view.
6. The contractor shall field locate all utilities before drilling soil nails.
7. The contractor shall provide and maintain stable soil slopes above and below the soil nail walls.
8. Bottom of wall shall be placed against undisturbed soil material.
9. Prepare and stain sculpted shotcrete surface.
10. Concrete barrier shall be integrally colored and applied with anti-graffiti coating from top of barrier to 6 inches below finished grade.

HECKER PASS SOIL NAIL WALL NO. 8

QUANTITIES

STRUCTURE EXCAVATION (SOIL NAIL WALL)	74	CY
STRUCTURE BACKFILL (SOIL NAIL WALL)	8	CY
SOIL NAIL	380	LF
BAR REINFORCING STEEL (RETAINING WALL)	3,395	LB
STRUCTURAL SHOTCRETE	10	CY
SCULPTED SHOTCRETE	14	CY
PREPARE AND STAIN SCULPTED SHOTCRETE	435	SQFT
ANTI-GRAFFITI COATING	210	SQFT
MISCELLANEOUS METAL (SAFETY HOOK)	58	LB
CABLE RAILING (MODIFIED)	70	LF
CONCRETE BARRIER (TYPE 60D MODIFIED)	70	LF

NOTE:

Contractor shall verify all controlling field dimensions before ordering or fabricating any materials.

CURVE DATA

Alignment	R	Δ	T	L
"D1" LINE ①	550'	11°35'50"	55.85'	111.32'
"4BW2" LINE ②	526.13'	7°57'28"	36.60'	73.07'

BRIAN MORI
DESIGN ENGINEER

	BY	CHECKED
DESIGN	Sameh. Hegazi	Rangina Amir
DETAILS	Antonio Carreon	Rangina Amir
QUANTITIES	Rangina Amir	Sameh Hegazi

LOAD & RESISTANCE FACTOR DESIGN — LIVE LOADING: HL93 W/"LOW-BOY": PERMIT DESIGN VEHICLE

	BY	CHECKED
LAYOUT	Sameh Hegazi	Adam Menke
SPECIFICATIONS	Tina Chen	PLANS AND SPECS COMPARED Tina Chen

ORIGINAL SCALE IN INCHES FOR REDUCED PLANS 0 1 2 3

STATE OF CALIFORNIA
DEPARTMENT OF TRANSPORTATION

DIVISION OF ENGINEERING SERVICES
STRUCTURE DESIGN
DESIGN BRANCH 8

BRIDGE NO. 37E0117
POST MILE 2.62/2.63

HECKER PASS SOIL NAIL WALL NO. 8
GENERAL PLAN

UNIT: 3593
PROJECT NUMBER & PHASE: 0400000813-1
CONTRACT NO.: 04-2A2501

DISREGARD PRINTS BEARING EARLIER REVISION DATES

REVISION DATES: 07-11-12 07-20-12 05-08-13

SHEET 1 OF 16

USERNAME => s124496 DATE PLOTTED => 21-JUN-2013 TIME PLOTTED => 09:04

STRUCTURES DESIGN GENERAL PLAN SHEET (ENGLISH) (REV.09-01-10)

FILE => 37e0117-a-gp.dgn

DIST	COUNTY	ROUTE	POST MILES TOTAL PROJECT	SHEET No.	TOTAL SHEETS
04	SCI	152	0.1/5.2	336	416

REGISTERED CIVIL ENGINEER 05-15-13 DATE

6-17-13
PLANS APPROVAL DATE

REGISTERED PROFESSIONAL ENGINEER Sameh Hegazi No. C64899 Exp. 09-30-2013 CIVIL STATE OF CALIFORNIA

The State of California or its officers or agents shall not be responsible for the accuracy or completeness of electronic copies of this plan sheet.

INDEX TO PLANS

SHEET NO.	TITLE
1	GENERAL PLAN
2	INDEX TO PLANS
3	FOUNDATION PLAN
4	STRUCTURE ELEVATION
5	TYPICAL SECTION
6	STRUCTURAL DETAILS NO. 1
7	STRUCTURAL DETAILS NO. 2
8	STRUCTURAL DETAILS NO. 3
9	DRAINAGE DETAILS
10	SCULPTED SHOTCRETE TREATMENT
11	SCULPTED SHOTCRETE TREATMENT DETAILS NO. 1
12	SCULPTED SHOTCRETE TREATMENT DETAILS NO. 2
13	LOG OF TEST BORING 1 of 4
14	LOG OF TEST BORING 2 of 4
15	LOG OF TEST BORING 3 of 4
16	LOG OF TEST BORING 4 of 4

STANDARD PLANS DATED MAY 2010

A10A	ACRONYMS AND ABBREVIATIONS (SHEET 1 OF 2)
A10B	ACRONYMS AND ABBREVIATIONS (SHEET 2 OF 2)
A10C	LINES AND SYMBOLS (SHEET 1 OF 3)
A10D	LINES AND SYMBOLS (SHEET 2 OF 3)
A10E	LINES AND SYMBOLS (SHEET 3 OF 3)
A76A	CONCRETE BARRIER TYPE 60
B0-3	BRIDGE DETAILS
RSP B11-47	CABLE RAILING

STANDARD PLAN SHEET NO.

DETAIL NO.

GENERAL NOTES

LOAD AND RESISTANCE FACTOR DESIGN:

AASHTO LFRD Bridge Design Specifications, preface dated Dec 2009
4th edition with California Amendments.

FHWA Publication No. FHWA-IF-03-017,
Manual for Design and Construction Monitoring of Soil Nail Walls

REINFORCED CONCRETE & SHOTCRETE:

F'c = 3.6 ksi
Fy = 60 ksi

STRUCTURAL STEEL:

Plates and shapes shall conform to ASTM Designation
A709/A709M Grade (36 ksi)

SOIL NAILS:

Soil nails shall conform to ASTM Designation
A615, Grade 60, fs = 60 ksi, #7 bars

PUNCHING SHEAR:

PS = 45 kips

SOIL DESIGN PARAMETERS IN NAILING ZONES :

NAIL DATA TABLE

ZONE	"D1" LINE STATION	UNIT WEIGHT (lb/ft^3)	FRICTION ANGLE DEGREES	COHESION (lb/ft^2)	DESIGN PULL OUT RESISTANCE (Kip/ft)	UPPER ELEVATION (ft)	LOWER ELEVATION (ft)
1	138+12.00 - 138+82.00	125	32	700	2.0	616	602

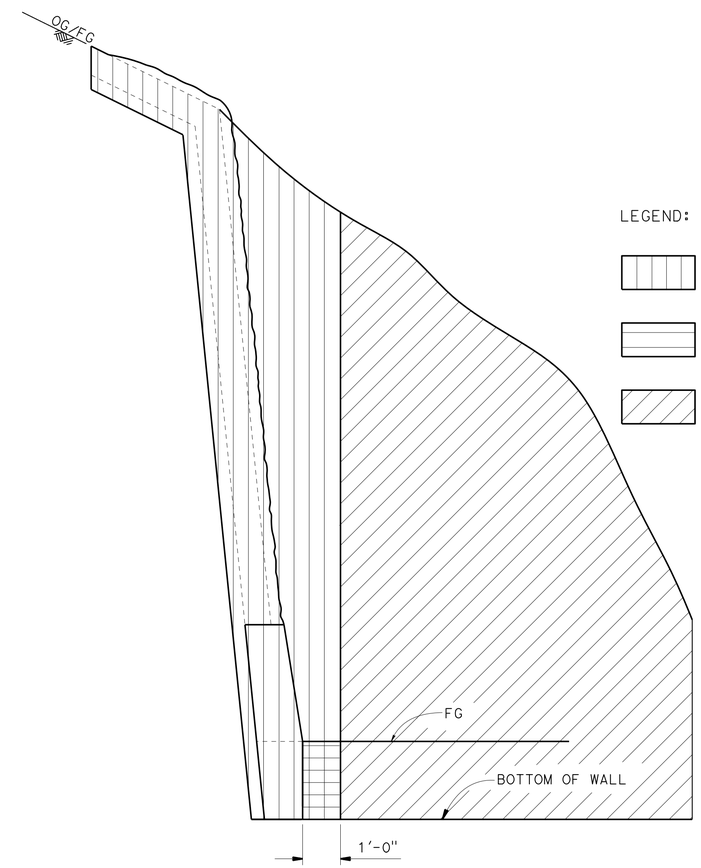

LEGEND:

Structure Excavation (Soil Nail Wall)

Structure Backfill (Soil Nail Wall)

Roadway Excavation (See Road Plans)

LIMITS OF PAYMENT FOR EXCAVATION AND BACKFILL

No Scale

	BY	CHECKED
DESIGN	Sameh Hegazi	Rangina Amir
DETAILS	Antonio Carreon	S Hegazi/R Amir
QUANTITIES	Rangina Amir	Sameh Hegazi

STATE OF CALIFORNIA
DEPARTMENT OF TRANSPORTATION

DIVISION OF ENGINEERING SERVICES
STRUCTURE DESIGN
DESIGN BRANCH 8

BRIDGE NO. 37E0117
POST MILE 2.62/2.63

HECKER PASS SOIL NAIL WALL NO.8
INDEX TO PLANS

STRUCTURES DESIGN DETAIL SHEET (ENGLISH) (REV. 09-01-10)

ORIGINAL SCALE IN INCHES FOR REDUCED PLANS 0 1 2 3

UNIT: 3593
PROJECT NUMBER & PHASE: 0400000813-1
CONTRACT NO.: 04-2A2501

DISREGARD PRINTS BEARING EARLIER REVISION DATES

REVISION DATES 07-20-12 05-10-13 05-24-13

SHEET 2 OF 16

FILE => 37e0117-a-itp.dgn

USERNAME => s124496 DATE PLOTTED => 21-JUN-2013 TIME PLOTTED => 07:32

DIST	COUNTY	ROUTE	POST MILES TOTAL PROJECT	SHEET No.	TOTAL SHEETS
04	SCI	152	0.1/5.2	337	416

REGISTERED CIVIL ENGINEER 08-01-12 DATE

6-17-13
PLANS APPROVAL DATE

REGISTERED PROFESSIONAL ENGINEER Sameh Hegazi No. C64899 Exp. 09-30-2013 CIVIL STATE OF CALIFORNIA

The State of California or its officers or agents shall not be responsible for the accuracy or completeness of electronic copies of this plan sheet.

CURVE DATA

ALIGNMENT	R	Δ	T	L
"D1" LINE ①	550.00	11°35'50"	55.85	111.32
"4BW2" LINE ②	526.13	7°57'28"	36.60	73.07

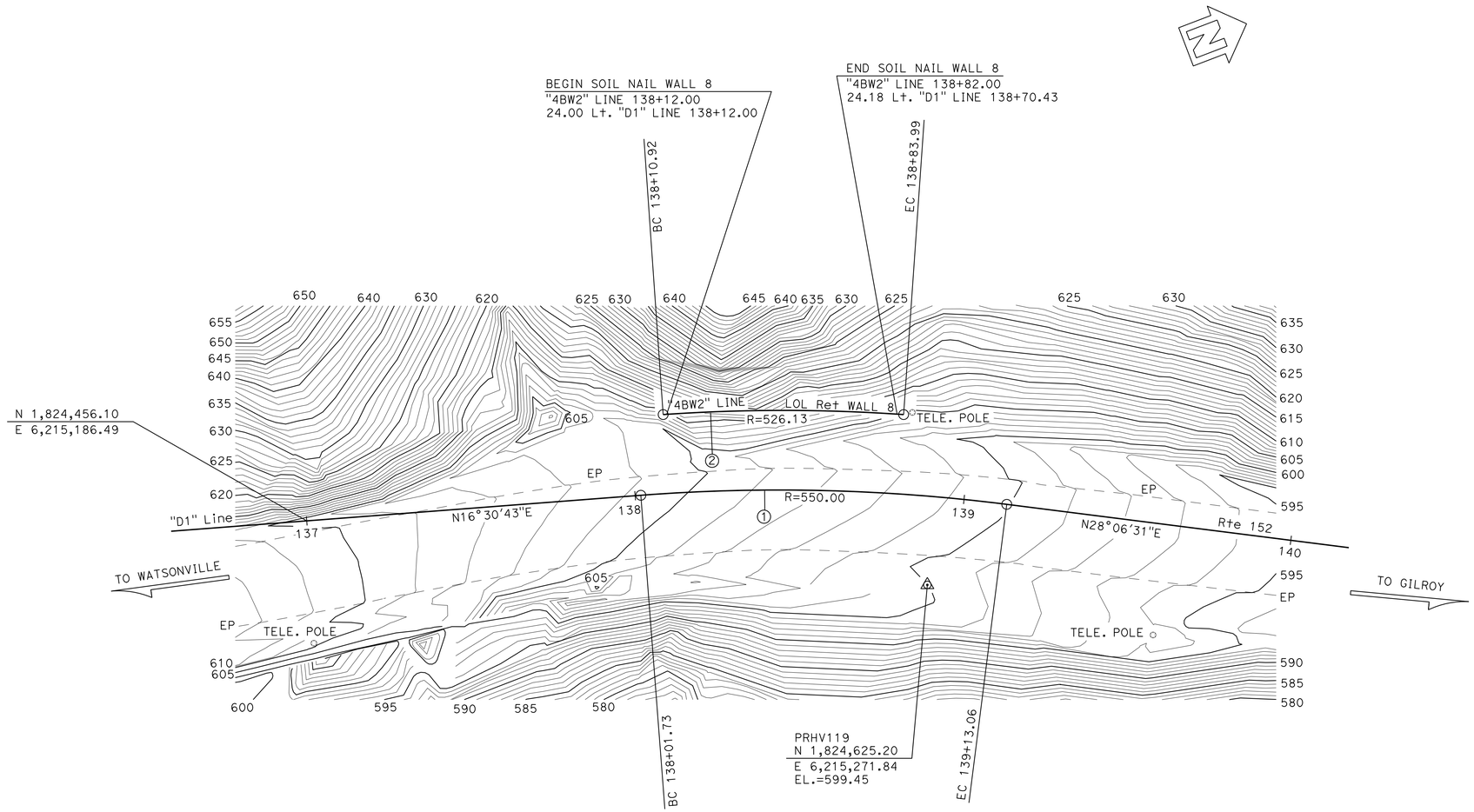

SURVEY CONTROL

SUHV114 (Not Shown)

Fnd 1" I.P. w/CT PP&T
16.16 Lt. "D1' Line, Rte 152
Sta. 133+90.74
N 1,824,160.46
E 6,215,086.49
EL.=630.05

PRHV119

26.88 Rt. "D1' Line, Rte 152
Sta. 138+91.13
N 1,824,625.20
E 6,215,271.84
EL.=599.45

PRELIMINARY INVESTIGATION SECTION

SCALE 1"=20'	VERT.DATUM NAVD 88	PHOTOGRAMMETRY AS OF: X			
	HORZ.DATUM NAD83 (92)	SURVEYED	BY District	CHECKED	BY Don Ivy 06/2011
ALIGNMENT TIES Dist. Traverse Sheet		DRAFTED	BY S. Zheng 06/2011	CHECKED	BY Jim Pallares 06/2011

DESIGN	BY Sameh Hegazi	CHECKED Rangina Amir
DETAILS	BY Antonio Carreon	CHECKED S Hegazi/R Amir
QUANTITIES	BY Rangina Amir	CHECKED S Hegazi

STATE OF CALIFORNIA
DEPARTMENT OF TRANSPORTATION

DIVISION OF ENGINEERING SERVICES
STRUCTURE DESIGN
DESIGN BRANCH 08

BRIDGE NO. 37E0117
POST MILE 2.62/2.63

HECKER PASS SOIL NAIL WALL NO. 8
FOUNDATION PLAN

STRUCTURES FOUNDATION PLAN SHEET (ENGLISH) (REV. 09-01-10)

ORIGINAL SCALE IN INCHES FOR REDUCED PLANS 0 1 2 3

UNIT: 3646
PROJECT NUMBER & PHASE: 0100000183-1 CONTRACT NO.: 04-2A2501

DISREGARD PRINTS BEARING EARLIER REVISION DATES → REVISION DATES 02-29-12 05-24-12 07-20-12

SHEET 3 OF 16

FILE => 37e0117-c-fpl01.dgn

DIST	COUNTY	ROUTE	POST MILES TOTAL PROJECT	SHEET No.	TOTAL SHEETS
04	SCI	152	0.1/5.2	338	416

REGISTERED CIVIL ENGINEER 08-01-12 DATE

6-17-13
PLANS APPROVAL DATE

REGISTERED PROFESSIONAL ENGINEER Sameh Hegazi No. C64899 Exp. 09-30-2013 CIVIL STATE OF CALIFORNIA

The State of California or its officers or agents shall not be responsible for the accuracy or completeness of electronic copies of this plan sheet.

LEGEND:

○ Indicates approximate location of soil nail .

■ Indicates approximate location of proof test nails.

NOTES:

Ⓐ ST = Vertical distance from top of wall elevation to top level of soil nails, ST = 2′-0".

Ⓑ SB_1 = Vertical distance from bottom of wall to bottom level of the soil nails, SB_1 (min) = 2′-0" SB_1 (max) = 3′-0".

Ⓒ SB_2 = Vertical distance from bottom of wall to bottom level of the soil nails, SB_2 (Min)> 3′-6".

Ⓓ Discontinue row when vertical distance between soil nails are less than 1′-6".

Ⓔ SV = Vertical spacing of soil nails, SV (min) = 1′-6" SV (max) = 5′-0".

Ⓕ SH = Horizontal spacing of soil nails, SH (min) = 1′-6" SH (max) = 5′-0".

Ⓖ SS = Horizontal distance between the begining / end of wall and first / last soil nail, SS (min) = 1′-6" SS (max) = 2′-6".

Ⓗ The exact location of the test soil nails to be determined by the Engineer.

Ⓘ Cable railing posts are not shown for clarity.

NAIL SCHEDULE "A"	BAR SIZE #7	
No. OF NAIL ROWS	2	
ROW No.TOP TO BOTTOM	1	2
EMBEDMENT LENGTH (ft)	10	10

NAIL SCHEDULE "B"	BAR SIZE #7		
No. OF NAIL ROWS	3		
ROW No.TOP TO BOTTOM	1	2	3
EMBEDMENT LENGTH (ft)	12	10	10

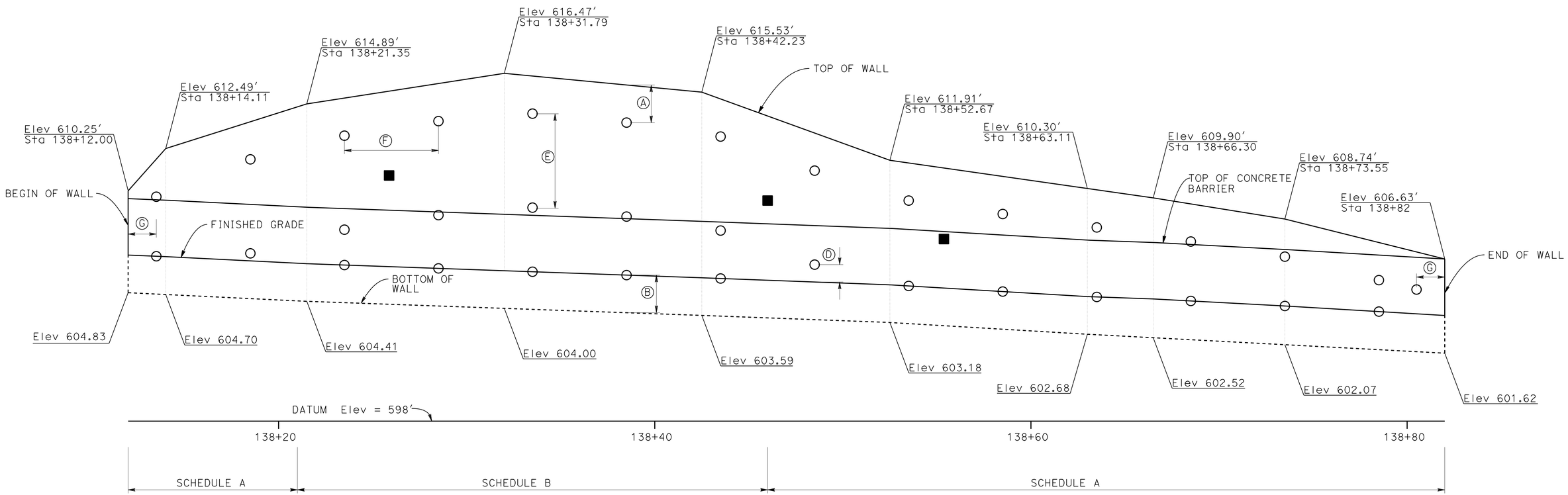

DEVELOPED ELEVATION

3/8" = 1′

DESIGN	BY Sameh Hegazi	CHECKED Rangina Amir	
DETAILS	BY Antonio Carreon	CHECKED S Hegazi/R Amir	
QUANTITIES	BY Rangina Amir	CHECKED Sameh Hegazi	

STATE OF CALIFORNIA DEPARTMENT OF TRANSPORTATION

DIVISION OF ENGINEERING SERVICES STRUCTURE DESIGN DESIGN BRANCH 8

BRIDGE NO. 37E0117 POST MILE 2.62/2.63

HECKER PASS SOIL NAIL WALL NO.8

STRUCTURE ELEVATION

STRUCTURES DESIGN DETAIL SHEET (ENGLISH) (REV. 09-01-10)

ORIGINAL SCALE IN INCHES FOR REDUCED PLANS 0 1 2 3

UNIT: 3593
PROJECT NUMBER & PHASE: 0400000813-1 CONTRACT NO.: 04-2A2501

DISREGARD PRINTS BEARING EARLIER REVISION DATES

REVISION DATES 02-09-12 05-24-12 07-20-12

SHEET 4 OF 16

FILE => 37e0117-d-se.dgn

USERNAME => s124496 DATE PLOTTED => 21-JUN-2013 TIME PLOTTED => 07:32

DIST	COUNTY	ROUTE	POST MILES TOTAL PROJECT	SHEET No.	TOTAL SHEETS
04	SCI	152	0.1/5.2	339	416

REGISTERED CIVIL ENGINEER 05-15-13 DATE

6-17-13
PLANS APPROVAL DATE

REGISTERED PROFESSIONAL ENGINEER
Sameh Hegazi
No. C64899
Exp. 09-30-2013
CIVIL
STATE OF CALIFORNIA

The State of California or its officers or agents shall not be responsible for the accuracy or completeness of electronic copies of this plan sheet.

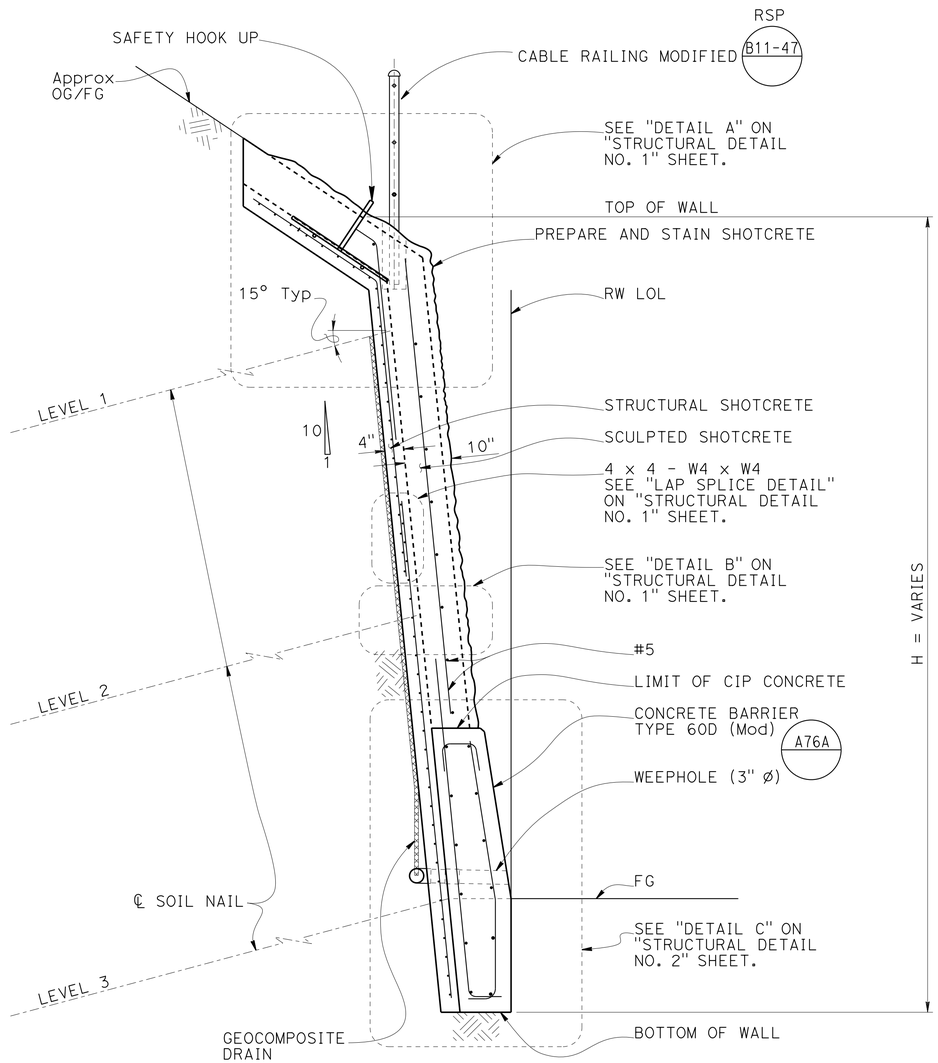

TYPICAL SECTION

3/4" = 1'

NOTES:
1. For "PRODUCTION SOIL NAIL DETAIL" and "PROOF TEST SOIL NAIL DETAIL", see "STRUCTURAL DETAIL NO.3" sheet.
2. For sculpted shotcrete treatment, see "SCULPTED SHOTCRETE TREATMENT" sheet.
3 For geocomposite drain detail, see "DRAINAGE DETAILS" sheet.

	BY	CHECKED
DESIGN	Sameh Hegazi	Rangina Amir
DETAILS	Antonio Carreon	S Hegazi/R Amir
QUANTITIES	Rangina Amir	Sameh Hegazi

STATE OF CALIFORNIA
DEPARTMENT OF TRANSPORTATION

DIVISION OF ENGINEERING SERVICES
STRUCTURE DESIGN
DESIGN BRANCH 8

BRIDGE NO. 37E0117
POST MILE 2.62/2.63

HECKER PASS SOIL NAIL WALL NO.8
TYPICAL SECTION

STRUCTURES DESIGN DETAIL SHEET (ENGLISH) (REV. 09-01-10)

ORIGINAL SCALE IN INCHES FOR REDUCED PLANS 0 1 2 3

UNIT: 3593
PROJECT NUMBER & PHASE: 0400000813-1 CONTRACT NO.: 04-2A2501

DISREGARD PRINTS BEARING EARLIER REVISION DATES

REVISION DATES: 07-26-12 05-10-13 05-24-12

SHEET 5 OF 16

FILE => 37e0117-f-typ.dgn

USERNAME => s124496 DATE PLOTTED => 21-JUN-2013 TIME PLOTTED => 07:32

DIST	COUNTY	ROUTE	POST MILES TOTAL PROJECT	SHEET No.	TOTAL SHEETS
04	SCI	152	0.1/5.2	340	416

REGISTERED CIVIL ENGINEER 05-15-13 DATE

6-17-13
PLANS APPROVAL DATE

REGISTERED PROFESSIONAL ENGINEER Sameh Hegazi No. C64899 Exp. 09-30-2013 CIVIL STATE OF CALIFORNIA

The State of California or its officers or agents shall not be responsible for the accuracy or completeness of electronic copies of this plan sheet.

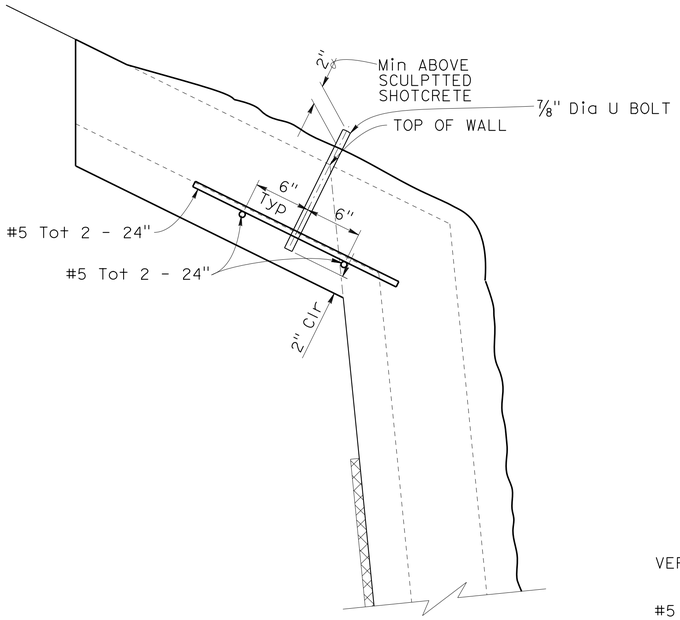

SAFETY HOOKUP DETAIL
No Scale

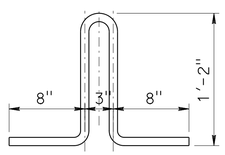

7/8" U BOLT DETAILS
1½" = 1'

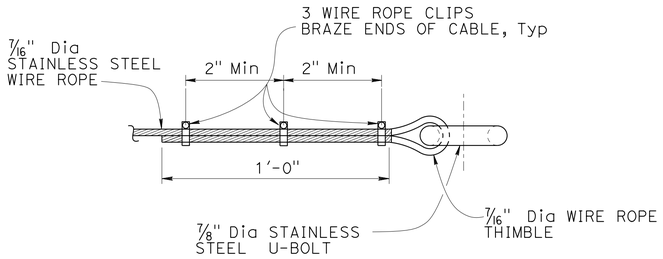

SAFETY WIRE ROPE DETAIL
No Scale

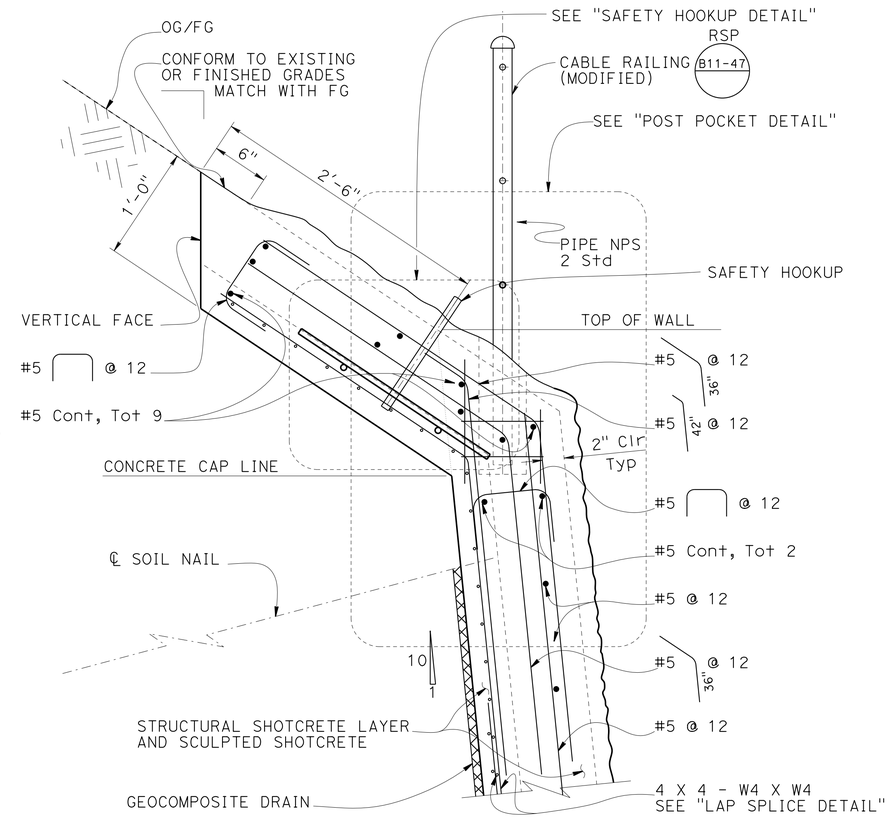

DETAIL A
1½" = 1'-0"

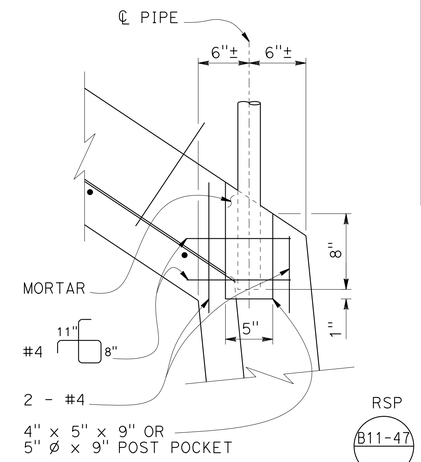

POST POCKET DETAIL
No Scale

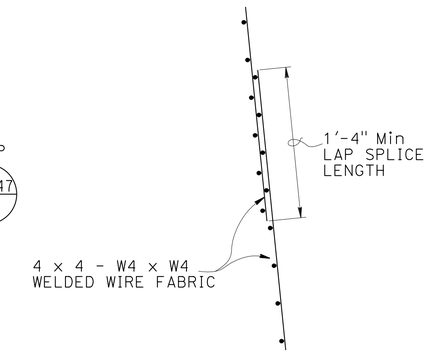

LAP SPLICE DETAIL
No Scale

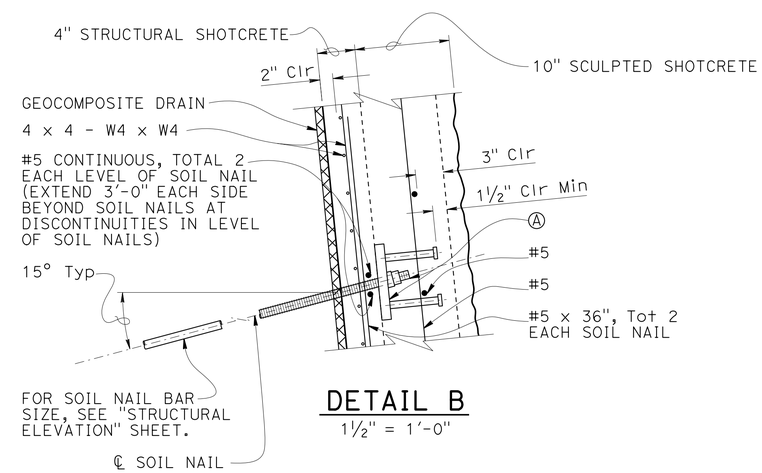

DETAIL B
1½" = 1'-0"

NOTE:

Ⓐ For bearing plate and soil nail details not shown, see "STRUCTURAL DETAILS NO. 3" sheet.

1. Safety hookups shall be placed behind cable railing posts with 10'-0" Max spacing.
2. Safety wire rope shall be extended between safety hookups at top of wall.
3. Safety wire rope and safety hookups shall be placed at locations where wall heights from top of wall to finished grade exceed 5 feet.

DESIGN	BY Sameh Hegazi	CHECKED Rangina Amir	
DETAILS	BY Antonio Carreon	CHECKED S Hegazi/R Amir	
QUANTITIES	BY Rangina Amir	CHECKED Sameh Hegazi	

STATE OF CALIFORNIA
DEPARTMENT OF TRANSPORTATION

DIVISION OF ENGINEERING SERVICES
STRUCTURE DESIGN
DESIGN BRANCH 8

BRIDGE NO. 37E0117
POST MILE 2.62/2.63

HECKER PASS SOIL NAIL WALL NO.8
STRUCTURAL DETAILS NO. 1

STRUCTURES DESIGN DETAIL SHEET (ENGLISH) (REV. 09-01-10)

ORIGINAL SCALE IN INCHES FOR REDUCED PLANS 0 1 2 3

UNIT: 3593
PROJECT NUMBER & PHASE: 0400000813-1
CONTRACT NO.: 04-2A2501

DISREGARD PRINTS BEARING EARLIER REVISION DATES

REVISION DATES 05-10-13 05-24-12 07-20-12

SHEET 6 OF 16

FILE => 37e0117-g-stdt01.dgn

USERNAME => s124496 DATE PLOTTED => 21-JUN-2013 TIME PLOTTED => 07:33

DIST	COUNTY	ROUTE	POST MILES TOTAL PROJECT	SHEET No.	TOTAL SHEETS
04	SCI	152	0.1/5.2	341	416

REGISTERED CIVIL ENGINEER 05-15-13 DATE

6-17-13
PLANS APPROVAL DATE

REGISTERED PROFESSIONAL ENGINEER
Sameh Hegazi
No. C64899
Exp. 06-30-2013
CIVIL
STATE OF CALIFORNIA

The State of California or its officers or agents shall not be responsible for the accuracy or completeness of electronic copies of this plan sheet.

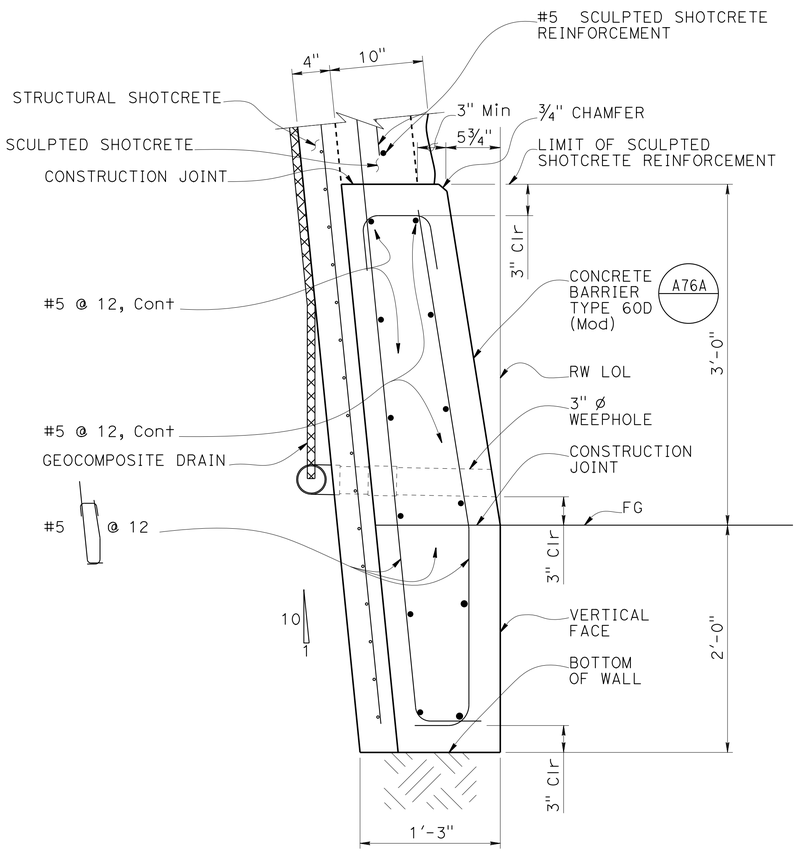

DETAIL C
1 1/2" = 1'-0"

NOTE:
1. Soil nails not shown for clarity.
2. Concrete barrier shall be integrally colored.

DESIGN	BY Sameh Hegazi	CHECKED Rangina Amir	
DETAILS	BY Antonio Carreon	CHECKED S Hegazi/R Amir	
QUANTITIES	BY Rangina Amir	CHECKED Sameh Hegazi	

STATE OF CALIFORNIA
DEPARTMENT OF TRANSPORTATION

DIVISION OF ENGINEERING SERVICES
STRUCTURE DESIGN
DESIGN BRANCH 8

BRIDGE NO. 37E0117
POST MILE 2.62/2.63

HECKER PASS SOIL NAIL WALL NO.8
STRUCTURAL DETAILS NO. 2

STRUCTURES DESIGN DETAIL SHEET (ENGLISH) (REV. 09-01-10)

ORIGINAL SCALE IN INCHES FOR REDUCED PLANS 0 1 2 3

UNIT: 3593
PROJECT NUMBER & PHASE: 0400000813-1
CONTRACT NO.: 04-2A2501

DISREGARD PRINTS BEARING EARLIER REVISION DATES

REVISION DATES: 02-29-12 05-10-13 01-20-12

SHEET 7 OF 16

FILE => 37e0117-g-stdt02.dgn

USERNAME => s124496 DATE PLOTTED => 21-JUN-2013 TIME PLOTTED => 07:33

DIST	COUNTY	ROUTE	POST MILES TOTAL PROJECT	SHEET No.	TOTAL SHEETS
04	SCI	152	0.1/5.2	342	416

REGISTERED CIVIL ENGINEER 08-01-12 DATE

6-17-13
PLANS APPROVAL DATE

REGISTERED PROFESSIONAL ENGINEER Sameh Hegazi No. C64899 Exp. 09-30-2013 CIVIL STATE OF CALIFORNIA

The State of California or its officers or agents shall not be responsible for the accuracy or completeness of electronic copies of this plan sheet.

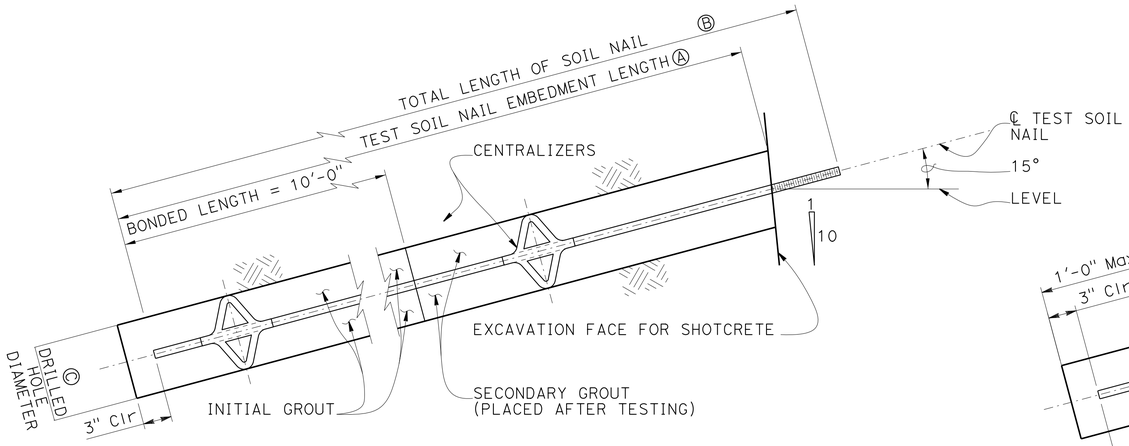

PROOF TEST SOIL NAIL DETAIL

No Scale

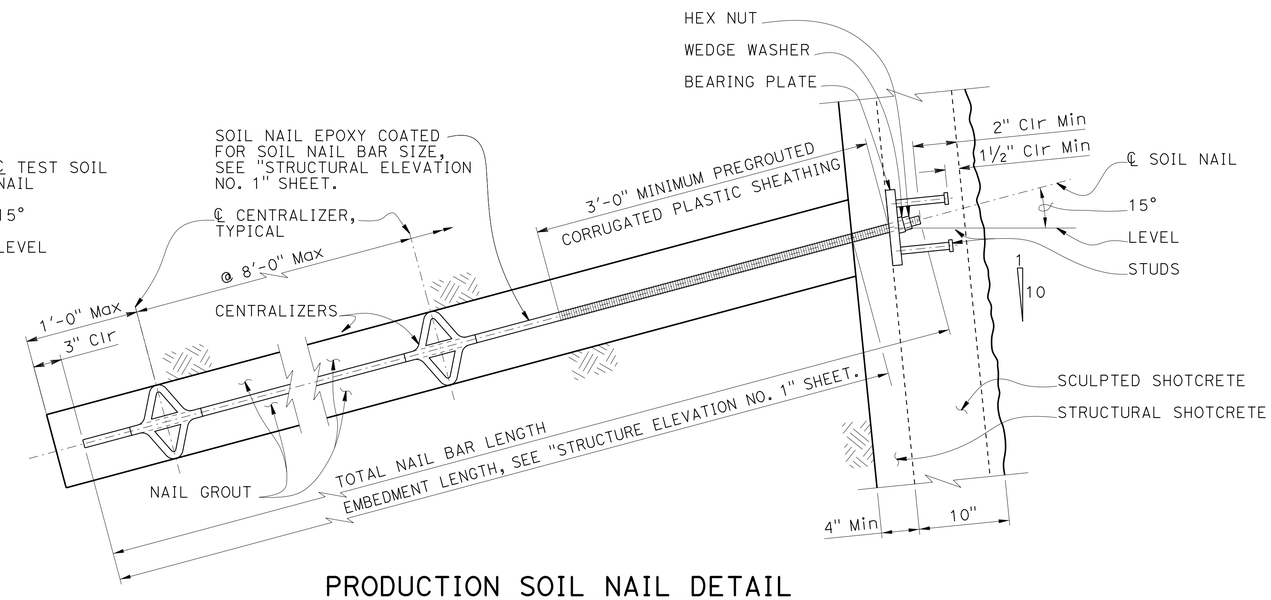

PRODUCTION SOIL NAIL DETAIL

No Scale

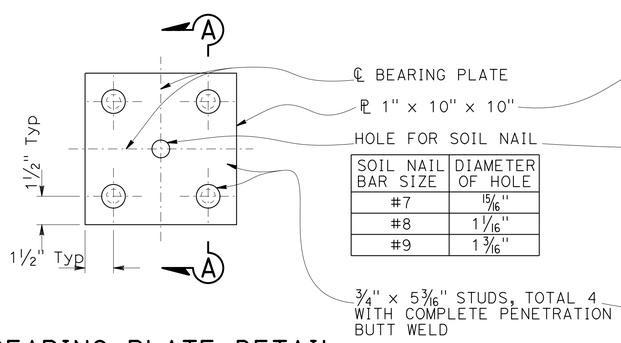

SOIL NAIL BAR SIZE	DIAMETER OF HOLE
#7	15/16"
#8	1 1/16"
#9	1 3/16"

BEARING PLATE DETAIL

No Scale

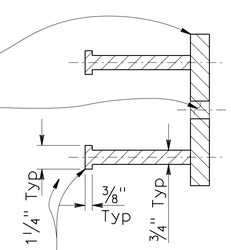

SECTION A-A

No Scale

NOTES:
1. Geocomposite drain not shown for clarity.
2. Wall reinforcement not shown for clarity.
3. Finished grout surface to be normal to the bar

Ⓐ Embedment length of test soil nails equals 2/3 of embedment length of adjacent production soil nails, but not less than 12'-0".

Ⓑ Total length of test soil nail equals embedment length plus length required for jacking equipment.

Ⓒ Contractor to determine drilled hole diameter.

	BY	CHECKED
DESIGN	Sameh Hegazi	Rangina Amir
DETAILS	Antonio Carreon	S Hegazi/R Amir
QUANTITIES	Rangina Amir	Sameh Hegazi

STATE OF CALIFORNIA
DEPARTMENT OF TRANSPORTATION

DIVISION OF ENGINEERING SERVICES
STRUCTURE DESIGN
DESIGN BRANCH 8

BRIDGE NO. 37E0117
POST MILE 2.62/2.63

HECKER PASS SOIL NAIL WALL NO.8
STRUCTURAL DETAILS NO.3

STRUCTURES DESIGN DETAIL SHEET (ENGLISH) (REV. 09-01-10)

ORIGINAL SCALE IN INCHES FOR REDUCED PLANS 0 1 2 3

UNIT: 3593
PROJECT NUMBER & PHASE: 0400000813-1
CONTRACT NO.: 04-2A2501

DISREGARD PRINTS BEARING EARLIER REVISION DATES

REVISION DATES 02-28-12 05-24-12 07-20-12

SHEET 8 OF 16

FILE => 37e0117-g-stdt03.dgn

USERNAME => s124496 DATE PLOTTED => 21-JUN-2013 TIME PLOTTED => 07:33

DIST	COUNTY	ROUTE	POST MILES TOTAL PROJECT	SHEET No.	TOTAL SHEETS
04	SCI	152	0.1/5.2	343	416

REGISTERED CIVIL ENGINEER 08-15-13 DATE

6-17-13
PLANS APPROVAL DATE

REGISTERED PROFESSIONAL ENGINEER
Sameh Hegazi
No. C64899
Exp. 09-30-2013
CIVIL
STATE OF CALIFORNIA

The State of California or its officers or agents shall not be responsible for the accuracy or completeness of electronic copies of this plan sheet.

NOTES:
1. Wall reinforcement not shown for clarity.

Ⓐ Indicates soil nail locations.

Ⓑ Center of geocomposite strips shall be centered vertically between soil nails.

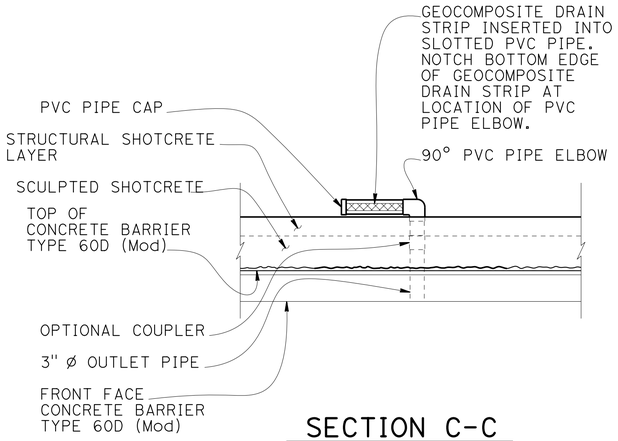

SECTION C-C
NO SCALE

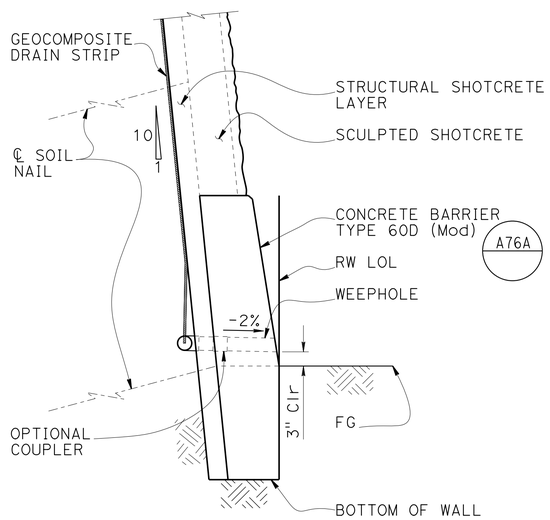

SECTION B-B
3/4"=1'

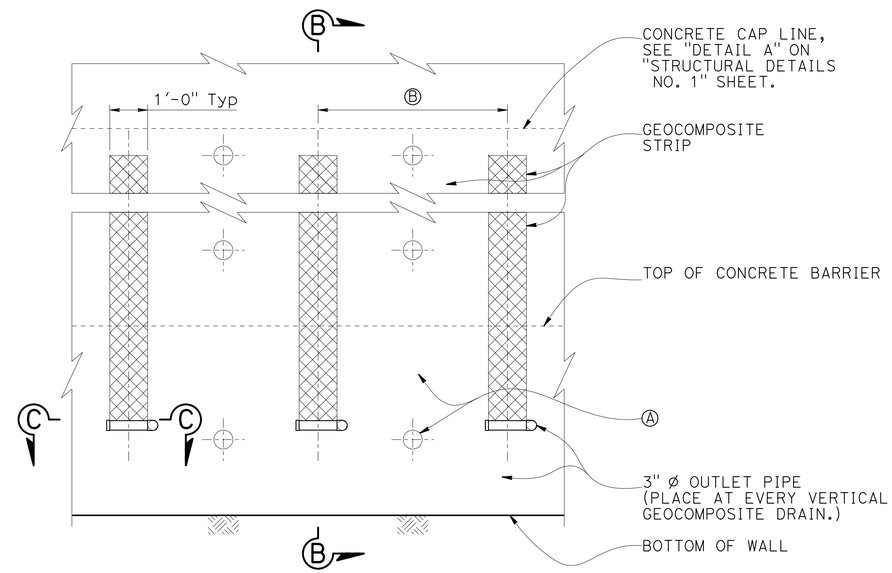

WALL PART ELEVATION
NO SCALE

DESIGN	BY Sameh Hegazi	CHECKED Rangina Amir	
DETAILS	BY Antonio Carreon	CHECKED S Hegazi/R Amir	
QUANTITIES	BY Rangina Amir	CHECKED Sameh Hegazi	

STATE OF CALIFORNIA
DEPARTMENT OF TRANSPORTATION

DIVISION OF ENGINEERING SERVICES
STRUCTURE DESIGN
DESIGN BRANCH 8

BRIDGE NO. 37E0117
POST MILE 2.62/2.63

HECKER PASS SOIL NAIL WALL NO.8
DRAINAGE DETAILS

STRUCTURES DESIGN DETAIL SHEET (ENGLISH) (REV. 09-01-10)

ORIGINAL SCALE IN INCHES FOR REDUCED PLANS 0 1 2 3

UNIT: 3593
PROJECT NUMBER & PHASE: 0400000813-1
CONTRACT NO.: 04-2A2501

DISREGARD PRINTS BEARING EARLIER REVISION DATES

REVISION DATES: 07-20-12 05-10-13 05-24-13

SHEET 9 OF 16

FILE => 37e0117-r-ddet01.dgn

USERNAME => s124496 DATE PLOTTED => 21-JUN-2013 TIME PLOTTED => 07:33

DIST	COUNTY	ROUTE	POST MILES TOTAL PROJECT	SHEET No.	TOTAL SHEETS
04	SCI	152	0.1/5.2	344	416

REGISTERED CIVIL ENGINEER 08-01-12 DATE

6-17-13
PLANS APPROVAL DATE

REGISTERED PROFESSIONAL ENGINEER
Sameh Hegazi
No. C64899
Exp. 09-30-2013
CIVIL
STATE OF CALIFORNIA

The State of California or its officers or agents shall not be responsible for the accuracy or completeness of electronic copies of this plan sheet.

LEGEND:

1. PRIMARY STRATA LINES

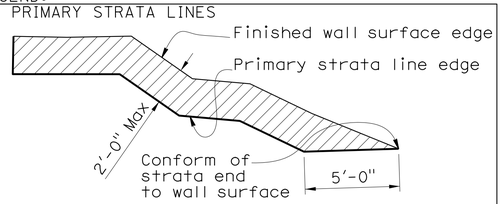

2. SECONDARY STRATA LINES

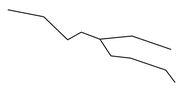

3. indicates location of weakend planes joint. Joints should not be placed within 18 inches of a nail head. For details, see B0-3 / 3-2

NOTES:

1. Primary strata lines drawn on the front elevation are to be used as a guide for layout of primary strata line reinforcement. See "SCULPTED SHOTCRETE TREATMENT DETAILS NO. 1" and "SCULPTED SHOTCRETE TREATMENT DETAILS NO. 2" sheets.
2. Secondary strata lines drawn on the front elevation are to be used as a general guide. Strata lines shall be sculpted to mimic local geology.
3. This sheet is accurate for sculpted shotcrete treatment only.
4. Sculpted shotcrete surface treatment shall be continuous throughout the face of the wall.
5. Additional shotcrete needed for carving the primary strata lines to be reinforced as shown on "SCULPTED SHOTCRETE TREATMENT DETAILS NO. 1" and "SCULPTED SHOTCRETE TREATMENT DETAILS NO. 2" sheets.
6. Primary strata lines to be tapered into the top and bottom of wall.
7. Secondary strata lines are not to exceed 2" amplitude.
8. 3" Ø weepholes are not shown.
9. Cable railing is not shown

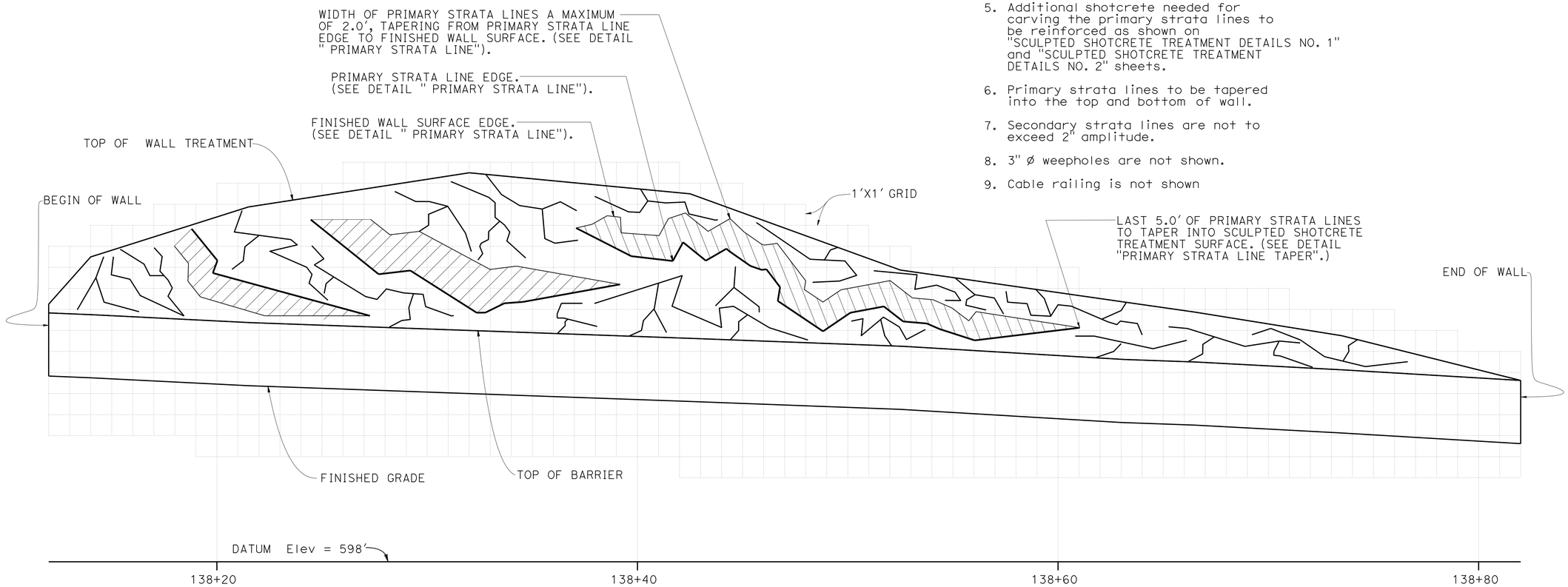

SCULPTED SHOTCRETE SURFACE TREAMENT

3/8" = 1'

DESIGN	BY Sameh Hegazi	CHECKED Rangina Amir	
DETAILS	BY Antonio Carreon	CHECKED S Hegazi/R Amir	
QUANTITIES	BY Rangina Amir	CHECKED Sameh Hegazi	

STATE OF CALIFORNIA
DEPARTMENT OF TRANSPORTATION

DIVISION OF ENGINEERING SERVICES
STRUCTURE DESIGN
DESIGN BRANCH 8

BRIDGE NO. 37E0117
POST MILE 2.62/2.63

HECKER PASS SOIL NAIL WALL NO.8
SCULPTED SHOTCRETE TREATMENT

STRUCTURES DESIGN DETAIL SHEET (ENGLISH) (REV. 09-01-10)

ORIGINAL SCALE IN INCHES FOR REDUCED PLANS 0 1 2 3

UNIT: 3593
PROJECT NUMBER & PHASE: 0400000813-1
CONTRACT NO.: 04-2A2501

DISREGARD PRINTS BEARING EARLIER REVISION DATES

REVISION DATES: 07-20-12 | 02-28-12 | 05-24-12

SHEET 10 OF 16

FILE => 37e0117-s-archtreat.dgn

USERNAME => s124496 DATE PLOTTED => 21-JUN-2013 TIME PLOTTED => 07:33

DIST	COUNTY	ROUTE	POST MILES TOTAL PROJECT	SHEET No.	TOTAL SHEETS
04	SCI	152	0.1/5.2	345	416

REGISTERED CIVIL ENGINEER 08-01-12 DATE

6-17-13
PLANS APPROVAL DATE

REGISTERED PROFESSIONAL ENGINEER Sameh Hegazi No. C64899 Exp. 09-30-2013 CIVIL STATE OF CALIFORNIA

The State of California or its officers or agents shall not be responsible for the accuracy or completeness of electronic copies of this plan sheet.

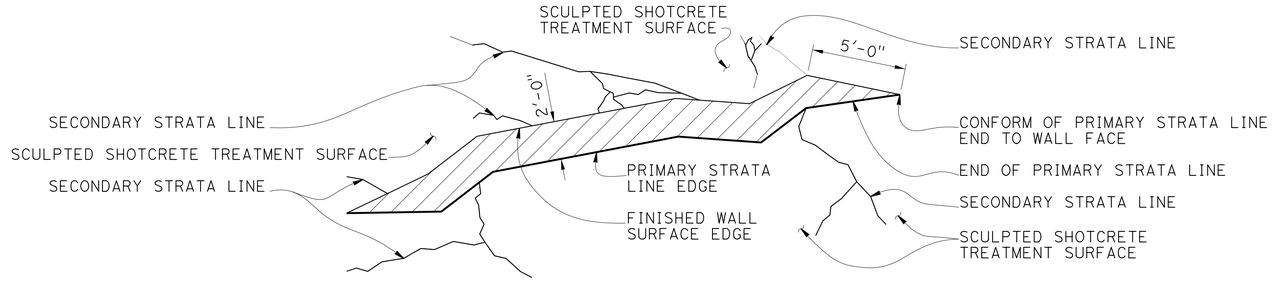

PRIMARY STRATA LINE ELEVATION DETAIL

No Scale

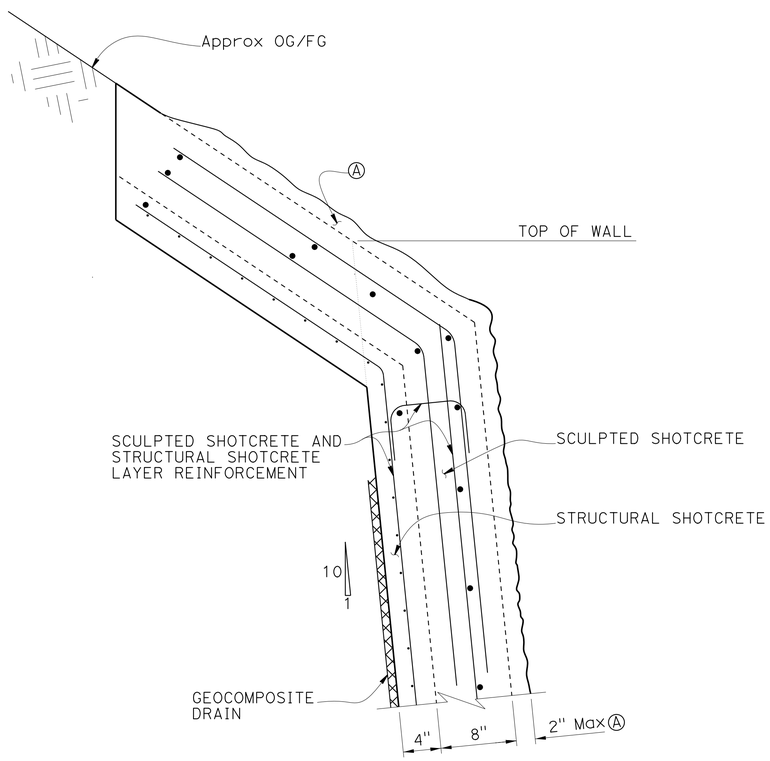

TOP OF WALL SCUPLTED SHOTCRETE TREATMENT REINFORCEMENT

No Scale

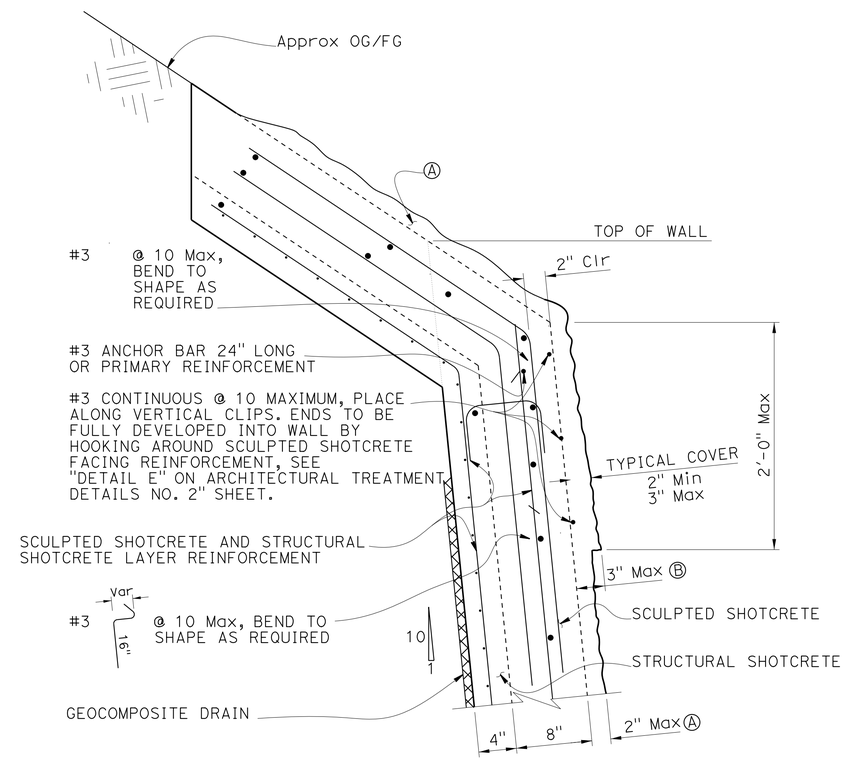

PRIMARY STRATA LINE AT TOP OF WALL SCULPTED SHOTCRETE TREATMENT REINFORCEMENT

No Scale

NOTES:
1. See also "SCULPTED SHOTCRETE TREATMENT DETAILS NO. 2" sheet for reinforcement.
2. Soil nail not shown for clarity.
3. Longitudinal bars shall taper to a point and be flush with the finished wall surface at primary strata line ends where it transitions into the wall face.
4. Cable railing post not shown for clarity.

Ⓐ Max 2" thick unreinforced sculpted shotcrete zone for sculpted shotcrete treatment.

Ⓑ Max 3" thick reinforced sculpted shotcrete zone for top of wall sculpted shotcrete treatment.

	BY	CHECKED
DESIGN	Sameh Hegazi	Rangina Amir
DETAILS	Antonio Carreon	S Hegazi/R Amir
QUANTITIES	Rangina Amir	Sameh Hegazi

STATE OF CALIFORNIA
DEPARTMENT OF TRANSPORTATION

DIVISION OF ENGINEERING SERVICES
STRUCTURE DESIGN
DESIGN BRANCH 8

BRIDGE NO. 37E0117
POST MILE 2.62/2.63

HECKER PASS SOIL NAIL WALL NO.8

SCULPTED SHOTCRETE TREATMENT DETAILS NO. 1

STRUCTURES DESIGN DETAIL SHEET (ENGLISH) (REV. 09-01-10)

ORIGINAL SCALE IN INCHES FOR REDUCED PLANS 0 1 2 3

UNIT: 3593
PROJECT NUMBER & PHASE: 0400000813-1
CONTRACT NO.: 04-2A2501

DISREGARD PRINTS BEARING EARLIER REVISION DATES

REVISION DATES 02-29-12 05-24-12 07-20-12

SHEET 11 OF 16

FILE => 37e0117-u-archdt01.dgn

USERNAME => s124496 DATE PLOTTED => 21-JUN-2013 TIME PLOTTED => 07:33

DIST	COUNTY	ROUTE	POST MILES TOTAL PROJECT	SHEET No.	TOTAL SHEETS
04	SCI	152	0.1/5.2	346	416

REGISTERED CIVIL ENGINEER 08-01-12 DATE

6-17-13
PLANS APPROVAL DATE

REGISTERED PROFESSIONAL ENGINEER Sameh Hegazi No. C64899 Exp. 09-30-2013 CIVIL STATE OF CALIFORNIA

The State of California or its officers or agents shall not be responsible for the accuracy or completeness of electronic copies of this plan sheet.

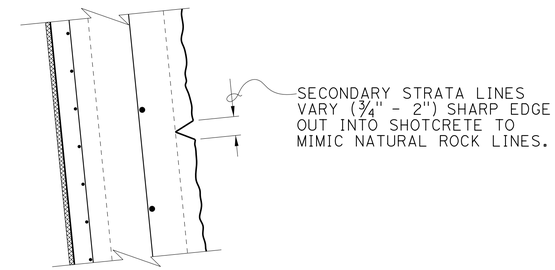

CROSS SECTION SECONDARY STRATA LINE

No Scale

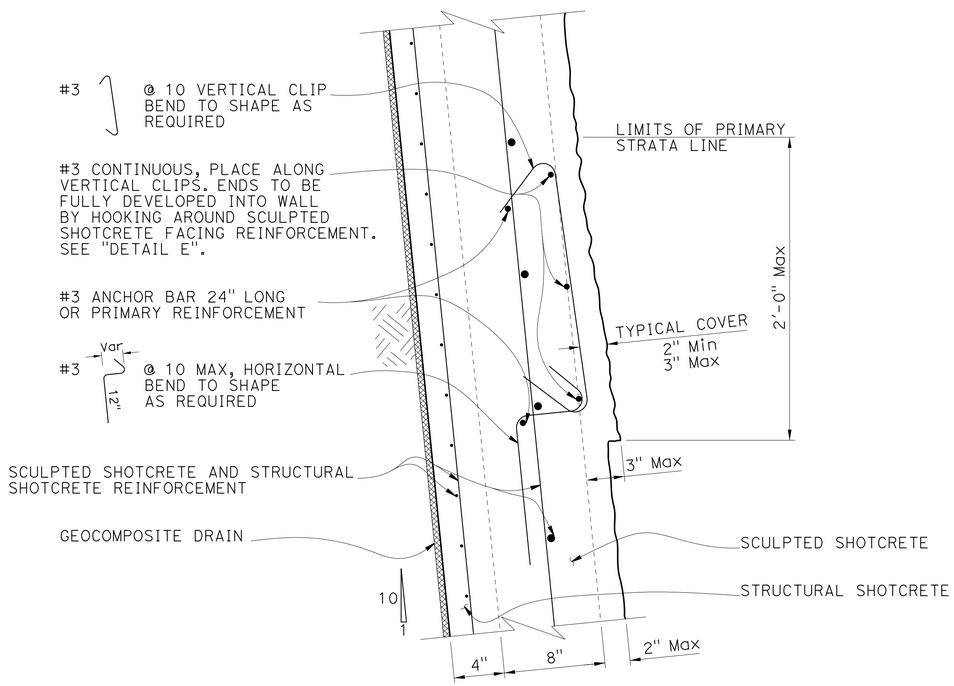

PRIMARY STRATA LINE SCULPTED SHOTCRETE TREATMENT REINFORCEMENT

No Scale

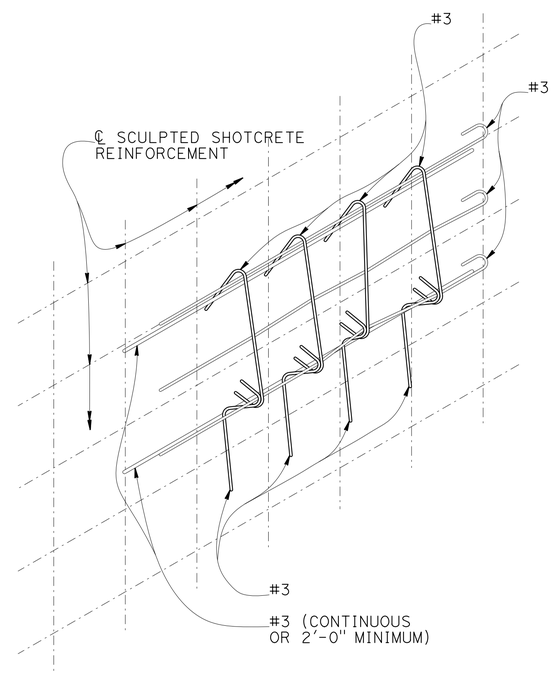

DETAIL E

No Scale

DESIGN	BY Sameh Hegazi	CHECKED Rangina Amir	
DETAILS	BY Antonio Carreon	CHECKED S Hegazi/R Amir	
QUANTITIES	BY Rangina Amir	CHECKED Sameh Hegazi	

STATE OF CALIFORNIA DEPARTMENT OF TRANSPORTATION

DIVISION OF ENGINEERING SERVICES STRUCTURE DESIGN DESIGN BRANCH 8

BRIDGE NO. 37E0117
POST MILE 2.62/2.63

HECKER PASS SOIL NAIL WALL NO.8

SCULPTED SHOTCRETE TREATMENT DETAILS NO. 2

STRUCTURES DESIGN DETAIL SHEET (ENGLISH) (REV. 09-01-10)

ORIGINAL SCALE IN INCHES FOR REDUCED PLANS 0 1 2 3

UNIT: 3593
PROJECT NUMBER & PHASE: 0400000813-1
CONTRACT NO.: 04-2A2501

DISREGARD PRINTS BEARING EARLIER REVISION DATES

REVISION DATES 02-29-12 05-24-12 07-20-12

SHEET 12 OF 16

FILE => 37e0117-u-archdt02.dgn

USERNAME => s124496 DATE PLOTTED => 21-JUN-2013 TIME PLOTTED => 07:33

DIST	COUNTY	ROUTE	POST MILES TOTAL PROJECT	SHEET No	TOTAL SHEETS
04	SCI	152	0.1/5.2	347	416

Ali Kaddoura 02-15-12
REGISTERED CIVIL ENGINEER

6-17-13
PLANS APPROVAL DATE

REGISTERED PROFESSIONAL ENGINEER Ali K. Kaddoura No. 55710 Exp. 12-31-12 CIVIL STATE OF CALIFORNIA

The State of California or its officers or agents shall not be responsible for the accuracy or completeness of electronic copies of this plan sheet.

This LOTB sheet was prepared in accordance with the Caltrans Soil & Rock Logging, Classification, & Presentation Manual (2010 Edition).

BENCH MARK

PRHV119

26.88 Rt. "D1" Line, Rte 152
Sta. 138+91.13
N 1,824,625.20
E 6,215,271.84
EL.=599.45

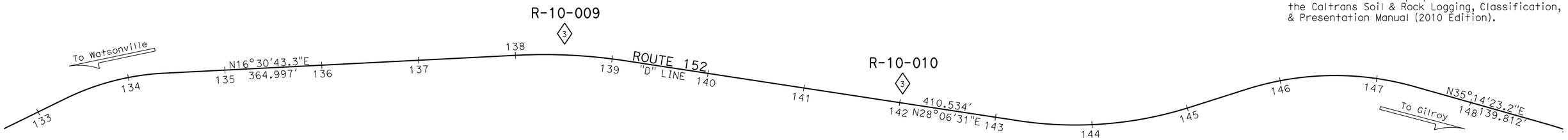

PLAN

1" = 50'

NOTE: 1. This LOTB sheet was prepared in accordance with the Caltrans Soil & Rock Logging, Classification, and Presentation Manual (April 2010).

2. PP=unconfined compressive strength (tsf) as measured by pocket penetrometer.

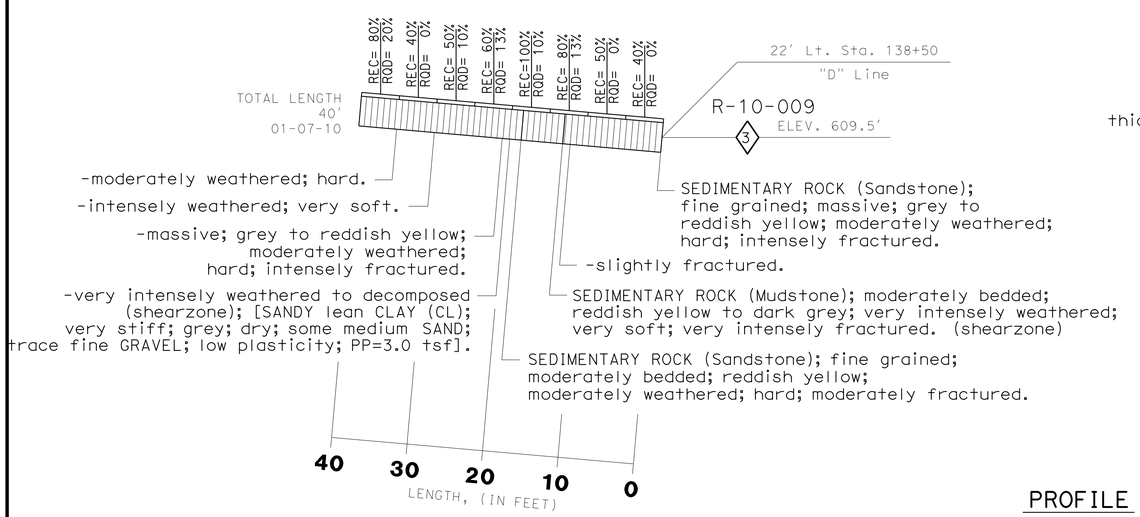

PROFILE

HOR. 1"=10'
VER. 1"=10'

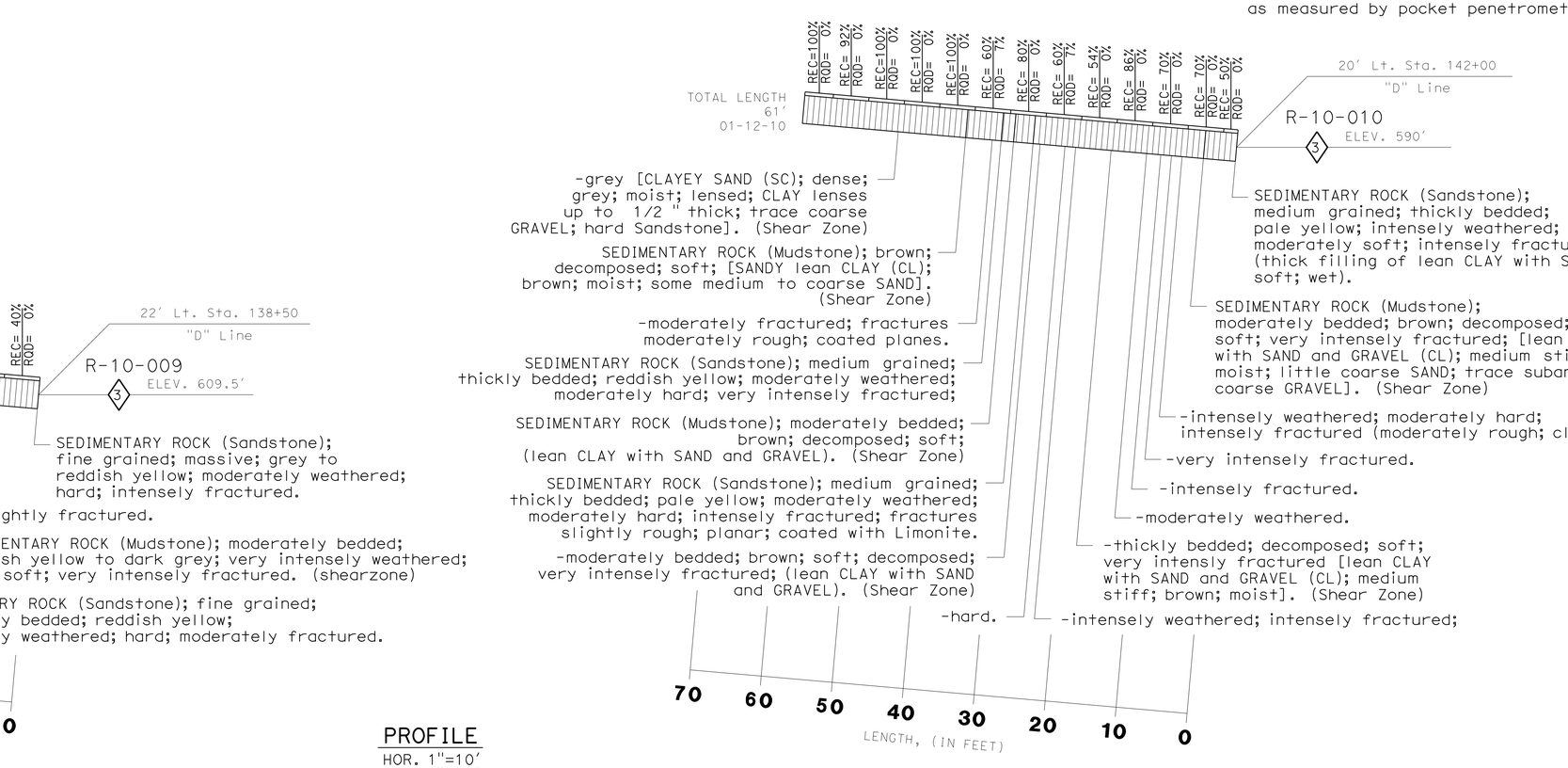

ENGINEERING SERVICES		GEOTECHNICAL SERVICES	STATE OF CALIFORNIA DEPARTMENT OF TRANSPORTATION	DIVISION OF ENGINEERING SERVICES OFFICE OF GEOTECHNICAL DESIGN BRANCH	BRIDGE NO. 37E0117	HECKER PASS SOIL NAIL WALL NO. 8
FUNCTIONAL SUPERVISOR	DRAWN BY: M. Reynolds 10/10	FIELD INVESTIGATION BY: A. Kaddoura, C. Risden			POST MILES 2.62/2.63	LOG OF TEST BORINGS 1 OF 4
NAME:	CHECKED BY: M. Gaffney					

ORIGINAL SCALE IN INCHES FOR REDUCED PLANS 0 1 2 3

CU 04
EA 2A2501

DISREGARD PRINTS BEARING EARLIER REVISION DATES → 03-08-12 05-24-12

REVISION DATES

SHEET 13 OF 16

FILE => 37e0117-z-1tb01.dgn

USERNAME => s124496 DATE PLOTTED => 21-JUN-2013 TIME PLOTTED => 07:33

REGISTERED CIVIL ENGINEER — DATE 02-15-12

6-17-13
PLANS APPROVAL DATE

REGISTERED PROFESSIONAL ENGINEER — Ali K. Kaddoura — No. 55710 — Exp. 12-31-12 — CIVIL — STATE OF CALIFORNIA

The State of California or its officers or agents shall not be responsible for the accuracy or completeness of electronic copies of this plan sheet.

REFERENCE: CALTRANS SOIL & ROCK LOGGING, CLASSIFICATION, AND PRESENTATION MANUAL (JUNE 2007)

CEMENTATION

Description	Criteria
Weak	Crumbles or breaks with handling or little finger pressure.
Moderate	Crumbles or breaks with considerable finger pressure.
Strong	Will not crumble or break with finger pressure.

CONSISTENCY OF COHESIVE SOILS

Description	Unconfined Compressive Strength (tsf)	Pocket Penetrometer Measurement (tsf)	Torvane Measurement (tsf)	Field Approximation
Very Soft	< 0.25	< 0.25	< 0.12	Easily penetrated several inches by fist
Soft	0.25 to 0.50	0.25 to 0.50	0.12 to 0.25	Easily penetrated several inches by thumb
Medium Stiff	0.50 to 1.0	0.50 to 1.0	0.25 to 0.50	Penetrated several inches by thumb with moderate effort
Stiff	1 to 2	1 to 2	0.50 to 1.0	Readily indented by thumb but penetrated only with great effort
Very Stiff	2 to 4	2 to 4	1.0 to 2.0	Readily indented by thumbnail
Hard	> 4.0	> 4.0	> 2.0	Indented by thumbnail with difficulty

BOREHOLE IDENTIFICATION

Symbol	Hole Type	Description
Size	A	Auger Boring
Size	R P	Rotary drilled boring Rotary percussion boring (air)
Size	R	Rotary drilled diamond core
Size	HD HA	Hand driven (1-inch soil tube) Hand Auger
●	D	Dynamic Cone Penetration Boring
▲	CPT	Cone Penetration Test (ASTM D 5778-95)
⬚	O	Other

Note: Size in inches.

PLASTICITY OF FINE-GRAINED SOILS

Description	Criteria
Nonplastic	A 1/8-inch thread cannot be rolled at any water content.
Low	The thread can barely be rolled and the lump cannot be formed when drier than the plastic limit.
Medium	The thread is easy to roll and not much time is required to reach the plastic limit. The thread cannot be rerolled after reaching the plastic limit. The lump crumbles when drier than the plastic limit.
High	It takes considerable time rolling and kneading to reach the plastic limit. The thread can be rerolled several times after reaching the plastic limit. The lump can be formed without crumbling when drier than the plastic limit.

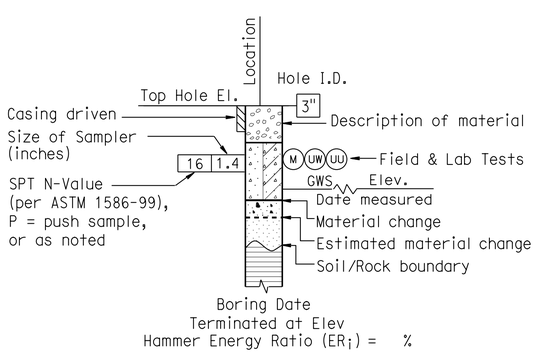

ROTARY BORING

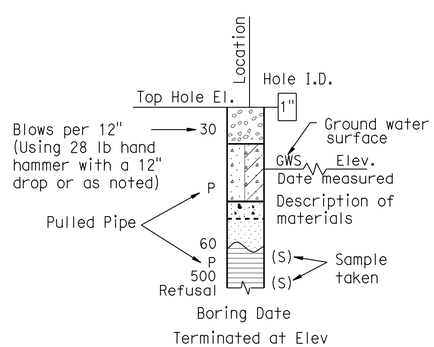

HAND BORING

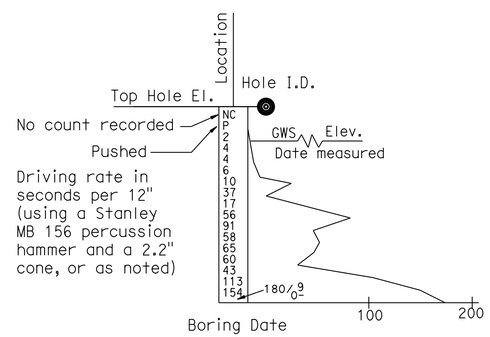

DYNAMIC CONE PENETRATION BORING

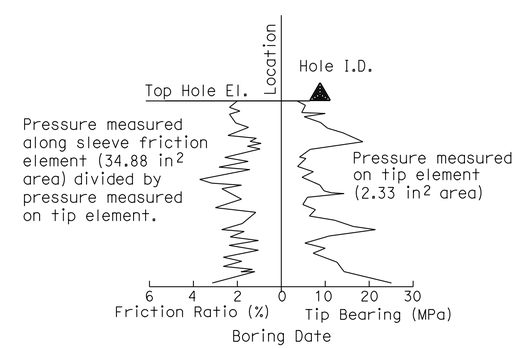

CONE PENETRATION TEST (CPT) SOUNDING

ENGINEERING SERVICES			GEOTECHNICAL SERVICES
FUNCTIONAL SUPERVISOR	PREPARED BY	M. Reynolds 10/10	FIELD INVESTIGATION BY:
NAME:	CHECKED BY	M. Gaffney	A. Kaddoura C. Risden

STATE OF CALIFORNIA
DEPARTMENT OF TRANSPORTATION

DIVISION OF ENGINEERING SERVICES
OFFICE OF GEOTECHNICAL
DESIGN BRANCH

BRIDGE NO. 37E0117
POST MILE 2.62/2.63

HECKER PASS SOIL NAIL WALL NO. 8
LOG OF TEST BORINGS 2 OF 4

GS LOTB SOIL LEGEND

ORIGINAL SCALE IN INCHES FOR REDUCED PLANS 0 1 2 3

CU 04
EA 2A2501

DISREGARD PRINTS BEARING EARLIER REVISION DATES

REVISION DATES: 03-09-12 05-24-12

SHEET 14 OF 16

FILE => 37e0117-z-ltb02.dgn

USERNAME => s124496 DATE PLOTTED => 21-JUN-2013 TIME PLOTTED => 07:33

REFERENCE: CALTRANS SOIL & ROCK LOGGING, CLASSIFICATION, AND PRESENTATION MANUAL (JUNE 2007)

DIST	COUNTY	ROUTE	POST MILES TOTAL PROJECT	SHEET No	TOTAL SHEETS
04	SCI	152	0.1/5.2	349	416

Ali Kaddoura 02-15-12
REGISTERED CIVIL ENGINEER DATE

6-17-13
PLANS APPROVAL DATE

REGISTERED PROFESSIONAL ENGINEER Ali K. Kaddoura No. 55710 Exp. 12-31-12 CIVIL STATE OF CALIFORNIA

The State of California or its officers or agents shall not be responsible for the accuracy or completeness of electronic copies of this plan sheet.

GROUP SYMBOLS AND NAMES

Graphic/Symbol	Group Names
GW	Well-graded GRAVEL Well-graded GRAVEL with SAND
GP	Poorly graded GRAVEL Poorly graded GRAVEL with SAND
GW-GM	Well-graded GRAVEL with SILT Well-graded GRAVEL with SILT and SAND
GW-GC	Well-graded GRAVEL with CLAY (or SILTY CLAY) Well-graded GRAVEL with CLAY and SAND (or SILTY CLAY and SAND)
GP-GM	Poorly graded GRAVEL with SILT Poorly graded GRAVEL with SILT and SAND
GP-GC	Poorly graded GRAVEL with CLAY (or SILTY CLAY) Poorly graded GRAVEL with CLAY and SAND (or SILTY CLAY and SAND)
GM	SILTY GRAVEL SILTY GRAVEL with SAND
GC	CLAYEY GRAVEL CLAYEY GRAVEL with SAND
GC-GM	SILTY, CLAYEY GRAVEL SILTY, CLAYEY GRAVEL with SAND
SW	Well-graded SAND Well-graded SAND with GRAVEL
SP	Poorly graded SAND Poorly graded SAND with GRAVEL
SW-SM	Well-graded SAND with SILT Well-graded SAND with SILT and GRAVEL
SW-SC	Well-graded SAND with CLAY (or SILTY CLAY) Well-graded SAND with CLAY and GRAVEL (or SILTY CLAY and GRAVEL)
SP-SM	Poorly graded SAND with SILT Poorly graded SAND with SILT and GRAVEL
SP-SC	Poorly graded SAND with CLAY (or SILTY CLAY) Poorly graded SAND with CLAY and GRAVEL (or SILTY CLAY and GRAVEL)
SM	SILTY SAND SILTY SAND with GRAVEL
SC	CLAYEY SAND CLAYEY SAND with GRAVEL
SC-SM	SILTY, CLAYEY SAND SILTY, CLAYEY SAND with GRAVEL
PT	PEAT
	COBBLES COBBLES and BOULDERS BOULDERS

Graphic/Symbol	Group Names
CL	Lean CLAY Lean CLAY with SAND Lean CLAY with GRAVEL SANDY lean CLAY SANDY lean CLAY with GRAVEL GRAVELLY lean CLAY GRAVELLY lean CLAY with SAND
CL-ML	SILTY CLAY SILTY CLAY with SAND SILTY CLAY with GRAVEL SANDY SILTY CLAY SANDY SILTY CLAY with GRAVEL GRAVELLY SILTY CLAY GRAVELLY SILTY CLAY with SAND
ML	SILT SILT with SAND SILT with GRAVEL SANDY SILT SANDY SILT with GRAVEL GRAVELLY SILT GRAVELLY SILT with SAND
OL	ORGANIC lean CLAY ORGANIC lean CLAY with SAND ORGANIC lean CLAY with GRAVEL SANDY ORGANIC lean CLAY SANDY ORGANIC lean CLAY with GRAVEL GRAVELLY ORGANIC lean CLAY GRAVELLY ORGANIC lean CLAY with SAND
OL	ORGANIC SILT ORGANIC SILT with SAND ORGANIC SILT with GRAVEL SANDY ORGANIC SILT SANDY ORGANIC SILT with GRAVEL GRAVELLY ORGANIC SILT GRAVELLY ORGANIC SILT with SAND
CH	Fat CLAY Fat CLAY with SAND Fat CLAY with GRAVEL SANDY fat CLAY SANDY fat CLAY with GRAVEL GRAVELLY fat CLAY GRAVELLY fat CLAY with SAND
MH	Elastic SILT Elastic SILT with SAND Elastic SILT with GRAVEL SANDY elastic SILT SANDY elastic SILT with GRAVEL GRAVELLY elastic SILT GRAVELLY elastic SILT with SAND
OH	ORGANIC fat CLAY ORGANIC fat CLAY with SAND ORGANIC fat CLAY with GRAVEL SANDY ORGANIC fat CLAY SANDY ORGANIC fat CLAY with GRAVEL GRAVELLY ORGANIC fat CLAY GRAVELLY ORGANIC fat CLAY with SAND
OH	ORGANIC elastic SILT ORGANIC elastic SILT with SAND ORGANIC elastic SILT with GRAVEL SANDY ORGANIC elastic SILT SANDY ORGANIC elastic SILT with GRAVEL GRAVELLY ORGANIC elastic SILT GRAVELLY ORGANIC elastic SILT with SAND
OL/OH	ORGANIC SOIL ORGANIC SOIL with SAND ORGANIC SOIL with GRAVEL SANDY ORGANIC SOIL SANDY ORGANIC SOIL with GRAVEL GRAVELLY ORGANIC SOIL GRAVELLY ORGANIC SOIL with SAND

FIELD AND LABORATORY TESTING

- (C) Consolidation (ASTM D 2435)
- (CL) Collapse Potential (ASTM D 5333)
- (CP) Compaction Curve (CTM 216)
- (CR) Corrosivity Testing (CTM 643, CTM 422, CTM 417)
- (CU) Consolidated Undrained Triaxial (ASTM D 4767)
- (DS) Direct Shear (ASTM D 3080)
- (EI) Expansion Index (ASTM D 4829)
- (M) Moisture Content (ASTM D 2216)
- (OC) Organic Content-% (ASTM D 2974)
- (P) Permeability (CTM 220)
- (PA) Particle Size Analysis (ASTM D 422)
- (PI) Plasticity Index (AASHTO T 90) Liquid Limit (AASHTO T 89)
- (PL) Point Load Index (ASTM D 5731)
- (PM) Pressure Meter
- (PP) Pocket Penetrometer
- (R) R-Value (CTM 301)
- (SE) Sand Equivalent (CTM 217)
- (SG) Specific Gravity (AASHTO T 100)
- (SL) Shrinkage Limit (ASTM D 427)
- (SW) Swell Potential (ASTM D 4546)
- (TV) Pocket Torvane
- (UC) Unconfined Compression-Soil (ASTM D 2166) Unconfined Compression-Rock (ASTM D 2938)
- (UU) Unconsolidated Undrained Triaxial (ASTM D 2850)
- (UW) Unit Weight (ASTM D 4767)
- (VS) Vane Shear (AASHTO T 223)

APPARENT DENSITY OF COHESIONLESS SOILS

Description	SPT N_{60} (Blows / 12 inches)
Very loose	0 - 4
Loose	5 - 10
Medium Dense	11 - 30
Dense	31 - 50
Very Dense	> 50

MOISTURE

Description	Criteria
Dry	Absence of moisture, dusty, dry to the touch
Moist	Damp but no visible water
Wet	Visible free water, usually soil is below water table

PERCENT OR PROPORTION OF SOILS

Description	Criteria
Trace	Particles are present but estimated to be less than 5%
Few	5 to 10%
Little	15 to 25%
Some	30 to 45%
Mostly	50 to 100%

PARTICLE SIZE

Description		Size
Boulder		> 12"
Cobble		3" to 12"
Gravel	Coarse	3/4" to 3"
	Fine	No. 4 to 3/4"
Sand	Coarse	No. 10 to No. 4
	Medium	No. 40 to No. 10
	Fine	No. 200 to No. 40

ENGINEERING SERVICES				GEOTECHNICAL SERVICES
FUNCTIONAL SUPERVISOR	PREPARED BY	M. Reynolds	10/10	FIELD INVESTIGATION BY:
NAME:	CHECKED BY	M. Gaffney		A. Kadoura C. Risden

GS LOTB SOIL LEGEND

ORIGINAL SCALE IN INCHES FOR REDUCED PLANS 0 1 2 3

STATE OF CALIFORNIA DEPARTMENT OF TRANSPORTATION

DIVISION OF ENGINEERING SERVICES OFFICE OF GEOTECHNICAL DESIGN BRANCH

CU 04
EA 2A2501

BRIDGE NO. 37E0117
POST MILE 2.62/2.63

HECKER PASS SOIL NAIL WALL NO. 8

LOG OF TEST BORINGS 3 OF 4

DISREGARD PRINTS BEARING EARLIER REVISION DATES 03-09-11 05-24-12

REVISION DATES

SHEET 15 OF 16

FILE => 37e0117-z-ltb03.dgn

USERNAME => s124496 DATE PLOTTED => 21-JUN-2013 TIME PLOTTED => 07:33

REFERENCE: CALTRANS SOIL & ROCK LOGGING, CLASSIFICATION, AND PRESENTATION MANUAL (JUNE 2007)

DIST	COUNTY	ROUTE	POST MILES TOTAL PROJECT	SHEET No	TOTAL SHEETS
04	SCI	152	0.1/5.2	350	416

Ali Kaddoura 02-15-12
REGISTERED CIVIL ENGINEER DATE

6-17-13
PLANS APPROVAL DATE

REGISTERED PROFESSIONAL ENGINEER Ali K. Kaddoura No. 55710 Exp. 12-31-12 CIVIL STATE OF CALIFORNIA

The State of California or its officers or agents shall not be responsible for the accuracy or completeness of electronic copies of this plan sheet.

PERCENT CORE RECOVERY (REC) & ROCK QUALITY DESIGNATION (RQD)

$$REC = \frac{\sum \text{Length of the recovered core pieces (inches)}}{\text{Total length of core run (inches)}} \times 100\%$$

$$RQD = \frac{\sum \text{Length of intact core pieces} \geq 4''}{\text{Total length of core run (inches)}} \times 100\%$$

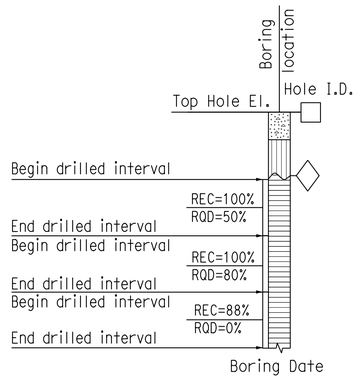

RELATIVE STRENGTH OF INTACT ROCK

Term	Uniaxial Compressive Strength (PSI)
Extremely Strong	> 30,000
Very Strong	14,500 - 30,000
Strong	7,000 - 14,500
Medium Strong	3,500 - 7,000
Weak	700 - 3,500
Very Weak	150 - 700
Extremely Weak	< 150

BEDDING SPACING

Description	Thickness / Spacing
Massive	Greater than 10 ft
Very thickly bedded	3 to 10 ft
Thickly bedded	1 to 3 ft
Moderately bedded	3-5/8" to 1 ft
Thinly bedded	1-1/4" to 3-5/8"
Very thinly bedded	3/8" to 1-1/4"
Laminated	Less than 3/8"

LEGEND OF ROCK MATERIALS

- IGNEOUS ROCK
- SEDIMENTARY ROCK
- METAMORPHIC ROCK

ROCK HARDNESS

Description	Criteria
Extremely Hard	Specimen cannot be scratched with a pocket knife or sharp pick; can only be chipped with repeated heavy hammer blows.
Very Hard	Specimen cannot be scratched with a pocket knife or sharp pick. Breaks with repeated heavy hammer blows.
Hard	Specimen can be scratched with a pocket knife or sharp pick with difficulty (heavy pressure). Heavy hammer blows required to break specimen.
Moderately Hard	Specimen can be scratched with pocket knife or sharp pick with light or moderate pressure. Core breaks with moderate hammer pressure.
Moderately Soft	Specimen can be grooved 1/6" deep with a pocket knife or sharp pick with moderate or heavy pressure. Breaks with light hammer blow or heavy manual pressure.
Soft	Specimen can be grooved or gouged easily by a pocket knife or sharp pick with light pressure, can be scratched with fingernail. Breaks with light to moderate manual pressure.
Very Soft	Specimen can be readily indented, grooved or gouged with fingernail, or carved with a pocket knife. Breaks with light manual pressure.

FRACTURE DENSITY

Description	Observed Fracture Density
Unfractured	No fractures.
Very slightly fractured	Lengths greater than 3 feet.
Slightly fractured	Lengths from 1 to 3 feet with few lengths less than 1 foot or greater than 3 feet.
Moderately fractured	Lengths mostly in 4" to 1 foot range with most lengths about 8"
Intensely fractured	Lengths average from 1 to 4" with scattered fragmented intervals with lengths less than 4"
Very intensely fractured	Mostly chips and fragments with a few scattered short core lengths.

Combination descriptors (such as "Very intensely to intensely fractured") are used where equal distribution of both fracture density characteristics is present over a significant interval or exposure, or where characteristics are "in between" the descriptor definitions. Only two adjacent descriptors may be combined.

WEATHERING DESCRIPTORS FOR INTACT ROCK

Description	Diagnostic features					General Characteristics
	Chemical Weathering-Discoloration and/or oxidation		Mechanical Weathering-Grain boundary conditions (disaggregation) primarily for granitics and some coarse-grained sediments	Texture and Solutioning		
	Body of Rock	Fracture Surfaces		Texture	Solutioning	
Fresh	No discoloration, not oxidized.	No discoloration or oxidation.	No separation, intact (tight).	No change.	No solutioning.	Hammer rings when crystalline rocks are struck.
Slightly Weathered	Discoloration or oxidation is limited to surface of, or short distance from, fractures; some feldspar crystals are dull.	Minor to complete discoloration or oxidation of most surfaces.	No visible separation, intact (tight).	Preserved.	Minor leaching of some soluble minerals may be noted.	Hammer rings when crystalline rocks are struck. Body of rock not weakened.
Moderately Weathered	Discoloration or oxidation extends from fractures usually throughout; Fe-Mg minerals are "rusty," feldspar crystals are "cloudy."	All fracture surfaces are discolored or oxidized.	Partial separation of boundaries visible.	Generally preserved.	Soluble minerals may be mostly leached.	Hammer does not ring when rock is struck. Body of rock is slightly weakened.
Intensely Weathered	Discoloration or oxidation throughout; all feldspars and Fe-Mg minerals are altered to clay to some extent; or chemical alteration produces in-situ disaggregation, see grain boundary conditions.	All fracture surfaces are discolored or oxidized, surfaces friable.	Partial separation, rock is friable; in semiarid conditions granitics are disaggregated.	Texture altered by chemical disintegration (hydration, argillation).	Leaching of soluble minerals may be complete.	Dull sound when struck with hammer, usually can be broken with moderate to heavy manual pressure or by light hammer blow without reference to planes of weakness such as incipient or hairline fractures, or veinlets. Rock is significantly weakened.
Decomposed	Discolored or oxidized throughout, but resistant minerals such as quartz may be unaltered; all feldspars and Fe-Mg minerals are completely altered to clay.		Complete separation of grain boundaries (disaggregated).	Resembles a soil, partial or complete remnant rock structure may be preserved; leaching of soluble minerals usually complete.		Can be granulated by hand. Resistant minerals such as quartz may be present as "stringers" or "dikes."

Combination descriptors (such as "slightly weathered to fresh") are permissible where equal distribution of both weathering characteristics is present over significant intervals or where characteristics present are "in between" the diagnostic feature. However, combination descriptors should not be used where significant, identifiable zones can be delineated. Only two adjacent descriptors may be combined. "Very intensely weathered" is the combination descriptor for "intensely weathered to decomposed."

ENGINEERING SERVICES				GEOTECHNICAL SERVICES
FUNCTIONAL SUPERVISOR	PREPARED BY	M. Reynolds	10/10	FIELD INVESTIGATION BY:
NAME:	CHECKED BY	M. Gaffney		A. Kaddoura C. Risden

STATE OF CALIFORNIA DEPARTMENT OF TRANSPORTATION

DIVISION OF ENGINEERING SERVICES OFFICE OF GEOTECHNICAL DESIGN BRANCH

BRIDGE NO. 37E0117
POST MILE 2.62/2.63

HECKER PASS SOIL NAIL WALL NO. 8
LOG OF TEST BORINGS 4 OF 4

GS LOTB ROCK LEGEND

ORIGINAL SCALE IN INCHES FOR REDUCED PLANS 0 1 2 3

CU 04
EA 2A2501

DISREGARD PRINTS BEARING EARLIER REVISION DATES → 03-09-12 05-24-12

REVISION DATES

SHEET 16 OF 16

FILE => 37e0117-z-ltb04.dgn

USERNAME => s124496 DATE PLOTTED => 21-JUN-2013 TIME PLOTTED => 07:33

DIST	COUNTY	ROUTE	POST MILES TOTAL PROJECT	SHEET No.	TOTAL SHEETS
04	SCI	152	0.1/5.2	351	416

REGISTERED CIVIL ENGINEER 05-15-13 DATE

6-17-13
PLANS APPROVAL DATE

REGISTERED PROFESSIONAL ENGINEER Sameh Hegazi No. C64899 Exp. 06-30-2013 CIVIL STATE OF CALIFORNIA

The State of California or its officers or agents shall not be responsible for the accuracy or completeness of electronic copies of this plan sheet.

LEGEND:
- ○ Indicates approximate location of soil nails
- ■ Indicates approximate location of proof test nails

NOTE:
Not all approximate location of soil nails, proof test nails, cable railing posts, and weepholes shown.

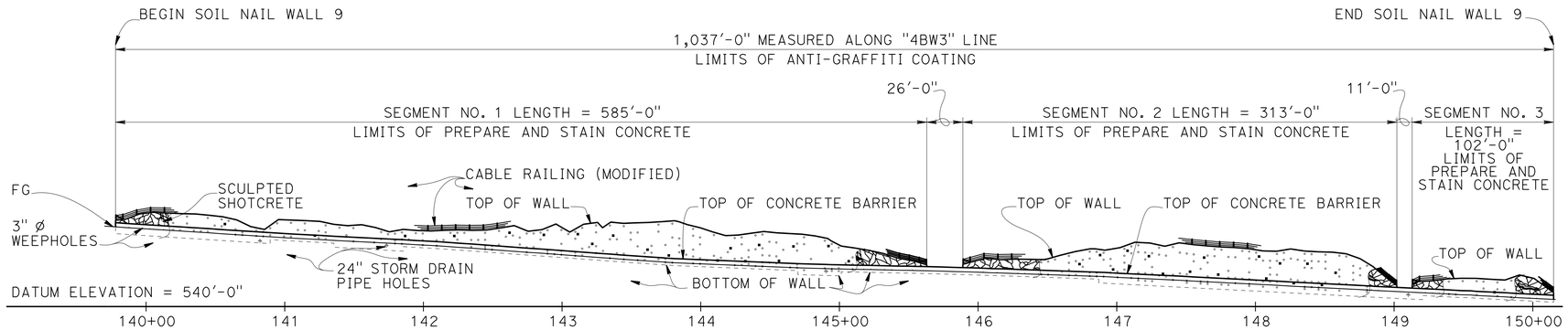

DEVELOPED ELEVATION

1" = 50'

NOTES:
1. Top of the wall elevations shall be verified in the field.
2. Soil nail inclination = 15° typical.
3. The exact locations of the Test Soil Nail to be determined by the Engineer in the field.
4. All soil nail levels are parallel to top of wall except the bottom level which is parallel to bottom of wall.
5. Soil nails shall be placed normal to shotcrete surface in the plan view.
6. The contractor shall field locate all utilities before drilling soil nails.
7. The contractor shall provide and maintain stable soil slopes above and below the soil nail walls.
8. Bottom of wall shall be placed against undisturbed soil material.
9. Prepare and stain sculpted shotcrete surface.
10. Concrete barrier shall be integrally colored and applied with anti-graffiti coating from top of barrier to 6 inches below finished grade.

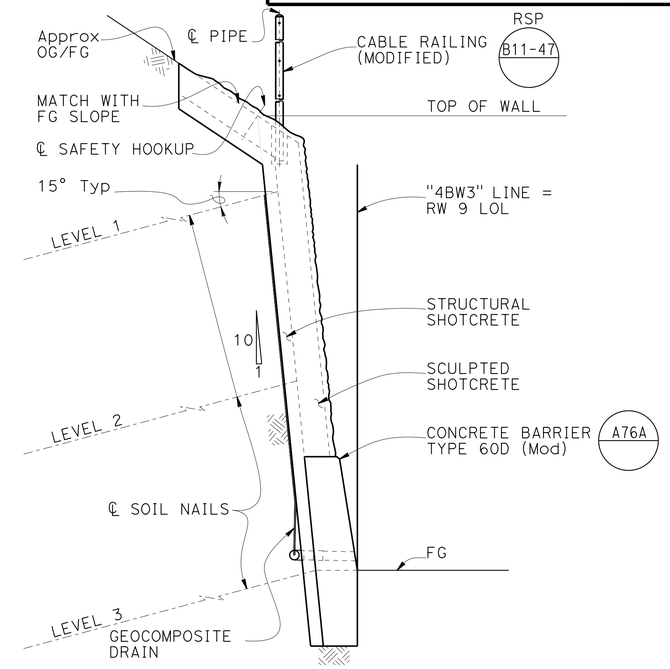

TYPICAL SECTION

½" = 1'

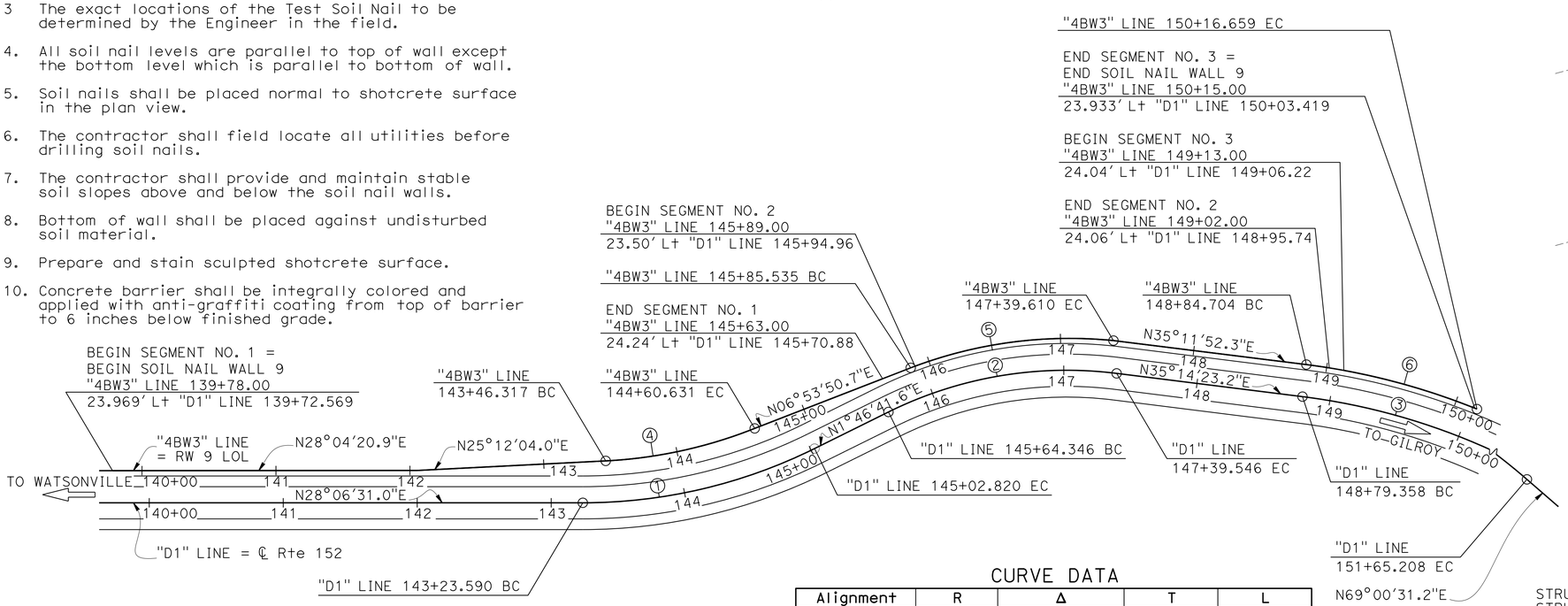

PLAN

1" = 50'

CURVE DATA

Alignment	R	Δ	T	L
"D1" LINE ①	390.000'	26°19'52"	91.23'	179.23'
"D1" LINE ②	300.000'	33°27'39"	90.18'	175.20'
"D1" LINE ③	485.000'	33°46'09"	147.21'	285.85'
"4BW3" LINE ④	348.972'	18°46'07"	57.67'	114.31'
"4BW3" LINE ⑤	331.116'	26°39'39"	78.46'	154.08'
"4BW3" LINE ⑥	511.298'	14°47'12"	66.35'	131.96'

QUANTITIES

STRUCTURE EXCAVATION (SOIL NAIL WALL)	2,600	CY
STRUCTURE BACKFILL (SOIL NAIL WALL)	160	CY
SOIL NAIL	18,265	LF
BAR REINFORCING STEEL (RETAINING WALL)	74,510	LB
STRUCTURAL SHOTCRETE	285	CY
SCULPTED SHOTCRETE	514	CY
PREPARE AND STAIN SCULPTED SHOTCRETE	16,141	SQFT
ANTI-GRAFFITI COATING	3,111	SQFT
MISCELLANEOUS METAL (SAFETY HOOK)	1,145	LB
CABLE RAILING (MODIFIED)	1,037	LF
CONCRETE BARRIER (TYPE 60D MODIFIED)	1,037	LF

NOTE:
THE CONTRACTOR SHALL VERIFY ALL CONTROLLING FIELD DIMENSIONS BEFORE ORDERING OR FABRICATING ANY MATERIAL.

BRIAN MORI
DESIGN ENGINEER

	BY	CHECKED
DESIGN	S. Hegazi	R. Amir
DETAILS	T. Kusumi	R. Amir / S. Hegazi
QUANTITIES	R. Amir	S. Hegazi

LOAD & RESISTANCE FACTOR DESIGN — LIVE LOADING: HL93 W/"LOW-BOY"; PERMIT DESIGN VEHICLE

	BY	CHECKED
LAYOUT	S. Hegazi	A. Menke
SPECIFICATIONS	T. Chen	PLANS AND SPECS COMPARED T. Chen

ORIGINAL SCALE IN INCHES FOR REDUCED PLANS 0 1 2 3

STATE OF CALIFORNIA
DEPARTMENT OF TRANSPORTATION

DIVISION OF ENGINEERING SERVICES
STRUCTURE DESIGN
DESIGN BRANCH 8

BRIDGE NO. 37E0118
POST MILE 2.65/2.84

HECKER PASS SOIL NAIL WALL NO. 9
GENERAL PLAN

UNIT: 3593
PROJECT NUMBER & PHASE: 0400000813-1
CONTRACT NO.: 04-2A2501

DISREGARD PRINTS BEARING EARLIER REVISION DATES

REVISION DATES: 04-06-11 05-08-13 08-01-13
SHEET 1 OF 27

USERNAME => s124496 DATE PLOTTED => 21-JUN-2013 TIME PLOTTED => 09:04

STRUCTURES DESIGN GENERAL PLAN SHEET (ENGLISH) (REV.09-01-10)

FILE => 37e0118-a-gp.dgn

DIST	COUNTY	ROUTE	POST MILES TOTAL PROJECT	SHEET No.	TOTAL SHEETS
04	SCI	152	0.1/5.2	352	416

REGISTERED CIVIL ENGINEER 05-15-13 DATE

6-17-13
PLANS APPROVAL DATE

REGISTERED PROFESSIONAL ENGINEER
Sameh Hegazi
No. C64899
Exp. 06-30-2013
CIVIL
STATE OF CALIFORNIA

The State of California or its officers or agents shall not be responsible for the accuracy or completeness of electronic copies of this plan sheet.

GENERAL NOTES

LOAD AND RESISTANCE FACTOR DESIGN:
AASHTO LRFD Bridge Design Specifications, 4th Editions and the Caltrans Amendments; preface dated Dec., 2009.

FHWA Publication No. FHWA-IF-03-017, Manual for Design and Construction Monitoring of Soil Nail Walls.

REINFORCED CONCRETE & SHOTCRETE:
F'c = 3.6 ksi
Fy = 60 ksi

STRUCTURAL STEEL:
Plates and shapes shall conform to ASTM Designation A709 Grade (36 ksi)

SOIL NAILS:
Soil nails shall conform to ASTM Designation A615, Grade 60, fs = 60 ksi, #7 bars, #8 bars, and #10 bars

PUNCHING SHEAR:
Ps = 45 Kps

SOIL DESIGN PARAMETERS IN NAILING ZONES:

NAIL DATA TABLE

Zone	"4BW3" Line Station	Unit Weight (lb/ft^3)	Friction Angle Degrees	Cohesion (lb/ft^2)	Design Pull out Resistance (kip/ft)	Upper Elev (ft)	Lower Elev (ft)
1	139+70.00 - 143+00.00	125	32	700	2.0	608	575
2	143+00.00 - 145+63.00	125	32	700	2.0	602	584
3	143+00.00 - 145+63.00	125	32	700	2.0	584	564
4	145+89.00 - 149+02.00	125	32	700	2.0	586	568
5	145+89.00 - 149+02.00	125	32	700	2.0	568	548
6	149+13.00 - 150+15.00	125	32	700	2.0	563	545

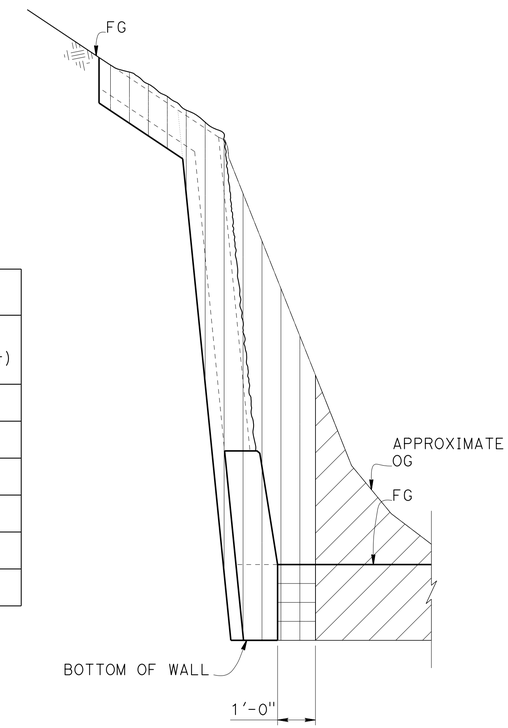

LEGEND:

- Structure excavation (Soil Nail Wall)
- Structure backfill (Soil Nail Wall)
- Roadway excavation (See "ROAD PLANS.")

LIMITS OF PAYMENT FOR EXCAVATION AND BACKFILL

No Scale

INDEX TO PLANS

SHEET NO.	TITLE
1	GENERAL PLAN
2	INDEX TO PLANS
3	FOUNDATION PLAN NO. 1
4	FOUNDATION PLAN NO. 2
5	STRUCTURE ELEVATION NO. 1
6	STRUCTURE ELEVATION NO. 2
7	STRUCTURE ELEVATION NO. 3
8	STRUCTURE ELEVATION NO. 4
9	STRUCTURE ELEVATION NO. 5
10	TYPICAL SECTION
11	STRUCTURAL DETAILS NO. 1
12	STRUCTURAL DETAILS NO. 2
13	STRUCTURAL DETAILS NO. 3
14	DRAINAGE DETAILS NO. 1
15	DRAINAGE DETAILS NO. 2
16	SCULPTED SHOTCRETE TREATMENT NO. 1
17	SCULPTED SHOTCRETE TREATMENT NO. 2
18	SCULPTED SHOTCRETE TREATMENT NO. 3
19	SCULPTED SHOTCRETE TREATMENT NO. 4
20	SCULPTED SHOTCRETE TREATMENT NO. 5
21	SCULPTED SHOTCRETE TREATMENT DETAILS NO. 1
22	SCULPTED SHOTCRETE TREATMENT DETAILS NO. 2
23	LOG OF TEST BORINGS 1 OF 5
24	LOG OF TEST BORINGS 2 OF 5
25	LOG OF TEST BORINGS 3 OF 5
26	LOG OF TEST BORINGS 4 OF 5
27	LOG OF TEST BORINGS 5 OF 5

STANDARD PLANS DATED MAY 2010

DETAIL	DESCRIPTION
A10A	ABBREVIATIONS (SHEET 1 OF 2)
A10B	ABBREVIATIONS (SHEET 2 OF 2)
A10C	LINES AND SYMBOLS (SHEET 1 OF 3)
A10D	LINES AND SYMBOLS (SHEET 2 OF 3)
A10E	LINES AND SYMBOLS (SHEET 3 OF 3)
A76A	CONCRETE BARRIER TYPE 60
B0-3	BRIDGE DETAILS
RSP B11-47	CABLE RAILING

STANDARD PLAN SHEET NO.
DETAIL NO.

DESIGN	BY S. Hegazi	CHECKED R. Amir	
DETAILS	BY T. Kusumi	CHECKED R. Amir / S. Hegazi	
QUANTITIES	BY R. Amir	CHECKED S. Hegazi	

STATE OF CALIFORNIA
DEPARTMENT OF TRANSPORTATION

DIVISION OF ENGINEERING SERVICES
STRUCTURE DESIGN
DESIGN BRANCH 8

BRIDGE NO. 37E0118
POST MILE 2.65/2.84

HECKER PASS SOIL NAIL WALL NO. 9
INDEX TO PLANS

STRUCTURES DESIGN DETAIL SHEET (ENGLISH) (REV. 09-01-10)

ORIGINAL SCALE IN INCHES FOR REDUCED PLANS 0 1 2 3

UNIT: 3593
PROJECT NUMBER & PHASE: 0400000813-1
CONTRACT NO.: 04-2A2501

DISREGARD PRINTS BEARING EARLIER REVISION DATES

REVISION DATES: 06-16-11 05-10-13 07-18-12

SHEET 2 OF 27

FILE => 37e0118-a-itp.dgn

USERNAME => s124496 DATE PLOTTED => 21-JUN-2013 TIME PLOTTED => 07:01

DIST	COUNTY	ROUTE	POST MILES TOTAL PROJECT	SHEET No.	TOTAL SHEETS
04	SCI	152	0.1/5.2	353	416

REGISTERED CIVIL ENGINEER 08-01-12 DATE

6-17-13
PLANS APPROVAL DATE

REGISTERED PROFESSIONAL ENGINEER Sameh Hegazi No. C64899 Exp. 06-30-2013 CIVIL STATE OF CALIFORNIA

The State of California or its officers or agents shall not be responsible for the accuracy or completeness of electronic copies of this plan sheet.

CURVE DATA

Alignment	R	Δ	T	L
"D1" LINE ①	390.00	26°19'52"	91.23	179.23
"4BW3" LINE ④	348.97	18°46'07"	57.67	114.31

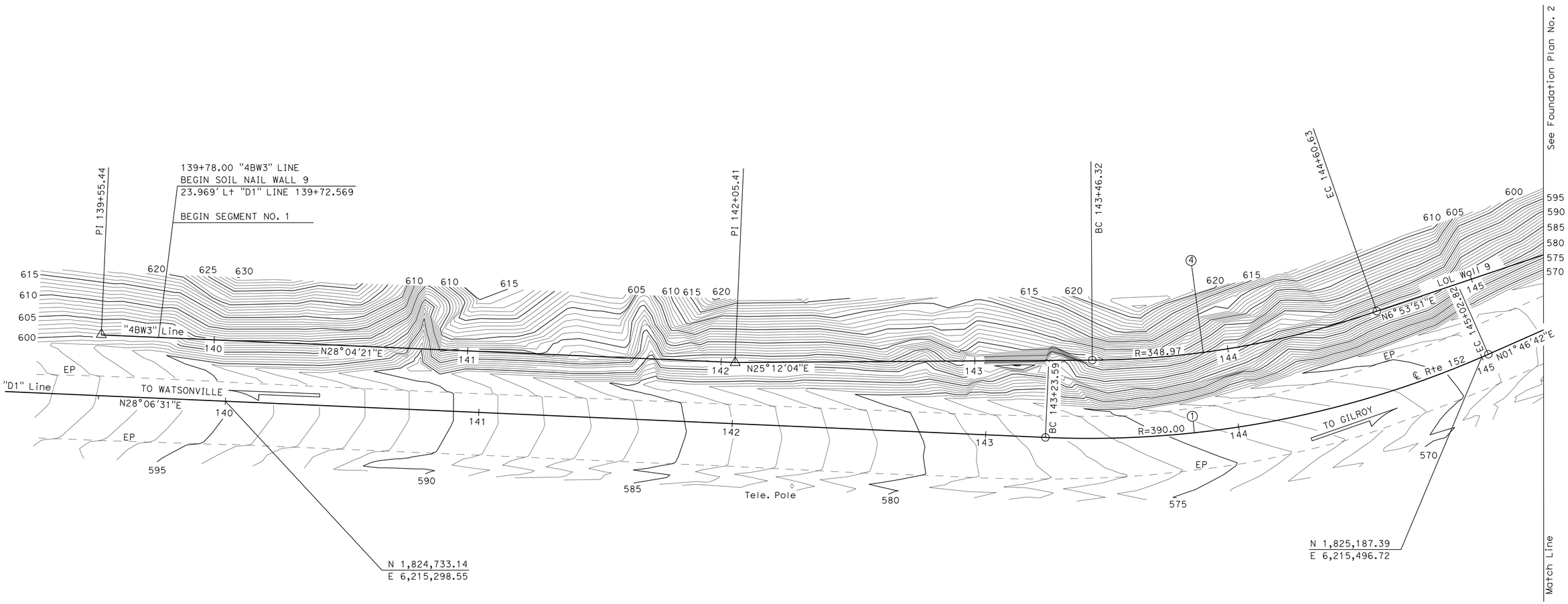

SURVEY CONTROL

PRHV119 (Not Shown)

26.88 Rt. "D1" Line, ℄ Rte 152
Sta. 138+91.13
N 1,824,625.20
E 6,215,271.84
EL.=599.45

PRHV123 (Shown on Sheet #2)

32.94 Rt. "D1" Line, ℄ Rte 152
Sta. 150+80.58
N 1,825,637.38
E 6,215,797.60
EL.=536.89

PRELIMINARY INVESTIGATION SECTION

SCALE	VERT.DATUM NAVD 88	PHOTOGRAMMETRY AS OF: X			
1"=20'	HORZ.DATUM NAD83 (92)	SURVEYED	BY District	CHECKED	BY Don Ivy 08/2011
ALIGNMENT TIES Dist. Traverse Sheet		DRAFTED	BY S. Zheng 08/2011	CHECKED	BY Jim Pallares 08/2011

DESIGN	BY S. Hegazi	CHECKED R. Amir
DETAILS	BY T. Kusumi	CHECKED R. Amir / S. Hegazi
QUANTITIES	BY R. Amir	CHECKED S. Hegazi

STATE OF CALIFORNIA
DEPARTMENT OF TRANSPORTATION

DIVISION OF ENGINEERING SERVICES
STRUCTURE DESIGN
DESIGN BRANCH 08

BRIDGE NO. 37E0118
POST MILE 2.65/2.84

RETAINING WALL NO. 9
FOUNDATION PLAN NO. 1

STRUCTURES FOUNDATION PLAN SHEET (ENGLISH) (REV. 09-01-10)

ORIGINAL SCALE IN INCHES FOR REDUCED PLANS 0 1 2 3

UNIT: 3646
PROJECT NUMBER & PHASE: 0100000183-1
CONTRACT NO.: 04-2A2501

DISREGARD PRINTS BEARING EARLIER REVISION DATES

REVISION DATES: 8/8/2011 02-06-12 05-25-12

SHEET 3 OF 27

FILE => 37e0118-e-fpl01.dgn

USERNAME => s124496 DATE PLOTTED => 21-JUN-2013 TIME PLOTTED => 07:01

DIST	COUNTY	ROUTE	POST MILES TOTAL PROJECT	SHEET No.	TOTAL SHEETS
04	SCI	152	0.1/5.2	354	416

REGISTERED CIVIL ENGINEER 08-01-12 DATE

6-17-13
PLANS APPROVAL DATE

REGISTERED PROFESSIONAL ENGINEER
Sameh Hegazi
No. C64899
Exp. 06-30-2013
CIVIL
STATE OF CALIFORNIA

The State of California or its officers or agents shall not be responsible for the accuracy or completeness of electronic copies of this plan sheet.

CURVE DATA

Alignment	R	Δ	T	L
"D1" LINE ②	300.00	33°27'39"	90.18	175.20
"D1" LINE ③	485.00	33°46'09"	147.21	285.85
"4BW3" LINE ⑤	331.12	26°39'39"	78.46	154.08
"4BW3" LINE ⑥	511.30	14°47'12"	66.35	131.95

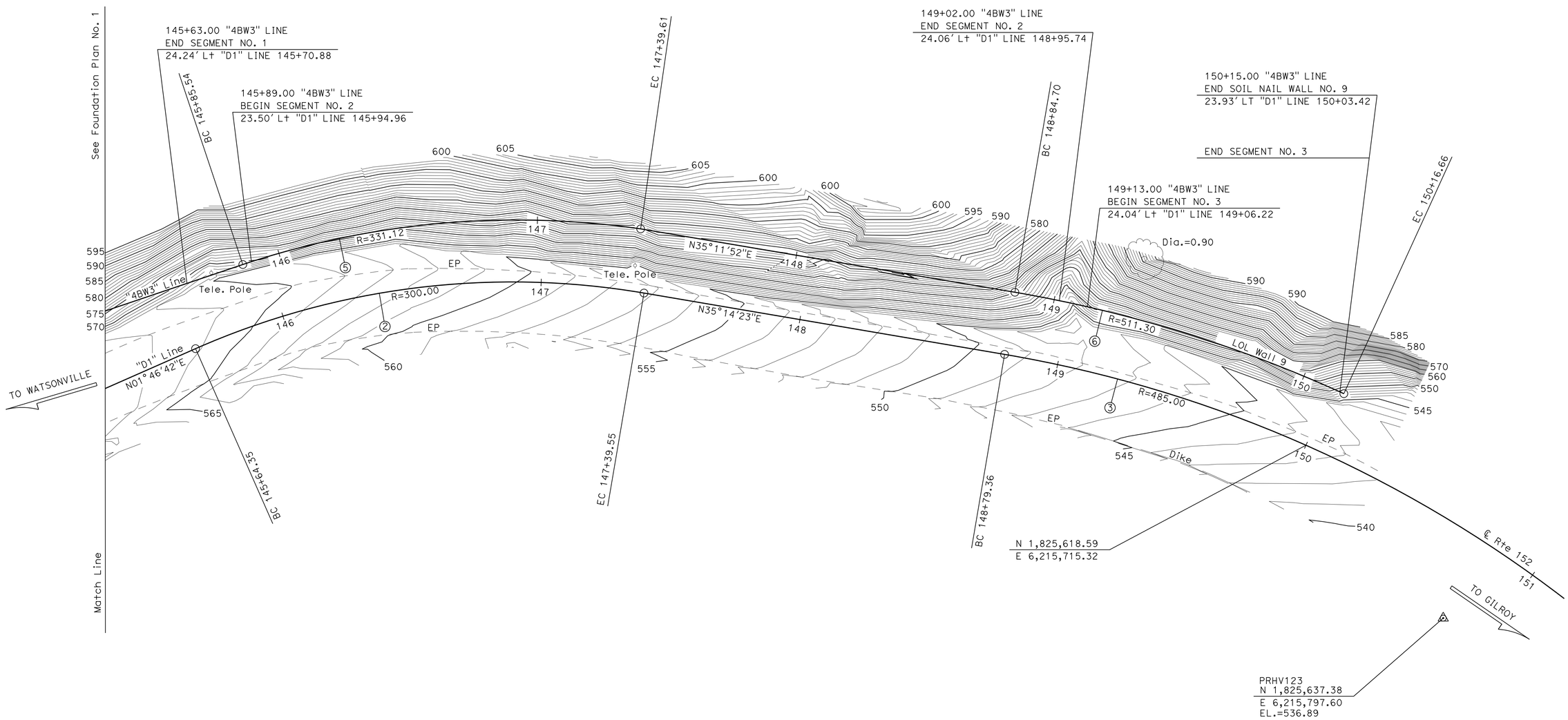

PRELIMINARY INVESTIGATION SECTION					
SCALE 1"=20'	VERT.DATUM NAVD 88	PHOTOGRAMMETRY AS OF: X			
	HORZ.DATUM NAD83 (92)	SURVEYED BY District		CHECKED BY Don Ivy	08/2011
ALIGNMENT TIES Dist. Traverse Sheet		DRAFTED BY S. Zheng	08/2011	CHECKED BY Jim Pallares	08/2011

DESIGN	BY S. Hegazi	CHECKED R. Amir
DETAILS	BY T. Kusumi	CHECKED R. Amir / S. Hegazi
QUANTITIES	BY R. Amir	CHECKED S. Hegazi

STATE OF CALIFORNIA
DEPARTMENT OF TRANSPORTATION

DIVISION OF ENGINEERING SERVICES
STRUCTURE DESIGN
DESIGN BRANCH 08

BRIDGE NO. 37E0118
POST MILE 2.65/2.84

RETAINING WALL NO. 9
FOUNDATION PLAN NO. 2

STRUCTURES FOUNDATION PLAN SHEET (ENGLISH) (REV. 09-01-10)

ORIGINAL SCALE IN INCHES FOR REDUCED PLANS 0 1 2 3

UNIT: 3646
PROJECT NUMBER & PHASE: 0100000183-1 CONTRACT NO.: 04-2A2501

DISREGARD PRINTS BEARING EARLIER REVISION DATES

REVISION DATES: 8/8/2011 05-25-12 02-06-13

SHEET 4 OF 27

FILE => 37e0118-e-fpl02.dgn

USERNAME => s124496 DATE PLOTTED => 21-JUN-2013 TIME PLOTTED => 07:01

DIST	COUNTY	ROUTE	POST MILES TOTAL PROJECT	SHEET No.	TOTAL SHEETS
04	SCI	152	0.1/5.2	355	416

REGISTERED CIVIL ENGINEER 08-01-12 DATE

6-17-13
PLANS APPROVAL DATE

REGISTERED PROFESSIONAL ENGINEER Sameh Hegazi No. C64899 Exp. 06-30-2013 CIVIL STATE OF CALIFORNIA

The State of California or its officers or agents shall not be responsible for the accuracy or completeness of electronic copies of this plan sheet.

SCHEDULE D	BAR SIZE: #8				
NO. OF SOIL NAIL ROWS	5				
ROW NO. TOP TO BOTTOM	1	2	3	4	5
EMBEDMENT LENGTH (FT)	24	24	19	15	10

SCHEDULE E	BAR SIZE: #9					
NO. OF SOIL NAIL ROWS	6					
ROW NO. TOP TO BOTTOM	1	2	3	4	5	6
EMBEDMENT LENGTH (FT)	30	30	30	25	20	15

SCHEDULE F	BAR SIZE: #9						
NO. OF SOIL NAIL ROWS	7						
ROW NO. TOP TO BOTTOM	1	2	3	4	5	6	7
EMBEDMENT LENGTH (FT)	37	33	33	25	25	20	15

SCHEDULE A	BAR SIZE: #7	
NO. OF SOIL NAIL ROWS	2	
ROW NO. TOP TO BOTTOM	1	2
EMBEDMENT LENGTH (FT)	10	10

SCHEDULE B	BAR SIZE: #7		
NO. OF SOIL NAIL ROWS	3		
ROW NO. TOP TO BOTTOM	1	2	3
EMBEDMENT LENGTH (FT)	15	12	10

SCHEDULE C	BAR SIZE: #8			
NO. OF SOIL NAIL ROWS	4			
ROW NO. TOP TO BOTTOM	1	2	3	4
EMBEDMENT LENGTH (FT)	19	15	12	10

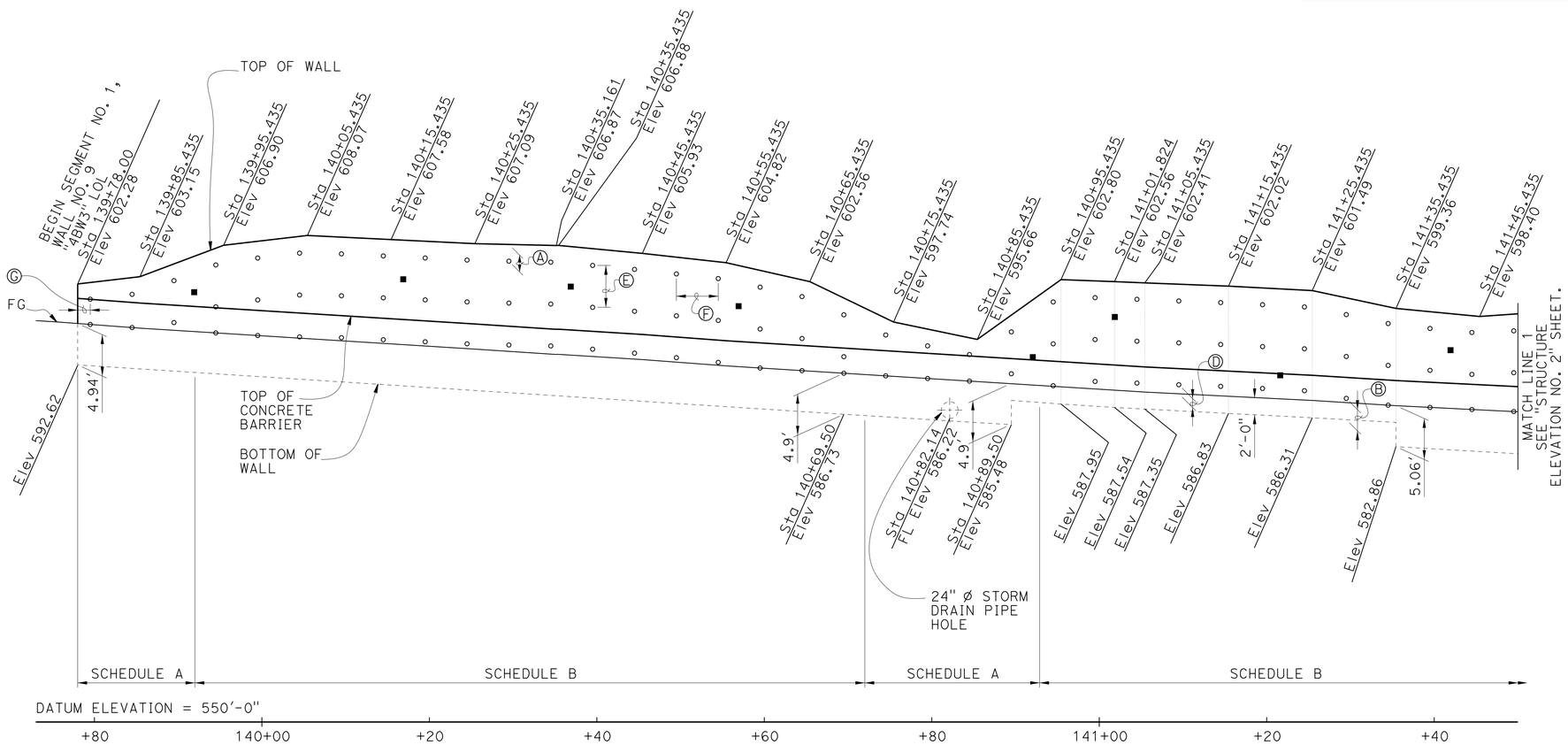

DEVELOPED ELEVATION

1/8" = 1'-0"

NOTES:

Ⓐ ST = Vertical distance from top of wall elevation to top level of soil nails, ST = 2'-0"

Ⓑ SB_1 = Vertical distance from bottom of wall to bottom level of the soil nails, SB1 (Min) = 2'-0", SB1 (Max) < 3'-6".

Ⓒ SB_2 = Vertical distance from finish grade to bottom level of the soil nails, SB2 (Min) = 1'-6".

Ⓓ Discontinue row when vertical distance between soil nails are less than 1'-6".

Ⓔ SV = Vertical spacing of soil nails, SV (Min) = 1'-6", SV (Max) = 5'-0".

Ⓕ SH = Horizontal spacing of soil nails, SH (Min) = 1'-6", SH (Max) = 5'-0".

Ⓖ SS = Horizontal distance between the begin/end wall and first/last soil nails, SS (Min) = 1'-6", SS (Max) = 2'-6".

Ⓗ The exact location of the test soil nails to be determined by the Engineer.

1. Cable railing posts are not shown for clarity.
2. Move the 24" ø storm drain pipe holes to avoid the soil nails.

LEGEND:
- o Indicates approximate location of soil nails
- ■ Indicates approximate location of proof test nails

	BY	CHECKED
DESIGN	S. Hegazi	R. Amir
DETAILS	T. Kusumi	R. Amir / S. Hegazi
QUANTITIES	R. Amir	S. Hegazi

STATE OF CALIFORNIA
DEPARTMENT OF TRANSPORTATION

DIVISION OF ENGINEERING SERVICES
STRUCTURE DESIGN
DESIGN BRANCH 8

BRIDGE NO. 37E0118
POST MILE 2.65/2.84

HECKER PASS SOIL NAIL WALL NO. 9
STRUCTURE ELEVATION NO. 1

STRUCTURES DESIGN DETAIL SHEET (ENGLISH) (REV. 09-01-10)

ORIGINAL SCALE IN INCHES FOR REDUCED PLANS 0 1 2 3

UNIT: 3593
PROJECT NUMBER & PHASE: 0400000813-1
CONTRACT NO.: 04-2A2501

DISREGARD PRINTS BEARING EARLIER REVISION DATES

REVISION DATES 10-14-11 05-01-12 05-30-12

SHEET 5 OF 27

FILE => 37e0118-f-structelv01.dgn

USERNAME => s124936 DATE PLOTTED => 21-JUN-2013 TIME PLOTTED => 07:01

DIST	COUNTY	ROUTE	POST MILES TOTAL PROJECT	SHEET No.	TOTAL SHEETS
04	SCI	152	0.1/5.2	356	416

REGISTERED CIVIL ENGINEER 08-01-12 DATE

6-17-13
PLANS APPROVAL DATE

REGISTERED PROFESSIONAL ENGINEER
Sameh Hegazi
No. C64899
Exp. 06-30-2013
CIVIL
STATE OF CALIFORNIA

The State of California or its officers or agents shall not be responsible for the accuracy or completeness of electronic copies of this plan sheet.

NOTE:
1. For production nails schedules and notes, see "STRUCTURE ELEVATION NO. 1" sheet.

LEGEND:
- o Indicates approximate location of soil nails
- ■ Indicates approximate location of proof test nails

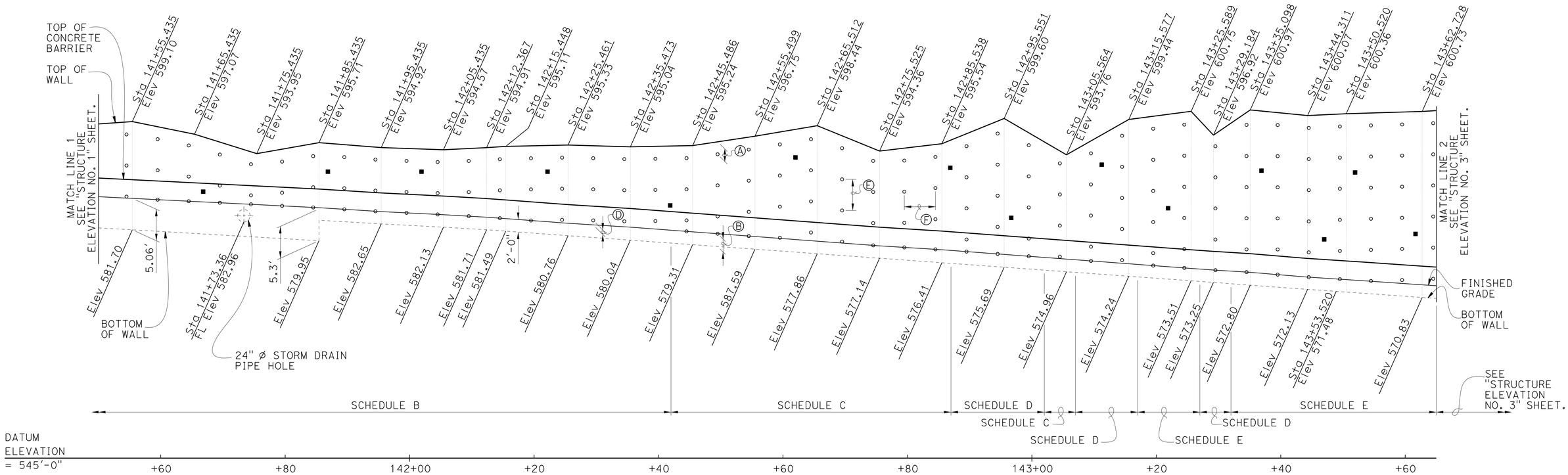

DEVELOPED ELEVATION

1/8" = 1'-0"

DESIGN	BY S. Hegazi	CHECKED R. Amir	
DETAILS	BY T. Kusumi	CHECKED R. Amir / S. Hegazi	
QUANTITIES	BY R. Amir	CHECKED S. Hegazi	

STATE OF CALIFORNIA
DEPARTMENT OF TRANSPORTATION

DIVISION OF ENGINEERING SERVICES
STRUCTURE DESIGN
DESIGN BRANCH 8

BRIDGE NO. 37E0118
POST MILE 2.65/2.84

HECKER PASS SOIL NAIL WALL NO. 9
STRUCTURE ELEVATION NO. 2

STRUCTURES DESIGN DETAIL SHEET (ENGLISH) (REV. 09-01-10)

ORIGINAL SCALE IN INCHES FOR REDUCED PLANS 0 1 2 3

UNIT: 3593
PROJECT NUMBER & PHASE: 0400000813-1
CONTRACT NO.: 04-2A2501

DISREGARD PRINTS BEARING EARLIER REVISION DATES

REVISION DATES: 10-14-11 05-30-12 05-01-12

SHEET 6 OF 27

FILE => 37e0118-f-structelv02.dgn

USERNAME => s124496 DATE PLOTTED => 21-JUN-2013 TIME PLOTTED => 07:01

DIST	COUNTY	ROUTE	POST MILES TOTAL PROJECT	SHEET No.	TOTAL SHEETS
04	SCI	152	0.1/5.2	357	416

REGISTERED CIVIL ENGINEER 08-01-12 DATE

6-17-13
PLANS APPROVAL DATE

REGISTERED PROFESSIONAL ENGINEER
Sameh Hegazi
No. C64899
Exp. 06-30-2013
CIVIL
STATE OF CALIFORNIA

The State of California or its officers or agents shall not be responsible for the accuracy or completeness of electronic copies of this plan sheet.

NOTE:
1. For production nails schedules and notes, see "STRUCTURE ELEVATION NO. 1" sheet.

LEGEND:
- o Indicates approximate location of soil nails
- ■ Indicates approximate location of proof test nails

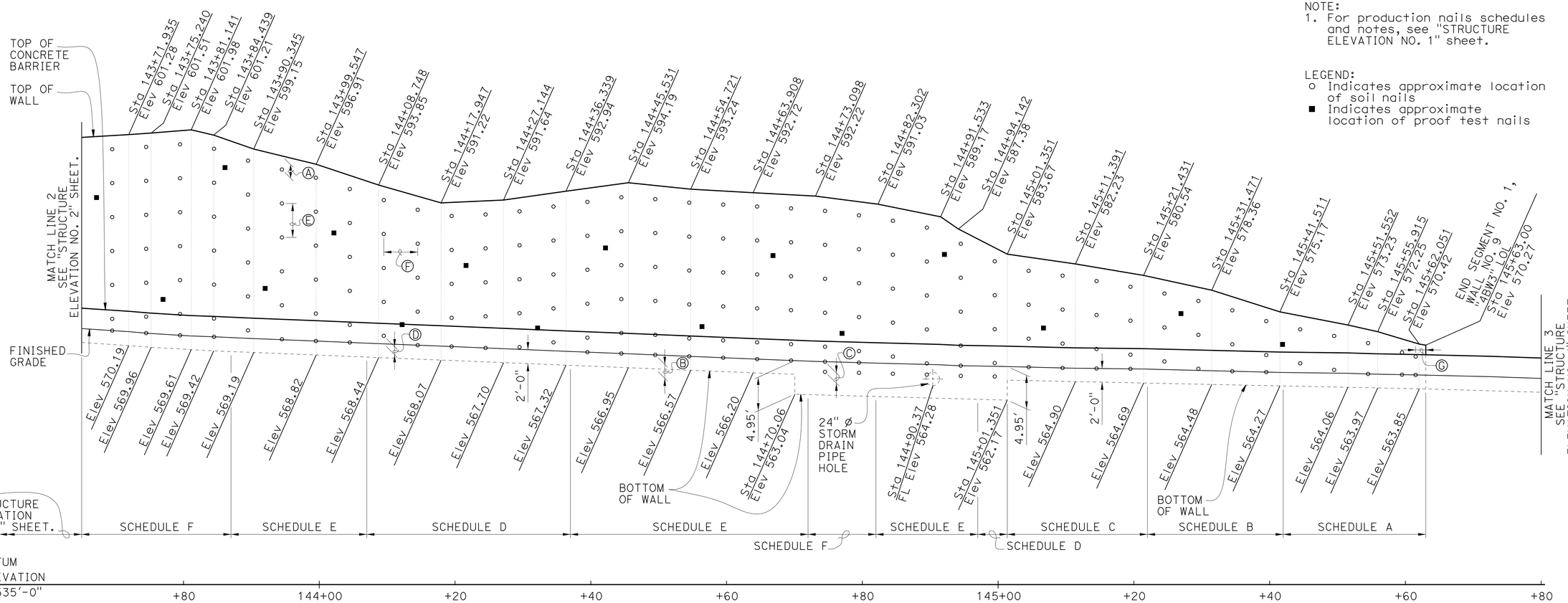

DEVELOPED ELEVATION

1/8" = 1'-0"

FOR COMPLETE RIGHT OF WAY DATA, SEE RIGHT OF WAY RECORDS MAPS AT DISTRICT OFFICE.

	BY	CHECKED
DESIGN	S. Hegazi	R. Amir
DETAILS	T. Kusumi	R. Amir / S. Hegazi
QUANTITIES	R. Amir	S. Hegazi

STATE OF CALIFORNIA
DEPARTMENT OF TRANSPORTATION

DIVISION OF ENGINEERING SERVICES
STRUCTURE DESIGN
DESIGN BRANCH 8

BRIDGE NO. 37E0118
POST MILE 2.65/2.84

HECKER PASS SOIL NAIL WALL NO. 9
STRUCTURE ELEVATION NO. 3

STRUCTURES DESIGN DETAIL SHEET (ENGLISH) (REV. 09-01-10)

ORIGINAL SCALE IN INCHES FOR REDUCED PLANS 0 1 2 3

UNIT: 3593
PROJECT NUMBER & PHASE: 0400000813-1
CONTRACT NO.: 04-2A2501

DISREGARD PRINTS BEARING EARLIER REVISION DATES

REVISION DATES: 10-14-11 11-25-11 05-01-12 05-30-12

SHEET 7 OF 27

FILE => 37e0118-f-structelv03.dgn

USERNAME => s124496 DATE PLOTTED => 21-JUN-2013 TIME PLOTTED => 07:02

DIST	COUNTY	ROUTE	POST MILES TOTAL PROJECT	SHEET No.	TOTAL SHEETS
04	SCI	152	0.1/5.2	358	416

REGISTERED CIVIL ENGINEER 08-01-12 DATE

6-17-13
PLANS APPROVAL DATE

REGISTERED PROFESSIONAL ENGINEER
Sameh Hegazi
No. C64899
Exp. 06-30-2013
CIVIL
STATE OF CALIFORNIA

The State of California or its officers or agents shall not be responsible for the accuracy or completeness of electronic copies of this plan sheet.

NOTE:
1. For production nails schedules and notes, see "STRUCTURE ELEVATION NO. 1" sheet.

LEGEND:
- ○ Indicates approximate location of soil nails
- ■ Indicates approximate location of proof test nails

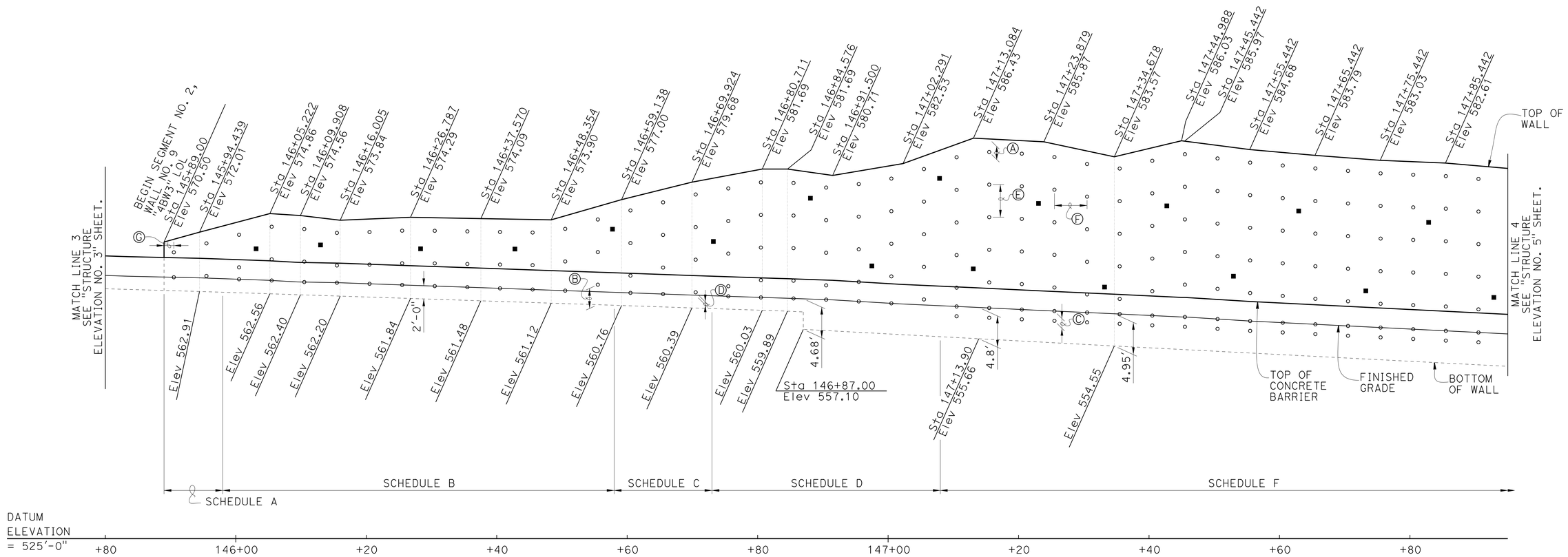

DEVELOPED ELEVATION

1/8" = 1'-0"

FOR COMPLETE RIGHT OF WAY DATA, SEE RIGHT OF WAY RECORDS MAPS AT DISTRICT OFFICE.

	BY	CHECKED
DESIGN	S. Hegazi	R. Amir
DETAILS	T. Kusumi	R. Amir / S. Hegazi
QUANTITIES	R. Amir	S. Hegazi

STATE OF CALIFORNIA
DEPARTMENT OF TRANSPORTATION

DIVISION OF ENGINEERING SERVICES
STRUCTURE DESIGN
DESIGN BRANCH 8

BRIDGE NO. 37E0118
POST MILE 2.65/2.84

HECKER PASS SOIL NAIL WALL NO. 9
STRUCTURE ELEVATION NO. 4

STRUCTURES DESIGN DETAIL SHEET (ENGLISH) (REV. 09-01-10)

ORIGINAL SCALE IN INCHES FOR REDUCED PLANS 0 1 2 3

UNIT: 3593
PROJECT NUMBER & PHASE: 0400000813-1
CONTRACT NO.: 04-2A2501

DISREGARD PRINTS BEARING EARLIER REVISION DATES

REVISION DATES: 10-14-11 06-04-12 05-01-13

SHEET 8 OF 27

FILE => 37e0118-f-strucelv04.dgn

USERNAME => s124496 DATE PLOTTED => 21-JUN-2013 TIME PLOTTED => 07:02

DIST	COUNTY	ROUTE	POST MILES TOTAL PROJECT	SHEET No.	TOTAL SHEETS
04	SCI	152	0.1/5.2	359	416

REGISTERED CIVIL ENGINEER 08-01-12 DATE

6-17-13
PLANS APPROVAL DATE

REGISTERED PROFESSIONAL ENGINEER
Sameh Hegazi
No. C64899
Exp. 06-30-2013
CIVIL
STATE OF CALIFORNIA

The State of California or its officers or agents shall not be responsible for the accuracy or completeness of electronic copies of this plan sheet.

NOTE:
1. For production nails schedules and notes, see "STRUCTURE ELEVATION NO. 1" sheet.

LEGEND:
- ○ Indicates approximate location of soil nails
- ■ Indicates approximate location of proof test nails

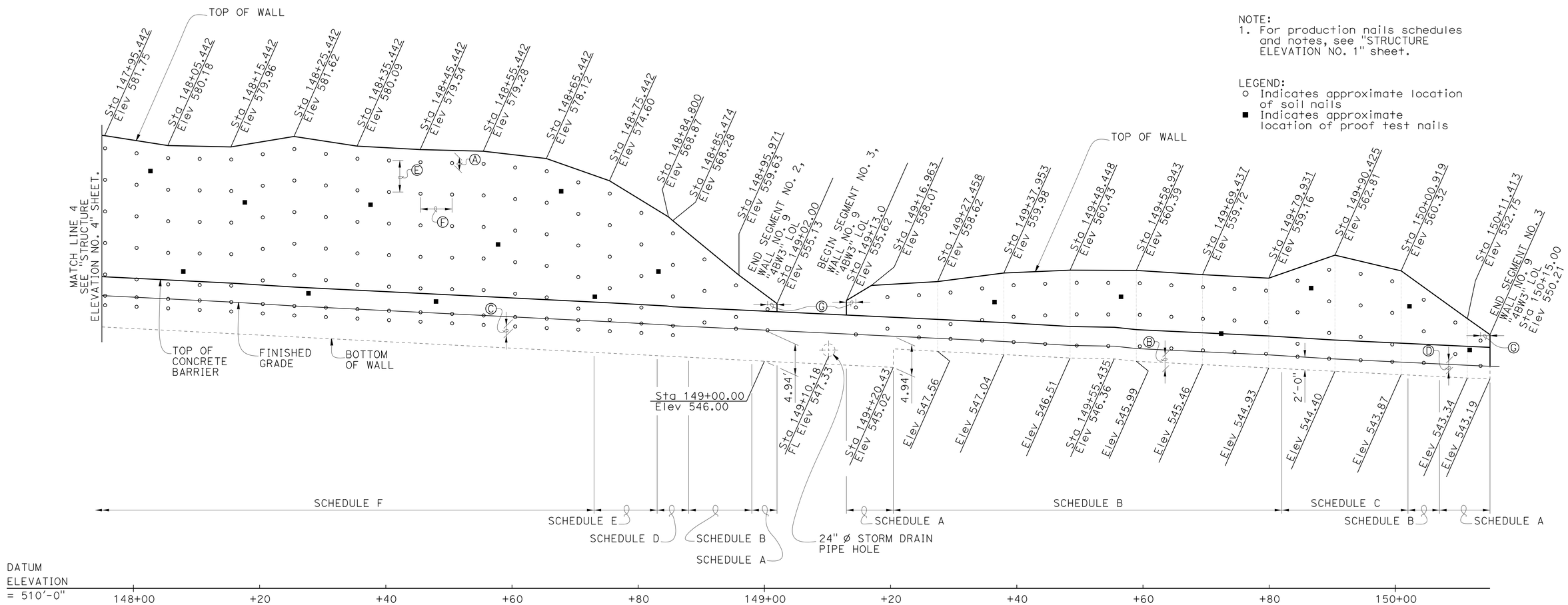

DEVELOPED ELEVATION

1/8" = 1'-0"

FOR COMPLETE RIGHT OF WAY DATA, SEE RIGHT OF WAY RECORDS MAPS AT DISTRICT OFFICE.

	BY	CHECKED
DESIGN	S. Hegazi	R. Amir
DETAILS	T. Kusumi	R. Amir / S. Hegazi
QUANTITIES	R. Amir	S. Hegazi

STATE OF CALIFORNIA
DEPARTMENT OF TRANSPORTATION

DIVISION OF ENGINEERING SERVICES
STRUCTURE DESIGN
DESIGN BRANCH 8

BRIDGE NO. 37E0118
POST MILE 2.65/2.84

HECKER PASS SOIL NAIL WALL NO. 9
STRUCTURE ELEVATION NO. 5

STRUCTURES DESIGN DETAIL SHEET (ENGLISH) (REV. 09-01-10)

ORIGINAL SCALE IN INCHES FOR REDUCED PLANS 0 1 2 3

UNIT: 3593
PROJECT NUMBER & PHASE: 0400000813-1
CONTRACT NO.: 04-2A2501

DISREGARD PRINTS BEARING EARLIER REVISION DATES

REVISION DATES: 10-14-11 | 06-04-12 | 05-01-13

SHEET 9 OF 27

FILE => 37e0118-f-strucelv05.dgn

USERNAME => s124436 DATE PLOTTED => 21-JUN-2013 TIME PLOTTED => 07:02

DIST	COUNTY	ROUTE	POST MILES TOTAL PROJECT	SHEET No.	TOTAL SHEETS
04	SCI	152	0.1/5.2	360	416

REGISTERED CIVIL ENGINEER 05-15-13 DATE

6-17-13
PLANS APPROVAL DATE

REGISTERED PROFESSIONAL ENGINEER
Sameh Hegazi
No. C64899
Exp. 06-30-2013
CIVIL
STATE OF CALIFORNIA

The State of California or its officers or agents shall not be responsible for the accuracy or completeness of electronic copies of this plan sheet.

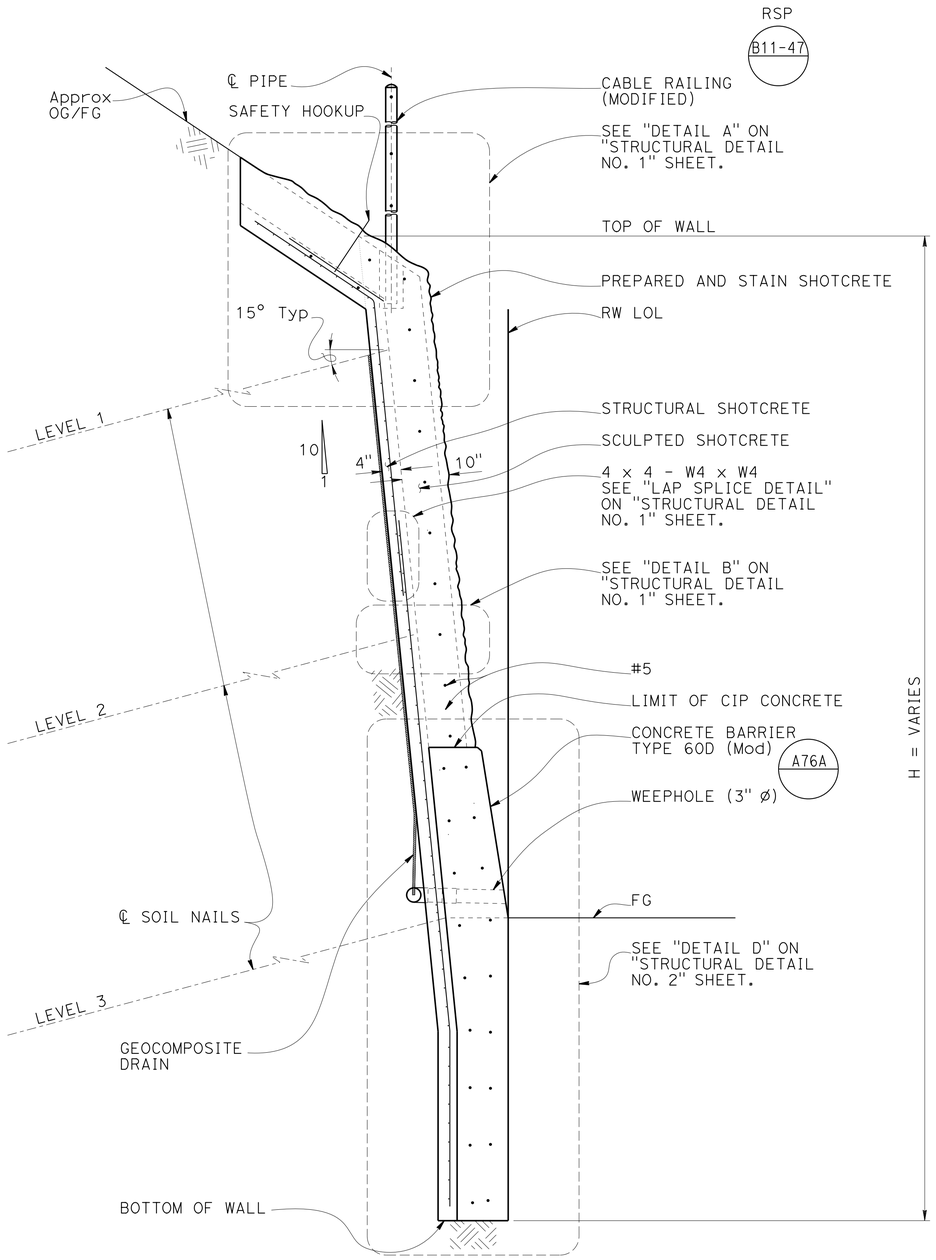

TYPICAL SECTION AT FOUNDATION DROP

3/4" = 1'-0"

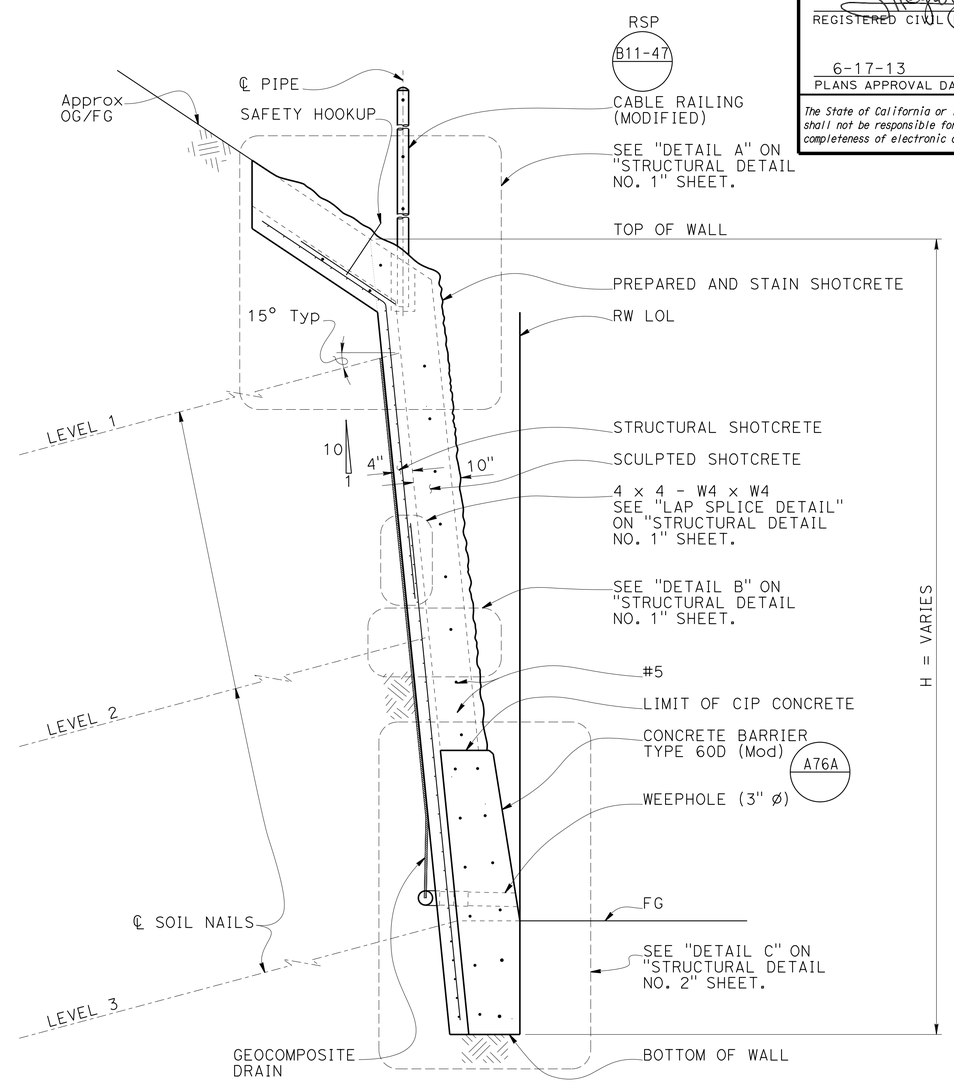

TYPICAL SECTION

3/4" = 1'-0"

NOTES:
1. For "PRODUCTION SOIL NAIL DETAIL" and "PROOF TEST SOIL NAIL DETAIL", see "STRUCTURAL DETAIL NO.3" sheet.
2. For sculpted shotcrete treatment, see "SCULPTED SHOTCRETE TREATMENT NO. 1" sheet.
3 For geocomposite drain detail, see "DRAINAGE DETAILS NO. 2" sheet.

	BY	CHECKED
DESIGN	S. Hegazi	R. Amir
DETAILS	T. Kusumi	R. Amir / S. Hegazi
QUANTITIES	R. Amir	S. Hegazi

STATE OF CALIFORNIA
DEPARTMENT OF TRANSPORTATION

DIVISION OF ENGINEERING SERVICES
STRUCTURE DESIGN
DESIGN BRANCH 8

BRIDGE NO. 37E0118
POST MILE 2.65/2.84

HECKER PASS SOIL NAIL WALL NO. 9
TYPICAL SECTION

STRUCTURES DESIGN DETAIL SHEET (ENGLISH) (REV. 09-01-10)

ORIGINAL SCALE IN INCHES FOR REDUCED PLANS 0 1 2 3

UNIT: 3593
PROJECT NUMBER & PHASE: 0400000813-1
CONTRACT NO.: 04-2A2501

DISREGARD PRINTS BEARING EARLIER REVISION DATES

REVISION DATES: ~~06-16-11~~ ~~07-19-12~~ 05-10-13

SHEET 10 OF 27

FILE => 37e0118-g-_ts.dgn

USERNAME => s124496 DATE PLOTTED => 21-JUN-2013 TIME PLOTTED => 07:02

DIST	COUNTY	ROUTE	POST MILES TOTAL PROJECT	SHEET No.	TOTAL SHEETS
04	SCI	152	0.1/5.2	361	416

REGISTERED CIVIL ENGINEER 05-15-13 DATE

6-17-13
PLANS APPROVAL DATE

REGISTERED PROFESSIONAL ENGINEER
Sameh Hegazi
No. C64899
Exp. 06-30-2013
CIVIL
STATE OF CALIFORNIA

The State of California or its officers or agents shall not be responsible for the accuracy or completeness of electronic copies of this plan sheet.

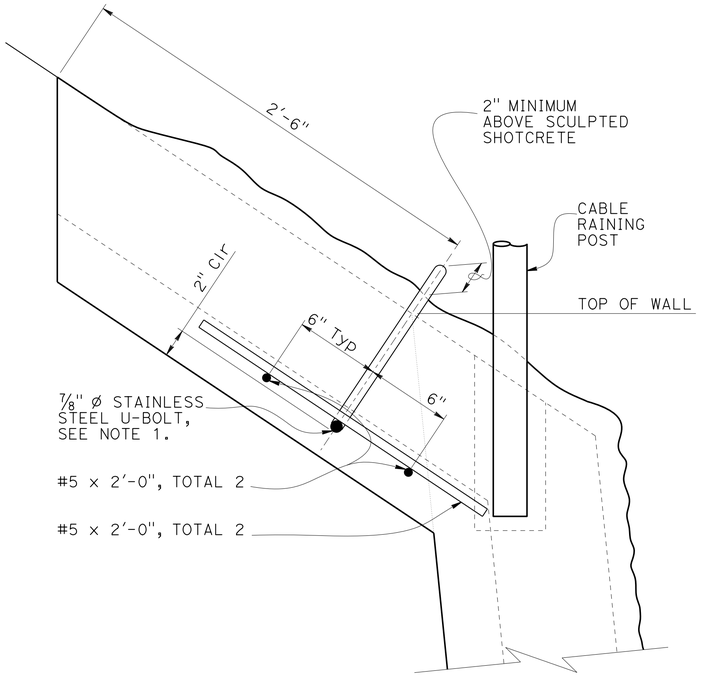

SAFETY HOOKUP DETAIL

No Scale

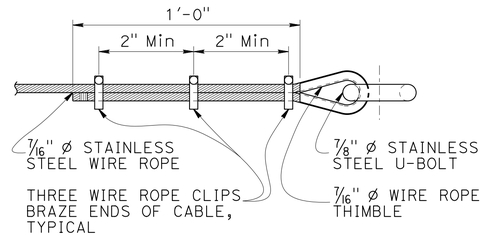

SAFETY WIRE ROPE DETAIL

No Scale

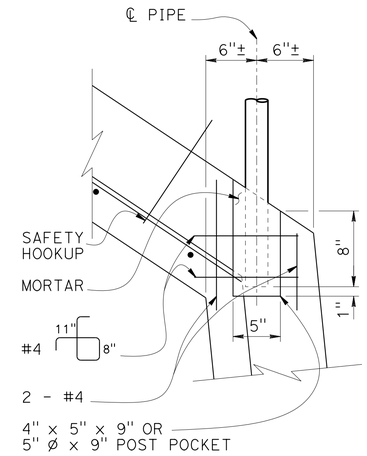

POST POCKET DETAIL

No Scale

RSP B11-47

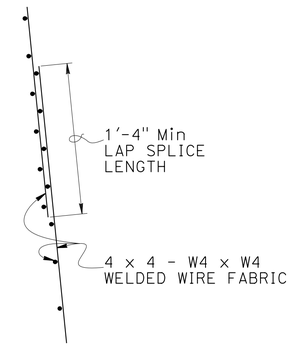

LAP SPLICE DETAIL

No Scale

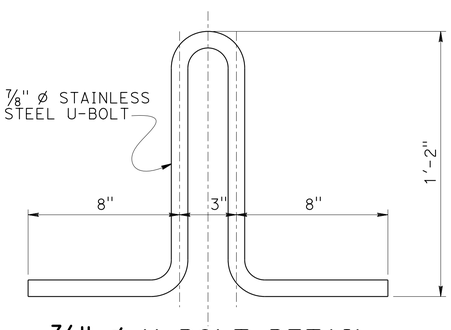

7/8" Ø U-BOLT DETAIL

3" = 1'-0"

NOTE:

Ⓐ For bearing plate and soil nail details not shown, see "STRUCTURAL DETAILS NO. 3" sheet.

1. Safety hookups shall be placed behind cable railing posts with 10'-0" Max spacing.
2. Safety wire rope shall be extended between safety hookups at top of wall.
3. Safety wire rope and safety hookups shall be placed at locations where wall heights from top of wall to finished grade exceed 5 feet.

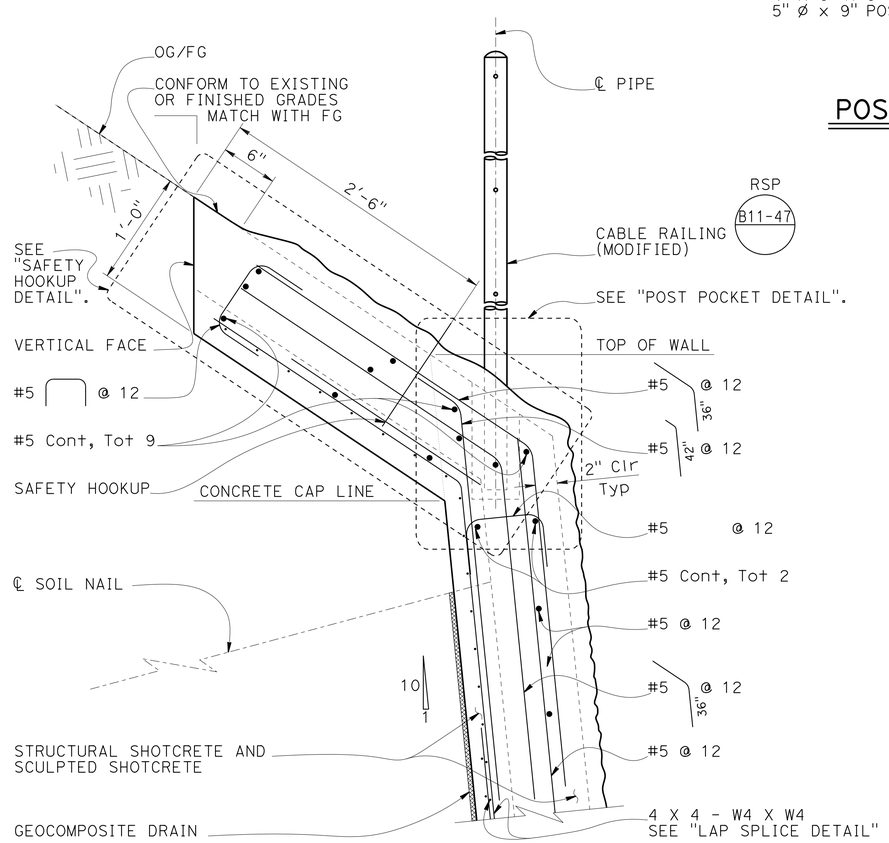

DETAIL A

1½" = 1'-0"

RSP B11-47

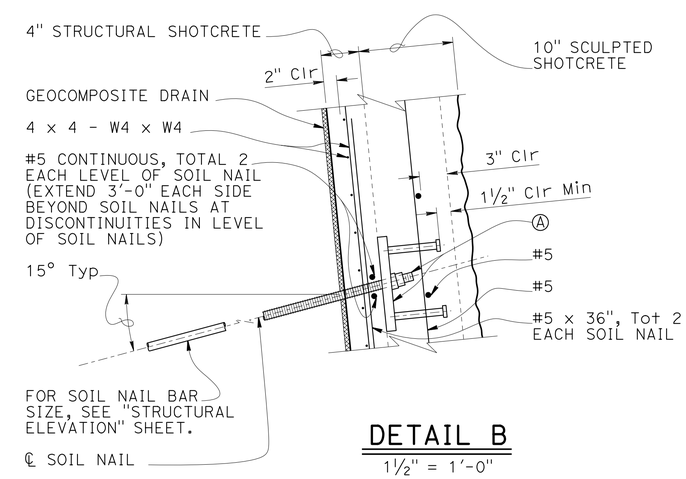

DETAIL B

1½" = 1'-0"

DESIGN	BY S. Hegazi	CHECKED R. Amir	
DETAILS	BY T. Kusumi	CHECKED R. Amir / S. Hegazi	
QUANTITIES	BY R. Amir	CHECKED S. Hegazi	

STATE OF CALIFORNIA
DEPARTMENT OF TRANSPORTATION

DIVISION OF ENGINEERING SERVICES
STRUCTURE DESIGN
DESIGN BRANCH 8

BRIDGE NO. 37E0118
POST MILE 2.65/2.84

HECKER PASS SOIL NAIL WALL NO. 9
STRUCTURAL DETAILS NO. 1

STRUCTURES DESIGN DETAIL SHEET (ENGLISH) (REV. 09-01-10)

ORIGINAL SCALE IN INCHES FOR REDUCED PLANS 0 1 2 3

UNIT: 3593
PROJECT NUMBER & PHASE: 0400000813-1
CONTRACT NO.: 04-2A2501

DISREGARD PRINTS BEARING EARLIER REVISION DATES

REVISION DATES: 06-09-11 07-18-12 05-10-13

SHEET 11 OF 27

FILE => 37e0118-g-stdt01.dgn

USERNAME => s124496 DATE PLOTTED => 21-JUN-2013 TIME PLOTTED => 07:02

DIST	COUNTY	ROUTE	POST MILES TOTAL PROJECT	SHEET No.	TOTAL SHEETS
04	SCI	152	0.1/5.2	362	416

REGISTERED CIVIL ENGINEER 05-15-13 DATE

6-17-13
PLANS APPROVAL DATE

REGISTERED PROFESSIONAL ENGINEER
Sameh Hegazi
No. C64899
Exp. 06-30-2013
CIVIL
STATE OF CALIFORNIA

The State of California or its officers or agents shall not be responsible for the accuracy or completeness of electronic copies of this plan sheet.

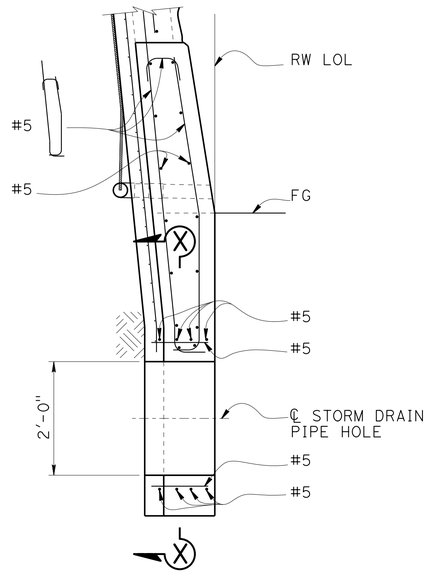

DROP FOUNDATION DETAIL AT STORM DRAIN PIPE HOLE

No Scale

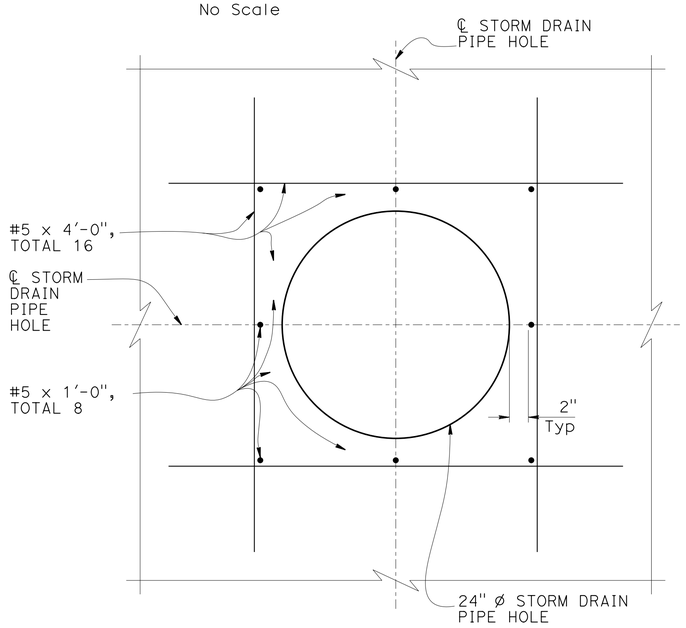

SECTION X-X

No Scale

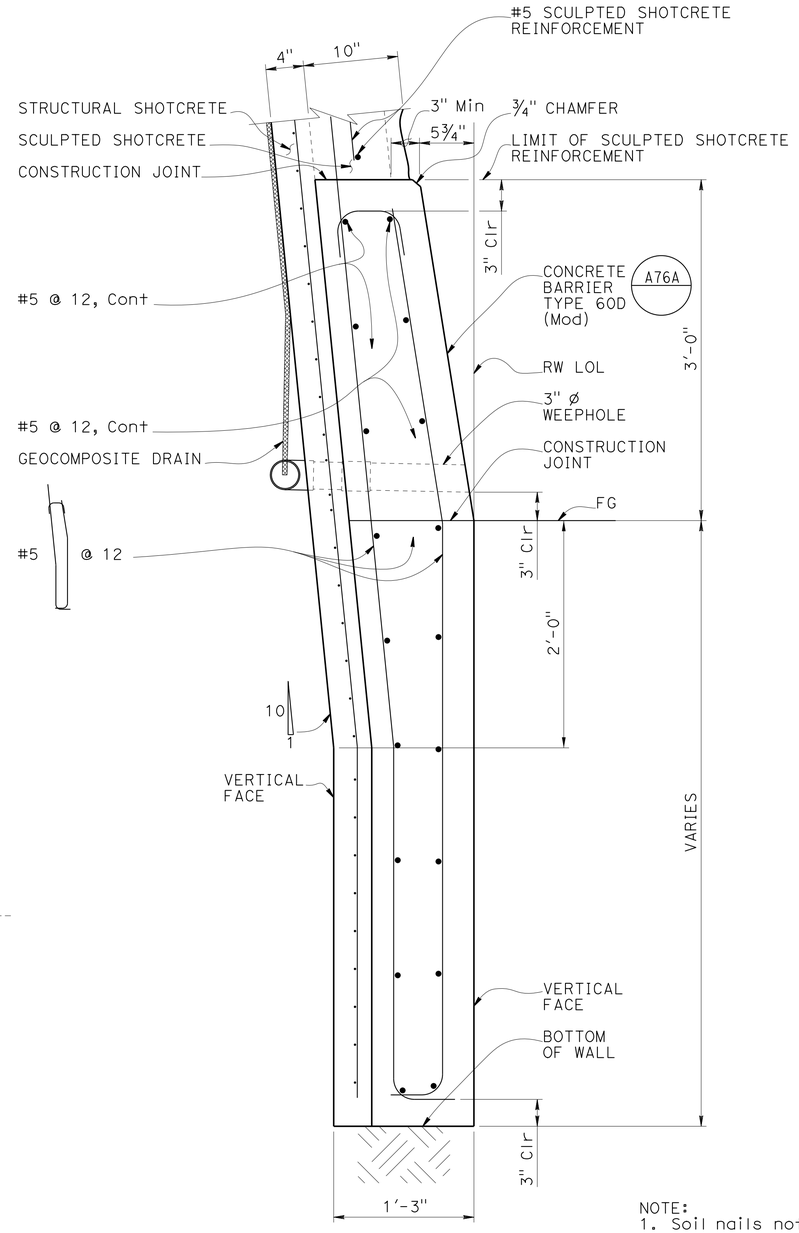

DETAIL D

1½" = 1'-0"

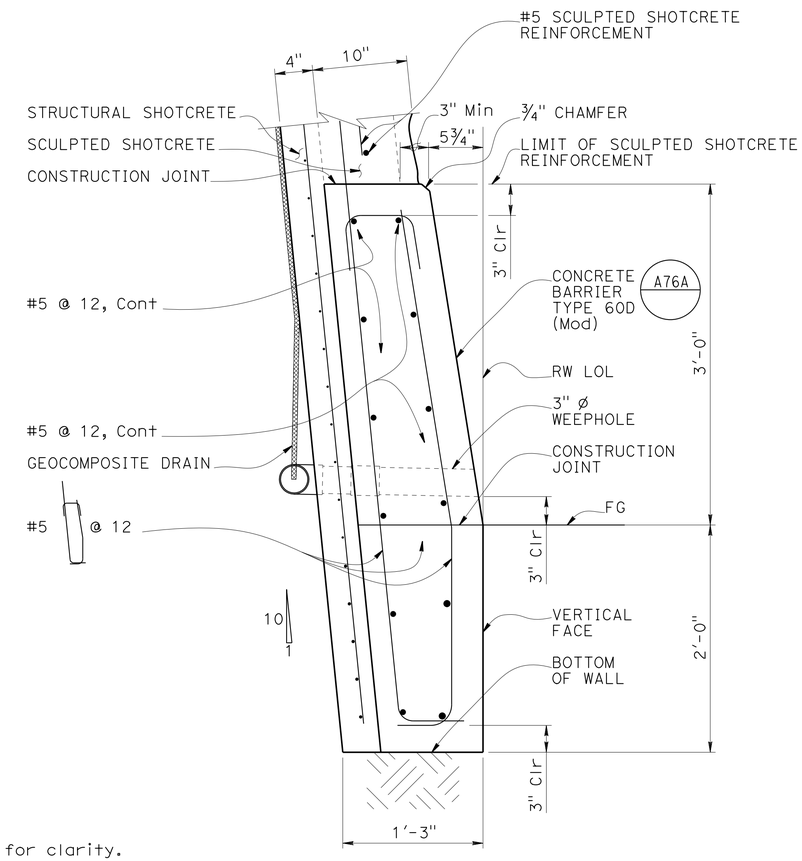

DETAIL C

1½" = 1'-0"

NOTE:
1. Soil nails not shown for clarity.
2. Concrete barrier shall be integrally colored.
3. For storm drain pipe hole locations, see "STRUCTURE ELEVATION" sheets.

DESIGN	BY S. Hegazi	CHECKED R. Amir	
DETAILS	BY T. Kusumi	CHECKED R. Amir / S. Hegazi	
QUANTITIES	BY R. Amir	CHECKED S. Hegazi	

STATE OF CALIFORNIA
DEPARTMENT OF TRANSPORTATION

DIVISION OF ENGINEERING SERVICES
STRUCTURE DESIGN
DESIGN BRANCH 8

BRIDGE NO. 37E0118
POST MILE 2.65/2.84

HECKER PASS SOIL NAIL WALL NO. 9
STRUCTURAL DETAILS NO. 2

STRUCTURES DESIGN DETAIL SHEET (ENGLISH) (REV. 09-01-10)

ORIGINAL SCALE IN INCHES FOR REDUCED PLANS 0 1 2 3

UNIT: 3593
PROJECT NUMBER & PHASE: 0400000813-1
CONTRACT NO.: 04-2A2501

DISREGARD PRINTS BEARING EARLIER REVISION DATES

REVISION DATES: 06-10-11 07-19-12 05-10-13

SHEET 12 OF 27

FILE => 37e0118-g-stdt02.dgn

USERNAME => s124036 DATE PLOTTED => 21-JUN-2013 TIME PLOTTED => 07:02

DIST	COUNTY	ROUTE	POST MILES TOTAL PROJECT	SHEET No.	TOTAL SHEETS
04	SCI	152	0.1/5.2	363	416

REGISTERED CIVIL ENGINEER 08-01-12 DATE

6-17-13
PLANS APPROVAL DATE

REGISTERED PROFESSIONAL ENGINEER
Sameh Hegazi
No. C64899
Exp. 06-30-2013
CIVIL
STATE OF CALIFORNIA

The State of California or its officers or agents shall not be responsible for the accuracy or completeness of electronic copies of this plan sheet.

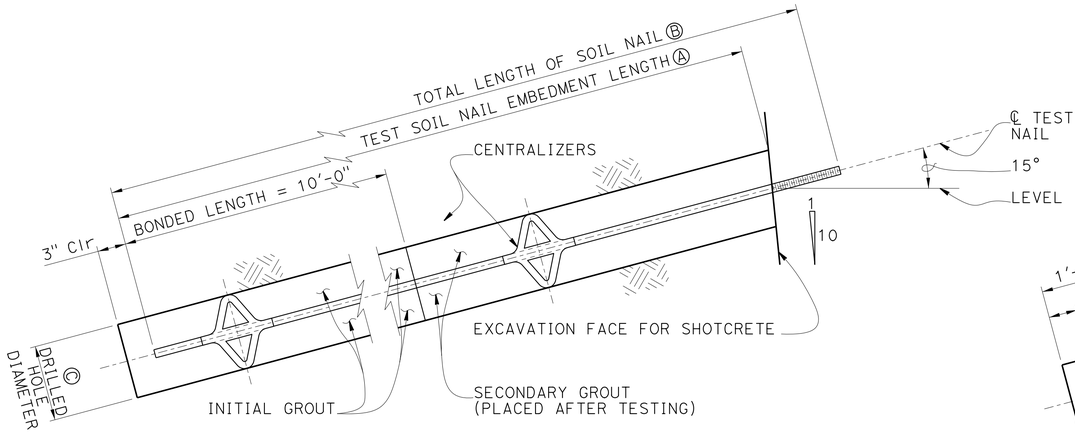

PROOF TEST SOIL NAIL DETAIL

No Scale

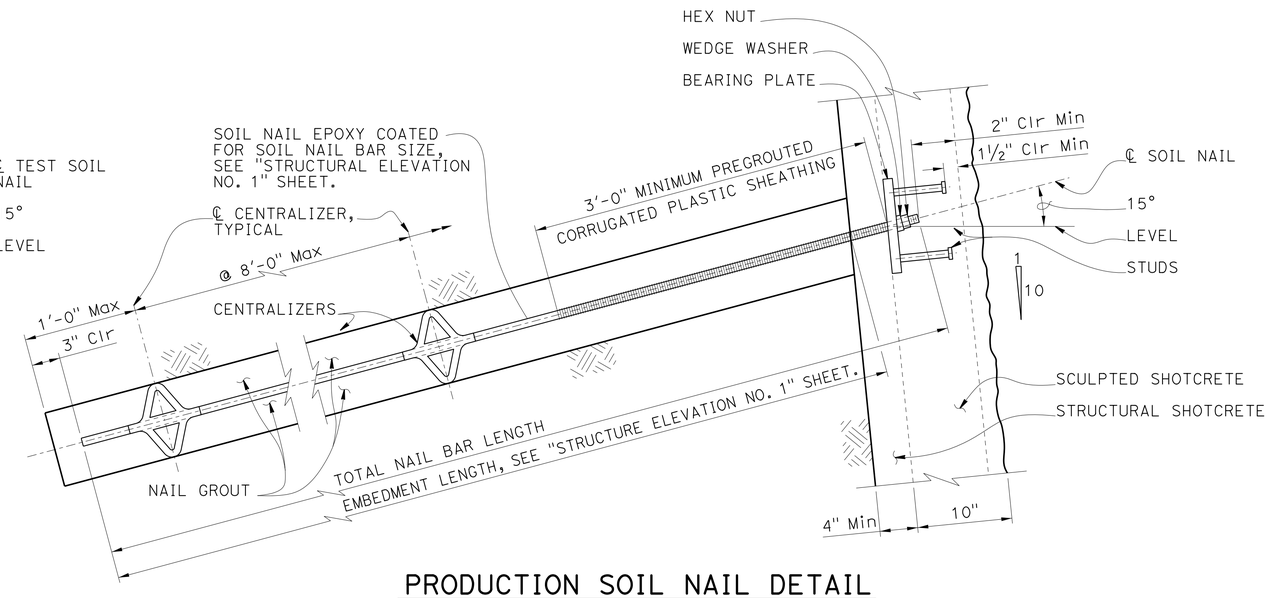

PRODUCTION SOIL NAIL DETAIL

No Scale

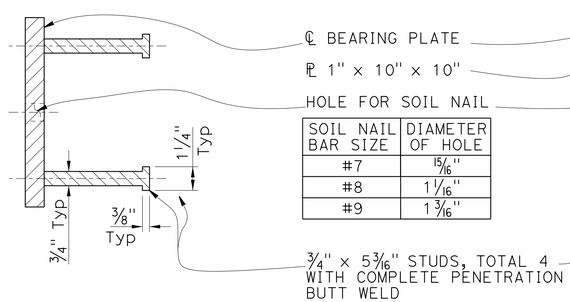

SECTION A-A

No Scale

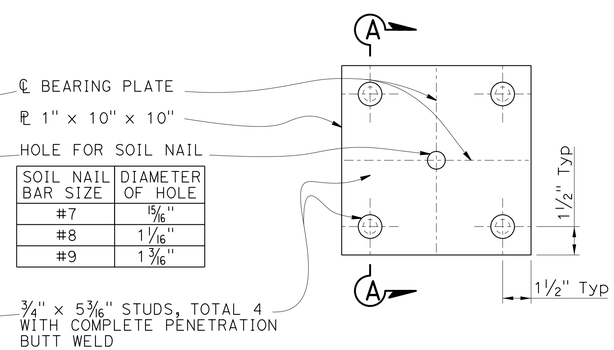

SOIL NAIL BAR SIZE	DIAMETER OF HOLE
#7	15/16"
#8	1 1/16"
#9	1 3/16"

BEARING PLATE DETAIL

No Scale

NOTES:
1. Geocomposite drain not shown for clarity.
2. Wall reinforcement not shown for clarity.
3. Finished grout surface to be normal to the bar

Ⓐ Embedment length of test soil nails equals 2/3 of embedment length of adjacent production soil nails, but not less than 12'-0".

Ⓑ Total length of test soil nail equals embedment length plus length required for jacking equipment.

Ⓒ Contractor to determine drilled hole diameter.

DESIGN	BY S. Hegazi	CHECKED R. Amir	
DETAILS	BY T. Kusumi	CHECKED R. Amir / S. Hegazi	
QUANTITIES	BY R. Amir	CHECKED S. Hegazi	

STATE OF CALIFORNIA
DEPARTMENT OF TRANSPORTATION

DIVISION OF ENGINEERING SERVICES
STRUCTURE DESIGN
DESIGN BRANCH 8

BRIDGE NO. 37E0118
POST MILE 2.65/2.84

HECKER PASS SOIL NAIL WALL NO. 9
STRUCTURAL DETAILS NO. 3

STRUCTURES DESIGN DETAIL SHEET (ENGLISH) (REV. 09-01-10)

ORIGINAL SCALE IN INCHES FOR REDUCED PLANS 0 1 2 3

UNIT: 3593
PROJECT NUMBER & PHASE: 0400000813-1
CONTRACT NO.: 04-2A2501

DISREGARD PRINTS BEARING EARLIER REVISION DATES

REVISION DATES: 06-30-11 06-26-12 05-01-12

SHEET 13 OF 27

FILE => 37e0118-g-stdt03.dgn

USERNAME => s124436 DATE PLOTTED => 21-JUN-2013 TIME PLOTTED => 07:02

DIST	COUNTY	ROUTE	POST MILES TOTAL PROJECT	SHEET No.	TOTAL SHEETS
04	SCI	152	0.1/5.2	364	416

REGISTERED CIVIL ENGINEER 05-15-13 DATE

6-17-13
PLANS APPROVAL DATE

REGISTERED PROFESSIONAL ENGINEER
Sameh Hegazi
No. C64899
Exp. 06-30-2013
CIVIL
STATE OF CALIFORNIA

The State of California or its officers or agents shall not be responsible for the accuracy or completeness of electronic copies of this plan sheet.

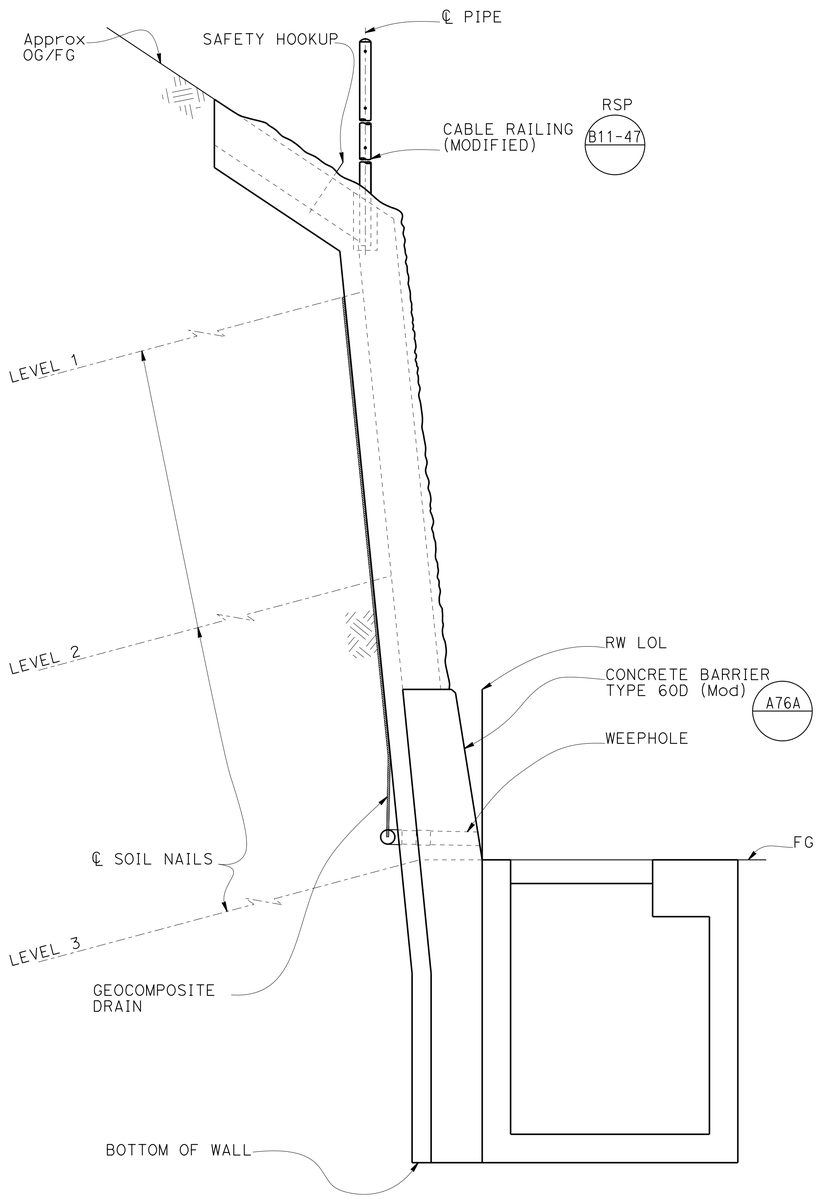

TYPICAL SECTION WITH DROP INLET

No Scale

NOTES:
1. For drainage details not shown, see "ROADWAY PLANS".
2. For drop inlet type, locations and elevations, see "ROADWAY PLANS".
3 Engineer must adjust bottom elevation to accommodate drainage system shown on "ROADWAY PLANS".
4. Bottom of wall to be placed against undisturbed material.
5. Drop inlets shall be centered vertically between soil nails.

	BY	CHECKED
DESIGN	S. Hegazi	R. Amir
DETAILS	T. Kusumi	R. Amir / S. Hegazi
QUANTITIES	R. Amir	S. Hegazi

STATE OF CALIFORNIA
DEPARTMENT OF TRANSPORTATION

DIVISION OF ENGINEERING SERVICES
STRUCTURE DESIGN
DESIGN BRANCH 8

BRIDGE NO. 37E0118
POST MILE 2.65/2.84

HECKER PASS SOIL NAIL WALL NO. 9
DRAINAGE DETAIL NO. 1

STRUCTURES DESIGN DETAIL SHEET (ENGLISH) (REV. 09-01-10)

ORIGINAL SCALE IN INCHES FOR REDUCED PLANS 0 1 2 3

UNIT: 3593
PROJECT NUMBER & PHASE: 0400000813-1
CONTRACT NO.: 04-2A2501

DISREGARD PRINTS BEARING EARLIER REVISION DATES

REVISION DATES: 06-17-11 07-18-12 05-10-13

SHEET 14 OF 27

FILE => 37e0118-r-dd01.dgn

USERNAME => s124496 DATE PLOTTED => 21-JUN-2013 TIME PLOTTED => 07:02

DIST	COUNTY	ROUTE	POST MILES TOTAL PROJECT	SHEET No.	TOTAL SHEETS
04	SCI	152	0.1/5.2	365	416

REGISTERED CIVIL ENGINEER 08-01-12 DATE

6-17-13
PLANS APPROVAL DATE

REGISTERED PROFESSIONAL ENGINEER
Sameh Hegazi
No. C64899
Exp. 06-30-2013
CIVIL
STATE OF CALIFORNIA

The State of California or its officers or agents shall not be responsible for the accuracy or completeness of electronic copies of this plan sheet.

NOTES:
1. Wall reinforcement not shown for clarity.

Ⓐ Indicates soil nail locations.

Ⓑ Center of geocomposite strips shall be centered vertically between soil nails.

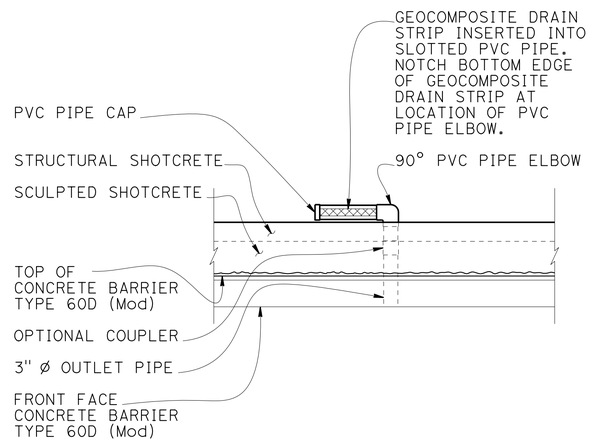

SECTION C-C

No Scale

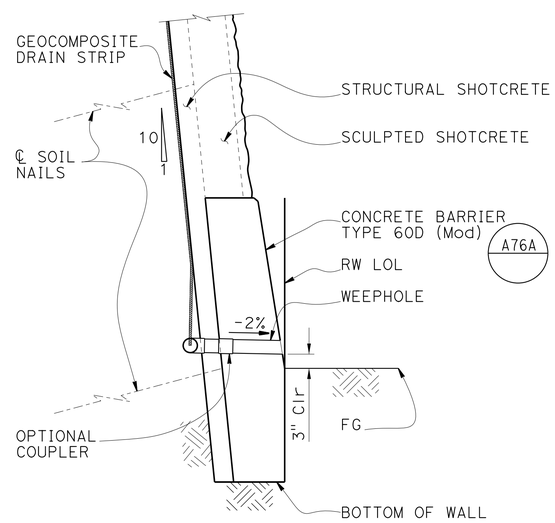

SECTION B-B

3/4" = 1'-0"

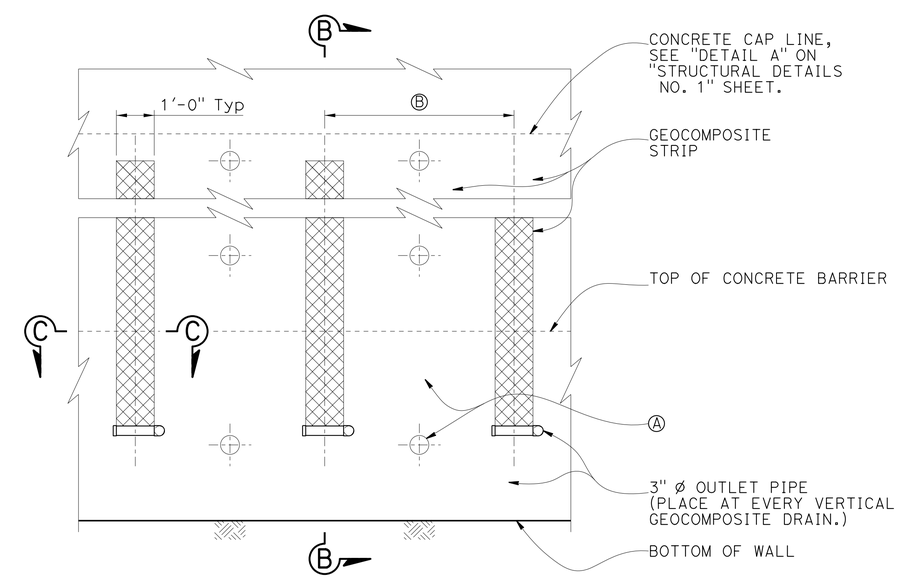

WALL PART ELEVATION

No Scale

DESIGN	BY S. Hegazi	CHECKED R. Amir	
DETAILS	BY T. Kusumi	CHECKED R. Amir / S. Hegazi	
QUANTITIES	BY R. Amir	CHECKED S. Hegazi	

STATE OF CALIFORNIA
DEPARTMENT OF TRANSPORTATION

DIVISION OF ENGINEERING SERVICES
STRUCTURE DESIGN
DESIGN BRANCH 8

BRIDGE NO. 37E0118
POST MILE 2.65/2.84

HECKER PASS SOIL NAIL WALL NO. 9
DRAINAGE DETAILS NO. 2

STRUCTURES DESIGN DETAIL SHEET (ENGLISH) (REV. 09-01-10)

ORIGINAL SCALE IN INCHES FOR REDUCED PLANS 0 1 2 3

UNIT: 3593
PROJECT NUMBER & PHASE: 0400000813-1
CONTRACT NO.: 04-2A2501

DISREGARD PRINTS BEARING EARLIER REVISION DATES

REVISION DATES: 06-17-11 07-19-12 05-22-13

SHEET 15 OF 27

FILE => 37e0118-r-dd+02.dgn

USERNAME => s124496 DATE PLOTTED => 21-JUN-2013 TIME PLOTTED => 07:02

DIST	COUNTY	ROUTE	POST MILES TOTAL PROJECT	SHEET No.	TOTAL SHEETS
04	SCI	152	0.1/5.2	366	416

REGISTERED CIVIL ENGINEER 08-01-12 DATE

6-17-13
PLANS APPROVAL DATE

REGISTERED PROFESSIONAL ENGINEER
Sameh Hegazi
No. C64899
Exp. 06-30-2013
CIVIL
STATE OF CALIFORNIA

The State of California or its officers or agents shall not be responsible for the accuracy or completeness of electronic copies of this plan sheet.

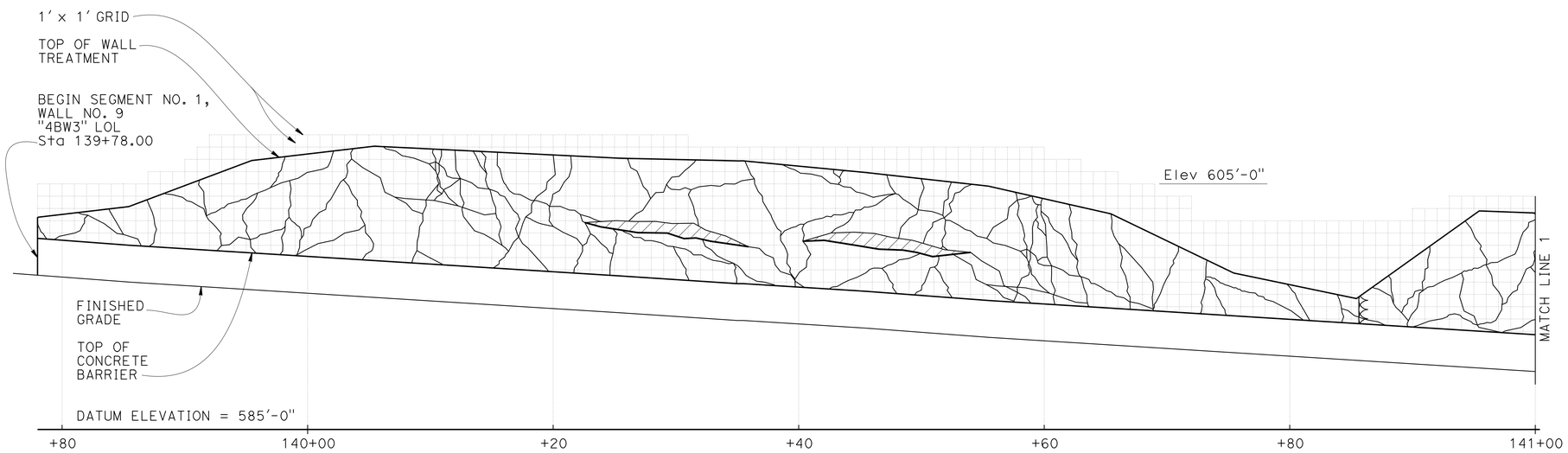

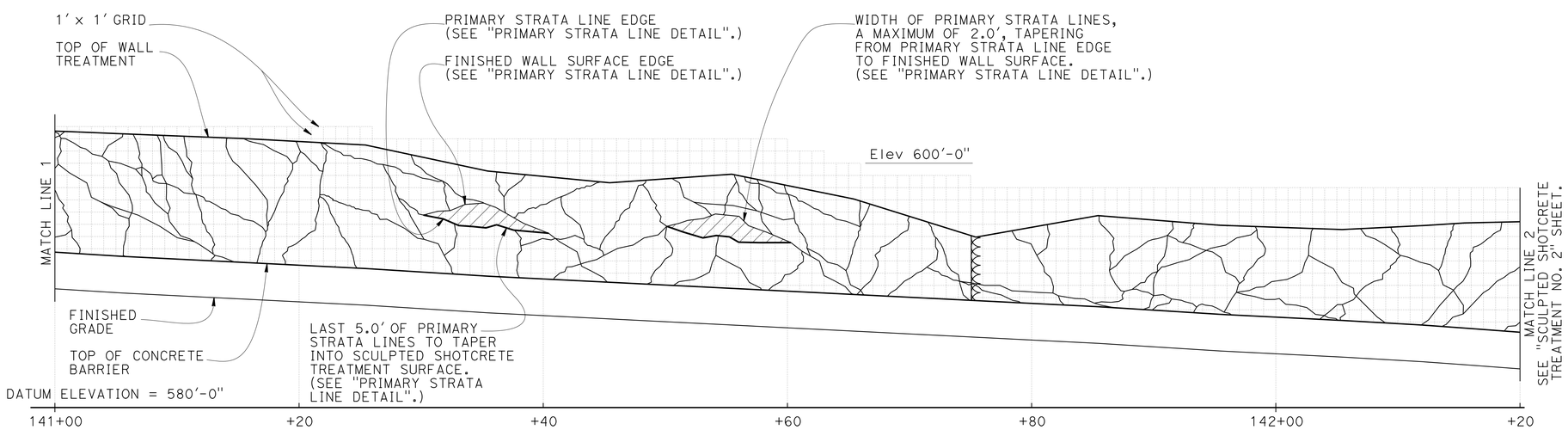

SCULPTED SHOTCRETE SURFACE TREATMENT

3/16" = 1'-0"

LEGEND:

1. PRIMARY STRATA LINES

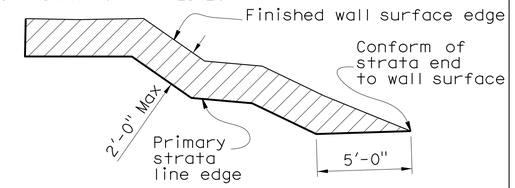

2. SECONDARY STRATA LINES

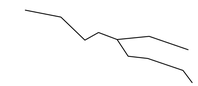

3. Indicates location of weakened planes joint. Joints should not be placed within 18 inches of a nail head. For details, see B0-3 / 3-2

NOTES:

1. Primary strata lines drawn on the front elevation are to be used as a guide for layout of primary strata line reinforcement. See "SCULPTED SHOTCRETE TREATMENT DETAILS NO. 1" and "SCULPTED SHOTCRETE TREATMENT DETAILS NO. 2" sheets.
2. Secondary strata lines drawn on the front elevation are to be used as a general guide. Strata lines shall be sculpted to mimic local geology.
3. This sheet is accurate for sculpted shotcrete treatment only.
4. Sculpted shotcrete surface treatment shall be continuous throughout the face of the wall.
5. Additional shotcrete needed for carving the primary strata lines to be reinforced as shown on "SCULPTED SHOTCRETE TREATMENT DETAILS NO. 1" and "SCULPTED SHOTCRETE TREATMENT DETAILS NO. 2" sheets.
6. Primary strata lines to be tapered into the top and bottom of wall.
7. Secondary strata lines are not to exceed 2" amplitude.
8. 3" ø weepholes are not shown.
9. Cable railing is not shown.

	BY	CHECKED
DESIGN	S. Hegazi	R. Amir
DETAILS	T. Kusumi	R. Amir / S. Hegazi
QUANTITIES	R. Amir	S. Hegazi

STATE OF CALIFORNIA
DEPARTMENT OF TRANSPORTATION

DIVISION OF ENGINEERING SERVICES
STRUCTURE DESIGN
DESIGN BRANCH 8

BRIDGE NO. 37E0118
POST MILE 2.65/2.84

HECKER PASS SOIL NAIL WALL NO. 9
SCULPTED SHOTCRETE TREATMENT NO. 1

STRUCTURES DESIGN DETAIL SHEET (ENGLISH) (REV. 09-01-10)

ORIGINAL SCALE IN INCHES FOR REDUCED PLANS 0 1 2 3

UNIT: 3593
PROJECT NUMBER & PHASE: 0400000813-1
CONTRACT NO.: 04-2A2501

DISREGARD PRINTS BEARING EARLIER REVISION DATES

REVISION DATES: 10-14-11 07-19-12 06-04-13

SHEET 16 OF 27

FILE => 37e0118-u-arch01.dgn

USERNAME => s124496 DATE PLOTTED => 21-JUN-2013 TIME PLOTTED => 07:02

DIST	COUNTY	ROUTE	POST MILES TOTAL PROJECT	SHEET No.	TOTAL SHEETS
04	SCI	152	0.1/5.2	367	416

REGISTERED CIVIL ENGINEER 08-01-12 DATE

6-17-13
PLANS APPROVAL DATE

REGISTERED PROFESSIONAL ENGINEER
Sameh Hegazi
No. C64899
Exp. 06-30-2013
CIVIL
STATE OF CALIFORNIA

The State of California or its officers or agents shall not be responsible for the accuracy or completeness of electronic copies of this plan sheet.

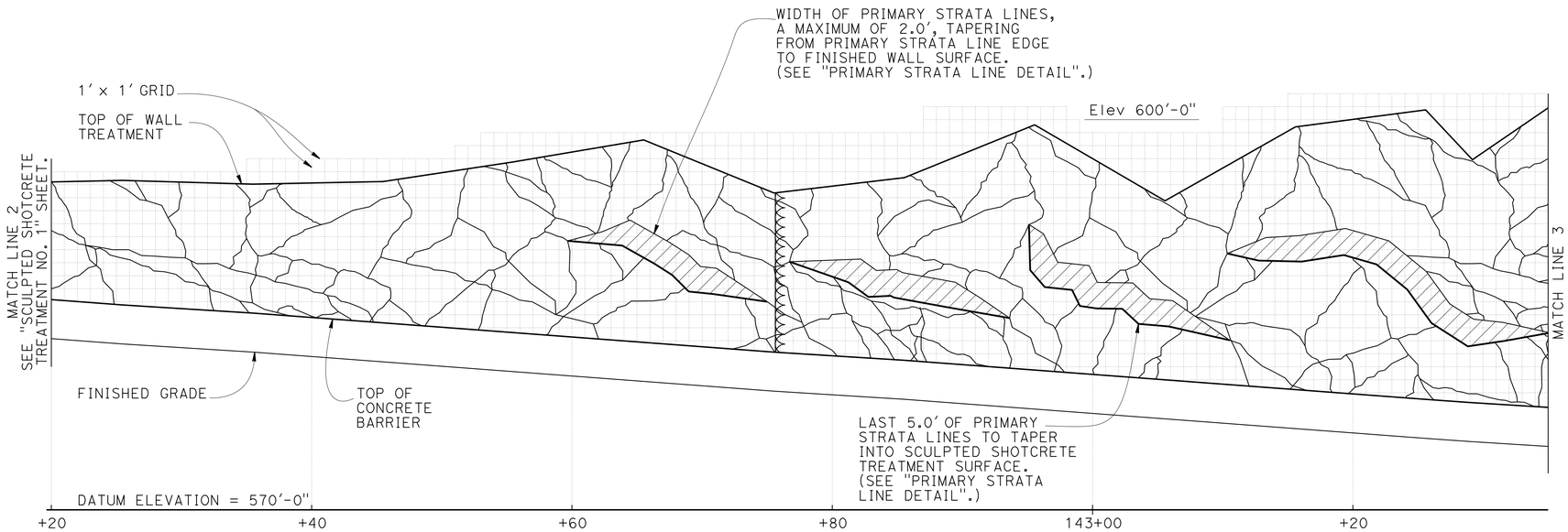

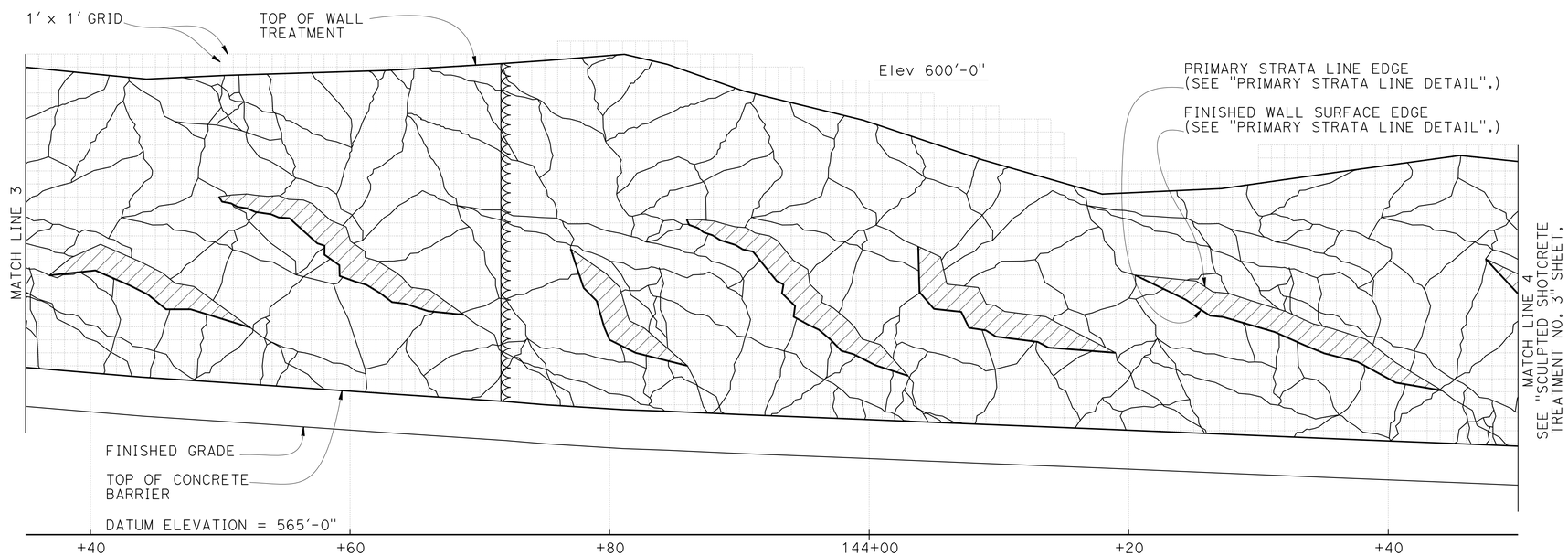

SCULPTED SHOTCRETE SURFACE TREATMENT

3/16" = 1'-0"

NOTE:
For notes and legend, see "SCULPTED SHOTCRETE TREATMENT NO. 1" sheet.

DESIGN	BY S. Hegazi	CHECKED R. Amir	
DETAILS	BY T. Kusumi	CHECKED R. Amir / S. Hegazi	
QUANTITIES	BY R. Amir	CHECKED S. Hegazi	

STATE OF CALIFORNIA
DEPARTMENT OF TRANSPORTATION

DIVISION OF ENGINEERING SERVICES
STRUCTURE DESIGN
DESIGN BRANCH 8

BRIDGE NO. 37E0118
POST MILE 2.65/2.84

HECKER PASS SOIL NAIL WALL NO. 9
SCULPTED SHOTCRETE TREATMENT NO. 2

STRUCTURES DESIGN DETAIL SHEET (ENGLISH) (REV. 09-01-10)

ORIGINAL SCALE IN INCHES FOR REDUCED PLANS 0 1 2 3

UNIT: 3593
PROJECT NUMBER & PHASE: 0400000813-1
CONTRACT NO.: 04-2A2501

DISREGARD PRINTS BEARING EARLIER REVISION DATES

REVISION DATES: 10-14-11 11-25-11 02-02-12 07-19-12

SHEET 17 OF 27

FILE => 37e0118-u-arch02.dgn

USERNAME => s124496 DATE PLOTTED => 21-JUN-2013 TIME PLOTTED => 07:02

DIST	COUNTY	ROUTE	POST MILES TOTAL PROJECT	SHEET No.	TOTAL SHEETS
04	SCI	152	0.1/5.2	368	416

REGISTERED CIVIL ENGINEER 08-01-12 DATE

6-17-13
PLANS APPROVAL DATE

REGISTERED PROFESSIONAL ENGINEER
Sameh Hegazi
No. C64899
Exp. 06-30-2013
CIVIL
STATE OF CALIFORNIA

The State of California or its officers or agents shall not be responsible for the accuracy or completeness of electronic copies of this plan sheet.

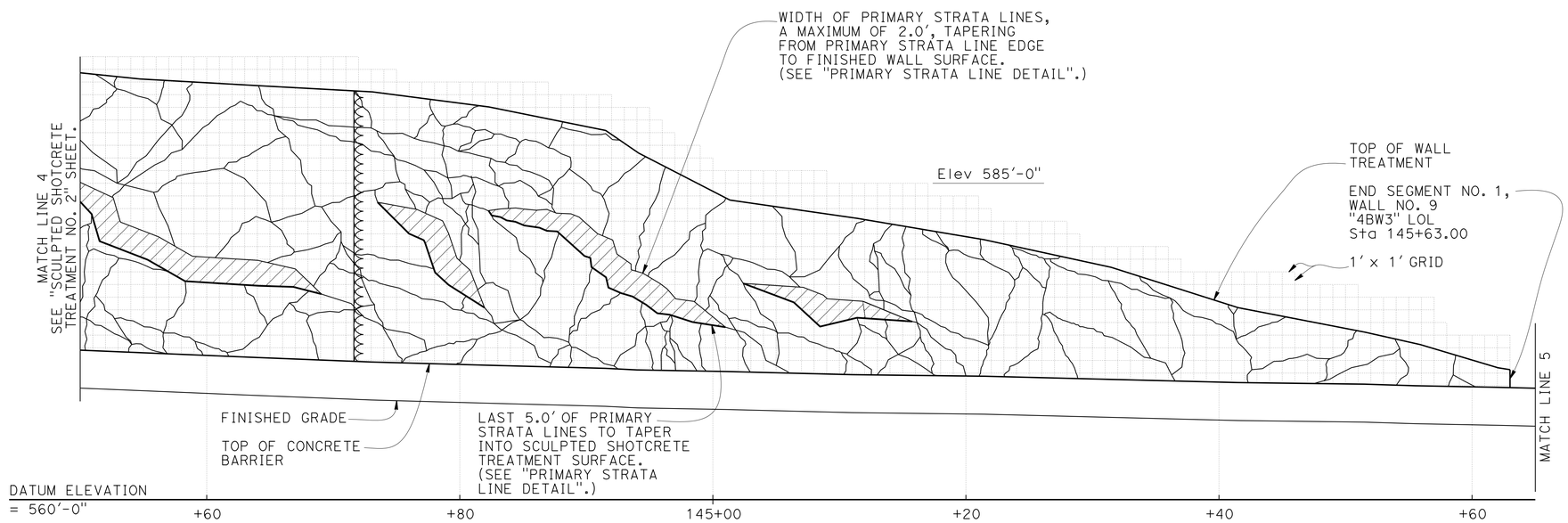

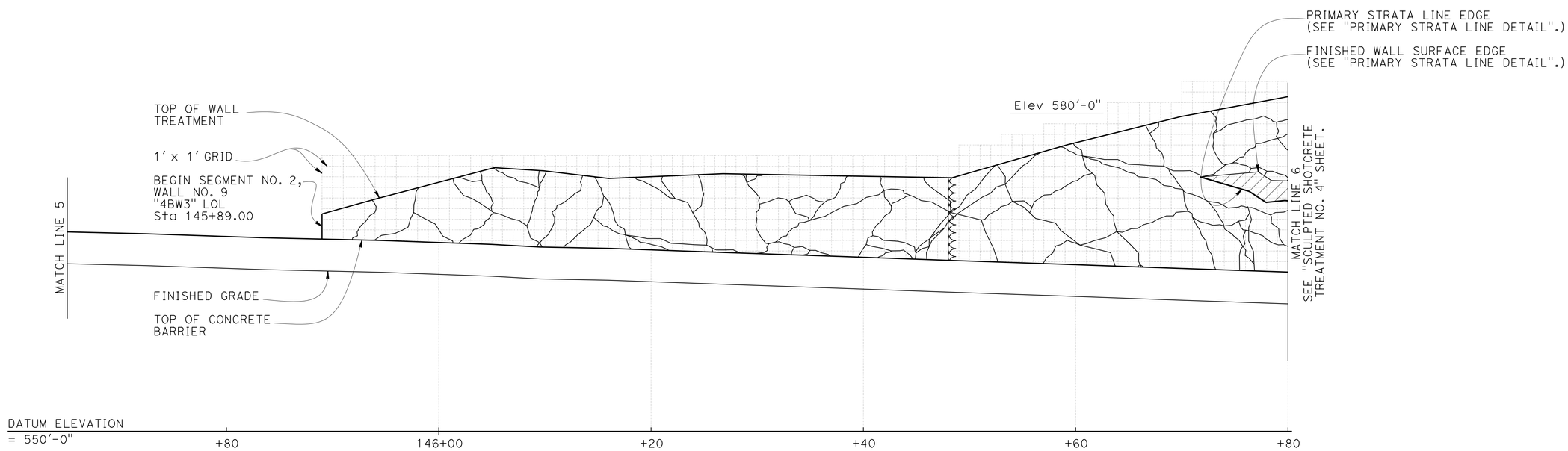

SCULPTED SHOTCRETE SURFACE TREATMENT

3/16" = 1'-0"

NOTE:
For notes and legend, see "SCULPTED SHOTCRETE TREATMENT NO. 1" sheet.

	BY	CHECKED
DESIGN	S. Hegazi	R. Amir
DETAILS	T. Kusumi	R. Amir / S. Hegazi
QUANTITIES	R. Amir	S. Hegazi

STATE OF CALIFORNIA
DEPARTMENT OF TRANSPORTATION

DIVISION OF ENGINEERING SERVICES
STRUCTURE DESIGN
DESIGN BRANCH 8

BRIDGE NO. 37E0118
POST MILE 2.65/2.84

HECKER PASS SOIL NAIL WALL NO. 9
SCULPTED SHOTCRETE TREATMENT NO. 3

STRUCTURES DESIGN DETAIL SHEET (ENGLISH) (REV. 09-01-10)

ORIGINAL SCALE IN INCHES FOR REDUCED PLANS 0 1 2 3

UNIT: 3593
PROJECT NUMBER & PHASE: 0400000813-1
CONTRACT NO.: 04-2A2501

DISREGARD PRINTS BEARING EARLIER REVISION DATES

REVISION DATES: 10-14-11 07-19-12 06-04-13

SHEET 18 OF 27

FILE => 37e0118-u-arch03.dgn

USERNAME => s124496 DATE PLOTTED => 21-JUN-2013 TIME PLOTTED => 07:02

DIST	COUNTY	ROUTE	POST MILES TOTAL PROJECT	SHEET No.	TOTAL SHEETS
04	SCI	152	0.1/5.2	369	416

REGISTERED CIVIL ENGINEER 08-01-12 DATE

6-17-13
PLANS APPROVAL DATE

REGISTERED PROFESSIONAL ENGINEER
Sameh Hegazi
No. C64899
Exp. 06-30-2013
CIVIL
STATE OF CALIFORNIA

The State of California or its officers or agents shall not be responsible for the accuracy or completeness of electronic copies of this plan sheet.

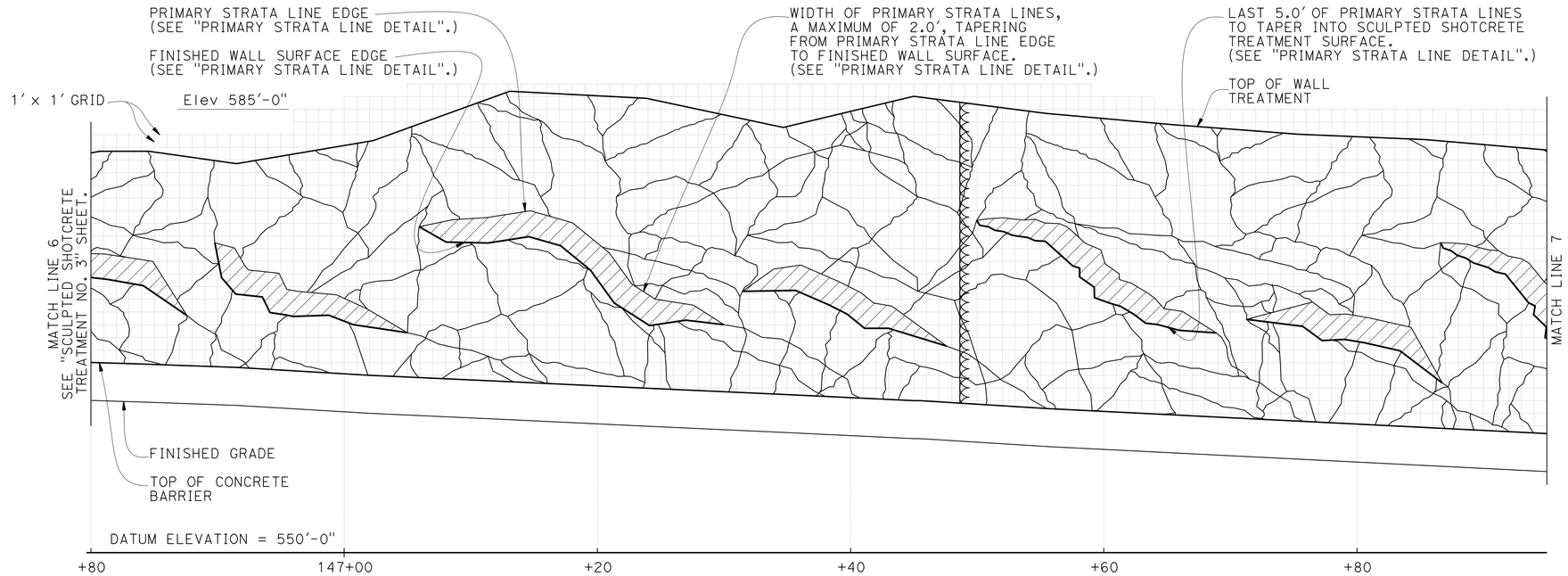

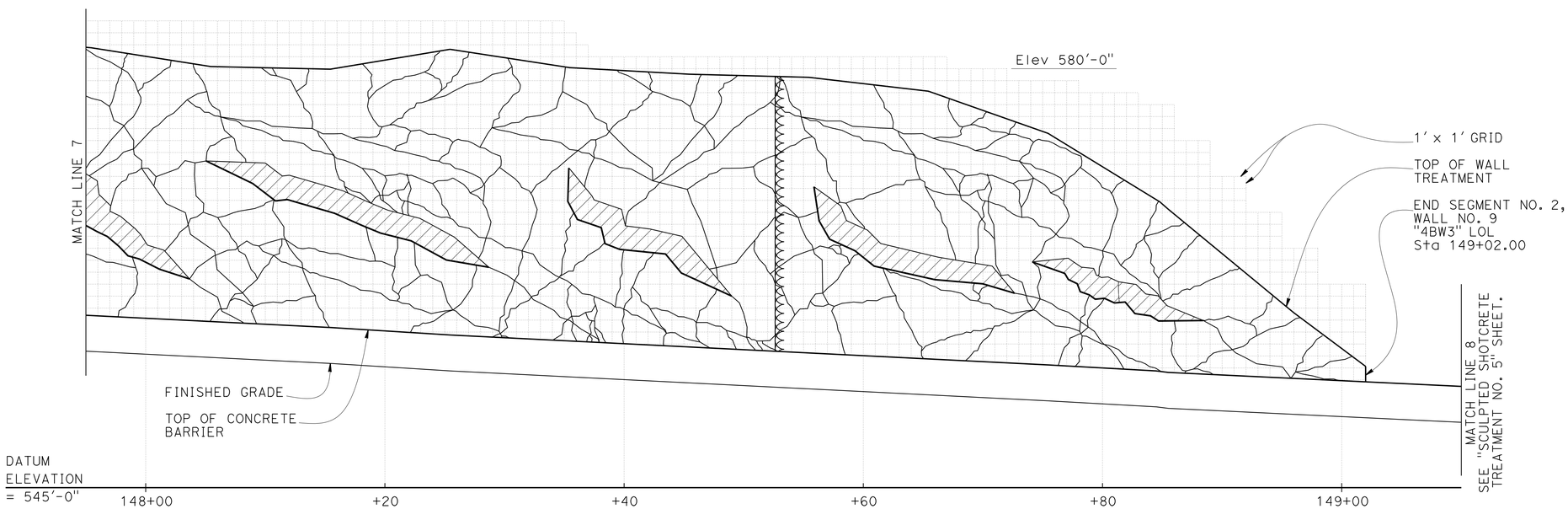

SCULPTED SHOTCRETE SURFACE TREATMENT

3/16" = 1'-0"

NOTE:
For notes and legend, see "SCULPTED SHOTCRETE TREATMENT NO. 1" sheet.

	BY	CHECKED
DESIGN	S. Hegazi	R. Amir
DETAILS	T. Kusumi	R. Amir / S. Hegazi
QUANTITIES	R. Amir	S. Hegazi

STATE OF CALIFORNIA
DEPARTMENT OF TRANSPORTATION

DIVISION OF ENGINEERING SERVICES
STRUCTURE DESIGN
DESIGN BRANCH 8

BRIDGE NO. 37E0118
POST MILE 2.65/2.84

HECKER PASS SOIL NAIL WALL NO. 9
SCULPTED SHOTCRETE TREATMENT NO. 4

STRUCTURES DESIGN DETAIL SHEET (ENGLISH) (REV. 09-01-10)

ORIGINAL SCALE IN INCHES FOR REDUCED PLANS 0 1 2 3

UNIT: 3593
PROJECT NUMBER & PHASE: 0400000813-1
CONTRACT NO.: 04-2A2501

DISREGARD PRINTS BEARING EARLIER REVISION DATES

REVISION DATES: 10-14-11 11-25-11 02-02-12 07-19-12

SHEET 19 OF 27

FILE => 37e0118-u-arch04.dgn

USERNAME => s124496 DATE PLOTTED => 21-JUN-2013 TIME PLOTTED => 07:02

DIST	COUNTY	ROUTE	POST MILES TOTAL PROJECT	SHEET No.	TOTAL SHEETS
04	SCI	152	0.1/5.2	370	416

REGISTERED CIVIL ENGINEER 08-01-12 DATE

6-17-13
PLANS APPROVAL DATE

REGISTERED PROFESSIONAL ENGINEER
Sameh Hegazi
No. C64899
Exp. 06-30-2013
CIVIL
STATE OF CALIFORNIA

The State of California or its officers or agents shall not be responsible for the accuracy or completeness of electronic copies of this plan sheet.

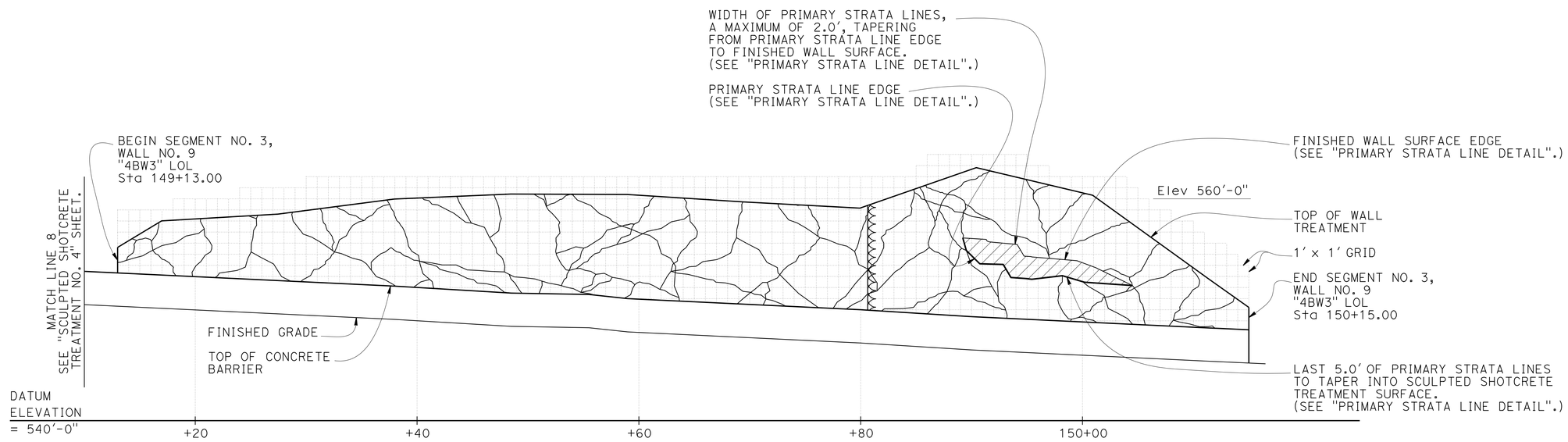

SCULPTED SHOTCRETE SURFACE TREATMENT

3/16" = 1'-0"

NOTE:
For notes and legend, see "SCULPTED SHOTCRETE TREATMENT NO. 1" sheet.

	BY	CHECKED
DESIGN	S. Hegazi	R. Amir
DETAILS	T. Kusumi	R. Amir / S. Hegazi
QUANTITIES	R. Amir	S. Hegazi

STATE OF CALIFORNIA
DEPARTMENT OF TRANSPORTATION

DIVISION OF ENGINEERING SERVICES
STRUCTURE DESIGN
DESIGN BRANCH 8

BRIDGE NO. 37E0118
POST MILE 2.65/2.84

HECKER PASS SOIL NAIL WALL NO. 9
SCULPTED SHOTCRETE TREATMENT NO. 5

STRUCTURES DESIGN DETAIL SHEET (ENGLISH) (REV. 09-01-10)

ORIGINAL SCALE IN INCHES FOR REDUCED PLANS 0 1 2 3

UNIT: 3593
PROJECT NUMBER & PHASE: 0400000813-1
CONTRACT NO.: 04-2A2501

DISREGARD PRINTS BEARING EARLIER REVISION DATES

REVISION DATES: 10-14-11 07-19-12 06-04-13

SHEET 20 OF 27

FILE => 37e0118-u-arch05.dgn

USERNAME => s124496 DATE PLOTTED => 21-JUN-2013 TIME PLOTTED => 07:02

DIST	COUNTY	ROUTE	POST MILES TOTAL PROJECT	SHEET No.	TOTAL SHEETS
04	SCI	152	0.1/5.2	371	416

REGISTERED CIVIL ENGINEER 08-01-12 DATE

6-17-13
PLANS APPROVAL DATE

REGISTERED PROFESSIONAL ENGINEER Sameh Hegazi No. C64899 Exp. 06-30-2013 CIVIL STATE OF CALIFORNIA

The State of California or its officers or agents shall not be responsible for the accuracy or completeness of electronic copies of this plan sheet.

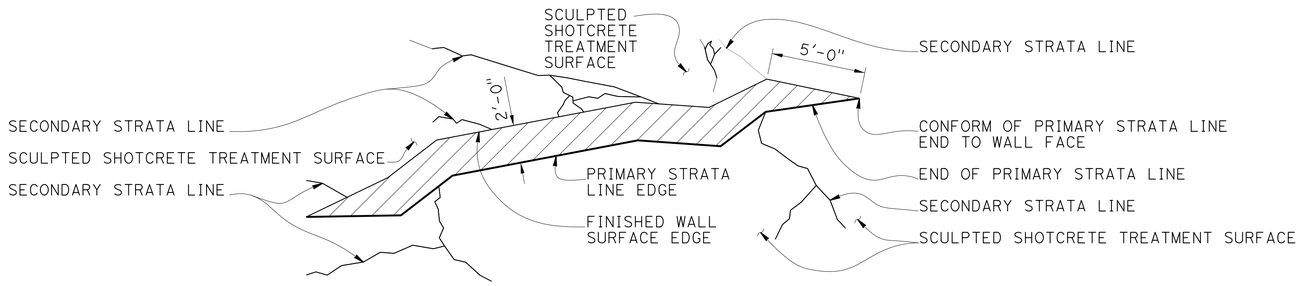

PRIMARY STRATA LINE ELEVATION DETAIL

No Scale

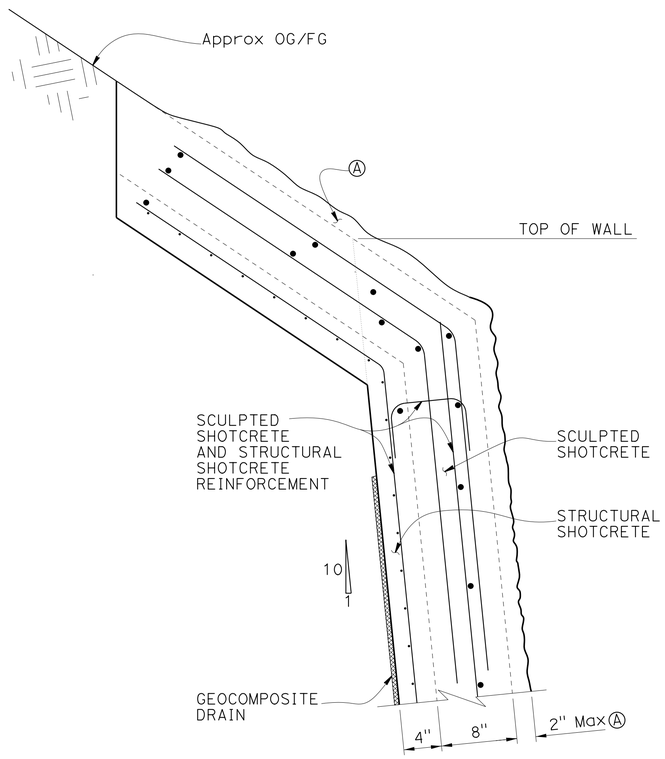

TOP OF WALL SCULPTED SHOTCRETE TREATMENT REINFORCEMENT

No Scale

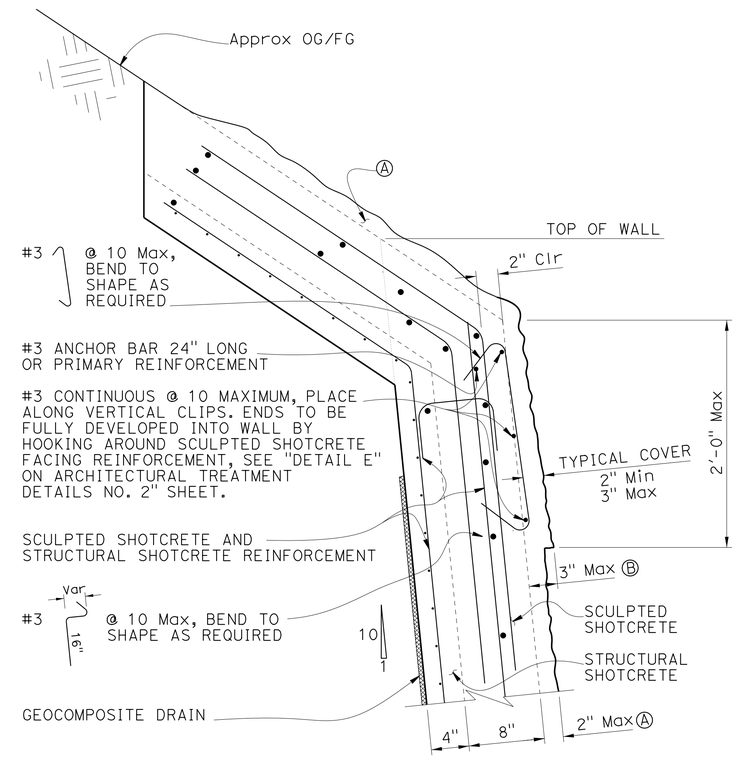

PRIMARY STRATA LINE AT TOP OF WALL SCULPTED SHOTCRETE TREATMENT REINFORCEMENT

No Scale

NOTES:

1. See also "SCULPTED SHOTCRETE TREATMENT DETAILS NO. 2" sheet for reinforcement.
2. Soil nail not shown for clarity.
3. Longitudinal bars shall taper to a point and be flush with the finished wall surface at primary strata line ends where it transitions into the wall face.
4. Cable railing post pocket and safety hookup are not shown for clarity.

Ⓐ Max 2" thick unreinforced sculpted shotcrete zone for sculpted shotcrete treatment.

Ⓑ Max 3" thick reinforced sculpted shotecrete zone for top of wall sculpted shotcrete treatment.

	BY	CHECKED
DESIGN	S. Hegazi	R. Amir
DETAILS	T. Kusumi	R. Amir / S. Hegazi
QUANTITIES	R. Amir	S. Hegazi

STATE OF CALIFORNIA
DEPARTMENT OF TRANSPORTATION

DIVISION OF ENGINEERING SERVICES
STRUCTURE DESIGN
DESIGN BRANCH 8

BRIDGE NO. 37E0118
POST MILE 2.65/2.84

HECKER PASS SOIL NAIL WALL NO. 9
SCULPTED SHOTCRETE TREATMENT DETAILS NO. 1

STRUCTURES DESIGN DETAIL SHEET (ENGLISH) (REV. 09-01-10)

ORIGINAL SCALE IN INCHES FOR REDUCED PLANS 0 1 2 3

UNIT: 3593
PROJECT NUMBER & PHASE: 0400000813-1
CONTRACT NO.: 04-2A2501

DISREGARD PRINTS BEARING EARLIER REVISION DATES

REVISION DATES: 06-08-11 06-21-12 07-19-12

SHEET 21 OF 27

FILE => 37e0118-u-archdt01.dgn

USERNAME => s124496 DATE PLOTTED => 21-JUN-2013 TIME PLOTTED => 07:03

DIST	COUNTY	ROUTE	POST MILES TOTAL PROJECT	SHEET No.	TOTAL SHEETS
04	SCI	152	0.1/5.2	372	416

REGISTERED CIVIL ENGINEER 08-01-12 DATE

6-17-13
PLANS APPROVAL DATE

REGISTERED PROFESSIONAL ENGINEER
Sameh Hegazi
No. C64899
Exp. 06-30-2013
CIVIL
STATE OF CALIFORNIA

The State of California or its officers or agents shall not be responsible for the accuracy or completeness of electronic copies of this plan sheet.

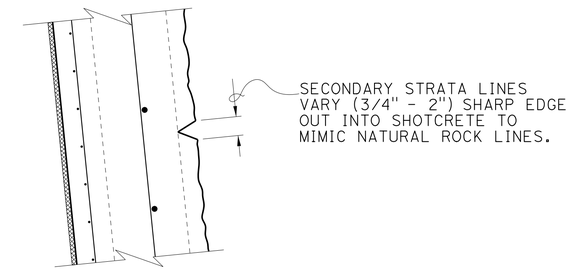

SECONDARY STRATA LINE

No Scale

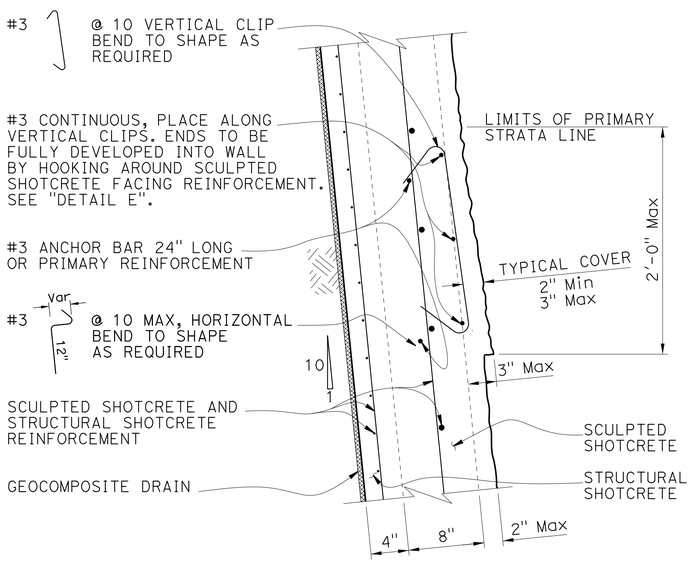

PRIMARY STRATA LINE
SCULPTED SHOTCRETE TREATMENT REINFORCEMENT

No Scale

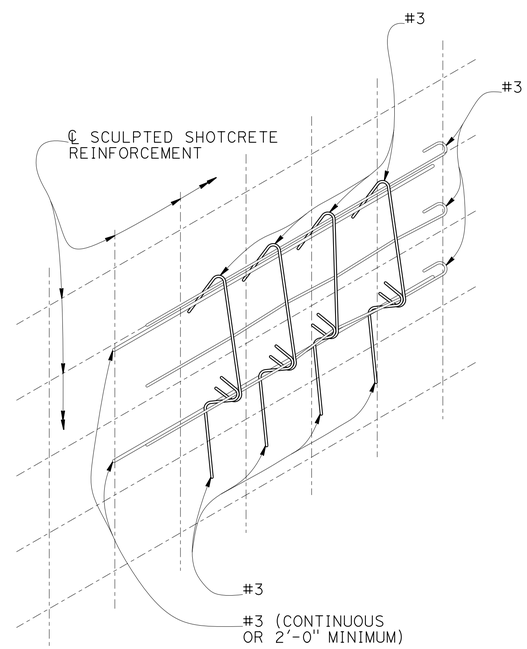

DETAIL E

No Scale

DESIGN	BY S. Hegazi	CHECKED R. Amir	
DETAILS	BY T. Kusumi	CHECKED R. Amir / S. Hegazi	
QUANTITIES	BY R. Amir	CHECKED S. Hegazi	

STATE OF CALIFORNIA
DEPARTMENT OF TRANSPORTATION

DIVISION OF ENGINEERING SERVICES
STRUCTURE DESIGN
DESIGN BRANCH 8

BRIDGE NO. 37E0118
POST MILE 2.65/2.84

HECKER PASS SOIL NAIL WALL NO. 9
SCULPTED SHOTCRETE TREATMENT DETAILS NO. 2

STRUCTURES DESIGN DETAIL SHEET (ENGLISH) (REV. 09-01-10)

ORIGINAL SCALE IN INCHES FOR REDUCED PLANS 0 1 2 3

UNIT: 3593
PROJECT NUMBER & PHASE: 0400000813-1
CONTRACT NO.: 04-2A2501

DISREGARD PRINTS BEARING EARLIER REVISION DATES

REVISION DATES: 06-09-11 05-02-12 07-19-12

SHEET 22 OF 27

FILE => 37e0118-u-arcndt02.dgn

USERNAME => s124496 DATE PLOTTED => 21-JUN-2013 TIME PLOTTED => 07:03

DIST	COUNTY	ROUTE	POST MILES TOTAL PROJECT	SHEET No	TOTAL SHEETS
04	SCI	152	0.1/5.2	373	416

Ali Kaddoura 02-15-12
REGISTERED CIVIL ENGINEER

6-17-13
PLANS APPROVAL DATE

REGISTERED PROFESSIONAL ENGINEER Ali K. Kaddoura No. 55710 Exp. 12-31-12 CIVIL STATE OF CALIFORNIA

The State of California or its officers or agents shall not be responsible for the accuracy or completeness of electronic copies of this plan sheet.

This LOTB sheet was prepared in accordance with the Caltrans Soil & Rock Logging, Classification, & Presentation Manual (2010 Edition).

BENCH MARK

PRHV119

26.88 Rt. "D1" Line, Rte 152
Sta. 138+91.13
N 1,824,625.20
E 6,215,271.84
EL.=599.45

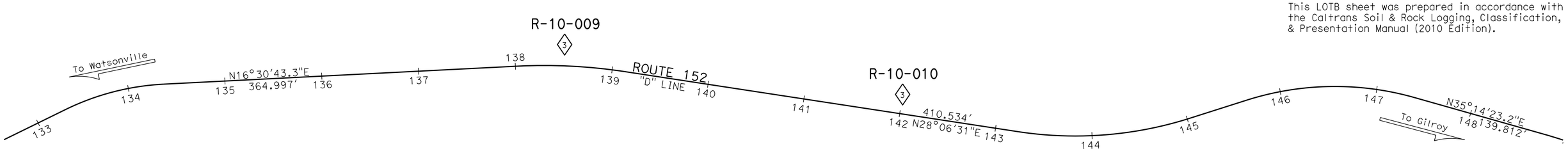

PLAN

1" = 50'

NOTE: 1. This LOTB sheet was prepared in accordance with the Caltrans Soil & Rock Logging, Classification, and Presentation Manual (April 2010).

2. PP=unconfined compressive strength (tsf) as measured by pocket penetrometer.

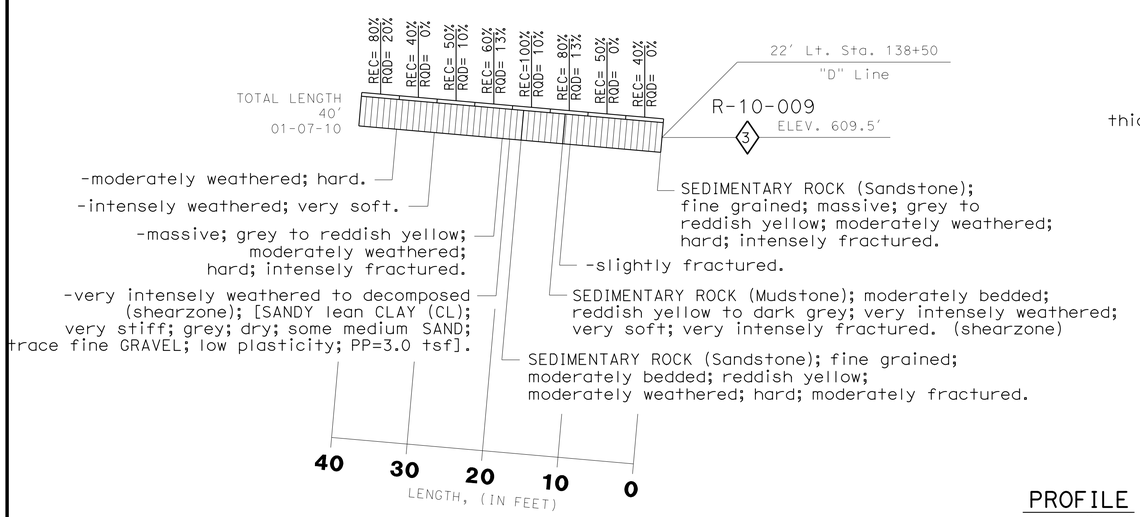

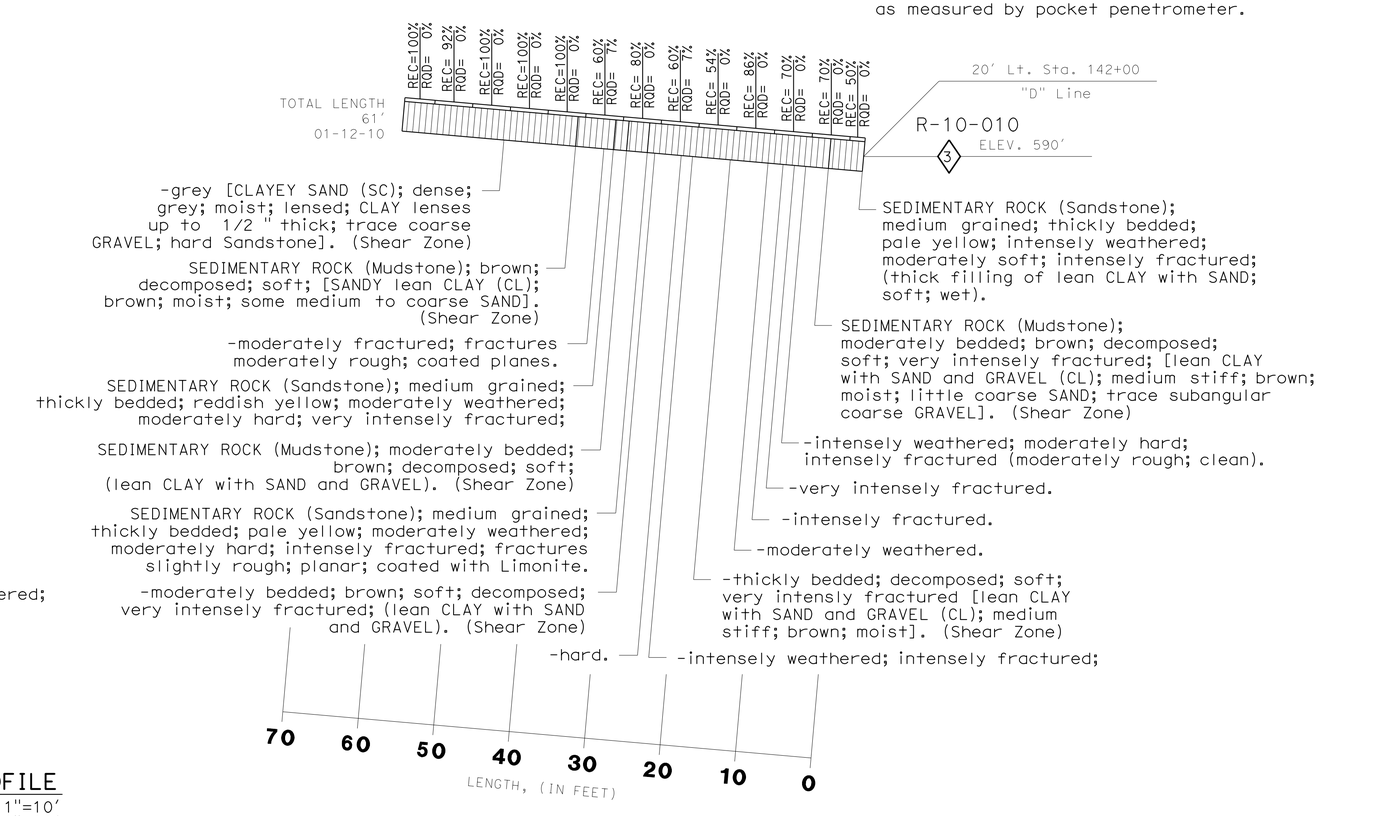

PROFILE

HOR. 1"=10'
VER. 1"=10'

ENGINEERING SERVICES		GEOTECHNICAL SERVICES	STATE OF CALIFORNIA DEPARTMENT OF TRANSPORTATION	DIVISION OF ENGINEERING SERVICES OFFICE OF GEOTECHNICAL DESIGN BRANCH 8	BRIDGE NO. 37E0118 POST MILES 2.65/2.84	HECKER PASS SOIL NAIL WALL NO. 9
FUNCTIONAL SUPERVISOR	DRAWN BY: M. Reynolds 10/10	FIELD INVESTIGATION BY: A. Kaddoura, C. Risden				LOG OF TEST BORINGS 1 of 5
NAME:	CHECKED BY: M. Gaffney					

ORIGINAL SCALE IN INCHES FOR REDUCED PLANS 0 1 2 3

CU 04
EA 2A2500

DISREGARD PRINTS BEARING EARLIER REVISION DATES → 03-08-12 05-25-12

REVISION DATES

SHEET 23 OF 27

FILE => 37e0118-z-1tb01.dgn

USERNAME => s124496 DATE PLOTTED => 21-JUN-2013 TIME PLOTTED => 07:03

DIST	COUNTY	ROUTE	POST MILES TOTAL PROJECT	SHEET No	TOTAL SHEETS
04	SCI	152	0.1/5.2	374	416

Ali Kaddoura 02-15-12
REGISTERED CIVIL ENGINEER

6-17-13
PLANS APPROVAL DATE

The State of California or its officers or agents shall not be responsible for the accuracy or completeness of electronic copies of this plan sheet.

REGISTERED PROFESSIONAL ENGINEER Ali K. Kaddoura No. 55710 Exp. 12-31-12 CIVIL STATE OF CALIFORNIA

This LOTB sheet was prepared in accordance with the Caltrans Soil & Rock Logging, Classification, & Presentation Manual (2010 Edition).

NOTE: 1. This LOTB sheet was prepared in accordance with the Caltrans Soil & Rock Logging, Classification, and Presentation Manual (April 2010).

2. PP=unconfined compressive strength (tsf) as measured by pocket penetrometer.

3. *NR: Not Recorded.

BENCH MARK

PRHV123

32.94 Rt. "D1" Line, ℄ Rte 152
Sta. 150+80.58
N 1,825,637.38
E 6,215,797.60
EL.=536.89

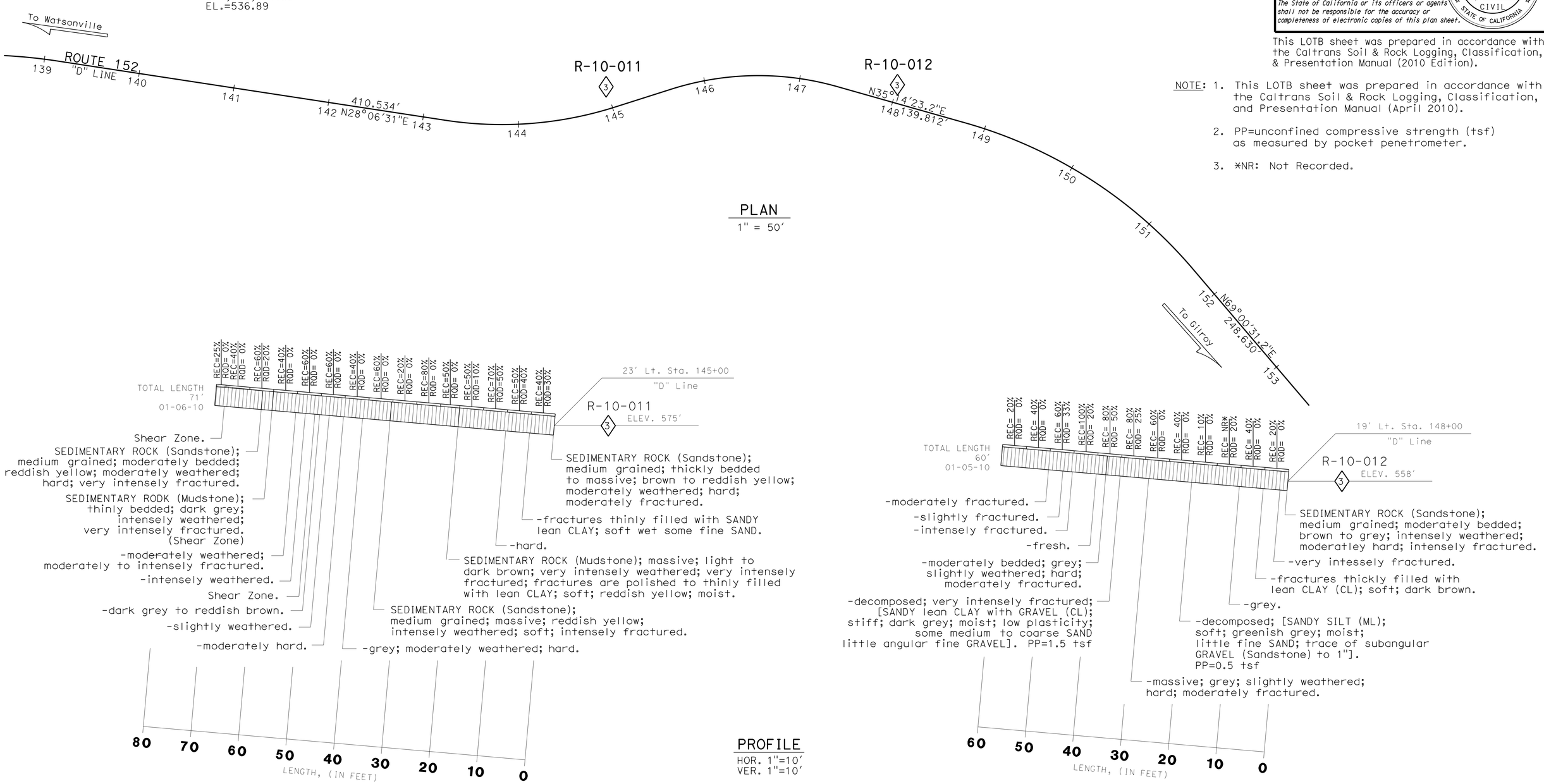

ENGINEERING SERVICES	GEOTECHNICAL SERVICES	STATE OF CALIFORNIA DEPARTMENT OF TRANSPORTATION	DIVISION OF ENGINEERING SERVICES OFFICE OF GEOTECHNICAL DESIGN BRANCH 8	BRIDGE NO. 37E0118 / POST MILES 2.65/2.84	HECKER PASS SOIL NAIL WALL NO. 9
FUNCTIONAL SUPERVISOR	DRAWN BY: M. Reynolds 10/10	FIELD INVESTIGATION BY: A. Kaddoura			LOG OF TEST BORINGS 2 of 5
NAME:	CHECKED BY: M. Gaffney				

ORIGINAL SCALE IN INCHES FOR REDUCED PLANS 0 1 2 3

CU 04
EA 2A2500

DISREGARD PRINTS BEARING EARLIER REVISION DATES 03-08-12 05-25-12

REVISION DATES

SHEET 24 OF 27

FILE => 37e0118-z-1tb02.dgn

USERNAME => s124496 DATE PLOTTED => 21-JUN-2013 TIME PLOTTED => 07:03

DIST	COUNTY	ROUTE	POST MILES TOTAL PROJECT	SHEET No	TOTAL SHEETS
04	SCI	152	0.1/5.2	375	416

Ali Kaddoura 02-15-12
REGISTERED CIVIL ENGINEER DATE

6-17-13
PLANS APPROVAL DATE

REGISTERED PROFESSIONAL ENGINEER Ali K. Kaddoura No. 55710 Exp. 12-31-12 CIVIL STATE OF CALIFORNIA

The State of California or its officers or agents shall not be responsible for the accuracy or completeness of electronic copies of this plan sheet.

REFERENCE: CALTRANS SOIL & ROCK LOGGING, CLASSIFICATION, AND PRESENTATION MANUAL (JUNE 2007)

CEMENTATION

Description	Criteria
Weak	Crumbles or breaks with handling or little finger pressure.
Moderate	Crumbles or breaks with considerable finger pressure.
Strong	Will not crumble or break with finger pressure.

CONSISTENCY OF COHESIVE SOILS

Description	Unconfined Compressive Strength (tsf)	Pocket Penetrometer Measurement (tsf)	Torvane Measurement (tsf)	Field Approximation
Very Soft	< 0.25	< 0.25	< 0.12	Easily penetrated several inches by fist
Soft	0.25 to 0.50	0.25 to 0.50	0.12 to 0.25	Easily penetrated several inches by thumb
Medium Stiff	0.50 to 1.0	0.50 to 1.0	0.25 to 0.50	Penetrated several inches by thumb with moderate effort
Stiff	1 to 2	1 to 2	0.50 to 1.0	Readily indented by thumb but penetrated only with great effort
Very Stiff	2 to 4	2 to 4	1.0 to 2.0	Readily indented by thumbnail
Hard	> 4.0	> 4.0	> 2.0	Indented by thumbnail with difficulty

BOREHOLE IDENTIFICATION

Symbol	Hole Type	Description
Size	A	Auger Boring
Size	R P	Rotary drilled boring Rotary percussion boring (air)
Size	R	Rotary drilled diamond core
Size	HD HA	Hand driven (1-inch soil tube) Hand Auger
●	D	Dynamic Cone Penetration Boring
▲	CPT	Cone Penetration Test (ASTM D 5778-95)
⬚	O	Other

Note: Size in inches.

PLASTICITY OF FINE-GRAINED SOILS

Description	Criteria
Nonplastic	A 1/8-inch thread cannot be rolled at any water content.
Low	The thread can barely be rolled and the lump cannot be formed when drier than the plastic limit.
Medium	The thread is easy to roll and not much time is required to reach the plastic limit. The thread cannot be rerolled after reaching the plastic limit. The lump crumbles when drier than the plastic limit.
High	It takes considerable time rolling and kneading to reach the plastic limit. The thread can be rerolled several times after reaching the plastic limit. The lump can be formed without crumbling when drier than the plastic limit.

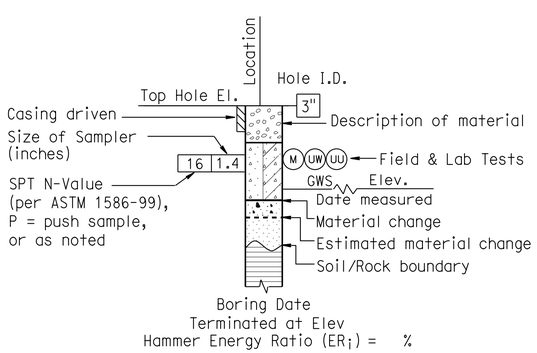

ROTARY BORING

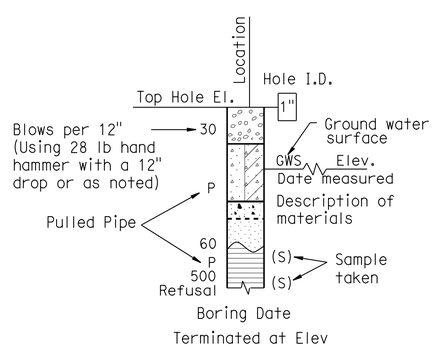

HAND BORING

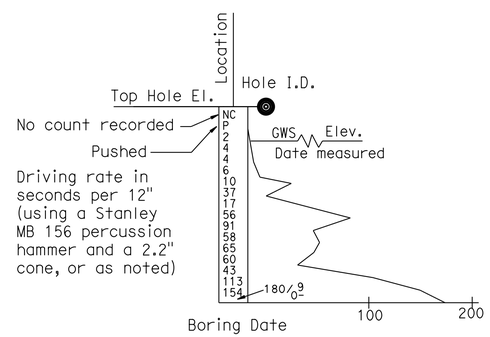

DYNAMIC CONE PENETRATION BORING

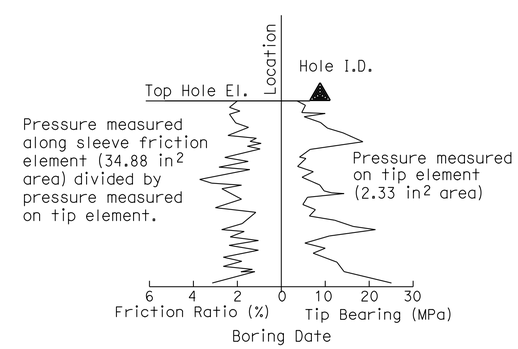

CONE PENETRATION TEST (CPT) SOUNDING

ENGINEERING SERVICES			GEOTECHNICAL SERVICES
FUNCTIONAL SUPERVISOR	PREPARED BY	M. Reynolds 10/10	FIELD INVESTIGATION BY:
NAME:	CHECKED BY	M. Gaffney	A. Kaddoura C. Risden

STATE OF CALIFORNIA DEPARTMENT OF TRANSPORTATION

DIVISION OF ENGINEERING SERVICES OFFICE OF GEOTECHNICAL DESIGN BRANCH 8

BRIDGE NO. 37E0118
POST MILE 2.65/2.84

HECKER PASS SOIL NAIL WALL NO. 9

LOG OF TEST BORINGS 3 of 5

GS LOTB SOIL LEGEND

ORIGINAL SCALE IN INCHES FOR REDUCED PLANS 0 1 2 3

CU 04
EA 2A2500

DISREGARD PRINTS BEARING EARLIER REVISION DATES 03-08-12 05-25-12

REVISION DATES

SHEET 25 OF 27

FILE => 37e0118-z-ltb03.dgn

USERNAME => s124496 DATE PLOTTED => 21-JUN-2013 TIME PLOTTED => 07:03

REFERENCE: CALTRANS SOIL & ROCK LOGGING, CLASSIFICATION, AND PRESENTATION MANUAL (JUNE 2007)

DIST	COUNTY	ROUTE	POST MILES TOTAL PROJECT	SHEET No	TOTAL SHEETS
04	SCI	152	0.1/5.2	376	416

Ali Kaddoura 02-15-12
REGISTERED CIVIL ENGINEER DATE

6-17-13
PLANS APPROVAL DATE

REGISTERED PROFESSIONAL ENGINEER Ali K. Kaddoura No. 55710 Exp. 12-31-12 CIVIL STATE OF CALIFORNIA

The State of California or its officers or agents shall not be responsible for the accuracy or completeness of electronic copies of this plan sheet.

GROUP SYMBOLS AND NAMES

Graphic/Symbol	Group Names	Graphic/Symbol	Group Names
GW	Well-graded GRAVEL Well-graded GRAVEL with SAND	CL	Lean CLAY Lean CLAY with SAND Lean CLAY with GRAVEL SANDY lean CLAY SANDY lean CLAY with GRAVEL GRAVELLY lean CLAY GRAVELLY lean CLAY with SAND
GP	Poorly graded GRAVEL Poorly graded GRAVEL with SAND		
GW-GM	Well-graded GRAVEL with SILT Well-graded GRAVEL with SILT and SAND	CL-ML	SILTY CLAY SILTY CLAY with SAND SILTY CLAY with GRAVEL SANDY SILTY CLAY SANDY SILTY CLAY with GRAVEL GRAVELLY SILTY CLAY GRAVELLY SILTY CLAY with SAND
GW-GC	Well-graded GRAVEL with CLAY (or SILTY CLAY) Well-graded GRAVEL with CLAY and SAND (or SILTY CLAY and SAND)		
GP-GM	Poorly graded GRAVEL with SILT Poorly graded GRAVEL with SILT and SAND	ML	SILT SILT with SAND SILT with GRAVEL SANDY SILT SANDY SILT with GRAVEL GRAVELLY SILT GRAVELLY SILT with SAND
GP-GC	Poorly graded GRAVEL with CLAY (or SILTY CLAY) Poorly graded GRAVEL with CLAY and SAND (or SILTY CLAY and SAND)		
GM	SILTY GRAVEL SILTY GRAVEL with SAND	OL	ORGANIC lean CLAY ORGANIC lean CLAY with SAND ORGANIC lean CLAY with GRAVEL SANDY ORGANIC lean CLAY SANDY ORGANIC lean CLAY with GRAVEL GRAVELLY ORGANIC lean CLAY GRAVELLY ORGANIC lean CLAY with SAND
GC	CLAYEY GRAVEL CLAYEY GRAVEL with SAND		
GC-GM	SILTY, CLAYEY GRAVEL SILTY, CLAYEY GRAVEL with SAND	OL	ORGANIC SILT ORGANIC SILT with SAND ORGANIC SILT with GRAVEL SANDY ORGANIC SILT SANDY ORGANIC SILT with GRAVEL GRAVELLY ORGANIC SILT GRAVELLY ORGANIC SILT with SAND
SW	Well-graded SAND Well-graded SAND with GRAVEL		
SP	Poorly graded SAND Poorly graded SAND with GRAVEL	CH	Fat CLAY Fat CLAY with SAND Fat CLAY with GRAVEL SANDY fat CLAY SANDY fat CLAY with GRAVEL GRAVELLY fat CLAY GRAVELLY fat CLAY with SAND
SW-SM	Well-graded SAND with SILT Well-graded SAND with SILT and GRAVEL		
SW-SC	Well-graded SAND with CLAY (or SILTY CLAY) Well-graded SAND with CLAY and GRAVEL (or SILTY CLAY and GRAVEL)	MH	Elastic SILT Elastic SILT with SAND Elastic SILT with GRAVEL SANDY elastic SILT SANDY elastic SILT with GRAVEL GRAVELLY elastic SILT GRAVELLY elastic SILT with SAND
SP-SM	Poorly graded SAND with SILT Poorly graded SAND with SILT and GRAVEL		
SP-SC	Poorly graded SAND with CLAY (or SILTY CLAY) Poorly graded SAND with CLAY and GRAVEL (or SILTY CLAY and GRAVEL)	OH	ORGANIC fat CLAY ORGANIC fat CLAY with SAND ORGANIC fat CLAY with GRAVEL SANDY ORGANIC fat CLAY SANDY ORGANIC fat CLAY with GRAVEL GRAVELLY ORGANIC fat CLAY GRAVELLY ORGANIC fat CLAY with SAND
SM	SILTY SAND SILTY SAND with GRAVEL		
SC	CLAYEY SAND CLAYEY SAND with GRAVEL	OH	ORGANIC elastic SILT ORGANIC elastic SILT with SAND ORGANIC elastic SILT with GRAVEL SANDY ORGANIC elastic SILT SANDY ORGANIC elastic SILT with GRAVEL GRAVELLY ORGANIC elastic SILT GRAVELLY ORGANIC elastic SILT with SAND
SC-SM	SILTY, CLAYEY SAND SILTY, CLAYEY SAND with GRAVEL		
PT	PEAT	OL/OH	ORGANIC SOIL ORGANIC SOIL with SAND ORGANIC SOIL with GRAVEL SANDY ORGANIC SOIL SANDY ORGANIC SOIL with GRAVEL GRAVELLY ORGANIC SOIL GRAVELLY ORGANIC SOIL with SAND
	COBBLES COBBLES and BOULDERS BOULDERS		

FIELD AND LABORATORY TESTING

- (C) Consolidation (ASTM D 2435)
- (CL) Collapse Potential (ASTM D 5333)
- (CP) Compaction Curve (CTM 216)
- (CR) Corrosivity Testing (CTM 643, CTM 422, CTM 417)
- (CU) Consolidated Undrained Triaxial (ASTM D 4767)
- (DS) Direct Shear (ASTM D 3080)
- (EI) Expansion Index (ASTM D 4829)
- (M) Moisture Content (ASTM D 2216)
- (OC) Organic Content-% (ASTM D 2974)
- (P) Permeability (CTM 220)
- (PA) Particle Size Analysis (ASTM D 422)
- (PI) Plasticity Index (AASHTO T 90) Liquid Limit (AASHTO T 89)
- (PL) Point Load Index (ASTM D 5731)
- (PM) Pressure Meter
- (PP) Pocket Penetrometer
- (R) R-Value (CTM 301)
- (SE) Sand Equivalent (CTM 217)
- (SG) Specific Gravity (AASHTO T 100)
- (SL) Shrinkage Limit (ASTM D 427)
- (SW) Swell Potential (ASTM D 4546)
- (TV) Pocket Torvane
- (UC) Unconfined Compression-Soil (ASTM D 2166) Unconfined Compression-Rock (ASTM D 2938)
- (UU) Unconsolidated Undrained Triaxial (ASTM D 2850)
- (UW) Unit Weight (ASTM D 4767)
- (VS) Vane Shear (AASHTO T 223)

APPARENT DENSITY OF COHESIONLESS SOILS

Description	SPT N_{60} (Blows / 12 inches)
Very loose	0 - 4
Loose	5 - 10
Medium Dense	11 - 30
Dense	31 - 50
Very Dense	> 50

MOISTURE

Description	Criteria
Dry	Absence of moisture, dusty, dry to the touch
Moist	Damp but no visible water
Wet	Visible free water, usually soil is below water table

PERCENT OR PROPORTION OF SOILS

Description	Criteria
Trace	Particles are present but estimated to be less than 5%
Few	5 to 10%
Little	15 to 25%
Some	30 to 45%
Mostly	50 to 100%

PARTICLE SIZE

Description		Size
Boulder		> 12"
Cobble		3" to 12"
Gravel	Coarse	3/4" to 3"
	Fine	No. 4 to 3/4"
Sand	Coarse	No. 10 to No. 4
	Medium	No. 40 to No. 10
	Fine	No. 200 to No. 40

ENGINEERING SERVICES				GEOTECHNICAL SERVICES
FUNCTIONAL SUPERVISOR	PREPARED BY	M. Reynolds	10/10	FIELD INVESTIGATION BY:
NAME:	CHECKED BY	M. Gaffney		A. Kadoura C. Risden

STATE OF CALIFORNIA DEPARTMENT OF TRANSPORTATION

DIVISION OF ENGINEERING SERVICES OFFICE OF GEOTECHNICAL DESIGN BRANCH 8

BRIDGE NO. 37E0118
POST MILE 2.65/2.84

HECKER PASS SOIL NAIL WALL NO. 9

LOG OF TEST BORINGS 4 of 5

GS LOTB SOIL LEGEND

ORIGINAL SCALE IN INCHES FOR REDUCED PLANS 0 1 2 3

CU 04
EA 2A2500

DISREGARD PRINTS BEARING EARLIER REVISION DATES 03-08-12 05-25-12

REVISION DATES

SHEET 26 OF 27

FILE => 37e0118-z-ltb04.dgn

USERNAME => s124496 DATE PLOTTED => 21-JUN-2013 TIME PLOTTED => 07:03

REFERENCE: CALTRANS SOIL & ROCK LOGGING, CLASSIFICATION, AND PRESENTATION MANUAL (JUNE 2007)

DIST	COUNTY	ROUTE	POST MILES TOTAL PROJECT	SHEET No	TOTAL SHEETS
04	SCI	152	0.1/5.2	377	416

Ali Kaddoura 02-15-12
REGISTERED CIVIL ENGINEER DATE

6-17-13
PLANS APPROVAL DATE

REGISTERED PROFESSIONAL ENGINEER Ali K. Kaddoura No. 55710 Exp. 12-31-12 CIVIL STATE OF CALIFORNIA

The State of California or its officers or agents shall not be responsible for the accuracy or completeness of electronic copies of this plan sheet.

PERCENT CORE RECOVERY (REC) & ROCK QUALITY DESIGNATION (RQD)

$$REC = \frac{\sum \text{Length of the recovered core pieces (inches)}}{\text{Total length of core run (inches)}} \times 100\%$$

$$RQD = \frac{\sum \text{Length of intact core pieces} \geq 4''}{\text{Total length of core run (inches)}} \times 100\%$$

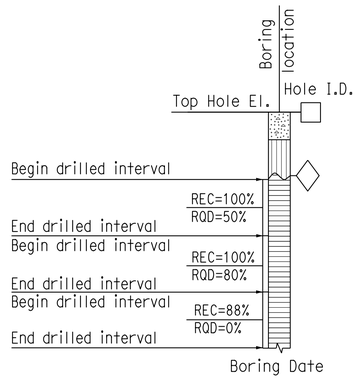

RELATIVE STRENGTH OF INTACT ROCK

Term	Uniaxial Compressive Strength (PSI)
Extremely Strong	> 30,000
Very Strong	14,500 - 30,000
Strong	7,000 - 14,500
Medium Strong	3,500 - 7,000
Weak	700 - 3,500
Very Weak	150 - 700
Extremely Weak	< 150

BEDDING SPACING

Description	Thickness / Spacing
Massive	Greater than 10 ft
Very thickly bedded	3 to 10 ft
Thickly bedded	1 to 3 ft
Moderately bedded	3-5/8" to 1 ft
Thinly bedded	1-1/4" to 3-5/8"
Very thinly bedded	3/8" to 1-1/4"
Laminated	Less than 3/8"

LEGEND OF ROCK MATERIALS

- IGNEOUS ROCK
- SEDIMENTARY ROCK
- METAMORPHIC ROCK

ROCK HARDNESS

Description	Criteria
Extremely Hard	Specimen cannot be scratched with a pocket knife or sharp pick; can only be chipped with repeated heavy hammer blows.
Very Hard	Specimen cannot be scratched with a pocket knife or sharp pick. Breaks with repeated heavy hammer blows.
Hard	Specimen can be scratched with a pocket knife or sharp pick with difficulty (heavy pressure). Heavy hammer blows required to break specimen.
Moderately Hard	Specimen can be scratched with pocket knife or sharp pick with light or moderate pressure. Core breaks with moderate hammer pressure.
Moderately Soft	Specimen can be grooved 1/6" deep with a pocket knife or sharp pick with moderate or heavy pressure. Breaks with light hammer blow or heavy manual pressure.
Soft	Specimen can be grooved or gouged easily by a pocket knife or sharp pick with light pressure, can be scratched with fingernail. Breaks with light to moderate manual pressure.
Very Soft	Specimen can be readily indented, grooved or gouged with fingernail, or carved with a pocket knife. Breaks with light manual pressure.

FRACTURE DENSITY

Description	Observed Fracture Density
Unfractured	No fractures.
Very slightly fractured	Lengths greater than 3 feet.
Slightly fractured	Lengths from 1 to 3 feet with few lengths less than 1 foot or greater than 3 feet.
Moderately fractured	Lengths mostly in 4" to 1 foot range with most lengths about 8"
Intensely fractured	Lengths average from 1 to 4" with scattered fragmented intervals with lengths less than 4"
Very intensely fractured	Mostly chips and fragments with a few scattered short core lengths.

Combination descriptors (such as "Very intensely to intensely fractured") are used where equal distribution of both fracture density characteristics is present over a significant interval or exposure, or where characteristics are "in between" the descriptor definitions. Only two adjacent descriptors may be combined.

WEATHERING DESCRIPTORS FOR INTACT ROCK

Description	Diagnostic features					General Characteristics
	Chemical Weathering-Discoloration and/or oxidation		Mechanical Weathering-Grain boundary conditions (disaggregation) primarily for granitics and some coarse-grained sediments	Texture and Solutioning		
	Body of Rock	Fracture Surfaces		Texture	Solutioning	
Fresh	No discoloration, not oxidized.	No discoloration or oxidation.	No separation, intact (tight).	No change.	No solutioning.	Hammer rings when crystalline rocks are struck.
Slightly Weathered	Discoloration or oxidation is limited to surface of, or short distance from, fractures; some feldspar crystals are dull.	Minor to complete discoloration or oxidation of most surfaces.	No visible separation, intact (tight).	Preserved.	Minor leaching of some soluble minerals may be noted.	Hammer rings when crystalline rocks are struck. Body of rock not weakened.
Moderately Weathered	Discoloration or oxidation extends from fractures usually throughout; Fe-Mg minerals are "rusty," feldspar crystals are "cloudy."	All fracture surfaces are discolored or oxidized.	Partial separation of boundaries visible.	Generally preserved.	Soluble minerals may be mostly leached.	Hammer does not ring when rock is struck. Body of rock is slightly weakened.
Intensely Weathered	Discoloration or oxidation throughout; all feldspars and Fe-Mg minerals are altered to clay to some extent; or chemical alteration produces in-situ disaggregation, see grain boundary conditions.	All fracture surfaces are discolored or oxidized, surfaces friable.	Partial separation, rock is friable; in semiarid conditions granitics are disaggregated.	Texture altered by chemical disintegration (hydration, argillation).	Leaching of soluble minerals may be complete.	Dull sound when struck with hammer, usually can be broken with moderate to heavy manual pressure or by light hammer blow without reference to planes of weakness such as incipient or hairline fractures, or veinlets. Rock is significantly weakened.
Decomposed	Discolored or oxidized throughout, but resistant minerals such as quartz may be unaltered; all feldspars and Fe-Mg minerals are completely altered to clay.		Complete separation of grain boundaries (disaggregated).	Resembles a soil, partial or complete remnant rock structure may be preserved; leaching of soluble minerals usually complete.		Can be granulated by hand. Resistant minerals such as quartz may be present as "stringers" or "dikes."

Combination descriptors (such as "slightly weathered to fresh") are permissible where equal distribution of both weathering characteristics is present over significant intervals or where characteristics present are "in between" the diagnostic feature. However, combination descriptors should not be used where significant, identifiable zones can be delineated. Only two adjacent descriptors may be combined. "Very intensely weathered" is the combination descriptor for "intensely weathered to decomposed."

ENGINEERING SERVICES				GEOTECHNICAL SERVICES
FUNCTIONAL SUPERVISOR	PREPARED BY	M. Reynolds	10/10	FIELD INVESTIGATION BY:
NAME:	CHECKED BY	M. Gaffney		A. Kaddoura C. Risden

GS LOTB ROCK LEGEND

ORIGINAL SCALE IN INCHES FOR REDUCED PLANS 0 1 2 3

STATE OF CALIFORNIA DEPARTMENT OF TRANSPORTATION

DIVISION OF ENGINEERING SERVICES OFFICE OF GEOTECHNICAL DESIGN BRANCH 8

CU 04
EA 2A2500

BRIDGE NO. 37E0118
POST MILE 2.65/2.84

HECKER PASS SOIL NAIL WALL NO. 9

LOG OF TEST BORINGS 5 of 5

DISREGARD PRINTS BEARING EARLIER REVISION DATES → 03-08-12 05-25-12

REVISION DATES

SHEET 27 OF 27

FILE => 37e0118-z-ltb05.dgn

USERNAME => s124496 DATE PLOTTED => 21-JUN-2013 TIME PLOTTED => 07:03

DIST	COUNTY	ROUTE	POST MILES TOTAL PROJECT	SHEET No.	TOTAL SHEETS
04	SCI	152	0.1/5.2	378	416

REGISTERED CIVIL ENGINEER 05-15-13 DATE

6-17-13
PLANS APPROVAL DATE

REGISTERED PROFESSIONAL ENGINEER Sameh Hegazi No. C64899 Exp.06-30-2013 CIVIL STATE OF CALIFORNIA

The State of California or its officers or agents shall not be responsible for the accuracy or completeness of electronic copies of this plan sheet.

LEGEND:
- ○ Indicates approximate location of soil nails
- ■ Indicates approximate location of proof test nails

NOTE:
Not all approximate location of soil nails, proof test nails, cable railing posts, and weepholes shown.

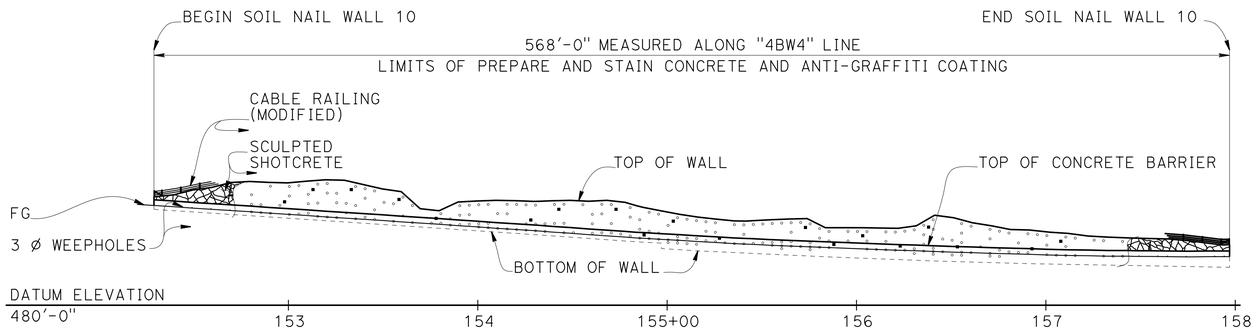

DEVELOPED ELEVATION

1" = 40'

NOTES:
1. Top of the wall elevations shall be verified in the field.
2. Soil nail inclination = 15° typical.
3. The exact locations of the Test Soil Nail to be determined by the Engineer in the field.
4. All soil nail levels are parallel to top of wall except the bottom level which is parallel to bottom of wall.
5. Soil nails shall be placed normal to shotcrete surface in the plan view.
6. The contractor shall field locate all utilities before drilling soil nails.
7. The contractor shall provide and maintain stable soil slopes above and below the soil nail walls.
8. Bottom of wall shall be placed against undisturbed soil material.
9. Prepare and stain sculpted shotcrete surface.
10. Concrete barrier shall be integrally colored and applied with anti-graffiti coating from top of barrier to 6 inches below finished grade.

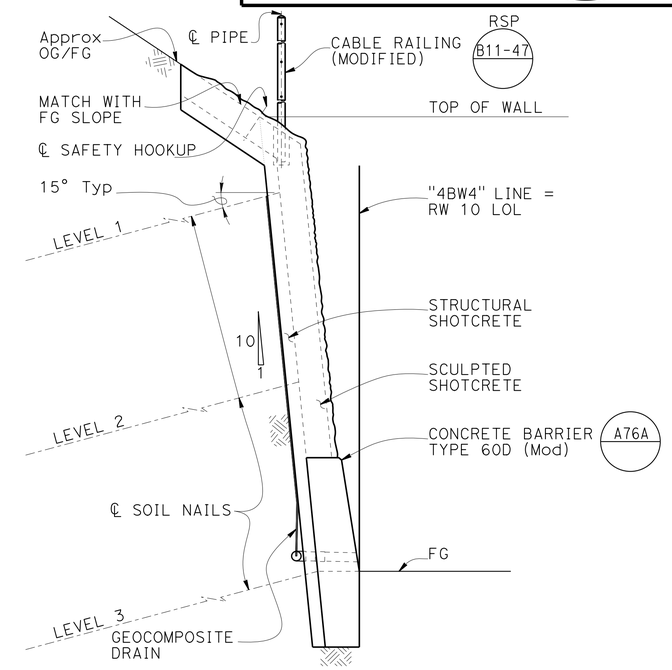

TYPICAL SECTION

½" = 1'

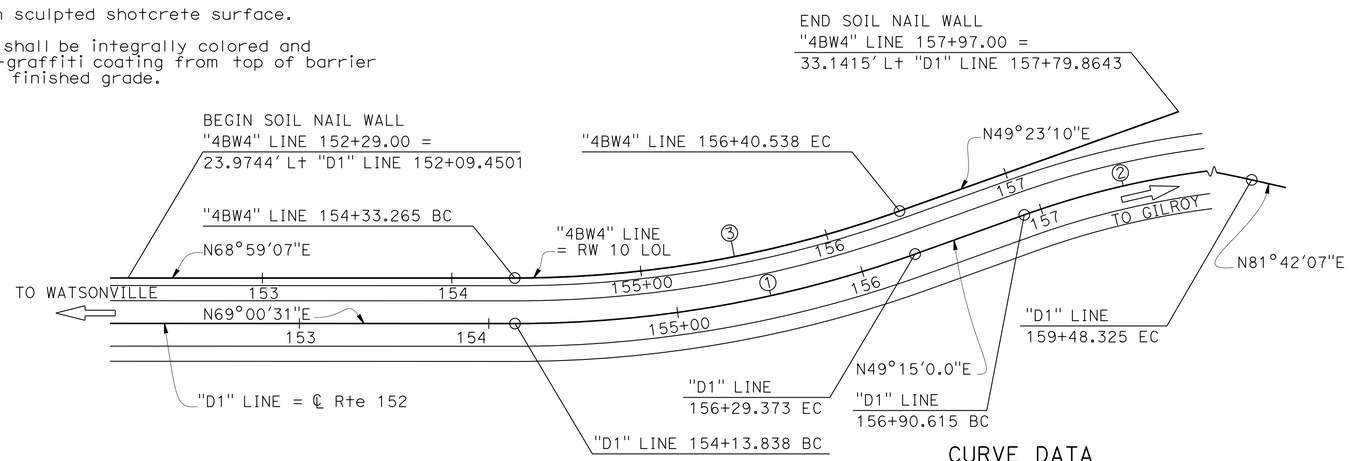

PLAN

1" = 40'

NOTE:
THE CONTRACTOR SHALL VERIFY ALL CONTROLLING FIELD DIMENSIONS BEFORE ORDERING OR FABRICATING ANY MATERIAL.

CURVE DATA

Alignment	R	Δ	T	L
"D1" LINE ①	625.00'	19°45'32"	108.85'	215.54'
"D1" LINE ②	455.00'	32°27'08"	132.41'	257.71'
"4BW4" LINE ③	601.41'	19°44'48"	104.66'	207.27'

QUANTITIES

STRUCTURE EXCAVATION (SOIL NAIL WALL)	1,141	CY
STRUCTURE BACKFILL (SOIL NAIL WALL)	95	CY
SOIL NAIL	5,925	LF
BAR REINFORCING STEEL (RETAINING WALL)	36,880	LB
STRUCTURAL SHOTCRETE	137	CY
SCULPTED SHOTCRETE	227	CY
PREPARE AND STAIN SCULPTED SHOTCRETE	7,077	SQFT
ANTI-GRAFFITI COATING	1,704	SQFT
MISCELLANEOUS METAL (SAFETY HOOK)	633	LB
CABLE RAILING (MODIFIED)	568	LF
CONCRETE BARRIER (TYPE 60D MODIFIED)	568	LF

BRIAN MORI
DESIGN ENGINEER

	BY	CHECKED
DESIGN	S. Hegazi	R. Amir
DETAILS	T. Kusumi	R. Amir / S. Hegazi
QUANTITIES	R. Amir	S. Hegazi

LOAD & RESISTANCE FACTOR DESIGN — LIVE LOADING: HL93 W/"LOW-BOY"; PERMIT DESIGN VEHICLE

	BY	CHECKED
LAYOUT	S. Hegazi	A. Menke
SPECIFICATIONS	T. Chen	PLANS AND SPECS COMPARED T. Chen

ORIGINAL SCALE IN INCHES FOR REDUCED PLANS 0 1 2 3

STATE OF CALIFORNIA
DEPARTMENT OF TRANSPORTATION

DIVISION OF ENGINEERING SERVICES
STRUCTURE DESIGN
DESIGN BRANCH 8

UNIT: 3593
PROJECT NUMBER & PHASE: 0400000813-1
CONTRACT NO.: 04-2A2501

BRIDGE NO. 37E0119
POST MILE 2.88/2.99

HECKER PASS SOIL NAIL WALL NO. 10
GENERAL PLAN

DISREGARD PRINTS BEARING EARLIER REVISION DATES

REVISION DATES 04-11-11 05-08-13 07-26-13

SHEET 1 OF 20

STRUCTURES DESIGN GENERAL PLAN SHEET (ENGLISH) (REV.09-01-10)

FILE => 37e0119-a-gp01.dgn

USERNAME => s124496 DATE PLOTTED => 21-JUN-2013 TIME PLOTTED => 09:04

DIST	COUNTY	ROUTE	POST MILES TOTAL PROJECT	SHEET No.	TOTAL SHEETS
04	SCI	152	0.1/5.2	379	416

REGISTERED CIVIL ENGINEER 05-15-13 DATE

6-17-13
PLANS APPROVAL DATE

REGISTERED PROFESSIONAL ENGINEER
Sameh Hegazi
No. C64899
Exp. 06-30-2013
CIVIL
STATE OF CALIFORNIA

The State of California or its officers or agents shall not be responsible for the accuracy or completeness of electronic copies of this plan sheet.

GENERAL NOTES

LOAD AND RESISTANCE FACTOR DESIGN:
AASHTO LRFD Bridge Design Specifications, 4th Editions and the Caltrans Amendments; preface dated Dec., 2009.

FHWA Publication No. FHWA-IF-03-017, Manual for Design and Construction Monitoring of Soil Nail Walls.

REINFORCED CONCRETE & SHOTCRETE:
F'c = 3.6 ksi
Fy = 60 ksi

STRUCTURAL STEEL:
Plates and shapes shall conform to ASTM Designation A709 Grade (36 ksi)

SOIL NAILS:
Soil nails shall conform to ASTM Designation A615, Grade 60, fs = 60 ksi, #7 bars and #8 bars

PUNCHING SHEAR:
Ps = 45 Kps

SOIL DESIGN PARAMETERS IN NAILING ZONES:

NAIL DATA TABLE

Zone	"4BW4" Line Station	Unit Weight (lb/ft^3)	Friction Angle Degrees	Cohesion (lb/ft^2)	Design Pull out Resistance (kip/ft)	Upper Elev (ft)	Lower Elev (ft)
1	152+29.00 - 155+20.00	125	32	700	2.0	546	528
2	152+29.00 - 155+20.00	125	32	700	2.0	528	510
3	155+20.00 - 157+97.00	125	32	700	2.0	527	508

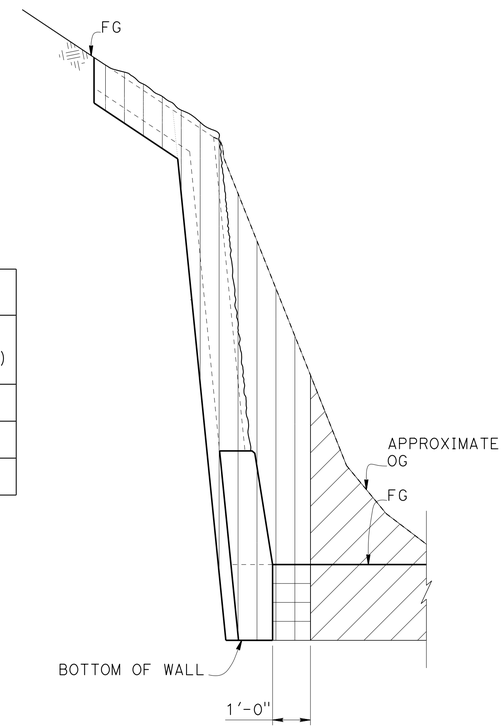

LEGEND:

Structure excavation (Soil Nail Wall)

Structure backfill (Soil Nail Wall)

Roadway excavation (See "ROAD PLANS.")

LIMITS OF PAYMENT FOR EXCAVATION AND BACKFILL

No Scale

INDEX TO PLANS

SHEET NO.	TITLE
1	GENERAL PLAN
2	INDEX TO PLANS
3	FOUNDATION PLAN
4	STRUCTURE ELEVATION NO. 1
5	STRUCTURE ELEVATION NO. 2
6	TYPICAL SECTION
7	STRUCTURAL DETAILS NO. 1
8	STRUCTURAL DETAILS NO. 2
9	STRUCTURAL DETAILS NO. 3
10	DRAINAGE DETAILS NO. 1
11	DRAINAGE DETAILS NO. 2
12	SCULPTED SHOTCRETE TREATMENT NO. 1
13	SCULPTED SHOTCRETE TREATMENT NO. 2
14	SCULPTED SHOTCRETE TREATMENT NO. 3
15	SCULPTED SHOTCRETE TREATMENT DETAILS NO. 1
16	SCULPTED SHOTCRETE TREATMENT DETAILS NO. 2
17	LOG OF TEST BORINGS 1 OF 4
17	LOG OF TEST BORINGS 2 OF 4
19	LOG OF TEST BORINGS 3 OF 4
20	LOG OF TEST BORINGS 4 OF 4

STANDARD PLANS DATED MAY 2010

DETAIL	DESCRIPTION
A10A	ABBREVIATIONS (SHEET 1 OF 2)
A10B	ABBREVIATIONS (SHEET 2 OF 2)
A10C	LINES AND SYMBOLS (SHEET 1 OF 3)
A10D	LINES AND SYMBOLS (SHEET 2 OF 3)
A10E	LINES AND SYMBOLS (SHEET 3 OF 3)
A76A	CONCRETE BARRIER TYPE 60
B0-3	BRIDGE DETAILS
RSP B11-47	CABLE RAILING

STANDARD PLAN SHEET NO.

DETAIL NO.

DESIGN	BY S. Hegazi	CHECKED R. Amir	
DETAILS	BY T. Kusumi	CHECKED R. Amir / S. Hegazi	
QUANTITIES	BY R. Amir	CHECKED S. Hegazi	

STATE OF CALIFORNIA
DEPARTMENT OF TRANSPORTATION

DIVISION OF ENGINEERING SERVICES
STRUCTURE DESIGN
DESIGN BRANCH 8

BRIDGE NO. 37E0119
POST MILE 2.88/2.99

HECKER PASS SOIL NAIL WALL NO. 10
INDEX TO PLANS

STRUCTURES DESIGN DETAIL SHEET (ENGLISH) (REV. 09-01-10)

ORIGINAL SCALE IN INCHES FOR REDUCED PLANS 0 1 2 3

UNIT: 3593
PROJECT NUMBER & PHASE: 0400000813-1

DISREGARD PRINTS BEARING EARLIER REVISION DATES

REVISION DATES: 06-16-11 07-26-12 05-10-13

SHEET 2 OF 20

USERNAME => s124496 DATE PLOTTED => 21-JUN-2013 TIME PLOTTED => 07:03

FILE => 37e0119-a-itp.dgn

DIST	COUNTY	ROUTE	POST MILES TOTAL PROJECT	SHEET No.	TOTAL SHEETS
04	SCI	152	0.1/5.2	380	416

REGISTERED CIVIL ENGINEER 08-01-12 DATE

6-17-13
PLANS APPROVAL DATE

REGISTERED PROFESSIONAL ENGINEER Sameh Hegazi No. C64899 Exp. 06-30-2013 CIVIL STATE OF CALIFORNIA

The State of California or its officers or agents shall not be responsible for the accuracy or completeness of electronic copies of this plan sheet.

CURVE DATA

Alignment	R	Δ	T	L
"D1" LINE ①	625.00	19°45′32"	108.85	215.54
"D1" LINE ②	455.00	32°27′08"	132.41	257.71
"4BW4" LINE ③	601.41	19°44′48"	104.68	207.27

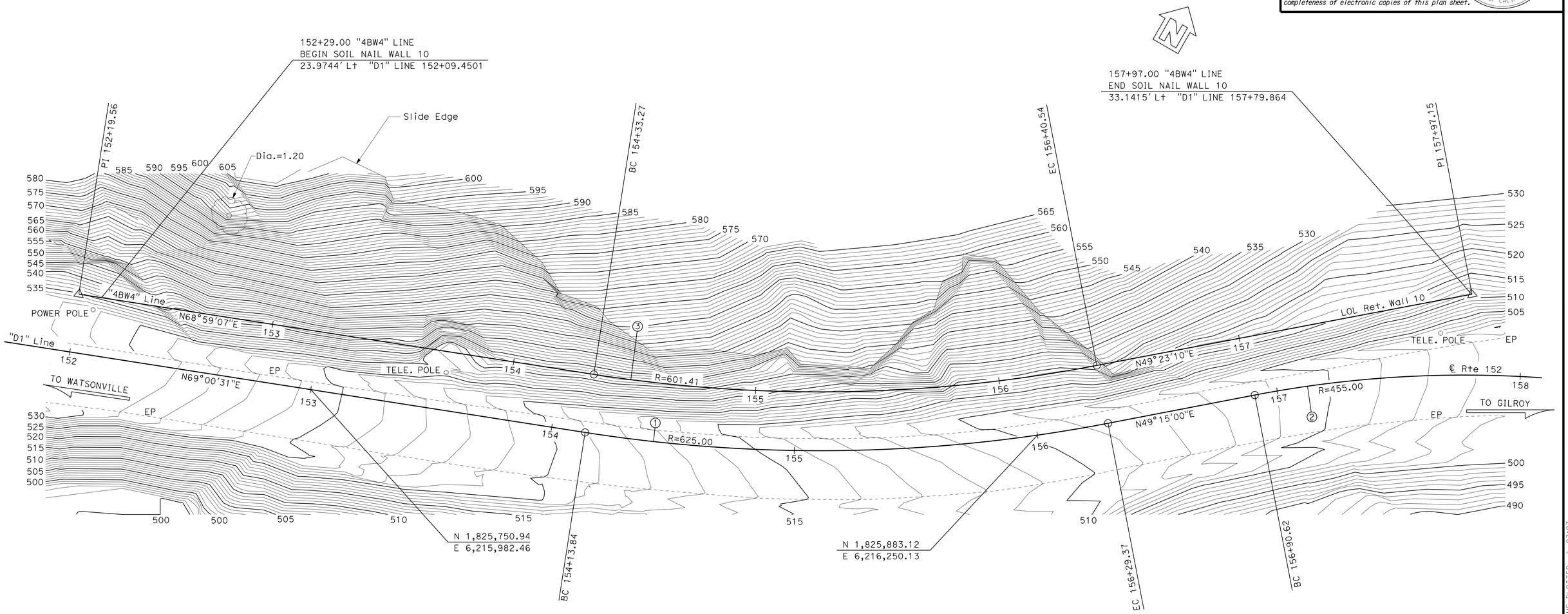

SURVEY CONTROL

PRHV123 (Not Shown)
32.94 Rt. "D1" Line, ℄ Rte 152
Sta. 150+80.58
N 1,825,637.38
E 6,215,797.60
EL.=536.89

PRHV108 (Not Shown)
23.62 Rt. "D1" Line, ℄ Rte 152
Sta. 158+34.02
N 1,825,995.04
E 6,216,449.82
EL.=498.21

PRELIMINARY INVESTIGATION SECTION

SCALE	VERT.DATUM NAVD 88	PHOTOGRAMMETRY AS OF: X			
1"=20′	HORZ.DATUM NAD83 (92)	SURVEYED	BY District	CHECKED	BY Don Ivy 06/2011
ALIGNMENT TIES Dist. Traverse Sheet		DRAFTED	BY S. Zheng 06/2011	CHECKED	BY Jim Pallares 06/2011

DESIGN	BY S. Hegazi	CHECKED	R. Amir
DETAILS	BY T. Kusumi	CHECKED	R. Amir / S. Hegazi
QUANTITIES	BY R. Amir	CHECKED	S. Hegazi

STATE OF CALIFORNIA
DEPARTMENT OF TRANSPORTATION

DIVISION OF ENGINEERING SERVICES
STRUCTURE DESIGN
DESIGN BRANCH 08

BRIDGE NO. 37E0119
POST MILE 2.88/2.99

RETAINING WALL NO. 10
FOUNDATION PLAN

STRUCTURES FOUNDATION PLAN SHEET (ENGLISH) (REV. 09-01-10)

ORIGINAL SCALE IN INCHES FOR REDUCED PLANS 0 1 2 3

UNIT: 3646
PROJECT NUMBER & PHASE: 0100000183-1 CONTRACT NO.: 04-2A2501

DISREGARD PRINTS BEARING EARLIER REVISION DATES

REVISION DATES: 06-17-11 05-25-12 11-22-11

SHEET 3 OF 20

FILE => 37e0119-e-fpl01.dgn

USERNAME => s124496 DATE PLOTTED => 21-JUN-2013 TIME PLOTTED => 07:03

DIST	COUNTY	ROUTE	POST MILES TOTAL PROJECT	SHEET No.	TOTAL SHEETS
04	SCI	152	0.1/5.2	381	416

REGISTERED CIVIL ENGINEER 08-01-12 DATE

6-17-13
PLANS APPROVAL DATE

REGISTERED PROFESSIONAL ENGINEER
Sameh Hegazi
No. C64899
Exp. 06-30-2013
CIVIL
STATE OF CALIFORNIA

The State of California or its officers or agents shall not be responsible for the accuracy or completeness of electronic copies of this plan sheet.

NOTES:

Ⓐ ST = Vertical distance from top of wall elevation to top level of soil nails, ST = 2'-0"

Ⓑ SB_1 = Vertical distance from bottom of wall to bottom level of the soil nails, SB1 (Min) = 2'-0", SB1 (Max) < 3'-6".

Ⓒ SB_2 = Vertical distance from finished grade to bottom level of the soil nails, SB2 = 1'-6".

Ⓓ Discontinue row when vertical distance between soil nails are less than 1'-6".

Ⓔ SV = Vertical spacing of soil nails, SV (Min) = 1'-6", SV (Max) = 5'-0".

Ⓕ SH = Horizontal spacing of soil nails, SH (Min) = 1'-6", SH (Max) = 5'-0".

Ⓖ SS = Horizontal distance between the begin/end wall and first/last soil nail, SS (Min) = 1'-6", SS (Max) = 2'-6".

Ⓗ The exact location of the test soil nails to be determined by the Engineer.

1. Cable railing posts are not shown for clarity.

LEGEND:
- ○ Indicates approximate location of soil nails
- ■ Indicates approximate location of proof test nails

SCHEDULE D	BAR SIZE: #8				
NO. OF SOIL NAIL ROWS	5				
ROW NO. TOP TO BOTTOM	1	2	3	4	5
EMBEDMENT LENGTH (FT)	24	19	19	12	10

SCHEDULE A	BAR SIZE: #7	
NO. OF SOIL NAIL ROWS	2	
ROW NO. TOP TO BOTTOM	1	2
EMBEDMENT LENGTH (FT)	10	10

SCHEDULE E	BAR SIZE: #8					
NO. OF SOIL NAIL ROWS	6					
ROW NO. TOP TO BOTTOM	1	2	3	4	5	6
EMBEDMENT LENGTH (FT)	24	19	19	12	10	10

SCHEDULE B	BAR SIZE: #7		
NO. OF SOIL NAIL ROWS	3		
ROW NO. TOP TO BOTTOM	1	2	3
EMBEDMENT LENGTH (FT)	12	10	10

SCHEDULE C	BAR SIZE: #8			
NO. OF SOIL NAIL ROWS	4			
ROW NO. TOP TO BOTTOM	1	2	3	4
EMBEDMENT LENGTH (FT)	19	15	12	10

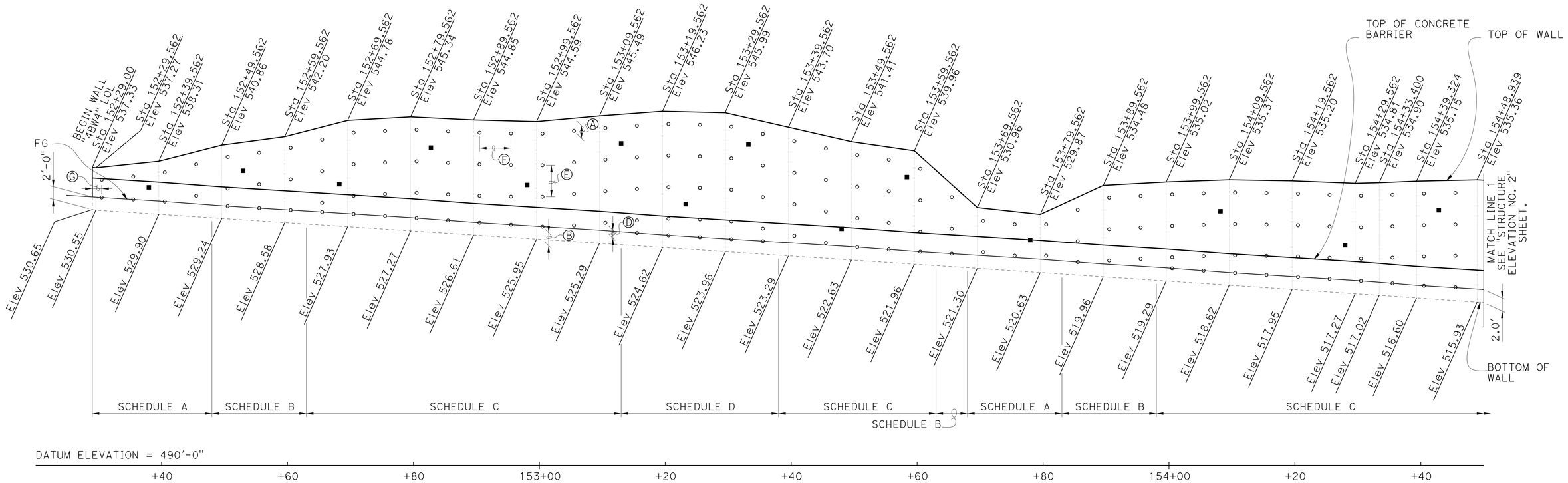

DEVELOPED ELEVATION

1/8" = 1'-0"

FOR COMPLETE RIGHT OF WAY DATA, SEE RIGHT OF WAY RECORDS MAPS AT DISTRICT OFFICE.

	BY	CHECKED
DESIGN	S. Hegazi	R. Amir
DETAILS	T. Kusumi	R. Amir / S. Hegazi
QUANTITIES	R. Amir	S. Hegazi

STATE OF CALIFORNIA
DEPARTMENT OF TRANSPORTATION

DIVISION OF ENGINEERING SERVICES
STRUCTURE DESIGN
DESIGN BRANCH 8

BRIDGE NO. 37E0119
POST MILE 2.88/2.99

HECKER PASS SOIL NAIL WALL NO. 10
STRUCTURE ELEVATION NO. 1

STRUCTURES DESIGN DETAIL SHEET (ENGLISH) (REV. 09-01-10)

ORIGINAL SCALE IN INCHES FOR REDUCED PLANS 0 1 2 3

UNIT: 3593
PROJECT NUMBER & PHASE: 0400000813-1
CONTRACT NO.: 04-2A2501

DISREGARD PRINTS BEARING EARLIER REVISION DATES

REVISION DATES: 09-01-11 02-27-12 05-02-12

SHEET 4 OF 20

FILE => 37e0119-f-strucelv01.dgn

USERNAME => s124496 DATE PLOTTED => 21-JUN-2013 TIME PLOTTED => 07:03

DIST	COUNTY	ROUTE	POST MILES TOTAL PROJECT	SHEET No.	TOTAL SHEETS
04	SCI	152	0.1/5.2	382	416

REGISTERED CIVIL ENGINEER 08-01-12 DATE

6-17-13
PLANS APPROVAL DATE

REGISTERED PROFESSIONAL ENGINEER
Sameh Hegazi
No. C64899
Exp. 06-30-2013
CIVIL
STATE OF CALIFORNIA

The State of California or its officers or agents shall not be responsible for the accuracy or completeness of electronic copies of this plan sheet.

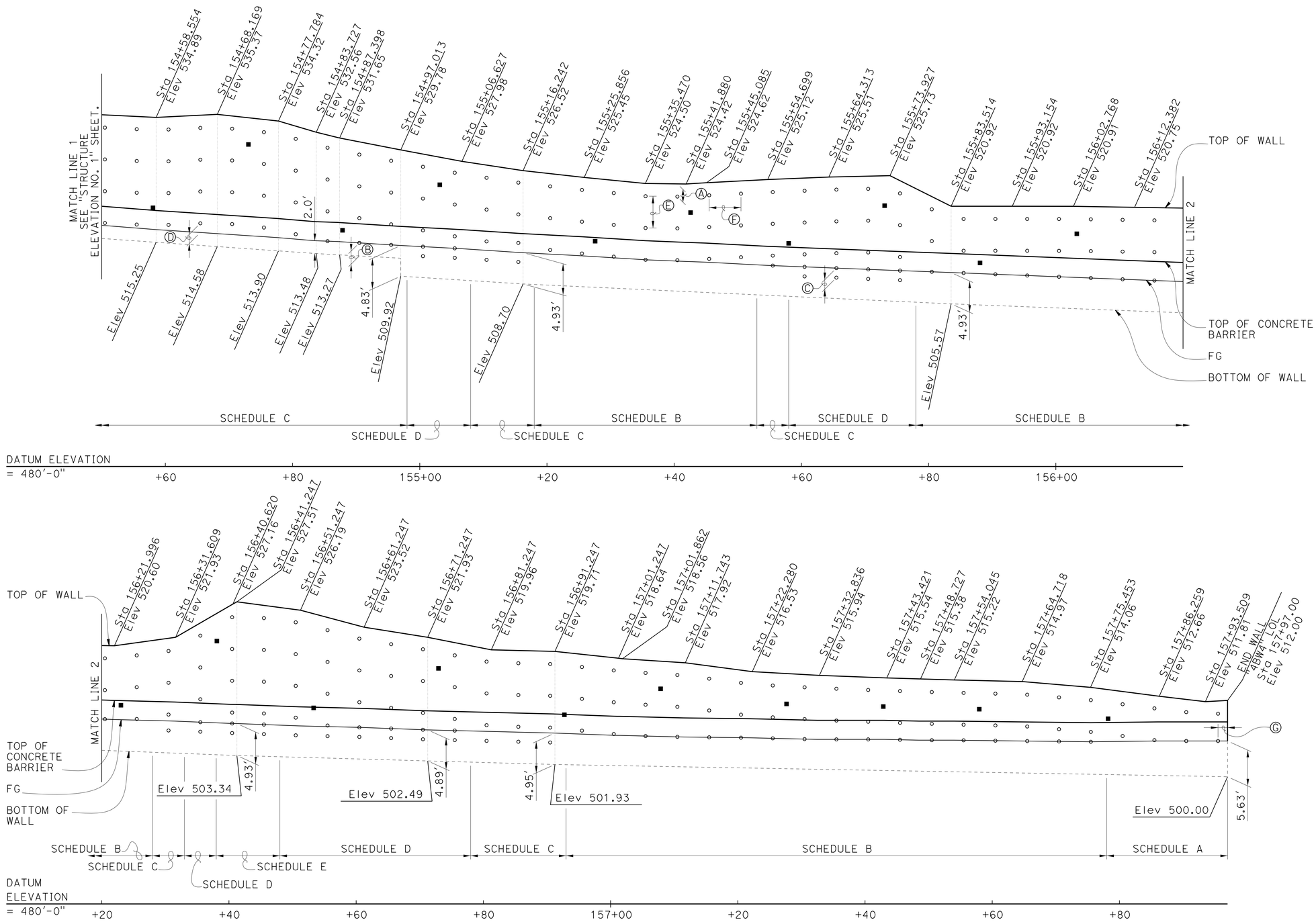

DEVELOPED ELEVATION

1/8" = 1'-0"

NOTE:
1. For production nails schedules and notes, see "STRUCTURE ELEVATION NO. 1" sheet.

LEGEND:
- o Indicates approximate location of soil nails
- ■ Indicates approximate location of proof test nails

FOR COMPLETE RIGHT OF WAY DATA, SEE RIGHT OF WAY RECORDS MAPS AT DISTRICT OFFICE.

	BY	CHECKED
DESIGN	S. Hegazi	R. Amir
DETAILS	T. Kusumi	R. Amir / S. Hegazi
QUANTITIES	R. Amir	S. Hegazi

STATE OF CALIFORNIA
DEPARTMENT OF TRANSPORTATION

DIVISION OF ENGINEERING SERVICES
STRUCTURE DESIGN
DESIGN BRANCH 8

BRIDGE NO. 37E0119
POST MILE 2.88/2.99

HECKER PASS SOIL NAIL WALL NO. 10
STRUCTURE ELEVATION NO. 2

STRUCTURES DESIGN DETAIL SHEET (ENGLISH) (REV. 09-01-10)

ORIGINAL SCALE IN INCHES FOR REDUCED PLANS 0 1 2 3

UNIT: 3593
PROJECT NUMBER & PHASE: 0400000813-1
CONTRACT NO.: 04-2A2501

DISREGARD PRINTS BEARING EARLIER REVISION DATES

REVISION DATES: 08-01-11 11-28-11 02-02-12 05-02-12

SHEET 5 OF 20

FILE => 37e0119-f-structelv02.dgn

USERNAME => s124496 DATE PLOTTED => 21-JUN-2013 TIME PLOTTED => 07:03

DIST	COUNTY	ROUTE	POST MILES TOTAL PROJECT	SHEET No.	TOTAL SHEETS
04	SCI	152	0.1/5.2	383	416

REGISTERED CIVIL ENGINEER 05-15-13 DATE

6-17-13
PLANS APPROVAL DATE

REGISTERED PROFESSIONAL ENGINEER Sameh Hegazi No. C64899 Exp. 06-30-2013 CIVIL STATE OF CALIFORNIA

The State of California or its officers or agents shall not be responsible for the accuracy or completeness of electronic copies of this plan sheet.

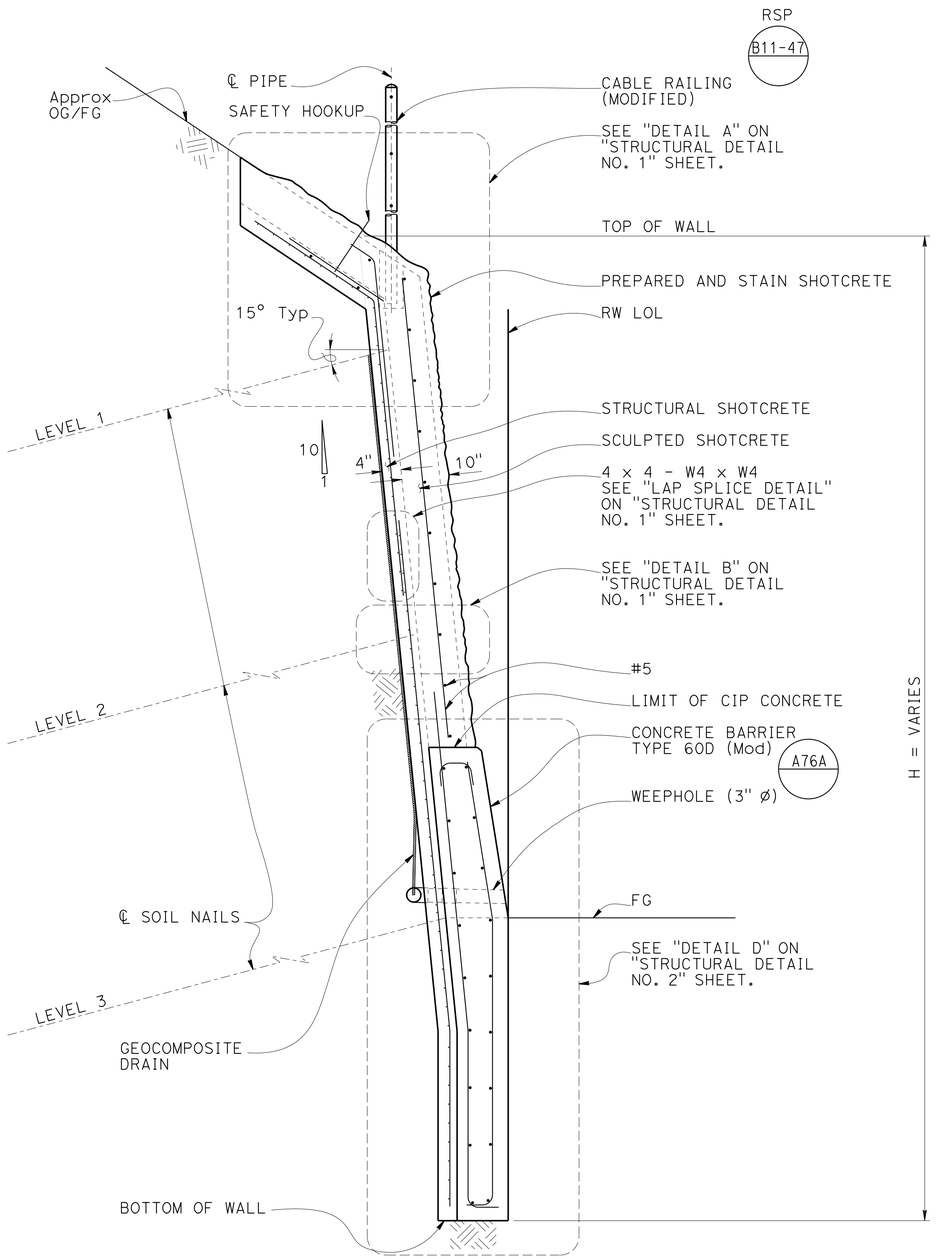

TYPICAL SECTION AT FOUNDATION DROP

3/4" = 1'-0"

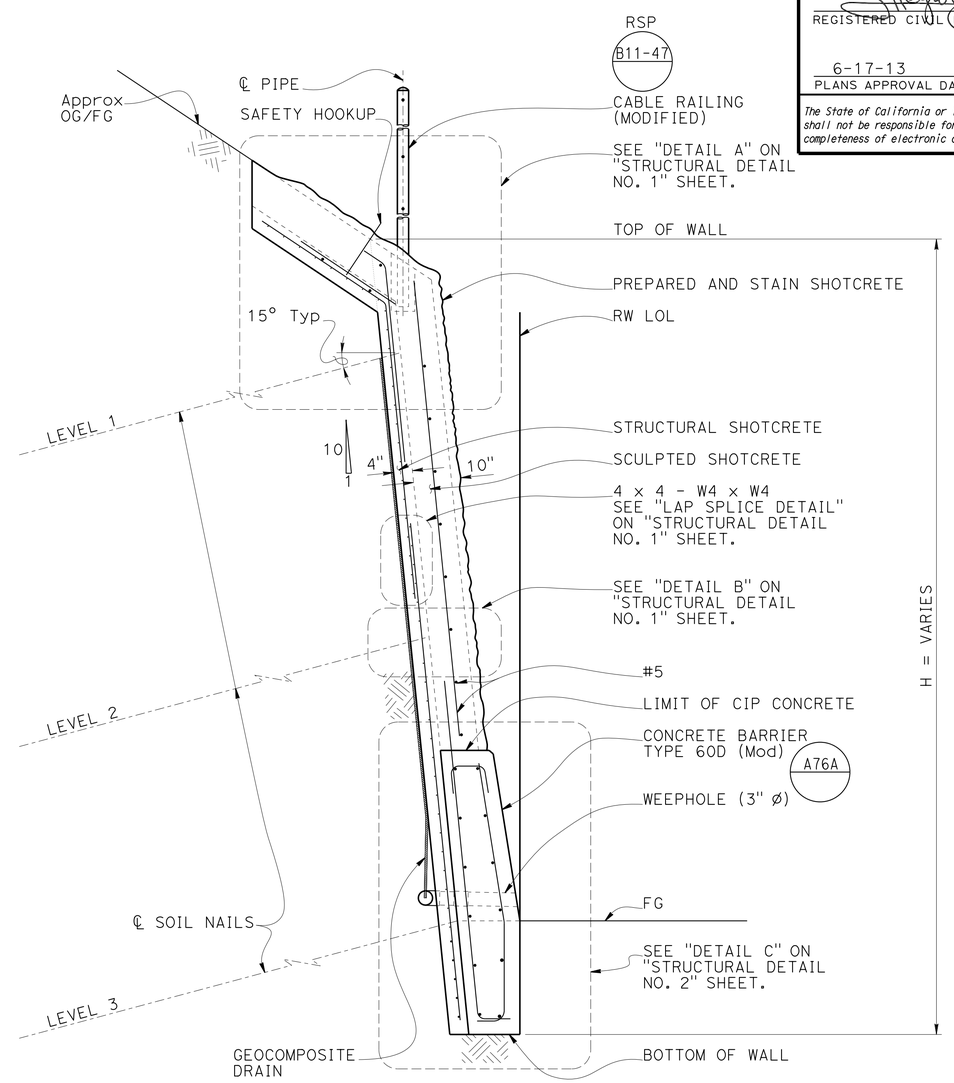

TYPICAL SECTION

3/4" = 1'-0"

NOTES:
1. For "PRODUCTION SOIL NAIL DETAIL" and "PROOF TEST SOIL NAIL DETAIL", see "STRUCTURAL DETAIL NO.3" sheet.
2. For sculpted shotcrete treatment, see "SCULPTED SHOTCRETE TREATMENT NO. 1" sheet.
3 For geocomposite drain detail, see "DRAINAGE DETAILS NO. 2" sheet.

	BY	CHECKED
DESIGN	S. Hegazi	R. Amir
DETAILS	T. Kusumi	R. Amir / S. Hegazi
QUANTITIES	R. Amir	S. Hegazi

STATE OF CALIFORNIA
DEPARTMENT OF TRANSPORTATION

DIVISION OF ENGINEERING SERVICES
STRUCTURE DESIGN
DESIGN BRANCH 8

BRIDGE NO. 37E0119
POST MILE 2.88/2.99

HECKER PASS SOIL NAIL WALL NO. 10
TYPICAL SECTION

STRUCTURES DESIGN DETAIL SHEET (ENGLISH) (REV. 09-01-10)

ORIGINAL SCALE IN INCHES FOR REDUCED PLANS 0 1 2 3

UNIT: 3593
PROJECT NUMBER & PHASE: 0400000813-1
CONTRACT NO.: 04-2A2501

DISREGARD PRINTS BEARING EARLIER REVISION DATES

REVISION DATES: 06-16-11 07-26-12 05-10-13

SHEET 6 OF 20

FILE => 37e0119-g-_ts.dgn

USERNAME => s124496 DATE PLOTTED => 21-JUN-2013 TIME PLOTTED => 07:04

DIST	COUNTY	ROUTE	POST MILES TOTAL PROJECT	SHEET No.	TOTAL SHEETS
04	SCI	152	0.1/5.2	384	416

REGISTERED CIVIL ENGINEER 05-15-13 DATE

6-17-13
PLANS APPROVAL DATE

REGISTERED PROFESSIONAL ENGINEER Sameh Hegazi No. C64899 Exp. 06-30-2013 CIVIL STATE OF CALIFORNIA

The State of California or its officers or agents shall not be responsible for the accuracy or completeness of electronic copies of this plan sheet.

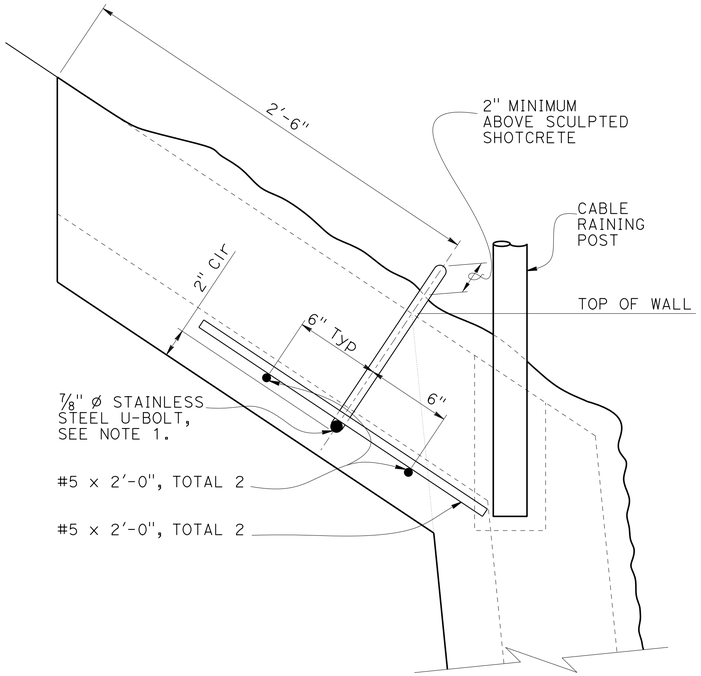

SAFETY HOOKUP DETAIL

No Scale

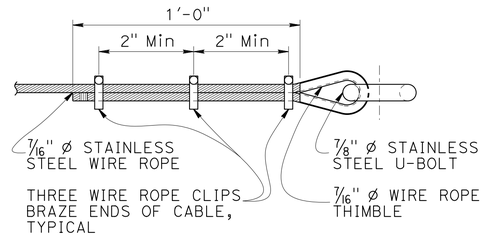

SAFETY WIRE ROPE DETAIL

No Scale

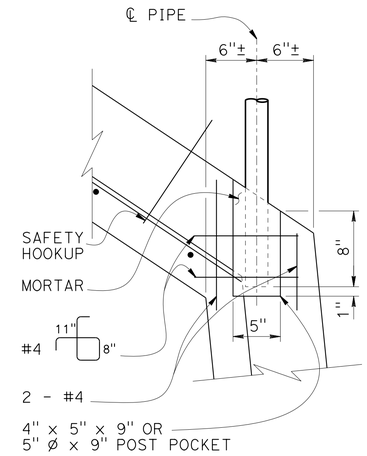

POST POCKET DETAIL

No Scale

RSP B11-47

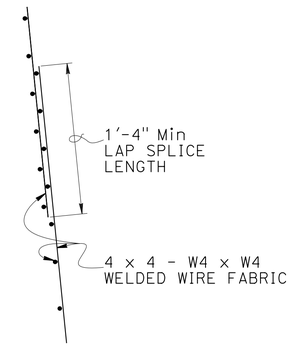

LAP SPLICE DETAIL

No Scale

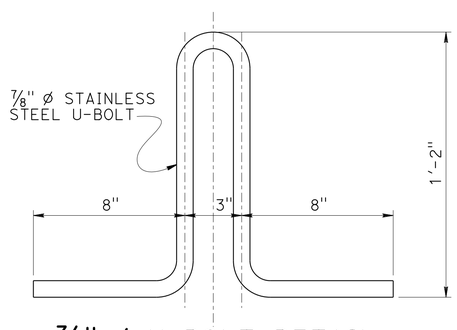

7/8" Ø U-BOLT DETAIL

3" = 1'-0"

NOTE:

Ⓐ For bearing plate and soil nail details not shown, see "STRUCTURAL DETAILS NO. 3" sheet.

1. Safety hookups shall be placed behind cable railing posts with 10'-0" Max spacing.
2. Safety wire rope shall be extended between safety hookups at top of wall.
3. Safety wire rope and safety hookups shall be placed at locations where wall heights from top of wall to finished grade exceed 5 feet.

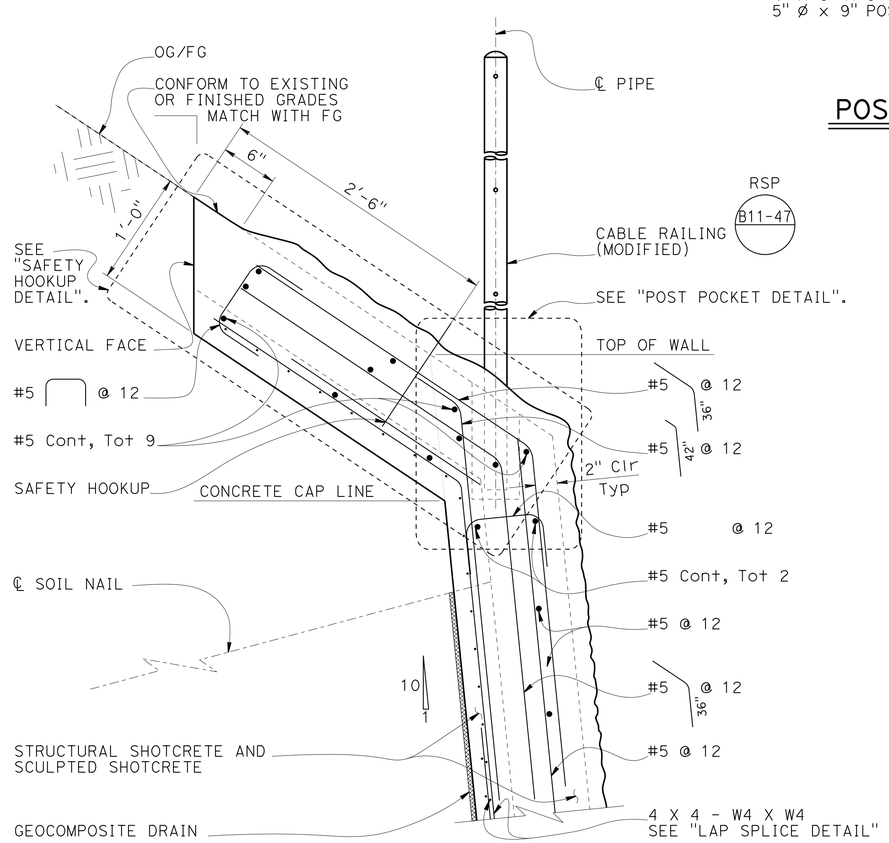

DETAIL A

1½" = 1'-0"

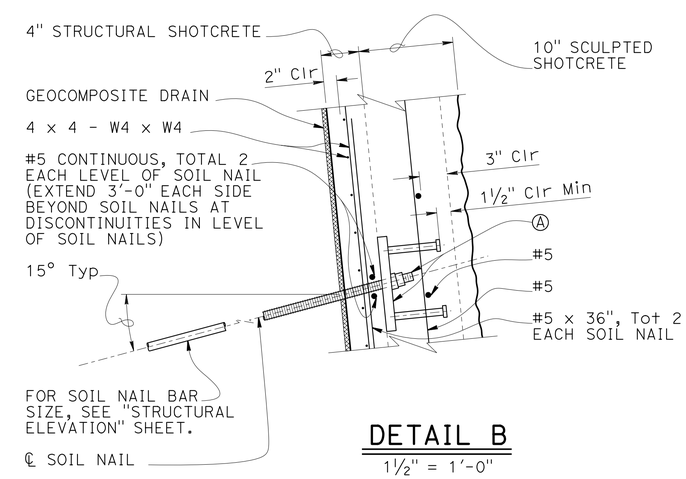

DETAIL B

1½" = 1'-0"

DESIGN	BY S. Hegazi	CHECKED R. Amir	
DETAILS	BY T. Kusumi	CHECKED R. Amir / S. Hegazi	
QUANTITIES	BY R. Amir	CHECKED S. Hegazi	

STATE OF CALIFORNIA
DEPARTMENT OF TRANSPORTATION

DIVISION OF ENGINEERING SERVICES
STRUCTURE DESIGN
DESIGN BRANCH 8

BRIDGE NO. 37E0119
POST MILE 2.88/2.99

HECKER PASS SOIL NAIL WALL NO. 10
STRUCTURAL DETAILS NO. 1

STRUCTURES DESIGN DETAIL SHEET (ENGLISH) (REV. 09-01-10)

ORIGINAL SCALE IN INCHES FOR REDUCED PLANS 0 1 2 3

UNIT: 3593
PROJECT NUMBER & PHASE: 0400000813-1
CONTRACT NO.: 04-2A2501

DISREGARD PRINTS BEARING EARLIER REVISION DATES

REVISION DATES: 06-09-11 07-26-12 05-10-13

SHEET 7 OF 20

FILE => 37e0119-g-stdt01.dgn

USERNAME => s124496 DATE PLOTTED => 21-JUN-2013 TIME PLOTTED => 07:04

DIST	COUNTY	ROUTE	POST MILES TOTAL PROJECT	SHEET No.	TOTAL SHEETS
04	SCI	152	0.1/5.2	385	416

REGISTERED CIVIL ENGINEER 05-15-13 DATE

6-17-13
PLANS APPROVAL DATE

REGISTERED PROFESSIONAL ENGINEER
Sameh Hegazi
No. C64899
Exp. 06-30-2013
CIVIL
STATE OF CALIFORNIA

The State of California or its officers or agents shall not be responsible for the accuracy or completeness of electronic copies of this plan sheet.

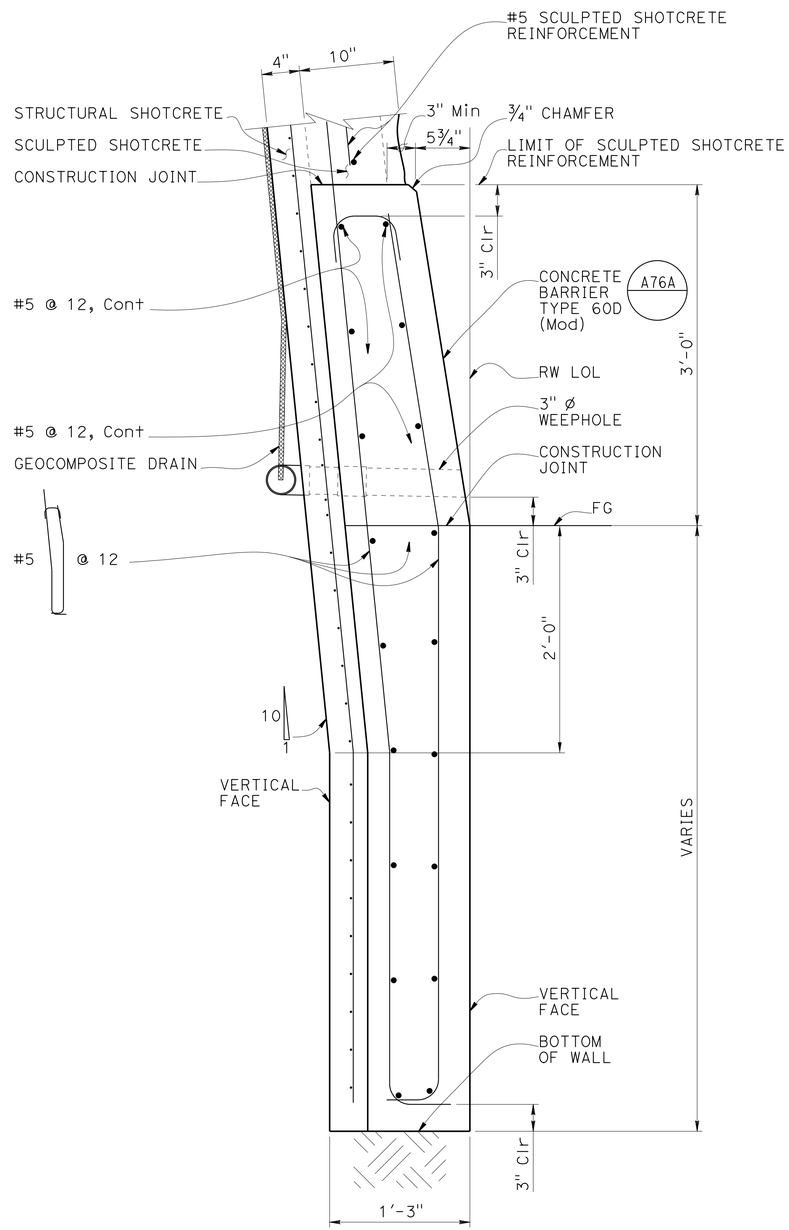

DETAIL D

1½" = 1'-0"

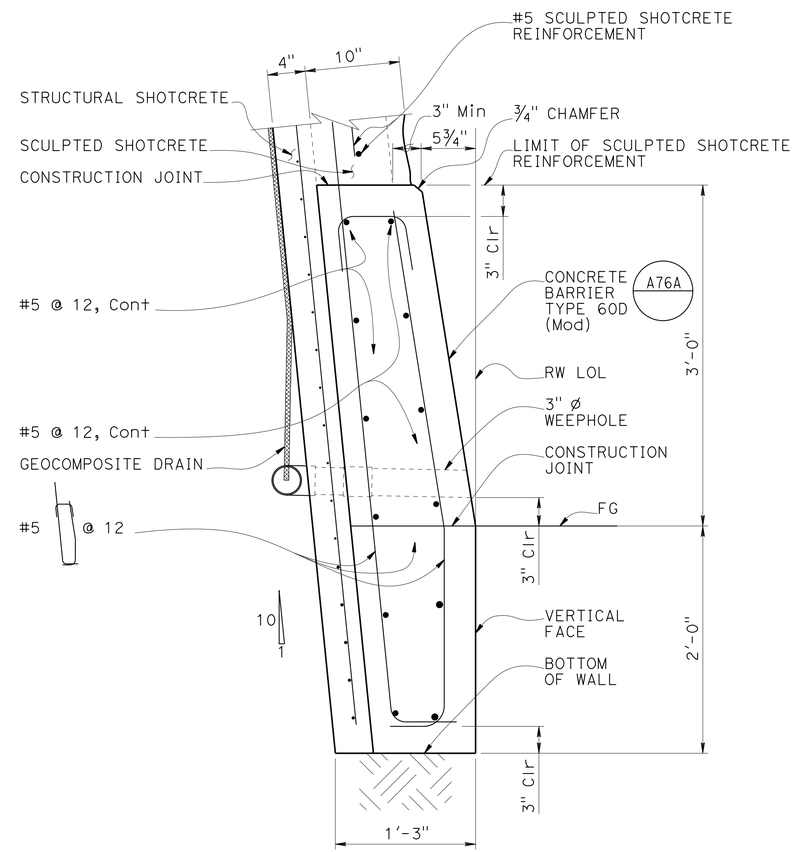

DETAIL C

1½" = 1'-0"

NOTE:
1. Soil nails not shown for clarity.
2. Concrete barrier shall be integrally colored.

DESIGN	BY S. Hegazi	CHECKED R. Amir	
DETAILS	BY T. Kusumi	CHECKED R. Amir / S. Hegazi	
QUANTITIES	BY R. Amir	CHECKED S. Hegazi	

STATE OF CALIFORNIA
DEPARTMENT OF TRANSPORTATION

DIVISION OF ENGINEERING SERVICES
STRUCTURE DESIGN
DESIGN BRANCH 8

BRIDGE NO. 37E0119
POST MILE 2.88/2.99

HECKER PASS SOIL NAIL WALL NO. 10
STRUCTURAL DETAILS NO. 2

STRUCTURES DESIGN DETAIL SHEET (ENGLISH) (REV. 09-01-10)

ORIGINAL SCALE IN INCHES FOR REDUCED PLANS 0 1 2 3

UNIT: 3593
PROJECT NUMBER & PHASE: 0400000813-1
CONTRACT NO.: 04-2A2501

DISREGARD PRINTS BEARING EARLIER REVISION DATES →

REVISION DATES: 06-10-11 | 07-26-12 | 05-10-13

SHEET 8 OF 20

FILE => 37e0119-g-stdt02.dgn

USERNAME => s124936 DATE PLOTTED => 21-JUN-2013 TIME PLOTTED => 07:04

DIST	COUNTY	ROUTE	POST MILES TOTAL PROJECT	SHEET No.	TOTAL SHEETS
04	SCI	152	0.1/5.2	386	416

REGISTERED CIVIL ENGINEER 08-01-12 DATE

6-17-13
PLANS APPROVAL DATE

REGISTERED PROFESSIONAL ENGINEER
Sameh Hegazi
No. C64899
Exp. 06-30-2013
CIVIL
STATE OF CALIFORNIA

The State of California or its officers or agents shall not be responsible for the accuracy or completeness of electronic copies of this plan sheet.

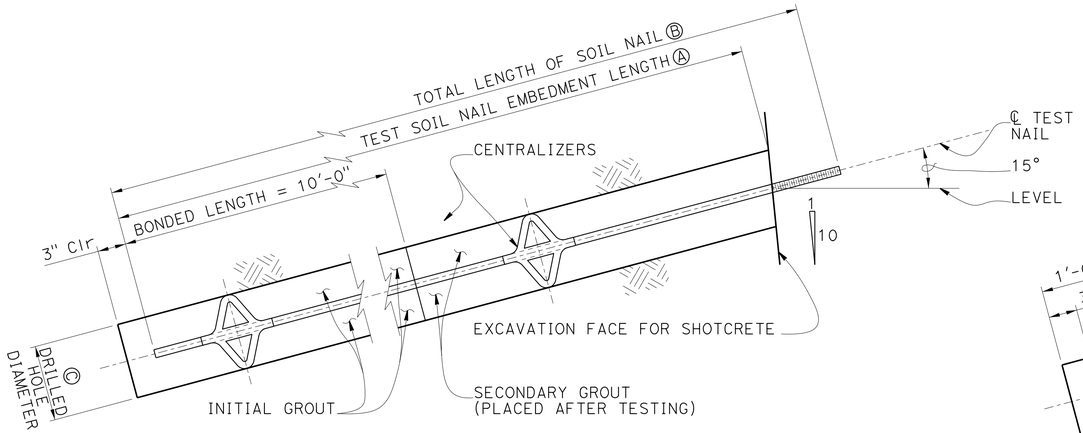

PROOF TEST SOIL NAIL DETAIL

No Scale

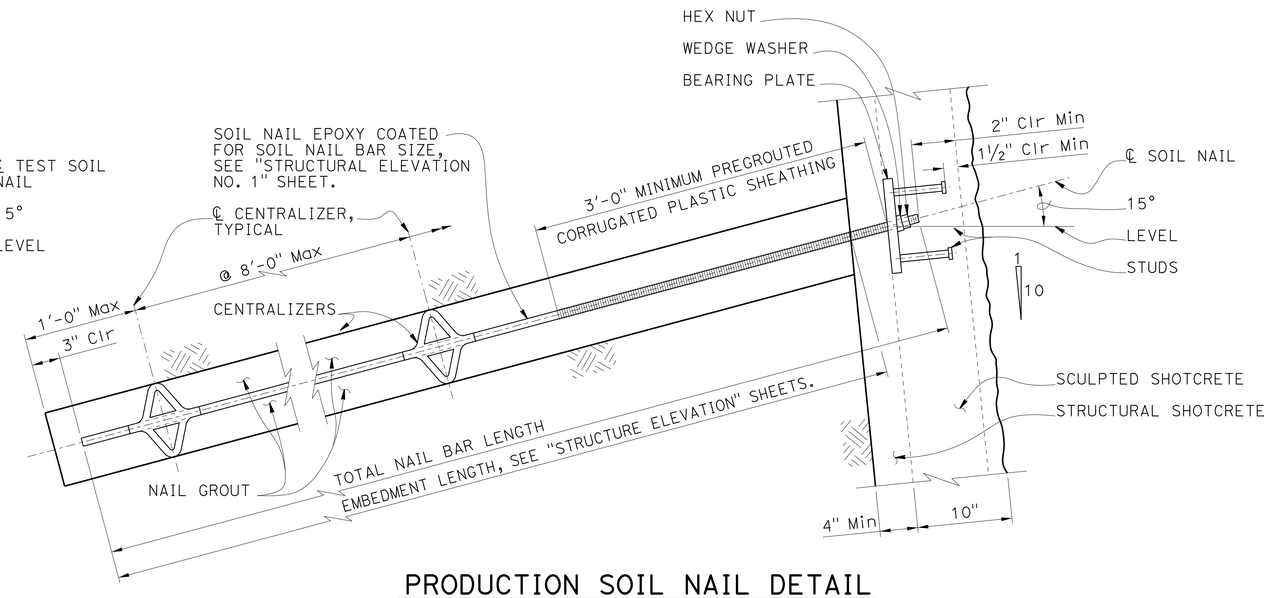

PRODUCTION SOIL NAIL DETAIL

No Scale

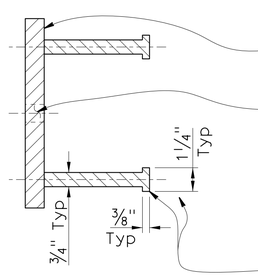

SECTION A-A

No Scale

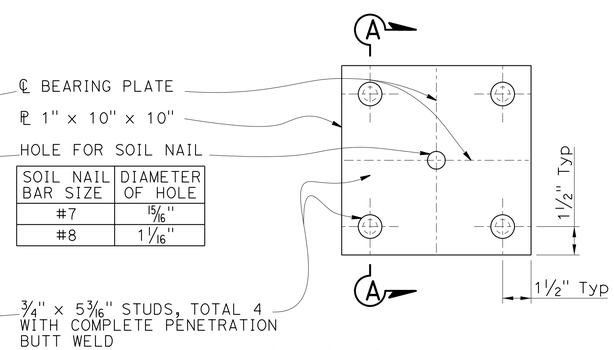

SOIL NAIL BAR SIZE	DIAMETER OF HOLE
#7	15/16"
#8	1 1/16"

BEARING PLATE DETAIL

No Scale

NOTES:
1. Geocomposite drain not shown for clarity.
2. Wall reinforcement not shown for clarity.
3. Finished grout surface to be normal to the bar

Ⓐ Embedment length of test soil nails equals 2/3 of embedment length of adjacent production soil nails, but not less than 12'-0".

Ⓑ Total length of test soil nail equals embedment length plus length required for jacking equipment.

Ⓒ Contractor to determine drilled hole diameter.

	BY	CHECKED
DESIGN	S. Hegazi	R. Amir
DETAILS	T. Kusumi	R. Amir / S. Hegazi
QUANTITIES	R. Amir	S. Hegazi

STATE OF CALIFORNIA
DEPARTMENT OF TRANSPORTATION

DIVISION OF ENGINEERING SERVICES
STRUCTURE DESIGN
DESIGN BRANCH 8

BRIDGE NO. 37E0119
POST MILE 2.88/2.99

HECKER PASS SOIL NAIL WALL NO. 10
STRUCTURAL DETAILS NO. 3

STRUCTURES DESIGN DETAIL SHEET (ENGLISH) (REV. 09-01-10)

ORIGINAL SCALE IN INCHES FOR REDUCED PLANS 0 1 2 3

UNIT: 3593
PROJECT NUMBER & PHASE: 0400000813-1
CONTRACT NO.: 04-2A2501

DISREGARD PRINTS BEARING EARLIER REVISION DATES

REVISION DATES: 06-30-11 06-26-12 05-02-12

SHEET 9 OF 20

FILE => 37e0119-g-stdt03.dgn

USERNAME => s124436 DATE PLOTTED => 21-JUN-2013 TIME PLOTTED => 07:04

DIST	COUNTY	ROUTE	POST MILES TOTAL PROJECT	SHEET No.	TOTAL SHEETS
04	SCI	152	0.1/5.2	387	416

REGISTERED CIVIL ENGINEER 05-15-13 DATE

6-17-13
PLANS APPROVAL DATE

REGISTERED PROFESSIONAL ENGINEER
Sameh Hegazi
No. C64899
Exp. 06-30-2013
CIVIL
STATE OF CALIFORNIA

The State of California or its officers or agents shall not be responsible for the accuracy or completeness of electronic copies of this plan sheet.

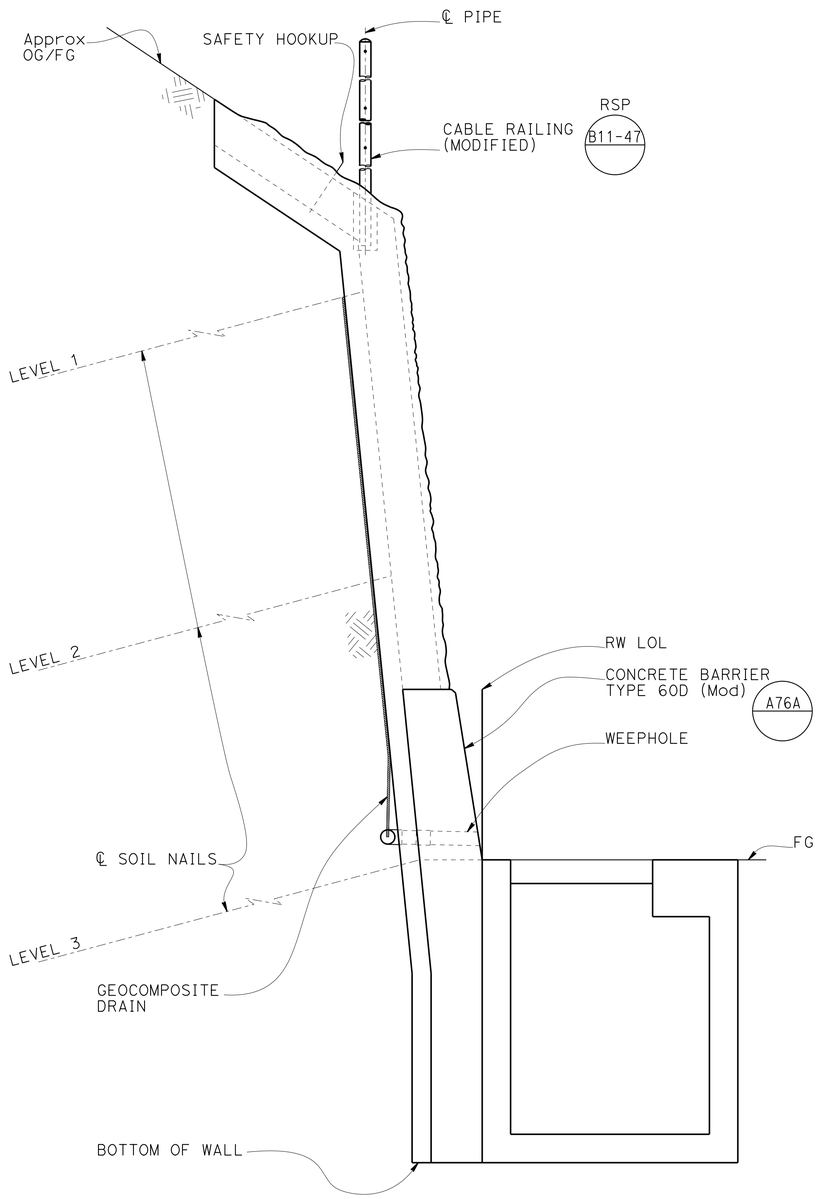

TYPICAL SECTION WITH DROP INLET

No Scale

NOTES:
1. For drainage details not shown, see "ROADWAY PLANS".
2. For drop inlet type, locations and elevations, see "ROADWAY PLANS".
3 Engineer must adjust bottom elevation to accommodate drainage system shown on "ROADWAY PLANS".
4. Bottom of wall to be placed against undisturbed material.
5. Drop inlets shall be centered vertically between soil nails.

	BY	CHECKED
DESIGN	S. Hegazi	R. Amir
DETAILS	T. Kusumi	R. Amir / S. Hegazi
QUANTITIES	R. Amir	S. Hegazi

STATE OF CALIFORNIA
DEPARTMENT OF TRANSPORTATION

DIVISION OF ENGINEERING SERVICES
STRUCTURE DESIGN
DESIGN BRANCH 8

BRIDGE NO. 37E0119
POST MILE 2.88/2.99

HECKER PASS SOIL NAIL WALL NO. 10
DRAINAGE DETAIL NO. 1

STRUCTURES DESIGN DETAIL SHEET (ENGLISH) (REV. 09-01-10)

ORIGINAL SCALE IN INCHES FOR REDUCED PLANS 0 1 2 3

UNIT: 3593
PROJECT NUMBER & PHASE: 0400000813-1
CONTRACT NO.: 04-2A2501

DISREGARD PRINTS BEARING EARLIER REVISION DATES

REVISION DATES: 06-17-11 07-26-12 05-10-13

SHEET 10 OF 20

FILE => 37e0119-r-dd01.dgn

USERNAME => s124496 DATE PLOTTED => 21-JUN-2013 TIME PLOTTED => 07:04

DIST	COUNTY	ROUTE	POST MILES TOTAL PROJECT	SHEET No.	TOTAL SHEETS
04	SCI	152	0.1/5.2	388	416

REGISTERED CIVIL ENGINEER 08-01-12 DATE

6-17-13
PLANS APPROVAL DATE

REGISTERED PROFESSIONAL ENGINEER
Sameh Hegazi
No. C64899
Exp. 06-30-2013
CIVIL
STATE OF CALIFORNIA

The State of California or its officers or agents shall not be responsible for the accuracy or completeness of electronic copies of this plan sheet.

NOTES:
1. Wall reinforcement not shown for clarity.

Ⓐ Indicates soil nail locations.

Ⓑ Center of geocomposite strips shall be centered vertically between soil nails.

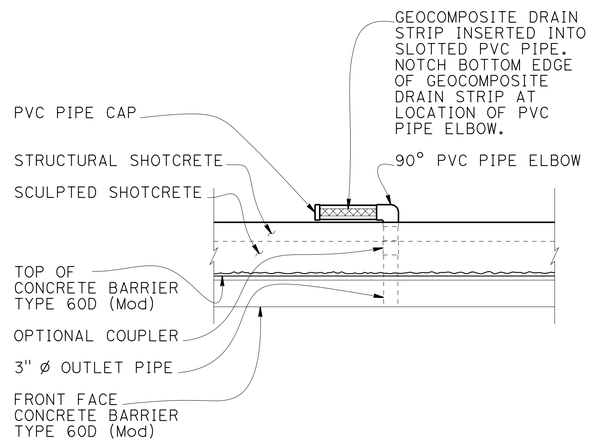

SECTION C-C

No Scale

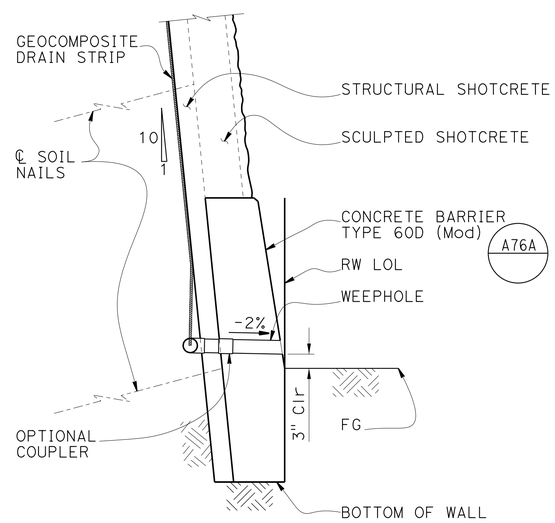

SECTION B-B

3/4" = 1'-0"

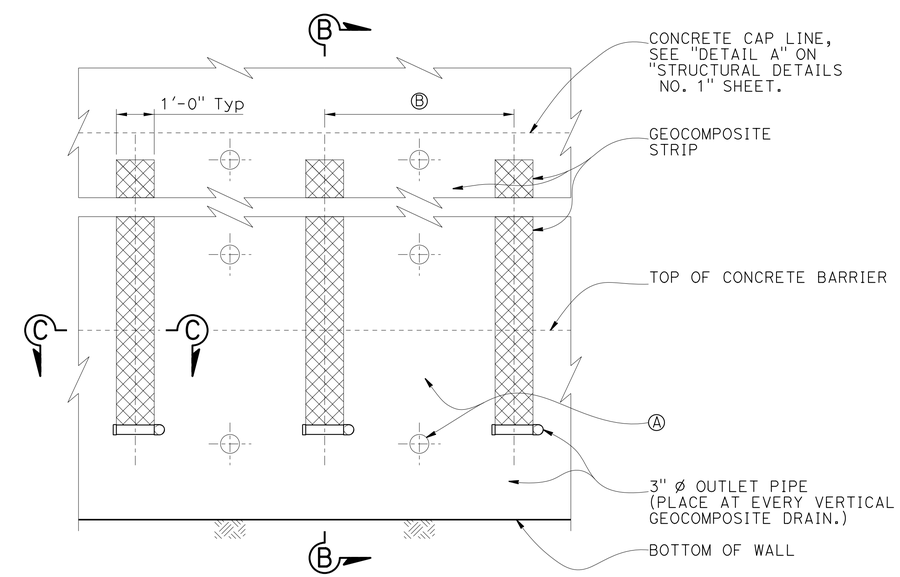

WALL PART ELEVATION

No Scale

DESIGN	BY S. Hegazi	CHECKED R. Amir	
DETAILS	BY T. Kusumi	CHECKED R. Amir / S. Hegazi	
QUANTITIES	BY R. Amir	CHECKED S. Hegazi	

STATE OF CALIFORNIA
DEPARTMENT OF TRANSPORTATION

DIVISION OF ENGINEERING SERVICES
STRUCTURE DESIGN
DESIGN BRANCH 8

BRIDGE NO. 37E0119
POST MILE 2.88/2.99

HECKER PASS SOIL NAIL WALL NO. 10
DRAINAGE DETAILS NO. 2

STRUCTURES DESIGN DETAIL SHEET (ENGLISH) (REV. 09-01-10)

ORIGINAL SCALE IN INCHES FOR REDUCED PLANS 0 1 2 3

UNIT: 3593
PROJECT NUMBER & PHASE: 0400000813-1
CONTRACT NO.: 04-2A2501

DISREGARD PRINTS BEARING EARLIER REVISION DATES

REVISION DATES: 06-17-11 07-20-12 05-20-13

SHEET 11 OF 20

FILE => 37e0119-r-dd+02.dgn

USERNAME => s124496 DATE PLOTTED => 21-JUN-2013 TIME PLOTTED => 07:04

DIST	COUNTY	ROUTE	POST MILES TOTAL PROJECT	SHEET No.	TOTAL SHEETS
04	SCI	152	0.1/5.2	389	416

REGISTERED CIVIL ENGINEER 08-01-12 DATE

6-17-13
PLANS APPROVAL DATE

REGISTERED PROFESSIONAL ENGINEER Sameh Hegazi No. C64899 Exp. 06-30-2013 CIVIL STATE OF CALIFORNIA

The State of California or its officers or agents shall not be responsible for the accuracy or completeness of electronic copies of this plan sheet.

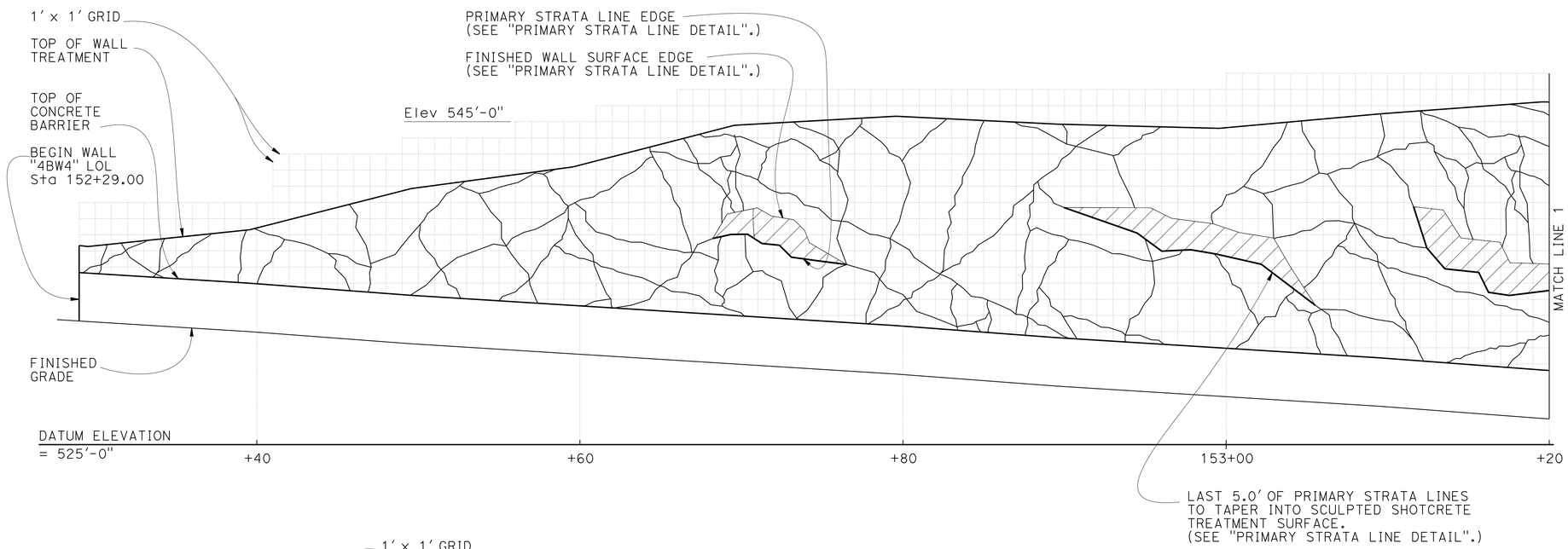

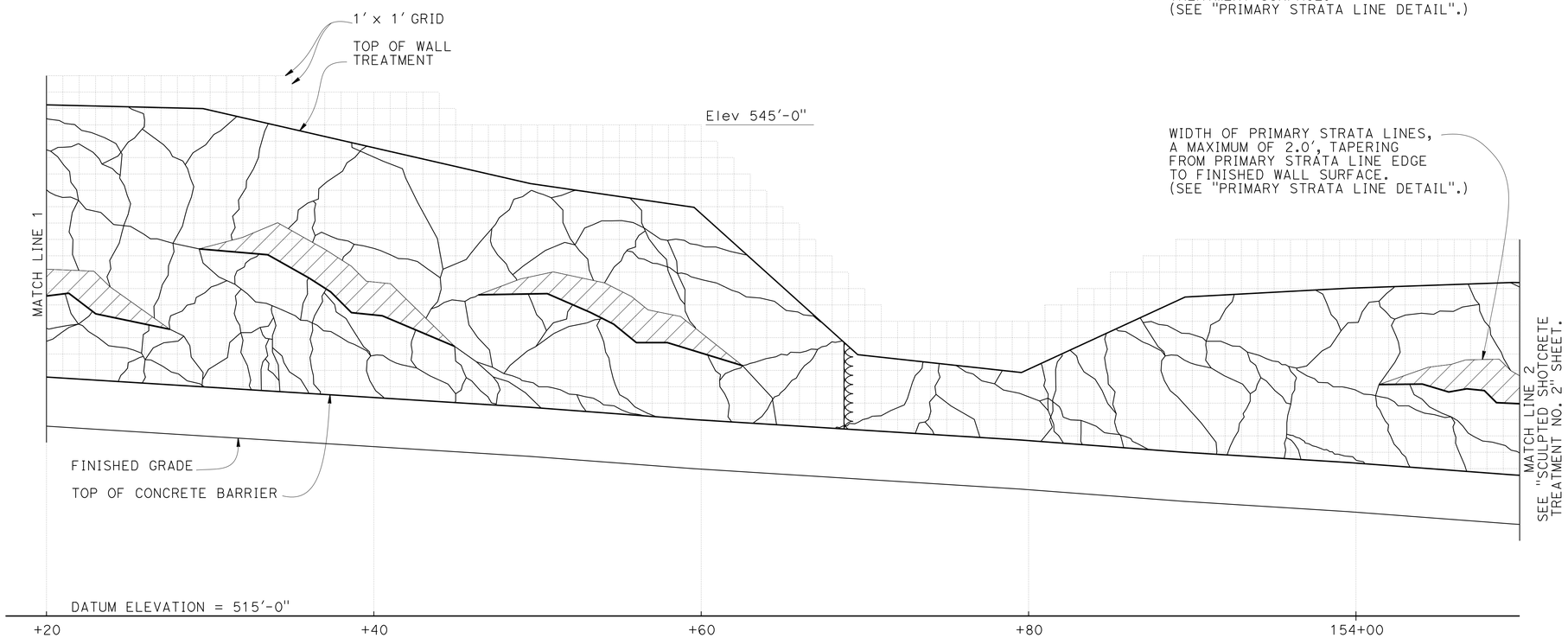

SCULPTED SHOTCRETE SURFACE TREATMENT

1/4" = 1'-0"

LEGEND:

1. PRIMARY STRATA LINES

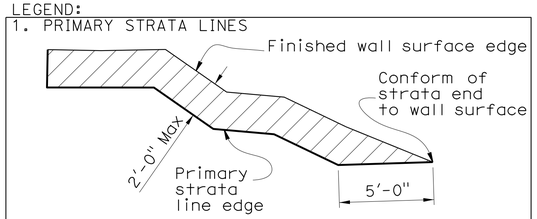

2. SECONDARY STRATA LINES

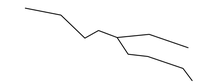

3. Indicates location of weakened planes joint. Joints should not be placed within 18 inches of a nail head. For details, see B0-3 / 3-2

NOTES:

1. Primary strata lines drawn on the front elevation are to be used as a guide for layout of primary strata line reinforcement. See "SCULPTED SHOTCRETE TREATMENT DETAILS NO. 1" and "SCULPTED SHOTCRETE TREATMENT DETAILS NO. 2" sheets.
2. Secondary strata lines drawn on the front elevation are to be used as a general guide. Strata lines shall be sculpted to mimic local geology.
3. This sheet is accurate for sculpted shotcrete treatment only.
4. Sculpted shotcrete surface treatment shall be continuous throughout the face of the wall.
5. Additional shotcrete needed for carving the primary strata lines to be reinforced as shown on "SCULPTED SHOTCRETE TREATMENT DETAILS NO. 1" and "SCULPTED SHOTCRETE TREATMENT DETAILS NO. 2" sheets.
6. Primary strata lines to be tapered into the top and bottom of wall.
7. Secondary strata lines are not to exceed 2" amplitude.
8. 3" ø weepholes are not shown.
9. Cable railing is not shown.

	BY	CHECKED
DESIGN	S. Hegazi	R. Amir
DETAILS	T. Kusumi	R. Amir / S. Hegazi
QUANTITIES	R. Amir	S. Hegazi

STATE OF CALIFORNIA
DEPARTMENT OF TRANSPORTATION

DIVISION OF ENGINEERING SERVICES
STRUCTURE DESIGN
DESIGN BRANCH 8

BRIDGE NO. 37E0119
POST MILE 2.88/2.99

HECKER PASS SOIL NAIL WALL NO. 10
SCULPTED SHOTCRETE TREATMENT NO. 1

STRUCTURES DESIGN DETAIL SHEET (ENGLISH) (REV. 09-01-10)

ORIGINAL SCALE IN INCHES FOR REDUCED PLANS 0 1 2 3

UNIT: 3593
PROJECT NUMBER & PHASE: 0400000813-1
CONTRACT NO.: 04-2A2501

DISREGARD PRINTS BEARING EARLIER REVISION DATES

REVISION DATES: 09-01-11 02-08-12 02-27-12 07-20-12

SHEET 12 OF 20

FILE => 37e0119-u-arch01.dgn

USERNAME => s124936 DATE PLOTTED => 21-JUN-2013 TIME PLOTTED => 07:04

DIST	COUNTY	ROUTE	POST MILES TOTAL PROJECT	SHEET No.	TOTAL SHEETS
04	SCI	152	0.1/5.2	390	416

REGISTERED CIVIL ENGINEER 08-01-12 DATE

6-17-13
PLANS APPROVAL DATE

REGISTERED PROFESSIONAL ENGINEER Sameh Hegazi No. C64899 Exp. 06-30-2013 CIVIL STATE OF CALIFORNIA

The State of California or its officers or agents shall not be responsible for the accuracy or completeness of electronic copies of this plan sheet.

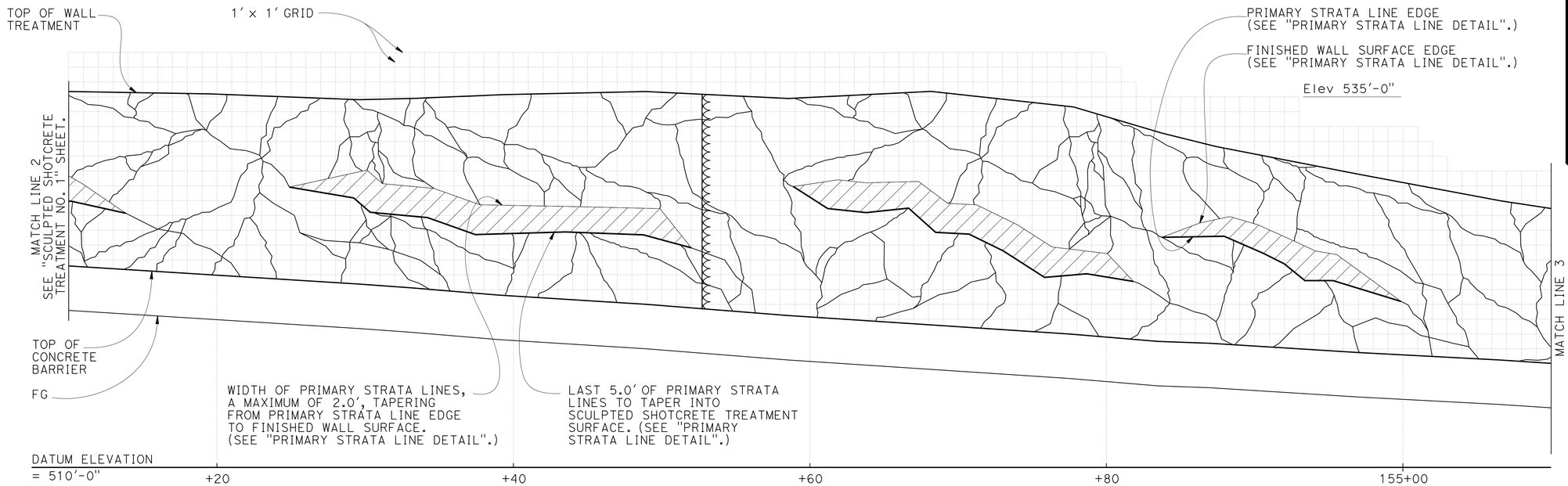

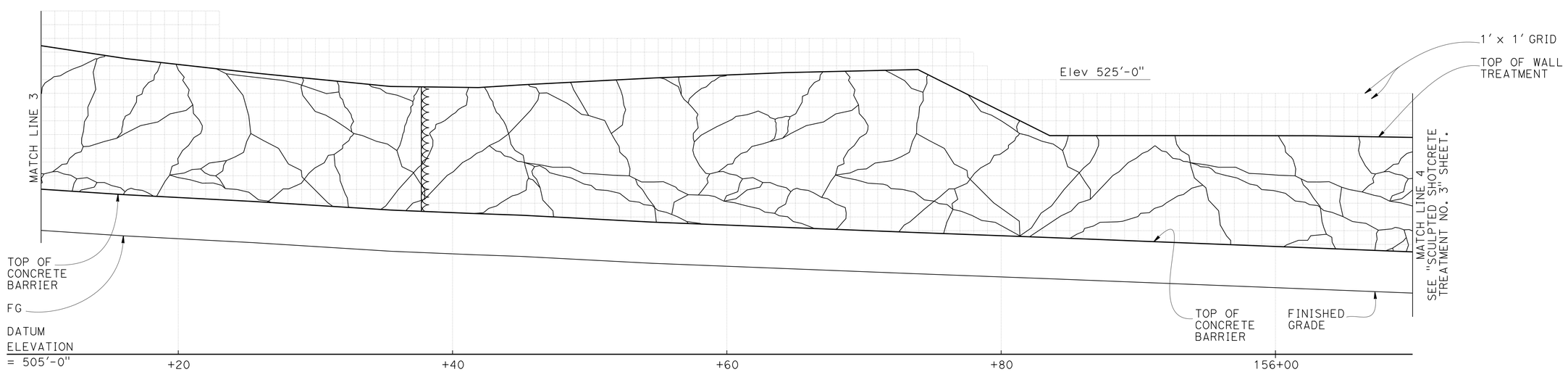

SCULPTED SHOTCRETE SURFACE TREATMENT

1/4" = 1'-0"

NOTE:
For notes and legend, see "SCULPTED SHOTCRETE TREATMENT NO. 1" sheet.

	BY	CHECKED
DESIGN	S. Hegazi	R. Amir
DETAILS	T. Kusumi	R. Amir / S. Hegazi
QUANTITIES	R. Amir	S. Hegazi

STATE OF CALIFORNIA
DEPARTMENT OF TRANSPORTATION

DIVISION OF ENGINEERING SERVICES
STRUCTURE DESIGN
DESIGN BRANCH 8

BRIDGE NO. 37E0119
POST MILE 2.88/2.99

HECKER PASS SOIL NAIL WALL NO. 10
SCULPTED SHOTCRETE TREATMENT NO. 2

STRUCTURES DESIGN DETAIL SHEET (ENGLISH) (REV. 09-01-10)

ORIGINAL SCALE IN INCHES FOR REDUCED PLANS 0 1 2 3

UNIT: 3593
PROJECT NUMBER & PHASE: 0400000813-1
CONTRACT NO.: 04-2A2501

DISREGARD PRINTS BEARING EARLIER REVISION DATES

REVISION DATES 08-01-11 11-28-11 02-06-12 07-20-12

SHEET 13 OF 20

FILE => 37e0119-u-arch02.dgn

USERNAME => s124496 DATE PLOTTED => 21-JUN-2013 TIME PLOTTED => 07:04

DIST	COUNTY	ROUTE	POST MILES TOTAL PROJECT	SHEET No.	TOTAL SHEETS
04	SCI	152	0.1/5.2	391	416

REGISTERED CIVIL ENGINEER 08-01-12 DATE

6-17-13
PLANS APPROVAL DATE

REGISTERED PROFESSIONAL ENGINEER
Sameh Hegazi
No. C64899
Exp. 06-30-2013
CIVIL
STATE OF CALIFORNIA

The State of California or its officers or agents shall not be responsible for the accuracy or completeness of electronic copies of this plan sheet.

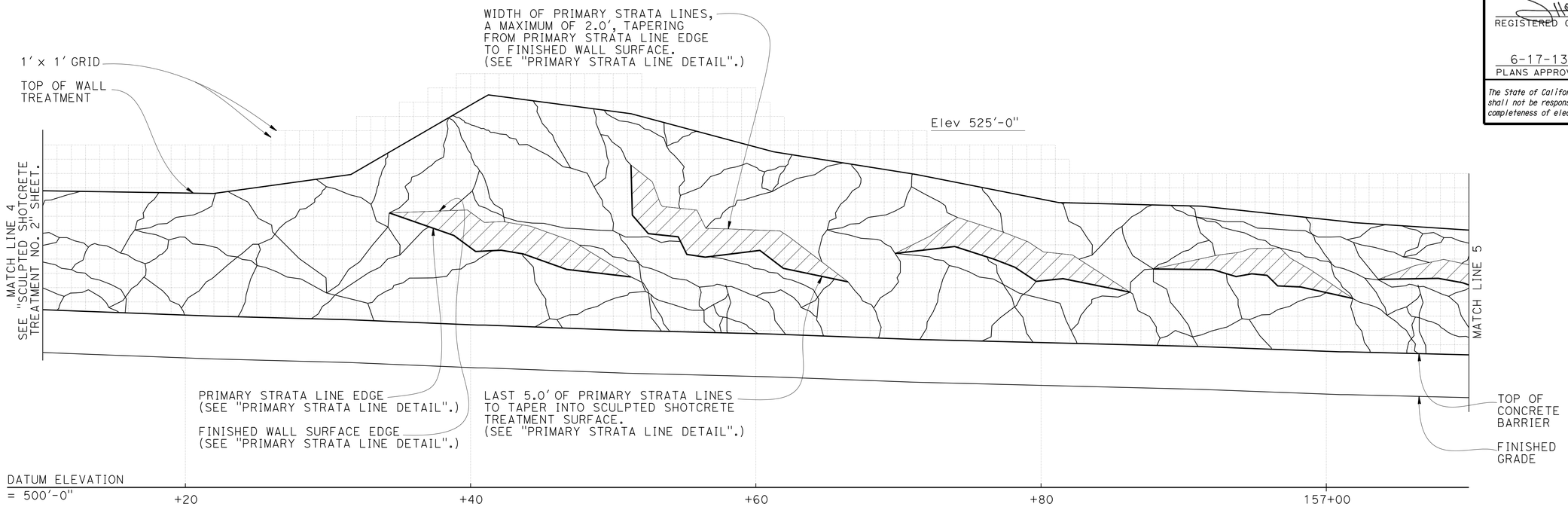

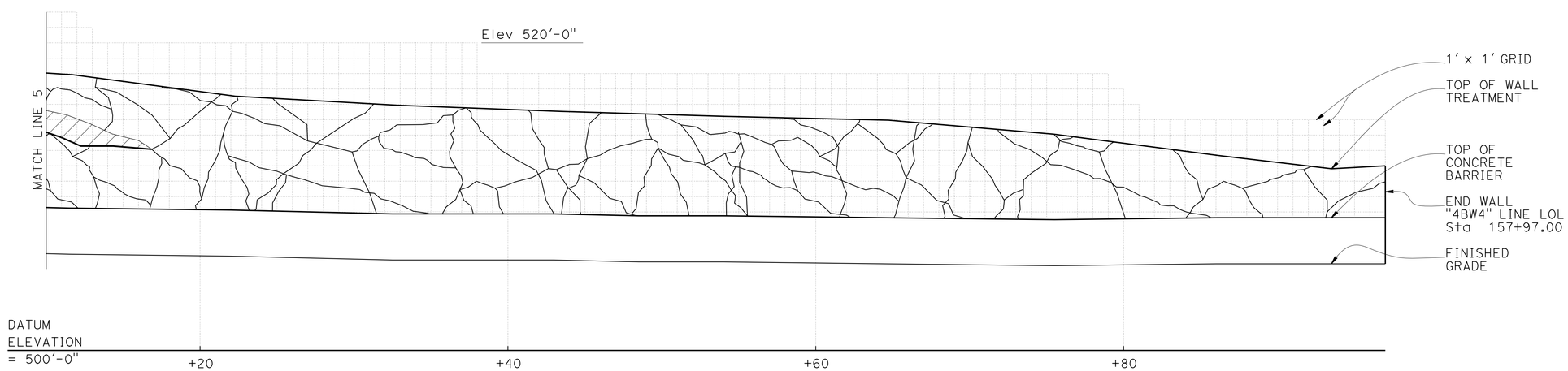

SCULPTED SHOTCRETE SURFACE TREATMENT

1/4" = 1'-0"

NOTE:
For notes and legend, see "SCULPTED SHOTCRETE TREATMENT NO. 1" sheet.

	BY	CHECKED
DESIGN	S. Hegazi	R. Amir
DETAILS	T. Kusumi	R. Amir / S. Hegazi
QUANTITIES	R. Amir	S. Hegazi

STATE OF CALIFORNIA
DEPARTMENT OF TRANSPORTATION

DIVISION OF ENGINEERING SERVICES
STRUCTURE DESIGN
DESIGN BRANCH 8

BRIDGE NO. 37E0119
POST MILE 2.88/2.99

HECKER PASS SOIL NAIL WALL NO. 10
SCULPTED SHOTCRETE TREATMENT NO. 3

STRUCTURES DESIGN DETAIL SHEET (ENGLISH) (REV. 09-01-10)

ORIGINAL SCALE IN INCHES FOR REDUCED PLANS 0 1 2 3

UNIT: 3593
PROJECT NUMBER & PHASE: 0400000813-1
CONTRACT NO.: 04-2A2501

DISREGARD PRINTS BEARING EARLIER REVISION DATES

REVISION DATES: 08-01-11 11-28-11 02-02-12 07-20-12

SHEET 14 OF 20

FILE => 37e0119-u-arch03.dgn

USERNAME => s124496 DATE PLOTTED => 21-JUN-2013 TIME PLOTTED => 07:04

DIST	COUNTY	ROUTE	POST MILES TOTAL PROJECT	SHEET No.	TOTAL SHEETS
04	SCI	152	0.1/5.2	392	416

REGISTERED CIVIL ENGINEER 08-01-12 DATE

6-17-13
PLANS APPROVAL DATE

REGISTERED PROFESSIONAL ENGINEER
Sameh Hegazi
No. C64899
Exp. 06-30-2013
CIVIL
STATE OF CALIFORNIA

The State of California or its officers or agents shall not be responsible for the accuracy or completeness of electronic copies of this plan sheet.

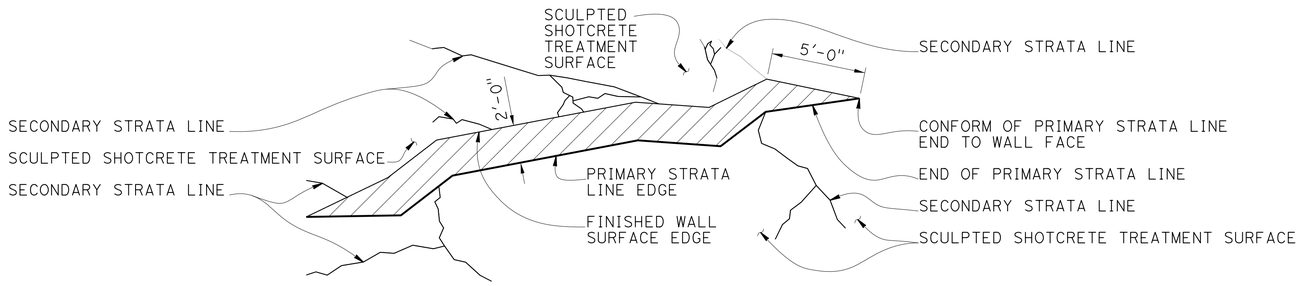

PRIMARY STRATA LINE ELEVATION DETAIL

No Scale

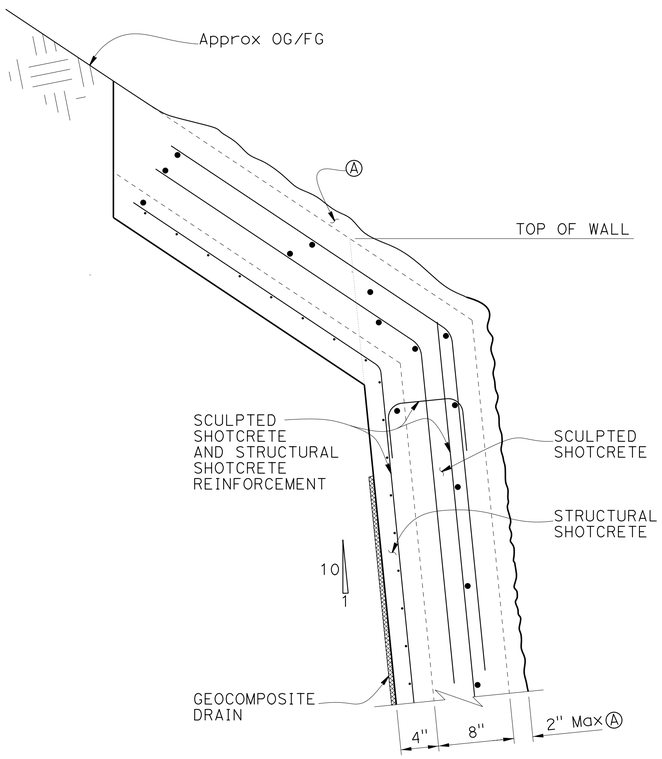

TOP OF WALL SCULPTED SHOTCRETE TREATMENT REINFORCEMENT

No Scale

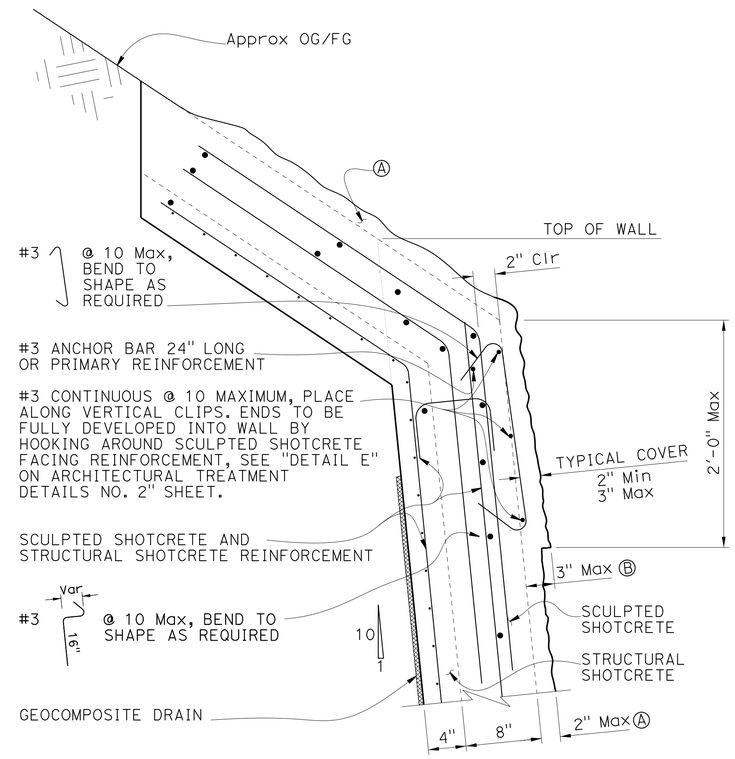

PRIMARY STRATA LINE AT TOP OF WALL SCULPTED SHOTCRETE TREATMENT REINFORCEMENT

No Scale

NOTES:

1. See also "SCULPTED SHOTCRETE TREATMENT DETAILS NO. 2" sheet for reinforcement.
2. Soil nail not shown for clarity.
3. Longitudinal bars shall taper to a point and be flush with the finished wall surface at primary strata line ends where it transitions into the wall face.
4. Cable railing post pocket and safety hookup are not shown for clarity.

Ⓐ Max 2" thick unreinforced sculpted shotcrete zone for sculpted shotcrete treatment.

Ⓑ Max 3" thick reinforced sculpted shotecrete zone for top of wall sculpted shotcrete treatment.

	BY	CHECKED
DESIGN	S. Hegazi	R. Amir
DETAILS	T. Kusumi	R. Amir / S. Hegazi
QUANTITIES	R. Amir	S. Hegazi

STATE OF CALIFORNIA
DEPARTMENT OF TRANSPORTATION

DIVISION OF ENGINEERING SERVICES
STRUCTURE DESIGN
DESIGN BRANCH 8

BRIDGE NO. 37E0119
POST MILE 2.88/2.99

HECKER PASS SOIL NAIL WALL NO. 10
SCULPTED SHOTCRETE TREATMENT DETAILS NO. 1

STRUCTURES DESIGN DETAIL SHEET (ENGLISH) (REV. 09-01-10)

ORIGINAL SCALE IN INCHES FOR REDUCED PLANS 0 1 2 3

UNIT: 3593
PROJECT NUMBER & PHASE: 0400000813-1
CONTRACT NO.: 04-2A2501

DISREGARD PRINTS BEARING EARLIER REVISION DATES

REVISION DATES: 06-08-11 06-21-12 07-20-13

SHEET 15 OF 20

FILE => 37e0119-u-archdt01.dgn

USERNAME => s124496 DATE PLOTTED => 21-JUN-2013 TIME PLOTTED => 07:04

DIST	COUNTY	ROUTE	POST MILES TOTAL PROJECT	SHEET No.	TOTAL SHEETS
04	SCI	152	0.1/5.2	393	416

REGISTERED CIVIL ENGINEER 08-01-12 DATE

6-17-13
PLANS APPROVAL DATE

REGISTERED PROFESSIONAL ENGINEER
Sameh Hegazi
No. C64899
Exp. 06-30-2013
CIVIL
STATE OF CALIFORNIA

The State of California or its officers or agents shall not be responsible for the accuracy or completeness of electronic copies of this plan sheet.

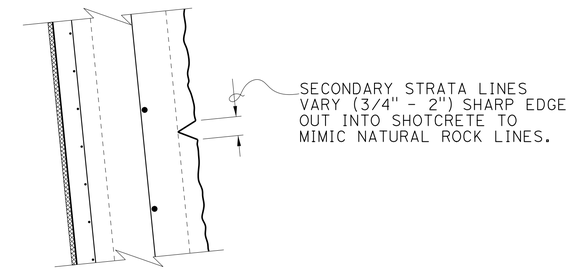

SECONDARY STRATA LINE

No Scale

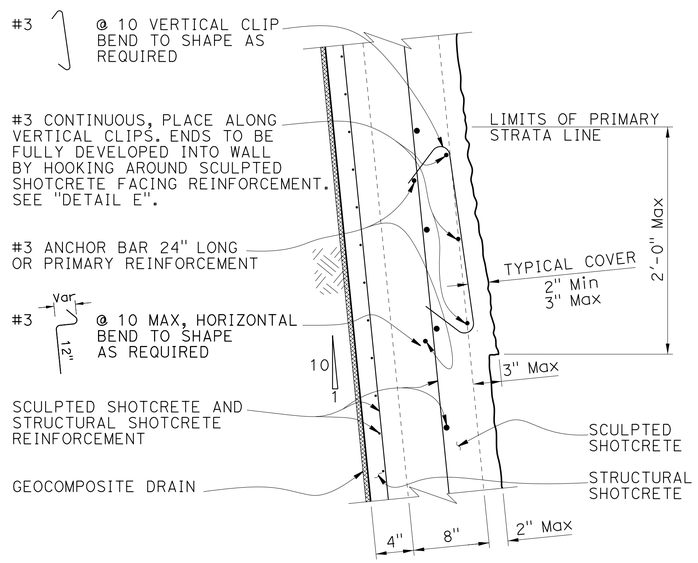

PRIMARY STRATA LINE
SCULPTED SHOTCRETE TREATMENT REINFORCEMENT

No Scale

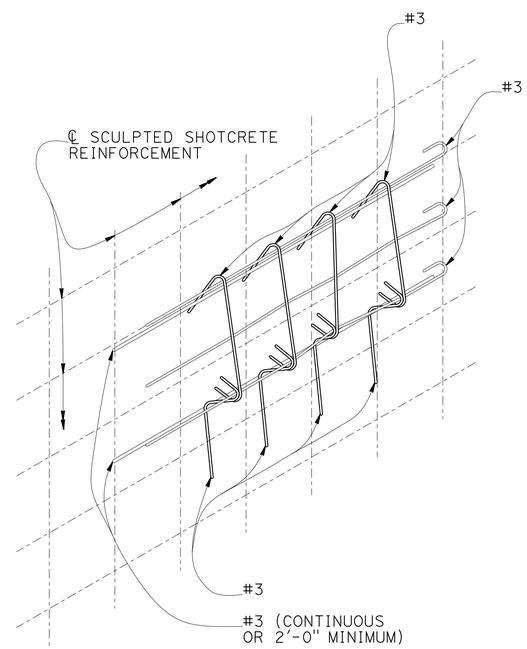

DETAIL E

No Scale

DESIGN	BY S. Hegazi	CHECKED R. Amir	
DETAILS	BY T. Kusumi	CHECKED R. Amir / S. Hegazi	
QUANTITIES	BY R. Amir	CHECKED S. Hegazi	

STATE OF CALIFORNIA
DEPARTMENT OF TRANSPORTATION

DIVISION OF ENGINEERING SERVICES
STRUCTURE DESIGN
DESIGN BRANCH 8

BRIDGE NO. 37E0119
POST MILE 2.88/2.99

HECKER PASS SOIL NAIL WALL NO. 10
SCULPTED SHOTCRETE TREATMENT DETAILS NO. 2

STRUCTURES DESIGN DETAIL SHEET (ENGLISH) (REV. 09-01-10)

ORIGINAL SCALE IN INCHES FOR REDUCED PLANS 0 1 2 3

UNIT: 3593
PROJECT NUMBER & PHASE: 0400000813-1
CONTRACT NO.: 04-2A2501

DISREGARD PRINTS BEARING EARLIER REVISION DATES

REVISION DATES: 06-09-11 05-02-12 07-20-12

SHEET 16 OF 20

FILE => 37e0119-u-arcndt02.dgn

USERNAME => s124496 DATE PLOTTED => 21-JUN-2013 TIME PLOTTED => 07:04

DIST	COUNTY	ROUTE	POST MILES TOTAL PROJECT	SHEET No	TOTAL SHEETS
04	SCI	152	0.1/5.2	394	416

Ali Kaddoura 02-15-12
REGISTERED CIVIL ENGINEER

6-17-13
PLANS APPROVAL DATE

REGISTERED PROFESSIONAL ENGINEER Ali K. Kaddoura No. 55710 Exp. 12-31-12 CIVIL STATE OF CALIFORNIA

The State of California or its officers or agents shall not be responsible for the accuracy or completeness of electronic copies of this plan sheet.

This LOTB sheet was prepared in accordance with the Caltrans Soil & Rock Logging, Classification, & Presentation Manual (2010 Edition).

NOTE: 1. This LOTB sheet was prepared in accordance with the Caltrans Soil & Rock Logging, Classification, and Presentation Manual (April 2010).

2. *NR: Not Recorded.

BENCH MARK

PRHV108

23.62 Rt. "D1" Line, ℄ Rte 152
Sta. 158+34.02
N 1,825,995.04
E 6,216,449.82
EL.=498.21

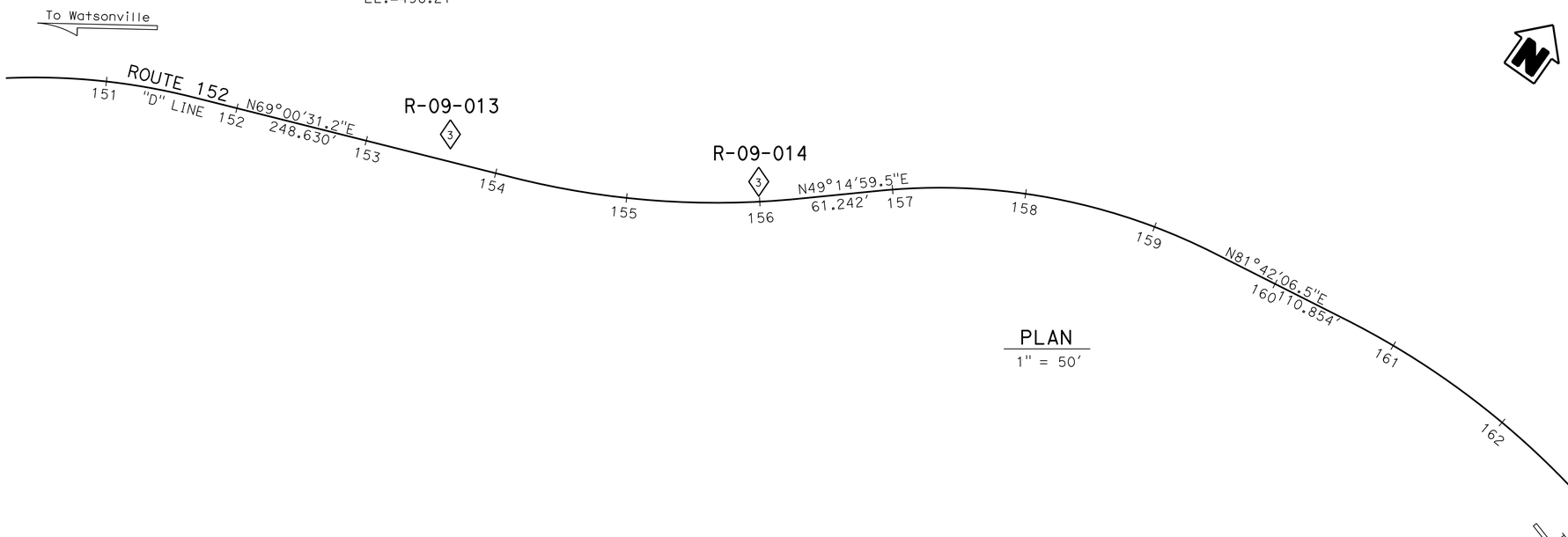

PLAN

1" = 50'

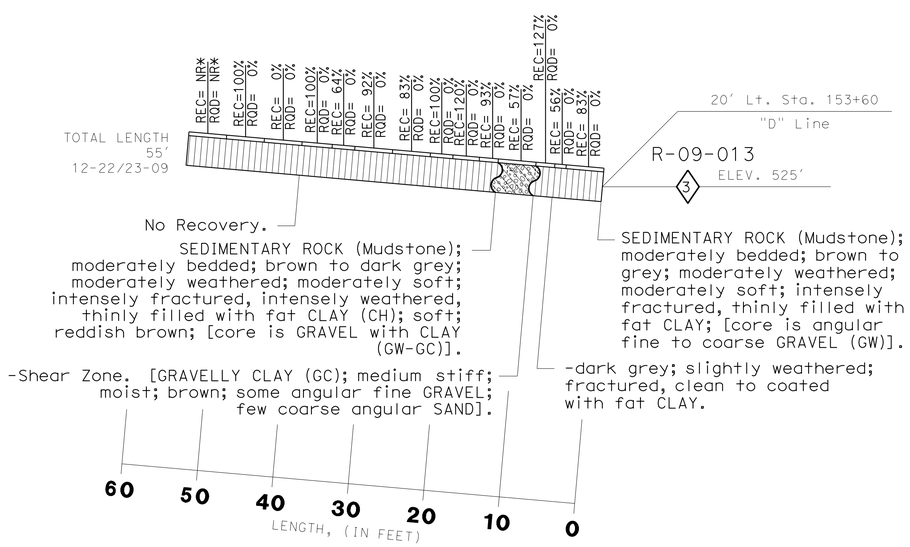

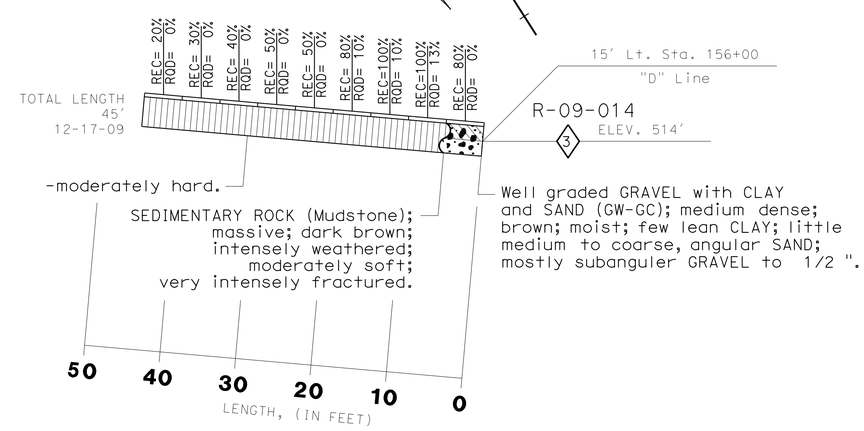

PROFILE

HOR. 1"=10'
VER. 1"=10'

ENGINEERING SERVICES		GEOTECHNICAL SERVICES	STATE OF CALIFORNIA DEPARTMENT OF TRANSPORTATION	DIVISION OF ENGINEERING SERVICES OFFICE OF GEOTECHNICAL DESIGN BRANCH 8	BRIDGE NO. 37E0119 / POST MILES 2.88/2.99	HECKER PASS SOIL NAIL WALL NO. 10
FUNCTIONAL SUPERVISOR	DRAWN BY: M. Reynolds 10/10	FIELD INVESTIGATION BY: C. Risden, A. Kaddoura				LOG OF TEST BORINGS 1 of 4
NAME:	CHECKED BY: M. Gaffney					

ORIGINAL SCALE IN INCHES FOR REDUCED PLANS 0 1 2 3

CU 04
EA 2A2500

DISREGARD PRINTS BEARING EARLIER REVISION DATES 03-09-12 05-25-12

REVISION DATES | SHEET 17 | OF 20

FILE => 37e0119-z-lltb01.dgn

USERNAME => s124496 DATE PLOTTED => 21-JUN-2013 TIME PLOTTED => 07:04

DIST	COUNTY	ROUTE	POST MILES TOTAL PROJECT	SHEET No	TOTAL SHEETS
04	SCI	152	0.1/5.2	395	416

Ali Kaddoura 02-15-12
REGISTERED CIVIL ENGINEER DATE

6-17-13
PLANS APPROVAL DATE

REGISTERED PROFESSIONAL ENGINEER Ali K. Kaddoura No. 55710 Exp. 12-31-12 CIVIL STATE OF CALIFORNIA

The State of California or its officers or agents shall not be responsible for the accuracy or completeness of electronic copies of this plan sheet.

REFERENCE: CALTRANS SOIL & ROCK LOGGING, CLASSIFICATION, AND PRESENTATION MANUAL (JUNE 2007)

CEMENTATION

Description	Criteria
Weak	Crumbles or breaks with handling or little finger pressure.
Moderate	Crumbles or breaks with considerable finger pressure.
Strong	Will not crumble or break with finger pressure.

CONSISTENCY OF COHESIVE SOILS

Description	Unconfined Compressive Strength (tsf)	Pocket Penetrometer Measurement (tsf)	Torvane Measurement (tsf)	Field Approximation
Very Soft	< 0.25	< 0.25	< 0.12	Easily penetrated several inches by fist
Soft	0.25 to 0.50	0.25 to 0.50	0.12 to 0.25	Easily penetrated several inches by thumb
Medium Stiff	0.50 to 1.0	0.50 to 1.0	0.25 to 0.50	Penetrated several inches by thumb with moderate effort
Stiff	1 to 2	1 to 2	0.50 to 1.0	Readily indented by thumb but penetrated only with great effort
Very Stiff	2 to 4	2 to 4	1.0 to 2.0	Readily indented by thumbnail
Hard	> 4.0	> 4.0	> 2.0	Indented by thumbnail with difficulty

BOREHOLE IDENTIFICATION

Symbol	Hole Type	Description
Size	A	Auger Boring
Size	R P	Rotary drilled boring Rotary percussion boring (air)
Size	R	Rotary drilled diamond core
Size	HD HA	Hand driven (1-inch soil tube) Hand Auger
●	D	Dynamic Cone Penetration Boring
▲	CPT	Cone Penetration Test (ASTM D 5778-95)
⬚	O	Other

Note: Size in inches.

PLASTICITY OF FINE-GRAINED SOILS

Description	Criteria
Nonplastic	A 1/8-inch thread cannot be rolled at any water content.
Low	The thread can barely be rolled and the lump cannot be formed when drier than the plastic limit.
Medium	The thread is easy to roll and not much time is required to reach the plastic limit. The thread cannot be rerolled after reaching the plastic limit. The lump crumbles when drier than the plastic limit.
High	It takes considerable time rolling and kneading to reach the plastic limit. The thread can be rerolled several times after reaching the plastic limit. The lump can be formed without crumbling when drier than the plastic limit.

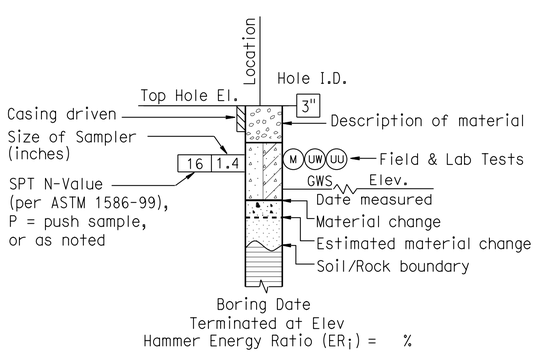

ROTARY BORING

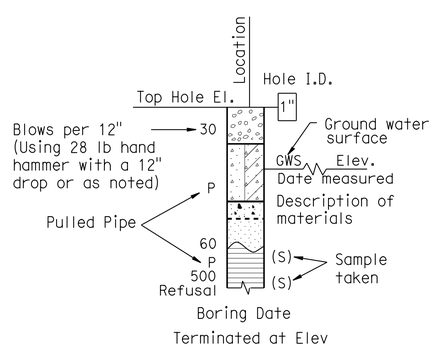

HAND BORING

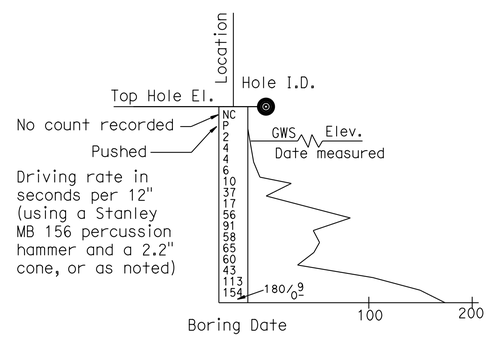

DYNAMIC CONE PENETRATION BORING

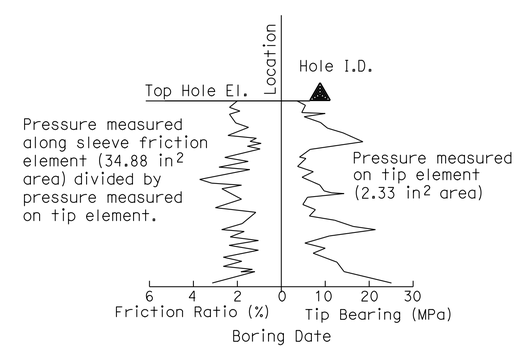

CONE PENETRATION TEST (CPT) SOUNDING

ENGINEERING SERVICES				GEOTECHNICAL SERVICES	STATE OF CALIFORNIA DEPARTMENT OF TRANSPORTATION	DIVISION OF ENGINEERING SERVICES OFFICE OF GEOTECHNICAL DESIGN BRANCH 8	BRIDGE NO. 37E0119 POST MILE 2.88/2.99	HECKER PASS SOIL NAIL WALL NO. 10
FUNCTIONAL SUPERVISOR	PREPARED BY	M. Reynolds	10/10	FIELD INVESTIGATION BY:				LOG OF TEST BORINGS 2 of 4
NAME:	CHECKED BY	M. Gaffney		A. Kaddoura C. Risden				
GS LOTB SOIL LEGEND				ORIGINAL SCALE IN INCHES FOR REDUCED PLANS 0 1 2 3		CU 04 EA 2A2500	DISREGARD PRINTS BEARING EARLIER REVISION DATES	REVISION DATES 03-08-12 05-25-12 SHEET 18 OF 20

FILE => 37e0119-z-ltb02.dgn

USERNAME => s124496 DATE PLOTTED => 21-JUN-2013 TIME PLOTTED => 07:04

REFERENCE: CALTRANS SOIL & ROCK LOGGING, CLASSIFICATION, AND PRESENTATION MANUAL (JUNE 2007)

DIST	COUNTY	ROUTE	POST MILES TOTAL PROJECT	SHEET No	TOTAL SHEETS
04	SCI	152	0.1/5.2	396	416

Ali Kaddoura 02-15-12
REGISTERED CIVIL ENGINEER DATE

6-17-13
PLANS APPROVAL DATE

REGISTERED PROFESSIONAL ENGINEER Ali K. Kaddoura No. 55710 Exp. 12-31-12 CIVIL STATE OF CALIFORNIA

The State of California or its officers or agents shall not be responsible for the accuracy or completeness of electronic copies of this plan sheet.

GROUP SYMBOLS AND NAMES

Graphic/Symbol	Group Names
GW	Well-graded GRAVEL Well-graded GRAVEL with SAND
GP	Poorly graded GRAVEL Poorly graded GRAVEL with SAND
GW-GM	Well-graded GRAVEL with SILT Well-graded GRAVEL with SILT and SAND
GW-GC	Well-graded GRAVEL with CLAY (or SILTY CLAY) Well-graded GRAVEL with CLAY and SAND (or SILTY CLAY and SAND)
GP-GM	Poorly graded GRAVEL with SILT Poorly graded GRAVEL with SILT and SAND
GP-GC	Poorly graded GRAVEL with CLAY (or SILTY CLAY) Poorly graded GRAVEL with CLAY and SAND (or SILTY CLAY and SAND)
GM	SILTY GRAVEL SILTY GRAVEL with SAND
GC	CLAYEY GRAVEL CLAYEY GRAVEL with SAND
GC-GM	SILTY, CLAYEY GRAVEL SILTY, CLAYEY GRAVEL with SAND
SW	Well-graded SAND Well-graded SAND with GRAVEL
SP	Poorly graded SAND Poorly graded SAND with GRAVEL
SW-SM	Well-graded SAND with SILT Well-graded SAND with SILT and GRAVEL
SW-SC	Well-graded SAND with CLAY (or SILTY CLAY) Well-graded SAND with CLAY and GRAVEL (or SILTY CLAY and GRAVEL)
SP-SM	Poorly graded SAND with SILT Poorly graded SAND with SILT and GRAVEL
SP-SC	Poorly graded SAND with CLAY (or SILTY CLAY) Poorly graded SAND with CLAY and GRAVEL (or SILTY CLAY and GRAVEL)
SM	SILTY SAND SILTY SAND with GRAVEL
SC	CLAYEY SAND CLAYEY SAND with GRAVEL
SC-SM	SILTY, CLAYEY SAND SILTY, CLAYEY SAND with GRAVEL
PT	PEAT
	COBBLES COBBLES and BOULDERS BOULDERS

Graphic/Symbol	Group Names
CL	Lean CLAY Lean CLAY with SAND Lean CLAY with GRAVEL SANDY lean CLAY SANDY lean CLAY with GRAVEL GRAVELLY lean CLAY GRAVELLY lean CLAY with SAND
CL-ML	SILTY CLAY SILTY CLAY with SAND SILTY CLAY with GRAVEL SANDY SILTY CLAY SANDY SILTY CLAY with GRAVEL GRAVELLY SILTY CLAY GRAVELLY SILTY CLAY with SAND
ML	SILT SILT with SAND SILT with GRAVEL SANDY SILT SANDY SILT with GRAVEL GRAVELLY SILT GRAVELLY SILT with SAND
OL	ORGANIC lean CLAY ORGANIC lean CLAY with SAND ORGANIC lean CLAY with GRAVEL SANDY ORGANIC lean CLAY SANDY ORGANIC lean CLAY with GRAVEL GRAVELLY ORGANIC lean CLAY GRAVELLY ORGANIC lean CLAY with SAND
OL	ORGANIC SILT ORGANIC SILT with SAND ORGANIC SILT with GRAVEL SANDY ORGANIC SILT SANDY ORGANIC SILT with GRAVEL GRAVELLY ORGANIC SILT GRAVELLY ORGANIC SILT with SAND
CH	Fat CLAY Fat CLAY with SAND Fat CLAY with GRAVEL SANDY fat CLAY SANDY fat CLAY with GRAVEL GRAVELLY fat CLAY GRAVELLY fat CLAY with SAND
MH	Elastic SILT Elastic SILT with SAND Elastic SILT with GRAVEL SANDY elastic SILT SANDY elastic SILT with GRAVEL GRAVELLY elastic SILT GRAVELLY elastic SILT with SAND
OH	ORGANIC fat CLAY ORGANIC fat CLAY with SAND ORGANIC fat CLAY with GRAVEL SANDY ORGANIC fat CLAY SANDY ORGANIC fat CLAY with GRAVEL GRAVELLY ORGANIC fat CLAY GRAVELLY ORGANIC fat CLAY with SAND
OH	ORGANIC elastic SILT ORGANIC elastic SILT with SAND ORGANIC elastic SILT with GRAVEL SANDY ORGANIC elastic SILT SANDY ORGANIC elastic SILT with GRAVEL GRAVELLY ORGANIC elastic SILT GRAVELLY ORGANIC elastic SILT with SAND
OL/OH	ORGANIC SOIL ORGANIC SOIL with SAND ORGANIC SOIL with GRAVEL SANDY ORGANIC SOIL SANDY ORGANIC SOIL with GRAVEL GRAVELLY ORGANIC SOIL GRAVELLY ORGANIC SOIL with SAND

FIELD AND LABORATORY TESTING

- (C) Consolidation (ASTM D 2435)
- (CL) Collapse Potential (ASTM D 5333)
- (CP) Compaction Curve (CTM 216)
- (CR) Corrosivity Testing (CTM 643, CTM 422, CTM 417)
- (CU) Consolidated Undrained Triaxial (ASTM D 4767)
- (DS) Direct Shear (ASTM D 3080)
- (EI) Expansion Index (ASTM D 4829)
- (M) Moisture Content (ASTM D 2216)
- (OC) Organic Content-% (ASTM D 2974)
- (P) Permeability (CTM 220)
- (PA) Particle Size Analysis (ASTM D 422)
- (PI) Plasticity Index (AASHTO T 90) Liquid Limit (AASHTO T 89)
- (PL) Point Load Index (ASTM D 5731)
- (PM) Pressure Meter
- (PP) Pocket Penetrometer
- (R) R-Value (CTM 301)
- (SE) Sand Equivalent (CTM 217)
- (SG) Specific Gravity (AASHTO T 100)
- (SL) Shrinkage Limit (ASTM D 427)
- (SW) Swell Potential (ASTM D 4546)
- (TV) Pocket Torvane
- (UC) Unconfined Compression-Soil (ASTM D 2166) Unconfined Compression-Rock (ASTM D 2938)
- (UU) Unconsolidated Undrained Triaxial (ASTM D 2850)
- (UW) Unit Weight (ASTM D 4767)
- (VS) Vane Shear (AASHTO T 223)

APPARENT DENSITY OF COHESIONLESS SOILS

Description	SPT N_{60} (Blows / 12 inches)
Very loose	0 - 4
Loose	5 - 10
Medium Dense	11 - 30
Dense	31 - 50
Very Dense	> 50

MOISTURE

Description	Criteria
Dry	Absence of moisture, dusty, dry to the touch
Moist	Damp but no visible water
Wet	Visible free water, usually soil is below water table

PERCENT OR PROPORTION OF SOILS

Description	Criteria
Trace	Particles are present but estimated to be less than 5%
Few	5 to 10%
Little	15 to 25%
Some	30 to 45%
Mostly	50 to 100%

PARTICLE SIZE

Description		Size
Boulder		> 12"
Cobble		3" to 12"
Gravel	Coarse	3/4" to 3"
	Fine	No. 4 to 3/4"
Sand	Coarse	No. 10 to No. 4
	Medium	No. 40 to No. 10
	Fine	No. 200 to No. 40

ENGINEERING SERVICES				GEOTECHNICAL SERVICES
FUNCTIONAL SUPERVISOR	PREPARED BY	M. Reynolds	10/10	FIELD INVESTIGATION BY:
NAME:	CHECKED BY	M. Gaffney		A. Kadoura C. Risden

STATE OF CALIFORNIA DEPARTMENT OF TRANSPORTATION

DIVISION OF ENGINEERING SERVICES OFFICE OF GEOTECHNICAL DESIGN BRANCH 8

BRIDGE NO. 37E0119
POST MILE 2.88/2.99

HECKER PASS SOIL NAIL WALL NO. 10

LOG OF TEST BORINGS 3 of 4

GS LOTB SOIL LEGEND

ORIGINAL SCALE IN INCHES FOR REDUCED PLANS 0 1 2 3

CU 04
EA 2A2500

DISREGARD PRINTS BEARING EARLIER REVISION DATES 03-08-12 05-25-12

REVISION DATES

SHEET 19 OF 20

FILE => 37e0119-z-ltb03.dgn

USERNAME => s124496 DATE PLOTTED => 21-JUN-2013 TIME PLOTTED => 07:04

REFERENCE: CALTRANS SOIL & ROCK LOGGING, CLASSIFICATION, AND PRESENTATION MANUAL (JUNE 2007)

DIST	COUNTY	ROUTE	POST MILES TOTAL PROJECT	SHEET No	TOTAL SHEETS
04	SCI	152	0.1/5.2	397	416

Ali Kaddoura 02-15-12
REGISTERED CIVIL ENGINEER DATE

6-17-13
PLANS APPROVAL DATE

REGISTERED PROFESSIONAL ENGINEER Ali K. Kaddoura No. 55710 Exp. 12-31-12 CIVIL STATE OF CALIFORNIA

The State of California or its officers or agents shall not be responsible for the accuracy or completeness of electronic copies of this plan sheet.

PERCENT CORE RECOVERY (REC) & ROCK QUALITY DESIGNATION (RQD)

$$REC = \frac{\sum \text{Length of the recovered core pieces (inches)}}{\text{Total length of core run (inches)}} \times 100\%$$

$$RQD = \frac{\sum \text{Length of intact core pieces} \geq 4''}{\text{Total length of core run (inches)}} \times 100\%$$

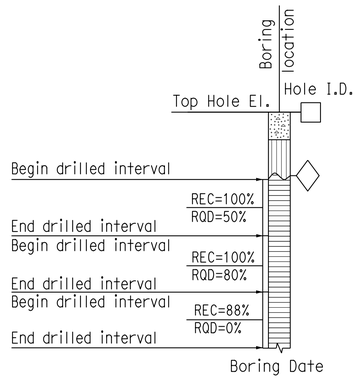

RELATIVE STRENGTH OF INTACT ROCK

Term	Uniaxial Compressive Strength (PSI)
Extremely Strong	> 30,000
Very Strong	14,500 - 30,000
Strong	7,000 - 14,500
Medium Strong	3,500 - 7,000
Weak	700 - 3,500
Very Weak	150 - 700
Extremely Weak	< 150

BEDDING SPACING

Description	Thickness / Spacing
Massive	Greater than 10 ft
Very thickly bedded	3 to 10 ft
Thickly bedded	1 to 3 ft
Moderately bedded	3-5/8" to 1 ft
Thinly bedded	1-1/4" to 3-5/8"
Very thinly bedded	3/8" to 1-1/4"
Laminated	Less than 3/8"

LEGEND OF ROCK MATERIALS

- IGNEOUS ROCK
- SEDIMENTARY ROCK
- METAMORPHIC ROCK

ROCK HARDNESS

Description	Criteria
Extremely Hard	Specimen cannot be scratched with a pocket knife or sharp pick; can only be chipped with repeated heavy hammer blows.
Very Hard	Specimen cannot be scratched with a pocket knife or sharp pick. Breaks with repeated heavy hammer blows.
Hard	Specimen can be scratched with a pocket knife or sharp pick with difficulty (heavy pressure). Heavy hammer blows required to break specimen.
Moderately Hard	Specimen can be scratched with pocket knife or sharp pick with light or moderate pressure. Core breaks with moderate hammer pressure.
Moderately Soft	Specimen can be grooved 1/6" deep with a pocket knife or sharp pick with moderate or heavy pressure. Breaks with light hammer blow or heavy manual pressure.
Soft	Specimen can be grooved or gouged easily by a pocket knife or sharp pick with light pressure, can be scratched with fingernail. Breaks with light to moderate manual pressure.
Very Soft	Specimen can be readily indented, grooved or gouged with fingernail, or carved with a pocket knife. Breaks with light manual pressure.

FRACTURE DENSITY

Description	Observed Fracture Density
Unfractured	No fractures.
Very slightly fractured	Lengths greater than 3 feet.
Slightly fractured	Lengths from 1 to 3 feet with few lengths less than 1 foot or greater than 3 feet.
Moderately fractured	Lengths mostly in 4" to 1 foot range with most lengths about 8"
Intensely fractured	Lengths average from 1 to 4" with scattered fragmented intervals with lengths less than 4"
Very intensely fractured	Mostly chips and fragments with a few scattered short core lengths.

Combination descriptors (such as "Very intensely to intensely fractured") are used where equal distribution of both fracture density characteristics is present over a significant interval or exposure, or where characteristics are "in between" the descriptor definitions. Only two adjacent descriptors may be combined.

WEATHERING DESCRIPTORS FOR INTACT ROCK

Description	Diagnostic features					General Characteristics
	Chemical Weathering-Discoloration and/or oxidation		Mechanical Weathering-Grain boundary conditions (disaggregation) primarily for granitics and some coarse-grained sediments	Texture and Solutioning		
	Body of Rock	Fracture Surfaces		Texture	Solutioning	
Fresh	No discoloration, not oxidized.	No discoloration or oxidation.	No separation, intact (tight).	No change.	No solutioning.	Hammer rings when crystalline rocks are struck.
Slightly Weathered	Discoloration or oxidation is limited to surface of, or short distance from, fractures; some feldspar crystals are dull.	Minor to complete discoloration or oxidation of most surfaces.	No visible separation, intact (tight).	Preserved.	Minor leaching of some soluble minerals may be noted.	Hammer rings when crystalline rocks are struck. Body of rock not weakened.
Moderately Weathered	Discoloration or oxidation extends from fractures usually throughout; Fe-Mg minerals are "rusty," feldspar crystals are "cloudy."	All fracture surfaces are discolored or oxidized.	Partial separation of boundaries visible.	Generally preserved.	Soluble minerals may be mostly leached.	Hammer does not ring when rock is struck. Body of rock is slightly weakened.
Intensely Weathered	Discoloration or oxidation throughout; all feldspars and Fe-Mg minerals are altered to clay to some extent; or chemical alteration produces in-situ disaggregation, see grain boundary conditions.	All fracture surfaces are discolored or oxidized, surfaces friable.	Partial separation, rock is friable; in semiarid conditions granitics are disaggregated.	Texture altered by chemical disintegration (hydration, argillation).	Leaching of soluble minerals may be complete.	Dull sound when struck with hammer, usually can be broken with moderate to heavy manual pressure or by light hammer blow without reference to planes of weakness such as incipient or hairline fractures, or veinlets. Rock is significantly weakened.
Decomposed	Discolored or oxidized throughout, but resistant minerals such as quartz may be unaltered; all feldspars and Fe-Mg minerals are completely altered to clay.		Complete separation of grain boundaries (disaggregated).	Resembles a soil, partial or complete remnant rock structure may be preserved; leaching of soluble minerals usually complete.		Can be granulated by hand. Resistant minerals such as quartz may be present as "stringers" or "dikes."

Combination descriptors (such as "slightly weathered to fresh") are permissible where equal distribution of both weathering characteristics is present over significant intervals or where characteristics present are "in between" the diagnostic feature. However, combination descriptors should not be used where significant, identifiable zones can be delineated. Only two adjacent descriptors may be combined. "Very intensely weathered" is the combination descriptor for "intensely weathered to decomposed."

ENGINEERING SERVICES				GEOTECHNICAL SERVICES
FUNCTIONAL SUPERVISOR	PREPARED BY	M. Reynolds	10/10	FIELD INVESTIGATION BY:
NAME:	CHECKED BY	M. Gaffney		A. Kaddoura C. Risden

STATE OF CALIFORNIA DEPARTMENT OF TRANSPORTATION

DIVISION OF ENGINEERING SERVICES OFFICE OF GEOTECHNICAL DESIGN BRANCH 8

BRIDGE NO. 37E0119
POST MILE 2.88/2.99

HECKER PASS SOIL NAIL WALL NO. 10

LOG OF TEST BORINGS 4 of 4

GS LOTB ROCK LEGEND

ORIGINAL SCALE IN INCHES FOR REDUCED PLANS 0 1 2 3

CU 04
EA 2A2500

DISREGARD PRINTS BEARING EARLIER REVISION DATES → 03-08-12 05-25-12

REVISION DATES

SHEET 20 OF 20

FILE => 37e0119-z-ltb04.dgn

USERNAME => s124496 DATE PLOTTED => 21-JUN-2013 TIME PLOTTED => 07:05

DIST	COUNTY	ROUTE	POST MILES TOTAL PROJECT	SHEET No.	TOTAL SHEETS
04	SCI	152	0.1/5.2	398	416

REGISTERED CIVIL ENGINEER 05-15-13 DATE

6-17-13
PLANS APPROVAL DATE

REGISTERED PROFESSIONAL ENGINEER Sameh Hegazi No. C64899 Exp.06-30-2013 CIVIL STATE OF CALIFORNIA

The State of California or its officers or agents shall not be responsible for the accuracy or completeness of electronic copies of this plan sheet.

LEGEND:
- ○ Indicates approximate location of soil nails
- ■ Indicates approximate location of proof test nails

NOTE:
Not all approximate location of soil nails , weepholes and proof test nails shown.

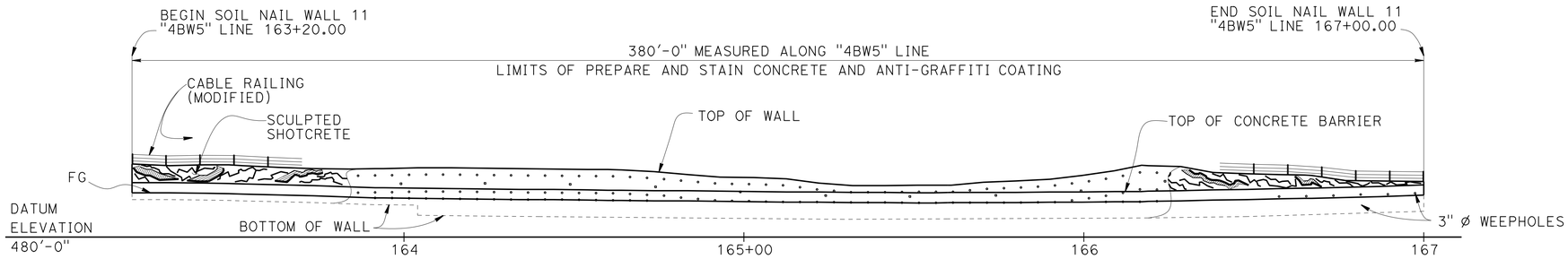

NOTES:
1. Top of the wall elevations shall be verified in the field.
2. Soil nail inclination = 15° typical.
3. The exact locations of the Test Soil Nail to be determined by the Engineer in the field.
4. All soil nail levels are parallel to top of cut except the bottom level which is parallel to bottom of wall.
5. Soil nails shall be placed normal to shotcrete surface in the plan view.
6. The contractor shall field locate all utilities before drilling soil nails.
7. The contractor shall provide and maintain stable soil slopes above and below the soil nail walls.
8. Bottom of wall shall be placed against undisturbed soil material.
9. Prepare and stain sculpted shotcrete surface.
10. Concrete barrier shall be integrally colored and applied with anti-graffiti coating from top of barrier to 6 inches below finished grade.

DEVELOPED ELEVATION

1" = 20'

CURVE DATA

Alignment	R	Δ	T	L
"D1" LINE ①	615.00'	30°35'25"	168.19'	328.35'
"D1" LINE ②	780.00'	15°34'56"	106.72'	212.13'
"4BW5" LINE ③	500.00'	9°38'11"	42.15'	84.09'
"4BW5" LINE ④	625.00'	22°0'21"	120.04'	240.05'

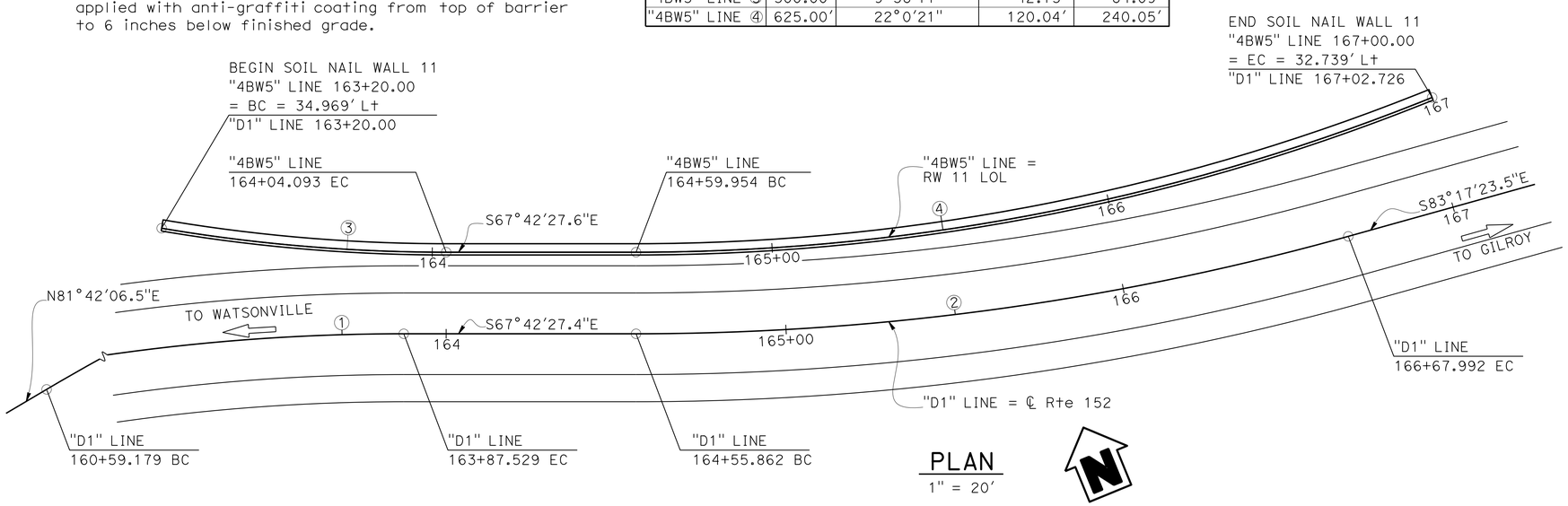

PLAN

1" = 20'

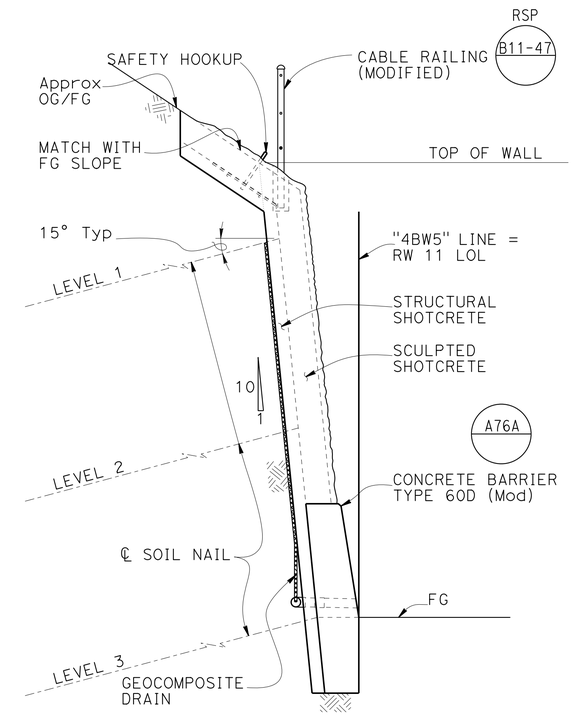

TYPICAL SECTION

½" = 1'

HECKER PASS SOIL NAIL WALL NO. 11

	QUANTITIES	
STRUCTURE EXCAVATION (SOIL NAIL WALL)	490	CY
STRUCTURE BACKFILL (SOIL NAIL WALL)	74	CY
SOIL NAIL	1,965	LF
BAR REINFORCING STEEL (RETAINING WALL)	18,530	LB
STRUCTURAL SHOTCRETE	67	CY
SCULPTED SHOTCRETE	83	CY
PREPARE AND STAIN SCULPTED SHOTCRETE	2,491	SQFT
ANTI-GRAFFITI COATING	1,140	SQFT
MISCELLANEOUS METAL (SAFETY HOOK)	423	LB
CABLE RAILING (MODIFIED)	380	LF
CONCRETE BARRIER (TYPE 60D MODIFIED)	380	LF

BRIAN MORI
DESIGN ENGINEER

	BY	CHECKED
DESIGN	Sameh Hegazi	Rangina Amir
DETAILS	Tomoko Kusumi	S. Hegazi/R. Amir
QUANTITIES	Rangina Amir	Sameh Hegazi

LOAD & RESISTANCE FACTOR DESIGN — LIVE LOADING: HL93 W/"LOW-BOY": PERMIT DESIGN VEHICLE

	BY	CHECKED
LAYOUT	Sameh Hegazi	Adam Menke
SPECIFICATIONS	Tina Chen	PLANS AND SPECS COMPARED: Tina Chen

ORIGINAL SCALE IN INCHES FOR REDUCED PLANS 0 1 2 3

STATE OF CALIFORNIA
DEPARTMENT OF TRANSPORTATION

DIVISION OF ENGINEERING SERVICES
STRUCTURE DESIGN
DESIGN BRANCH 8

BRIDGE NO. 37E0120
POST MILE 3.09/3.16

HECKER PASS SOIL NAIL WALL NO. 11
GENERAL PLAN

UNIT: 3593
PROJECT NUMBER & PHASE: 0400000813-1
CONTRACT NO.: 04-2A2501

DISREGARD PRINTS BEARING EARLIER REVISION DATES

REVISION DATES: 07-14-12 07-20-12 05-08-13

SHEET 1 OF 19

STRUCTURES DESIGN GENERAL PLAN SHEET (ENGLISH) (REV.09-01-10)

FILE => 37e0120-a-gp.dgn

USERNAME => s124496 DATE PLOTTED => 21-JUN-2013 TIME PLOTTED => 09:04

DIST	COUNTY	ROUTE	POST MILES TOTAL PROJECT	SHEET No.	TOTAL SHEETS
04	SCI	152	0.1/5.2	399	416

REGISTERED CIVIL ENGINEER 05-15-13 DATE

6-17-13
PLANS APPROVAL DATE

REGISTERED PROFESSIONAL ENGINEER Sameh Hegazi No. C64899 Exp. 09-30-2013 CIVIL STATE OF CALIFORNIA

The State of California or its officers or agents shall not be responsible for the accuracy or completeness of electronic copies of this plan sheet.

INDEX TO PLANS

SHEET NO.	TITLE
1	GENERAL PLAN
2	INDEX TO PLANS
3	FOUNDATION PLAN
4	STRUCTURE ELEVATION NO. 1
5	STRUCTURE ELEVATION NO. 2
6	TYPICAL SECTION
7	STRUCTURAL DETAILS NO. 1
8	STRUCTURAL DETAILS NO. 2
9	STRUCTURAL DETAILS NO. 3
10	DRAINAGE DETAILS NO. 1
11	DRAINAGE DETAILS NO. 2
12	SCULPTED SHOTCRETE TREATMENT NO. 1
13	SCULPTED SHOTCRETE TREATMENT NO. 2
14	SCULPTED SHOTCRETE TREATMENT DETAILS NO. 1
15	SCULPTED SHOTCRETE TREATMENT DETAILS NO. 2
16	LOG OF TEST BORING 1 of 4
17	LOG OF TEST BORING 2 of 4
18	LOG OF TEST BORING 3 of 4
19	LOG OF TEST BORING 4 of 4

STANDARD PLANS DATED MAY 2010

DETAIL	DESCRIPTION
A10A	ABBREVIATIONS (SHEET 1 OF 2)
A10B	ABBREVIATIONS (SHEET 2 OF 2)
A10C	LINES AND SYMBOLS (SHEET 1 OF 3)
A10D	LINES AND SYMBOLS (SHEET 2 OF 3)
A10E	LINES AND SYMBOLS (SHEET 3 OF 3)
A76A	CONCRETE BARRIER TYPE 60
B0-3	BRIDGE DETAILS
RSP B11-47	CABLE RAILINGS

STANDARD PLAN SHEET NO.

DETAIL NO.

GENERAL NOTES

LOAD AND RESISTANCE FACTOR DESIGN:

AASHTO LFRD Bridge Design Specifications,
4th edition with California Amendments.

FHWA Publication No. FHWA-IF-03-017,
Manual for Design and Construction Monitoring of Soil Nail Walls

REINFORCED CONCRETE & SHOTCRETE:

F'c = 3.6 ksi
Fy = 60 ksi

STRUCTURAL STEEL:

Plates and shapes shall conform to ASTM Designation
A709/A709M Grade (36 ksi)

SOIL NAILS:

Soil nails shall conform to ASTM Designation
A615, Grade 60, fs = 60 ksi, #7 bars

PUNCHING SHEAR:

PS = 45 kips

SOIL DESIGN PARAMETERS IN NAILING ZONES :

NAIL DATA TABLE

ZONE	"4BW5" LINE STATION	UNIT WEIGHT (lb/ft^3)	FRICTION ANGLE DEGREES	COHESION (lb/ft^2)	DESIGN PULL OUT RESISTANCE (Kip/ft)	UPPER ELEVATION (ft)	UPPER ELEVATION (ft)
1	163+20.00 - 165+00.00	125	32	700	2.0	501	489
2	165+00.00 - 167+00.00	125	32	700	2.0	501	490

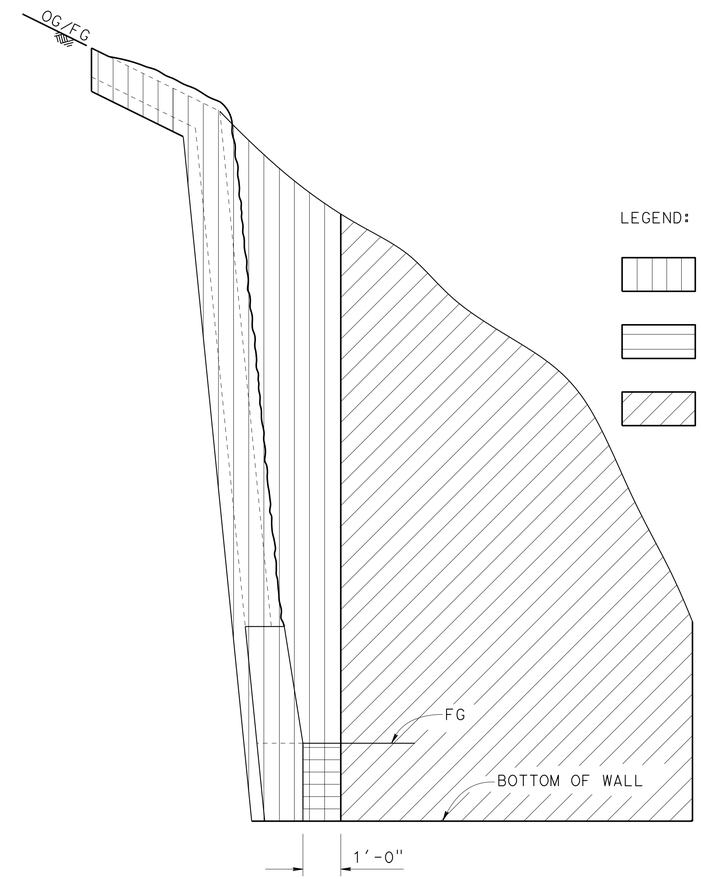

LEGEND:

Structure Excavation (Soil Nail Wall)

Structure Backfill (Soil Nail Wall)

Roadway Excavation (See Road Plans)

LIMITS OF PAYMENT FOR EXCAVATION AND BACKFILL

No Scale

DESIGN	BY Sameh Hegazi	CHECKED Rangina Amir	
DETAILS	BY Antonio Carreon	CHECKED S Hegazi/R Amir	
QUANTITIES	BY Rangina Amir	CHECKED Sameh Hegazi	

STATE OF CALIFORNIA
DEPARTMENT OF TRANSPORTATION

DIVISION OF ENGINEERING SERVICES
STRUCTURE DESIGN
DESIGN BRANCH 8

BRIDGE NO. 37E0120
POST MILE 3.09/3.16

HECKER PASS SOIL NAIL WALL NO. 11
INDEX TO PLANS

STRUCTURES DESIGN DETAIL SHEET (ENGLISH) (REV. 09-01-10)

ORIGINAL SCALE IN INCHES FOR REDUCED PLANS 0 1 2 3

UNIT: 3593
PROJECT NUMBER & PHASE: 0400000813-1
CONTRACT NO.: 04-2A2501

DISREGARD PRINTS BEARING EARLIER REVISION DATES

REVISION DATES 07-20-12 05-10-13 05-24-12

SHEET 2 OF 19

FILE => 37e0120-a-itp.dgn

USERNAME => s124496 DATE PLOTTED => 21-JUN-2013 TIME PLOTTED => 07:05

DIST	COUNTY	ROUTE	POST MILES TOTAL PROJECT	SHEET No.	TOTAL SHEETS
04	SCI	152	0.1/5.2	400	416

REGISTERED CIVIL ENGINEER 08-01-12 DATE

6-17-13
PLANS APPROVAL DATE

REGISTERED PROFESSIONAL ENGINEER
Sameh Hegazi
No. C64899
Exp. 09-30-13
CIVIL
STATE OF CALIFORNIA

The State of California or its officers or agents shall not be responsible for the accuracy or completeness of electronic copies of this plan sheet.

CURVE DATA

Alignment	R	Δ	T	L
"4BW5" LINE ③	500.00	09°38′11"	42.15	84.09
"4BW5" LINE ④	625.00	21°48′24"	120.39	237.87
"D1" LINE ①	615.00	30°35′25"	168.19	328.35
"D1" LINE ②	780.00	15°34′56"	106.72	212.13

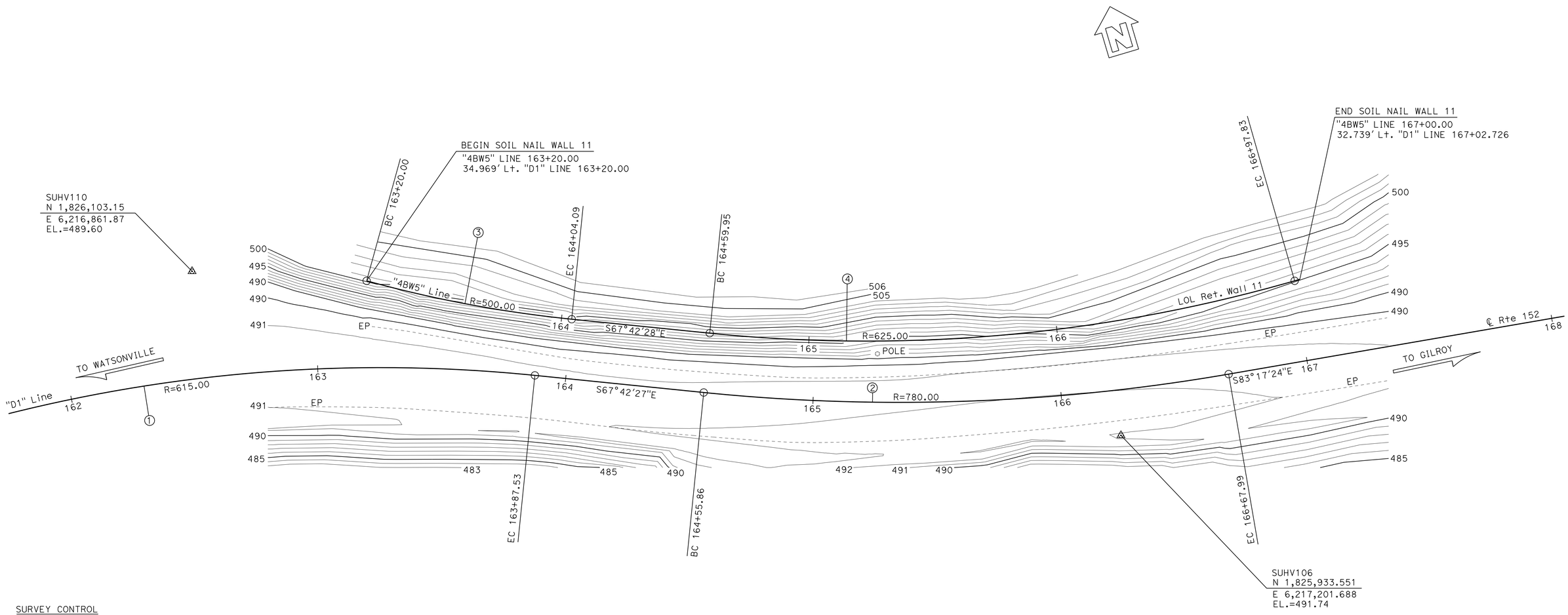

SURVEY CONTROL

SUHV110

Fnd 1" I.P. w/CT PP&T
43.17 Lt. "D1" Line, ℄ Rte 152
Sta. 162+54.23
N 1,826,103.15
E 6,216,861.87
EL.=489.60

SUHV106

18.31 Rt. "D1" Line, ℄ Rte 152
Sta. 166+22.12
N 1,825,933.551
E 6,217,201.688
EL.=491.74

PRELIMINARY INVESTIGATION SECTION

SCALE	VERT.DATUM NAVD 88	PHOTOGRAMMETRY AS OF: X			
1"=20′	HORZ.DATUM NAD83 (92)	SURVEYED	BY District	CHECKED	BY Don Ivy 06/2011
ALIGNMENT TIES Dist. Traverse Sheet		DRAFTED	BY S. Zheng 06/2011	CHECKED	BY Jim Pallares 06/2011

DESIGN	BY Sameh Hegazi	CHECKED Rangina Amir
DETAILS	BY Antonio Carreon	CHECKED S Hegazi/R Amir
QUANTITIES	BY Rangina Amir	CHECKED Sameh Hegazi

STATE OF CALIFORNIA
DEPARTMENT OF TRANSPORTATION

DIVISION OF ENGINEERING SERVICES
STRUCTURE DESIGN
DESIGN BRANCH 8

BRIDGE NO. 37E0120
POST MILE 3.09/3.16

HECKER PASS SOIL NAIL WALL NO.11
FOUNDATION PLAN

STRUCTURES FOUNDATION PLAN SHEET (ENGLISH) (REV. 09-01-10)

ORIGINAL SCALE IN INCHES FOR REDUCED PLANS 0 1 2 3

UNIT: 3646
PROJECT NUMBER & PHASE: 0100000183-1
CONTRACT NO.: 04-2A2501

DISREGARD PRINTS BEARING EARLIER REVISION DATES

REVISION DATES: 05-24-12 07-20-12 02-28-13

SHEET 3 OF 19

FILE => 37e0120-c-fpl01.dgn