Dist	COUNTY	ROUTE	POST MILES TOTAL PROJECT	SHEET No.	TOTAL SHEETS
04	SCI	152	0.1/5.2	201	416

REGISTERED ELECTRICAL ENGINEER 02-25-13 DATE

6-17-13
PLANS APPROVAL DATE

REGISTERED PROFESSIONAL ENGINEER MONA N. ATTALLAH No. 18407 Exp. 6/30/14 ELECTRICAL STATE OF CALIFORNIA

THE STATE OF CALIFORNIA OR ITS OFFICERS OR AGENTS SHALL NOT BE RESPONSIBLE FOR THE ACCURACY OR COMPLETENESS OF SCANNED COPIES OF THIS PLAN SHEET.

NOTE:

FOR ACCURATE RIGHT OF WAY DATA, CONTACT RIGHT OF WAY ENGINEERING AT THE DISTRICT OFFICE.

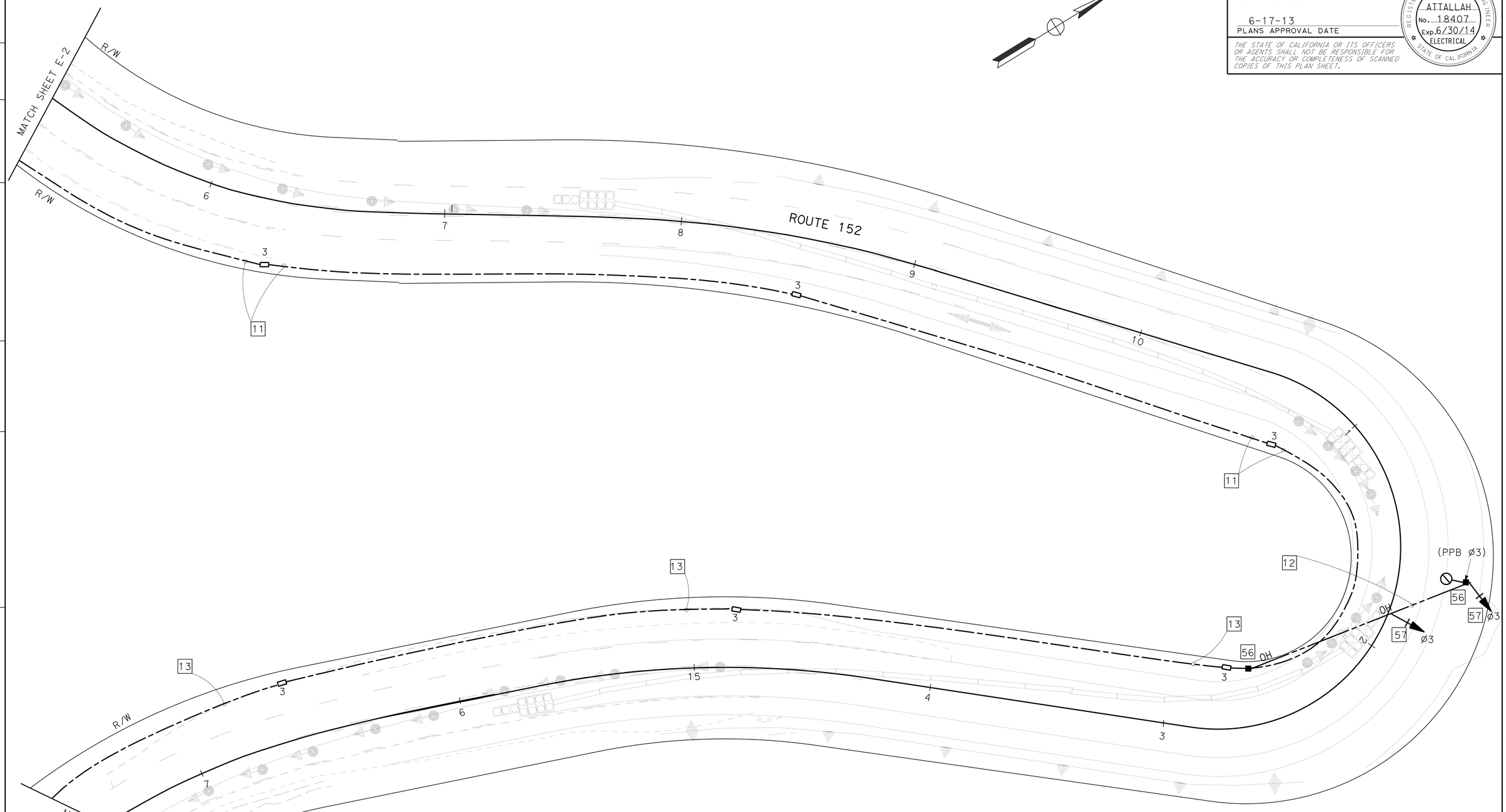

TEMPORARY SIGNAL SYSTEM (LOCATION 1)

SCALE: 1" = 20'

E-3

APPROVED FOR ELECTRICAL WORK ONLY

STATE OF CALIFORNIA - DEPARTMENT OF TRANSPORTATION

Caltrans 06-ELECTRICAL DESIGN

FUNCTIONAL SUPERVISOR: ALI BAKHDOUD

CALCULATED-DESIGNED BY: MONA ATTALLAH

CHECKED BY: DANIEL VO

REVISED BY

DATE REVISED

LAST REVISION 02-25-13

DATE PLOTTED => 21-JUN-2013
TIME PLOTTED => 08:10

Dist	COUNTY	ROUTE	POST MILES TOTAL PROJECT	SHEET No.	TOTAL SHEETS
04	SCI	152	0.1/5.2	202	416

REGISTERED ELECTRICAL ENGINEER 02-25-13 DATE

6-17-13
PLANS APPROVAL DATE

REGISTERED PROFESSIONAL ENGINEER MONA N. ATTALLAH No. 18407 Exp. 6/30/14 ELECTRICAL STATE OF CALIFORNIA

THE STATE OF CALIFORNIA OR ITS OFFICERS OR AGENTS SHALL NOT BE RESPONSIBLE FOR THE ACCURACY OR COMPLETENESS OF SCANNED COPIES OF THIS PLAN SHEET.

NOTE:

FOR ACCURATE RIGHT OF WAY DATA, CONTACT
RIGHT OF WAY ENGINEERING AT THE DISTRICT OFFICE.

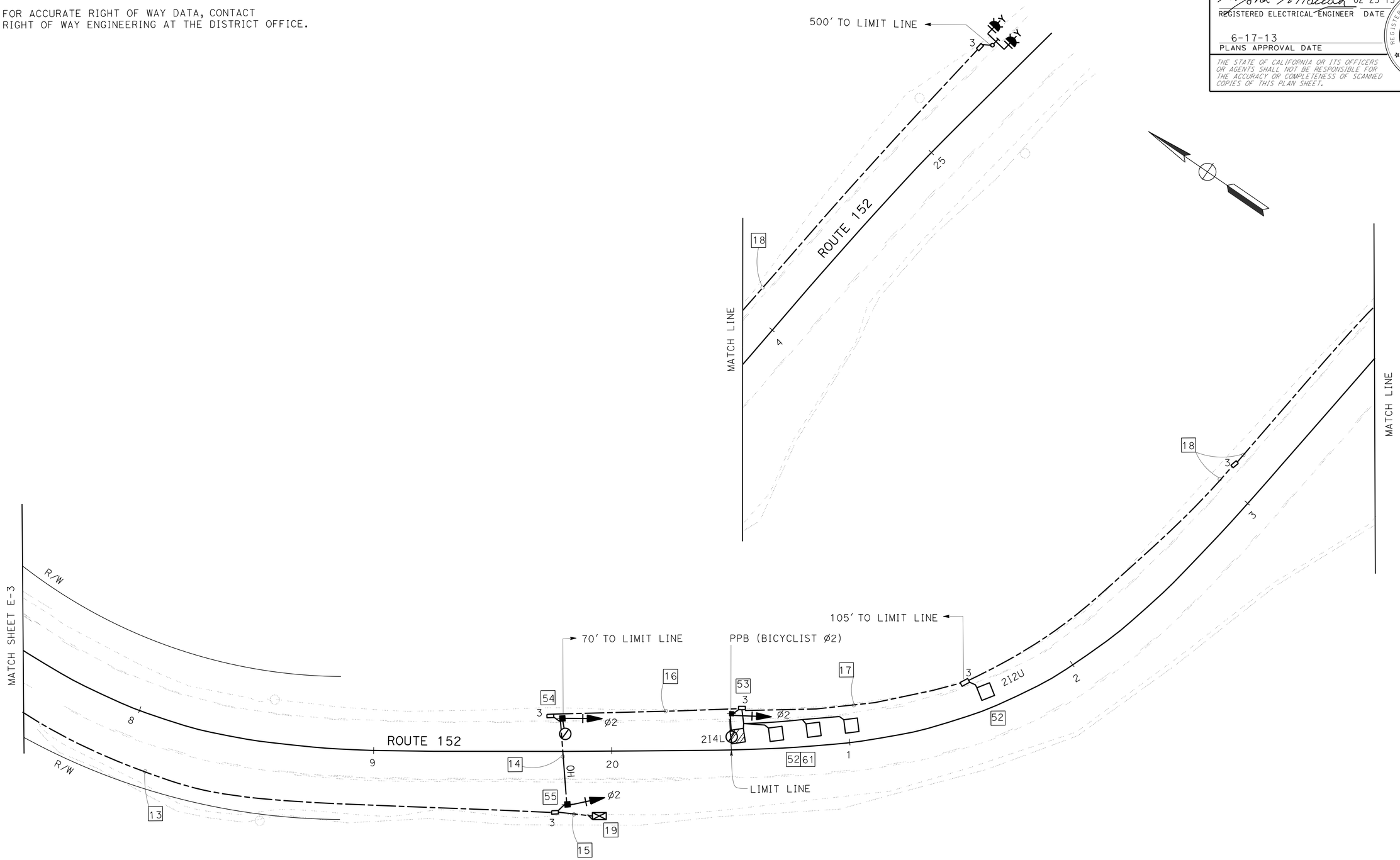

TEMPORARY SIGNAL SYSTEM (LOCATION 1)

SCALE: 1" = 20'

E-4

APPROVED FOR ELECTRICAL WORK ONLY

STATE OF CALIFORNIA - DEPARTMENT OF TRANSPORTATION
Caltrans 06-ELECTRICAL DESIGN

FUNCTIONAL SUPERVISOR: ALI BAKHDOUD
CALCULATED-DESIGNED BY: MONA ATTALLAH
CHECKED BY: DANIEL VO
REVISED BY
DATE REVISED

LAST REVISION 02-25-13
DATE PLOTTED => 21-JUN-2013
TIME PLOTTED => 08:06

Dist	COUNTY	ROUTE	POST MILES TOTAL PROJECT	SHEET No.	TOTAL SHEETS
04	SCI	152	0.1/5.2	203	416

REGISTERED ELECTRICAL ENGINEER 02-25-13 DATE

6-17-13
PLANS APPROVAL DATE

REGISTERED PROFESSIONAL ENGINEER MONA N. ATTALLAH No. 18407 Exp. 6/30/14 ELECTRICAL STATE OF CALIFORNIA

THE STATE OF CALIFORNIA OR ITS OFFICERS OR AGENTS SHALL NOT BE RESPONSIBLE FOR THE ACCURACY OR COMPLETENESS OF SCANNED COPIES OF THIS PLAN SHEET.

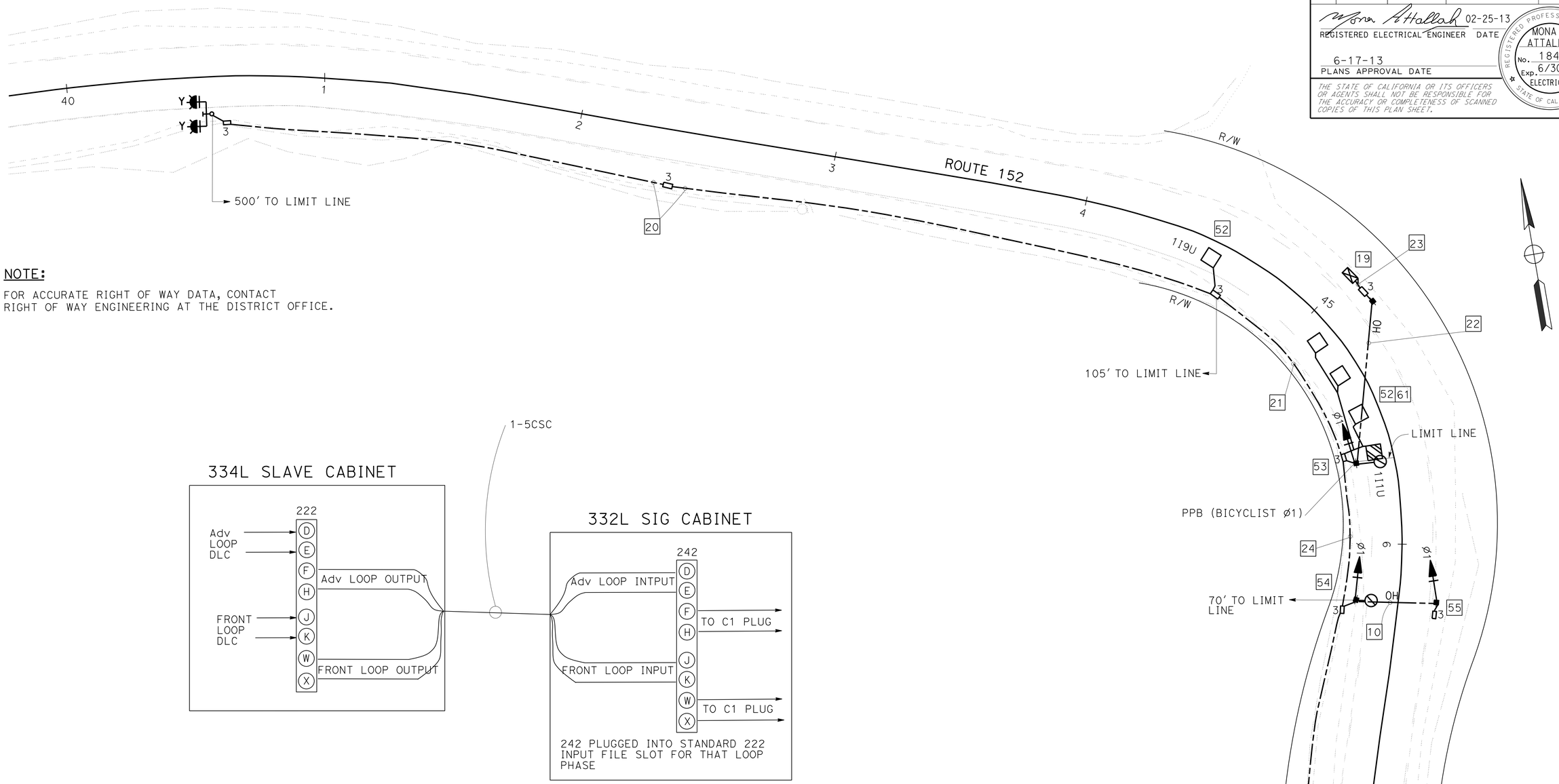

NOTE:

FOR ACCURATE RIGHT OF WAY DATA, CONTACT RIGHT OF WAY ENGINEERING AT THE DISTRICT OFFICE.

DETAIL A

TEMPORARY SIGNAL SYSTEM (LOCATIONS 2 AND 3)

SCALE: 1" = 20'

E-5

APPROVED FOR ELECTRICAL WORK ONLY

STATE OF CALIFORNIA - DEPARTMENT OF TRANSPORTATION
Caltrans 06-ELECTRICAL DESIGN

FUNCTIONAL SUPERVISOR: ALI BAKHDOUD
CALCULATED-DESIGNED BY: MONA ATTALLAH
CHECKED BY: DANIEL VO
REVISED BY
DATE REVISED

LAST REVISION 02-25-13
DATE PLOTTED => 21-JUN-2013
TIME PLOTTED => 08:06

Dist	COUNTY	ROUTE	POST MILES TOTAL PROJECT	SHEET No.	TOTAL SHEETS
04	SCI	152	0.1/5.2	204	416

REGISTERED ELECTRICAL ENGINEER 02-25-13 DATE

6-17-13
PLANS APPROVAL DATE

REGISTERED PROFESSIONAL ENGINEER
MONA N. ATTALLAH
No. 18407
Exp. 6/30/14
ELECTRICAL
STATE OF CALIFORNIA

THE STATE OF CALIFORNIA OR ITS OFFICERS OR AGENTS SHALL NOT BE RESPONSIBLE FOR THE ACCURACY OR COMPLETENESS OF SCANNED COPIES OF THIS PLAN SHEET.

NOTE:

FOR ACCURATE RIGHT OF WAY DATA, CONTACT
RIGHT OF WAY ENGINEERING AT THE DISTRICT OFFICE.

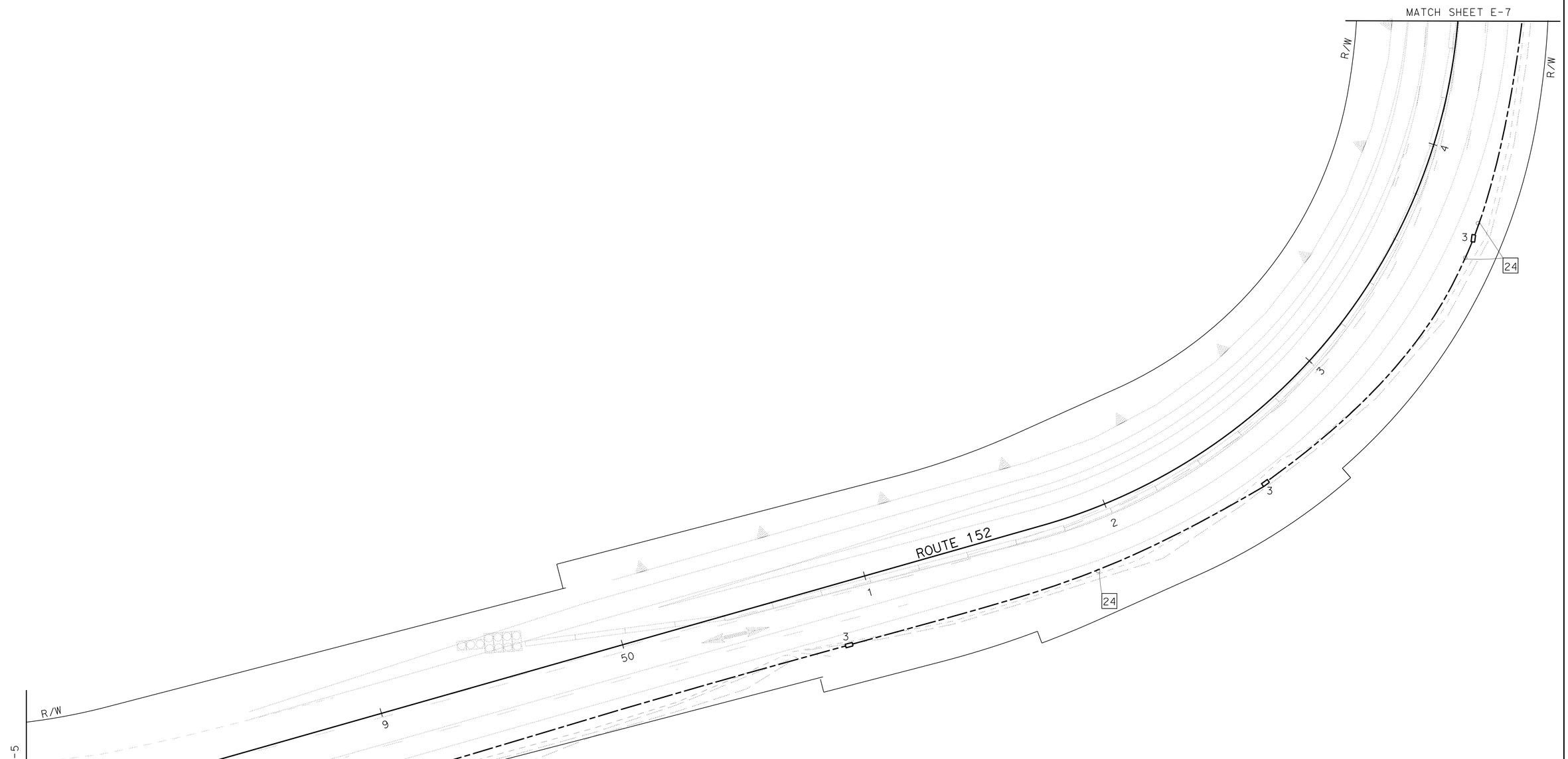

TEMPORARY SIGNAL SYSTEM (LOCATIONS 2 AND 3)

SCALE: 1" = 20'

E-6

APPROVED FOR ELECTRICAL WORK ONLY

STATE OF CALIFORNIA - DEPARTMENT OF TRANSPORTATION
Caltrans 06-ELECTRICAL DESIGN

FUNCTIONAL SUPERVISOR: ALI BAKHDOUD
CALCULATED-DESIGNED BY: MONA ATTALLAH
CHECKED BY: DANIEL VO
REVISED BY
DATE REVISED

LAST REVISION 02-25-13
DATE PLOTTED => 21-JUN-2013
TIME PLOTTED => 08:06

Dist	COUNTY	ROUTE	POST MILES TOTAL PROJECT	SHEET No.	TOTAL SHEETS
04	SCI	152	0.1/5.2	205	416

Mona Attallah 02-25-13
REGISTERED ELECTRICAL ENGINEER DATE

6-17-13
PLANS APPROVAL DATE

REGISTERED PROFESSIONAL ENGINEER
MONA N. ATTALLAH
No. 18407
Exp. 6/30/14
ELECTRICAL
STATE OF CALIFORNIA

THE STATE OF CALIFORNIA OR ITS OFFICERS OR AGENTS SHALL NOT BE RESPONSIBLE FOR THE ACCURACY OR COMPLETENESS OF SCANNED COPIES OF THIS PLAN SHEET.

NOTE:

FOR ACCURATE RIGHT OF WAY DATA, CONTACT
RIGHT OF WAY ENGINEERING AT THE DISTRICT OFFICE.

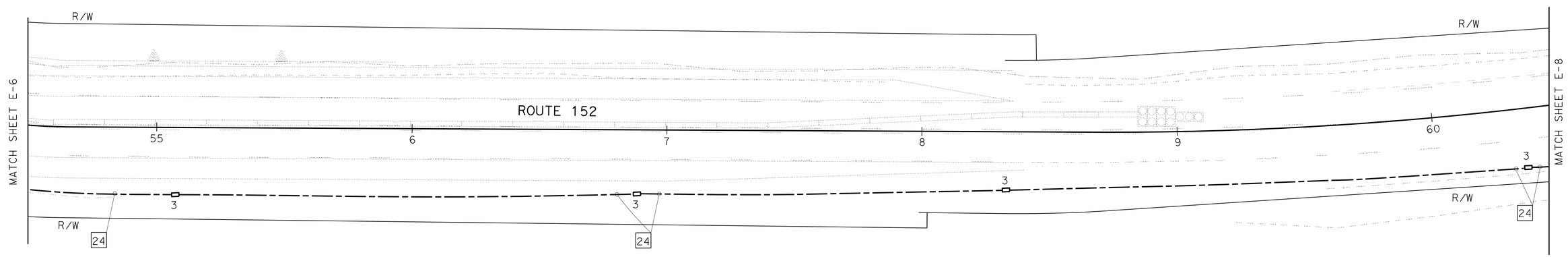

TEMPORARY SIGNAL SYSTEM (LOCATIONS 2 AND 3)

SCALE: 1" = 20'

E-7

APPROVED FOR ELECTRICAL WORK ONLY

REVISED BY	
DATE REVISED	
CALCULATED-DESIGNED BY	MONA ATTALLAH
CHECKED BY	DANIEL VO
FUNCTIONAL SUPERVISOR	ALI BAKHDOUD

STATE OF CALIFORNIA - DEPARTMENT OF TRANSPORTATION
Caltrans 06-ELECTRICAL DESIGN

LAST REVISION 02-25-13
DATE PLOTTED => 21-JUN-2013
TIME PLOTTED => 08:07

Dist	COUNTY	ROUTE	POST MILES TOTAL PROJECT	SHEET No.	TOTAL SHEETS
04	SCI	152	0.1/5.2	206	416

REGISTERED ELECTRICAL ENGINEER 02-25-13 DATE

6-17-13
PLANS APPROVAL DATE

REGISTERED PROFESSIONAL ENGINEER MONA N. ATTALLAH No. 18407 Exp. 6/30/14 ELECTRICAL STATE OF CALIFORNIA

THE STATE OF CALIFORNIA OR ITS OFFICERS OR AGENTS SHALL NOT BE RESPONSIBLE FOR THE ACCURACY OR COMPLETENESS OF SCANNED COPIES OF THIS PLAN SHEET.

NOTE:

FOR ACCURATE RIGHT OF WAY DATA, CONTACT
RIGHT OF WAY ENGINEERING AT THE DISTRICT OFFICE.

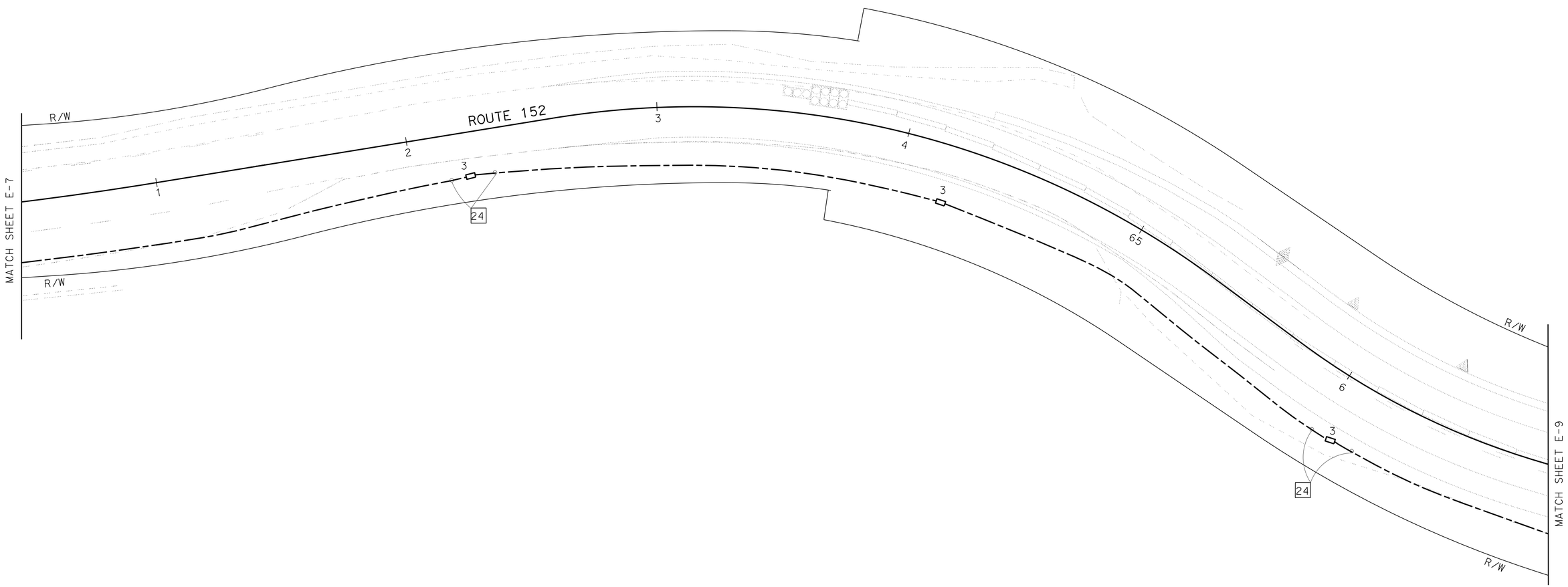

TEMPORARY SIGNAL SYSTEM (LOCATIONS 2 AND 3)

SCALE: 1" = 20'

E-8

APPROVED FOR ELECTRICAL WORK ONLY

STATE OF CALIFORNIA - DEPARTMENT OF TRANSPORTATION
Caltrans 06-ELECTRICAL DESIGN

FUNCTIONAL SUPERVISOR: ALI BAKHDOUD
CALCULATED-DESIGNED BY: MONA ATTALLAH
CHECKED BY: DANIEL VO
REVISED BY
DATE REVISED

LAST REVISION 02-25-13
DATE PLOTTED => 21-JUN-2013
TIME PLOTTED => 08:07

Dist	COUNTY	ROUTE	POST MILES TOTAL PROJECT	SHEET No.	TOTAL SHEETS
04	SCI	152	0.1/5.2	207	416

REGISTERED ELECTRICAL ENGINEER 02-25-13 DATE

6-17-13
PLANS APPROVAL DATE

REGISTERED PROFESSIONAL ENGINEER MONA N. ATTALLAH No. 18407 Exp. 6/30/14 ELECTRICAL STATE OF CALIFORNIA

THE STATE OF CALIFORNIA OR ITS OFFICERS OR AGENTS SHALL NOT BE RESPONSIBLE FOR THE ACCURACY OR COMPLETENESS OF SCANNED COPIES OF THIS PLAN SHEET.

NOTE:

FOR ACCURATE RIGHT OF WAY DATA, CONTACT RIGHT OF WAY ENGINEERING AT THE DISTRICT OFFICE.

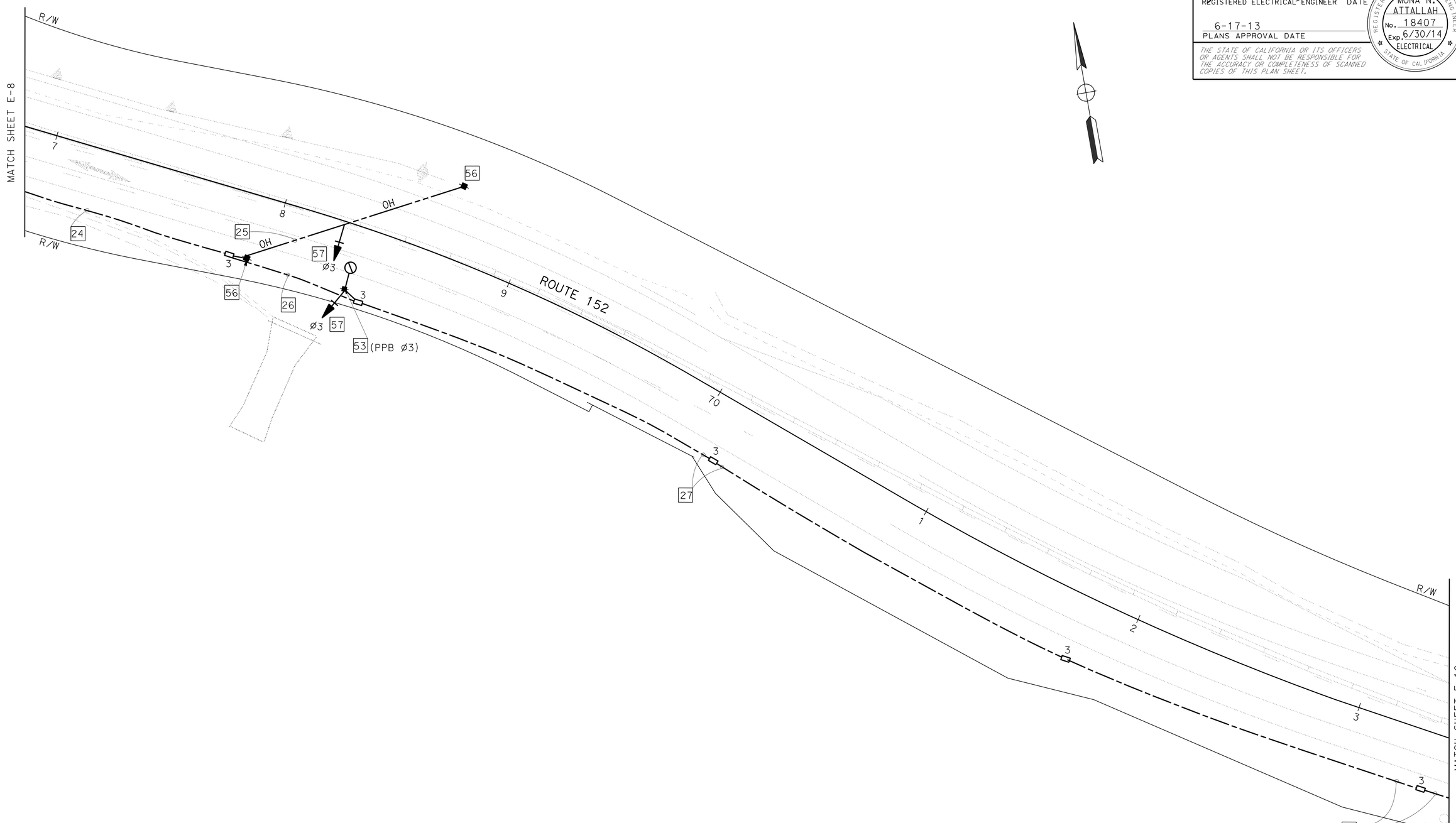

TEMPORARY SIGNAL SYSTEM (LOCATIONS 2 AND 3)

SCALE: 1" = 20'

E-9

APPROVED FOR ELECTRICAL WORK ONLY

STATE OF CALIFORNIA - DEPARTMENT OF TRANSPORTATION

Caltrans 06-ELECTRICAL DESIGN

FUNCTIONAL SUPERVISOR: ALI BAKHDOUD

CALCULATED-DESIGNED BY: MONA ATTALLAH

CHECKED BY: DANIEL VO

REVISED BY

DATE REVISED

LAST REVISION 02-25-13

DATE PLOTTED => 21-JUN-2013
TIME PLOTTED => 08:07

Dist	COUNTY	ROUTE	POST MILES TOTAL PROJECT	SHEET No.	TOTAL SHEETS
04	SCI	152	0.1/5.2	208	416

Mona Attallah 02-25-13
REGISTERED ELECTRICAL ENGINEER DATE

6-17-13
PLANS APPROVAL DATE

REGISTERED PROFESSIONAL ENGINEER
MONA N. ATTALLAH
No. 18407
Exp. 6/30/14
ELECTRICAL
STATE OF CALIFORNIA

THE STATE OF CALIFORNIA OR ITS OFFICERS OR AGENTS SHALL NOT BE RESPONSIBLE FOR THE ACCURACY OR COMPLETENESS OF SCANNED COPIES OF THIS PLAN SHEET.

NOTE:

FOR ACCURATE RIGHT OF WAY DATA, CONTACT RIGHT OF WAY ENGINEERING AT THE DISTRICT OFFICE.

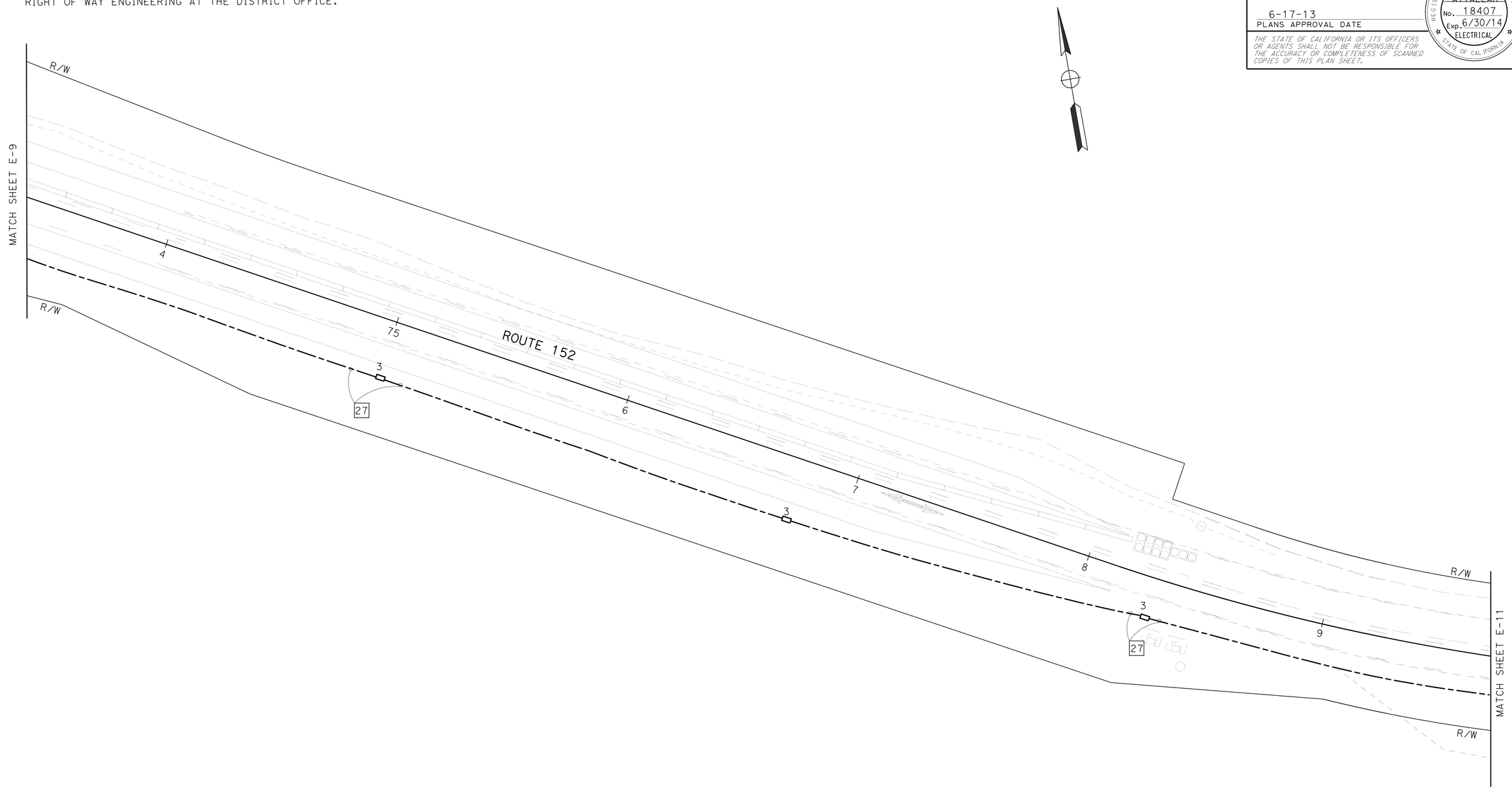

TEMPORARY SIGNAL SYSTEM (LOCATIONS 2 AND 3)

SCALE: 1" = 20'

E-10

APPROVED FOR ELECTRICAL WORK ONLY

STATE OF CALIFORNIA - DEPARTMENT OF TRANSPORTATION
Caltrans 06-ELECTRICAL DESIGN

FUNCTIONAL SUPERVISOR: ALI BAKHDOUD
CALCULATED-DESIGNED BY: MONA ATTALLAH
CHECKED BY: DANIEL VO
REVISED BY
DATE REVISED

LAST REVISION 02-25-13
DATE PLOTTED => 21-JUN-2013
TIME PLOTTED => 08:07

BORDER LAST REVISED 7/2/2010
USERNAME => s121614
DGN FILE => 0400000813UA010.dgn
RELATIVE BORDER SCALE IS IN INCHES 0 1 2 3
UNIT 1515
PROJECT NUMBER & PHASE 04000008131

Dist	COUNTY	ROUTE	POST MILES TOTAL PROJECT	SHEET No.	TOTAL SHEETS
04	SCI	152	0.1/5.2	209	416

REGISTERED ELECTRICAL ENGINEER 02-25-13 DATE

6-17-13
PLANS APPROVAL DATE

REGISTERED PROFESSIONAL ENGINEER MONA N. ATTALLAH No. 18407 Exp. 6/30/14 ELECTRICAL STATE OF CALIFORNIA

THE STATE OF CALIFORNIA OR ITS OFFICERS OR AGENTS SHALL NOT BE RESPONSIBLE FOR THE ACCURACY OR COMPLETENESS OF SCANNED COPIES OF THIS PLAN SHEET.

NOTE:
FOR ACCURATE RIGHT OF WAY DATA, CONTACT
RIGHT OF WAY ENGINEERING AT THE DISTRICT OFFICE.

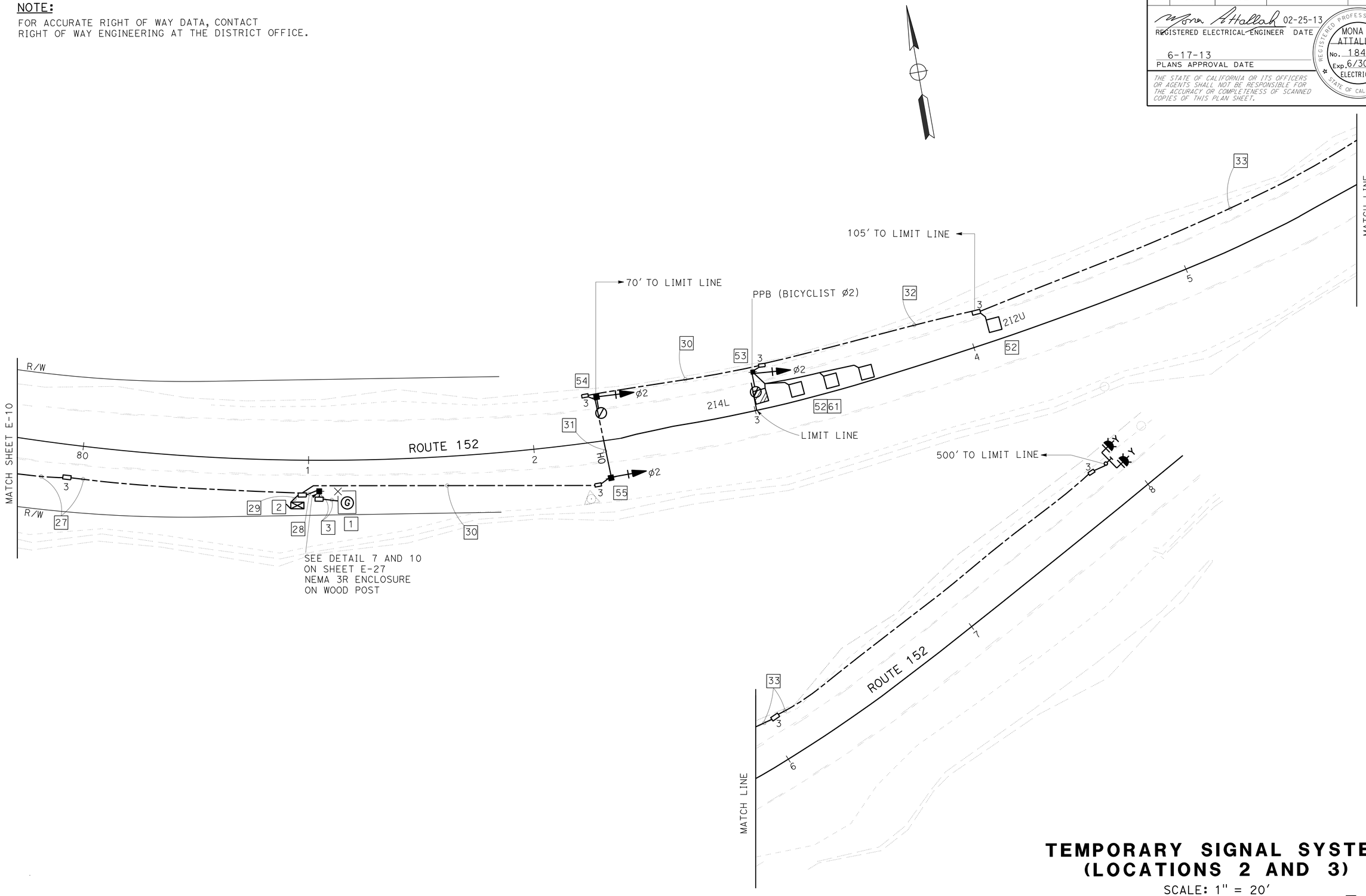

TEMPORARY SIGNAL SYSTEM (LOCATIONS 2 AND 3)

SCALE: 1" = 20'

E-11

APPROVED FOR ELECTRICAL WORK ONLY

REVISED BY | DATE REVISED
MONA ATTALLAH | DANIEL VO
CALCULATED-DESIGNED BY | CHECKED BY
FUNCTIONAL SUPERVISOR | ALI BAKHDOUD

STATE OF CALIFORNIA - DEPARTMENT OF TRANSPORTATION
Caltrans 06-ELECTRICAL DESIGN

LAST REVISION 02-25-13 | DATE PLOTTED => 21-JUN-2013 | TIME PLOTTED => 08:07

Dist	COUNTY	ROUTE	POST MILES TOTAL PROJECT	SHEET No.	TOTAL SHEETS
04	SCI	152	0.1/5.2	210	416

REGISTERED ELECTRICAL ENGINEER 02-25-13 DATE

6-17-13
PLANS APPROVAL DATE

REGISTERED PROFESSIONAL ENGINEER MONA N. ATTALLAH No. 18407 Exp. 6/30/14 ELECTRICAL STATE OF CALIFORNIA

THE STATE OF CALIFORNIA OR ITS OFFICERS OR AGENTS SHALL NOT BE RESPONSIBLE FOR THE ACCURACY OR COMPLETENESS OF SCANNED COPIES OF THIS PLAN SHEET.

NOTE:

FOR ACCURATE RIGHT OF WAY DATA, CONTACT RIGHT OF WAY ENGINEERING AT THE DISTRICT OFFICE.

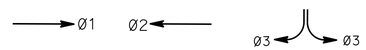

PHASE DIAGRAM
STEADY DEMAND SEQUENCE

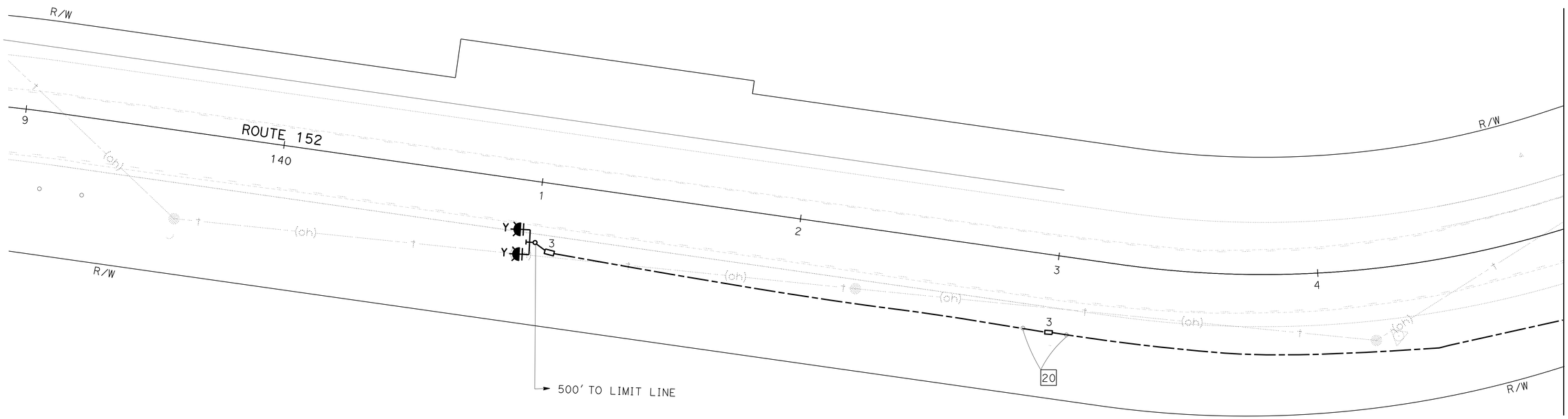

TEMPORARY SIGNAL SYSTEM (LOCATION 4) (STAGES 1 AND 2)

SCALE: 1" = 20'

E-12

APPROVED FOR ELECTRICAL WORK ONLY

STATE OF CALIFORNIA - DEPARTMENT OF TRANSPORTATION
Caltrans 06-ELECTRICAL DESIGN

FUNCTIONAL SUPERVISOR: ALI BAKHDOUD
CALCULATED-DESIGNED BY: MONA ATTALLAH
CHECKED BY: DANIEL VO
REVISED BY
DATE REVISED

LAST REVISION 02-25-13
DATE PLOTTED => 21-JUN-2013
TIME PLOTTED => 08:07

Dist	COUNTY	ROUTE	POST MILES TOTAL PROJECT	SHEET No.	TOTAL SHEETS
04	SCI	152	0.1/5.2	211	416

REGISTERED ELECTRICAL ENGINEER 02-25-13 DATE

6-17-13
PLANS APPROVAL DATE

REGISTERED PROFESSIONAL ENGINEER MONA N. ATTALLAH No. 18407 Exp. 6/30/14 ELECTRICAL STATE OF CALIFORNIA

THE STATE OF CALIFORNIA OR ITS OFFICERS OR AGENTS SHALL NOT BE RESPONSIBLE FOR THE ACCURACY OR COMPLETENESS OF SCANNED COPIES OF THIS PLAN SHEET.

NOTE:

FOR ACCURATE RIGHT OF WAY DATA, CONTACT RIGHT OF WAY ENGINEERING AT THE DISTRICT OFFICE.

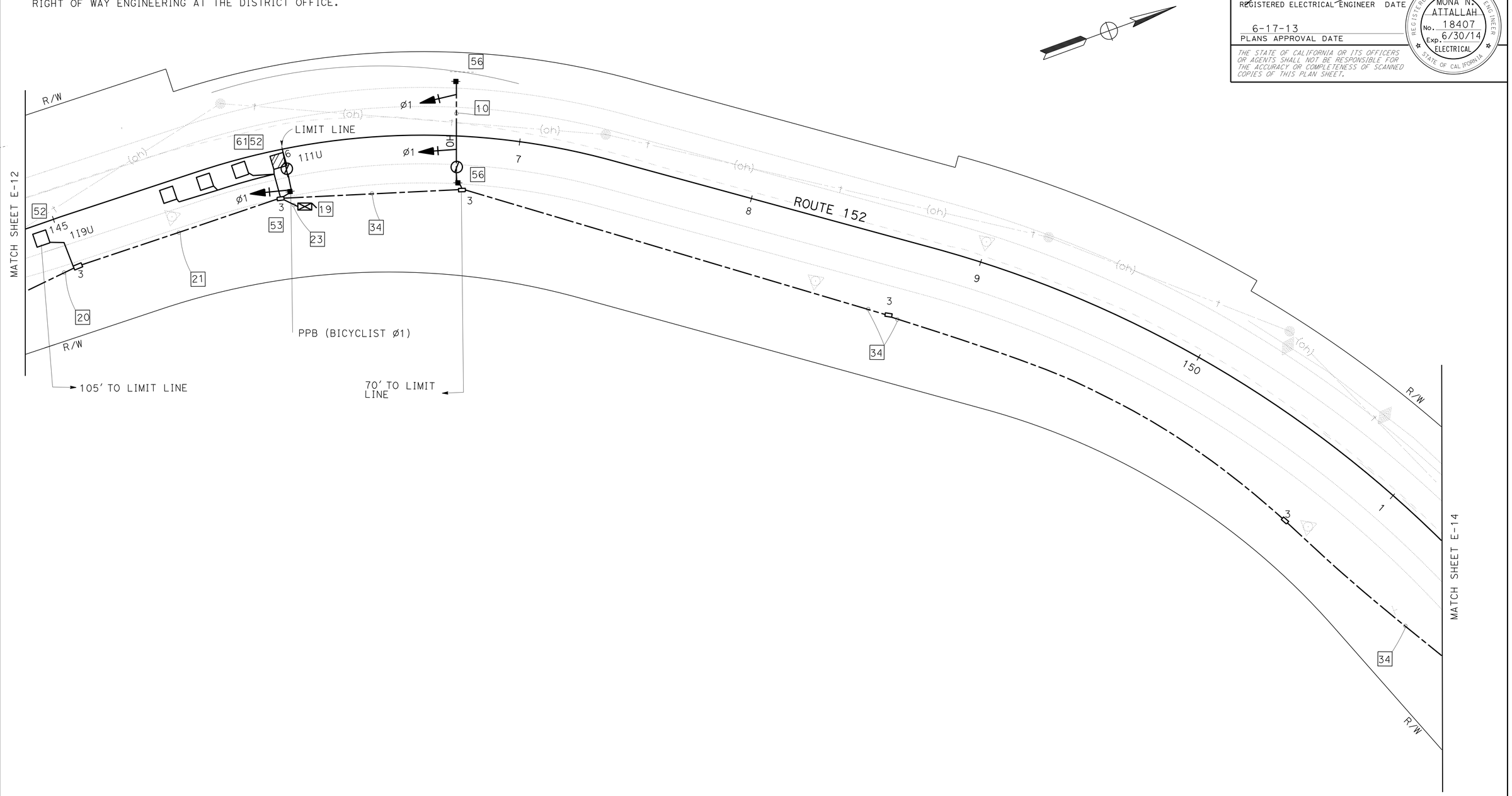

TEMPORARY SIGNAL SYSTEM (LOCATION 4) (STAGES 1 AND 2)

SCALE: 1" = 20'

E-13

APPROVED FOR ELECTRICAL WORK ONLY

STATE OF CALIFORNIA - DEPARTMENT OF TRANSPORTATION
Caltrans 06-ELECTRICAL DESIGN

FUNCTIONAL SUPERVISOR: ALI BAKHDOUD
CALCULATED-DESIGNED BY: MONA ATTALLAH
CHECKED BY: DANIEL VO
REVISED BY
DATE REVISED

LAST REVISION 02-25-13
DATE PLOTTED => 21-JUN-2013
TIME PLOTTED => 08:07

Dist	COUNTY	ROUTE	POST MILES TOTAL PROJECT	SHEET No.	TOTAL SHEETS
04	SCI	152	0.1/5.2	212	416

REGISTERED ELECTRICAL ENGINEER 02-25-13 DATE

6-17-13
PLANS APPROVAL DATE

REGISTERED PROFESSIONAL ENGINEER
MONA N. ATTALLAH
No. 18407
Exp. 6/30/14
ELECTRICAL
STATE OF CALIFORNIA

THE STATE OF CALIFORNIA OR ITS OFFICERS OR AGENTS SHALL NOT BE RESPONSIBLE FOR THE ACCURACY OR COMPLETENESS OF SCANNED COPIES OF THIS PLAN SHEET.

NOTE:

FOR ACCURATE RIGHT OF WAY DATA, CONTACT RIGHT OF WAY ENGINEERING AT THE DISTRICT OFFICE.

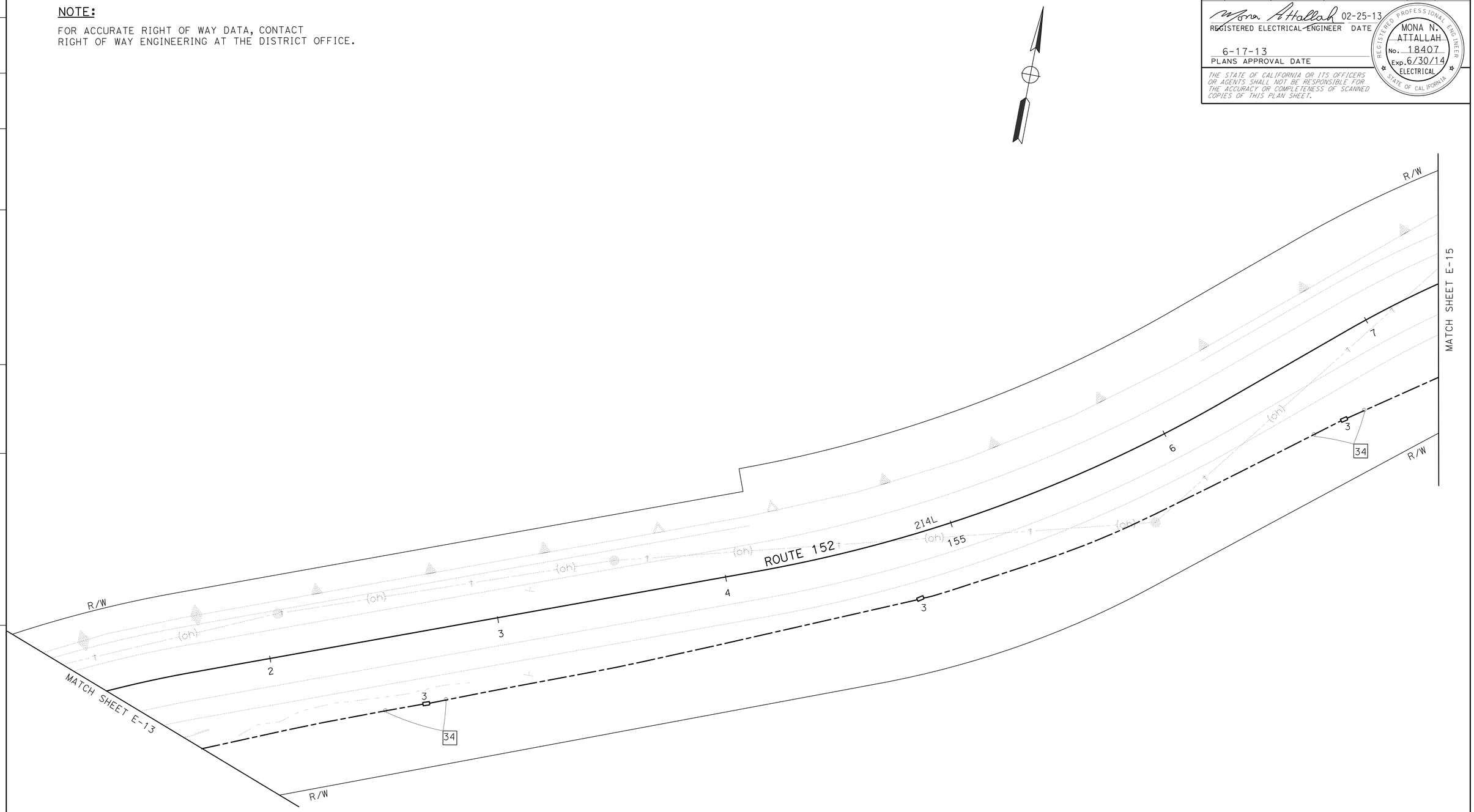

TEMPORARY SIGNAL SYSTEM (LOCATION 4) (STAGES 1 AND 2)

SCALE: 1" = 20'

E-14

APPROVED FOR ELECTRICAL WORK ONLY

STATE OF CALIFORNIA - DEPARTMENT OF TRANSPORTATION
Caltrans 06-ELECTRICAL DESIGN

FUNCTIONAL SUPERVISOR: ALI BAKHDOUD
CALCULATED-DESIGNED BY: MONA ATTALLAH
CHECKED BY: DANIEL VO
REVISED BY
DATE REVISED

LAST REVISION 02-25-13
DATE PLOTTED => 21-JUN-2013
TIME PLOTTED => 08:07

Dist	COUNTY	ROUTE	POST MILES TOTAL PROJECT	SHEET No.	TOTAL SHEETS
04	SCI	152	0.1/5.2	213	416

REGISTERED ELECTRICAL ENGINEER 02-25-13 DATE

6-17-13
PLANS APPROVAL DATE

REGISTERED PROFESSIONAL ENGINEER
MONA N. ATTALLAH
No. 18407
Exp. 6/30/14
ELECTRICAL
STATE OF CALIFORNIA

THE STATE OF CALIFORNIA OR ITS OFFICERS OR AGENTS SHALL NOT BE RESPONSIBLE FOR THE ACCURACY OR COMPLETENESS OF SCANNED COPIES OF THIS PLAN SHEET.

NOTE:

FOR ACCURATE RIGHT OF WAY DATA, CONTACT RIGHT OF WAY ENGINEERING AT THE DISTRICT OFFICE.

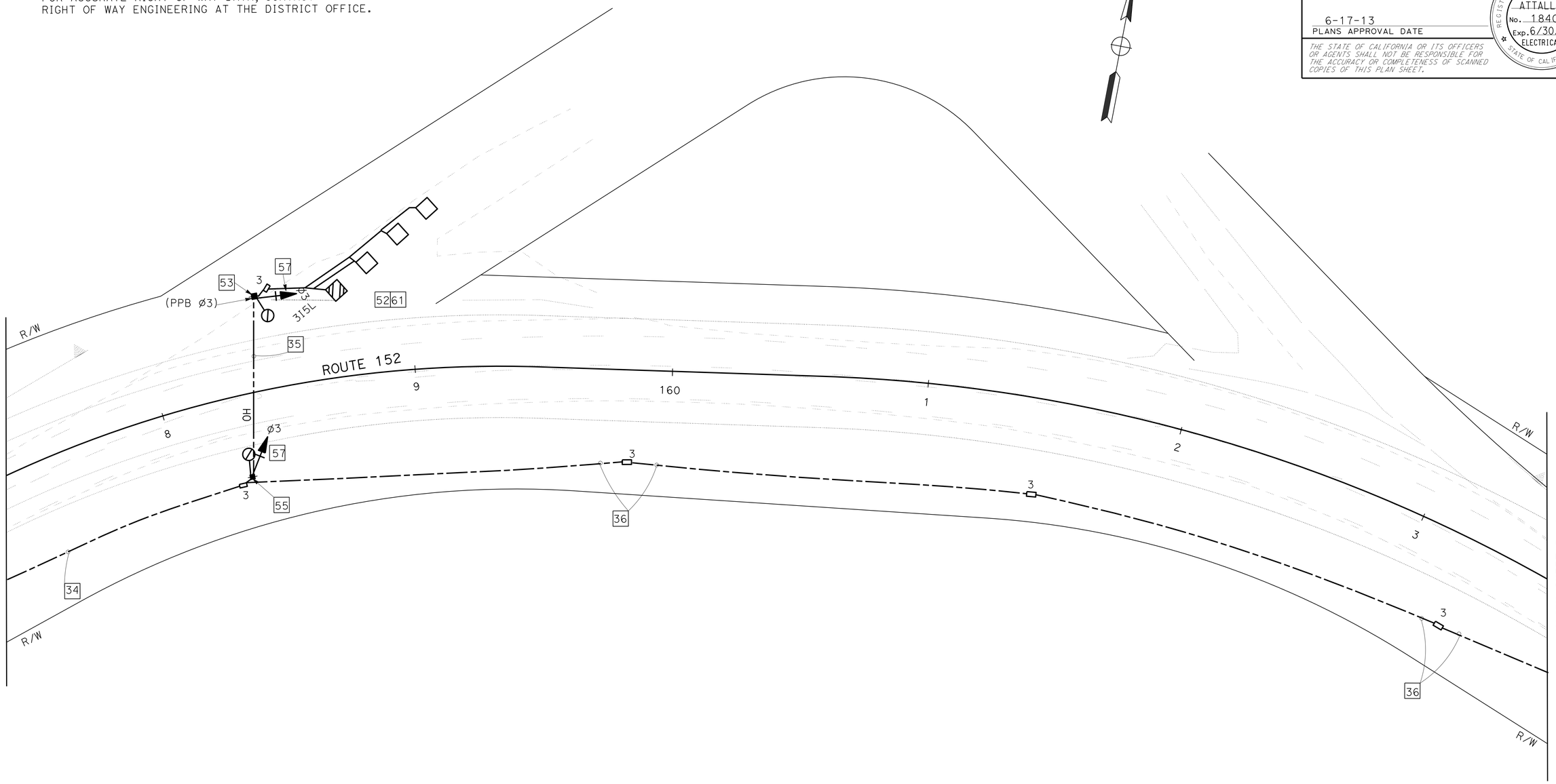

TEMPORARY SIGNAL SYSTEM (LOCATION 4) (STAGES 1 AND 2)

SCALE: 1" = 20'

E-15

APPROVED FOR ELECTRICAL WORK ONLY

STATE OF CALIFORNIA - DEPARTMENT OF TRANSPORTATION
Caltrans 06-ELECTRICAL DESIGN

FUNCTIONAL SUPERVISOR: ALI BAKHDOUD
CALCULATED-DESIGNED BY: MONA ATTALLAH
CHECKED BY: DANIEL VO
REVISED BY
DATE REVISED

LAST REVISION 02-25-13
DATE PLOTTED => 21-JUN-2013
TIME PLOTTED => 08:07

Dist	COUNTY	ROUTE	POST MILES TOTAL PROJECT	SHEET No.	TOTAL SHEETS
04	SCI	152	0.1/5.2	214	416

REGISTERED ELECTRICAL ENGINEER 02-25-13 DATE

6-17-13
PLANS APPROVAL DATE

REGISTERED PROFESSIONAL ENGINEER
MONA N. ATTALLAH
No. 18407
Exp. 6/30/14
ELECTRICAL
STATE OF CALIFORNIA

THE STATE OF CALIFORNIA OR ITS OFFICERS OR AGENTS SHALL NOT BE RESPONSIBLE FOR THE ACCURACY OR COMPLETENESS OF SCANNED COPIES OF THIS PLAN SHEET.

NOTE:

FOR ACCURATE RIGHT OF WAY DATA, CONTACT RIGHT OF WAY ENGINEERING AT THE DISTRICT OFFICE.

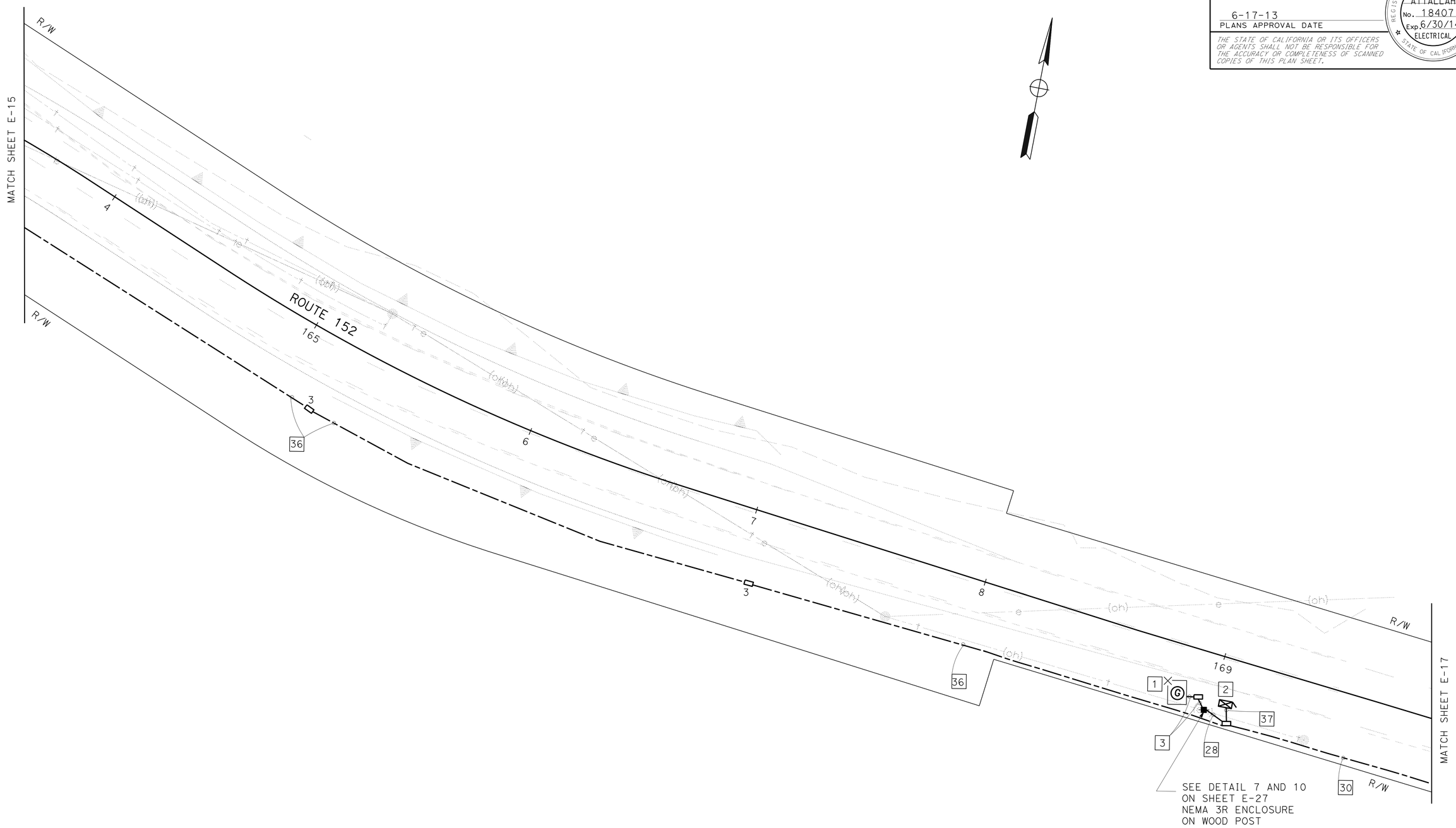

TEMPORARY SIGNAL SYSTEM (LOCATION 4) (STAGES 1 AND 2)

SCALE: 1" = 20'

E-16

APPROVED FOR ELECTRICAL WORK ONLY

STATE OF CALIFORNIA - DEPARTMENT OF TRANSPORTATION
Caltrans 06-ELECTRICAL DESIGN

FUNCTIONAL SUPERVISOR: ALI BAKHDOUD
CALCULATED-DESIGNED BY: MONA ATTALLAH
CHECKED BY: DANIEL VO
REVISED BY
DATE REVISED

LAST REVISION 02-25-13
DATE PLOTTED => 21-JUN-2013
TIME PLOTTED => 08:21

Dist	COUNTY	ROUTE	POST MILES TOTAL PROJECT	SHEET No.	TOTAL SHEETS
04	SCI	152	0.1/5.2	215	416

REGISTERED ELECTRICAL ENGINEER 02-25-13 DATE

6-17-13
PLANS APPROVAL DATE

REGISTERED PROFESSIONAL ENGINEER MONA N. ATTALLAH No. 18407 Exp. 6/30/14 ELECTRICAL STATE OF CALIFORNIA

THE STATE OF CALIFORNIA OR ITS OFFICERS OR AGENTS SHALL NOT BE RESPONSIBLE FOR THE ACCURACY OR COMPLETENESS OF SCANNED COPIES OF THIS PLAN SHEET.

NOTE:

FOR ACCURATE RIGHT OF WAY DATA, CONTACT RIGHT OF WAY ENGINEERING AT THE DISTRICT OFFICE.

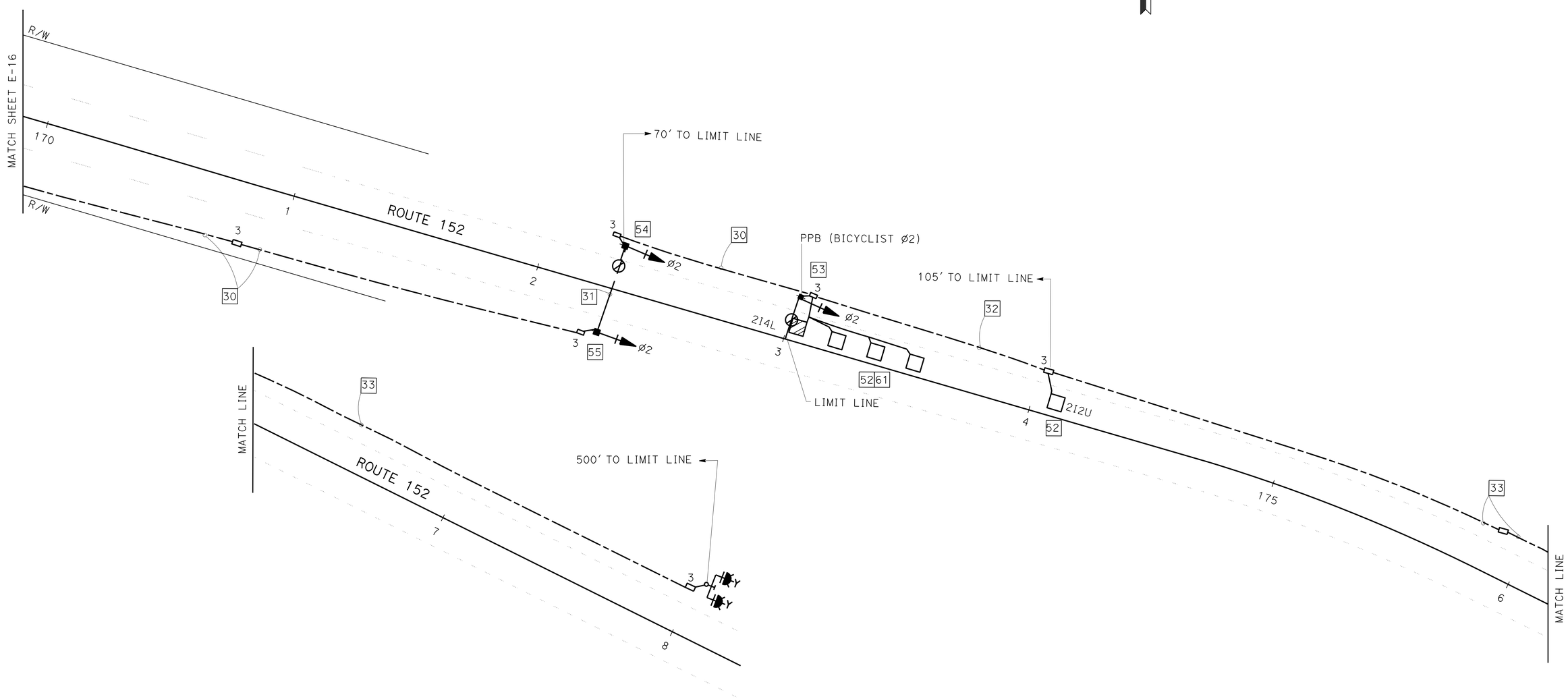

TEMPORARY SIGNAL SYSTEM (LOCATION 4) (STAGES 1 AND 2)

SCALE: 1" = 20'

E-17

APPROVED FOR ELECTRICAL WORK ONLY

STATE OF CALIFORNIA - DEPARTMENT OF TRANSPORTATION
Caltrans 06-ELECTRICAL DESIGN

FUNCTIONAL SUPERVISOR: ALI BAKHDOUD
CALCULATED-DESIGNED BY: MONA ATTALLAH
CHECKED BY: DANIEL VO
REVISED BY
DATE REVISED

LAST REVISION 02-25-13
DATE PLOTTED => 21-JUN-2013
TIME PLOTTED => 08:21

Dist	COUNTY	ROUTE	POST MILES TOTAL PROJECT	SHEET No.	TOTAL SHEETS
04	SCI	152	0.1/5.2	216	416

REGISTERED ELECTRICAL ENGINEER 02-25-13 DATE

6-17-13
PLANS APPROVAL DATE

REGISTERED PROFESSIONAL ENGINEER MONA N. ATTALLAH No. 18407 Exp. 6/30/14 ELECTRICAL STATE OF CALIFORNIA

THE STATE OF CALIFORNIA OR ITS OFFICERS OR AGENTS SHALL NOT BE RESPONSIBLE FOR THE ACCURACY OR COMPLETENESS OF SCANNED COPIES OF THIS PLAN SHEET.

NOTE:

FOR ACCURATE RIGHT OF WAY DATA, CONTACT RIGHT OF WAY ENGINEERING AT THE DISTRICT OFFICE.

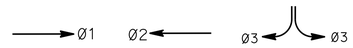

PHASE DIAGRAM
STEADY DEMAND SEQUENCE

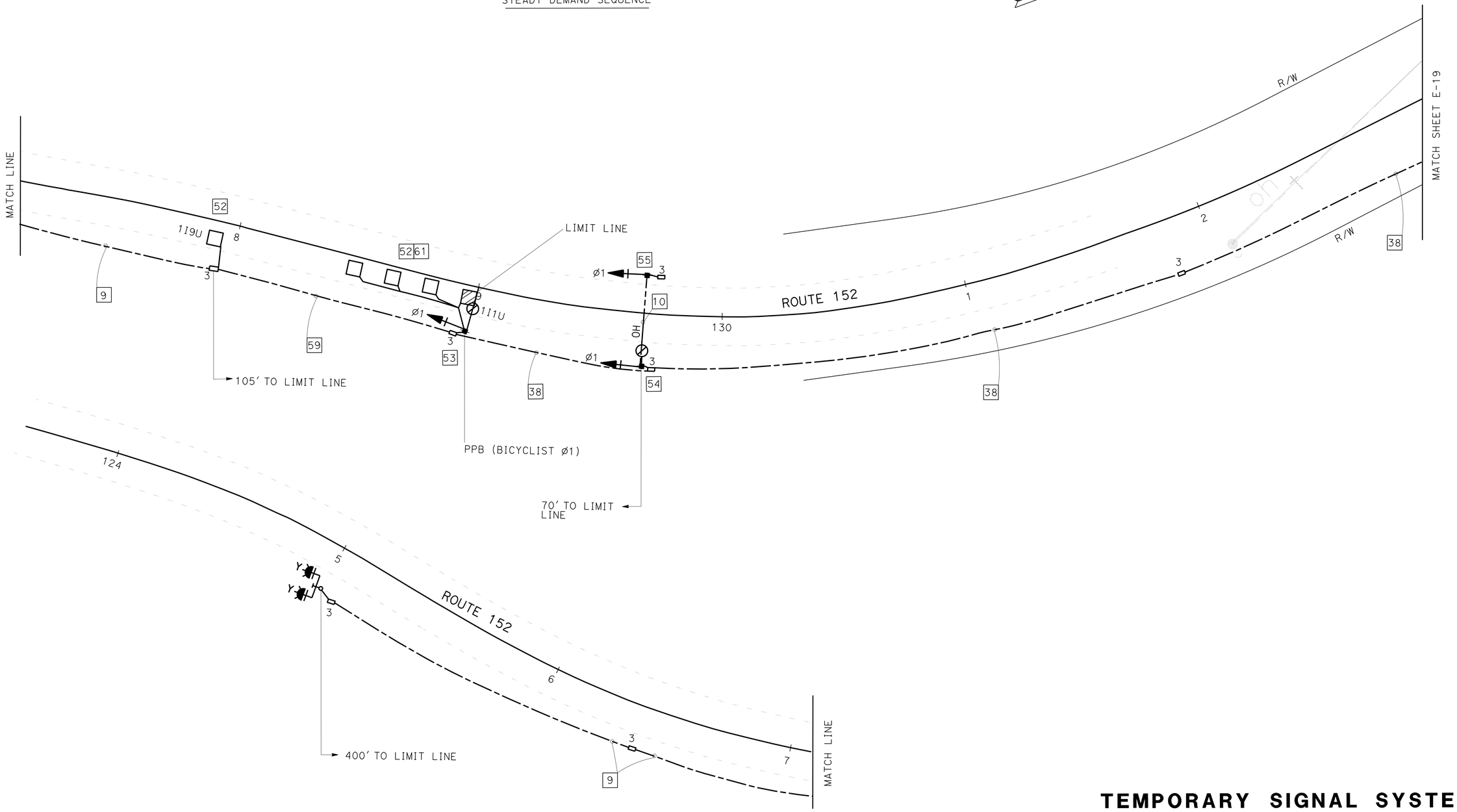

APPROVED FOR ELECTRICAL WORK ONLY

TEMPORARY SIGNAL SYSTEM (LOCATION 4) (STAGES 3 AND 4)

SCALE: 1" = 20'

E-18

STATE OF CALIFORNIA - DEPARTMENT OF TRANSPORTATION
Caltrans 06-ELECTRICAL DESIGN

FUNCTIONAL SUPERVISOR: ALI BAKHDOUD
CALCULATED-DESIGNED BY: MONA ATTALLAH
CHECKED BY: DANIEL VO
REVISED BY
DATE REVISED

LAST REVISION 02-25-13
DATE PLOTTED => 21-JUN-2013
TIME PLOTTED => 08:21

Dist	COUNTY	ROUTE	POST MILES TOTAL PROJECT	SHEET No.	TOTAL SHEETS
04	SCI	152	0.1/5.2	217	416

REGISTERED ELECTRICAL ENGINEER 02-25-13 DATE

6-17-13
PLANS APPROVAL DATE

REGISTERED PROFESSIONAL ENGINEER
MONA N. ATTALLAH
No. 18407
Exp. 6/30/14
ELECTRICAL
STATE OF CALIFORNIA

THE STATE OF CALIFORNIA OR ITS OFFICERS OR AGENTS SHALL NOT BE RESPONSIBLE FOR THE ACCURACY OR COMPLETENESS OF SCANNED COPIES OF THIS PLAN SHEET.

NOTE:

FOR ACCURATE RIGHT OF WAY DATA, CONTACT RIGHT OF WAY ENGINEERING AT THE DISTRICT OFFICE.

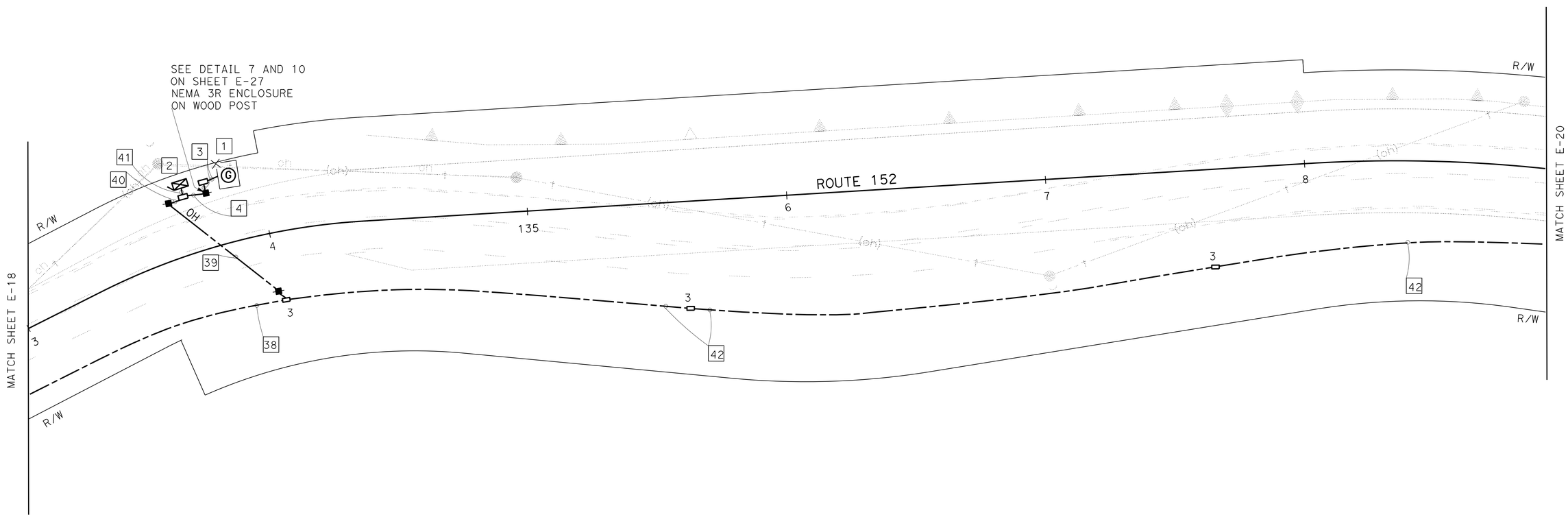

TEMPORARY SIGNAL SYSTEM (LOCATION 4) (STAGES 3 AND 4)

SCALE: 1" = 20'

E-19

APPROVED FOR ELECTRICAL WORK ONLY

STATE OF CALIFORNIA - DEPARTMENT OF TRANSPORTATION
Caltrans 06-ELECTRICAL DESIGN

FUNCTIONAL SUPERVISOR: ALI BAKHDOUD
CALCULATED-DESIGNED BY: MONA ATTALLAH
CHECKED BY: DANIEL VO
REVISED BY
DATE REVISED

LAST REVISION 02-25-13
DATE PLOTTED => 21-JUN-2013
TIME PLOTTED => 08:21

BORDER LAST REVISED 7/2/2010
USERNAME => s119571
DGN FILE => 0400000813UA019 .dgn
RELATIVE BORDER SCALE IS IN INCHES 0 1 2 3
UNIT 1515
PROJECT NUMBER & PHASE 04000008131

Dist	COUNTY	ROUTE	POST MILES TOTAL PROJECT	SHEET No.	TOTAL SHEETS
04	SCI	152	0.1/5.2	218	416

REGISTERED ELECTRICAL ENGINEER 02-25-13 DATE

6-17-13
PLANS APPROVAL DATE

REGISTERED PROFESSIONAL ENGINEER
MONA N. ATTALLAH
No. 18407
Exp. 6/30/14
ELECTRICAL
STATE OF CALIFORNIA

THE STATE OF CALIFORNIA OR ITS OFFICERS OR AGENTS SHALL NOT BE RESPONSIBLE FOR THE ACCURACY OR COMPLETENESS OF SCANNED COPIES OF THIS PLAN SHEET.

NOTE:

FOR ACCURATE RIGHT OF WAY DATA, CONTACT RIGHT OF WAY ENGINEERING AT THE DISTRICT OFFICE.

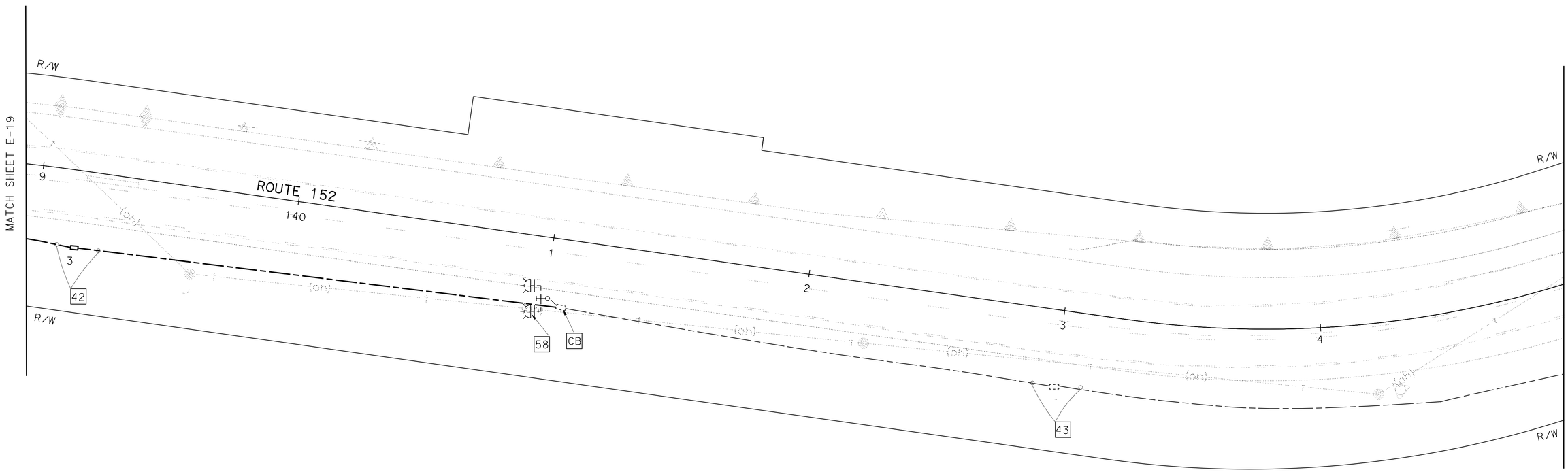

TEMPORARY SIGNAL SYSTEM (LOCATION 4) (STAGES 3 AND 4)

SCALE: 1" = 20'

E-20

APPROVED FOR ELECTRICAL WORK ONLY

STATE OF CALIFORNIA - DEPARTMENT OF TRANSPORTATION
Caltrans 06-ELECTRICAL DESIGN

FUNCTIONAL SUPERVISOR: ALI BAKHDOUD
CALCULATED-DESIGNED BY: MONA ATTALLAH
CHECKED BY: DANIEL VO
REVISED BY
DATE REVISED

LAST REVISION 02-25-13
DATE PLOTTED => 21-JUN-2013
TIME PLOTTED => 08:21

Dist	COUNTY	ROUTE	POST MILES TOTAL PROJECT	SHEET No.	TOTAL SHEETS
04	SCI	152	0.1/5.2	219	416

REGISTERED ELECTRICAL ENGINEER 02-25-13 DATE

6-17-13
PLANS APPROVAL DATE

REGISTERED PROFESSIONAL ENGINEER MONA N. ATTALLAH No. 18407 Exp. 6/30/14 ELECTRICAL STATE OF CALIFORNIA

THE STATE OF CALIFORNIA OR ITS OFFICERS OR AGENTS SHALL NOT BE RESPONSIBLE FOR THE ACCURACY OR COMPLETENESS OF SCANNED COPIES OF THIS PLAN SHEET.

NOTE:

FOR ACCURATE RIGHT OF WAY DATA, CONTACT RIGHT OF WAY ENGINEERING AT THE DISTRICT OFFICE.

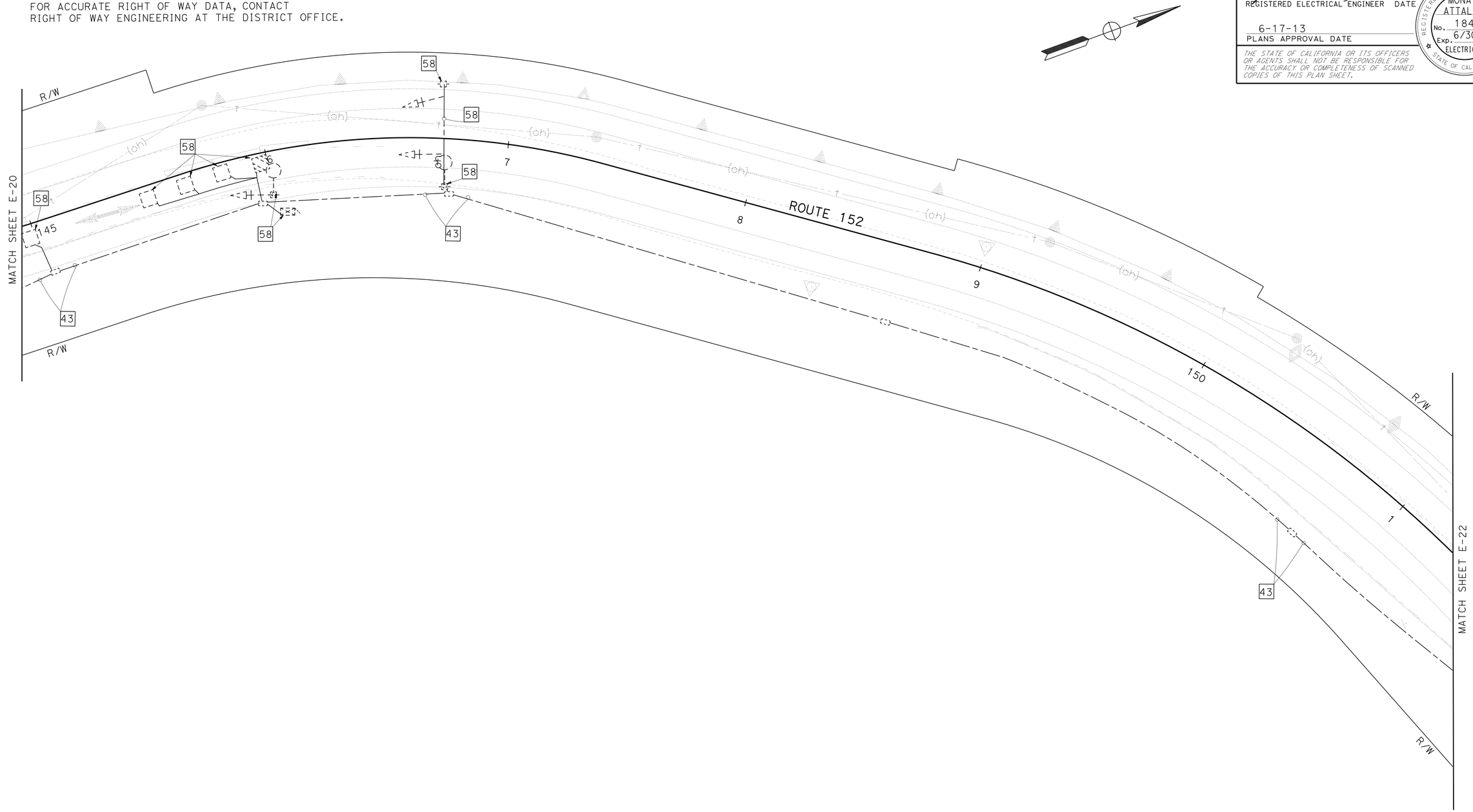

TEMPORARY SIGNAL SYSTEM (LOCATION 4) (STAGES 3 AND 4)

SCALE: 1" = 20'

E-21

APPROVED FOR ELECTRICAL WORK ONLY

STATE OF CALIFORNIA - DEPARTMENT OF TRANSPORTATION

Caltrans 06-ELECTRICAL DESIGN

FUNCTIONAL SUPERVISOR: ALI BAKHDOUD

CALCULATED-DESIGNED BY: MONA ATTALLAH

CHECKED BY: DANIEL VO

REVISED BY / DATE REVISED

LAST REVISION 02-25-13

DATE PLOTTED => 21-JUN-2013
TIME PLOTTED => 08:21

Dist	COUNTY	ROUTE	POST MILES TOTAL PROJECT	SHEET No.	TOTAL SHEETS
04	SCI	152	0.1/5.2	220	416

REGISTERED ELECTRICAL ENGINEER 02-25-13 DATE

6-17-13
PLANS APPROVAL DATE

REGISTERED PROFESSIONAL ENGINEER MONA N. ATTALLAH No. 18407 Exp. 6/30/14 ELECTRICAL STATE OF CALIFORNIA

THE STATE OF CALIFORNIA OR ITS OFFICERS OR AGENTS SHALL NOT BE RESPONSIBLE FOR THE ACCURACY OR COMPLETENESS OF SCANNED COPIES OF THIS PLAN SHEET.

NOTE:

FOR ACCURATE RIGHT OF WAY DATA, CONTACT RIGHT OF WAY ENGINEERING AT THE DISTRICT OFFICE.

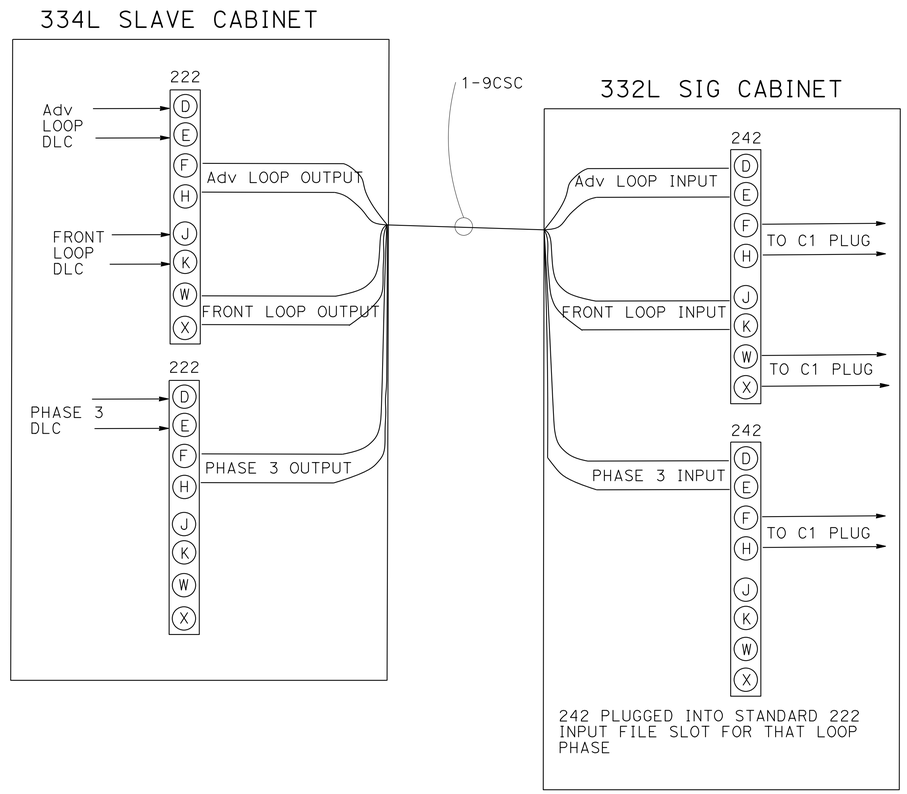

DETAIL A

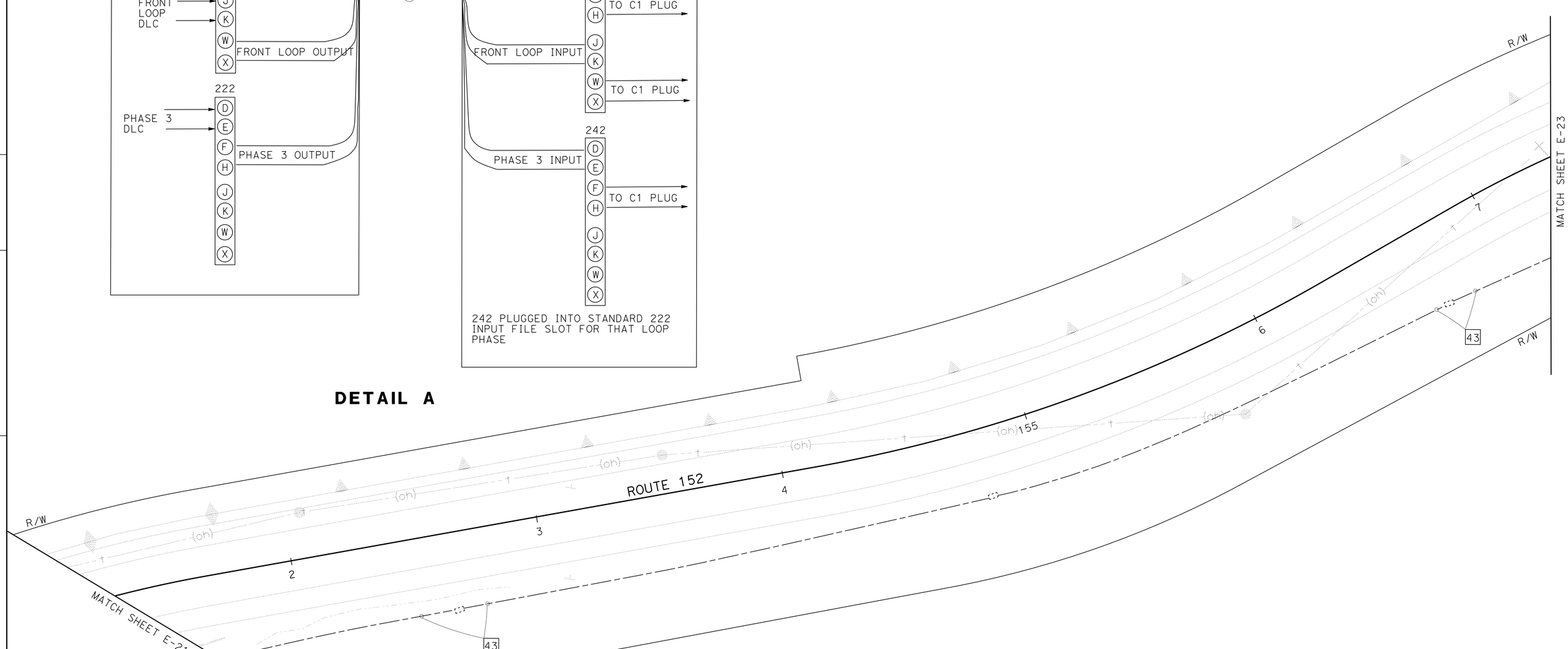

TEMPORARY SIGNAL SYSTEM (LOCATION 4) (STAGES 3 AND 4)

SCALE: 1" = 20'

E-22

APPROVED FOR ELECTRICAL WORK ONLY

STATE OF CALIFORNIA - DEPARTMENT OF TRANSPORTATION
Caltrans 06-ELECTRICAL DESIGN

FUNCTIONAL SUPERVISOR: ALI BAKHDOUD
CALCULATED-DESIGNED BY: MONA ATTALLAH
CHECKED BY: DANIEL VO
REVISED BY
DATE REVISED

LAST REVISION 02-25-13
DATE PLOTTED => 21-JUN-2013
TIME PLOTTED => 08:21

Dist	COUNTY	ROUTE	POST MILES TOTAL PROJECT	SHEET No.	TOTAL SHEETS
04	SCI	152	0.1/5.2	221	416

REGISTERED ELECTRICAL ENGINEER 02-25-13 DATE

6-17-13
PLANS APPROVAL DATE

REGISTERED PROFESSIONAL ENGINEER MONA N. ATTALLAH No. 18407 Exp. 6/30/14 ELECTRICAL STATE OF CALIFORNIA

THE STATE OF CALIFORNIA OR ITS OFFICERS OR AGENTS SHALL NOT BE RESPONSIBLE FOR THE ACCURACY OR COMPLETENESS OF SCANNED COPIES OF THIS PLAN SHEET.

NOTE:

FOR ACCURATE RIGHT OF WAY DATA, CONTACT RIGHT OF WAY ENGINEERING AT THE DISTRICT OFFICE.

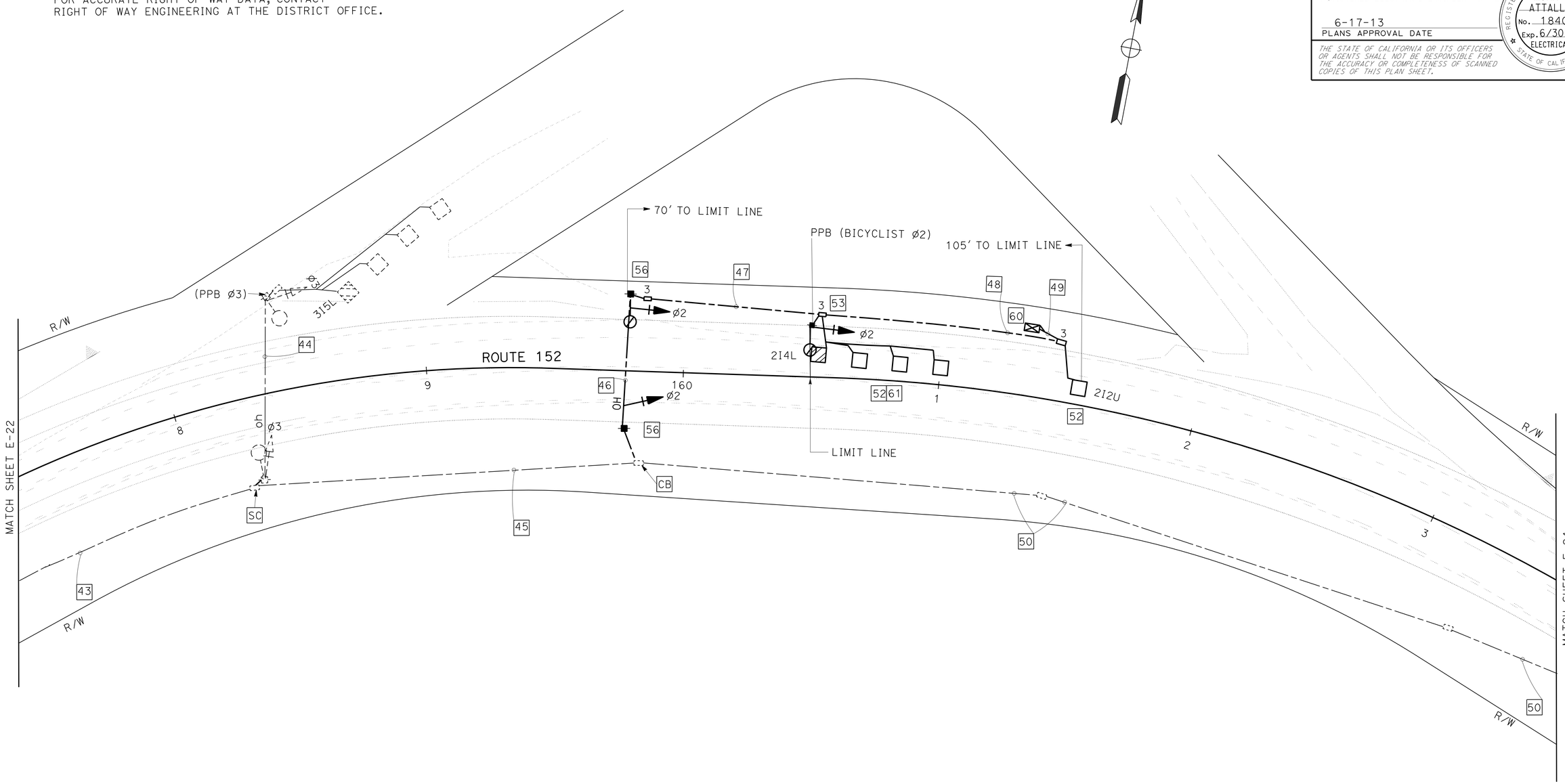

TEMPORARY SIGNAL SYSTEM (LOCATION 4) (STAGES 3 AND 4)

SCALE: 1" = 20'

E-23

APPROVED FOR ELECTRICAL WORK ONLY

STATE OF CALIFORNIA - DEPARTMENT OF TRANSPORTATION
Caltrans 06-ELECTRICAL DESIGN

FUNCTIONAL SUPERVISOR: ALI BAKHDOUD
CALCULATED-DESIGNED BY: MONA ATTALLAH
CHECKED BY: DANIEL VO
REVISED BY
DATE REVISED

LAST REVISION 02-25-13
DATE PLOTTED => 21-JUN-2013
TIME PLOTTED => 08:21

Dist	COUNTY	ROUTE	POST MILES TOTAL PROJECT	SHEET No.	TOTAL SHEETS
04	SCI	152	0.1/5.2	222	416

REGISTERED ELECTRICAL ENGINEER 02-25-13 DATE

6-17-13
PLANS APPROVAL DATE

REGISTERED PROFESSIONAL ENGINEER MONA N. ATTALLAH No. 18407 Exp. 6/30/14 ELECTRICAL STATE OF CALIFORNIA

THE STATE OF CALIFORNIA OR ITS OFFICERS OR AGENTS SHALL NOT BE RESPONSIBLE FOR THE ACCURACY OR COMPLETENESS OF SCANNED COPIES OF THIS PLAN SHEET.

NOTE:

FOR ACCURATE RIGHT OF WAY DATA, CONTACT
RIGHT OF WAY ENGINEERING AT THE DISTRICT OFFICE.

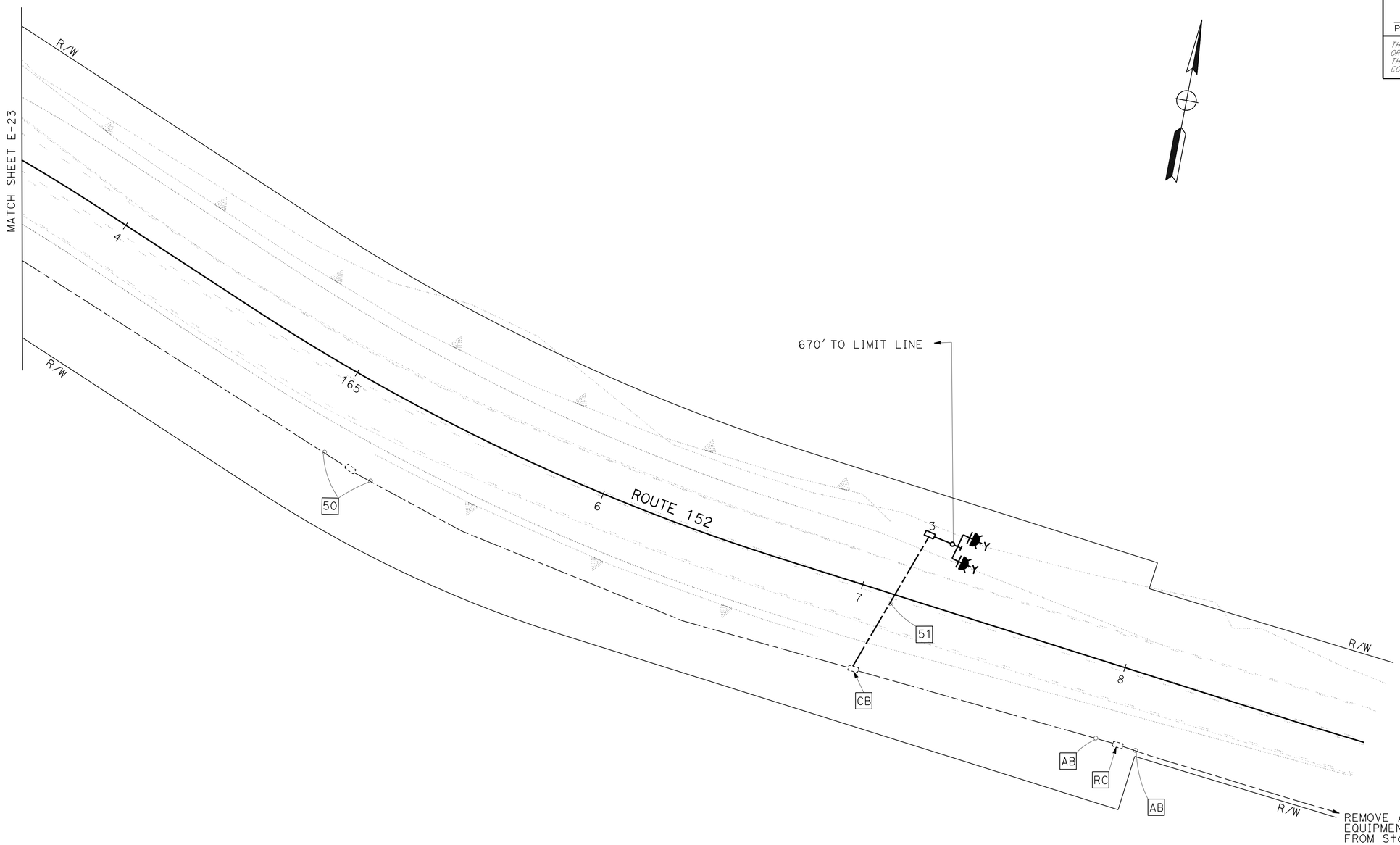

TEMPORARY SIGNAL SYSTEM (LOCATION 4) (STAGES 3 AND 4)

SCALE: 1" = 20'

E-24

APPROVED FOR ELECTRICAL WORK ONLY

STATE OF CALIFORNIA - DEPARTMENT OF TRANSPORTATION
Caltrans 06-ELECTRICAL DESIGN

FUNCTIONAL SUPERVISOR: ALI BAKHDOUD
CALCULATED-DESIGNED BY: MONA ATTALLAH
CHECKED BY: DANIEL VO
REVISED BY
DATE REVISED

LAST REVISION 02-25-13
DATE PLOTTED => 21-JUN-2013
TIME PLOTTED => 08:13

Dist	COUNTY	ROUTE	POST MILES TOTAL PROJECT	SHEET No.	TOTAL SHEETS
04	SCI	152	0.1/5.2	223	416

Mona Attallah 02-25-13
REGISTERED ELECTRICAL ENGINEER DATE

6-17-13
PLANS APPROVAL DATE

REGISTERED PROFESSIONAL ENGINEER
MONA N. ATTALLAH
No. 18407
Exp. 6/30/14
ELECTRICAL
STATE OF CALIFORNIA

THE STATE OF CALIFORNIA OR ITS OFFICERS OR AGENTS SHALL NOT BE RESPONSIBLE FOR THE ACCURACY OR COMPLETENESS OF SCANNED COPIES OF THIS PLAN SHEET.

LEGEND:

1. MODEL 334L CABINET WITH DEPARTMENT-FURNISHED MODEL 2070E CONTROLLER UNIT FOR VMS. INSTALL GPRS WIRELESS MODEM. REFER TO SHEET E-29 FOR GPRS WIRELESS MODEM INSTALLATION DETAILS.
2. PULL BOX PER PG&E REQUIREMENTS.
3. REFER TO SHEETS E-28 AND SES-5 FOR VMS WIRING, SIGN INSTALLATION AND DETAILS.

NOTES:

1. ALL PULL BOXES MUST BE No. 5(E) UNLESS OTHERWISE NOTED.
2. FOR ACCURATE RIGHT OF WAY DATA, CONTACT RIGHT OF WAY ENGINEERING AT THE DISTRICT OFFICE.

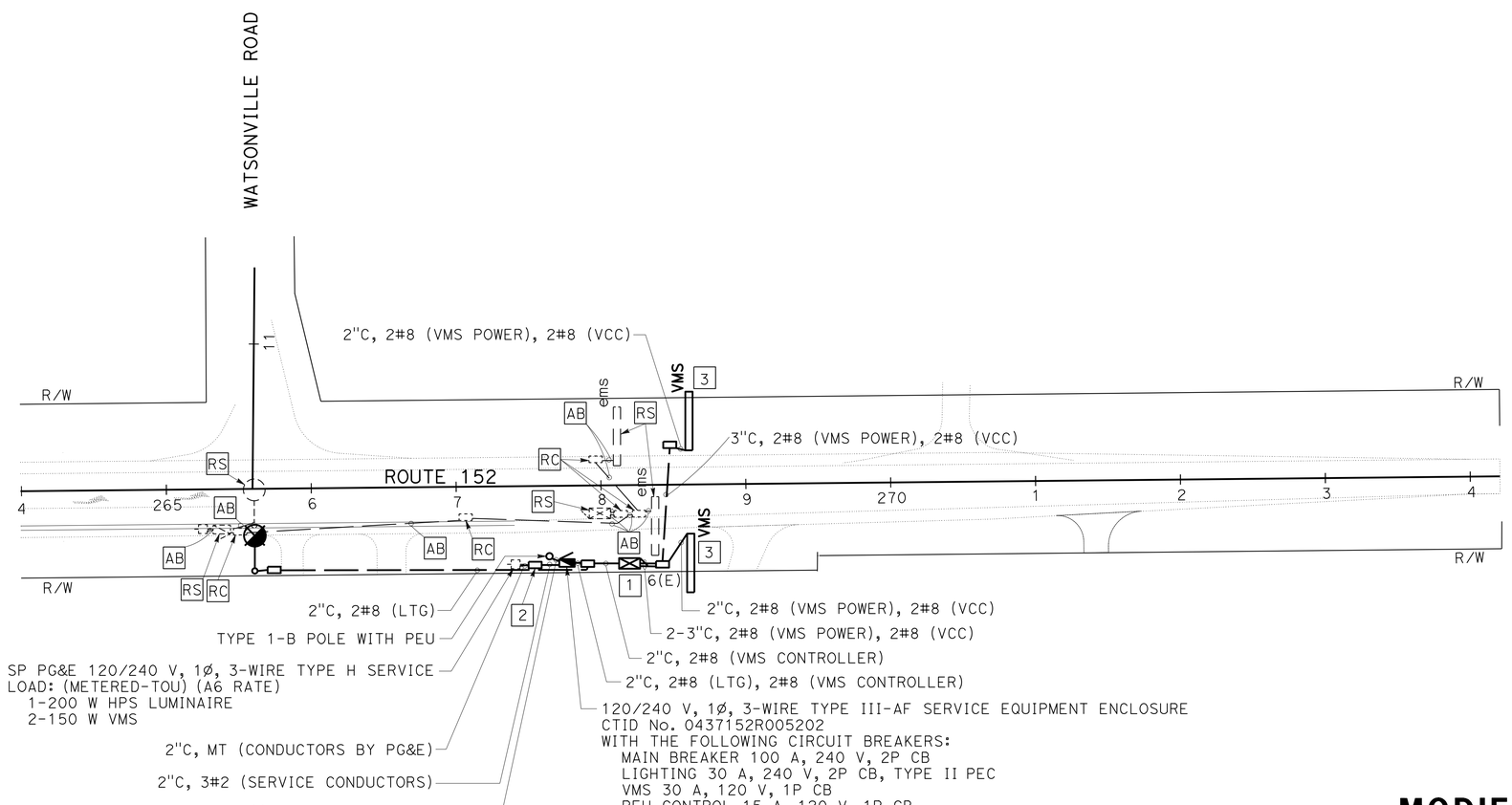

MODIFY VARIABLE MESSAGE SIGN

SCALE: 1" = 50'

APPROVED FOR ELECTRICAL WORK ONLY

E-25

STATE OF CALIFORNIA - DEPARTMENT OF TRANSPORTATION
Caltrans 06-ELECTRICAL DESIGN

FUNCTIONAL SUPERVISOR: ALI BAKHDOUD
CALCULATED-DESIGNED BY: MONA ATTALLAH
CHECKED BY: DANIEL VO
REVISED BY
DATE REVISED

LAST REVISION 04-10-13
DATE PLOTTED => 21-JUN-2013
TIME PLOTTED => 08:13

Dist	COUNTY	ROUTE	POST MILES TOTAL PROJECT	SHEET No.	TOTAL SHEETS
04	SCI	152	0.1/5.2	224	416

REGISTERED ELECTRICAL ENGINEER 02-25-13 DATE

6-17-13
PLANS APPROVAL DATE

REGISTERED PROFESSIONAL ENGINEER MONA N. ATTALLAH No. 18407 Exp. 6/30/14 ELECTRICAL STATE OF CALIFORNIA

THE STATE OF CALIFORNIA OR ITS OFFICERS OR AGENTS SHALL NOT BE RESPONSIBLE FOR THE ACCURACY OR COMPLETENESS OF SCANNED COPIES OF THIS PLAN SHEET.

NOTES:

1. SEE SES SHEETS FOR WOOD POLE DETAILS.
2. INSTALL CONDUIT RUNS AS DIRECTED BY THE ENGINEER.

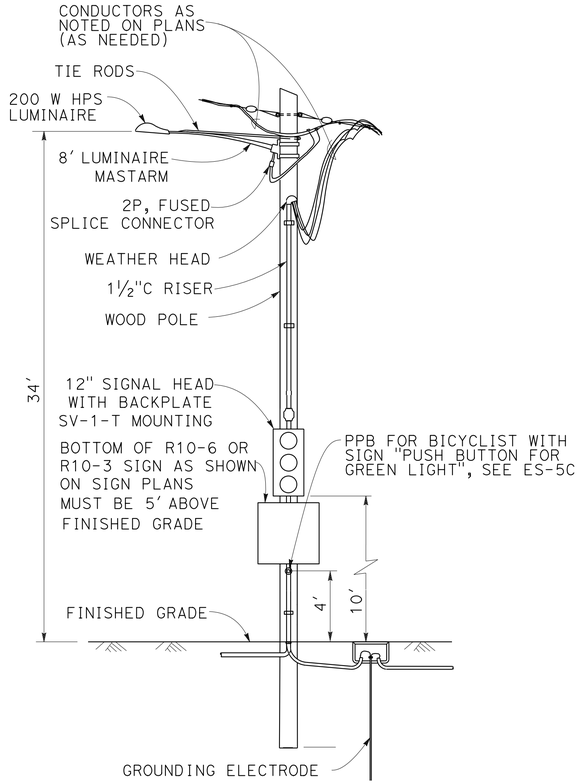

DETAIL 1

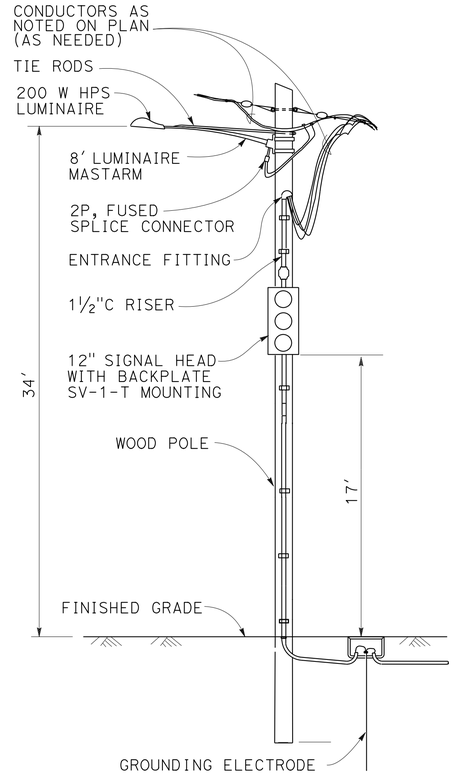

TEMPORARY SIGNAL & LIGHTING INSTALLATION
DETAIL 2

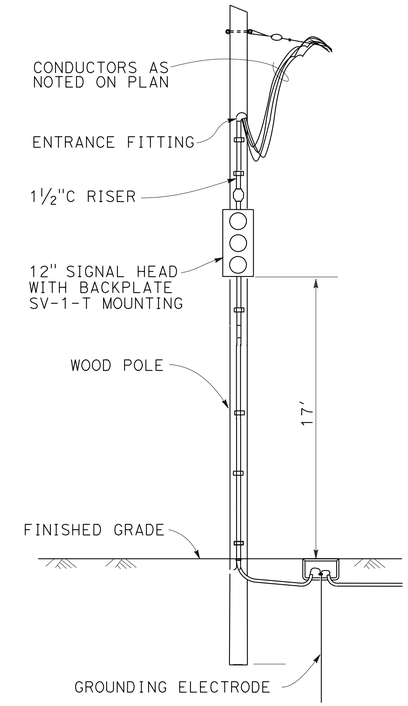

TEMPORARY SIGNAL INSTALLATION
DETAIL 3

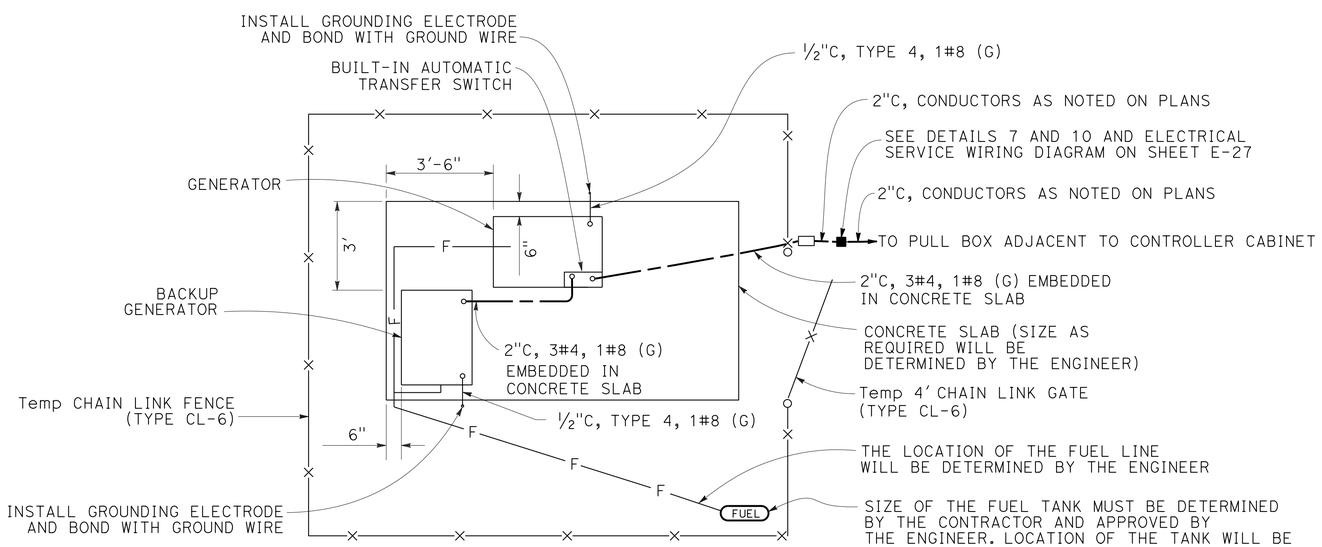

GENERATOR WITH BACKUP GENERATOR
DETAIL 4

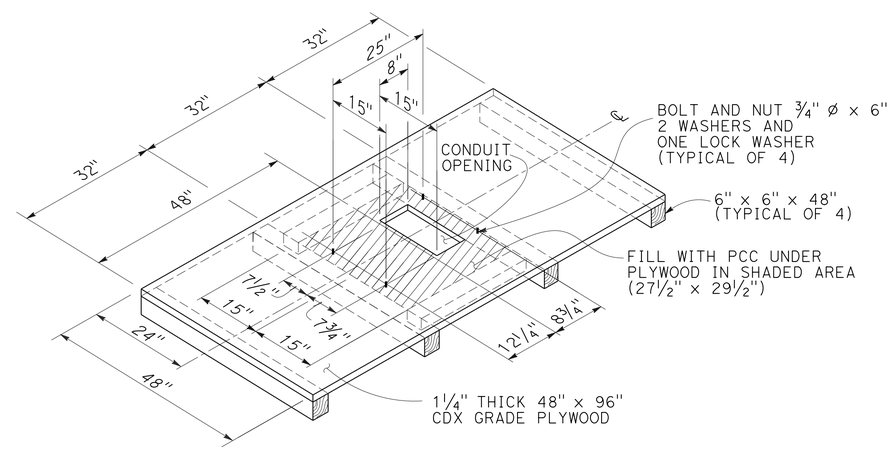

TEMPORARY MODEL 332L AND 334L CABINET FOUNDATION PLATFORM
DETAIL 5

APPROVED FOR ELECTRICAL WORK ONLY

ELECTRICAL DETAILS

NO SCALE

E-26

REVISED BY | DATE REVISED
MONA ATTALLAH | DANIEL VO
CALCULATED-DESIGNED BY | CHECKED BY
FUNCTIONAL SUPERVISOR: ALI BAKHDOUD

STATE OF CALIFORNIA - DEPARTMENT OF TRANSPORTATION
Caltrans 06-ELECTRICAL DESIGN

LAST REVISION 02-25-13 | DATE PLOTTED => 21-JUN-2013 | TIME PLOTTED => 08:13

Dist	COUNTY	ROUTE	POST MILES TOTAL PROJECT	SHEET No.	TOTAL SHEETS
04	SCI	152	0.1/5.2	225	416

REGISTERED ELECTRICAL ENGINEER 02-25-13 DATE

6-17-13
PLANS APPROVAL DATE

REGISTERED PROFESSIONAL ENGINEER MONA N. ATTALLAH No. 18407 Exp. 6/30/14 ELECTRICAL STATE OF CALIFORNIA

THE STATE OF CALIFORNIA OR ITS OFFICERS OR AGENTS SHALL NOT BE RESPONSIBLE FOR THE ACCURACY OR COMPLETENESS OF SCANNED COPIES OF THIS PLAN SHEET.

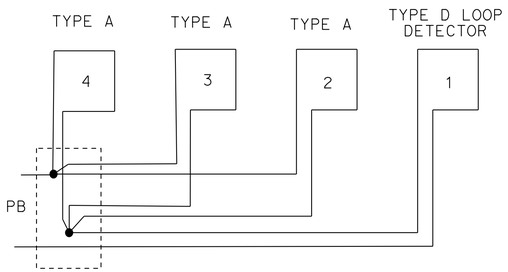

1D + 3A LOOP CONNECTION

DETAIL 11

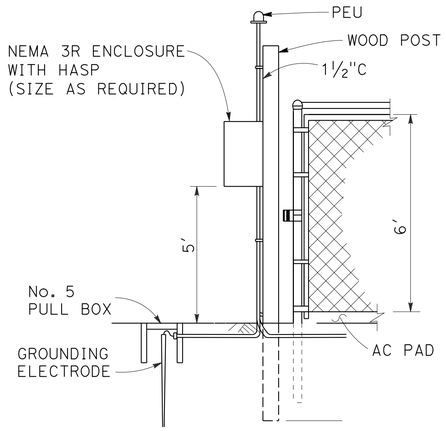

ELECTRICAL SERVICE SIDE VIEW

DETAIL 10

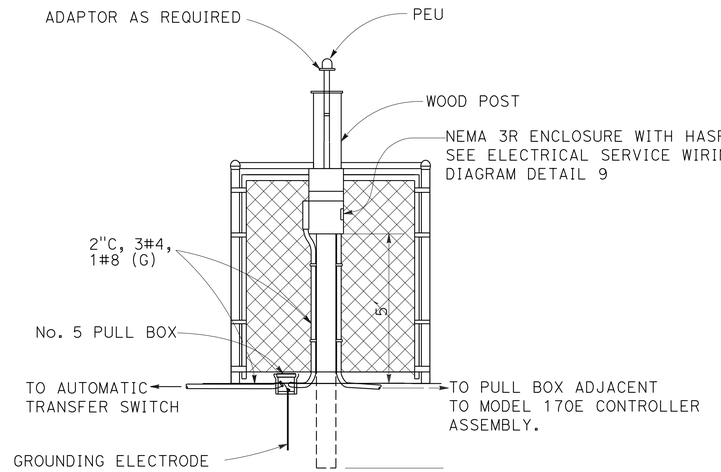

ELECTRICAL SERVICE FRONT VIEW

DETAIL 7

NOTE:

1. SEE SES SHEETS FOR WOOD POLE DETAILS.

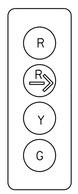

4 SECTION SIGNAL HEAD

DETAIL 6

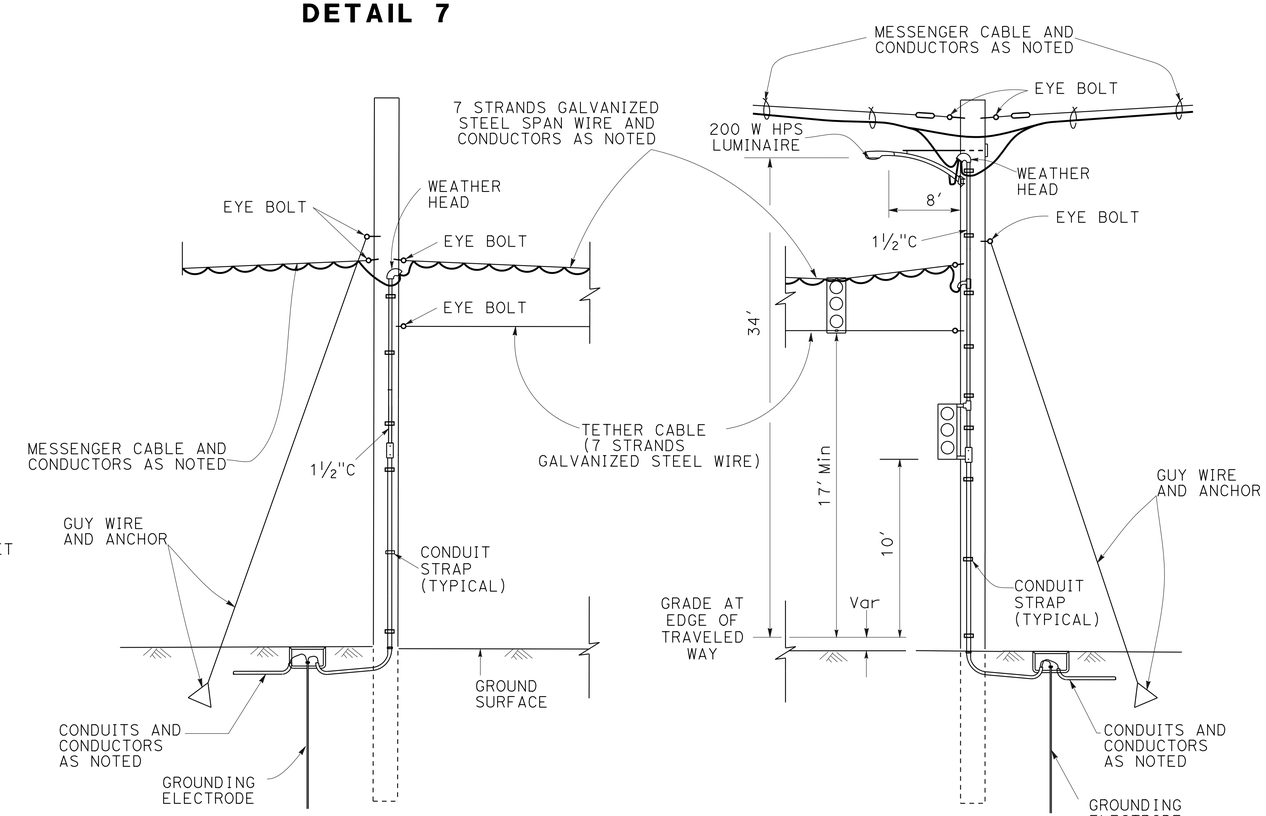

DETAIL 8

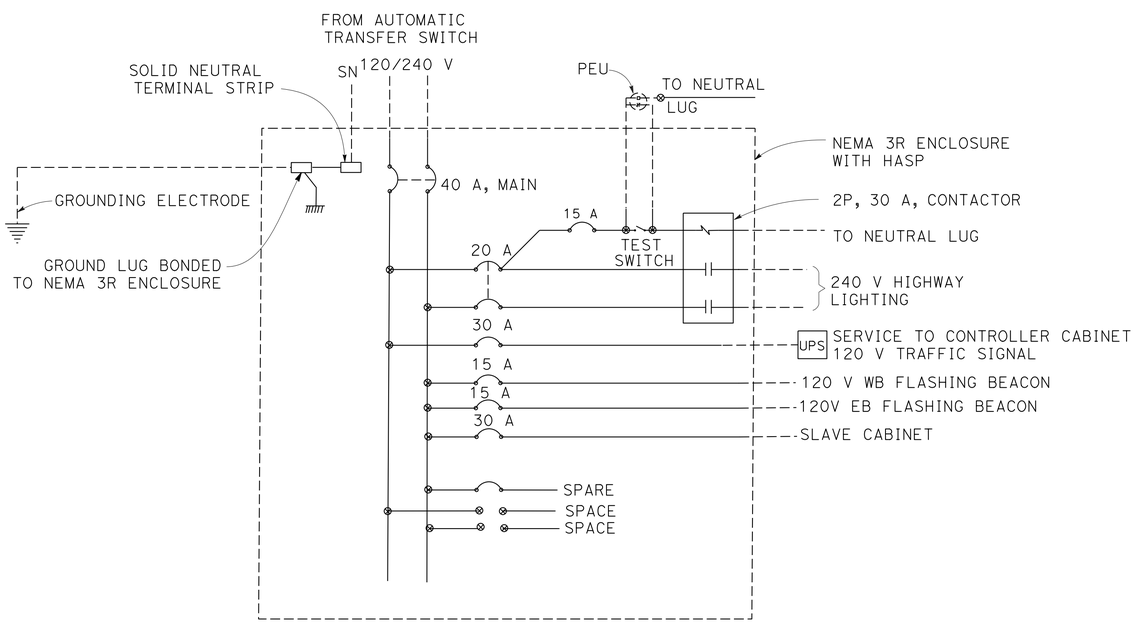

ELECTRICAL SERVICE WIRING DIAGRAM
DETAIL 9

ELECTRICAL DETAILS

NO SCALE

E-27

APPROVED FOR ELECTRICAL WORK ONLY

STATE OF CALIFORNIA - DEPARTMENT OF TRANSPORTATION
Caltrans 06-ELECTRICAL DESIGN

FUNCTIONAL SUPERVISOR: ALI BAKHDOUD
CALCULATED-DESIGNED BY: MONA ATTALLAH
CHECKED BY: DANIEL VO
REVISED BY
DATE REVISED

LAST REVISION 02-25-13
DATE PLOTTED => 21-JUN-2013
TIME PLOTTED => 08:13

Dist	COUNTY	ROUTE	POST MILES TOTAL PROJECT	SHEET No.	TOTAL SHEETS
04	SCI	152	0.1/5.2	226	416

REGISTERED ELECTRICAL ENGINEER DATE 02-25-13

6-17-13
PLANS APPROVAL DATE

REGISTERED PROFESSIONAL ENGINEER MONA N. ATTALLAH No. 18407 Exp. 6/30/14 ELECTRICAL STATE OF CALIFORNIA

THE STATE OF CALIFORNIA OR ITS OFFICERS OR AGENTS SHALL NOT BE RESPONSIBLE FOR THE ACCURACY OR COMPLETENESS OF SCANNED COPIES OF THIS PLAN SHEET.

NOTE:

REFER TO SES-5 SHEET FOR VMS SIGN DETAILS.

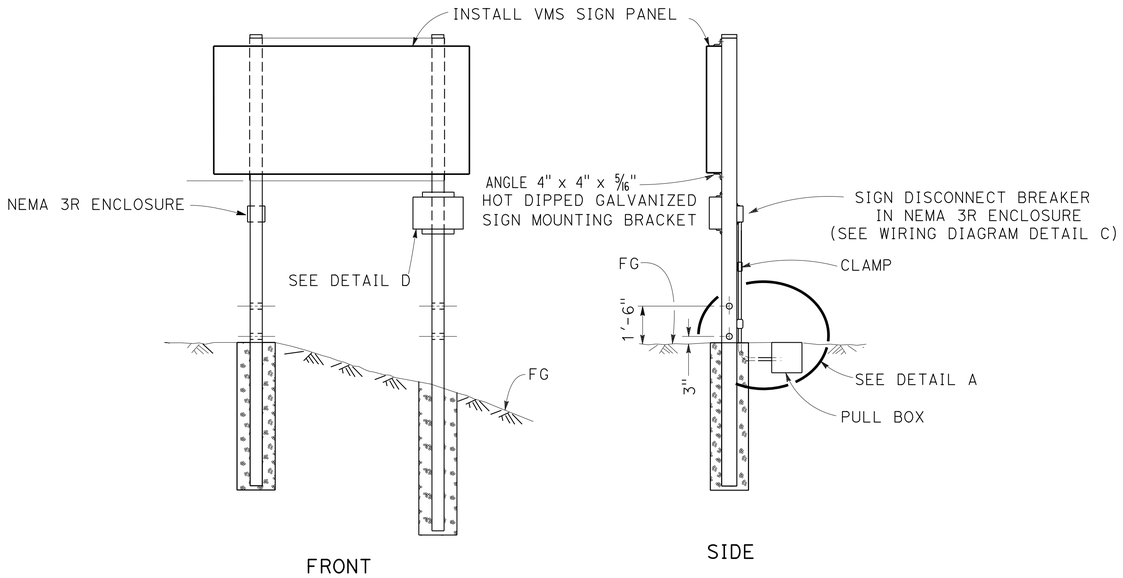

ELEVATION

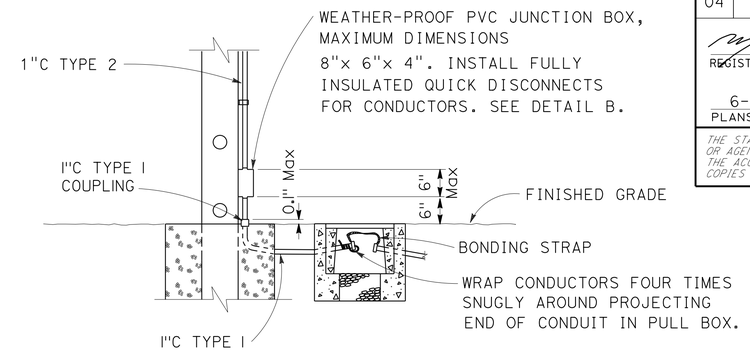

DETAIL A
CONDUIT BREAKAWAY

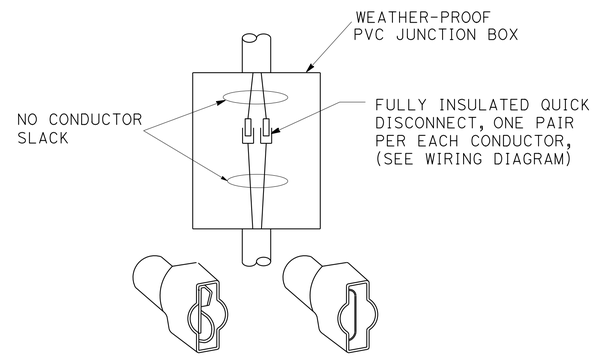

DETAIL B
DISCONNECTS FOR
POWER CONDUCTORS

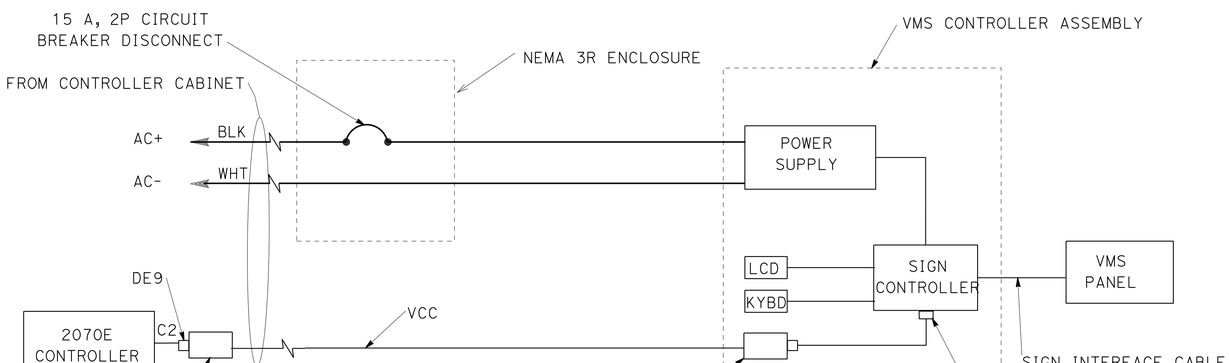

DETAIL C
WIRING DIAGRAM

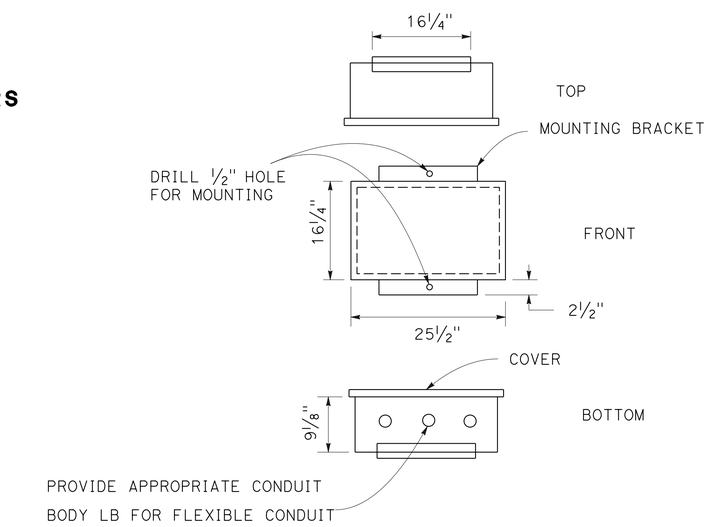

DETAIL D
VMS CONTROLLER ASSEMBLY

ELECTRICAL DETAILS

NO SCALE

E-28

APPROVED FOR ELECTRICAL WORK ONLY

STATE OF CALIFORNIA - DEPARTMENT OF TRANSPORTATION
Caltrans 06-ELECTRICAL DESIGN

FUNCTIONAL SUPERVISOR: ALI BAKHDOUD
CALCULATED-DESIGNED BY: MONA ATTALLAH
CHECKED BY: DANIEL VO
REVISED BY
DATE REVISED

LAST REVISION 02-25-13
DATE PLOTTED => 21-JUN-2013
TIME PLOTTED => 08:13

Dist	COUNTY	ROUTE	POST MILES TOTAL PROJECT	SHEET No.	TOTAL SHEETS
04	SCI	152	0.1/5.2	227	416

REGISTERED ELECTRICAL ENGINEER 02-25-13 DATE

6-17-13
PLANS APPROVAL DATE

REGISTERED PROFESSIONAL ENGINEER MONA N. ATTALLAH No. 18407 Exp. 6/30/14 ELECTRICAL STATE OF CALIFORNIA

THE STATE OF CALIFORNIA OR ITS OFFICERS OR AGENTS SHALL NOT BE RESPONSIBLE FOR THE ACCURACY OR COMPLETENESS OF SCANNED COPIES OF THIS PLAN SHEET.

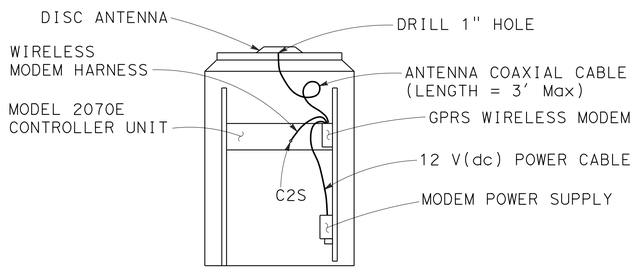

REAR VIEW OF THE MODEL 334L CONTROLLER CABINET

GPRS WIRELESS MODEM AND ANTENNA INSTALLATION DETAIL

CONTRACTOR'S WORK IN THE CONTROLLER CABINET

1. PROVIDE THE GPRS MODEM AND WIRELESS MODEM HARNESS TO THE ENGINEER 30 WORKING DAYS BEFORE INSTALLATION. THE ENGINEER WILL RETURN THE PROGRAMMED MODEM, WITH PACKET DATA PROTOCOL CONTEXT AND ACCESS POINT NUMBER, AND HARNESS WITHIN 15 WORKING DAYS.
2. DRILL 1" HOLE THROUGH THE TOP OF THE CABINET. ATTACH THE ANTENNA ON THE CABINET AS DIRECTED BY THE MANUFACTURER.
3. MOUNT THE MODEM UNIT ON THE CABINET REAR MOUNTING RAIL WITH MOUNTING BRACKET PROVIDED BY THE MANUFACTURER.
4. MOUNT THE MODEM 12 V(dc) POWER SUPPLY DIRECTLY TO CABINET.
5. CONNECT POWER CABLE TO 12 V(dc) POWER ADAPTER.
6. CONNECT THE ANTENNA COAXIAL CABLE TO THE MODEM.
7. CONNECT MODEM HARNESS BETWEEN THE MODEM AND THE MODEL 2070E CONTROLLER UNIT AS SHOWN.
8. RECORD THE SERIAL NUMBER OF THE MODEM ON THE CHECK LIST SHEET.

WIRELESS MODEM HARNESS INSTALLATION DETAILS

1. CABLE PIN OUT DIAGRAM

AMP 201360-2-ND DB9-P

L — 2
K — 3
N — 5
D, H, J, M — 1,4,6,7,8,9 N/C

2. CONSTRUCT AND INSTALL COMMUNICATION CABLE. SEE SPECIAL PROVISIONS FOR CABLE TYPE AND OTHER INFORMATION.

APPROVED FOR ELECTRICAL WORK ONLY

ELECTRICAL DETAILS

NO SCALE

E-29

REVISED BY | DATE REVISED
MONA ATTALLAH | DANIEL VO
CALCULATED-DESIGNED BY | CHECKED BY
FUNCTIONAL SUPERVISOR: ALI BAKHDOUD

STATE OF CALIFORNIA - DEPARTMENT OF TRANSPORTATION
Caltrans 06-ELECTRICAL DESIGN

LAST REVISION 02-25-13 | DATE PLOTTED => 21-JUN-2013 | TIME PLOTTED => 08:13

Dist	COUNTY	ROUTE	POST MILES TOTAL PROJECT	SHEET No.	TOTAL SHEETS
04	SCI	152	0.1/5.2	228	416

REGISTERED ELECTRICAL ENGINEER 02-25-13 DATE

6-17-13
PLANS APPROVAL DATE

REGISTERED PROFESSIONAL ENGINEER MONA N. ATTALLAH No. 18407 Exp. 6/30/14 ELECTRICAL STATE OF CALIFORNIA

THE STATE OF CALIFORNIA OR ITS OFFICERS OR AGENTS SHALL NOT BE RESPONSIBLE FOR THE ACCURACY OR COMPLETENESS OF SCANNED COPIES OF THIS PLAN SHEET.

NOTE:

THE QUANTITIES ON THIS SHEET ARE FOR INFORMATION ONLY AND ARE NOT SEPARATE PAY ITEMS.

TEMPORARY SIGNAL SYSTEM (LOCATION 1)

SHEET No.	15' WOOD POST	45' WOOD POLE	50' WOOD POLE	2"C, TYPE 3	No. 5 PULL BOX	No. 3½ PULL BOX	4 SECTION SIGNAL HEAD	3 SECTION SIGNAL HEAD	TYPE 15-FBS	MODEL 334L CABINET FOUNDATION PLATFORM	MODEL 334L CABINET	200 W HPS LUMINAIRE	TYPE D LOOP	TYPE A LOOP	DETECTOR LEAD-IN CABLE	No. 4 CONDUCTOR	No. 6 CONDUCTOR	No. 8 CONDUCTOR	No. 8(G) CONDUCTOR	No. 10 CONDUCTOR	No. 14 CONDUCTOR	NEMA 3R SERVICE ENCLOSURE	GENERATOR	MESSENGER CABLE	1-5CSC	PPB	UPS	CHAIN LINK FENCE (TYPE CL-6)	4' CHAIN LINK GATE (TYPE CL-6)	FUEL TANK
	EA	EA	EA	LF	EA	EA	EA	EA	EA	EA	EA	EA	EA	EA	LF	LF	LF	LF	LF	LF	LF	EA	EA	LF	LF	EA	EA	LF	EA	EA
E-2	1	1	2	536	3	5		3	1			2	1	4	124	36	1,482	578	536	244	3,952		2	45	244	1	1	80	1	1
E-3			2	1,201		6	2					1					7,398		1,201	1,297	13,116			96	1,201	1				
E-4		1	2	799		6		3	1	1	1	2	1	4	353		2,748	70	820	345	2,760				244	1	1			

TEMPORARY SIGNAL SYSTEM (LOCATIONS 2 AND 3)

SHEET No.	15' WOOD POST	45' WOOD POLE	50' WOOD POLE	2"C, TYPE 3	No. 5 PULL BOX	No. 3½ PULL BOX	4 SECTION SIGNAL HEAD	3 SECTION SIGNAL HEAD	TYPE 15-FBS	MODEL 334L CABINET FOUNDATION PLATFORM	MODEL 334L CABINET	200 W HPS LUMINAIRE	TYPE D LOOP	TYPE A LOOP	DETECTOR LEAD-IN CABLE	No. 4 CONDUCTOR	No. 6 CONDUCTOR	No. 8 CONDUCTOR	No. 8(G) CONDUCTOR	No. 10 CONDUCTOR	No. 14 CONDUCTOR	NEMA 3R SERVICE ENCLOSURE	GENERATOR	MESSENGER CABLE	1-5CSC	PPB	UPS	CHAIN LINK FENCE (TYPE CL-6)	4' CHAIN LINK GATE (TYPE CL-6)	FUEL TANK
	EA	EA	EA	LF	EA	EA	EA	EA	EA	EA	EA	EA	EA	EA	LF	LF	LF	LF	LF	LF	LF	EA		LF	LF	EA	EA	LF	EA	EA
E-5			3	669		8		3	1	1	1	2	1	4	524		1,854		665	235	1,215			103	262	1	1			
E-6				740		4											4,440		740	740	3,700				740					
E-7				595		4											3,570		595	595	2,975				595					
E-8				642		3											3,852		642	642	3,210				642					
E-9		1	2	645		5	2					1					3,870		645	2,580	8,137			97	645	1				
E-10				630		3											3,780		630	630	8,190				630					
E-11	1	1	2	500	2	7		3	1			2	1	4	327	30	1,010	780	227	241	2,605	1	2	35	125	1	1	80	1	1

ELECTRICAL QUANTITIES
E-30

STATE OF CALIFORNIA - DEPARTMENT OF TRANSPORTATION
Caltrans 06-ELECTRICAL DESIGN

FUNCTIONAL SUPERVISOR: ALI BAKHDOUD
CALCULATED-DESIGNED BY: MONA ATTALLAH
CHECKED BY: DANIEL VO
REVISED BY
DATE REVISED

LAST REVISION 02-25-13
DATE PLOTTED => 21-JUN-2013
TIME PLOTTED => 08:13

Dist	COUNTY	ROUTE	POST MILES TOTAL PROJECT	SHEET No.	TOTAL SHEETS
04	SCI	152	0.1/5.2	229	416

REGISTERED ELECTRICAL ENGINEER 02-25-13 DATE

6-17-13
PLANS APPROVAL DATE

REGISTERED PROFESSIONAL ENGINEER MONA N. ATTALLAH No. 18407 Exp. 6/30/14 ELECTRICAL STATE OF CALIFORNIA

THE STATE OF CALIFORNIA OR ITS OFFICERS OR AGENTS SHALL NOT BE RESPONSIBLE FOR THE ACCURACY OR COMPLETENESS OF SCANNED COPIES OF THIS PLAN SHEET.

NOTE:

THE QUANTITIES ON THIS SHEET ARE FOR INFORMATION ONLY AND ARE NOT SEPARATE PAY ITEMS.

TEMPORARY SIGNAL SYSTEM (LOCATION 4) (STAGES 1 AND 2)

SHEET No.	15' WOOD POST	45' WOOD POLE	50' WOOD POLE	2"C, TYPE 3	No. 5 PULL BOX	No. 3½ PULL BOX	4 SECTION SIGNAL HEAD	3 SECTION SIGNAL HEAD	TYPE 15-FBS	MODEL 334L CABINET	MODEL 334L CABINET FOUNDATION PLATFORM	200 W HPS LUMINAIRE	TYPE D LOOP	TYPE A LOOP	DETECTOR LEAD-IN CABLE	No. 4 CONDUCTOR	No. 6 CONDUCTOR	No. 8 CONDUCTOR	No. 8(G) CONDUCTOR	No. 10 CONDUCTOR	No. 14 CONDUCTOR	NEMA 3R SERVICE ENCLOSURE	GENERATOR	MESSENGER CABLE	1-5CSC	PPB	UPS	CHAIN LINK FENCE (TYPE CL-6)	4' CHAIN LINK GATE (TYPE CL-6)	FUEL TANK
	EA	EA	EA	LF	EA	EA	EA	EA	EA	EA	EA	EA	EA	EA	LF	LF	LF	LF	LF	LF	LF	EA	EA	LF	LF	EA	EA	LF	EA	EA
E-12				393		2			1								786		393											
E-13		1	2	190		5		3		1	1	2	1	4	103		766		182	118	944			43	83	1	1			
E-14				560		3											3,360		560	560	4,480				560					
E-15			2	620		5	2					2	1	2	600		3,680		620	700	8,200			80	620	1				
E-16	1			658	2	2									740	30	3,500	214	658	640	7,910	1	2		552		1	80	1	1
E-17		1	2	801		7		3	1			2	1	4	779		684	1,579	837	342	2,736			36		1				

TEMPORARY SIGNAL SYSTEM (LOCATION 4) (STAGES 3 AND 4)

SHEET No.	15' WOOD POST	45' WOOD POLE	50' WOOD POLE	2"C, TYPE 3	MODEL 334L CABINET	No. 5 PULL BOX	No. 3½ PULL BOX	3 SECTION SIGNAL HEAD	TYPE 15-FBS	MODEL 334L CABINET	MODEL 334L CABINET FOUNDATION PLATFORM	200 W HPS LUMINAIRE	TYPE D LOOP	TYPE A LOOP	DETECTOR LEAD-IN CABLE	No. 4 CONDUCTOR	No. 6 CONDUCTOR	No. 8 CONDUCTOR	No. 8(G) CONDUCTOR	No. 10 CONDUCTOR	No. 14 CONDUCTOR	NEMA 3R SERVICE ENCLOSURE	GENERATOR	MESSENGER CABLE	1-9CSC	PPB	UPS	CHAIN LINK FENCE (TYPE CL-6)	4' CHAIN LINK GATE (TYPE CL-6)	FUEL TANK
	EA	EA	EA	LF	EA	EA	EA	EA	EA	EA	EA	EA	EA	EA	LF	LF	LF	LF	LF	LF	LF	EA	EA	LF	LF	EA	EA	LF	EA	EA
E-18		1	2	508			7	3	1			2	1	4	816		890	1,016	508	717	5,192			37		1				
E-19	1		2	611		2	3								345	30	3,387	336	665	655	8,305	1	2	54	550		1	80	1	1
E-20				208			1										3,588		598	1,196	7,774				598					
E-21																	3,858		643	643	8,359				643					
E-22																	3,360		560	560	560				560					
E-23		1	2	173	1		3	3		1	1	2	1	4	444		2,002		514	372	1,968			53	475	1	1			
E-24				52			1		1								784		392											

MODIFY VARIABLE MESSAGE SIGN

SHEET No.	MODEL 334L CABINET	MODEL 334L CABINET FOUNDATION	GPRS MODEM	VMS SIGN	No. 5(E) PB	No. 6(E) PB	3"C, TYPE 3	3"C, TYPE 1	2"C, TYPE 3	2"C, TYPE 1	No. 8 CONDUCTOR	No. 6 CONDUCTOR	No. 2 CONDUCTOR	PG&E PB	TYPE III-AF SERVICE EQUIPMENT ENCLOSURE	TYPE III-AF FOUNDATION	WOOD POST	NEMA 3R ENCLOSURE	SIGN CONTROLLER ASSEMBLY	TYPE 32 ELECTROLIER	TYPE 32 ELECTROLIER CIDH PILE
	EA	EA	EA	EA	EA	EA	LF	LF	LF	LF	LF	LF	LF	EA	EA	EA	EA	EA	EA	EA	EA
E-25	1	1	1	2	4	1	325	10	25	15	485	890	15	1	1	1	4	1	1	1	1

ELECTRICAL QUANTITIES
E-31

STATE OF CALIFORNIA - DEPARTMENT OF TRANSPORTATION
Caltrans 06-ELECTRICAL DESIGN

FUNCTIONAL SUPERVISOR: ALI BAKHDOUD
CALCULATED-DESIGNED BY: MONA ATTALLAH
CHECKED BY: DANIEL VO
REVISED BY
DATE REVISED

LAST REVISION 02-25-13
DATE PLOTTED => 21-JUN-2013
TIME PLOTTED => 08:13

DIST	COUNTY	ROUTE	POST MILES TOTAL PROJECT	SHEET No	TOTAL SHEETS
04	SCI	152	0.1/5.2	230	416

REGISTERED CIVIL ENGINEER — DATE 11/21/12

6-17-13
PLANS APPROVAL DATE

REGISTERED PROFESSIONAL ENGINEER — AIMAN MALAK — No. C73369 — Exp. 12-31-2014 — CIVIL — STATE OF CALIFORNIA

The State of California or its officers or agents shall not be responsible for the accuracy or completeness of electronic copies of this plan sheet.

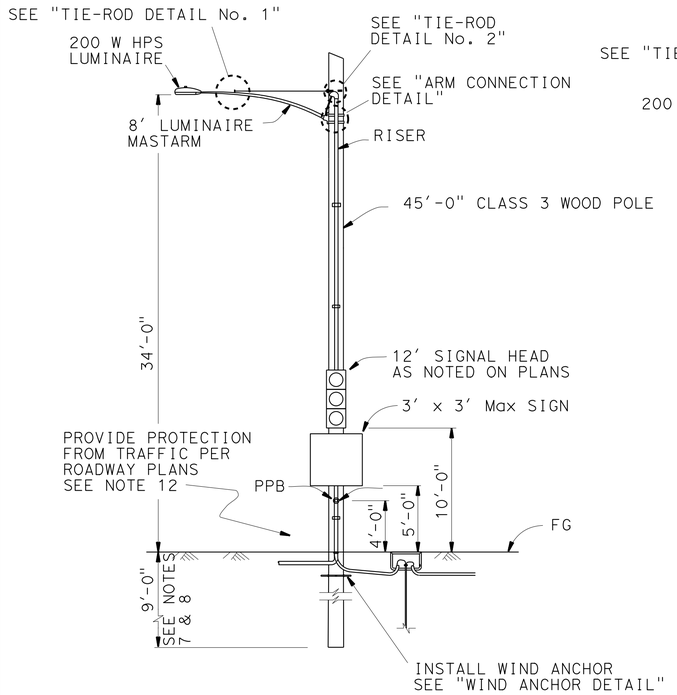

WOOD POLE SUPPORT WITH NO OH CONDUCTORS

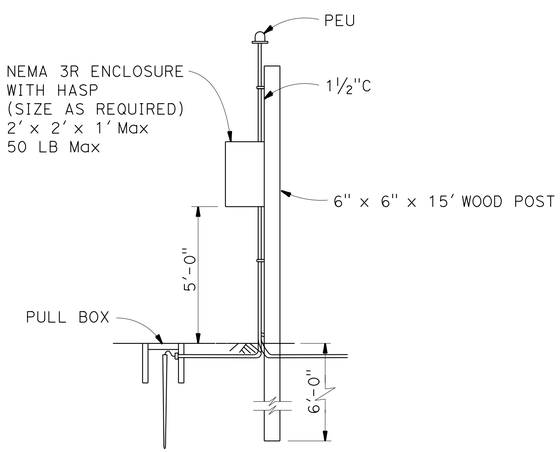

WOOD POST DETAIL

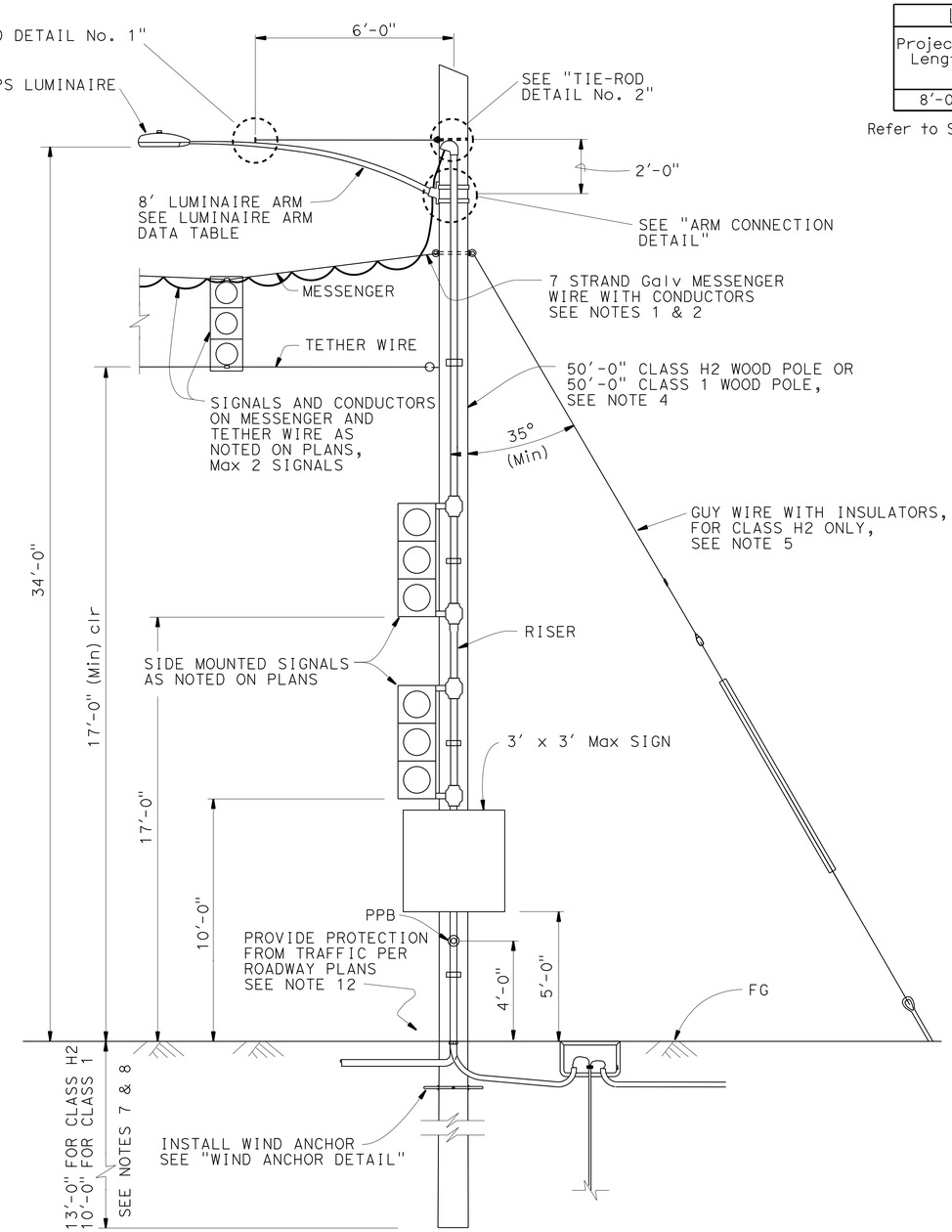

TYPICAL WOOD POLE SUPPORT WITH OH CONDUCTORS

SEE NOTE 11

NO SCALE

LUMINAIRE ARM DATA			
Projected Length	N Rise	Min OD At Pole	Thickness
8'-0"	2'-6"	3½"	0.1196"

Refer to SP ES-6A for Luminaire arm details

GENERAL NOTES:

SPECIFICATIONS

Design: AASHTO Standard Specifications for Structural Supports for Highway Signs, Luminaires and Traffic Signals dated 2009 and 2010 Interim Revisions.

LOADING

Wind Loadings: 85 MPH

UNIT STRESSES

Timber Poles: Tapered treated round pole ASTM D2899 Standard
Fb = 1850 psi
Fv = 110 psi
E = 1500 x 10^3 psi

TREATMENT

To conform with Section 86 Standard Specifications

GALVANIZATION

All steel or iron per Section 75 Standard Specification.

SPECIFICATIONS

Caltrans Standard Specifications 2010
ANSI 05 Wood Poles
ASTM A475 Utility Grade Wires

NOTES:

1. All overhead cables must be slack spanned with 25'-0" minimum overhead clearance.
2. Conductors must be suspended from span-wire as follows:
   A) Main run ⅜" span-wire with 4.5% ± sag.
   B) ¼" tether wire with 4.5% ± sag where required.
   No spare conductors allowed except as noted.
3. Overhead line construction not specifically covered here must conform with the provisions of General Order No. 95 of Public Utilities Commission.
4. Use 50'-0" class H2 with guy wires for wood poles to support signal(s) on messenger and tether wires, Max 2 signals, or for wood poles to carry 20 or more conductors, Max span 60 ft. Otherwise use 50'-0" class 1 wood poles without guy wire.
5. 50'-0" class H2 wood poles must be stabilized using guy wires, breast blocks or rakes at each dead end, corner, drop or line deviation more than 10° from straight line. The direction of the guy must counteract the resultant of unbalanced force applied to pole. Where space or conflict prevent guy installation, a diagonal brace must be used. The brace must be wood and must be connected to pole by means to satisfy structural and electrical requirements. The direction of the brace must counteract the resultant of unbalanced horizontal force of 4000 pounds (Min).
6. All attachments must be mounted with stainless steel straps or other manufacturers methods without drilling holes in pole, except as shown. Drilling through pole will require the Engineer's approval.
7. Foundation design is based on AASHTO 2009 and 2010 Interim Revisions article 13.6 Broms' approximate procedure assuming a cohesionless material. The angle of internal friction used is 30° and unit weight of soil used is 120 lb/ft^3. Verify actual soil condition.
8. If pole is located on a steep slope add 2 feet extra for embedment.
9. See Sheets SES-2 thru SES-4 for details.
10. For details not shown, see "2010 STANDARD PLANS"
11. Attach combination of attachments as specified at locations where indicated on Electrical Sheets.
12. All temporary wood poles must be protected from traffic by means according to California Department of Transportation Highway Manual as required. See "Roadway Plans".

NOTE:
THE CONTRACTOR SHALL VERIFY ALL CONTROLLING FIELD DIMENSIONS BEFORE ORDERING OR FABRICATING ANY MATERIAL.

BRANCH CHIEF: JAMES SAGAR

	BY	CHECKED
DESIGN	A MALAK	T MARCHENKO
DETAILS	H NGUYEN	A MALAK
QUANTITIES		

STATE OF CALIFORNIA
DEPARTMENT OF TRANSPORTATION

DIVISION OF ENGINEERING SERVICES
DESIGN AND TECHNICAL SERVICES
SPECIAL DESIGNS BRANCH
B

BRIDGE NO. N/A
POST MILE 0.0/5.2

TEMPORARY SIGNAL SYSTEM
TEMPORARY WOOD POLE

SES-1

(ENGLISH) SPECIAL DESIGNS BRANCH BORDER SHEET (REV. 7-1-09)

ORIGINAL SCALE IN INCHES FOR REDUCED PLANS 0 1 2 3

UNIT: 3619
PROJECT NUMBER & PHASE: 0400000813
CONTRACT NO.: 04-2A2501

DISREGARD PRINTS BEARING EARLIER REVISION DATES
REVISION DATES: 3-2-12 7-3-12

SHEET 1 OF 5

FILE => spec_des_br_prj/2012sd/04-2a2501_ses1.dgn

USERNAME => s124496 DATE PLOTTED => 21-JUN-2013 TIME PLOTTED => 08:04

DIST	COUNTY	ROUTE	POST MILES TOTAL PROJECT	SHEET No	TOTAL SHEETS
04	SCI	152	0.1/5.2	231	416

REGISTERED CIVIL ENGINEER — DATE 11/21/12

6-17-13
PLANS APPROVAL DATE

REGISTERED PROFESSIONAL ENGINEER — AIMAN MALAK — No. C73369 — Exp. 12-31-2014 — CIVIL — STATE OF CALIFORNIA

The State of California or its officers or agents shall not be responsible for the accuracy or completeness of electronic copies of this plan sheet.

NOTES:

1. All hardware and steel must be galvanized after fabrication.
2. Arm Base connection details must be in compliance with Standard Plans Detail Sheet ES-6A with noted modifications.
3. 2000 lb Min capacity strap system shall be used for top and bottom of plate.
4. Verify pole dimensions at Tie-Rod attachment height. Fabricate 8" flat bar with "L" Dimension to maintain an open gap between encasement in finished installation.

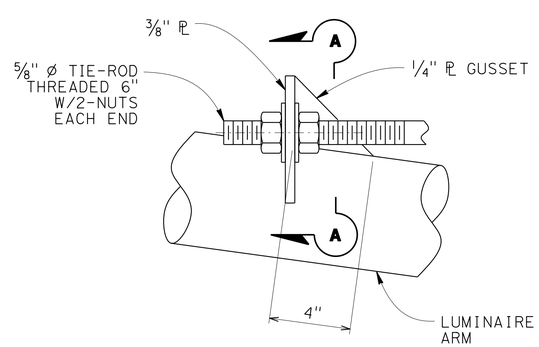

ELEVATION

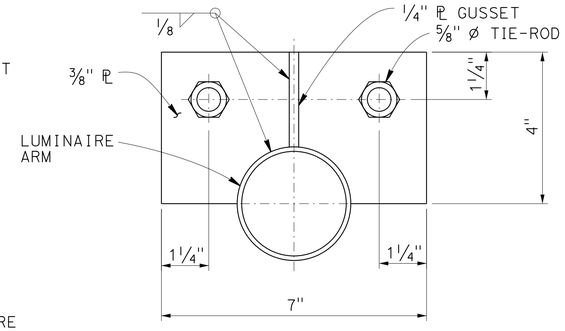

SECTION A-A

TIE-ROD DETAIL No. 1

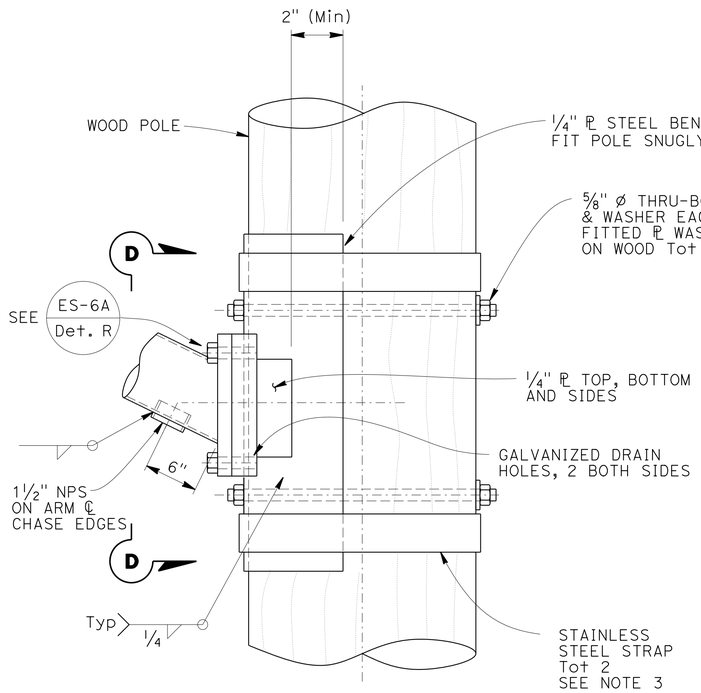

ELEVATION

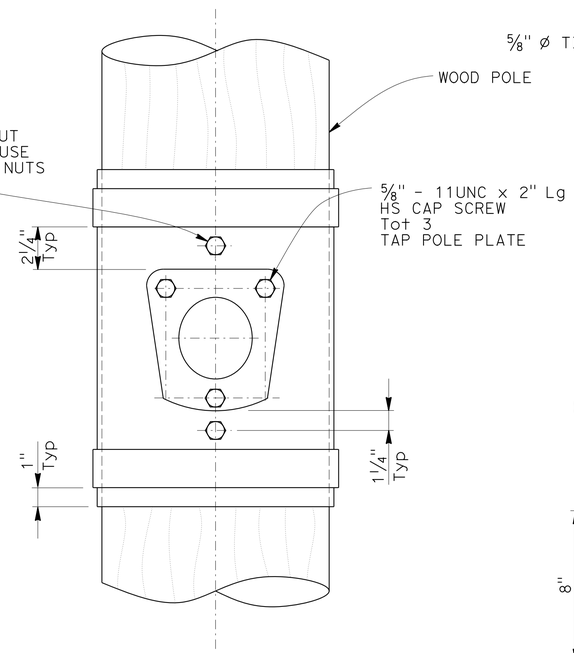

VIEW D-D

NOTE:
THE CONTRACTOR SHALL VERIFY ALL CONTROLLING FIELD DIMENSIONS BEFORE ORDERING OR FABRICATING ANY MATERIAL.

ARM CONNECTION DETAILS

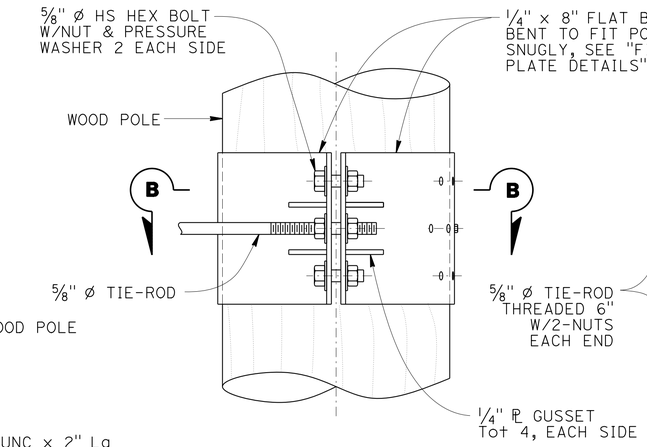

ELEVATION

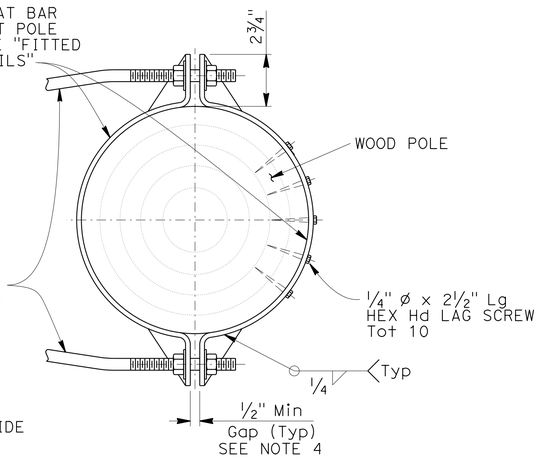

SECTION B-B

TIE-ROD DETAIL No. 2

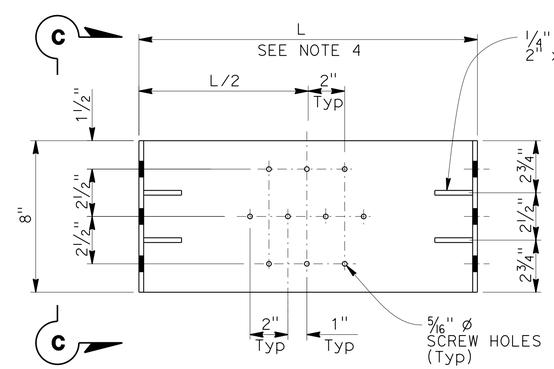

ELEVATION

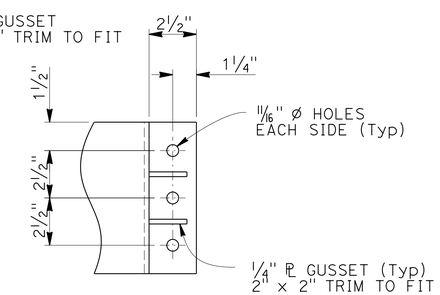

VIEW C-C

FITTED PLATE DETAILS

Note: 2 Required (1 w/screw holes, 1 without)

NO SCALE

BRANCH CHIEF JAMES SAGAR	DESIGN	BY A MALAK	CHECKED T MARCHENKO
	DETAILS	BY H NGUYEN	CHECKED A MALAK
	QUANTITIES	BY	CHECKED

STATE OF CALIFORNIA
DEPARTMENT OF TRANSPORTATION

DIVISION OF ENGINEERING SERVICES
DESIGN AND TECHNICAL SERVICES
SPECIAL DESIGNS BRANCH
B

BRIDGE NO. N/A
POST MILE 0.0/5.2

TEMPORARY SIGNAL SYSTEM
ARM MOUNTING DETAILS

SES-2

(ENGLISH) SPECIAL DESIGNS BRANCH BORDER SHEET (REV. 7-1-09)

ORIGINAL SCALE IN INCHES FOR REDUCED PLANS 0 1 2 3

UNIT: 3619
PROJECT NUMBER & PHASE: 0400000813
CONTRACT NO.: 04-2A2501

DISREGARD PRINTS BEARING EARLIER REVISION DATES

REVISION DATES 2-7-12

SHEET 2 OF 5

FILE => spec_des_br_prj/2012sd/04-2a2501_ses2.dgn

USERNAME => s124496 DATE PLOTTED => 21-JUN-2013 TIME PLOTTED => 08:04

DIST	COUNTY	ROUTE	POST MILES TOTAL PROJECT	SHEET No	TOTAL SHEETS
04	SCI	152	0.1/5.2	232	416

REGISTERED CIVIL ENGINEER 11/21/12 DATE

6-17-13
PLANS APPROVAL DATE

REGISTERED PROFESSIONAL ENGINEER ATMAN MALAK No. C73369 Exp. 12-31-2014 CIVIL STATE OF CALIFORNIA

The State of California or its officers or agents shall not be responsible for the accuracy or completeness of electronic copies of this plan sheet.

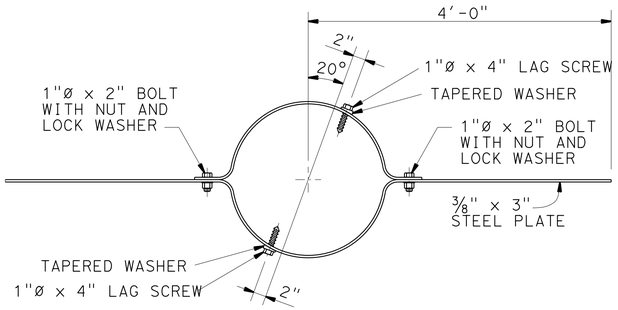

WIND ANCHOR

To be installed perpendicular to luminaire arms and 2'-0" Min below grade

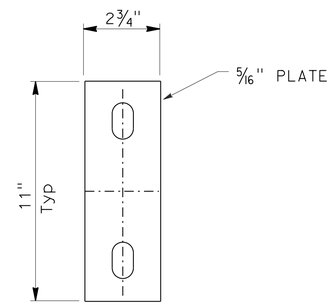

COMPARTMENT PLATE (MOD)

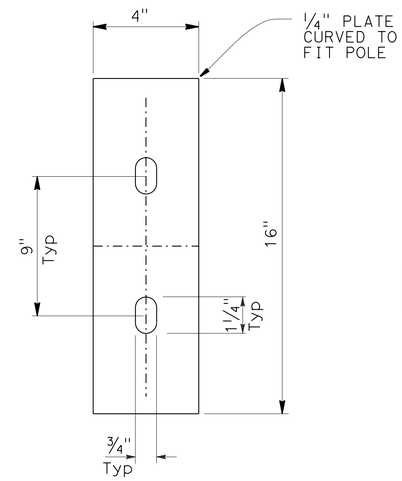

BACK PLATE

NOTE:

1. Verify soil condition, slope, and adjust anchoring to satisfy basic design requirements per Note 7 on SES-1 sheet.

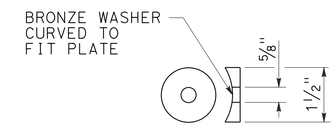

DETAIL "C"

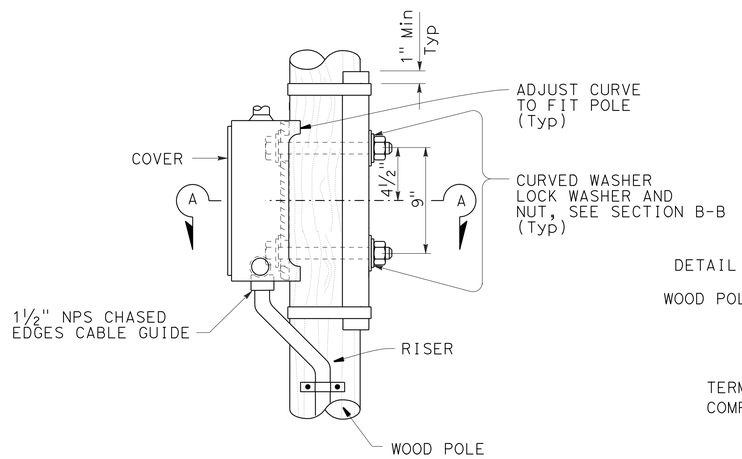

SIDE MOUNTING TERMINAL COMPARTMENT

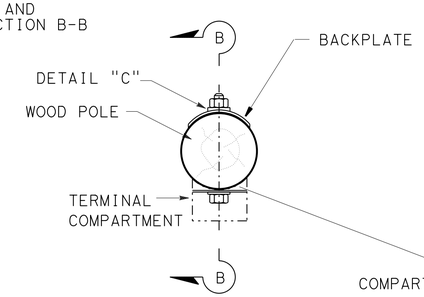

SECTION A-A

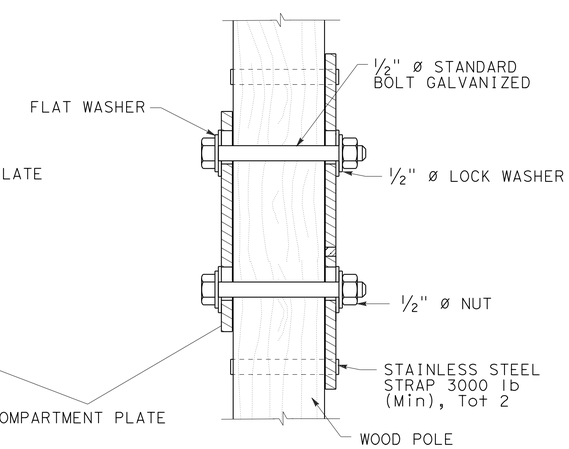

SECTION B-B

SIGNAL HEAD MOUNTING

For Details Not Shown See RSP-ES-4D Sheet

NOTE:
THE CONTRACTOR SHALL VERIFY ALL CONTROLLING FIELD DIMENSIONS BEFORE ORDERING OR FABRICATING ANY MATERIAL.

NO SCALE

BRANCH CHIEF JAMES SAGAR	DESIGN	BY A MALAK	CHECKED T MARCHENKO
	DETAILS	BY HUNG NGUYEN	CHECKED A MALAK
	QUANTITIES	BY	CHECKED

STATE OF CALIFORNIA
DEPARTMENT OF TRANSPORTATION

DIVISION OF ENGINEERING SERVICES
DESIGN AND TECHNICAL SERVICES
SPECIAL DESIGNS BRANCH B

BRIDGE NO. N/A
POST MILE 0.0/5.2

TEMPORARY SIGNAL SYSTEM
SIGNAL & ANCHOR DETAILS

SES-3

(ENGLISH) SPECIAL DESIGNS BRANCH BORDER SHEET (REV. 7-1-09)

ORIGINAL SCALE IN INCHES FOR REDUCED PLANS 0 1 2 3

UNIT: 3619
PROJECT NUMBER & PHASE: 0400000813
CONTRACT NO.: 04-2A2501

DISREGARD PRINTS BEARING EARLIER REVISION DATES
REVISION DATES 2-7-12

SHEET 3 OF 5

FILE => spec_des_br_prj/2012sd/04-2a2501_ses3.dgn

USERNAME => s124496 DATE PLOTTED => 21-JUN-2013 TIME PLOTTED => 08:04

DIST	COUNTY	ROUTE	POST MILES TOTAL PROJECT	SHEET No	TOTAL SHEETS
04	SCI	152	0.1/5.2	233	416

REGISTERED CIVIL ENGINEER 11/21/12 DATE

6-17-13
PLANS APPROVAL DATE

The State of California or its officers or agents shall not be responsible for the accuracy or completeness of electronic copies of this plan sheet.

REGISTERED PROFESSIONAL ENGINEER
AIMAN MALAK
No. C73369
Exp. 12-31-2014
CIVIL
STATE OF CALIFORNIA

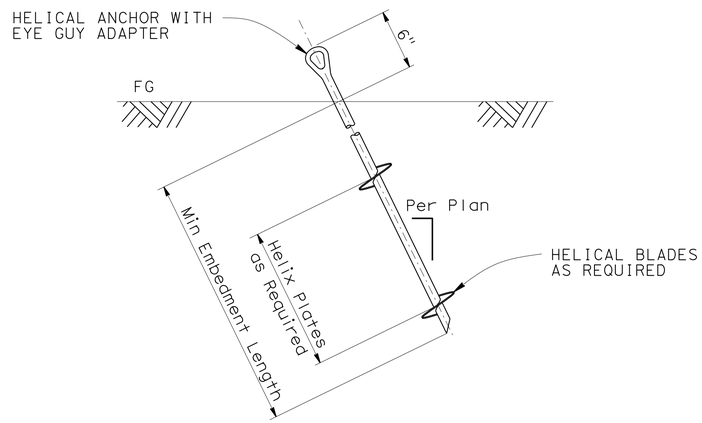

ALTERNATIVE GUY WIRE INSTALLATION DETAIL

(See Helical Anchor Specifications Table)

HELICAL ANCHOR SPECIFICATIONS

Anchor Location	Type	Helix Plate Diameter*	Allowable Min Tension Cap., "Q_a"	Embedment Length (Min)	Installation Torque (Min)**, "T"
Detail	Tension	12"	4000 lb	8'-0"	1200 Ft-lb

SPECIFICATION NOTES:

1 During installation the torque will be continuosly monitored and recorded. If a drop in torque is recorded, the anchor must then continue to be inserted past the soft soil layer until Minimum Installation Torque is achieved.

2 Anchors and Hardware to be installed per the manufacturers specifications.

* Number of helical plates is not specified; Contractors choice.

** Adjust accordingly if required, See Note 3.

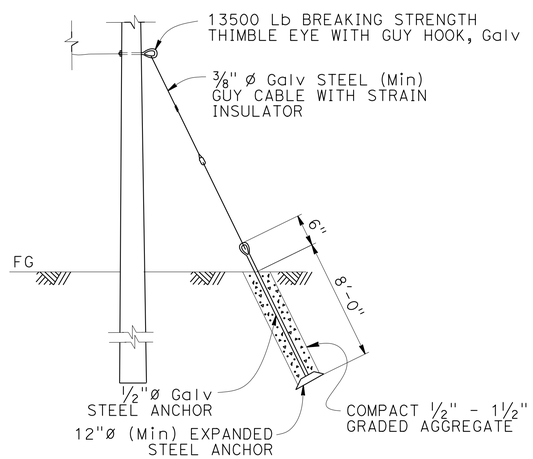

GUY WIRE INSTALLATION DETAIL

NOTES:

1. Verify soil condition, slope, and adjust anchoring to satisfy basic design requirements per Note 7 on SES-1 sheet.

2. Use of alternative Guy Wire Installation Detail requires that the soil bearing capacity be verified by the Contractor.

3. Determine the most appropriate value for k_t based on soil conditions and shall adjust the Min Installation Torque based on the revised k_t. A k_t value of 10 was assumed for the Min Installation Torque shown in the table.

   The Helical Installation torque Formula is $Q_u = k_t * T$ where,

   $Q_u = Q_a * FS$ = Ultimate Helical Anchor Capacity (lb)
   FS = Factor of Safety = 3.0
   Q_a = Allowable Helical Anchor Capacity (lb)
   k_t = Empirical Torque Factor (ft^{-1})
   T = Min Installation Torque (ft-lb)

4. Requests made by Helical Anchor Installation Contractor to reduce the minimum embedment length and Helix ℞ diameter require the Engineer's approval.

5. Locate and mark all of the substructures and utilities. Installation of anchors underneath utilities or subsurface structures is prohibited. Horizontal clearances of anchors must be determined by the Engineer during construction.

NOTE:
THE CONTRACTOR SHALL VERIFY ALL CONTROLLING FIELD DIMENSIONS BEFORE ORDERING OR FABRICATING ANY MATERIAL.

NO SCALE

BRANCH CHIEF JAMES SAGAR	DESIGN	BY A MALAK	CHECKED T MARCHENKO
	DETAILS	BY H NGUYEN	CHECKED A MALAK
	QUANTITIES	BY	CHECKED

STATE OF CALIFORNIA
DEPARTMENT OF TRANSPORTATION

DIVISION OF ENGINEERING SERVICES
DESIGN AND TECHNICAL SERVICES
SPECIAL DESIGNS BRANCH

B

BRIDGE NO. N/A
POST MILE 0.0/5,2

TEMPORARY SIGNAL SYSTEM
GUY WIRE DETAILS

SES-4

(ENGLISH) SPECIAL DESIGNS BRANCH BORDER SHEET (REV. 7-1-09)

ORIGINAL SCALE IN INCHES FOR REDUCED PLANS 0 1 2 3

UNIT: 3619
PROJECT NUMBER & PHASE: 0400000813
CONTRACT NO.: 04-2A2501

DISREGARD PRINTS BEARING EARLIER REVISION DATES

REVISION DATES 10-15-12

SHEET 4 OF 5

USERNAME => s124496 DATE PLOTTED => 21-JUN-2013 TIME PLOTTED => 08:04

FILE => spec_des_br_prj/2012sd/04-2a2501_ses4.dgn

DIST	COUNTY	ROUTE	POST MILES TOTAL PROJECT	SHEET No	TOTAL SHEETS
04	SCI	152	0.1/5.2	234	416

REGISTERED CIVIL ENGINEER — DATE 11/21/12

6-17-13
PLANS APPROVAL DATE

REGISTERED PROFESSIONAL ENGINEER — AIMAN MALAK — No. C73369 — Exp. 12-31-2014 — CIVIL — STATE OF CALIFORNIA

The State of California or its officers or agents shall not be responsible for the accuracy or completeness of electronic copies of this plan sheet.

Location	VMS Panel E Line STA 269+50	POST DATA, See Note 5							
		Laminated Wood Box Post Type	Section Dimensions	Length, Ft		Weight, Lb		Breakaway System	Mounting Bolt Size
				Left	Right	Left	Right		
1	Roadside "Rt"	"L"	14⅞" x 7⅞"	18.75	20.0	320	340	Yes	½" ø
2	Roadside "Lt"	"L"	14⅞" x 7⅞"	18.75	20.0	320	340	Yes	½" ø
						Total Wt = 1320 lbs			

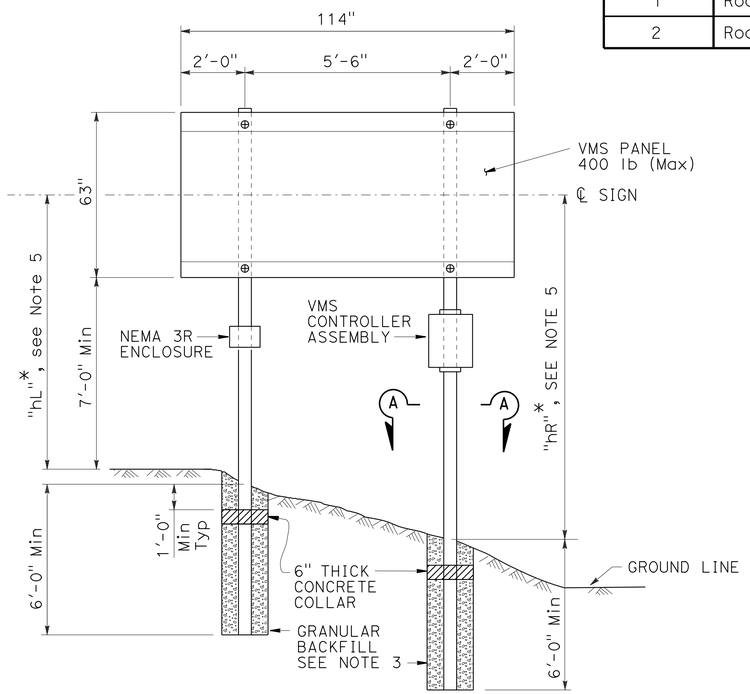

ELEVATION

* DIMENSIONS SHOWN ON PROJECT PLANS ARE FOR FABRICATION. AT TIME OF INSTALLATION ADJUST THESE DIMENSIONS TO VERIFY IN FIELD

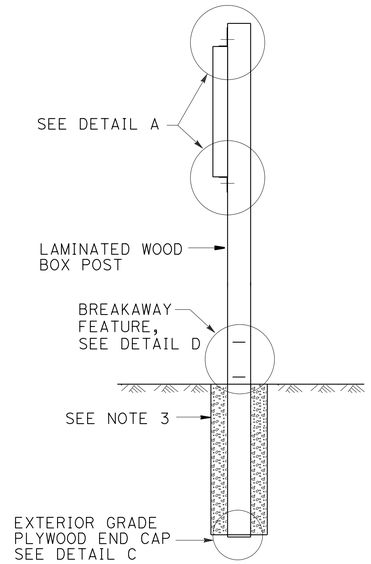

SIDE VIEW

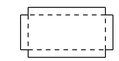

GALVANIZED METAL CAP

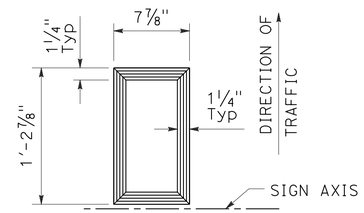

SECTION A-A

TYPE "L"

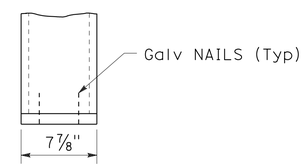

SECTION B-B

GENERAL NOTES

DESIGN:

AASHTO Specifications for Structural Supports for Highway Signs, Luminaires and Traffic Signals, dated 2009 and 2010 Interim Revisions

CONSTRUCTION:

Standard Specifications and the Special Provisions State of California Department of Transportation Dated 2010

Standard Plans State of California Department of Transportation Dated 2010

LOADING:

WIND LOADING:

25 psf applied load combinations per 3.9 AASHTO Specifications for Structural Supports for Hightway Signs, Luminaires and Traffic Signals, dated 2009 and 2010 Interim Revisions

STANDARD PLANS DATED 2010

A10A	ABBREVIATIONS (A-L)
A10B	ABBREVIATIONS (M-Z)
RS1	ROADSIDE SIGNS TYPICAL INSTALLATION DETAIL No. 1
RS2	ROADSIDE SIGNS TYPICAL INSTALLATION DETAIL No. 2
RS4	ROADSIDE SIGNS TYPICAL INSTALLATION DETAIL No. 4

NOTES:

1. For details not shown, see "2010 STANDARD PLANS"
2. For sign location see "PROJECT PLANS".
3. Diameter of post holes shall be at least 2'-6".
4. Refer to VMS manufacturer to verify bolt hole layout and length.
5. Design based on 1V:4H Max slope. Verify before post fabrication.

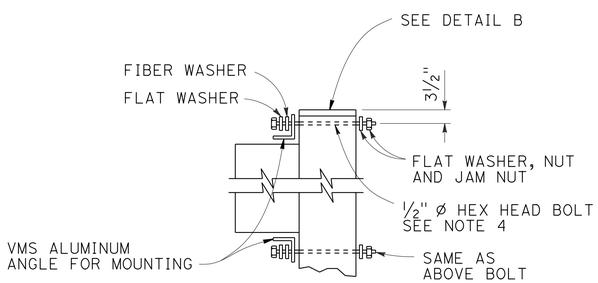

DETAIL A

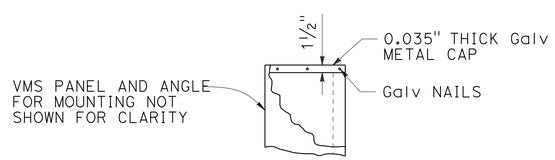

DETAIL B

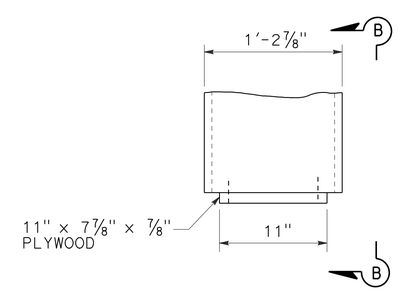

DETAIL C

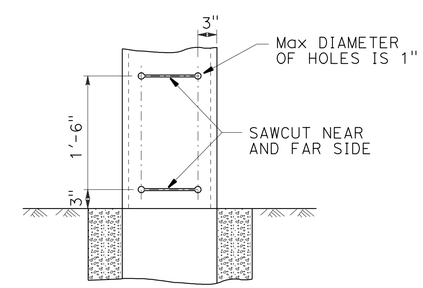

DETAIL D

NOTE:
THE CONTRACTOR SHALL VERIFY ALL CONTROLLING FIELD DIMENSIONS BEFORE ORDERING OR FABRICATING ANY MATERIAL.

NO SCALE

BRANCH CHIEF JAMES SAGAR	DESIGN	BY A MALAK	CHECKED B NAGID
	DETAILS	BY H NGUYEN	CHECKED A MALAK
	QUANTITIES	BY A MALAK	CHECKED B NAGID

STATE OF CALIFORNIA
DEPARTMENT OF TRANSPORTATION

DIVISION OF ENGINEERING SERVICES
DESIGN AND TECHNICAL SERVICES
SPECIAL DESIGNS BRANCH
B

BRIDGE NO. N/A
POST MILE 0.0/5.2

VMS ROADSIDE SIGN INSTALLATION & DETAILS

SES-5

(ENGLISH) SPECIAL DESIGNS BRANCH BORDER SHEET (REV. 7-1-09)

ORIGINAL SCALE IN INCHES FOR REDUCED PLANS 0 1 2 3

UNIT: 3619
PROJECT NUMBER & PHASE: 0400000813
CONTRACT NO.: 04-2A2501

DISREGARD PRINTS BEARING EARLIER REVISION DATES

REVISION DATES 2-14-12

SHEET 5 OF 5

FILE => spec_des_br_prj/2011sd/07-260701/04-2a2501_ses5.dgn

USERNAME => s124496 DATE PLOTTED => 21-JUN-2013 TIME PLOTTED => 08:05

Dist	COUNTY	ROUTE	POST MILES TOTAL PROJECT	SHEET No.	TOTAL SHEETS
04	SCI	152	0.1/5.2	235	416

REGISTERED CIVIL ENGINEER

April 20, 2012
PLANS APPROVAL DATE

REGISTERED PROFESSIONAL ENGINEER
Roberta L. McLaughlin
No. C40375
Exp. 3-31-13
CIVIL
STATE OF CALIFORNIA

THE STATE OF CALIFORNIA OR ITS OFFICERS OR AGENTS SHALL NOT BE RESPONSIBLE FOR THE ACCURACY OR COMPLETENESS OF SCANNED COPIES OF THIS PLAN SHEET.

TO ACCOMPANY PLANS DATED 6-17-13

2010 REVISED STANDARD PLAN RSP A24A

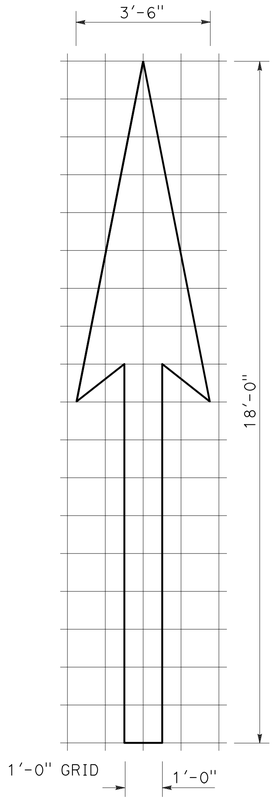

A=25 ft^2

TYPE I 18'-0" ARROW

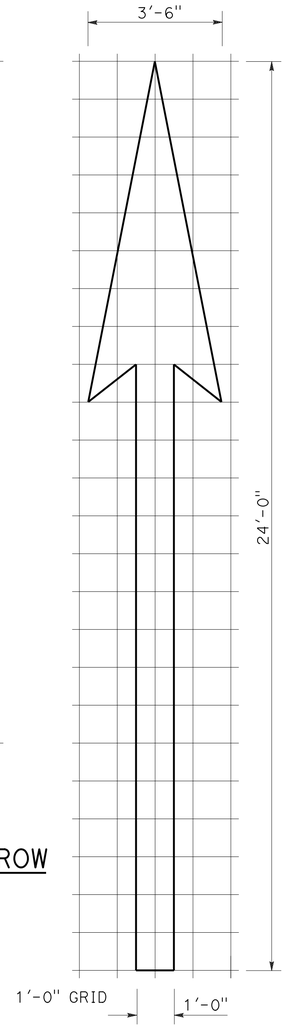

A=31 ft^2

TYPE I 24'-0" ARROW

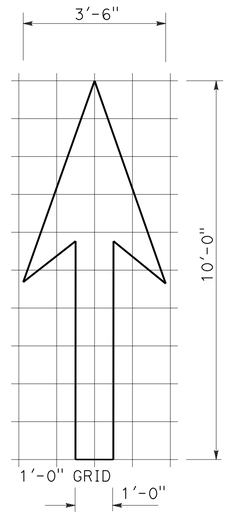

A=14 ft^2

TYPE I 10'-0" ARROW

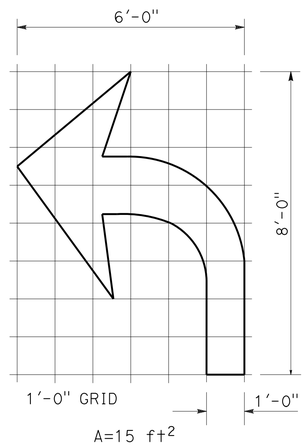

A=15 ft^2

TYPE IV (L) ARROW

(For Type IV (R) arrow, use mirror image)

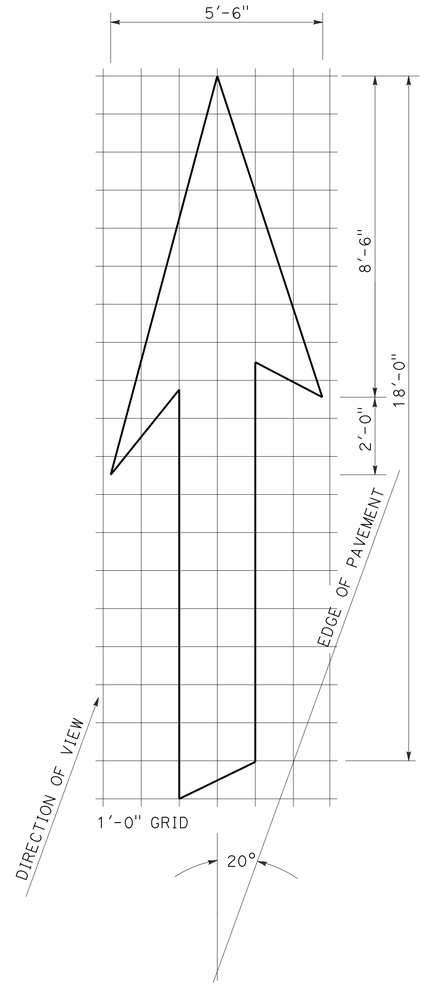

A=42 ft^2

TYPE VI ARROW

Right lane drop arrow
(For left lane, use mirror image)

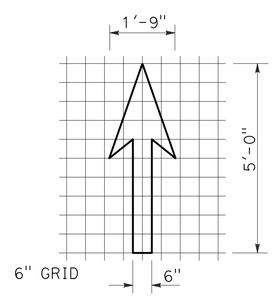

A=3.5 ft^2

BIKE LANE ARROW

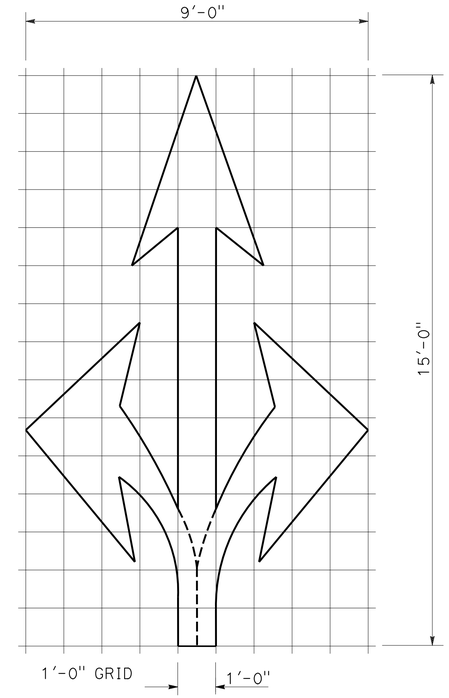

A=36 ft^2

TYPE VIII ARROW

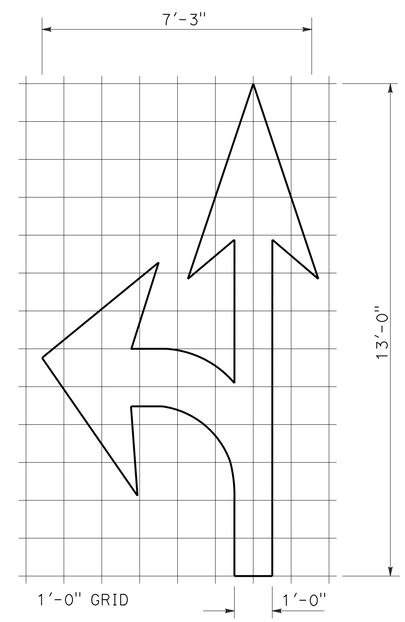

A=27 ft^2

TYPE VII (L) ARROW

(For Type VII (R) arrow, use mirror image)

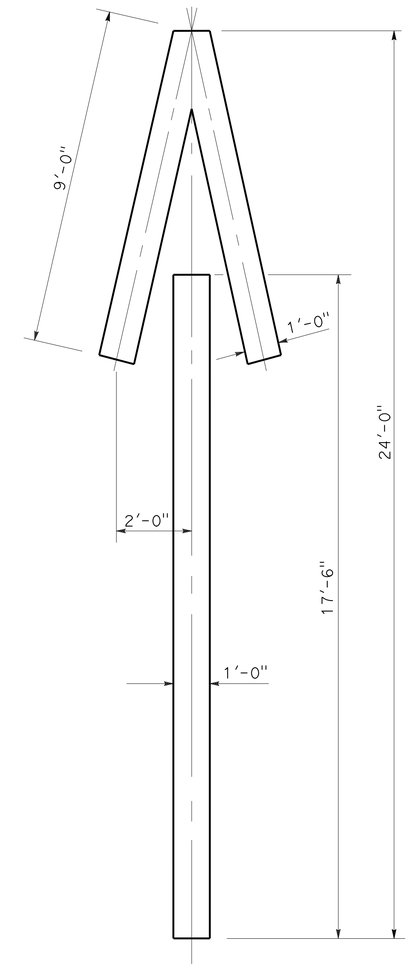

A=33 ft^2

TYPE V ARROW

NOTE:
Minor variations in dimensions may be accepted by the Engineer.

STATE OF CALIFORNIA
DEPARTMENT OF TRANSPORTATION

PAVEMENT MARKINGS ARROWS

NO SCALE

RSP A24A DATED APRIL 20, 2012 SUPERSEDES STANDARD PLAN A24A DATED MAY 20, 2011 - PAGE 13 OF THE STANDARD PLANS BOOK DATED 2010.

REVISED STANDARD PLAN RSP A24A

3-14-12

Dist	COUNTY	ROUTE	POST MILES TOTAL PROJECT	SHEET No.	TOTAL SHEETS
04	SCI	152	0.1/5.2	236	416

REGISTERED CIVIL ENGINEER

July 20, 2012
PLANS APPROVAL DATE

REGISTERED PROFESSIONAL ENGINEER
Roberta L. McLaughlin
No. C40375
Exp. 3-31-13
CIVIL
STATE OF CALIFORNIA

THE STATE OF CALIFORNIA OR ITS OFFICERS OR AGENTS SHALL NOT BE RESPONSIBLE FOR THE ACCURACY OR COMPLETENESS OF SCANNED COPIES OF THIS PLAN SHEET.

TO ACCOMPANY PLANS DATED 6-17-13

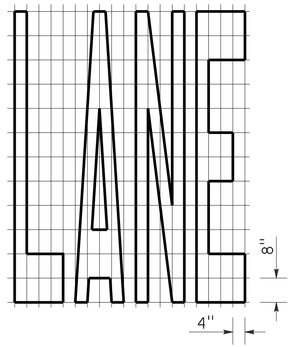

A=24 ft²

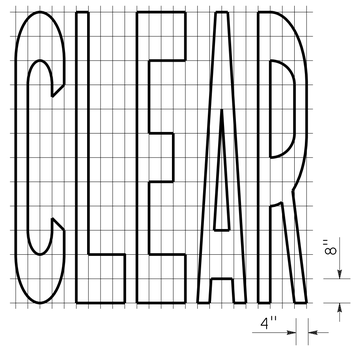

A=27 ft²

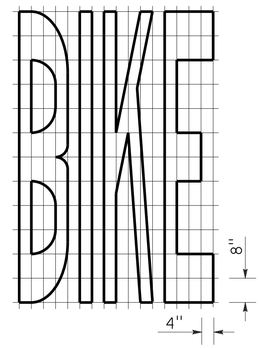

A=21 ft²

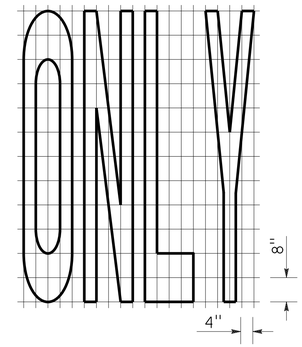

A=22 ft²

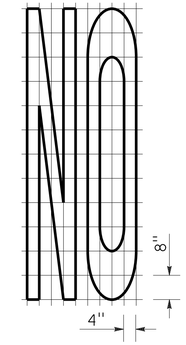

A=14 ft²

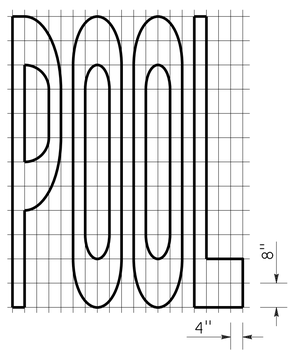

A=23 ft²

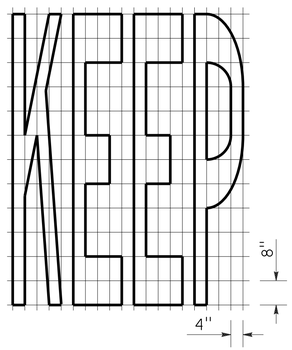

A=24 ft²

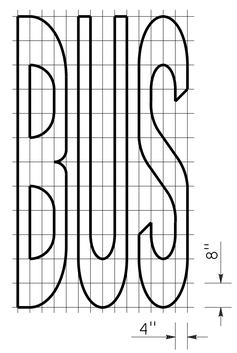

A=20 ft²

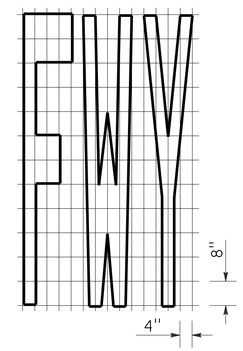

A=16 ft²

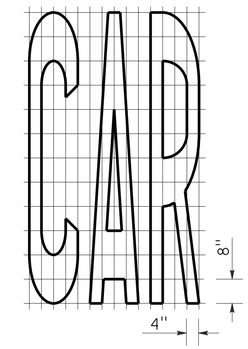

A=17 ft²

WORD MARKINGS			
ITEM	ft²	ITEM	ft²
LANE	24	NO	14
POOL	23	BIKE	21
CAR	17	BUS	20
CLEAR	27	ONLY	22
KEEP	24	FWY	16

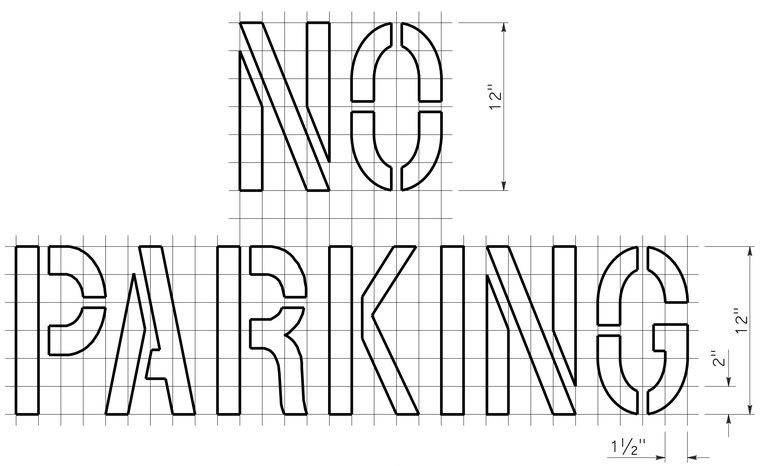

A=2 ft²
See Notes 6 and 7

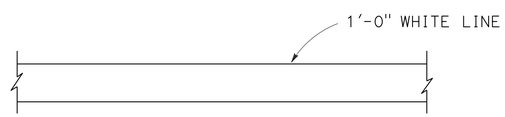

LIMIT LINE (STOP LINE)

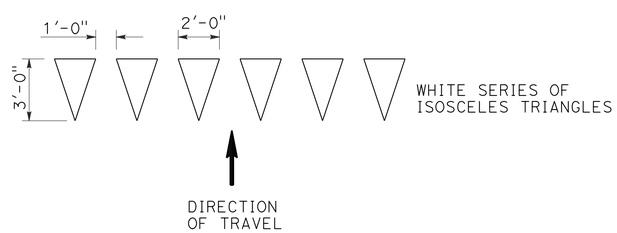

YIELD LINE

NOTES:

1. If a message consists of more than one word, it should read "UP", i.e., the first word should be nearest the driver.
2. The space between words should be at least four times the height of the characters for low speed roads, but not more than ten times the height of the characters. The space may be reduced appropriately where there is limited space because of local conditions.
3. Minor variations in dimensions may be accepted by the Engineer.
4. Portions of a letter, number or symbol may be separated by connecting segments not to exceed 2" in width.
5. The words "NO PARKING" pavement marking is to be used for parking facilities. For typical locations of markings, see Standard Plans A90A and A90B.
6. The words "NO PARKING", shall be painted in white letters no less than 1'-0" high on a contrasting background and located so that it is visible to traffic enforcement officials.

STATE OF CALIFORNIA
DEPARTMENT OF TRANSPORTATION

PAVEMENT MARKINGS WORDS, LIMIT AND YIELD LINES

NO SCALE

RSP A24E DATED JULY 20, 2012 SUPERSEDES STANDARD PLAN A24E
DATED MAY 20, 2011 - PAGE 17 OF THE STANDARD PLANS BOOK DATED 2010.

REVISED STANDARD PLAN RSP A24E

2010 REVISED STANDARD PLAN RSP A24E

6-12-12

Dist	COUNTY	ROUTE	POST MILES TOTAL PROJECT	SHEET No.	TOTAL SHEETS
04	SCI	152	0.1/5.2	237	416

REGISTERED CIVIL ENGINEER

October 19, 2012
PLANS APPROVAL DATE

REGISTERED PROFESSIONAL ENGINEER Glenn DeCou No. C34547 Exp. 9-30-13 CIVIL STATE OF CALIFORNIA

THE STATE OF CALIFORNIA OR ITS OFFICERS OR AGENTS SHALL NOT BE RESPONSIBLE FOR THE ACCURACY OR COMPLETENESS OF SCANNED COPIES OF THIS PLAN SHEET.

TO ACCOMPANY PLANS DATED 6-17-13

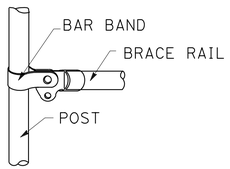

BRACE RAIL

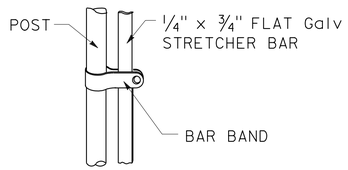

STRETCHER BAR

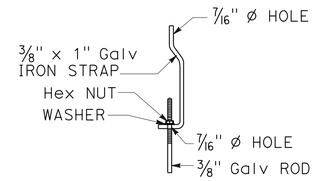

TRUSS TIGHTENER

NOTES:

1. All material for abutment connection to be galvanized.
2. The chain link fabric shall be replaced by barbed wire strands at 12" maximum centers between the double posts.
3. When the width of the culvert makes it necessary to anchor a post to the top of the culvert, a cast iron shoe or other device approved by the Engineer shall be used.
4. Fencing over stream and around headwall may also use Barbed Wire or Wire Mesh fencing with either wood post or steel post installation.
5. See Standard Plan A85 for Chain Link fence dimensions. See Standard Plan A86 for Barbed Wire and Wire Mesh fence dimensions and for wood post and steel post installation.

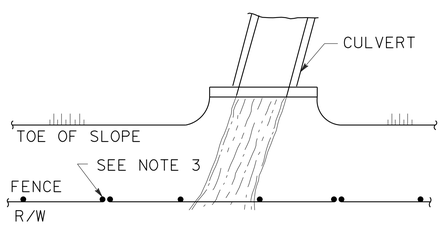

PLAN

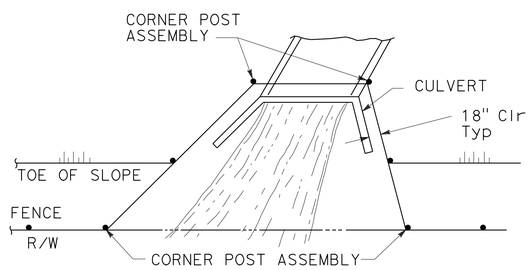

PLAN

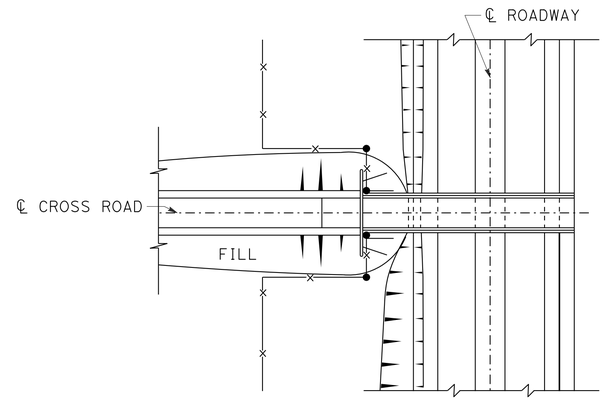

PLAN OF ROADWAY - OVERCROSSING

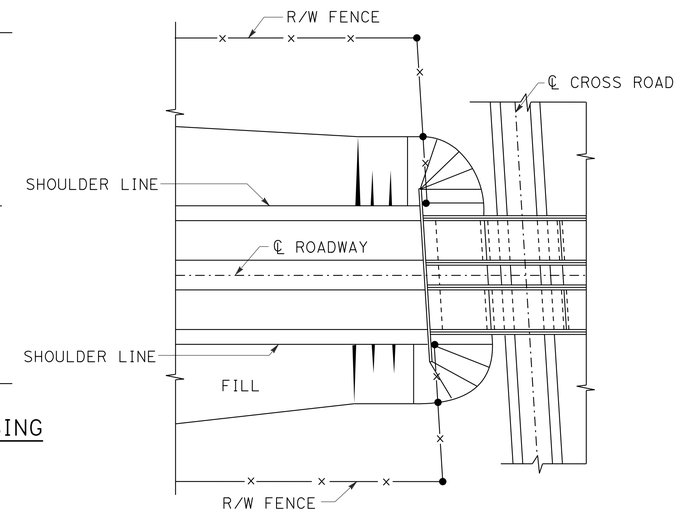

PLAN OF ROADWAY - UNDERCROSSING

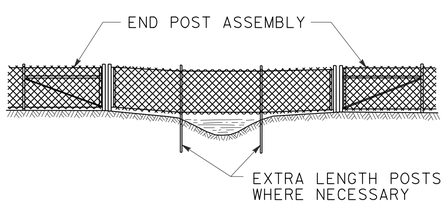

ELEVATION

INSTALLATION OVER STREAM

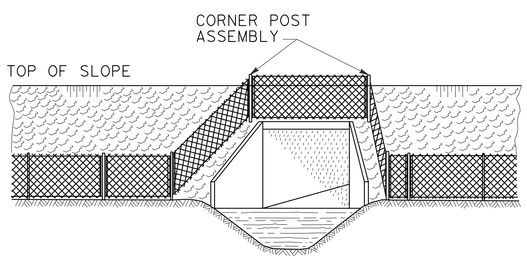

ELEVATION

INSTALLATION AROUND HEADWALL

See Note 4

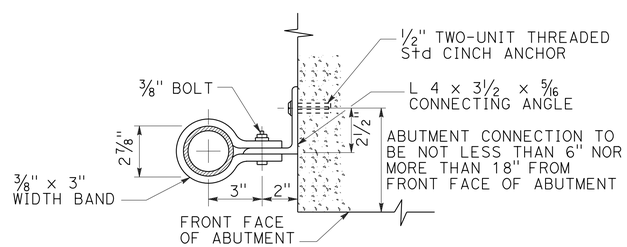

ABUTMENT CONNECTION

TYPICAL INSTALLATION AT BRIDGES

STATE OF CALIFORNIA
DEPARTMENT OF TRANSPORTATION

CHAIN LINK FENCE DETAILS

NO SCALE

RSP A85B DATED OCTOBER 19, 2012 SUPERSEDES STANDARD PLAN A85B DATED MAY 20, 2011 - PAGE 114 OF THE STANDARD PLANS BOOK DATED 2010.

REVISED STANDARD PLAN RSP A85B

2010 REVISED STANDARD PLAN RSP A85B

7-19-12

TO ACCOMPANY PLANS DATED 6-17-13

Dist	COUNTY	ROUTE	POST MILES TOTAL PROJECT	SHEET No.	TOTAL SHEETS
04	SCI	152	0.1/5.2	238	416

REGISTERED CIVIL ENGINEER

October 19, 2012
PLANS APPROVAL DATE

REGISTERED PROFESSIONAL ENGINEER Glenn DeCou No. C34547 Exp. 9-30-13 CIVIL STATE OF CALIFORNIA

THE STATE OF CALIFORNIA OR ITS OFFICERS OR AGENTS SHALL NOT BE RESPONSIBLE FOR THE ACCURACY OR COMPLETENESS OF SCANNED COPIES OF THIS PLAN SHEET.

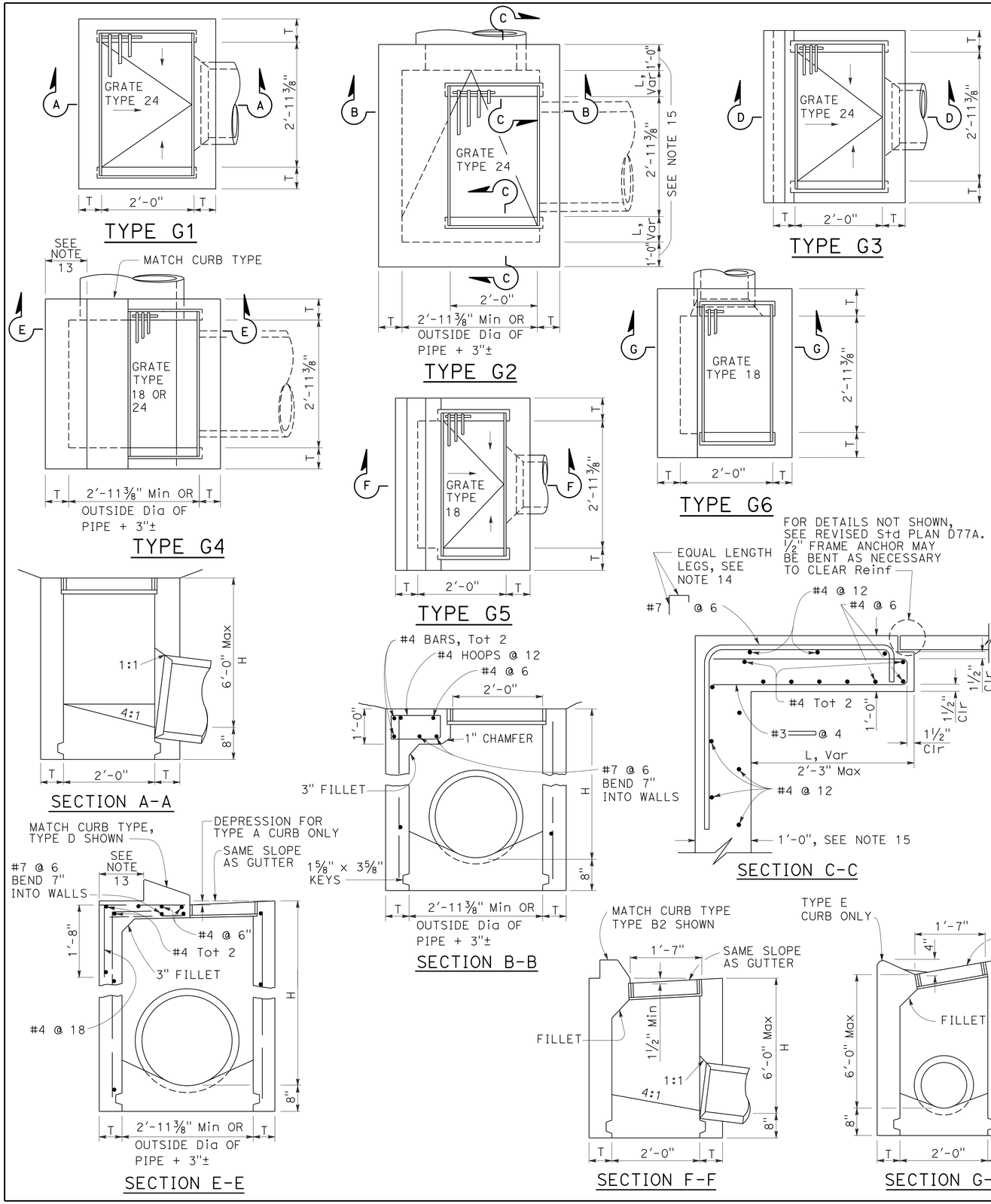

NOTES:

1. "H" is the difference in elevation between the outlet pipe flow line and the normal gutter grade line undepressed.
2. For "T" wall thickness, see Table A below.
3. Wall reinforcing not required when "H" is 8'-0" or less and the unsupported width or length is 7'-0" or less. Walls exceeding these limits shall be reinforced with #4 bars @ 1'-6" ± centers placed 1½" clear to inside of box unless otherwise shown.
4. Inlet bottom reinforcing not required. See Standard Plan D74C for alternative reinforced bottom and alternative half round bottom.
5. Steps-None required where "H" is less than 2'-6". Where "H" is 2'-6" or more, install steps with lowest rung 1'-0" above the floor and highest rung not more than 6" below top of inlet. The distance between steps shall not exceed 1'-0" and shall be uniform throughout the length of the wall. Place steps in the wall without an opening. Steps inserts may be substituted for the bar steps. Step inserts shall comply with State Industrial Safety requirements. See Standard Plan D74C for step details.
6. Details shown apply to both metal and concrete pipe.
7. Pipe(s) can be placed in any wall.
8. Curb section shall match adjacent curb.
9. Basin floors shall have wood trowel finish and a minimum slope of 12:3 from all directions toward outlet pipe.
10. Set inlet so that grate bars are parallel to direction of principal surface flow.
11. See Revised Standard Plans D77A and D77B for grate and frame details and weights of miscellaneous iron and steel.
12. See Standard Plan D78A for gutter depression details.
13. This dimenison will vary with different grates, curbs types, box width and wall thickness.
14. Bar may be rotated as necessary to clear opening. Where "L" is 6" or less, bar may be omitted.
15. Where "L" is 6" or less, wall thickness shall be as shown in Table A.
16. Cast-in-place inlets to be formed around all pipes/stubs intersecting the inlet, and concrete poured in one continuous operation. Precast inlets shall have mortared connections conforming to details for Type GCP Inlet shown on Standard Plan D75B. See Standard Specifications for mortar composition.

TABLE A

CONCRETE QUANTITIES				
TYPE	H=3'-0" TO 8'-0" (T=6")		H=8'-1" TO 20'-0" (T=8")	
	H=3'-0" (CY)	ADDITIONAL PCC PER FOOT (CY)	H=8'-1" (CY)	ADDITIONAL PCC PER FOOT (CY)
G-1	0.95	0.220	See Note A	SEE NOTE A
G-2*	1.31	0.255	3.50	0.357
G-3	1.03	0.220	See Note A	SEE NOTE A
G-4* (TYPE 24)	1.27	0.255	3.48	0.357
G-4* (TYPE 18)	1.30	0.255	3.50	0.357
G-5	1.02	0.220	SEE NOTE A	SEE NOTE A
G-6	1.04	0.220	SEE NOTE A	SEE NOTE A

TABLE BASED ON 8" FLOOR SLAB. NO DEDUCTIONS ARE TO BE MADE TO THESE QUANTITIES BECAUSE OF PIPE OPENINGS, DIFFERENT FLOOR ALTERNATIVES OR DIFFERENT CURB TYPES. * QUANTITIES FOR TYPE G-2 AND G-4 INLETS BASED ON THE MINIMUM INTERIOR DIMENSIONS.

NOTE A:

Maximum allowable height 6'-0".

STATE OF CALIFORNIA
DEPARTMENT OF TRANSPORTATION

DRAINAGE INLETS

NO SCALE

RSP D73 DATED OCTOBER 19, 2012 SUPERSEDES STANDARD PLAN D73 DATED MAY 20, 2011 - PAGE 156 OF THE STANDARD PLANS BOOK DATED 2010.

REVISED STANDARD PLAN RSP D73

2010 REVISED STANDARD PLAN RSP D73

7-19-12

Dist	COUNTY	ROUTE	POST MILES TOTAL PROJECT	SHEET No.	TOTAL SHEETS
04	SCI	152	0.1/5.2	239	416

Raymond Don Tsztoo
REGISTERED CIVIL ENGINEER

April 19, 2013
PLANS APPROVAL DATE

REGISTERED PROFESSIONAL ENGINEER Raymond Don Tsztoo No. C37332 Exp. 6-30-14 CIVIL STATE OF CALIFORNIA

THE STATE OF CALIFORNIA OR ITS OFFICERS OR AGENTS SHALL NOT BE RESPONSIBLE FOR THE ACCURACY OR COMPLETENESS OF SCANNED COPIES OF THIS PLAN SHEET.

TO ACCOMPANY PLANS DATED 6-17-13

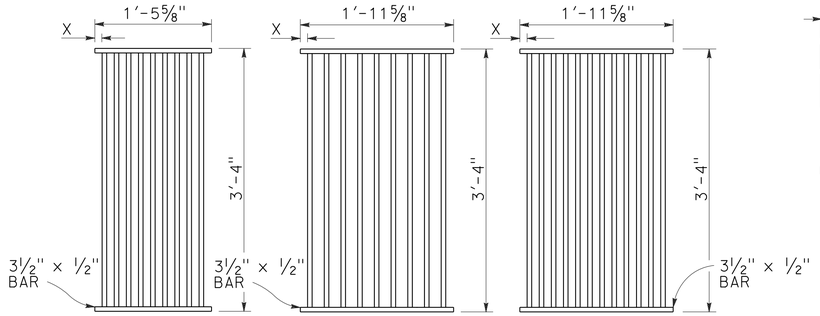

TYPE 18-9

1⅜" Clear spacing. Use within the roadbed on highways where bicycles and pedestrians are excluded.

TYPE 24-9

2" Clear spacing. Use in locations off the roadbed on all types of highways.

TYPE 24-12

1⅜" Clear spacing. Use within the roadbed on highways where bicycles and pedestrians are excluded.

RECTANGULAR GRATE DETAILS

(See table below)

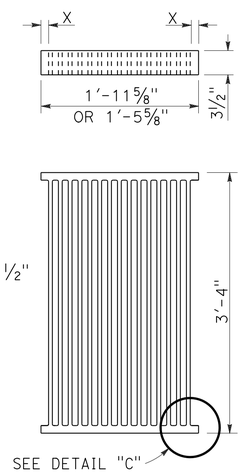

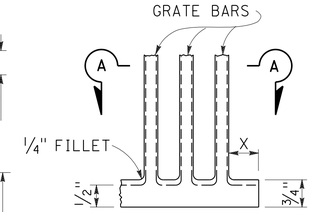

DETAIL "C"

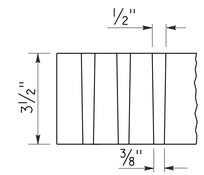

SECTION A-A

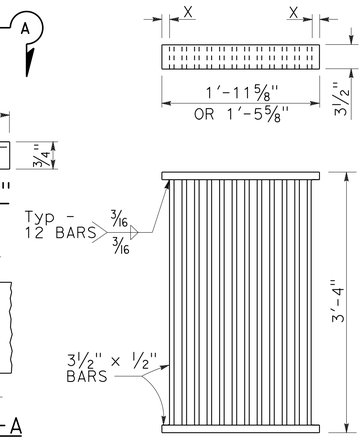

ALTERNATIVE CAST DUCTILE IRON GRATE OR CAST CARBON STEEL GRATE

ALTERNATIVE WELDED GRATE

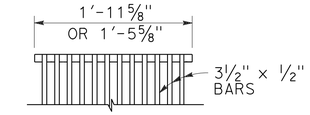

CAST END BLOCK

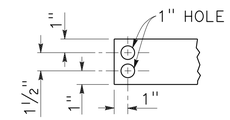

END OF BAR

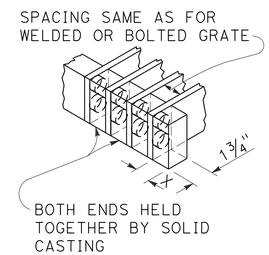

ALTERNATIVE CAST DUCTILE IRON OR CAST CARBON STEEL END BLOCK GRATE

NOTES:

1. Grate type numbers refer to approximate width of grate in inches and number of bars, respectively.
2. Contractor has the option of using cast ductile iron, cast carbon steel, welded, bolted, or cast end block grate.
3. Rounded top of bars optional on all grates.
4. Pipe inlets with a grate shall be placed so that bars parallel direction of principle surface flow.
5. Complete joint penetration butt welds may be substituted for the fillet welds on all anchors.
6. Standard square, hexagon, round or equivalent headed anchors may be substituted for the right angle hooks on the anchors shown on this plan.
7. Grate and frame weights are based on welded grates (weights of face angles, steps, protection bars, etc. are not included).
8. Connect chain to grate and frame only at locations shown on the plans. When chain is required, do not use cast ductile iron grates.

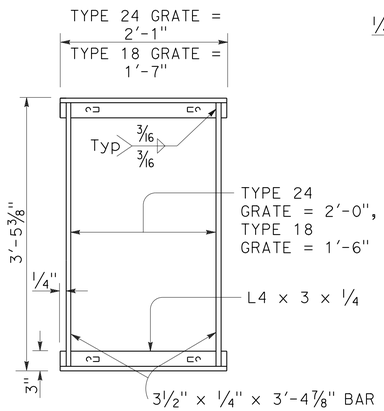

TYPICAL FRAME

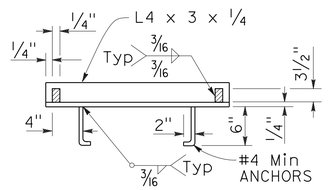

CROSS SECTION

(Thru frame)

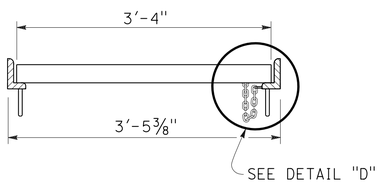

LONGITUDINAL SECTION

(Thru frame and grate)

RECTANGULAR FRAME DETAILS

(For all rectangular grates)

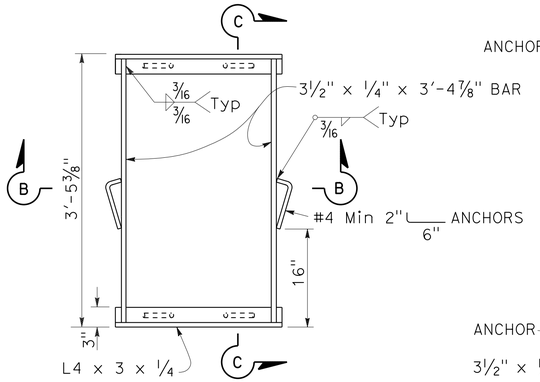

TYPICAL FRAME

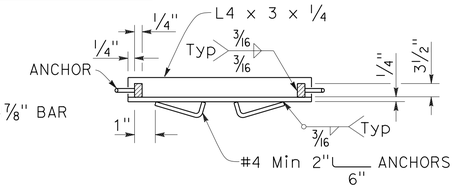

SECTION B-B

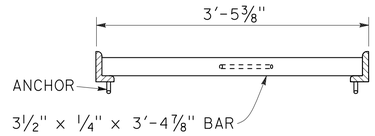

SECTION C-C

ALTERNATIVE ANCHOR FOR RECTANGULAR FRAME

(For details not shown, See Rectangular Frame Details)

INLET TYPE	GRATE TYPE	No. OF GRATES	WEIGHT LB
GDO	24-12	2	634
GOL-7	24-12	1	326
GOL-10	24-12	1	326
GO,G1,G2,G3,G4 (TYPE 24)	24-9	1	263
	24-12	1	326
G4 (TYPE 18),G5,G6	18-9	1	249
GT1	18-9	2	498
GT2	18-9	2	498
GT3	24-12	2	652
GT4	24-12	2	652
TRASH RACK			22
GRATE CHAIN			3

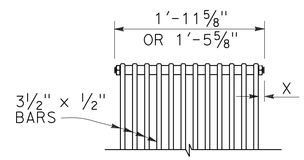

BOLTED END BLOCK

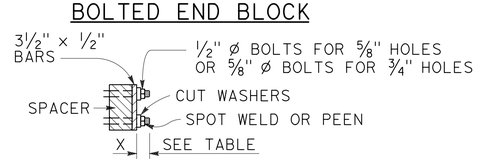

BOLTING DETAIL

ALTERNATIVE BOLTED GRATE

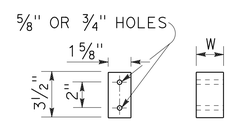

BAR SPACER

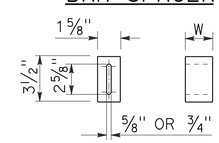

ALTERNATIVE SPACER

W = 1⅜" or 2"

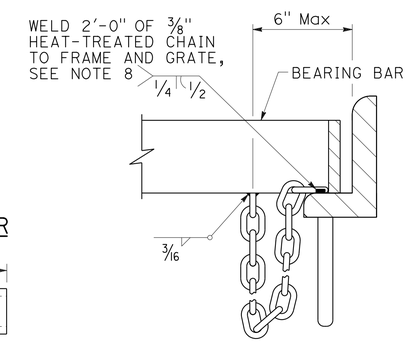

DETAIL "D"

(Steel grates only)

GRATE BAR SPACING TABLE

TYPE	No. OF BARS	CLEAR BAR SPACING	X
18-9	9	1⅜"	1 1/16"
24-9	9	2"	1 9/16"
24-12	12	1⅜"	1¼"

INLET TYPE	COVER TYPE	WEIGHT LB
OS	PLATE	174
OL-7	PLATE	170
OL-10	PLATE	170
OL-14	PLATE	170
OL-21	PLATE	170
OCP	PLATE	112
OCPI	PLATE	112
OCPI	REDWOOD	42
OMP	PLATE	177
OMPI	PLATE	177

BASIS FOR Misc IRON & STEEL FINAL PAY WEIGHTS FOR DRAINAGE INLETS

(See Note 7)

STATE OF CALIFORNIA
DEPARTMENT OF TRANSPORTATION

GRATE DETAILS No. 1

NO SCALE

RSP D77A DATED APRIL 19, 2013 SUPERSEDES RSP D77A DATED JULY 20, 2012 AND STANDARD PLAN D77A DATED MAY 20, 2011 - PAGE 164 OF THE STANDARD PLANS BOOK DATED 2010.

REVISED STANDARD PLAN RSP D77A

2010 REVISED STANDARD PLAN RSP D77A

4-4-13

Dist	COUNTY	ROUTE	POST MILES TOTAL PROJECT	SHEET No.	TOTAL SHEETS
04	SCI	152	0.1/5.2	240	416

Raymond Don Tsztoo
REGISTERED CIVIL ENGINEER

April 19, 2013
PLANS APPROVAL DATE

REGISTERED PROFESSIONAL ENGINEER Raymond Don Tsztoo No. C37332 Exp. 6-30-14 CIVIL STATE OF CALIFORNIA

THE STATE OF CALIFORNIA OR ITS OFFICERS OR AGENTS SHALL NOT BE RESPONSIBLE FOR THE ACCURACY OR COMPLETENESS OF SCANNED COPIES OF THIS PLAN SHEET.

TO ACCOMPANY PLANS DATED 6-17-13

2010 REVISED STANDARD PLAN RSP D77B

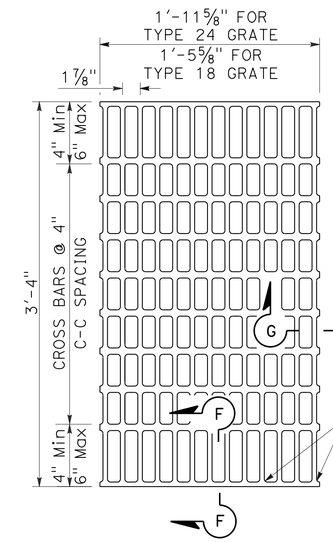

NOTES:

Bearing bars to be 3½" x ¼" bars on 1⅞" centers.

⅜"± ø Cross bars may be fillet welded, resistance welded or electroforged to bearing bars.

Weight of Type 24 grate = 141 LBS.

Weight of Type 18 grate = 107 LBS. (Type 24 grate shown).

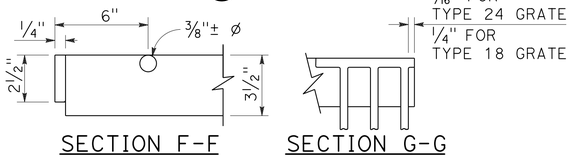

SECTION F-F SECTION G-G

TYPE 18-10 AND 24-13 GRATE

(Welded Steel)

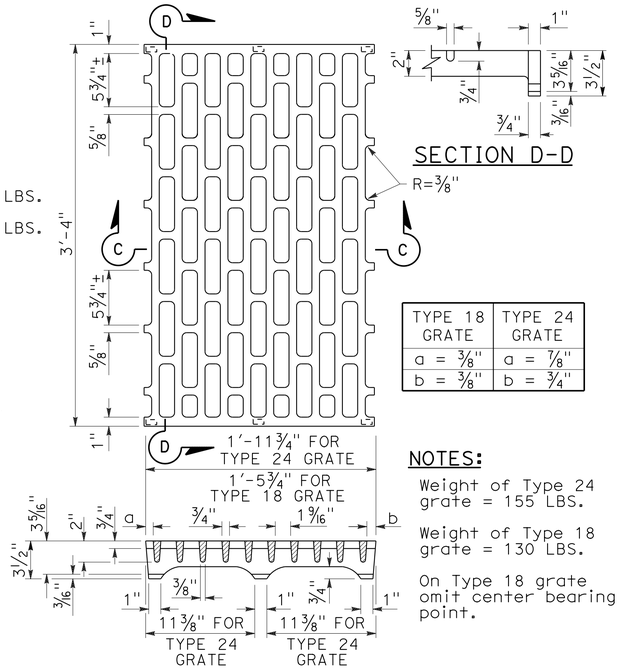

SECTION D-D

TYPE 18 GRATE	TYPE 24 GRATE
a = ⅜"	a = ⅞"
b = ⅜"	b = ¾"

NOTES:

Weight of Type 24 grate = 155 LBS.

Weight of Type 18 grate = 130 LBS.

On Type 18 grate omit center bearing point.

SECTION C-C

TYPE 18-8C AND 24-10C GRATE

(Cast ductile iron)

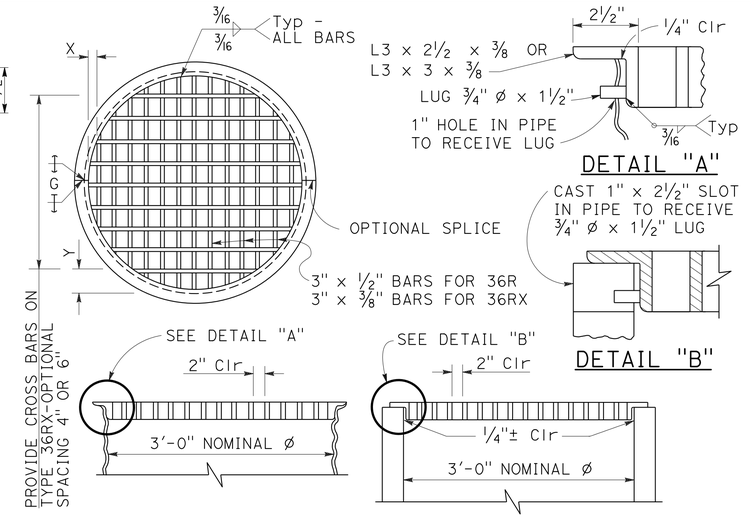

TYPE 36R AND 36RX GRATE DETAILS

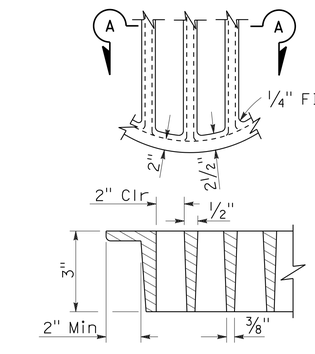

SECTION A-A

ALTERNATIVE CAST DUCTILE IRON GRATE OR CAST CARBON STEEL GRATE TYPE 36R AND 36RX

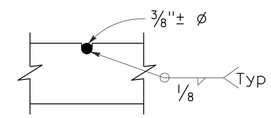

⅜"± ø Cross bars may be fillet welded, resistance welded or electroforged to bearing bars.

CROSS BAR DETAIL TYPE 36RX GRATE (WELDED STEEL)

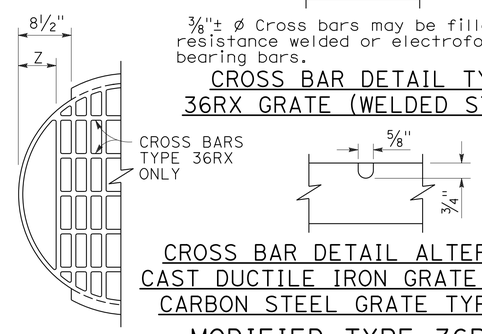

CROSS BAR DETAIL ALTERNATIVE CAST DUCTILE IRON GRATE OR CAST CARBON STEEL GRATE TYPE 36RX

MODIFIED TYPE 36R AND 36RX GRATE FOR ODI INLET

BASIS FOR Misc IRON AND STEEL FINAL PAY WEIGHTS FOR DRAINAGE INLETS

INLET TYPE	GRATE TYPE	No. OF GRATES	WEIGHT LB
GDO (SEE NOTE 4)	24-10C	2	391
	24-10S	2	456
	24-12X	2	473
	24-13	2	374
GO,GOL,G1,G2, G3,G4 (TYPE 24)	24-10C	1	202
	24-10S	1	229
	24-12X	1	239
	24-13	1	188
G4 (TYPE 18) G5,G6	18-8S	1	187
	18-9X	1	187
	18-10	1	149
GT1,GT2	18-8S	2	374
	18-9X	2	374
	18-10	2	298
GT3,GT4	24-10C	2	404
	24-10S	2	458
	24-12X	2	478
	24-13	2	376
ODI	36RX (Mod)	1	196
GMP,GCP,GCPI	36RX	1	215
ODI	36R (Mod)	1	220
GMP,GCP,GCPI	36R	1	236
TRASH RACK			22
GRATE CHAIN			3

NOTES:

1. When alternative grates are allowed - Final pay based on alternative with the lesser weight.
2. Use frame shown on Standard Plan D74A, D74B or RSP D77A as appropriate.
3. When Type 24-10S, 24-12X or 24-13 grates are used with GDO Inlets, a ¼" x 3½" x 3'-4⅞" steel bar shall be welded across the center of inlet frame to separate the individual grates.
4. See Revised Standard Plan RSP D77A for connecting chain to welded grate and frame. When chain is required, do not use cast ductile iron grate.

GRATE BAR SPACING TABLE

TYPE	No. OF BARS	CLEAR BAR SPACING	X	Y 4" SPACING	Y 6" SPACING	Z
36R	13	2"	2⅛"	-	-	-
36RX (STEEL)	15	2"	9/16"	3¾"	5¾"	-
36RX (CAST)	13	2"	2⅛"	3¾"	5¾"	-
36R Mod	12	2"	2⅛"	-	-	5"
36RX Mod (STEEL)	13	2"	9/16"	3¾"	5¾"	5 11/16"
36RX Mod (CAST)	12	2"	2⅛"	3¾"	5¾"	5"

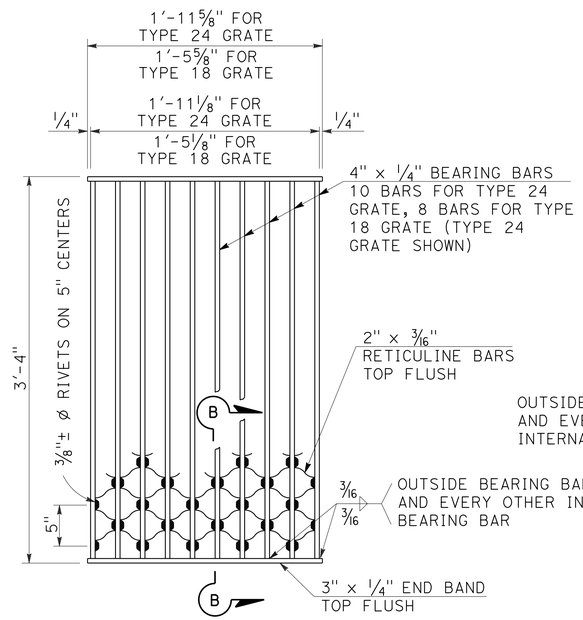

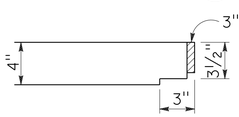

NOTES:

Weight of Type 24 grate = 182 LBS.
Weight of Type 18 grate = 145 LBS.

SECTION B-B

TYPE 18-8S AND 24-10S GRATE

(Welded Steel) Reticuline type

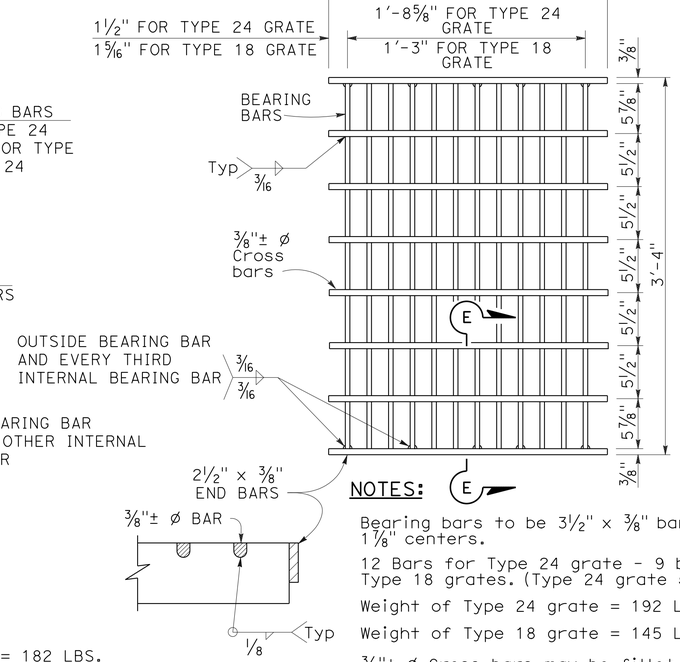

SECTION E-E

NOTES:

Bearing bars to be 3½" x ⅜" bars on 1⅞" centers.

12 Bars for Type 24 grate - 9 bars for Type 18 grates. (Type 24 grate shown).

Weight of Type 24 grate = 192 LBS.

Weight of Type 18 grate = 145 LBS.

⅜"± ø Cross bars may be fillet welded, resistance welded or electroforged to bearing bars.

TYPE 18-9X AND 24-12X GRATE

(Welded Steel)

STATE OF CALIFORNIA
DEPARTMENT OF TRANSPORTATION

GRATE DETAILS No. 2

NO SCALE

RSP D77B DATED APRIL 19, 2013 SUPERSEDES RSP D77B DATED JULY 20, 2012 AND STANDARD PLAN D77B DATED MAY 20, 2011 - PAGE 165 OF THE STANDARD PLANS BOOK DATED 2010.

REVISED STANDARD PLAN RSP D77B

4-4-13

Dist	COUNTY	ROUTE	POST MILES TOTAL PROJECT	SHEET No.	TOTAL SHEETS
04	SCI	152	0.1/5.2	241	416

REGISTERED CIVIL ENGINEER

April 19, 2013
PLANS APPROVAL DATE

REGISTERED PROFESSIONAL ENGINEER
Gurinderpal Bhullar
No. C48815
Exp. 9-30-14
CIVIL
STATE OF CALIFORNIA

THE STATE OF CALIFORNIA OR ITS OFFICERS OR AGENTS SHALL NOT BE RESPONSIBLE FOR THE ACCURACY OR COMPLETENESS OF SCANNED COPIES OF THIS PLAN SHEET.

TO ACCOMPANY PLANS DATED 6-17-13

NOTES:

See Revised Standard Plan RSP T9 for tables.

Use cone spacing X for taper segment, Y for tangent segment or Z for conflict situations, as approriate, per Table 1, unless X, Y, or Z cone spacing is shown on this sheet.

Unless otherwise specified in the special provisions, all temporary warning signs shall have black legend on fluorescent orange background.

California codes are designated by (CA). Otherwise, Federal (MUTCD) codes are shown.

TYPICAL LANE CLOSURE WITH REVERSIBLE CONTROL

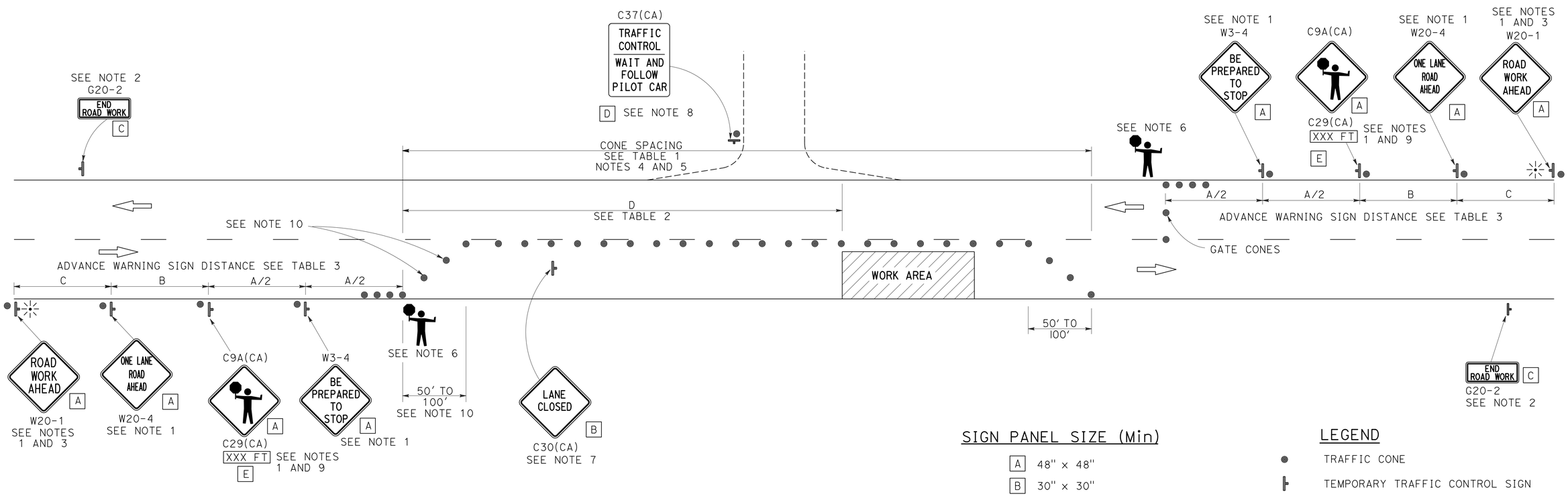

SIGN PANEL SIZE (Min)

A	48" x 48"
B	30" x 30"
C	36" x 18"
D	36" x 42"
E	20" x 7"

LEGEND

- TRAFFIC CONE
- TEMPORARY TRAFFIC CONTROL SIGN
- PORTABLE FLASHING BEACON
- FLAGGER

NOTES:

1. Each advance warning sign in each direction of travel shall be equipped with at least two flags for daytime closure. Each flag shall be at least 16" x 16" in size and shall be orange or fluorescent red-orange in color. Flashing beacons shall be placed at the locations indicated for lane closure during hours of darkness.
2. A G20-2 "END ROAD WORK" sign, as appropriate, shall be placed at the end of the lane control unless the end of work area is obvious, or ends within a larger project's limits.
3. If the W20-1 sign would follow within 2000' of a stationary W20-1 or G20-1 "ROAD WORK NEXT _____ MILES", use a W20-4 sign for the first advance warning sign.
4. All cones used for lane closures during the hours of darkness shall be fitted with retroreflective bands (or sleeves) as specified in the specifications.
5. Portable delineators, placed at one-half the spacing indicated for traffic cones, may be used instead of cones for daytime closures only.
6. Additional advance flaggers may be required. Flagger should stand in a conspicuous place, be visible to approaching traffic as well as approaching vehicles after the first vehicle has stopped. During the hours of darkness, the flagging-station and flagger shall be illuminated and clearly visible to approaching traffic. The illumination footprint of the lighting on the ground shall be at least 20' in diameter. Place a minimum of four cones at 50' intervals in advance of flagger station as shown.
7. Place C30(CA) "LANE CLOSED" sign at 500' to 1000' intervals throughout extended work areas. They are optional if the work area is visible from the flagger station.
8. When a pilot car is used, place a C37(CA) "TRAFFIC CONTROL-WAIT AND FOLLOW PILOT CAR" sign with black legend on white background at all intersections, driveways and alleys without a flagger within traffic control area. Signs shall be clean and visible at all times. Where traffic can not be effectively self-regulated, at least one flagger shall be used at each intersection within traffic control area.
9. An optional C29(CA) sign may be placed below the C9A(CA) sign.
10. Either traffic cones or barricades shall be placed on the taper. Barricades shall be Type I, II, or III.

STATE OF CALIFORNIA
DEPARTMENT OF TRANSPORTATION

TRAFFIC CONTROL SYSTEM FOR LANE CLOSURE ON TWO LANE CONVENTIONAL HIGHWAYS

NO SCALE

RSP T13 DATED APRIL 19, 2013 SUPERSEDES STANDARD PLAN T13 DATED MAY 20, 2011 - PAGE 241 OF THE STANDARD PLANS BOOK DATED 2010.

REVISED STANDARD PLAN RSP T13

2010 REVISED STANDARD PLAN RSP T13

4-2-13

Dist	COUNTY	ROUTE	POST MILES TOTAL PROJECT	SHEET No.	TOTAL SHEETS
04	SCI	152	0.1/5.2	242	416

REGISTERED CIVIL ENGINEER

April 20, 2012
PLANS APPROVAL DATE

REGISTERED PROFESSIONAL ENGINEER Gary Wang No. C58298 Exp. 6-30-12 CIVIL STATE OF CALIFORNIA

THE STATE OF CALIFORNIA OR ITS OFFICERS OR AGENTS SHALL NOT BE RESPONSIBLE FOR THE ACCURACY OR COMPLETENESS OF SCANNED COPIES OF THIS PLAN SHEET.

TO ACCOMPANY PLANS DATED 6-17-13

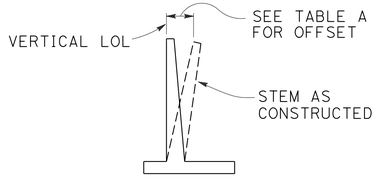

APPROXIMATE WALL OFFSET VALUES

Values for offseting forms to be determined by the Engineer.

TABLE A

H	OFFSET
4'-12'	H/200
14'-16'	H/160
18'-20'	H/140
22'-24'	H/130
26'-36'	2½"

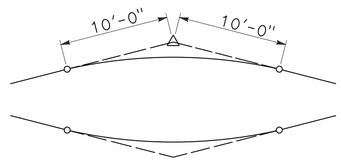

20'-0" VC AT TOP OF WALL SLOPE CHANGE

Where shown on the plans

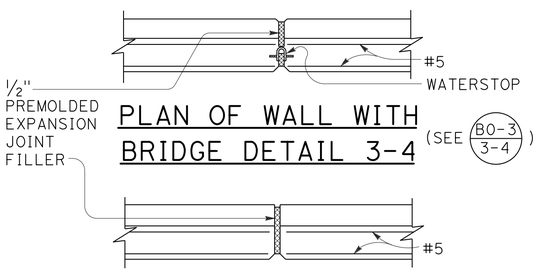

PLAN OF WALL WITH BRIDGE DETAIL 3-4

(SEE B0-3 / 3-4)

PLAN OF WALL WITH EXPANSION JOINT ONLY

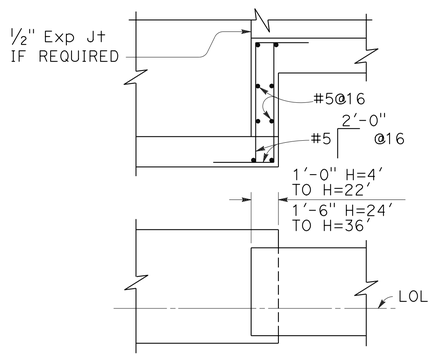

FOOTING STEP

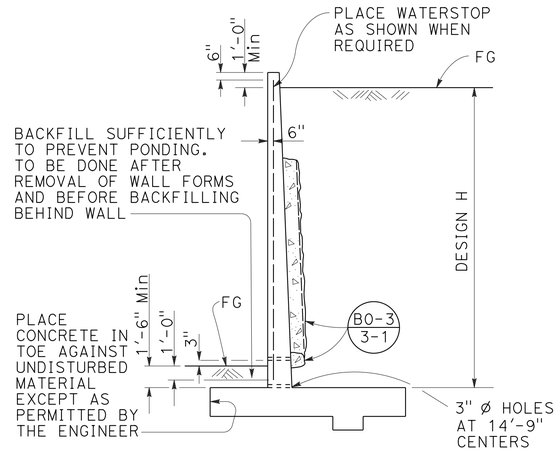

DESIGN AND DRAINAGE

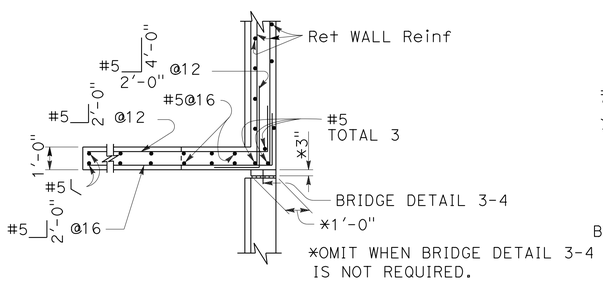

PLAN

(For return wall Type "A")

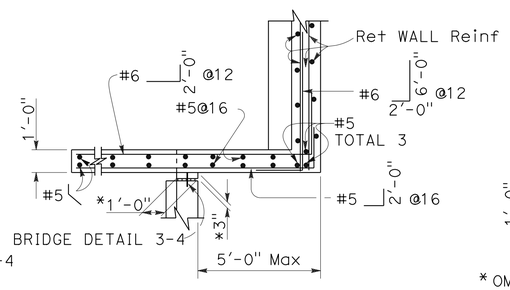

PLAN

(For return wall Type "B")

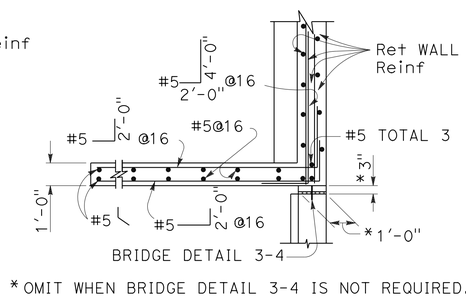

*OMIT WHEN BRIDGE DETAIL 3-4 IS NOT REQUIRED.

PLAN

(For return wall Type "C")

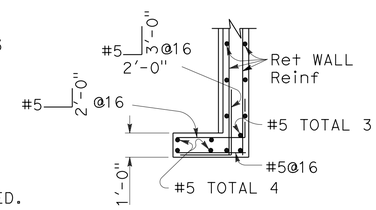

PLAN

(For return wall Type "D")

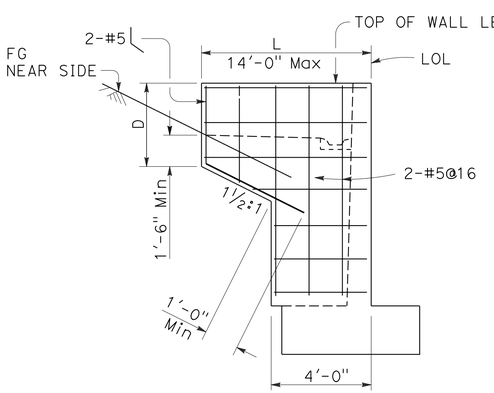

ELEVATION

RETURN WALL TYPE "A"

Use where H=8' or less

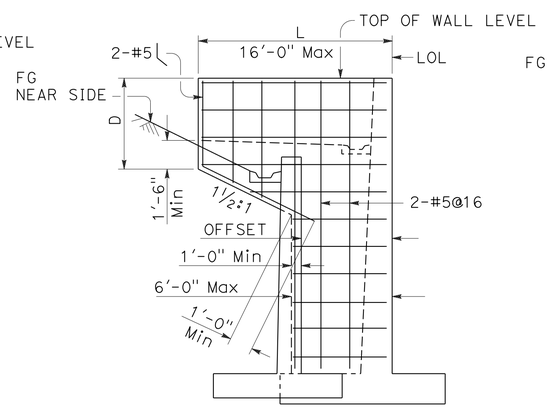

ELEVATION

RETURN WALL TYPE "B"

Use where H=10' or more on offset walls

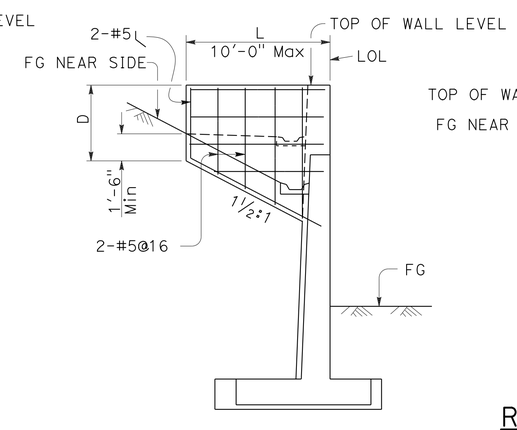

ELEVATION

RETURN WALL TYPE "C"

Use where H=10' or more on straight walls

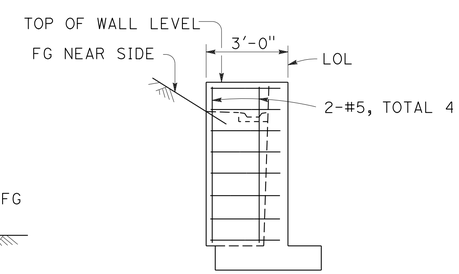

ELEVATION

RETURN WALL TYPE "D"

Use where H=6' or less

DESIGN CONDITIONS:

Design "H" may be exceeded by 6" before going to the next size. Special footing design is required where foundation material is incapable of supporting bearing stress listed in table

Return wall not required unless shown elsewhere

DESIGN NOTES:

DESIGN: AASHTO LRFD Bridge Design Specifications, 4th edition with California Amendments

LIVE LOAD: Surcharge on level ground surface

SOIL: ϕ = 34°
γ = 120 pcf

REINFORCED CONCRETE: fy = 60,000 psi
fc' = 3,600 psi

STATE OF CALIFORNIA
DEPARTMENT OF TRANSPORTATION

RETAINING WALL DETAILS No. 1

NO SCALE

RSP B3-5 DATED APRIL 20, 2012 SUPERSEDES STANDARD PLAN B3-5 DATED MAY 20, 2011 - PAGE 277 OF THE STANDARD PLANS BOOK DATED 2010.

REVISED STANDARD PLAN RSP B3-5

2010 REVISED STANDARD PLAN RSP B3-5

2-22-12

Dist	COUNTY	ROUTE	POST MILES TOTAL PROJECT	SHEET No.	TOTAL SHEETS
04	SCI	152	0.1/5.2	243	416

REGISTERED CIVIL ENGINEER

October 21, 2011
PLANS APPROVAL DATE

REGISTERED PROFESSIONAL ENGINEER
Tillat Satter
No. C42892
Exp. 3-31-12
CIVIL
STATE OF CALIFORNIA

THE STATE OF CALIFORNIA OR ITS OFFICERS OR AGENTS SHALL NOT BE RESPONSIBLE FOR THE ACCURACY OR COMPLETENESS OF SCANNED COPIES OF THIS PLAN SHEET.

TO ACCOMPANY PLANS DATED 6-17-13

2010 REVISED STANDARD PLAN RSP B11-47

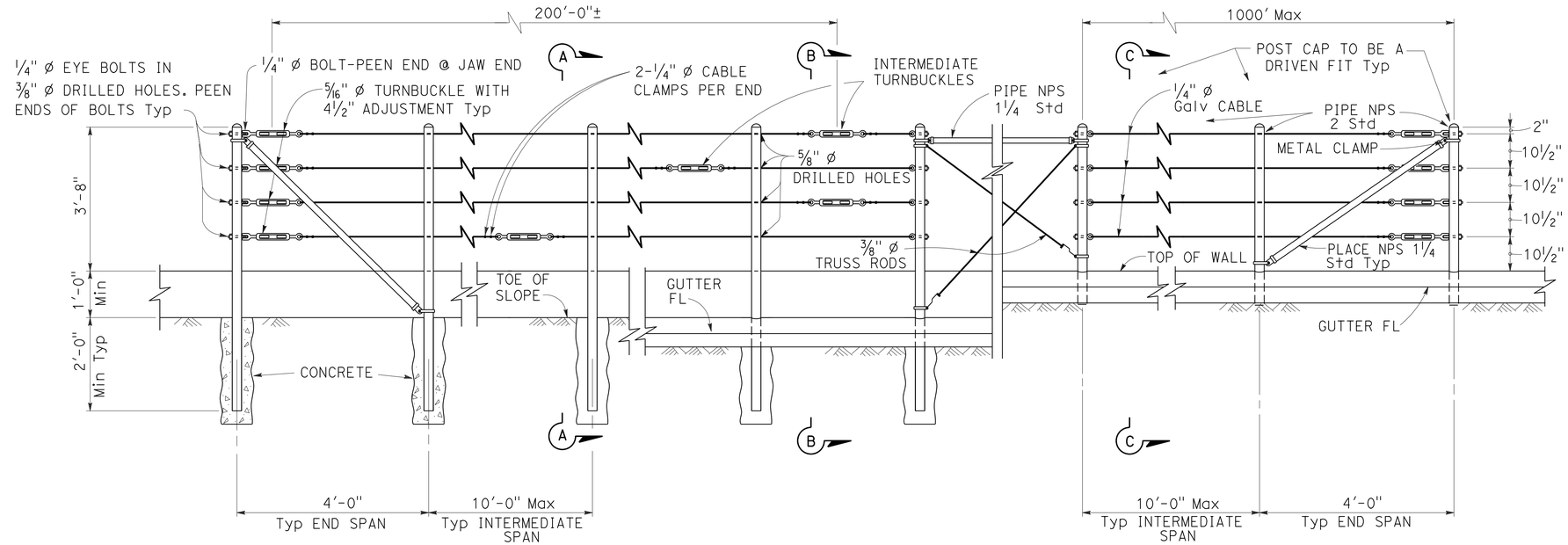

EXISTING WALL (WITHOUT GUTTER)
Existing

RETAINING WALL (WITH GUTTER)
Existing

RETAINING WALL (WITH GUTTER)
New construction

ELEVATION

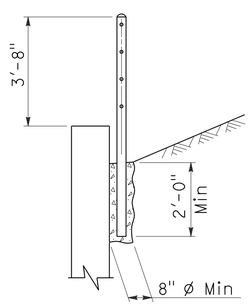

SECTION A-A
Existing

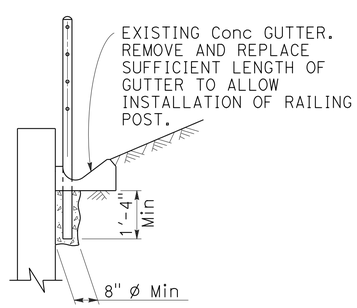

SECTION B-B
Existing

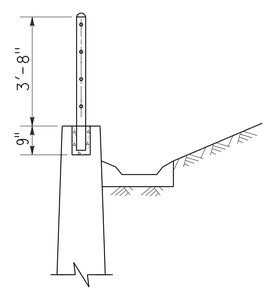

SECTION C-C
New construction

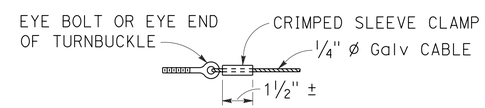

ALTERNATIVE CABLE CONNECTION

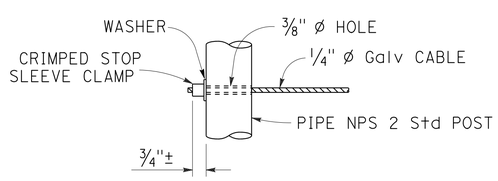

ALTERNATIVE DEAD END ANCHORAGE

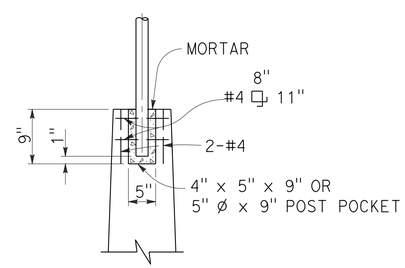

POST POCKET

NOTES:

1. Maximum distance between turnbuckles shall be 200'-0"±.
2. Intermediate turnbuckles to be placed in adjacent spans.
3. Cable shall not be spliced between intermediate turnbuckles and end posts.
4. Posts to be vertical.
5. Alignment of holes in posts may vary to conform to slope of top of retaining wall.
6. The Contractor shall verify all dependent dimensions in the field before ordering or fabricating any material.
7. Line posts shall be braced horizontally and trussed diagonally in both directions at intervals not to exceed 1000'.
8. Post pockets to be centered in top of wall.
9. Typical end spans, braced in both directions, shall be constructed at changes in line where the angle of deflection is 15° or more.
10. Provide thimbles at all cable loops.

STATE OF CALIFORNIA
DEPARTMENT OF TRANSPORTATION

CABLE RAILING

NO SCALE

RSP B11-47 DATED OCTOBER 21, 2011 SUPERSEDES STANDARD PLAN B11-47 DATED MAY 20, 2011 - PAGE 293 OF THE STANDARD PLANS BOOK DATED 2010.

REVISED STANDARD PLAN RSP B11-47

DIST	COUNTY	ROUTE	POST MILES TOTAL PROJECT	SHEET NO.	TOTAL SHEETS
04	SCI	152	0.1/5.2	244	416

REGISTERED ELECTRICAL ENGINEER

January 20, 2012
PLANS APPROVAL DATE

REGISTERED PROFESSIONAL ENGINEER
Jeffery G. McRae
No. E14512
Exp. 6-30-12
ELECTRICAL
STATE OF CALIFORNIA

THE STATE OF CALIFORNIA OR ITS OFFICERS OR AGENTS SHALL NOT BE RESPONSIBLE FOR THE ACCURACY OR COMPLETENESS OF SCANNED COPIES OF THIS PLAN SHEET.

TO ACCOMPANY PLANS DATED 6-17-13

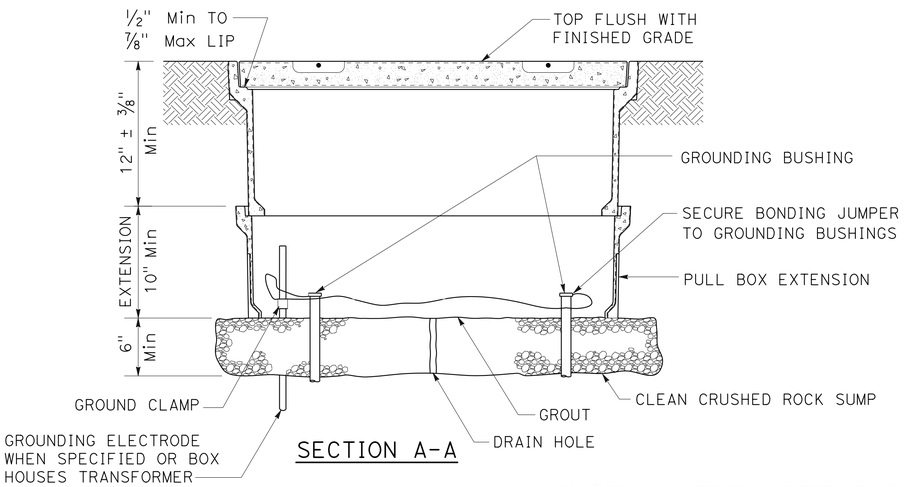

SECTION A-A

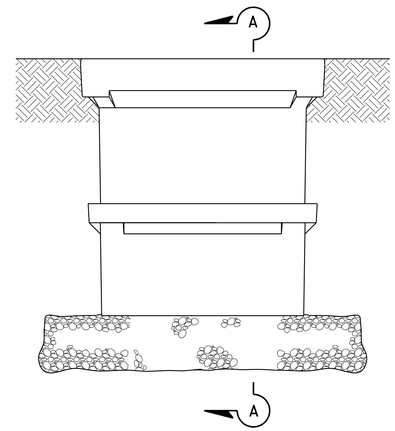

SIDE VIEW

INSTALLATION DETAILS

DETAIL A

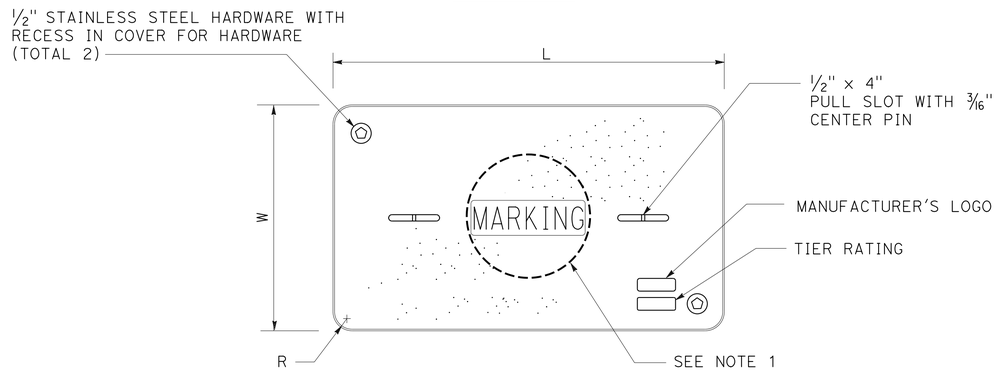

COVER TOP VIEW

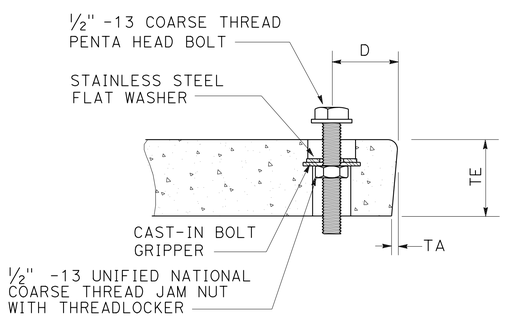

TYPICAL COVER CAPTIVE BOLT

OR SIMILAR

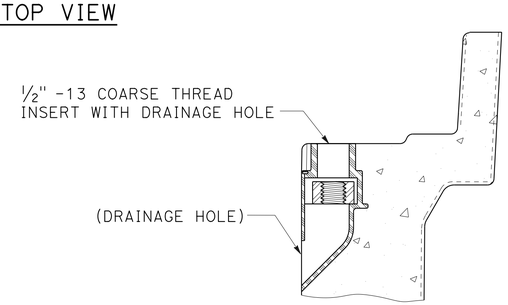

TYPICAL THREADED INSERT

OR SIMILAR

DIMENSION TABLE										
PULL BOX	PULL BOX			COVER						
	MINIMUM DEPTH BOX	MINIMUM DEPTH EXTENSION	MAXIMUM WEIGHT	L	W	R	TE	TA	D	MAXIMUM WEIGHT
No. 3 1/2	12"	N/A	40 lb	1' - 3 3/8"	10 1/8"	1 3/8"	2"	1/8"	1 3/4"	30 lb
No. 5	12"	10"	55 lb	1' - 11 1/4"	1' - 1 3/4"	1 3/8"	2"	1/8"	1 3/4"	60 lb
No. 6	12"	10"	70 lb	2' - 6 1/2"	1' - 5 1/2"	1 3/8"	2"	1/8"	2"	85 lb

NOTES ON PULL BOXES:

1. Pull box covers must be marked as follows: "SERVICE" Service circuits between service point and service disconnect; "SPRINKLER-CONTROL" sprinkler control circuits, 50 V or less; "CALTRANS" on all pull boxes, except pull boxes marked "SPRINKLER-CONTROL"; and "TELEPHONE" Telephone service;

   A) No. 3 1/2 pull box.
      1) "SIGNAL" - Traffic signal circuits with or without street or sign lighting circuits.
      2) "ST LIGHTING" - Street or sign lighting circuits where voltage is under 600 V.

   B) No. 5, 6, 9 or 9A pull box.
      1) "TRAFFIC SIGNAL" - Traffic signal circuits with or without street or sign lighting circuits.
      2) "STREET LIGHTING" - Street or sign lighting circuits where voltage is under 600 V.
      3) "STREET LIGHTING-HIGH VOLTAGE" - Street or sign lighting circuits where voltage is above 600 V.
      4) "IRRIGATION" - Circuits to irrigation controller 120 V or more.
      5) "RAMP METER" - Ramp meter circuits.
      6) "COUNT STATION" - Count or speed monitor circuits.
      7) "COMMUNICATIONS" - Communication circuits.
      8) "TOS COMMUNICATIONS" - TOS communication line.
      9) "TOS POWER" - TOS power.
      10) "TDC POWER" - Telephone demarcation cabinet power.
      11) "CCTV" - Closed circuit television circuits.
      12) "TMS" - Traffic monitoring station circuits.
      13) "CMS" - Changeable message sign circuits.
      14) "HAR" - Highway advisory radio circuits.

2. The nominal dimensions of the opening in which the cover sets must be the same as the cover dimensions (L and W) plus 1/8" or greater.

3. Covers and boxes must be interchangeable with California Standard. When interchanged with a standard, the top surfaces must be flush within 1/8". Top outside radius of covers and pull boxes must have a 1/8" radius.

4. Pull box extension may be another pull box as long as the bottom edge of the pull box can fit into the cover opening.

STATE OF CALIFORNIA
DEPARTMENT OF TRANSPORTATION

ELECTRICAL SYSTEMS (PULL BOX)

NO SCALE

RSP ES-8A DATED JANUARY 20, 2012 SUPPLEMENTS THE STANDARD PLANS BOOK DATED 2010.

REVISED STANDARD PLAN RSP ES-8A

2010 REVISED STANDARD PLAN RSP ES-8A

01-09-12

Dist	COUNTY	ROUTE	POST MILES TOTAL PROJECT	SHEET No.	TOTAL SHEETS
04	SCI	152	0.1/5.2	245	416

REGISTERED ELECTRICAL ENGINEER

July 20, 2012
PLANS APPROVAL DATE

REGISTERED PROFESSIONAL ENGINEER
Jeffery G. McRae
No. E14512
Exp. 6-30-14
ELECTRICAL
STATE OF CALIFORNIA

THE STATE OF CALIFORNIA OR ITS OFFICERS OR AGENTS SHALL NOT BE RESPONSIBLE FOR THE ACCURACY OR COMPLETENESS OF SCANNED COPIES OF THIS PLAN SHEET.

TO ACCOMPANY PLANS DATED 6-17-13

ISOFOOTCANDLE CURVE - MINIMUM

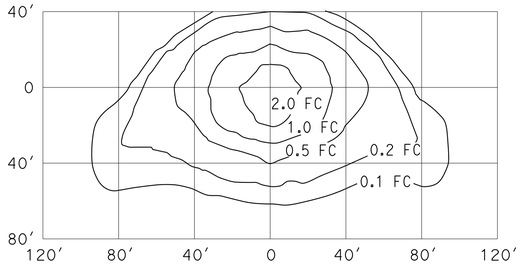

TYPE III MEDIUM CUTOFF

Cutoff Luminaire
34′ Mounting Height
Lamp operated at 22,000 lm
200-W high pressure sodium lamp
ANSI Designation S66

ISOFOOTCANDLE CURVE - MINIMUM

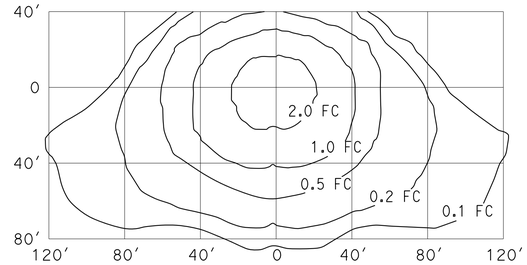

TYPE III MEDIUM CUTOFF

Cutoff Luminaire
40′ Mounting Height
Lamp operated at 37,000 lm
310-W high pressure sodium lamp
ANSI Designation S67

ISOFOOTCANDLE CURVE - MINIMUM

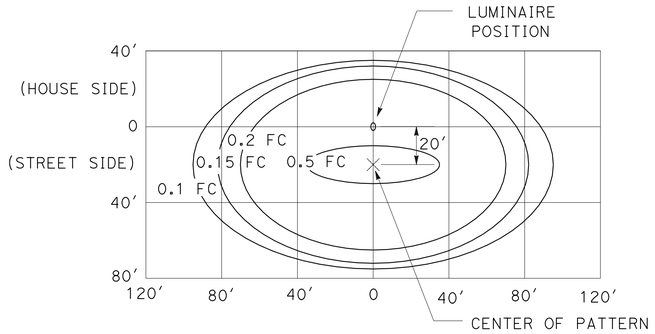

LED LUMINAIRE ROADWAY 1

200-W HPS Equivalent at 34′ Mounting Height

ISOFOOTCANDLE CURVE - MINIMUM

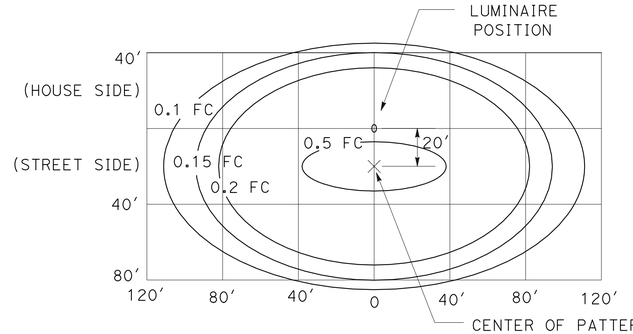

LED LUMINAIRE ROADWAY 2

310-W HPS Equivalent at 40′ Mounting Height

ISOFOOTCANDLE CURVE - MINIMUM

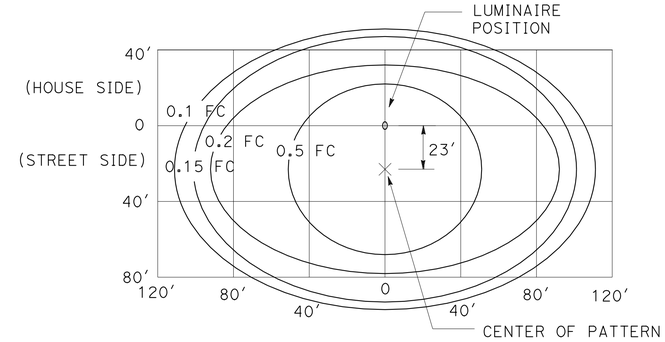

LED LUMINAIRE ROADWAY 4

400-W HPS Equivalent at 40′ Mounting Height

ISOFOOTCANDLE CURVE - MINIMUM

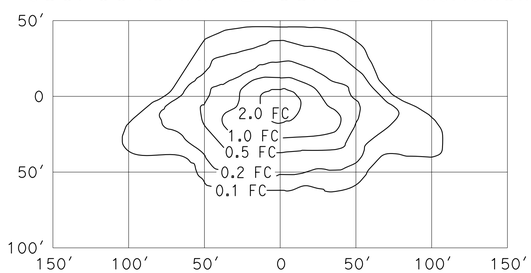

TYPE III MEDIUM CUTOFF

Cutoff Luminaire
30′ Mounting Height
Lamp operated at 16,000 lm
150-W high pressure sodium lamp
ANSI Designation S55

ISOFOOTCANDLE CURVE - MINIMUM

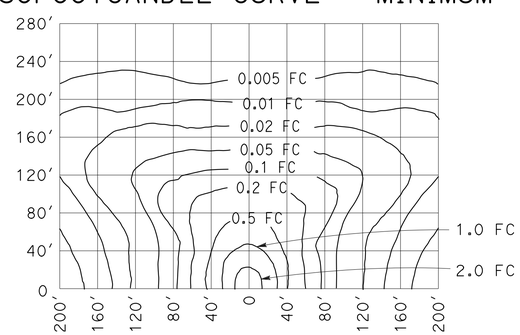

LOW PRESSURE SODIUM LUMINAIRE

40′ Mounting Height
Lamp operated at 33,000 lm
180-W low pressure sodium lamp

STATE OF CALIFORNIA
DEPARTMENT OF TRANSPORTATION

ELECTRICAL SYSTEMS (ISOFOOTCANDLE DIAGRAMS)

NO SCALE

RSP ES-10A DATED JULY 20, 2012 SUPPLEMENTS THE STANDARD PLANS BOOK DATED 2010.

REVISED STANDARD PLAN RSP ES-10A

2010 REVISED STANDARD PLAN RSP ES-10A

2-16-12

DIST	COUNTY	ROUTE	POST MILES TOTAL PROJECT	SHEET No.	TOTAL SHEETS
04	SCI	152	0.1/5.2	246	416

REGISTERED CIVIL ENGINEER 05-15-13 DATE

6-17-13
PLANS APPROVAL DATE

REGISTERED PROFESSIONAL ENGINEER
Sameh Hegazi
No. C64899
Exp.06-30-2013
CIVIL
STATE OF CALIFORNIA

The State of California or its officers or agents shall not be responsible for the accuracy or completeness of electronic copies of this plan sheet.

NOTE:
Not all approximate location of soil nails, proof test nails, cable railing posts, and weepholes shown.

LEGEND:
- ○ Indicates approximate location of soil nails
- ■ Indicates approximate location of proof test nails

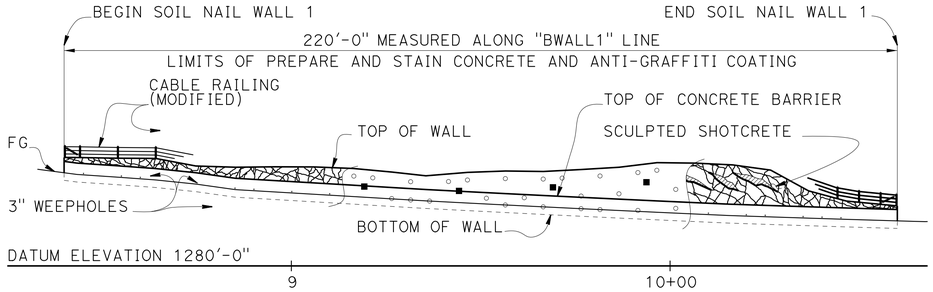

DEVELOPED ELEVATION

1" = 20'

NOTES:
1. Top of the wall elevations shall be verified in the field.
2. Soil nail inclination = 15° typical.
3. The exact locations of the Test Soil Nail to be determined by the Engineer in the field.
4. All soil nail levels are parallel to top of wall except the bottom level which is parallel to bottom of wall.
5. Soil nails shall be placed normal to shotcrete surface in the plan view.
6. The contractor shall field locate all utilities before drilling soil nails.
7. The contractor shall provide and maintain stable soil slopes above and below the soil nail walls.
8. Bottom of wall shall be placed against undisturbed soil material.
9. Prepare and stain sculpted shotcrete surface.
10. Concrete barrier shall be integrally colored and applied with anti-graffiti coating from top of barrier to 6 inches below finished grade.

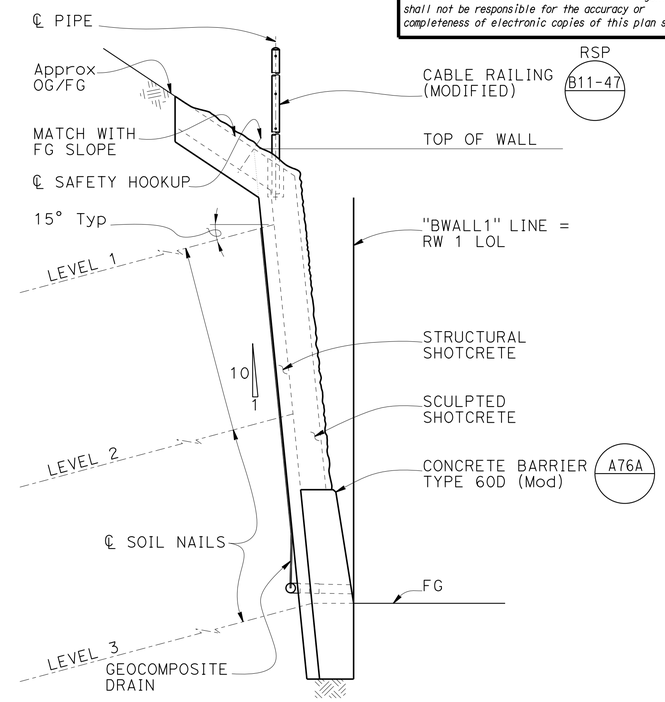

TYPICAL SECTION

½" = 1'

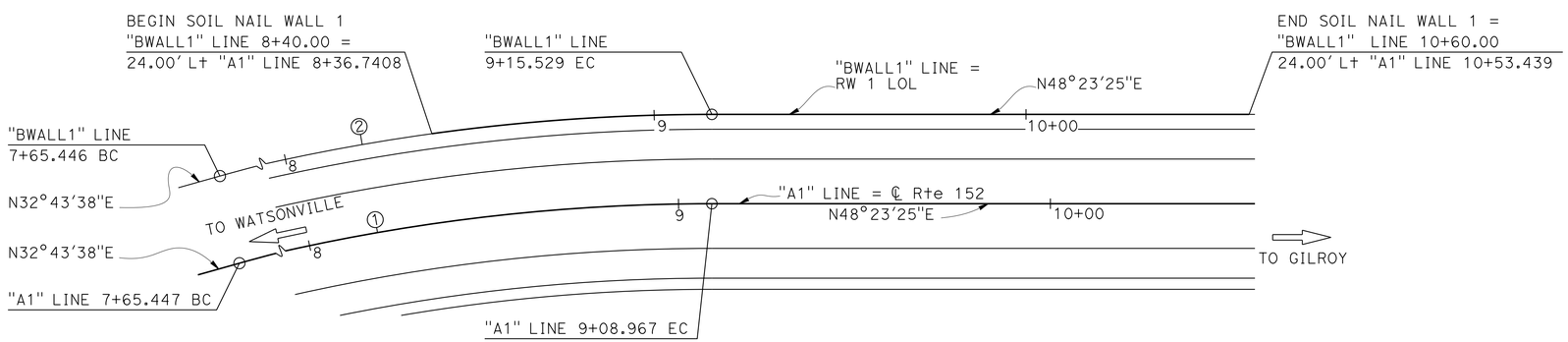

PLAN

1" = 20'

NOTE:
THE CONTRACTOR SHALL VERIFY ALL CONTROLLING FIELD DIMENSIONS BEFORE ORDERING OR FABRICATING ANY MATERIAL.

CURVE DATA

Alignment	R	Δ	T	L
"A1" LINE ①	525'	15°39'47"	72.21'	143.52'
"BWALL1" LINE ②	549'	15°39'47"	75.51'	150.08'

QUANTITIES

STRUCTURE EXCAVATION (SOIL NAIL WALL)	248	CY
STRUCTURE BACKFILL (SOIL NAIL WALL)	24	CY
SOIL NAIL	1,280	LF
BAR REINFORCING STEEL (RETAINING WALL)	10,930	LB
STRUCTURAL SHOTCRETE	34	CY
SCULPTED SHOTCRETE	51	CY
PREPARE AND STAIN SCULPTED SHOTCRETE	1,558	SQFT
ANTI-GRAFFITI COATING	660	SQFT
MISCELLANEOUS METAL (SAFETY HOOK)	157	LB
CABLE RAILING (MODIFIED)	220	LF
CONCRETE BARRIER (TYPE 60D MODIFIED)	220	LF

BRIAN MORI
DESIGN ENGINEER

	BY	CHECKED
DESIGN	S. Hegazi	R. Amir
DETAILS	T. Kusumi	R. Amir / S. Hegazi
QUANTITIES	R. Amir	S. Hegazi

LOAD & RESISTANCE FACTOR DESIGN — LIVE LOADING: HL93 W/"LOW-BOY"; PERMIT DESIGN VEHICLE

	BY	CHECKED
LAYOUT	S. Hegazi	A. Menke
SPECIFICATIONS	T. Chen	PLANS AND SPECS COMPARED T. Chen

ORIGINAL SCALE IN INCHES FOR REDUCED PLANS 0 1 2 3

STATE OF CALIFORNIA
DEPARTMENT OF TRANSPORTATION

DIVISION OF ENGINEERING SERVICES
STRUCTURE DESIGN
DESIGN BRANCH 8

BRIDGE NO. 37E0112
POST MILE 0.16/0.20

HECKER PASS SOIL NAIL WALL NO. 1
GENERAL PLAN

UNIT: 3593
PROJECT NUMBER & PHASE: 0400000813-1
CONTRACT NO.: 04-2A2501

DISREGARD PRINTS BEARING EARLIER REVISION DATES

REVISION DATES: 02-10-11 05-08-13 05-15-13

SHEET 1 OF 16

STRUCTURES DESIGN GENERAL PLAN SHEET (ENGLISH) (REV.09-01-10)

FILE => 37e0112-a-gp.dgn

USERNAME => s124496 DATE PLOTTED => 21-JUN-2013 TIME PLOTTED => 09:04

DIST	COUNTY	ROUTE	POST MILES TOTAL PROJECT	SHEET No.	TOTAL SHEETS
04	SCI	152	0.1/5.2	247	416

REGISTERED CIVIL ENGINEER 05-15-13 DATE

6-17-13
PLANS APPROVAL DATE

REGISTERED PROFESSIONAL ENGINEER Sameh Hegazi No. C64899 Exp. 06-30-2013 CIVIL STATE OF CALIFORNIA

The State of California or its officers or agents shall not be responsible for the accuracy or completeness of electronic copies of this plan sheet.

GENERAL NOTES

LOAD AND RESISTANCE FACTOR DESIGN:
AASHTO LRFD Bridge Design Specifications, 4th Editions and the Caltrans Amendments; preface dated Dec., 2009.

FHWA Publication No. FHWA-IF-03-017, Manual for Design and Construction Monitoring of Soil Nail Walls.

REINFORCED CONCRETE & SHOTCRETE:
F'c = 3.6 ksi
Fy = 60 ksi

STRUCTURAL STEEL:
Plates and shapes shall conform to ASTM Designation A709 Grade (36 ksi)

SOIL NAILS:
Soil nails shall conform to ASTM Designation A615, Grade 60, fs = 60 ksi, #7 bars

PUNCHING SHEAR:
Ps = 45 Kps

SOIL DESIGN PARAMETERS IN NAILING ZONES:

NAIL DATA TABLE

Zone	"BWALL1" Line Station	Unit Weight (lb/ft^3)	Friction Angle Degrees	Cohesion (lb/ft^2)	Design Pull out Resistance (kip/ft)	Upper Elev (ft)	Lower Elev (ft)
1	8+40.00 - 10+60.00	125	32	700	2.0	1310	1300
2	8+40.00 - 10+60.00	125	32	700	2.0	1300	1287

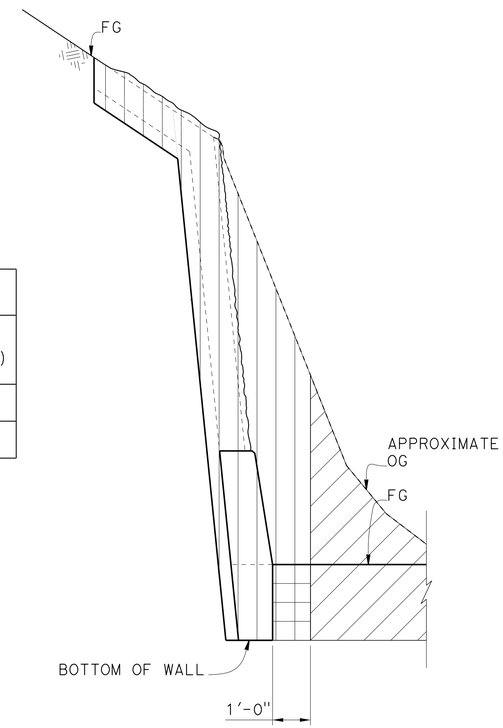

LEGEND:

Structure excavation (Soil Nail Wall)

Structure backfill (Soil Nail Wall)

Roadway excavation (See "ROAD PLANS.")

LIMITS OF PAYMENT FOR EXCAVATION AND BACKFILL

No Scale

INDEX TO PLANS

SHEET NO.	TITLE
1	GENERAL PLAN
2	INDEX TO PLANS
3	FOUNDATION PLAN
4	STRUCTURE ELEVATION
5	TYPICAL SECTION
6	STRUCTURAL DETAILS NO. 1
7	STRUCTURAL DETAILS NO. 2
8	STRUCTURAL DETAILS NO. 3
9	DRAINAGE DETAILS
10	SCULPTED SHOTCRETE TREATMENT
11	SCULPTED SHOTCRETE TREATMENT DETAILS NO. 1
12	SCULPTED SHOTCRETE DETAILS NO. 2
13	LOG OF TEST BORINGS 1 OF 4
14	LOG OF TEST BORINGS 2 OF 4
15	LOG OF TEST BORINGS 3 OF 4
16	LOG OF TEST BORINGS 4 OF 4

STANDARD PLANS DATED MAY 2010

DETAIL	DESCRIPTION
A10A	ABBREVIATIONS (SHEET 1 OF 2)
A10B	ABBREVIATIONS (SHEET 2 OF 2)
A10C	LINES AND SYMBOLS (SHEET 1 OF 3)
A10D	LINES AND SYMBOLS (SHEET 2 OF 3)
A10E	LINES AND SYMBOLS (SHEET 3 OF 3)
A76A	CONCRETE BARRIER TYPE 60
B0-3	BRIDGE DETAILS
RSP B11-47	CABLE RAILING

STANDARD PLAN SHEET NO.

DETAIL NO.

DESIGN	BY S. Hegazi	CHECKED R. Amir	
DETAILS	BY T. Kusumi	CHECKED R. Amir / S. Hegazi	
QUANTITIES	BY R. Amir	CHECKED S. Hegazi	

STATE OF CALIFORNIA DEPARTMENT OF TRANSPORTATION

DIVISION OF ENGINEERING SERVICES STRUCTURE DESIGN DESIGN BRANCH 8

BRIDGE NO. 37E0112
POST MILE 0.16/0.20

HECKER PASS SOIL NAIL WALL NO. 1

INDEX TO PLANS

STRUCTURES DESIGN DETAIL SHEET (ENGLISH) (REV. 09-01-10)

ORIGINAL SCALE IN INCHES FOR REDUCED PLANS 0 1 2 3

UNIT: 3593
PROJECT NUMBER & PHASE: 0400000813-1 CONTRACT NO.: 04-2A2501

DISREGARD PRINTS BEARING EARLIER REVISION DATES

REVISION DATES: ~~06-28-11~~ ~~07-17-12~~ 05-10-13

SHEET 2 OF 16

FILE => 37e0112-a-itp.dgn

USERNAME => s124496 DATE PLOTTED => 21-JUN-2013 TIME PLOTTED => 08:05

DIST	COUNTY	ROUTE	POST MILES TOTAL PROJECT	SHEET No.	TOTAL SHEETS
04	SCI	152	0.1/5.2	248	416

REGISTERED CIVIL ENGINEER 08-01-12 DATE

6-17-13
PLANS APPROVAL DATE

REGISTERED PROFESSIONAL ENGINEER
Sameh Hegazi
No. C64899
Exp. 06-30-2013
CIVIL
STATE OF CALIFORNIA

The State of California or its officers or agents shall not be responsible for the accuracy or completeness of electronic copies of this plan sheet.

CURVE DATA

No.	R	Δ	T	L
Ⓐ	525.00	15°39′47″	72.21	143.52
Ⓑ	77.00	171°46′13″	1070.30	230.84
Ⓒ	549.00	15°39′47″	75.51	150.08
Ⓓ	100.00	18°01′09″	15.86	31.45

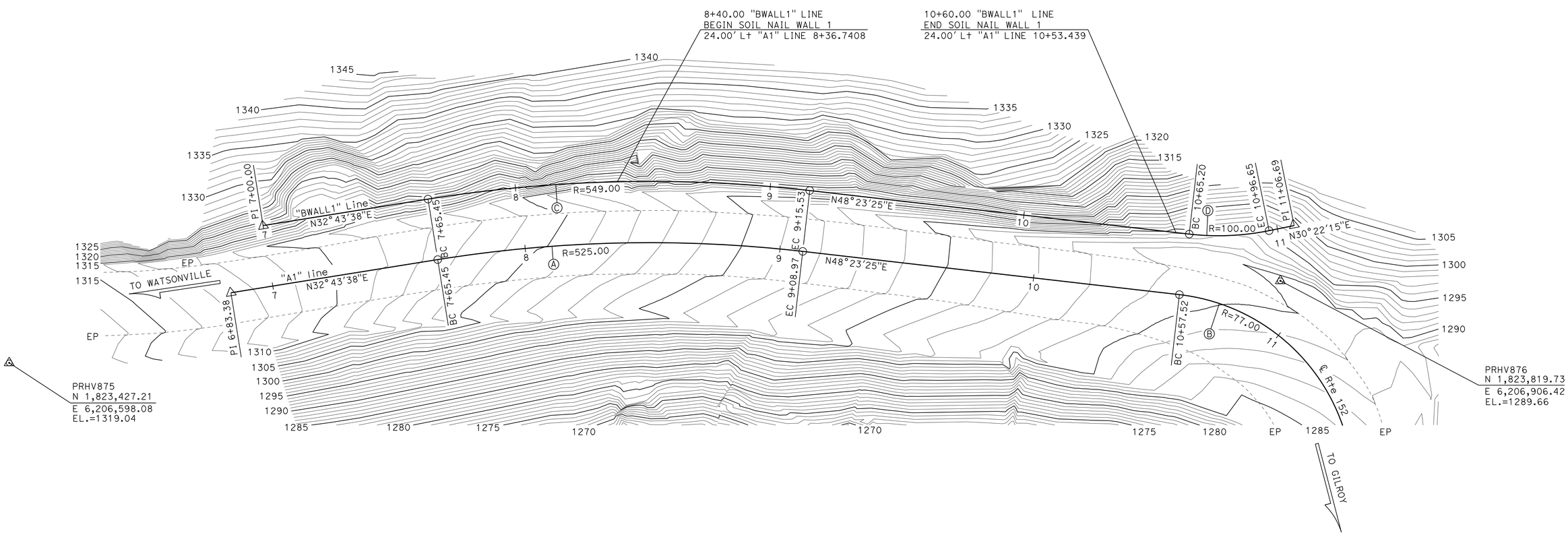

SURVEY CONTROL

PRHV875
Fnd 1" I.P. w/CT PP&T
91.11 Ft. S24°17′59″W From
Sta. 6+83.38 "A1" Line, ℄ Rte 152
N 1,823,427.21
E 6,206,598.08
EL.=1319.04

PRHV876
Fnd 1" I.P. w/CT PP&T
18.12 Lt. "A1" Line, ℄ Rte 152
Sta. 10+89.79
N 1,823,819.73
E 6,206,906.42
EL.=1289.66

PRELIMINARY INVESTIGATION SECTION

SCALE 1"=20′	VERT.DATUM NAVD 88	PHOTOGRAMMETRY AS OF: X			
	HORZ.DATUM NAD83 (92)	SURVEYED	BY District	CHECKED	BY Don Ivy 06/2011
ALIGNMENT TIES Dist. Traverse Sheet		DRAFTED	BY S. Zheng 06/2011	CHECKED	BY Jim Pallares 06/2011

DESIGN	BY S. Hegazi	CHECKED R. Amir
DETAILS	BY T. Kusumi	CHECKED R. Amir / S. Hegazi
QUANTITIES	BY R. Amir	CHECKED S. Hegazi

STATE OF CALIFORNIA
DEPARTMENT OF TRANSPORTATION

DIVISION OF ENGINEERING SERVICES
STRUCTURE DESIGN
DESIGN BRANCH 08

BRIDGE NO. 37E0112
POST MILE 0.16/0.20

RETAINING WALL NO.1
FOUNDATION PLAN

STRUCTURES FOUNDATION PLAN SHEET (ENGLISH) (REV. 09-01-10)

ORIGINAL SCALE IN INCHES FOR REDUCED PLANS 0 1 2 3

UNIT: 3646
PROJECT NUMBER & PHASE: 0100000183-1
CONTRACT NO.: 04-2A2501

DISREGARD PRINTS BEARING EARLIER REVISION DATES

REVISION DATES: 06-16-11 06-28-11 11-14-11 05-25-12

SHEET 3 OF 16

FILE => 37e0112-e-fpl01.dgn

USERNAME => s124436 DATE PLOTTED => 21-JUN-2013 TIME PLOTTED => 08:05

DIST	COUNTY	ROUTE	POST MILES TOTAL PROJECT	SHEET No.	TOTAL SHEETS
04	SCI	152	0.1/5.2	249	416

REGISTERED CIVIL ENGINEER 08-01-12 DATE

6-17-13
PLANS APPROVAL DATE

REGISTERED PROFESSIONAL ENGINEER Sameh Hegazi No. C64899 Exp. 06-30-2013 CIVIL STATE OF CALIFORNIA

The State of California or its officers or agents shall not be responsible for the accuracy or completeness of electronic copies of this plan sheet.

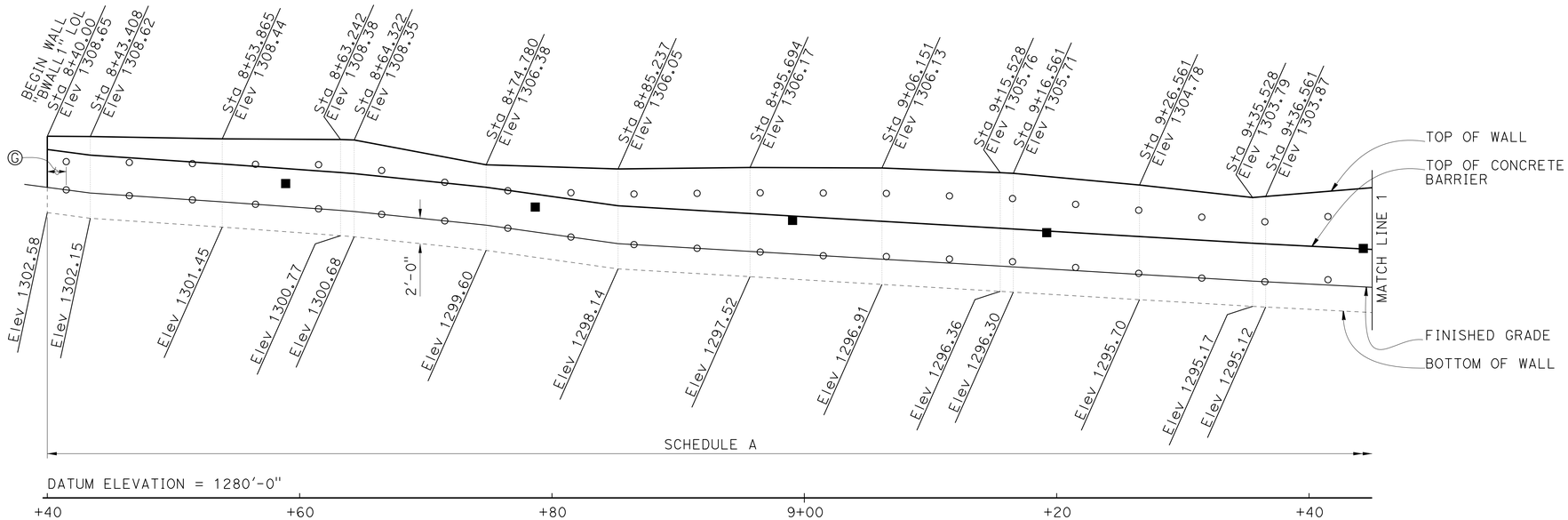

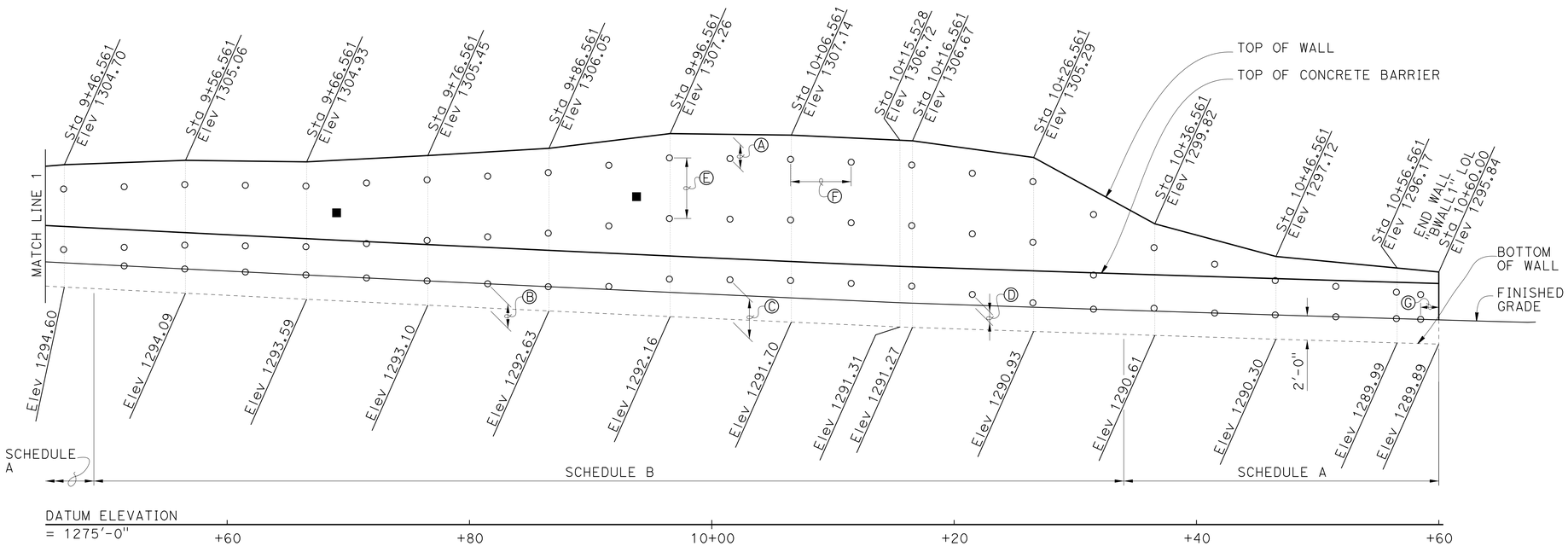

DEVELOPED ELEVATION

3/16" = 1'-0"

SCHEDULE A	BAR SIZE: #7	
NO. OF SOIL NAIL ROWS	2	
ROW NO. TOP TO BOTTOM	1	2
EMBEDMENT LENGTH (FT)	10	10

SCHEDULE B	BAR SIZE: #7		
NO. OF SOIL NAIL ROWS	3		
ROW NO. TOP TO BOTTOM	1	2	3
EMBEDMENT LENGTH (FT)	15	12	10

NOTES:

Ⓐ ST = Vertical distance from top of wall elevation to top level of soil nails, ST = 2'-0"

Ⓑ SB_1 = Vertical distance from bottom of wall to bottom level of the soil nails, SB1 (Min) = 2'-0", SB1 (Max) < 3'-6".

Ⓒ SB_2 = Vertical distance from bottom of wall to bottom level of the soil nails, SB2 (Max) < 3'-6"

Ⓓ Discontinue row when vertical distance between soil nails are less than 1'-6".

Ⓔ SV = Vertical spacing of soil nails, SV (Min) = 1'-6", SV (Max) = 5'-0".

Ⓕ SH = Horizontal spacing of soil nails, SH (Min) = 1'-6", SH (Max) = 5'-0".

Ⓖ SS = Horizontal distance between the begin/end wall and first/last soil nails, SS (Min) = 1'-6", SS (Max) = 2'-6".

Ⓗ The exact location of the test soil nails to be determined by the Engineer.

1. Cable railing posts are not shown for clarity.

LEGEND:
- ○ Indicates approximate location of soil nails
- ■ Indicates approximate location of proof test nails

DESIGN	BY S. Hegazi	CHECKED R. Amir	
DETAILS	BY T. Kusumi	CHECKED R. Amir / S. Hegazi	
QUANTITIES	BY R. Amir	CHECKED S. Hegazi	

STATE OF CALIFORNIA
DEPARTMENT OF TRANSPORTATION

DIVISION OF ENGINEERING SERVICES
STRUCTURE DESIGN
DESIGN BRANCH 8

BRIDGE NO. 37E0112
POST MILE 0.16/0.20

HECKER PASS SOIL NAIL WALL NO. 1
STRUCTURE ELEVATION

STRUCTURES DESIGN DETAIL SHEET (ENGLISH) (REV. 09-01-10)

ORIGINAL SCALE IN INCHES FOR REDUCED PLANS 0 1 2 3

UNIT: 3593
PROJECT NUMBER & PHASE: 0400000813-1
CONTRACT NO.: 04-2A2501

DISREGARD PRINTS BEARING EARLIER REVISION DATES

REVISION DATES 06-08-11 02-28-12 04-26-12

SHEET 4 OF 16

FILE => 37e0112-f-strucelv.dgn

USERNAME => s124496 DATE PLOTTED => 21-JUN-2013 TIME PLOTTED => 08:05

DIST	COUNTY	ROUTE	POST MILES TOTAL PROJECT	SHEET No.	TOTAL SHEETS
04	SCI	152	0.1/5.2	250	416

REGISTERED CIVIL ENGINEER 05-15-13 DATE

6-17-13
PLANS APPROVAL DATE

REGISTERED PROFESSIONAL ENGINEER
Sameh Hegazi
No. C64899
Exp. 06-30-2013
CIVIL
STATE OF CALIFORNIA

The State of California or its officers or agents shall not be responsible for the accuracy or completeness of electronic copies of this plan sheet.

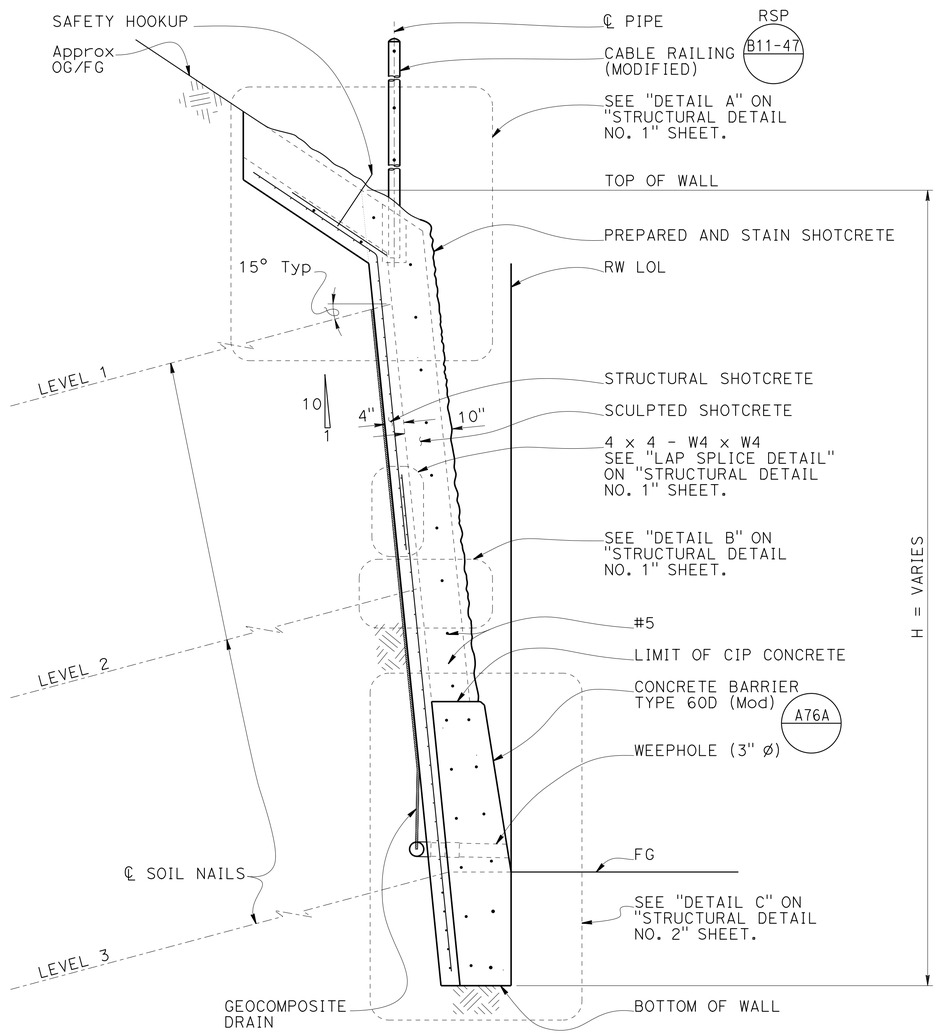

TYPICAL SECTION

3/4" = 1'-0"

NOTES:
1. For "PRODUCTION SOIL NAIL DETAIL" and "PROOF TEST SOIL NAIL DETAIL", see "STRUCTURAL DETAIL NO.3" sheet.
2. For sculpted shotcrete treatment, see "SCULPTED SHOTCRETE" TREATMENT" sheet.
3 For geocomposite drain detail, see "DRAINAGE DETAILS" sheet.

	BY	CHECKED
DESIGN	S. Hegazi	R. Amir
DETAILS	T. Kusumi	R. Amir / S. Hegazi
QUANTITIES	R. Amir	S. Hegazi

STATE OF CALIFORNIA
DEPARTMENT OF TRANSPORTATION

DIVISION OF ENGINEERING SERVICES
STRUCTURE DESIGN
DESIGN BRANCH 8

BRIDGE NO. 37E0112
POST MILE 0.16/0.20

HECKER PASS SOIL NAIL WALL NO. 1
TYPICAL SECTION

STRUCTURES DESIGN DETAIL SHEET (ENGLISH) (REV. 09-01-10)

ORIGINAL SCALE IN INCHES FOR REDUCED PLANS 0 1 2 3

UNIT: 3593
PROJECT NUMBER & PHASE: 0400000813-1
CONTRACT NO.: 04-2A2501

DISREGARD PRINTS BEARING EARLIER REVISION DATES

REVISION DATES: 06-16-11 07-13-12 05-10-13

SHEET 5 OF 16

FILE => 37e0112-g-_ts01.dgn

USERNAME => s124496 DATE PLOTTED => 21-JUN-2013 TIME PLOTTED => 07:52

DIST	COUNTY	ROUTE	POST MILES TOTAL PROJECT	SHEET No.	TOTAL SHEETS
04	SCI	152	0.1/5.2	251	416

REGISTERED CIVIL ENGINEER 05-15-13 DATE

6-17-13
PLANS APPROVAL DATE

REGISTERED PROFESSIONAL ENGINEER Sameh Hegazi No. C64899 Exp. 06-30-2013 CIVIL STATE OF CALIFORNIA

The State of California or its officers or agents shall not be responsible for the accuracy or completeness of electronic copies of this plan sheet.

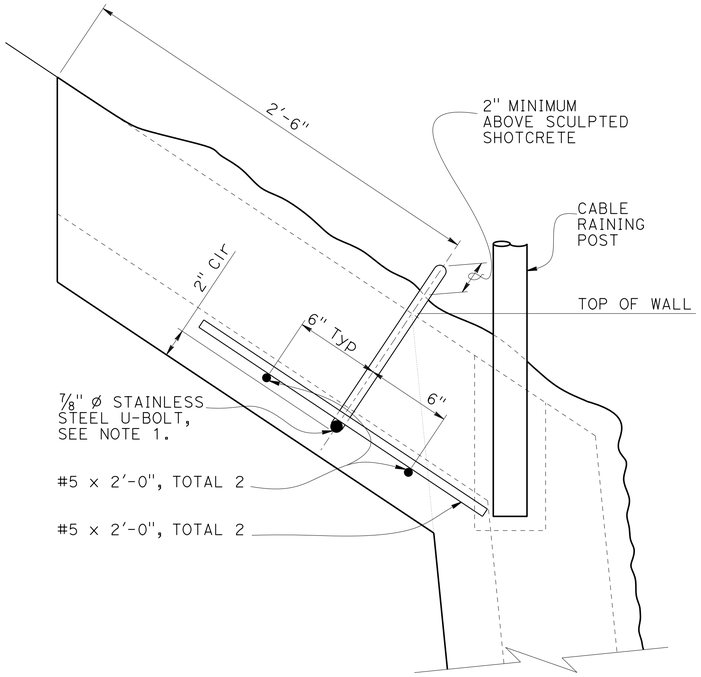

SAFETY HOOKUP DETAIL

No Scale

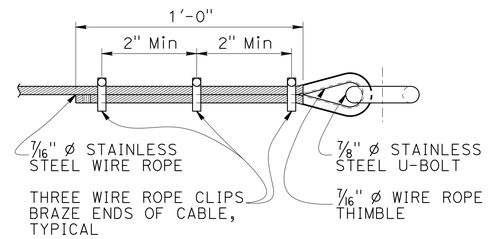

SAFETY WIRE ROPE DETAIL

No Scale

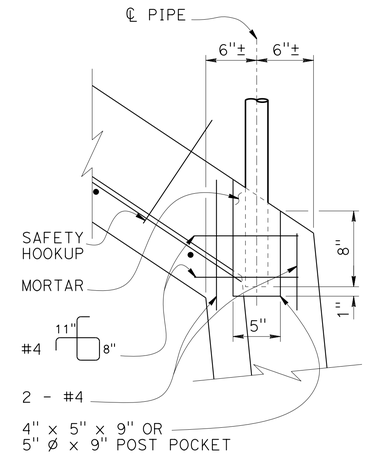

POST POCKET DETAIL

No Scale

RSP B11-47

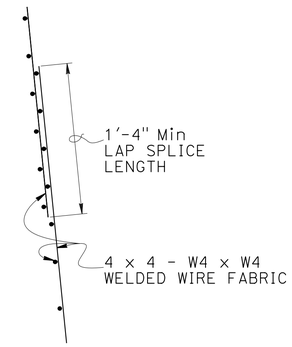

LAP SPLICE DETAIL

No Scale

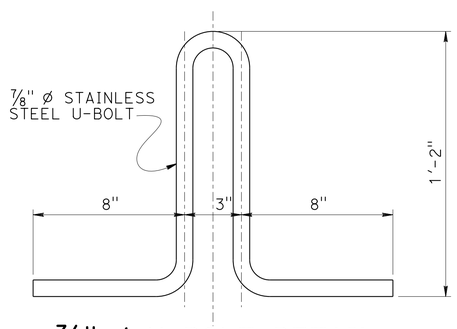

7/8" Ø U-BOLT DETAIL

3" = 1'-0"

NOTE:

Ⓐ For bearing plate and soil nail details not shown, see "STRUCTURAL DETAILS NO. 3" sheet.

1. Safety hookups shall be placed behind cable railing posts with 10'-0" Max spacing.
2. Safety wire rope shall be extended between safety hookups at top of wall.
3. Safety wire rope and safety hookups shall be placed at locations where wall heights from top of wall to finished grade exceed 5 feet.

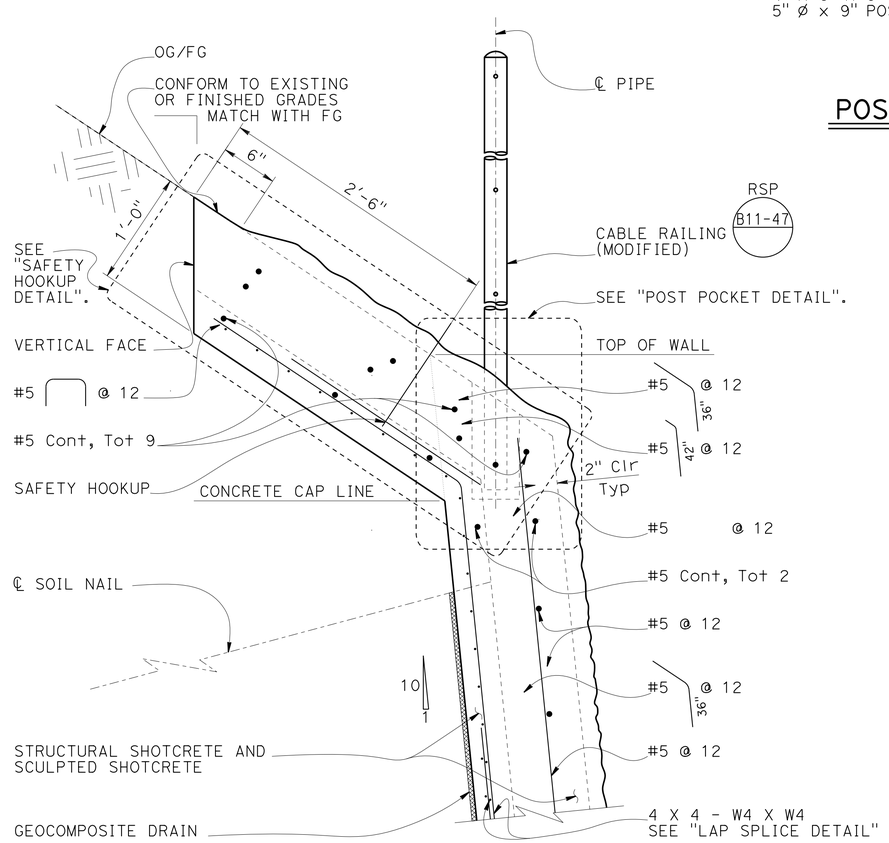

DETAIL A

1½" = 1'-0"

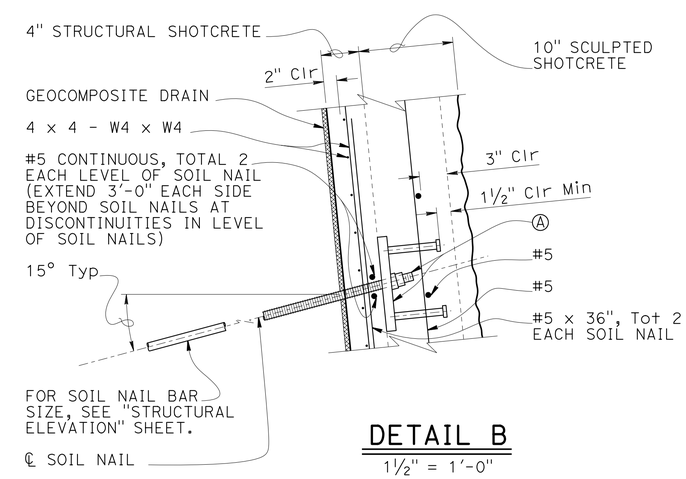

DETAIL B

1½" = 1'-0"

DESIGN	BY S. Hegazi	CHECKED R. Amir	
DETAILS	BY T. Kusumi	CHECKED R. Amir / S. Hegazi	
QUANTITIES	BY R. Amir	CHECKED S. Hegazi	

STATE OF CALIFORNIA
DEPARTMENT OF TRANSPORTATION

DIVISION OF ENGINEERING SERVICES
STRUCTURE DESIGN
DESIGN BRANCH 8

BRIDGE NO. 37E0112
POST MILE 0.16/0.20

HECKER PASS SOIL NAIL WALL NO. 1
STRUCTURAL DETAILS NO. 1

STRUCTURES DESIGN DETAIL SHEET (ENGLISH) (REV. 09-01-10)

ORIGINAL SCALE IN INCHES FOR REDUCED PLANS 0 1 2 3

UNIT: 3593
PROJECT NUMBER & PHASE: 0400000813-1
CONTRACT NO.: 04-2A2501

DISREGARD PRINTS BEARING EARLIER REVISION DATES

REVISION DATES: 06-09-11 05-10-13 07-17-13

SHEET 6 OF 16

FILE => 37e0112-g-stdt01.dgn

USERNAME => s124496 DATE PLOTTED => 21-JUN-2013 TIME PLOTTED => 07:53

DIST	COUNTY	ROUTE	POST MILES TOTAL PROJECT	SHEET No.	TOTAL SHEETS
04	SCI	152	0.1/5.2	252	416

REGISTERED CIVIL ENGINEER 05-15-13 DATE

6-17-13
PLANS APPROVAL DATE

REGISTERED PROFESSIONAL ENGINEER
Sameh Hegazi
No. C64899
Exp. 06-30-2013
CIVIL
STATE OF CALIFORNIA

The State of California or its officers or agents shall not be responsible for the accuracy or completeness of electronic copies of this plan sheet.

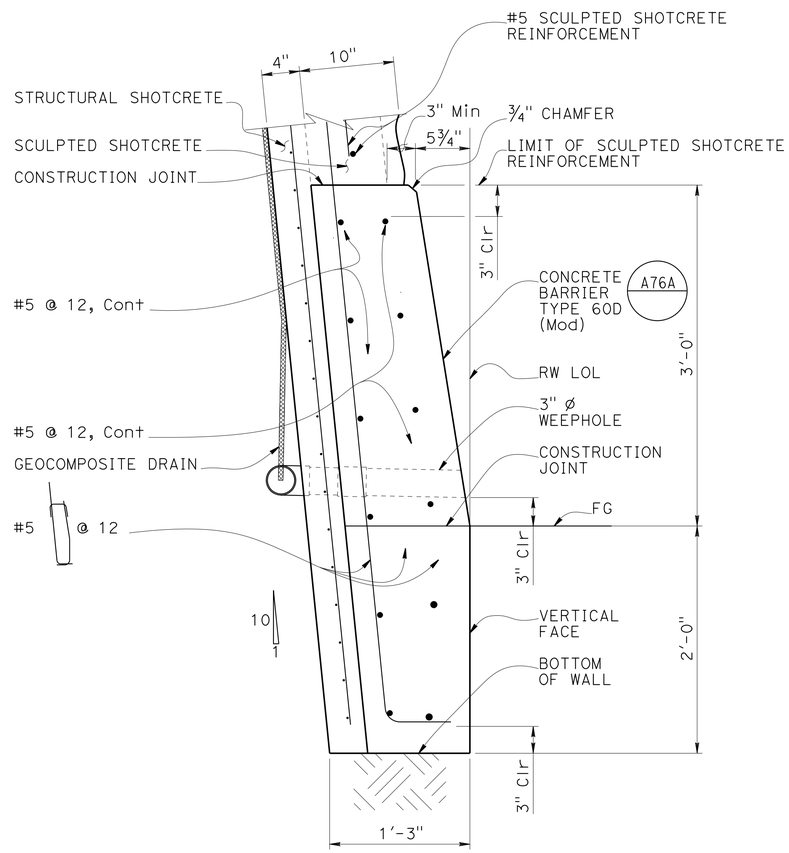

DETAIL C

1 1/2" = 1'-0"

NOTE:
1. Soil nails not shown for clarity.
2. Concrete barrier shall be integrally colored.

	BY	CHECKED
DESIGN	S. Hegazi	R. Amir
DETAILS	T. Kusumi	R. Amir / S. Hegazi
QUANTITIES	R. Amir	S. Hegazi

STATE OF CALIFORNIA
DEPARTMENT OF TRANSPORTATION

DIVISION OF ENGINEERING SERVICES
STRUCTURE DESIGN
DESIGN BRANCH 8

BRIDGE NO. 37E0112
POST MILE 0.16/0.20

HECKER PASS SOIL NAIL WALL NO. 1
STRUCTURAL DETAIL NO. 2

STRUCTURES DESIGN DETAIL SHEET (ENGLISH) (REV. 09-01-10)

ORIGINAL SCALE IN INCHES FOR REDUCED PLANS 0 1 2 3

UNIT: 3593
PROJECT NUMBER & PHASE: 0400000813-1
CONTRACT NO.: 04-2A2501

DISREGARD PRINTS BEARING EARLIER REVISION DATES

REVISION DATES: 06-15-11 07-17-12 05-10-13

SHEET 7 OF 16

FILE => 37e0112-g-stdt02.dgn

USERNAME => s124496 DATE PLOTTED => 21-JUN-2013 TIME PLOTTED => 07:53

DIST	COUNTY	ROUTE	POST MILES TOTAL PROJECT	SHEET No.	TOTAL SHEETS
04	SCI	152	0.1/5.2	253	416

REGISTERED CIVIL ENGINEER 08-01-12 DATE

6-17-13
PLANS APPROVAL DATE

REGISTERED PROFESSIONAL ENGINEER Sameh Hegazi No. C64899 Exp. 06-30-2013 CIVIL STATE OF CALIFORNIA

The State of California or its officers or agents shall not be responsible for the accuracy or completeness of electronic copies of this plan sheet.

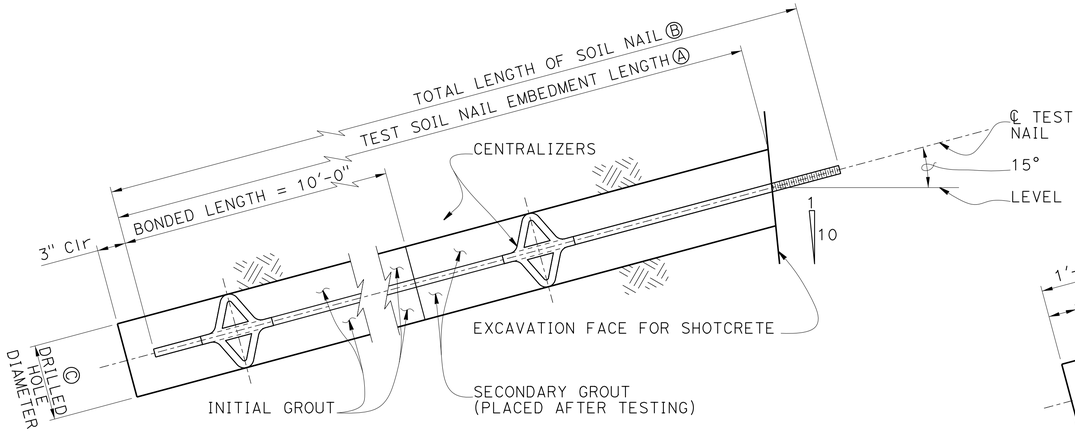

PROOF TEST SOIL NAIL DETAIL

No Scale

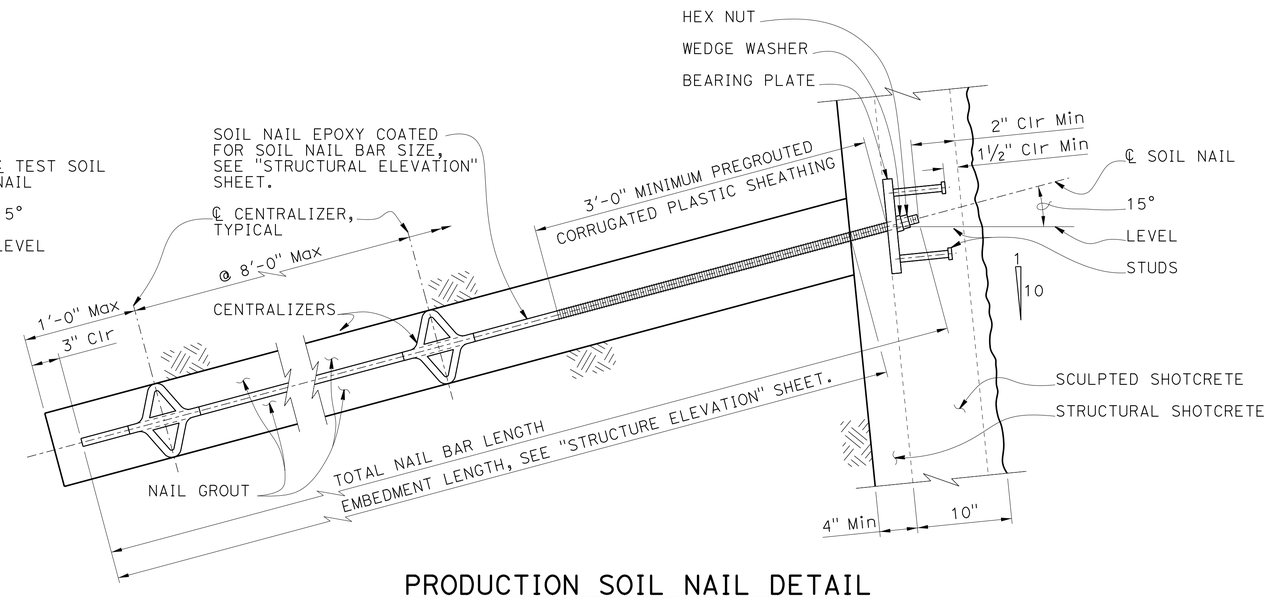

PRODUCTION SOIL NAIL DETAIL

No Scale

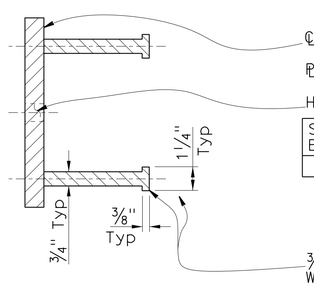

SECTION A-A

No Scale

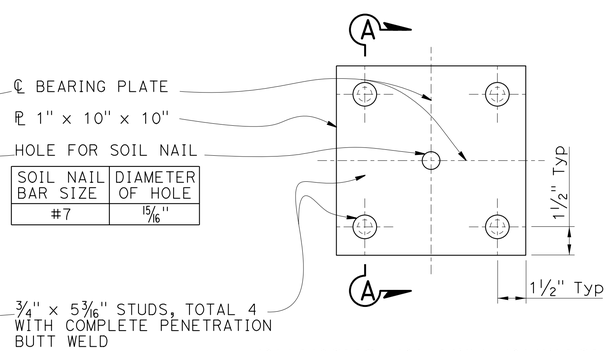

SOIL NAIL BAR SIZE	DIAMETER OF HOLE
#7	15/16"

BEARING PLATE DETAIL

No Scale

NOTES:

1. Geocomposite drain not shown for clarity.
2. Wall reinforcement not shown for clarity.
3. Finished grout surface to be normal to the bar

Ⓐ Embedment length of test soil nails equals 2/3 of embedment length of adjacent production soil nails, but not less than 12'-0".

Ⓑ Total length of test soil nail equals embedment length plus length required for jacking equipment.

Ⓒ Contractor to determine drilled hole diameter.

	BY	CHECKED
DESIGN	S. Hegazi	R. Amir
DETAILS	T. Kusumi	R. Amir / S. Hegazi
QUANTITIES	R. Amir	S. Hegazi

STATE OF CALIFORNIA
DEPARTMENT OF TRANSPORTATION

DIVISION OF ENGINEERING SERVICES
STRUCTURE DESIGN
DESIGN BRANCH 8

BRIDGE NO. 37E0112
POST MILE 0.16/0.20

HECKER PASS SOIL NAIL WALL NO. 1

STRUCTURAL DETAILS NO. 3

STRUCTURES DESIGN DETAIL SHEET (ENGLISH) (REV. 09-01-10)

ORIGINAL SCALE IN INCHES FOR REDUCED PLANS 0 1 2 3

UNIT: 3593
PROJECT NUMBER & PHASE: 0400000813-1
CONTRACT NO.: 04-2A2501

DISREGARD PRINTS BEARING EARLIER REVISION DATES

REVISION DATES: 06-15-11 04-26-11 06-26-12

SHEET 8 OF 16

FILE => 37e0112-g-stdt03.dgn

USERNAME => s124496 DATE PLOTTED => 21-JUN-2013 TIME PLOTTED => 07:53

DIST	COUNTY	ROUTE	POST MILES TOTAL PROJECT	SHEET No.	TOTAL SHEETS
04	SCI	152	0.1/5.2	254	416

REGISTERED CIVIL ENGINEER 05-15-13 DATE

6-17-13
PLANS APPROVAL DATE

REGISTERED PROFESSIONAL ENGINEER
Sameh Hegazi
No. C64899
Exp. 06-30-2013
CIVIL
STATE OF CALIFORNIA

The State of California or its officers or agents shall not be responsible for the accuracy or completeness of electronic copies of this plan sheet.

NOTES:
1. Wall reinforcement not shown for clarity.

Ⓐ Indicates soil nail locations.

Ⓑ Center of geocomposite strips shall be centered vertically between soil nails.

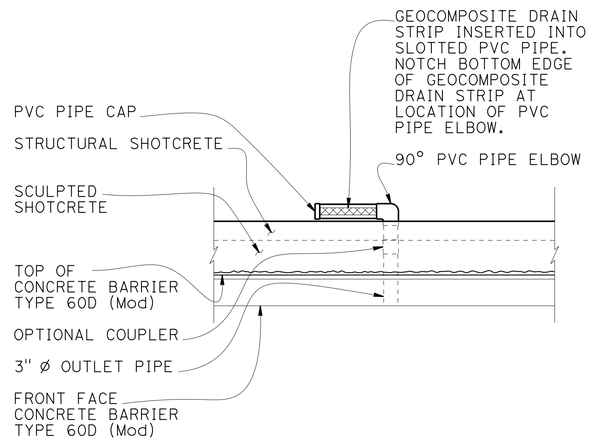

SECTION C-C

No Scale

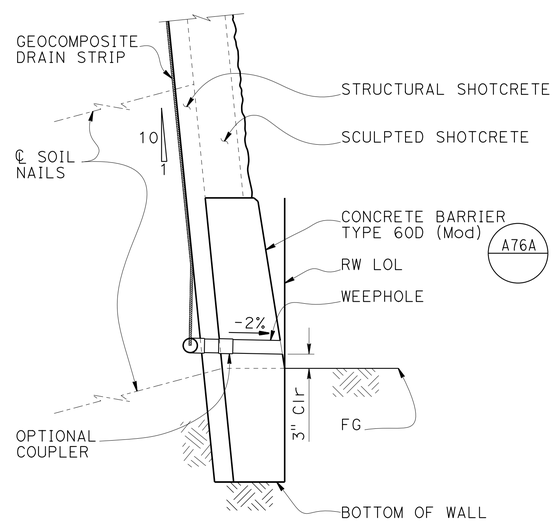

SECTION B-B

3/4" = 1'-0"

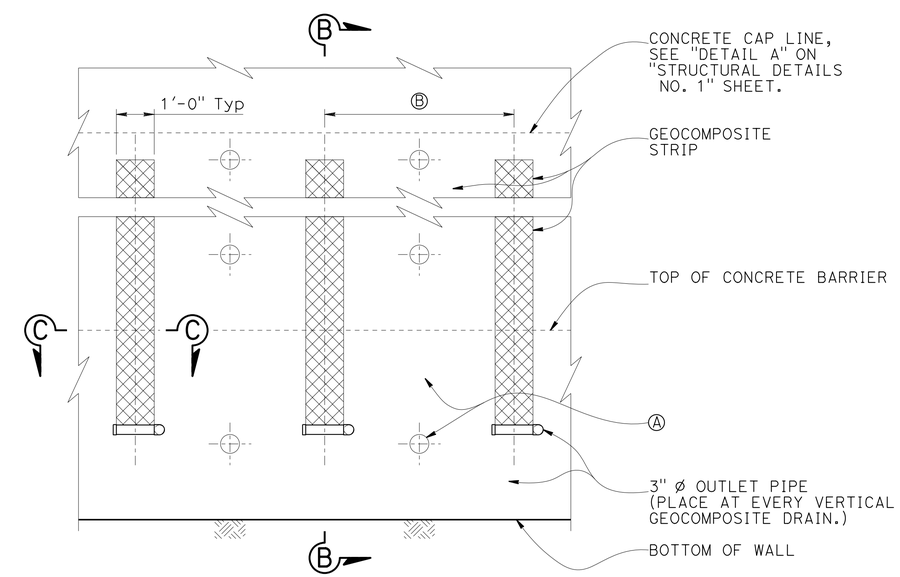

WALL PART ELEVATION

No Scale

DESIGN	BY S. Hegazi	CHECKED R. Amir	
DETAILS	BY T. Kusumi	CHECKED R. Amir / S. Hegazi	
QUANTITIES	BY R. Amir	CHECKED S. Hegazi	

STATE OF CALIFORNIA
DEPARTMENT OF TRANSPORTATION

DIVISION OF ENGINEERING SERVICES
STRUCTURE DESIGN
DESIGN BRANCH 8

BRIDGE NO. 37E0112
POST MILE 0.16/0.20

HECKER PASS SOIL NAIL WALL NO. 1
DRAINAGE DETAILS

STRUCTURES DESIGN DETAIL SHEET (ENGLISH) (REV. 09-01-10)

ORIGINAL SCALE IN INCHES FOR REDUCED PLANS 0 1 2 3

UNIT: 3593
PROJECT NUMBER & PHASE: 0400000813-1
CONTRACT NO.: 04-2A2501

DISREGARD PRINTS BEARING EARLIER REVISION DATES

REVISION DATES: 06-17-11 07-18-12 05-10-13

SHEET 9 OF 16

FILE => 37e0112-r-dd1.dgn

USERNAME => s124496 DATE PLOTTED => 21-JUN-2013 TIME PLOTTED => 07:53

DIST	COUNTY	ROUTE	POST MILES TOTAL PROJECT	SHEET No.	TOTAL SHEETS
04	SCI	152	0.1/5.2	255	416

REGISTERED CIVIL ENGINEER 08-01-12 DATE

6-17-13
PLANS APPROVAL DATE

REGISTERED PROFESSIONAL ENGINEER
Sameh Hegazi
No. C64899
Exp. 06-30-2013
CIVIL
STATE OF CALIFORNIA

The State of California or its officers or agents shall not be responsible for the accuracy or completeness of electronic copies of this plan sheet.

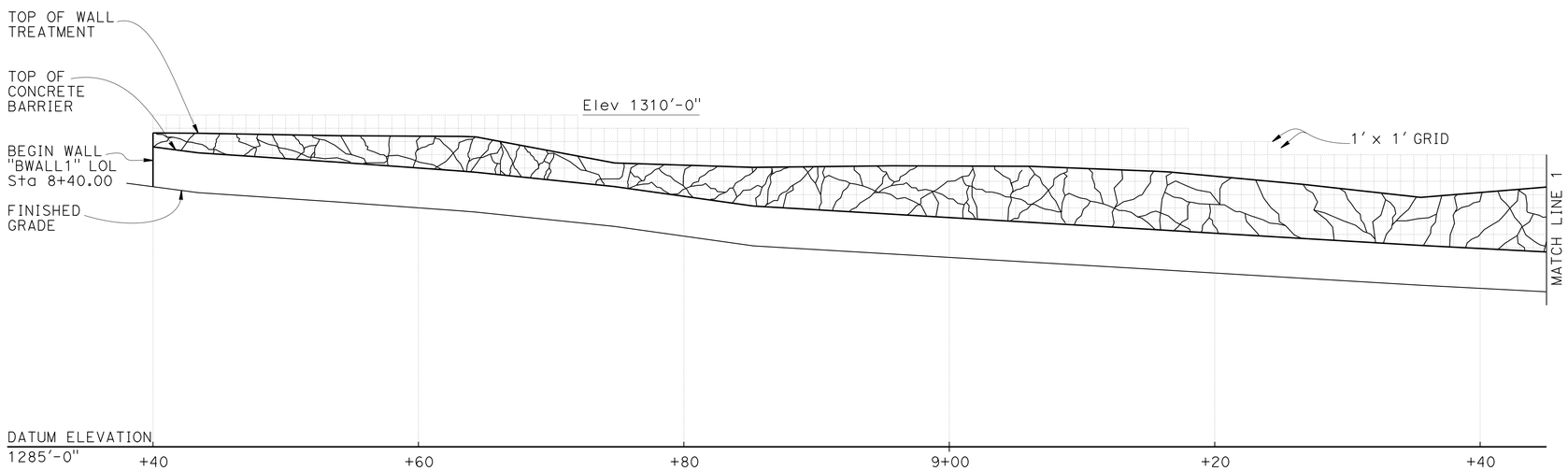

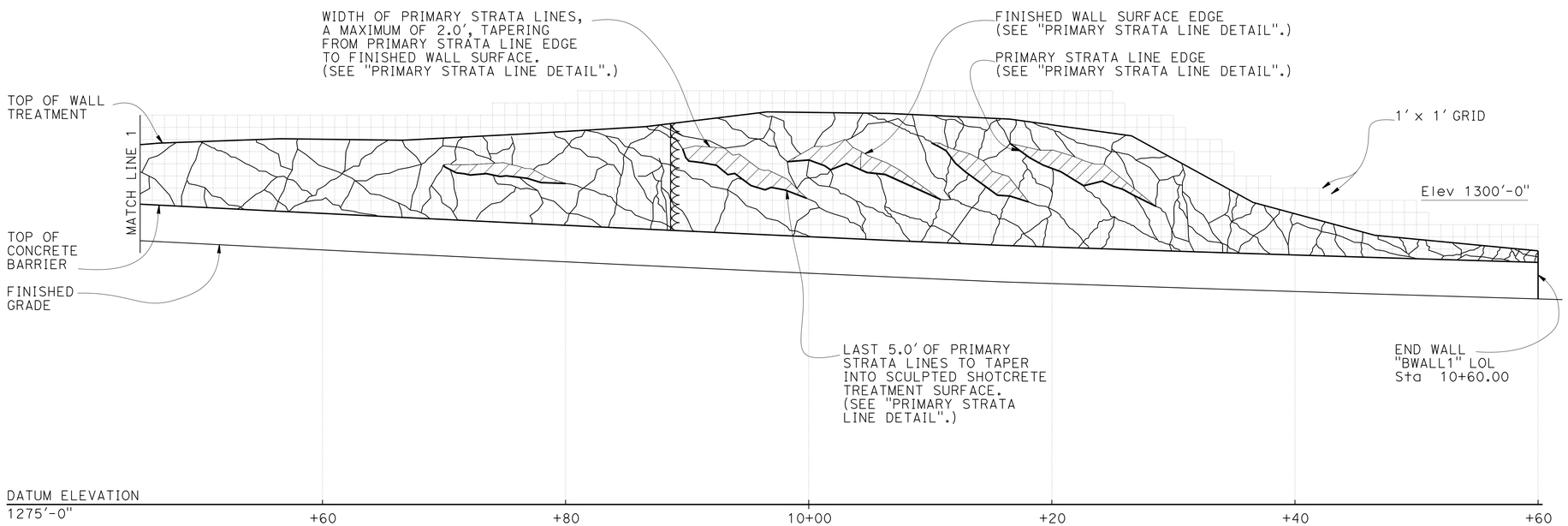

SCULPTED SHOTCRETE SURFACE TREATMENT

3/16" = 1'-0"

LEGEND:

1. PRIMARY STRATA LINES

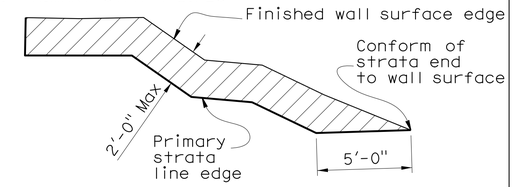

2. SECONDARY STRATA LINES

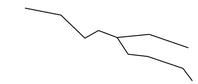

3. Indicates location of weakened planes joint. Joints should not be placed within 18 inches of a nail head. For details, see B0-3 / 3-2

NOTES:

1. Primary strata lines drawn on the front elevation are to be used as a guide for layout of primary strata line reinforcement. See "SCULPTED SHOTCRETE TREATMENT DETAILS NO. 1" and "SCULPTED SHOTCRETE TREATMENT DETAILS NO. 2" sheets.
2. Secondary strata lines drawn on the front elevation are to be used as a general guide. Strata lines shall be sculpted to mimic local geology.
3. This sheet is accurate for sculpted shotcrete treatment only.
4. Sculpted shotcrete surface treatment shall be continuous throughout the face of the wall.
5. Additional shotcrete needed for carving the primary strata lines to be reinforced as shown on "SCULPTED SHOTCRETE TREATMENT DETAILS NO. 1" and "SCULPTED SHOTCRETE TREATMENT DETAILS NO. 2" sheets.
6. Primary strata lines to be tapered into the top and bottom of wall.
7. Secondary strata lines are not to exceed 2" amplitude.
8. 3" ø weepholes are not shown.
9. Cable railing is not shown.

	BY	CHECKED
DESIGN	S. Hegazi	R. Amir
DETAILS	T. Kusumi	R. Amir / S. Hegazi
QUANTITIES	R. Amir	S. Hegazi

STATE OF CALIFORNIA
DEPARTMENT OF TRANSPORTATION

DIVISION OF ENGINEERING SERVICES
STRUCTURE DESIGN
DESIGN BRANCH 8

BRIDGE NO. 37E0112
POST MILE 0.16/0.20

HECKER PASS SOIL NAIL WALL NO. 1
SCULPTED SHOTCRETE TREATMENT

STRUCTURES DESIGN DETAIL SHEET (ENGLISH) (REV. 09-01-10)

ORIGINAL SCALE IN INCHES FOR REDUCED PLANS 0 1 2 3

UNIT: 3593
PROJECT NUMBER & PHASE: 0400000813-1
CONTRACT NO.: 04-2A2501

DISREGARD PRINTS BEARING EARLIER REVISION DATES

REVISION DATES: 06-28-11 02-28-12 07-17-12

SHEET 10 OF 16

FILE => 37e0112-u-arch01.dgn

USERNAME => s124496 DATE PLOTTED => 21-JUN-2013 TIME PLOTTED => 07:53

DIST	COUNTY	ROUTE	POST MILES TOTAL PROJECT	SHEET No.	TOTAL SHEETS
04	SCI	152	0.1/5.2	256	416

REGISTERED CIVIL ENGINEER 08-01-12 DATE

6-17-13
PLANS APPROVAL DATE

REGISTERED PROFESSIONAL ENGINEER
Sameh Hegazi
No. C64899
Exp. 06-30-2013
CIVIL
STATE OF CALIFORNIA

The State of California or its officers or agents shall not be responsible for the accuracy or completeness of electronic copies of this plan sheet.

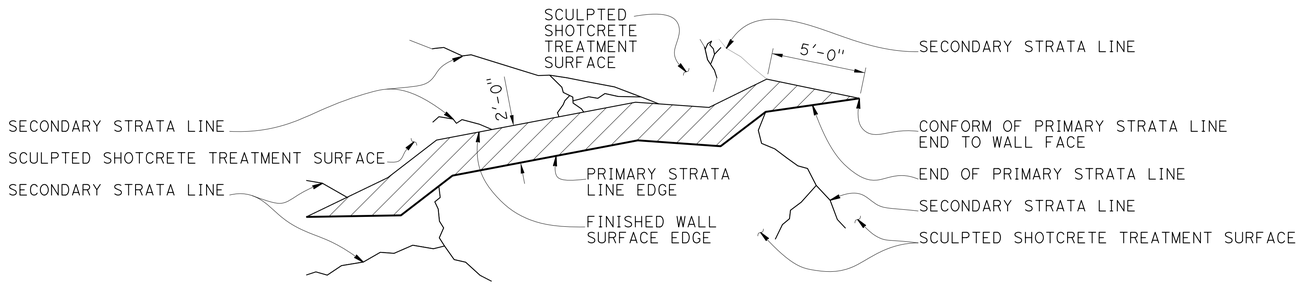

PRIMARY STRATA LINE ELEVATION DETAIL

No Scale

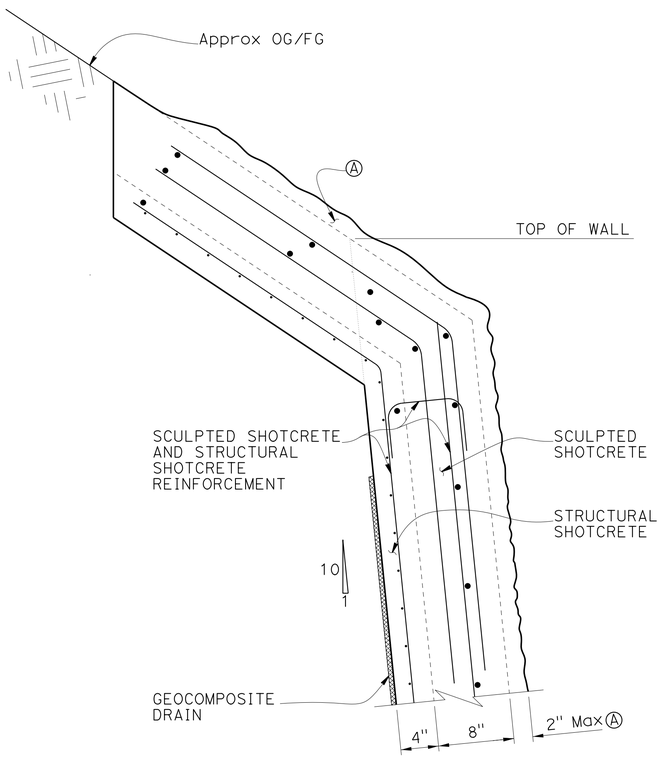

TOP OF WALL SCULPTED SHOTCRETE TREATMENT REINFORCEMENT

No Scale

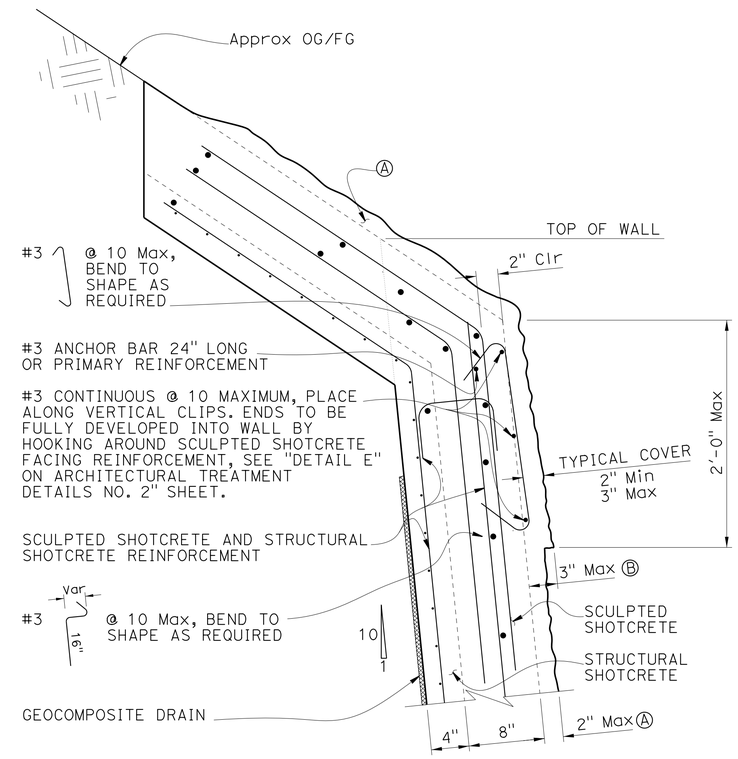

PRIMARY STRATA LINE AT TOP OF WALL SCULPTED SHOTCRETE TREATMENT REINFORCEMENT

No Scale

NOTES:
1. See also "SCULPTED SHOTCRETE TREATMENT DETAILS NO. 2" sheet for reinforcement.
2. Soil nail not shown for clarity.
3. Longitudinal bars shall taper to a point and be flush with the finished wall surface at primary strata line ends where it transitions into the wall face.
4. Cable railing post pocket and safety hookup are not shown for clarity.

Ⓐ Max 2" thick unreinforced sculpted shotcrete zone for sculpted shotcrete treatment.

Ⓑ Max 3" thick reinforced sculpted shotecrete zone for top of wall sculpted shotcrete treatment.

	BY	CHECKED
DESIGN	S. Hegazi	R. Amir
DETAILS	T. Kusumi	R. Amir / S. Hegazi
QUANTITIES	R. Amir	S. Hegazi

STATE OF CALIFORNIA
DEPARTMENT OF TRANSPORTATION

DIVISION OF ENGINEERING SERVICES
STRUCTURE DESIGN
DESIGN BRANCH 8

BRIDGE NO. 37E0112
POST MILE 0.16/0.20

HECKER PASS SOIL NAIL WALL NO. 1
SCULPTED SHOTCRETE TREATMENT DETAILS NO. 1

STRUCTURES DESIGN DETAIL SHEET (ENGLISH) (REV. 09-01-10)

ORIGINAL SCALE IN INCHES FOR REDUCED PLANS 0 1 2 3

UNIT: 3593
PROJECT NUMBER & PHASE: 0400000813-1
CONTRACT NO.: 04-2A2501

DISREGARD PRINTS BEARING EARLIER REVISION DATES

REVISION DATES: 06-08-11 | 06-21-12 | 07-17-12

SHEET 11 OF 16

FILE => 37e0112-u-archdt01.dgn

USERNAME => s124496 DATE PLOTTED => 21-JUN-2013 TIME PLOTTED => 07:53

DIST	COUNTY	ROUTE	POST MILES TOTAL PROJECT	SHEET No.	TOTAL SHEETS
04	SCI	152	0.1/5.2	257	416

REGISTERED CIVIL ENGINEER 08-01-12 DATE

6-17-13
PLANS APPROVAL DATE

REGISTERED PROFESSIONAL ENGINEER
Sameh Hegazi
No. C64899
Exp. 06-30-2013
CIVIL
STATE OF CALIFORNIA

The State of California or its officers or agents shall not be responsible for the accuracy or completeness of electronic copies of this plan sheet.

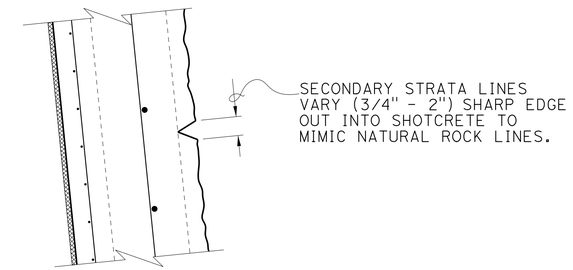

SECONDARY STRATA LINE

No Scale

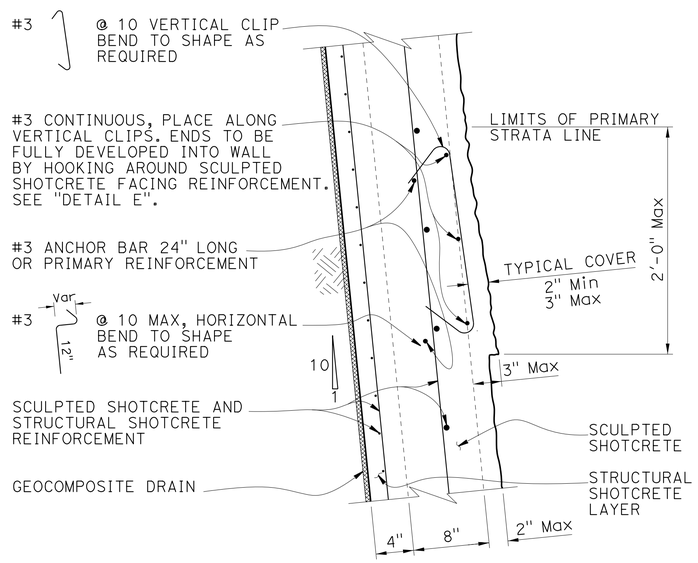

PRIMARY STRATA LINE
SCULPTED SHOTCRETE TREATMENT REINFORCEMENT

No Scale

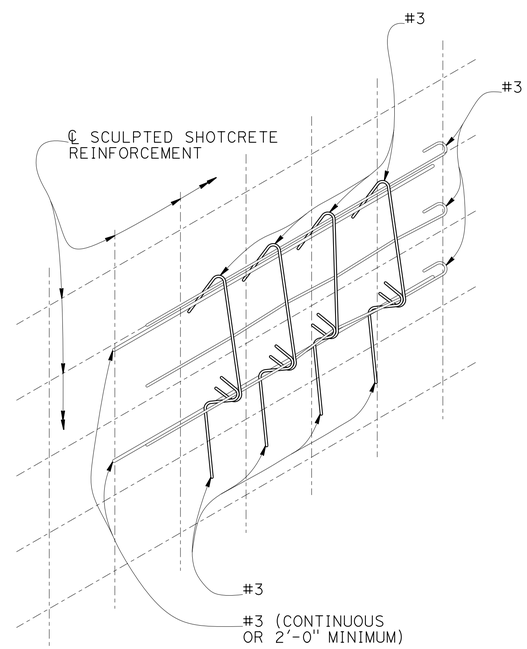

DETAIL E

No Scale

DESIGN	BY S. Hegazi	CHECKED R. Amir	
DETAILS	BY T. Kusumi	CHECKED R. Amir / S. Hegazi	
QUANTITIES	BY R. Amir	CHECKED S. Hegazi	

STATE OF CALIFORNIA
DEPARTMENT OF TRANSPORTATION

DIVISION OF ENGINEERING SERVICES
STRUCTURE DESIGN
DESIGN BRANCH 8

BRIDGE NO. 37E0112
POST MILE 0.16/0.20

HECKER PASS SOIL NAIL WALL NO. 1
SCULPTED SHOTCRETE TREATMENT DETAILS NO. 2

STRUCTURES DESIGN DETAIL SHEET (ENGLISH) (REV. 09-01-10)

ORIGINAL SCALE IN INCHES FOR REDUCED PLANS 0 1 2 3

UNIT: 3593
PROJECT NUMBER & PHASE: 0400000813-1
CONTRACT NO.: 04-2A2501

DISREGARD PRINTS BEARING EARLIER REVISION DATES

REVISION DATES: ~~06-09-11~~ 07-17-12 ~~07-27-11~~

SHEET 12 OF 16

FILE => 37e0112-u-archdt02.dgn

USERNAME => s124496 DATE PLOTTED => 21-JUN-2013 TIME PLOTTED => 07:53

DIST	COUNTY	ROUTE	POST MILES TOTAL PROJECT	SHEET No	TOTAL SHEETS
04	SCI	152	0.1/5.2	258	416

Ali Kaddoura 02-15-12
REGISTERED CIVIL ENGINEER

6-17-13
PLANS APPROVAL DATE

REGISTERED PROFESSIONAL ENGINEER Ali K. Kaddoura No. 55710 Exp. 12-31-12 CIVIL STATE OF CALIFORNIA

The State of California or its officers or agents shall not be responsible for the accuracy or completeness of electronic copies of this plan sheet.

This LOTB sheet was prepared in accordance with the Caltrans Soil & Rock Logging, Classification, & Presentation Manual (2010 Edition).

NOTE: 1. This LOTB sheet was prepared in accordance with the Caltrans Soil & Rock Logging, Classification, and Presentation Manual (April 2010).

2. PP=unconfined compressive strength (tsf) as measured by pocket penetrometer.

BENCH MARK

PHRV876
Fnd 1" I.P. w/CT PP&T
18.12 Lt. "A1" Line, ℄ Rte 152
Sta. 10+89.79
N 1,823,819.73
E 6,206,906.42
EL.=1,289.66

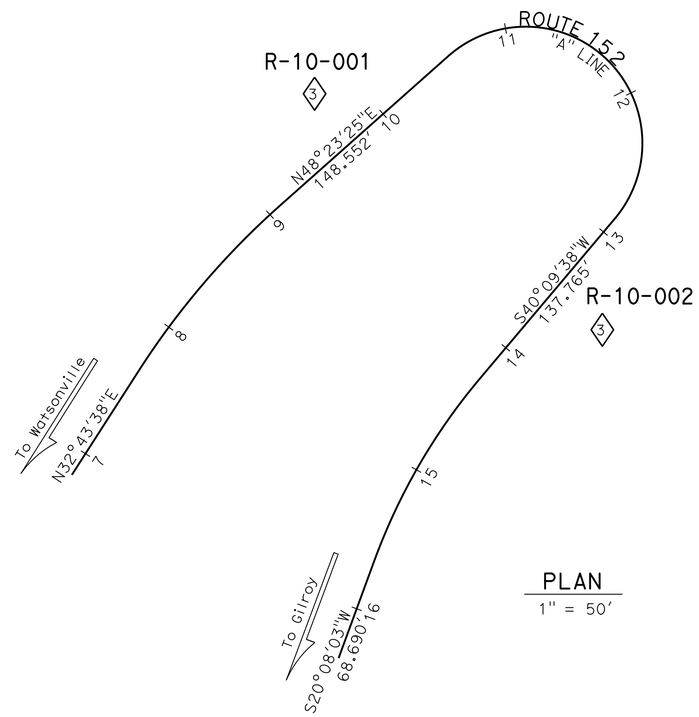

PLAN
1" = 50'

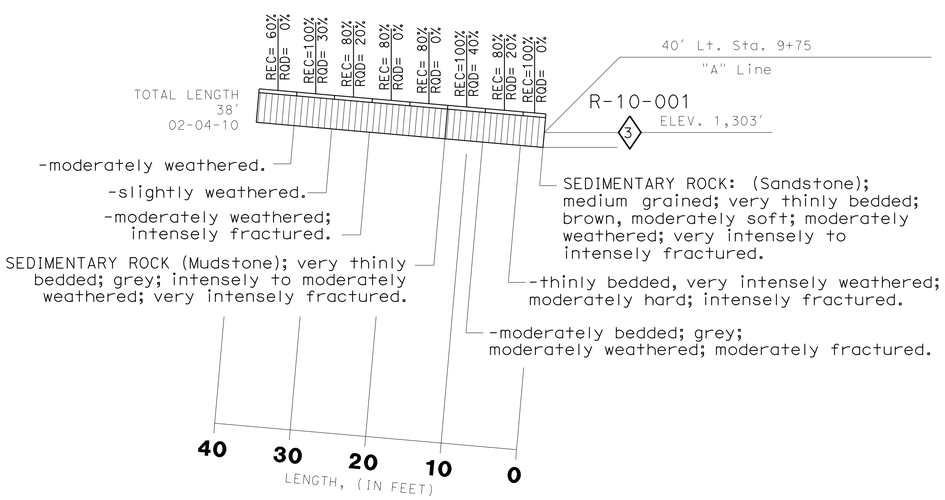

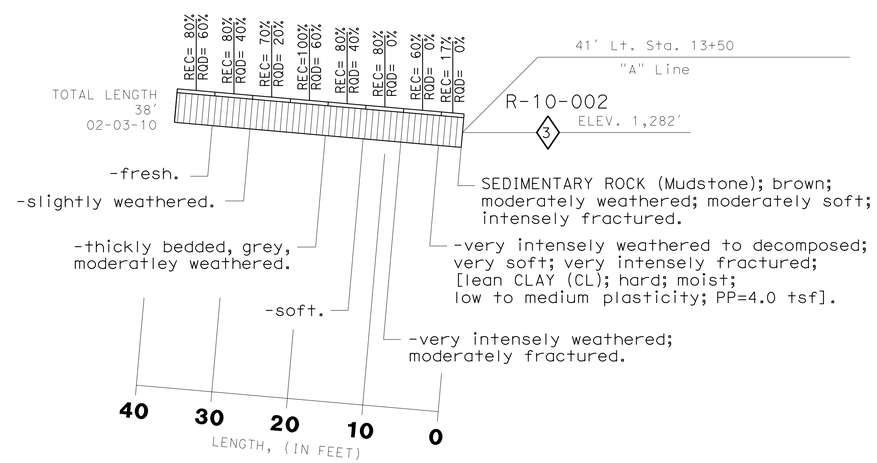

PROFILE
HOR. 1"=10'
VER. 1"=10'

ENGINEERING SERVICES	GEOTECHNICAL SERVICES	STATE OF CALIFORNIA DEPARTMENT OF TRANSPORTATION	DIVISION OF ENGINEERING SERVICES OFFICE OF GEOTECHNICAL DESIGN BRANCH 8	BRIDGE NO. 37E0112 / POST MILES 0.16/0.20	HECKER PASS SOIL NAIL WALL NO. 1
FUNCTIONAL SUPERVISOR	DRAWN BY: M. Reynolds 10/10	FIELD INVESTIGATION BY: A. Kaddoura			LOG OF TEST BORINGS 1 of 4
NAME:	CHECKED BY: M. Gaffney				

ORIGINAL SCALE IN INCHES FOR REDUCED PLANS 0 1 2 3

CU 04
EA 2A2500

DISREGARD PRINTS BEARING EARLIER REVISION DATES 03-08-12 05-24-12

REVISION DATES | SHEET 13 | OF 16

FILE => 37e0112-z-1tb01.dgn

USERNAME => s124496 DATE PLOTTED => 21-JUN-2013 TIME PLOTTED => 07:53

DIST	COUNTY	ROUTE	POST MILES TOTAL PROJECT	SHEET No	TOTAL SHEETS
04	SCI	152	0.1/5.2	259	416

Ali Kaddoura 02-15-12
REGISTERED CIVIL ENGINEER DATE

6-17-13
PLANS APPROVAL DATE

REGISTERED PROFESSIONAL ENGINEER Ali K. Kaddoura No. 55710 Exp. 12-31-12 CIVIL STATE OF CALIFORNIA

The State of California or its officers or agents shall not be responsible for the accuracy or completeness of electronic copies of this plan sheet.

REFERENCE: CALTRANS SOIL & ROCK LOGGING, CLASSIFICATION, AND PRESENTATION MANUAL (JUNE 2007)

CEMENTATION

Description	Criteria
Weak	Crumbles or breaks with handling or little finger pressure.
Moderate	Crumbles or breaks with considerable finger pressure.
Strong	Will not crumble or break with finger pressure.

CONSISTENCY OF COHESIVE SOILS

Description	Unconfined Compressive Strength (tsf)	Pocket Penetrometer Measurement (tsf)	Torvane Measurement (tsf)	Field Approximation
Very Soft	< 0.25	< 0.25	< 0.12	Easily penetrated several inches by fist
Soft	0.25 to 0.50	0.25 to 0.50	0.12 to 0.25	Easily penetrated several inches by thumb
Medium Stiff	0.50 to 1.0	0.50 to 1.0	0.25 to 0.50	Penetrated several inches by thumb with moderate effort
Stiff	1 to 2	1 to 2	0.50 to 1.0	Readily indented by thumb but penetrated only with great effort
Very Stiff	2 to 4	2 to 4	1.0 to 2.0	Readily indented by thumbnail
Hard	> 4.0	> 4.0	> 2.0	Indented by thumbnail with difficulty

BOREHOLE IDENTIFICATION

Symbol	Hole Type	Description
Size	A	Auger Boring
Size	R P	Rotary drilled boring Rotary percussion boring (air)
Size	R	Rotary drilled diamond core
Size	HD HA	Hand driven (1-inch soil tube) Hand Auger
●	D	Dynamic Cone Penetration Boring
▲	CPT	Cone Penetration Test (ASTM D 5778-95)
⬚	O	Other

Note: Size in inches.

PLASTICITY OF FINE-GRAINED SOILS

Description	Criteria
Nonplastic	A 1/8-inch thread cannot be rolled at any water content.
Low	The thread can barely be rolled and the lump cannot be formed when drier than the plastic limit.
Medium	The thread is easy to roll and not much time is required to reach the plastic limit. The thread cannot be rerolled after reaching the plastic limit. The lump crumbles when drier than the plastic limit.
High	It takes considerable time rolling and kneading to reach the plastic limit. The thread can be rerolled several times after reaching the plastic limit. The lump can be formed without crumbling when drier than the plastic limit.

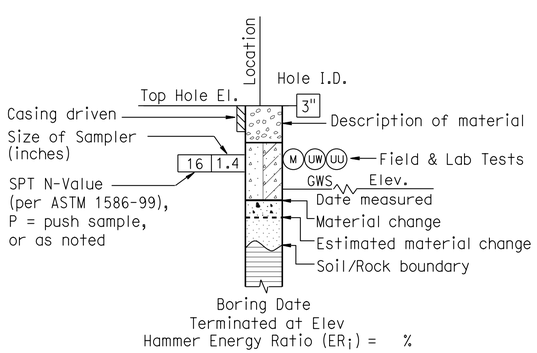

ROTARY BORING

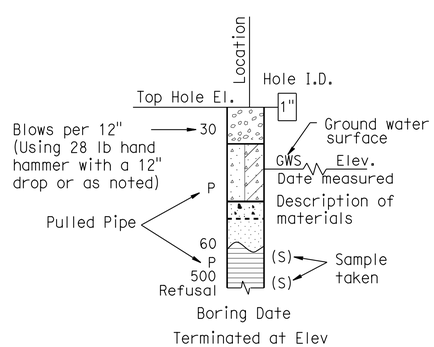

HAND BORING

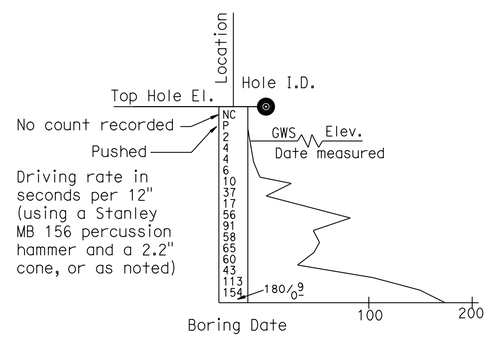

DYNAMIC CONE PENETRATION BORING

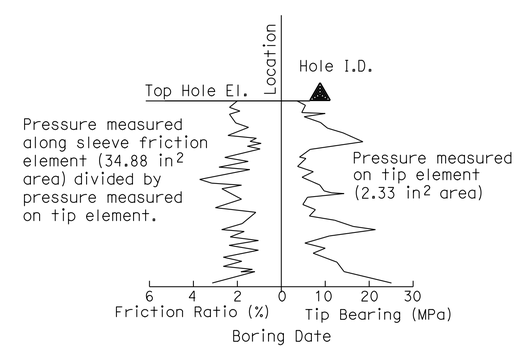

CONE PENETRATION TEST (CPT) SOUNDING

ENGINEERING SERVICES				GEOTECHNICAL SERVICES
FUNCTIONAL SUPERVISOR	PREPARED BY	M. Reynolds	10/10	FIELD INVESTIGATION BY:
NAME:	CHECKED BY	M. Gaffney		A. Kaddoura C. Risden

STATE OF CALIFORNIA DEPARTMENT OF TRANSPORTATION

DIVISION OF ENGINEERING SERVICES OFFICE OF GEOTECHNICAL DESIGN BRANCH 8

BRIDGE NO. 37E0112
POST MILE 0.16/0.20

HECKER PASS SOIL NAIL WALL NO. 1

LOG OF TEST BORINGS 2 of 4

GS LOTB SOIL LEGEND

ORIGINAL SCALE IN INCHES FOR REDUCED PLANS 0 1 2 3

CU 04
EA 2A2500

DISREGARD PRINTS BEARING EARLIER REVISION DATES 03-08-12 05-24-12

REVISION DATES

SHEET 14 OF 16

FILE => 37e0112-z-ltb02.dgn

USERNAME => s124496 DATE PLOTTED => 21-JUN-2013 TIME PLOTTED => 07:53

REFERENCE: CALTRANS SOIL & ROCK LOGGING, CLASSIFICATION, AND PRESENTATION MANUAL (JUNE 2007)

DIST	COUNTY	ROUTE	POST MILES TOTAL PROJECT	SHEET No	TOTAL SHEETS
04	SCI	152	0.1/5.2	260	416

Ali Kaddoura 02-15-12
REGISTERED CIVIL ENGINEER DATE

6-17-13
PLANS APPROVAL DATE

REGISTERED PROFESSIONAL ENGINEER Ali K. Kaddoura No. 55710 Exp. 12-31-12 CIVIL STATE OF CALIFORNIA

The State of California or its officers or agents shall not be responsible for the accuracy or completeness of electronic copies of this plan sheet.

GROUP SYMBOLS AND NAMES

Graphic/Symbol	Group Names
GW	Well-graded GRAVEL Well-graded GRAVEL with SAND
GP	Poorly graded GRAVEL Poorly graded GRAVEL with SAND
GW-GM	Well-graded GRAVEL with SILT Well-graded GRAVEL with SILT and SAND
GW-GC	Well-graded GRAVEL with CLAY (or SILTY CLAY) Well-graded GRAVEL with CLAY and SAND (or SILTY CLAY and SAND)
GP-GM	Poorly graded GRAVEL with SILT Poorly graded GRAVEL with SILT and SAND
GP-GC	Poorly graded GRAVEL with CLAY (or SILTY CLAY) Poorly graded GRAVEL with CLAY and SAND (or SILTY CLAY and SAND)
GM	SILTY GRAVEL SILTY GRAVEL with SAND
GC	CLAYEY GRAVEL CLAYEY GRAVEL with SAND
GC-GM	SILTY, CLAYEY GRAVEL SILTY, CLAYEY GRAVEL with SAND
SW	Well-graded SAND Well-graded SAND with GRAVEL
SP	Poorly graded SAND Poorly graded SAND with GRAVEL
SW-SM	Well-graded SAND with SILT Well-graded SAND with SILT and GRAVEL
SW-SC	Well-graded SAND with CLAY (or SILTY CLAY) Well-graded SAND with CLAY and GRAVEL (or SILTY CLAY and GRAVEL)
SP-SM	Poorly graded SAND with SILT Poorly graded SAND with SILT and GRAVEL
SP-SC	Poorly graded SAND with CLAY (or SILTY CLAY) Poorly graded SAND with CLAY and GRAVEL (or SILTY CLAY and GRAVEL)
SM	SILTY SAND SILTY SAND with GRAVEL
SC	CLAYEY SAND CLAYEY SAND with GRAVEL
SC-SM	SILTY, CLAYEY SAND SILTY, CLAYEY SAND with GRAVEL
PT	PEAT
	COBBLES COBBLES and BOULDERS BOULDERS

Graphic/Symbol	Group Names
CL	Lean CLAY Lean CLAY with SAND Lean CLAY with GRAVEL SANDY lean CLAY SANDY lean CLAY with GRAVEL GRAVELLY lean CLAY GRAVELLY lean CLAY with SAND
CL-ML	SILTY CLAY SILTY CLAY with SAND SILTY CLAY with GRAVEL SANDY SILTY CLAY SANDY SILTY CLAY with GRAVEL GRAVELLY SILTY CLAY GRAVELLY SILTY CLAY with SAND
ML	SILT SILT with SAND SILT with GRAVEL SANDY SILT SANDY SILT with GRAVEL GRAVELLY SILT GRAVELLY SILT with SAND
OL	ORGANIC lean CLAY ORGANIC lean CLAY with SAND ORGANIC lean CLAY with GRAVEL SANDY ORGANIC lean CLAY SANDY ORGANIC lean CLAY with GRAVEL GRAVELLY ORGANIC lean CLAY GRAVELLY ORGANIC lean CLAY with SAND
OL	ORGANIC SILT ORGANIC SILT with SAND ORGANIC SILT with GRAVEL SANDY ORGANIC SILT SANDY ORGANIC SILT with GRAVEL GRAVELLY ORGANIC SILT GRAVELLY ORGANIC SILT with SAND
CH	Fat CLAY Fat CLAY with SAND Fat CLAY with GRAVEL SANDY fat CLAY SANDY fat CLAY with GRAVEL GRAVELLY fat CLAY GRAVELLY fat CLAY with SAND
MH	Elastic SILT Elastic SILT with SAND Elastic SILT with GRAVEL SANDY elastic SILT SANDY elastic SILT with GRAVEL GRAVELLY elastic SILT GRAVELLY elastic SILT with SAND
OH	ORGANIC fat CLAY ORGANIC fat CLAY with SAND ORGANIC fat CLAY with GRAVEL SANDY ORGANIC fat CLAY SANDY ORGANIC fat CLAY with GRAVEL GRAVELLY ORGANIC fat CLAY GRAVELLY ORGANIC fat CLAY with SAND
OH	ORGANIC elastic SILT ORGANIC elastic SILT with SAND ORGANIC elastic SILT with GRAVEL SANDY ORGANIC elastic SILT SANDY ORGANIC elastic SILT with GRAVEL GRAVELLY ORGANIC elastic SILT GRAVELLY ORGANIC elastic SILT with SAND
OL/OH	ORGANIC SOIL ORGANIC SOIL with SAND ORGANIC SOIL with GRAVEL SANDY ORGANIC SOIL SANDY ORGANIC SOIL with GRAVEL GRAVELLY ORGANIC SOIL GRAVELLY ORGANIC SOIL with SAND

FIELD AND LABORATORY TESTING

- (C) Consolidation (ASTM D 2435)
- (CL) Collapse Potential (ASTM D 5333)
- (CP) Compaction Curve (CTM 216)
- (CR) Corrosivity Testing (CTM 643, CTM 422, CTM 417)
- (CU) Consolidated Undrained Triaxial (ASTM D 4767)
- (DS) Direct Shear (ASTM D 3080)
- (EI) Expansion Index (ASTM D 4829)
- (M) Moisture Content (ASTM D 2216)
- (OC) Organic Content-% (ASTM D 2974)
- (P) Permeability (CTM 220)
- (PA) Particle Size Analysis (ASTM D 422)
- (PI) Plasticity Index (AASHTO T 90) Liquid Limit (AASHTO T 89)
- (PL) Point Load Index (ASTM D 5731)
- (PM) Pressure Meter
- (PP) Pocket Penetrometer
- (R) R-Value (CTM 301)
- (SE) Sand Equivalent (CTM 217)
- (SG) Specific Gravity (AASHTO T 100)
- (SL) Shrinkage Limit (ASTM D 427)
- (SW) Swell Potential (ASTM D 4546)
- (TV) Pocket Torvane
- (UC) Unconfined Compression-Soil (ASTM D 2166) Unconfined Compression-Rock (ASTM D 2938)
- (UU) Unconsolidated Undrained Triaxial (ASTM D 2850)
- (UW) Unit Weight (ASTM D 4767)
- (VS) Vane Shear (AASHTO T 223)

APPARENT DENSITY OF COHESIONLESS SOILS

Description	SPT N_{60} (Blows / 12 inches)
Very loose	0 - 4
Loose	5 - 10
Medium Dense	11 - 30
Dense	31 - 50
Very Dense	> 50

MOISTURE

Description	Criteria
Dry	Absence of moisture, dusty, dry to the touch
Moist	Damp but no visible water
Wet	Visible free water, usually soil is below water table

PERCENT OR PROPORTION OF SOILS

Description	Criteria
Trace	Particles are present but estimated to be less than 5%
Few	5 to 10%
Little	15 to 25%
Some	30 to 45%
Mostly	50 to 100%

PARTICLE SIZE

Description		Size
Boulder		> 12"
Cobble		3" to 12"
Gravel	Coarse	3/4" to 3"
	Fine	No. 4 to 3/4"
Sand	Coarse	No. 10 to No. 4
	Medium	No. 40 to No. 10
	Fine	No. 200 to No. 40

ENGINEERING SERVICES				GEOTECHNICAL SERVICES
FUNCTIONAL SUPERVISOR	PREPARED BY	M. Reynolds	10/10	FIELD INVESTIGATION BY:
NAME:	CHECKED BY	M. Gaffney		A. Kadoura C. Risden

STATE OF CALIFORNIA DEPARTMENT OF TRANSPORTATION

DIVISION OF ENGINEERING SERVICES OFFICE OF GEOTECHNICAL DESIGN BRANCH 8

BRIDGE NO. 37E0112
POST MILE 0.16/0.20

HECKER PASS SOIL NAIL WALL NO. 1
LOG OF TEST BORINGS 3 of 4

GS LOTB SOIL LEGEND

ORIGINAL SCALE IN INCHES FOR REDUCED PLANS 0 1 2 3

CU 04
EA 2A2500

DISREGARD PRINTS BEARING EARLIER REVISION DATES 03-08-12 05-24-12

REVISION DATES

SHEET 15 OF 16

FILE => 37e0112-z-ltb03.dgn

USERNAME => s124496 DATE PLOTTED => 21-JUN-2013 TIME PLOTTED => 07:53

REFERENCE: CALTRANS SOIL & ROCK LOGGING, CLASSIFICATION, AND PRESENTATION MANUAL (JUNE 2007)

DIST	COUNTY	ROUTE	POST MILES TOTAL PROJECT	SHEET No	TOTAL SHEETS
04	SCI	152	0.1/5.2	261	416

Ali Kaddoura 02-15-12
REGISTERED CIVIL ENGINEER DATE

6-17-13
PLANS APPROVAL DATE

REGISTERED PROFESSIONAL ENGINEER Ali K. Kaddoura No. 55710 Exp. 12-31-12 CIVIL STATE OF CALIFORNIA

The State of California or its officers or agents shall not be responsible for the accuracy or completeness of electronic copies of this plan sheet.

PERCENT CORE RECOVERY (REC) & ROCK QUALITY DESIGNATION (RQD)

$$REC = \frac{\sum \text{Length of the recovered core pieces (inches)}}{\text{Total length of core run (inches)}} \times 100\%$$

$$RQD = \frac{\sum \text{Length of intact core pieces} \geq 4''}{\text{Total length of core run (inches)}} \times 100\%$$

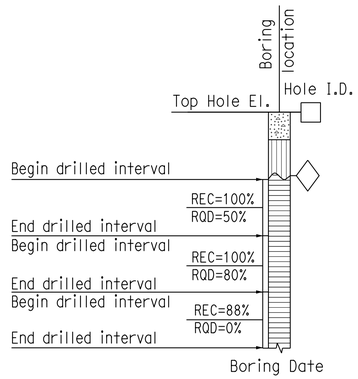

RELATIVE STRENGTH OF INTACT ROCK

Term	Uniaxial Compressive Strength (PSI)
Extremely Strong	> 30,000
Very Strong	14,500 - 30,000
Strong	7,000 - 14,500
Medium Strong	3,500 - 7,000
Weak	700 - 3,500
Very Weak	150 - 700
Extremely Weak	< 150

BEDDING SPACING

Description	Thickness / Spacing
Massive	Greater than 10 ft
Very thickly bedded	3 to 10 ft
Thickly bedded	1 to 3 ft
Moderately bedded	3-5/8" to 1 ft
Thinly bedded	1-1/4" to 3-5/8"
Very thinly bedded	3/8" to 1-1/4"
Laminated	Less than 3/8"

LEGEND OF ROCK MATERIALS

- IGNEOUS ROCK
- SEDIMENTARY ROCK
- METAMORPHIC ROCK

ROCK HARDNESS

Description	Criteria
Extremely Hard	Specimen cannot be scratched with a pocket knife or sharp pick; can only be chipped with repeated heavy hammer blows.
Very Hard	Specimen cannot be scratched with a pocket knife or sharp pick. Breaks with repeated heavy hammer blows.
Hard	Specimen can be scratched with a pocket knife or sharp pick with difficulty (heavy pressure). Heavy hammer blows required to break specimen.
Moderately Hard	Specimen can be scratched with pocket knife or sharp pick with light or moderate pressure. Core breaks with moderate hammer pressure.
Moderately Soft	Specimen can be grooved 1/6" deep with a pocket knife or sharp pick with moderate or heavy pressure. Breaks with light hammer blow or heavy manual pressure.
Soft	Specimen can be grooved or gouged easily by a pocket knife or sharp pick with light pressure, can be scratched with fingernail. Breaks with light to moderate manual pressure.
Very Soft	Specimen can be readily indented, grooved or gouged with fingernail, or carved with a pocket knife. Breaks with light manual pressure.

FRACTURE DENSITY

Description	Observed Fracture Density
Unfractured	No fractures.
Very slightly fractured	Lengths greater than 3 feet.
Slightly fractured	Lengths from 1 to 3 feet with few lengths less than 1 foot or greater than 3 feet.
Moderately fractured	Lengths mostly in 4" to 1 foot range with most lengths about 8"
Intensely fractured	Lengths average from 1 to 4" with scattered fragmented intervals with lengths less than 4"
Very intensely fractured	Mostly chips and fragments with a few scattered short core lengths.

Combination descriptors (such as "Very intensely to intensely fractured") are used where equal distribution of both fracture density characteristics is present over a significant interval or exposure, or where characteristics are "in between" the descriptor definitions. Only two adjacent descriptors may be combined.

WEATHERING DESCRIPTORS FOR INTACT ROCK

Description	Diagnostic features					General Characteristics
	Chemical Weathering-Discoloration and/or oxidation		Mechanical Weathering-Grain boundary conditions (disaggregation) primarily for granitics and some coarse-grained sediments	Texture and Solutioning		
	Body of Rock	Fracture Surfaces		Texture	Solutioning	
Fresh	No discoloration, not oxidized.	No discoloration or oxidation.	No separation, intact (tight).	No change.	No solutioning.	Hammer rings when crystalline rocks are struck.
Slightly Weathered	Discoloration or oxidation is limited to surface of, or short distance from, fractures; some feldspar crystals are dull.	Minor to complete discoloration or oxidation of most surfaces.	No visible separation, intact (tight).	Preserved.	Minor leaching of some soluble minerals may be noted.	Hammer rings when crystalline rocks are struck. Body of rock not weakened.
Moderately Weathered	Discoloration or oxidation extends from fractures usually throughout; Fe-Mg minerals are "rusty," feldspar crystals are "cloudy."	All fracture surfaces are discolored or oxidized.	Partial separation of boundaries visible.	Generally preserved.	Soluble minerals may be mostly leached.	Hammer does not ring when rock is struck. Body of rock is slightly weakened.
Intensely Weathered	Discoloration or oxidation throughout; all feldspars and Fe-Mg minerals are altered to clay to some extent; or chemical alteration produces in-situ disaggregation, see grain boundary conditions.	All fracture surfaces are discolored or oxidized, surfaces friable.	Partial separation, rock is friable; in semiarid conditions granitics are disaggregated.	Texture altered by chemical disintegration (hydration, argillation).	Leaching of soluble minerals may be complete.	Dull sound when struck with hammer, usually can be broken with moderate to heavy manual pressure or by light hammer blow without reference to planes of weakness such as incipient or hairline fractures, or veinlets. Rock is significantly weakened.
Decomposed	Discolored or oxidized throughout, but resistant minerals such as quartz may be unaltered; all feldspars and Fe-Mg minerals are completely altered to clay.		Complete separation of grain boundaries (disaggregated).	Resembles a soil, partial or complete remnant rock structure may be preserved; leaching of soluble minerals usually complete.		Can be granulated by hand. Resistant minerals such as quartz may be present as "stringers" or "dikes."

Combination descriptors (such as "slightly weathered to fresh") are permissible where equal distribution of both weathering characteristics is present over significant intervals or where characteristics present are "in between" the diagnostic feature. However, combination descriptors should not be used where significant, identifiable zones can be delineated. Only two adjacent descriptors may be combined. "Very intensely weathered" is the combination descriptor for "intensely weathered to decomposed."

ENGINEERING SERVICES				GEOTECHNICAL SERVICES
FUNCTIONAL SUPERVISOR	PREPARED BY	M. Reynolds	10/10	FIELD INVESTIGATION BY:
NAME:	CHECKED BY	M. Gaffney		A. Kaddoura C. Risden

GS LOTB ROCK LEGEND

ORIGINAL SCALE IN INCHES FOR REDUCED PLANS 0 1 2 3

STATE OF CALIFORNIA DEPARTMENT OF TRANSPORTATION

DIVISION OF ENGINEERING SERVICES OFFICE OF GEOTECHNICAL DESIGN BRANCH 8

CU 04
EA 2A2500

BRIDGE NO. 37E0112
POST MILE 0.16/0.20

HECKER PASS SOIL NAIL WALL NO. 1

LOG OF TEST BORINGS 4 of 4

DISREGARD PRINTS BEARING EARLIER REVISION DATES → 03-08-12 05-24-12

REVISION DATES

SHEET 16 OF 16

FILE => 37e0112-z-ltb04.dgn

USERNAME => s124496 DATE PLOTTED => 21-JUN-2013 TIME PLOTTED => 07:53

DIST	COUNTY	ROUTE	POST MILES TOTAL PROJECT	SHEET No.	TOTAL SHEETS
04	SCI	152	0.1/5.2	262	416

REGISTERED CIVIL ENGINEER 05-15-13 DATE

6-17-13
PLANS APPROVAL DATE

REGISTERED PROFESSIONAL ENGINEER Sameh Hegazi No. C64899 Exp.06-30-2013 CIVIL STATE OF CALIFORNIA

The State of California or its officers or agents shall not be responsible for the accuracy or completeness of electronic copies of this plan sheet.

QUANTITIES

STRUCTURE EXCAVATION (SOIL NAIL WALL)	309	CY
STRUCTURE BACKFILL (SOIL NAIL WALL)	47	CY
SOIL NAIL	1,410	LF
BAR REINFORCING STEEL (RETAINING WALL)	11,155	LB
STRUCTURAL SHOTCRETE	42	CY
SCULPTED SHOTCRETE	49	CY
PREPARE AND STAIN SCULPTED SHOTCRETE	1,542	SQFT
ANTI-GRAFFITI COATING	663	SQFT
MISCELLANEOUS METAL (SAFETY HOOK)	190	LB
CABLE RAILING (MODIFIED)	221	LF
CONCRETE BARRIER (TYPE 60D MODIFIED)	221	LF

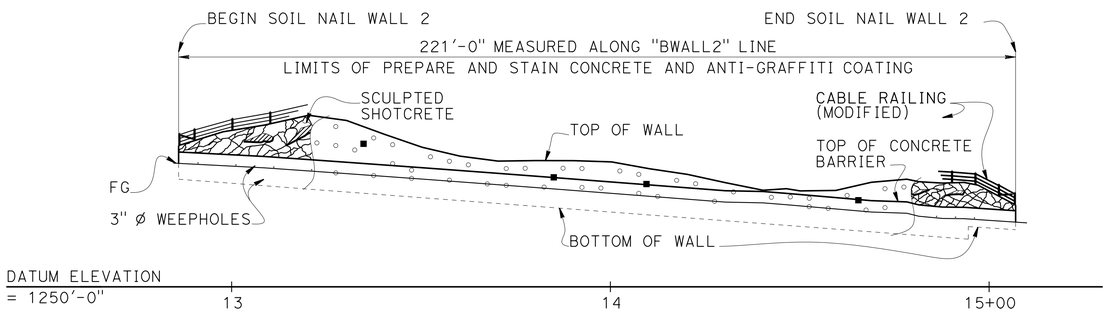

NOTE:
Not all approximate location of soil nails, proof test nails, cable railing posts, and weepholes shown.

LEGEND:
- ○ Indicates approximate location of soil nails
- ■ Indicates approximate location of proof test nails

DEVELOPED ELEVATION

1" = 20'

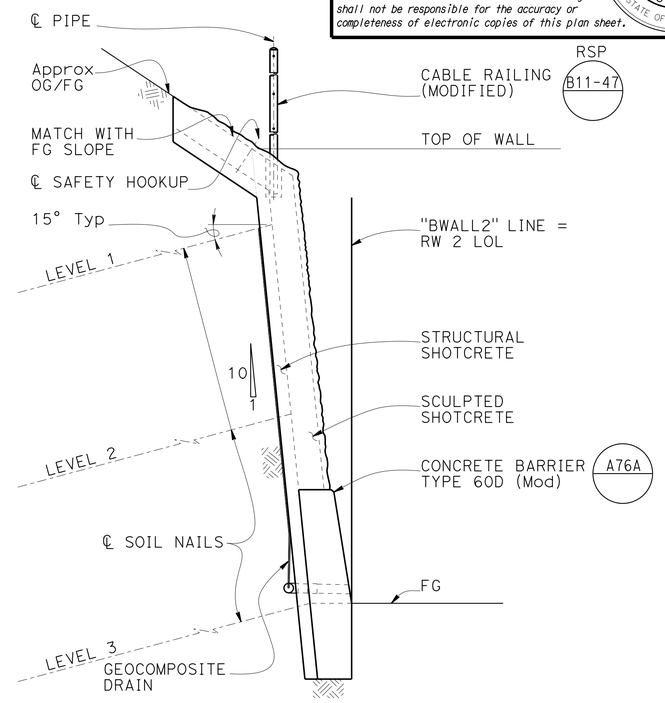

TYPICAL SECTION

1/2" = 1'

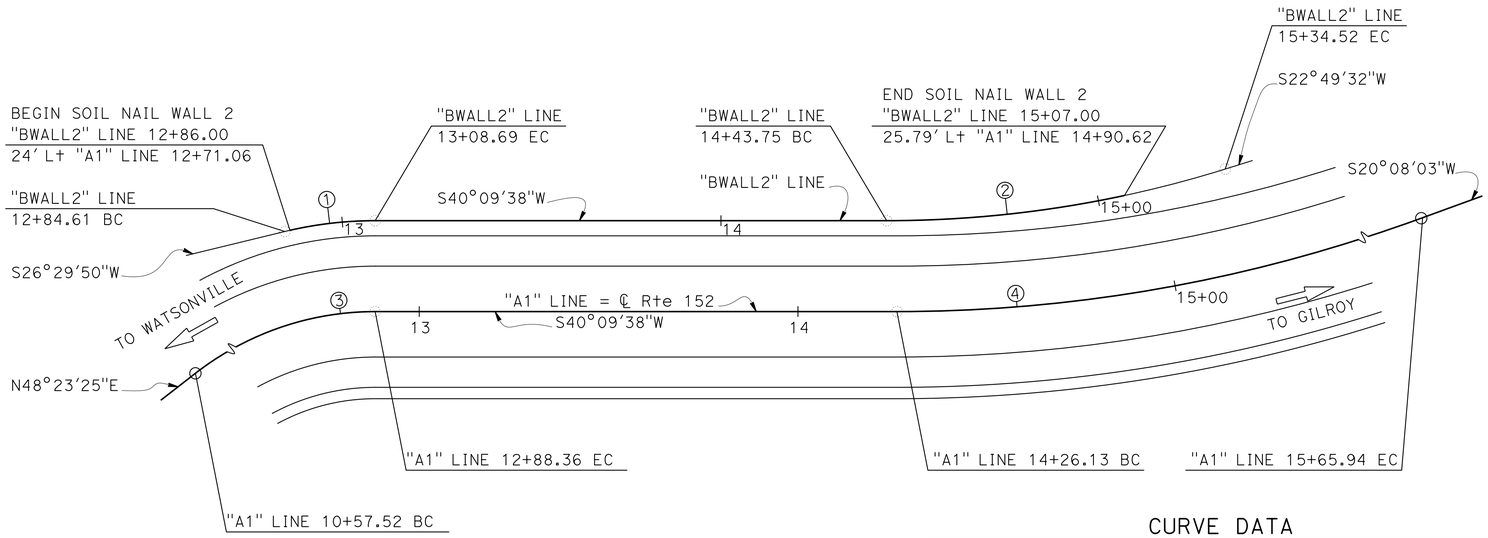

NOTE:
THE CONTRACTOR SHALL VERIFY ALL CONTROLLING FIELD DIMENSIONS BEFORE ORDERING OR FABRICATING ANY MATERIAL.

PLAN

1" = 20'

CURVE DATA

Alignment	R	Δ	T	L
"BWALL2" LINE ①	101'	13°39'48"	12.10'	24.09'
"BWALL2" LINE ②	300'	17°20'05"	45.73'	90.77'
"A1" LINE ③	77'	171°46'13"	1070.30'	230.84'
"A1" LINE ④	400'	20°01'35"	70.63'	139.81'

NOTES:
1. Top of the wall elevations shall be verified in the field.
2. Soil nail inclination = 15° typical.
3. The exact locations of the Test Soil Nail to be determined by the Engineer in the field.
4. All soil nail levels are parallel to top of wall except the bottom level which is parallel to bottom of wall.
5. Soil nails shall be placed normal to shotcrete surface in the plan view.
6. The contractor shall field locate all utilities before drilling soil nails.
7. The contractor shall provide and maintain stable soil slopes above and below the soil nail walls.
8. Bottom of wall shall be placed against undisturbed soil material.
9. Prepare and stain sculpted shotcrete surface.
10. Concrete barrier shall be integrally colored and applied with anti-graffiti coating from top of barrier to 6 inches below finished grade.

BRIAN MORI
DESIGN ENGINEER

	BY	CHECKED
DESIGN	S. Hegazi	R. Amir
DETAILS	T. Kusumi	R. Amir / S. Hegazi
QUANTITIES	R. Amir	S. Hegazi

LOAD & RESISTANCE FACTOR DESIGN — LIVE LOADING: HL93 W/"LOW-BOY": PERMIT DESIGN VEHICLE

	BY	CHECKED
LAYOUT	S. Hegazi	A. Menke
SPECIFICATIONS	T. Chen	PLANS AND SPECS COMPARED T. Chen

ORIGINAL SCALE IN INCHES FOR REDUCED PLANS 0 1 2 3

STATE OF CALIFORNIA
DEPARTMENT OF TRANSPORTATION

DIVISION OF ENGINEERING SERVICES
STRUCTURE DESIGN
DESIGN BRANCH 8

BRIDGE NO. 37E0113
POST MILE 0.24/0.28

HECKER PASS SOIL NAIL WALL NO. 2
GENERAL PLAN

UNIT: 3593
PROJECT NUMBER & PHASE: 0400000813-1
CONTRACT NO.: 04-2A2501

DISREGARD PRINTS BEARING EARLIER REVISION DATES

REVISION DATES: 02-11-11 07-17-12 05-08-13

SHEET 1 OF 17

STRUCTURES DESIGN GENERAL PLAN SHEET (ENGLISH) (REV.09-01-10)

FILE => 37e0113-a-gp01.dgn

USERNAME => s124496 DATE PLOTTED => 21-JUN-2013 TIME PLOTTED => 09:04

DIST	COUNTY	ROUTE	POST MILES TOTAL PROJECT	SHEET No.	TOTAL SHEETS
04	SCI	152	0.1/5.2	263	416

REGISTERED CIVIL ENGINEER 05-15-13 DATE

6-17-13
PLANS APPROVAL DATE

REGISTERED PROFESSIONAL ENGINEER
Sameh Hegazi
No. C64899
Exp.06-30-2013
CIVIL
STATE OF CALIFORNIA

The State of California or its officers or agents shall not be responsible for the accuracy or completeness of electronic copies of this plan sheet.

GENERAL NOTES

LOAD AND RESISTANCE FACTOR DESIGN:
AASHTO LRFD Bridge Design Specifications, 4th Editions and the Caltrans Amendments; preface dated Dec., 2009.

FHWA Publication No. FHWA-IF-03-017, Manual for Design and Construction Monitoring of Soil Nail Walls.

REINFORCED CONCRETE & SHOTCRETE:
F'c = 3.6 ksi
Fy = 60 ksi

STRUCTURAL STEEL:
Plates and shapes shall conform to ASTM Designation A709 Grade (36 ksi)

SOIL NAILS:
Soil nails shall conform to ASTM Designation A615, Grade 60, fs = 60 ksi, #7 bars

PUNCHING SHEAR:
Ps = 45 Kps

SOIL DESIGN PARAMETERS IN NAILING ZONES:

NAIL DATA TABLE

Zone	"BWALL2" Line Station	Unit Weight (lb/ft^3)	Friction Angle Degrees	Cohesion (lb/ft^2)	Design Pull out Resistance (kip/ft)	Upper Elev (ft)	Lower Elev (ft)
1	12+86.00 - 15+07.00	125	32	700	2.0	1295	1280
2	12+86.00 - 15+07.00	125	32	700	2.0	1280	1263

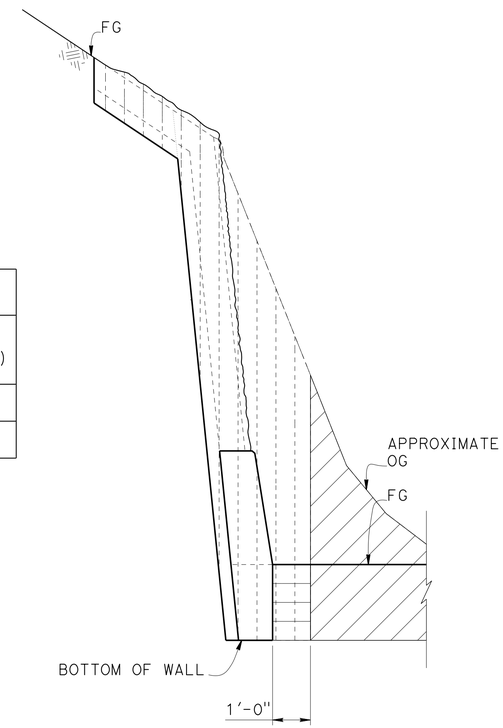

LEGEND:

Structure excavation (Soil Nail Wall)

Structure backfill (Soil Nail Wall)

Roadway excavation (See "ROAD PLANS.")

LIMITS OF PAYMENT FOR EXCAVATION AND BACKFILL

No Scale

INDEX TO PLANS

SHEET NO.	TITLE
1	GENERAL PLAN
2	INDEX TO PLANS
3	FOUNDATION PLAN
4	STRUCTURE ELEVATION
5	TYPICAL SECTION
6	STRUCTURAL DETAILS NO. 1
7	STRUCTURAL DETAILS NO. 2
8	STRUCTURAL DETAILS NO. 3
9	DRAINAGE DETAILS NO. 1
10	DRAINAGE DETAILS NO. 2
11	SCULPTED SHOTCRETE TREATMENT
12	SCULPTED SHOTCRETE TREATMENT DETAILS NO. 1
13	SCULPTED SHOTCRETE TREATMENT DETAILS NO. 2
14	LOG OF TEST BORINGS 1 OF 4
15	LOG OF TEST BORINGS 2 OF 4
16	LOG OF TEST BORINGS 3 OF 4
17	LOG OF TEST BORINGS 4 OF 4

STANDARD PLANS DATED MAY 2010

DETAIL	DESCRIPTION
A10A	ABBREVIATIONS (SHEET 1 OF 2)
A10B	ABBREVIATIONS (SHEET 2 OF 2)
A10C	LINES AND SYMBOLS (SHEET 1 OF 3)
A10D	LINES AND SYMBOLS (SHEET 2 OF 3)
A10E	LINES AND SYMBOLS (SHEET 3 OF 3)
A76A	CONCRETE BARRIER TYPE 60
B0-3	BRIDGE DETAILS
RSP B11-47	CABLE RAILING

STANDARD PLAN SHEET NO.

DETAIL NO.

DESIGN	BY S. Hegazi	CHECKED R. Amir	
DETAILS	BY T. Kusumi	CHECKED R. Amir / S. Hegazi	
QUANTITIES	BY R. Amir	CHECKED S. Hegazi	

STATE OF CALIFORNIA
DEPARTMENT OF TRANSPORTATION

DIVISION OF ENGINEERING SERVICES
STRUCTURE DESIGN
DESIGN BRANCH 8

BRIDGE NO. 37E0113
POST MILE 0.24/0.28

HECKER PASS SOIL NAIL WALL NO. 2
INDEX TO PLANS

STRUCTURES DESIGN DETAIL SHEET (ENGLISH) (REV. 09-01-10)

ORIGINAL SCALE IN INCHES FOR REDUCED PLANS 0 1 2 3

UNIT: 3593
PROJECT NUMBER & PHASE: 0400000813-1
CONTRACT NO.: 04-2A2501

DISREGARD PRINTS BEARING EARLIER REVISION DATES

REVISION DATES: ~~06-16-11~~ ~~07-18-12~~ 05-10-13

SHEET 2 OF 17

FILE => 37e0113-a-itp.dgn

USERNAME => s124496 DATE PLOTTED => 21-JUN-2013 TIME PLOTTED => 07:54

DIST	COUNTY	ROUTE	POST MILES TOTAL PROJECT	SHEET No.	TOTAL SHEETS
04	SCI	152	0.1/5.2	264	416

REGISTERED CIVIL ENGINEER 08-01-12 DATE

6-17-13
PLANS APPROVAL DATE

REGISTERED PROFESSIONAL ENGINEER
Sameh Hegazi
No. C64899
Exp. 06-30-2013
CIVIL
STATE OF CALIFORNIA

The State of California or its officers or agents shall not be responsible for the accuracy or completeness of electronic copies of this plan sheet.

CURVE DATA

Alignment	R	Δ	T	L
"BWALL2" LINE ①	101.00	13°39'48"	12.10	24.09
"BWALL2" LINE ②	300.00	17°20'05"	45.73	90.76
"A1" LINE ③	77.00	171°46'13"	1070.30	230.84
"A1" LINE ④	400.00	20°01'35"	70.63	139.81

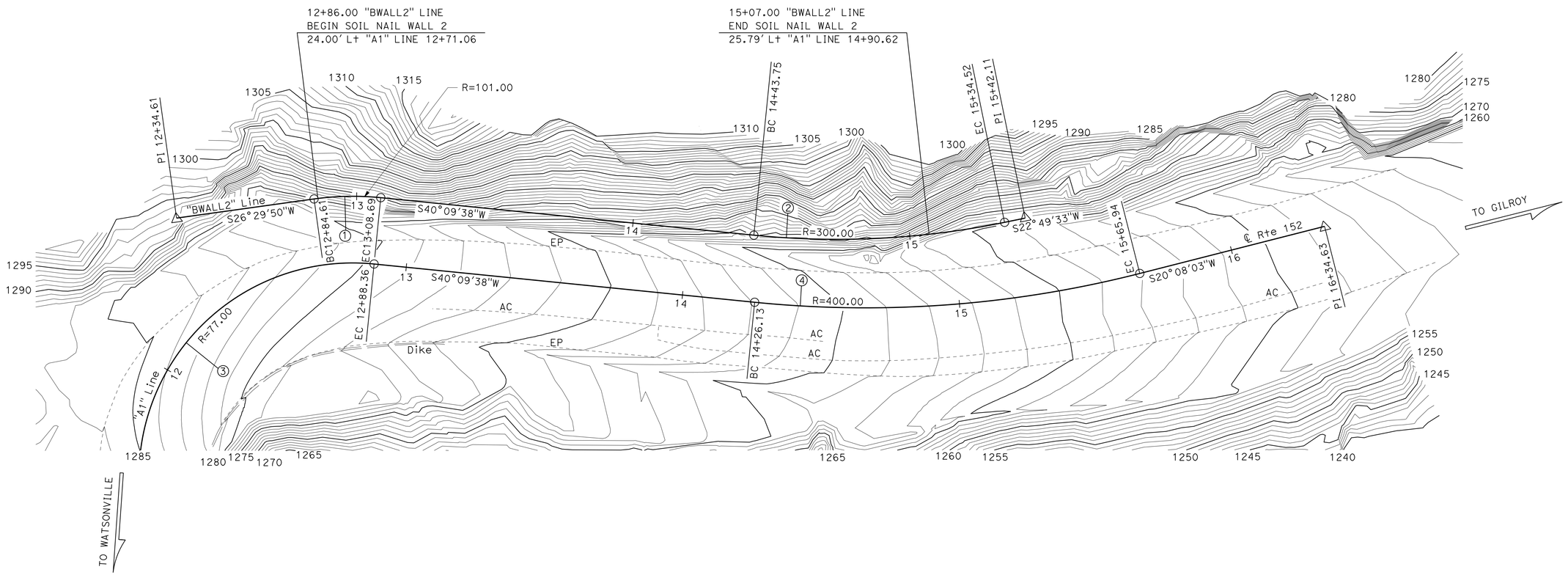

SURVEY CONTROL

PRHV875
Fnd 1" I.P. w/CT PP&T
91.11 Ft. S24°17'59"W From
Sta. 6+83.38 "A1" Line, ℄ Rte 152
N 1,823,427.21
E 6,206,598.08
EL.=1319.04

PRHV876
Fnd 1" I.P. w/CT PP&T
18.12 Lt. "A1" Line, ℄ Rte 152
Sta. 10+89.79
N 1,823,819.73
E 6,206,906.42
EL.=1289.66

PRHV876
N 1,823,819.73
E 6,206,906.42
EL.=1289.66

PRHV875
N 1,823,427.21
E 6,206,598.08
EL.=1319.04

PRELIMINARY INVESTIGATION SECTION

SCALE 1"=20'	VERT.DATUM NAVD 88	PHOTOGRAMMETRY AS OF: X			
	HORZ.DATUM NAD83 (92)	SURVEYED	BY District	CHECKED	BY Don Ivy 06/2011
ALIGNMENT TIES Dist. Traverse Sheet		DRAFTED	BY S. Zheng 06/2011	CHECKED	BY Jim Pallares 06/2011

DESIGN	BY S. Hegazi	CHECKED	R. Amir
DETAILS	BY T. Kusumi	CHECKED	R. Amir / S. Hegazi
QUANTITIES	BY R. Amir	CHECKED	S. Hegazi

STATE OF CALIFORNIA
DEPARTMENT OF TRANSPORTATION

DIVISION OF ENGINEERING SERVICES
STRUCTURE DESIGN
DESIGN BRANCH 08

BRIDGE NO. 37E0113
POST MILE 0.24/0.28

HECKER PASS SOIL NAIL WALL NO.2
FOUNDATION PLAN

STRUCTURES FOUNDATION PLAN SHEET (ENGLISH) (REV. 09-01-10)

ORIGINAL SCALE IN INCHES FOR REDUCED PLANS 0 1 2 3

UNIT: 3646
PROJECT NUMBER & PHASE: 0100000183-1
CONTRACT NO.: 04-2A2501

DISREGARD PRINTS BEARING EARLIER REVISION DATES

REVISION DATES: 06-16-11 02-03-12 05-24-12

SHEET 3 OF 17

FILE => 37e0113-e-fp101.dgn

USERNAME => s124496 DATE PLOTTED => 21-JUN-2013 TIME PLOTTED => 07:54

DIST	COUNTY	ROUTE	POST MILES TOTAL PROJECT	SHEET No.	TOTAL SHEETS
04	SCI	152	0.1/5.2	265	416

REGISTERED CIVIL ENGINEER — DATE 08-01-12

6-17-13
PLANS APPROVAL DATE

REGISTERED PROFESSIONAL ENGINEER — Sameh Hegazi — No. C64899 — Exp. 06-30-2013 — CIVIL — STATE OF CALIFORNIA

The State of California or its officers or agents shall not be responsible for the accuracy or completeness of electronic copies of this plan sheet.

SCHEDULE D	BAR SIZE: #8				
NO. OF SOIL NAIL ROWS	5				
ROW NO. TOP TO BOTTOM	1	2	3	4	5
EMBEDMENT LENGTH (FT)	17	15	12	10	10

SCHEDULE A	BAR SIZE: #8	
NO. OF SOIL NAIL ROWS	2	
ROW NO. TOP TO BOTTOM	1	2
EMBEDMENT LENGTH (FT)	10	10

SCHEDULE B	BAR SIZE: #8		
NO. OF SOIL NAIL ROWS	3		
ROW NO. TOP TO BOTTOM	1	2	3
EMBEDMENT LENGTH (FT)	15	12	10

SCHEDULE C	BAR SIZE: #8			
NO. OF SOIL NAIL ROWS	4			
ROW NO. TOP TO BOTTOM	1	2	3	4
EMBEDMENT LENGTH (FT)	17	15	12	10

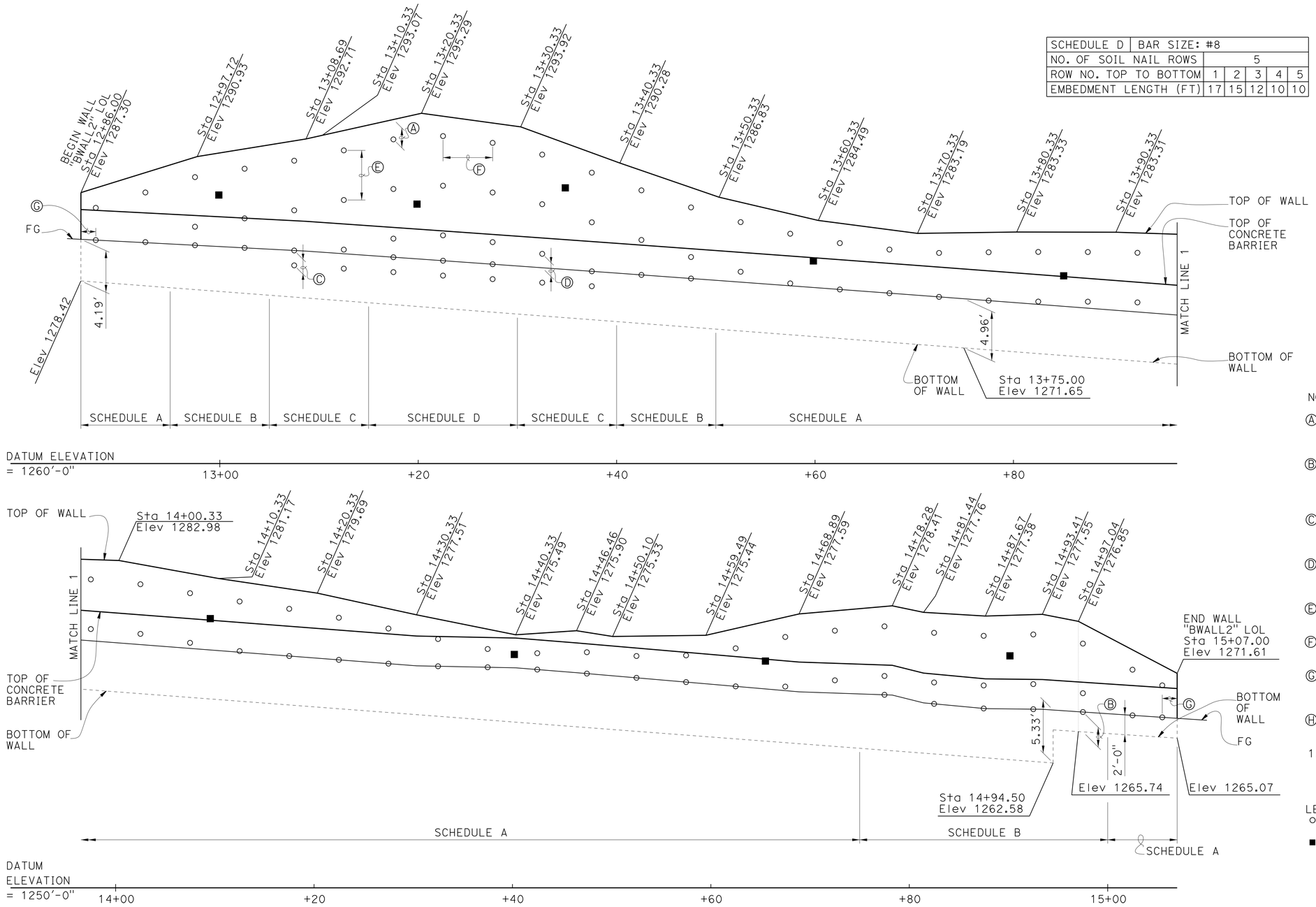

DEVELOPED ELEVATION

3/16" = 1'-0"

NOTES:

Ⓐ ST = Vertical distance from top of wall elevation to top level of soil nails, ST = 2'-0"

Ⓑ SB_1 = Vertical distance from bottom of wall to bottom level of the soil nails, SB1 (Min) = 2'-0", SB1 (Max) < 3'-6".

Ⓒ SB_2 = Vertical distance from finished grade to bottom level of the soil nails, SB2 = 1'-6".

Ⓓ Discontinue row when vertical distance between soil nails are less than 1'-6".

Ⓔ SV = Vertical spacing of soil nails, SV (Min) = 1'-6", SV (Max) = 5'-0".

Ⓕ SH = Horizontal spacing of soil nails, SH (Min) = 1'-6", SH (Max) = 5'-0".

Ⓖ SS = Horizontal distance between the begin/end wall and first/last soil nails, SS (Min) = 1'-6", SS (Max) = 2'-6".

Ⓗ The exact location of the test soil nails to be determined by the Engineer.

1. Cable railing posts are not shown for clarity.

LEGEND:
- ○ Indicates approximate location of soil nails
- ■ Indicates approximate location of proof test nails

	BY	CHECKED
DESIGN	S. Hegazi	R. Amir
DETAILS	T. Kusumi	R. Amir / S. Hegazi
QUANTITIES	R. Amir	S. Hegazi

STATE OF CALIFORNIA
DEPARTMENT OF TRANSPORTATION

DIVISION OF ENGINEERING SERVICES
STRUCTURE DESIGN
DESIGN BRANCH 8

BRIDGE NO. 37E0113
POST MILE 0.24/0.28

HECKER PASS SOIL NAIL WALL NO. 2
STRUCTURE ELEVATION

STRUCTURES DESIGN DETAIL SHEET (ENGLISH) (REV. 09-01-10)

ORIGINAL SCALE IN INCHES FOR REDUCED PLANS 0 1 2 3

UNIT: 3593
PROJECT NUMBER & PHASE: 0400000813-1
CONTRACT NO.: 04-2A2501

DISREGARD PRINTS BEARING EARLIER REVISION DATES

REVISION DATES: 05-26-11 | 05-29-12 | 04-24-13

SHEET 4 OF 17

FILE => 37e0113-f-strucelv.dgn

USERNAME => s124496 DATE PLOTTED => 21-JUN-2013 TIME PLOTTED => 07:54

DIST	COUNTY	ROUTE	POST MILES TOTAL PROJECT	SHEET No.	TOTAL SHEETS
04	SCI	152	0.1/5.2	266	416

REGISTERED CIVIL ENGINEER 05-15-13 DATE

6-17-13
PLANS APPROVAL DATE

REGISTERED PROFESSIONAL ENGINEER Sameh Hegazi No. C64899 Exp. 06-30-2013 CIVIL STATE OF CALIFORNIA

The State of California or its officers or agents shall not be responsible for the accuracy or completeness of electronic copies of this plan sheet.

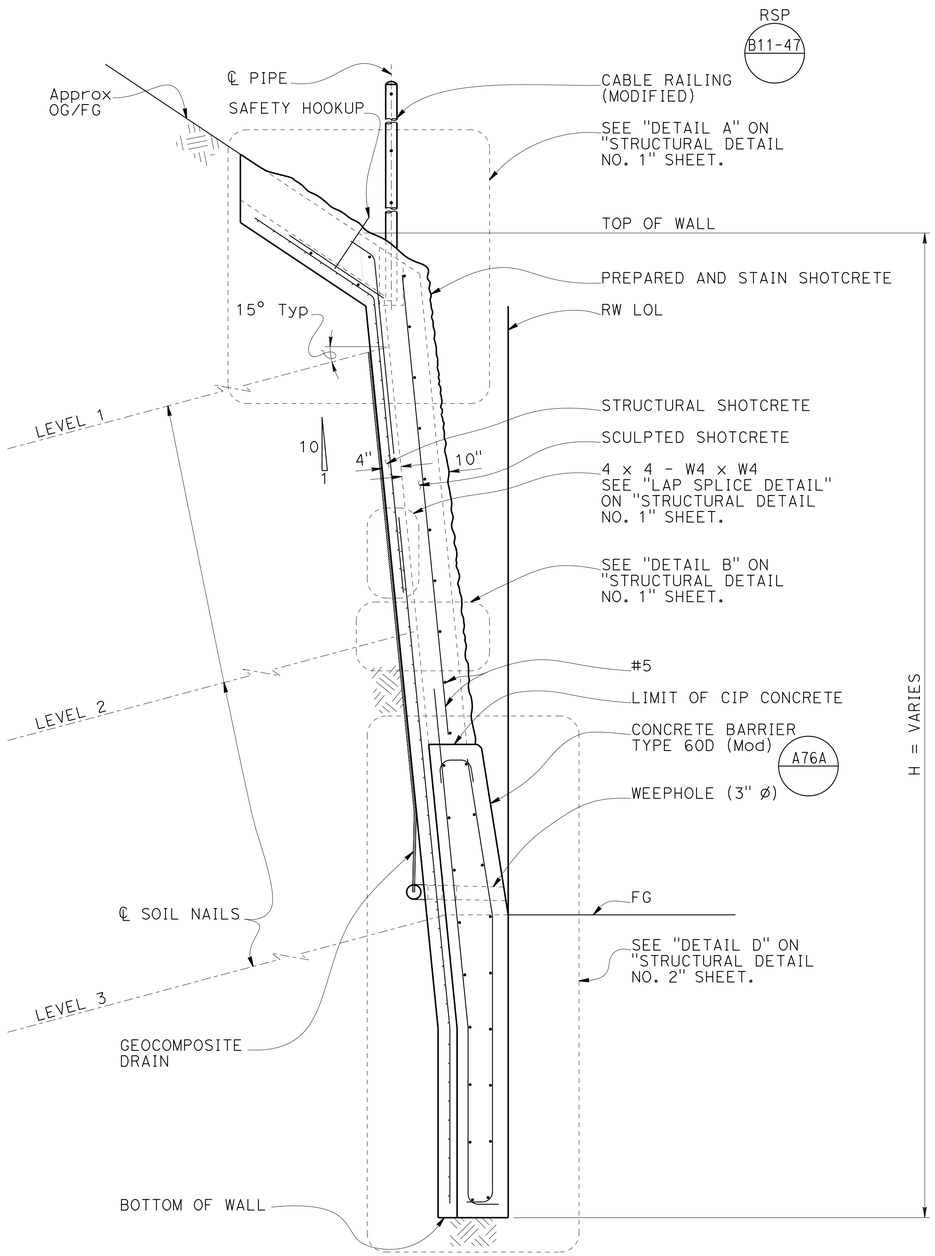

TYPICAL SECTION AT FOUNDATION DROP

3/4" = 1'-0"

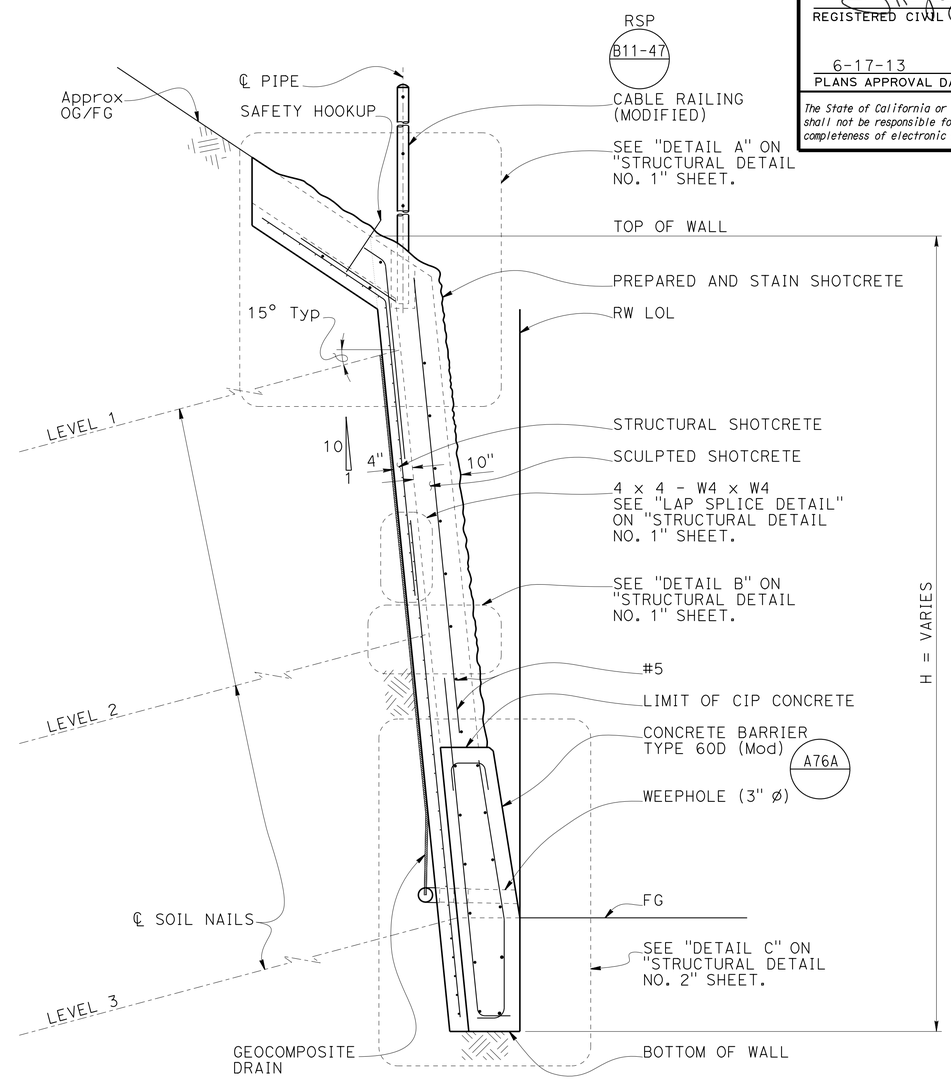

TYPICAL SECTION

3/4" = 1'-0"

NOTES:
1. For "PRODUCTION SOIL NAIL DETAIL" and "PROOF TEST SOIL NAIL DETAIL", see "STRUCTURAL DETAIL NO.3" sheet.
2. For sculpted shotcrete treatment, see "SCULPTED SHOTCRETE TREATMENT" sheet.
3 For geocomposite drain detail, see "DRAINAGE DETAILS NO. 2" sheet.

	BY	CHECKED
DESIGN	S. Hegazi	R. Amir
DETAILS	T. Kusumi	R. Amir / S. Hegazi
QUANTITIES	R. Amir	S. Hegazi

STATE OF CALIFORNIA
DEPARTMENT OF TRANSPORTATION

DIVISION OF ENGINEERING SERVICES
STRUCTURE DESIGN
DESIGN BRANCH 8

BRIDGE NO. 37E0113
POST MILE 0.24/0.28

HECKER PASS SOIL NAIL WALL NO. 2
TYPICAL SECTION

STRUCTURES DESIGN DETAIL SHEET (ENGLISH) (REV. 09-01-10)

ORIGINAL SCALE IN INCHES FOR REDUCED PLANS 0 1 2 3

UNIT: 3593
PROJECT NUMBER & PHASE: 0400000813-1
CONTRACT NO.: 04-2A2501

DISREGARD PRINTS BEARING EARLIER REVISION DATES

REVISION DATES 06-14-11 07-18-12 05-10-13

SHEET 5 OF 17

FILE => 37e0113-g-_ts.dgn

USERNAME => s124936 DATE PLOTTED => 21-JUN-2013 TIME PLOTTED => 07:54

DIST	COUNTY	ROUTE	POST MILES TOTAL PROJECT	SHEET No.	TOTAL SHEETS
04	SCI	152	0.1/5.2	267	416

REGISTERED CIVIL ENGINEER 05-15-13 DATE

6-17-13
PLANS APPROVAL DATE

REGISTERED PROFESSIONAL ENGINEER Sameh Hegazi No. C64899 Exp. 06-30-2013 CIVIL STATE OF CALIFORNIA

The State of California or its officers or agents shall not be responsible for the accuracy or completeness of electronic copies of this plan sheet.

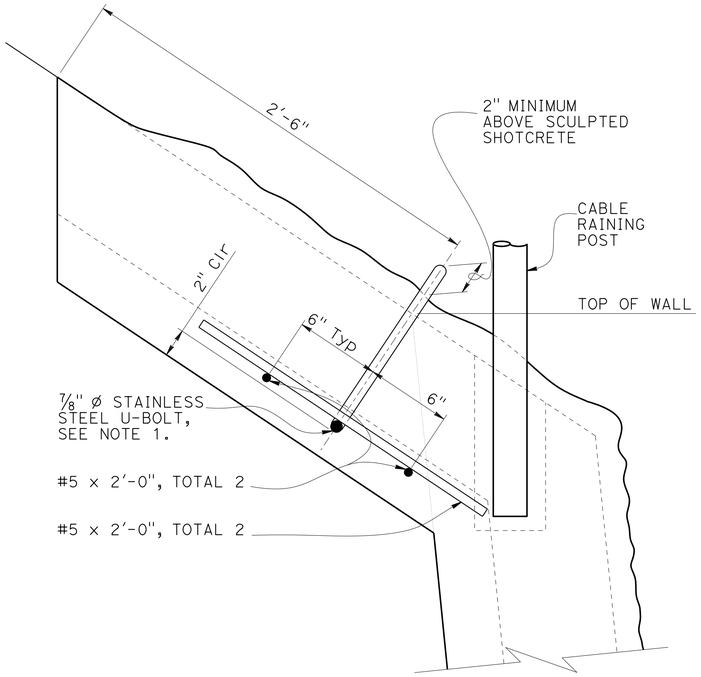

SAFETY HOOKUP DETAIL

No Scale

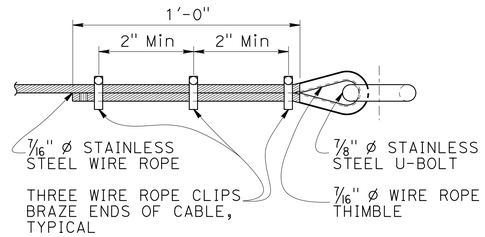

SAFETY WIRE ROPE DETAIL

No Scale

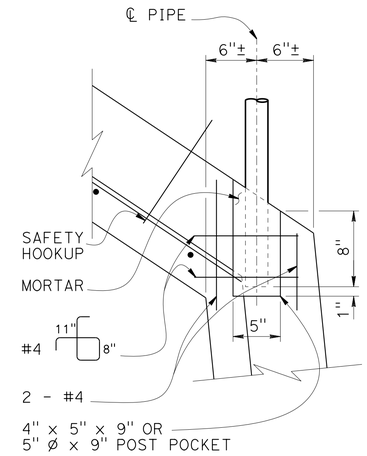

POST POCKET DETAIL

RSP B11-47

No Scale

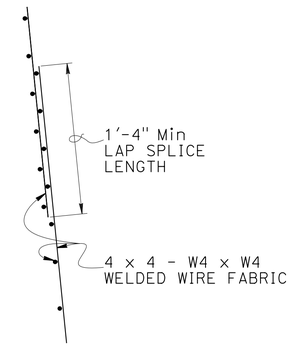

LAP SPLICE DETAIL

No Scale

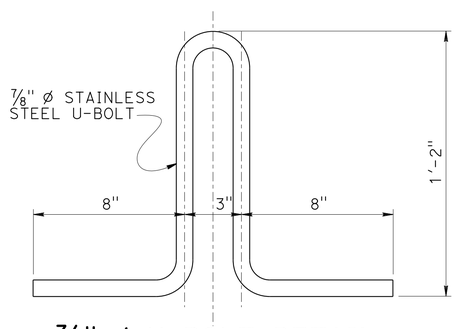

7/8" Ø U-BOLT DETAIL

3" = 1'-0"

NOTE:

Ⓐ For bearing plate and soil nail details not shown, see "STRUCTURAL DETAILS NO. 3" sheet.

1. Safety hookups shall be placed behind cable railing posts with 10'-0" Max spacing.
2. Safety wire rope shall be extended between safety hookups at top of wall.
3. Safety wire rope and safety hookups shall be placed at locations where wall heights from top of wall to finished grade exceed 5 feet.

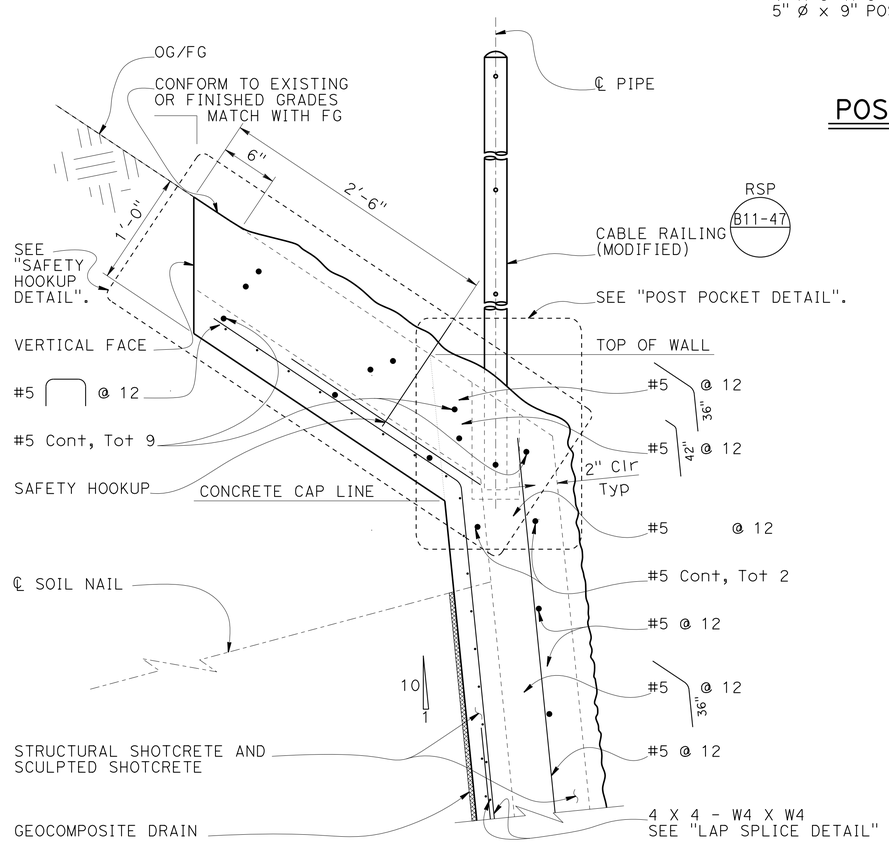

DETAIL A

1½" = 1'-0"

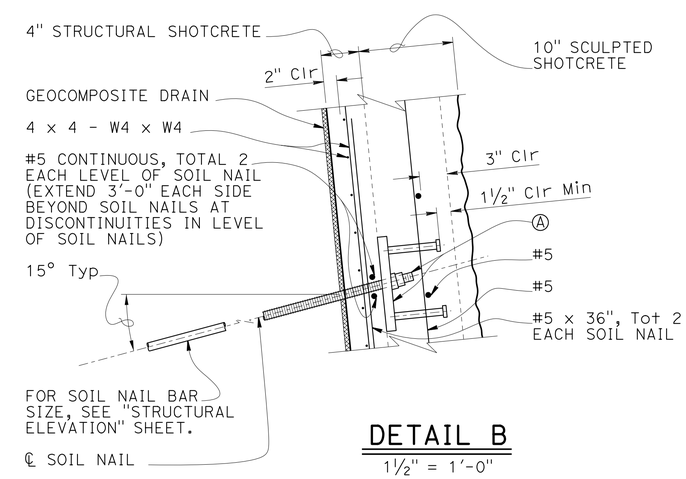

DETAIL B

1½" = 1'-0"

DESIGN	BY S. Hegazi	CHECKED R. Amir	
DETAILS	BY T. Kusumi	CHECKED R. Amir / S. Hegazi	
QUANTITIES	BY R. Amir	CHECKED S. Hegazi	

STATE OF CALIFORNIA
DEPARTMENT OF TRANSPORTATION

DIVISION OF ENGINEERING SERVICES
STRUCTURE DESIGN
DESIGN BRANCH 8

BRIDGE NO. 37E0113
POST MILE 0.24/0.28

HECKER PASS SOIL NAIL WALL NO. 2

STRUCTURAL DETAILS NO. 1

STRUCTURES DESIGN DETAIL SHEET (ENGLISH) (REV. 09-01-10)

ORIGINAL SCALE IN INCHES FOR REDUCED PLANS 0 1 2 3

UNIT: 3593
PROJECT NUMBER & PHASE: 0400000813-1
CONTRACT NO.: 04-2A2501

DISREGARD PRINTS BEARING EARLIER REVISION DATES

REVISION DATES: 06-09-11 05-10-13 07-18-13

SHEET 6 OF 17

FILE => 37e0113-g-stdt01.dgn

USERNAME => s124496 DATE PLOTTED => 21-JUN-2013 TIME PLOTTED => 07:54

DIST	COUNTY	ROUTE	POST MILES TOTAL PROJECT	SHEET No.	TOTAL SHEETS
04	SCI	152	0.1/5.2	268	416

REGISTERED CIVIL ENGINEER 05-15-13 DATE

6-17-13
PLANS APPROVAL DATE

REGISTERED PROFESSIONAL ENGINEER
Sameh Hegazi
No. C64899
Exp. 06-30-2013
CIVIL
STATE OF CALIFORNIA

The State of California or its officers or agents shall not be responsible for the accuracy or completeness of electronic copies of this plan sheet.

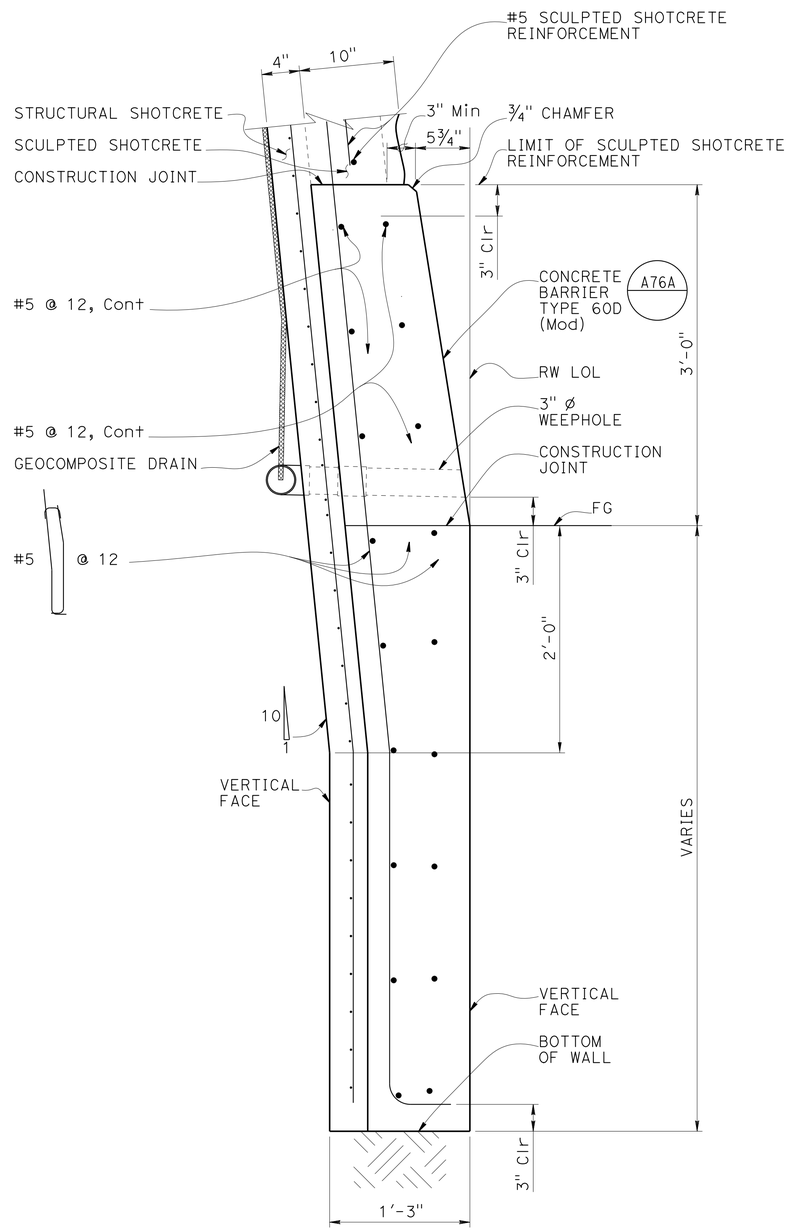

DETAIL D

1½" = 1'-0"

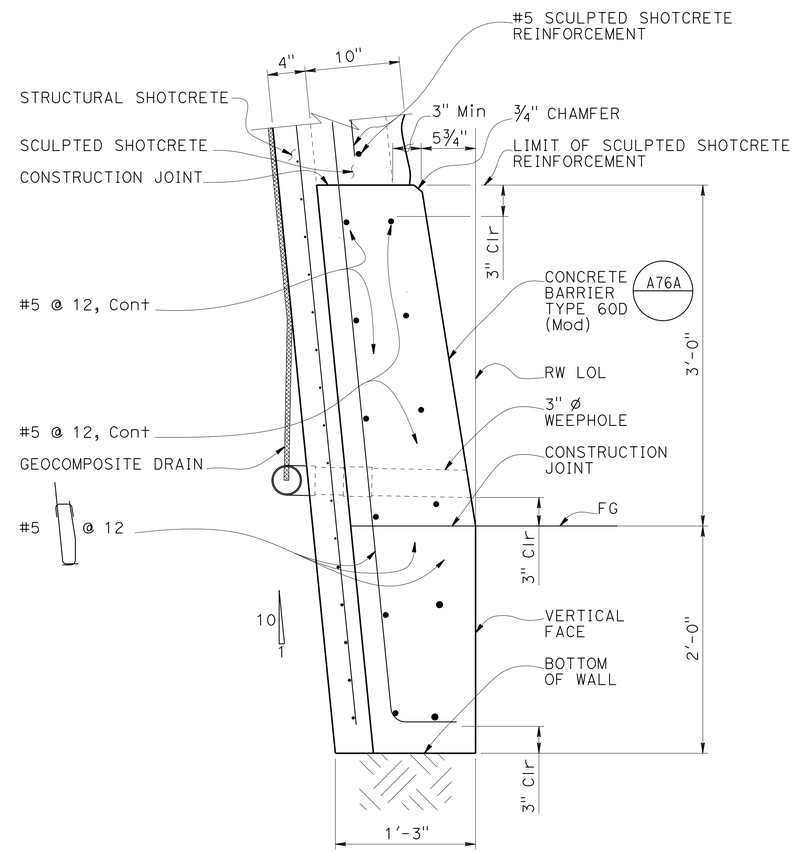

DETAIL C

1½" = 1'-0"

NOTE:
1. Soil nails not shown for clarity.
2. Concrete barrier shall be integrally colored.

DESIGN	BY S. Hegazi	CHECKED R. Amir	
DETAILS	BY T. Kusumi	CHECKED R. Amir / S. Hegazi	
QUANTITIES	BY R. Amir	CHECKED S. Hegazi	

STATE OF CALIFORNIA
DEPARTMENT OF TRANSPORTATION

DIVISION OF ENGINEERING SERVICES
STRUCTURE DESIGN
DESIGN BRANCH 8

BRIDGE NO. 37E0113
POST MILE 0.24/0.28

HECKER PASS SOIL NAIL WALL NO. 2
STRUCTURAL DETAILS NO. 2

STRUCTURES DESIGN DETAIL SHEET (ENGLISH) (REV. 09-01-10)

ORIGINAL SCALE IN INCHES FOR REDUCED PLANS 0 1 2 3

UNIT: 3593
PROJECT NUMBER & PHASE: 0400000813-1
CONTRACT NO.: 04-2A2501

DISREGARD PRINTS BEARING EARLIER REVISION DATES

REVISION DATES: 06-10-11 07-18-12 05-10-13

SHEET 7 OF 17

FILE => 37e0113-g-stdt02.dgn

USERNAME => s124936 DATE PLOTTED => 21-JUN-2013 TIME PLOTTED => 07:54

DIST	COUNTY	ROUTE	POST MILES TOTAL PROJECT	SHEET No.	TOTAL SHEETS
04	SCI	152	0.1/5.2	269	416

REGISTERED CIVIL ENGINEER 08-01-12 DATE

6-17-13
PLANS APPROVAL DATE

REGISTERED PROFESSIONAL ENGINEER
Sameh Hegazi
No. C64899
Exp. 06-30-2013
CIVIL
STATE OF CALIFORNIA

The State of California or its officers or agents shall not be responsible for the accuracy or completeness of electronic copies of this plan sheet.

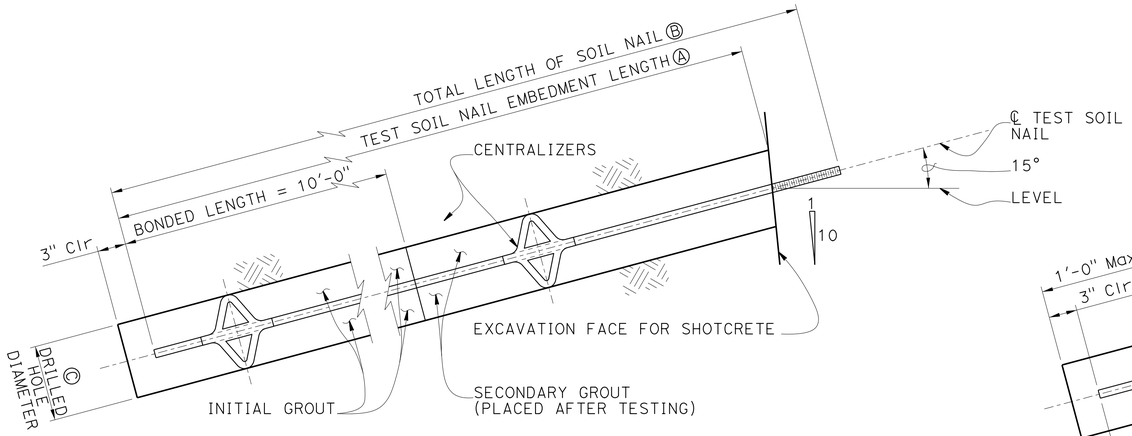

PROOF TEST SOIL NAIL DETAIL

No Scale

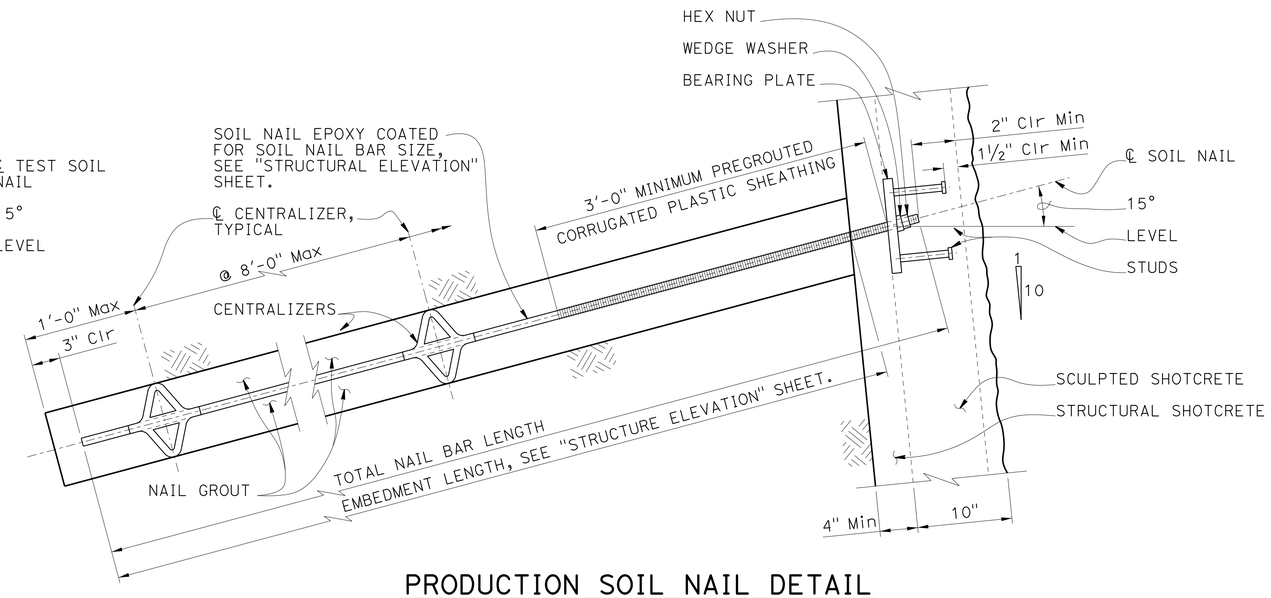

PRODUCTION SOIL NAIL DETAIL

No Scale

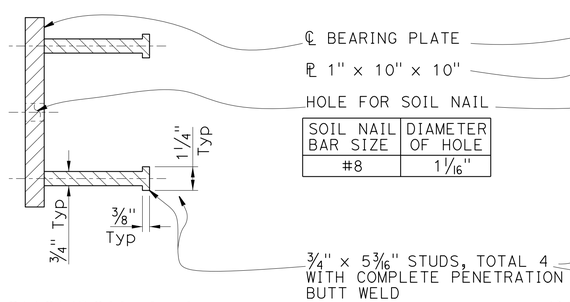

SOIL NAIL BAR SIZE	DIAMETER OF HOLE
#8	1 1/16"

SECTION A-A

No Scale

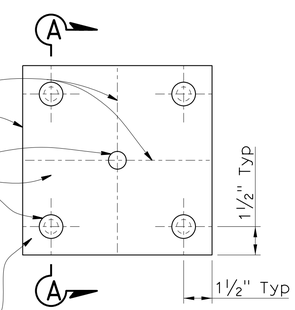

BEARING PLATE DETAIL

No Scale

NOTES:
1. Geocomposite drain not shown for clarity.
2. Wall reinforcement not shown for clarity.
3. Finished grout surface to be normal to the bar

Ⓐ Embedment length of test soil nails equals 2/3 of embedment length of adjacent production soil nails, but not less than 12'-0".

Ⓑ Total length of test soil nail equals embedment length plus length required for jacking equipment.

Ⓒ Contractor to determine drilled hole diameter.

	BY	CHECKED
DESIGN	S. Hegazi	R. Amir
DETAILS	T. Kusumi	R. Amir / S. Hegazi
QUANTITIES	R. Amir	S. Hegazi

STATE OF CALIFORNIA
DEPARTMENT OF TRANSPORTATION

DIVISION OF ENGINEERING SERVICES
STRUCTURE DESIGN
DESIGN BRANCH 8

BRIDGE NO. 37E0113
POST MILE 0.24/0.28

HECKER PASS SOIL NAIL WALL NO. 2
STRUCTURAL DETAILS NO. 3

STRUCTURES DESIGN DETAIL SHEET (ENGLISH) (REV. 09-01-10)

ORIGINAL SCALE IN INCHES FOR REDUCED PLANS 0 1 2 3

UNIT: 3593
PROJECT NUMBER & PHASE: 0400000813-1
CONTRACT NO.: 04-2A2501

DISREGARD PRINTS BEARING EARLIER REVISION DATES

REVISION DATES 06-30-11 04-27-12 06-26-12

SHEET 8 OF 17

FILE => 37e0113-g-stdt03.dgn

USERNAME => s124436 DATE PLOTTED => 21-JUN-2013 TIME PLOTTED => 07:54

DIST	COUNTY	ROUTE	POST MILES TOTAL PROJECT	SHEET No.	TOTAL SHEETS
04	SCI	152	0.1/5.2	270	416

REGISTERED CIVIL ENGINEER 05-15-13 DATE

6-17-13
PLANS APPROVAL DATE

REGISTERED PROFESSIONAL ENGINEER
Sameh Hegazi
No. C64899
Exp. 06-30-2013
CIVIL
STATE OF CALIFORNIA

The State of California or its officers or agents shall not be responsible for the accuracy or completeness of electronic copies of this plan sheet.

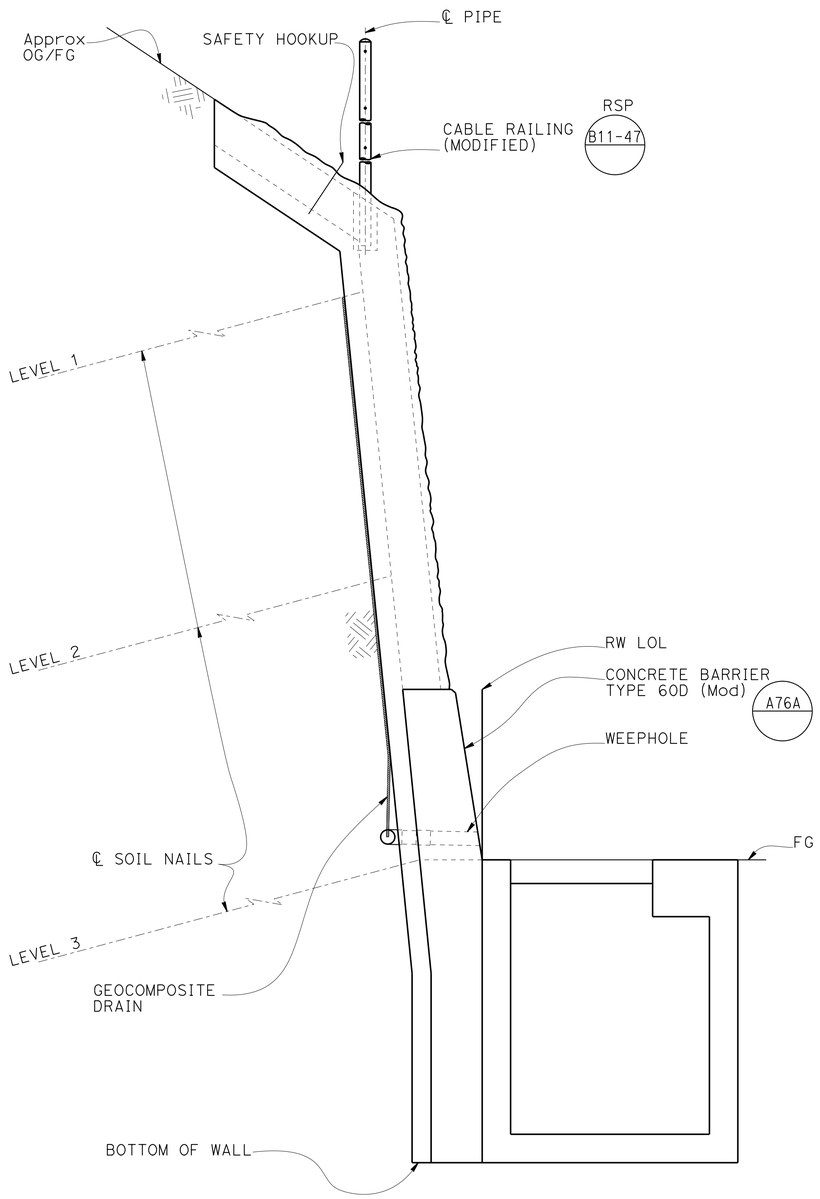

TYPICAL SECTION WITH DROP INLET

No Scale

NOTES:
1. For drainage inlet details not shown, see "ROADWAY PLANS".
2. For drop inlet type, locations and elevations, see "ROADWAY PLANS".
3 Engineer must adjust bottom elevation to accommodate drainage system shown on "ROADWAY PLANS".
4. Bottom of wall to be placed against undisturbed material.
5. Drop inlets shall be centered vertically between soil nails.

	BY	CHECKED
DESIGN	S. Hegazi	R. Amir
DETAILS	T. Kusumi	R. Amir / S. Hegazi
QUANTITIES	R. Amir	S. Hegazi

STATE OF CALIFORNIA
DEPARTMENT OF TRANSPORTATION

DIVISION OF ENGINEERING SERVICES
STRUCTURE DESIGN
DESIGN BRANCH 8

BRIDGE NO. 37E0113
POST MILE 0.24/0.28

HECKER PASS SOIL NAIL WALL NO. 2
DRAINAGE DETAIL NO. 1

STRUCTURES DESIGN DETAIL SHEET (ENGLISH) (REV. 09-01-10)

ORIGINAL SCALE IN INCHES FOR REDUCED PLANS 0 1 2 3

UNIT: 3593
PROJECT NUMBER & PHASE: 0400000813-1
CONTRACT NO.: 04-2A2501

DISREGARD PRINTS BEARING EARLIER REVISION DATES

REVISION DATES: 06-17-11 07-18-12 05-10-13

SHEET 9 OF 17

FILE => 37e0113-r-dd+01.dgn

USERNAME => s124496 DATE PLOTTED => 21-JUN-2013 TIME PLOTTED => 07:54

DIST	COUNTY	ROUTE	POST MILES TOTAL PROJECT	SHEET No.	TOTAL SHEETS
04	SCI	152	0.1/5.2	271	416

REGISTERED CIVIL ENGINEER 08-01-12 DATE

6-17-13
PLANS APPROVAL DATE

REGISTERED PROFESSIONAL ENGINEER
Sameh Hegazi
No. C64899
Exp. 06-30-2013
CIVIL
STATE OF CALIFORNIA

The State of California or its officers or agents shall not be responsible for the accuracy or completeness of electronic copies of this plan sheet.

NOTES:
1. Wall reinforcement not shown for clarity.

Ⓐ ⊕ Indicates soil nail locations.

Ⓑ Center of geocomposite strips shall be centered vertically between soil nails.

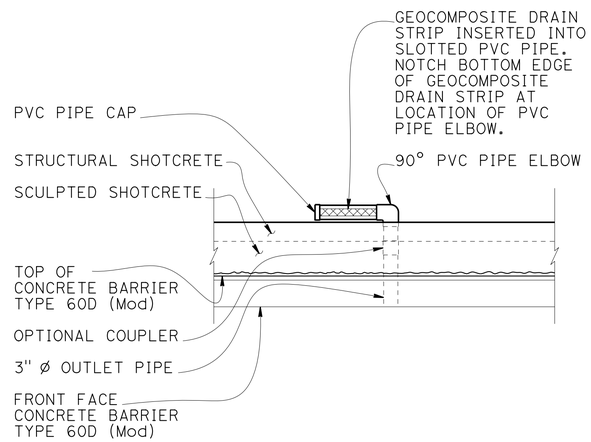

SECTION C-C

No Scale

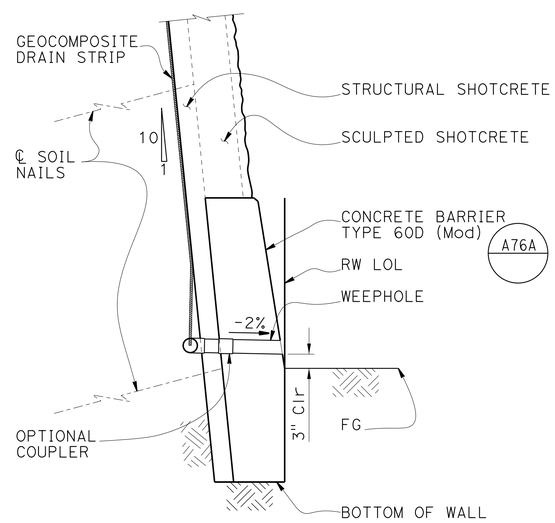

SECTION B-B

3/4" = 1'-0"

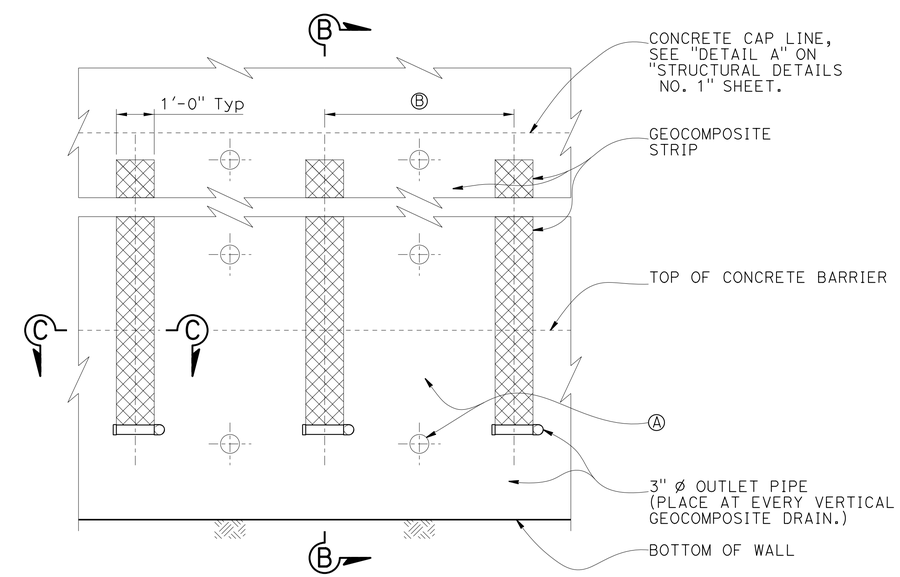

WALL PART ELEVATION

No Scale

DESIGN	BY S. Hegazi	CHECKED R. Amir	
DETAILS	BY T. Kusumi	CHECKED R. Amir / S. Hegazi	
QUANTITIES	BY R. Amir	CHECKED S. Hegazi	

STATE OF CALIFORNIA
DEPARTMENT OF TRANSPORTATION

DIVISION OF ENGINEERING SERVICES
STRUCTURE DESIGN
DESIGN BRANCH 8

BRIDGE NO. 37E0113
POST MILE 0.24/0.28

HECKER PASS SOIL NAIL WALL NO. 2
DRAINAGE DETAILS NO. 2

STRUCTURES DESIGN DETAIL SHEET (ENGLISH) (REV. 09-01-10)

ORIGINAL SCALE IN INCHES FOR REDUCED PLANS 0 1 2 3

UNIT: 3593
PROJECT NUMBER & PHASE: 0400000813-1
CONTRACT NO.: 04-2A2501

DISREGARD PRINTS BEARING EARLIER REVISION DATES

REVISION DATES: 06-27-11 07-18-12 04-27-13

SHEET 10 OF 17

FILE => 37e0113-r-dd+02.dgn

USERNAME => s124496 DATE PLOTTED => 21-JUN-2013 TIME PLOTTED => 07:54

DIST	COUNTY	ROUTE	POST MILES TOTAL PROJECT	SHEET No.	TOTAL SHEETS
04	SCI	152	0.1/5.2	272	416

REGISTERED CIVIL ENGINEER 08-01-12 DATE

6-17-13
PLANS APPROVAL DATE

REGISTERED PROFESSIONAL ENGINEER Sameh Hegazi No. C64899 Exp. 06-30-2013 CIVIL STATE OF CALIFORNIA

The State of California or its officers or agents shall not be responsible for the accuracy or completeness of electronic copies of this plan sheet.

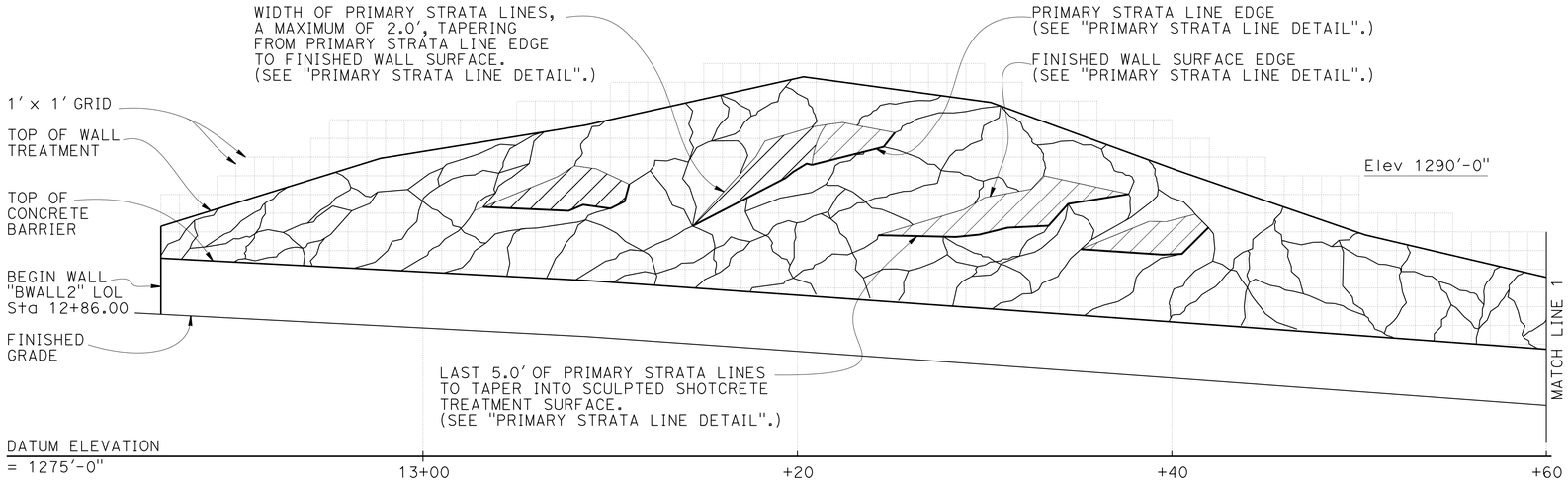

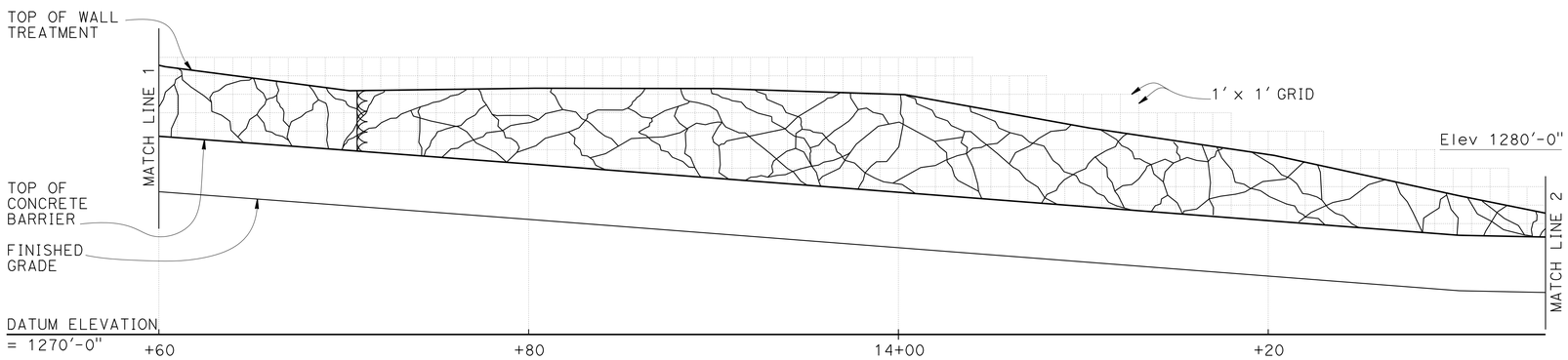

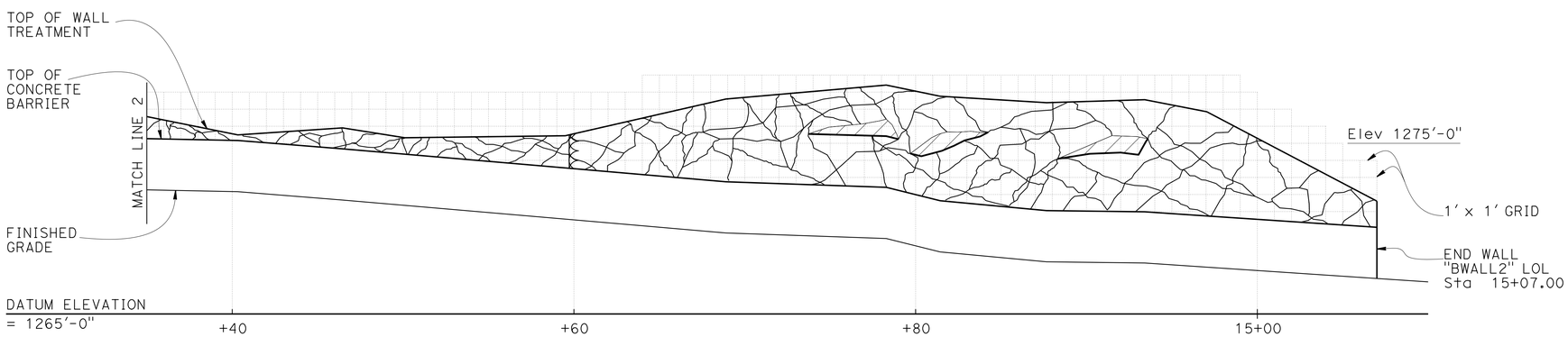

SCULPTED SHOTCRETE SURFACE TREATMENT

1/4" = 1'-0"

LEGEND:

1. PRIMARY STRATA LINES

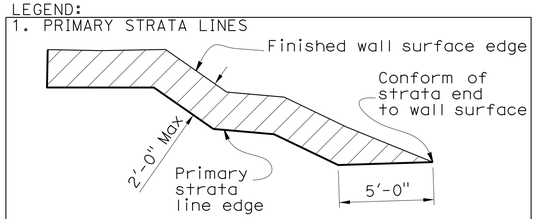

2. SECONDARY STRATA LINES

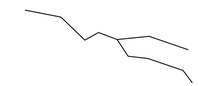

3. Indicates location of weakened planes joint. Joints should not be placed within 18 inches of a nail head. For details, see B0-3 / 3-2

NOTES:

1. Primary strata lines drawn on the front elevation are to be used as a guide for layout of primary strata line reinforcement. See "SCULPTED SHOTCRETE TREATMENT DETAILS NO. 1" and "SCULPTED SHOTCRETE TREATMENT DETAILS NO. 2" sheets.
2. Secondary strata lines drawn on the front elevation are to be used as a general guide. Strata lines shall be sculpted to mimic local geology.
3. This sheet is accurate for sculpted shotcrete treatment only.
4. Sculpted shotcrete surface treatment shall be continuous throughout the face of the wall.
5. Additional shotcrete needed for carving the primary strata lines to be reinforced as shown on "SCULPTED SHOTCRETE TREATMENT DETAILS NO. 1" and "SCULPTED SHOTCRETE TREATMENT DETAILS NO. 2" sheets.
6. Primary strata lines to be tapered into the top and bottom of wall.
7. Secondary strata lines are not to exceed 2" amplitude.
8. 3" ø weepholes are not shown.
9. Cable railing is not shown.

	BY	CHECKED
DESIGN	S. Hegazi	R. Amir
DETAILS	T. Kusumi	R. Amir / S. Hegazi
QUANTITIES	R. Amir	S. Hegazi

STATE OF CALIFORNIA DEPARTMENT OF TRANSPORTATION

DIVISION OF ENGINEERING SERVICES STRUCTURE DESIGN DESIGN BRANCH 8

BRIDGE NO. 37E0113 POST MILE 0.24/0.28

HECKER PASS SOIL NAIL WALL NO. 2
SCULPTED SHOTCRETE TREATMENT

STRUCTURES DESIGN DETAIL SHEET (ENGLISH) (REV. 09-01-10)

ORIGINAL SCALE IN INCHES FOR REDUCED PLANS 0 1 2 3

UNIT: 3593
PROJECT NUMBER & PHASE: 0400000813-1 CONTRACT NO.: 04-2A2501

DISREGARD PRINTS BEARING EARLIER REVISION DATES

REVISION DATES 05-26-11 07-18-12 02-26-13

SHEET 11 OF 17

FILE => 37e0113-u-arch01.dgn

USERNAME => s124496 DATE PLOTTED => 21-JUN-2013 TIME PLOTTED => 07:54

DIST	COUNTY	ROUTE	POST MILES TOTAL PROJECT	SHEET No.	TOTAL SHEETS
04	SCI	152	0.1/5.2	273	416

REGISTERED CIVIL ENGINEER 08-01-12 DATE

6-17-13
PLANS APPROVAL DATE

REGISTERED PROFESSIONAL ENGINEER
Sameh Hegazi
No. C64899
Exp. 06-30-2013
CIVIL
STATE OF CALIFORNIA

The State of California or its officers or agents shall not be responsible for the accuracy or completeness of electronic copies of this plan sheet.

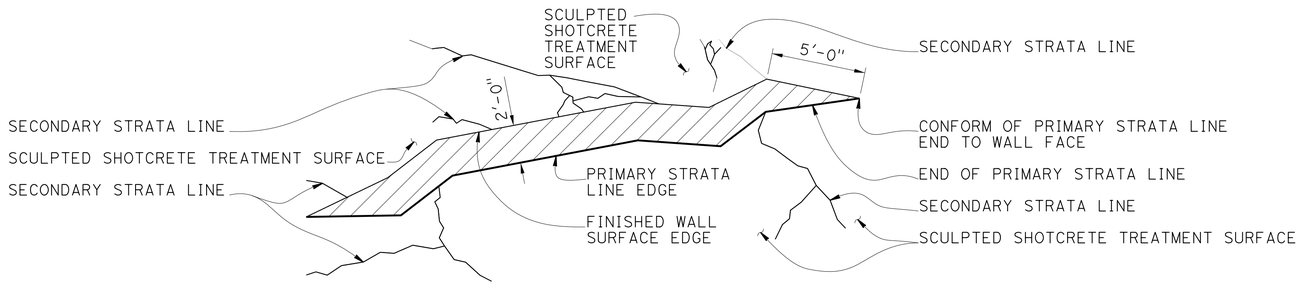

PRIMARY STRATA LINE ELEVATION DETAIL

No Scale

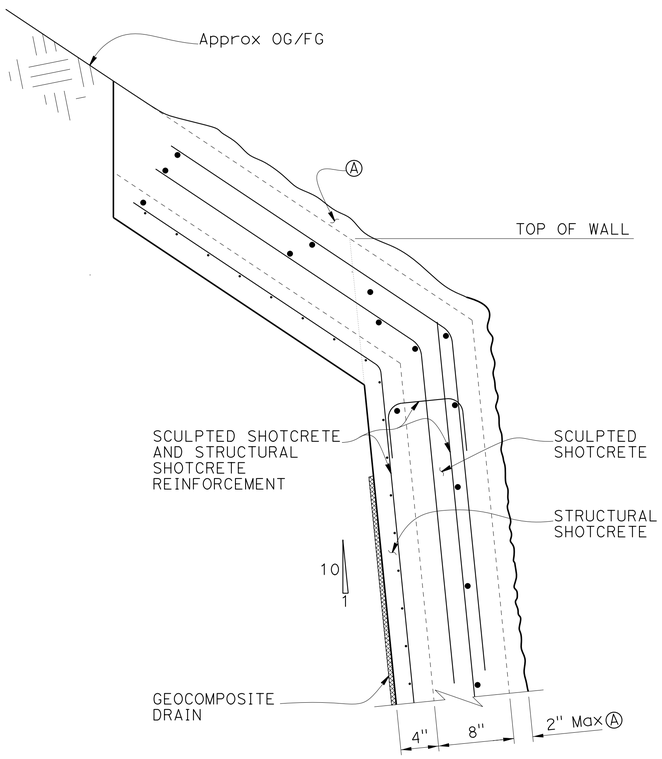

TOP OF WALL SCULPTED SHOTCRETE TREATMENT REINFORCEMENT

No Scale

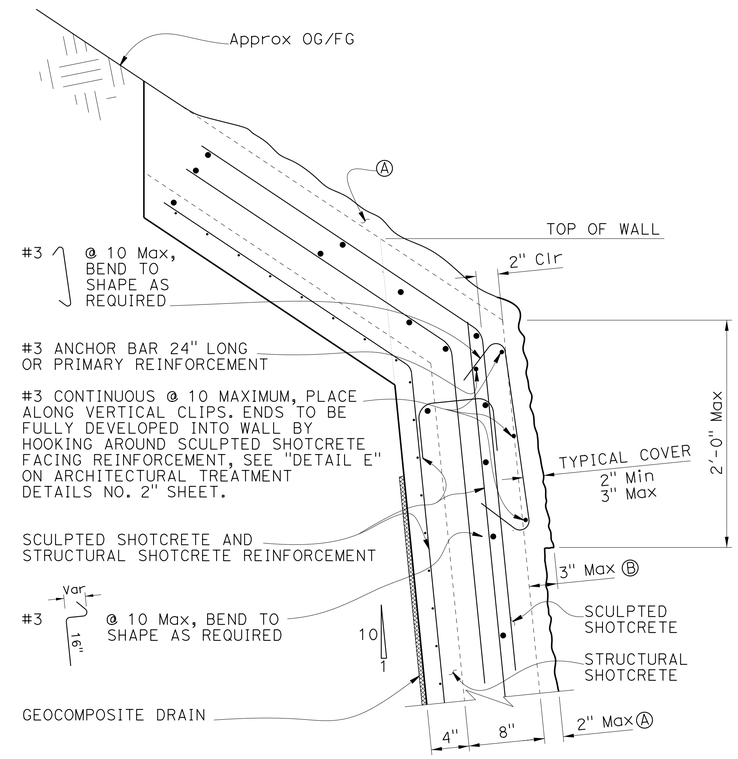

PRIMARY STRATA LINE AT TOP OF WALL SCULPTED SHOTCRETE TREATMENT REINFORCEMENT

No Scale

NOTES:
1. See also "SCULPTED SHOTCRETE TREATMENT DETAILS NO. 2" sheet for reinforcement.
2. Soil nail not shown for clarity.
3. Longitudinal bars shall taper to a point and be flush with the finished wall surface at primary strata line ends where it transitions into the wall face.
4. Cable railing post pocket and safety hookup are not shown for clarity.

Ⓐ Max 2" thick unreinforced sculpted shotcrete zone for sculpted shotcrete treatment.

Ⓑ Max 3" thick reinforced sculpted shotecrete zone for top of wall sculpted shotcrete treatment.

	BY	CHECKED
DESIGN	S. Hegazi	R. Amir
DETAILS	T. Kusumi	R. Amir / S. Hegazi
QUANTITIES	R. Amir	S. Hegazi

STATE OF CALIFORNIA
DEPARTMENT OF TRANSPORTATION

DIVISION OF ENGINEERING SERVICES
STRUCTURE DESIGN
DESIGN BRANCH 8

BRIDGE NO. 37E0113
POST MILE 0.24/0.28

HECKER PASS SOIL NAIL WALL NO. 2
SCULPTED SHOTCRETE TREATMENT DETAILS NO. 1

STRUCTURES DESIGN DETAIL SHEET (ENGLISH) (REV. 09-01-10)

ORIGINAL SCALE IN INCHES FOR REDUCED PLANS 0 1 2 3

UNIT: 3593
PROJECT NUMBER & PHASE: 0400000813-1
CONTRACT NO.: 04-2A2501

DISREGARD PRINTS BEARING EARLIER REVISION DATES

REVISION DATES: 06-08-11 | 06-21-12 | 07-18-13

SHEET 12 OF 17

FILE => 37e0113-u-archdt01.dgn

USERNAME => s124496 DATE PLOTTED => 21-JUN-2013 TIME PLOTTED => 07:54

DIST	COUNTY	ROUTE	POST MILES TOTAL PROJECT	SHEET No.	TOTAL SHEETS
04	SCI	152	0.1/5.2	274	416

REGISTERED CIVIL ENGINEER 08-01-12 DATE

6-17-13
PLANS APPROVAL DATE

REGISTERED PROFESSIONAL ENGINEER
Sameh Hegazi
No. C64899
Exp. 06-30-2013
CIVIL
STATE OF CALIFORNIA

The State of California or its officers or agents shall not be responsible for the accuracy or completeness of electronic copies of this plan sheet.

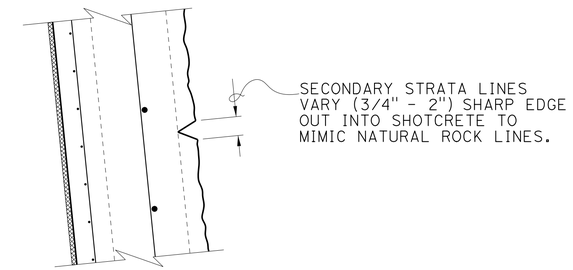

SECONDARY STRATA LINE

No Scale

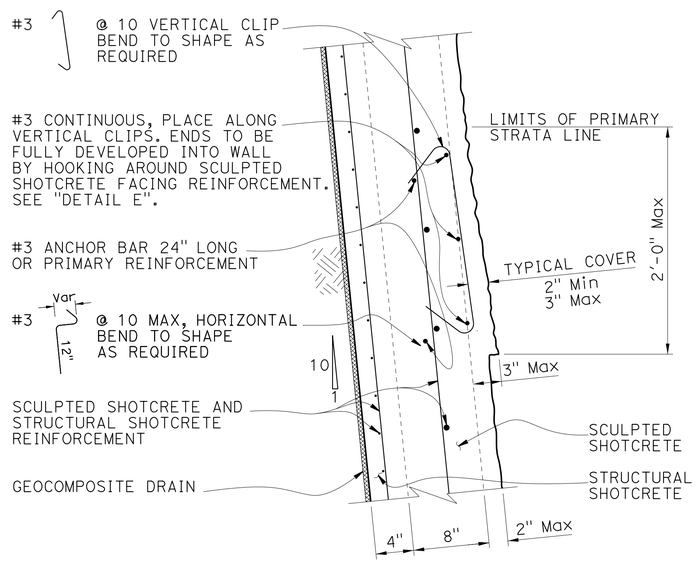

PRIMARY STRATA LINE
SCULPTED SHOTCRETE TREATMENT REINFORCEMENT

No Scale

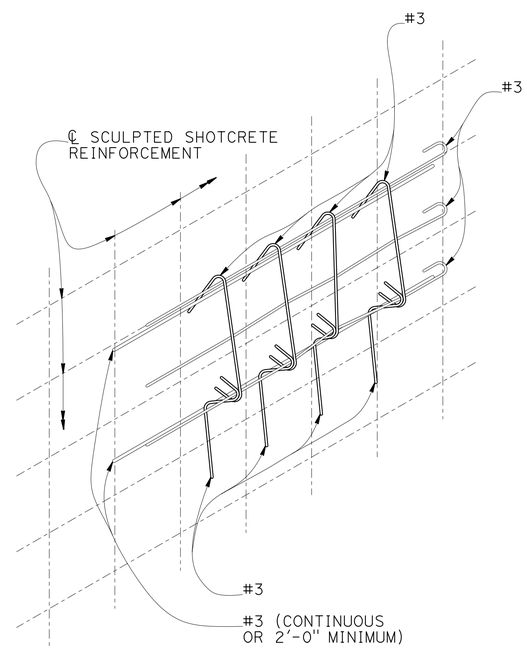

DETAIL E

No Scale

DESIGN	BY S. Hegazi	CHECKED R. Amir	
DETAILS	BY T. Kusumi	CHECKED R. Amir / S. Hegazi	
QUANTITIES	BY R. Amir	CHECKED S. Hegazi	

STATE OF CALIFORNIA
DEPARTMENT OF TRANSPORTATION

DIVISION OF ENGINEERING SERVICES
STRUCTURE DESIGN
DESIGN BRANCH 8

BRIDGE NO. 37E0113
POST MILE 0.24/0.28

HECKER PASS SOIL NAIL WALL NO. 2
SCULPTED SHOTCRETE TREATMENT DETAILS NO. 2

STRUCTURES DESIGN DETAIL SHEET (ENGLISH) (REV. 09-01-10)

ORIGINAL SCALE IN INCHES FOR REDUCED PLANS 0 1 2 3

UNIT: 3593
PROJECT NUMBER & PHASE: 0400000813-1
CONTRACT NO.: 04-2A2501

DISREGARD PRINTS BEARING EARLIER REVISION DATES

REVISION DATES: 06-09-11 04-30-11 07-18-12

SHEET 13 OF 17

FILE => 37e0113-u-archdt02.dgn

USERNAME => s124496 DATE PLOTTED => 21-JUN-2013 TIME PLOTTED => 07:54

DIST	COUNTY	ROUTE	POST MILES TOTAL PROJECT	SHEET No	TOTAL SHEETS
04	SCI	152	0.1/5.2	275	416

Ali Kaddoura 02-15-12
REGISTERED CIVIL ENGINEER

6-17-13
PLANS APPROVAL DATE

REGISTERED PROFESSIONAL ENGINEER Ali K. Kaddoura No. 55710 Exp. 12-31-12 CIVIL STATE OF CALIFORNIA

The State of California or its officers or agents shall not be responsible for the accuracy or completeness of electronic copies of this plan sheet.

This LOTB sheet was prepared in accordance with the Caltrans Soil & Rock Logging, Classification, & Presentation Manual (2010 Edition).

NOTE: 1. This LOTB sheet was prepared in accordance with the Caltrans Soil & Rock Logging, Classification, and Presentation Manual (April 2010).

2. PP=unconfined compressive strength (tsf) as measured by pocket penetrometer.

BENCH MARK

PHRV876
Fnd 1" I.P. w/CT PP&T
18.12 Lt. "A1" Line, ℄ Rte 152
Sta. 10+89.79
N 1,823,819.73
E 6,206,906.42
EL.=1,289.66

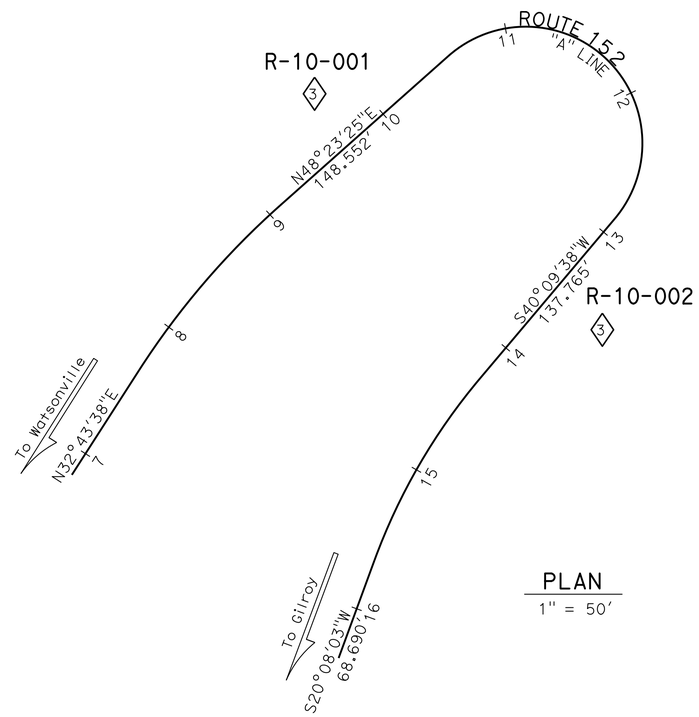

PLAN
1" = 50'

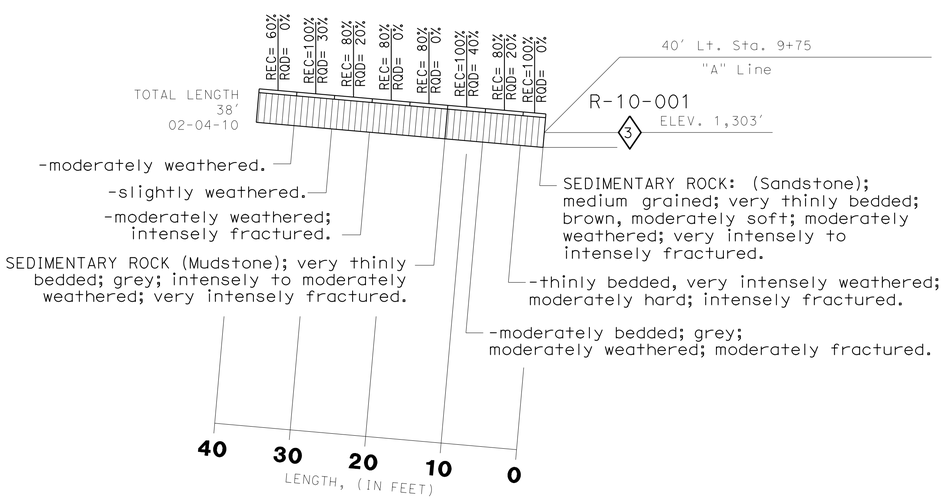

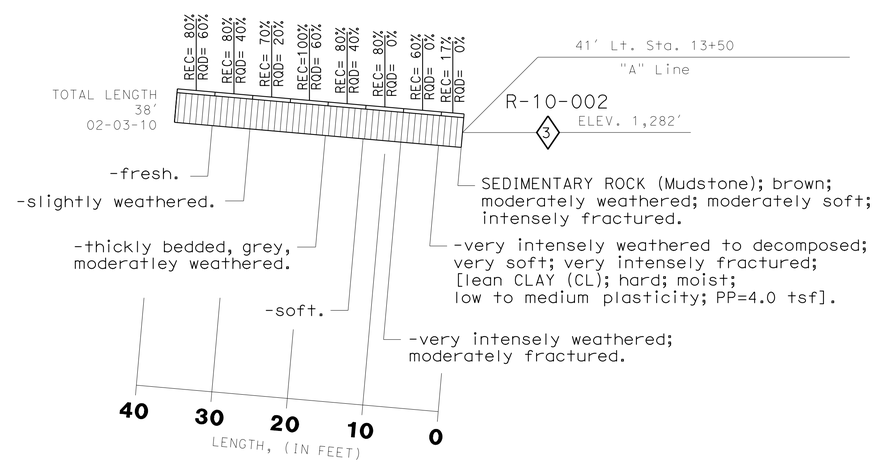

PROFILE
HOR. 1"=10'
VER. 1"=10'

ENGINEERING SERVICES	GEOTECHNICAL SERVICES	STATE OF CALIFORNIA DEPARTMENT OF TRANSPORTATION	DIVISION OF ENGINEERING SERVICES OFFICE OF GEOTECHNICAL DESIGN BRANCH 8	BRIDGE NO. 37E0113 / POST MILES 0.24/0.28	HECKER PASS SOIL NAIL WALL NO. 2
FUNCTIONAL SUPERVISOR	DRAWN BY: M. Reynolds 10/10	FIELD INVESTIGATION BY: A. Kaddoura			LOG OF TEST BORINGS 1 of 4
NAME:	CHECKED BY: M. Gaffney				

ORIGINAL SCALE IN INCHES FOR REDUCED PLANS 0 1 2 3

CU 04
EA 2A2500

DISREGARD PRINTS BEARING EARLIER REVISION DATES 03-08-12 05-24-12

REVISION DATES | SHEET 14 | OF 17

FILE => 37e0113-z-1tb01.dgn

USERNAME => s124436 DATE PLOTTED => 21-JUN-2013 TIME PLOTTED => 07:54

DIST	COUNTY	ROUTE	POST MILES TOTAL PROJECT	SHEET No	TOTAL SHEETS
04	SCI	152	0.1/5.2	276	416

Ali Kaddoura 02-15-12
REGISTERED CIVIL ENGINEER DATE

6-17-13
PLANS APPROVAL DATE

REGISTERED PROFESSIONAL ENGINEER Ali K. Kaddoura No. 55710 Exp. 12-31-12 CIVIL STATE OF CALIFORNIA

The State of California or its officers or agents shall not be responsible for the accuracy or completeness of electronic copies of this plan sheet.

REFERENCE: CALTRANS SOIL & ROCK LOGGING, CLASSIFICATION, AND PRESENTATION MANUAL (JUNE 2007)

CEMENTATION

Description	Criteria
Weak	Crumbles or breaks with handling or little finger pressure.
Moderate	Crumbles or breaks with considerable finger pressure.
Strong	Will not crumble or break with finger pressure.

CONSISTENCY OF COHESIVE SOILS

Description	Unconfined Compressive Strength (tsf)	Pocket Penetrometer Measurement (tsf)	Torvane Measurement (tsf)	Field Approximation
Very Soft	< 0.25	< 0.25	< 0.12	Easily penetrated several inches by fist
Soft	0.25 to 0.50	0.25 to 0.50	0.12 to 0.25	Easily penetrated several inches by thumb
Medium Stiff	0.50 to 1.0	0.50 to 1.0	0.25 to 0.50	Penetrated several inches by thumb with moderate effort
Stiff	1 to 2	1 to 2	0.50 to 1.0	Readily indented by thumb but penetrated only with great effort
Very Stiff	2 to 4	2 to 4	1.0 to 2.0	Readily indented by thumbnail
Hard	> 4.0	> 4.0	> 2.0	Indented by thumbnail with difficulty

BOREHOLE IDENTIFICATION

Symbol	Hole Type	Description
Size	A	Auger Boring
Size	R P	Rotary drilled boring Rotary percussion boring (air)
Size	R	Rotary drilled diamond core
Size	HD HA	Hand driven (1-inch soil tube) Hand Auger
●	D	Dynamic Cone Penetration Boring
▲	CPT	Cone Penetration Test (ASTM D 5778-95)
⬚	O	Other

Note: Size in inches.

PLASTICITY OF FINE-GRAINED SOILS

Description	Criteria
Nonplastic	A 1/8-inch thread cannot be rolled at any water content.
Low	The thread can barely be rolled and the lump cannot be formed when drier than the plastic limit.
Medium	The thread is easy to roll and not much time is required to reach the plastic limit. The thread cannot be rerolled after reaching the plastic limit. The lump crumbles when drier than the plastic limit.
High	It takes considerable time rolling and kneading to reach the plastic limit. The thread can be rerolled several times after reaching the plastic limit. The lump can be formed without crumbling when drier than the plastic limit.

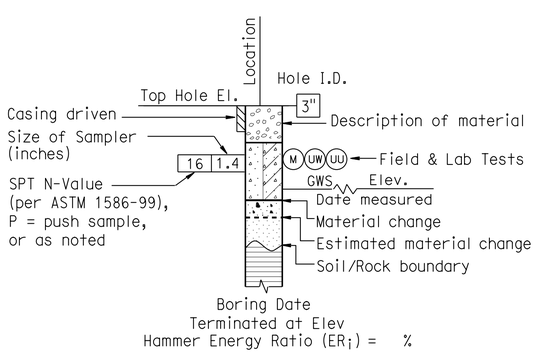

ROTARY BORING

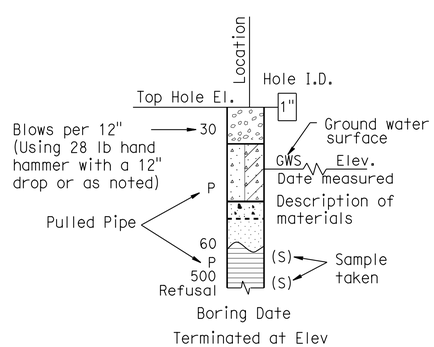

HAND BORING

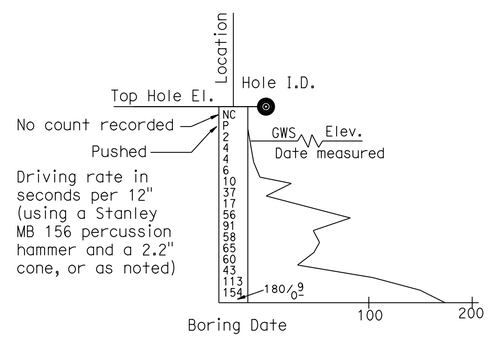

DYNAMIC CONE PENETRATION BORING

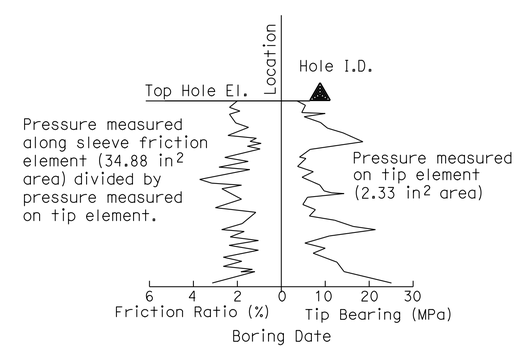

CONE PENETRATION TEST (CPT) SOUNDING

ENGINEERING SERVICES				GEOTECHNICAL SERVICES	STATE OF CALIFORNIA DEPARTMENT OF TRANSPORTATION	DIVISION OF ENGINEERING SERVICES OFFICE OF GEOTECHNICAL DESIGN BRANCH 8	BRIDGE NO. 37E0113	HECKER PASS SOIL NAIL WALL NO. 2
FUNCTIONAL SUPERVISOR	PREPARED BY	M. Reynolds	10/10	FIELD INVESTIGATION BY:			POST MILE 0.24/0.28	LOG OF TEST BORINGS 2 of 4
NAME:	CHECKED BY	M. Gaffney		A. Kaddoura C. Risden				

GS LOTB SOIL LEGEND

ORIGINAL SCALE IN INCHES FOR REDUCED PLANS 0 1 2 3

CU 04
EA 2A2500

DISREGARD PRINTS BEARING EARLIER REVISION DATES 03-08-12 05-24-12

REVISION DATES

SHEET 15 OF 17

FILE => 37e0113-z-ltb02.dgn

USERNAME => s124496 DATE PLOTTED => 21-JUN-2013 TIME PLOTTED => 07:55

REFERENCE: CALTRANS SOIL & ROCK LOGGING, CLASSIFICATION, AND PRESENTATION MANUAL (JUNE 2007)

DIST	COUNTY	ROUTE	POST MILES TOTAL PROJECT	SHEET No	TOTAL SHEETS
04	SCI	152	0.1/5.2	277	416

Ali Kaddoura 02-15-12
REGISTERED CIVIL ENGINEER DATE

6-17-13
PLANS APPROVAL DATE

REGISTERED PROFESSIONAL ENGINEER Ali K. Kaddoura No. 55710 Exp. 12-31-12 CIVIL STATE OF CALIFORNIA

The State of California or its officers or agents shall not be responsible for the accuracy or completeness of electronic copies of this plan sheet.

GROUP SYMBOLS AND NAMES

Graphic/Symbol	Group Names
GW	Well-graded GRAVEL Well-graded GRAVEL with SAND
GP	Poorly graded GRAVEL Poorly graded GRAVEL with SAND
GW-GM	Well-graded GRAVEL with SILT Well-graded GRAVEL with SILT and SAND
GW-GC	Well-graded GRAVEL with CLAY (or SILTY CLAY) Well-graded GRAVEL with CLAY and SAND (or SILTY CLAY and SAND)
GP-GM	Poorly graded GRAVEL with SILT Poorly graded GRAVEL with SILT and SAND
GP-GC	Poorly graded GRAVEL with CLAY (or SILTY CLAY) Poorly graded GRAVEL with CLAY and SAND (or SILTY CLAY and SAND)
GM	SILTY GRAVEL SILTY GRAVEL with SAND
GC	CLAYEY GRAVEL CLAYEY GRAVEL with SAND
GC-GM	SILTY, CLAYEY GRAVEL SILTY, CLAYEY GRAVEL with SAND
SW	Well-graded SAND Well-graded SAND with GRAVEL
SP	Poorly graded SAND Poorly graded SAND with GRAVEL
SW-SM	Well-graded SAND with SILT Well-graded SAND with SILT and GRAVEL
SW-SC	Well-graded SAND with CLAY (or SILTY CLAY) Well-graded SAND with CLAY and GRAVEL (or SILTY CLAY and GRAVEL)
SP-SM	Poorly graded SAND with SILT Poorly graded SAND with SILT and GRAVEL
SP-SC	Poorly graded SAND with CLAY (or SILTY CLAY) Poorly graded SAND with CLAY and GRAVEL (or SILTY CLAY and GRAVEL)
SM	SILTY SAND SILTY SAND with GRAVEL
SC	CLAYEY SAND CLAYEY SAND with GRAVEL
SC-SM	SILTY, CLAYEY SAND SILTY, CLAYEY SAND with GRAVEL
PT	PEAT
	COBBLES COBBLES and BOULDERS BOULDERS

Graphic/Symbol	Group Names
CL	Lean CLAY Lean CLAY with SAND Lean CLAY with GRAVEL SANDY lean CLAY SANDY lean CLAY with GRAVEL GRAVELLY lean CLAY GRAVELLY lean CLAY with SAND
CL-ML	SILTY CLAY SILTY CLAY with SAND SILTY CLAY with GRAVEL SANDY SILTY CLAY SANDY SILTY CLAY with GRAVEL GRAVELLY SILTY CLAY GRAVELLY SILTY CLAY with SAND
ML	SILT SILT with SAND SILT with GRAVEL SANDY SILT SANDY SILT with GRAVEL GRAVELLY SILT GRAVELLY SILT with SAND
OL	ORGANIC lean CLAY ORGANIC lean CLAY with SAND ORGANIC lean CLAY with GRAVEL SANDY ORGANIC lean CLAY SANDY ORGANIC lean CLAY with GRAVEL GRAVELLY ORGANIC lean CLAY GRAVELLY ORGANIC lean CLAY with SAND
OL	ORGANIC SILT ORGANIC SILT with SAND ORGANIC SILT with GRAVEL SANDY ORGANIC SILT SANDY ORGANIC SILT with GRAVEL GRAVELLY ORGANIC SILT GRAVELLY ORGANIC SILT with SAND
CH	Fat CLAY Fat CLAY with SAND Fat CLAY with GRAVEL SANDY fat CLAY SANDY fat CLAY with GRAVEL GRAVELLY fat CLAY GRAVELLY fat CLAY with SAND
MH	Elastic SILT Elastic SILT with SAND Elastic SILT with GRAVEL SANDY elastic SILT SANDY elastic SILT with GRAVEL GRAVELLY elastic SILT GRAVELLY elastic SILT with SAND
OH	ORGANIC fat CLAY ORGANIC fat CLAY with SAND ORGANIC fat CLAY with GRAVEL SANDY ORGANIC fat CLAY SANDY ORGANIC fat CLAY with GRAVEL GRAVELLY ORGANIC fat CLAY GRAVELLY ORGANIC fat CLAY with SAND
OH	ORGANIC elastic SILT ORGANIC elastic SILT with SAND ORGANIC elastic SILT with GRAVEL SANDY ORGANIC elastic SILT SANDY ORGANIC elastic SILT with GRAVEL GRAVELLY ORGANIC elastic SILT GRAVELLY ORGANIC elastic SILT with SAND
OL/OH	ORGANIC SOIL ORGANIC SOIL with SAND ORGANIC SOIL with GRAVEL SANDY ORGANIC SOIL SANDY ORGANIC SOIL with GRAVEL GRAVELLY ORGANIC SOIL GRAVELLY ORGANIC SOIL with SAND

FIELD AND LABORATORY TESTING

- (C) Consolidation (ASTM D 2435)
- (CL) Collapse Potential (ASTM D 5333)
- (CP) Compaction Curve (CTM 216)
- (CR) Corrosivity Testing (CTM 643, CTM 422, CTM 417)
- (CU) Consolidated Undrained Triaxial (ASTM D 4767)
- (DS) Direct Shear (ASTM D 3080)
- (EI) Expansion Index (ASTM D 4829)
- (M) Moisture Content (ASTM D 2216)
- (OC) Organic Content-% (ASTM D 2974)
- (P) Permeability (CTM 220)
- (PA) Particle Size Analysis (ASTM D 422)
- (PI) Plasticity Index (AASHTO T 90) Liquid Limit (AASHTO T 89)
- (PL) Point Load Index (ASTM D 5731)
- (PM) Pressure Meter
- (PP) Pocket Penetrometer
- (R) R-Value (CTM 301)
- (SE) Sand Equivalent (CTM 217)
- (SG) Specific Gravity (AASHTO T 100)
- (SL) Shrinkage Limit (ASTM D 427)
- (SW) Swell Potential (ASTM D 4546)
- (TV) Pocket Torvane
- (UC) Unconfined Compression-Soil (ASTM D 2166) Unconfined Compression-Rock (ASTM D 2938)
- (UU) Unconsolidated Undrained Triaxial (ASTM D 2850)
- (UW) Unit Weight (ASTM D 4767)
- (VS) Vane Shear (AASHTO T 223)

APPARENT DENSITY OF COHESIONLESS SOILS

Description	SPT N_{60} (Blows / 12 inches)
Very loose	0 - 4
Loose	5 - 10
Medium Dense	11 - 30
Dense	31 - 50
Very Dense	> 50

MOISTURE

Description	Criteria
Dry	Absence of moisture, dusty, dry to the touch
Moist	Damp but no visible water
Wet	Visible free water, usually soil is below water table

PERCENT OR PROPORTION OF SOILS

Description	Criteria
Trace	Particles are present but estimated to be less than 5%
Few	5 to 10%
Little	15 to 25%
Some	30 to 45%
Mostly	50 to 100%

PARTICLE SIZE

Description		Size
Boulder		> 12"
Cobble		3" to 12"
Gravel	Coarse	3/4" to 3"
	Fine	No. 4 to 3/4"
Sand	Coarse	No. 10 to No. 4
	Medium	No. 40 to No. 10
	Fine	No. 200 to No. 40

ENGINEERING SERVICES				GEOTECHNICAL SERVICES
FUNCTIONAL SUPERVISOR	PREPARED BY	M. Reynolds	10/10	FIELD INVESTIGATION BY:
NAME:	CHECKED BY	M. Gaffney		A. Kadoura C. Risden

STATE OF CALIFORNIA DEPARTMENT OF TRANSPORTATION

DIVISION OF ENGINEERING SERVICES OFFICE OF GEOTECHNICAL DESIGN BRANCH 8

BRIDGE NO. 37E0113
POST MILE 0.24/0.28

HECKER PASS SOIL NAIL WALL NO. 2
LOG OF TEST BORINGS 3 of 4

GS LOTB SOIL LEGEND

ORIGINAL SCALE IN INCHES FOR REDUCED PLANS 0 1 2 3

CU 04
EA 2A2500

DISREGARD PRINTS BEARING EARLIER REVISION DATES 03-08-12 05-24-12

REVISION DATES

SHEET 16 OF 17

FILE => 37e0113-z-ltb03.dgn

USERNAME => s124496 DATE PLOTTED => 21-JUN-2013 TIME PLOTTED => 07:55

REFERENCE: CALTRANS SOIL & ROCK LOGGING, CLASSIFICATION, AND PRESENTATION MANUAL (JUNE 2007)

DIST	COUNTY	ROUTE	POST MILES TOTAL PROJECT	SHEET No	TOTAL SHEETS
04	SCI	152	0.1/5.2	278	416

Ali Kaddoura 02-15-12
REGISTERED CIVIL ENGINEER DATE

6-17-13
PLANS APPROVAL DATE

REGISTERED PROFESSIONAL ENGINEER Ali K. Kaddoura No. 55710 Exp. 12-31-12 CIVIL STATE OF CALIFORNIA

The State of California or its officers or agents shall not be responsible for the accuracy or completeness of electronic copies of this plan sheet.

PERCENT CORE RECOVERY (REC) & ROCK QUALITY DESIGNATION (RQD)

$$REC = \frac{\sum \text{Length of the recovered core pieces (inches)}}{\text{Total length of core run (inches)}} \times 100\%$$

$$RQD = \frac{\sum \text{Length of intact core pieces} \geq 4''}{\text{Total length of core run (inches)}} \times 100\%$$

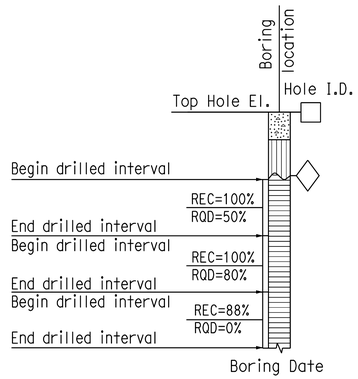

RELATIVE STRENGTH OF INTACT ROCK

Term	Uniaxial Compressive Strength (PSI)
Extremely Strong	> 30,000
Very Strong	14,500 - 30,000
Strong	7,000 - 14,500
Medium Strong	3,500 - 7,000
Weak	700 - 3,500
Very Weak	150 - 700
Extremely Weak	< 150

BEDDING SPACING

Description	Thickness / Spacing
Massive	Greater than 10 ft
Very thickly bedded	3 to 10 ft
Thickly bedded	1 to 3 ft
Moderately bedded	3-5/8" to 1 ft
Thinly bedded	1-1/4" to 3-5/8"
Very thinly bedded	3/8" to 1-1/4"
Laminated	Less than 3/8"

LEGEND OF ROCK MATERIALS

- IGNEOUS ROCK
- SEDIMENTARY ROCK
- METAMORPHIC ROCK

ROCK HARDNESS

Description	Criteria
Extremely Hard	Specimen cannot be scratched with a pocket knife or sharp pick; can only be chipped with repeated heavy hammer blows.
Very Hard	Specimen cannot be scratched with a pocket knife or sharp pick. Breaks with repeated heavy hammer blows.
Hard	Specimen can be scratched with a pocket knife or sharp pick with difficulty (heavy pressure). Heavy hammer blows required to break specimen.
Moderately Hard	Specimen can be scratched with pocket knife or sharp pick with light or moderate pressure. Core breaks with moderate hammer pressure.
Moderately Soft	Specimen can be grooved 1/6" deep with a pocket knife or sharp pick with moderate or heavy pressure. Breaks with light hammer blow or heavy manual pressure.
Soft	Specimen can be grooved or gouged easily by a pocket knife or sharp pick with light pressure, can be scratched with fingernail. Breaks with light to moderate manual pressure.
Very Soft	Specimen can be readily indented, grooved or gouged with fingernail, or carved with a pocket knife. Breaks with light manual pressure.

FRACTURE DENSITY

Description	Observed Fracture Density
Unfractured	No fractures.
Very slightly fractured	Lengths greater than 3 feet.
Slightly fractured	Lengths from 1 to 3 feet with few lengths less than 1 foot or greater than 3 feet.
Moderately fractured	Lengths mostly in 4" to 1 foot range with most lengths about 8"
Intensely fractured	Lengths average from 1 to 4" with scattered fragmented intervals with lengths less than 4"
Very intensely fractured	Mostly chips and fragments with a few scattered short core lengths.

Combination descriptors (such as "Very intensely to intensely fractured") are used where equal distribution of both fracture density characteristics is present over a significant interval or exposure, or where characteristics are "in between" the descriptor definitions. Only two adjacent descriptors may be combined.

WEATHERING DESCRIPTORS FOR INTACT ROCK

Description	Diagnostic features					General Characteristics
	Chemical Weathering-Discoloration and/or oxidation		Mechanical Weathering-Grain boundary conditions (disaggregation) primarily for granitics and some coarse-grained sediments	Texture and Solutioning		
	Body of Rock	Fracture Surfaces		Texture	Solutioning	
Fresh	No discoloration, not oxidized.	No discoloration or oxidation.	No separation, intact (tight).	No change.	No solutioning.	Hammer rings when crystalline rocks are struck.
Slightly Weathered	Discoloration or oxidation is limited to surface of, or short distance from, fractures; some feldspar crystals are dull.	Minor to complete discoloration or oxidation of most surfaces.	No visible separation, intact (tight).	Preserved.	Minor leaching of some soluble minerals may be noted.	Hammer rings when crystalline rocks are struck. Body of rock not weakened.
Moderately Weathered	Discoloration or oxidation extends from fractures usually throughout; Fe-Mg minerals are "rusty," feldspar crystals are "cloudy."	All fracture surfaces are discolored or oxidized.	Partial separation of boundaries visible.	Generally preserved.	Soluble minerals may be mostly leached.	Hammer does not ring when rock is struck. Body of rock is slightly weakened.
Intensely Weathered	Discoloration or oxidation throughout; all feldspars and Fe-Mg minerals are altered to clay to some extent; or chemical alteration produces in-situ disaggregation, see grain boundary conditions.	All fracture surfaces are discolored or oxidized, surfaces friable.	Partial separation, rock is friable; in semiarid conditions granitics are disaggregated.	Texture altered by chemical disintegration (hydration, argillation).	Leaching of soluble minerals may be complete.	Dull sound when struck with hammer, usually can be broken with moderate to heavy manual pressure or by light hammer blow without reference to planes of weakness such as incipient or hairline fractures, or veinlets. Rock is significantly weakened.
Decomposed	Discolored or oxidized throughout, but resistant minerals such as quartz may be unaltered; all feldspars and Fe-Mg minerals are completely altered to clay.		Complete separation of grain boundaries (disaggregated).	Resembles a soil, partial or complete remnant rock structure may be preserved; leaching of soluble minerals usually complete.		Can be granulated by hand. Resistant minerals such as quartz may be present as "stringers" or "dikes."

Combination descriptors (such as "slightly weathered to fresh") are permissible where equal distribution of both weathering characteristics is present over significant intervals or where characteristics present are "in between" the diagnostic feature. However, combination descriptors should not be used where significant, identifiable zones can be delineated. Only two adjacent descriptors may be combined. "Very intensely weathered" is the combination descriptor for "intensely weathered to decomposed."

ENGINEERING SERVICES				GEOTECHNICAL SERVICES
FUNCTIONAL SUPERVISOR	PREPARED BY	M. Reynolds	10/10	FIELD INVESTIGATION BY:
NAME:	CHECKED BY	M. Gaffney		A. Kaddoura C. Risden

GS LOTB ROCK LEGEND

ORIGINAL SCALE IN INCHES FOR REDUCED PLANS 0 1 2 3

STATE OF CALIFORNIA DEPARTMENT OF TRANSPORTATION

DIVISION OF ENGINEERING SERVICES OFFICE OF GEOTECHNICAL DESIGN BRANCH 8

CU 04
EA 2A2500

BRIDGE NO. 37E0113
POST MILE 0.24/0.28

HECKER PASS SOIL NAIL WALL NO. 2

LOG OF TEST BORINGS 4 of 4

DISREGARD PRINTS BEARING EARLIER REVISION DATES → 03-08-12 05-24-12

REVISION DATES

SHEET 17 OF 17

FILE => 37e0113-z-ltb04.dgn

USERNAME => s124496 DATE PLOTTED => 21-JUN-2013 TIME PLOTTED => 07:55

DIST	COUNTY	ROUTE	POST MILES TOTAL PROJECT	SHEET No.	TOTAL SHEETS
04	SCI	152	0.1/5.2	279	416

REGISTERED CIVIL ENGINEER 05-15-13 DATE

6-17-13
PLANS APPROVAL DATE

REGISTERED PROFESSIONAL ENGINEER Sameh Hegazi No. C64899 Exp.06-30-2013 CIVIL STATE OF CALIFORNIA

The State of California or its officers or agents shall not be responsible for the accuracy or completeness of electronic copies of this plan sheet.

LEGEND:
- ○ Indicates approximate location of soil nails
- ■ Indicates approximate location of proof test nails

NOTE:
Not all approximate location of soil nails, proof test nails, cable railing posts, and weepholes shown.

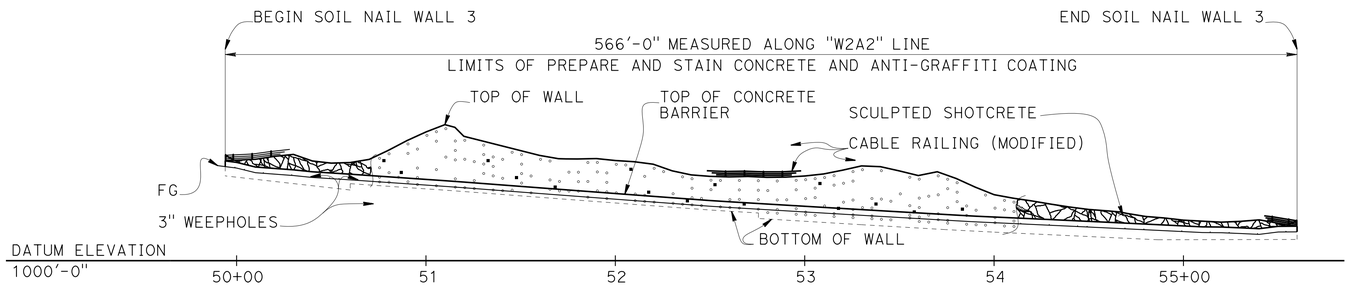

DEVELOPED ELEVATION

1" = 40'

NOTES:
1. Top of the wall elevations shall be verified in the field.
2. Soil nail inclination = 15° typical.
3. The exact locations of the Test Soil Nail to be determined by the Engineer in the field.
4. All soil nail levels are parallel to top of wall except the bottom level which is parallel to bottom of wall.
5. Soil nails shall be placed normal to shotcrete surface in the plan view.
6. The contractor shall field locate all utilities before drilling soil nails.
7. The contractor shall provide and maintain stable soil slopes above and below the soil nail walls.
8. Bottom of wall shall be placed against undisturbed soil material.
9. Prepare and stain sculpted shotcrete surface.
10. Concrete barrier shall be integrally colored and applied with anti-graffiti coating from top of barrier to 6 inches below finished grade.

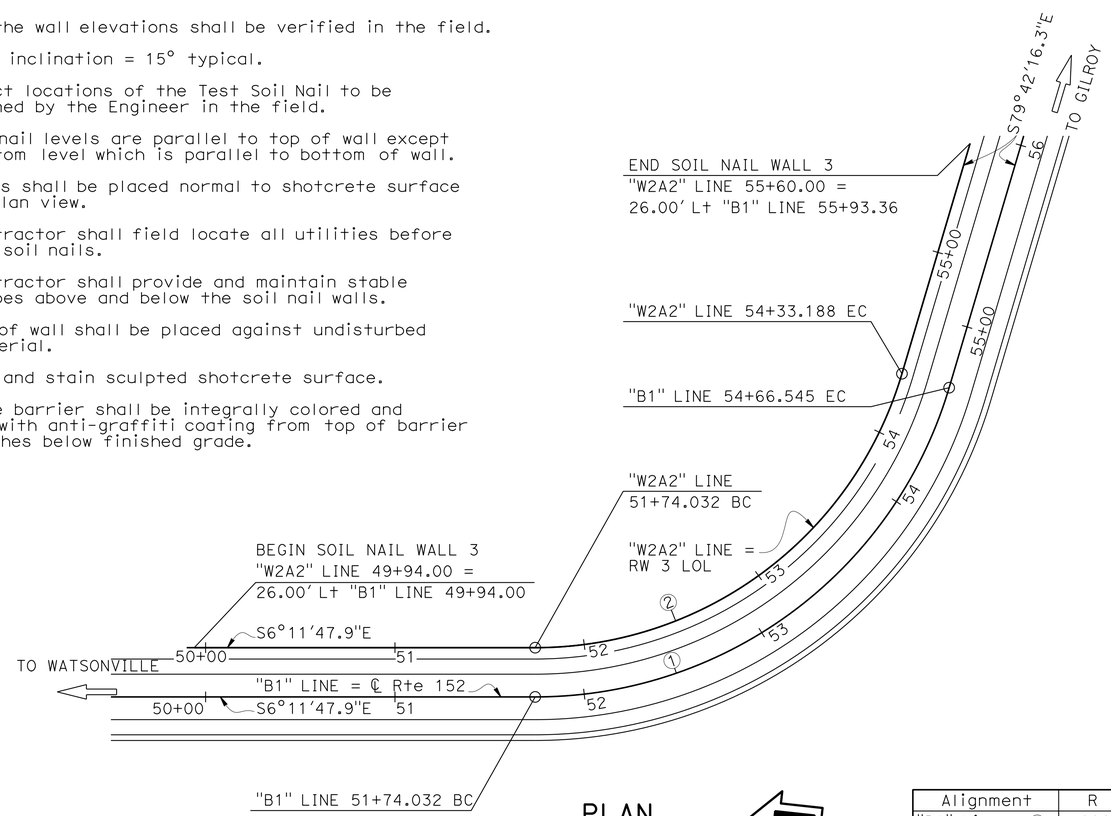

NOTE:
THE CONTRACTOR SHALL VERIFY ALL CONTROLLING FIELD DIMENSIONS BEFORE ORDERING OR FABRICATING ANY MATERIAL.

PLAN

1" = 40'

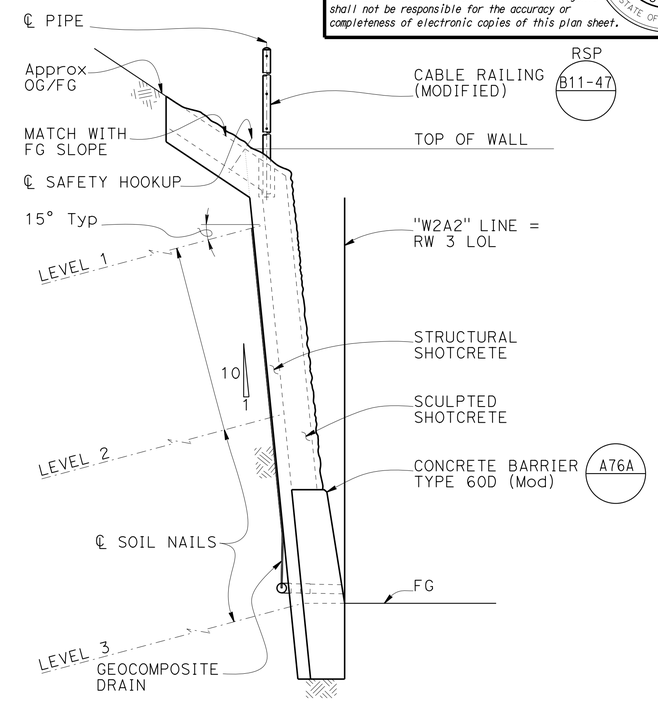

TYPICAL SECTION

½" = 1'

CURVE DATA

Alignment	R	Δ	T	L
"B1" Line ①	228'	73°30'28"	170.28'	292.51'
"W2A2" Line ②	202'	73°30'28"	150.86'	259.16'

QUANTITIES

STRUCTURE EXCAVATION (SOIL NAIL WALL)	1,438	CY
STRUCTURE BACKFILL (SOIL NAIL WALL)	99	CY
SOIL NAIL	8,530	LF
BAR REINFORCING STEEL (RETAINING WALL)	40,605	LB
STRUCTURAL SHOTCRETE	154	CY
SCULPTED SHOTCRETE	268	CY
PREPARE AND STAIN SCULPTED SHOTCRETE	8,382	SQFT
ANTI-GRAFFITI COATING	1,698	SQFT
MISCELLANEOUS METAL (SAFETY HOOK)	590	LB
CABLE RAILING (MODIFIED)	566	LF
CONCRETE BARRIER (TYPE 60D MODIFIED)	566	LF

BRIAN MORI
DESIGN ENGINEER

	BY	CHECKED
DESIGN	S. Hegazi	R. Amir
DETAILS	T. Kusumi	R. Amir / S. Hegazi
QUANTITIES	R. Amir	S. Hegazi

LOAD & RESISTANCE FACTOR DESIGN — LIVE LOADING: HL93 W/"LOW-BOY": PERMIT DESIGN VEHICLE

	BY	CHECKED
LAYOUT	S. Hegazi	A. Menke
SPECIFICATIONS	T. Chen	PLANS AND SPECS COMPARED T. Chen

STATE OF CALIFORNIA
DEPARTMENT OF TRANSPORTATION

DIVISION OF ENGINEERING SERVICES
STRUCTURE DESIGN
DESIGN BRANCH 8

BRIDGE NO. 37E0114
POST MILE 0.95/1.06

HECKER PASS SOIL NAIL WALL NO. 3
GENERAL PLAN

ORIGINAL SCALE IN INCHES FOR REDUCED PLANS 0 1 2 3

UNIT: 3593
PROJECT NUMBER & PHASE: 0400000813-1
CONTRACT NO.: 04-2A2501

DISREGARD PRINTS BEARING EARLIER REVISION DATES

REVISION DATES: 03-11-11 05-15-13 05-06-13

SHEET 1 OF 20

STRUCTURES DESIGN GENERAL PLAN SHEET (ENGLISH) (REV.09-01-10)

FILE => 37e0114-a-gp01.dgn

USERNAME => s124496 DATE PLOTTED => 21-JUN-2013 TIME PLOTTED => 09:04

DIST	COUNTY	ROUTE	POST MILES TOTAL PROJECT	SHEET No.	TOTAL SHEETS
04	SCI	152	0.1/5.2	280	416

REGISTERED CIVIL ENGINEER 05-15-13 DATE

6-17-13
PLANS APPROVAL DATE

REGISTERED PROFESSIONAL ENGINEER Sameh Hegazi No. C64899 Exp. 06-30-2013 CIVIL STATE OF CALIFORNIA

The State of California or its officers or agents shall not be responsible for the accuracy or completeness of electronic copies of this plan sheet.

GENERAL NOTES

LOAD AND RESISTANCE FACTOR DESIGN:
AASHTO LRFD Bridge Design Specifications, 4th Editions and the Caltrans Amendments; preface dated Dec., 2009.

FHWA Publication No. FHWA-IF-03-017, Manual for Design and Construction Monitoring of Soil Nail Walls.

REINFORCED CONCRETE & SHOTCRETE:
F'c = 3.6 ksi
Fy = 60 ksi

STRUCTURAL STEEL:
Plates and shapes shall conform to ASTM Designation A709 Grade (36 ksi)

SOIL NAILS:
Soil nails shall conform to ASTM Designation A615, Grade 60, fs = 60 ksi, #7 bars, #8 bars, and #10 bars.

PUNCHING SHEAR:
Ps = 45 Kps

SOIL DESIGN PARAMETERS IN NAILING ZONES:

NAIL DATA TABLE

Zone	"W2A2" Line Station	Unit Weight (lb/ft^3)	Friction Angle Degrees	Cohesion (lb/ft^2)	Design Pull out Resistance (kip/ft)	Upper Elev (ft)	Lower Elev (ft)
1	49+94.00 - 50+70.00	125	32	700	2.0	1056	1040
2	50+70.00 - 52+00.00	125	32	700	2.0	1072	1050
3	50+70.00 - 52+00.00	125	32	700	2.0	1050	1030
4	52+00.00 - 54+00.00	125	32	700	2.0	1050	1035
5	52+00.00 - 54+00.00	125	32	700	2.0	1035	1015
6	54+00.00 - 55+60.00	125	32	700	2.0	1035	1011

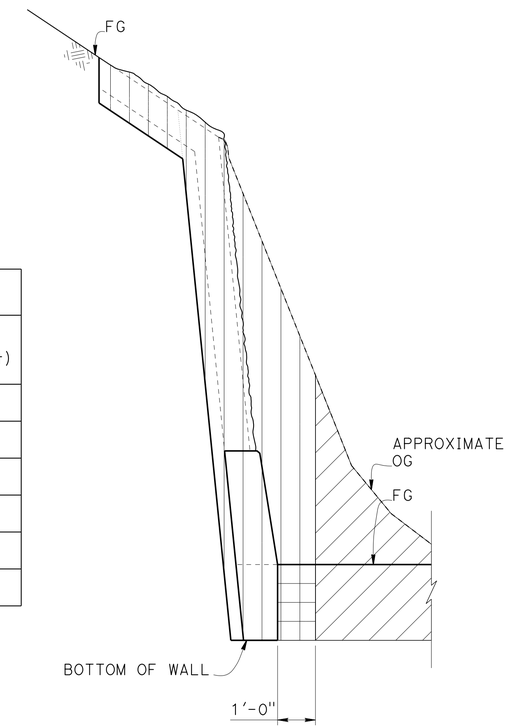

LEGEND:
- Structure excavation (Soil Nail Wall)
- Structure backfill (Soil Nail Wall)
- Roadway excavation (See "ROAD PLANS.")

LIMITS OF PAYMENT FOR EXCAVATION AND BACKFILL

No Scale

INDEX TO PLANS

SHEET NO.	TITLE
1	GENERAL PLAN
2	INDEX TO PLANS
3	FOUNDATION PLAN
4	STRUCTURE ELEVATION NO. 1
5	STRUCTURE ELEVATION NO. 2
6	TYPICAL SECTION
7	STRUCTURAL DETAILS NO. 1
8	STRUCTURAL DETAILS NO. 2
9	STRUCTURAL DETAILS NO. 3
10	DRAINAGE DETAILS NO. 1
11	DRAINAGE DETAILS NO. 2
12	SCULPTED SHOTCRETE TREATMENT NO. 1
13	SCULPTED SHOTCRETE TREATMENT NO. 2
14	SCULPTED SHOTCRETE TREATMENT NO. 3
15	SCULPTED SHOTCRETE TREATMENT DETAILS NO. 1
16	SCULPTED SHOTCRETE TREATMENT DETAILS NO. 2
17	LOG OF TEST BORINGS 1 OF 4
17	LOG OF TEST BORINGS 2 OF 4
19	LOG OF TEST BORINGS 3 OF 4
20	LOG OF TEST BORINGS 4 OF 4

STANDARD PLANS DATED MAY 2010

DETAIL	DESCRIPTION
A10A	ABBREVIATIONS (SHEET 1 OF 2)
A10B	ABBREVIATIONS (SHEET 2 OF 2)
A10C	LINES AND SYMBOLS (SHEET 1 OF 3)
A10D	LINES AND SYMBOLS (SHEET 2 OF 3)
A10E	LINES AND SYMBOLS (SHEET 3 OF 3)
A76A	CONCRETE BARRIER TYPE 60
B0-3	BRIDGE DETAILS
RSP B11-47	CABLE RAILING

STANDARD PLAN SHEET NO.
DETAIL NO.

DESIGN	BY S. Hegazi	CHECKED R. Amir	
DETAILS	BY T. Kusumi	CHECKED S. Hegazi / R. Amir	
QUANTITIES	BY R. Amir	CHECKED S. Hegazi	

STATE OF CALIFORNIA DEPARTMENT OF TRANSPORTATION

DIVISION OF ENGINEERING SERVICES STRUCTURE DESIGN DESIGN BRANCH 8

BRIDGE NO. 37E0114
POST MILE 0.95/1.06

HECKER PASS SOIL NAIL WALL NO. 3
INDEX TO PLANS

STRUCTURES DESIGN DETAIL SHEET (ENGLISH) (REV. 09-01-10)

ORIGINAL SCALE IN INCHES FOR REDUCED PLANS 0 1 2 3

UNIT: 3593
PROJECT NUMBER & PHASE: 0400000813-1
CONTRACT NO.: 04-2A2501

DISREGARD PRINTS BEARING EARLIER REVISION DATES

REVISION DATES: 06-16-11 07-18-12 05-10-13

SHEET 2 OF 20

FILE => 37e0114-a-itp.dgn

USERNAME => s124496 DATE PLOTTED => 21-JUN-2013 TIME PLOTTED => 07:55

DIST	COUNTY	ROUTE	POST MILES TOTAL PROJECT	SHEET No.	TOTAL SHEETS
04	SCI	152	0.1/5.2	281	416

REGISTERED CIVIL ENGINEER — DATE 08-01-12

6-17-13
PLANS APPROVAL DATE

REGISTERED PROFESSIONAL ENGINEER — Sameh Hegazi — No. C64899 — Exp. 06-30-2013 — CIVIL — STATE OF CALIFORNIA

The State of California or its officers or agents shall not be responsible for the accuracy or completeness of electronic copies of this plan sheet.

CURVE DATA

Alignment	R	Δ	T	L
"B1" Line ①	228.00	73°30'28"	170.28	292.51
"W2A2" Line ②	202.00	73°30'28"	150.86	259.16

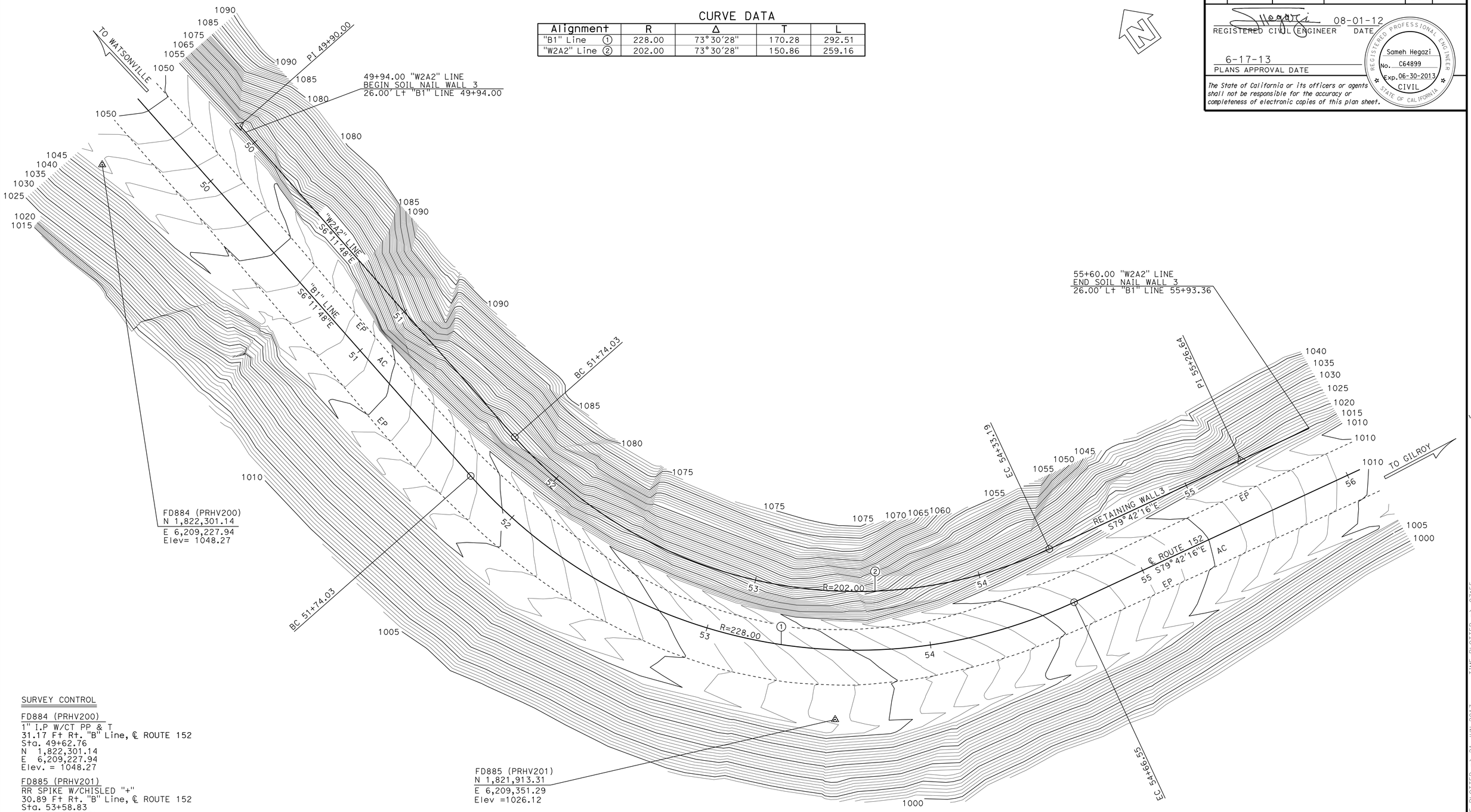

SURVEY CONTROL

FD884 (PRHV200)
1" I.P W/CT PP & T
31.17 Ft Rt. "B" Line, ℄ ROUTE 152
Sta. 49+62.76
N 1,822,301.14
E 6,209,227.94
Elev. = 1048.27

FD885 (PRHV201)
RR SPIKE W/CHISLED "+"
30.89 Ft Rt. "B" Line, ℄ ROUTE 152
Sta. 53+58.83
N 1,821,913.31
E 6,209,351.29
Elev. = 1026.12

PRELIMINARY INVESTIGATION SECTION

SCALE 1"=20'	VERT.DATUM NAVD88	PHOTOGRAMMETRY AS OF: X			
	HORZ.DATUM NAD83(92) (1991.35)	SURVEYED	BY DISTRICT	CHECKED	BY J. Pallares 06/2011
ALIGNMENT TIES Dist. Traverse Sheet		DRAFTED	BY J. Zhou 06/2011	CHECKED	BY T. Zolnikov 06/2011

DESIGN	BY S. Hegazi	CHECKED	R. Amir
DETAILS	BY T. Kusumi	CHECKED	S. Hegazi / R. Amir
QUANTITIES	BY R. Amir	CHECKED	S. Hegazi

STATE OF CALIFORNIA
DEPARTMENT OF TRANSPORTATION

DIVISION OF ENGINEERING SERVICES
STRUCTURE DESIGN
DESIGN BRANCH 08

BRIDGE NO. 37E0114
POST MILE 0.95/1.06

HECKER PASS SOIL NAIL WALL NO.3
FOUNDATION PLAN

STRUCTURES FOUNDATION PLAN SHEET (ENGLISH) (REV. 09-01-10)

ORIGINAL SCALE IN INCHES FOR REDUCED PLANS 0 1 2 3

UNIT: 3646
PROJECT NUMBER & PHASE: 04000008131
CONTRACT NO.: 04-2A2501

DISREGARD PRINTS BEARING EARLIER REVISION DATES

REVISION DATES: 07-06-11 05-24-12 02-06-13

SHEET 3 OF 20

FILE => 37e0114-e-fpl01.dgn

USERNAME => s124496 DATE PLOTTED => 21-JUN-2013 TIME PLOTTED => 07:55

DIST	COUNTY	ROUTE	POST MILES TOTAL PROJECT	SHEET No.	TOTAL SHEETS
04	SCI	152	0.1/5.2	282	416

REGISTERED CIVIL ENGINEER 08-01-12 DATE

6-17-13
PLANS APPROVAL DATE

REGISTERED PROFESSIONAL ENGINEER Sameh Hegazi No. C64899 Exp. 06-30-2013 CIVIL STATE OF CALIFORNIA

The State of California or its officers or agents shall not be responsible for the accuracy or completeness of electronic copies of this plan sheet.

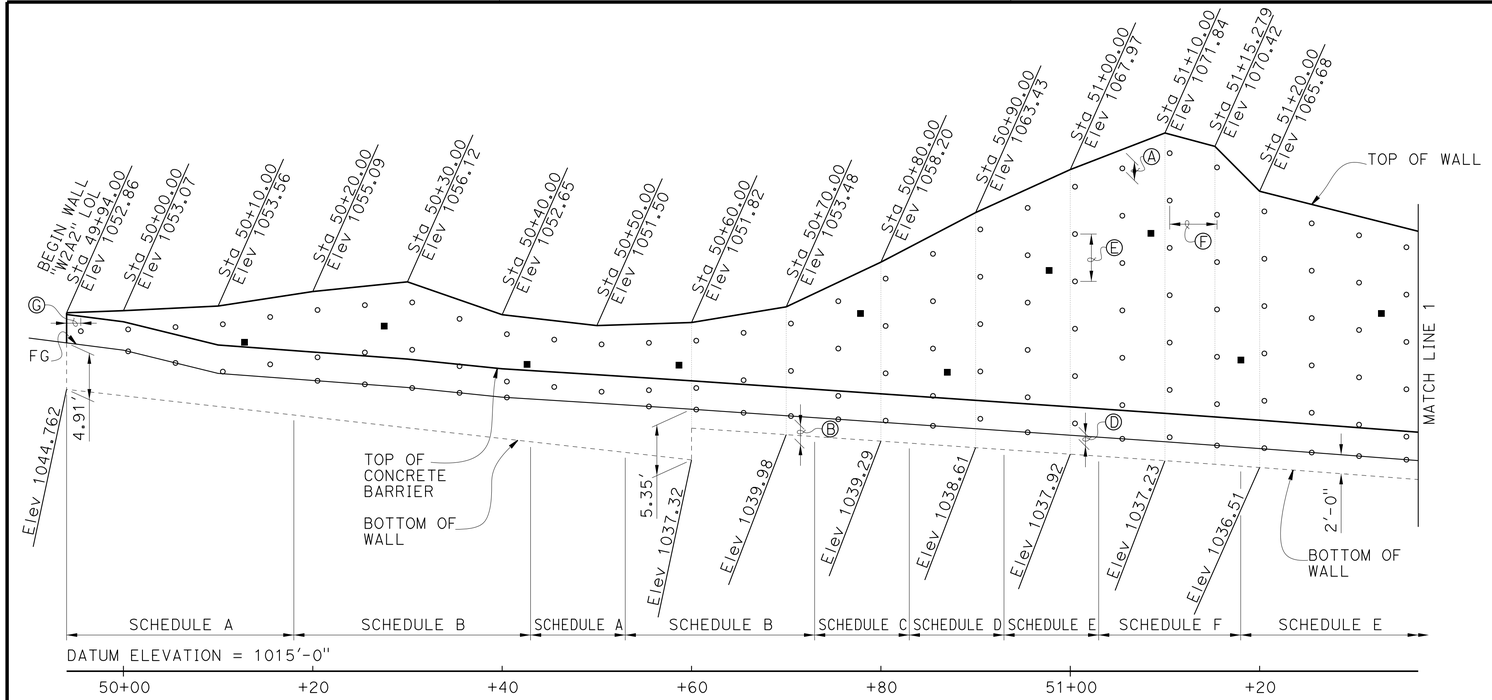

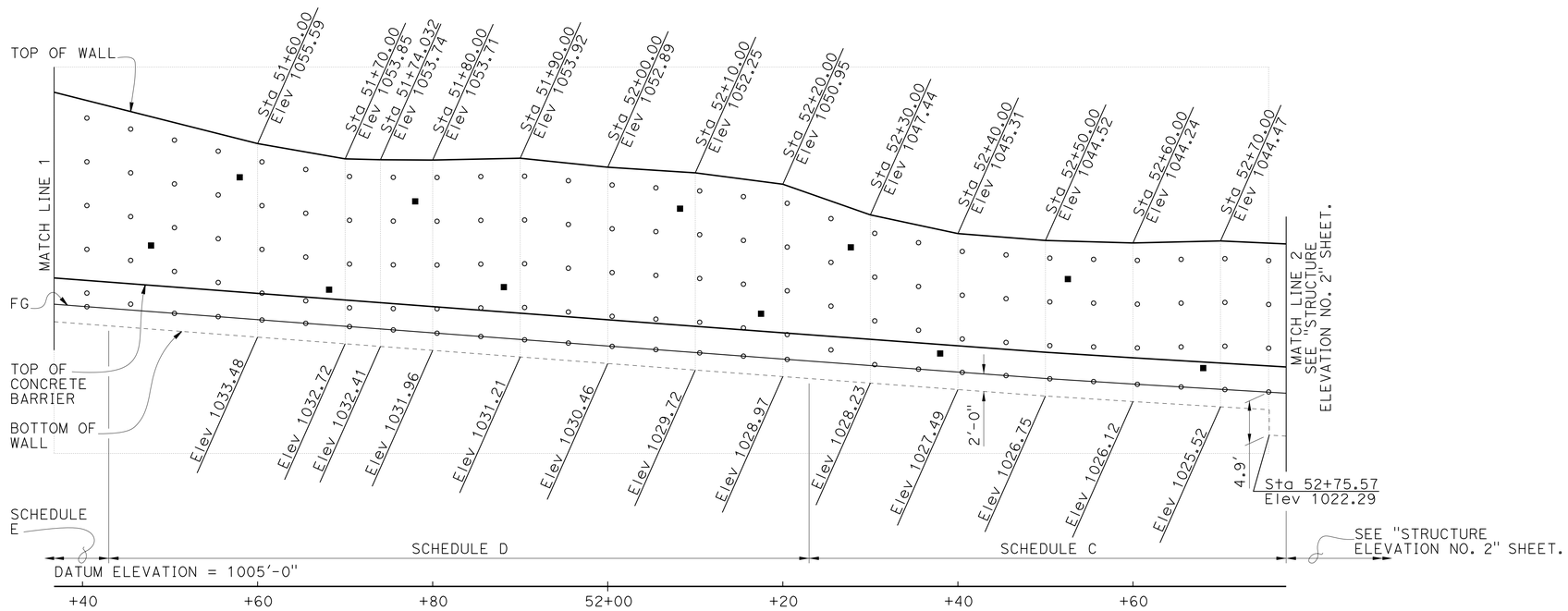

DEVELOPED ELEVATION

1/8" = 1'-0"

SCHEDULE D	BAR SIZE: #8				
NO. OF SOIL NAIL ROWS	5				
ROW NO. TOP TO BOTTOM	1	2	3	4	5
EMBEDMENT LENGTH (FT)	24	19	15	12	10

SCHEDULE A	BAR SIZE: #7	
NO. OF SOIL NAIL ROWS	2	
ROW NO. TOP TO BOTTOM	1	2
EMBEDMENT LENGTH (FT)	10	10

SCHEDULE E	BAR SIZE: #9					
NO. OF SOIL NAIL ROWS	6					
ROW NO. TOP TO BOTTOM	1	2	3	4	5	6
EMBEDMENT LENGTH (FT)	30	30	25	20	15	10

SCHEDULE B	BAR SIZE: #7		
NO. OF SOIL NAIL ROWS	3		
ROW NO. TOP TO BOTTOM	1	2	3
EMBEDMENT LENGTH (FT)	15	12	10

SCHEDULE F	BAR SIZE: #9						
NO. OF SOIL NAIL ROWS	7						
ROW NO. TOP TO BOTTOM	1	2	3	4	5	6	7
EMBEDMENT LENGTH (FT)	37	33	30	25	20	15	10

SCHEDULE C	BAR SIZE: #7			
NO. OF SOIL NAIL ROWS	4			
ROW NO. TOP TO BOTTOM	1	2	3	4
EMBEDMENT LENGTH (FT)	17	15	12	10

NOTES:

Ⓐ ST = Vertical distance from top of wall elevation to top level of soil nails, ST = 2'-0"

Ⓑ SB_1 = Vertical distance from bottom of wall to bottom level of the soil nails, SB1 (Min) = 2'-0", SB1 (Max) < 3'-6".

Ⓒ SB_2 = Vertical distance from finished grade to bottom level of the soil nails, SB2 = 1'-6"

Ⓓ Discontinue row when vertical distance between soil nails are less than 1'-6".

Ⓔ SV = Vertical spacing of soil nails, SV (Min) = 1'-6", SV (Max) = 5'-0".

Ⓕ SH = Horizontal spacing of soil nails, SH (Min) = 1'-6", SH (Max) = 5'-0".

Ⓖ SS = Horizontal distance between the begin/end wall and first/last soil nails, SS (Min) = 1'-6", SS (Max) = 2'-6".

Ⓗ The exact location of the test soil nails to be determined by the Engineer.

1. Cable railing posts are not shown for clarity.

LEGEND:
- o Indicates approximate location of soil nails
- ■ Indicates approximate location of proof test nails

DESIGN	BY S. Hegazi	CHECKED R. Amir	
DETAILS	BY T. Kusumi	CHECKED S. Hegazi / R. Amir	
QUANTITIES	BY R. Amir	CHECKED S. Hegazi	

STATE OF CALIFORNIA
DEPARTMENT OF TRANSPORTATION

DIVISION OF ENGINEERING SERVICES
STRUCTURE DESIGN
DESIGN BRANCH 8

BRIDGE NO. 37E0114
POST MILE 0.95/1.06

HECKER PASS SOIL NAIL WALL NO. 3
STRUCTURE ELEVATION NO. 1

STRUCTURES DESIGN DETAIL SHEET (ENGLISH) (REV. 09-01-10)

ORIGINAL SCALE IN INCHES FOR REDUCED PLANS 0 1 2 3

UNIT: 3593
PROJECT NUMBER & PHASE: 0400000813-1
CONTRACT NO.: 04-2A2501

DISREGARD PRINTS BEARING EARLIER REVISION DATES

REVISION DATES 07-06-11 04-30-12 03-04-13

SHEET 4 OF 20

FILE => 37e0114-f-strucelv01.dgn

USERNAME => s124096 DATE PLOTTED => 21-JUN-2013 TIME PLOTTED => 07:55

DIST	COUNTY	ROUTE	POST MILES TOTAL PROJECT	SHEET No.	TOTAL SHEETS
04	SCI	152	0.1/5.2	283	416

REGISTERED CIVIL ENGINEER 08-01-12 DATE

6-17-13
PLANS APPROVAL DATE

REGISTERED PROFESSIONAL ENGINEER
Sameh Hegazi
No. C64899
Exp. 06-30-2013
CIVIL
STATE OF CALIFORNIA

The State of California or its officers or agents shall not be responsible for the accuracy or completeness of electronic copies of this plan sheet.

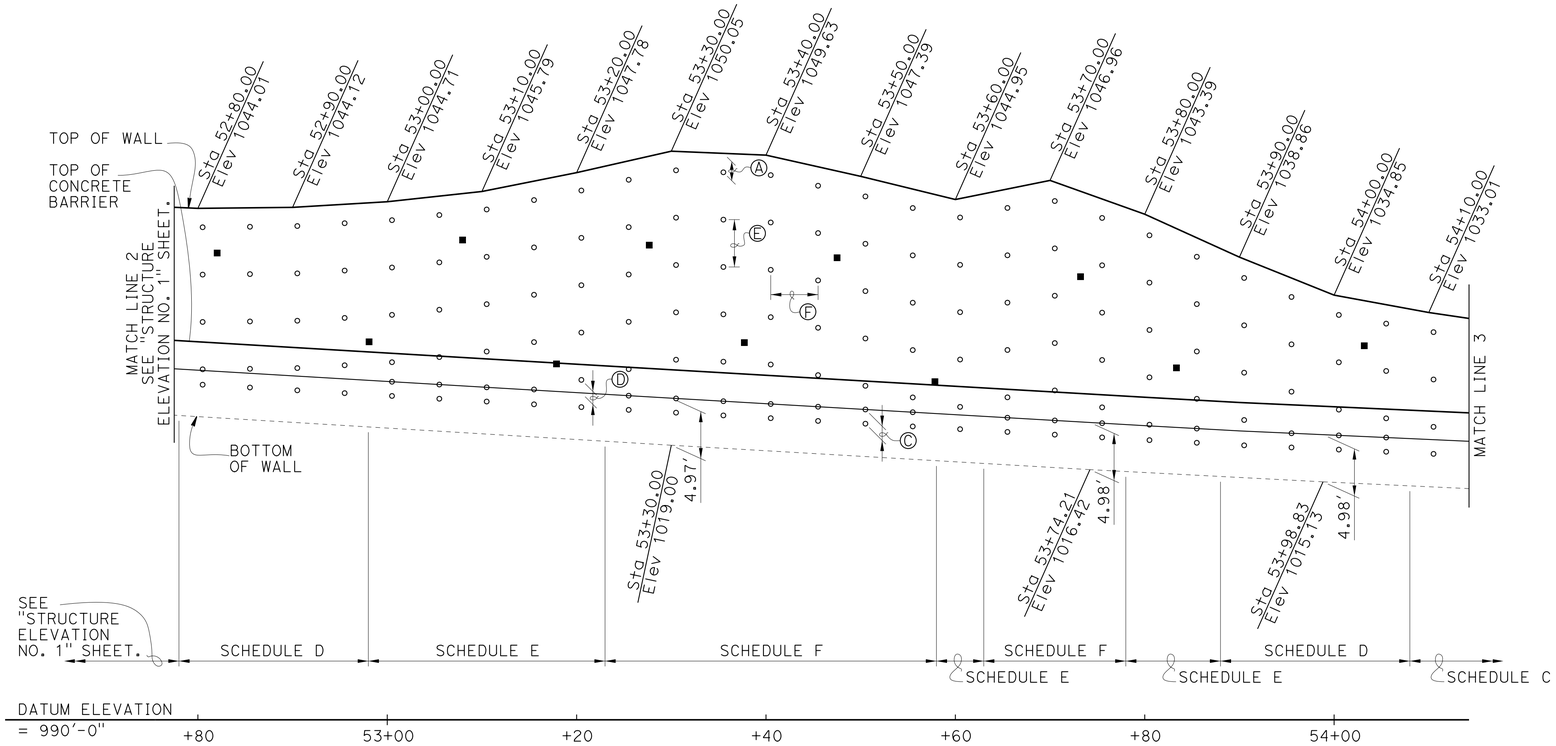

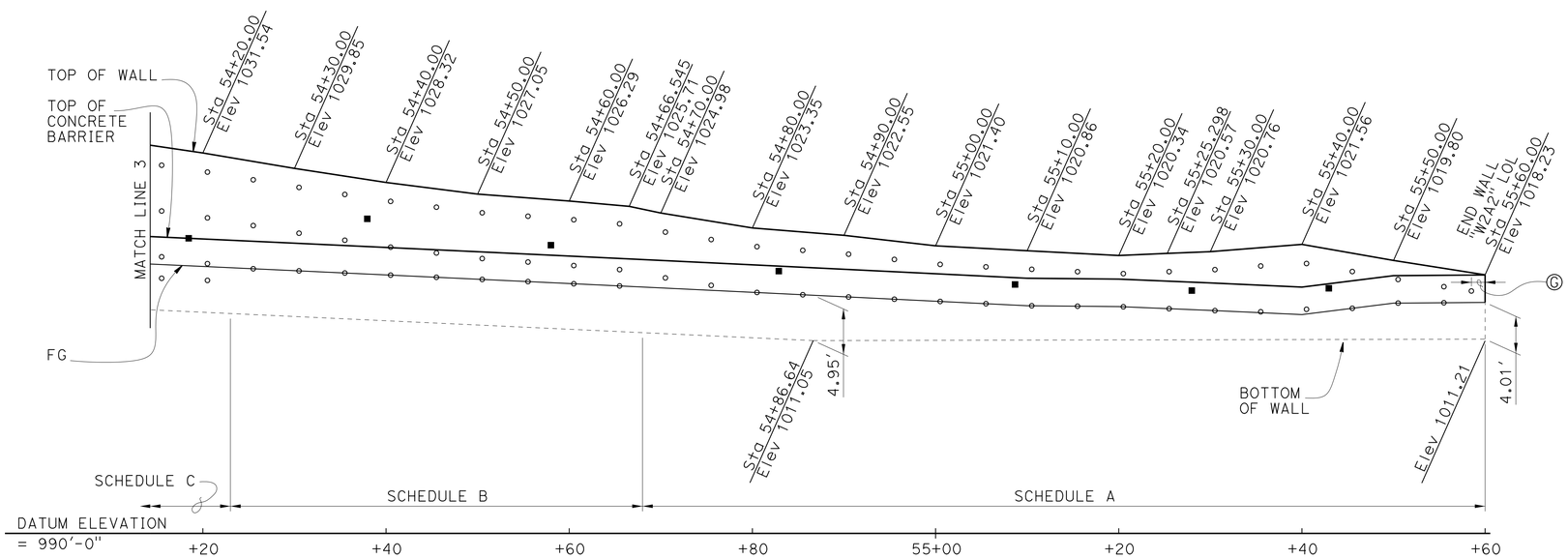

DEVELOPED ELEVATION

1/8" = 1'-0"

NOTE:
1. For production nails schedules and notes, see "STRUCTURE ELEVATION NO. 1" sheet.

LEGEND:
- o Indicates approximate location of soil nails
- ■ Indicates approximate location of proof test nails

	BY	CHECKED
DESIGN	S. Hegazi	R. Amir
DETAILS	T. Kusumi	S. Hegazi / R. Amir
QUANTITIES	R. Amir	S. Hegazi

STATE OF CALIFORNIA
DEPARTMENT OF TRANSPORTATION

DIVISION OF ENGINEERING SERVICES
STRUCTURE DESIGN
DESIGN BRANCH 8

BRIDGE NO. 37E0114
POST MILE 0.95/1.06

HECKER PASS SOIL NAIL WALL NO. 3
STRUCTURE ELEVATION NO. 2

STRUCTURES DESIGN DETAIL SHEET (ENGLISH) (REV. 09-01-10)

ORIGINAL SCALE IN INCHES FOR REDUCED PLANS 0 1 2 3

UNIT: 3593
PROJECT NUMBER & PHASE: 0400000813-1
CONTRACT NO.: 04-2A2501

DISREGARD PRINTS BEARING EARLIER REVISION DATES

REVISION DATES: 07-01-11 04-30-12 12-05-12

SHEET 5 OF 20

FILE => 37e0114-f-strucelv02.dgn

USERNAME => s124496 DATE PLOTTED => 21-JUN-2013 TIME PLOTTED => 07:55

DIST	COUNTY	ROUTE	POST MILES TOTAL PROJECT	SHEET No.	TOTAL SHEETS
04	SCI	152	0.1/5.2	284	416

REGISTERED CIVIL ENGINEER 05-15-13 DATE

6-17-13
PLANS APPROVAL DATE

REGISTERED PROFESSIONAL ENGINEER
Sameh Hegazi
No. C64899
Exp. 06-30-2013
CIVIL
STATE OF CALIFORNIA

The State of California or its officers or agents shall not be responsible for the accuracy or completeness of electronic copies of this plan sheet.

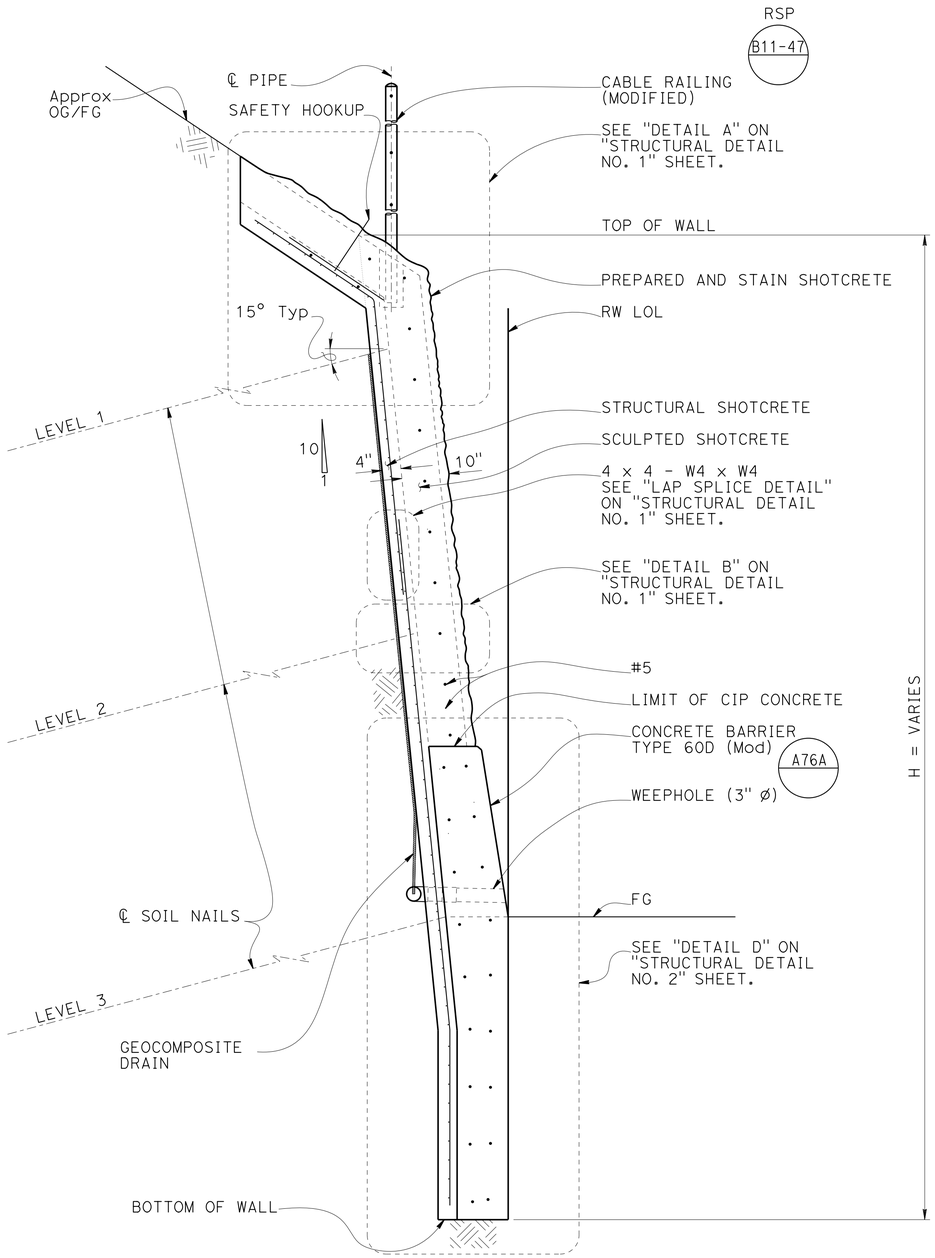

TYPICAL SECTION AT FOUNDATION DROP

3/4" = 1'-0"

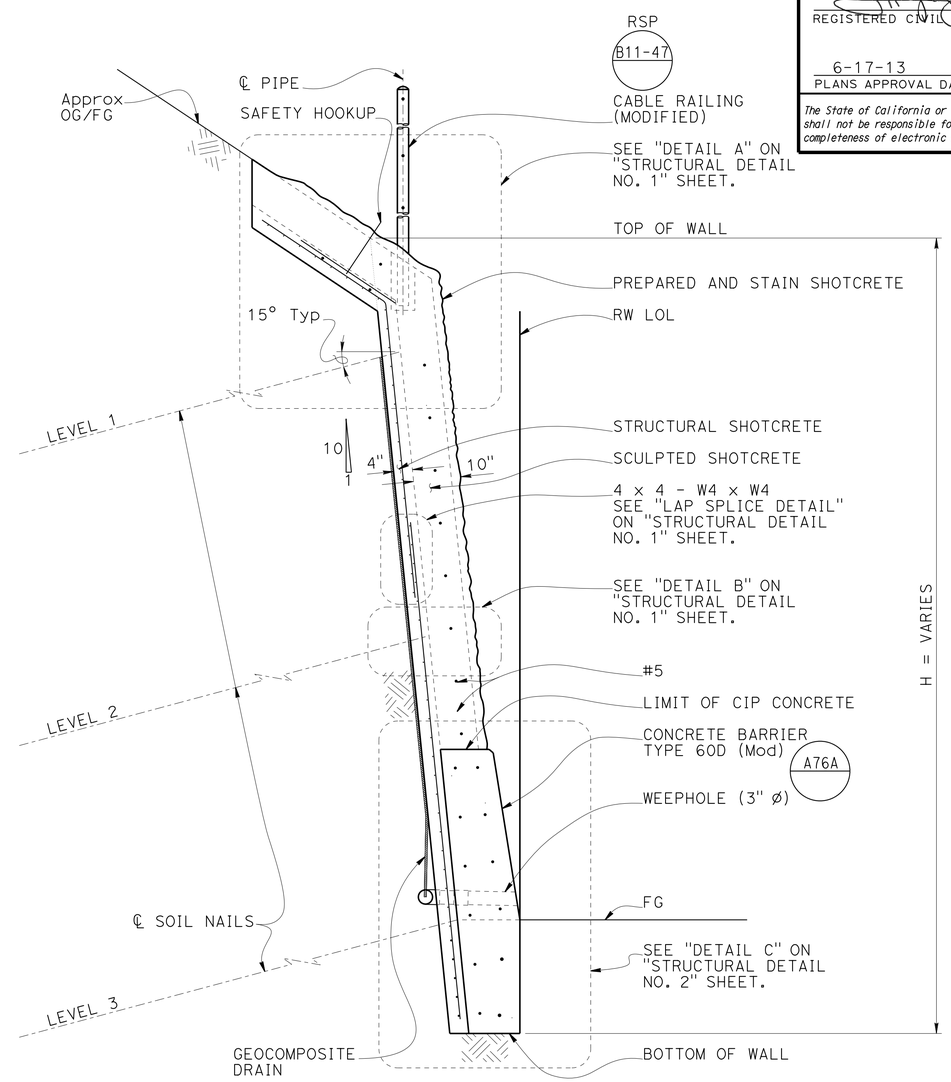

TYPICAL SECTION

3/4" = 1'-0"

NOTES:

1. For "PRODUCTION SOIL NAIL DETAIL" and "PROOF TEST SOIL NAIL DETAIL", see "STRUCTURAL DETAIL NO.3" sheet.
2. For sculpted shotcrete treatment, see "SCULPTED SHOTCRETE TREATMENT" sheets.
3. For geocomposite drain detail, see "DRAINAGE DETAILS NO. 2" sheet.

	BY	CHECKED
DESIGN	S. Hegazi	R. Amir
DETAILS	T. Kusumi	S. Hegazi / R. Amir
QUANTITIES	R. Amir	S. Hegazi

STATE OF CALIFORNIA
DEPARTMENT OF TRANSPORTATION

DIVISION OF ENGINEERING SERVICES
STRUCTURE DESIGN
DESIGN BRANCH 8

BRIDGE NO. 37E0114
POST MILE 0.95/1.06

HECKER PASS SOIL NAIL WALL NO. 3

TYPICAL SECTION

STRUCTURES DESIGN DETAIL SHEET (ENGLISH) (REV. 09-01-10)

ORIGINAL SCALE IN INCHES FOR REDUCED PLANS 0 1 2 3

UNIT: 3593
PROJECT NUMBER & PHASE: 0400000813-1
CONTRACT NO.: 04-2A2501

DISREGARD PRINTS BEARING EARLIER REVISION DATES

REVISION DATES: 06-16-11 07-18-12 05-10-13

SHEET 6 OF 20

FILE => 37e0114-g-_ts.dgn

USERNAME => s124036 DATE PLOTTED => 21-JUN-2013 TIME PLOTTED => 07:55

DIST	COUNTY	ROUTE	POST MILES TOTAL PROJECT	SHEET No.	TOTAL SHEETS
04	SCI	152	0.1/5.2	285	416

REGISTERED CIVIL ENGINEER 05-15-13 DATE

6-17-13
PLANS APPROVAL DATE

REGISTERED PROFESSIONAL ENGINEER Sameh Hegazi No. C64899 Exp. 06-30-2013 CIVIL STATE OF CALIFORNIA

The State of California or its officers or agents shall not be responsible for the accuracy or completeness of electronic copies of this plan sheet.

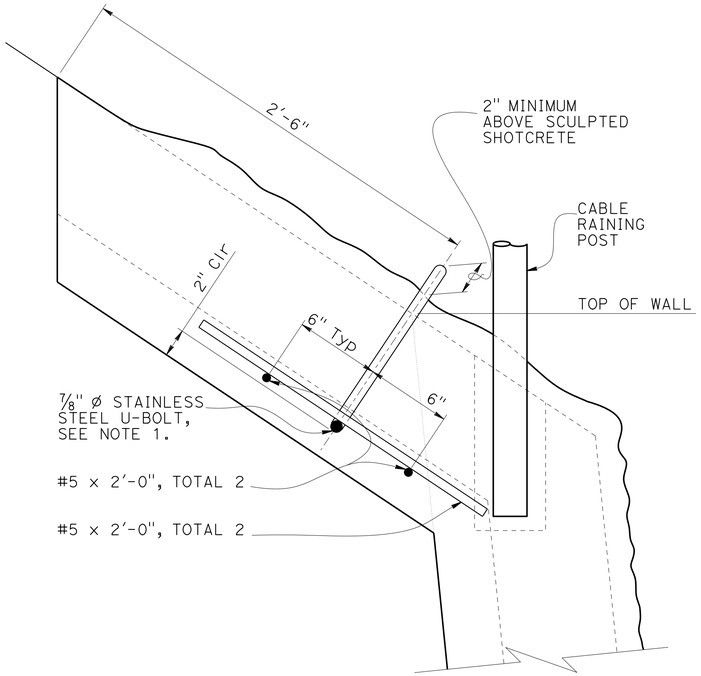

SAFETY HOOKUP DETAIL

No Scale

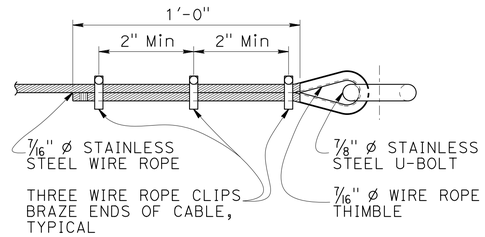

SAFETY WIRE ROPE DETAIL

No Scale

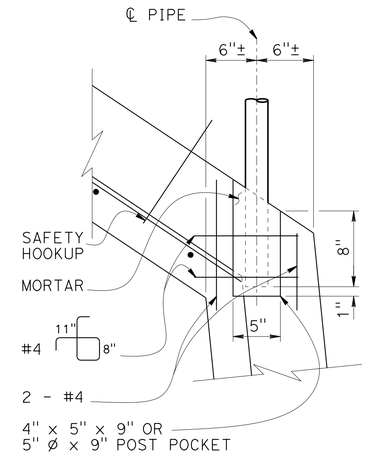

POST POCKET DETAIL

No Scale

RSP B11-47

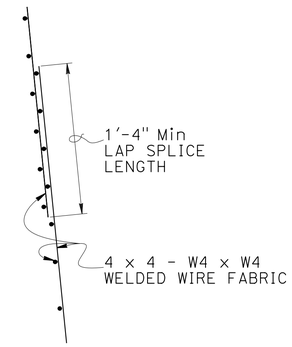

LAP SPLICE DETAIL

No Scale

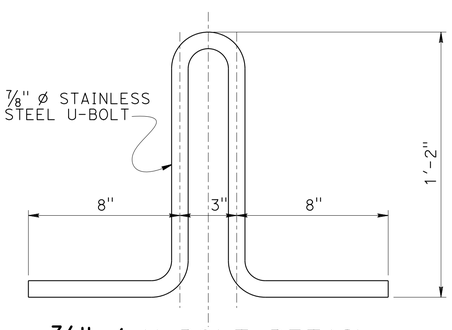

7/8" Ø U-BOLT DETAIL

3" = 1'-0"

NOTE:

Ⓐ For bearing plate and soil nail details not shown, see "STRUCTURAL DETAILS NO. 3" sheet.

1. Safety hookups shall be placed behind cable railing posts with 10'-0" Max spacing.
2. Safety wire rope shall be extended between safety hookups at top of wall.
3. Safety wire rope and safety hookups shall be placed at locations where wall heights from top of wall to finished grade exceed 5 feet.

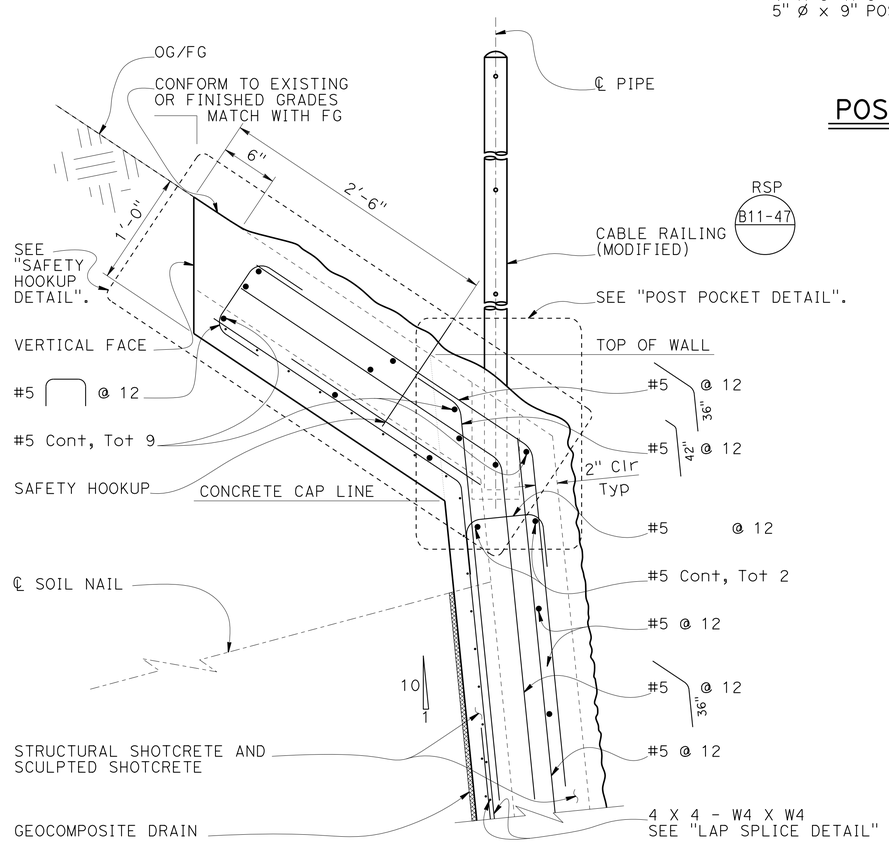

DETAIL A

1½" = 1'-0"

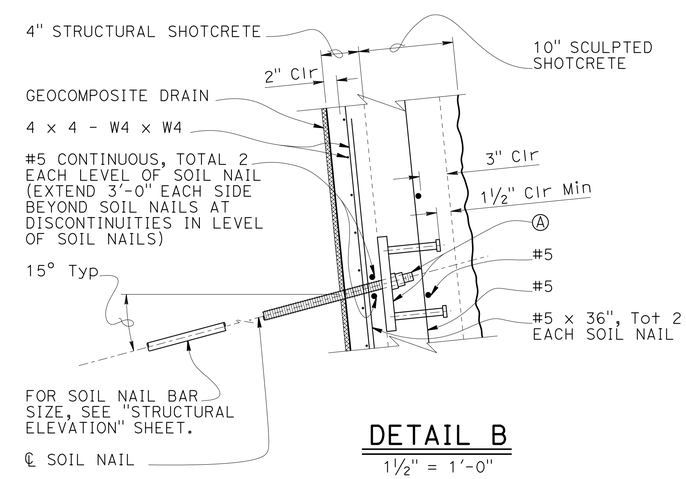

DETAIL B

1½" = 1'-0"

DESIGN	BY S. Hegazi	CHECKED R. Amir	
DETAILS	BY T. Kusumi	CHECKED S. Hegazi / R. Amir	
QUANTITIES	BY R. Amir	CHECKED S. Hegazi	

STATE OF CALIFORNIA
DEPARTMENT OF TRANSPORTATION

DIVISION OF ENGINEERING SERVICES
STRUCTURE DESIGN
DESIGN BRANCH 8

BRIDGE NO. 37E0114
POST MILE 0.95/1.06

HECKER PASS SOIL NAIL WALL NO. 3
STRUCTURAL DETAILS NO. 1

STRUCTURES DESIGN DETAIL SHEET (ENGLISH) (REV. 09-01-10)

ORIGINAL SCALE IN INCHES FOR REDUCED PLANS 0 1 2 3

UNIT: 3593
PROJECT NUMBER & PHASE: 0400000813-1
CONTRACT NO.: 04-2A2501

DISREGARD PRINTS BEARING EARLIER REVISION DATES

REVISION DATES: 06-09-11 05-10-13 07-18-13

SHEET 7 OF 20

FILE => 37e0114-g-stdt01.dgn

USERNAME => s124496 DATE PLOTTED => 21-JUN-2013 TIME PLOTTED => 07:55

DIST	COUNTY	ROUTE	POST MILES TOTAL PROJECT	SHEET No.	TOTAL SHEETS
04	SCI	152	0.1/5.2	286	416

REGISTERED CIVIL ENGINEER 05-15-13 DATE

6-17-13
PLANS APPROVAL DATE

REGISTERED PROFESSIONAL ENGINEER
Sameh Hegazi
No. C64899
Exp. 06-30-2013
CIVIL
STATE OF CALIFORNIA

The State of California or its officers or agents shall not be responsible for the accuracy or completeness of electronic copies of this plan sheet.

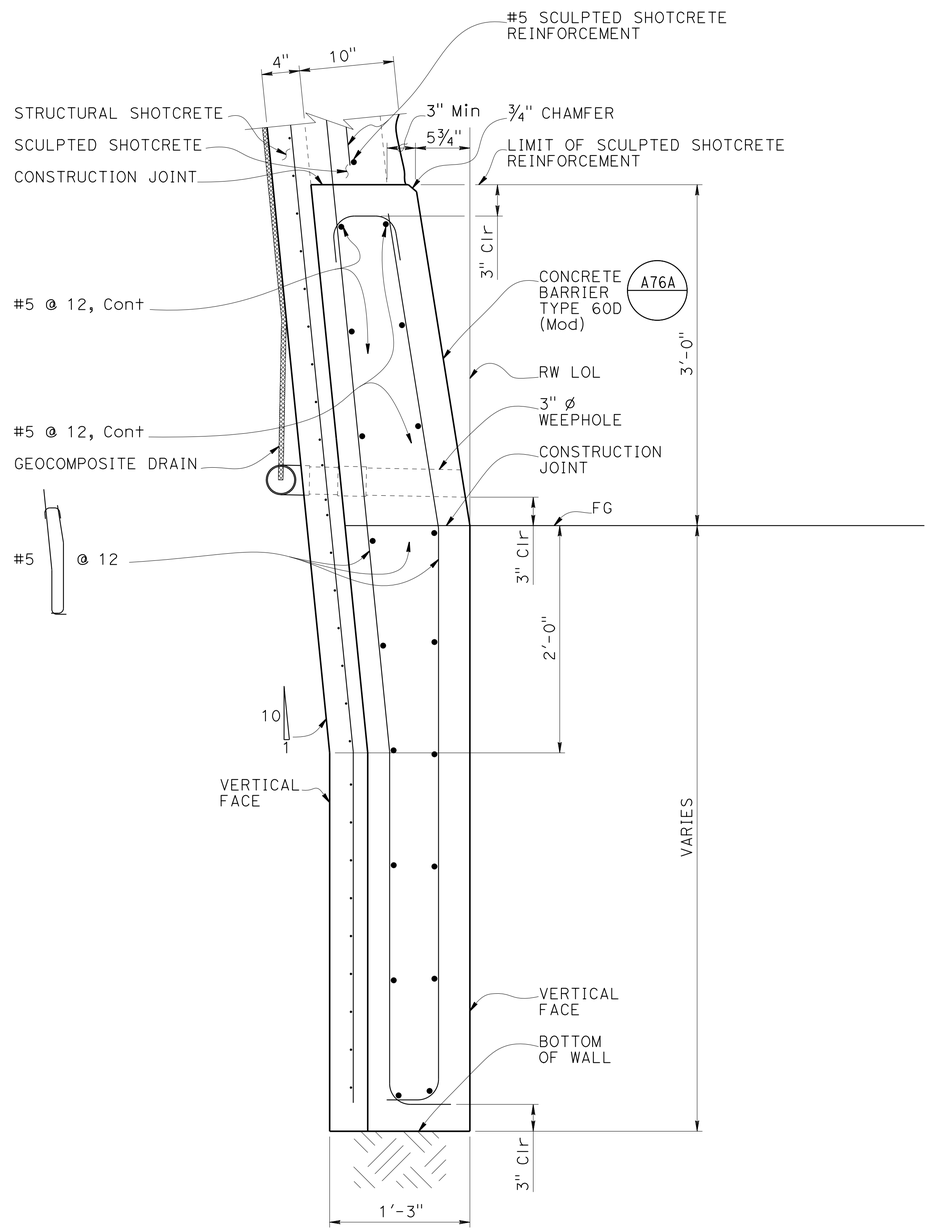

DETAIL D

1½" = 1'-0"

NOTE:
1. Soil nails not shown for clarity.
2. Concrete barrier shall be integrally colored.

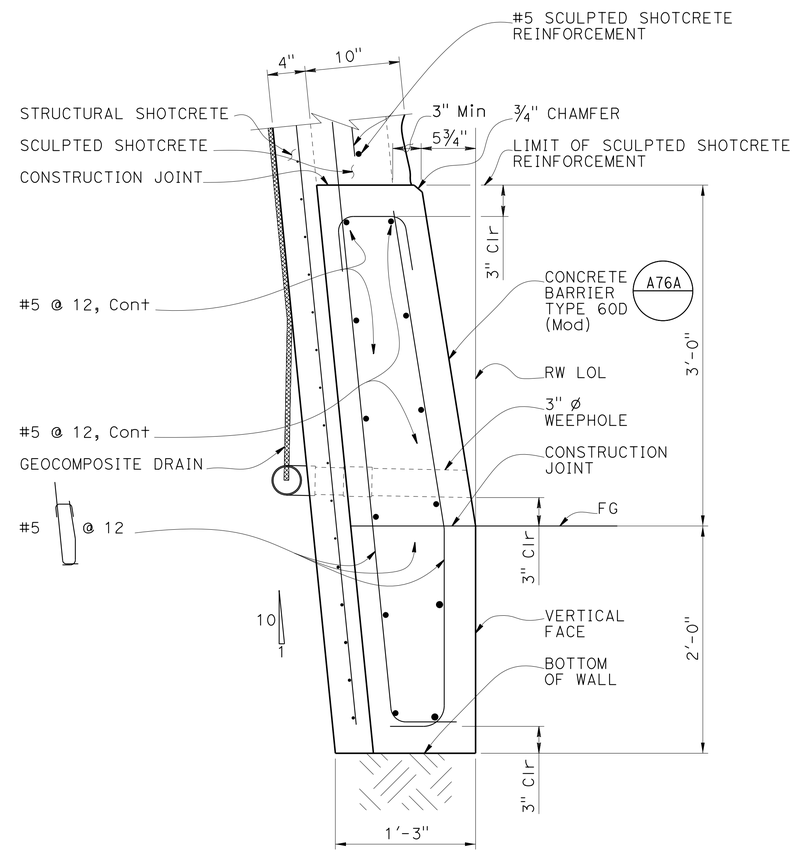

DETAIL C

1½" = 1'-0"

DESIGN	BY S. Hegazi	CHECKED R. Amir	
DETAILS	BY T. Kusumi	CHECKED S. Hegazi / R. Amir	
QUANTITIES	BY R. Amir	CHECKED S. Hegazi	

STATE OF CALIFORNIA
DEPARTMENT OF TRANSPORTATION

DIVISION OF ENGINEERING SERVICES
STRUCTURE DESIGN
DESIGN BRANCH 8

BRIDGE NO. 37E0114
POST MILE 0.95/1.06

HECKER PASS SOIL NAIL WALL NO. 3
STRUCTURAL DETAILS NO. 2

STRUCTURES DESIGN DETAIL SHEET (ENGLISH) (REV. 09-01-10)

ORIGINAL SCALE IN INCHES FOR REDUCED PLANS 0 1 2 3

UNIT: 3593
PROJECT NUMBER & PHASE: 0400000813-1
CONTRACT NO.: 04-2A2501

DISREGARD PRINTS BEARING EARLIER REVISION DATES →

REVISION DATES: 06-10-11 | 07-18-12 | 05-10-13

SHEET 8 OF 20

FILE => 37e0114-g-stdt02.dgn

USERNAME => s124936 DATE PLOTTED => 21-JUN-2013 TIME PLOTTED => 07:55

DIST	COUNTY	ROUTE	POST MILES TOTAL PROJECT	SHEET No.	TOTAL SHEETS
04	SCI	152	0.1/5.2	287	416

REGISTERED CIVIL ENGINEER 08-01-12 DATE

6-17-13
PLANS APPROVAL DATE

REGISTERED PROFESSIONAL ENGINEER Sameh Hegazi No. C64899 Exp. 06-30-2013 CIVIL STATE OF CALIFORNIA

The State of California or its officers or agents shall not be responsible for the accuracy or completeness of electronic copies of this plan sheet.

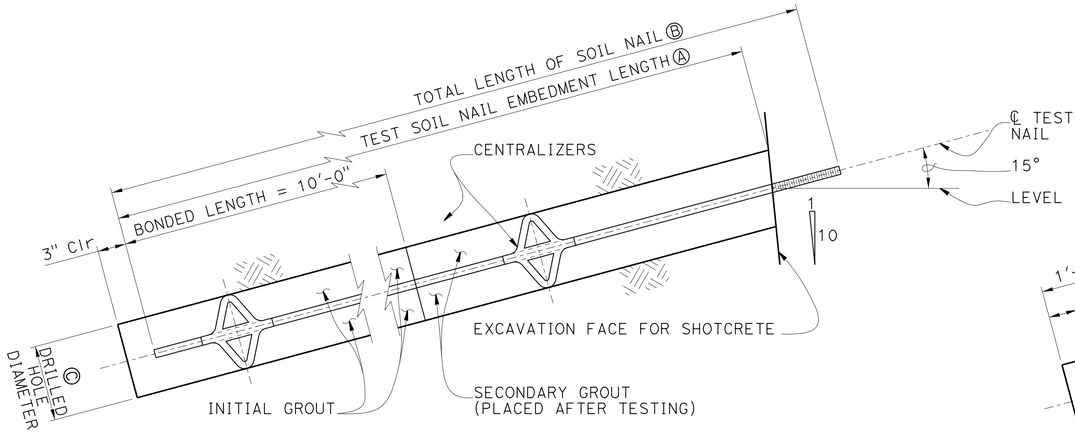

PROOF TEST SOIL NAIL DETAIL

No Scale

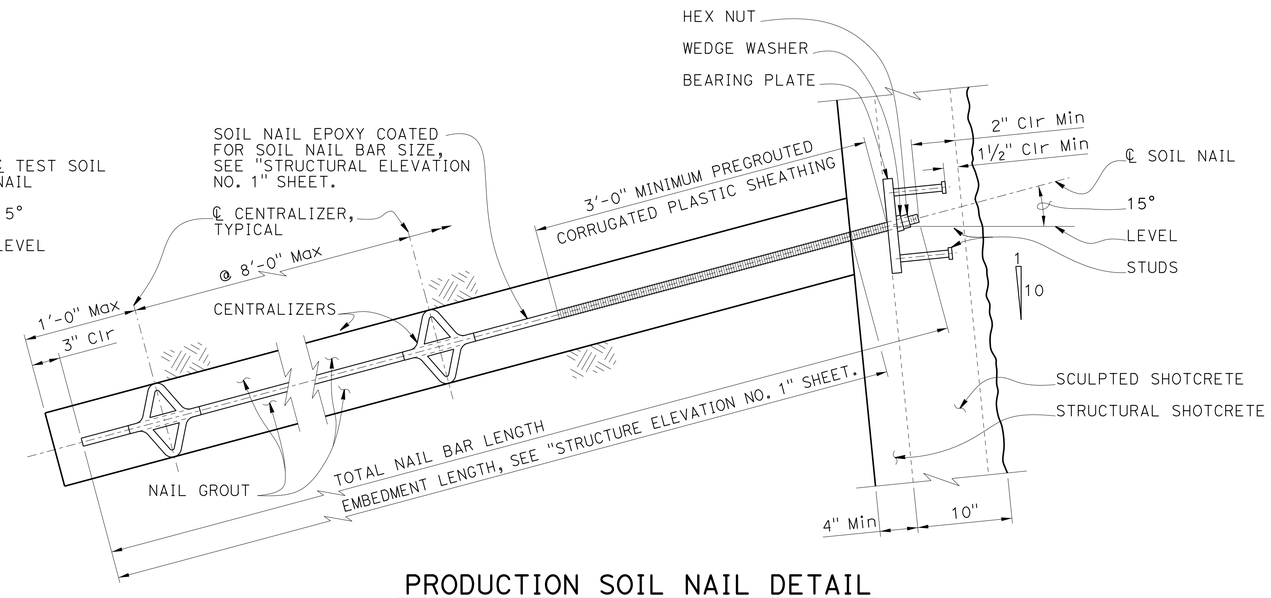

PRODUCTION SOIL NAIL DETAIL

No Scale

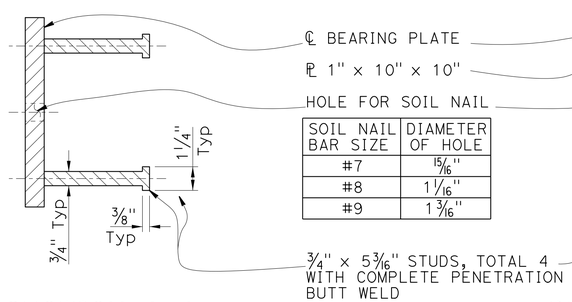

SOIL NAIL BAR SIZE	DIAMETER OF HOLE
#7	15/16"
#8	1 1/16"
#9	1 3/16"

SECTION A-A

No Scale

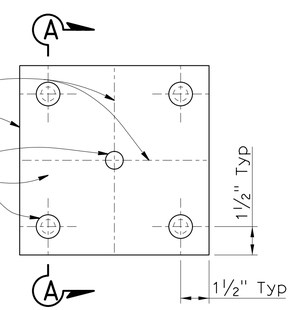

BEARING PLATE DETAIL

No Scale

NOTES:
1. Geocomposite drain not shown for clarity.
2. Wall reinforcement not shown for clarity.
3. Finished grout surface to be normal to the bar

Ⓐ Embedment length of test soil nails equals 2/3 of embedment length of adjacent production soil nails, but not less than 12'-0".

Ⓑ Total length of test soil nail equals embedment length plus length required for jacking equipment.

Ⓒ Contractor to determine drilled hole diameter.

DESIGN	BY S. Hegazi	CHECKED R. Amir	
DETAILS	BY T. Kusumi	CHECKED S. Hegazi / R. Amir	
QUANTITIES	BY R. Amir	CHECKED S. Hegazi	

STATE OF CALIFORNIA
DEPARTMENT OF TRANSPORTATION

DIVISION OF ENGINEERING SERVICES
STRUCTURE DESIGN
DESIGN BRANCH 8

BRIDGE NO. 37E0114
POST MILE 0.95/1.06

HECKER PASS SOIL NAIL WALL NO. 3
STRUCTURAL DETAILS NO. 3

STRUCTURES DESIGN DETAIL SHEET (ENGLISH) (REV. 09-01-10)

ORIGINAL SCALE IN INCHES FOR REDUCED PLANS 0 1 2 3

UNIT: 3593
PROJECT NUMBER & PHASE: 0400000813-1
CONTRACT NO.: 04-2A2501

DISREGARD PRINTS BEARING EARLIER REVISION DATES

REVISION DATES: 06-30-11 06-26-12 04-30-13

SHEET 9 OF 20

FILE => 37e0114-g-stdt03.dgn

USERNAME => s124436 DATE PLOTTED => 21-JUN-2013 TIME PLOTTED => 07:55

DIST	COUNTY	ROUTE	POST MILES TOTAL PROJECT	SHEET No.	TOTAL SHEETS
04	SCI	152	0.1/5.2	288	416

REGISTERED CIVIL ENGINEER 05-15-13 DATE

6-17-13
PLANS APPROVAL DATE

REGISTERED PROFESSIONAL ENGINEER
Sameh Hegazi
No. C64899
Exp. 06-30-2013
CIVIL
STATE OF CALIFORNIA

The State of California or its officers or agents shall not be responsible for the accuracy or completeness of electronic copies of this plan sheet.

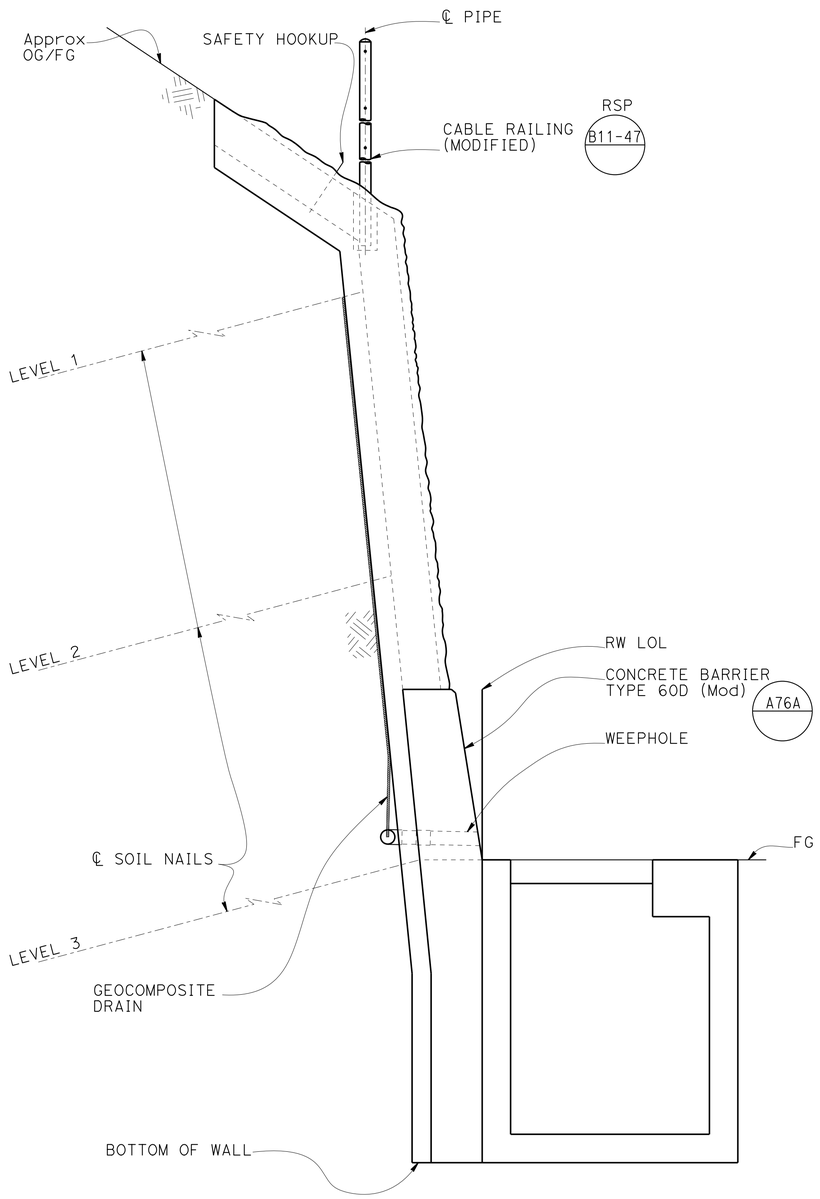

TYPICAL SECTION WITH DROP INLET

No Scale

NOTES:
1. For drainage details not shown, see "ROADWAY PLANS".
2. For drop inlet type, locations and elevations, see "ROADWAY PLANS".
3 Engineer must adjust bottom elevation to accommodate drainage system shown on "ROADWAY PLANS".
4. Bottom of wall to be placed against undisturbed material.
5. Drop inlets shall be centered vertically between soil nails.

	BY	CHECKED
DESIGN	S. Hegazi	R. Amir
DETAILS	T. Kusumi	S. Hegazi / R. Amir
QUANTITIES	R. Amir	S. Hegazi

STATE OF CALIFORNIA
DEPARTMENT OF TRANSPORTATION

DIVISION OF ENGINEERING SERVICES
STRUCTURE DESIGN
DESIGN BRANCH 8

BRIDGE NO. 37E0114
POST MILE 0.95/1.06

HECKER PASS SOIL NAIL WALL NO. 3
DRAINAGE DETAIL NO. 1

STRUCTURES DESIGN DETAIL SHEET (ENGLISH) (REV. 09-01-10)

ORIGINAL SCALE IN INCHES FOR REDUCED PLANS 0 1 2 3

UNIT: 3593
PROJECT NUMBER & PHASE: 0400000813-1
CONTRACT NO.: 04-2A2501

DISREGARD PRINTS BEARING EARLIER REVISION DATES

REVISION DATES: 06-17-11 07-18-12 05-10-13

SHEET 10 OF 20

FILE => 37e0114-r-dd01.dgn

USERNAME => s124496 DATE PLOTTED => 21-JUN-2013 TIME PLOTTED => 07:55

DIST	COUNTY	ROUTE	POST MILES TOTAL PROJECT	SHEET No.	TOTAL SHEETS
04	SCI	152	0.1/5.2	289	416

REGISTERED CIVIL ENGINEER 08-01-12 DATE

6-17-13
PLANS APPROVAL DATE

REGISTERED PROFESSIONAL ENGINEER
Sameh Hegazi
No. C64899
Exp. 06-30-2013
CIVIL
STATE OF CALIFORNIA

The State of California or its officers or agents shall not be responsible for the accuracy or completeness of electronic copies of this plan sheet.

NOTES:
1. Wall reinforcement not shown for clarity.

Ⓐ Indicates soil nail locations.

Ⓑ Center of geocomposite strips shall be centered vertically between soil nails.

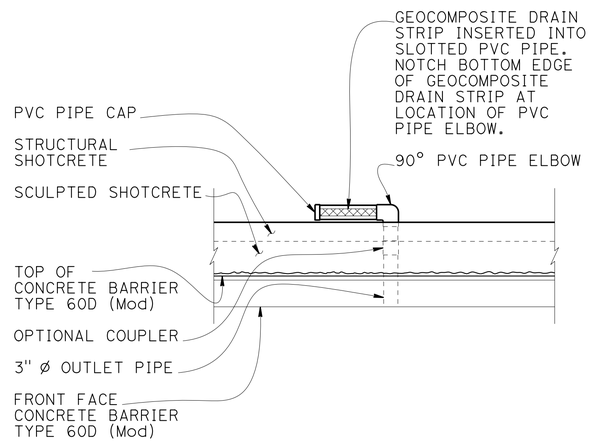

SECTION C-C

No Scale

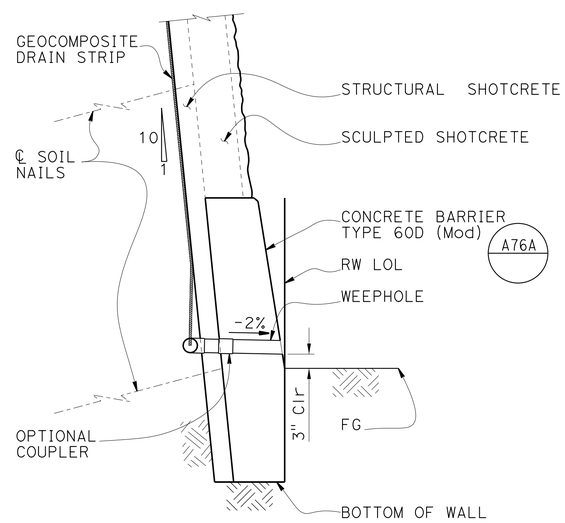

SECTION B-B

3/4" = 1'-0"

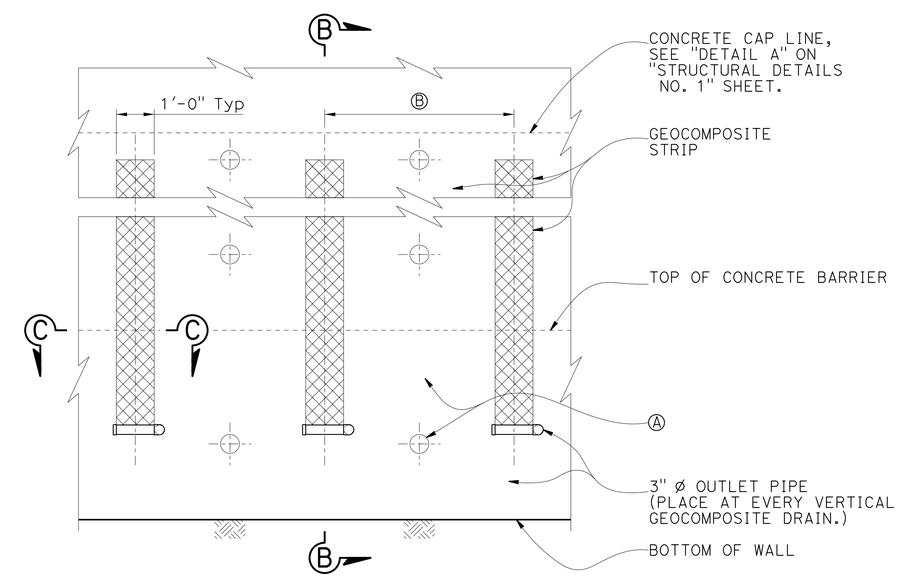

WALL PART ELEVATION

No Scale

DESIGN	BY S. Hegazi	CHECKED R. Amir	
DETAILS	BY T. Kusumi	CHECKED S. Hegazi / R. Amir	
QUANTITIES	BY R. Amir	CHECKED S. Hegazi	

STATE OF CALIFORNIA
DEPARTMENT OF TRANSPORTATION

DIVISION OF ENGINEERING SERVICES
STRUCTURE DESIGN
DESIGN BRANCH 8

BRIDGE NO. 37E0114
POST MILE 0.95/1.06

HECKER PASS SOIL NAIL WALL NO. 3
DRAINAGE DETAILS NO. 2

STRUCTURES DESIGN DETAIL SHEET (ENGLISH) (REV. 09-01-10)

ORIGINAL SCALE IN INCHES FOR REDUCED PLANS 0 1 2 3

UNIT: 3593
PROJECT NUMBER & PHASE: 0400000813-1
CONTRACT NO.: 04-2A2501

DISREGARD PRINTS BEARING EARLIER REVISION DATES

REVISION DATES: 06-17-11 07-18-12 04-30-13

SHEET 11 OF 20

FILE => 37e0114-r-dd+02.dgn

USERNAME => s124496 DATE PLOTTED => 21-JUN-2013 TIME PLOTTED => 07:56

DIST	COUNTY	ROUTE	POST MILES TOTAL PROJECT	SHEET No.	TOTAL SHEETS
04	SCI	152	0.1/5.2	290	416

REGISTERED CIVIL ENGINEER 08-01-12 DATE

6-17-13
PLANS APPROVAL DATE

REGISTERED PROFESSIONAL ENGINEER
Sameh Hegazi
No. C64899
Exp. 06-30-2013
CIVIL
STATE OF CALIFORNIA

The State of California or its officers or agents shall not be responsible for the accuracy or completeness of electronic copies of this plan sheet.

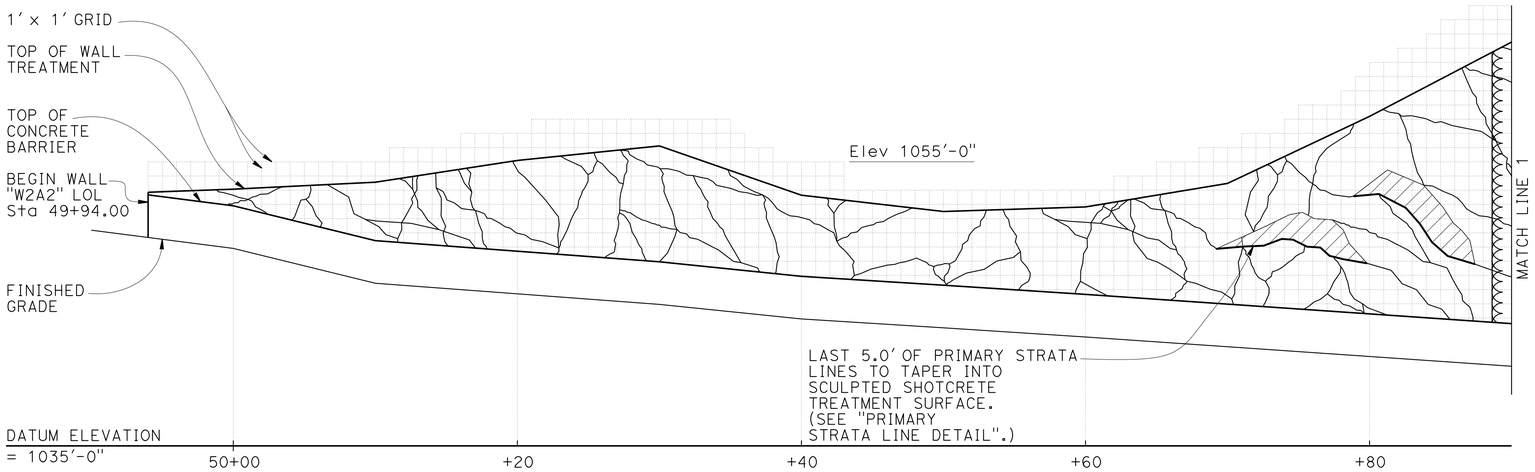

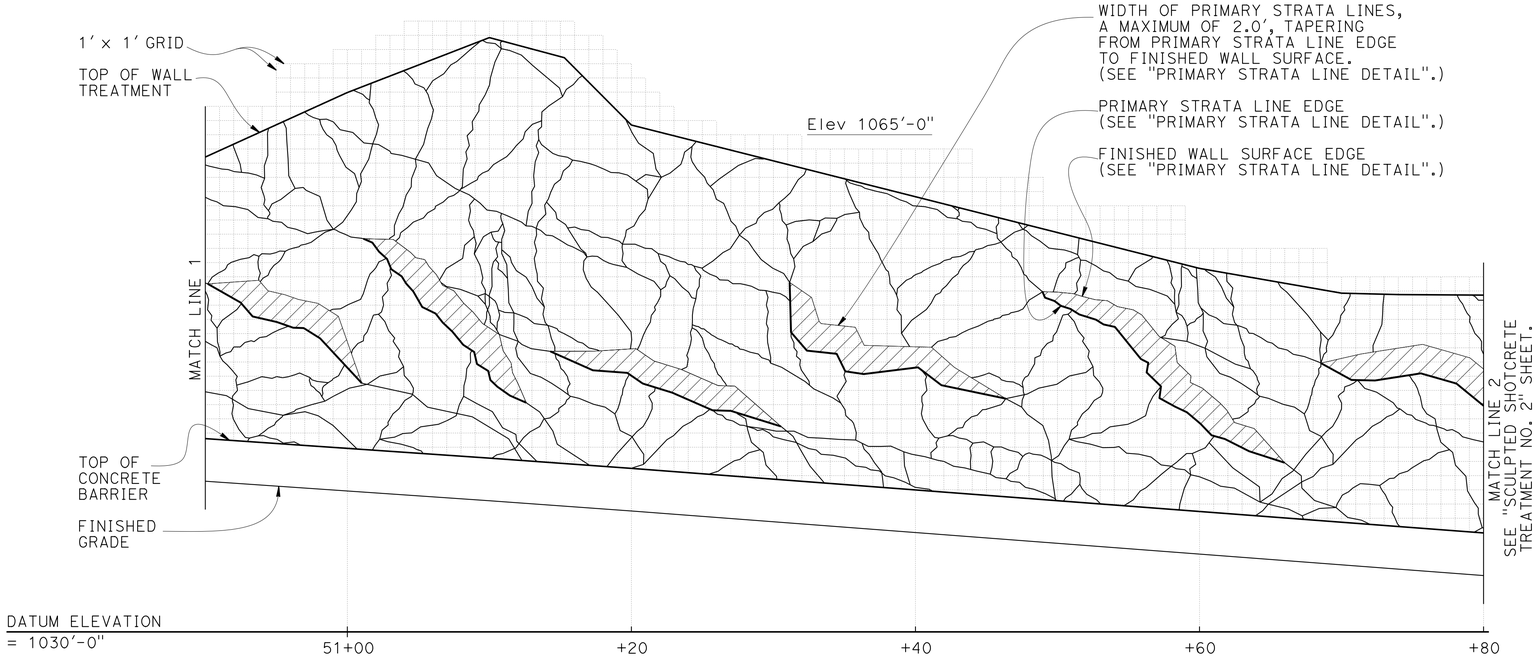

SCULPTED SHOTCRETE SURFACE TREATMENT

3/16" = 1'-0"

LEGEND:

1. PRIMARY STRATA LINES

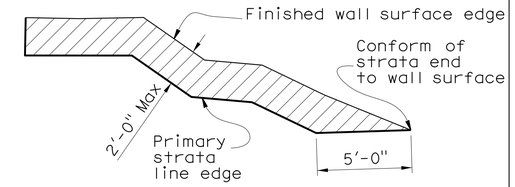

2. SECONDARY STRATA LINES

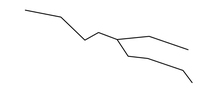

3. Indicates location of weakened planes joint. Joints should not be placed within 18 inches of a nail head. For details, see B0-3 / 3-2

NOTES:

1. Primary strata lines drawn on the front elevation are to be used as a guide for layout of primary strata line reinforcement. See "SCULPTED SHOTCRETE TREATMENT DETAILS NO. 1" and "SCULPTED SHOTCRETE TREATMENT DETAILS NO. 2" sheets.
2. Secondary strata lines drawn on the front elevation are to be used as a general guide. Strata lines shall be sculpted to mimic local geology.
3. This sheet is accurate for sculpted shotcrete treatment only.
4. Sculpted shotcrete surface treatment shall be continuous throughout the face of the wall.
5. Additional shotcrete needed for carving the primary strata lines to be reinforced as shown on "SCULPTED SHOTCRETE TREATMENT DETAILS NO. 1" and "SCULPTED SHOTCRETE TREATMENT DETAILS NO. 2" sheets.
6. Primary strata lines to be tapered into the top and bottom of wall.
7. Secondary strata lines are not to exceed 2" amplitude.
8. 3" ø weepholes are not shown.
9. Cable railing is not shown.

	BY	CHECKED
DESIGN	S. Hegazi	R. Amir
DETAILS	T. Kusumi	S. Hegazi / R. Amir
QUANTITIES	R. Amir	S. Hegazi

STATE OF CALIFORNIA
DEPARTMENT OF TRANSPORTATION

DIVISION OF ENGINEERING SERVICES
STRUCTURE DESIGN
DESIGN BRANCH 8

BRIDGE NO. 37E0114
POST MILE 0.95/1.06

HECKER PASS SOIL NAIL WALL NO. 3
SCULPTED SHOTCRETE TREATMENT NO. 1

STRUCTURES DESIGN DETAIL SHEET (ENGLISH) (REV. 09-01-10)

ORIGINAL SCALE IN INCHES FOR REDUCED PLANS 0 1 2 3

UNIT: 3593
PROJECT NUMBER & PHASE: 0400000813-1
CONTRACT NO.: 04-2A2501

DISREGARD PRINTS BEARING EARLIER REVISION DATES

REVISION DATES: 01-06-11 02-02-12 07-18-12

SHEET 12 OF 20

FILE => 37e0114-u-arch01.dgn

USERNAME => s124496 DATE PLOTTED => 21-JUN-2013 TIME PLOTTED => 07:56

DIST	COUNTY	ROUTE	POST MILES TOTAL PROJECT	SHEET No.	TOTAL SHEETS
04	SCI	152	0.1/5.2	291	416

REGISTERED CIVIL ENGINEER 08-01-12 DATE

6-17-13
PLANS APPROVAL DATE

REGISTERED PROFESSIONAL ENGINEER
Sameh Hegazi
No. C64899
Exp. 06-30-2013
CIVIL
STATE OF CALIFORNIA

The State of California or its officers or agents shall not be responsible for the accuracy or completeness of electronic copies of this plan sheet.

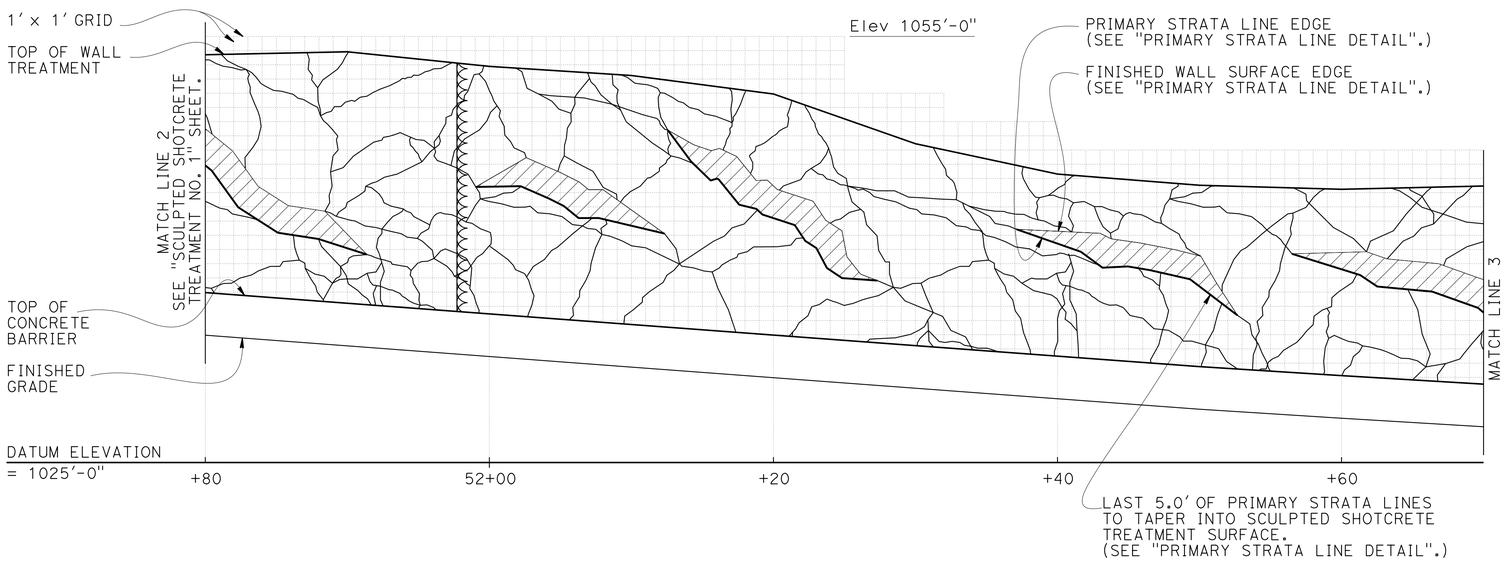

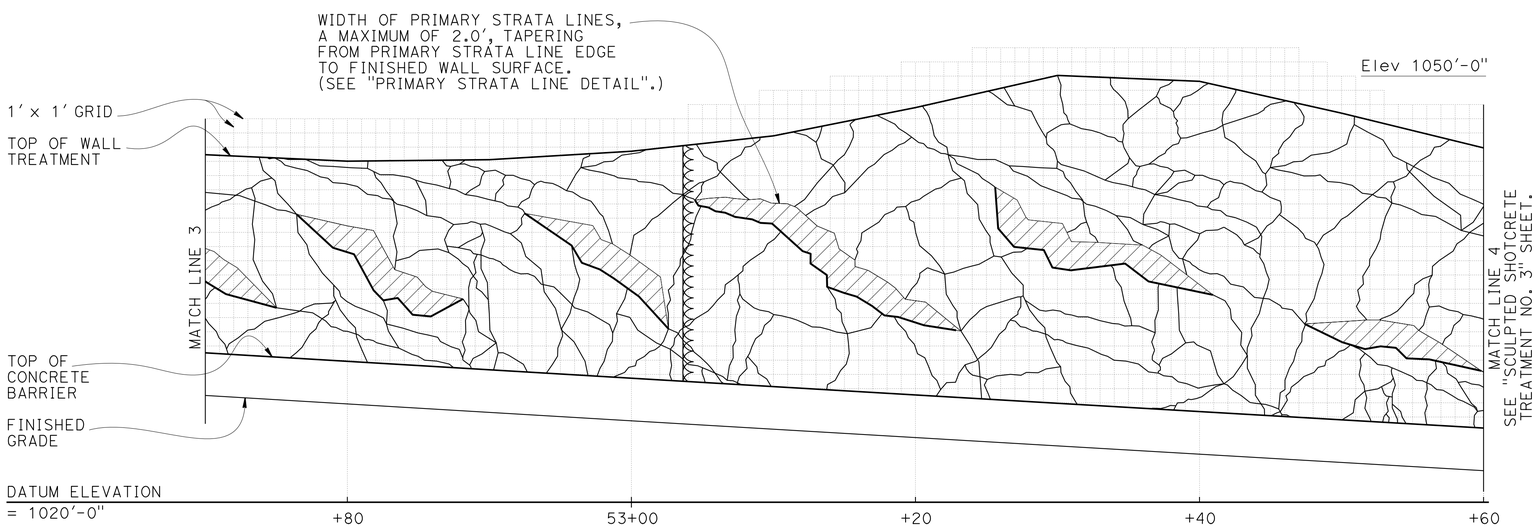

NOTE:
For notes and legend, see "SCULPTED SHOTCRETE TREATMENT NO. 1" sheet.

SCULPTED SHOTCRETE SURFACE TREATMENT

3/16" = 1'-0"

DESIGN	BY S. Hegazi	CHECKED R. Amir	
DETAILS	BY T. Kusumi	CHECKED S. Hegazi / R. Amir	
QUANTITIES	BY R. Amir	CHECKED S. Hegazi	

STATE OF CALIFORNIA
DEPARTMENT OF TRANSPORTATION

DIVISION OF ENGINEERING SERVICES
STRUCTURE DESIGN
DESIGN BRANCH 8

BRIDGE NO. 37E0114
POST MILE 0.95/1.06

HECKER PASS SOIL NAIL WALL NO. 3
SCULPTED SHOTCRETE TREATMENT NO. 2

STRUCTURES DESIGN DETAIL SHEET (ENGLISH) (REV. 09-01-10)

ORIGINAL SCALE IN INCHES FOR REDUCED PLANS 0 1 2 3

UNIT: 3593
PROJECT NUMBER & PHASE: 0400000813-1
CONTRACT NO.: 04-2A2501

DISREGARD PRINTS BEARING EARLIER REVISION DATES

REVISION DATES: 01-06-11 02-02-12 07-18-12

SHEET 13 OF 20

FILE => 37e0114-u-arch02.dgn

USERNAME => s124496 DATE PLOTTED => 21-JUN-2013 TIME PLOTTED => 07:56

DIST	COUNTY	ROUTE	POST MILES TOTAL PROJECT	SHEET No.	TOTAL SHEETS
04	SCI	152	0.1/5.2	292	416

REGISTERED CIVIL ENGINEER 08-01-12 DATE

6-17-13
PLANS APPROVAL DATE

REGISTERED PROFESSIONAL ENGINEER
Sameh Hegazi
No. C64899
Exp. 06-30-2013
CIVIL
STATE OF CALIFORNIA

The State of California or its officers or agents shall not be responsible for the accuracy or completeness of electronic copies of this plan sheet.

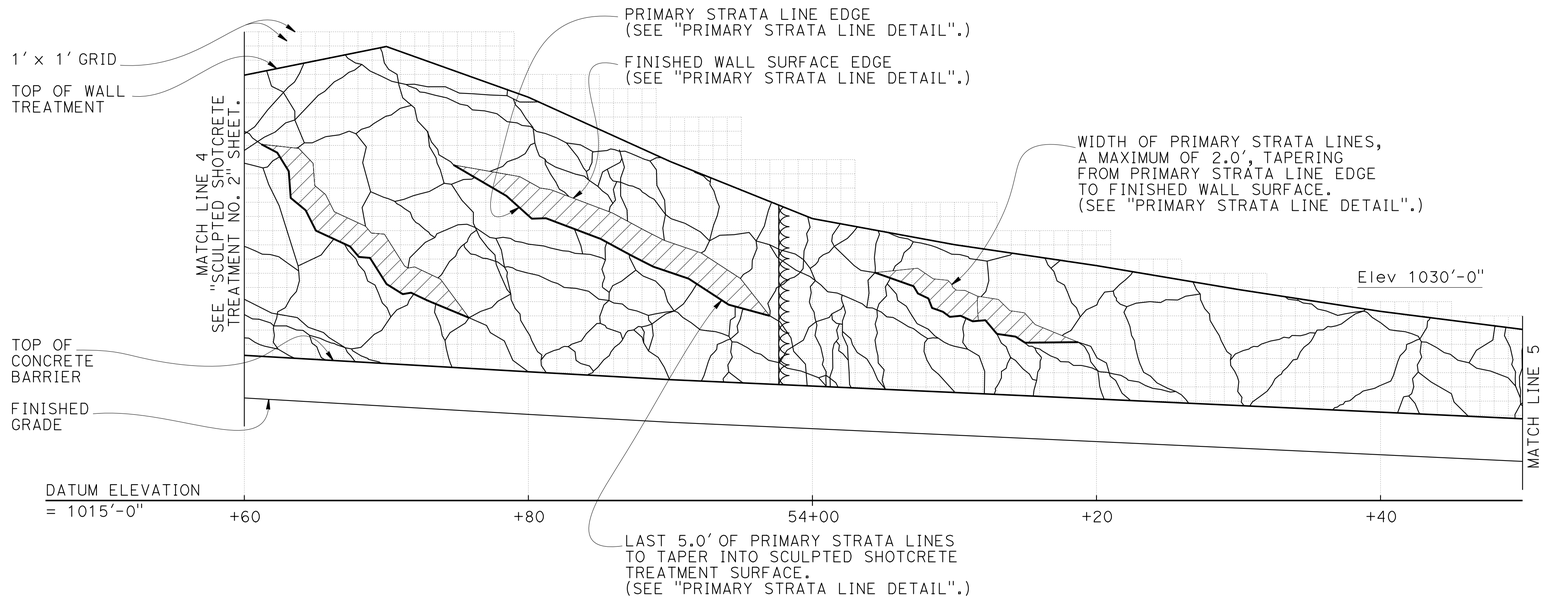

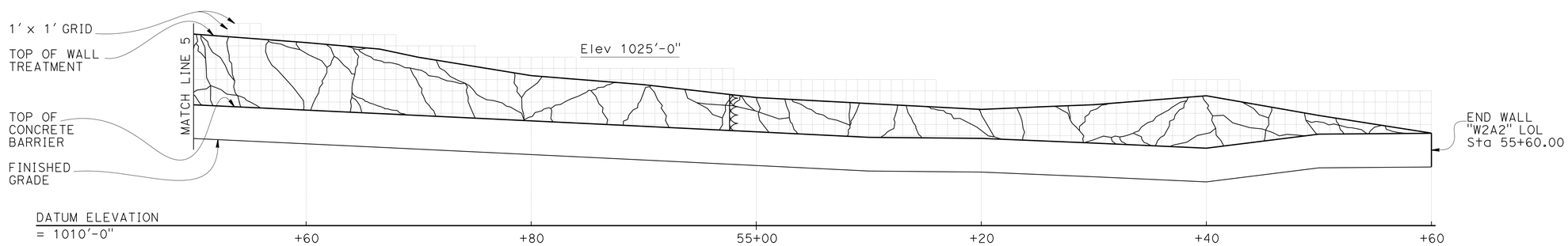

NOTE:
For notes and legend, see "SCULPTED SHOTCRETE TREATMENT NO. 1" sheet.

SCULPTED SHOTCRETE SURFACE TREATMENT

3/16" = 1'-0"

	BY	CHECKED
DESIGN	S. Hegazi	R. Amir
DETAILS	T. Kusumi	S. Hegazi / R. Amir
QUANTITIES	R. Amir	S. Hegazi

STATE OF CALIFORNIA
DEPARTMENT OF TRANSPORTATION

DIVISION OF ENGINEERING SERVICES
STRUCTURE DESIGN
DESIGN BRANCH 8

BRIDGE NO. 37E0114
POST MILE 0.95/1.06

HECKER PASS SOIL NAIL WALL NO. 3
SCULPTED SHOTCRETE TREATMENT NO. 3

STRUCTURES DESIGN DETAIL SHEET (ENGLISH) (REV. 09-01-10)

ORIGINAL SCALE IN INCHES FOR REDUCED PLANS 0 1 2 3

UNIT: 3593
PROJECT NUMBER & PHASE: 0400000813-1
CONTRACT NO.: 04-2A2501

DISREGARD PRINTS BEARING EARLIER REVISION DATES

REVISION DATES 01-06-11 02-22-12 07-18-12

SHEET 14 OF 20

FILE => 37e0114-u-arch03.dgn

USERNAME => s124496 DATE PLOTTED => 21-JUN-2013 TIME PLOTTED => 07:56

DIST	COUNTY	ROUTE	POST MILES TOTAL PROJECT	SHEET No.	TOTAL SHEETS
04	SCI	152	0.1/5.2	293	416

REGISTERED CIVIL ENGINEER 08-01-12 DATE

6-17-13
PLANS APPROVAL DATE

REGISTERED PROFESSIONAL ENGINEER
Sameh Hegazi
No. C64899
Exp. 06-30-2013
CIVIL
STATE OF CALIFORNIA

The State of California or its officers or agents shall not be responsible for the accuracy or completeness of electronic copies of this plan sheet.

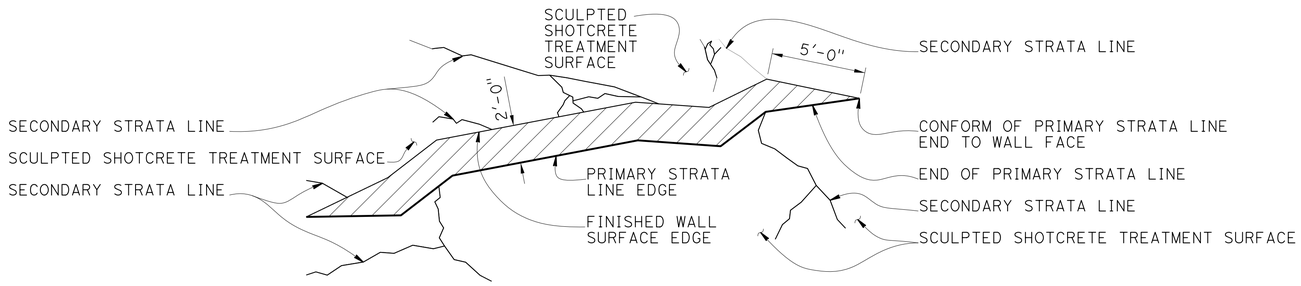

PRIMARY STRATA LINE ELEVATION DETAIL

No Scale

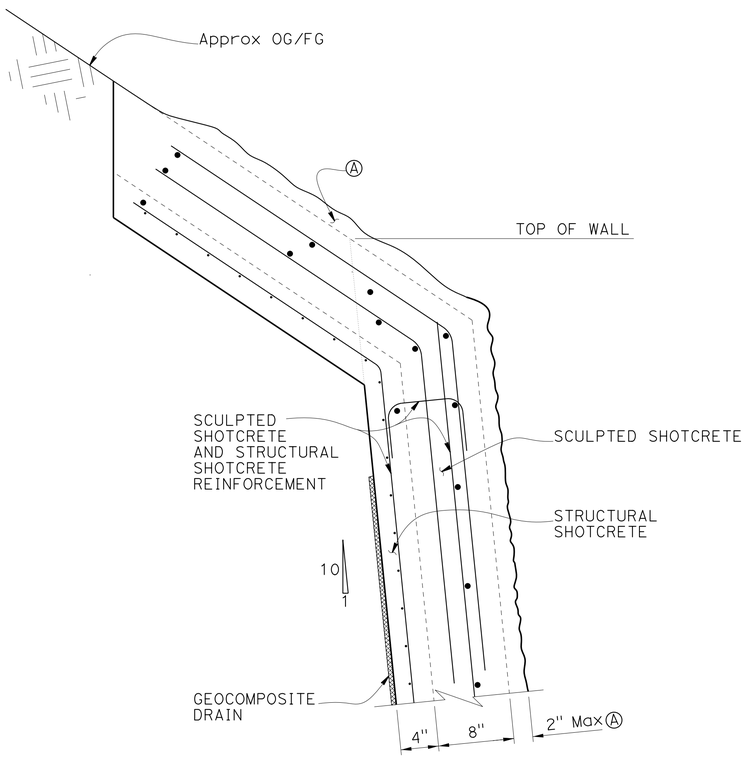

TOP OF WALL SCULPTED SHOTCRETE TREATMENT REINFORCEMENT

No Scale

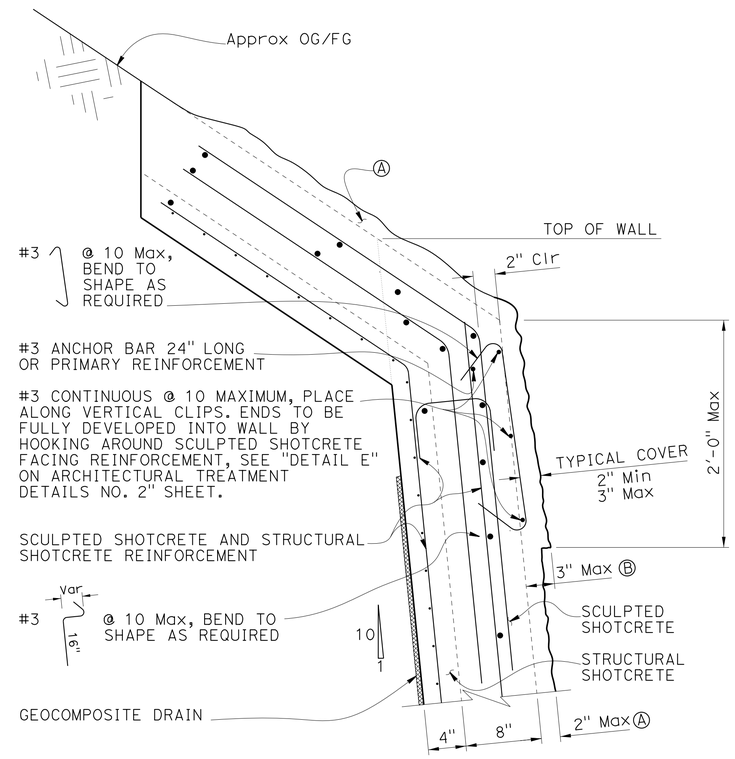

PRIMARY STRATA LINE AT TOP OF WALL SCULPTED SHOTCRETE TREATMENT REINFORCEMENT

No Scale

NOTES:

1. See also "SCULPTED SHOTCRETE TREATMENT DETAILS NO. 2" sheet for reinforcement.
2. Soil nail not shown for clarity.
3. Longitudinal bars shall taper to a point and be flush with the finished wall surface at primary strata line ends where it transitions into the wall face.
4. Cable railing post pocket and safety hookup are not shown for clarity.

Ⓐ Max 2" thick unreinforced sculpted shotcrete zone for sculpted shotcrete treatment.

Ⓑ Max 3" thick reinforced sculpted shotecrete zone for top of wall sculpted shotcrete treatment.

	BY	CHECKED
DESIGN	S. Hegazi	R. Amir
DETAILS	T. Kusumi	S. Hegazi / R. Amir
QUANTITIES	R. Amir	S. Hegazi

STATE OF CALIFORNIA
DEPARTMENT OF TRANSPORTATION

DIVISION OF ENGINEERING SERVICES
STRUCTURE DESIGN
DESIGN BRANCH 8

BRIDGE NO. 37E0114
POST MILE 0.95/1.06

HECKER PASS SOIL NAIL WALL NO. 3
SCULPTED SHOTCRETE TREATMENT DETAILS NO. 1

STRUCTURES DESIGN DETAIL SHEET (ENGLISH) (REV. 09-01-10)

ORIGINAL SCALE IN INCHES FOR REDUCED PLANS 0 1 2 3

UNIT: 3593
PROJECT NUMBER & PHASE: 0400000813-1
CONTRACT NO.: 04-2A2501

DISREGARD PRINTS BEARING EARLIER REVISION DATES

REVISION DATES: 06-08-11 06-21-12 07-19-13

SHEET 15 OF 20

FILE => 37e0114-u-archdt01.dgn

USERNAME => s124496 DATE PLOTTED => 21-JUN-2013 TIME PLOTTED => 07:56

DIST	COUNTY	ROUTE	POST MILES TOTAL PROJECT	SHEET No.	TOTAL SHEETS
04	SCI	152	0.1/5.2	294	416

REGISTERED CIVIL ENGINEER 08-01-12 DATE

6-17-13
PLANS APPROVAL DATE

REGISTERED PROFESSIONAL ENGINEER
Sameh Hegazi
No. C64899
Exp. 06-30-2013
CIVIL
STATE OF CALIFORNIA

The State of California or its officers or agents shall not be responsible for the accuracy or completeness of electronic copies of this plan sheet.

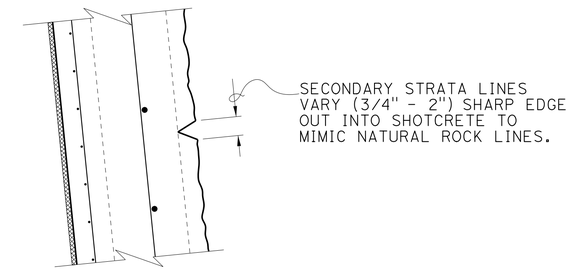

SECONDARY STRATA LINE

No Scale

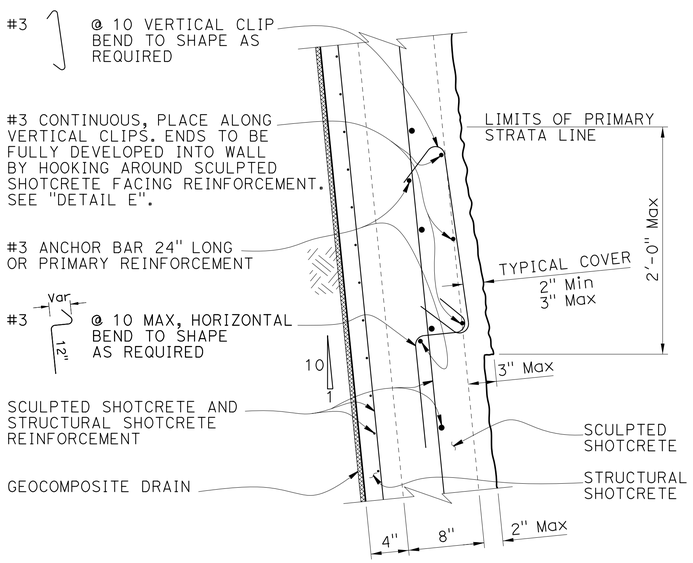

PRIMARY STRATA LINE
SCULPTED SHOTCRETE TREATMENT REINFORCEMENT

No Scale

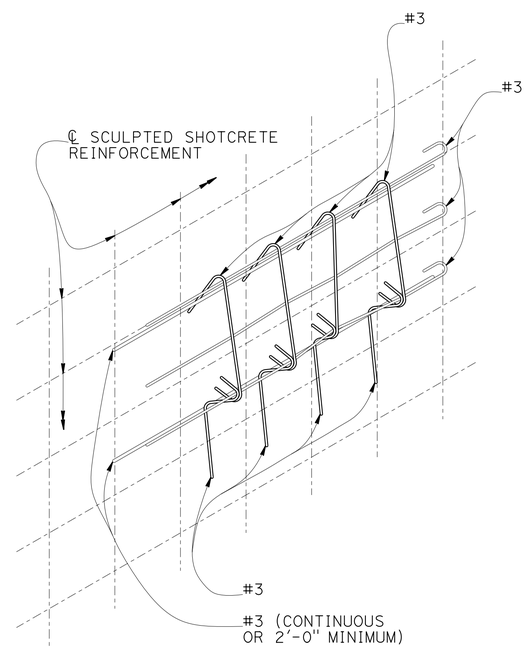

DETAIL E

No Scale

DESIGN	BY S. Hegazi	CHECKED R. Amir	
DETAILS	BY T. Kusumi	CHECKED S. Hegazi / R. Amir	
QUANTITIES	BY R. Amir	CHECKED S. Hegazi	

STATE OF CALIFORNIA
DEPARTMENT OF TRANSPORTATION

DIVISION OF ENGINEERING SERVICES
STRUCTURE DESIGN
DESIGN BRANCH 8

BRIDGE NO. 37E0114
POST MILE 0.95/1.06

HECKER PASS SOIL NAIL WALL NO. 3
SCULPTED SHOTCRETE TREATMENT DETAILS NO. 2

STRUCTURES DESIGN DETAIL SHEET (ENGLISH) (REV. 09-01-10)

ORIGINAL SCALE IN INCHES FOR REDUCED PLANS 0 1 2 3

UNIT: 3593
PROJECT NUMBER & PHASE: 0400000813-1
CONTRACT NO.: 04-2A2501

DISREGARD PRINTS BEARING EARLIER REVISION DATES

REVISION DATES: 06-09-11 04-30-12 07-18-12

SHEET 16 OF 20

FILE => 37e0114-u-arcndt02.dgn

USERNAME => s124496 DATE PLOTTED => 21-JUN-2013 TIME PLOTTED => 07:56

DIST	COUNTY	ROUTE	POST MILES TOTAL PROJECT	SHEET No	TOTAL SHEETS
04	SCI	152	0.1/5.2	295	416

Ali Kaddoura 02-15-12
REGISTERED CIVIL ENGINEER

6-17-13
PLANS APPROVAL DATE

REGISTERED PROFESSIONAL ENGINEER
Ali K. Kaddoura
No. 55710
Exp. 12-31-12
CIVIL
STATE OF CALIFORNIA

The State of California or its officers or agents shall not be responsible for the accuracy or completeness of electronic copies of this plan sheet.

This LOTB sheet was prepared in accordance with the Caltrans Soil & Rock Logging, Classification, & Presentation Manual (2010 Edition).

NOTE: 1. This LOTB sheet was prepared in accordance with the Caltrans Soil & Rock Logging, Classification, and Presentation Manual (April 2010).

2. PP=unconfined compressive strength (tsf) as measured by pocket penetrometer.

3. *NR: Not Recorded.

BENCH MARK

FD885 (PRHV201)
RR SPIKE w/ CHISLED "+"
30.89 Ft Rt. "B" Line, ℄ Rte 152
Sta. 53+58.83
N 1,821,913.31
E 6,209,351.29
Elev.=1,026.12

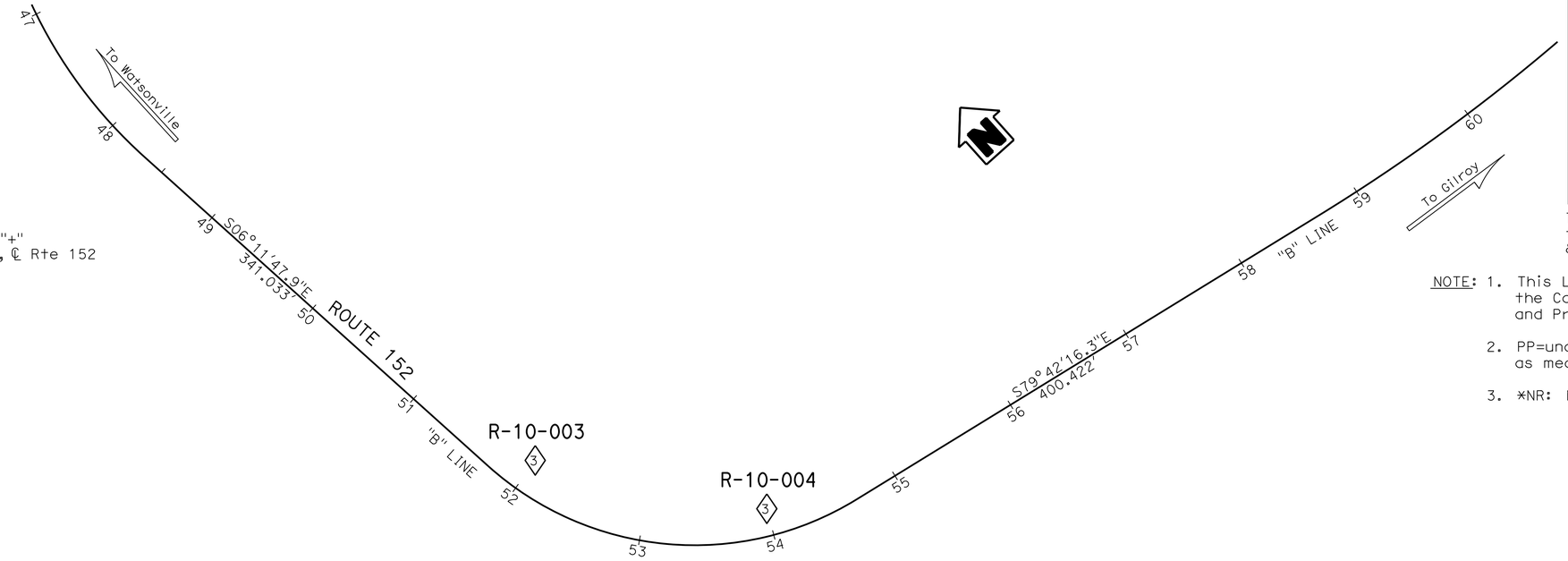

PLAN

1" = 50'

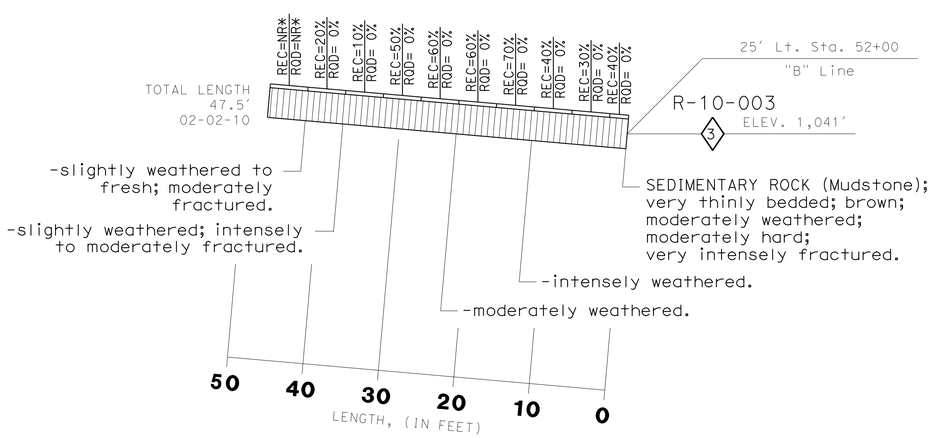

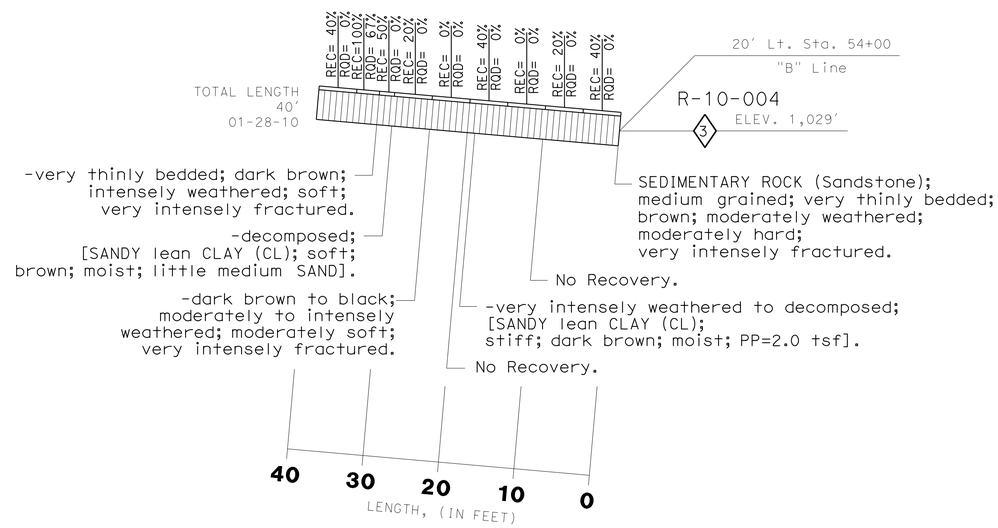

PROFILE

HOR. 1"=10'
VER. 1"=10'

ENGINEERING SERVICES	GEOTECHNICAL SERVICES	STATE OF CALIFORNIA DEPARTMENT OF TRANSPORTATION	DIVISION OF ENGINEERING SERVICES OFFICE OF GEOTECHNICAL DESIGN BRANCH 8	BRIDGE NO. 37E0114 / POST MILES 0.95/1.06	HECKER PASS SOIL NAIL WALL NO. 3
FUNCTIONAL SUPERVISOR	DRAWN BY: M. Reynolds 10/10	FIELD INVESTIGATION BY: A. Kaddoura			LOG OF TEST BORINGS 1 of 4
NAME:	CHECKED BY: M. Gaffney				

ORIGINAL SCALE IN INCHES FOR REDUCED PLANS 0 1 2 3

CU 04
EA 2A2500

DISREGARD PRINTS BEARING EARLIER REVISION DATES 03-08-12 05-24-12

REVISION DATES

SHEET 17 OF 20

FILE => 37e0114-z-1tb01.dgn

USERNAME => s124496 DATE PLOTTED => 21-JUN-2013 TIME PLOTTED => 07:56

DIST	COUNTY	ROUTE	POST MILES TOTAL PROJECT	SHEET No	TOTAL SHEETS
04	SCI	152	0.1/5.2	296	416

Ali Kaddoura 02-15-12
REGISTERED CIVIL ENGINEER DATE

6-17-13
PLANS APPROVAL DATE

REGISTERED PROFESSIONAL ENGINEER Ali K. Kaddoura No. 55710 Exp. 12-31-12 CIVIL STATE OF CALIFORNIA

The State of California or its officers or agents shall not be responsible for the accuracy or completeness of electronic copies of this plan sheet.

REFERENCE: CALTRANS SOIL & ROCK LOGGING, CLASSIFICATION, AND PRESENTATION MANUAL (JUNE 2007)

CEMENTATION

Description	Criteria
Weak	Crumbles or breaks with handling or little finger pressure.
Moderate	Crumbles or breaks with considerable finger pressure.
Strong	Will not crumble or break with finger pressure.

CONSISTENCY OF COHESIVE SOILS

Description	Unconfined Compressive Strength (tsf)	Pocket Penetrometer Measurement (tsf)	Torvane Measurement (tsf)	Field Approximation
Very Soft	< 0.25	< 0.25	< 0.12	Easily penetrated several inches by fist
Soft	0.25 to 0.50	0.25 to 0.50	0.12 to 0.25	Easily penetrated several inches by thumb
Medium Stiff	0.50 to 1.0	0.50 to 1.0	0.25 to 0.50	Penetrated several inches by thumb with moderate effort
Stiff	1 to 2	1 to 2	0.50 to 1.0	Readily indented by thumb but penetrated only with great effort
Very Stiff	2 to 4	2 to 4	1.0 to 2.0	Readily indented by thumbnail
Hard	> 4.0	> 4.0	> 2.0	Indented by thumbnail with difficulty

BOREHOLE IDENTIFICATION

Symbol	Hole Type	Description
Size	A	Auger Boring
Size	R P	Rotary drilled boring Rotary percussion boring (air)
Size	R	Rotary drilled diamond core
Size	HD HA	Hand driven (1-inch soil tube) Hand Auger
●	D	Dynamic Cone Penetration Boring
▲	CPT	Cone Penetration Test (ASTM D 5778-95)
⬚	O	Other

Note: Size in inches.

PLASTICITY OF FINE-GRAINED SOILS

Description	Criteria
Nonplastic	A 1/8-inch thread cannot be rolled at any water content.
Low	The thread can barely be rolled and the lump cannot be formed when drier than the plastic limit.
Medium	The thread is easy to roll and not much time is required to reach the plastic limit. The thread cannot be rerolled after reaching the plastic limit. The lump crumbles when drier than the plastic limit.
High	It takes considerable time rolling and kneading to reach the plastic limit. The thread can be rerolled several times after reaching the plastic limit. The lump can be formed without crumbling when drier than the plastic limit.

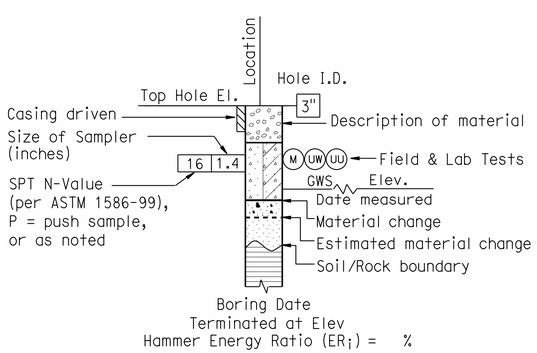

ROTARY BORING

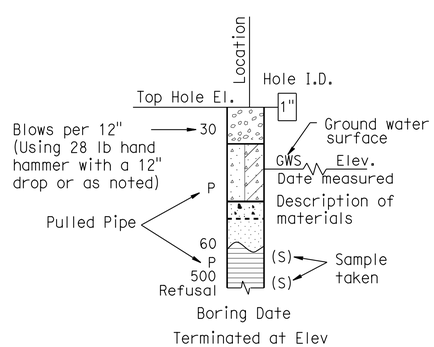

HAND BORING

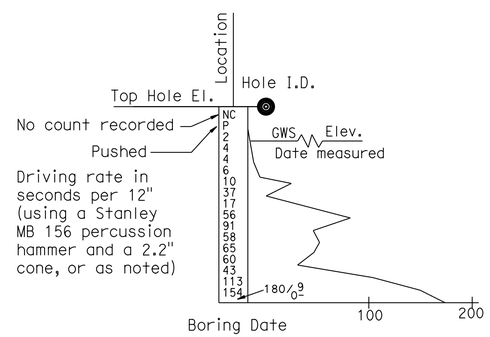

DYNAMIC CONE PENETRATION BORING

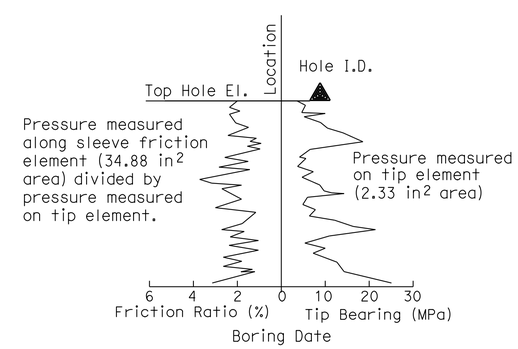

CONE PENETRATION TEST (CPT) SOUNDING

ENGINEERING SERVICES				GEOTECHNICAL SERVICES
FUNCTIONAL SUPERVISOR	PREPARED BY	M. Reynolds	10/10	FIELD INVESTIGATION BY:
NAME:	CHECKED BY	M. Gaffney		A. Kaddoura C. Risden

STATE OF CALIFORNIA DEPARTMENT OF TRANSPORTATION

DIVISION OF ENGINEERING SERVICES OFFICE OF GEOTECHNICAL DESIGN BRANCH 8

BRIDGE NO. 37E0114
POST MILE 0.95/1.06

HECKER PASS SOIL NAIL WALL NO. 3

LOG OF TEST BORINGS 2 of 4

GS LOTB SOIL LEGEND

ORIGINAL SCALE IN INCHES FOR REDUCED PLANS 0 1 2 3

CU 04
EA 2A2500

DISREGARD PRINTS BEARING EARLIER REVISION DATES

REVISION DATES 03-08-12 05-24-12

SHEET 18 OF 20

FILE => 37e0114-z-ltb02.dgn

USERNAME => s124496 DATE PLOTTED => 21-JUN-2013 TIME PLOTTED => 07:56

REFERENCE: CALTRANS SOIL & ROCK LOGGING, CLASSIFICATION, AND PRESENTATION MANUAL (JUNE 2007)

DIST	COUNTY	ROUTE	POST MILES TOTAL PROJECT	SHEET No	TOTAL SHEETS
04	SCI	152	0.1/5.2	297	416

Ali Kaddoura 02-15-12
REGISTERED CIVIL ENGINEER DATE

6-17-13
PLANS APPROVAL DATE

REGISTERED PROFESSIONAL ENGINEER Ali K. Kaddoura No. 55710 Exp. 12-31-12 CIVIL STATE OF CALIFORNIA

The State of California or its officers or agents shall not be responsible for the accuracy or completeness of electronic copies of this plan sheet.

GROUP SYMBOLS AND NAMES

Graphic/Symbol	Group Names
GW	Well-graded GRAVEL Well-graded GRAVEL with SAND
GP	Poorly graded GRAVEL Poorly graded GRAVEL with SAND
GW-GM	Well-graded GRAVEL with SILT Well-graded GRAVEL with SILT and SAND
GW-GC	Well-graded GRAVEL with CLAY (or SILTY CLAY) Well-graded GRAVEL with CLAY and SAND (or SILTY CLAY and SAND)
GP-GM	Poorly graded GRAVEL with SILT Poorly graded GRAVEL with SILT and SAND
GP-GC	Poorly graded GRAVEL with CLAY (or SILTY CLAY) Poorly graded GRAVEL with CLAY and SAND (or SILTY CLAY and SAND)
GM	SILTY GRAVEL SILTY GRAVEL with SAND
GC	CLAYEY GRAVEL CLAYEY GRAVEL with SAND
GC-GM	SILTY, CLAYEY GRAVEL SILTY, CLAYEY GRAVEL with SAND
SW	Well-graded SAND Well-graded SAND with GRAVEL
SP	Poorly graded SAND Poorly graded SAND with GRAVEL
SW-SM	Well-graded SAND with SILT Well-graded SAND with SILT and GRAVEL
SW-SC	Well-graded SAND with CLAY (or SILTY CLAY) Well-graded SAND with CLAY and GRAVEL (or SILTY CLAY and GRAVEL)
SP-SM	Poorly graded SAND with SILT Poorly graded SAND with SILT and GRAVEL
SP-SC	Poorly graded SAND with CLAY (or SILTY CLAY) Poorly graded SAND with CLAY and GRAVEL (or SILTY CLAY and GRAVEL)
SM	SILTY SAND SILTY SAND with GRAVEL
SC	CLAYEY SAND CLAYEY SAND with GRAVEL
SC-SM	SILTY, CLAYEY SAND SILTY, CLAYEY SAND with GRAVEL
PT	PEAT
	COBBLES COBBLES and BOULDERS BOULDERS

Graphic/Symbol	Group Names
CL	Lean CLAY Lean CLAY with SAND Lean CLAY with GRAVEL SANDY lean CLAY SANDY lean CLAY with GRAVEL GRAVELLY lean CLAY GRAVELLY lean CLAY with SAND
CL-ML	SILTY CLAY SILTY CLAY with SAND SILTY CLAY with GRAVEL SANDY SILTY CLAY SANDY SILTY CLAY with GRAVEL GRAVELLY SILTY CLAY GRAVELLY SILTY CLAY with SAND
ML	SILT SILT with SAND SILT with GRAVEL SANDY SILT SANDY SILT with GRAVEL GRAVELLY SILT GRAVELLY SILT with SAND
OL	ORGANIC lean CLAY ORGANIC lean CLAY with SAND ORGANIC lean CLAY with GRAVEL SANDY ORGANIC lean CLAY SANDY ORGANIC lean CLAY with GRAVEL GRAVELLY ORGANIC lean CLAY GRAVELLY ORGANIC lean CLAY with SAND
OL	ORGANIC SILT ORGANIC SILT with SAND ORGANIC SILT with GRAVEL SANDY ORGANIC SILT SANDY ORGANIC SILT with GRAVEL GRAVELLY ORGANIC SILT GRAVELLY ORGANIC SILT with SAND
CH	Fat CLAY Fat CLAY with SAND Fat CLAY with GRAVEL SANDY fat CLAY SANDY fat CLAY with GRAVEL GRAVELLY fat CLAY GRAVELLY fat CLAY with SAND
MH	Elastic SILT Elastic SILT with SAND Elastic SILT with GRAVEL SANDY elastic SILT SANDY elastic SILT with GRAVEL GRAVELLY elastic SILT GRAVELLY elastic SILT with SAND
OH	ORGANIC fat CLAY ORGANIC fat CLAY with SAND ORGANIC fat CLAY with GRAVEL SANDY ORGANIC fat CLAY SANDY ORGANIC fat CLAY with GRAVEL GRAVELLY ORGANIC fat CLAY GRAVELLY ORGANIC fat CLAY with SAND
OH	ORGANIC elastic SILT ORGANIC elastic SILT with SAND ORGANIC elastic SILT with GRAVEL SANDY ORGANIC elastic SILT SANDY ORGANIC elastic SILT with GRAVEL GRAVELLY ORGANIC elastic SILT GRAVELLY ORGANIC elastic SILT with SAND
OL/OH	ORGANIC SOIL ORGANIC SOIL with SAND ORGANIC SOIL with GRAVEL SANDY ORGANIC SOIL SANDY ORGANIC SOIL with GRAVEL GRAVELLY ORGANIC SOIL GRAVELLY ORGANIC SOIL with SAND

FIELD AND LABORATORY TESTING

- (C) Consolidation (ASTM D 2435)
- (CL) Collapse Potential (ASTM D 5333)
- (CP) Compaction Curve (CTM 216)
- (CR) Corrosivity Testing (CTM 643, CTM 422, CTM 417)
- (CU) Consolidated Undrained Triaxial (ASTM D 4767)
- (DS) Direct Shear (ASTM D 3080)
- (EI) Expansion Index (ASTM D 4829)
- (M) Moisture Content (ASTM D 2216)
- (OC) Organic Content-% (ASTM D 2974)
- (P) Permeability (CTM 220)
- (PA) Particle Size Analysis (ASTM D 422)
- (PI) Plasticity Index (AASHTO T 90) Liquid Limit (AASHTO T 89)
- (PL) Point Load Index (ASTM D 5731)
- (PM) Pressure Meter
- (PP) Pocket Penetrometer
- (R) R-Value (CTM 301)
- (SE) Sand Equivalent (CTM 217)
- (SG) Specific Gravity (AASHTO T 100)
- (SL) Shrinkage Limit (ASTM D 427)
- (SW) Swell Potential (ASTM D 4546)
- (TV) Pocket Torvane
- (UC) Unconfined Compression-Soil (ASTM D 2166) Unconfined Compression-Rock (ASTM D 2938)
- (UU) Unconsolidated Undrained Triaxial (ASTM D 2850)
- (UW) Unit Weight (ASTM D 4767)
- (VS) Vane Shear (AASHTO T 223)

APPARENT DENSITY OF COHESIONLESS SOILS

Description	SPT N_{60} (Blows / 12 inches)
Very loose	0 - 4
Loose	5 - 10
Medium Dense	11 - 30
Dense	31 - 50
Very Dense	> 50

MOISTURE

Description	Criteria
Dry	Absence of moisture, dusty, dry to the touch
Moist	Damp but no visible water
Wet	Visible free water, usually soil is below water table

PERCENT OR PROPORTION OF SOILS

Description	Criteria
Trace	Particles are present but estimated to be less than 5%
Few	5 to 10%
Little	15 to 25%
Some	30 to 45%
Mostly	50 to 100%

PARTICLE SIZE

Description		Size
Boulder		> 12"
Cobble		3" to 12"
Gravel	Coarse	3/4" to 3"
	Fine	No. 4 to 3/4"
Sand	Coarse	No. 10 to No. 4
	Medium	No. 40 to No. 10
	Fine	No. 200 to No. 40

ENGINEERING SERVICES			
FUNCTIONAL SUPERVISOR	PREPARED BY	M. Reynolds	10/10
NAME:	CHECKED BY	M. Gaffney	

GEOTECHNICAL SERVICES
FIELD INVESTIGATION BY:
A. Kadoura
C. Risden

STATE OF CALIFORNIA
DEPARTMENT OF TRANSPORTATION

DIVISION OF ENGINEERING SERVICES
OFFICE OF GEOTECHNICAL
DESIGN BRANCH 8

BRIDGE NO. 37E0114
POST MILE 0.95/1.06

HECKER PASS SOIL NAIL WALL NO. 3
LOG OF TEST BORINGS 3 of 4

GS LOTB SOIL LEGEND

ORIGINAL SCALE IN INCHES FOR REDUCED PLANS 0 1 2 3

CU 04
EA 2A2500

DISREGARD PRINTS BEARING EARLIER REVISION DATES 03-08-12 05-24-12

REVISION DATES

SHEET 19 OF 20

FILE => 37e0114-z-ltb03.dgn

USERNAME => s124496 DATE PLOTTED => 21-JUN-2013 TIME PLOTTED => 07:56

REFERENCE: CALTRANS SOIL & ROCK LOGGING, CLASSIFICATION, AND PRESENTATION MANUAL (JUNE 2007)

DIST	COUNTY	ROUTE	POST MILES TOTAL PROJECT	SHEET No	TOTAL SHEETS
04	SCI	152	0.1/5.2	298	416

Ali Kaddoura 02-15-12
REGISTERED CIVIL ENGINEER DATE

6-17-13
PLANS APPROVAL DATE

REGISTERED PROFESSIONAL ENGINEER Ali K. Kaddoura No. 55710 Exp. 12-31-12 CIVIL STATE OF CALIFORNIA

The State of California or its officers or agents shall not be responsible for the accuracy or completeness of electronic copies of this plan sheet.

PERCENT CORE RECOVERY (REC) & ROCK QUALITY DESIGNATION (RQD)

$$REC = \frac{\sum \text{Length of the recovered core pieces (inches)}}{\text{Total length of core run (inches)}} \times 100\%$$

$$RQD = \frac{\sum \text{Length of intact core pieces} \geq 4''}{\text{Total length of core run (inches)}} \times 100\%$$

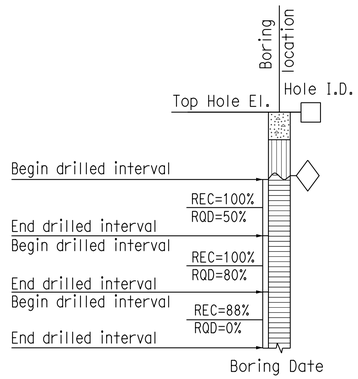

RELATIVE STRENGTH OF INTACT ROCK

Term	Uniaxial Compressive Strength (PSI)
Extremely Strong	> 30,000
Very Strong	14,500 - 30,000
Strong	7,000 - 14,500
Medium Strong	3,500 - 7,000
Weak	700 - 3,500
Very Weak	150 - 700
Extremely Weak	< 150

BEDDING SPACING

Description	Thickness / Spacing
Massive	Greater than 10 ft
Very thickly bedded	3 to 10 ft
Thickly bedded	1 to 3 ft
Moderately bedded	3-5/8" to 1 ft
Thinly bedded	1-1/4" to 3-5/8"
Very thinly bedded	3/8" to 1-1/4"
Laminated	Less than 3/8"

LEGEND OF ROCK MATERIALS

- IGNEOUS ROCK
- SEDIMENTARY ROCK
- METAMORPHIC ROCK

ROCK HARDNESS

Description	Criteria
Extremely Hard	Specimen cannot be scratched with a pocket knife or sharp pick; can only be chipped with repeated heavy hammer blows.
Very Hard	Specimen cannot be scratched with a pocket knife or sharp pick. Breaks with repeated heavy hammer blows.
Hard	Specimen can be scratched with a pocket knife or sharp pick with difficulty (heavy pressure). Heavy hammer blows required to break specimen.
Moderately Hard	Specimen can be scratched with pocket knife or sharp pick with light or moderate pressure. Core breaks with moderate hammer pressure.
Moderately Soft	Specimen can be grooved 1/6" deep with a pocket knife or sharp pick with moderate or heavy pressure. Breaks with light hammer blow or heavy manual pressure.
Soft	Specimen can be grooved or gouged easily by a pocket knife or sharp pick with light pressure, can be scratched with fingernail. Breaks with light to moderate manual pressure.
Very Soft	Specimen can be readily indented, grooved or gouged with fingernail, or carved with a pocket knife. Breaks with light manual pressure.

FRACTURE DENSITY

Description	Observed Fracture Density
Unfractured	No fractures.
Very slightly fractured	Lengths greater than 3 feet.
Slightly fractured	Lengths from 1 to 3 feet with few lengths less than 1 foot or greater than 3 feet.
Moderately fractured	Lengths mostly in 4" to 1 foot range with most lengths about 8"
Intensely fractured	Lengths average from 1 to 4" with scattered fragmented intervals with lengths less than 4"
Very intensely fractured	Mostly chips and fragments with a few scattered short core lengths.

Combination descriptors (such as "Very intensely to intensely fractured") are used where equal distribution of both fracture density characteristics is present over a significant interval or exposure, or where characteristics are "in between" the descriptor definitions. Only two adjacent descriptors may be combined.

WEATHERING DESCRIPTORS FOR INTACT ROCK

Description	Diagnostic features					General Characteristics
	Chemical Weathering-Discoloration and/or oxidation		Mechanical Weathering-Grain boundary conditions (disaggregation) primarily for granitics and some coarse-grained sediments	Texture and Solutioning		
	Body of Rock	Fracture Surfaces		Texture	Solutioning	
Fresh	No discoloration, not oxidized.	No discoloration or oxidation.	No separation, intact (tight).	No change.	No solutioning.	Hammer rings when crystalline rocks are struck.
Slightly Weathered	Discoloration or oxidation is limited to surface of, or short distance from, fractures; some feldspar crystals are dull.	Minor to complete discoloration or oxidation of most surfaces.	No visible separation, intact (tight).	Preserved.	Minor leaching of some soluble minerals may be noted.	Hammer rings when crystalline rocks are struck. Body of rock not weakened.
Moderately Weathered	Discoloration or oxidation extends from fractures usually throughout; Fe-Mg minerals are "rusty," feldspar crystals are "cloudy."	All fracture surfaces are discolored or oxidized.	Partial separation of boundaries visible.	Generally preserved.	Soluble minerals may be mostly leached.	Hammer does not ring when rock is struck. Body of rock is slightly weakened.
Intensely Weathered	Discoloration or oxidation throughout; all feldspars and Fe-Mg minerals are altered to clay to some extent; or chemical alteration produces in-situ disaggregation, see grain boundary conditions.	All fracture surfaces are discolored or oxidized, surfaces friable.	Partial separation, rock is friable; in semiarid conditions granitics are disaggregated.	Texture altered by chemical disintegration (hydration, argillation).	Leaching of soluble minerals may be complete.	Dull sound when struck with hammer, usually can be broken with moderate to heavy manual pressure or by light hammer blow without reference to planes of weakness such as incipient or hairline fractures, or veinlets. Rock is significantly weakened.
Decomposed	Discolored or oxidized throughout, but resistant minerals such as quartz may be unaltered; all feldspars and Fe-Mg minerals are completely altered to clay.		Complete separation of grain boundaries (disaggregated).	Resembles a soil, partial or complete remnant rock structure may be preserved; leaching of soluble minerals usually complete.		Can be granulated by hand. Resistant minerals such as quartz may be present as "stringers" or "dikes."

Combination descriptors (such as "slightly weathered to fresh") are permissible where equal distribution of both weathering characteristics is present over significant intervals or where characteristics present are "in between" the diagnostic feature. However, combination descriptors should not be used where significant, identifiable zones can be delineated. Only two adjacent descriptors may be combined. "Very intensely weathered" is the combination descriptor for "intensely weathered to decomposed."

ENGINEERING SERVICES			GEOTECHNICAL SERVICES
FUNCTIONAL SUPERVISOR	PREPARED BY	M. Reynolds 10/10	FIELD INVESTIGATION BY:
NAME:	CHECKED BY	M. Gaffney	A. Kaddoura C. Risden

STATE OF CALIFORNIA DEPARTMENT OF TRANSPORTATION

DIVISION OF ENGINEERING SERVICES OFFICE OF GEOTECHNICAL DESIGN BRANCH 8

BRIDGE NO. 37E0114
POST MILE 0.95/1.06

HECKER PASS SOIL NAIL WALL NO. 3

LOG OF TEST BORINGS 4 of 4

GS LOTB ROCK LEGEND

ORIGINAL SCALE IN INCHES FOR REDUCED PLANS 0 1 2 3

CU 04
EA 2A2500

DISREGARD PRINTS BEARING EARLIER REVISION DATES 03-08-12 05-24-12

REVISION DATES

SHEET 20 OF 20

FILE => 37e0114-z-ltb04.dgn

USERNAME => s124496 DATE PLOTTED => 21-JUN-2013 TIME PLOTTED => 07:56

DIST	COUNTY	ROUTE	POST MILES TOTAL PROJECT	SHEET No.	TOTAL SHEETS
04	SCI	152	0.1/5.2	299	416

REGISTERED CIVIL ENGINEER 05-15-13 DATE

6-17-13
PLANS APPROVAL DATE

REGISTERED PROFESSIONAL ENGINEER Sameh Hegazi No. C64899 Exp.06-30-2013 CIVIL STATE OF CALIFORNIA

The State of California or its officers or agents shall not be responsible for the accuracy or completeness of electronic copies of this plan sheet.

NOTES:
1. Top of the wall elevations shall be verified in the field.
2. Soil nail inclination = 15° typical.
3. The exact locations of the Test Soil Nail to be determined by the Engineer in the field.
4. All soil nail levels are parallel to top of cut except the bottom level which is parallel to bottom of wall.
5. Soil nails shall be placed normal to shotcrete surface in the plan view.
6. The contractor shall field locate all utilities before drilling soil nails.
7. The contractor shall provide and maintain stable soil slopes above and below the soil nail walls.
8. Bottom of wall shall be placed against undisturbed soil material.
9. Prepare and stain sculpted shotcrete surface.
10. Concrete barrier shall be integrally colored and applied with anti-graffiti coating from top of barrier to 6 inches below finished grade.

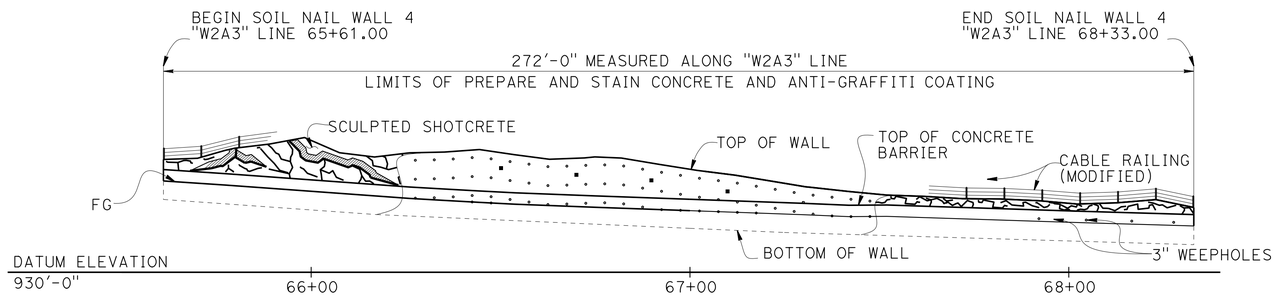

DEVELOPED ELEVATION

1" = 20'

LEGEND:
- o Indicates approximate location of soil nails
- ■ Indicates approximate location of proof test nails

NOTE:
Not all approximate location of soil nails, proof test nails cable railing posts and weepholes shown.

HECKER PASS SOIL NAIL WALL NO. 4

	QUANTITIES	
STRUCTURE EXCAVATION (SOIL NAIL WALL)	409	CY
STRUCTURE BACKFILL (SOIL NAIL WALL)	58	CY
SOIL NAIL	1,800	LF
BAR REINFORCING STEEL (RETAINING WALL)	14,275	LB
STRUCTURAL SHOTCRETE	56	CY
SCULPTED SHOTCRETE	73	CY
PREPARE AND STAIN SCULPTED SHOTCRETE	2,144	SQFT
ANTI-GRAFFITI COATING	816	SQFT
MISCELLANEOUS METAL (SAFETY HOOK)	278	LB
CABLE RAILING (MODIFIED)	272	LF
CONCRETE BARRIER (TYPE 60D MODIFIED)	272	LF

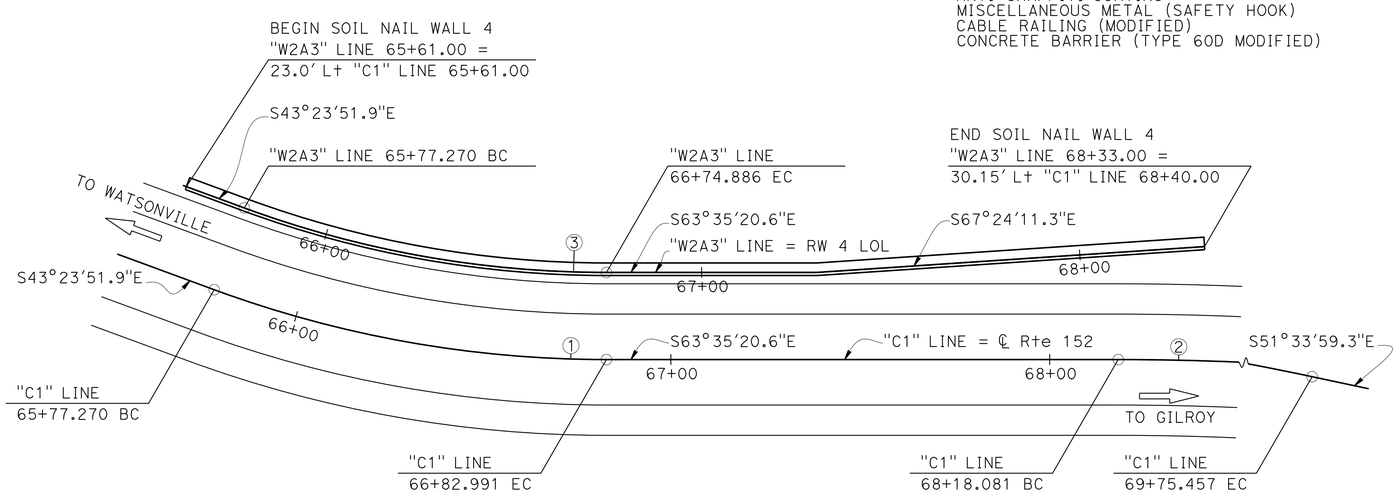

PLAN

1" = 20'

CURVE DATA

Alignment	R	Δ	T	L
"C1" LINE ①	300'	20°11'29"	53.42'	105.72'
"C1" LINE ②	750'	12°01'21"	78.98'	157.38'
"W2A3" LINE ③	277'	20°11'29"	49.32'	97.62'

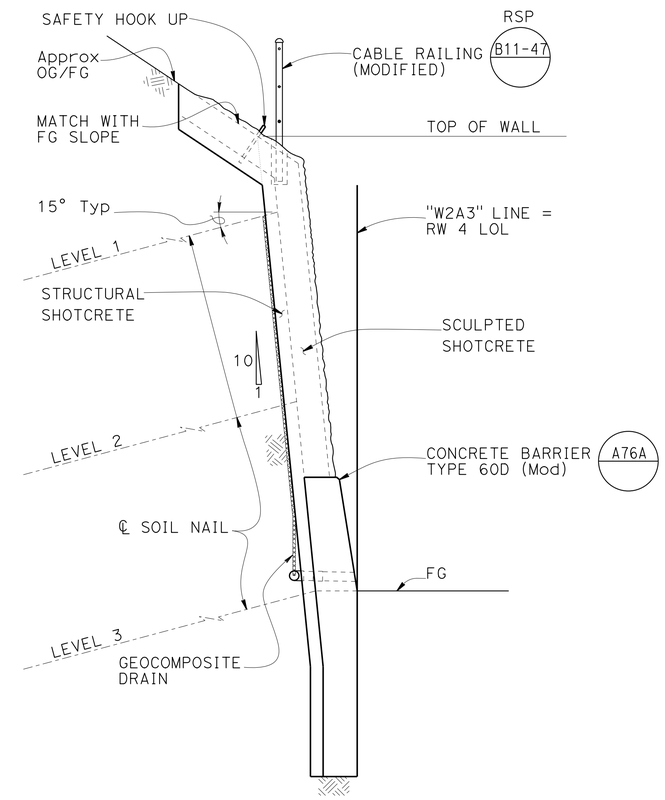

TYPICAL SECTION

1/2" = 1'

BRIAN MORI DESIGN ENGINEER	DESIGN	BY Sameh Hegazi	CHECKED Rangina Amir	LOAD & RESISTANCE FACTOR DESIGN	LIVE LOADING: HL93 W/"LOW-BOY"; PERMIT DESIGN VEHICLE
	DETAILS	BY Antonio Carreon	CHECKED R. Amir / S. Hegazi	LAYOUT BY Sameh Hegazi	CHECKED Adam Menke
	QUANTITIES	BY Rangina Amir	CHECKED Sameh Hegazi	SPECIFICATIONS BY Tina Chen	PLANS AND SPECS COMPARED Tina Chen

ORIGINAL SCALE IN INCHES FOR REDUCED PLANS 0 1 2 3

STATE OF CALIFORNIA
DEPARTMENT OF TRANSPORTATION

DIVISION OF ENGINEERING SERVICES
STRUCTURE DESIGN
DESIGN BRANCH 8

BRIDGE NO. 37E0115
POST MILE 1.24/1.30

HECKER PASS SOIL NAIL WALL NO. 4
GENERAL PLAN

UNIT: 3593
PROJECT NUMBER & PHASE: 0400000813-1
CONTRACT NO.: 04-2A2501

DISREGARD PRINTS BEARING EARLIER REVISION DATES

REVISION DATES: 07-26-12 05-08-13 07-11-13

SHEET 1 OF 17

STRUCTURES DESIGN GENERAL PLAN SHEET (ENGLISH) (REV.09-01-10)

FILE => 37e0115-g-gp.dgn

USERNAME => s124496 DATE PLOTTED => 21-JUN-2013 TIME PLOTTED => 09:04

DIST	COUNTY	ROUTE	POST MILES TOTAL PROJECT	SHEET No.	TOTAL SHEETS
04	SCI	152	0.1/5.2	300	416

REGISTERED CIVIL ENGINEER 05-15-13 DATE

6-17-13
PLANS APPROVAL DATE

REGISTERED PROFESSIONAL ENGINEER Sameh Hegazi No. C64899 Exp. 09-30-2013 CIVIL STATE OF CALIFORNIA

The State of California or its officers or agents shall not be responsible for the accuracy or completeness of electronic copies of this plan sheet.

INDEX TO PLAN

SHEET NO.	TITLE
1	GENERAL PLAN
2	INDEX TO PLAN
3	FOUNDATION PLAN
4	STRUCTURE ELEVATION
5	TYPICAL SECTION
6	STRUCTURAL DETAILS NO. 1
7	STRUCTURAL DETAILS NO. 2
8	STRUCTURAL DETAILS NO. 3
9	DRAINAGE DETAILS NO. 1
10	DRAINAGE DETAILS NO. 2
11	SCULPTED SHOTCRETE TREATMENT
12	SCULPTED SHOTCRETE DETAILS NO. 1
13	SCULPTED SHOTCRETE DETAILS NO. 2
14	LOG OF TEST BORING 1 of 4
15	LOG OF TEST BORING 2 of 4
16	LOG OF TEST BORING 3 of 4
17	LOG OF TEST BORING 4 of 4

STANDARD PLANS DATED MAY 2010

DETAIL	DESCRIPTION
A10A	ABBREVIATIONS (SHEET 1 OF 2)
A10B	ABBREVIATIONS (SHEET 2 OF 2)
A10C	LINES AND SYMBOLS (SHEET 1 OF 3)
A10D	LINES AND SYMBOLS (SHEET 2 OF 3)
A10E	LINES AND SYMBOLS (SHEET 3 OF 3)
A76A	CONCRETE BARRIER TYPE 60
B0-3	BRIDGE DETAILS
RSP B11-47	CABLE RAILINGS

STANDARD PLAN SHEET NO.

DETAIL NO.

GENERAL NOTES

LOAD AND RESISTANCE FACTOR DESIGN:

AASHTO LFRD Bridge Design Specifications,
4th edition with California Amendments.

FHWA Publication No. FHWA-IF-03-017,
Manual for Design and Construction Monitoring of Soil Nail Walls

REINFORCED CONCRETE & SHOTCRETE:

F'c = 3.6 ksi
Fy = 60 ksi

STRUCTURAL STEEL:

Plates and shapes shall conform to ASTM Designation
A709/A709M Grade (36 ksi)

SOIL NAILS:

Soil nails shall conform to ASTM Designation
A615, Grade 60, fs = 60 ksi, #7 bars

PUNCHING SHEAR:

PS = 45 kips

SOIL DESIGN PARAMETERS IN NAILING ZONES :

NAIL DATA TABLE

ZONE	"W2A3" LINE STATION	UNIT WEIGHT (lb/ft^3)	FRICTION ANGLE DEGREES	COHESION (lb/ft^2)	DESIGN PULL OUT RESISTANCE (Kip/ft)	UPPER ELEVATION (ft)	LOWER ELEVATION (ft)
1	65+61.00 - 68+38.00	125	32	700	2.0	965	940

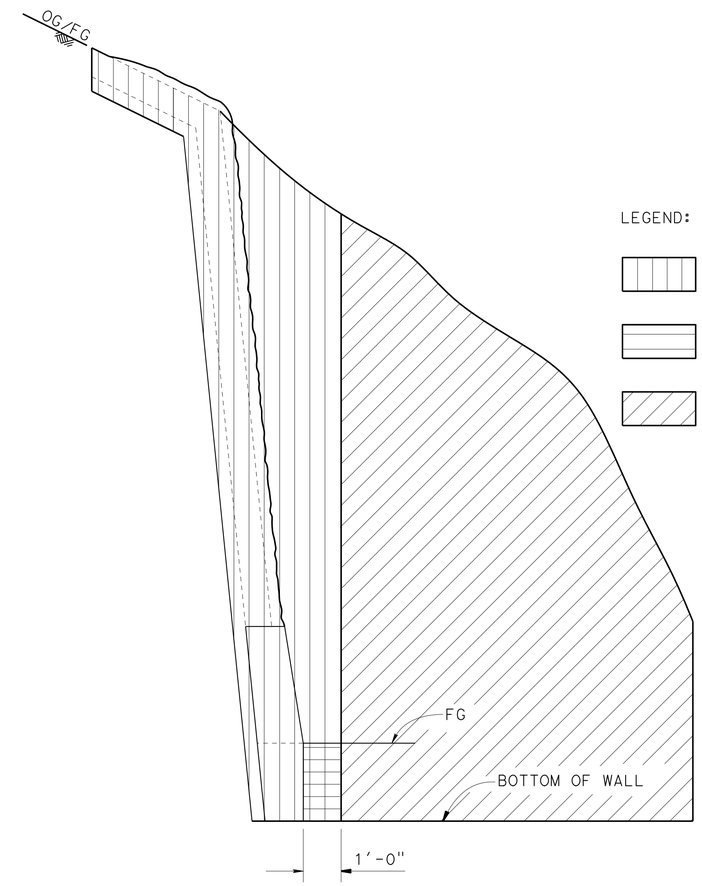

LEGEND:

Structure Excavation (Soil Nail Wall)

Structure Backfill (Soil Nail Wall)

Roadway Excavation (See Road Plans)

LIMITS OF PAYMENT FOR EXCAVATION AND BACKFILL

No Scale

	BY	CHECKED
DESIGN	Sameh Hegazi	Rangina Amir
DETAILS	Antonio Carreon	S Hegazi/R Amir
QUANTITIES	Rangina Amir	Sameh Hegazi

STATE OF CALIFORNIA
DEPARTMENT OF TRANSPORTATION

DIVISION OF ENGINEERING SERVICES
STRUCTURE DESIGN
DESIGN BRANCH 8

BRIDGE NO. 37E0115
POST MILE 1.24/1.30

HECKER PASS SOIL NAIL WALL NO. 4
INDEX TO PLAN

STRUCTURES DESIGN DETAIL SHEET (ENGLISH) (REV. 09-01-10)

ORIGINAL SCALE IN INCHES FOR REDUCED PLANS 0 1 2 3

UNIT: 3593
PROJECT NUMBER & PHASE: 0400000813-1
CONTRACT NO.: 04-2A2501

DISREGARD PRINTS BEARING EARLIER REVISION DATES

REVISION DATES 05-10-13 05-24-12 07-20-12

SHEET 2 OF 17

FILE => 37e0115-a-itp.dgn

USERNAME => s124496 DATE PLOTTED => 21-JUN-2013 TIME PLOTTED => 07:29