Dist	COUNTY	ROUTE	POST MILES TOTAL PROJECT	SHEET No.	TOTAL SHEETS
04	SM	1	40.6/40.9	101	157

REGISTERED CIVIL ENGINEER

July 19, 2013
PLANS APPROVAL DATE

REGISTERED PROFESSIONAL ENGINEER Michael Janzen No. 44788 Exp. 03-31-14 CIVIL STATE OF CALIFORNIA

THE STATE OF CALIFORNIA OR ITS OFFICERS OR AGENTS SHALL NOT BE RESPONSIBLE FOR THE ACCURACY OR COMPLETENESS OF SCANNED COPIES OF THIS PLAN SHEET.

TO ACCOMPANY PLANS DATED 8-19-13

2010 REVISED STANDARD PLAN RSP A87A

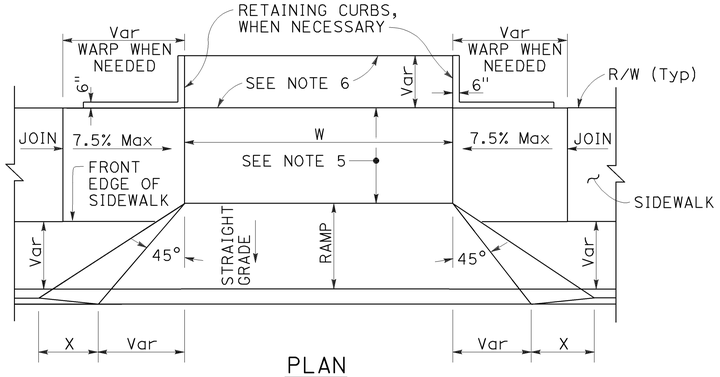

PLAN

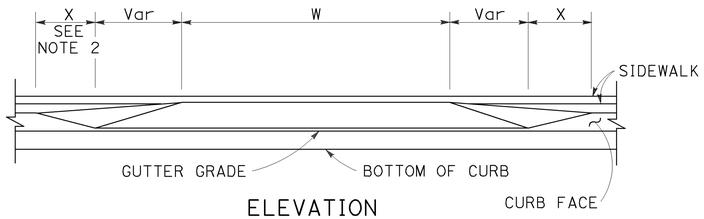

ELEVATION

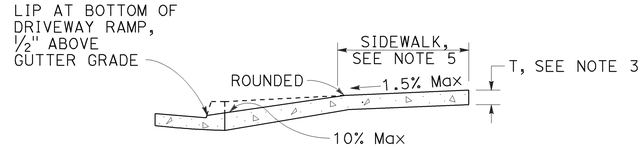

CASE A

Typical driveway, sidewalk not depressed

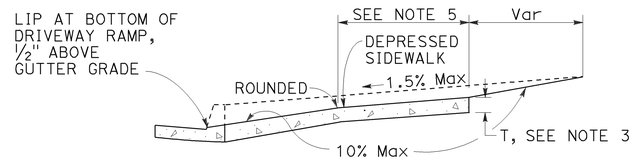

CASE B

Driveway with depressed sidewalk

SECTIONS

DRIVEWAYS

TABLE A

CURB TYPE	DIMENSIONS			
	"H1"	"H2"	"W1"	"W2"
A1-6	1'-2"	6"	7½"	1½"
A1-8	1'-4"	8"	8"	2"
A2-6	1'-0"	6"	2'-7½"	1½"
A2-8	1'-2"	8"	2'-8"	2"
A3-6	6"	5"	7¼"	1¼"
A3-8	8"	7"	7¾"	1¾"
B1-4	1'-0"	4"	7½"	2½"
B1-6	1'-2"	6"	9"	4"
B2-4	10"	4"	2'-7½"	2½"
B2-6	1'-0"	6"	2'-9"	4"
B3-4	4"	3"	7"	2"
B3-6	6"	5"	8½"	3½"
D-4	10"	4"	1'-6"	1'-1"
D-6	1'-0"	6"	2'-2"	1'-9"

CURB QUANTITIES

TYPE	CUBIC YARDS PER LINEAR FOOT
A1-6	0.02585
A1-8	0.03084
A2-6	0.05903
A2-8	0.06379
A3-6	0.01036
A3-8	0.01435
B1-4	0.02185
B1-6	0.02930
B2-4	0.05515
B2-6	0.06171
B3-4	0.00641
B3-6	0.01074
B4	0.05709
D-4	0.04083
D-6	0.06804
E	0.06661

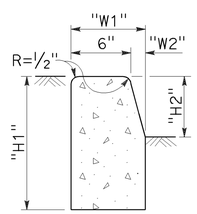

TYPE A1 CURBS

See Table A

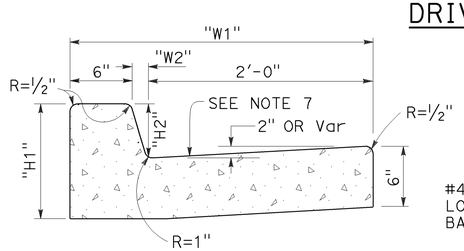

TYPE A2 CURBS

See Table A

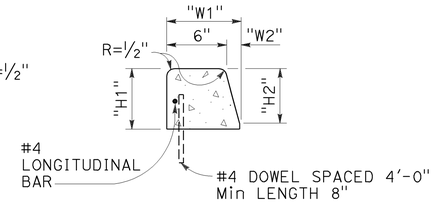

TYPE A3 CURBS

Superimposed on existing pavement
See Table A

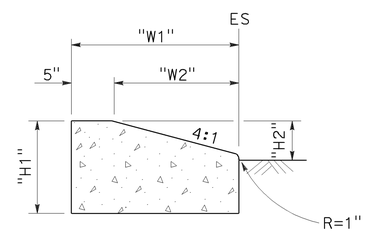

TYPE D CURBS

See Table A

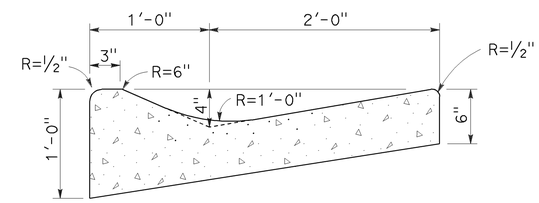

TYPE E CURB

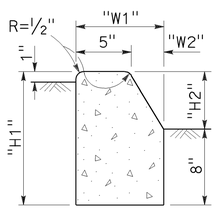

TYPE B1 CURBS

See Table A

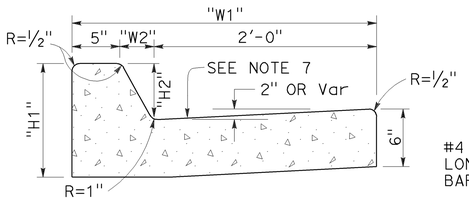

TYPE B2 CURBS

See Table A

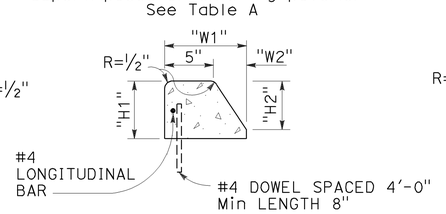

TYPE B3 CURBS

Superimposed on existing pavement
See Table A

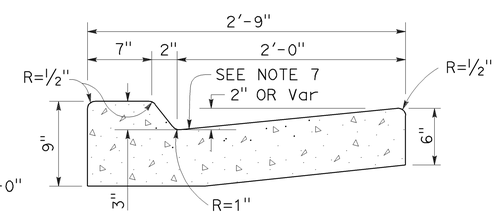

TYPE B4 CURBS

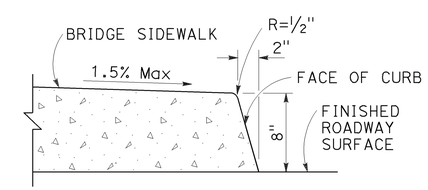

TYPE H CURB

On Bridges

CURBS

NOTES:

1. Case A driveway section typically applies.
2. X=3'-0" except for curb heights over 10" where 4:1 slopes shall be used on curb slope.
3. Sidewalk and ramp thickness "T" at driveway shall be 4" for residental and 6" for commercial.
4. Difference in slope of the driveway ramp and the slope of a line between the gutter and a point on the roadway 5'-0" from gutter line shall not exceed 15%. Reduce driveway ramp slope, not gutter slope, where required.
5. Minimum width of clear passageway for sidewalk shall be 4'-2".
6. Retaining curbs and acquisition of construction easement may be necessary for narrow sidewalks or curb heights in excess of 6".
7. Across the pedestrian route at curb ramp locations, the gutter pan slope shall not exceed 1" of depth for each 2'-0" of width.

STATE OF CALIFORNIA
DEPARTMENT OF TRANSPORTATION

CURBS AND DRIVEWAYS

NO SCALE

RSP A87A DATED JULY 19, 2013 SUPERSEDES STANDARD PLAN A87A
DATED MAY 20, 2011 - PAGE 119 OF THE STANDARD PLANS BOOK DATED 2010.

REVISED STANDARD PLAN RSP A87A

Dist	COUNTY	ROUTE	POST MILES TOTAL PROJECT	SHEET No.	TOTAL SHEETS
04	SM	1	40.6/40.9	102	157

REGISTERED CIVIL ENGINEER

July 19, 2013
PLANS APPROVAL DATE

REGISTERED PROFESSIONAL ENGINEER
Michael Janzen
No. 44788
Exp. 03-31-14
CIVIL
STATE OF CALIFORNIA

THE STATE OF CALIFORNIA OR ITS OFFICERS OR AGENTS SHALL NOT BE RESPONSIBLE FOR THE ACCURACY OR COMPLETENESS OF SCANNED COPIES OF THIS PLAN SHEET.

TO ACCOMPANY PLANS DATED 8-19-13

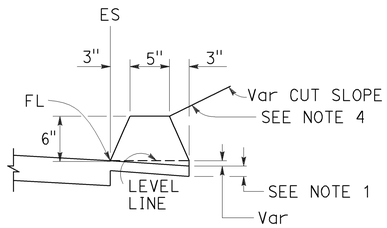

TYPE A
See Note 3

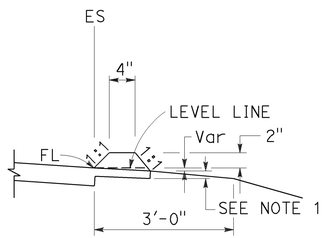

TYPE C

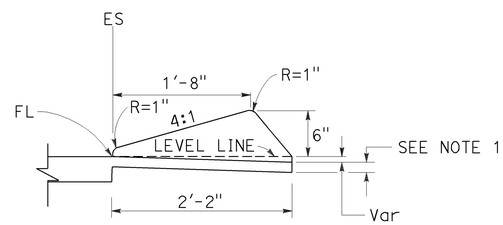

TYPE D

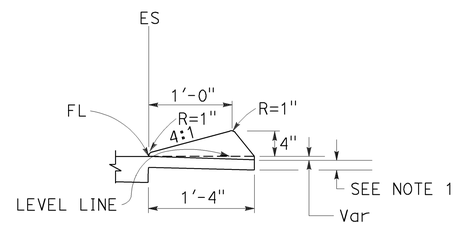

TYPE E

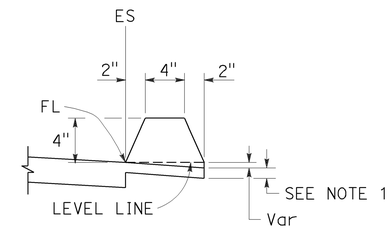

TYPE F
See Note 5

DIKES

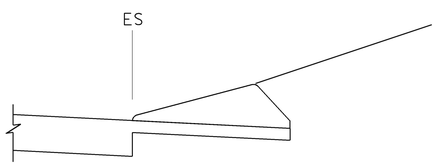

CASE C-1
Cut Slope

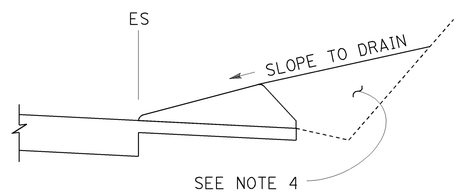

CASE C-2
Cut Slope

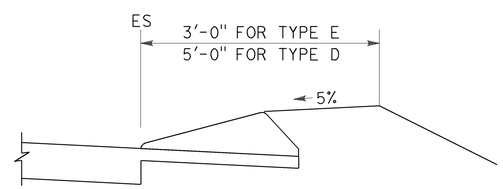

CASE F

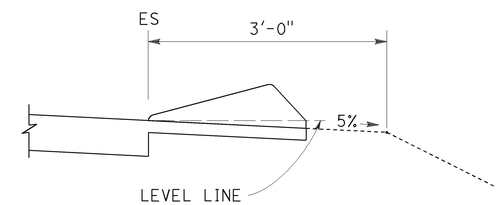

CASE R
See Note 2

TYPE D AND E BACKFILL DETAILS

NOTES:

1. For HMA shoulders only, extend top layer of HMA placed on the shoulder under dike with no joint at the ES. For projects with OGFC shoulders, do not extend OGFC under dike. See project plans for modified dike detail.
2. Case R applies to retrofit only projects where restrictive conditions do not provide enough width for Case F backfill.
3. Type A dike only to be used where restrictive slope conditions do not provide enough width to use Type D or Type E dike.
4. Fill and compact with excavated material to top of dike.
5. Use Type F dike, where dike is required with guard railing installations. See Revised Standard Plan RSP A77N4 for dike positioning details.

DIKE QUANTITIES

TYPE	CUBIC YARDS PER LINEAR FOOT
A	0.0135
C	0.0038
D	0.0293
E	0.0130
F	0.0066

Quantities based on 5% cross slope.

STATE OF CALIFORNIA
DEPARTMENT OF TRANSPORTATION

HOT MIX ASPHALT DIKES

NO SCALE

RSP A87B DATED JULY 19, 2013 SUPERSEDES STANDARD PLAN A87B DATED MAY 20, 2011 - PAGE 120 OF THE STANDARD PLANS BOOK DATED 2010.

REVISED STANDARD PLAN RSP A87B

2010 REVISED STANDARD PLAN RSP A87B

6-27-13

Dist	COUNTY	ROUTE	POST MILES TOTAL PROJECT	SHEET No.	TOTAL SHEETS
04	SM	1	40.6/40.9	103	157

REGISTERED CIVIL ENGINEER

July 19, 2013
PLANS APPROVAL DATE

REGISTERED PROFESSIONAL ENGINEER Hector David Cordova No. C41957 Exp. 3-31-14 CIVIL STATE OF CALIFORNIA

THE STATE OF CALIFORNIA OR ITS OFFICERS OR AGENTS SHALL NOT BE RESPONSIBLE FOR THE ACCURACY OR COMPLETENESS OF SCANNED COPIES OF THIS PLAN SHEET.

TO ACCOMPANY PLANS DATED 8-19-13

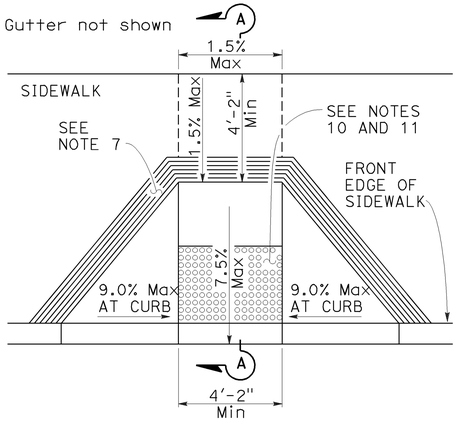

CASE A

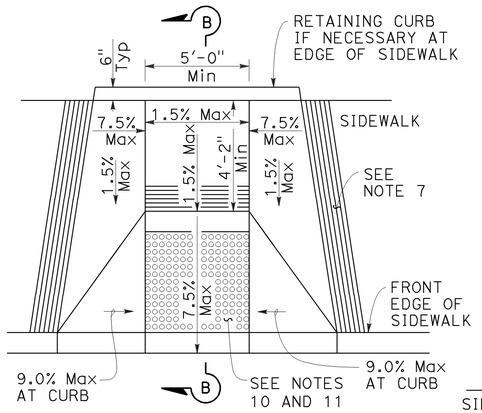

CASE B

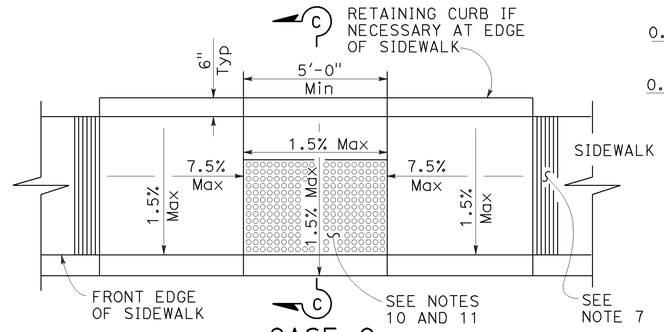

CASE C

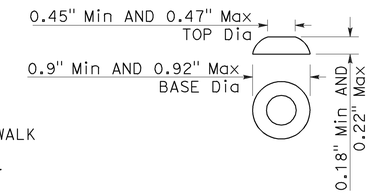

RAISED TRUNCATED DOME

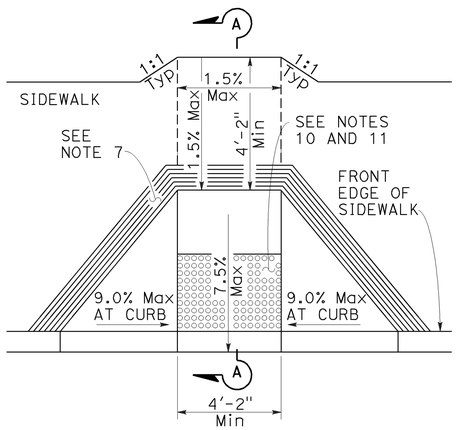

CASE D

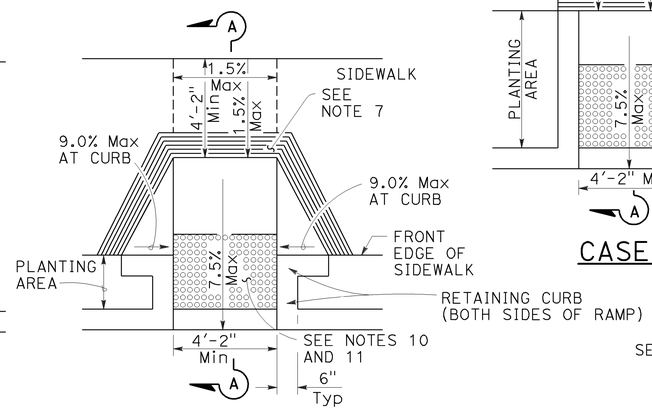

CASE E

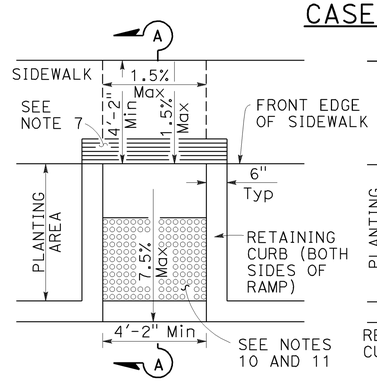

CASE F

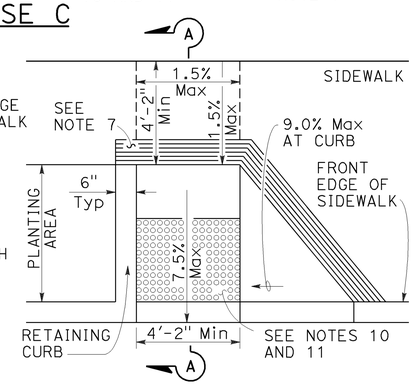

CASE G

See Note 4

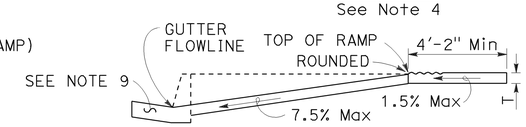

SECTION A-A

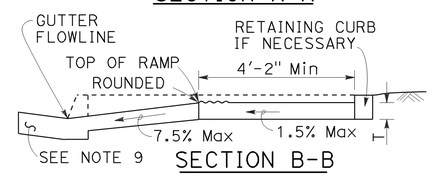

SECTION B-B

Depress entire sidewalk as required

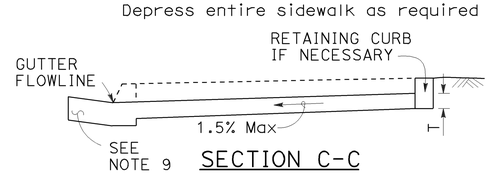

SECTION C-C

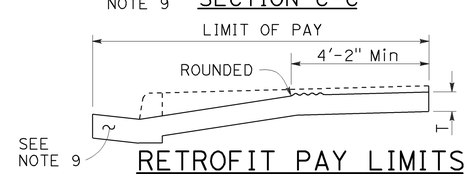

RETROFIT PAY LIMITS

Existing curb and sidewalk

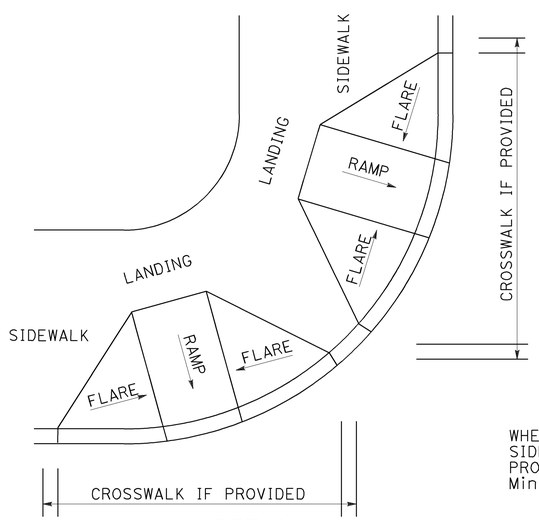

DETAIL A

TYPICAL TWO-RAMP CORNER INSTALLATION

See Note 1

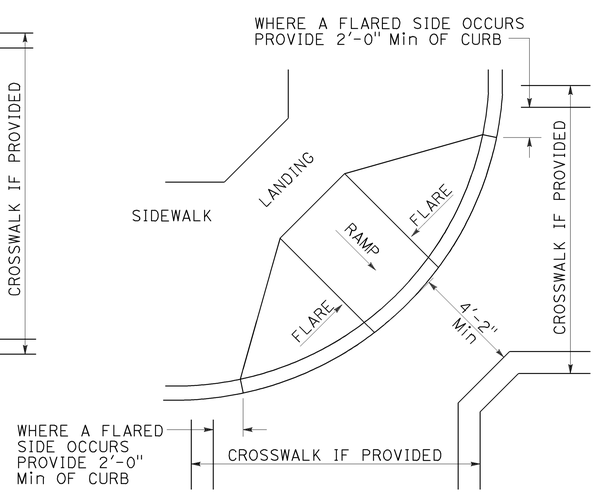

DETAIL B

TYPICAL ONE-RAMP CORNER INSTALLATION

See Notes 1 and 3

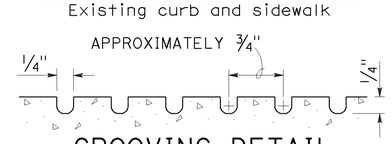

GROOVING DETAIL

NOTES:

1. As site conditions dictate, Case A through Case G curb ramps may be used for corner installations similar to those shown in Detail A and Detail B. The case of curb ramps used in Detail A do not have to be the same. Case A through Case G curb ramps also may be used at mid block locations, as site conditions dictate.
2. If distance from curb to back of sidewalk is too short to accommodate ramp and 4'-2" platform (landing) as shown in Case A, the sidewalk may be depressed longitudinally as in Case B, or C or may be widened as in Case D.
3. When ramp is located in center of curb return, crosswalk configuration must be similar to that shown for Detail B.
4. As site conditions dictate, the retaining curb side and the flared side of the Case G ramp shall be constructed in reversed position.
5. If located on a curve, the sides of the ramp need not be parallel, but the minimum width of the ramp shall be 4'-2".
6. Side slope of ramp flares vary uniformly from a maximum of 9.0% at curb to conform with longitudinal sidewalk slope adjacent to top of the ramp, except in Case C and Case F.
7. The curb ramp shall be outlined, as shown, with a 1'-0" wide border with 1/4" grooves approximately 3/4" on center. See grooving detail.
8. Transitions from ramps and landing to walks, gutters or streets shall be flush (no lip) and free of abrupt changes.
9. Counter slopes of adjoining gutters and road surfaces immediately adjacent to and within 24 inches of the curb ramp shall not be steeper than 1:20 (5.0%). Gutter pan slope shall not exceed 1" of depth for each 2'-0" of width.
10. Curb ramps shall have a detectable warning surface that extends the full width and 3'-0" depth of the ramp. Detectable Warning Surfaces shall conform to the details on this plan and the requirements in the Standard Specifications.
11. The edge of the detectable warning surface nearest the street shall be between 6" and 8" from the gutter flowline.
12. Sidewalk and ramp thickness, "T", shall be 3 1/2" minimum.
13. Utility pull boxes, manholes, vaults and all other utility facilities within the boundaries of the curb ramp will be relocated or adjusted to grade by the owner prior to, or in conjunction with, curb ramp construction.
14. Detectable warning surface may have to be cut to allow removal of utility covers while maintaining full detectable warning width and depth.

RAISED TRUNCATED DOME PATTERN (IN-LINE)

DETECTABLE WARNING SURFACE

See Note 10

STATE OF CALIFORNIA
DEPARTMENT OF TRANSPORTATION

CURB RAMP DETAILS

NO SCALE

RSP A88A DATED JULY 19, 2013 SUPERSEDES STANDARD PLAN A88A
DATED MAY 20, 2011 - PAGE 121 OF THE STANDARD PLANS BOOK DATED 2010.

REVISED STANDARD PLAN RSP A88A

2010 REVISED STANDARD PLAN RSP A88A

7-8-13

Dist	COUNTY	ROUTE	POST MILES TOTAL PROJECT	SHEET No.	TOTAL SHEETS
04	SM	1	40.6/40.9	104	157

REGISTERED CIVIL ENGINEER

October 21, 2011
PLANS APPROVAL DATE

REGISTERED PROFESSIONAL ENGINEER Tillat Satter No. C42892 Exp. 3-31-12 CIVIL STATE OF CALIFORNIA

THE STATE OF CALIFORNIA OR ITS OFFICERS OR AGENTS SHALL NOT BE RESPONSIBLE FOR THE ACCURACY OR COMPLETENESS OF SCANNED COPIES OF THIS PLAN SHEET.

TO ACCOMPANY PLANS DATED 8-19-13

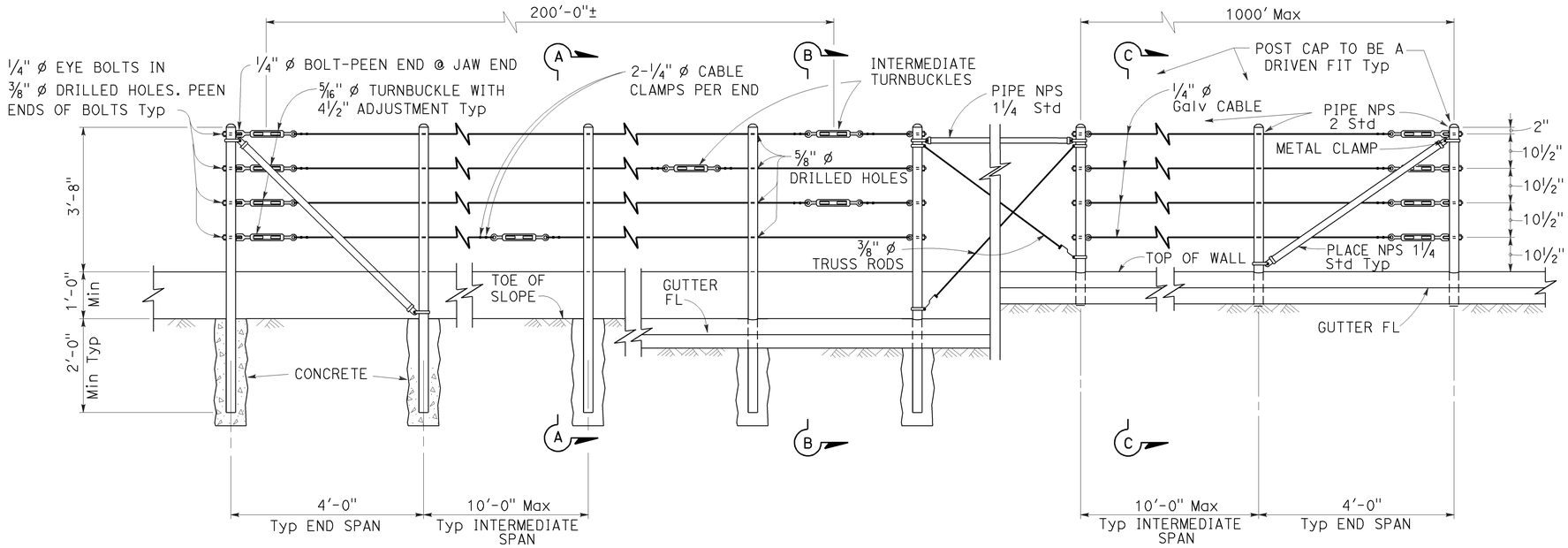

EXISTING WALL (WITHOUT GUTTER)
Existing

RETAINING WALL (WITH GUTTER)
Existing

RETAINING WALL (WITH GUTTER)
New construction

ELEVATION

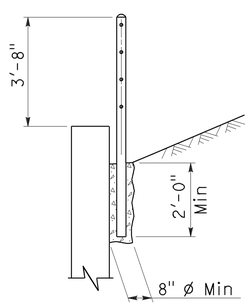

SECTION A-A
Existing

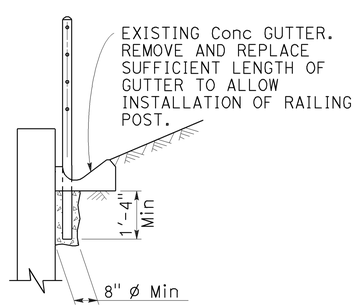

SECTION B-B
Existing

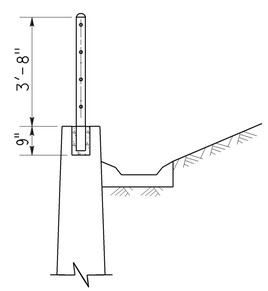

SECTION C-C
New construction

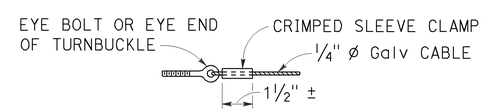

ALTERNATIVE CABLE CONNECTION

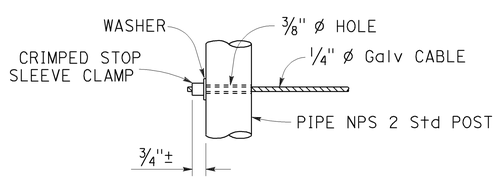

ALTERNATIVE DEAD END ANCHORAGE

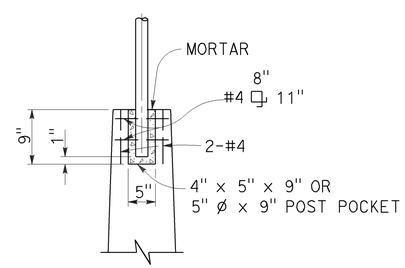

POST POCKET

NOTES:

1. Maximum distance between turnbuckles shall be 200'-0"±.
2. Intermediate turnbuckles to be placed in adjacent spans.
3. Cable shall not be spliced between intermediate turnbuckles and end posts.
4. Posts to be vertical.
5. Alignment of holes in posts may vary to conform to slope of top of retaining wall.
6. The Contractor shall verify all dependent dimensions in the field before ordering or fabricating any material.
7. Line posts shall be braced horizontally and trussed diagonally in both directions at intervals not to exceed 1000'.
8. Post pockets to be centered in top of wall.
9. Typical end spans, braced in both directions, shall be constructed at changes in line where the angle of deflection is 15° or more.
10. Provide thimbles at all cable loops.

STATE OF CALIFORNIA
DEPARTMENT OF TRANSPORTATION

CABLE RAILING

NO SCALE

RSP B11-47 DATED OCTOBER 21, 2011 SUPERSEDES STANDARD PLAN B11-47 DATED MAY 20, 2011 - PAGE 293 OF THE STANDARD PLANS BOOK DATED 2010.

REVISED STANDARD PLAN RSP B11-47

2010 REVISED STANDARD PLAN RSP B11-47

9-14-11

Dist	COUNTY	ROUTE	POST MILES TOTAL PROJECT	SHEET No.	TOTAL SHEETS
04	SM	1	40.6/40.9	105	157

REGISTERED CIVIL ENGINEER

July 19, 2013
PLANS APPROVAL DATE

REGISTERED PROFESSIONAL ENGINEER
Tillat Satter
No. C42892
Exp. 3-31-14
CIVIL
STATE OF CALIFORNIA

THE STATE OF CALIFORNIA OR ITS OFFICERS OR AGENTS SHALL NOT BE RESPONSIBLE FOR THE ACCURACY OR COMPLETENESS OF SCANNED COPIES OF THIS PLAN SHEET.

TO ACCOMPANY PLANS DATED 8-19-13

2010 REVISED STANDARD PLAN RSP B11-54

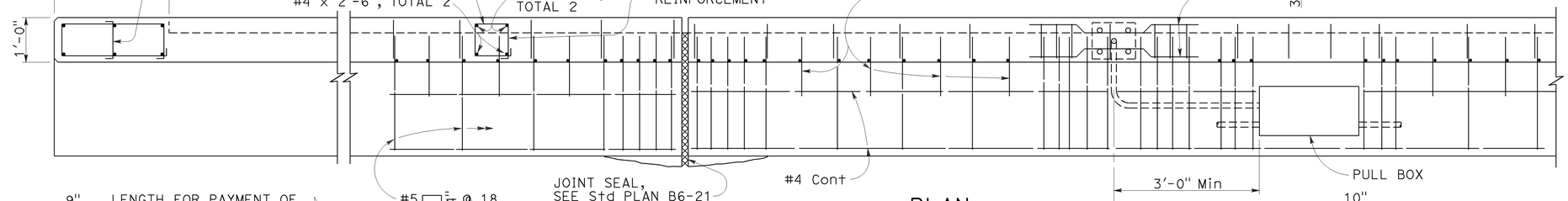

PLAN

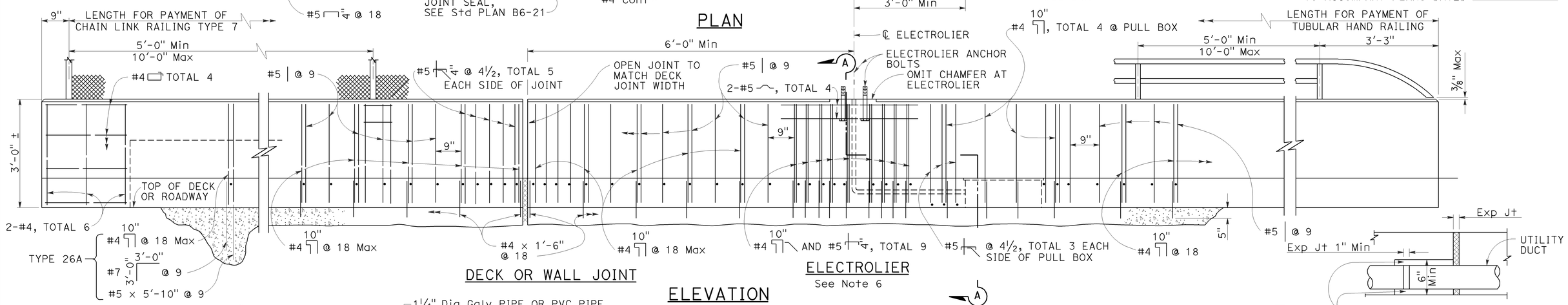

DECK OR WALL JOINT

ELEVATION

ELECTROLIER

See Note 6

UTILITY DUCT EXPANSION JOINT

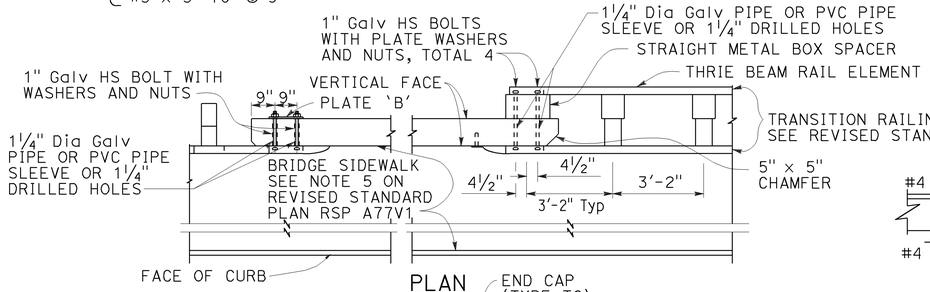

PLAN

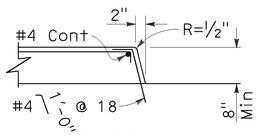

TYPE H

To be used unless otherwise shown on plans.

CURB DETAIL

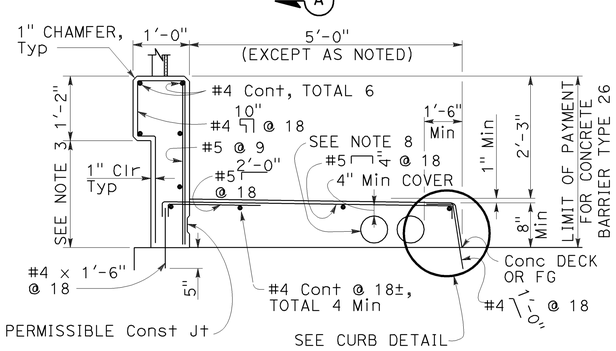

TYPE 26

On bridge deck

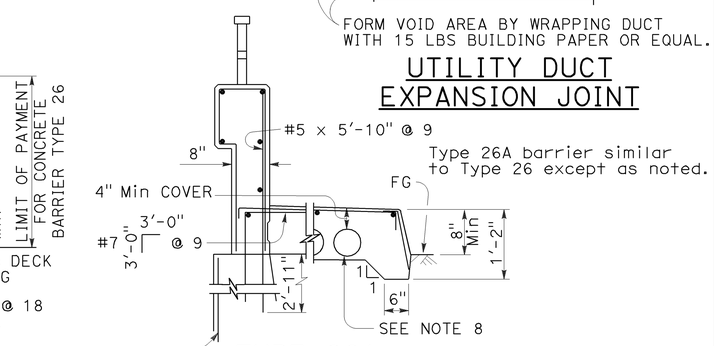

TYPE 26A

Off bridge deck

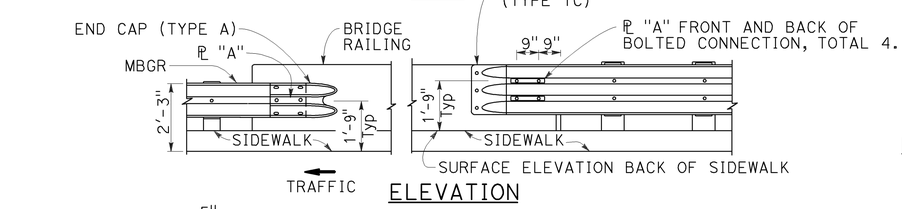

ELEVATION

METAL RAILING CONNECTION TO BRIDGE RAILING

See Note 9

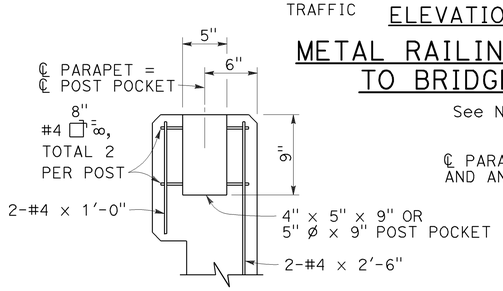

POST ANCHORAGE DETAIL

Applies to Chain Link Railing Type 7 and Tubular Hand Railing. See respective Standard Plans for additional details.

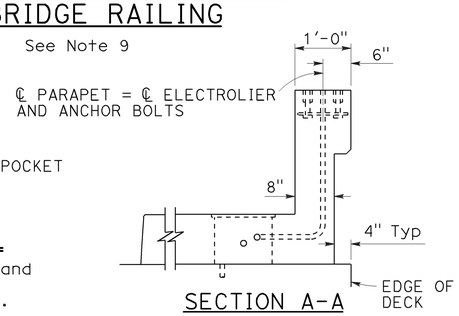

SECTION A-A

NOTES:

1. For Chain Link Railing notes and details not shown, see Standard Plan B11-52.
2. For Hand Railing notes and details not shown, see Standard Plan B11-51.
3. Dimensions will vary with cross slope and with certain thicknesses of surfacing. See Project Plans.
4. Walls are to be backfilled before railing is placed.
5. Clearance to reinforcing steel in curb and railing to be 1" except as noted. Longitudinal reinforcement to stop at all expansion joints.
6. See Project Plans for electrolier locations and pull box type.
7. For electrical details, see Standard Plans ES-9A, ES-9B, ES-9C, ES-9D, and ES-9E.
8. A maximum of five - 4" and a minimum of two - 4" round openings for future utilities. Openings are to be sealed at ends and extended 8" minimum past end of sidewalk if not used. Duct forms are to be tied down. Minimum of 6" from face of rail to utility opening.
9. For typical metal railing connection details not shown, see Revised Standard Plans RSP A77K1 and RSP A77K2.
10. This barrier is to be used only for speeds of 45 MPH or less. For speeds greater than 45 MPH, pedestrians should be protected by a separation traffic barrier.

STATE OF CALIFORNIA
DEPARTMENT OF TRANSPORTATION

CONCRETE BARRIER TYPE 26

NO SCALE

RSP B11-54 DATED JULY 19, 2013 SUPERSEDES STANDARD PLAN B11-54 DATED MAY 20, 2011 - PAGE 296 OF THE STANDARD PLANS BOOK DATED 2010.

REVISED STANDARD PLAN RSP B11-54

6-27-13

Dist	COUNTY	ROUTE	POST MILES TOTAL PROJECT	SHEET No.	TOTAL SHEETS
04	SM	1	40.6/40.9	106	157

REGISTERED CIVIL ENGINEER

July 19, 2013
PLANS APPROVAL DATE

REGISTERED PROFESSIONAL ENGINEER Tillat Satter No. C42892 Exp. 3-31-14 CIVIL STATE OF CALIFORNIA

THE STATE OF CALIFORNIA OR ITS OFFICERS OR AGENTS SHALL NOT BE RESPONSIBLE FOR THE ACCURACY OR COMPLETENESS OF SCANNED COPIES OF THIS PLAN SHEET.

TO ACCOMPANY PLANS DATED 8-19-13

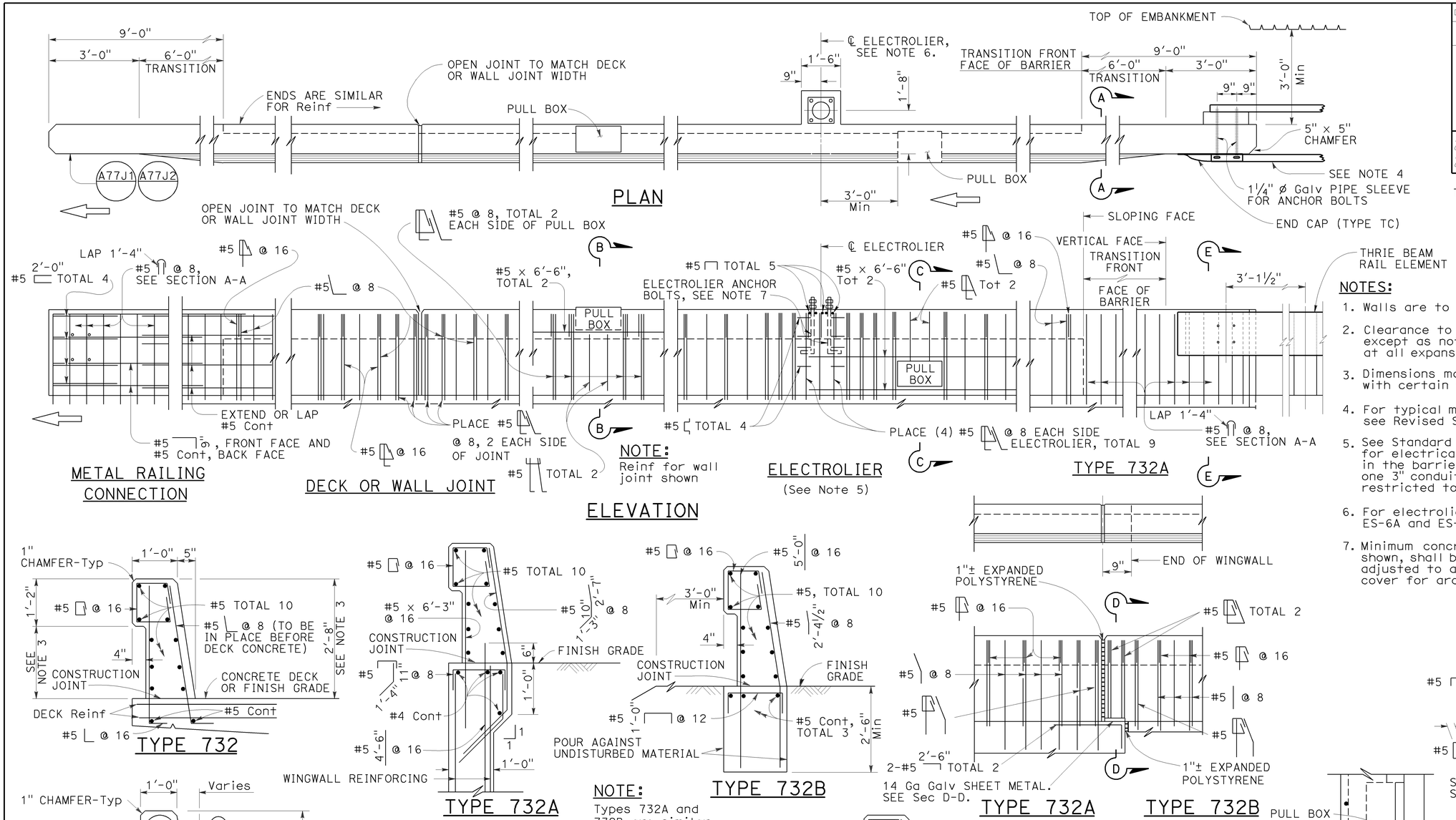

NOTES:

1. Walls are to be backfilled before barrier is placed.
2. Clearance to reinforcing steel in barrier to be 1", except as noted. Longitudinal reinforcement to stop at all expansion joints.
3. Dimensions may vary with roadway cross slope and with certain thickness of surfacing. See Project Plans.
4. For typical metal railing connection details not shown, see Revised Standard Plans RSP A77U1 and RSP A77U2.
5. See Standard Plans ES-9A, ES-9B, ES-9C, ES-9D and ES-9E for electrical details. The maximum number of conduits in the barrier is limited to two 2" conduits along with one 3" conduit. When a 3" conduit is used, it is restricted to the base of the barrier.
6. For electrolier mounting details, See Standard Plans ES-6A and ES-6B.
7. Minimum concrete edge distance, to the reinforcing shown, shall be maintained. Edge distance may be adjusted to accommodate increase in concrete cover for architectual treatment.

NOTE: Types 732A and 732B are similar to Type 732 except as noted.

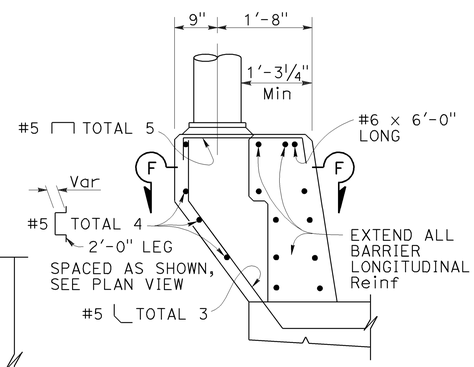

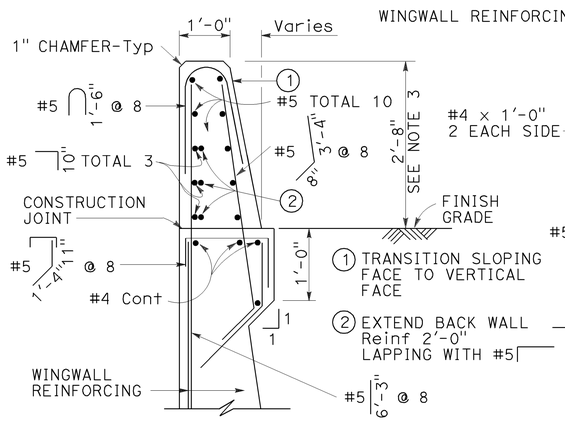

Details shown for barrier anchorage to Type 732A. Anchorage for barrier Types 732 and 732A are similar to their respective details.

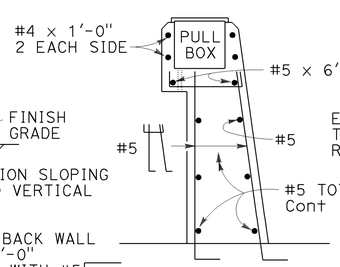

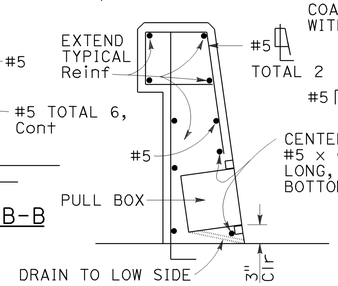

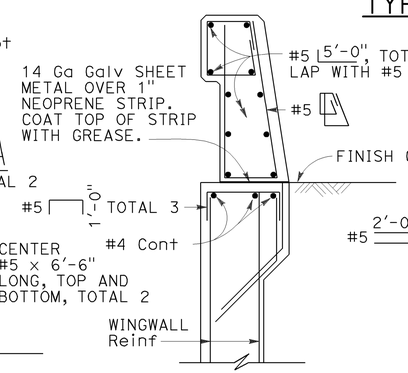

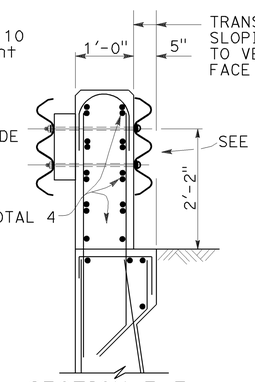

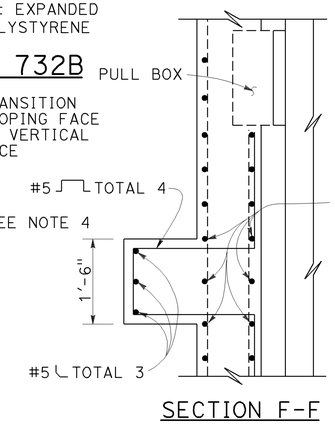

STATE OF CALIFORNIA
DEPARTMENT OF TRANSPORTATION

CONCRETE BARRIER TYPE 732

NO SCALE

RSP B11-55 DATED JULY 19, 2013 SUPERSEDES STANDARD PLAN B11-55 DATED MAY 20, 2011 - PAGE 297 OF THE STANDARD PLANS BOOK DATED 2010.

REVISED STANDARD PLAN RSP B11-55

2010 REVISED STANDARD PLAN RSP B11-55

6-27-13

Dist	COUNTY	ROUTE	POST MILES TOTAL PROJECT	SHEET No.	TOTAL SHEETS
04	SM	1	40.6/40.9	107	157

REGISTERED CIVIL ENGINEER

April 20, 2012
PLANS APPROVAL DATE

REGISTERED PROFESSIONAL ENGINEER
Tillat Satter
No. C42892
Exp. 3-31-14
CIVIL
STATE OF CALIFORNIA

THE STATE OF CALIFORNIA OR ITS OFFICERS OR AGENTS SHALL NOT BE RESPONSIBLE FOR THE ACCURACY OR COMPLETENESS OF SCANNED COPIES OF THIS PLAN SHEET.

TO ACCOMPANY PLANS DATED 8-19-13

2010 REVISED STANDARD PLAN RSP B11-68

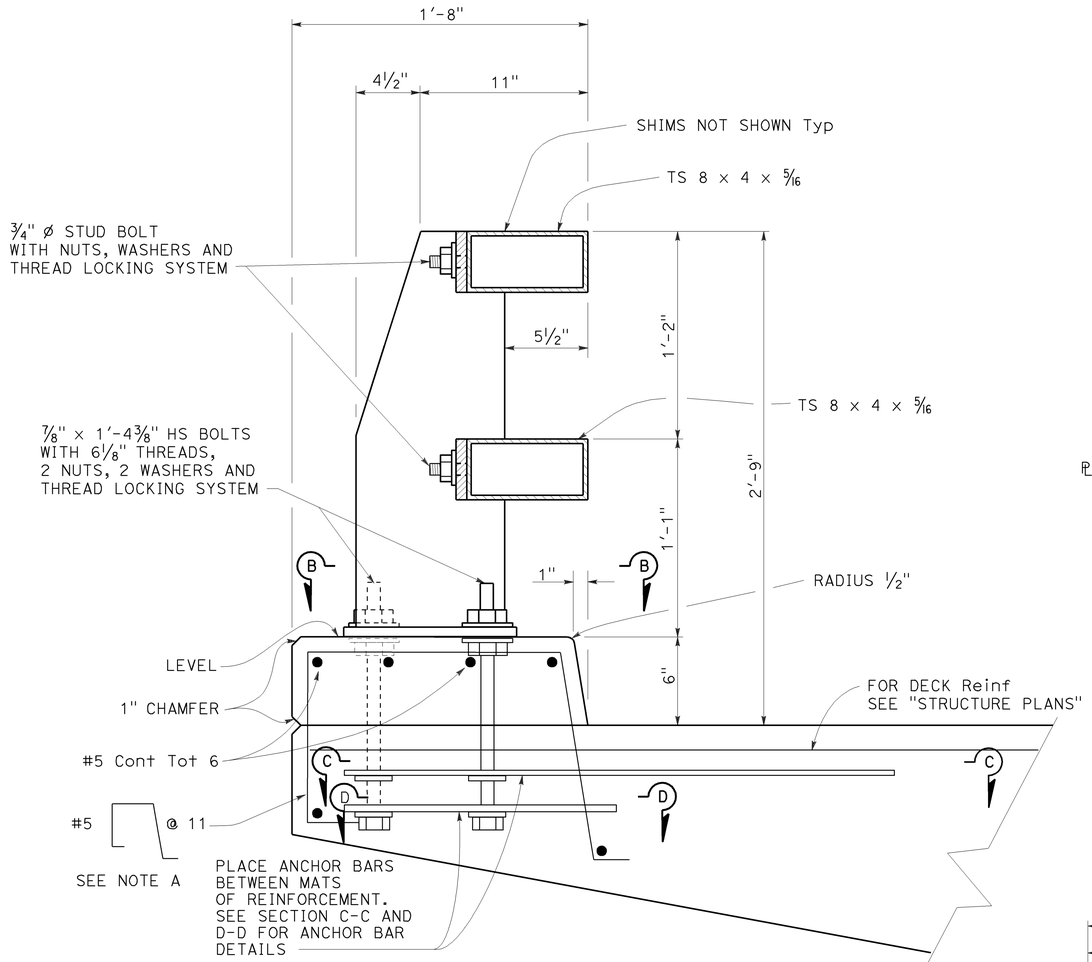

TYPICAL RAIL SECTION

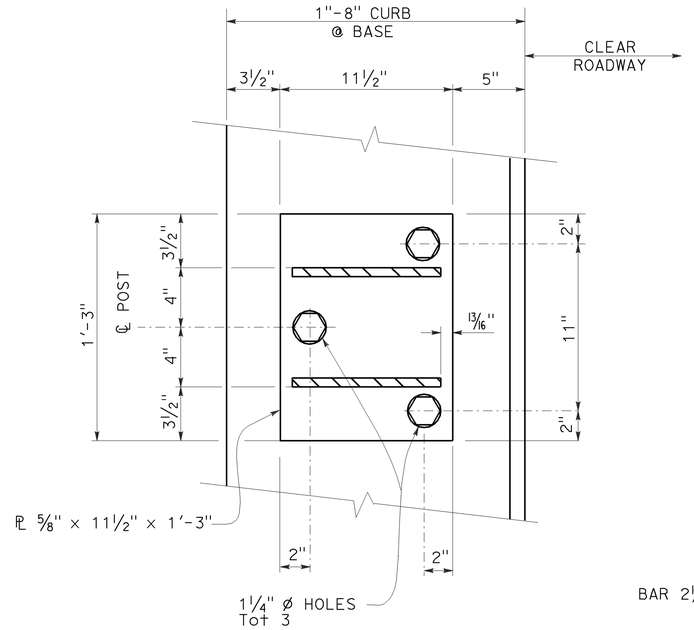

SECTION B-B

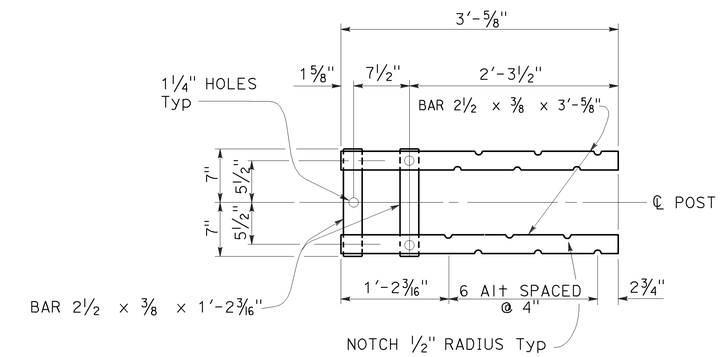

SECTION C-C
Top Anchorage

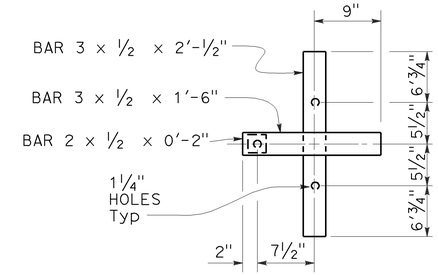

SECTION D-D
Lower Anchorage

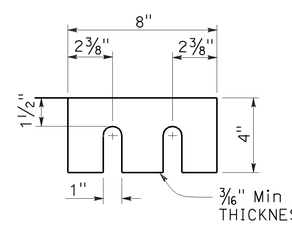

SHIMS REQUIRED FOR TOP AND BOTTOM RAIL

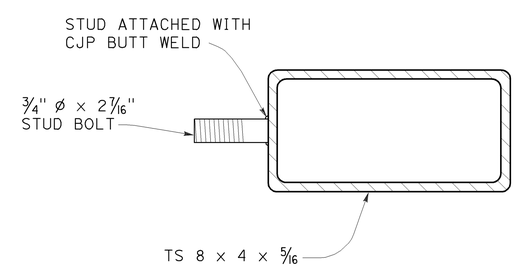

SECTION AT POST

STUD BOLT DETAIL

NOTE A

Adjust spacing to clear scupper opening by 2" if applicable.

STATE OF CALIFORNIA
DEPARTMENT OF TRANSPORTATION

CALIFORNIA ST-10 BRIDGE RAIL (SHEET 1 OF 3)

NO SCALE

RSP B11-68 DATED APRIL 20, 2012 SUPERSEDES STANDARD PLAN B11-68 DATED MAY 20, 2011 - PAGE 308 OF THE STANDARD PLANS BOOK DATED 2010.

REVISED STANDARD PLAN RSP B11-68

3-23-12

Dist	COUNTY	ROUTE	POST MILES TOTAL PROJECT	SHEET No.	TOTAL SHEETS
04	SM	1	40.6/40.9	108	157

REGISTERED CIVIL ENGINEER

July 19, 2013
PLANS APPROVAL DATE

REGISTERED PROFESSIONAL ENGINEER
Tillat Satter
No. C42892
Exp. 3-31-14
CIVIL
STATE OF CALIFORNIA

THE STATE OF CALIFORNIA OR ITS OFFICERS OR AGENTS SHALL NOT BE RESPONSIBLE FOR THE ACCURACY OR COMPLETENESS OF SCANNED COPIES OF THIS PLAN SHEET.

TO ACCOMPANY PLANS DATED 8-19-13

2010 REVISED STANDARD PLAN RSP B11-70

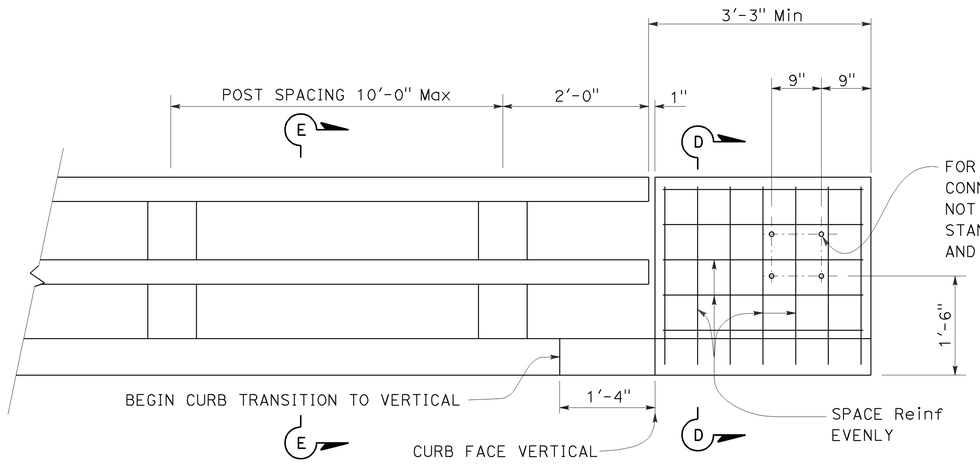

END OF RAILING ELEVATION

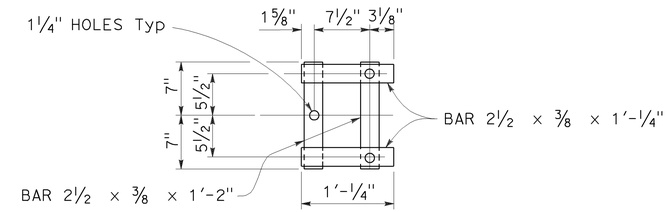

WALL ANCHOR PLATE DETAIL

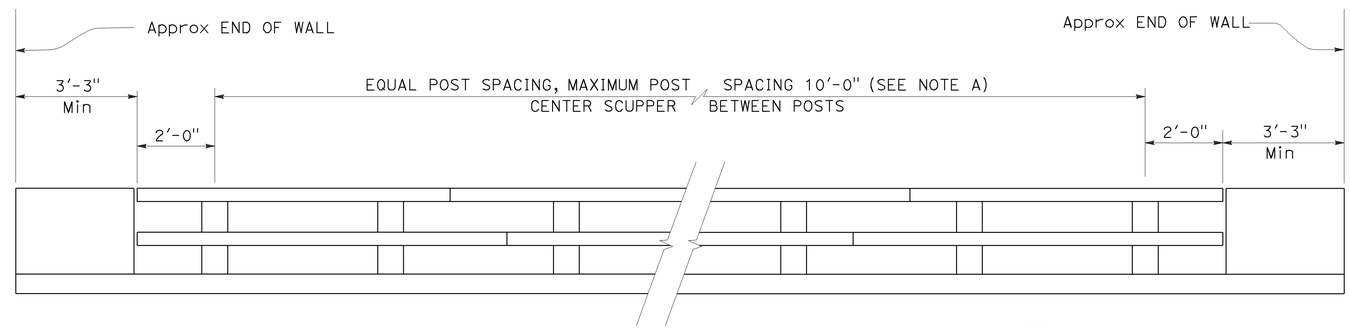

BRIDGE RAILING ELEVATION

NOTE A:

Post spacing and/or block length to be adjusted to fit bridge length or wingwall length.

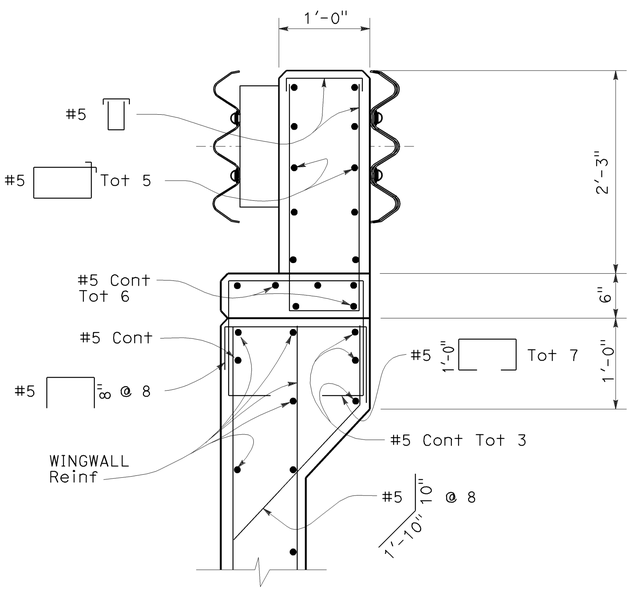

SECTION D-D

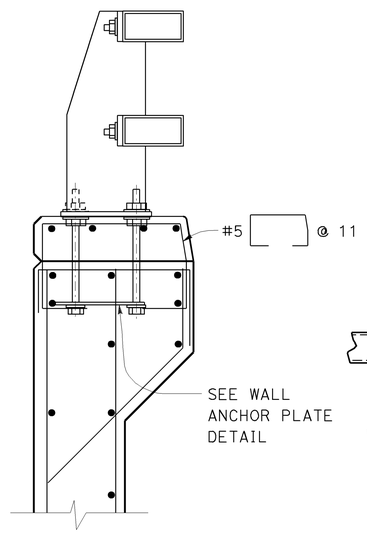

SECTION E-E

Reinf same as for Section D-D except as noted.

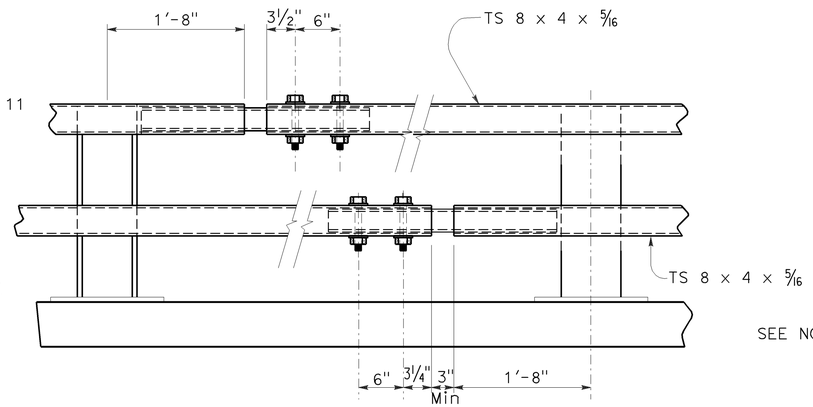

EXPANSION SPLICE

NOTE B:

Use ¾" ϕ × 5⅝"
Hs bolts with washers, fully tensioned.
1" holes in rail Typ

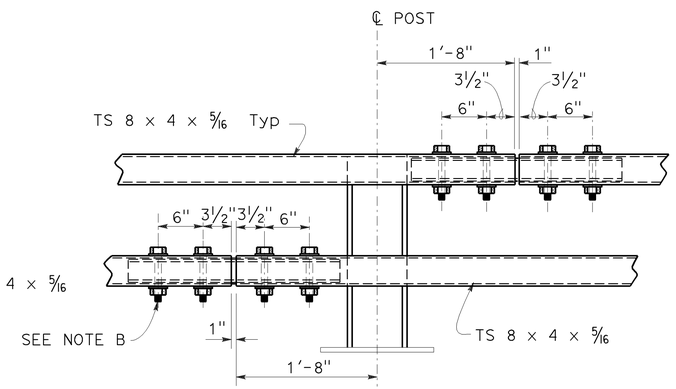

STANDARD SPLICE

STATE OF CALIFORNIA
DEPARTMENT OF TRANSPORTATION

CALIFORNIA ST-10 BRIDGE RAIL (SHEET 3 OF 3)

NO SCALE

RSP B11-70 DATED JULY 19, 2013 SUPERSEDES STANDARD PLAN B11-70 DATED MAY 20, 2011 - PAGE 310 OF THE STANDARD PLANS BOOK DATED 2010.

REVISED STANDARD PLAN RSP B11-70

6-27-13

TO ACCOMPANY PLANS DATED 8-19-13

Dist	COUNTY	ROUTE	POST MILES TOTAL PROJECT	SHEET No.	TOTAL SHEETS
04	SM	1	40.6/40.9	109	157

Glenn DeCou
REGISTERED CIVIL ENGINEER

October 19, 2012
PLANS APPROVAL DATE

REGISTERED PROFESSIONAL ENGINEER Glenn DeCou No. C34547 Exp. 9-30-13 CIVIL STATE OF CALIFORNIA

THE STATE OF CALIFORNIA OR ITS OFFICERS OR AGENTS SHALL NOT BE RESPONSIBLE FOR THE ACCURACY OR COMPLETENESS OF SCANNED COPIES OF THIS PLAN SHEET.

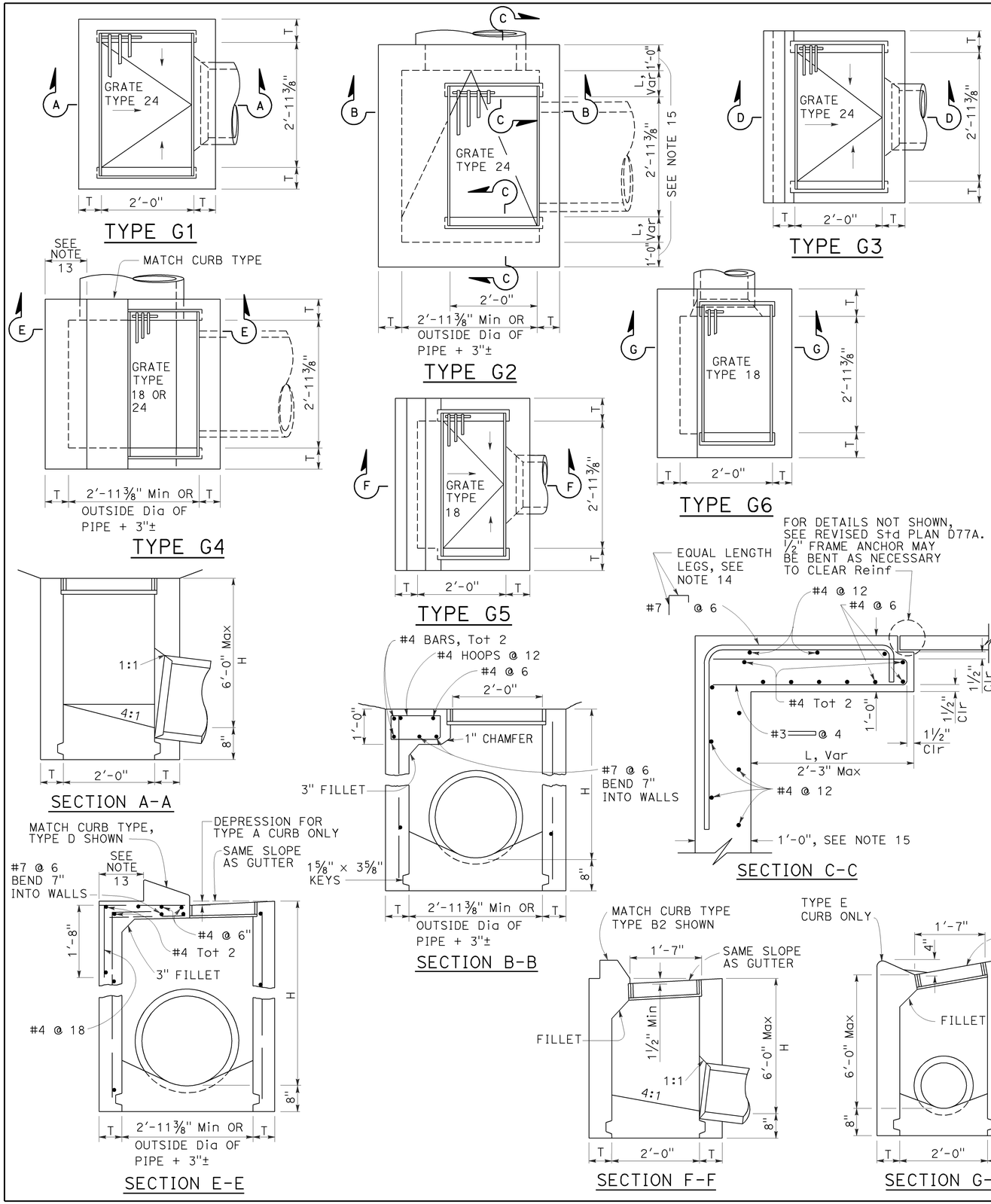

NOTES:

1. "H" is the difference in elevation between the outlet pipe flow line and the normal gutter grade line undepressed.
2. For "T" wall thickness, see Table A below.
3. Wall reinforcing not required when "H" is 8'-0" or less and the unsupported width or length is 7'-0" or less. Walls exceeding these limits shall be reinforced with #4 bars @ 1'-6" ± centers placed 1½" clear to inside of box unless otherwise shown.
4. Inlet bottom reinforcing not required. See Standard Plan D74C for alternative reinforced bottom and alternative half round bottom.
5. Steps-None required where "H" is less than 2'-6". Where "H" is 2'-6" or more, install steps with lowest rung 1'-0" above the floor and highest rung not more than 6" below top of inlet. The distance between steps shall not exceed 1'-0" and shall be uniform throughout the length of the wall. Place steps in the wall without an opening. Steps inserts may be substituted for the bar steps. Step inserts shall comply with State Industrial Safety requirements. See Standard Plan D74C for step details.
6. Details shown apply to both metal and concrete pipe.
7. Pipe(s) can be placed in any wall.
8. Curb section shall match adjacent curb.
9. Basin floors shall have wood trowel finish and a minimum slope of 12:3 from all directions toward outlet pipe.
10. Set inlet so that grate bars are parallel to direction of principal surface flow.
11. See Revised Standard Plans D77A and D77B for grate and frame details and weights of miscellaneous iron and steel.
12. See Standard Plan D78A for gutter depression details.
13. This dimenison will vary with different grates, curbs types, box width and wall thickness.
14. Bar may be rotated as necessary to clear opening. Where "L" is 6" or less, bar may be omitted.
15. Where "L" is 6" or less, wall thickness shall be as shown in Table A.
16. Cast-in-place inlets to be formed around all pipes/stubs intersecting the inlet, and concrete poured in one continuous operation. Precast inlets shall have mortared connections conforming to details for Type GCP Inlet shown on Standard Plan D75B. See Standard Specifications for mortar composition.

TABLE A

CONCRETE QUANTITIES				
TYPE	H=3'-0" TO 8'-0" (T=6")		H=8'-1" TO 20'-0" (T=8")	
	H=3'-0" (CY)	ADDITIONAL PCC PER FOOT (CY)	H=8'-1" (CY)	ADDITIONAL PCC PER FOOT (CY)
G-1	0.95	0.220	See Note A	SEE NOTE A
G-2*	1.31	0.255	3.50	0.357
G-3	1.03	0.220	See Note A	SEE NOTE A
G-4* (TYPE 24)	1.27	0.255	3.48	0.357
G-4* (TYPE 18)	1.30	0.255	3.50	0.357
G-5	1.02	0.220	SEE NOTE A	SEE NOTE A
G-6	1.04	0.220	SEE NOTE A	SEE NOTE A

TABLE BASED ON 8" FLOOR SLAB. NO DEDUCTIONS ARE TO BE MADE TO THESE QUANTITIES BECAUSE OF PIPE OPENINGS, DIFFERENT FLOOR ALTERNATIVES OR DIFFERENT CURB TYPES. * QUANTITIES FOR TYPE G-2 AND G-4 INLETS BASED ON THE MINIMUM INTERIOR DIMENSIONS.

NOTE A:

Maximum allowable height 6'-0".

STATE OF CALIFORNIA
DEPARTMENT OF TRANSPORTATION

DRAINAGE INLETS

NO SCALE

RSP D73 DATED OCTOBER 19, 2012 SUPERSEDES STANDARD PLAN D73 DATED MAY 20, 2011 - PAGE 156 OF THE STANDARD PLANS BOOK DATED 2010.

REVISED STANDARD PLAN RSP D73

2010 REVISED STANDARD PLAN RSP D73

7-19-12

Dist	COUNTY	ROUTE	POST MILES TOTAL PROJECT	SHEET No.	TOTAL SHEETS
04	SM	1	40.6/40.9	110	157

Raymond Don Tsztoo
REGISTERED CIVIL ENGINEER

April 19, 2013
PLANS APPROVAL DATE

REGISTERED PROFESSIONAL ENGINEER Raymond Don Tsztoo No. C37332 Exp. 6-30-14 CIVIL STATE OF CALIFORNIA

THE STATE OF CALIFORNIA OR ITS OFFICERS OR AGENTS SHALL NOT BE RESPONSIBLE FOR THE ACCURACY OR COMPLETENESS OF SCANNED COPIES OF THIS PLAN SHEET.

TO ACCOMPANY PLANS DATED 8-19-13

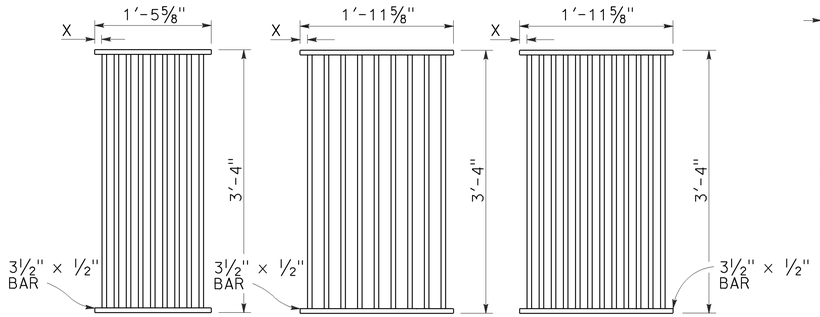

TYPE 18-9

1⅜" Clear spacing. Use within the roadbed on highways where bicycles and pedestrians are excluded.

TYPE 24-9

2" Clear spacing. Use in locations off the roadbed on all types of highways.

TYPE 24-12

1⅜" Clear spacing. Use within the roadbed on highways where bicycles and pedestrians are excluded.

RECTANGULAR GRATE DETAILS

(See table below)

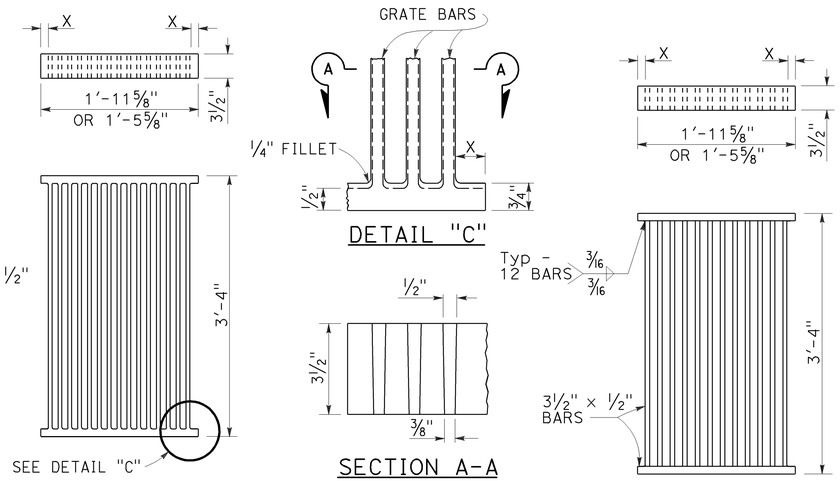

ALTERNATIVE CAST DUCTILE IRON GRATE OR CAST CARBON STEEL GRATE

ALTERNATIVE WELDED GRATE

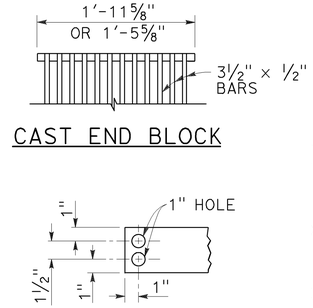

CAST END BLOCK

END OF BAR

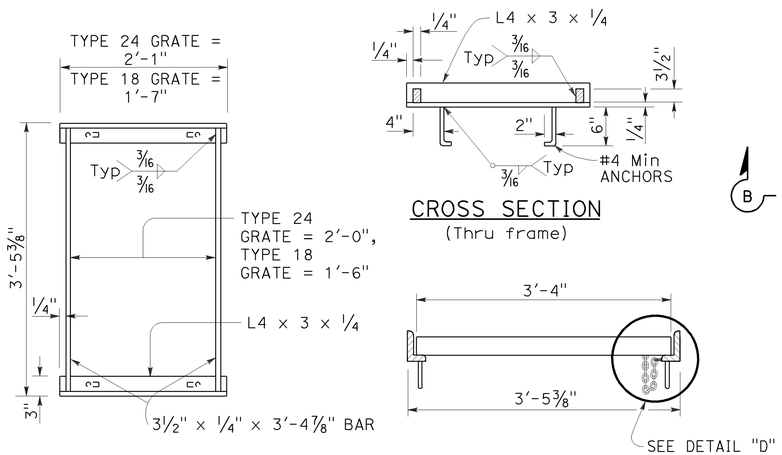

TYPICAL FRAME

CROSS SECTION
(Thru frame)

LONGITUDINAL SECTION
(Thru frame and grate)

RECTANGULAR FRAME DETAILS

(For all rectangular grates)

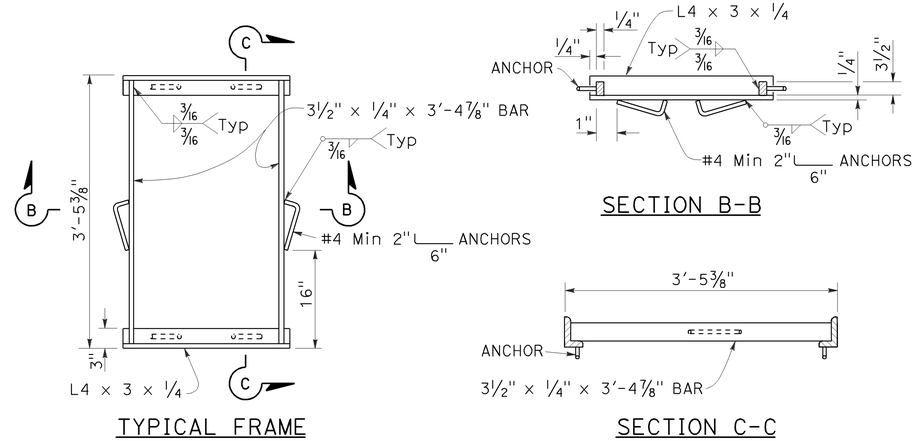

TYPICAL FRAME

SECTION B-B

SECTION C-C

ALTERNATIVE ANCHOR FOR RECTANGULAR FRAME

(For details not shown, See Rectangular Frame Details)

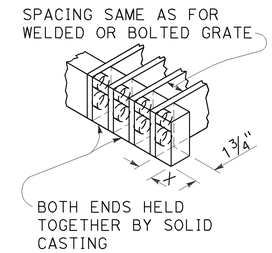

ALTERNATIVE CAST DUCTILE IRON OR CAST CARBON STEEL END BLOCK GRATE

NOTES:

1. Grate type numbers refer to approximate width of grate in inches and number of bars, respectively.
2. Contractor has the option of using cast ductile iron, cast carbon steel, welded, bolted, or cast end block grate.
3. Rounded top of bars optional on all grates.
4. Pipe inlets with a grate shall be placed so that bars parallel direction of principle surface flow.
5. Complete joint penetration butt welds may be substituted for the fillet welds on all anchors.
6. Standard square, hexagon, round or equivalent headed anchors may be substituted for the right angle hooks on the anchors shown on this plan.
7. Grate and frame weights are based on welded grates (weights of face angles, steps, protection bars, etc. are not included).
8. Connect chain to grate and frame only at locations shown on the plans. When chain is required, do not use cast ductile iron grates.

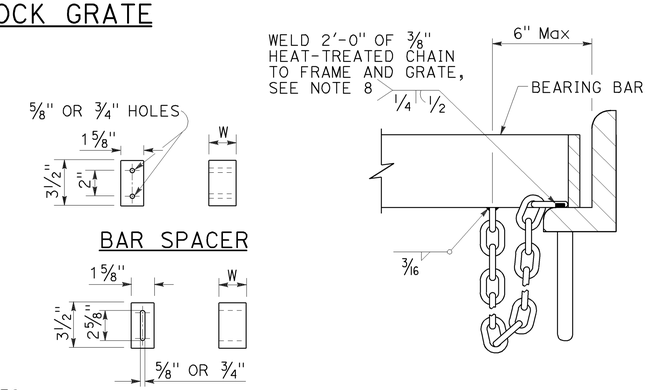

GRATE BAR SPACING TABLE

TYPE	No. OF BARS	CLEAR BAR SPACING	X
18-9	9	1⅜"	1 1/16"
24-9	9	2"	1 9/16"
24-12	12	1⅜"	1¼"

INLET TYPE	COVER TYPE	WEIGHT LB
OS	PLATE	174
OL-7	PLATE	170
OL-10	PLATE	170
OL-14	PLATE	170
OL-21	PLATE	170
OCP	PLATE	112
OCPI	PLATE	112
OCPI	REDWOOD	42
OMP	PLATE	177
OMPI	PLATE	177

INLET TYPE	GRATE TYPE	No. OF GRATES	WEIGHT LB
GDO	24-12	2	634
GOL-7	24-12	1	326
GOL-10	24-12	1	326
GO,G1,G2,G3,G4 (TYPE 24)	24-9	1	263
	24-12	1	326
G4 (TYPE 18),G5,G6	18-9	1	249
GT1	18-9	2	498
GT2	18-9	2	498
GT3	24-12	2	652
GT4	24-12	2	652
TRASH RACK			22
GRATE CHAIN			3

BASIS FOR Misc IRON & STEEL FINAL PAY WEIGHTS FOR DRAINAGE INLETS

(See Note 7)

STATE OF CALIFORNIA
DEPARTMENT OF TRANSPORTATION

GRATE DETAILS No. 1

NO SCALE

RSP D77A DATED APRIL 19, 2013 SUPERSEDES RSP D77A DATED JULY 20, 2012 AND STANDARD PLAN D77A DATED MAY 20, 2011 - PAGE 164 OF THE STANDARD PLANS BOOK DATED 2010.

REVISED STANDARD PLAN RSP D77A

2010 REVISED STANDARD PLAN RSP D77A

4-4-13

Dist	COUNTY	ROUTE	POST MILES TOTAL PROJECT	SHEET No.	TOTAL SHEETS
04	SM	1	40.6/40.9	111	157

Raymond Don Tsztoo
REGISTERED CIVIL ENGINEER

April 19, 2013
PLANS APPROVAL DATE

REGISTERED PROFESSIONAL ENGINEER Raymond Don Tsztoo No. C37332 Exp. 6-30-14 CIVIL STATE OF CALIFORNIA

THE STATE OF CALIFORNIA OR ITS OFFICERS OR AGENTS SHALL NOT BE RESPONSIBLE FOR THE ACCURACY OR COMPLETENESS OF SCANNED COPIES OF THIS PLAN SHEET.

TO ACCOMPANY PLANS DATED 8-19-13

2010 REVISED STANDARD PLAN RSP D77B

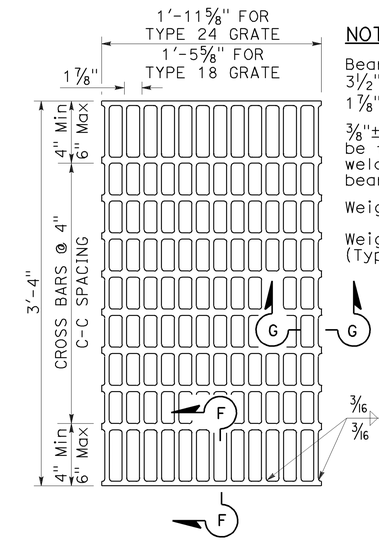

NOTES:

Bearing bars to be 3½" × ¼" bars on 1⅞" centers.

⅜"± ø Cross bars may be fillet welded, resistance welded or electroforged to bearing bars.

Weight of Type 24 grate = 141 LBS.

Weight of Type 18 grate = 107 LBS. (Type 24 grate shown).

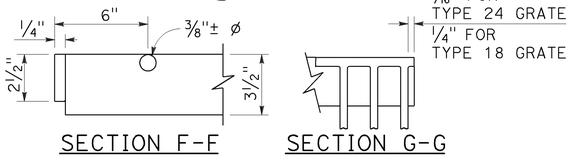

SECTION F-F SECTION G-G

TYPE 18-10 AND 24-13 GRATE

(Welded Steel)

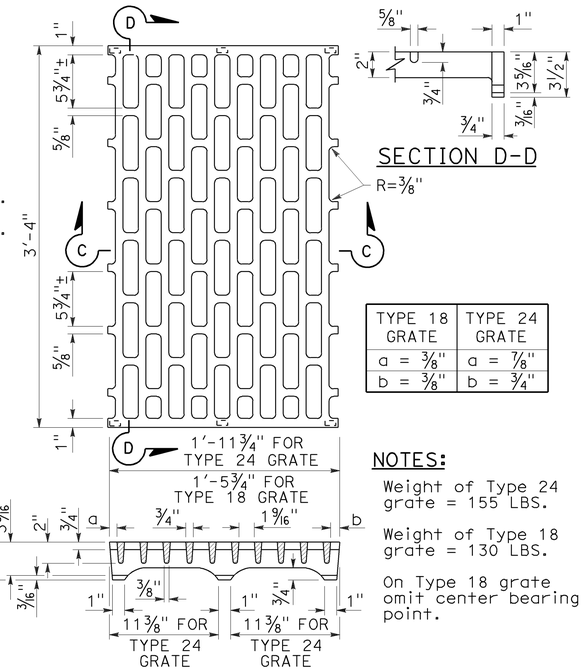

SECTION D-D

TYPE 18 GRATE	TYPE 24 GRATE
a = ⅜"	a = ⅞"
b = ⅜"	b = ¾"

NOTES:

Weight of Type 24 grate = 155 LBS.

Weight of Type 18 grate = 130 LBS.

On Type 18 grate omit center bearing point.

SECTION C-C

TYPE 18-8C AND 24-10C GRATE

(Cast ductile iron)

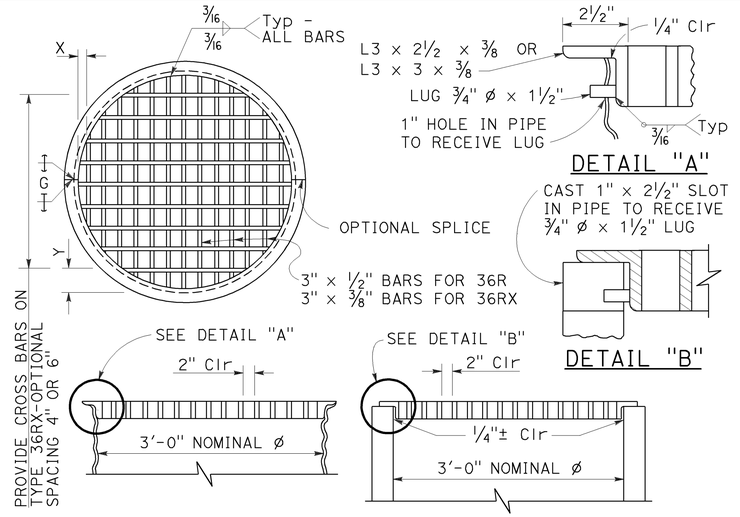

TYPE 36R AND 36RX GRATE DETAILS

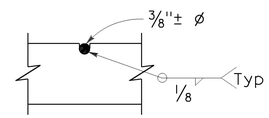

⅜"± ø Cross bars may be fillet welded, resistance welded or electroforged to bearing bars.

CROSS BAR DETAIL TYPE 36RX GRATE (WELDED STEEL)

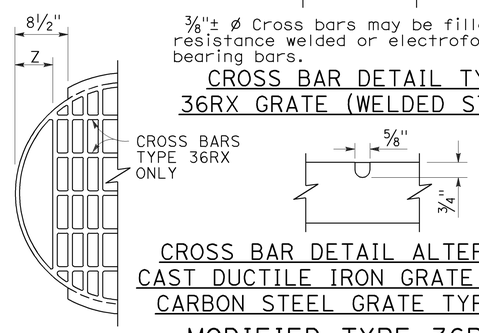

CROSS BAR DETAIL ALTERNATIVE CAST DUCTILE IRON GRATE OR CAST CARBON STEEL GRATE TYPE 36RX

MODIFIED TYPE 36R AND 36RX GRATE FOR ODI INLET

NOTES:

1. When alternative grates are allowed - Final pay based on alternative with the lesser weight.
2. Use frame shown on Standard Plan D74A, D74B or RSP D77A as appropriate.
3. When Type 24-10S, 24-12X or 24-13 grates are used with GDO Inlets, a ¼" × 3½" × 3'-4⅞" steel bar shall be welded across the center of inlet frame to separate the individual grates.
4. See Revised Standard Plan RSP D77A for connecting chain to welded grate and frame. When chain is required, do not use cast ductile iron grate.

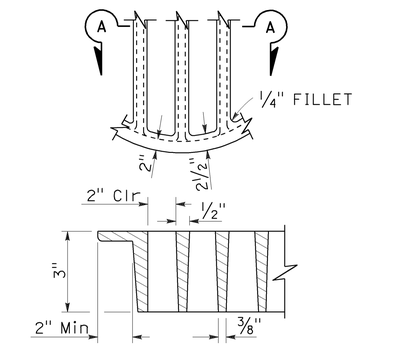

SECTION A-A

ALTERNATIVE CAST DUCTILE IRON GRATE OR CAST CARBON STEEL GRATE TYPE 36R AND 36RX

BASIS FOR Misc IRON AND STEEL FINAL PAY WEIGHTS FOR DRAINAGE INLETS

INLET TYPE	GRATE TYPE	No. OF GRATES	WEIGHT LB
GDO (SEE NOTE 4)	24-10C	2	391
	24-10S	2	456
	24-12X	2	473
	24-13	2	374
G0,G0L,G1,G2, G3,G4 (TYPE 24)	24-10C	1	202
	24-10S	1	229
	24-12X	1	239
	24-13	1	188
G4 (TYPE 18) G5,G6	18-8S	1	187
	18-9X	1	187
	18-10	1	149
GT1,GT2	18-8S	2	374
	18-9X	2	374
	18-10	2	298
GT3,GT4	24-10C	2	404
	24-10S	2	458
	24-12X	2	478
	24-13	2	376
ODI	36RX (Mod)	1	196
GMP,GCP,GCPI	36RX	1	215
ODI	36R (Mod)	1	220
GMP,GCP,GCPI	36R	1	236
TRASH RACK			22
GRATE CHAIN			3

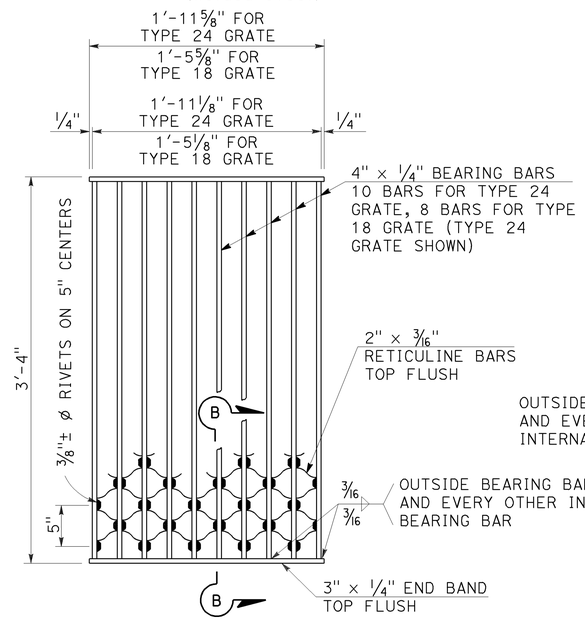

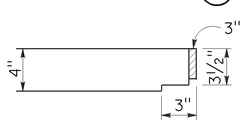

SECTION B-B

NOTES:

Weight of Type 24 grate = 182 LBS.
Weight of Type 18 grate = 145 LBS.

TYPE 18-8S AND 24-10S GRATE

(Welded Steel) Reticuline type

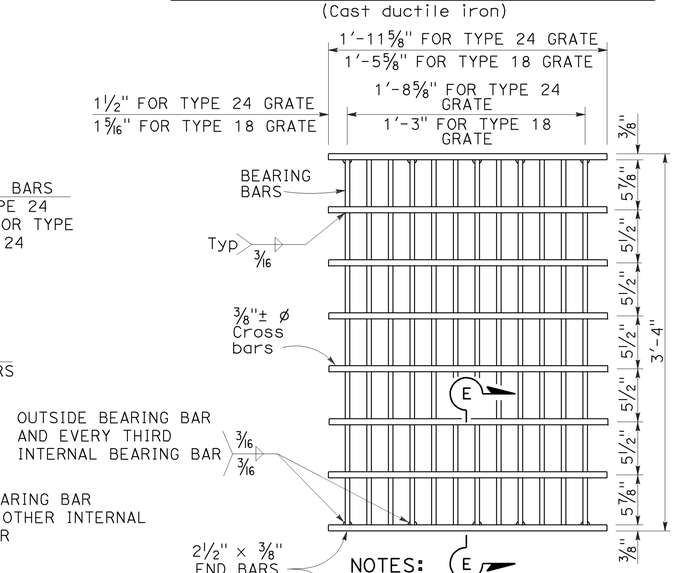

SECTION E-E

NOTES:

Bearing bars to be 3½" × ⅜" bars on 1⅞" centers.

12 Bars for Type 24 grate - 9 bars for Type 18 grates. (Type 24 grate shown).

Weight of Type 24 grate = 192 LBS.

Weight of Type 18 grate = 145 LBS.

⅜"± ø Cross bars may be fillet welded, resistance welded or electroforged to bearing bars.

TYPE 18-9X AND 24-12X GRATE

(Welded Steel)

GRATE BAR SPACING TABLE

TYPE	No. OF BARS	CLEAR BAR SPACING	X	Y 4" SPACING	Y 6" SPACING	Z
36R	13	2"	2⅛"	-	-	-
36RX (STEEL)	15	2"	9/16"	3¾"	5¾"	-
36RX (CAST)	13	2"	2⅛"	3¾"	5¾"	-
36R Mod	12	2"	2⅛"	-	-	5"
36RX Mod (STEEL)	13	2"	9/16"	3¾"	5¾"	5 11/16"
36RX Mod (CAST)	12	2"	2⅛"	3¾"	5¾"	5"

STATE OF CALIFORNIA
DEPARTMENT OF TRANSPORTATION

GRATE DETAILS No. 2

NO SCALE

RSP D77B DATED APRIL 19, 2013 SUPERSEDES RSP D77B DATED JULY 20, 2012 AND STANDARD PLAN D77B DATED MAY 20, 2011 - PAGE 165 OF THE STANDARD PLANS BOOK DATED 2010.

REVISED STANDARD PLAN RSP D77B

4-4-13

Dist	COUNTY	ROUTE	POST MILES TOTAL PROJECT	SHEET No.	TOTAL SHEETS
04	SM	1	40.6/40.9	112	157

LICENSED LANDSCAPE ARCHITECT

July 19, 2013
PLANS APPROVAL DATE

THE STATE OF CALIFORNIA OR ITS OFFICERS OR AGENTS SHALL NOT BE RESPONSIBLE FOR THE ACCURACY OR COMPLETENESS OF SCANNED COPIES OF THIS PLAN SHEET.

LICENSED LANDSCAPE ARCHITECT — Gregory A. Balzer — 2516 — 02-28-15 Renewal Date — 7-19-13 Date — STATE OF CALIFORNIA

TO ACCOMPANY PLANS DATED 8-19-13

A

AB	AGGREGATE BASE
ABS	ACRYLONITRILE-BUTADIENE-STYRENE
AC	ASPHALT CONCRETE
ACC	ARMOR-CLAD CONDUCTORS
Adj	ADJACENT/ADJUSTABLE
AIC	AUXILIARY IRRIGATION CONTROLLER
Alt	ALTERNATIVE
AMEND	AMENDMENT
ARV	AIR RELEASE VALVE
AUTO	AUTOMATIC
AUX	AUXILIARY
AVB	ATMOSPHERIC VACUUM BREAKER

B

B&B	BALLED AND BURLAPPED
B/B	BRASS/BRONZE
B/B/PL	BRASS/BRONZE/PLASTIC
B/PL	BRASS/PLASTIC
BFM	BONDED FIBER MATRIX
Bit Ctd	BITUMINOUS COATED
BP	BOOSTER PUMP
BPA	BACKFLOW PREVENTER ASSEMBLY
BPE	BACKFLOW PREVENTER ENCLOSURE
BV	BALL VALVE

C

C	CONDUIT
CAP	CORRUGATED ALUMINUM PIPE
CARV	COMBINATION AIR RELEASE VALVE
CB	COUPLING BAND
CCA	CAM COUPLER ASSEMBLY
CEC	CONTROLLER ENCLOSURE CABINET
CHDPE	CORRUGATED HIGH DENSITY POLYETHYLENE
CL	CHAIN LINK
CNC	CONTROL AND NEUTRAL CONDUCTORS
Conc	CONCRETE
CP	COPPER PIPE
CS	COMPOST SOCK
CSP	CORRUGATED STEEL PIPE
CST	CENTER STRIP
CV	CHECK VALVE

D

Dia	DIAMETER
DIP	DUCTILE IRON PIPE
DIT	DRIP IRRIGATION TUBING
DG	DECOMPOSED GRANITE
DN	DIAMETER NOMINAL
DVA	DRIP VALVE ASSEMBLY

E

EC	EROSION CONTROL
ECTC	EROSION CONTROL TECHNOLOGY COUNCIL
Elect	ELECTRIC/ELECTRICAL
Elev	ELEVATION
ELL	ELBOW
ENCL	ENCLOSURE
EP	EDGE OF PAVEMENT
ES	EDGE OF SHOULDER
EST	END STRIP
ESTB	ESTABLISHMENT
ETW	EDGE OF TRAVELED WAY

F

F	FULL CIRCLE
F/P	FULL/PART CIRCLE
FCV	FLOW CONTROL VALVE
FERT	FERTILIZER
FG	FINISHED GRADE
FH	FLEXIBLE HOSE
FIPT	FEMALE IRON PIPE THREAD
FIS	FERTILIZER INJECTOR SYSTEM
FL	FLOW LINE
FR	FIBER ROLL
FS	FLOW SENSOR
FSC	FLOW SENSOR CABLE
FV	FLUSH VALVE

G

Galv	GALVANIZED
GARV	GARDEN VALVE
GARVA	GARDEN VALVE ASSEMBLY
GM	GRAVEL MULCH
GPH	GALLONS PER HOUR
GPM	GALLONS PER MINUTE
GSP	GALVANIZED STEEL PIPE
GV	GATE VALVE

H

H	HALF CIRCLE
HDPE	HIGH DENSITY POLYETHYLENE
HP	HORSEPOWER/HINGE POINT
HPL	HIGH PRESSURE LINE
Hwy	HIGHWAY

I

IC	IRRIGATION CONTROLLER
ICC	IRRIGATION CONTROLLER(S) IN CONTROLLER ENCLOSURE CABINET
ID	INSIDE DIAMETER
IFS	IRRIGATION FILTRATION SYSTEM
IPS	IRON PIPE SIZE
IPT	IRON PIPE THREAD
Irr	IRRIGATION

L

L	LENGTH

M

Max	MAXIMUM
MBGR	METAL BEAM GUARD RAILING
MCV	MANUAL CONTROL VALVE
MIC	MASTER IRRIGATION CONTROLLER
Min	MINIMUM
MIPT	MALE IRON PIPE THREAD
Misc	MISCELLANEOUS
Mtl	MATERIAL
MVP	MAINTENANCE VEHICLE PULLOUT

N

NCN	NO COMMON NAME
NL	NOZZLE LINE
No.	NUMBER
NPT	NATIONAL PIPE THREAD

O

O/C	ON CENTER
OD	OUTSIDE DIAMETER
OL	OVERLAP

P

P	PART CIRCLE
PB	PULL BOX
PCC	PORTLAND CEMENT CONCRETE
PE	POLYETHYLENE
Pkt	PACKET
PL	PLASTIC
PLS	PURE LIVE SEED
PLT	PLANT/PLANTING
PLT ESTB	PLANT ESTABLISHMENT
PM	POST MILE
PR	PRESSURE RATED
PRLV	PRESSURE RELIEF VALVE
PRV	PRESSURE REGULATING VALVE
PVC	POLYVINYL CHLORIDE
Pvmt	PAVEMENT

Q

Q	QUARTER CIRCLE
QCV	QUICK COUPLING VALVE

R

R	RADIUS
RCP	REINFORCED CONCRETE PIPE
RCV	REMOTE CONTROL VALVE
RCVM	REMOTE CONTROL VALVE (MASTER)
RCVMF	REMOTE CONTROL VALVE (MASTER) W/FLOW SENSOR
RCVP	REMOTE CONTROL VALVE W/PRESSURE REGULATOR
RCW	RECYCLED WATER
RECP	ROLLED EROSION CONTROL PRODUCT
REQ	REQUIRED
RICS	REMOTE IRRIGATION CONTROL SYSTEM
R/W	RIGHT OF WAY

S

S	SLIP
SCH	SCHEDULE
SF	STATE-FURNISHED
Shld	SHOULDER
Sq	SQUARE
SST	SIDE STRIP
Sta	STATION
Std	STANDARD
SW	SIDEWALK/SOUND WALL

T

T	THIRD CIRCLE/THREAD
TLS	TRUCK LOADING STANDPIPE
TQ	THREE QUARTER CIRCLE
TRM	TURF REINFORCEMENT MAT
TT	TWO-THIRDS CIRCLE
TWSA	TREE WELL SPRINKLER ASSEMBLY
Typ	TYPICAL

U

UG	UNDERGROUND

W

W	WIDTH
W/	WITH
WM	WATER METER
WS	WYE STRAINER
WSA	WYE STRAINER ASSEMBLY
WSP	WELDED STEEL PIPE
WWM	WELDED WIRE MESH

NOTE:
For additional abbreviations, see Standard Plans A10A and A10B.

STATE OF CALIFORNIA
DEPARTMENT OF TRANSPORTATION

LANDSCAPE AND EROSION CONTROL ABBREVIATIONS

NO SCALE

RSP H1 DATED JULY 19, 2013 SUPERSEDES STANDARD PLAN H1 DATED MAY 20, 2011 - PAGE 218 OF THE STANDARD PLANS BOOK DATED 2010.

REVISED STANDARD PLAN RSP H1

2010 REVISED STANDARD PLAN RSP H1

6-28-13

Dist	COUNTY	ROUTE	POST MILES TOTAL PROJECT	SHEET No.	TOTAL SHEETS
04	SM	1	40.6/40.9	113	157

LICENSED LANDSCAPE ARCHITECT

JULY 19, 2013
PLANS APPROVAL DATE

LICENSED LANDSCAPE ARCHITECT — Gregory A. Balzer — 2576 — Expiration Date 2-28-15 — Renewal Date 7-19-13 — Date — STATE OF CALIFORNIA

THE STATE OF CALIFORNIA OR ITS OFFICERS OR AGENTS SHALL NOT BE RESPONSIBLE FOR THE ACCURACY OR COMPLETENESS OF SCANNED COPIES OF THIS PLAN SHEET.

TO ACCOMPANY PLANS DATED 8-19-13

EXISTING	NEW	ITEM DESCRIPTION
		WATER METER (WM)
		BACKFLOW PREVENTER ASSEMBLY (BPA)
		BACKFLOW PREVENTER ENCLOSURE (BPE)
		BOOSTER PUMP (BP)
		TRUCK LOADING STANDPIPE (TLS)
	FS	FLOW SENSOR (FS)
X	X	MASTER IRRIGATION CONTROLLER (MIC)
		AUXILIARY IRRIGATION CONTROLLER (AIC)
		IRRIGATION CONTROLLER (IC) IRRIGATION CONTROLLER (IC) (BATTERY) IRRIGATION CONTROLLER (IC) (SOLAR) IRRIGATION CONTROLLER (IC) (TWO WIRE) IRRIGATION CONTROLLER(S) IN CONTROLLER ENCLOSURE CABINET (ICC)
acc	ACC	ARMOR-CLAD CONDUCTORS (ACC)
cnc	CNC	CONTROL AND NEUTRAL CONDUCTORS (CNC)
		IRRIGATION CONDUIT
		EXTEND IRRIGATION CROSSOVER
dip	DIP	DUCTILE IRON PIPE (SUPPLY LINE) (MAIN) (DIP)
		GALVANIZED STEEL PIPE (SUPPLY LINE) (MAIN) (GSP)
		GALVANIZED STEEL PIPE (SUPPLY LINE) (LATERAL) (GSP)
		PLASTIC PIPE (SUPPLY LINE) (MAIN)
		PLASTIC PIPE (SUPPLY LINE) (LATERAL)
cp	CP	COPPER PIPE (SUPPLY LINE)
dit	DIT	DRIP IRRIGATION TUBING
		REMOTE CONTROL VALVE (RCV) REMOTE CONTROL VALVE (MASTER) (RCVM) REMOTE CONTROL VALVE (MASTER) W/FLOW METER (RCVMF)
P	P	REMOTE CONTROL VALVE W/PRESSURE REGULATOR (RCVP)
		EXISTING MANUAL CONTROL VALVE (MCV)
	V	DRIP VALVE ASSEMBLY (DVA)
	Y	WYE STRAINER ASSEMBLY (WSA)

EXISTING	NEW	ITEM DESCRIPTION
		GATE VALVE (GV)
		BALL VALVE (BV)
		QUICK COUPLING VALVE (QCV)
		CAM COUPLER ASSEMBLY (CCA)
		GARDEN VALVE ASSEMBLY (GARVA)
		PRESSURE REGULATING VALVE (PRV)
		PRESSURE RELIEF VALVE (PRLV)
		FLOW CONTROL VALVE (FCV)
		COMBINATION AIR RELEASE VALVE (CARV)
		CHECK VALVE (CV)
		FLUSH VALVE (FV)
		EXISTING NOZZLE LINE W/TURNING UNION
		EXISTING IRRIGATION SYSTEM
		EXISTING IRRIGATION SYSTEM TO BE REMOVED
		CHAIN LINK GATE
		QUICK COUPLING VALVE W/SPRINKLER PROTECTOR
3	3	SPRINKLER W/SPRINKLER PROTECTOR
	C	CONNECT TO EXISTING SYSTEM
		CAP
		CAP EXISTING
	\\\FR\\\	FIBER ROLL
	\\\CS\\\	COMPOST SOCK

RCV SIZE
IRRIGATION CONTROLLER
CONTROLLER STATION
VALVE IN PARALLEL (IF APPLICABLE)
GPM
QUANTITY OF SPRINKLERS (WHEN SHOWN)

* 2½"-A-2b-40-60

VALVE CODE

* VALVE CODES FOR EXISTING VALVES ARE SHOWN IN A DASHED ENCLOSURE.

STATE OF CALIFORNIA
DEPARTMENT OF TRANSPORTATION

LANDSCAPE AND EROSION CONTROL SYMBOLS

NO SCALE

RSP H2 DATED JULY 19, 2013 SUPERSEDES STANDARD PLAN H2 DATED MAY 20, 2011 - PAGE 219 OF THE STANDARD PLANS BOOK DATED 2010.

REVISED STANDARD PLAN RSP H2

2010 REVISED STANDARD PLAN RSP H2

6-28-13

Dist	COUNTY	ROUTE	POST MILES TOTAL PROJECT	SHEET No.	TOTAL SHEETS
04	SM	1	40.6/40.9	114	157

Gregory A. Balzer
LICENSED LANDSCAPE ARCHITECT

July 19, 2013
PLANS APPROVAL DATE

THE STATE OF CALIFORNIA OR ITS OFFICERS OR AGENTS SHALL NOT BE RESPONSIBLE FOR THE ACCURACY OR COMPLETENESS OF SCANNED COPIES OF THIS PLAN SHEET.

LICENSED LANDSCAPE ARCHITECT
Gregory A. Balzer 2576
Gregory A. Balzer
Expiration Date 2-28-15
Renewal Date 7-19-13
Date
STATE OF CALIFORNIA

TO ACCOMPANY PLANS DATED 8-19-13

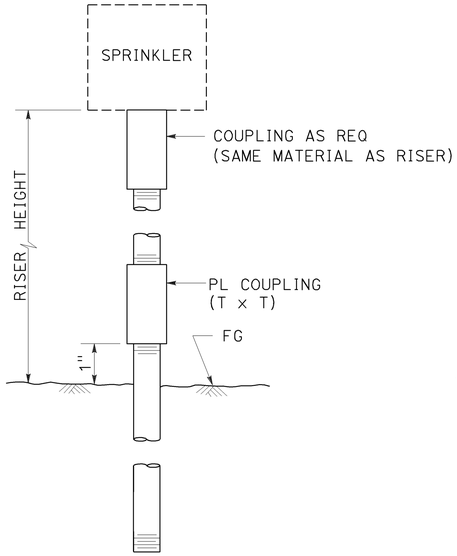

ELEVATION

RISER SPRINKLER ASSEMBLY TYPE I

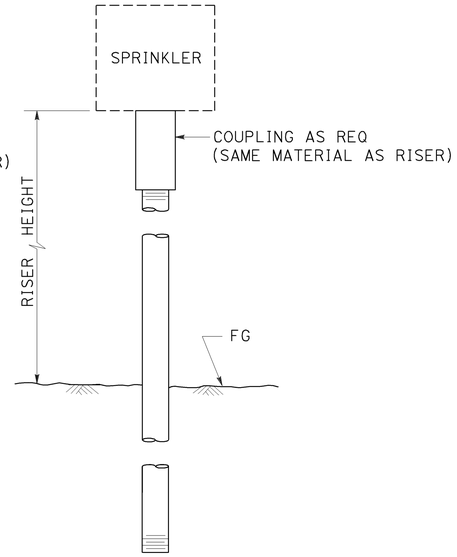

ELEVATION

RISER SPRINKLER ASSEMBLY TYPE II

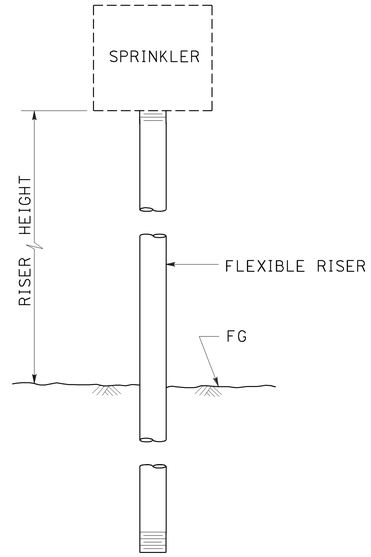

ELEVATION

RISER SPRINKLER ASSEMBLY TYPE III

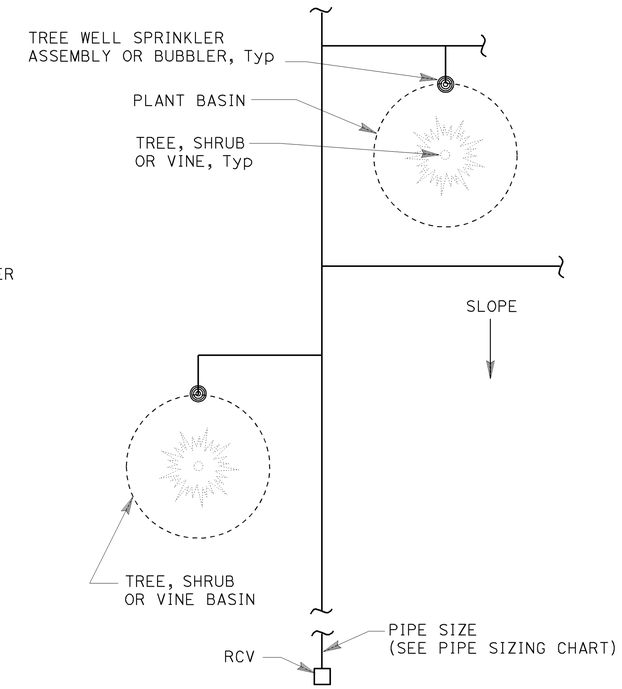

PLAN

NOTES:

1. Install tree well sprinkler assembly on up-hill side of plant when on slope.
2. Install bubbler within basin.

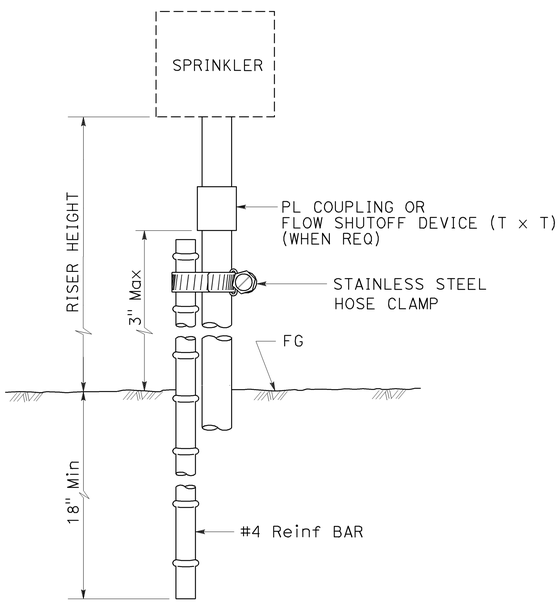

ELEVATION

RISER SPRINKLER ASSEMBLY TYPE IV

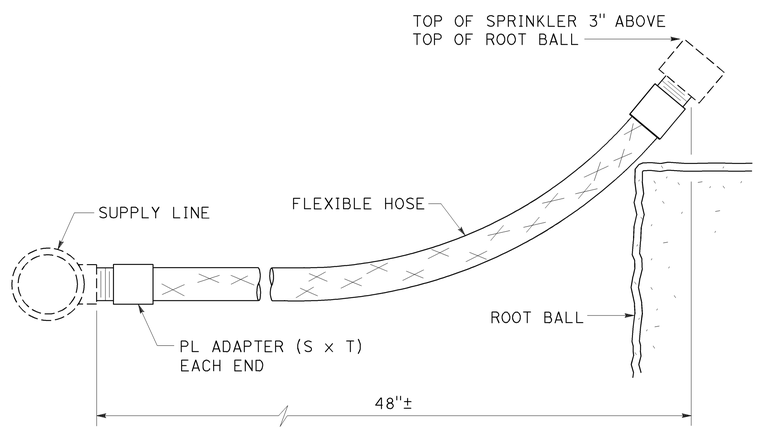

ELEVATION

RISER SPRINKLER ASSEMBLY TYPE V

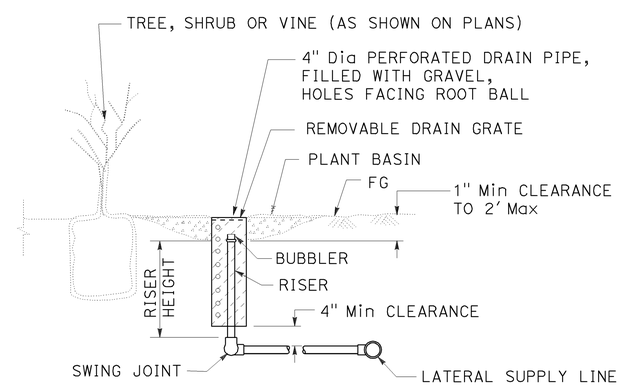

SECTION

TREE WELL SPRINKLER ASSEMBLY

STATE OF CALIFORNIA
DEPARTMENT OF TRANSPORTATION

LANDSCAPE DETAILS

NO SCALE

RSP H5 DATED JULY 19, 2013 SUPERSEDES STANDARD PLAN H5
DATED MAY 20, 2011 - PAGE 222 OF THE STANDARD PLANS BOOK DATED 2010.

REVISED STANDARD PLAN RSP H5

2010 REVISED STANDARD PLAN RSP H5

6-28-13

Dist	COUNTY	ROUTE	POST MILES TOTAL PROJECT	SHEET No.	TOTAL SHEETS
04	SM	1	40.6/40.9	115	157

Gregory A. Balzer
LICENSED LANDSCAPE ARCHITECT

July 19, 2013
PLANS APPROVAL DATE

LICENSED LANDSCAPE ARCHITECT
Gregory A. Balzer 2576
Renewal Date 2-28-15
7-19-13
Date
STATE OF CALIFORNIA

THE STATE OF CALIFORNIA OR ITS OFFICERS OR AGENTS SHALL NOT BE RESPONSIBLE FOR THE ACCURACY OR COMPLETENESS OF SCANNED COPIES OF THIS PLAN SHEET.

TO ACCOMPANY PLANS DATED 8-19-13

2010 REVISED STANDARD PLAN RSP H6

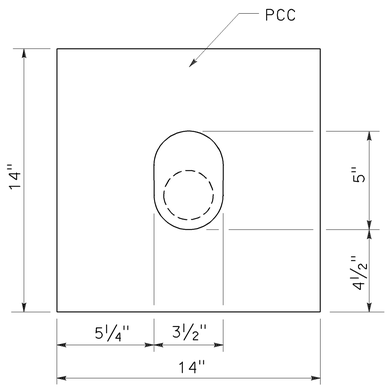

PLAN

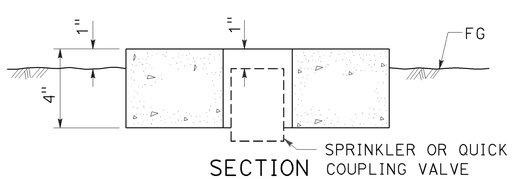

SECTION

SPRINKLER PROTECTOR TYPE I

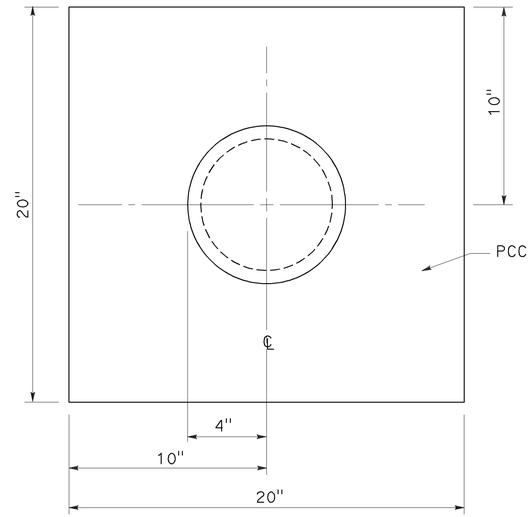

PLAN

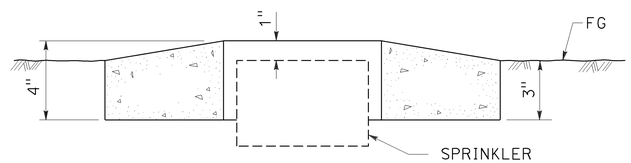

SECTION

SPRINKLER PROTECTOR TYPE II

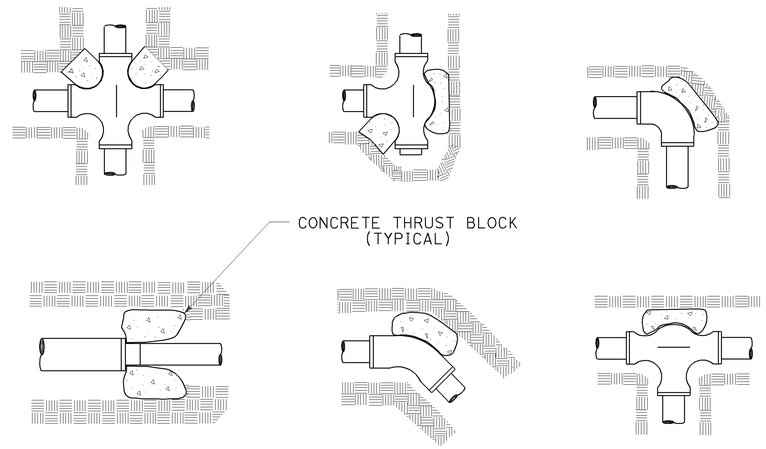

TYPICAL THRUST BLOCKS

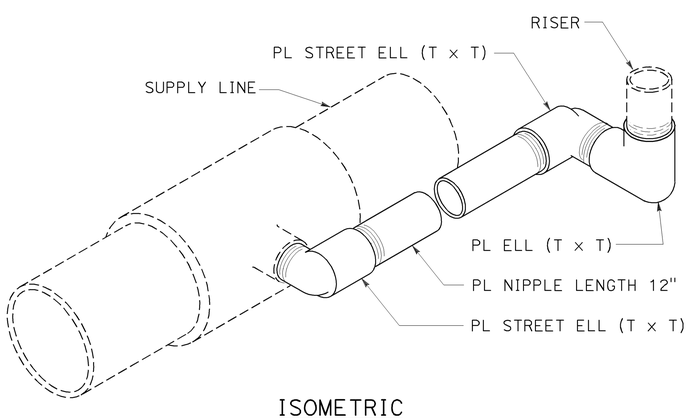

ISOMETRIC

POP-UP SPRINKLER ASSEMBLY TYPE I

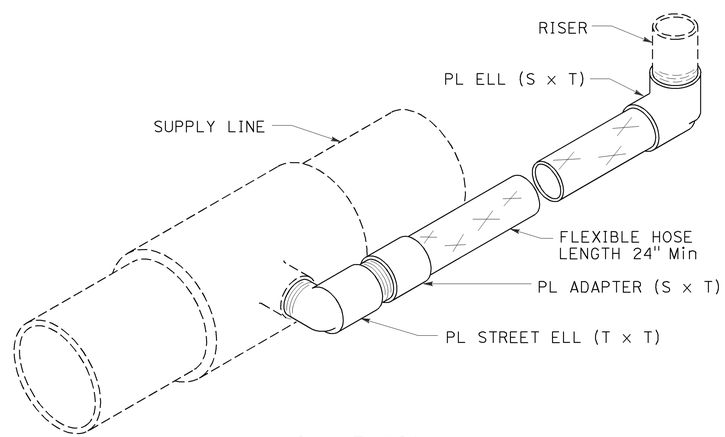

ISOMETRIC

POP-UP SPRINKLER ASSEMBLY TYPE II

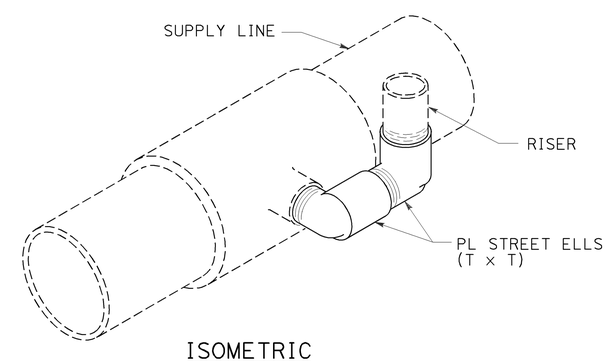

ISOMETRIC

POP-UP SPRINKLER ASSEMBLY TYPE III

STATE OF CALIFORNIA
DEPARTMENT OF TRANSPORTATION

LANDSCAPE DETAILS

NO SCALE

RSP H6 DATED JULY 19, 2013 SUPERSEDES STANDARD PLAN H6
DATED MAY 20, 2011 - PAGE 223 OF THE STANDARD PLANS BOOK DATED 2010.

REVISED STANDARD PLAN RSP H6

6-28-13

Dist	COUNTY	ROUTE	POST MILES TOTAL PROJECT	SHEET No.	TOTAL SHEETS
04	SM	1	40.6/40.9	116	157

LICENSED LANDSCAPE ARCHITECT

July 19, 2013
PLANS APPROVAL DATE

LICENSED LANDSCAPE ARCHITECT Gregory A. Balzer 2576 STATE OF CALIFORNIA
Renewal Date 2-28-15
Date 7-19-13

THE STATE OF CALIFORNIA OR ITS OFFICERS OR AGENTS SHALL NOT BE RESPONSIBLE FOR THE ACCURACY OR COMPLETENESS OF SCANNED COPIES OF THIS PLAN SHEET.

TO ACCOMPANY PLANS DATED 8-19-13

2010 REVISED STANDARD PLAN RSP H7

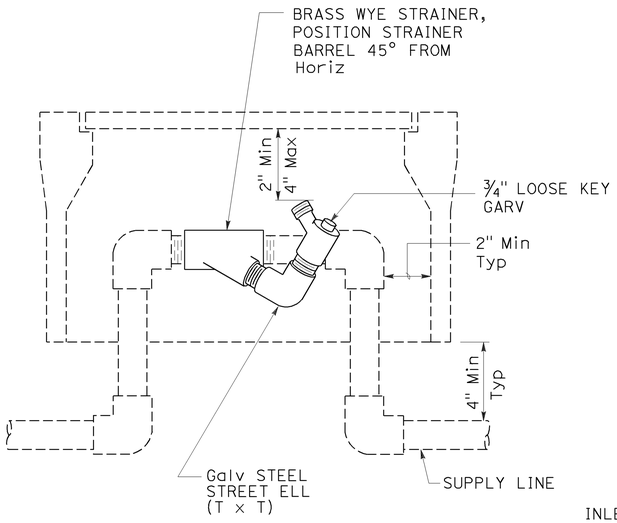

ELEVATION
WYE STRAINER ASSEMBLY

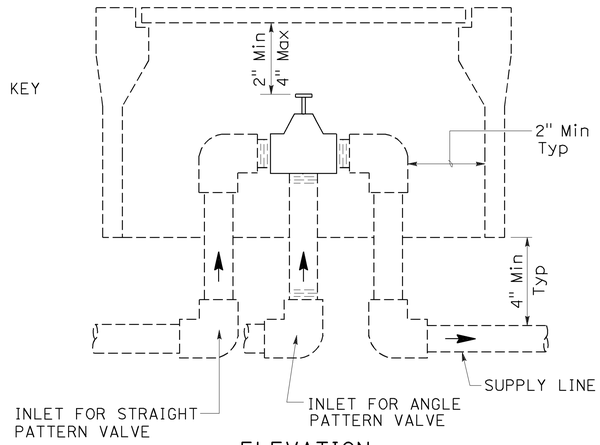

ELEVATION
VALVE

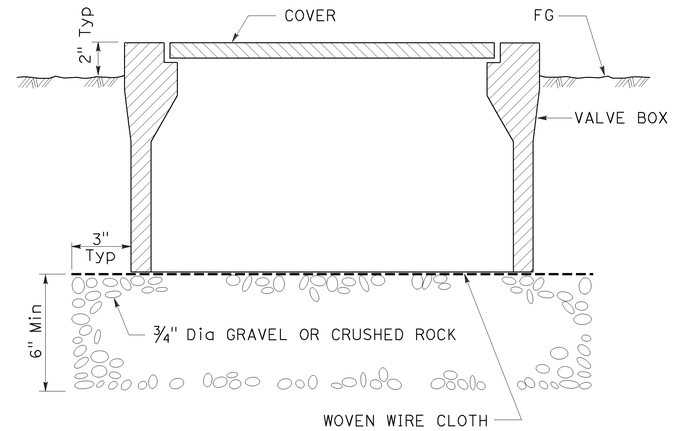

SECTION
VALVE BOX

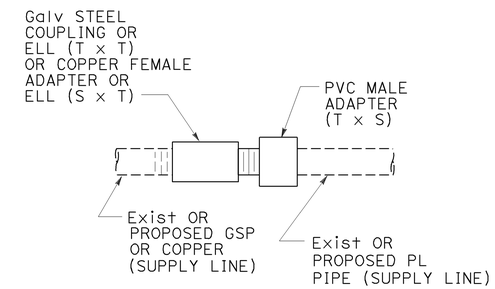

GALVANIZED OR COPPER PIPE CONNECTION TO PLASTIC PIPE

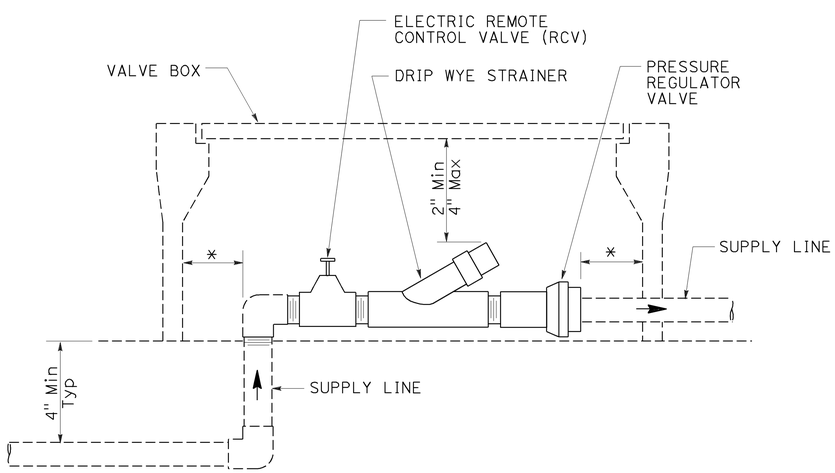

ELEVATION
DRIP VALVE ASSEMBLY

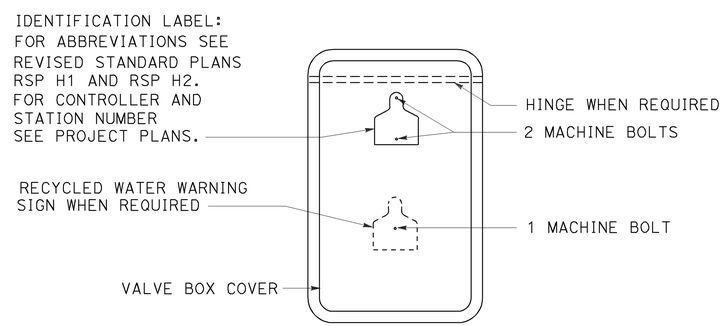

PLAN

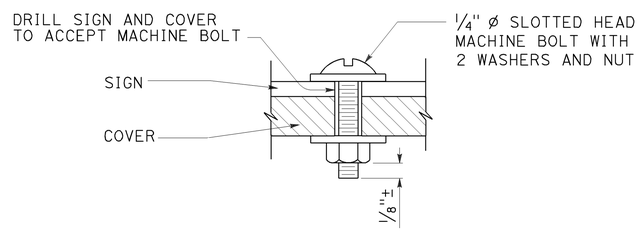

SECTION
VALVE BOX IDENTIFICATION

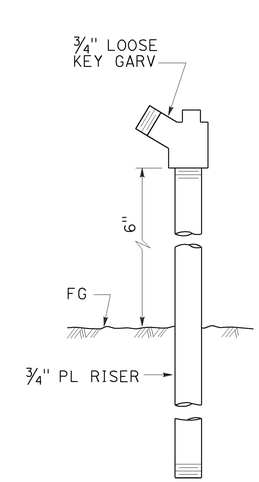

ELEVATION
GARDEN VALVE ASSEMBLY

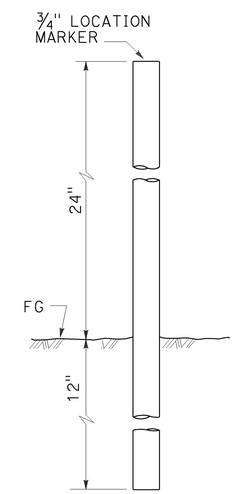

ELEVATION
LOCATION MARKER

GARDEN VALVE ASSEMBLY

STATE OF CALIFORNIA
DEPARTMENT OF TRANSPORTATION

LANDSCAPE DETAILS

NO SCALE

RSP H7 DATED JULY 19, 2013 SUPERSEDES STANDARD PLAN H7
DATED MAY 20, 2011 - PAGE 224 OF THE STANDARD PLANS BOOK DATED 2010.

REVISED STANDARD PLAN RSP H7

6-20-13

Dist	COUNTY	ROUTE	POST MILES TOTAL PROJECT	SHEET No.	TOTAL SHEETS
04	SM	1	40.6/40.9	117	157

LICENSED LANDSCAPE ARCHITECT

July 19, 2013
PLANS APPROVAL DATE

LICENSED LANDSCAPE ARCHITECT — Gregory A. Balzer — 2516 — Expires 2-28-15 — Renewal Date 7-19-13 — Date — STATE OF CALIFORNIA

THE STATE OF CALIFORNIA OR ITS OFFICERS OR AGENTS SHALL NOT BE RESPONSIBLE FOR THE ACCURACY OR COMPLETENESS OF SCANNED COPIES OF THIS PLAN SHEET.

TO ACCOMPANY PLANS DATED 8-19-13

2010 REVISED STANDARD PLAN RSP H8

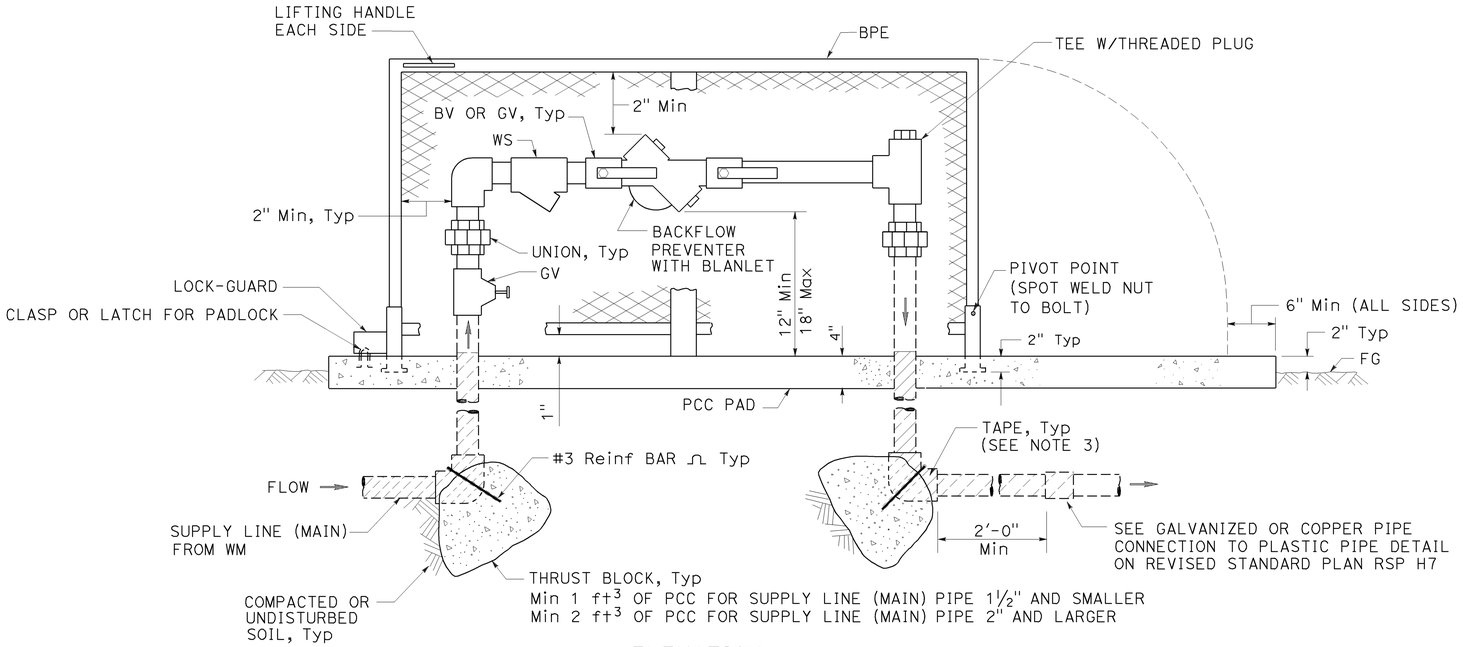

ELEVATION

BACKFLOW PREVENTER ASSEMBLY

IN ONE PIECE ENCLOSURE

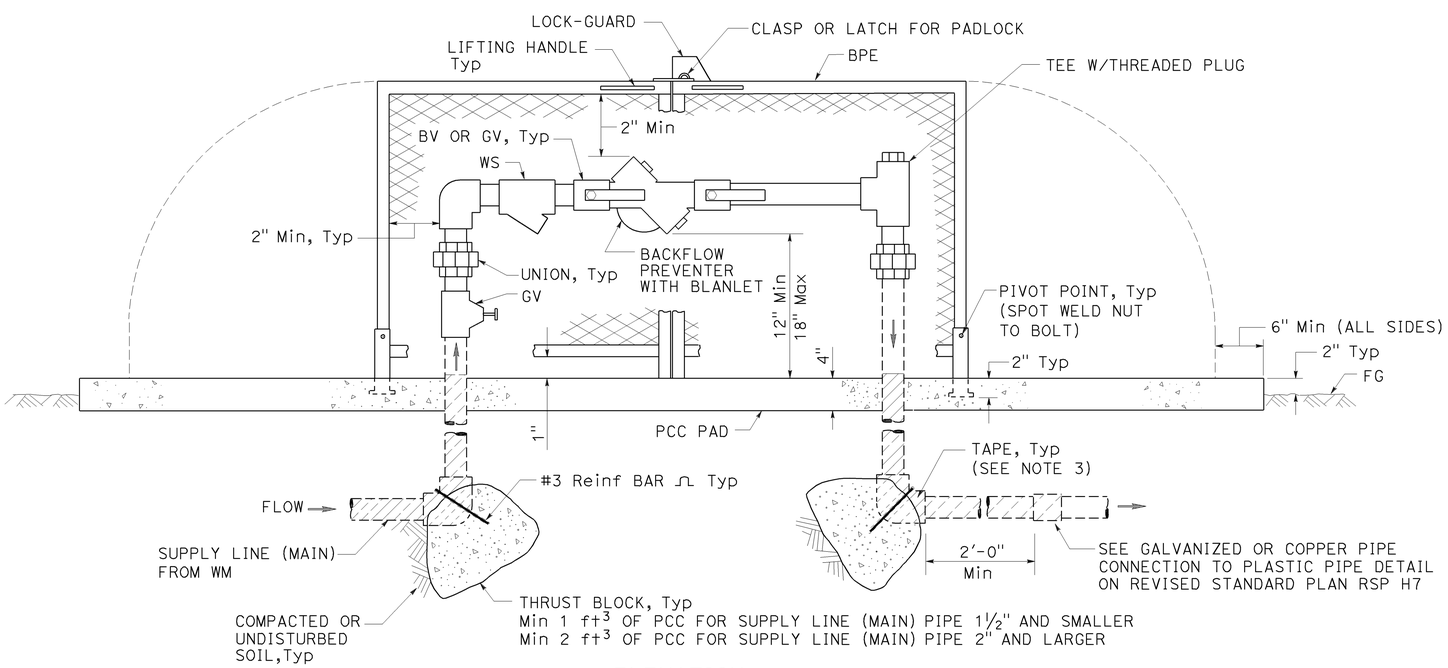

ELEVATION

BACKFLOW PREVENTER ASSEMBLY

IN TWO PIECE ENCLOSURE

NOTES:

1. Wye strainer and fittings must be the same size as the backflow preventer shown on the plans.
2. Backflow preventer assembly manifold pipe must be the same pipe as the supply line (main) pipe to be installed from the water meter to the backflow preventer assembly.
3. All metal in contact with soil and Portland Cement Concrete must be wrapped with 2" wide plastic backed adhesive polyethylene tape 20 mil thick with ½" overlap.

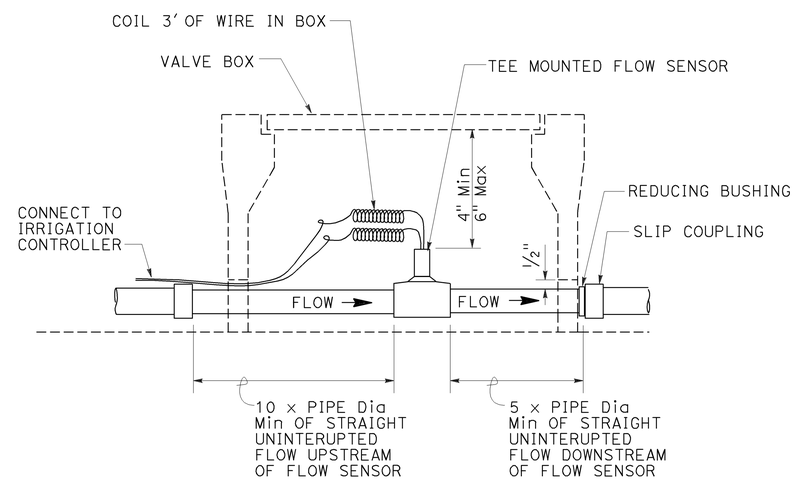

SECTION

FLOW SENSOR

STATE OF CALIFORNIA
DEPARTMENT OF TRANSPORTATION

LANDSCAPE DETAILS

NO SCALE

RSP H8 DATED JULY 19, 2013 SUPERSEDES STANDARD PLAN H8
DATED MAY 20, 2011 - PAGE 225 OF THE STANDARD PLANS BOOK DATED 2010.

REVISED STANDARD PLAN RSP H8

6-28-13

Dist	COUNTY	ROUTE	POST MILES TOTAL PROJECT	SHEET No.	TOTAL SHEETS
04	SM	1	40.6/40.9	118	157

LICENSED LANDSCAPE ARCHITECT

July 19, 2013
PLANS APPROVAL DATE

LICENSED LANDSCAPE ARCHITECT
Gregory A. Balzer 2576
Renewal Date 2-28-15
7-19-13
Date
STATE OF CALIFORNIA

THE STATE OF CALIFORNIA OR ITS OFFICERS OR AGENTS SHALL NOT BE RESPONSIBLE FOR THE ACCURACY OR COMPLETENESS OF SCANNED COPIES OF THIS PLAN SHEET.

TO ACCOMPANY PLANS DATED 8-19-13

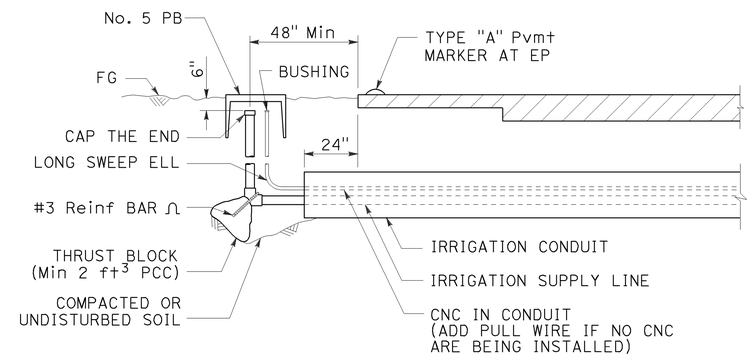

SECTION

IRRIGATION CONDUIT

UNDER TRAVELED WAY

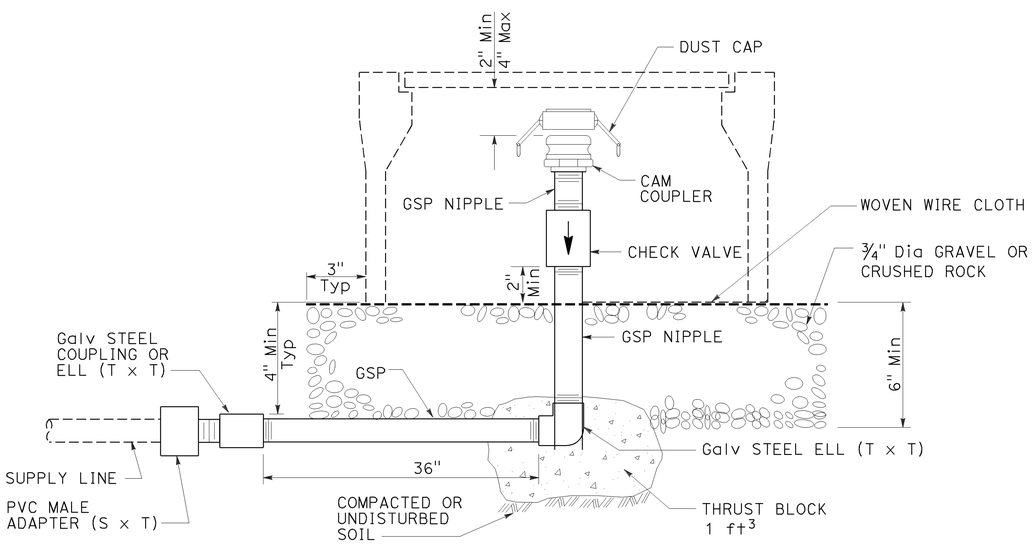

ELEVATION

CAM COUPLER ASSEMBLY

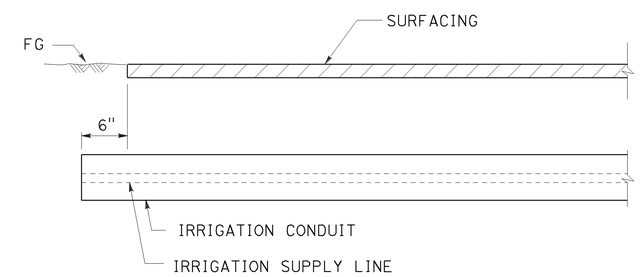

SECTION

IRRIGATION CONDUIT

UNDER SIDEWALKS, DRIVEWAYS AND PATHS

STATE OF CALIFORNIA
DEPARTMENT OF TRANSPORTATION

LANDSCAPE DETAILS

NO SCALE

RSP H9 DATED JULY 19, 2013 SUPERSEDES STANDARD PLAN H9
DATED MAY 20, 2011 - PAGE 226 OF THE STANDARD PLANS BOOK DATED 2010.

REVISED STANDARD PLAN RSP H9

2010 REVISED STANDARD PLAN RSP H9

6-28-13

Dist	COUNTY	ROUTE	POST MILES TOTAL PROJECT	SHEET No.	TOTAL SHEETS
04	SM	1	40.6/40.9	119	157

LICENSED LANDSCAPE ARCHITECT

July 19, 2013
PLANS APPROVAL DATE

LICENSED LANDSCAPE ARCHITECT
Gregory A. Balzer 2576
Expires 2-28-15
Renewal Date
7-19-13
Date
STATE OF CALIFORNIA

THE STATE OF CALIFORNIA OR ITS OFFICERS OR AGENTS SHALL NOT BE RESPONSIBLE FOR THE ACCURACY OR COMPLETENESS OF SCANNED COPIES OF THIS PLAN SHEET.

TO ACCOMPANY PLANS DATED 8-19-13

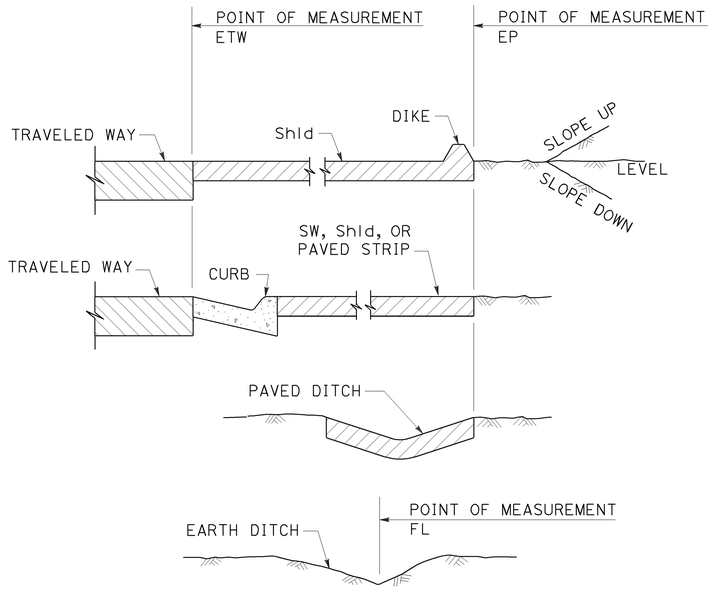

SECTION
POINTS OF MEASUREMENT

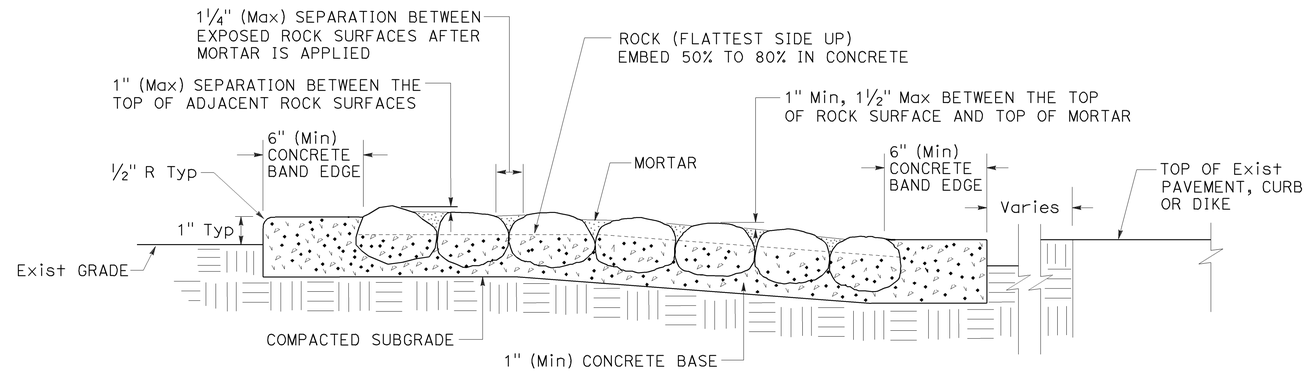

SECTION
ROCK BLANKET

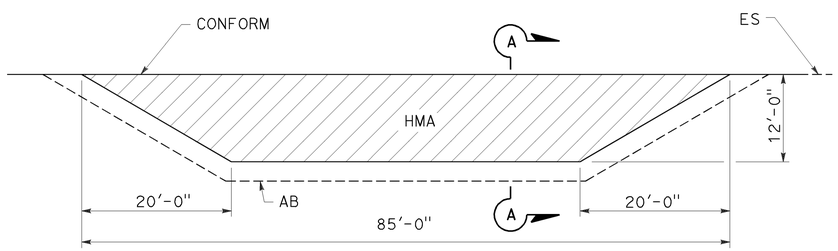

PLAN

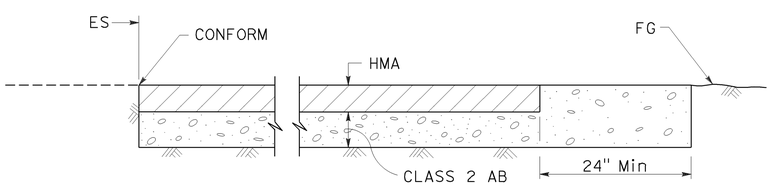

SECTION A-A
MAINTENANCE VEHICLE PULLOUT

STATE OF CALIFORNIA
DEPARTMENT OF TRANSPORTATION

LANDSCAPE DETAILS

NO SCALE

RSP H9A DATED JULY 19, 2013 SUPPLEMENTS THE STANDARD PLANS BOOK DATED 2010.

REVISED STANDARD PLAN RSP H9A

2010 REVISED STANDARD PLAN RSP H9A

6-21-13

DIST	COUNTY	ROUTE	POST MILES TOTAL PROJECT	SHEET No.	TOTAL SHEETS
04	SM	1	40.6/40.9	120	157

REGISTERED CIVIL ENGINEER

January 20, 2012
PLANS APPROVAL DATE

REGISTERED PROFESSIONAL ENGINEER Cornelis M. Hakim No. C55610 Exp. 12-31-12 CIVIL STATE OF CALIFORNIA

THE STATE OF CALIFORNIA OR ITS OFFICERS OR AGENTS SHALL NOT BE RESPONSIBLE FOR THE ACCURACY OR COMPLETENESS OF SCANNED COPIES OF THIS PLAN SHEET.

TO ACCOMPANY PLANS DATED 8-19-13

2010 REVISED STANDARD PLAN RSP P74

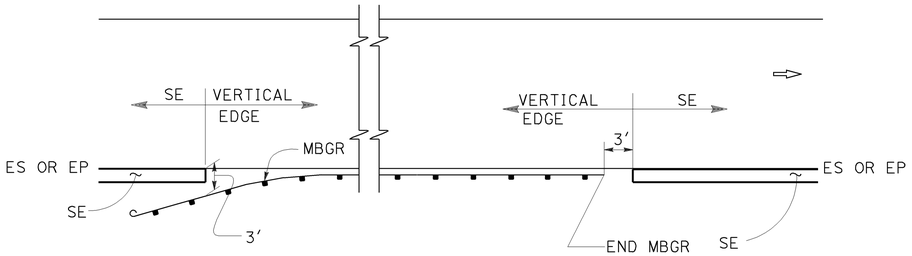

MBGR

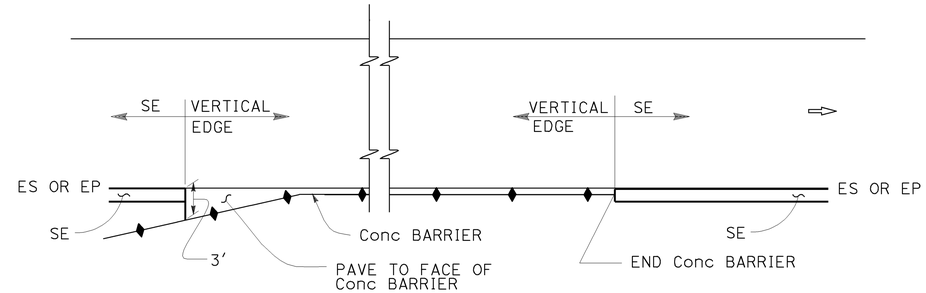

CONCRETE BARRIER

ABBREVIATIONS:

SE SAFETY EDGE

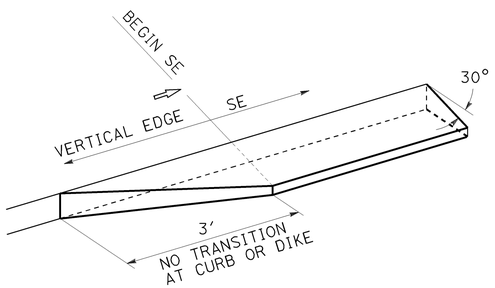

TRANSITION DETAIL FOR CONCRETE ONLY

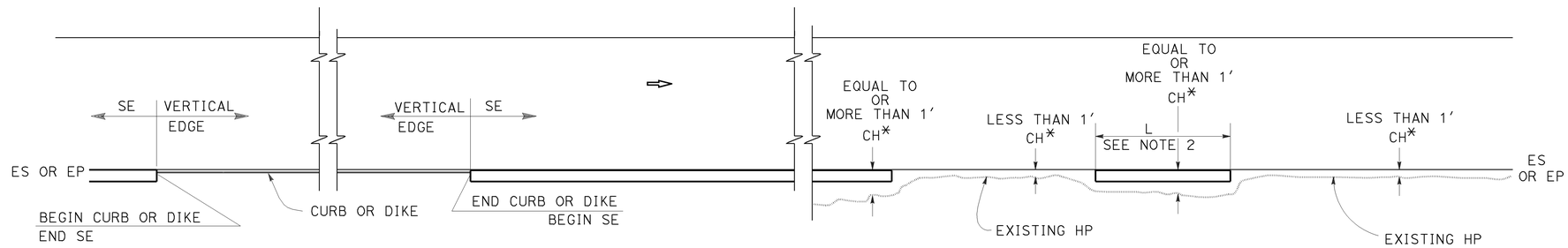

CURB OR DIKE

NARROW SIDE SLOPE

* CH = Distance from ES or EP to existing HP.

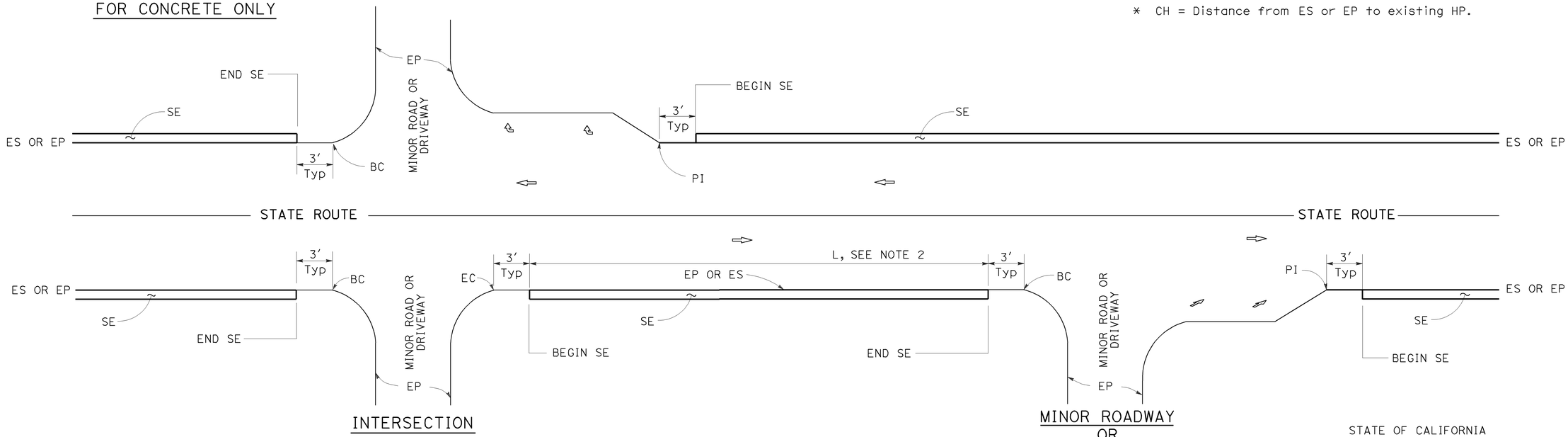

INTERSECTION

DRIVEWAY AND INTERSECTION

MINOR ROADWAY OR DRIVEWAY

NOTES:

1. For details not shown, see Revised Standard Plans RSP P75 and RSP P76.
2. Safety edge is optional when L is less than 30′.

STATE OF CALIFORNIA
DEPARTMENT OF TRANSPORTATION

PAVEMENT EDGE TREATMENTS

NO SCALE

RSP P74 DATED JANUARY 20, 2012 SUPPLEMENTS THE STANDARD PLANS BOOK DATED 2010.

REVISED STANDARD PLAN RSP P74

01-05-12

DIST	COUNTY	ROUTE	POST MILES TOTAL PROJECT	SHEET No.	TOTAL SHEETS
04	SM	1	40.6/40.9	121	157

REGISTERED CIVIL ENGINEER

January 20, 2012
PLANS APPROVAL DATE

REGISTERED PROFESSIONAL ENGINEER Cornelis M. Hakim No. C55610 Exp. 12-31-12 CIVIL STATE OF CALIFORNIA

THE STATE OF CALIFORNIA OR ITS OFFICERS OR AGENTS SHALL NOT BE RESPONSIBLE FOR THE ACCURACY OR COMPLETENESS OF SCANNED COPIES OF THIS PLAN SHEET.

TO ACCOMPANY PLANS DATED 8-19-13

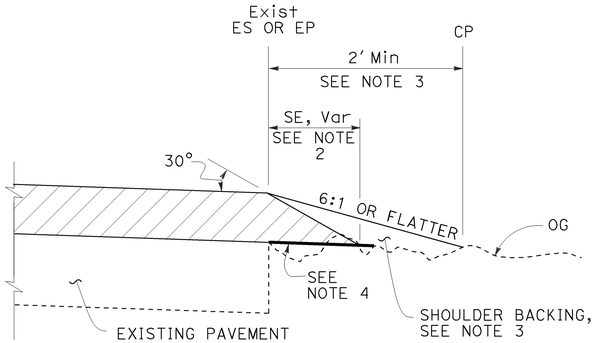

CASE A
Safety Edge

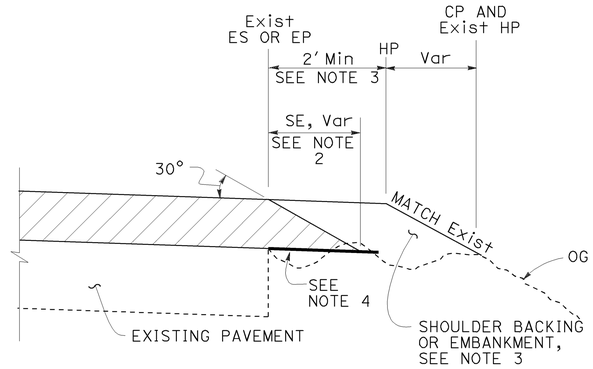

CASE B
Safety Edge

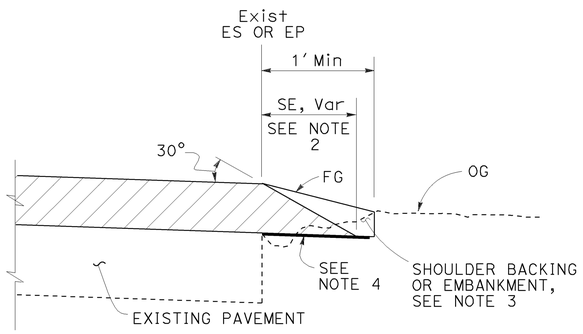

CASE C
Safety Edge

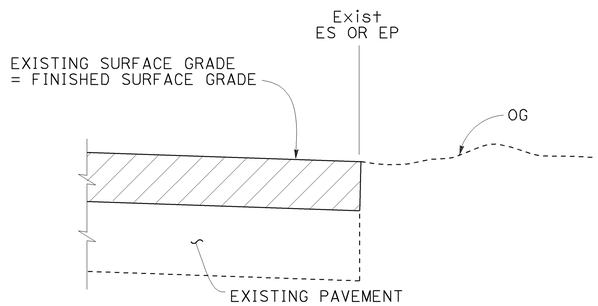

CASE D
Vertical Edge

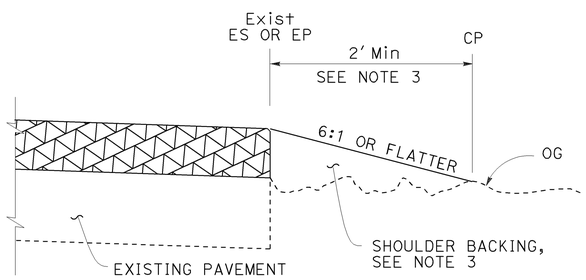

CASE E
Vertical Edge

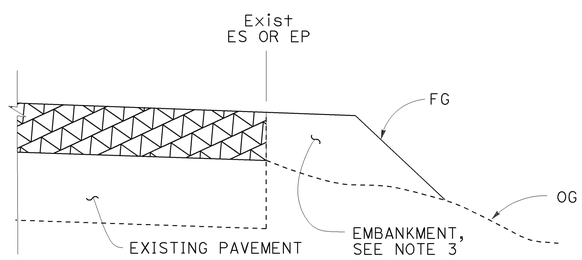

CASE F
Vertical Edge
* See Table A and Revised Std Plan RSP P74

LEGEND:

- HMA OVERLAY
- HMA OR CONCRETE OVERLAY
- CONCRETE OVERLAY

ABBREVIATIONS:

SE SAFETY EDGE
TT TOTAL THICKNESS OF SE

TABLE A
EDGE TREATMENT FOR VARIOUS OVERLAY THICKNESS AND CONDITIONS

	OVERLAY THICKNESS	
FIELD CONDITION	LESS THAN 0.15′	0.15′ OR MORE
Exist SLOPE 6:1 OR FLATTER	CASE E	CASE A
Exist SLOPE 3:1 TO 6:1	CASE E	CASE B
Exist SLOPE STEEPER THAN 3:1	CASE F	CASE F
CUT SECTION (REPLACE, COLD PLANE, MILL PAVEMENT)	CASE D	CASE C

ADDITIONAL HMA OR CONCRETE QUANTITIES FOR SE/SIDE/MILE

TYPICAL CROSS SECTION	TT	TOTAL ADDITIONAL MATERIAL FOR SE/SIDE/MILE		
		HMA (TON)	CONCRETE (CY)*	CONCRETE (CY)**
TT	0.15′	NA	NA	NA
	0.20′	13.7	NA	NA
	0.30′	30.9	NA	NA
	0.40′	54.9	NA	NA
	0.45′	69.4	NA	NA
TT 0.43′	0.50′	84.2	NA	NA
	0.60′	113.9	NA	NA
	0.70′	143.6	70.9	94.2
	0.80′	173.3	85.6	112.2
	0.90′	203.0	100.3	130.2
	1.00′	232.7	114.9	148.2
	1.10′	262.4	129.6	166.2
	1.20′	292.1	144.3	184.2

* For Detail "A"
** For Optional Detail "A"

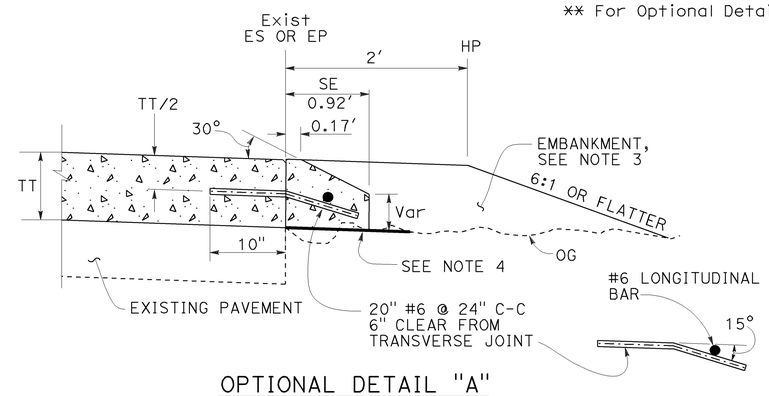

OPTIONAL DETAIL "A"
For concrete overlay
See Note 5

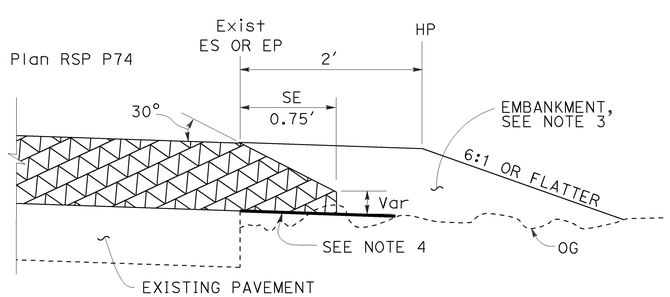

DETAIL "A"
For HMA overlay thickness more than 0.43′ or concrete overlay

NOTES:

1. For limits of safety edge and vertical edge treatments, see Revised Standard Plan RSP P74.
2. Details shown for HMA overlay thickness less than 0.43′. See Detail "A" for HMA overlay thickness more than 0.43′ or concrete overlay.
3. For locations and limits of shoulder backing or embankment see project plans.
4. Grade existing ground to place safety edge. 1′ minimum width
5. Safety edge transverse joint must match overlay transverse joint. End of #6 longitudinal bar must be 2" ±½" clear from transverse joint.
6. Safety edge is not needed in the area of MBGR, barrier, right turn lane and acceleration lane. See Revised Standard Plan RSP P74.

STATE OF CALIFORNIA
DEPARTMENT OF TRANSPORTATION

PAVEMENT EDGE TREATMENTS-OVERLAYS

NO SCALE

RSP P75 DATED JANUARY 20, 2012 SUPPLEMENTS THE STANDARD PLANS BOOK DATED 2010.

REVISED STANDARD PLAN RSP P75

2010 REVISED STANDARD PLAN RSP P75

DIST	COUNTY	ROUTE	POST MILES TOTAL PROJECT	SHEET No.	TOTAL SHEETS
04	SM	1	40.6/40.9	122	157

REGISTERED CIVIL ENGINEER

January 20, 2012
PLANS APPROVAL DATE

REGISTERED PROFESSIONAL ENGINEER Cornelis M. Hakim No. C55610 Exp. 12-31-12 CIVIL STATE OF CALIFORNIA

THE STATE OF CALIFORNIA OR ITS OFFICERS OR AGENTS SHALL NOT BE RESPONSIBLE FOR THE ACCURACY OR COMPLETENESS OF SCANNED COPIES OF THIS PLAN SHEET.

TO ACCOMPANY PLANS DATED 8-19-13

LEGEND:

- HMA PAVEMENT
- HMA OR CONCRETE PAVEMENT
- CONCRETE PAVEMENT

ABBREVIATIONS:

SE SAFETY EDGE
TT TOTAL THICKNESS OF SE
HW HINGE WIDTH, DISTANCE FROM ES OR EP TO HP

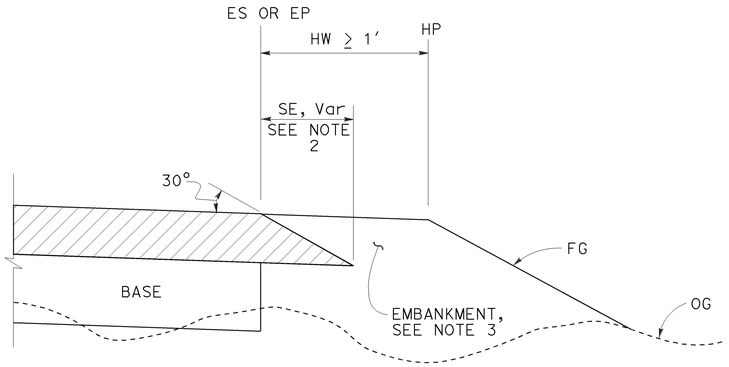

CASE K
Safety Edge - Fill Section, HW ≥ 1′

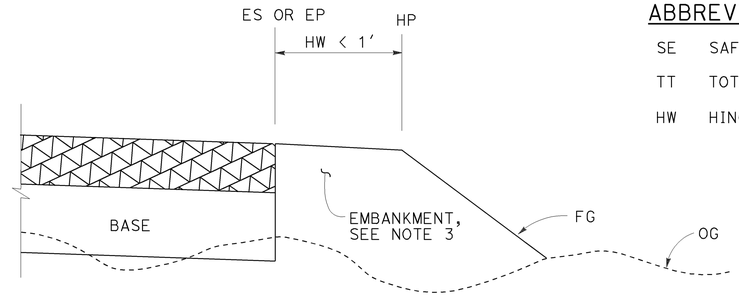

CASE L
Vertical Edge - Fill Section, HW < 1′

FILL SECTION

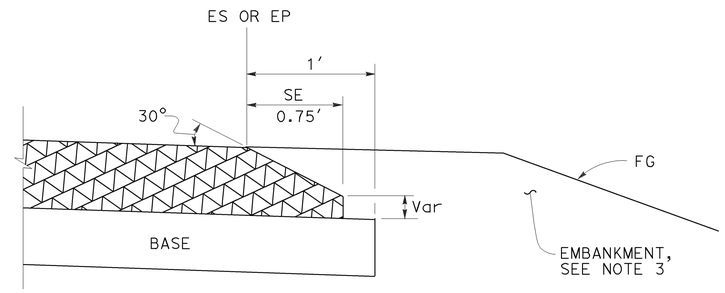

DETAIL "B"
For HMA pavement thickness more than 0.43′ or concrete pavement

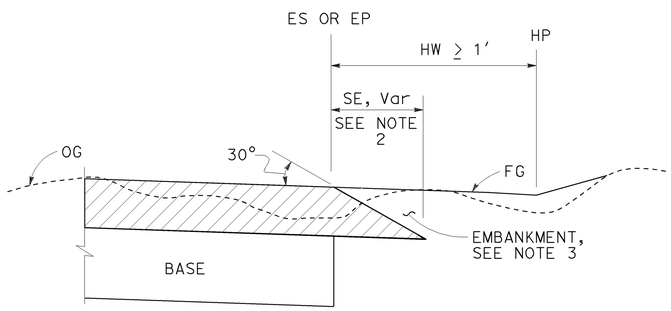

CASE M
Safety Edge - Cut Section, HW ≥ 1′

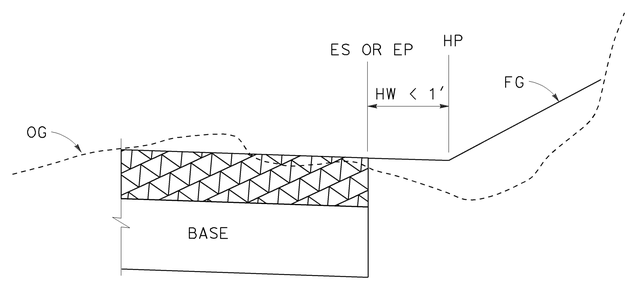

CASE N
Vertical Edge - Cut Section, HW < 1′

CUT SECTION

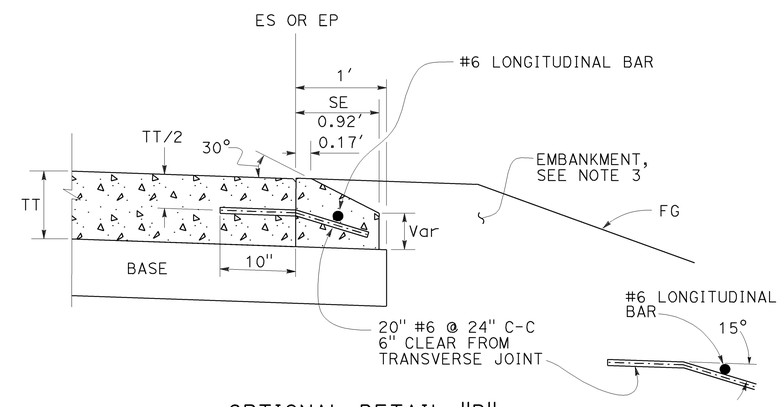

OPTIONAL DETAIL "B"
For concrete pavement
See Note 4

NOTES:

1. For limits of safety edge and vertical edge treatments, see Revised Standard Plan RSP P74
2. Details shown for HMA pavement thickness less than 0.43′. See Detail "B" for HMA pavement thickness more than 0.43′ or concrete pavement.
3. For locations and limits of embankment see project plans.
4. Safety edge transverse joint must match pavement transverse joint. End of #6 longitudinal bar must be 2" ±½" clear from transverse joint.
5. Safety edge is not needed in the area of MBGR, barrier, right turn lane and acceleration lane. See Revised Standard Plan RSP P74.

STATE OF CALIFORNIA
DEPARTMENT OF TRANSPORTATION

PAVEMENT EDGE TREATMENTS-NEW CONSTRUCTION

NO SCALE

RSP P76 DATED JANUARY 20, 2012 SUPPLEMENTS THE STANDARD PLANS BOOK DATED 2010.

REVISED STANDARD PLAN RSP P76

2010 REVISED STANDARD PLAN RSP P76

01-09-12

Dist	COUNTY	ROUTE	POST MILES TOTAL PROJECT	SHEET No.	TOTAL SHEETS
04	SM	1	40.6/40.9	123	157

REGISTERED CIVIL ENGINEER

April 19, 2013
PLANS APPROVAL DATE

REGISTERED PROFESSIONAL ENGINEER Gurinderpal Bhullar No. C48815 Exp. 9-30-14 CIVIL STATE OF CALIFORNIA

THE STATE OF CALIFORNIA OR ITS OFFICERS OR AGENTS SHALL NOT BE RESPONSIBLE FOR THE ACCURACY OR COMPLETENESS OF SCANNED COPIES OF THIS PLAN SHEET.

TO ACCOMPANY PLANS DATED 8-19-13

NOTES:

See Revised Standard Plan RSP T9 for tables.

Use cone spacing X for taper segment, Y for tangent segment or Z for conflict situations, as approriate, per Table 1, unless X, Y, or Z cone spacing is shown on this sheet.

Unless otherwise specified in the special provisions, all temporary warning signs shall have black legend on fluorescent orange background.

California codes are designated by (CA). Otherwise, Federal (MUTCD) codes are shown.

TYPICAL LANE CLOSURE WITH REVERSIBLE CONTROL

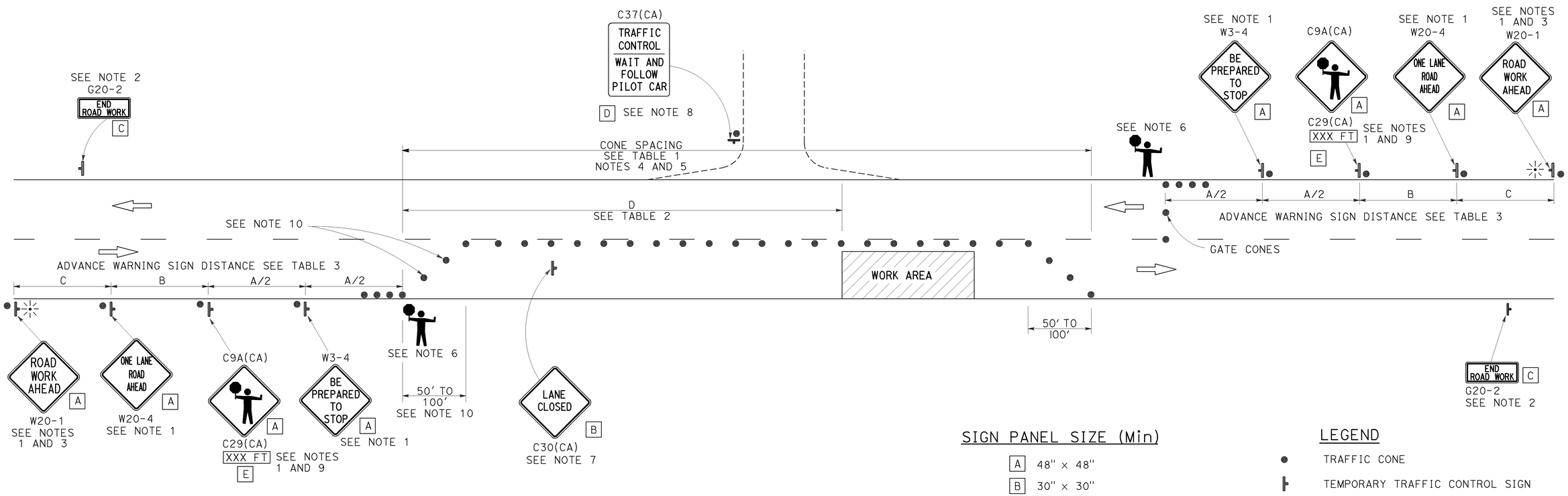

SIGN PANEL SIZE (Min)

A	48" × 48"
B	30" × 30"
C	36" × 18"
D	36" × 42"
E	20" × 7"

LEGEND

- TRAFFIC CONE
- TEMPORARY TRAFFIC CONTROL SIGN
- PORTABLE FLASHING BEACON
- FLAGGER

NOTES:

1. Each advance warning sign in each direction of travel shall be equipped with at least two flags for daytime closure. Each flag shall be at least 16" x 16" in size and shall be orange or fluorescent red-orange in color. Flashing beacons shall be placed at the locations indicated for lane closure during hours of darkness.
2. A G20-2 "END ROAD WORK" sign, as appropriate, shall be placed at the end of the lane control unless the end of work area is obvious, or ends within a larger project's limits.
3. If the W20-1 sign would follow within 2000' of a stationary W20-1 or G20-1 "ROAD WORK NEXT _____ MILES", use a W20-4 sign for the first advance warning sign.
4. All cones used for lane closures during the hours of darkness shall be fitted with retroreflective bands (or sleeves) as specified in the specifications.
5. Portable delineators, placed at one-half the spacing indicated for traffic cones, may be used instead of cones for daytime closures only.
6. Additional advance flaggers may be required. Flagger should stand in a conspicuous place, be visible to approaching traffic as well as approaching vehicles after the first vehicle has stopped. During the hours of darkness, the flagging-station and flagger shall be illuminated and clearly visible to approaching traffic. The illumination footprint of the lighting on the ground shall be at least 20' in diameter. Place a minimum of four cones at 50' intervals in advance of flagger station as shown.
7. Place C30(CA) "LANE CLOSED" sign at 500' to 1000' intervals throughout extended work areas. They are optional if the work area is visible from the flagger station.
8. When a pilot car is used, place a C37(CA) "TRAFFIC CONTROL-WAIT AND FOLLOW PILOT CAR" sign with black legend on white background at all intersections, driveways and alleys without a flagger within traffic control area. Signs shall be clean and visible at all times. Where traffic can not be effectively self-regulated, at least one flagger shall be used at each intersection within traffic control area.
9. An optional C29(CA) sign may be placed below the C9A(CA) sign.
10. Either traffic cones or barricades shall be placed on the taper. Barricades shall be Type I, II, or III.

STATE OF CALIFORNIA
DEPARTMENT OF TRANSPORTATION

TRAFFIC CONTROL SYSTEM FOR LANE CLOSURE ON TWO LANE CONVENTIONAL HIGHWAYS

NO SCALE

RSP T13 DATED APRIL 19, 2013 SUPERSEDES STANDARD PLAN T13 DATED MAY 20, 2011 - PAGE 241 OF THE STANDARD PLANS BOOK DATED 2010.

REVISED STANDARD PLAN RSP T13

2010 REVISED STANDARD PLAN RSP T13

4-2-13

Dist	COUNTY	ROUTE	POST MILES TOTAL PROJECT	SHEET No.	TOTAL SHEETS
04	SM	1	40.6/40.9	124	157

Theresa Gabriel
REGISTERED ELECTRICAL ENGINEER

July 19, 2013
PLANS APPROVAL DATE

REGISTERED PROFESSIONAL ENGINEER
Theresa Aziz Gabriel
No. E15129
Exp. 6-30-14
ELECTRICAL
STATE OF CALIFORNIA

THE STATE OF CALIFORNIA OR ITS OFFICERS OR AGENTS SHALL NOT BE RESPONSIBLE FOR THE ACCURACY OR COMPLETENESS OF SCANNED COPIES OF THIS PLAN SHEET.

TO ACCOMPANY PLANS DATED 8-19-13

LEGEND:

AB	ABANDON. IF APPLIED TO CONDUIT, REMOVE CONDUCTORS
BC	INSTALL PULL BOX IN EXISTING CONDUIT RUN
BP	PEDESTRIAN BARRICADE, TYPE AS INDICATED ON PLAN
CB	INSTALL CONDUIT INTO EXISTING PULL BOX
CC	CONNECT NEW AND EXISTING CONDUIT. REMOVE EXISTING CONDUCTORS AND INSTALL CONDUCTORS AS INDICATED
CF	CONDUIT TO REMAIN FOR FUTURE USE. REMOVE CONDUCTORS. INSTALL PULL TAPE
DH	DETECTOR HANDHOLE
FA	FOUNDATION TO BE ABANDONED
IS	INSTALL SIGN ON SIGNAL MAST ARM
NS	NO SLIP BASE ON STANDARD
PEC	PHOTOELECTRIC CONTROL
PEU	PHOTOELECTRIC UNIT
RC	EQUIPMENT OR MATERIAL TO BE REMOVED AND BECOME THE PROPERTY OF THE CONTRACTOR
RE	REMOVE ELECTROLIER, FUSES AND BALLAST. TAPE ENDS OF CONDUCTORS
RL	RELOCATE EQUIPMENT
RR	REMOVE AND REUSE EQUIPMENT
RS	REMOVE AND SALVAGE EQUIPMENT
SC	SPLICE NEW TO EXISTING CONDUCTORS
SD	SERVICE DISCONNECT
TSP	TELEPHONE SERVICE POINT

ABBREVIATIONS

APS	ACCESSIBLE PEDESTRIAN SIGNAL
BBS	BATTERY BACKUP SYSTEM
BC	BOLT CIRCLE
BPB	BICYCLE PUSH BUTTON
C	CONDUIT
CB	CIRCUIT BREAKER
CCTV	CLOSED CIRCUIT TELEVISION
Ckt	CIRCUIT
CMS	CHANGEABLE MESSAGE SIGN
Ctid	CALTRANS IDENTIFICATION
Comm	COMMUNICATION
DLC	LOOP DETECTOR LEAD-IN CABLE
EMS	EXTINGUISHABLE MESSAGE SIGN
EVUC	EMERGENCY VEHICLE UNIT CABLE
EVUD	EMERGENCY VEHICLE UNIT DETECTOR
FB	FLASHING BEACON
FBCA	FLASHING BEACON CONTROL ASSEMBLY
FBS	FLASHING BEACON WITH SLIP BASE
FO	FIBER OPTIC
G	EQUIPMENT GROUNDING CONDUCTOR
GB	GROUND BUS
GFCI	GROUND FAULT CIRCUIT INTERRUPTER
HAR	HIGHWAY ADVISORY RADIO
Hex	HEXAGONAL
HPS	HIGH PRESSURE SODIUM
IISNS	INTERNALLY ILLUMINATED STREET NAME SIGN
ISL	INDUCTION SIGN LIGHTING
LED	LIGHT EMITTING DIODE
LMA	LUMINAIRE MAST ARM
LPS	LOW PRESSURE SODIUM
Ltg	LIGHTING
Lum	LUMINAIRE
M	METERED
MAT	MAST ARM MOUNTING TOP ATTACHMENT
MAS	MAST ARM MOUNTING SIDE ATTACHMENT
M/M	MULTIPLE TO MULTIPLE TRANSFORMER
Mtg	MOUNTING
MV	MERCURY VAPOR LIGHTING FIXTURE
MVDS	MICROWAVE VEHICLE DETECTION SYSTEM
N	NEUTRAL (GROUNDED CONDUCTOR)
NB	NEUTRAL BUS
NC	NORMALLY CLOSE
NO	NORMALLY OPEN
P	CIRCUIT BREAKER'S POLE
PB	PULL BOX
PBA	PUSH BUTTON ASSEMBLY
PEC	PHOTOELECTRIC CONTROL
Ped	PEDESTRIAN
PEU	PHOTOELECTRIC UNIT
PT	CONDUIT WITH PULL TAPE
RE	RELOCATED EQUIPMENT
RM	RAMP METERING
RWIS	ROADSIDE WEATHER INFORMATION SYSTEM
SB	SLIP BASE
SIC	SIGNAL INTERCONNECT CABLE
Sig	SIGNAL
SMA	SIGNAL MAST ARM
SNS	STREET NAME SIGN
SP	SERVICE POINT
TDC	TELEPHONE DEMARCATION CABINET
TMS	TRAFFIC MONITORING STATION
TOS	TRAFFIC OPERATIONS SYSTEM
Veh	VEHICLE
VIVDS	VIDEO IMAGE VEHICLE DETECTION SYSTEM
WIM	WEIGH-IN-MOTION
Xfmr	TRANSFORMER

SOFFIT AND WALL MOUNTED LUMINAIRES

PENDANT, 70 W HPS UNLESS OTHERWISE SPECIFIED

FLUSH, 70 W HPS UNLESS OTHERWISE SPECIFIED

WALL SURFACE, 70 W HPS UNLESS OTHERWISE SPECIFIED

EXISTING SOFFIT OR WALL LUMINAIRE TO REMAIN UNMODIFIED

EXISTING SOFFIT OR WALL LUMINAIRE TO BE MODIFIED AS SPECIFIED

NOTE:

Arrow indicates "street side" of luminaire.

MISCELLANEOUS ELECTROLIERS

NEW	EXISTING	
		LUMINAIRE ON WOOD POLE
		NON-STANDARD ELECTROLIER (SEE PROJECT NOTES OR PROJECT PLANS)
		CITY ELECTROLIER
		ELECTROLIER FOUNDATION (FUTURE INSTALLATION)

NOTES:

1. HPS luminaires shall be 310 W HPS when installed on Type 21, 21D, 30, 31 and 32 Standards, unless otherwise specified. HPS luminaires shall be 200 W when installed on other type standards or poles, unless otherwise specified.
2. LED luminaires shall be 235 W when installed on Type 21, 21D, 30, 31 and 32 Standards, unless otherwise specified. LED luminaires shall be 165 W when installed on other type standards or poles, unless otherwise specified.
3. Luminaires shall be the cutoff type, ANSI Type III medium cutoff lighting distribution, unless otherwise specified.

STANDARD ELECTROLIER

NEW	EXISTING	STANDARD TYPE
		15
		15D
		15 STRUCTURE
		15D STRUCTURE
		21
		21D
		21 STRUCTURE
		21D STRUCTURE
		30
		31
		32

COMMONLY USED SYMBOLS FOR UNITED STATES CUSTOMARY UNITS OF MEASUREMENT:

SYMBOL USED	DEFINITIONS
Ω	OHMS
min	MINUTE
s	SECOND
bps	BITS PER SECOND
Bps	BYTES PER SECOND
A	AMPERE
V	VOLT
V(dc)	VOLT (DIRECT CURRENT)
V(ac)	VOLT (ALTERNATING CURRENT)
FC	FOOT - CANDLE
W	WATTS
VA	VOLT-AMPERE
M	MEGA
k	KILO
m	MILLI
μ	MICRO
P	PICO
Hz	HERTZ

STATE OF CALIFORNIA
DEPARTMENT OF TRANSPORTATION

ELECTRICAL SYSTEMS (LEGEND AND ABBREVIATIONS)

NO SCALE

RSP ES-1A DATED JULY 19, 2013 SUPERSEDES STANDARD PLAN ES-1A DATED MAY 20, 2011 - PAGE 425 OF THE STANDARD PLANS BOOK DATED 2010.

REVISED STANDARD PLAN RSP ES-1A

2010 REVISED STANDARD PLAN RSP ES-1A

Dist	COUNTY	ROUTE	POST MILES TOTAL PROJECT	SHEET No.	TOTAL SHEETS
04	SM	1	40.6/40.9	125	157

Theresa Gabriel
REGISTERED ELECTRICAL ENGINEER

July 19, 2013
PLANS APPROVAL DATE

REGISTERED PROFESSIONAL ENGINEER
Theresa Aziz Gabriel
No. E15129
Exp. 6-30-14
ELECTRICAL
STATE OF CALIFORNIA

THE STATE OF CALIFORNIA OR ITS OFFICERS OR AGENTS SHALL NOT BE RESPONSIBLE FOR THE ACCURACY OR COMPLETENESS OF SCANNED COPIES OF THIS PLAN SHEET.

TO ACCOMPANY PLANS DATED 8-19-13

CONDUIT

NEW	EXISTING	
		LIGHTING CONDUIT, UNLESS OTHERWISE INDICATED OR NOTED
		TRAFFIC SIGNAL CONDUIT
C	c	COMMUNICATION CONDUIT
T	t	TELEPHONE CONDUIT
F	f	FIRE ALARM CONDUIT
FO	fo	FIBER OPTIC CONDUIT
		CONDUIT TERMINATION
R	r	CONDUIT RISER ATTACHED TO THE STRUCTURE OR SERVICE POLE

SERVICE EQUIPMENT

NEW	EXISTING	
OH	oh	OVERHEAD LINES
U	U	WOOD POLE, "U" INDICATES UTILITY OWNED
		POLE GUY WITH ANCHOR
		UTILITY TRANSFORMER - GROUND MOUNTED
III	III	SERVICE EQUIPMENT ENCLOSURE TYPE. DOOR INDICATES FRONT OF ENCLOSURE
T	t	TELEPHONE DEMARCATION CABINET

POLE-MOUNTED SERVICE DESIGNATION

TYPE H SERVICE, 28'-10" — TYPE OF INSTALLATION AND POLE HEIGHT ABOVE GRADE

FLASHING BEACON

NEW	EXISTING	
R	R	FLASHING BEACON (ONE VEHICLE SIGNAL HEAD WITH BACKPLATE AND VISOR) "R" INDICATES RED INDICATION, "Y" INDICATES YELLOW INDICATION
Y Y	Y Y	FLASHING BEACON WITH TYPE 15-FBS STANDARD AND A SIGN.
R R	R R	FLASHING BEACON WITH TYPES 9, 9A OR 9B SIGN UNLESS OTHERWISE SPECIFIED OR INDICATED

SIGNAL EQUIPMENT

NEW	EXISTING	
C	C	PEDESTRIAN SIGNAL HEAD "C" INDICATES COUNTDOWN PEDESTRIAN HEAD
		PUSH BUTTON ASSEMBLY POST
		PEDESTRIAN BARRICADE
		VEHICLE SIGNAL HEAD (WITH BACKPLATE AND 3-SECTIONS: RED, YELLOW AND GREEN)
		VEHICLE SIGNAL HEAD WITH ANGLE VISOR
PV	PV	MODIFICATIONS OF BASIC SYMBOL: "L" INDICATES ALL NON-ARROW SECTIONS LOUVERED "LG" INDICATES LOUVERED GREEN SECTION ONLY "PV" INDICATES ALL 12" SECTIONS PROGRAMMED VISIBILITY "8" INDICATES ALL 8" SECTIONS (ONLY WHEN SPECIFIED)
		VEHICLE SIGNAL HEAD CONSISTING OF RED, YELLOW AND GREEN LEFT ARROW SECTIONS
		VEHICLE SIGNAL HEAD CONSISTING OF RED AND YELLOW SECTIONS WITH AN UP GREEN ARROW SECTION
		VEHICLE SIGNAL HEAD (5 SECTION) CONSISTING OF RED, YELLOW AND GREEN SECTIONS WITH YELLOW AND GREEN RIGHT ARROW SECTIONS
		TYPE 15TS STANDARD WITH VEHICLE SIGNAL HEAD AND LUMINAIRE
		TYPE 21TS STANDARD WITH VEHICLE SIGNAL HEAD AND LUMINAIRE
		STANDARD WITH LUMINAIRE AND SIGNAL MAST ARMS AND ATTACHED VEHICLE SIGNAL HEADS
		TYPE 1 STANDARD WITH ATTACHED VEHICLE SIGNAL HEADS
		STANDARD WITH A SIGNAL MAST ARM, ATTACHED VEHICLE SIGNAL HEADS AND INTERNALLY ILLUMINATED STREET NAME SIGN
		CONTROLLER ASSEMBLY. DOOR INDICATES FRONT OF CABINET

SIGNAL EQUIPMENT Cont

NEW	EXISTING	
		GUARD POST
		TYPE 1 STANDARD WITH RAMP METERING SIGN
		OPTICAL DETECTOR FOR THE EMERGENCY VEHICLE DETECTION SYSTEM

NOTES:

1. All signal sections shall be 12" unless shown otherwise.
2. Signal heads shall be provided with backplates unless shown otherwise.

ILLUMINATED OVERHEAD SIGN

NEW	EXISTING	
		SINGLE POST, SINGLE ILLUMINATED SIGN, BALANCED BUTTERFLY
		SINGLE POST, DOUBLE ILLUMINATED SIGN, BALANCED BUTTERFLY
		SINGLE POST, SINGLE ILLUMINATED SIGN, FULL CANTILEVER
		DOUBLE POST, SINGLE ILLUMINATED SIGN
		SINGLE ILLUMINATED SIGN MOUNTED ON STRUCTURE
		DOUBLE POST, SINGLE ILLUMINATED SIGN WITH ELECTROLIER

STATE OF CALIFORNIA
DEPARTMENT OF TRANSPORTATION

ELECTRICAL SYSTEMS (LEGEND AND ABBREVIATIONS)

NO SCALE

RSP ES-1B DATED JULY 19, 2013 SUPERSEDES STANDARD PLAN ES-1B DATED MAY 20, 2011 - PAGE 426 OF THE STANDARD PLANS BOOK DATED 2010.

REVISED STANDARD PLAN RSP ES-1B

2010 REVISED STANDARD PLAN RSP ES-1B

7-15-13

Dist	COUNTY	ROUTE	POST MILES TOTAL PROJECT	SHEET No.	TOTAL SHEETS
04	SM	1	40.6/40.9	126	157

Theresa Gabriel
REGISTERED ELECTRICAL ENGINEER

July 19, 2013
PLANS APPROVAL DATE

REGISTERED PROFESSIONAL ENGINEER
Theresa Aziz Gabriel
No. E15129
Exp. 6-30-14
ELECTRICAL
STATE OF CALIFORNIA

THE STATE OF CALIFORNIA OR ITS OFFICERS OR AGENTS SHALL NOT BE RESPONSIBLE FOR THE ACCURACY OR COMPLETENESS OF SCANNED COPIES OF THIS PLAN SHEET.

TO ACCOMPANY PLANS DATED 8-19-13

EQUIPMENT IDENTIFICATION

ILLUMINATED SIGN IDENTIFICATION NUMBER:

SIGN No. 12345
10 ISL SCI 1.0

- SIGN NUMBER - PLACE ON POST OR STRUCTURE
- TRANSFORMER RATING (kVA)
- LIGHTING CONTROL TYPE
- NUMBER AND TYPE OF FIXTURES

DO NOT PLACE ON STANDARD OR STRUCTURE

ELECTROLIER OR EQUIPMENT IDENTIFICATION NUMBER:

12345 - 15'-0"

- MAST ARM LENGTH, IF SHOWN. DO NOT PLACE ON STANDARD OR STRUCTURE
- EQUIPMENT NUMBER - PLACE ON STANDARD OR STRUCTURE. EXISTING EQUIPMENT NUMBERS ARE SHOWN IN PARENTHESIS

CONDUIT AND CONDUCTOR IDENTIFICATION:

1½"C, 2#10, 15#14, 2 DLC, 12P#18

- PAIR
- NUMBER AND SIZE OF CONDUCTORS AND CABLES
- SIZE OF CONDUIT IN INCHES

ø1, ø2, ø2P, etc.	TRAFFIC PHASE IDENTIFICATION FOR SIGNAL FACES, DETECTORS AND PHASE DIAGRAMS
1 2 3	LEGEND NUMBERS
A B C	EQUIPMENT, SIGNAL POLES, INSTALLATION OR ITEMS
1 2 3	CONDUIT RUN NUMBERS

SIGNAL AND LIGHTING STANDARD (TYPICAL DESIGNATION):

19A - 3 - 100

- WIND VELOCITY = 100 mph
- CASE 3 ARM LOADING
- STANDARD TYPE
- STANDARD PLAN SHEET NUMBER
- DETAIL, NUMBER, SECTION, TYPE OR ELEVATION

MISCELLANEOUS EQUIPMENT

NEW	EXISTING	
CMS	cms	CHANGEABLE MESSAGE SIGN
		CLOSED CIRCUIT TELEVISION CAMERA
		HIGHWAY ADVISORY RADIO POLE AND ANTENNA
EMS	ems	EXTINGUISHABLE MESSAGE SIGN
M V	m v	DETECTION DEVICE M = MICROWAVE SENSOR V = VIDEO IMAGE SENSOR

WIRING DIAGRAM LEGEND

----	EXTERNAL CONDUCTOR
	CONDUCTOR OR BUS
	TIE POINT
	CONTACTOR COIL
	CONTACTOR, NO CONTACT
	TERMINAL BLOCKS
	CONTACTOR, NC CONTACT
	ENCLOSURE BOND
	GROUNDING ELECTRODE
	CIRCUIT BREAKER
	RECEPTACLE

PULL BOXES

NEW	EXISTING	
		PULL BOX, No. 5 UNLESS OTHERWISE INDICATED OR NOTED
3	9A(21)	PULL BOX, ADDITIONAL DESIGNATIONS OR DESCRIPTIONS

3 No. 3½ PULL BOX
5 No. 5 PULL BOX
6 No. 6 PULL BOX
7 No. 7 (CEILING PULL BOX)
8 No. 8 (PENDANT SOFFIT PULL BOX)
9 No. 9 PULL BOX
9A No. 9A PULL BOX

(C) COMMUNICATIONS PULL BOX
(E) PULL BOX WITH EXTENSION
(S) SPRINKLER CONTROL PULL BOX
(21) ANCHOR BOLTS AND CONDUIT FOR FUTURE INSTALLATION OF TYPE 21 STANDARD
(T) TRAFFIC PULL BOX

VEHICLE DETECTORS

5 J 9 U

- VEHICLE DETECTOR DESIGNATION
- U = UPPER
  L = LOWER
- SLOT NUMBER IN INPUT FILE
- INPUT FILE (I OR J)
- PHASE

NEW	EXISTING	
		TYPE A DETECTOR LOOP. OUTLINE OF SAWCUT SHOWN
		TYPE B DETECTOR LOOP. OUTLINE OF SAWCUT SHOWN
		TYPE C DETECTOR LOOP. OUTLINE OF SAWCUT SHOWN
		TYPE D DETECTOR LOOP. OUTLINE OF SAWCUT SHOWN
		TYPE E DETECTOR LOOP. OUTLINE OF SAWCUT SHOWN
		TYPE Q DETECTOR LOOP. OUTLINE OF SAWCUT SHOWN
		MAGNETIC DETECTOR
DH	dh	DETECTOR HANDHOLE
		MICROWAVE OR VIDEO DETECTION ZONE

STATE OF CALIFORNIA
DEPARTMENT OF TRANSPORTATION

ELECTRICAL SYSTEMS (LEGEND AND ABBREVIATIONS)

NO SCALE

RSP ES-1C DATED JULY 19, 2013 SUPERSEDES STANDARD PLAN ES-1C DATED MAY 20, 2011 - PAGE 427 OF THE STANDARD PLANS BOOK DATED 2010.

REVISED STANDARD PLAN RSP ES-1C

2010 REVISED STANDARD PLAN RSP ES-1C

7-11-13

Dist	COUNTY	ROUTE	POST MILES TOTAL PROJECT	SHEET No.	TOTAL SHEETS
04	SM	1	40.6/40.9	127	157

Theresa Gabriel
REGISTERED ELECTRICAL ENGINEER

July 19, 2013
PLANS APPROVAL DATE

REGISTERED PROFESSIONAL ENGINEER
Theresa Aziz Gabriel
No. E15129
Exp. 6-30-14
ELECTRICAL
STATE OF CALIFORNIA

THE STATE OF CALIFORNIA OR ITS OFFICERS OR AGENTS SHALL NOT BE RESPONSIBLE FOR THE ACCURACY OR COMPLETENESS OF SCANNED COPIES OF THIS PLAN SHEET.

TO ACCOMPANY PLANS DATED 8-19-13

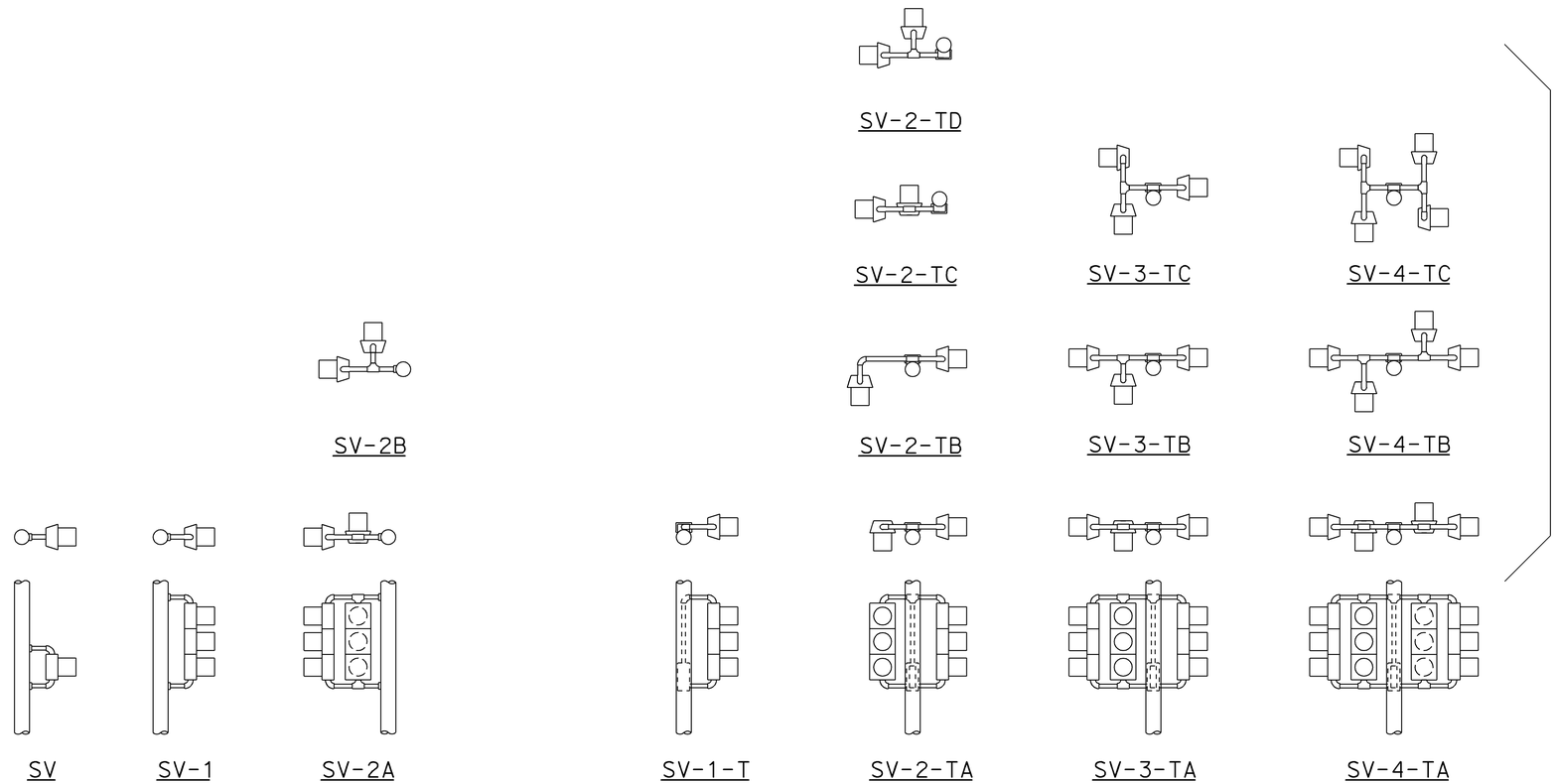

SIDE MOUNTINGS

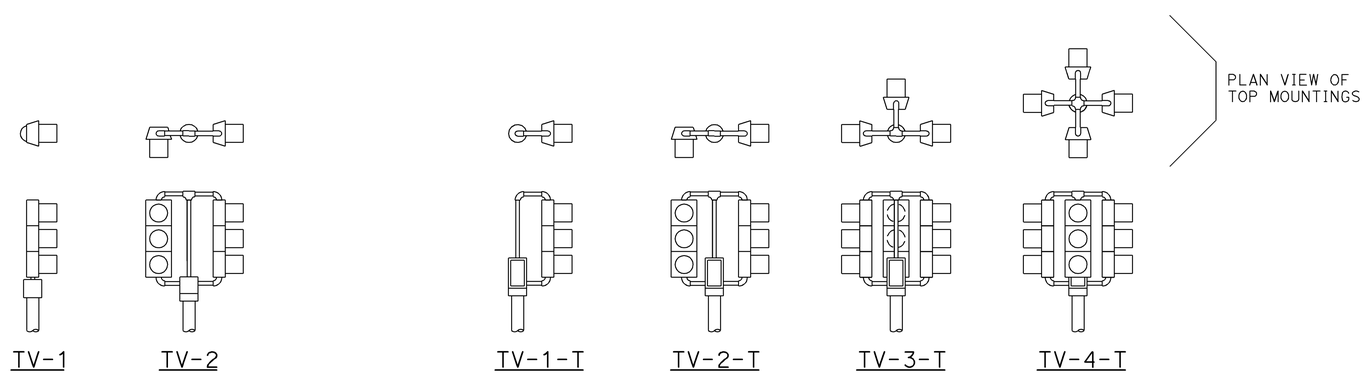

TOP MOUNTINGS

ABBREVIATIONS:

SV	SIDE MOUNTED VEHICLE SIGNALS
T	TERMINAL COMPARTMENT
TV	TOP MOUNTED VEHICLE SIGNALS
1, 2, 3, 4	NUMBER OF SIGNAL FACES (3 - SECTION, UNLESS OTHERWISE INDICATED)
A, B, C, D	CONFIGURATION OF SIGNALS

NOTES:

1. Mountings shall be oriented to provide maximum horizontal clearance to adjacent roadway.
2. Bracket arms shall be long enough to permit proper alignment of signals and backplate installation.
3. See Standard Plans ES-4D and ES-4E for attachment fitting details.

STATE OF CALIFORNIA
DEPARTMENT OF TRANSPORTATION

ELECTRICAL SYSTEMS (VEHICULAR SIGNAL HEADS AND MOUNTINGS)

NO SCALE

RSP ES-4A DATED JULY 19, 2013 SUPERSEDES STANDARD PLAN ES-4A DATED MAY 20, 2011 - PAGE 443 OF THE STANDARD PLANS BOOK DATED 2010.

REVISED STANDARD PLAN RSP ES-4A

2010 REVISED STANDARD PLAN RSP ES-4A

7-9-13

Dist	COUNTY	ROUTE	POST MILES TOTAL PROJECT	SHEET No.	TOTAL SHEETS
04	SM	1	40.6/40.9	128	157

Theresa Gabriel
REGISTERED ELECTRICAL ENGINEER

July 19, 2013
PLANS APPROVAL DATE

REGISTERED PROFESSIONAL ENGINEER
Theresa Aziz Gabriel
No. E15129
Exp. 6-30-14
ELECTRICAL
STATE OF CALIFORNIA

THE STATE OF CALIFORNIA OR ITS OFFICERS OR AGENTS SHALL NOT BE RESPONSIBLE FOR THE ACCURACY OR COMPLETENESS OF SCANNED COPIES OF THIS PLAN SHEET.

TO ACCOMPANY PLANS DATED 8-19-13

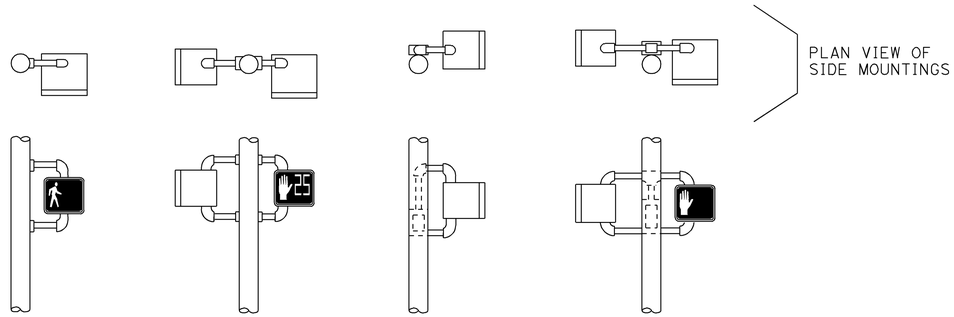

SP-1 SP-2 SP-1-T SP-2-T

SIDE MOUNTINGS

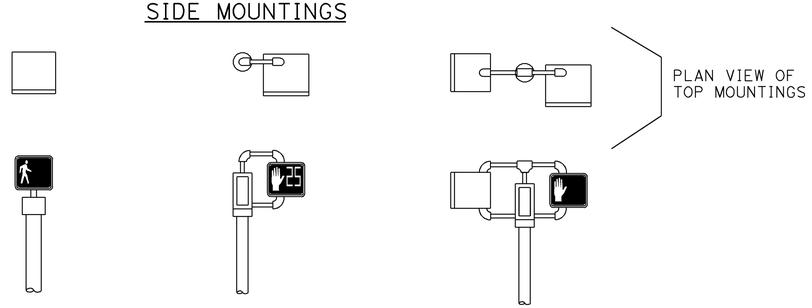

TP-1 TP-1-T TP-2-T

TOP MOUNTINGS

PEDESTRIAN SIGNALS AND MOUNTINGS

DETAIL A

PERSON WALKING INTERVAL FLASHING UPRAISED HAND INTERVAL STEADY UPRAISED HAND INTERVAL

PEDESTRIAN SIGNAL MODULE WITH COUNTDOWN

DETAIL B

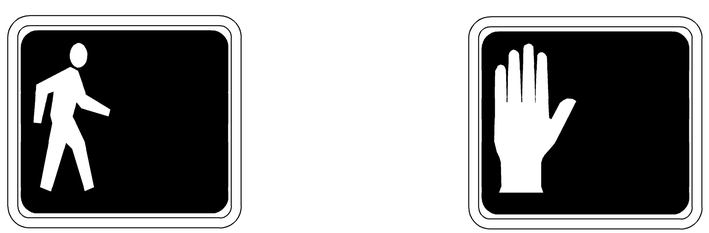

PERSON WALKING INTERVAL STEADY UPRAISED HAND INTERVAL

PEDESTRIAN SIGNAL MODULE WITHOUT COUNTDOWN

DETAIL C

NOTES:

1. Mounting shall be oriented to provide maximum horizontal clearance to adjacent roadway.
2. Bracket arms shall be long enough to permit proper alignment of signals.
3. See Standard Plan ES-4D for attachment fittings details.

ABBREVIATIONS:

1, 2	NUMBER OF SIGNAL FACES
SP	SIDE MOUNTED PEDESTRIAN SIGNAL
T	TERMINAL COMPARTMENT
TP	TOP MOUNTED PEDESTRIAN SIGNAL

RAMP METERING SIGN

DETAIL D

STATE OF CALIFORNIA
DEPARTMENT OF TRANSPORTATION

ELECTRICAL SYSTEMS (PEDESTRIAN SIGNAL AND RAMP METERING SIGN)

NO SCALE

RSP ES-4B DATED JULY 19, 2013 SUPERSEDES STANDARD PLAN ES-4B DATED MAY 20, 2011 - PAGE 444 OF THE STANDARD PLANS BOOK DATED 2010.

REVISED STANDARD PLAN RSP ES-4B

2010 REVISED STANDARD PLAN RSP ES-4B

7-9-13

Dist	COUNTY	ROUTE	POST MILES TOTAL PROJECT	SHEET No.	TOTAL SHEETS
04	SM	1	40.6/40.9	129	157

Theresa Gabriel
REGISTERED ELECTRICAL ENGINEER

July 19, 2013
PLANS APPROVAL DATE

REGISTERED PROFESSIONAL ENGINEER Theresa Aziz Gabriel No. E15129 Exp. 6-30-14 ELECTRICAL STATE OF CALIFORNIA

THE STATE OF CALIFORNIA OR ITS OFFICERS OR AGENTS SHALL NOT BE RESPONSIBLE FOR THE ACCURACY OR COMPLETENESS OF SCANNED COPIES OF THIS PLAN SHEET.

TO ACCOMPANY PLANS DATED 8-19-13

VISORS

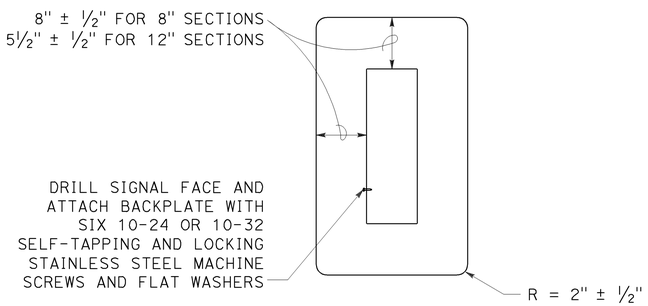

8" AND 12" SECTIONS

BACKPLATE

1/16" minimum thickness
3001-14 aluminum or plastic
when specified

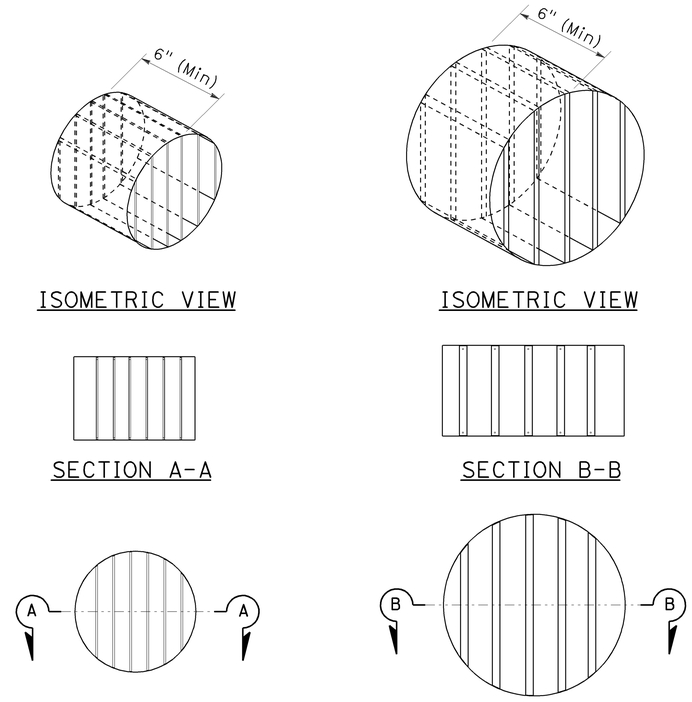

8" DIAMETER FRONT VIEW

12" DIAMETER FRONT VIEW

DIRECTIONAL LOUVER

Directional louvers shall be oriented as directed by the Engineer and secured in place with one plated brass machine screw and nut.

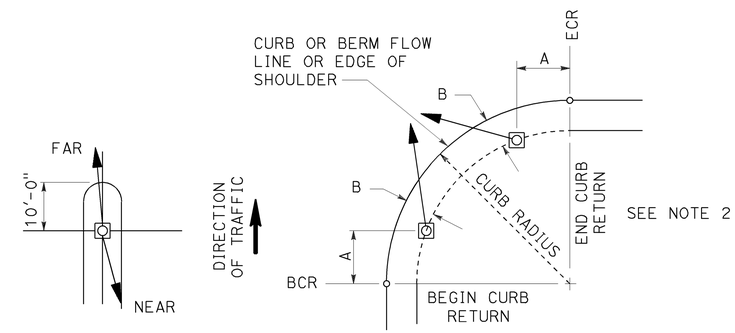

NOTES:

1. Typical signal pole placement unless dimensioned on plans.
2. For A and B dimensions, see Pole Schedule, or as directed by the Engineer.

SIGNAL STANDARD PLACEMENT DIMENSIONS AND EQUIPMENT LOCATIONS

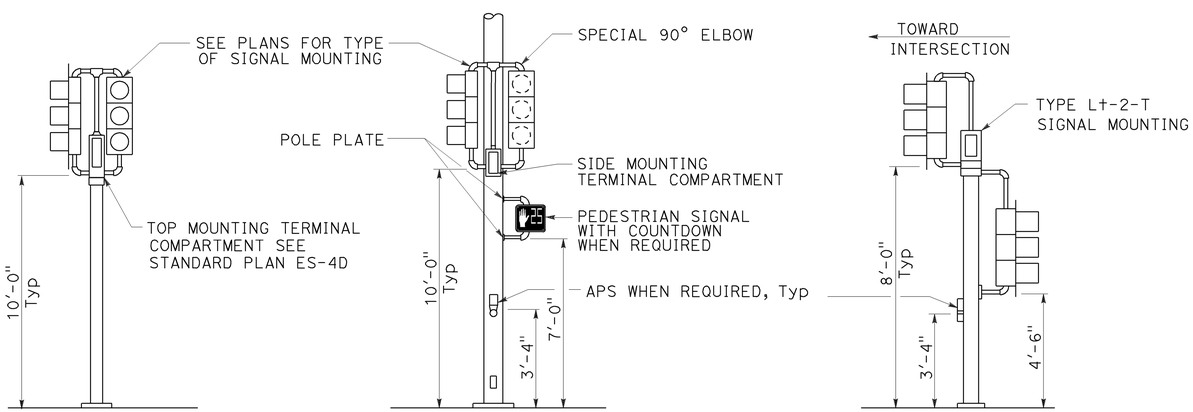

TOP MOUNTED SIGNALS (TV)

Type 1-A, 1-B, 1-C and 1-D standard as indicated on the plans

SIDE MOUNTED SIGNALS (SV AND SP)

Normally used on standards with luminaire or signal mast arm

LEFT TURN LANE SIGNAL

Type 1-A, 1-B, 1-C and 1-D standard as indicated on plans

TYPICAL SIGNAL INSTALLATIONS

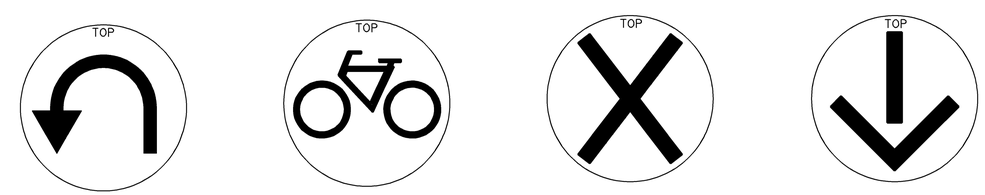

U-TURN

BICYCLE

LANE CONTROL

LANE CONTROL

SIGNAL FACES

STATE OF CALIFORNIA
DEPARTMENT OF TRANSPORTATION

ELECTRICAL SYSTEMS (VEHICULAR SIGNAL HEADS AND MOUNTINGS)

NO SCALE

RSP ES-4C DATED JULY 19, 2013 SUPERSEDES STANDARD PLAN ES-04C DATED MAY 20, 2011 - PAGE 445 OF THE STANDARD PLANS BOOK DATED 2010.

REVISED STANDARD PLAN RSP ES-4C

2010 REVISED STANDARD PLAN RSP ES-4C

7-10-13

Dist	COUNTY	ROUTE	POST MILES TOTAL PROJECT	SHEET No.	TOTAL SHEETS
04	SM	1	40.6/40.9	130	157

Theresa Gabriel
REGISTERED ELECTRICAL ENGINEER

July 19, 2013
PLANS APPROVAL DATE

REGISTERED PROFESSIONAL ENGINEER
Theresa Aziz Gabriel
No. E15129
Exp. 6-30-14
ELECTRICAL
STATE OF CALIFORNIA

THE STATE OF CALIFORNIA OR ITS OFFICERS OR AGENTS SHALL NOT BE RESPONSIBLE FOR THE ACCURACY OR COMPLETENESS OF SCANNED COPIES OF THIS PLAN SHEET.

TO ACCOMPANY PLANS DATED 8-19-13

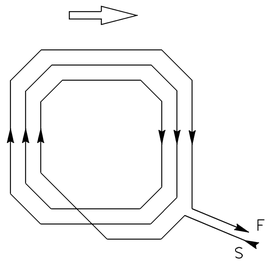

WINDING DETAIL

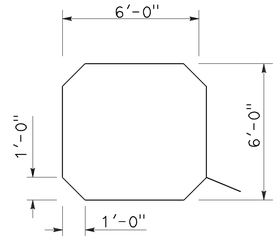

SAWCUT DETAIL

TYPE A LOOP DETECTOR CONFIGURATION

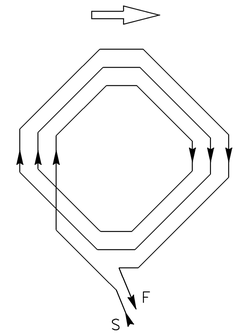

WINDING DETAIL

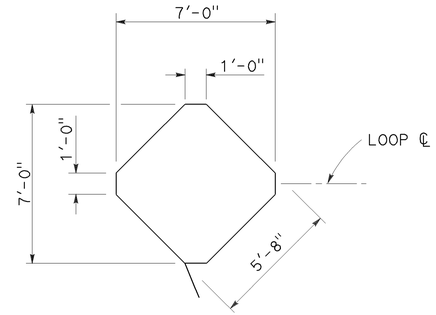

SAWCUT DETAIL

TYPE B LOOP DETECTOR CONFIGURATION

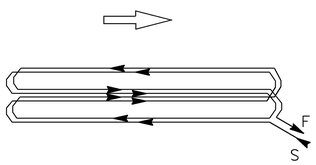

WINDING DETAIL

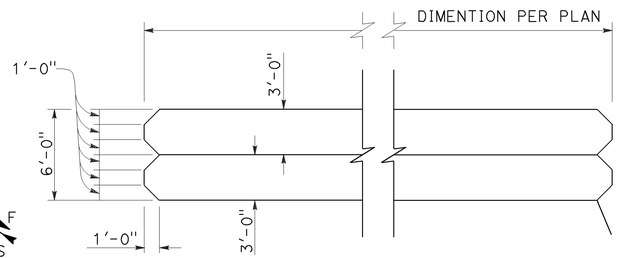

SAWCUT DETAIL

TYPE C LOOP DETECTOR CONFIGURATION

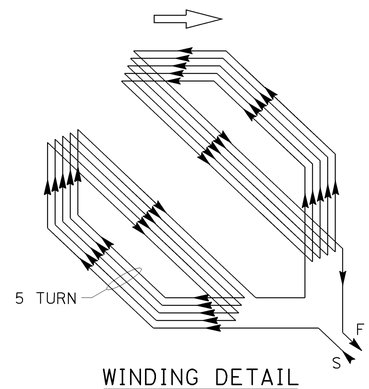

WINDING DETAIL

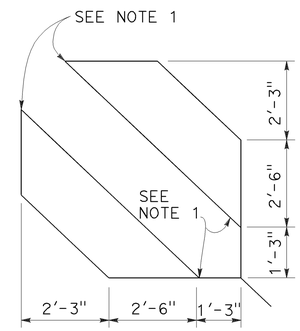

SAWCUT DETAIL

TYPE D LOOP DETECTOR CONFIGURATION

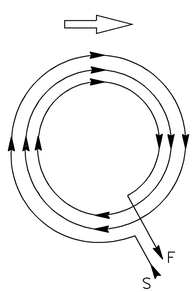

WINDING DETAIL

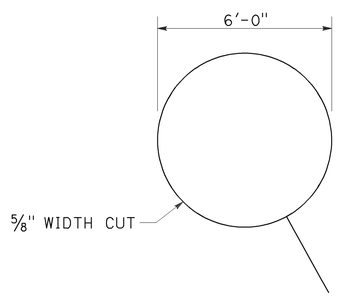

SAWCUT DETAIL

TYPE E LOOP DETECTOR CONFIGURATION

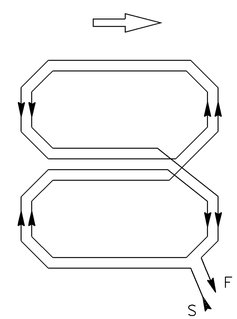

WINDING DETAIL

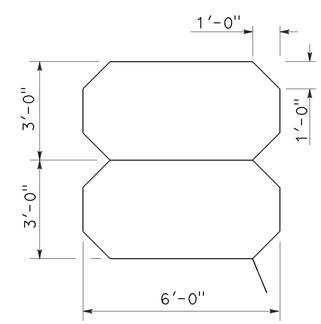

SAWCUT DETAIL

TYPE Q LOOP DETECTOR CONFIGURATION

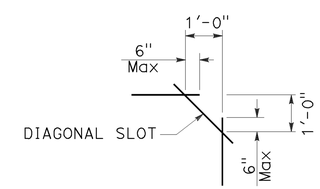

PLAN VIEW OF DIAGONAL SLOT AT CORNERS

NOTES:

1. Round corners of acute angle sawcuts to prevent damage to conductors.
2. Typical distance separating loops from edge to edge is 10' for Type A, B, D and E installation in single lane.

STATE OF CALIFORNIA
DEPARTMENT OF TRANSPORTATION

ELECTRICAL SYSTEMS (DETECTORS)

NO SCALE

RSP ES-5B DATED JULY 19, 2013 SUPERSEDES STANDARD PLAN ES-5B DATED MAY 20, 2011 - PAGE 449 OF THE STANDARD PLANS BOOK DATED 2010.

REVISED STANDARD PLAN RSP ES-5B

2010 REVISED STANDARD PLAN RSP ES-5B

7-9-13

Dist	COUNTY	ROUTE	POST MILES TOTAL PROJECT	SHEET No.	TOTAL SHEETS
04	SM	1	40.6/40.9	131	157

Theresa Gabriel
REGISTERED ELECTRICAL ENGINEER

July 19, 2013
PLANS APPROVAL DATE

REGISTERED PROFESSIONAL ENGINEER
Theresa Aziz Gabriel
No. E15129
Exp. 6-30-14
ELECTRICAL
STATE OF CALIFORNIA

THE STATE OF CALIFORNIA OR ITS OFFICERS OR AGENTS SHALL NOT BE RESPONSIBLE FOR THE ACCURACY OR COMPLETENESS OF SCANNED COPIES OF THIS PLAN SHEET.

TO ACCOMPANY PLANS DATED 8-19-13

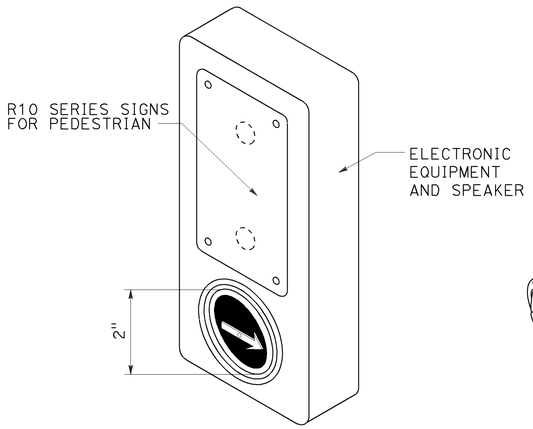

ACCESSIBLE PEDESTRIAN SIGNAL

DETAIL A
(See note 1 to 4)

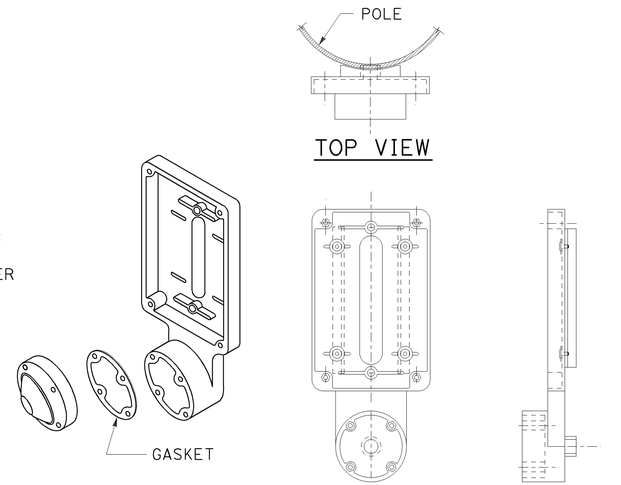

TYPE B PUSH BUTTON ASSEMBLY

DETAIL B
(See note 1 to 4)

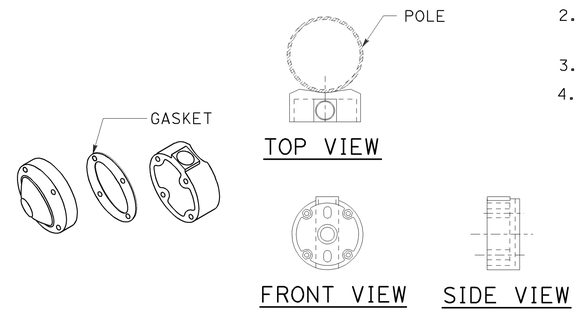

TYPE C PUSH BUTTON ASSEMBLY

DETAIL C
(See note 1 to 4)

NOTES:

1. Back casting shape to fit curvature of pole.
2. Provide cover fitting for top of post, when PBA is mounted on push button assembly post.
3. Install push button on crosswalk side of standard.
4. Use R10 series regulatory signs and plaques for pedestrian and bicycle facilities.

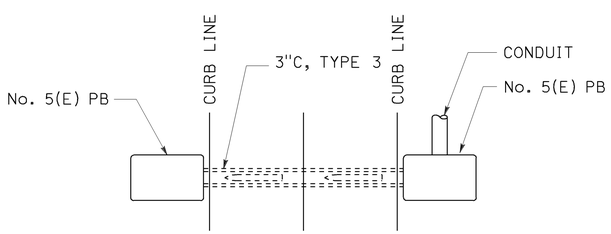

PLAN

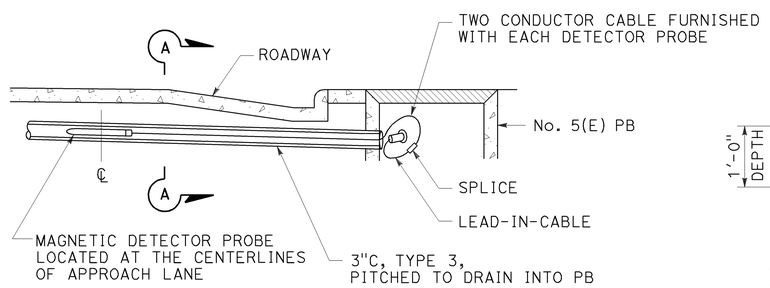

ELEVATION

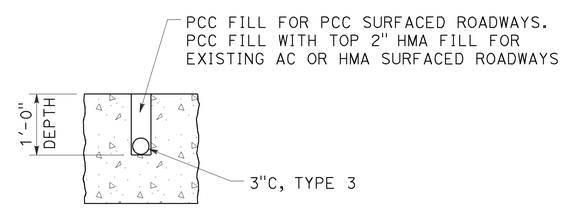

SECTION A-A

MAGNETIC VEHICLE DETECTOR

INSTALLATION DETAILS

DETAIL D

STATE OF CALIFORNIA
DEPARTMENT OF TRANSPORTATION

ELECTRICAL SYSTEMS (ACCESSIBLE PEDESTRIAN SIGNAL, PUSH BUTTON ASSEMBLIES AND MAGNETIC VEHICLE DETECTOR)

NO SCALE

RSP ES-5C DATED JULY 19, 2013 SUPERSEDES STANDARD PLAN ES-5C
DATED MAY 20, 2011 - PAGE 450 OF THE STANDARD PLANS BOOK DATED 2010.

REVISED STANDARD PLAN RSP ES-5C

2010 REVISED STANDARD PLAN RSP ES-5C

7-9-13

Dist	COUNTY	ROUTE	POST MILES TOTAL PROJECT	SHEET No.	TOTAL SHEETS
04	SM	1	40.6/40.9	132	157

Theresa Gabriel
REGISTERED ELECTRICAL ENGINEER

July 19, 2013
PLANS APPROVAL DATE

REGISTERED PROFESSIONAL ENGINEER Theresa Aziz Gabriel No. E15129 Exp. 6-30-14 ELECTRICAL STATE OF CALIFORNIA

THE STATE OF CALIFORNIA OR ITS OFFICERS OR AGENTS SHALL NOT BE RESPONSIBLE FOR THE ACCURACY OR COMPLETENESS OF SCANNED COPIES OF THIS PLAN SHEET.

TO ACCOMPANY PLANS DATED 8-19-13

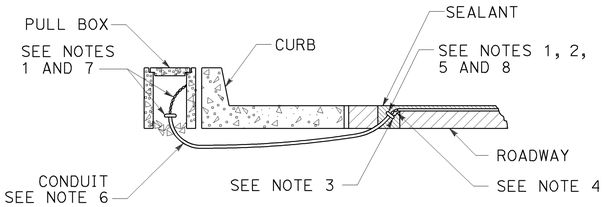

TYPE A
CURB TERMINATION DETAIL

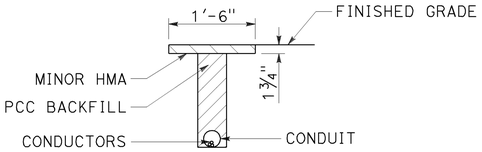

"T" TRENCH
DETAIL T

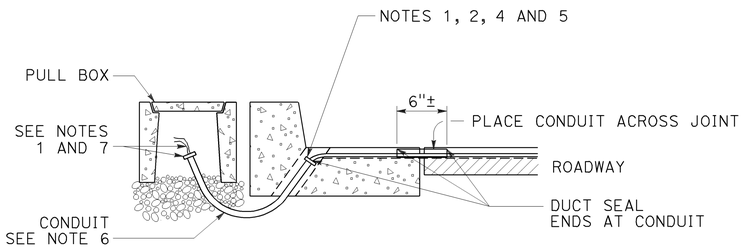

CROSS SECTION

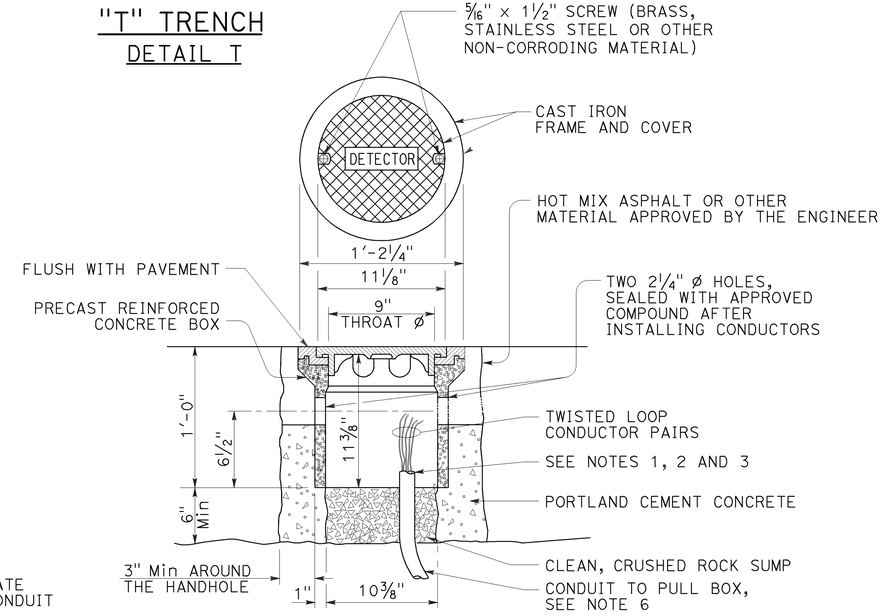

DETECTOR HANDHOLE DETAIL

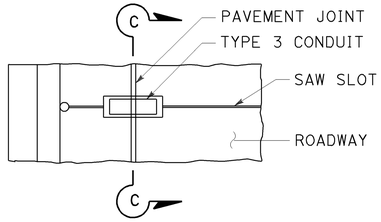

PLAN VIEW

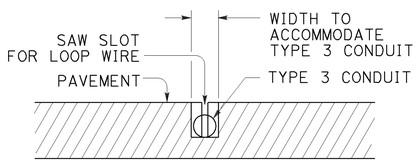

SECTION C-C

TYPE B
CURB TERMINATION DETAIL

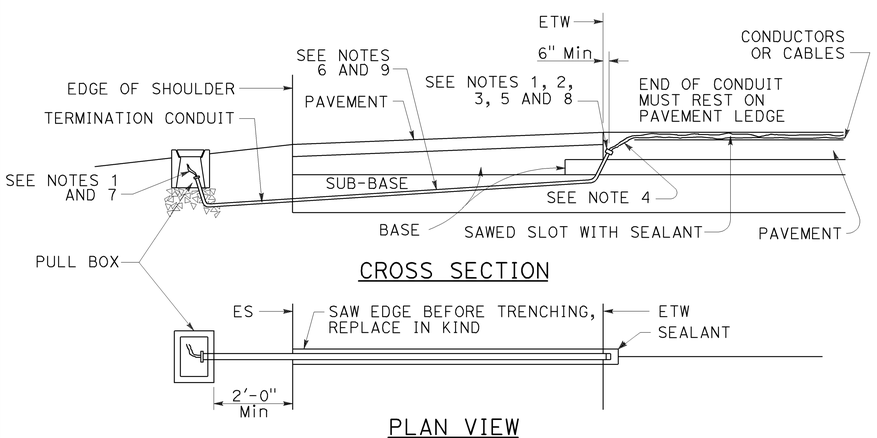

CROSS SECTION

PLAN VIEW

SHOULDER TERMINATION DETAILS

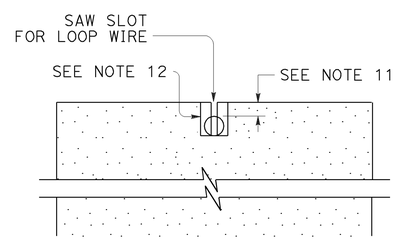

SECTION A-A

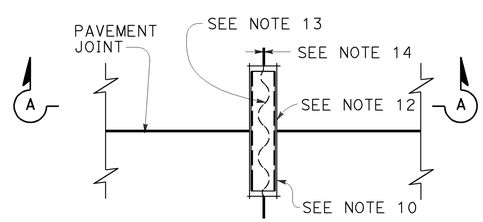

PLAN VIEW

TYPICAL LOOP LEAD-IN DETAIL
AT PAVEMENT JOINT

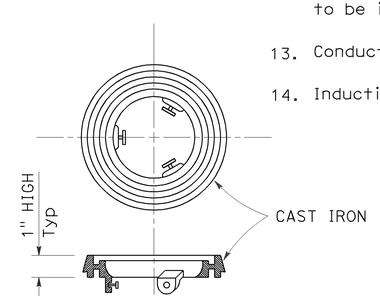

LOCKING GRADE RING

NOTES:

1. Bushing shall be used at end of conduit.
2. Tape detector conductors or cables 3" each side of bushings.
3. Install duct seal compound to each end of termination conduit before installing sealant.
4. Round all sharp edges where detector conductors or cables have to pass.
5. End of conduit shall be 3⅛" below roadway surface.
6. Conduit size / Loop conductors
   - 1"C minimum — 1 to 2 pairs
   - 1½"C minimum — 3 to 4 pairs
   - 2"C minimum — 5 or more pairs
7. Splice detector conductors or cables to detector lead-in-cable.
8. Location of detector handhole when shown on plans.
9. When the shoulder and traveled way are paved with the same material and there is no joint between them, the conduit shall extend only 2'-0" into the shoulder pavement.
10. ¾"C, Type 3 conduit 6" long minimum, plug both ends with duct compound to keep out sealant.
11. ½" Minimum between top of conduit and pavement surface.
12. Sawcut shall not exceed 1" in width and ⅛" longer than conduit to be installed.
13. Conductors with ½" minimum slack inside conduit.
14. Inductive loop detector saw slot.

STATE OF CALIFORNIA
DEPARTMENT OF TRANSPORTATION

ELECTRICAL SYSTEMS (CURB TERMINATION AND HANDHOLE)

NO SCALE

RSP ES-5D DATED JULY 19, 2013 SUPERSEDES STANDARD PLAN ES-5D DATED MAY 20, 2011 - PAGE 451 OF THE STANDARD PLANS BOOK DATED 2010.

REVISED STANDARD PLAN RSP ES-5D

2010 REVISED STANDARD PLAN RSP ES-5D

7-9-13

DIST	COUNTY	ROUTE	POST MILES TOTAL PROJECT	SHEET NO.	TOTAL SHEETS
04	SM	1	40.6/40.9	133	157

Theresa Gabriel
REGISTERED ELECTRICAL ENGINEER

July 19, 2013
PLANS APPROVAL DATE

REGISTERED PROFESSIONAL ENGINEER Theresa Aziz Gabriel No. E15129 Exp. 6-30-14 ELECTRICAL STATE OF CALIFORNIA

THE STATE OF CALIFORNIA OR ITS OFFICERS OR AGENTS SHALL NOT BE RESPONSIBLE FOR THE ACCURACY OR COMPLETENESS OF SCANNED COPIES OF THIS PLAN SHEET.

TO ACCOMPANY PLANS DATED 8-19-13

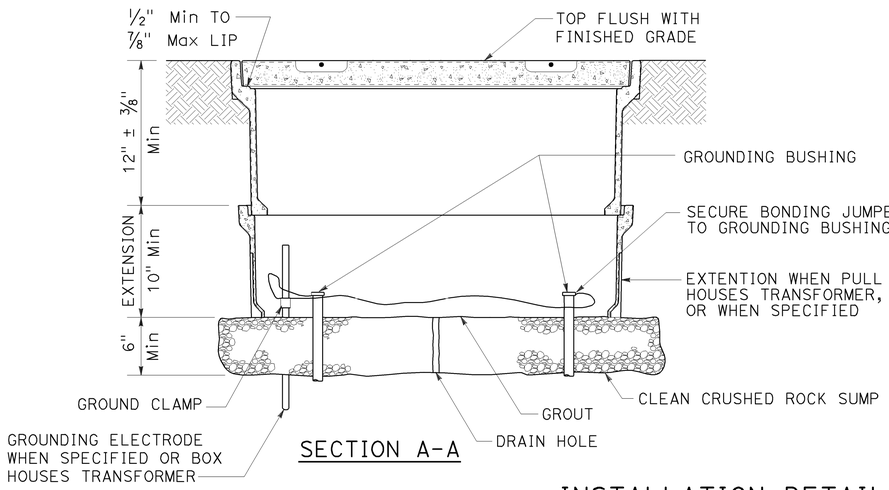

SECTION A-A

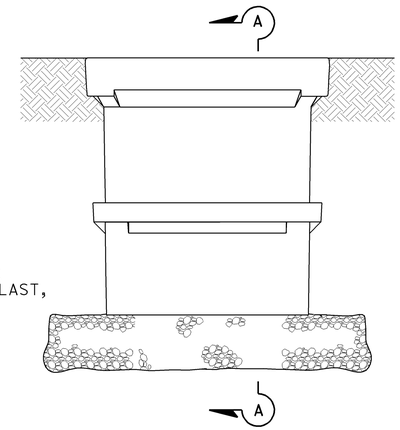

SIDE VIEW

INSTALLATION DETAILS

DETAIL A

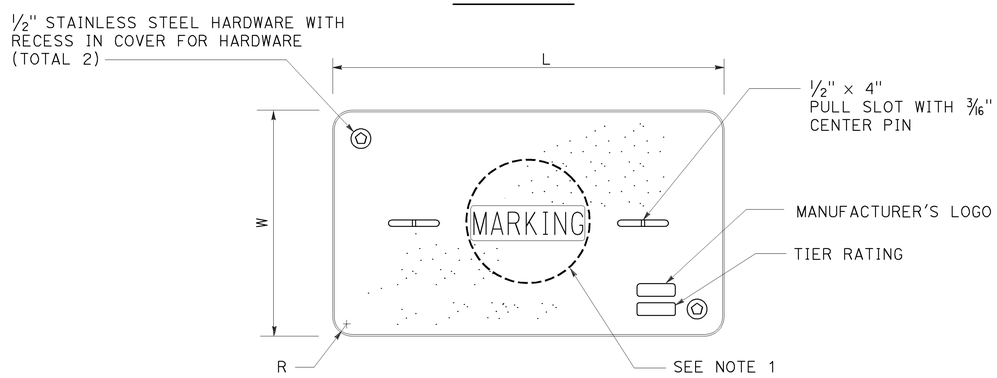

COVER TOP VIEW

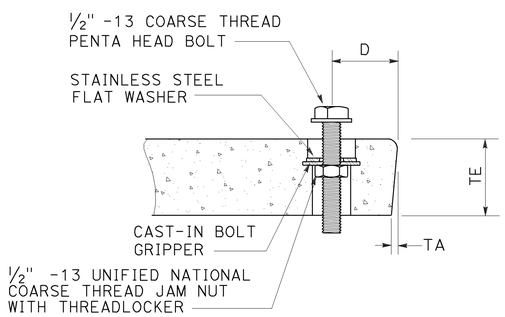

TYPICAL COVER CAPTIVE BOLT

OR SIMILAR

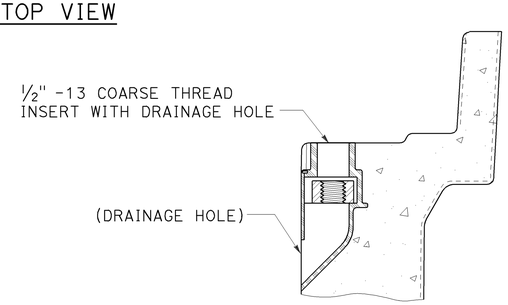

TYPICAL THREADED INSERT

OR SIMILAR

DIMENSION TABLE										
PULL BOX	PULL BOX			COVER						
	MINIMUM DEPTH BOX	MINIMUM DEPTH EXTENSION	MAXIMUM WEIGHT	L	W	R	TE	TA	D	MAXIMUM WEIGHT
No. 3½	12"	N/A	40 lb	1′ - 3⅜"	10⅛"	1⅜"	2"	⅛"	1¾"	30 lb
No. 5	12"	10"	55 lb	1′ - 11¼"	1′ - 1¾"	1⅜"	2"	⅛"	1¾"	60 lb
No. 6	12"	10"	70 lb	2′ - 6½"	1′ - 5½"	1⅜"	2"	⅛"	2"	85 lb

NOTES:

1. Pull box covers shall be marked as follows: "SERVICE" Service circuits between service point and service disconnect; "SPRINKLER-CONTROL" sprinkler control circuits, 50 V or less; "CALTRANS" on all pull boxes, except pull boxes marked "SPRINKLER-CONTROL"; and "TELEPHONE" Telephone service;

   A) No. 3½ pull box.
      1) "SIGNAL" - Traffic signal circuits with or without lighting or sign lighting circuits.
      2) "LIGHTING" - Lighting or sign lighting circuits where voltage is under 600 V.

   B) No. 5, 6, 9 or 9A pull box.
      1) "TRAFFIC SIGNAL" - Traffic signal circuits with or without lighting or sign lighting circuits.
      2) "LIGHTING" - Lighting or sign lighting circuits where voltage is under 600 V.
      3) "LIGHTING-HIGH VOLTAGE" - Lighting or sign lighting circuits where voltage is above 600 V.
      4) "IRRIGATION" - Circuits to irrigation controller 120 V or more.
      5) "RAMP METER" - Ramp meter circuits.
      6) "COUNT STATION" - Count or speed monitor circuits.
      7) "COMMUNICATIONS" - Communication circuits.
      8) "TOS COMMUNICATIONS" - TOS communication line.
      9) "TOS POWER" - TOS power.
      10) "TDC POWER" - Telephone demarcation cabinet power.
      11) "CCTV" - Closed circuit television circuits.
      12) "TMS" - Traffic monitoring station circuits.
      13) "CMS" - Changeable message sign circuits.
      14) "HAR" - Highway advisory radio circuits.
      15) "BOOSTER PUMP" - Booster pump circuit.

2. The nominal dimensions of the opening in which the cover sets shall be the same as the cover dimensions except the length and width dimensions shall be ⅛" greater.

3. Covers and boxes shall be interchangeable with California standard male and female gages. When interchanged with a standard male or female gage, the top surfaces shall be flush within ⅛". Top outside radius of covers and pull boxes shall have a ⅛" radius.

4. Pull box extension may be another pull box as long as the bottom edge of the pull box can fit into the cover opening.

5. All dimensions for the cover for non-traffic pull box are nominal values.

STATE OF CALIFORNIA
DEPARTMENT OF TRANSPORTATION

ELECTRICAL SYSTEMS (NON-TRAFFIC PULL BOX)

NO SCALE

RSP ES-8A DATED JULY 19, 2013 SUPERSEDES RSP ES-8A DATED JANUARY 20, 2012 THAT SUPPLEMENTS THE STANDARD PLANS BOOK DATED 2010.

REVISED STANDARD PLAN RSP ES-8A

2010 REVISED STANDARD PLAN RSP ES-8A

7-15-13

FOR ACCURATE RIGHT OF WAY DATA, CONTACT
RIGHT OF WAY ENGINEERING AT THE DISTRICT OFFICE

DIST	COUNTY	ROUTE	POST MILES TOTAL PROJECT	SHEET No	TOTAL SHEETS
04	SM	1	40.6/40.9	134	157

Mahvash Harms 8/17/13
REGISTERED STRUCTURAL ENGINEER DATE

8/19/13
PLANS APPROVAL DATE

REGISTERED PROFESSIONAL ENGINEER MAHVASH M. HARMS No. 2639 Exp. 12/31/14 STRUCTURAL STATE OF CALIFORNIA

The State of California or its officers or agents shall not be responsible for the accuracy or completeness of scanned copies of this plan sheet.

CITY OF PACIFICA
170 SANTA MARIA AVENUE
PACIFICA, CA 94044

BIGGS CARDOSA ASSOCIATES INC.
865 THE ALAMEDA
SAN JOSE, CALIFORNIA 95126

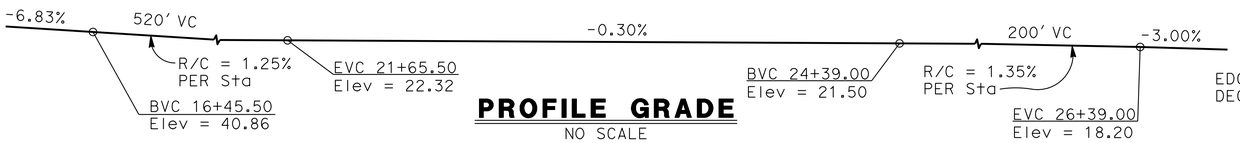

PROFILE GRADE
NO SCALE

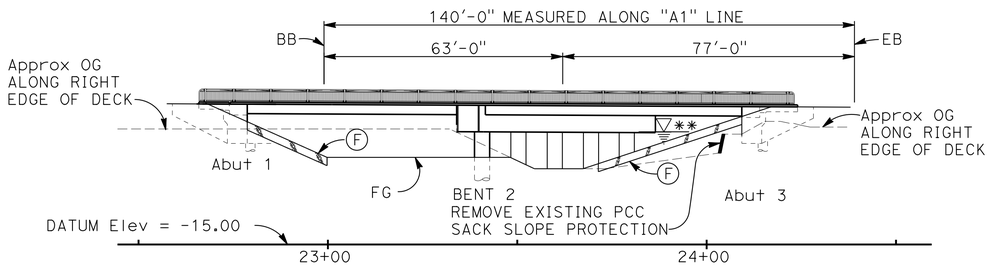

** HIGH WATER Elev (FUTURE CHANNEL), SEE "FOUNDATION PLAN" SHEET

ELEVATION
1" = 20'

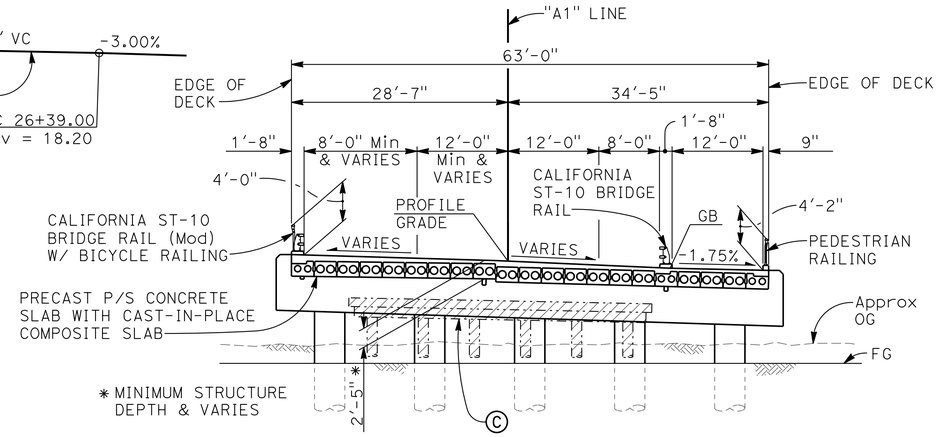

TYPICAL SECTION
1" = 10'

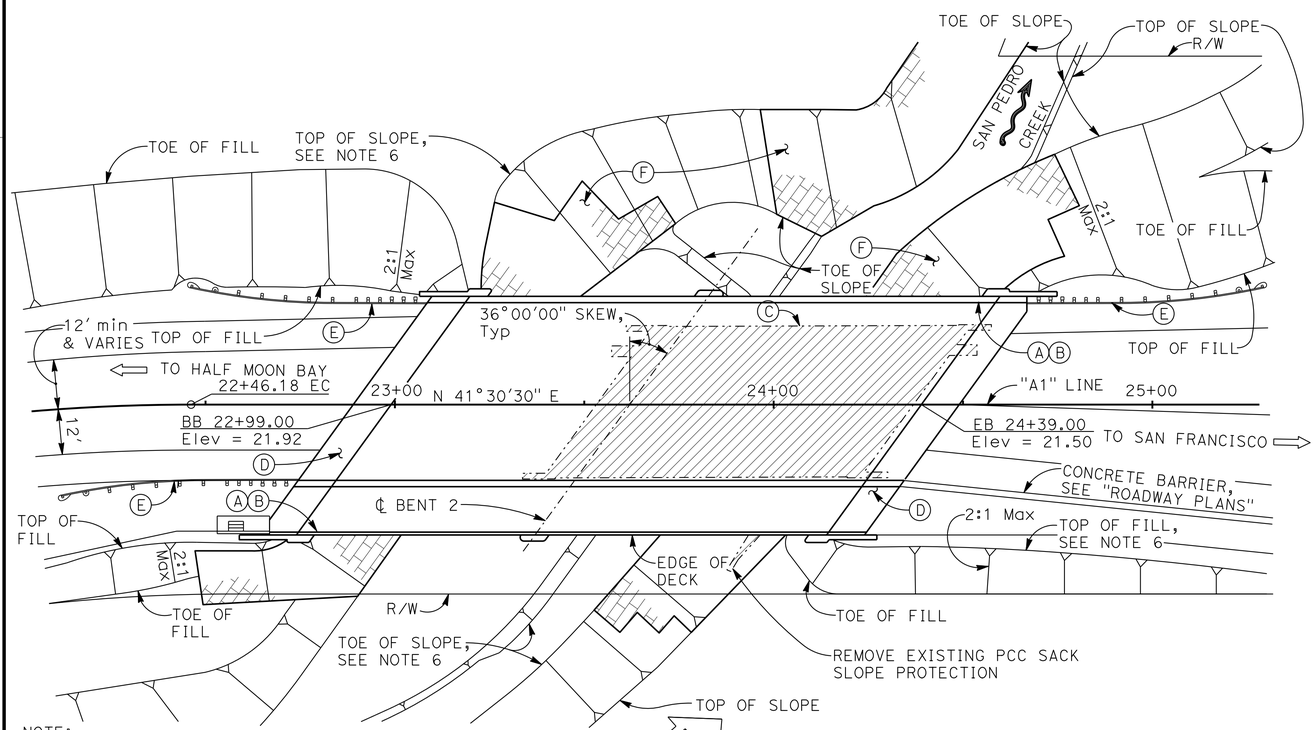

NOTE:
THE CONTRACTOR MUST VERIFY ALL CONTROLLING FIELD DIMENSIONS BEFORE ORDERING OR FABRICATING ANY MATERIAL.

PLAN
1" = 20'

LEGEND:

———	Indicates new structure
-·-·-·-·-	Indicates existing structure
⇨	Indicates direction of travel
▨	Indicates Exist structure to be removed

NOTES:

(A) Paint Bridge Number
(B) Paint "San Pedro Creek Bridge"
(C) Remove Exist San Pedro Creek Bridge Bridge No. 35-0053
(D) Structure Approach Slab Type EQ(10)
(E) MGS, see "Roadway Plans"
(F) Concrete Block Revetment, see "Roadway Plans"

1. For Hydrologic Summary, see "FOUNDATION PLAN" sheet.
2. For Pile Data Table, see "FOUNDATION PLAN" sheet.
3. For General Notes, see "DECK CONTOURS" sheet.
4. For List of Standard Plans, see "DECK CONTOURS" sheet
5. For Bench Mark and Datum, see "FOUNDATION PLAN" sheet.
6. See "Roadway Plans" for Creek & Roadway Grading Plans
7. For ESA fencing limits see "Roadway Plans"
8. B0-13 / 13-1 — B0-13: Indicates Standard Plan sheet No.; 13-1: Indicates Detail No.

INDEX TO BRIDGE PLANS

SHEET NO.	TITLE
1	GENERAL PLAN
2	DECK CONTOURS
3	FOUNDATION PLAN
4	ABUTMENT 1 LAYOUT
5	ABUTMENT 3 LAYOUT
6	ABUTMENT DETAILS No. 1
7	ABUTMENT DETAILS No. 2
8	BENT DETAILS No 1
9	BENT DETAILS No 2
10	TYPICAL SECTION
11	SOFFIT ELEVATION SPAN 1
12	SOFFIT ELEVATION SPAN 2
13	COMPOSITE CONCRETE DECK REINFORCEMENT
14	PRECAST PRESTRESSED CONCRETE SLAB DETAILS No. 1
15	PRECAST PRESTRESSED CONCRETE SLAB DETAILS No. 2
16	PRECAST PRESTRESSED CONCRETE SLAB DETAILS No. 3
17	CA ST-10 (Mod) W/ BICYCLE RAILING DETAILS No. 1
18	CA ST-10 (Mod) W/ BICYCLE RAILING DETAILS No. 2
19	CA ST-10 (Mod) W/ BICYCLE RAILING DETAILS No. 3
20	PEDESTRIAN RAILING DETAILS No. 1
21	PEDESTRIAN RAILING DETAILS No. 2
22	STRUCTURE APPROACH TYPE EQ(10)
23	LOG OF TEST BORINGS 1 OF 2
24	LOG OF TEST BORINGS 2 OF 2

DESIGN OVERSIGHT	DESIGN	BY G. KENNING	CHECKED D. DEVLIN	LOAD & RESISTANCE FACTOR DESIGN	LIVE LOADING: HL93 W/"LOW-BOY"; PERMIT DESIGN VEHICLE
SIGN OFF DATE	DETAILS	BY K. CRUZ	CHECKED D. DEVLIN	LAYOUT: BY K. CRUZ	CHECKED G. KENNING
	QUANTITIES	BY K. CRUZ	CHECKED J. GERLACH	SPECIFICATIONS: BY J. VISAYA	PLANS AND SPECS COMPARED D. DEVLIN

PREPARED FOR THE STATE OF CALIFORNIA DEPARTMENT OF TRANSPORTATION

MAHVASH M. HARMS
PROJECT ENGINEER

BRIDGE NO. 35-0350
POST MILES 40.83

SAN PEDRO CREEK BRIDGE (REPLACE)
GENERAL PLAN

DESIGN GENERAL PLAN SHEET (ENGLISH) (REV. 7/16/10)

ORIGINAL SCALE IN INCHES FOR REDUCED PLANS 0 1 2 3

UNIT: 0703
PROJECT NUMBER & PHASE: 04000007431
CONTRACT NO.: 04-265604

DISREGARD PRINTS BEARING EARLIER REVISION DATES
REVISION DATES: 2/8/13 3/28/13 5/21/13 8/17/13
SHEET 1 OF 24

FILE => 35-0350-a-gp01.dgn

USERNAME => s120183 DATE PLOTTED => 18-NOV-2013 TIME PLOTTED => 13:10
2002096.2 (20020962S1)

DIST	COUNTY	ROUTE	POST MILES TOTAL PROJECT	SHEET No	TOTAL SHEETS
04	SM	1	40.6/40.9	135	157

REGISTERED STRUCTURAL ENGINEER — DATE 8/16/13

8-19-13
PLANS APPROVAL DATE

REGISTERED PROFESSIONAL ENGINEER MAHVASH M. HARMS No. 2639 Exp. 12/31/14 STRUCTURAL STATE OF CALIFORNIA

The State of California or its officers or agents shall not be responsible for the accuracy or completeness of scanned copies of this plan sheet.

CITY OF PACIFICA
170 SANTA MARIA AVENUE
PACIFICA, CA 94044

BIGGS CARDOSA ASSOCIATES INC.
865 THE ALAMEDA
SAN JOSE, CALIFORNIA 95126

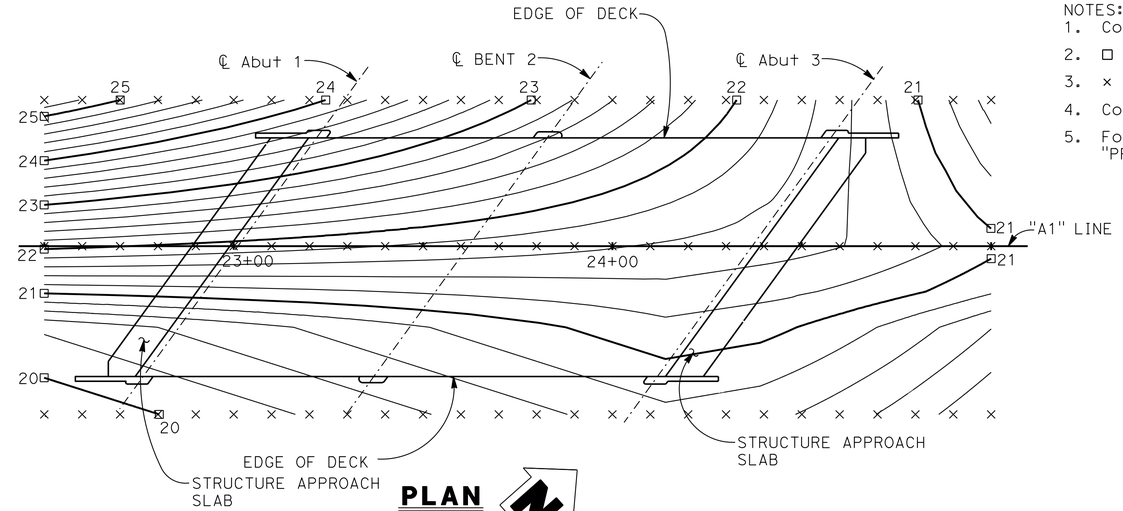

PLAN
1" = 20'

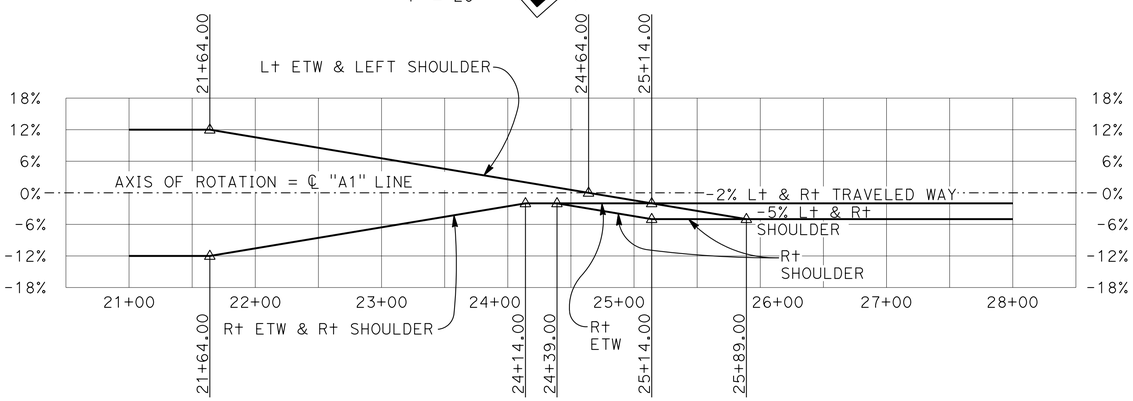

SUPERELEVATION DIAGRAM
NO SCALE

NOTES:
1. Contours indicate top of deck elevation.
2. □ Indicates even foot contours.
3. × Indicates 10 foot intervals measured along "A1" LINE
4. Contour interval = 0.20 feet
5. For dead load deflection components, see "PRECAST PRESTRESSED CONCRETE SLAB DETAILS No. 2" sheet

GENERAL NOTES
LOAD & RESISTANCE FACTOR DESIGN

DESIGN:	AASHTO LRFD Bridge Design Specifications, 4th Edition, and Caltrans Amendments, Preface dated November 2011
SEISMIC LOADING:	Caltrans Seismic Design Criteria (SDC) Version 1.6, dated November 2010
DEAD LOAD:	Includes 35 psf for future wearing surface.
LIVE LOAD:	HL93 and Permit Design Load
CONCRETE:	f'c = 3,600 psi (except as shown on "CONCRETE STRENGTH AND TYPE LIMITS") fy = 60,000 psi n = 8
PRESTRESSED CONCRETE:	See "PRESTRESSING NOTES" on "PRECAST PRESTRESSED CONCRETE SLAB DETAILS NO. 2" sheet
KEYWAY GROUT:	ASTM C1107, f'c = 5,000 psi
BAR REINFORCING STEEL:	All bar reinforcement must be epoxy coated prefabricated reinforcement (ASTM A934), unless noted otherwise
STRUCTURAL STEEL:	Steel Pipe Piles: ASTM A252 Grade 3 Plates, Bars, & Rods: ASTM A36 Pipe: ASTM A53 Grade B HSS Tubes: ASTM A500 Grade B
SEISMIC LOAD:	ARS curve by 2008 USGS Deaggregation (Beta) Probabilistic for V_{S30} = 270 m/s Moment Magnitude = 7.9 Peak Ground Acceleration = 0.72g with the following modifications: (1) 20% increase of spectral accelerations (Sa) for periods ≥ 1.0 seconds (2) no increase of Sa for periods < 0.5 seconds, (3) linear interpolation of Sa for periods between 0.5 and 1.0 seconds

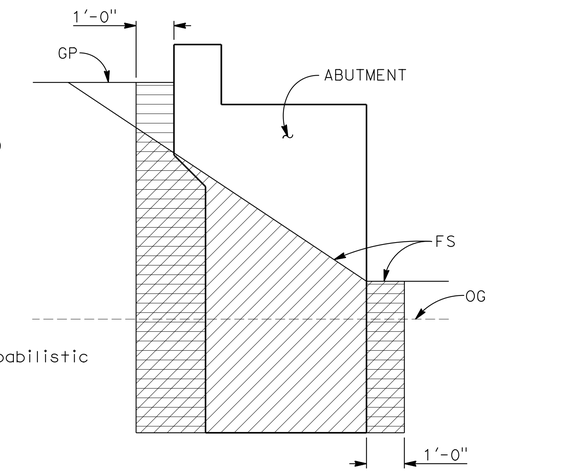

INDICATES STRUCTURE EXCAVATION (BRIDGE)
INDICATES STRUCTURE BACKFILL (BRIDGE)

LIMITS OF PAYMENT FOR STRUCTURE EXCAVATION AND BACKFILL AT ABUTMENT
NO SCALE

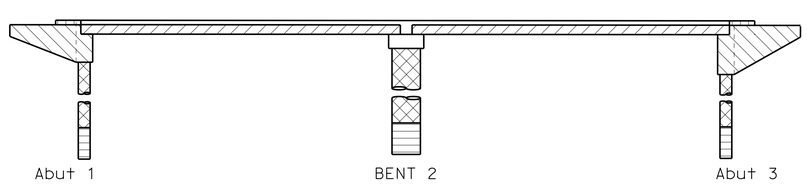

- STRUCTURAL CONCRETE, BRIDGE (f'c = 4000 psi AT 28 DAYS)
- STRUCTURAL CONCRETE, BRIDGE
- PRECAST PRESTRESSED CONCRETE SLAB, SEE "PRESTRESSING NOTES" ON "PRECAST PRESTRESSED CONCRETE SLAB DETAILS No. 2" SHEET
- STRUCTURAL CONCRETE, APPROACH SLAB
- CISS CONCRETE
- SEAL COURSE CONCRETE

CONCRETE STRENGTH AND TYPE LIMITS
NO SCALE

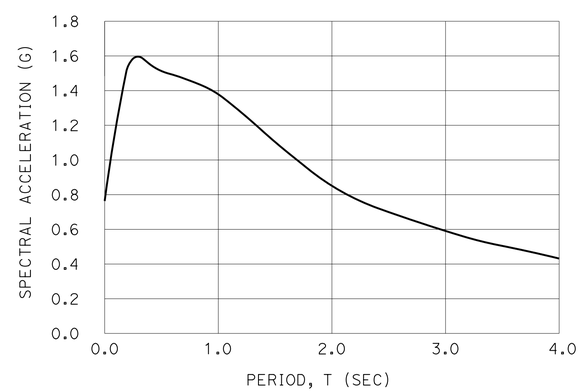

ARS DESIGN CURVE
NO SCALE

STANDARD PLANS DATED 2010

	A10A	ACRONYMS AND ABBREVIATIONS (SHEET 1 OF 2)
RSP	A10B	ACRONYMS AND ABBREVIATIONS (SHEET 2 OF 2)
	A10C	LINES AND SYMBOLS (SHEET 1 OF 3)
	A10D	LINES AND SYMBOLS (SHEET 2 OF 3)
	A10E	LINES AND SYMBOLS (SHEET 3 OF 3)
	A10F	LEGEND - SOIL (SHEET 1 OF 2)
	A10G	LEGEND - SOIL (SHEET 2 OF 2)
	A62B	LIMITS OF PAYMENT FOR EXCAVATION AND BACKFILL BRIDGE SURCHARGE AND WALL
	A62C	LIMITS OF PAYMENT FOR EXCAVATION AND BACKFILL BRIDGE
	B0-1	BRIDGE DETAILS
	B0-3	BRIDGE DETAILS
	B0-13	BRIDGE DETAILS
	B6-21	JOINT SEALS (MAXIMUM MOVEMENT RATING = 2")
RSP	B11-47	CABLE RAILING
RSP	B11-68	CALIFORNIA ST-10 BRIDGE RAIL (1 OF 3)
	B11-69	CALIFORNIA ST-10 BRIDGE RAIL (2 OF 3)
RSP	B11-70	CALIFORNIA ST-10 BRIDGE RAIL (3 OF 3)

ABBREVIATIONS

OH	OPPOSITE HAND
GB	GRADE BREAK
EQ	EQUAL

NOTE:
THE CONTRACTOR MUST VERIFY ALL CONTROLLING FIELD DIMENSIONS BEFORE ORDERING OR FABRICATING ANY MATERIAL.

DESIGN OVERSIGHT — Paul Cotter
10-8-13
SIGN OFF DATE

	BY	CHECKED
DESIGN	G. KENNING	D. DEVLIN
DETAILS	K. CRUZ	D. DEVLIN
QUANTITIES	K. CRUZ	J. GERLACH

PREPARED FOR THE STATE OF CALIFORNIA DEPARTMENT OF TRANSPORTATION

MAHVASH M. HARMS
PROJECT ENGINEER

BRIDGE NO. 35-0350
POST MILES 40.83

SAN PEDRO CREEK BRIDGE (REPLACE)
DECK CONTOURS

DESIGN GENERAL PLAN SHEET (ENGLISH) (REV. 7/16/10)

ORIGINAL SCALE IN INCHES FOR REDUCED PLANS 0 1 2 3

UNIT: 0703
PROJECT NUMBER & PHASE: 04000007431
CONTRACT NO.: 04-265604

DISREGARD PRINTS BEARING EARLIER REVISION DATES → 2/8/13 3/28/13 5/9/13 8/16/13

SHEET 2 OF 24

FILE => 35-0350-d-dc02.dgn

USERNAME => s120183 DATE PLOTTED => 18-NOV-2013 TIME PLOTTED => 13:10

2002096 (2002096S2)

FOR ACCURATE RIGHT OF WAY DATA, CONTACT
RIGHT OF WAY ENGINEERING AT THE DISTRICT OFFICE

DIST	COUNTY	ROUTE	POST MILES TOTAL PROJECT	SHEET No	TOTAL SHEETS
04	SM	1	40.6/40.9	136	157

Mahvash Harms 8/16/13
REGISTERED STRUCTURAL ENGINEER DATE

8-19-13
PLANS APPROVAL DATE

REGISTERED PROFESSIONAL ENGINEER MAHVASH M. HARMS No. 2639 Exp. 12/31/14 STRUCTURAL STATE OF CALIFORNIA

The State of California or its officers or agents shall not be responsible for the accuracy or completeness of scanned copies of this plan sheet.

CITY OF PACIFICA
170 SANTA MARIA AVENUE
PACIFICA, CA 94044

BIGGS CARDOSA ASSOCIATES INC.
865 THE ALAMEDA
SAN JOSE, CALIFORNIA 95126

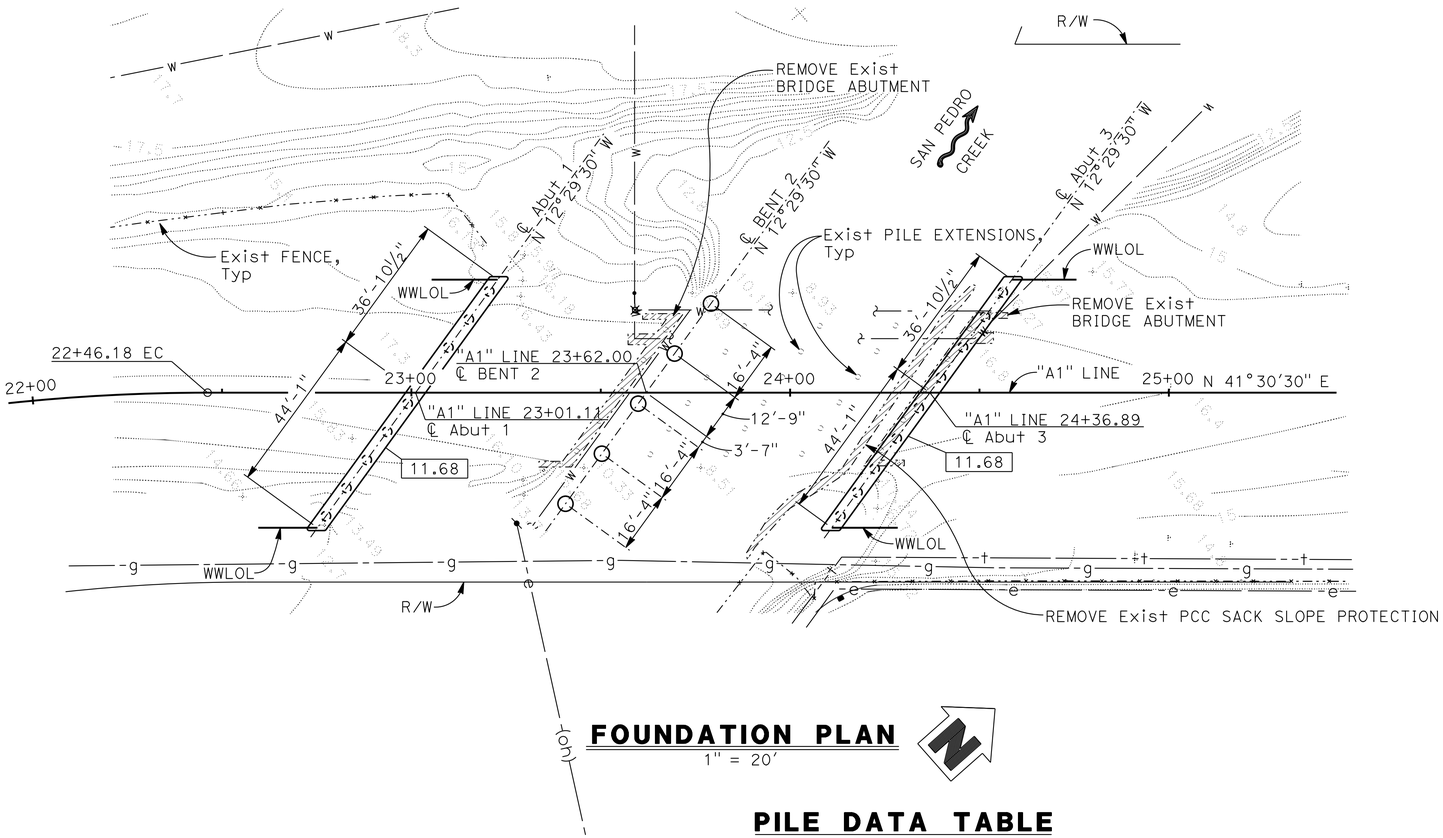

FOUNDATION PLAN
1" = 20'

NOTES:
1. See "Roadway Plans" for additional utility information.
2. See "Roadway Plans" for locations of Environmental Sensitive Area (ESA) fencing (limit of construction operations).
3. WWLOL are parallel with "A1" Line.

HYDROLOGIC SUMMARY

(Provided by Wilsey Ham in Hydraulic Report, October 4, 2012)

Drainage Area: 7.63 square miles

	DESIGN FLOOD	BASE FLOOD	OVER TOPPING FLOOD
Frequency (years)	50	100	500
Discharge (cubic feet per second)	3150	3550	4320
Water surface (elevation at bridge)	15.37	15.88	16.79
Velocity (feet per second)	6.19	6.57	7.23

1. Flood plain data are based upon information available when the plans were prepared and are shown to meet federal requirements. The accuracy of said information is not warranted by the state, and interested or affected parties should make their own investigation.
2. All hydrologic information is based on the widened creek configuration.

PILE DATA TABLE

Location	Pile Type	Nominal Resistance (Kips)		Design Tip Elev (ft)	Specified Tip Elev (ft)	Nominal Driving Resistance (kips)
		Compression	Tension			
Abutment 1	CISS 30" x ⅝"	810	N/A	(a) -53.0' (b) -41.0'	-53.0'	915
Bent 2	CISS 48" x ⅞"	1360	N/A	(a) -60.0' (b) -52.0'	-60.0'	1384
Abutment 3	CISS 30" x ⅝"	810	N/A	(a) -63.0' (b) -41.0'	-63.0'	915

Note:
(i) Design Tip Elevation are controlled by: (a) Compression; (b) Lateral
(ii) For abutment piles, Nominal Driving Resistance = Nominal Resistance + Down Drag Load above Elev. -20 ft
For bent piles, Nominal Driving Resistance = Nominal Resistance + Resistance in Scour Zone

BENCH MARK AND DATUM

Monument	Coordinates		Elev	Description/location
	North	East		
109	2045236.04	5980814.68	16.55	NGS BM Disk #Y1240 (NAVD 88-Project Benchmark)
118	2044971.81	5980475.27	17.91	Set Mag Nail and Washer
125	2045179.18	5980708.95	16.6	Set Mag Nail and Washer

LEGEND:
- Exist water line
- Exist telephone line
- Exist gas line (PG&E)
- Exist electrical line (PG&E)
- Exist overhead utility line (PG&E)
- Exist structure to be removed

NOTES:
1. 11.68 Indicates bottom of abutment diaphragm elevation
2. 15.6 Indicates spot elevation.
3. Utilities shown are for illustrative purposes only, verify with utility plans.

NOTE:
THE CONTRACTOR MUST VERIFY ALL CONTROLLING FIELD DIMENSIONS BEFORE ORDERING OR FABRICATING ANY MATERIAL.

GEOTECHNICAL PROFESSIONAL 3/28/13 APPROVAL DATE

Paul Cotter
DESIGN OVERSIGHT Paul Cotter
10-8-13
SIGN OFF DATE

SCALE: AS SHOWN VERT.DATUM NAVD 88 HORZ.DATUM NAD 83
PHOTOGRAMMETRY AS OF: ALIGNMENT TIES
SURVEYED BY WILSEY HAM DRAFTED BY
FIELD CHECKED BY CHECKED BY

DESIGN BY G. KENNING CHECKED D. DEVLIN
DETAILS BY K. CRUZ CHECKED D. DEVLIN
QUANTITIES BY K. CRUZ CHECKED J. GERLACH

PREPARED FOR THE STATE OF CALIFORNIA DEPARTMENT OF TRANSPORTATION

MAHVASH M. HARMS
PROJECT ENGINEER

BRIDGE NO. 35-0350
POST MILES 40.83

SAN PEDRO CREEK BRIDGE (REPLACE)
FOUNDATION PLAN

FOUNDATION PLAN SHEET (ENGLISH) (REV. 7-16-10)

ORIGINAL SCALE IN INCHES FOR REDUCED PLANS 0 1 2 3

UNIT: 0703
PROJECT NUMBER & PHASE: 04000007431 CONTRACT NO.: 04-265604

DISREGARD PRINTS BEARING EARLIER REVISION DATES 2/8/13 3/28/13 5/2/13 8/16/13

SHEET 3 OF 24

FILE => 35-0350-e-fp01.dgn

USERNAME => s120183 DATE PLOTTED => 18-NOV-2013 TIME PLOTTED => 13:10

2002096.2 (2002096253)

DIST	COUNTY	ROUTE	POST MILES TOTAL PROJECT	SHEET No	TOTAL SHEETS
04	SM	1	40.6/40.9	137	157

Mahvash Harms 8/16/13
REGISTERED STRUCTURAL ENGINEER DATE

8-19-13
PLANS APPROVAL DATE

REGISTERED PROFESSIONAL ENGINEER MAHVASH M. HARMS No. 2639 Exp. 12/31/14 STRUCTURAL STATE OF CALIFORNIA

The State of California or its officers or agents shall not be responsible for the accuracy or completeness of scanned copies of this plan sheet.

CITY OF PACIFICA
170 SANTA MARIA AVENUE
PACIFICA, CA 94044

BIGGS CARDOSA ASSOCIATES INC.
865 THE ALAMEDA
SAN JOSE, CALIFORNIA 95126

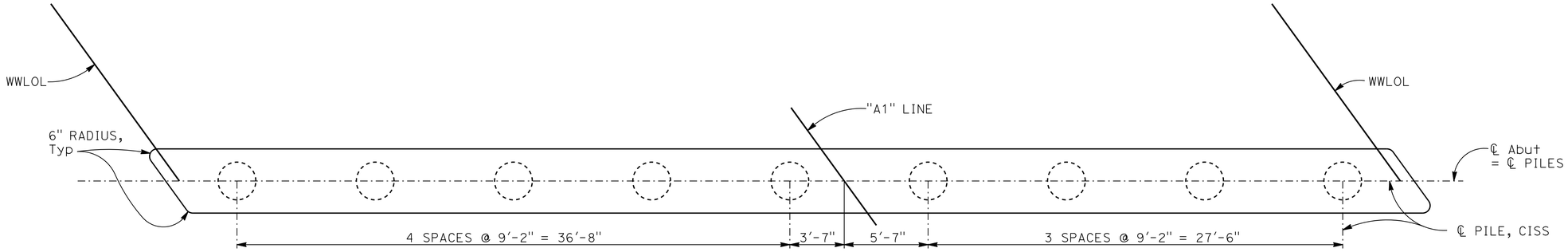

ABUTMENT 1 PILE LAYOUT
1/4" = 1'-0"

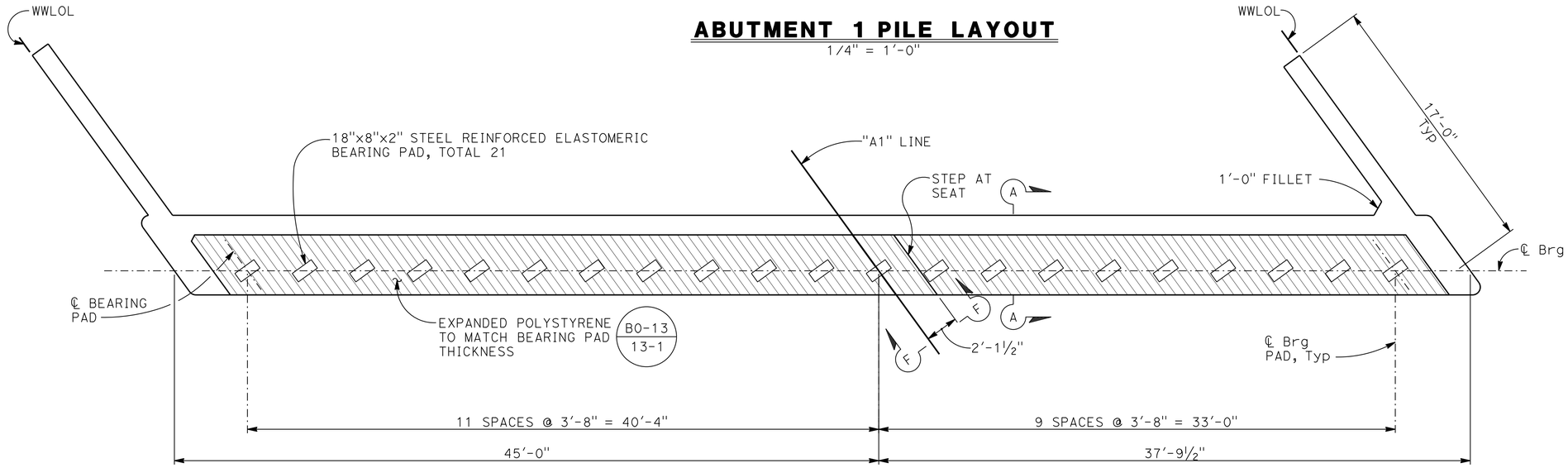

ABUTMENT 1 PLAN
1/4" = 1'-0"

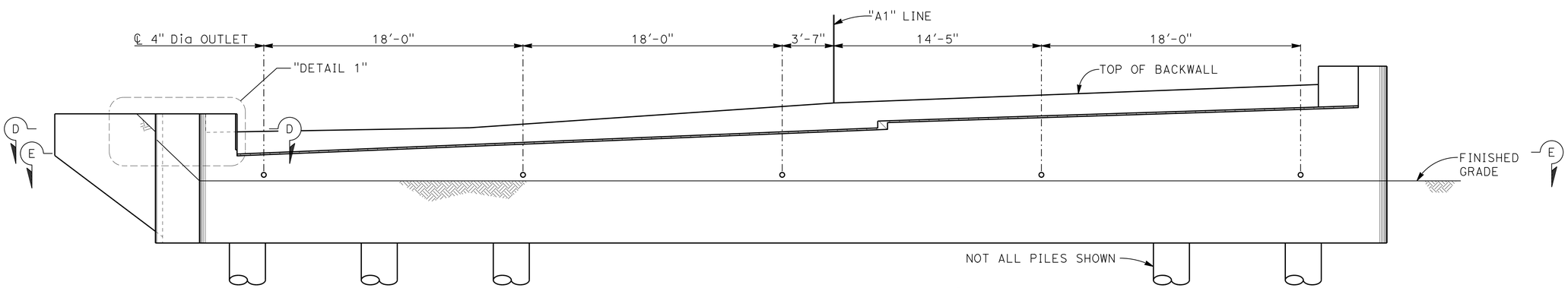

ABUTMENT 1 ELEVATION
1/4" = 1'-0"

NOTES:

1. Indicates 30" CISS Pile, see "PILE ELEVATION" in "ABUTMENT DETAILS No. 2" sheet.
2. Barriers not shown.
3. Structure approach not shown.
4. Indicates expanded polystyrene.
5. Place right shear key prior to girder erection. Place left shear key after girder erection.
6. For "SECTION A-A" and "DETAIL 1", see "ABUTMENT DETAILS No. 1" sheet.
7. For "SECTION D-D", "SECTION E-E" and "SECTION F-F", see "ABUTMENT DETAILS No. 2" sheet.

Paul Cotter
DESIGN OVERSIGHT Paul Cotter
10-8-13
SIGN OFF DATE

	BY	CHECKED
DESIGN	G. KENNING	D. DEVLIN
DETAILS	K. CRUZ	D. DEVLIN
QUANTITIES	K. CRUZ	J. GERLACH

PREPARED FOR THE STATE OF CALIFORNIA DEPARTMENT OF TRANSPORTATION

MAHVASH M. HARMS
PROJECT ENGINEER

BRIDGE NO. 35-0350
POST MILES 40.83

SAN PEDRO CREEK BRIDGE (REPLACE)
ABUTMENT 1 LAYOUT

DESIGN GENERAL PLAN SHEET (ENGLISH) (REV. 7/16/10)

ORIGINAL SCALE IN INCHES FOR REDUCED PLANS 0 1 2 3

UNIT: 0703
PROJECT NUMBER & PHASE: 0400007431
CONTRACT NO.: 04-265604

DISREGARD PRINTS BEARING EARLIER REVISION DATES
REVISION DATES 12/4/12 2/8/13 3/28/13 8/16/13
SHEET 4 OF 24

FILE => 35-0350-h-a4-lo1.dgn

USERNAME => s120183 DATE PLOTTED => 18-NOV-2013 TIME PLOTTED => 13:10

(2002096S4) 2002096

DIST	COUNTY	ROUTE	POST MILES TOTAL PROJECT	SHEET No	TOTAL SHEETS
04	SM	1	40.6/40.9	138	157

Mahvash Harms 8/16/13
REGISTERED STRUCTURAL ENGINEER DATE

8-19-13
PLANS APPROVAL DATE

REGISTERED PROFESSIONAL ENGINEER MAHVASH M. HARMS No. 2639 Exp. 12/31/14 STRUCTURAL STATE OF CALIFORNIA

The State of California or its officers or agents shall not be responsible for the accuracy or completeness of scanned copies of this plan sheet.

CITY OF PACIFICA
170 SANTA MARIA AVENUE
PACIFICA, CA 94044

BIGGS CARDOSA ASSOCIATES INC.
865 THE ALAMEDA
SAN JOSE, CALIFORNIA 95126

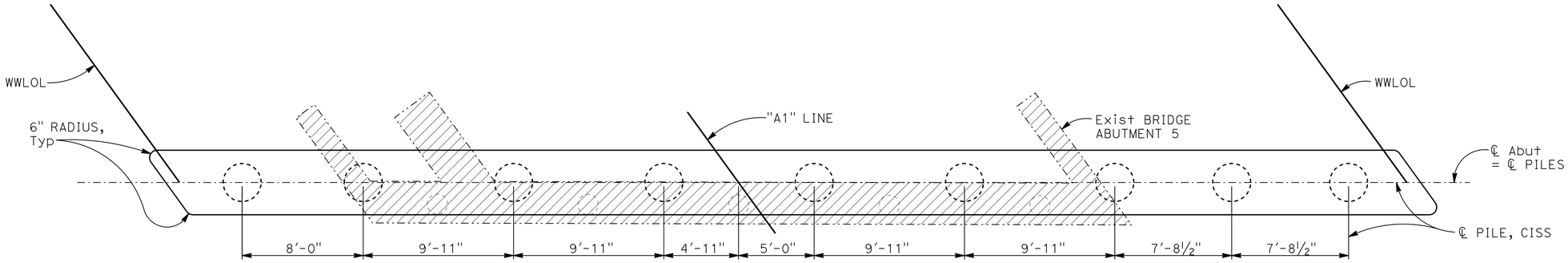

ABUTMENT 3 PILE LAYOUT

1/4" = 1'-0"

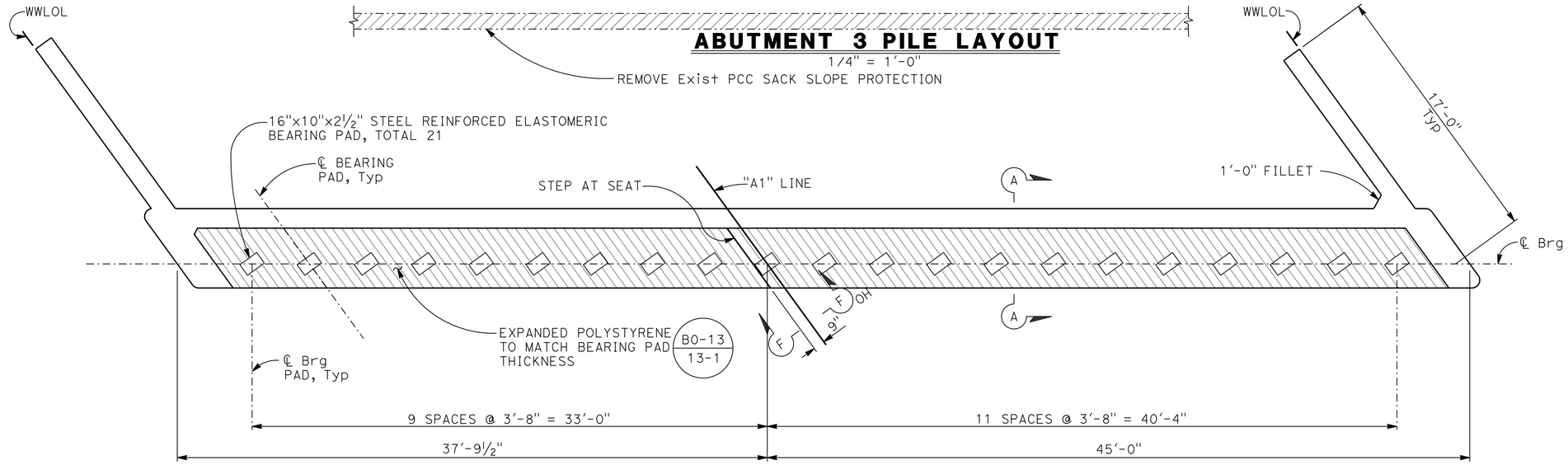

ABUTMENT 3 PLAN

1/4" = 1'-0"

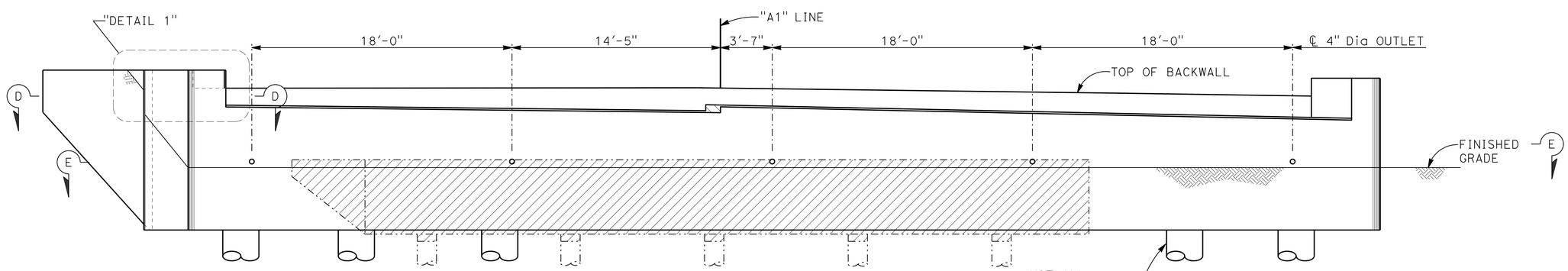

ABUTMENT 3 ELEVATION

1/4" = 1'-0"

NOTES:

1. Indicates 30" CISS Pile, see "PILE ELEVATION" in "ABUTMENT DETAILS No. 2" sheet.
2. Barriers not shown.
3. Structure approach not shown.
4. Indicates expanded polystyrene.
5. Indicates Exist pile.
6. Indicates Exist structure to be removed.
7. Place right shear key prior to girder erection. Place left shear key after girder erection.
8. For "SECTION A-A" and "DETAIL 1", see "ABUTMENT DETAILS No. 1" sheet.
9. For "SECTION D-D", "SECTION E-E" and "SECTION F-F", see "ABUTMENT DETAILS No. 2" sheet.

Paul Cotter
DESIGN OVERSIGHT Paul Cotter
10-8-13
SIGN OFF DATE

	BY	CHECKED
DESIGN	G. KENNING	D. DEVLIN
DETAILS	K. CRUZ	D. DEVLIN
QUANTITIES	K. CRUZ	J. GERLACH

PREPARED FOR THE STATE OF CALIFORNIA DEPARTMENT OF TRANSPORTATION

MAHVASH M. HARMS
PROJECT ENGINEER

BRIDGE NO. 35-0350
POST MILES 40.83

SAN PEDRO CREEK BRIDGE (REPLACE)
ABUTMENT 3 LAYOUT

DESIGN GENERAL PLAN SHEET (ENGLISH) (REV. 7/16/10)

ORIGINAL SCALE IN INCHES FOR REDUCED PLANS 0 1 2 3

UNIT: 0703
PROJECT NUMBER & PHASE: 04000007431
CONTRACT NO.: 04-265604

DISREGARD PRINTS BEARING EARLIER REVISION DATES → 2/8/13 3/28/13 5/21/13 8/16/13

SHEET 5 OF 24

FILE => 35-0350-h-a5-lo2.dgn

USERNAME => s120183 DATE PLOTTED => 18-NOV-2013 TIME PLOTTED => 13:10

2002096 (2002096S5)

DIST	COUNTY	ROUTE	POST MILES TOTAL PROJECT	SHEET No	TOTAL SHEETS
04	SM	1	40.6/40.9	139	157

Mahvash Harms 8/17/13
REGISTERED STRUCTURAL ENGINEER DATE

8/19/13
PLANS APPROVAL DATE

REGISTERED PROFESSIONAL ENGINEER MAHVASH M. HARMS No. 2639 Exp.12/31/14 STRUCTURAL STATE OF CALIFORNIA

The State of California or its officers or agents shall not be responsible for the accuracy or completeness of scanned copies of this plan sheet.

CITY OF PACIFICA
170 SANTA MARIA AVENUE
PACIFICA, CA 94044

BIGGS CARDOSA ASSOCIATES INC.
865 THE ALAMEDA
SAN JOSE, CALIFORNIA 95126

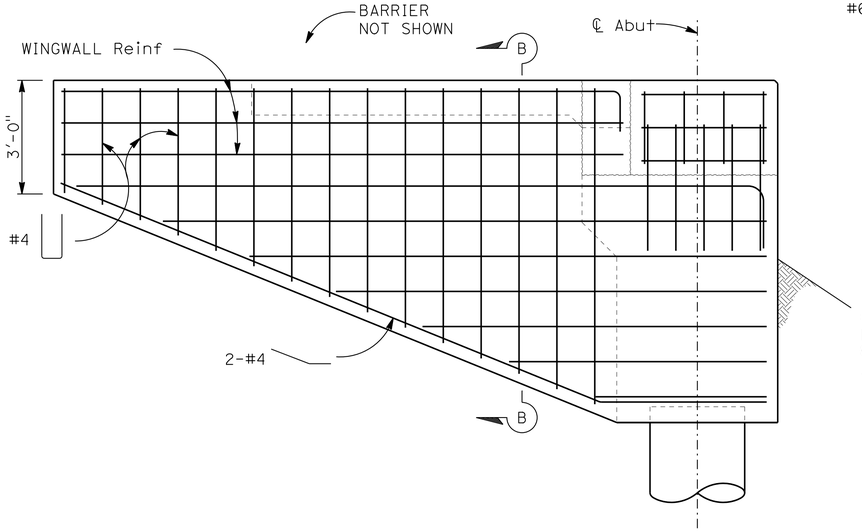

TYPICAL WINGWALL ELEVATION
½" = 1'-0"

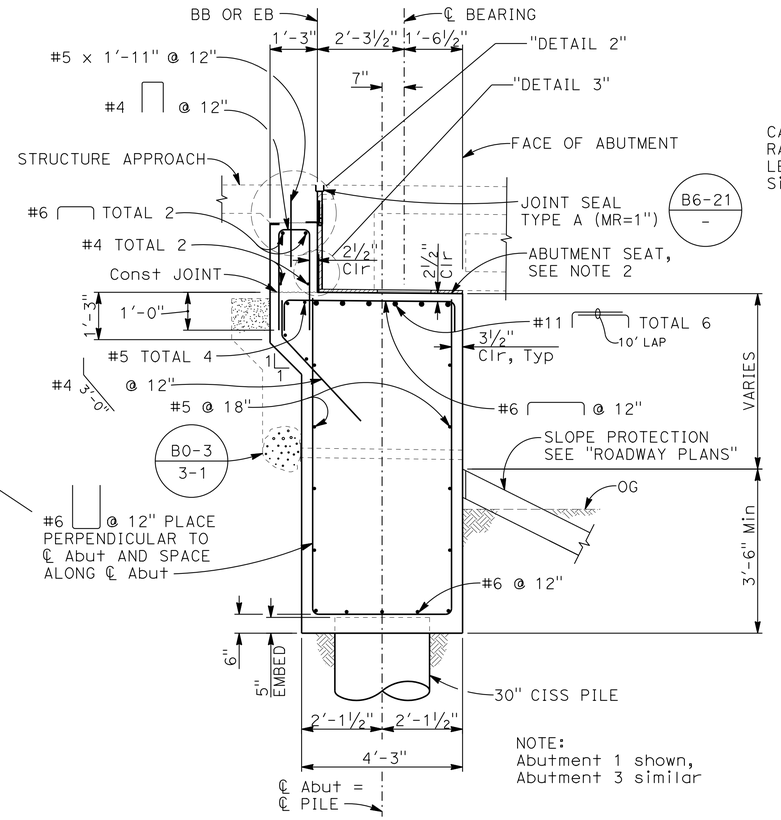

NOTE:
Abutment 1 shown, Abutment 3 similar

SECTION A-A
½" = 1'-0"

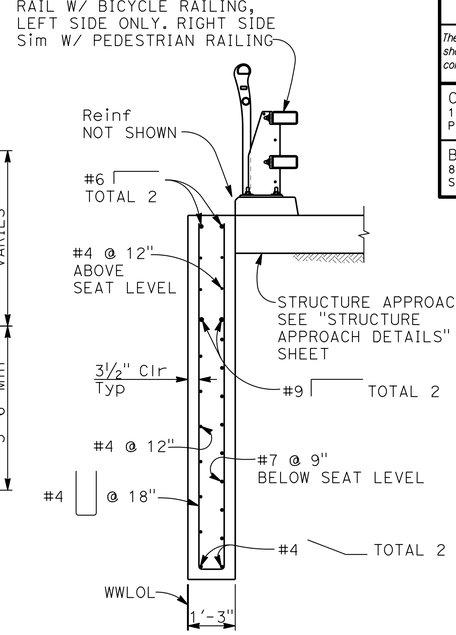

SECTION B-B
½" = 1'-0"

NOTES:

1. Place backfill equally in front & behind abutment until the finished grade elevation in front of the abutment is reached. Then backfill behind abutment to within 12" of abutment seat before placing PC/PS slab units.
2. Seats and bearing pads must be set parallel to the soffit of the PC/PS concrete slab units along the ℄ PC/PS concrete slab unit and along the ℄ Abut.
3. All bar reinforcement must be epoxy coated prefabricated reinforcement (ASTM A934), unless noted otherwise.

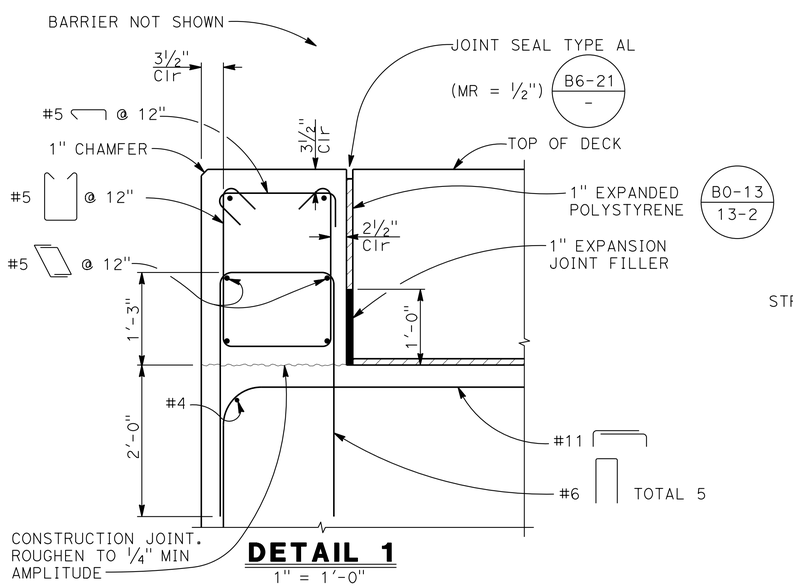

DETAIL 1
1" = 1'-0"

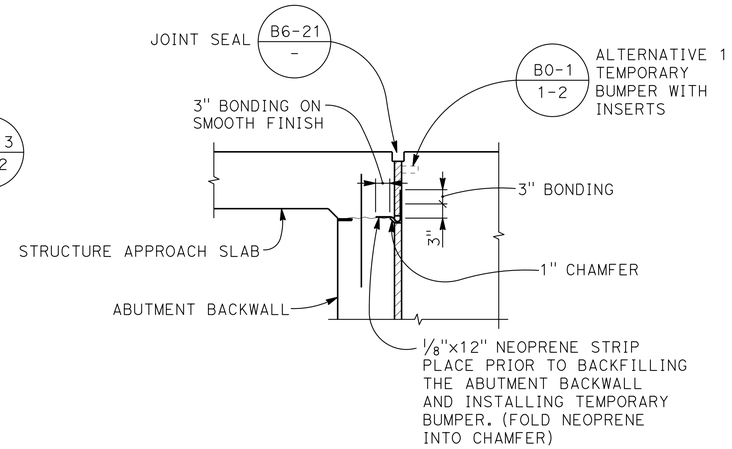

JOINT PROTECTION - DETAIL 2
¾" = 1'-0"

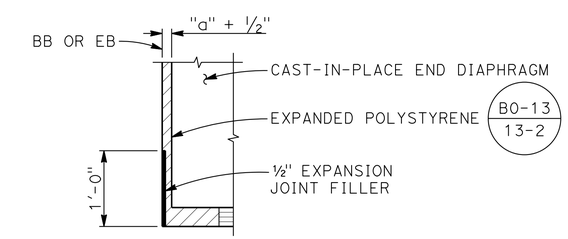

NOTE:
For "a" see B6-21 -

DETAIL 3
NO SCALE

DESIGN OVERSIGHT		DESIGN	BY G. KENNING	CHECKED D. DEVLIN	PREPARED FOR THE STATE OF CALIFORNIA DEPARTMENT OF TRANSPORTATION
SIGN OFF DATE		DETAILS	BY K. CRUZ	CHECKED D. DEVLIN	
		QUANTITIES	BY K. CRUZ	CHECKED J. GERLACH	

MAHVASH M. HARMS
PROJECT ENGINEER

BRIDGE NO. 35-0350
POST MILES 40.83

SAN PEDRO CREEK BRIDGE (REPLACE)
ABUTMENT DETAILS No. 1

DESIGN GENERAL PLAN SHEET (ENGLISH) (REV. 7/16/10)

ORIGINAL SCALE IN INCHES FOR REDUCED PLANS 0 1 2 3

UNIT: 0703
PROJECT NUMBER & PHASE: 04000007431 CONTRACT NO.: 04-265604

DISREGARD PRINTS BEARING EARLIER REVISION DATES → REVISION DATES 12/4/12 2/8/12 3/28/13 8/17/13

SHEET 6 OF 24

FILE => 35-0350-h-a6d1.dgn

USERNAME => s120183 DATE PLOTTED => 18-NOV-2013 TIME PLOTTED => 13:10

2002096 (2002096S6)

DIST	COUNTY	ROUTE	POST MILES TOTAL PROJECT	SHEET No	TOTAL SHEETS
04	SM	1	40.6/40.9	140	157

Mahvash Harms 8/16/13
REGISTERED STRUCTURAL ENGINEER DATE

8-19-13
PLANS APPROVAL DATE

REGISTERED PROFESSIONAL ENGINEER MAHVASH M. HARMS No. 2639 Exp. 12/31/14 STRUCTURAL STATE OF CALIFORNIA

The State of California or its officers or agents shall not be responsible for the accuracy or completeness of scanned copies of this plan sheet.

CITY OF PACIFICA
170 SANTA MARIA AVENUE
PACIFICA, CA 94044

BIGGS CARDOSA ASSOCIATES INC.
865 THE ALAMEDA
SAN JOSE, CALIFORNIA 95126

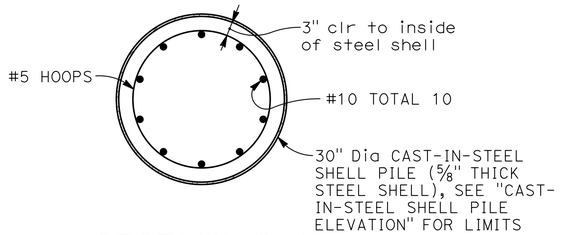

SECTION C-C
3/4" = 1'-0"

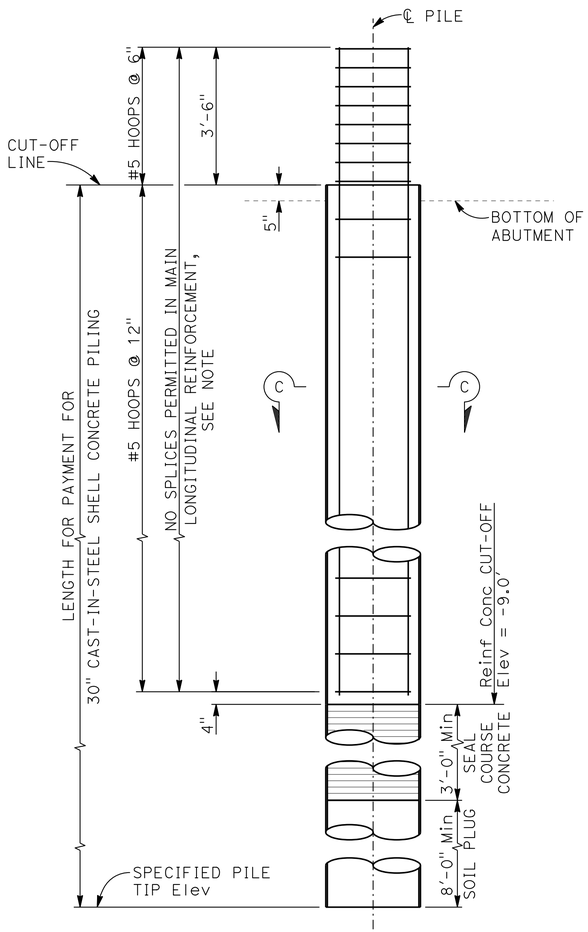

NOTE:
PILE REINFORCEMENT IS NOT REQUIRED TO BE EPOXY COATED

CAST-IN-STEEL SHELL PILE ELEVATION
1/2" = 1'-0"

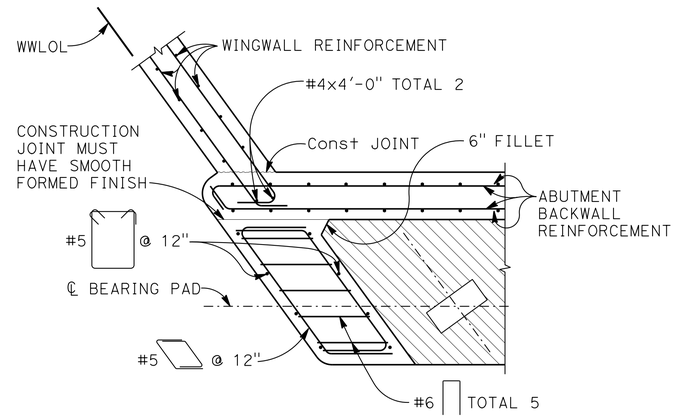

NOTE:
FOR DETAILS NOT NOTED SEE "DETAIL 1" ON "ABUTMENT DETAILS No. 1" SHEET

SECTION D-D
1/2" = 1'-0"

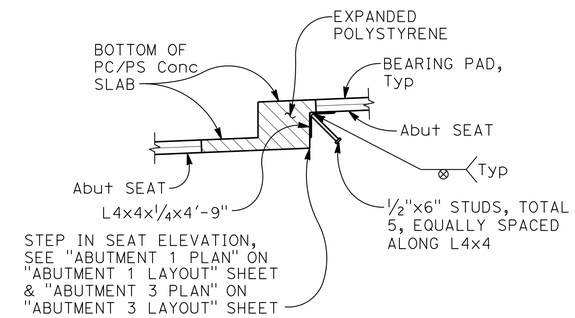

SECTION F-F
1" = 1'-0"

NOTES:
1. Indicates expanded polystyrene.
2. Indicates seal course concrete
3. All bar reinforcement must be epoxy coated prefabricated reinforcement (ASTM A934), unless noted otherwise.

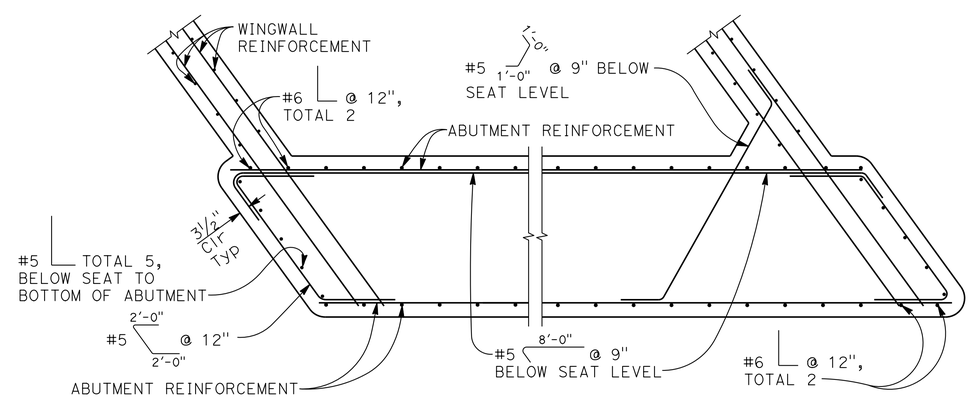

SECTION E-E
1/2" = 1'-0"

Paul Cotter
DESIGN OVERSIGHT Paul Cotter
10-8-13
SIGN OFF DATE

DESIGN	BY G. KENNING	CHECKED D. DEVLIN	
DETAILS	BY K. CRUZ	CHECKED D. DEVLIN	
QUANTITIES	BY K. CRUZ	CHECKED J. GERLACH	

PREPARED FOR THE STATE OF CALIFORNIA DEPARTMENT OF TRANSPORTATION

MAHVASH M. HARMS
PROJECT ENGINEER

BRIDGE NO. 35-0350
POST MILES 40.83

SAN PEDRO CREEK BRIDGE (REPLACE)
ABUTMENT DETAILS No. 2

DESIGN GENERAL PLAN SHEET (ENGLISH) (REV. 7/16/10)

ORIGINAL SCALE IN INCHES FOR REDUCED PLANS 0 1 2 3

UNIT: 0703
PROJECT NUMBER & PHASE: 0400007431
CONTRACT NO.: 04-265604

DISREGARD PRINTS BEARING EARLIER REVISION DATES
REVISION DATES 12/4/12 2/8/13 3/28/13 8/16/13
SHEET 7 OF 24

FILE => 35-0350-h-a7d2.dgn

USERNAME => s120183 DATE PLOTTED => 18-NOV-2013 TIME PLOTTED => 13:10
2002096 (2002096S7)

DIST	COUNTY	ROUTE	POST MILES TOTAL PROJECT	SHEET No	TOTAL SHEETS
04	SM	1	40.6/40.9	141	157

Mahvash Harms 8/16/13
REGISTERED STRUCTURAL ENGINEER DATE

8-19-13
PLANS APPROVAL DATE

REGISTERED PROFESSIONAL ENGINEER MAHVASH M. HARMS No. 2639 Exp. 12/31/14 STRUCTURAL STATE OF CALIFORNIA

The State of California or its officers or agents shall not be responsible for the accuracy or completeness of scanned copies of this plan sheet.

CITY OF PACIFICA
170 SANTA MARIA AVENUE
PACIFICA, CA 94044

BIGGS CARDOSA ASSOCIATES INC.
865 THE ALAMEDA
SAN JOSE, CALIFORNIA 95126

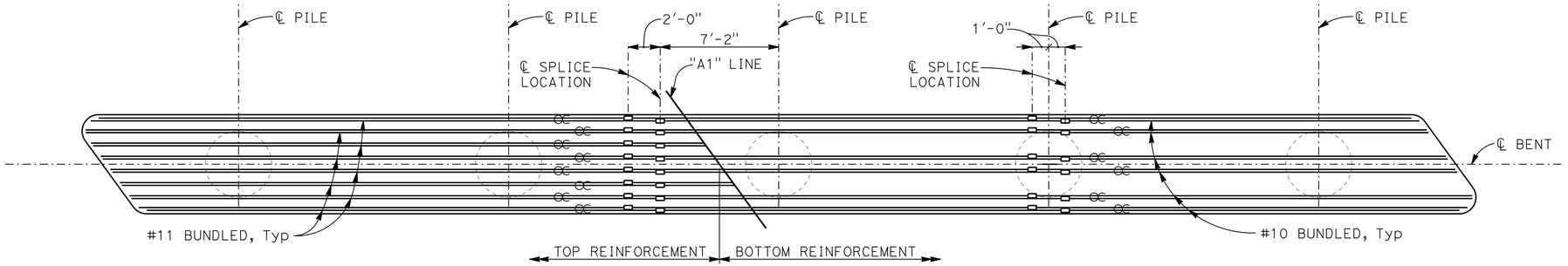

PLAN
1/4" = 1'-0"

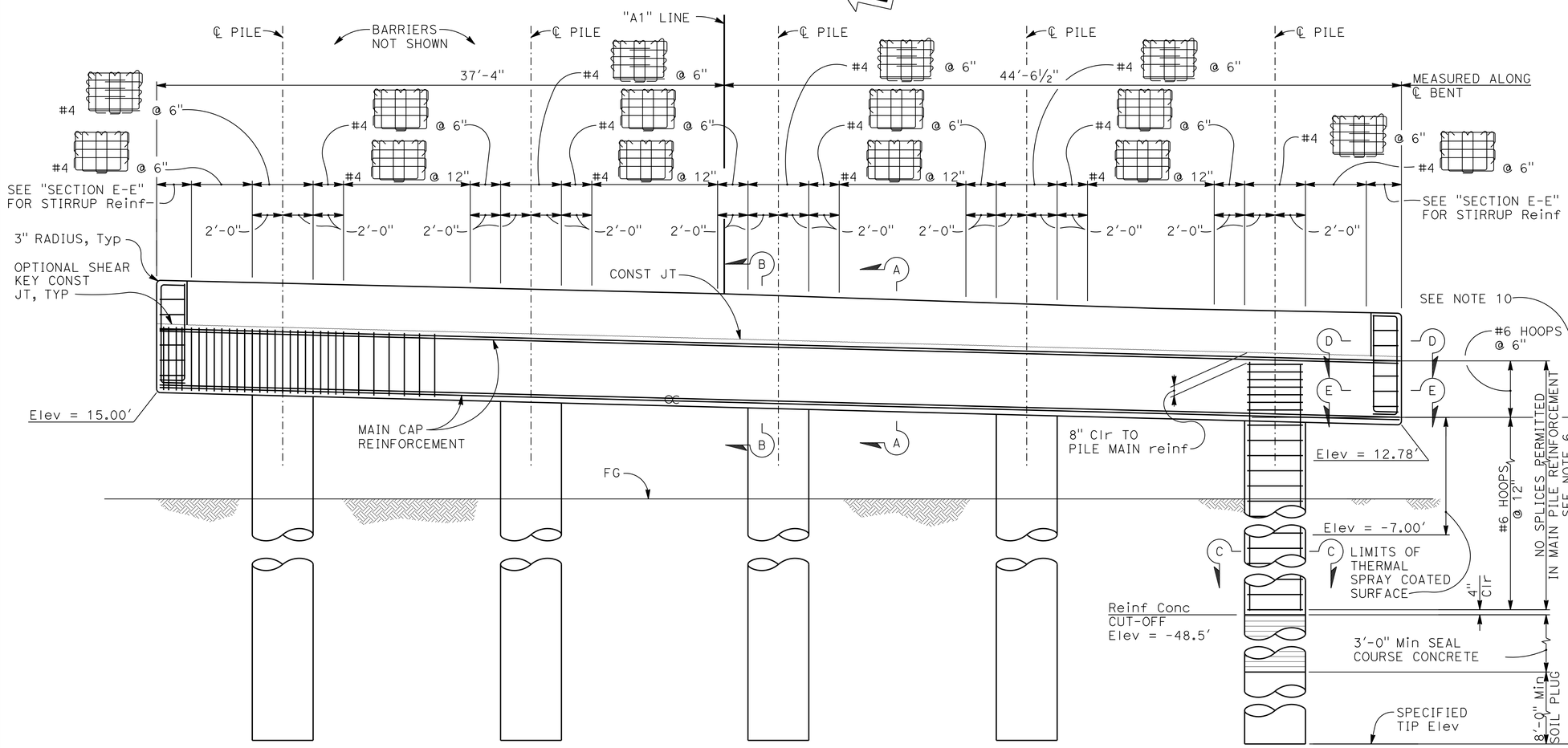

ELEVATION
1/4" = 1'-0"

NOTES:

1. Not all reinforcement shown for clarity.
2. Indicates bundled bars.
3. Indicates Ultimate Butt Splice. All splices in main cap reinforcement must be Ultimate Butt Splices
4. All pile hoops must utilize Ultimate Butt Splices.
5. Bent stirrups must be placed perpendicular to ℄ Bent, spaced along ℄ Bent.
6. Pile reinforcement is not required to be epoxy coated.
7. Place right shear key prior to girder erection. Place left shear key after girder erection.
8. Indicates seal course concrete
9. For "SECTION A-A", "SECTION B-B", "SECTION C-C", "SECTION D-D", and "SECTION E-E", see "BENT DETAILS No. 2" sheet.
10. For pile embedment into bent cap, see "SECTION B-B" on the "BENT DETAILS No. 2" sheet.
11. All bar reinforcement must be epoxy coated prefabricated reinforcement (ASTM A934), unless noted otherwise.

Paul Cotter
DESIGN OVERSIGHT Paul Cotter
10-8-13
SIGN OFF DATE

	BY	CHECKED
DESIGN	G. KENNING	D. DEVLIN
DETAILS	K. CRUZ	D. DEVLIN
QUANTITIES	K. CRUZ	J. GERLACH

PREPARED FOR THE STATE OF CALIFORNIA DEPARTMENT OF TRANSPORTATION

MAHVASH M. HARMS
PROJECT ENGINEER

BRIDGE NO. 35-0350
POST MILES 40.83

SAN PEDRO CREEK BRIDGE (REPLACE)
BENT DETAILS No. 1

DESIGN GENERAL PLAN SHEET (ENGLISH) (REV. 7/16/10)

ORIGINAL SCALE IN INCHES FOR REDUCED PLANS 0 1 2 3

UNIT: 0703
PROJECT NUMBER & PHASE: 04000007431 CONTRACT NO.: 04-265604

DISREGARD PRINTS BEARING EARLIER REVISION DATES → 12/4/12 2/8/13 3/28/13 8/16/13

SHEET 8 OF 24

FILE => 35-0350-j-b8d1.dgn

USERNAME => s120183 DATE PLOTTED => 18-NOV-2013 TIME PLOTTED => 13:10

(2002096S8) 2002096

DIST	COUNTY	ROUTE	POST MILES TOTAL PROJECT	SHEET No	TOTAL SHEETS
04	SM	1	40.6/40.9	142	157

Mahvash Harms 8/16/13
REGISTERED STRUCTURAL ENGINEER DATE

8-19-13
PLANS APPROVAL DATE

REGISTERED PROFESSIONAL ENGINEER MAHVASH M. HARMS No. 2639 Exp. 12/31/14 STRUCTURAL STATE OF CALIFORNIA

The State of California or its officers or agents shall not be responsible for the accuracy or completeness of scanned copies of this plan sheet.

CITY OF PACIFICA
170 SANTA MARIA AVENUE
PACIFICA, CA 94044

BIGGS CARDOSA ASSOCIATES INC.
865 THE ALAMEDA
SAN JOSE, CALIFORNIA 95126

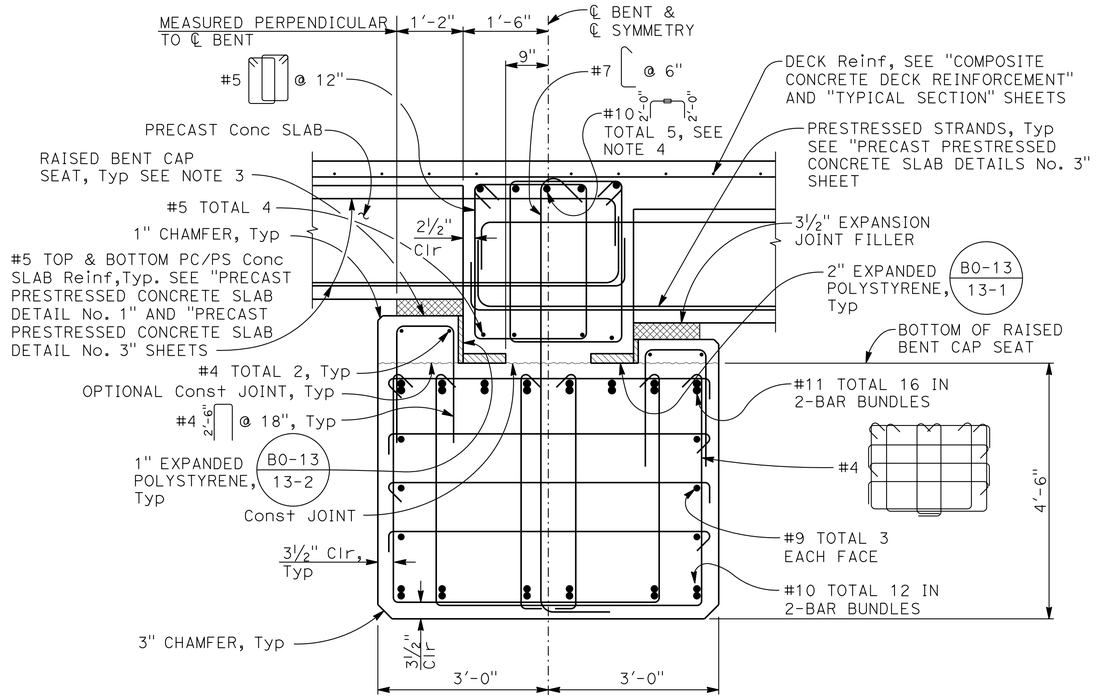

SECTION A-A
3/4" = 1'-0"

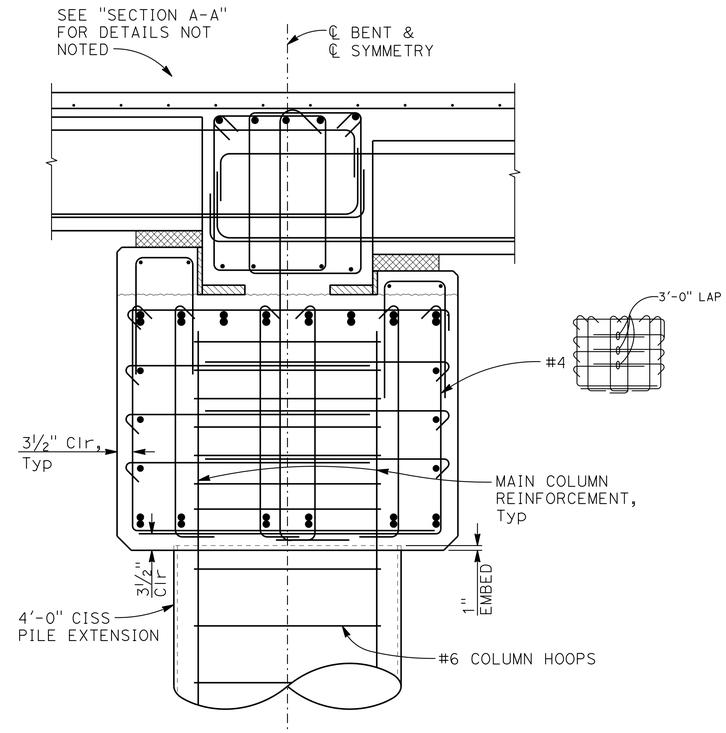

SECTION B-B
3/4" = 1'-0"

NOTES:

1. Indicates expanded polystyrene
2. Indicates expansion joint filler
3. Raised bent cap seat must be set parallel to the soffit of the PC/PS concrete slab units along the ℄ bent and along the ℄ PC/PS concrete slab unit.
4. Top transverse cast-in-place deck reinforcing bars must utilize Ultimate butt splices. Splices must be 7'-2" away from ℄ pile with splices for adjacent bars staggered 2'-0".
5. All bar reinforcement must be epoxy coated prefabricated reinforcement (ASTM A934), unless noted otherwise.

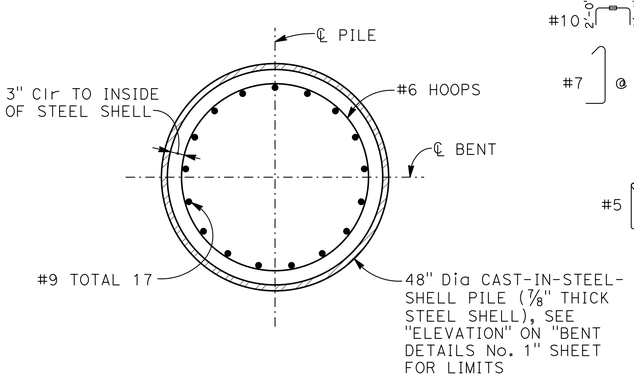

SECTION C-C
3/4" = 1'-0"

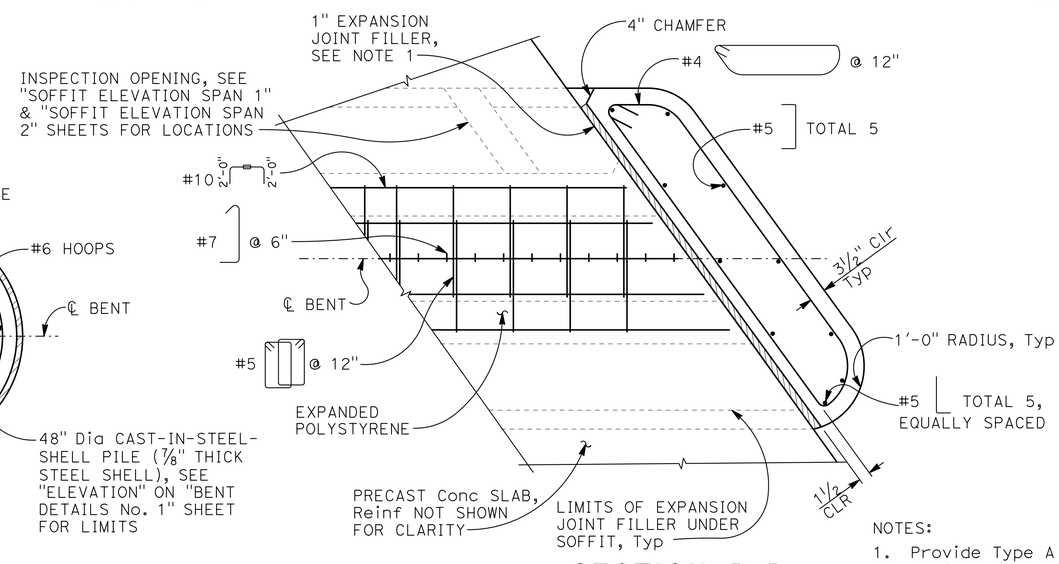

SECTION D-D
3/4" = 1'-0"

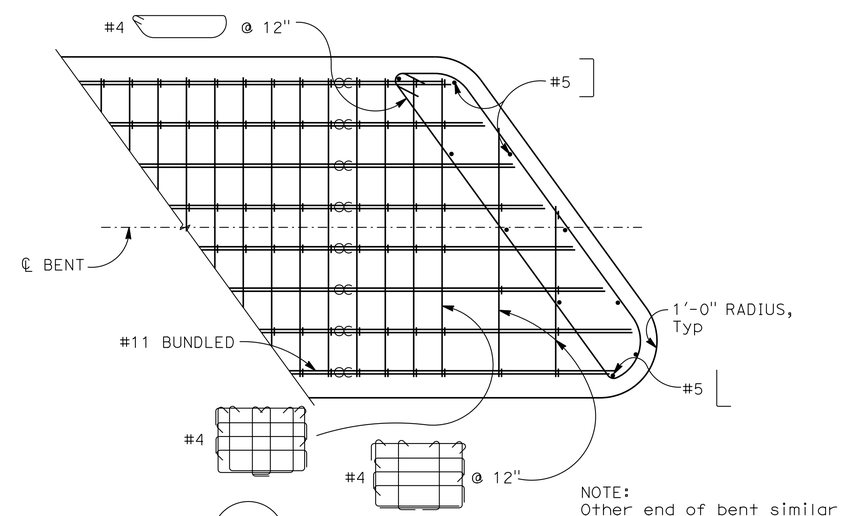

NOTE:
Other end of bent similar

SECTION E-E
3/4" = 1'-0"

NOTES:

1. Provide Type A joint seal (MR = 1") per on top of the vertical expansion joint filler between shear key and deck slab
2. Other end of bent similar

B6-21
-

Paul Cotter
DESIGN OVERSIGHT Paul Cotter
10-8-13
SIGN OFF DATE

	BY	CHECKED
DESIGN	G. KENNING	D. DEVLIN
DETAILS	K. CRUZ	D. DEVLIN
QUANTITIES	K. CRUZ	J. GERLACH

PREPARED FOR THE STATE OF CALIFORNIA DEPARTMENT OF TRANSPORTATION

MAHVASH M. HARMS
PROJECT ENGINEER

BRIDGE NO. 35-0350
POST MILES 40.83

SAN PEDRO CREEK BRIDGE (REPLACE)
BENT DETAILS No. 2

DESIGN GENERAL PLAN SHEET (ENGLISH) (REV. 7/16/10)

ORIGINAL SCALE IN INCHES FOR REDUCED PLANS 0 1 2 3

UNIT: 0703
PROJECT NUMBER & PHASE: 04000007431
CONTRACT NO.: 04-265604

DISREGARD PRINTS BEARING EARLIER REVISION DATES → REVISION DATES 12/4/12 2/8/13 3/28/13 8/16/13

SHEET 9 OF 24

FILE => 35-0350-j-b9d2.dgn

USERNAME => s120183 DATE PLOTTED => 18-NOV-2013 TIME PLOTTED => 13:11

2002096 (2002096S9)

DIST	COUNTY	ROUTE	POST MILES TOTAL PROJECT	SHEET No	TOTAL SHEETS
04	SM	1	40.6/40.9	143	157

Mahvash Harms 8/17/13
REGISTERED STRUCTURAL ENGINEER DATE

8/19/13
PLANS APPROVAL DATE

REGISTERED PROFESSIONAL ENGINEER MAHVASH M. HARMS No. 2639 Exp. 12/31/14 STRUCTURAL STATE OF CALIFORNIA

The State of California or its officers or agents shall not be responsible for the accuracy or completeness of scanned copies of this plan sheet.

CITY OF PACIFICA
170 SANTA MARIA AVENUE
PACIFICA, CA 94044

BIGGS CARDOSA ASSOCIATES INC.
865 THE ALAMEDA
SAN JOSE, CALIFORNIA 95126

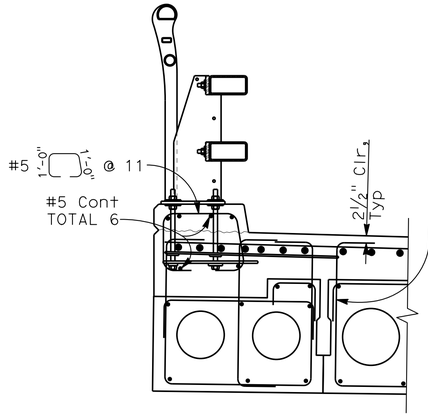

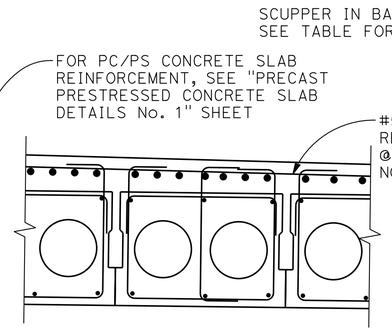

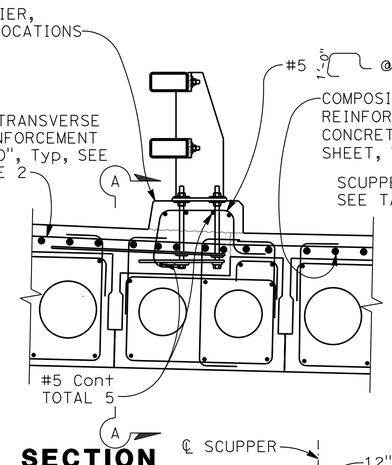

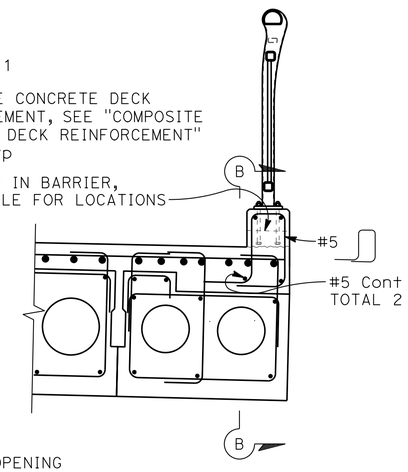

PART TYPICAL SECTION

3/4" = 1'-0"

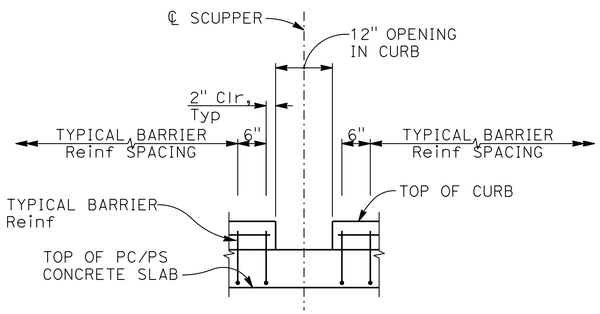

CA ST-10 RAIL SCUPPER LOCATIONS (STATIONS ON "A1" LINE)	
22+86.50	23+62.50
22+96.00	23+72.00
23+05.50	23+81.50
23+15.00	23+91.00
23+24.50	24+01.00
23+34.00	24+11.00
23+43.50	24+21.00
23+53.00	

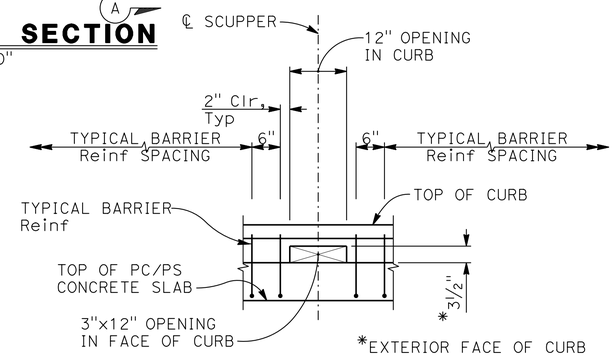

PEDESTRIAN RAILING SCUPPER LOCATIONS (STATIONS ON "A1" LINE)	
22+80.00	23+51.00
22+90.00	23+60.00
23+00.00	23+70.00
23+10.00	23+80.00
23+20.00	23+90.00
23+31.00	23+99.00
23+42.00	24+08.00

NOTES:

1. For soffit elevation and precast girder cross slopes, see "SOFFIT ELEVATION SPAN 1" and "SOFFIT ELEVATION SPAN 2" sheets.
2. Place and space transverse deck reinforcement normal to "A1" line.
3. Composite concrete deck must be placed a minimum of 45 days after fabrication of all precast concrete slab units.
4. All bar reinforcement must be epoxy coated prefabricated reinforcement (ASTM A934), unless noted otherwise.
5. For barrier details and reinf not shown, see Standard Plans B11-68 -, B11-69 -, & B11-70 -.

SECTION A-A

3/4" = 1'-0"

SECTION B-B

3/4" = 1'-0"

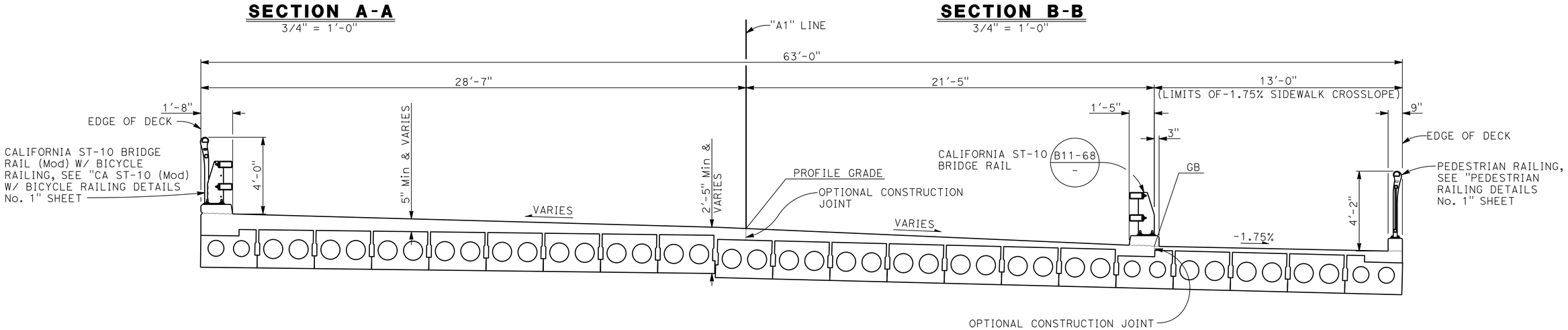

TYPICAL SECTION

3/8" = 1'-0"

DESIGN	BY G. KENNING	CHECKED D. DEVLIN	
DETAILS	BY K. CRUZ	CHECKED D. DEVLIN	
QUANTITIES	BY K. CRUZ	CHECKED J. GERLACH	

DESIGN OVERSIGHT

SIGN OFF DATE

DESIGN GENERAL PLAN SHEET (ENGLISH) (REV. 7/16/10)

ORIGINAL SCALE IN INCHES FOR REDUCED PLANS 0 1 2 3

PREPARED FOR THE STATE OF CALIFORNIA DEPARTMENT OF TRANSPORTATION

MAHVASH M. HARMS
PROJECT ENGINEER

BRIDGE NO. 35-0350
POST MILES 40.83

SAN PEDRO CREEK BRIDGE (REPLACE)
TYPICAL SECTION

UNIT: 0703
PROJECT NUMBER & PHASE: 04000007431
CONTRACT NO.: 04-265604

DISREGARD PRINTS BEARING EARLIER REVISION DATES 12/4/12 2/8/13 3/28/13 8/17/13

SHEET 10 OF 24

FILE => 35-0350-m-ts1.dgn

USERNAME => s120183 DATE PLOTTED => 18-NOV-2013 TIME PLOTTED => 13:11

2002096 (2002096S10)

DIST	COUNTY	ROUTE	POST MILES TOTAL PROJECT	SHEET No	TOTAL SHEETS
04	SM	1	40.6/40.9	144	157

Mahvash Harms 8/17/13
REGISTERED STRUCTURAL ENGINEER DATE

8/19/13
PLANS APPROVAL DATE

REGISTERED PROFESSIONAL ENGINEER MAHVASH M. HARMS No. 2639 Exp.12/31/14 STRUCTURAL STATE OF CALIFORNIA

The State of California or its officers or agents shall not be responsible for the accuracy or completeness of scanned copies of this plan sheet.

CITY OF PACIFICA
170 SANTA MARIA AVENUE
PACIFICA, CA 94044

BIGGS CARDOSA ASSOCIATES INC.
865 THE ALAMEDA
SAN JOSE, CALIFORNIA 95126

NOTES:

1. ✱ Indicates soffit elevations at ℄ bearing at the abutments and soffit elevations at the ends of the PC/PS concrete slab units at the bent.
2. The composite concrete slab thickness must be 5" Min, and will vary to conform to top of deck elevations. See "DECK CONTOURS" sheet for elevations.
3. Slopes shown are measured along ℄ bearing at the abutments and along ℄ bent at the bent.
4. Abutment seats and bearing pads must be set parallel to the soffit of the PC/PS concrete slab units along the ℄ abutment and along the ℄ PC/PS concrete slab unit.
5. Raised bent cap seats must be set parallel to the soffit of the PC/PS concrete slab units along the ℄ bent and along the ℄ PC/PS concrete slab unit.
6. For "DETAIL 1", see "SOFFIT ELEVATION SPAN 2" sheet.
7. Indicates expanded polystyrene.
8. Indicates expansion joint filler

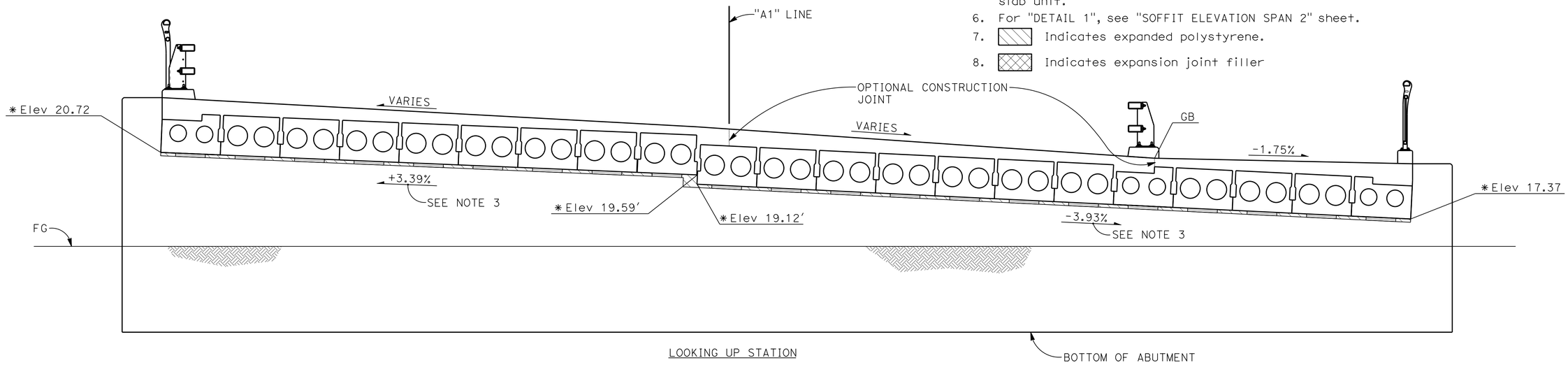

LOOKING UP STATION

ABUTMENT 1 ELEVATION

3/8" = 1'-0"

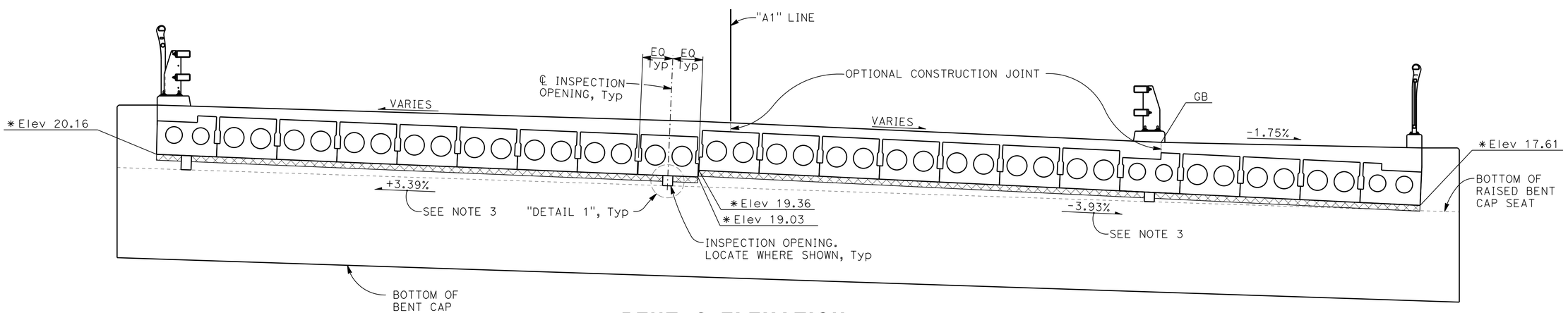

BENT 2 ELEVATION

3/8" = 1'-0"

DESIGN OVERSIGHT	DESIGN	BY G. KENNING	CHECKED D. DEVLIN	PREPARED FOR THE STATE OF CALIFORNIA DEPARTMENT OF TRANSPORTATION	MAHVASH M. HARMS PROJECT ENGINEER
SIGN OFF DATE	DETAILS	BY K. CRUZ	CHECKED D. DEVLIN		
	QUANTITIES	BY K. CRUZ	CHECKED J. GERLACH		

BRIDGE NO. 35-0350
POST MILES 40.83

SAN PEDRO CREEK BRIDGE (REPLACE)
SOFFIT ELEVATION SPAN 1

DESIGN GENERAL PLAN SHEET (ENGLISH) (REV. 7/16/10)

ORIGINAL SCALE IN INCHES FOR REDUCED PLANS 0 1 2 3

UNIT: 0703
PROJECT NUMBER & PHASE: 04000007431 CONTRACT NO.: 04-265604

DISREGARD PRINTS BEARING EARLIER REVISION DATES → REVISION DATES 12/4/12 12/8/12 12/28/12 8/17/13 SHEET 11 OF 24

FILE => 35-0350-n-sofel01.dgn

USERNAME => s120183 DATE PLOTTED => 18-NOV-2013 TIME PLOTTED => 13:11

2002096 (2002096S11)

DIST	COUNTY	ROUTE	POST MILES TOTAL PROJECT	SHEET No	TOTAL SHEETS
04	SM	1	40.6/40.9	145	157

Mahvash Harms 8/17/13
REGISTERED STRUCTURAL ENGINEER DATE

8/19/13
PLANS APPROVAL DATE

REGISTERED PROFESSIONAL ENGINEER MAHVASH M. HARMS No. 2639 Exp. 12/31/14 STRUCTURAL STATE OF CALIFORNIA

The State of California or its officers or agents shall not be responsible for the accuracy or completeness of scanned copies of this plan sheet.

CITY OF PACIFICA
170 SANTA MARIA AVENUE
PACIFICA, CA 94044

BIGGS CARDOSA ASSOCIATES INC.
865 THE ALAMEDA
SAN JOSE, CALIFORNIA 95126

NOTES:

1. ✱ Indicates soffit elevations at ℄ bearing at the abutments and soffit elevations at the ends of the PC/PS concrete slab units at the bent.
2. The composite concrete slab thickness must be 5" Min, and will vary to conform to top of deck elevations. See "DECK CONTOURS" sheet for elevations.
3. Slopes shown are measured along ℄ bearing at the abutments and along ℄ bent at the bent.
4. Abutment seats and bearing pads must be set parallel to the soffit of the PC/PS concrete slab units along the ℄ abutment and along the ℄ PC/PS concrete slab unit.
5. Raised bent cap seats must be set parallel to the soffit of the PC/PS concrete slab units along the ℄ bent and along the ℄ PC/PS concrete slab unit.
6. Indicates expanded polystyrene.
7. Indicates expansion joint filler

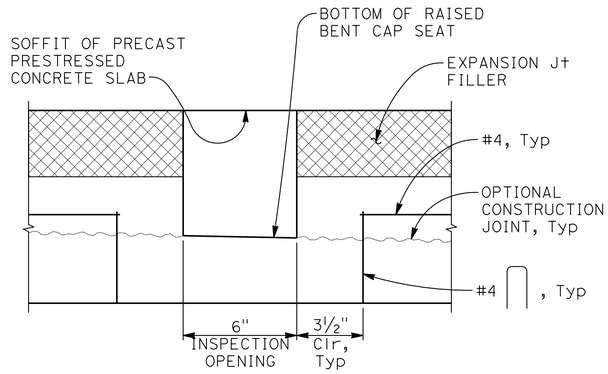

DETAIL 1
3" = 1'-0"

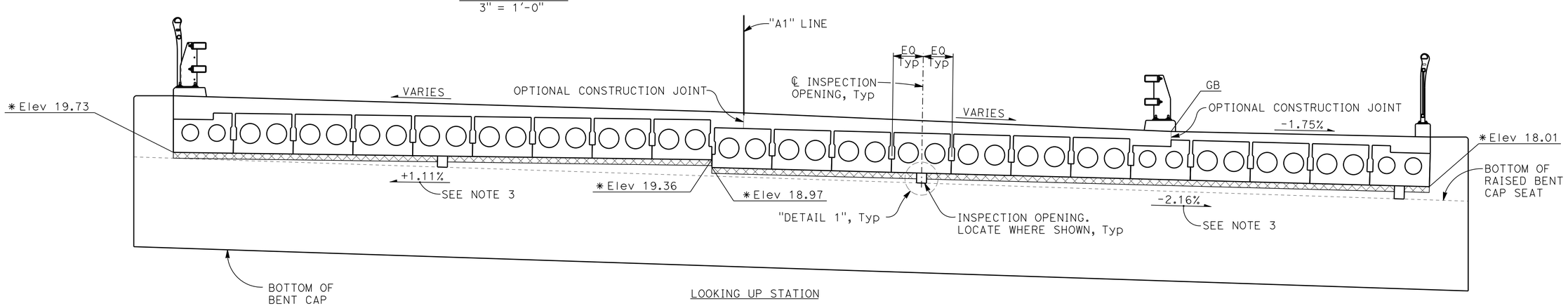

LOOKING UP STATION

BENT 2 ELEVATION
3/8" = 1'-0"

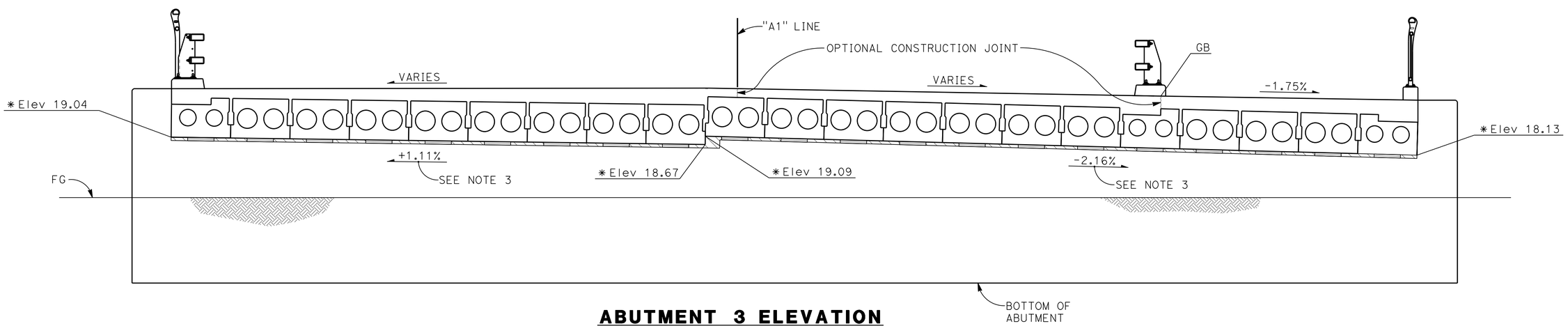

ABUTMENT 3 ELEVATION
3/8" = 1'-0"

DESIGN OVERSIGHT	DESIGN	BY G. KENNING	CHECKED D. DEVLIN	PREPARED FOR THE STATE OF CALIFORNIA DEPARTMENT OF TRANSPORTATION	MAHVASH M. HARMS PROJECT ENGINEER
SIGN OFF DATE	DETAILS	BY K. CRUZ	CHECKED D. DEVLIN		
	QUANTITIES	BY K. CRUZ	CHECKED J. GERLACH		

BRIDGE NO. 35-0350
POST MILES 40.83

SAN PEDRO CREEK BRIDGE (REPLACE)
SOFFIT ELEVATION SPAN 2

DESIGN GENERAL PLAN SHEET (ENGLISH) (REV. 7/16/10)

ORIGINAL SCALE IN INCHES FOR REDUCED PLANS 0 1 2 3

UNIT: 0703
PROJECT NUMBER & PHASE: 04000007431 CONTRACT NO.: 04-265604

DISREGARD PRINTS BEARING EARLIER REVISION DATES → REVISION DATES 12/4/12 2/8/13 3/28/13 8/17/13 SHEET 12 OF 24

FILE => 35-0350-n-sofel02.dgn

USERNAME => s120183 DATE PLOTTED => 18-NOV-2013 TIME PLOTTED => 13:11 (2002096512) 2002096

DIST	COUNTY	ROUTE	POST MILES TOTAL PROJECT	SHEET No	TOTAL SHEETS
04	SM	1	40.6/40.9	146	157

Mahvash Harms 8/16/13
REGISTERED STRUCTURAL ENGINEER DATE

8-19-13
PLANS APPROVAL DATE

REGISTERED PROFESSIONAL ENGINEER MAHVASH M. HARMS No. 2639 Exp. 12/31/14 STRUCTURAL STATE OF CALIFORNIA

The State of California or its officers or agents shall not be responsible for the accuracy or completeness of scanned copies of this plan sheet.

CITY OF PACIFICA
170 SANTA MARIA AVENUE
PACIFICA, CA 94044

BIGGS CARDOSA ASSOCIATES INC.
865 THE ALAMEDA
SAN JOSE, CALIFORNIA 95126

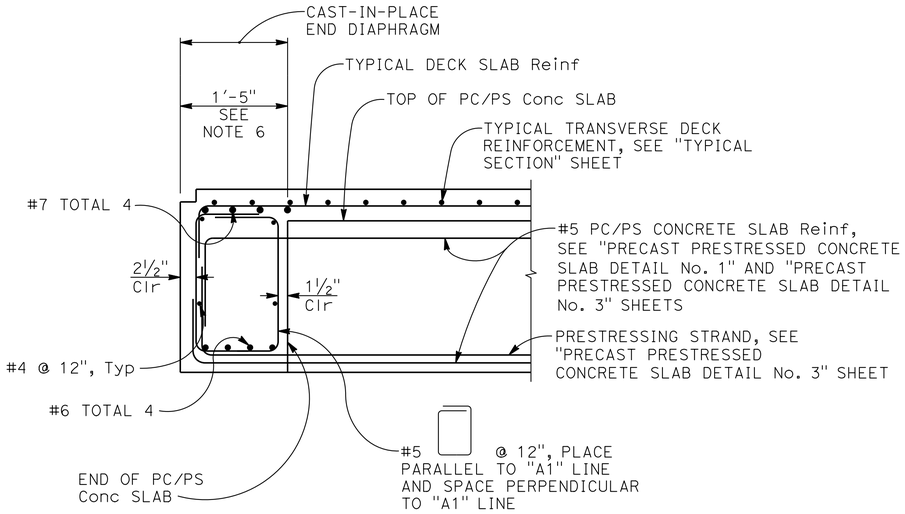

ABUTMENT DIAPHRAGM - SECTION A-A

1" = 1'-0"

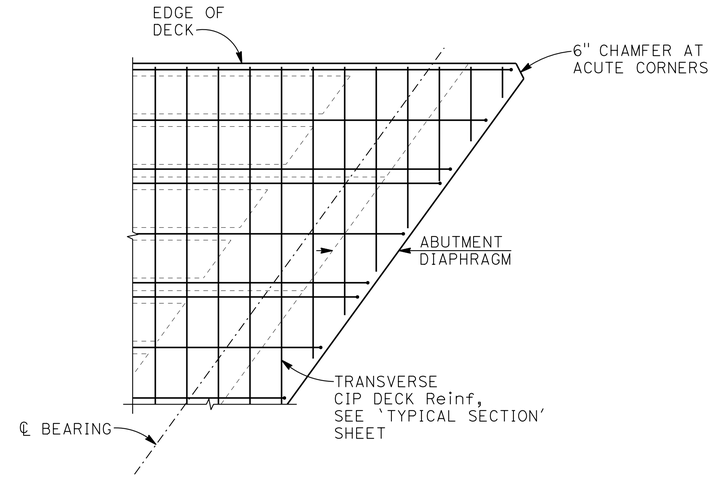

DETAIL 1

1/2" = 1'-0"

NOTES:

1. Number at end of bar indicates distance in feet from ℄ Bent.
2. Space bars equally within width of slab unit.
3. #10 x 70'-0" may be spliced with service butt splices staggered at 2'-0" min.
4. Splices for all longitudinal bars must be located outside the "No Splice Region" indicated.
5. Reinforcement shown within the width of the PC/PS concrete slab depicts the required reinforcement in the composite concrete deck on top of each PC/PS concrete slab.
6. Actual width of abutment diaphragm is dependent on "a" dimension, see "ABUTMENT DETAILS No. 1" sheet.
7. All bar reinforcement must be epoxy coated prefabricated reinforcement (ASTM A934), unless noted otherwise.

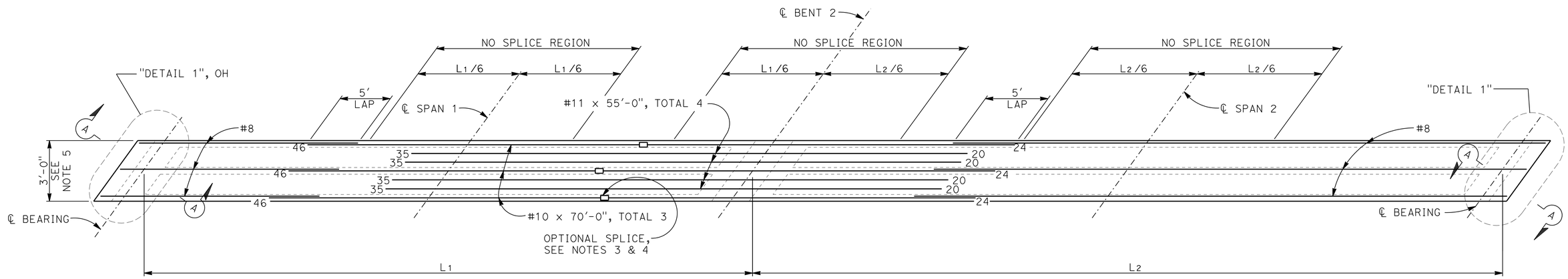

COMPOSITE CONCRETE DECK REINFORCEMENT PLAN - TYPICAL DECK UNIT

1" = 5'-0"

Paul Cotter
DESIGN OVERSIGHT Paul Cotter
10-8-13
SIGN OFF DATE

	BY	CHECKED
DESIGN	G. KENNING	D. DEVLIN
DETAILS	K. CRUZ	D. DEVLIN
QUANTITIES	K. CRUZ	J. GERLACH

PREPARED FOR THE STATE OF CALIFORNIA DEPARTMENT OF TRANSPORTATION

MAHVASH M. HARMS
PROJECT ENGINEER

BRIDGE NO. 35-0350
POST MILES 40.83

SAN PEDRO CREEK BRIDGE (REPLACE)
COMPOSITE CONCRETE DECK REINFORCEMENT

DESIGN GENERAL PLAN SHEET (ENGLISH) (REV. 7/16/10)

ORIGINAL SCALE IN INCHES FOR REDUCED PLANS 0 1 2 3

UNIT: 0703
PROJECT NUMBER & PHASE: 04000007431
CONTRACT NO.: 04-265604

DISREGARD PRINTS BEARING EARLIER REVISION DATES
REVISION DATES 12/4/12 2/8/13 3/28/13 8/16/13
SHEET 13 OF 24

FILE => 35-0350-o-dr01.dgn

USERNAME => s120183 DATE PLOTTED => 18-NOV-2013 TIME PLOTTED => 13:11
2002096 (2002096513)

DIST	COUNTY	ROUTE	POST MILES TOTAL PROJECT	SHEET No	TOTAL SHEETS
04	SM	1	40.6/40.9	147	157

Mahvash Harms 8/16/13
REGISTERED STRUCTURAL ENGINEER DATE

8-19-13
PLANS APPROVAL DATE

REGISTERED PROFESSIONAL ENGINEER MAHVASH M. HARMS No. 2639 Exp. 12/31/14 STRUCTURAL STATE OF CALIFORNIA

The State of California or its officers or agents shall not be responsible for the accuracy or completeness of scanned copies of this plan sheet.

CITY OF PACIFICA
170 SANTA MARIA AVENUE
PACIFICA, CA 94044

BIGGS CARDOSA ASSOCIATES INC.
865 THE ALAMEDA
SAN JOSE, CALIFORNIA 95126

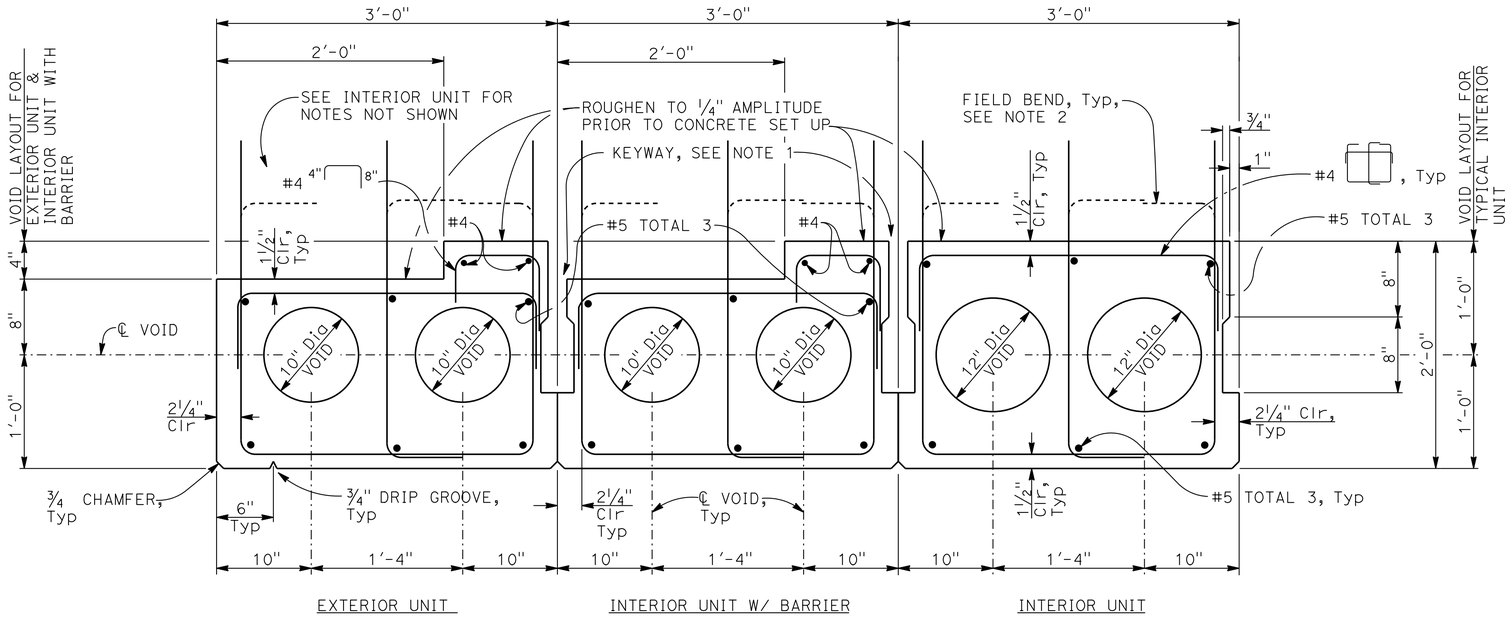

PRECAST/PRESTRESSED CONCRETE SLAB UNIT

1 1/2" = 1'-0"

NOTES:

1. Keyways to be filled with non-shrink grout a minimum of 7 days prior to placement of composite concrete slab.
2. Stirrups extending above the PC/PS concrete slab unit into the composite concrete slab must be field bent at different heights to maintain 2 1/2" clear to top of deck. These stirrups must be post fabricated epoxy coated (ASTM A775). Main longitudinal bars of the composite concrete slab must be placed at the inside radius of the hook.
3. All bar reinforcement must be epoxy coated prefabricated reinforcement (ASTM A934), unless noted otherwise. See Note 2 for epoxy coating requirements for the girder stirrups.

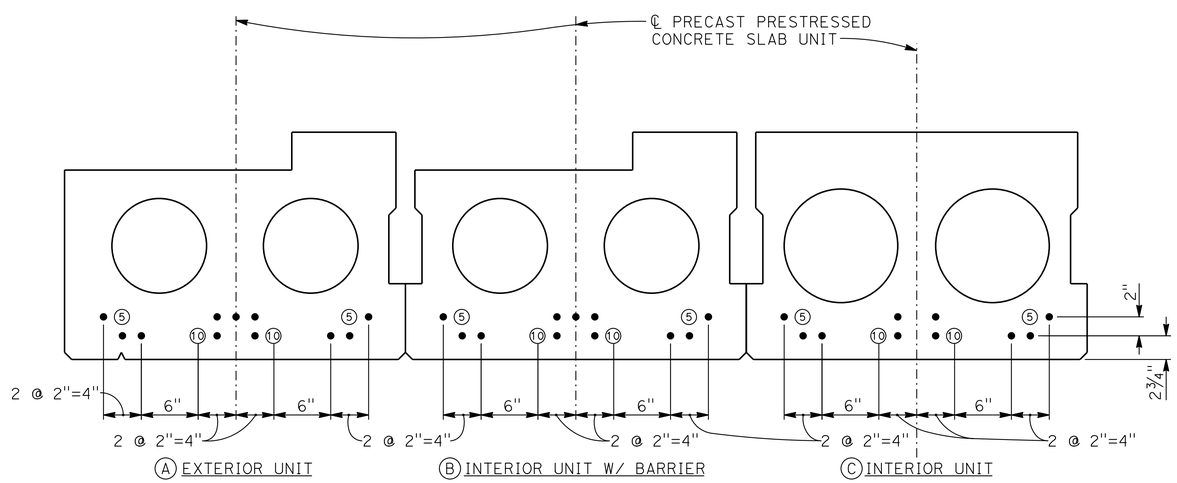

Legends:

- • Denotes continuously bonded strand.
- (5) Denotes debonded strand and debonded length in feet, measured from the ends of the Precast Prestressed Concrete Slab Unit.

STRAND LAYOUT SPAN 1

1 1/2" = 1'-0"

Paul Cotter
DESIGN OVERSIGHT Paul Cotter
10-8-13
SIGN OFF DATE

	BY	CHECKED
DESIGN	G. KENNING	D. DEVLIN
DETAILS	K. CRUZ	D. DEVLIN
QUANTITIES	K. CRUZ	J. GERLACH

PREPARED FOR THE STATE OF CALIFORNIA DEPARTMENT OF TRANSPORTATION

MAHVASH M. HARMS
PROJECT ENGINEER

BRIDGE NO. 35-0350
POST MILES 40.83

SAN PEDRO CREEK BRIDGE (REPLACE)

PRECAST PRESTRESSED CONCRETE SLAB DETAILS No. 1

DESIGN GENERAL PLAN SHEET (ENGLISH) (REV. 7/16/10)

ORIGINAL SCALE IN INCHES FOR REDUCED PLANS 0 1 2 3

UNIT: 0703
PROJECT NUMBER & PHASE: 04000007431 CONTRACT NO.: 04-265604

DISREGARD PRINTS BEARING EARLIER REVISION DATES
REVISION DATES 12/4/12 2/8/13 3/28/13 8/16/13
SHEET 14 OF 24

FILE => 35-0350-p-sldet01.dgn

USERNAME => s120183 DATE PLOTTED => 18-NOV-2013 TIME PLOTTED => 13:11

2002096 (2002096S14)

DIST	COUNTY	ROUTE	POST MILES TOTAL PROJECT	SHEET No	TOTAL SHEETS
04	SM	1	40.6/40.9	148	157

Mahvash Harms 8/16/13
REGISTERED STRUCTURAL ENGINEER DATE

8-19-13
PLANS APPROVAL DATE

REGISTERED PROFESSIONAL ENGINEER MAHVASH M. HARMS No. 2639 Exp. 12/31/14 STRUCTURAL STATE OF CALIFORNIA

The State of California or its officers or agents shall not be responsible for the accuracy or completeness of scanned copies of this plan sheet.

CITY OF PACIFICA
170 SANTA MARIA AVENUE
PACIFICA, CA 94044

BIGGS CARDOSA ASSOCIATES INC.
865 THE ALAMEDA
SAN JOSE, CALIFORNIA 95126

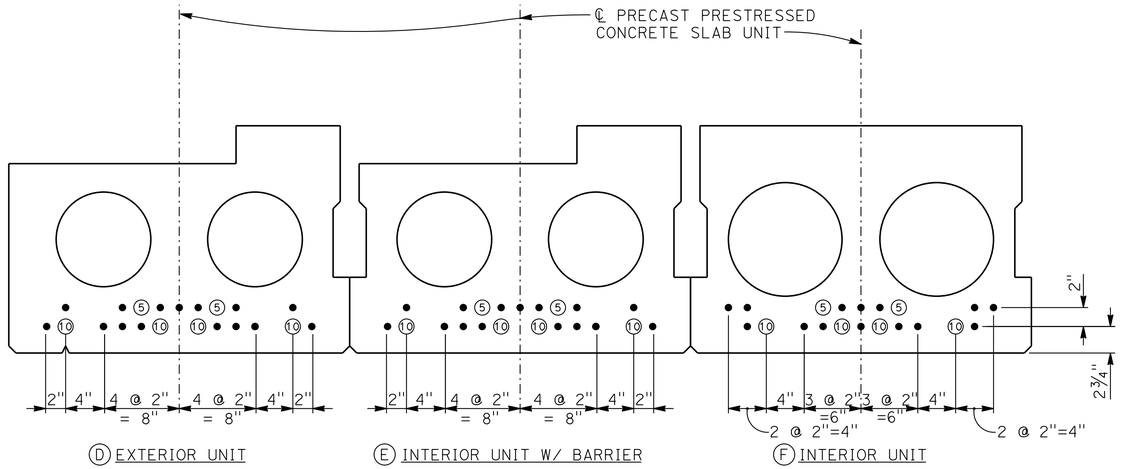

Legend:
- ● Denotes continuously bonded strand.
- ⑤ Denotes debonded strand and debonded length in feet, measured from the ends of the Precast Prestressed Concrete Slab Unit.

STRAND LAYOUT SPAN 2

1½" = 1'-0"

PRESTRESSING DATA TABLE

LOCATION	GIRDER (SEE NOTE 9)	# UNITS	Pjack (K/UNIT)	NUMBER OF P/S STRANDS	① DEFLECTION AT MIDSPAN DUE TO DECK DL (IN)	② DEFLECTION AT MIDSPAN DUE TO BARRIER DL (IN)
SPAN 1	A	2	659	15	0.80	0.02
	B	1	659	15	0.65	0.02
	C	18	615	14	0.45	0.02
SPAN 2	D	2	923	21	1.65	0.07
	E	1	923	21	1.70	0.07
	F	18	879	20	1.0	0.07

PRESTRESSING NOTES

1. Pjack is the force required before all losses.
2. The maximum tensile stress in the prestressing steel upon release shall not exceed 75% of the specified minimum ultimate tensile strength of the prestressing steel.
3. Design based on 270 ksi low relaxation 0.6" dia strand.
4. Slab designed for pretensioning.
5. Concrete: f'c = 6000 psi at 28 days
   f'ci = 5000 psi at Time of stressing
6. Total number of precast slab units = 42
7. Deflection components: Informational - to be used in setting screed line elevations.
8. If deck is placed with multiple pours, contractor must submit proposed screed rail locations and proposed construction joint locations to the Engineer for review.
9. For Span 1 Girder designations, see "PRECAST PRESTRESSED CONCRETE SLAB DETAILS No. 1" sheet.

Paul Cotter
DESIGN OVERSIGHT Paul Cotter
10-8-13
SIGN OFF DATE

	BY	CHECKED
DESIGN	G. KENNING	D. DEVLIN
DETAILS	K. CRUZ	D. DEVLIN
QUANTITIES	K. CRUZ	J. GERLACH

PREPARED FOR THE STATE OF CALIFORNIA DEPARTMENT OF TRANSPORTATION

MAHVASH M. HARMS
PROJECT ENGINEER

BRIDGE NO. 35-0350
POST MILES 40.83

SAN PEDRO CREEK BRIDGE (REPLACE)
PRECAST PRESTRESSED CONCRETE SLAB DETAILS No. 2

DESIGN GENERAL PLAN SHEET (ENGLISH) (REV. 7/16/10)

ORIGINAL SCALE IN INCHES FOR REDUCED PLANS 0 1 2 3

UNIT: 0703
PROJECT NUMBER & PHASE: 04000007431 CONTRACT NO.: 04-265604

DISREGARD PRINTS BEARING EARLIER REVISION DATES → 12/4/12 2/8/13 3/28/13 8/16/13

SHEET 15 OF 24

FILE => 35-0350-p-sldet02.dgn

USERNAME => s120183 DATE PLOTTED => 18-NOV-2013 TIME PLOTTED => 13:11
2002096 (2002096S15)

DIST	COUNTY	ROUTE	POST MILES TOTAL PROJECT	SHEET No	TOTAL SHEETS
04	SM	1	40.6/40.9	149	157

Mahvash Harms 8/16/13
REGISTERED STRUCTURAL ENGINEER DATE

8-19-13
PLANS APPROVAL DATE

REGISTERED PROFESSIONAL ENGINEER MAHVASH M. HARMS No. 2639 Exp. 12/31/14 STRUCTURAL STATE OF CALIFORNIA

The State of California or its officers or agents shall not be responsible for the accuracy or completeness of scanned copies of this plan sheet.

CITY OF PACIFICA
170 SANTA MARIA AVENUE
PACIFICA, CA 94044

BIGGS CARDOSA ASSOCIATES INC.
865 THE ALAMEDA
SAN JOSE, CALIFORNIA 95126

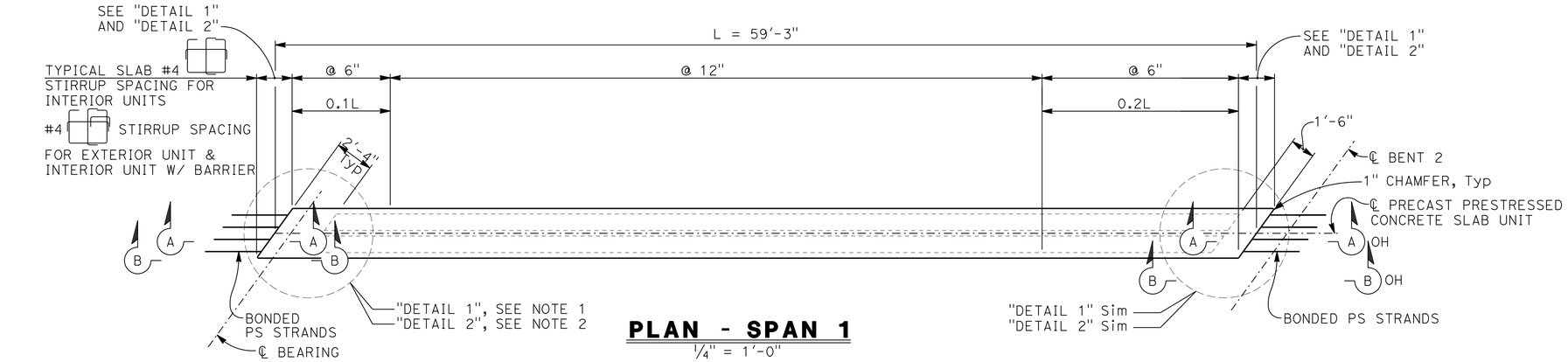

PLAN - SPAN 1
1/4" = 1'-0"

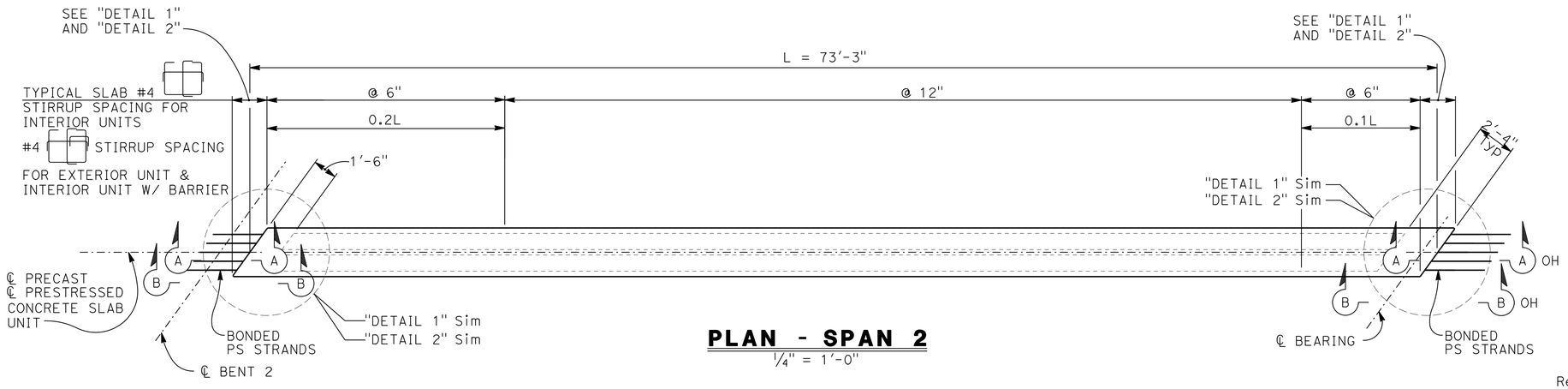

PLAN - SPAN 2
1/4" = 1'-0"

NOTES:
1. "DETAIL 1" and "SECTION A-A" are for interior units
2. "DETAIL 2" and "SECTION B-B" are for exterior units and interior units with barriers
3. All bar reinforcement must be epoxy coated prefabricated reinforcement (ASTM A934), unless noted otherwise.

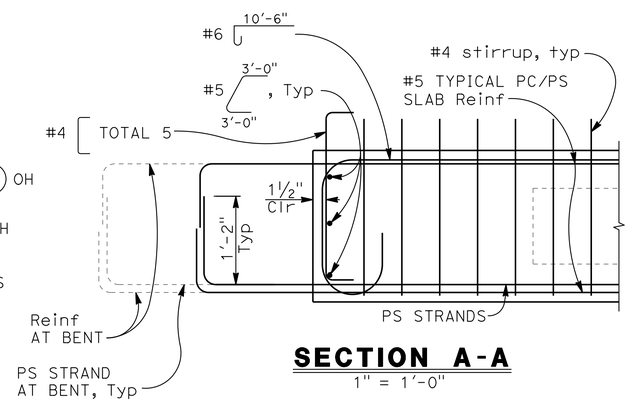

SECTION A-A
1" = 1'-0"

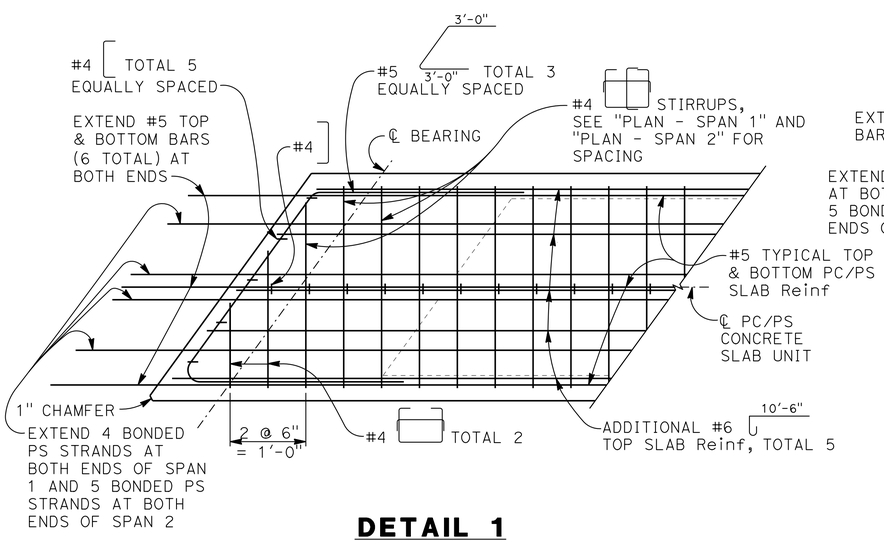

DETAIL 1
1" = 1'-0"

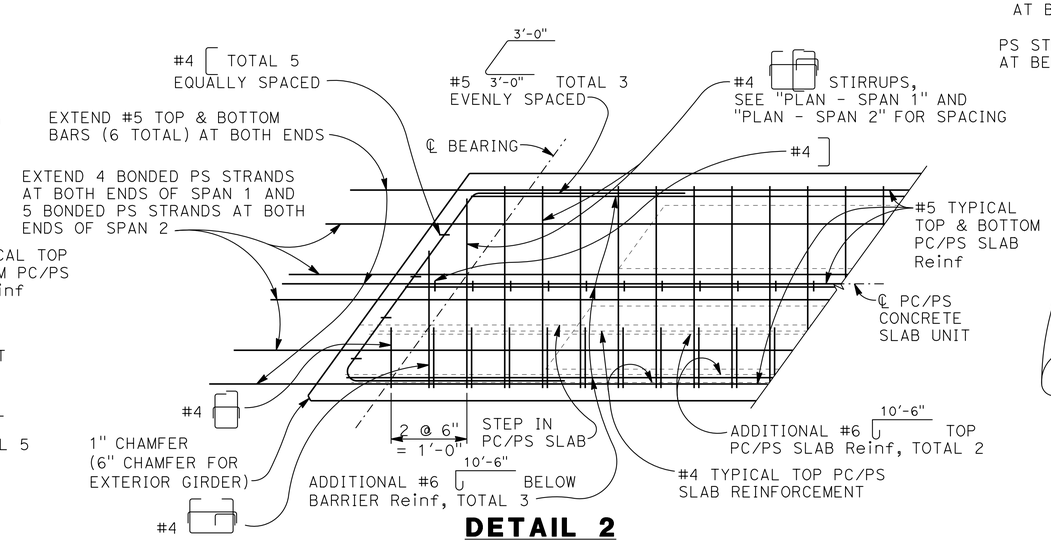

DETAIL 2
1" = 1'-0"

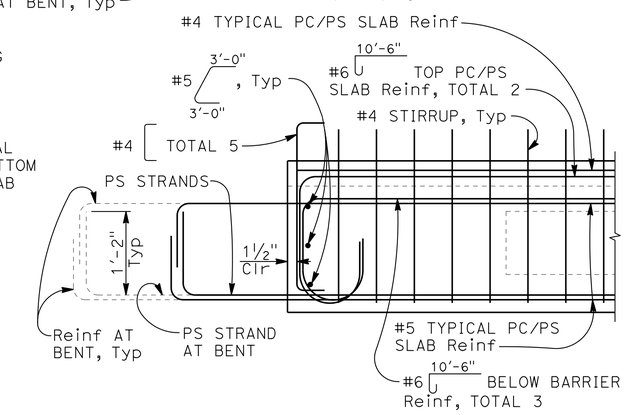

SECTION B-B
1" = 1'-0"

Paul Cotter
DESIGN OVERSIGHT Paul Cotter
10-8-13
SIGN OFF DATE

	BY	CHECKED
DESIGN	G. KENNING	D. DEVLIN
DETAILS	K. CRUZ	D. DEVLIN
QUANTITIES	K. CRUZ	J. GERLACH

PREPARED FOR THE STATE OF CALIFORNIA DEPARTMENT OF TRANSPORTATION

MAHVASH M. HARMS
PROJECT ENGINEER

BRIDGE NO. 35-0350
POST MILES 40.83

SAN PEDRO CREEK BRIDGE (REPLACE)
PRECAST PRESTRESSED CONCRETE SLAB DETAILS No. 3

DESIGN GENERAL PLAN SHEET (ENGLISH) (REV. 7/16/10)

ORIGINAL SCALE IN INCHES FOR REDUCED PLANS 0 1 2 3

UNIT: 0703
PROJECT NUMBER & PHASE: 04000007431
CONTRACT NO.: 04-265604

DISREGARD PRINTS BEARING EARLIER REVISION DATES → 12/4/12 2/8/13 3/28/13 8/16/13

SHEET 16 OF 24

FILE => 35-0350-p-sldet03.dgn

USERNAME => s120183 DATE PLOTTED => 18-NOV-2013 TIME PLOTTED => 13:11

(2002096516) 2002096

NOTES:
1. Galvanize rail assembly and all components after fabrication.
2. Details at beginning of bridge shown, end of bridge similar.
3. All bolts and threaded rods on bicycle railing must have Thread Locking System.
4. For "SECTION A-A", "SECTION E-E", "SECTION F-F", "EXPANSION JOINT FREE END CONNECTION DETAIL" and "EXPANSION JOINT FIXED END CONNECTION DETAIL", see "CA ST-10 (Mod) W/ BICYCLE RAILING DETAILS No. 2" sheet.
5. For "BICYCLE RAILING POST ELEVATION" and "RAILING EXPANSION JOINT DETAIL", see "CA ST-10 (Mod) W/ BICYCLE RAILING DETAILS No. 3" sheet.
6. For details not shown, see Standard Plans B11-47, B11-68, B11-69 & B11-70.
7. Locate intermediate turnbuckles at all cable splices. Maximum distance between turnbuckles must not exceed 100'-0"±.
8. Provide Thimbles at all cable loops

DIST	COUNTY	ROUTE	POST MILES TOTAL PROJECT	SHEET No	TOTAL SHEETS
04	SM	1	40.6/40.9	150	157

Mahvash Harms 8/17/13
REGISTERED STRUCTURAL ENGINEER DATE

8/19/13
PLANS APPROVAL DATE

REGISTERED PROFESSIONAL ENGINEER MAHVASH M. HARMS No. 2639 Exp. 12/31/14 STRUCTURAL STATE OF CALIFORNIA

The State of California or its officers or agents shall not be responsible for the accuracy or completeness of scanned copies of this plan sheet.

CITY OF PACIFICA
170 SANTA MARIA AVENUE
PACIFICA, CA 94044

BIGGS CARDOSA ASSOCIATES INC.
865 THE ALAMEDA
SAN JOSE, CALIFORNIA 95126

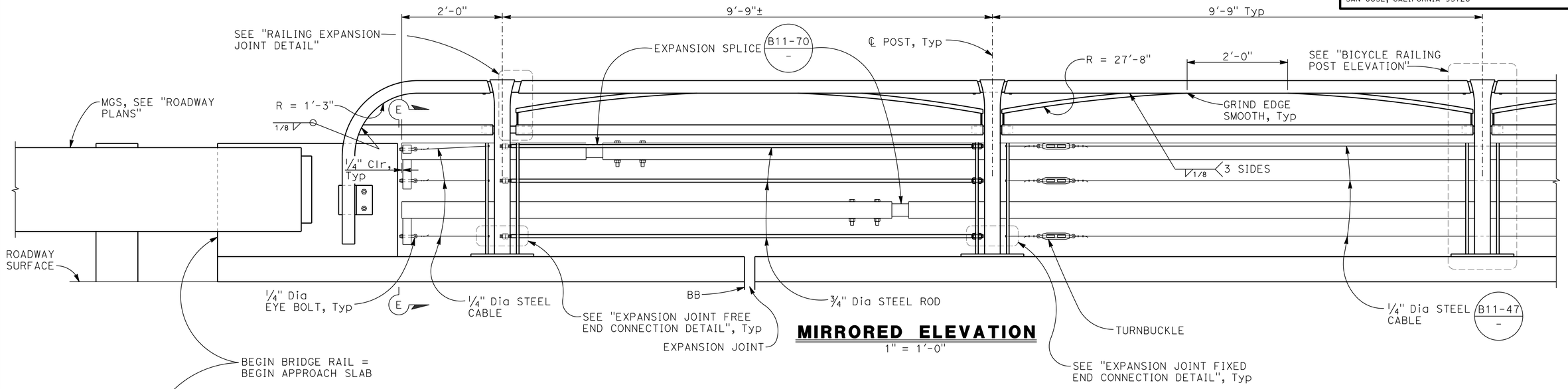

MIRRORED ELEVATION
1" = 1'-0"

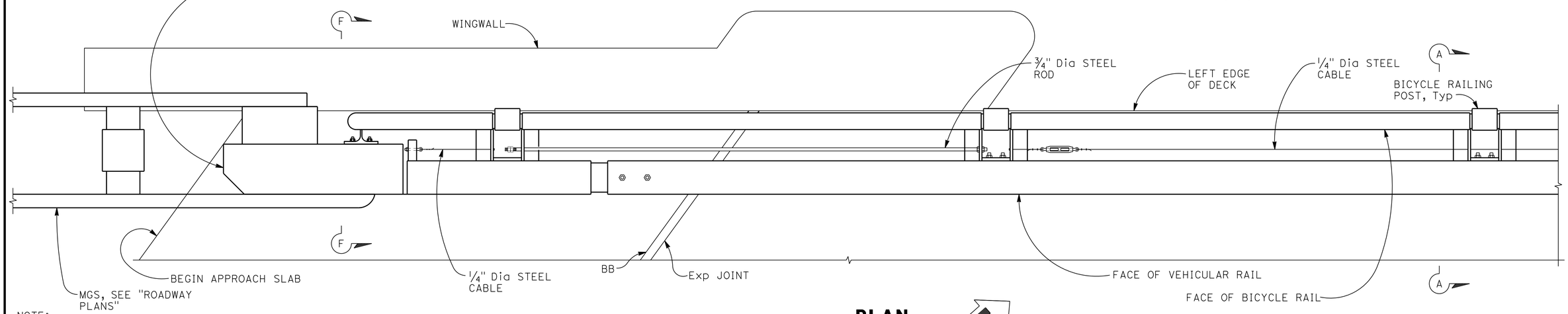

PLAN
1" = 1'-0"

NOTE:
THE CONTRACTOR MUST VERIFY ALL CONTROLLING FIELD DIMENSIONS BEFORE ORDERING OR FABRICATING ANY MATERIAL.

DESIGN OVERSIGHT

SIGN OFF DATE

	BY	CHECKED
DESIGN	G. KENNING	D. DEVLIN
DETAILS	J. GERLACH	D. DEVLIN
QUANTITIES	K. CRUZ	J. GERLACH

PREPARED FOR THE STATE OF CALIFORNIA DEPARTMENT OF TRANSPORTATION

MAHVASH M. HARMS
PROJECT ENGINEER

BRIDGE NO. 35-0350
POST MILES 40.83

SAN PEDRO CREEK BRIDGE (REPLACE)
CA ST-10 (MOD) W/ BICYCLE RAILING DETAILS No. 1

DESIGN GENERAL PLAN SHEET (ENGLISH) (REV. 7/16/10)

ORIGINAL SCALE IN INCHES FOR REDUCED PLANS 0 1 2 3

UNIT: 0703
PROJECT NUMBER & PHASE: 04000007431
CONTRACT NO.: 04-265604

DISREGARD PRINTS BEARING EARLIER REVISION DATES 8/17/13

REVISION DATES | SHEET 17 | OF 24

FILE => 35-0350-q-brd01.dgn

USERNAME => s120183 DATE PLOTTED => 18-NOV-2013 TIME PLOTTED => 13:11
2002096 (2002096S17)

DIST	COUNTY	ROUTE	POST MILES TOTAL PROJECT	SHEET No	TOTAL SHEETS
04	SM	1	40.6/40.9	151	157

Mahvash Harms 8/17/13
REGISTERED STRUCTURAL ENGINEER DATE

8/19/13
PLANS APPROVAL DATE

REGISTERED PROFESSIONAL ENGINEER MAHVASH M. HARMS No. 2639 Exp. 12/31/14 STRUCTURAL STATE OF CALIFORNIA

The State of California or its officers or agents shall not be responsible for the accuracy or completeness of scanned copies of this plan sheet.

CITY OF PACIFICA
170 SANTA MARIA AVENUE
PACIFICA, CA 94044

BIGGS CARDOSA ASSOCIATES INC.
865 THE ALAMEDA
SAN JOSE, CALIFORNIA 95126

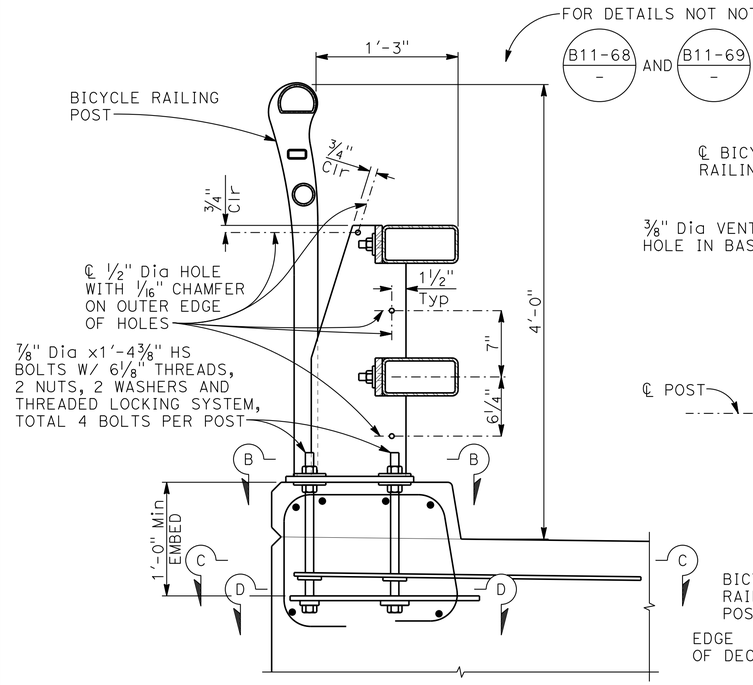

SECTION A-A
1 1/2" = 1'-0"

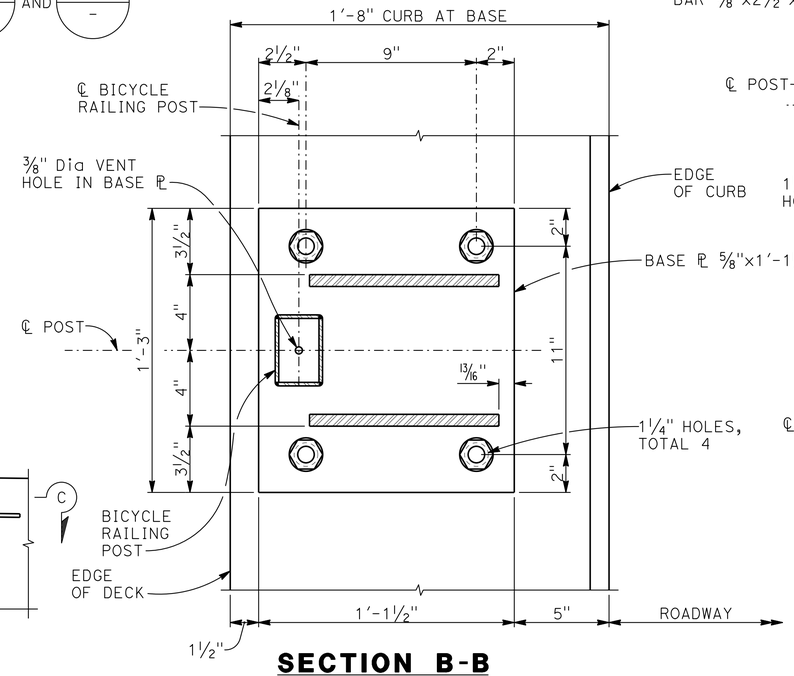

SECTION B-B
3" = 1'-0"

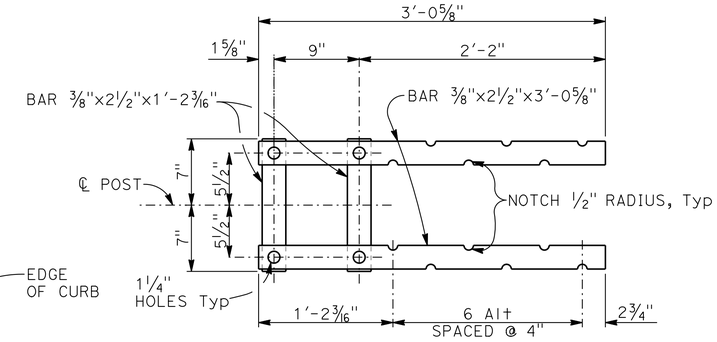

SECTION C-C
1 1/2" = 1'-0"

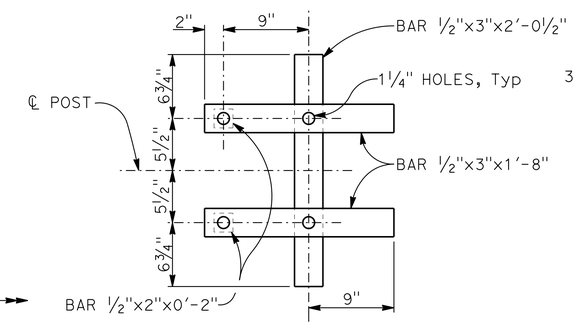

SECTION D-D
1 1/2" = 1'-0"

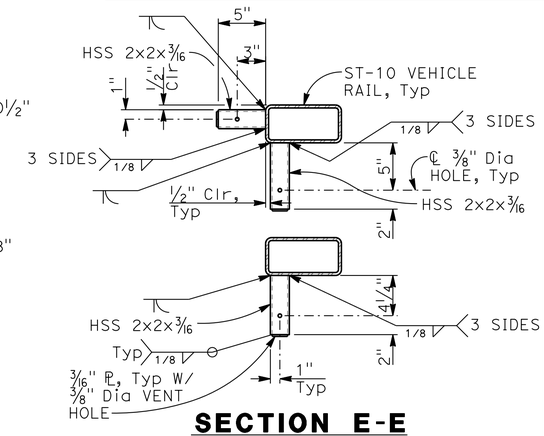

SECTION E-E
1 1/2" = 1'-0"

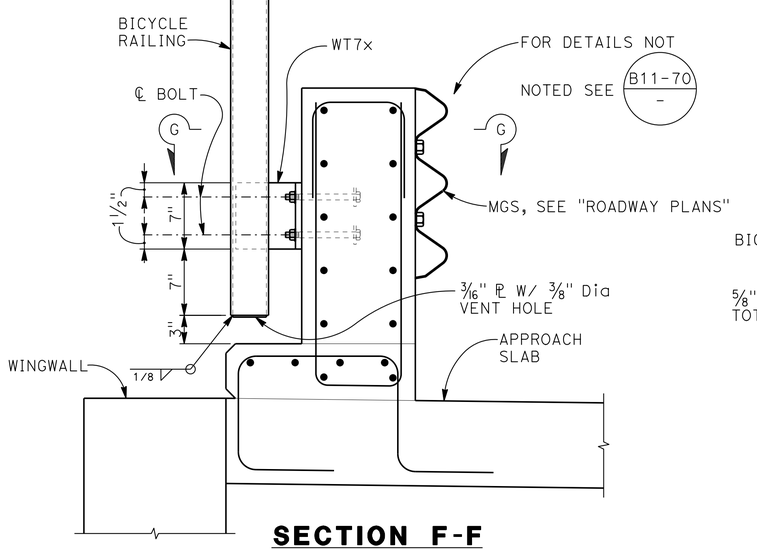

SECTION F-F
1 1/2" = 1'-0"

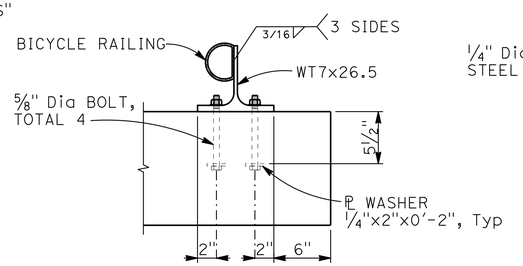

SECTION G-G
1 1/2" = 1'-0"

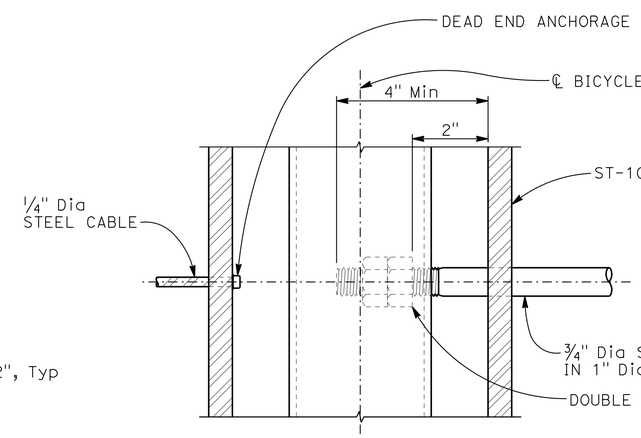

EXPANSION JOINT FREE END CONNECTION DETAIL
6" = 1'-0"

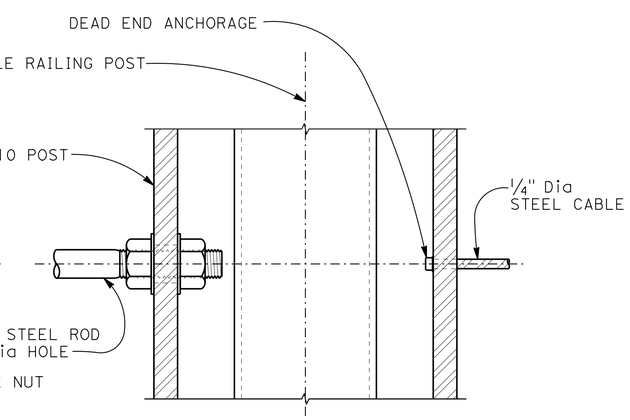

EXPANSION JOINT FIXED END CONNECTION DETAIL
6" = 1'-0"

NOTE:
THE CONTRACTOR MUST VERIFY ALL CONTROLLING FIELD DIMENSIONS BEFORE ORDERING OR FABRICATING ANY MATERIAL.

DESIGN	BY G. KENNING	CHECKED D. DEVLIN	
DETAILS	BY J. GERLACH	CHECKED D. DEVLIN	
QUANTITIES	BY K. CRUZ	CHECKED J. GERLACH	

DESIGN OVERSIGHT

SIGN OFF DATE

PREPARED FOR THE STATE OF CALIFORNIA DEPARTMENT OF TRANSPORTATION

MAHVASH M. HARMS
PROJECT ENGINEER

BRIDGE NO. 35-0350
POST MILES 40.83

SAN PEDRO CREEK BRIDGE (REPLACE)
CA ST-10 (MOD) W/ BICYCLE RAILING DETAILS No. 2

DESIGN GENERAL PLAN SHEET (ENGLISH) (REV. 7/16/10)

ORIGINAL SCALE IN INCHES FOR REDUCED PLANS 0 1 2 3

UNIT: 0703
PROJECT NUMBER & PHASE: 04000007431 CONTRACT NO.: 04-265604

DISREGARD PRINTS BEARING EARLIER REVISION DATES → 8/17/13

REVISION DATES | SHEET 18 | OF 24

FILE => 35-0350-q-brd02.dgn

USERNAME => s120183 DATE PLOTTED => 18-NOV-2013 TIME PLOTTED => 13:11

(2002096518) 2002096

DIST	COUNTY	ROUTE	POST MILES TOTAL PROJECT	SHEET No	TOTAL SHEETS
04	SM	1	40.6/40.9	152	157

Mahvash Harms 8/16/13
REGISTERED STRUCTURAL ENGINEER DATE

8-19-13
PLANS APPROVAL DATE

REGISTERED PROFESSIONAL ENGINEER MAHVASH M. HARMS No. 2639 Exp. 12/31/14 STRUCTURAL STATE OF CALIFORNIA

The State of California or its officers or agents shall not be responsible for the accuracy or completeness of scanned copies of this plan sheet.

CITY OF PACIFICA
170 SANTA MARIA AVENUE
PACIFICA, CA 94044

BIGGS CARDOSA ASSOCIATES INC.
865 THE ALAMEDA
SAN JOSE, CALIFORNIA 95126

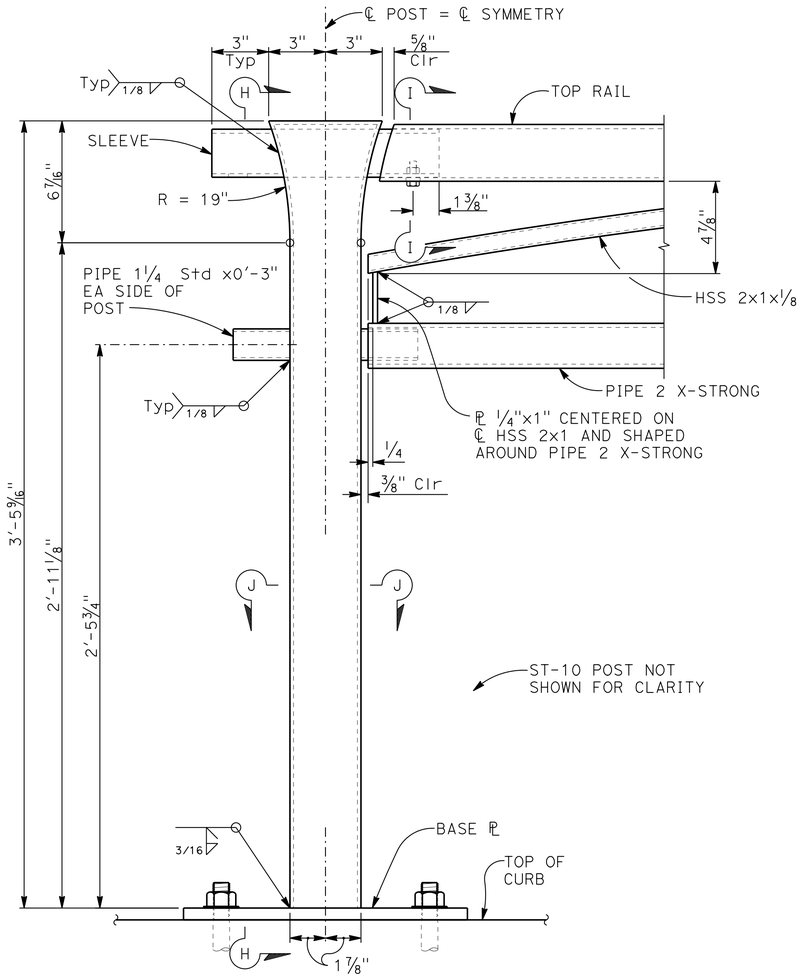

BICYCLE RAILING POST ELEVATION
3" = 1'-0"

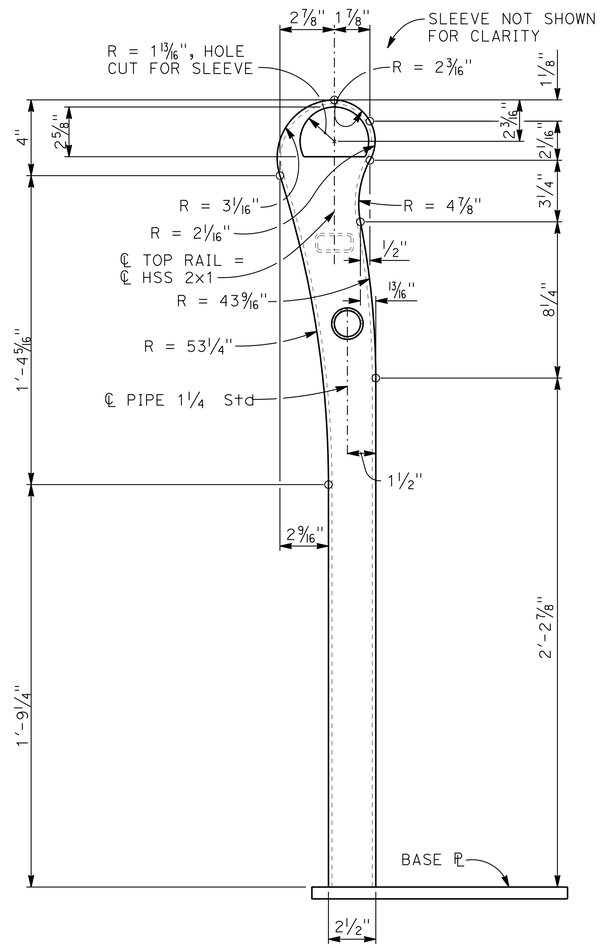

SECTION H-H
3" = 1'-0"

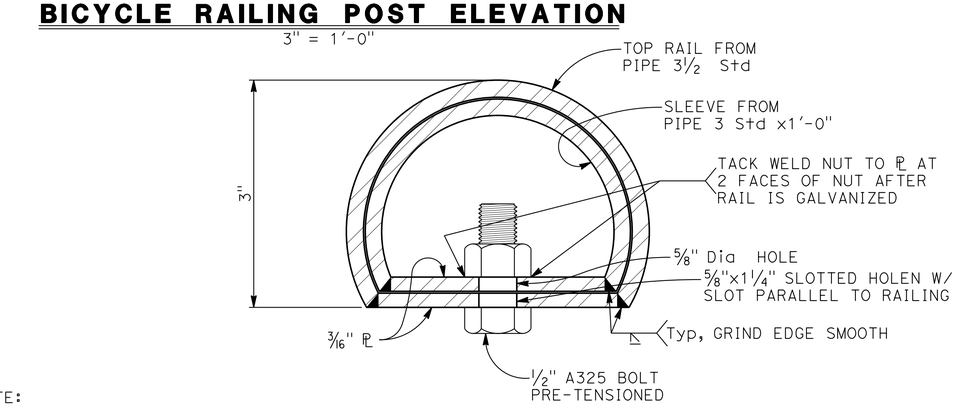

SECTION I-I
1" = 1"

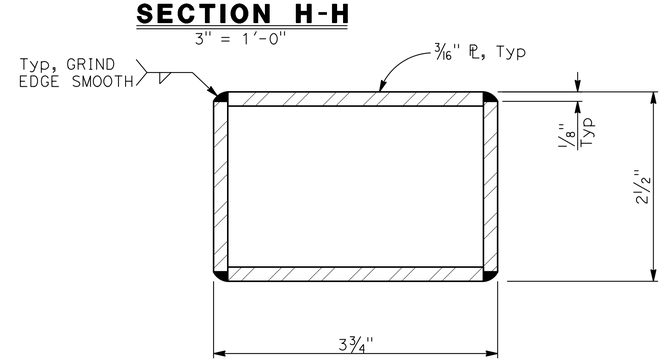

SECTION J-J
1" = 1"

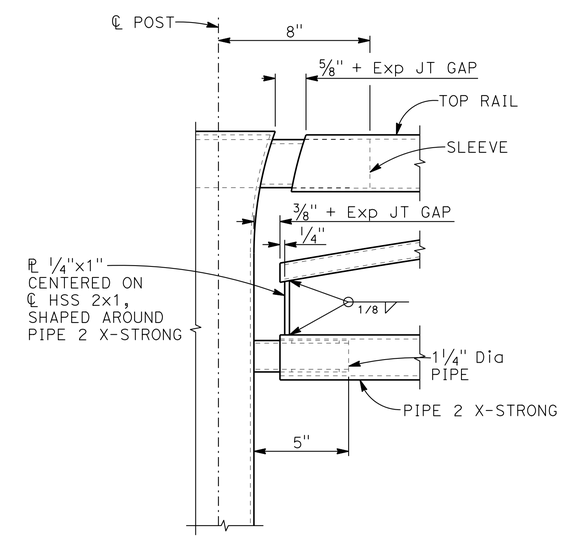

RAILING EXPANSION JOINT DETAIL
3" = 1'-0"

NOTE:
THE CONTRACTOR MUST VERIFY ALL CONTROLLING FIELD DIMENSIONS BEFORE ORDERING OR FABRICATING ANY MATERIAL.

Paul Cotter
DESIGN OVERSIGHT Paul Cotter
10-8-13
SIGN OFF DATE

	BY	CHECKED
DESIGN	G. KENNING	D. DEVLIN
DETAILS	J. GERLACH	D. DEVLIN
QUANTITIES	K. CRUZ	J. GERLACH

PREPARED FOR THE STATE OF CALIFORNIA DEPARTMENT OF TRANSPORTATION

MAHVASH M. HARMS
PROJECT ENGINEER

BRIDGE NO. 35-0350
POST MILES 40.83

SAN PEDRO CREEK BRIDGE (REPLACE)
CA ST-10 (MOD) W/ BICYCLE RAILING DETAILS No. 3

DESIGN GENERAL PLAN SHEET (ENGLISH) (REV. 7/16/10)

ORIGINAL SCALE IN INCHES FOR REDUCED PLANS 0 1 2 3

UNIT: 0703
PROJECT NUMBER & PHASE: 04000007431
CONTRACT NO.: 04-265604

DISREGARD PRINTS BEARING EARLIER REVISION DATES 8/16/13

REVISION DATES | SHEET 19 | OF 24

FILE => 35-0350-q-brd03.dgn

USERNAME => s120183 DATE PLOTTED => 18-NOV-2013 TIME PLOTTED => 13:11

2002096 (2002096519)

DIST	COUNTY	ROUTE	POST MILES TOTAL PROJECT	SHEET No	TOTAL SHEETS
04	SM	1	40.6/40.9	153	157

Mahvash Harms 8/17/13
REGISTERED STRUCTURAL ENGINEER DATE

8/19/13
PLANS APPROVAL DATE

REGISTERED PROFESSIONAL ENGINEER MAHVASH M. HARMS No. 2639 Exp. 12/31/14 STRUCTURAL STATE OF CALIFORNIA

The State of California or its officers or agents shall not be responsible for the accuracy or completeness of scanned copies of this plan sheet.

CITY OF PACIFICA
170 SANTA MARIA AVENUE
PACIFICA, CA 94044

BIGGS CARDOSA ASSOCIATES INC.
865 THE ALAMEDA
SAN JOSE, CALIFORNIA 95126

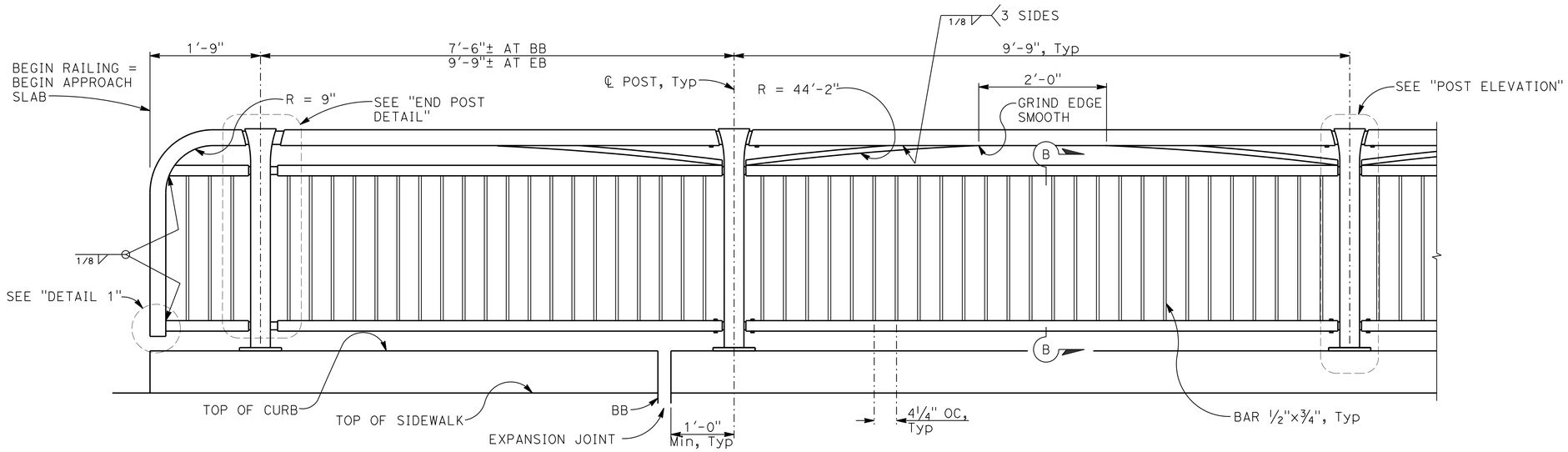

ELEVATION
1" = 1'-0"

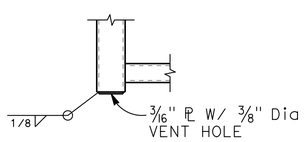

DETAIL 1
1 1/2" = 1'-0"

NOTES:
1. Galvanize rail assembly and all components after fabrication.
2. Details at beginning of bridge shown, end of bridge similar.
3. All bolts on pedestrian railing must have Thread Locking System.
4. For "SECTION B=B", "POST ELEVATION" and "END POST DETAIL", see "PEDESTRIAN RAILING DETAILS No. 2" sheet.

NOTE:
THE CONTRACTOR MUST VERIFY ALL CONTROLLING FIELD DIMENSIONS BEFORE ORDERING OR FABRICATING ANY MATERIAL.

DESIGN OVERSIGHT
SIGN OFF DATE

	BY	CHECKED
DESIGN	G. KENNING	D. DEVLIN
DETAILS	J. GERLACH	D. DEVLIN
QUANTITIES	K. CRUZ	J. GERLACH

PREPARED FOR THE STATE OF CALIFORNIA DEPARTMENT OF TRANSPORTATION

MAHVASH M. HARMS
PROJECT ENGINEER

BRIDGE NO. 35-0350
POST MILES 40.83

SAN PEDRO CREEK BRIDGE (REPLACE)
PEDESTRIAN RAILING DETAILS No. 1

DESIGN GENERAL PLAN SHEET (ENGLISH) (REV. 7/16/10)

ORIGINAL SCALE IN INCHES FOR REDUCED PLANS 0 1 2 3

UNIT: 0703
PROJECT NUMBER & PHASE: 04000007431 CONTRACT NO.: 04-265604

DISREGARD PRINTS BEARING EARLIER REVISION DATES → 8/17/13

REVISION DATES			SHEET	OF
			20	24

FILE => 35-0350-r-prd01.dgn

USERNAME => s120183 DATE PLOTTED => 18-NOV-2013 TIME PLOTTED => 13:11
2002096 (20020965 20)

DIST	COUNTY	ROUTE	POST MILES TOTAL PROJECT	SHEET No	TOTAL SHEETS
04	SM	1	40.6/40.9	154	157

Mahvash Harms 8/17/13
REGISTERED STRUCTURAL ENGINEER DATE

8/19/13
PLANS APPROVAL DATE

REGISTERED PROFESSIONAL ENGINEER MAHVASH M. HARMS No. 2639 Exp. 12/31/14 STRUCTURAL STATE OF CALIFORNIA

The State of California or its officers or agents shall not be responsible for the accuracy or completeness of scanned copies of this plan sheet.

CITY OF PACIFICA
170 SANTA MARIA AVENUE
PACIFICA, CA 94044

BIGGS CARDOSA ASSOCIATES INC.
865 THE ALAMEDA
SAN JOSE, CALIFORNIA 95126

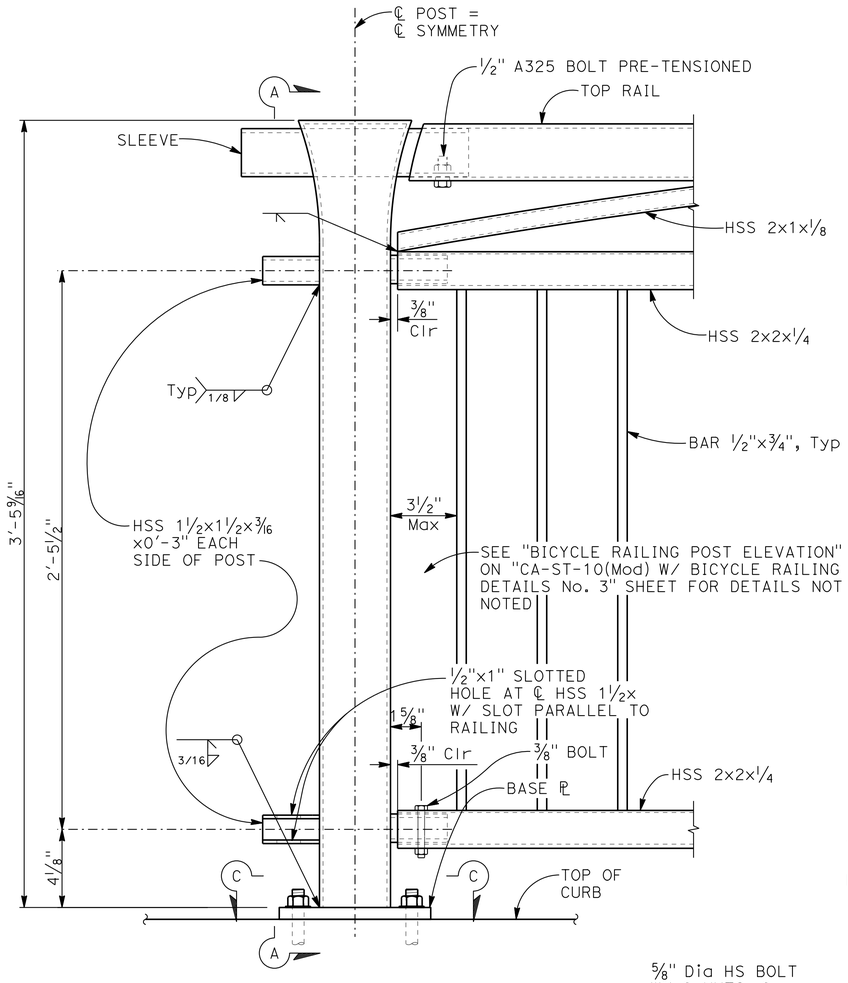

POST ELEVATION
3" = 1'-0"

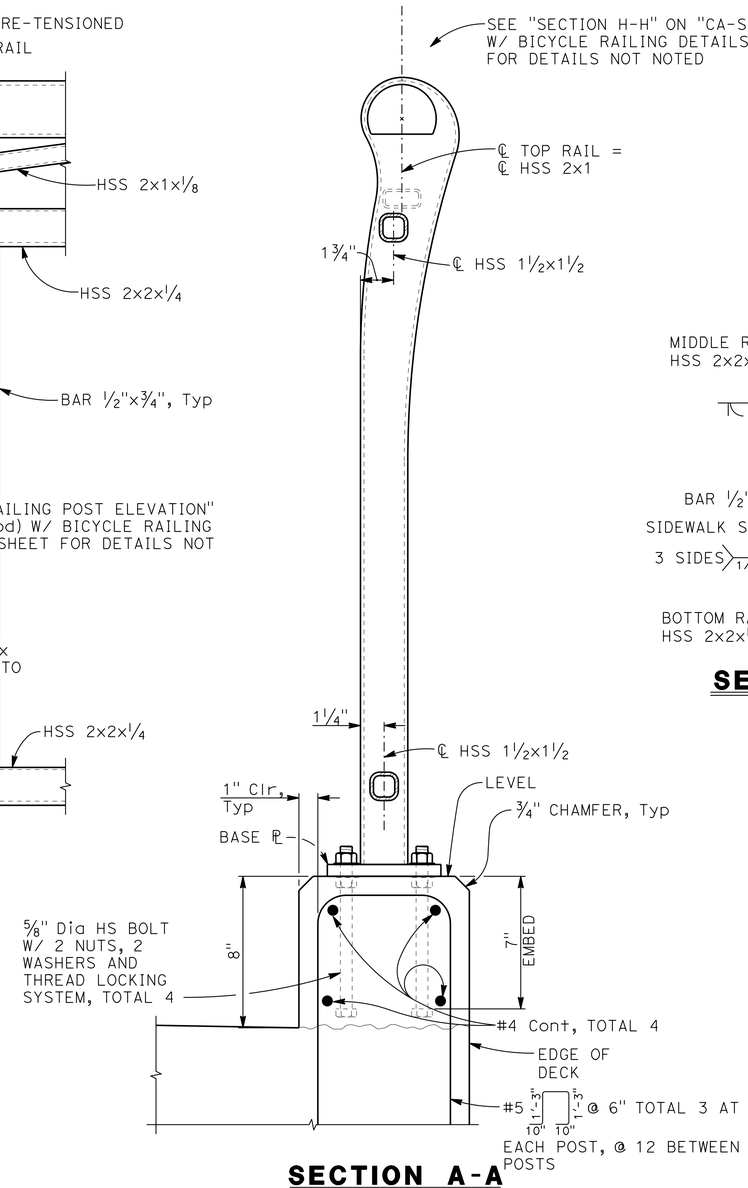

SECTION A-A
3" = 1'-0"

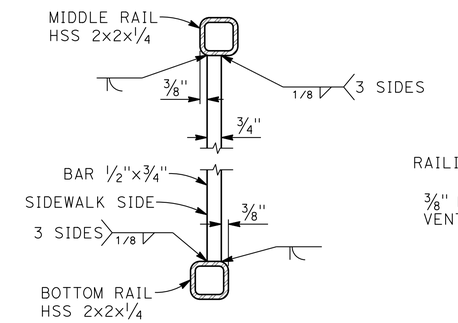

SECTION B-B
3" = 1'-0"

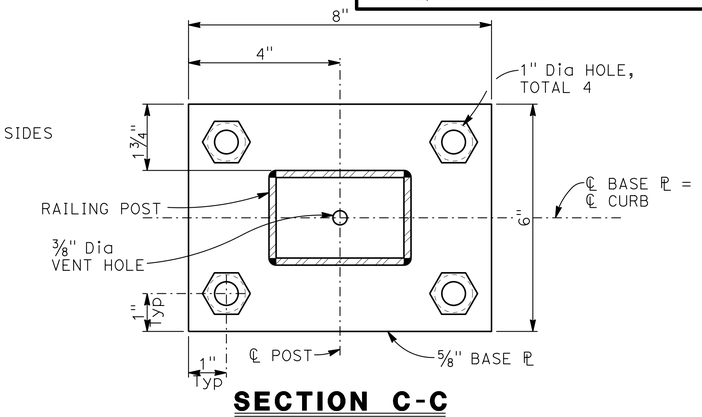

SECTION C-C
6" = 1'-0"

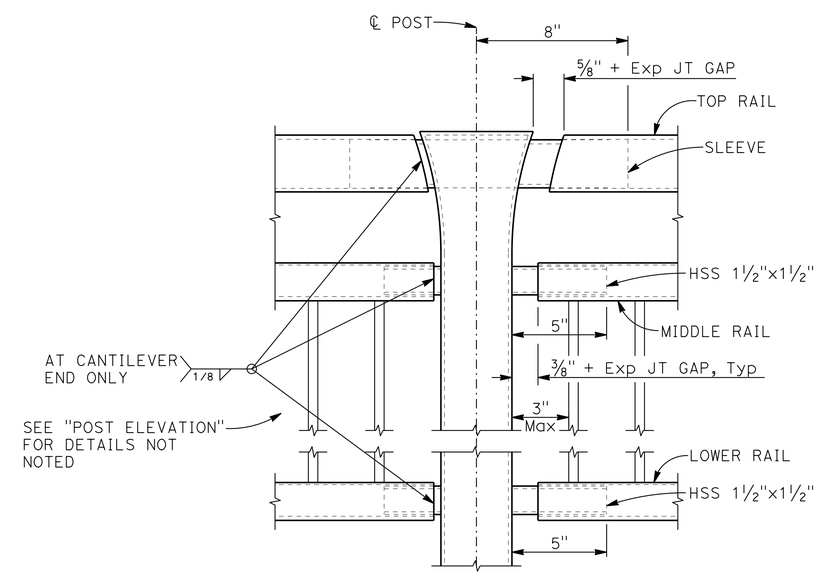

END POST DETAIL
3" = 1'-0"

NOTE:
THE CONTRACTOR MUST VERIFY ALL CONTROLLING FIELD DIMENSIONS BEFORE ORDERING OR FABRICATING ANY MATERIAL.

DESIGN	BY G. KENNING	CHECKED D. DEVLIN	
DETAILS	BY J. GERLACH	CHECKED D. DEVLIN	
QUANTITIES	BY K. CRUZ	CHECKED J. GERLACH	

DESIGN OVERSIGHT
SIGN OFF DATE

PREPARED FOR THE STATE OF CALIFORNIA DEPARTMENT OF TRANSPORTATION

MAHVASH M. HARMS
PROJECT ENGINEER

BRIDGE NO. 35-0350
POST MILES 40.83

SAN PEDRO CREEK BRIDGE (REPLACE)
PEDESTRIAN RAILING DETAILS No. 2

DESIGN GENERAL PLAN SHEET (ENGLISH) (REV. 7/16/10)

ORIGINAL SCALE IN INCHES FOR REDUCED PLANS 0 1 2 3

UNIT: 0703
PROJECT NUMBER & PHASE: 04000007431 CONTRACT NO.: 04-265604

DISREGARD PRINTS BEARING EARLIER REVISION DATES 8/17/13

REVISION DATES | SHEET 21 | OF 24

FILE => 35-0350-r-prd02.dgn

USERNAME => s120183 DATE PLOTTED => 18-NOV-2013 TIME PLOTTED => 13:11 2002096 (20020965211)

DIST.	COUNTY	ROUTE	MILE POST TOTAL PROJECT	SHEET NO.	TOTAL SHEETS
4	SM	1	40.6/40.9	155	157

REGISTERED STRUCTURAL ENGINEER — DATE 8/17/13

8/19/13
PLANS APPROVAL DATE

REGISTERED PROFESSIONAL ENGINEER MATHVASH M. HARMS No. 2639 Exp.12/31/14 STRUCTURAL STATE OF CALIFORNIA

The State of California or its officers or agents shall not be responsible for the accuracy or completeness of electronic copies of this plan sheet.

CITY OF PACIFICA
170 SANTA MARIA AVENUE
PACIFICA, CA 94044

BIGGS CARDOSA ASSOCIATES INC.
865 THE ALAMEDA
SAN JOSE, CALIFORNIA 95126

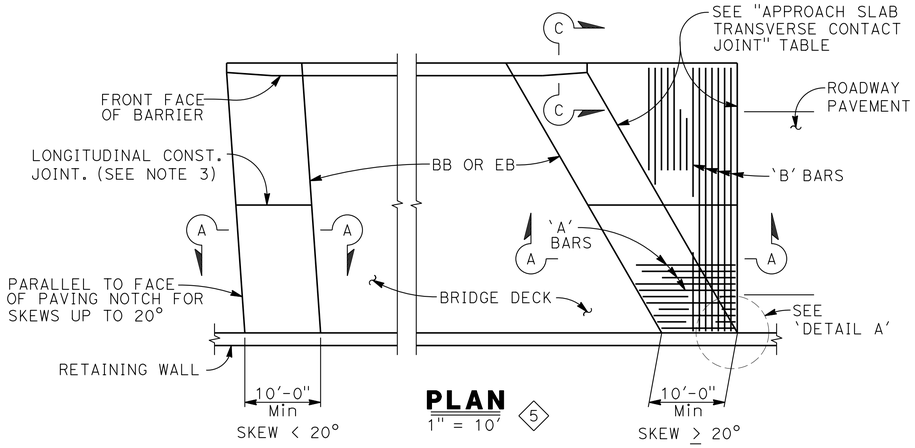

PLAN 5
1" = 10'

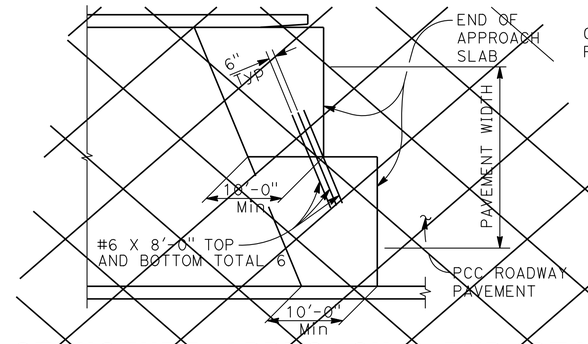

STRUCTURE APPROACH - END STAGGER DETAIL 1
NO SCALE

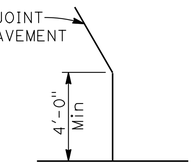

DETAIL A
NO SCALE

APPROACH SLAB TRANSVERSE CONTACT JOINT		
STRUCTURE SKEW	AC APPROACH PAVEMENT	PCC APPROACH PAVEMENT
< 20°	PARALLEL TO FACE OF PAVING NOTCH	PARALLEL TO FACE OF PAVING NOTCH
20° - 45°	PARALLEL TO FACE OF P N USE (DETAIL A)	STAGGER LINES 24' TO 36' APART
> 45°	PARALLEL TO FACE OF P N USE (DETAIL A)	STAGGER AT EACH LANE LINE

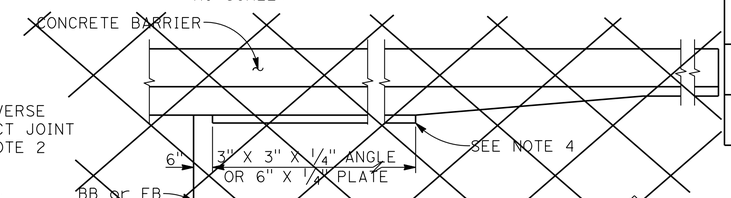

EDGE ANGLE DETAIL 1
1/2" = 1'-0"

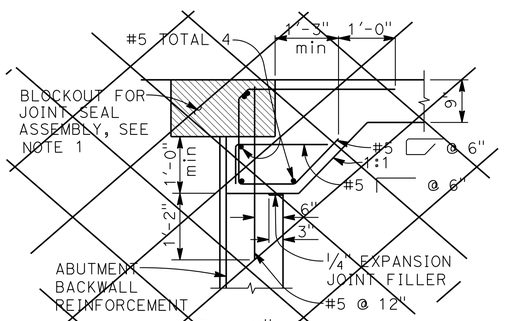

MR > 2" 1

SEAT TYPE ABUTMENT
SECTION A-A
3/4" = 1'-0"

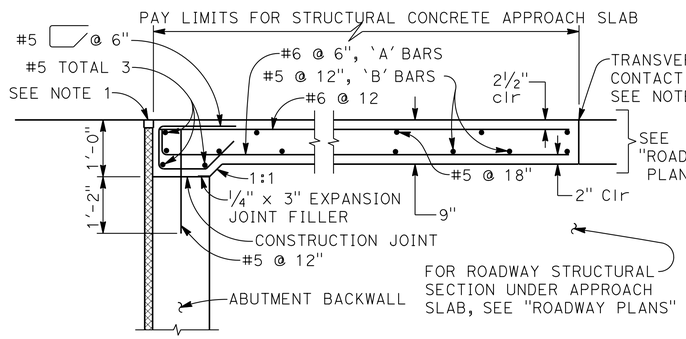

MR ≤ 2" 2

NOTE: SEAT TYPE ABUTMENT SHOWN,FOR DIAPHRAGM TYPE ABUTMENT,SEE "ABUTMENT TIE DETAILS".

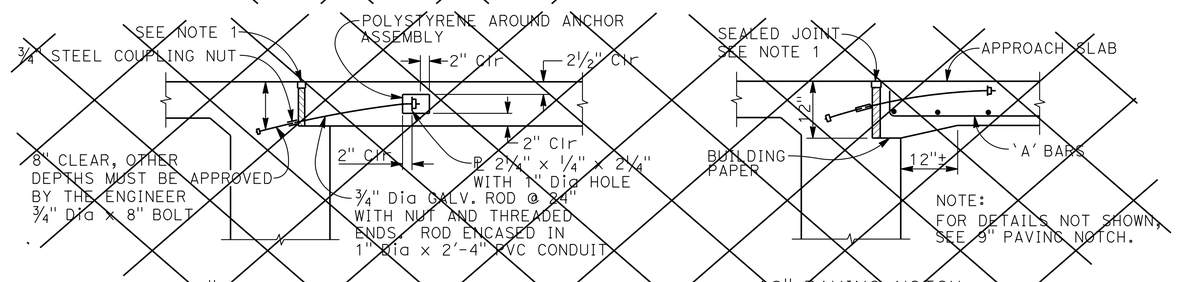

9" PAVING NOTCH — 12" PAVING NOTCH

DIAPHRAGM TYPE ABUTMENT
ABUTMENT TIE DETAILS 1
3/4" = 1'-0"

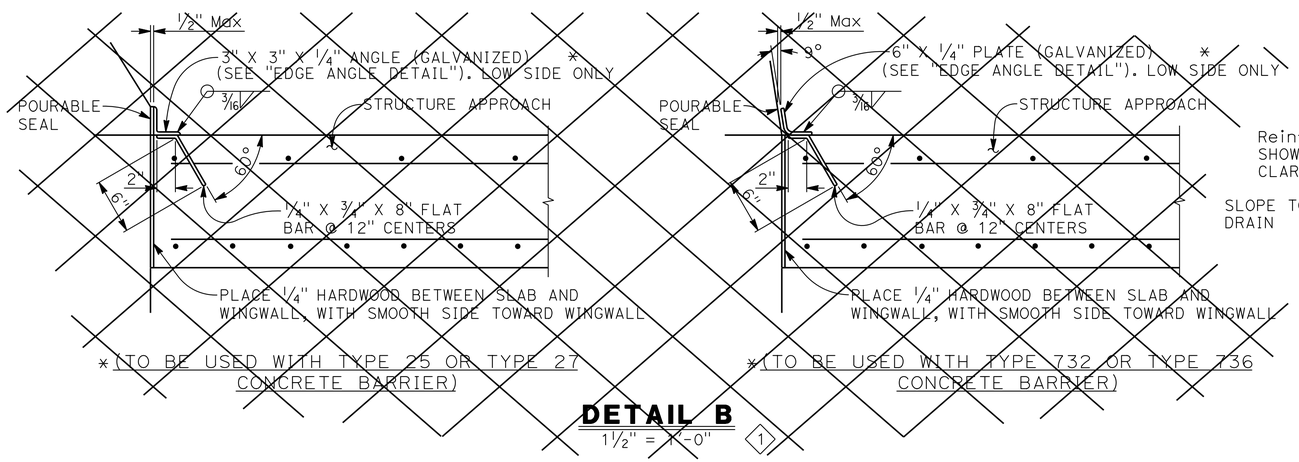

DETAIL B 1
1 1/2" = 1'-0"

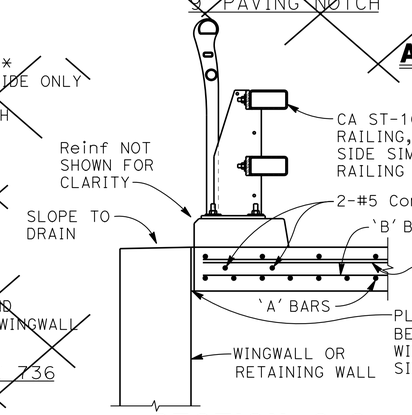

SECTION C-C 5
3/4" = 1'-0"

NOTES:

1. For details not noted or shown, see Structure Plans. Adjust bar reinforcement to clear a sawcut for sealed joint,when required.
2. For transverse contact joint with new PCC paving, refer to Standard Plan P10.
3. Longitudinal construction joints,when permitted by the Engineer,shall be located on lane lines.
4. End angle or plate at beginning of barrier transition, end of wing wall or end of structure approach as applicable.
5. At the contractor's option,approach slab transverse reinforcement may be placed parallel to paving notch. Spacing of transverse reinforcement is measured along ℄ roadway.
6. ~~For drainage details, see Structure Plans.~~ (4)
7. All bar reinforcement must be epoxy coated prefabricated reinforcement (ASTM A934), unless noted otherwise. (3)

SPECIAL DETAILS

REVISED STANDARD DRAWING

FILE NO. XS3-160E

APPROVAL DATE JULY 2011

1 DETAIL NOT USED — 2 INCREASED REINFORCEMENT CLEARANCE — 3 ADDED NOTE
4 NOTE REMOVED — 5 CHANGED BARRIER TYPE AND MOVED ONTO SLAB, INCREASED SLAB REINFORCEMENT

STATE OF CALIFORNIA
DEPARTMENT OF TRANSPORTATION

DIVISION OF ENGINEERING SERVICES

BRIDGE NO. 35-0350
MILE POST 40.83

SAN PEDRO CREEK BRIDGE (REPLACE)
STRUCTURE APPROACH TYPE EQ(10)

DS OSD 2147A (ENGLISH STANDARD DRAWING "XS" BORDER REV. (02-02-11)

ORIGINAL SCALE IN INCHES FOR REDUCED PLANS 0 1 2 3

UNIT: 0703
PROJECT NUMBER & PHASE: 04000007431
CONTRACT NO.: 04-265604

DISREGARD PRINTS BEARING EARLIER REVISION DATES

REVISION DATES 12/4/12 2/8/13 3/28/13 8/17/13 — SHEET 22 OF 24

FILE => 35-0350-s-sadet01.dgn

USERNAME => s120183 DATE PLOTTED => 18-NOV-2013 TIME PLOTTED => 13:11

2008096 (2008096S22)

DIST	COUNTY	ROUTE	POST MILES TOTAL PROJECT	SHEET No	TOTAL SHEETS
04	SM	1	40.6/40.9	156	157

GEOTECHNICAL PROFESSIONAL — DATE 2/6/13

8-19-13
PLANS APPROVAL DATE

REGISTERED PROFESSIONAL ENGINEER — GARY PARIKH — No. G.E. 666 — Exp. 12/31/13 GEOTECHNICAL — STATE OF CALIFORNIA

The State of California or its officers or agents shall not be responsible for the accuracy or completeness of electronic copies of this plan sheet.

CITY OF PACIFICA
170 SANTA MARIA AVENUE
PACIFICA, CA 94044

PARIKH CONSULTANTS, INC.
2360 QUME DRIVE, SUITE A
SAN JOSE, CA 95131

BENCHMARK AND DATUM

Monument	Coordinates North	Coordinates East	Elev.	Description/ Location
109	2045236.04	5980814.68	16.55	NGS BM Disk #Y1240 (NAVD) 88-Project Benchmark

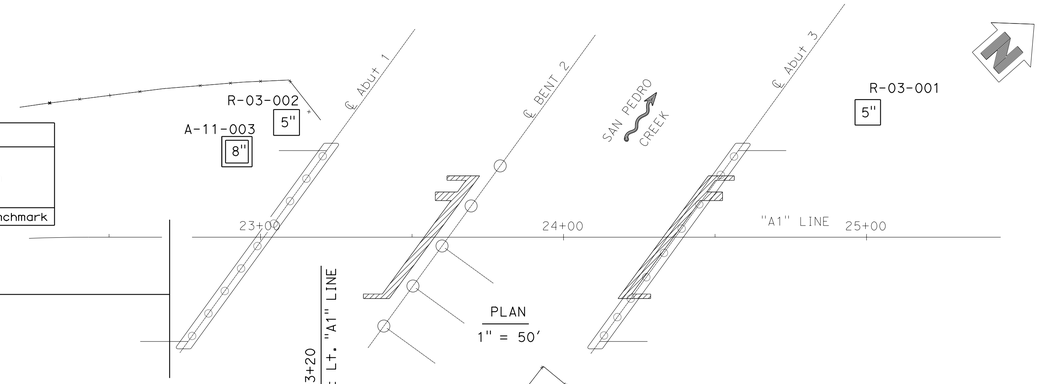

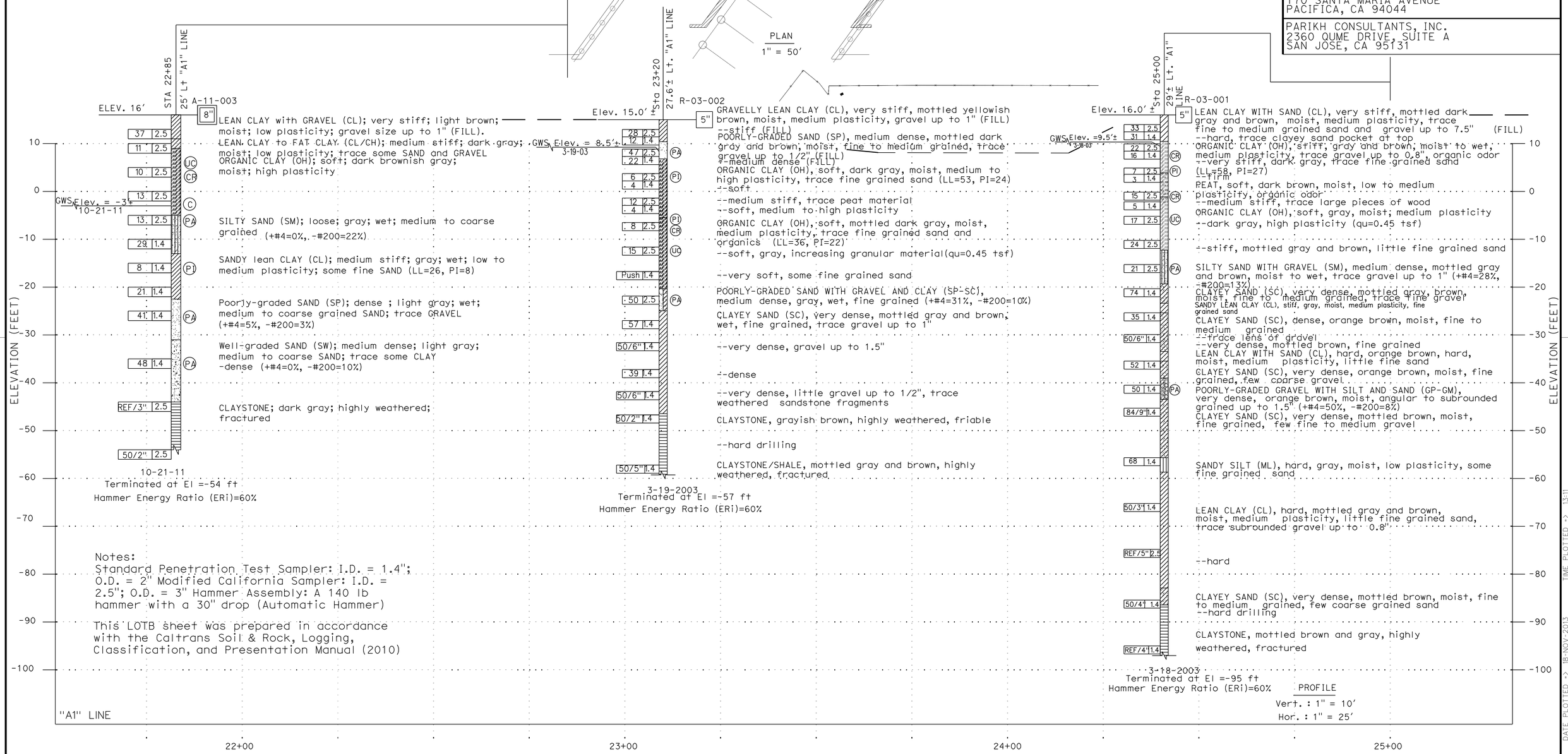

Notes:
Standard Penetration Test Sampler: I.D. = 1.4"; O.D. = 2" Modified California Sampler: I.D. = 2.5"; O.D. = 3" Hammer Assembly: A 140 lb hammer with a 30" drop (Automatic Hammer)

This LOTB sheet was prepared in accordance with the Caltrans Soil & Rock, Logging, Classification, and Presentation Manual (2010)

DESIGN OVERSIGHT: Paul Cotter — Paul Cotter
10-8-13
SIGN OFF DATE

DRAWN BY: O. GOUTHIER
CHECKED BY: D. WANG

D. ALEXANDER
FIELD INVESTIGATION BY:
DATE: MARCH 2003 & OCTOBER 2011

PREPARED FOR THE STATE OF CALIFORNIA DEPARTMENT OF TRANSPORTATION

DAVID WANG
PROJECT ENGINEER

BRIDGE NO. 35-0350
POST MILES 40.83

SAN PEDRO CREEK BRIDGE (REPLACE)
LOG OF TEST BORINGS 1 OF 2

GS GEOTECHNICAL LOG OF TEST BORINGS SHEET (ENGLISH) (REV. 7/16/10)

ORIGINAL SCALE IN INCHES FOR REDUCED PLANS 0 1 2 3

UNIT: 0703
PROJECT NUMBER & PHASE: 04000007431 CONTRACT NO.:04-265604

DISREGARD PRINTS BEARING EARLIER REVISION DATES — REVISION DATES 12/04/12 2/6/13 3/28/13 4/29/13

SHEET 23 OF 24

FILE -> 35-0350-z-ltb01.dgn

USERNAME -> s120183 DATE PLOTTED -> 18-NOV-2013 TIME PLOTTED -> 13:11

DIVISION OF ENGINEERING SERVICES – GEOTECHNICAL SERVICES					
As-Built Log of Test Borings sheet is considered an informational document only. As such, the State of California registration seal with signature, license number and registration certificate expiration date confirm that this is a true and accurate copy of the original document. This drawing is available and presented only for the convenience of any bidder, contractor or other interested party.					
DIST.	COUNTY	ROUTE	POST MILES–TOTAL PROJECT	Sheet No.	Total Sheets
04	SM	1	40.6/40.9	157	157
REGISTERED CIVIL ENGINEER				2/6/13 DATE	
SAN PEDRO CREEK BRIDGE (REPLACE)					
LOG OF TEST BORINGS 2 OF 2					
NOTE: A COPY OF THIS LOG OF TEST BORINGS IS AVAILABLE AT OFFICE OF STRUCTURE MAINTENANCE AND INVESTIGATIONS, SACRAMENTO, CALIFORNIA			UNIT: 0703 PROJECT NUMBER & PHASE: 04000007431		
BRIDGE No.	Sheet	of			
35-0350	24	24			

REGISTERED PROFESSIONAL ENGINEER
GARY PARIKH
G.E. 666
Exp. 12/31/13
GEOTECHNICAL
STATE OF CALIFORNIA

FED. ROAD DIV. NO.	STATE	REGIS. NO.	FISCAL YEAR	SHEET NO.	TOTAL SHEETS
7	CAL.			11	11

DIST.	COUNTY	ROUTE	SECTION	SHEET NO.	TOTAL SHEETS
IV	SM				

September 20, 1954

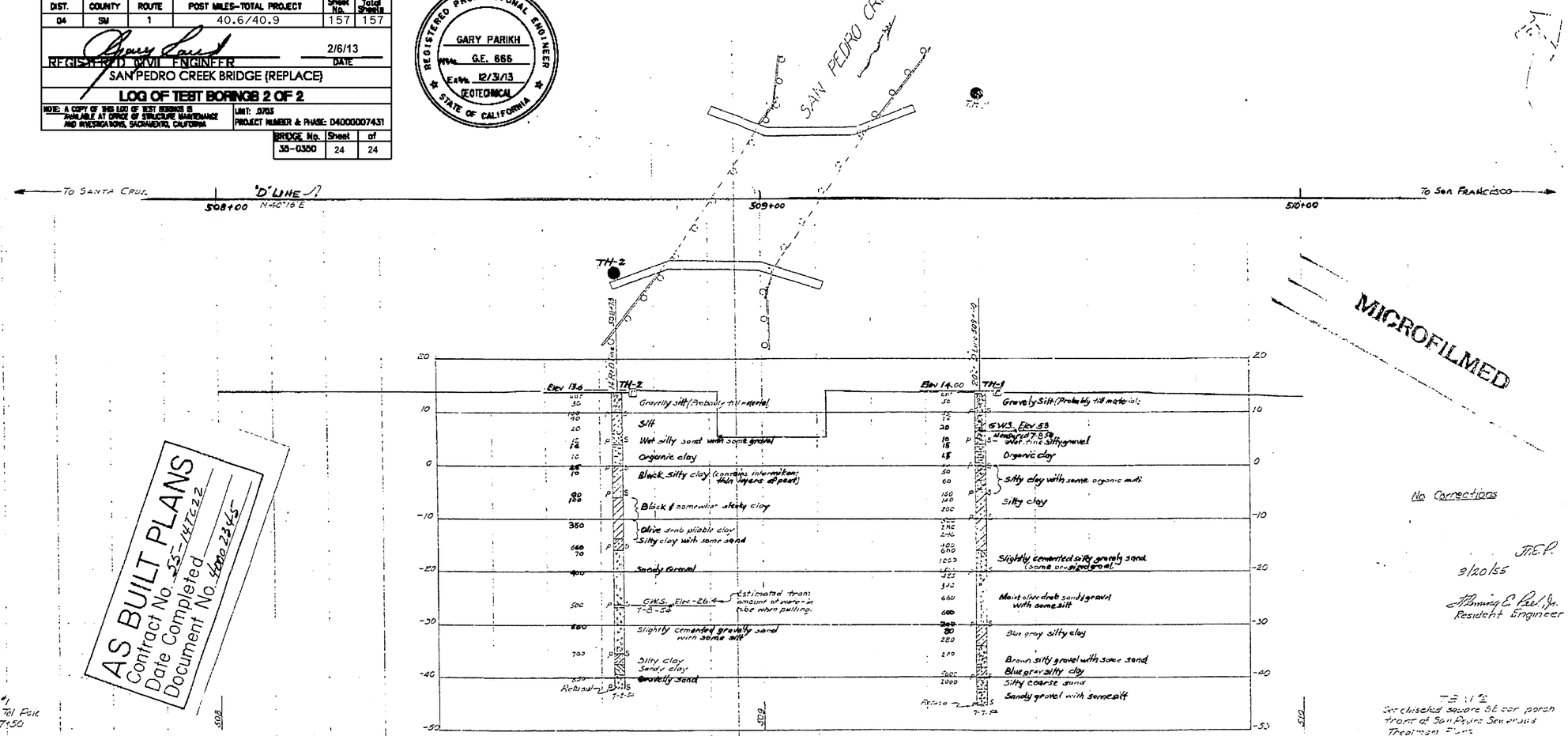

MICROFILMED

AS BUILT PLANS
Contract No. 55-141422
Date Completed
Document No. 4000223445

No Corrections

J.E.P.
3/20/55
Fleming E. Reel Jr.
Resident Engineer

T.B.M. #1
Set P.R. Spike in Tel Pole
±50 Ft. 'D' Line 507+50
Elev. 10.65

T.B.M. #2
Set chiseled square 56 cor. porch
front of San Pedro Sewerage
Treatment Plant
Elev. 7.996

BRIDGE DEPARTMENT

FIELD STUDY		
DRAWN	A.H.	7-6-56
CHECKED	J.G.G.	7-7-56
Approval Recommended by:		

Classification of Material Based on Standard Grade Size Limits

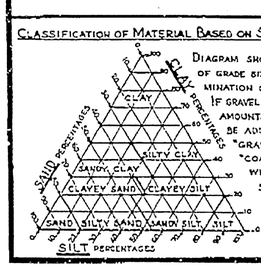

Diagram showing the basis for estimates of grade size distribution used in determination of class names. If gravel is present in appreciable amounts the term "gravelly" may be added to the class name, viz. "gravelly sand." The terms "coarse," "medium" and "fine" when used to describe sand, silt and gravel refer to standard grade size limits.

Legend of Earth Materials

- Gravel
- Sand
- Silt
- Clay
- Sandy Clay or Clayey Sand
- Sandy Silt or Silty Sand
- Silty Clay or Clayey Silt
- Peat and/or Organic Matter
- Fill Material
- Igneous Rock
- Sedimentary Rock
- Metamorphic Rock

Legend of Boring Operations

- Plan of any boring
- Penetrometer
- 2¼" Cone Penetrometer
- Sampler Boring (Dry)
- Rotary Boring (Wet)
- Auger Boring (Dry)
- Jet Boring
- Core Boring
- Test pit

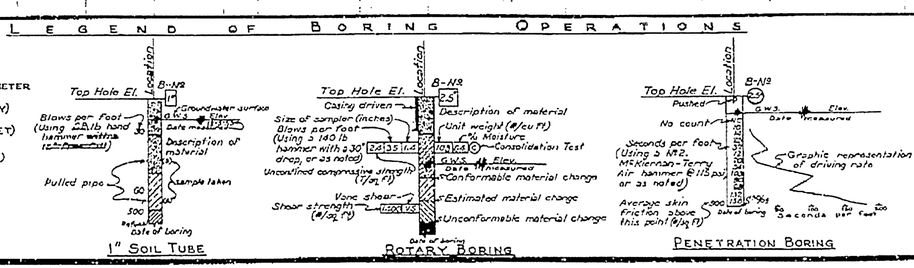

Notes

The contractor's attention is directed to Section 2, Article (c) of the Standard Specifications and to the Special Provisions accompanying this set of plans.

Classification of earth material as shown on this sheet is based upon field inspection and is not to be construed to imply mechanical analysis.

STATE OF CALIFORNIA
DEPARTMENT OF PUBLIC WORKS
DIVISION OF HIGHWAYS

PEDRO CREEK

LOG OF TEST BORINGS

SCALE	BRIDGE 35-53	FILE	DRAWING