INFORMATION HANDOUT

For Contract No. 04-264H34

Identified by
Project ID 0414000221

MATERIALS INFORMATION

1. Foundation Report, Marin/Sonoma Narrow Mitigation Project, Orange Sound Wall on NB Route 101 and Olive Ave UC Modification, Novato, California

2. Bridge No. 27-0092R as-built drawings

3. Results of Environmental Soil Sampling, Marin/Sonoma Narrow Mitigation Project, Orange Sound Wall on NB Route 101, Novato, California

4. Water Quality Information Handout

5. Bay Area Clean Water Agencies (BACWA): Bay Area Recycled Water Commercial Truck Fill Location Guide, January 2015

1. Foundation Report, Marin/Sonoma Narrow Mitigation Project, Orange Sound Wall on NB Route 101 and Olive Ave UC Modification, Novato, California

FOUNDATION REPORT

MARIN/SONOMA NARROWS MITIGATION PROJECT
ORANGE SOUND WALL ON NB ROUTE 101 AND
OLIVE AVENUE UC MODIFICATION
NOVATO, CALIFORNIA
EA 04-264H3 PROJECT ID: 0414000221
BRIDGE NUMBER: 27-0092R
MSN L1A2 MARIN MITIGATION/SOUNDWALL PROJECT

Submitted to:
Ms. Mahvash Harms
Biggs Cardosa Associates
101 California Street, Suite 875
San Francisco, California

Prepared by:
ENGEO Incorporated

March 13, 2015
Revised April 24, 2015

ENGEO Project No.
11667.000.000

Copyright © 2015 By ENGEO Incorporated. This Document May Not Be Reproduced In Whole Or In Part By Any Means Whatsoever, Nor May It Be Quoted Or Excerpted Without The Express Written Consent Of ENGEO Incorporated

ENGEO
Expect Excellence

GEOTECHNICAL
ENVIRONMENTAL
WATER RESOURCES
CONSTRUCTION SERVICES

ENGEO Project No.
11667.000.000

EA 04-264H3
Project ID: 0414000221
MSN L1A2 MARIN MITIGATION/SOUND WALL PROJECT

March 13, 2015
Revised April 24, 2015

Ms. Mahvash Harms
Biggs Cardosa Associates
101 California Street, Suite 875
San Francisco, CA 94111

Subject: Marin/Sonoma Narrows Mitigation Project
Orange Sound Wall on NB Route 101 and Olive Avenue UP Modification
Novato, California

FOUNDATION REPORT

Dear Ms. Harms:

As requested, we have completed a foundation exploration for the proposed Orange Sound Wall along the northbound direction of Route 101 and the Olive Avenue undercrossing (UC) modification in Novato, California, as part of the Marin/Sonoma Narrows Mitigation Project. The attached report is intended to provide geotechnical and construction recommendations for the proposed sound wall and underpass bridge modification.

Based on our study, it is our opinion that the currently proposed sound wall and underpass bridge modification is feasible from a geotechnical standpoint, provided the recommendations included in this report are incorporated into the project plans and implemented during construction.

We look forward to continuing to work with you on this project. If you have any questions regarding the findings or recommendations of our study, please do not hesitate to contact us.

Sincerely,

ENGEO Incorporated

Daniel Bernardi, PE

Jeff Fippin, GE

REGISTERED PROFESSIONAL ENGINEER
JEFFREY A. FIPPIN
No. 2631
Exp. 6/30/2015
GEOTECHNICAL
STATE OF CALIFORNIA

Yan Lap Janet Kan, GE, CEG
db/jk/jf/bvv

TABLE OF CONTENTS

Letter of Transmittal

1.0 INTRODUCTION 1
- **1.1 PROJECT DESCRIPTION 1**
- **1.2 FIELD EXPLORATION 1**
- **1.3 LABORATORY TESTING 2**

2.0 SITE GEOLOGY AND SUBSURFACE CONDITIONS 3
- **2.1 REGIONAL AND SITE GEOLOGY 3**
- **2.2 FAULTING AND SEISMICITY 3**
- **2.3 SUBSURFACE SOILS 3**

3.0 GEOTECHNICAL AND GEOLOGIC HAZARDS 4
- **3.1 FAULT RUPTURE 4**
- **3.2 GROUND SHAKING 4**
- **3.3 LIQUEFACTION 4**
- **3.4 LATERAL SPREADING 5**
- **3.5 SOIL CORROSIVITY 5**

4.0 CONCLUSIONS AND RECOMMENDATIONS 6
- **4.1 SEISMIC DESIGN CRITERIA 6**
- **4.2 FOUNDATION DESIGN 7**
  - 4.2.1 Foundation Type 7
  - 4.2.2 Sound Wall 8
  - 4.2.3 Olive Avenue Underpass Modification 8
  - 4.2.4 CIDH Pile Construction 10
- **4.3 PAVEMENT DESIGN 11**
- **4.4 EARTHWORK AND FILL PLACEMENT 12**
  - 4.4.1 Acceptable Fill 12
  - 4.4.2 Fill Compaction 12

5.0 LIMITATIONS AND UNIFORMITY OF CONDITIONS 12

SELECTED REFERENCES
FIGURES
APPENDIX A – Boring Logs (current study and historic LOTB)
APPENDIX B – Laboratory Test Results
APPENDIX C – Corrosion Analysis
APPENDIX D – Design Calculations
APPENDIX E – Supplemental Subsurface Data From 2008 Borings
APPENDIX F – Response to Caltrans Comments

1.0 INTRODUCTION

This report is intended to provide geotechnical recommendations for the Orange Sound Wall along the northbound direction of Route 101 and the Olive Avenue undercrossing modification in Novato, California.

This report was prepared for the exclusive use of Biggs Cardosa Associates, the Transportation Authority of Marin and its design team. In the event that any changes are made in the character, design, or layout of the proposed sound wall and undercrossing (UC) bridge, the conclusions and recommendations contained in this report should be reviewed by ENGEO to determine whether modifications to the report are necessary. This document may not be reproduced in whole or in part by any means whatsoever, nor may it be quoted or excerpted without the express written consent of ENGEO or as permitted by contract.

1.1 PROJECT DESCRIPTION

Based on conceptual project plans provided by Biggs Cardosa Associates, we understand that a new sound wall is planned along the northbound lanes of Route 101 roughly between De Long Avenue and the Olive Avenue UC bridge in Novato, California (Figure 1). The soundwall is subdivided into three segments labeled as SW 1, Soundwall on Bridge, and SW 2. SW 1 extends from approximately Station 348+50 to Station 355+22. SW 2 extends from approximately Station 356+69 to 361+00. The proposed sound wall will be designed and constructed in accordance with the 2010 Caltrans Standard Plan Sheet B15-6. The sound wall is planned within the currently landscaped areas along the northbound shoulder, as shown on Figure 2. We understand that the existing 3- to 4-foot-high earthen berm along the northbound shoulder will be removed to create a relatively flat surface for sound wall construction.

In addition, an overhang will be added to the eastern edge of the Olive Avenue UC bridge (northbound) to accommodate the proposed sound wall. The overhang will be approximately 1 inch beyond the edge of the existing barrier. The bridge deck integrates two new cast-in-drill-hole (CIDH) piles installed within the footprint of the existing bridge abutments. CIDH piles have been selected for this project to be consistent with the planned foundation type for the soundwalls and achieve economy of using a single type of foundation construction. Additionally, CIDH foundations were selected to reduce potential noise and vibration impacts on nearby residences from driven piles.

1.2 FIELD EXPLORATION

We performed a field exploration on December 5, 2014. The exploratory borings were drilled using a track-mounted drill rig equipped with 4-inch-diameter solid flight augers. Drive samples were obtained using a 3.25-inch-outer-diameter Modified California split-spoon sampler lined with brass liners or a Standard Penetration Test (SPT) sampler (1.4-inch-inside-diameter). The samplers were driven into the ground using a 140-lb automatic-trip hammer free falling from a height of 30 inches. The blows per foot recorded on the attached boring logs represent the

accumulated number of blows required to drive the last 12 inches or less. The blow counts have not been converted using any correction factors.

We used the field logs to develop the report logs in Appendix A. The logs depict subsurface conditions at the exploration locations for the date of exploration; however, subsurface conditions may vary with time. In addition, stratification lines represent the approximate boundaries between soil types and the transitions may be gradual.

Table 1.2-1 summarizes the exploration location, approximate elevation (using vertical datum NAVD88) and drilled depth. Approximate locations of the borings are presented graphically on Figure 2.

TABLE 1.2-1
Summary of Exploration Locations

Exploration Location	Date Sampled	Top Elevation (MSL) (feet)	Bottom Elevation (MSL) (feet)	Total Depth (feet)
1-B1	12/5/2014	44	34	10
1-B2	12/5/2014	35	10	26

We permitted and backfilled the borings in accordance with the requirements of Marin County Environmental Health Services.

1.3 LABORATORY TESTING

The following laboratory tests were performed on selected soil samples to determine their engineering properties.

TABLE 1.3-1
Laboratory Tests Performed

Characteristic	Test Method*	Location of Results Within this Report
Natural Unit Weight	ASTM D-2216	Boring Logs, Appendix A
Natural Moisture Content	ASTM D-2216	Boring Logs, Appendix A
Atterberg Limits	ASTM D-4318	Appendix B
Gradation	ASTM D-422	Appendix B
Unconfined Compression	ASTM D2166	Appendix B

* Testing was performed in general accordance with ASTM Test Method procedures

In addition, two soil samples were submitted to Cerco Analytical under a chain of custody for pH (CT 643), chlorides (CT422), sulfates (CT 417), resistivity (CT 643), and conductivity (ASTM D1125M) testing. Corrosivity test results are included in Appendix C.

2.0 SITE GEOLOGY AND SUBSURFACE CONDITIONS

2.1 REGIONAL AND SITE GEOLOGY

The site is located within the region of coastal California referred to as the Coast Ranges geomorphic province. The Coast Ranges have experienced a complex geological history characterized by Late Tertiary folding and faulting that has resulted in a series of northwest-trending mountain ranges and intervening valleys. The San Francisco Bay Valley and enclosing peripheral hills, in association with the two main fault structures (the San Andreas and Hayward-Rodgers Creek faults), comprise the main geological features of the local Bay Area. Diverse crustal movements within this tectonic framework are responsible for the morphology and seismicity of the area.

The site is located within the Novato Valley approximately 4 miles west of San Pablo Bay. Graymer (2000) has mapped the geology at the site to be underlain by Quaternary Alluvium (Qal) and Cretaceous and Jurrassic Metamorphic Rocks (KJfm). The regional mapped geology is shown on Figure 3.

2.2 FAULTING AND SEISMICITY

No known active faults cross the property and the site is not located within an Alquist-Priolo Special Study Zone. However, large (greater than Moment Magnitude 7) earthquakes have historically occurred in the Bay Area and many earthquakes of low magnitude occur every year. The nearest active faults to the site are the Rodgers Creek-Hayward Fault, located approximately 7½ miles to the northeast; the San Andreas Fault, located approximately 13 miles to the west; and the West Napa Fault, located about 17½ miles to the northeast (Figure 4).

2.3 SUBSURFACE SOILS

As shown on Figure 2, the proposed sound wall alignment crosses from an area of mapped bedrock to fill and back to bedrock from south to north. We anticipate the south and north ends of the sound wall to encounter shallow bedrock during foundation construction. Based on subsurface conditions encountered at Boring 1-B1, we anticipate shallow bedrock areas to consist of 3 to 4 feet of gravel in a clay and silt matrix over weak bedrock (Metamorphic Rock).

Boring 1-B2 was performed within the area of the sound wall alignment outside the mapped bedrock zone. This boring encountered approximately 6 feet of loose to dense gravelly fill over 18 feet of loose to dense clayey sand bedrock derived fill, extending to approximately Elevation 10 feet. Native alluvial soil consisting of stiff lean clay was encountered below Elevation 10 feet and extended to the termination depth of Boring 1-B2.

According to the log of test borings (LOTB) included in the as-built plans for the Olive Avenue UC bridge, native alluvial soil consisting of stiff to hard silty clay and dense silty sand and gravel

was encountered between approximately Elevation 12 and the termination Elevation of -60 feet[1]. The LOTB from the Olive Avenue UC as-built plans are included in Appendix A.

Due to recent rain, we encountered perched groundwater in Borings 1-B1 and 1-B2 roughly 3 feet below existing ground surface at the time of drilling. Based on the LOTB from the Olive Avenue UC as-built plans, groundwater was encountered between Elevations 0 and 5 feet.

Fluctuations in the level of groundwater may occur due to variations in rainfall, irrigation practice, and other factors not evident at the time measurements were made. Based on the available information, we recommend a design groundwater level at Elevation 5 feet.

3.0 GEOTECHNICAL AND GEOLOGIC HAZARDS

3.1 FAULT RUPTURE

Since there are no known active faults crossing the proposed bridge site and the site is not located within an Earthquake Fault Special Study Zone, it is our opinion that ground rupture is unlikely at the subject property.

3.2 GROUND SHAKING

As discussed in Section 2.3, the project site is located in a seismically active region. An earthquake of moderate to high magnitude generated within the San Andreas fault could cause significant ground shaking at the project site. The degree of shaking is dependent on the magnitude of the event, the distance to its zone of rupture and local geologic conditions. Seismic design criteria is discussed in Section 4.1 of this report.

3.3 LIQUEFACTION

Liquefaction is a phenomenon in which saturated cohesionless soils are subject to a temporary loss of shear strength because of pore pressure build-up under the reversing cyclic shear stresses associated with earthquakes. According to the liquefaction map by Wentworth et al. (2000), the site is considered to have a very low to low susceptibility to liquefaction; while this is a regional map, it does provide a general indication of overall susceptibility based on geologic formation.
We reviewed existing LOTBs from the as-built plans for the Olive Avenue Undercrossing (1968) and Olive Avenue Undercrossing Widening (2008) to evaluate the susceptibility of the soil to liquefaction. On April 21, 2015, we received via electronic mail laboratory index testing, field strength testing and logs of continuous Shelby tube samples for the 2008 borings, presented in Appendix E.

[1] The as-built plans indicated that the Olive Avenue UP bridge deck slopes from north to south between Elevations 29.54 and 30.62 feet. The elevations reported in this report are adjusted to the match the current project datum by adding 2 feet to the elevations shown on the LOTB.

Based on the information reviewed, the native soil beneath the existing bridge abutments generally comprises layers of stiff to hard clay and silt. Boring B-6, the closest boring to both abutments, encountered approximately 5 feet of dense, coarse sand with gravel (~Elevation -10 to -15 feet). The blow counts presented on the LOTB for Boring B-6 indicated that this sandy layer is too dense to be potentially liquefiable.

Borings R-08-007 and R-08-008 advance in 2008 encountered a layer of stiff, low plasticity clay interbedded with thin layers of sand between approximately El 5 to -5 feet. Based on the Shelby tube logs provided, the layers of sand ranged from 3 to 6 inches thick. The thin sand lenses appear to be interbedded in a clay matrix and discontinuous across the Borings R-08-007, R-08-008 and nearby Boring B-1 located on the opposite side of the roadway. Borings R-08-007 and R-08-008 indicate that top of bedrock is at approximately Elevation -50 feet.

The Caltrans report, "Foundation Report for the Olive Avenue Undercrossing (UC) Bridge Widening" dated October 26, 2009, included a liquefaction analysis of Borings R-08-007 and R-08-008. The soil in the borings is classified as clay-like in the analysis performed by Caltrans, which is consistent with the information forwarded to us by Caltrans. The 2009 Caltrans report concluded, *"The potential for liquefaction at this site is low"*.

Based on our interpretation of the LOTBs combined with supplemental information provided to us related to the 2008 Caltrans borings, the native alluvium below the bridge abutments generally has a high clay content with dense (high blow counts) sand layers. The interbedded sandy layers encountered in the 2008 borings appears to be loose, but because they are thin and appear to be discontinuous laterally, the effects of liquefaction induced settlement, if liquefaction were to occur, is expected to be nominal. Therefore, we concur that the risk of liquefaction and liquefaction-induced effects, such as settlement, in the vicinity of the bridge abutment is low.

3.4 LATERAL SPREADING

Lateral spreading is a failure within a nearly horizontal soil zone, commonly associated with liquefaction, which causes the overlaying soil mass to move toward a free face or down a gentle slope. As we discussed in Section 3.3, the liquefaction potential at the site is low, therefore, lateral spreading is expected to be insignificant.

3.5 SOIL CORROSIVITY

Two representative samples of the site soils were collected to evaluate the possible corrosion impacts on the proposed deep foundations. Soil samples were transported to CERCO Analytical Inc. for full corrosivity testing. The test results are provided in Table 3.5-1. Additionally, Caltrans performed four corrosion tests on samples from Borings R-08-007 and R-08-008; the results of these tests are also included in Table 3.5-1.

TABLE 3.5-1
Corrosivity Test Results

Sample ID	pH	Min. Resistivity (ohms-cm)	Conductivity (umhos/cm)	Chloride* (mg/kg)	Sulfate (mg/kg)
1-B1 @ 8.5'	8.1	-	300	N.D.	72
1-B2 @ 7' and 10.5'	8.3	2,200	-	N.D	150
R-08-007, 3417-6P (from 5 feet)	8.5	4,300	N/R	N/R	N/R
R-08-007, 3417-7P (from 20 feet)	8.1	3,900	N/R	N/R	N/R
R-08-008, 3417-8P (from 15 feet)	8.1	3,900	N/R	N/R	N/R
R-08-008, 3417-9P (from 40 feet)	7.9	1,400	N/R	N/R	N/R

Note: ND = not detected above the reporting limit of 15 mg/kg.
NR = not recorded

According to Caltrans Corrosion Guidelines Version 1.0 (2003), site soils are considered corrosive if the Chloride concentration is 500 ppm or above, sulfate concentration is 2,000 ppm or above, or pH is 5.5 or less. Based on these criteria, site soils are considered corrosive to structural elements based on resistivity. Conductivity testing was performed on the sample recovered from 1-B1 at a depth of 8½ feet due to limited recovery on this sample.

4.0 CONCLUSIONS AND RECOMMENDATIONS

Based on the results of the foundation exploration presented in this report, it is our opinion that the proposed sound wall and Olive Avenue underpass modification are feasible from a geotechnical standpoint. Geotechnical recommendations provided in the following sections should be considered during project design and implemented during construction. Recommendations on grading and foundations design are provided in the following sections of this report.

4.1 SEISMIC DESIGN CRITERIA

As part of these bridge foundation recommendations, we have evaluated the Acceleration Response Spectra (ARS) for the project site. We developed the ARS curve following the 2013 Caltrans Seismic Design Criteria Version 1.7 (Caltrans SDC, 2013). The 2013 Caltrans SDC requires comparing and enveloping the ARS curves calculated from the following:

- Deterministic Criteria based on late-Quaternary faults capable of producing a moment magnitude of 6.0 or greater.

- Probabilistic Criteria based on a 5 percent in 50 years probability of exceedance ground motion (975-year return period).

- Minimum Spectrum based on a Moment Magnitude 6.5 earthquake on a strike-slip fault occurring at a distance of 12 km from site.

The following faults were considered for the ARS curve for this project:

TABLE 4.1-1
Faults Associated with Caltrans ARS Curve

Fault Name	Mmax*	Fault Type	Distance From Fault (km)
Rodgers Creek	7.3	Strike-Slip	12.0
San Andreas	8.0	Strike-Slip	21.7
Hayward (North)	7.3	Strike-Slip	17.2

* Based on Caltrans Fault Database

The deterministic criteria is controlled by an event on the Rodgers Creek (12 km from the site), which is a strike-slip fault capable of generating a design earthquake with a maximum rupture (Mmax) of 7.3. The probabilistic criteria are based on source data from the 2008 United States Geological Survey (USGS) National Seismic Hazard Map. The governing deterministic and probabilistic ARS curves, and the resulting ARS curve developed in accordance with the 2013 Caltrans SDC, include near-fault directivity effects.

The ARS curve developed in accordance with the 2013 Caltrans SDC procedures is shown on Figure 5. The ARS curve was developed for a Site Class D with an approximate average shear wave velocity of the upper 30 meters (VS30) of 270 meters per second (about 885 feet per second). Near-fault adjustment factors were included in the spectra in accordance with the 2013 SDC.

4.2 FOUNDATION DESIGN

4.2.1 Foundation Type

After discussion with the structural designer, 16-inch cast-in-drilled-hole (CIDH) concrete piles are considered the preferred foundation system for the sound wall, and 24-inch (CIDH) concrete piles are considered the preferred foundation system for the Olive Avenue underpass modification.

As previously mentioned, CIDH piles were considered because they would match the planned foundations for the soundwalls, and it would be more economical to use the same pile installation equipment and reduces mobilization cost. Driven piles were not considered because

of assumed negative impacts from noise and vibration on the residences nearby the new bridge pile locations.

4.2.2 Sound Wall

The Orange Sound Wall along east shoulder of northbound Route 101 (SW 1 and SW 2) should be founded on CIDH foundations in accordance with the recommendations presented in Caltrans 2010 revised standard plan for masonry block wall on a Type 736S/SV Barier, Plan Number B15-6. We understand that the existing 3- to 4-foot-high berm within the sound wall alignment will be removed and flattened to provide a relatively level (maximum 5 percent gradient) ground condition on both sides of the sound wall. The ground surface along the east side of the proposed sound wall will be relatively level for a horizontal distance of at least 5 feet. Based on the planned finished grade in the vicinity of the sound wall, it is our opinion that "Case I" condition on Standard Plan Sheets B15-6 and B15-8 is applicable. A soil friction angle of 30 degrees can be considered for the sound wall foundation design.

4.2.3 Olive Avenue Underpass Modification

The proposed Olive Avenue underpass modification can be supported on CIDH piles as planned. Based on information provided by Biggs Cardosa Associates, we analyzed 24-inch CIDH piles for specific structural loads provided for Abutments 1 and 2. The vertical pile capacity only considers skin friction along the piles. Our analysis of capacity is based on the guidelines provided in the Federal Highway Administration (FHWA) Publication FHWA-NHI-10-016 "Drilled Shafts: Construction Procedures and LRFD Design Methods" (Reese and O'Neill, 1989). The design depths were determined based on the provided nominal capacities. Abutment 1 is designed using the soil data from previous boring B-6, which was drilled in close proximity to the planned pile. To design Abutment 2, we considered both the soil information in Boring B-6 as well as the soil typical of Borings R-08-007 and R-08-008. The analyses of both abutment piles are attached as Appendix D.The abutment pile design recommendations are shown on Table 4.2.3-1.

TABLE 4.2.3-1
Foundation Design Data

Support No.	Design Method	Pile Type	Finish Grade Elevation (ft)	Bottom of Footing Elevation (ft)	Pile Cap Size (ft)		Permissible Settlement (inch)	No. of Piles per Support
					B	L		
Abutment 1	WSD	24-inch CIDH	23.3 +/-	20.0 +/-	N/A	N/A	1.0	1
Abutment 2	WSD	24-inch CIDH	21.4 +/-	18.2 +/-	N/A	N/A	1.0	1

Note: Groundwater is assumed at Elevation 5 feet, approximately 26½ feet below the existing Olive Avenue UP bridge deck.

TABLE 4.2.3-2
Foundation Loads

Support No.	Service-I Limit State (kips)			Strength Limit State (Controlling Group, kips)				Extreme Limit State (Controlling Group, kips)			
	Total Load		Permanent Loads	Compression		Tension		Compression		Tension	
	Per Supp.	Per Pile	Per Support	Per Support	Max Per Pile.	Per Supp.	Max Per Pile	Per Support	Max Per Pile.	Per Supp.	Max Per Pile
Abutment 1	-	136	-	-	-	-	-	-	-	-	-
Abutment 2	-	193	-	-	-	-	-	-	-	-	-

TABLE 4.2.3-3
Load Demands

Support No.	Design Method	Service Loads (kips)		Required Nominal Resistance (kips)				Required Nominal Resistance (kips)	
				Strength Limit		Extreme Limit			
		Comp.	Tens.	Comp.	Tens.	Comp.	Tens.	Comp.	Tens.
Abutment 1	WSD	136	N/A	N/A	N/A	N/A	N/A	280	N/A
Abutment 2	WSD	193	N/A	N/A	N/A	N/A	N/A	390	N/A

TABLE 4.2.3-4
Pile Data Table

Location	Pile Type	Nominal Resistance (kips)		Finish Grade (ft)	Bottom of Footing Elev. (ft)	Pile Length . (ft)	Cut off Elevation (ft)	Design Tip Elev. (ft)	Specified Tip Elev. (ft)
		Compression	Tension						
Abutment 1	24-inch CIDH	280	N/A	23.3 +/-	20.0 +/-	37	20.3	-16.7	-16.7
Abutment 2		390	N/A	21.4 +/-	18.2 +/-	42	18.4	-23.6	-23.6

4.2.4 CIDH Pile Construction

The following guidelines should be used during construction of CIDHs.

1. Loose soils should be cleaned from the bottom of the pile boreholes using a cleanout bucket.

2. Pile boreholes should be inspected and approved by the geotechnical engineer prior to the installation of reinforcement. Extreme care should be implemented in drilling, placement of steel, and the pouring of concrete is essential to avoid excessive disturbance of pile boring walls.

3. Concrete placement by pumping or tremie tube to the bottom of the pile borings is recommended. Specifications should require that sufficient space be provided in the reinforcing cage during fabrication to allow the insertion of a tremie tube for concrete placement. The reinforcing cage should be installed and the concrete pumped immediately after drilling is completed.

4. Sandy soils were encountered in the exploration and these materials are susceptible to caving. If caving occurs, a temporary casing or wet construction method may be required during construction. Casings should have an outer diameter equal to or exceeding the pile diameter. Temporary casing should be placed tight-in-hole. Vibratory or impact hammer with or without center-relief drilling can be used to install the temporary casing provided the ground vibrations are monitored for potential movement; casing installation using this method should be suspended if excessive movement is detected. The temporary casing should be retrieved as the concrete is being poured, while always maintaining at least a 5-foot head of concrete inside the casing.

5. Groundwater level can fluctuate due to seasonal rainfall amount, local irrigation and groundwater recharge program and other man-made conditions. If groundwater is encountered during soundwall foundation construction, it should be controlled in accordance with Section 19-3.03D of the Caltrans Standard Specifications (2010).

6. Due to potential caving and groundwater condition, the wet method maybe necessary to construct the proposed CIDH piles for the Olive Avenue Undercrossing abutments. If the wet method is necessary, performance PVC monitoring tubes should be provided to allow for construction quality control by gamma-gamma logging. The minimum diameter of CIDH piles should be 24 inches, per Caltrans requirements, to allow for the monitoring tubes.

Drilling operations and concrete placement should be coordinated so that pile boreholes are left open a minimum amount of time. Depressions at the tops of the bridge abutment piles, resulting from drilling operations or from any other cause, should be backfilled to prevent ponding. Concrete collars occurring at the tops of the bridge abutment piles as a result of overpouring must be removed to prevent unnecessary uplift forces from being applied to the piles.

At the time of concrete placement, the volume of concrete entering the drilled holes should be monitored to verify that additional loss of ground has not occurred between drilling operations and the pouring of concrete.

4.3 PAVEMENT DESIGN

A new structural pavement section will be constructed in the inner and outer lanes of this section of highway. The "Geotechnical Materials Report" Provided by Parikh Consultants on June 2012 for this segmet of highway determined a design Traffic Index (TI) of 14, and an R-value of 15 for the inside lanes, and an R-value of 20 for the outside lanes. Based on these R-values and Traffic Indices, we recommend the following pavement sections:

TABLE 4.3-1
Pavement Sections

Traffic Index	R Value	Pavement		
		AC (inches)	AB (inches)	FDHMA (inches)
14	15	9	29	21
14	20	9	27	20

Notes: AC is asphalt concrete
AB is aggregate base class 2 material with minimum R = 78.
FDHMA is full depth hot mix asphalt

Pavement construction and materials should comply with the requirements of the Caltrans standard specifications, and the following minimum requirements.

- All pavement subgrades should be scarified to a depth of 12 inches below finished subgrade elevation, moisture conditioned to above optimum moisture content, and compacted to a minimum of 95 percent relative compaction.
- Subgrade soils should be in a stable, non-yielding condition at the time aggregate base materials are placed and compacted.
- Adequate drainage must be designed by the Project Civil Engineer such that the subgrade soils and aggregate base materials are not allowed to become saturated.
- Aggregate base materials should meet current Caltrans specifications for Class 2 aggregate base and should be compacted to at least 95 percent of maximum dry density at a minimum moisture content of optimum.
- Asphalt paving materials should meet current Caltrans specifications for asphalt concrete.

4.4 EARTHWORK AND FILL PLACEMENT

Prior to construction of the proposed sound wall and foundation of the Olive Avenue UC bridge modifications, the ground surface should be cleared of all surface and subsurface deleterious materials, including existing buried utilities, pavements and vegetation. Excavations extending below the planned finished site grades should be backfilled with suitable material compacted to the recommendations presented in Section 4.4.2. Soft or loose soil exposed at the planned finished grade should be removed or reworked in place.

4.4.1 Acceptable Fill

Soil should meet structure backfill requirements outlined in the Section 19 of the Caltrans Standard Specifications.

It should be noted that site soils, including materials from the existing earthern berm, have not been tested per Caltrans specifications for reuse as structure backfill. Additional testing should be performed prior to reusing site soil for backfill to confirm site soils suitability. Results should be provided to ENGEO for review and approval.

Import backfill, if planned, should be reviewed and approved by ENGEO at least 7 days prior to placement.

4.4.2 Fill Compaction

The exposed non-yielding surface to receive fill should be scarified to a depth of 12 inches, moisture conditioned, and recompacted to provide adequate bonding with the initial lift of fill. Fill should be compacted in accordance with Section 19 of the Caltrans Standard Specifications (2010) with the exception that laboratory compaction testing should be performed in accordance with ASTM D-1557. Backfill should be placed in loose lifts not exceeding 8 inches in thickness (or less when necessary), moisture-conditioned to at least 2 percentage points above optimum moisture content, and compacted to at least 95 percent relative compaction (for structure backfill). Jetting or flooding to compact backfill is not allowed. Heavy compaction equipment, such as vibratory rollers, dozers, or loaders, should not be used adjacent to the abutment walls in order to avoid damaging the walls due to large lateral earth pressures.

The contractor is responsible for conducting all trenching and shoring in accordance with CALOSHA requirements. Project consultants involved in utility design should specify pipe bedding materials.

5.0 LIMITATIONS AND UNIFORMITY OF CONDITIONS

This report represents geotechnical recommendations for design of the proposed sound wall and Olive Avenue UC modification in Novato, California. If changes occur in the nature or design of the project, we should be allowed to review this report and provide additional recommendations,

if any. It is the responsibility of the client to transmit the information and recommendations of this report to owners, architects, engineers, and designers for the project so that the necessary steps can be taken by the contractors and subcontractors to carry out such recommendations in the field. The conclusions and recommendations contained in this report are solely professional opinions.

The professional staff of ENGEO Incorporated strives to perform its services in a proper and professional manner with reasonable care and competence but is not infallible. There are risks of earth movement and property damages inherent in land development. We are unable to eliminate all risks or provide insurance; therefore, we are unable to guarantee or warrant the results of our work.

This document must not be subject to unauthorized reuse, that is, reuse without written authorization of ENGEO. Such authorization is essential because it requires ENGEO to evaluate the document's applicability given new circumstances, not the least of which is passage of time. If actual field or other conditions necessitate clarifications, adjustments, modifications or other changes to ENGEO's work, ENGEO must be engaged to prepare the necessary clarifications, adjustments, modifications or other changes before construction activities commence or further activity proceeds. If ENGEO's scope of services does not include onsite construction observation, or if other persons or entities are retained to provide such services, ENGEO cannot be held responsible for any or all claims arising from or resulting from the performance of such services by other persons or entities, and from any or all claims arising from or resulting from clarifications, adjustments, modifications, discrepancies or other changes necessary to reflect changed field or other conditions.

SELECTED REFERENCES

American Association of State Highway and Transportation Officials (AASHTO), 2007. AASHTO LRFD Bridge Design Specification, 4th Edition. Washington, DC: AASHTO.

Graymer R.W.et al. 2000; Geologic Map and Map Database of Parts of Marin, San Francisco, Alameda, Contra Costa, and Sonoma Counties, California. United States Geologic Survey (USGS).

Parikh Consultants, Inc. Geotechnical Material Report, MSA A3 NB HOV Lane Widening Project, 04-Mrn-101, PM R22.2/24.3; June 2012.

Reese L.C. and O'Neill M.W., 1989. Drilled Shafts: Construction Procedures and LRFD Design Methods; Federal Highway Administration (FHWA), Publication No. NHI-10-016.

State of California Department of Transportation, 1992, Bridge Design Details.

State of California Department of Transportation, September 2003, Corrosion Guidelines V1.0.

State of California Department of Transportation, October 2009, Foundation Report for the Olive Avenue Undercrossing (UC) Bridge Widening

State of California Department of Transportation, November 2013, Seismic Design Criteria Version 1.7.

State of California Department of Transportation, 2010, Standard Specifications.

State of California Department of Transportation, 2010, Standard Plans.

State of California Department of Transportation, 1975, Bridge Department, Engineering Geology Section, Log of Test Borings, Olive Ave U.C., Bridge No. 27-92, Post Mile 21.5, As-built Plans Sheet 12 of 12.

U.S. Department of Transportation Federal Highway Administration, Publication No. FHWA-NHI-10-016; Drilled Shafts: Construction Procedures and LRFD Design Methods, May 2010.

United States Geologic Survey (USGS), 2008; United States National Seismic Hazard Map

U.S. Navy 1982, Soil Mechanics, NAVFAC Design Manual 7.1, Naval Facilities Engineering Command, Arlington, VA.

Wentworth et al. 2000 Preliminary Maps of Quaternary Deposits and Liquefaction Susceptibility, Nine County San Francisco Bay Region, California, United States Geological Survey (USGS)

WGEP 1999, Earthquake Probabilities in San Francisco Bay Region: 2000-2030-A Summary of Findings, Open-File Report 99-517.

FIGURES

Figure 1 – Vicinity Map
Figure 2 – Site Plan
Figure 3 – Regional Geologic Map
Figure 4 – Regional Faulting and Seismicity
Figure 5 – Design Response Spectrum

FIGURES

COPYRIGHT © 2014 BY ENGEO INCORPORATED. THIS DOCUMENT MAY NOT BE REPRODUCED IN WHOLE OR IN PART BY ANY MEANS WHATSOEVER, NOR MAY IT BE QUOTED OR EXCERPTED WITHOUT THE EXPRESS WRITTEN CONSENT OF ENGEO INCORPORATED.

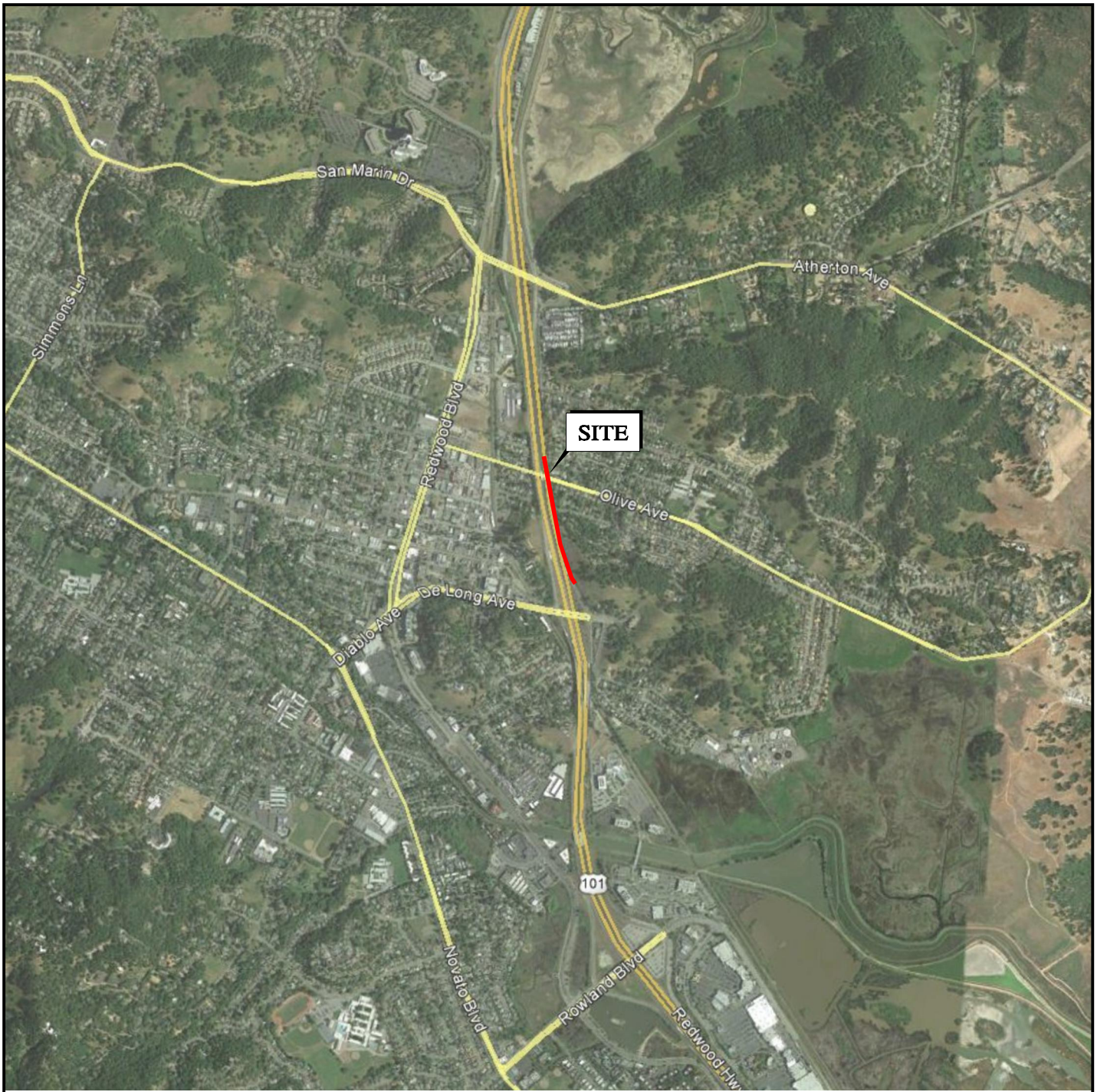

N

0 FEET 2000

0 METERS 1000

BASE MAP SOURCE: GOOGLE EARTH PRO

ENGEO Expect Excellence

VICINITY MAP

MARIN/SONOMA NARROW MITIGATION PROJECT

NOVATO, CALIFORNIA

PROJECT NO.:	11667.000.000
SCALE:	AS SHOWN
DRAWN BY:	SRP
CHECKED BY:	JK

FIGURE NO. 1

G:\Drafting\DRAFTING2_Dwg_10000 to 12999\11667\000\GEX\11667000000-1-VicinityMap-1214.dwg Plot Date: 12-19-14 SPATTERS

ORIGINAL FIGURE PRINTED IN COLOR

COPYRIGHT © 2014 BY ENGEO INCORPORATED. THIS DOCUMENT MAY NOT BE REPRODUCED IN WHOLE OR IN PART BY ANY MEANS WHATSOEVER, NOR MAY IT BE QUOTED OR EXCERPTED WITHOUT THE EXPRESS WRITTEN CONSENT OF ENGEO INCORPORATED.

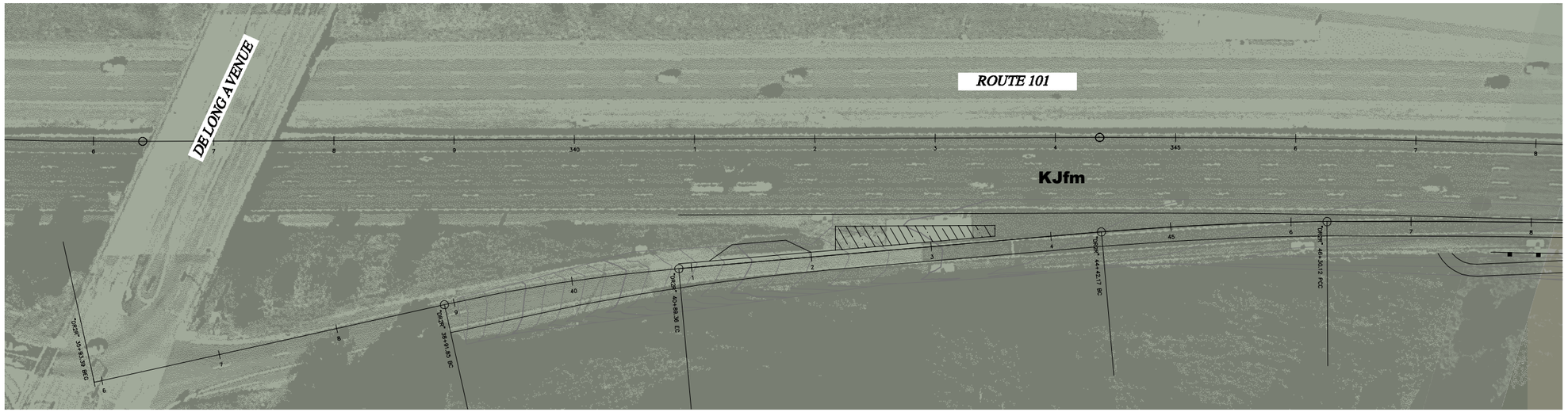

MATCHLINE (SEE BELOW)

MATCHLINE (SEE ABOVE)

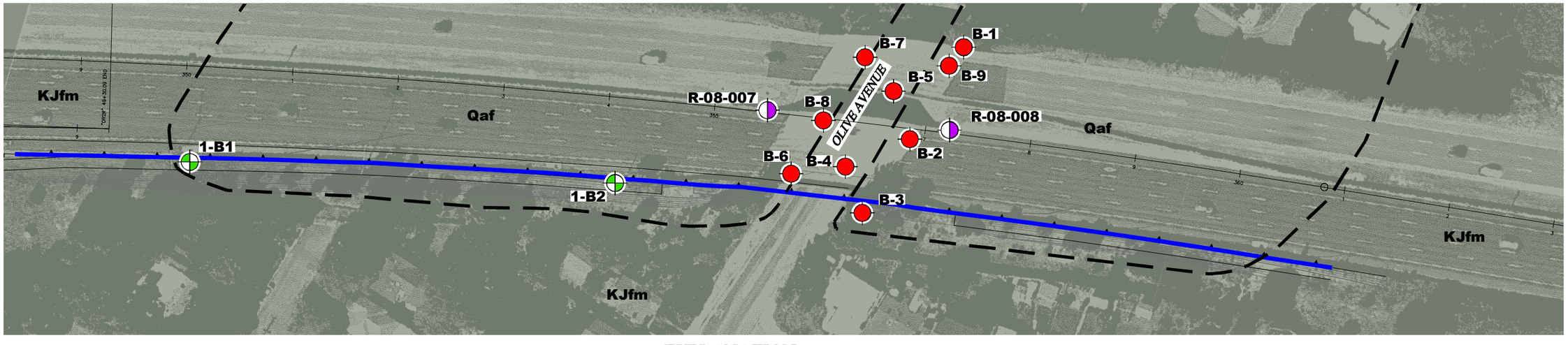

EXPLANATION

ALL LOCATIONS ARE APPROXIMATE

1-B2	BORING (ENGEO, 2014)
R-08-008	EXPLORATION (CALTRANS, 2008)
B-9	EXPLORATION (CALTRANS, 1968)
Qaf	FILL
KJfm	METAMORPHIC ROCKS (CRETACEOUS AND JURASSIC)
	GEOLOGIC CONTACT
	PROPOSED SOUNDWALL (SW1, SOUNDWALL ON BRIDGE, AND SW2)

N

0 FEET 100

0 METERS 50

BASE MAP SOURCE: BKF

ENGEO Expect Excellence

SITE PLAN

MARIN/SONOMA NARROW MITIGATION PROJECT

NOVATO, CALIFORNIA

PROJECT NO.: 11667.000.000

SCALE: AS SHOWN

DRAWN BY: SRP CHECKED BY: JK

FIGURE NO 2

ORIGINAL FIGURE PRINTED IN COLOR

G:\Drafting\DRAFTING2_Dwg_10000 to 12999\11667\000\GEX\11667000000-2-SitePlan-1214.dwg Plot Date: 3-13-15 dborde

COPYRIGHT © 2014 BY ENGEO INCORPORATED. THIS DOCUMENT MAY NOT BE REPRODUCED IN WHOLE OR IN PART BY ANY MEANS WHATSOEVER, NOR MAY IT BE QUOTED OR EXCERPTED WITHOUT THE EXPRESS WRITTEN CONSENT OF ENGEO INCORPORATED.

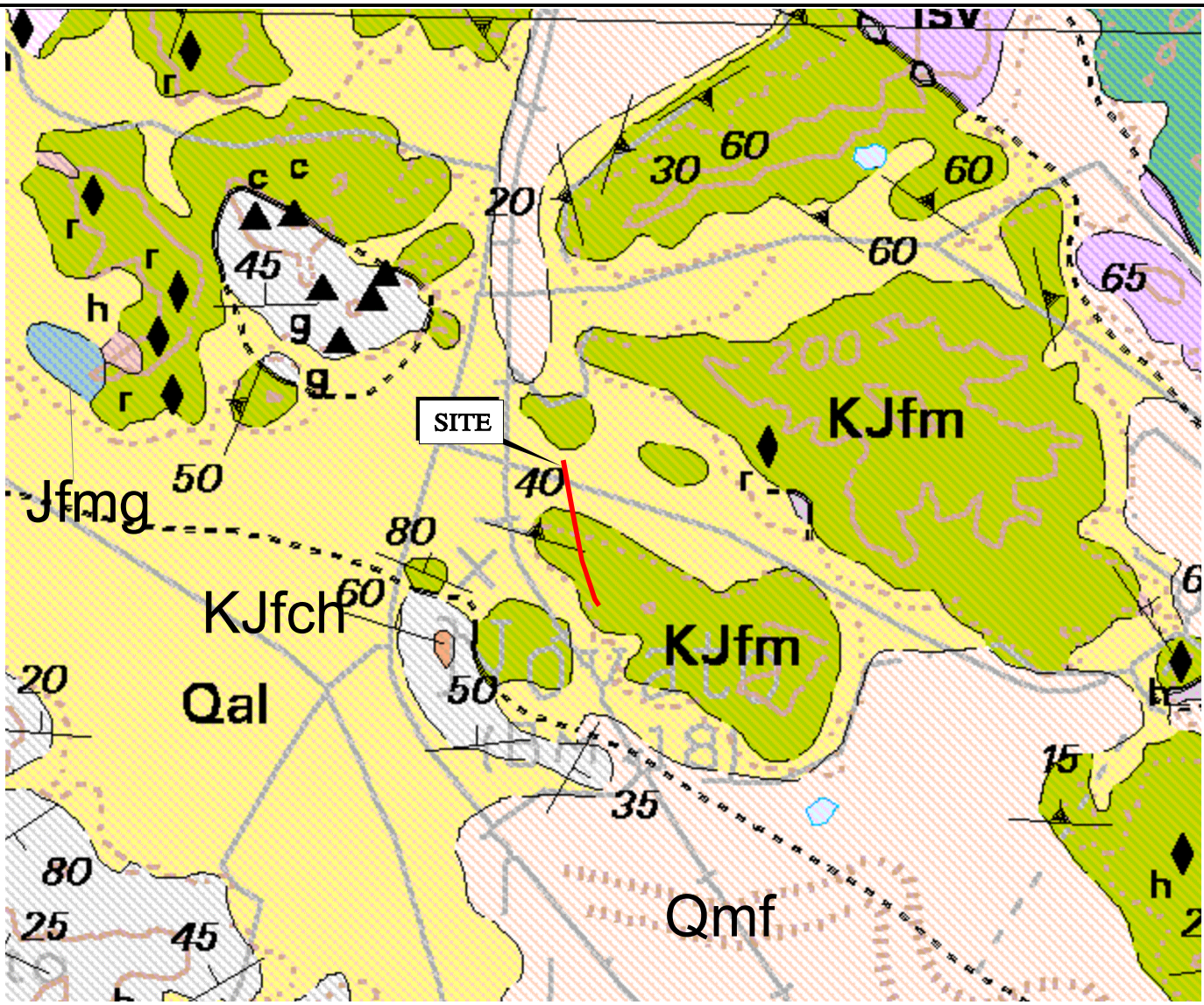

EXPLANATION

ALL LOCATIONS ARE APPROXIMATE

Qal	ALLUVIUM (QUATERNARY)
Qmf	ARTIFICIAL FILL OVER MARINE LAYER AND MARSH DEPOSITS (QUATERNARY)
Tsv	SONOMA VOLCANICS (PLIOCENE AND MIOCENE)
KJfm	METAMORPHIC ROCKS (CRETACEOUS AND JURASSIC)
KJfch	CHERT (CRETACEOUS AND JURASSIC)
JFmg	METAMORPHIC ROCKS (JURASSIC)

CONTACT

FAULT

THRUST FAULT

NORMAL FAULT

HIGH-GRADE MELANGE BLOCK

LOW GRADE MELANGE BLOCK

STRIKE AND DIP OF STRATA

FOLIATION INCLINED VERTICAL OVERTURNED

N

0 FEET 2000

0 METERS 1000

BASE MAP SOURCE: USGS, M.C. BLAKE JR., R.W. GRAYMER, D.L. JONES, 2000

ENGEO Expect Excellence

REGIONAL GEOLOGIC MAP

MARIN/SONOMA NARROW MITIGATION PROJECT

NOVATO, CALIFORNIA

PROJECT NO.: 11667.000.000		FIGURE NO.
SCALE: AS SHOWN		3
DRAWN BY: SRP	CHECKED BY: JK	

G:\Drafting\DRAFTING2_Dwg_10000 to 12999\11667\000\GEX\11667000000-3-RegionalGeologicMap-1214.dwg Plot Date:12-19-14 SPATTERS

ORIGINAL FIGURE PRINTED IN COLOR

COPYRIGHT © 2014 BY ENGEO INCORPORATED. THIS DOCUMENT MAY NOT BE REPRODUCED IN WHOLE OR IN PART BY ANY MEANS WHATSOEVER, NOR MAY IT BE QUOTED OR EXCERPTED WITHOUT THE EXPRESS WRITTEN CONSENT OF ENGEO INCORPORATED.

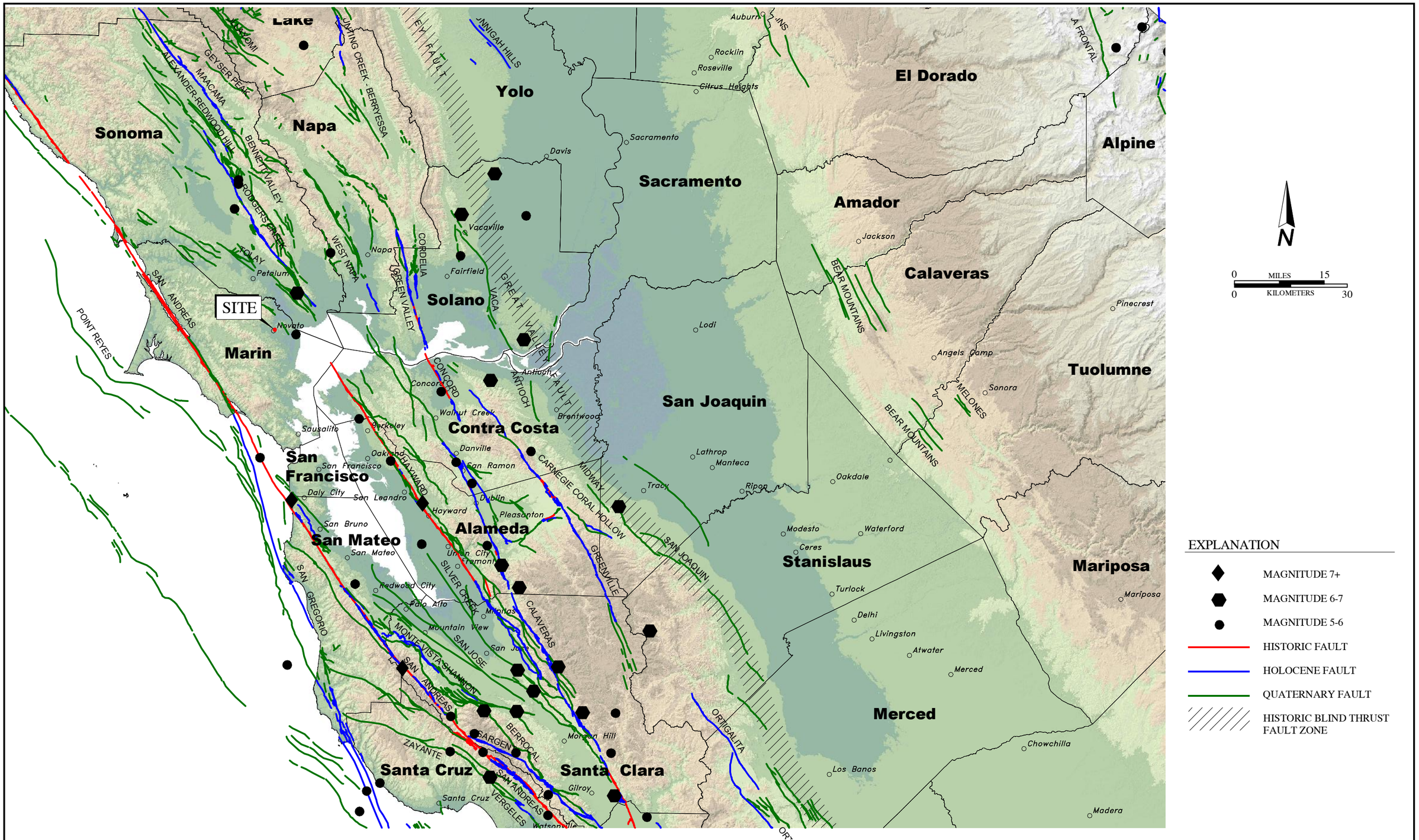

BASE MAP SOURCE:
COLOR HILLSHADE IMAGE BASED ON THE NATIONAL ELEVATION DATASET (NED) AT 30 METER RESOLUTION
U.S.G.S. QUATERNARY FAULT DATABASE, NOVEMBER, 2010
U.S.G.S. HISTORIC EARTHQUAKE DATABASE (1800–2000)

ENGEO Expect Excellence

REGIONAL FAULTING AND SEISMICITY
MARIN/SONOMA NARROW MITIGATION PROJECT
NOVATO, CALIFORNIA

PROJECT NO.: 11667.000.000		FIGURE NO
SCALE: AS SHOWN		4
DRAWN BY: SRP	CHECKED BY: JK	

ORIGINAL FIGURE PRINTED IN COLOR

G:\Drafting\DRAFTING2_Dwg_10000 to 12999\11667\000\GEX\11667000000-4-RegionalFaultMap-1214.dwg Plot Date:12-19-14 SPATTERS

COPYRIGHT © 2015 BY ENGEO INCORPORATED. THIS DOCUMENT MAY NOT BE REPRODUCED IN WHOLE OR IN PART BY ANY MEANS WHATSOEVER, NOR MAY IT BE QUOTED OR EXCERPTED WITHOUT THE EXPRESS WRITTEN CONSENT OF ENGEO INCORPORATED.

G:\Drafting\DRAFTING2_Dwg_10000 to 12999\11667\000\GEX\11667000000-5-DesignResponseSpectrump-1214.dwg Plot Date:12-19-14 SPATTERS

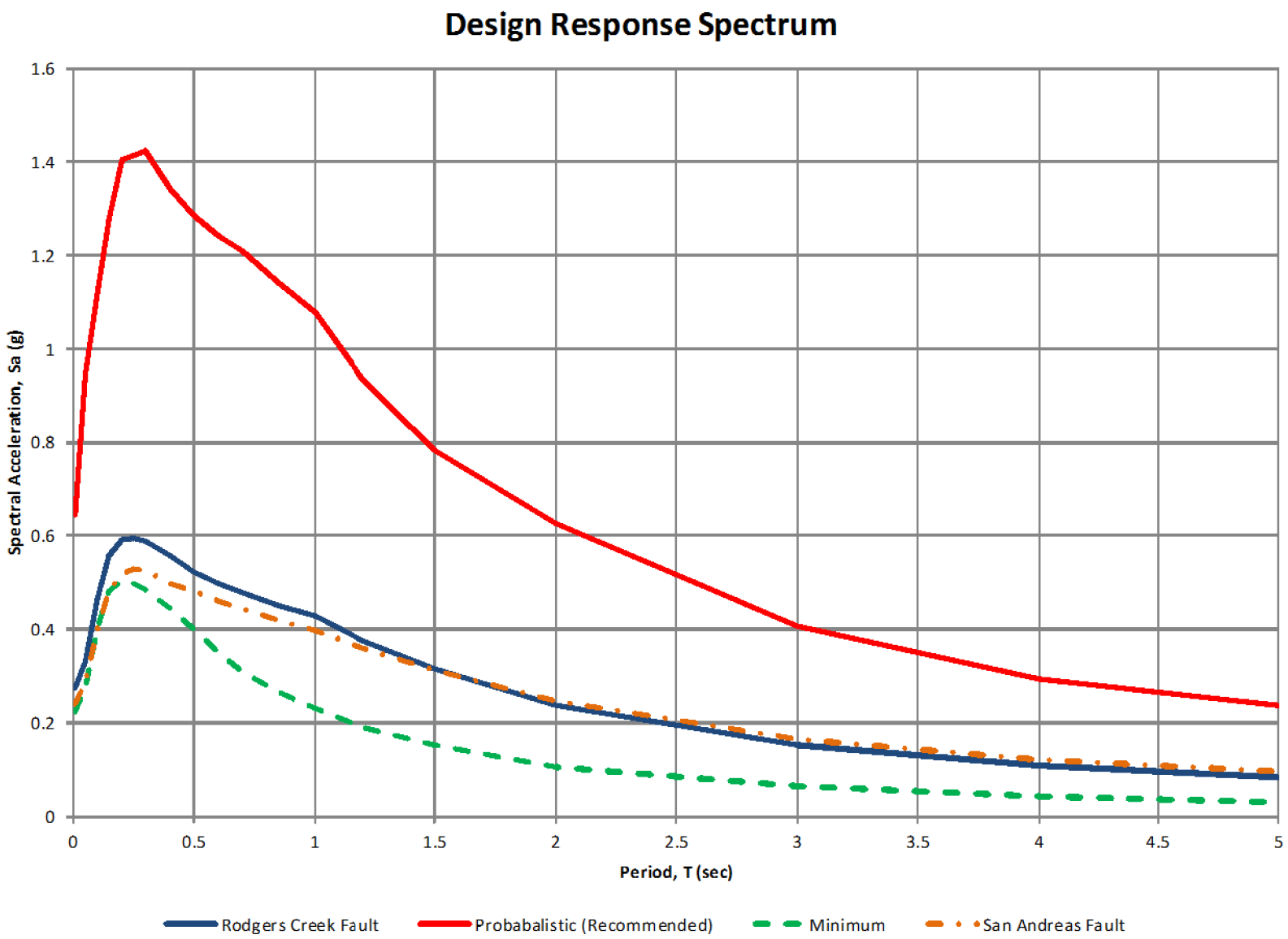

ENGEO
Expect Excellence

DESIGN RESPONSE SPECTRUM
MARIN/SONOMA NARROW MITIGATION PROJECT
NOVATO, CALIFORNIA

PROJECT NO.: 11667.000.000	FIGURE NO. 5
SCALE: NO SCALE	
DRAWN BY: SRP / CHECKED BY: JK	

ORIGINAL FIGURE PRINTED IN COLOR

APPENDIX A

Key to Logs of Borings
Logs of Borings
(ENGEO, 2014 and Caltrans, 1968)

APPENDIX A

KEY TO BORING LOGS

MAJOR TYPES			DESCRIPTION
COARSE-GRAINED SOILS MORE THAN HALF OF MAT'L LARGER THAN #200 SIEVE	GRAVELS MORE THAN HALF COARSE FRACTION IS LARGER THAN NO. 4 SIEVE SIZE	CLEAN GRAVELS WITH LESS THAN 5% FINES	GW - Well graded gravels or gravel-sand mixtures GP - Poorly graded gravels or gravel-sand mixtures
		GRAVELS WITH OVER 12 % FINES	GM - Silty gravels, gravel-sand and silt mixtures GC - Clayey gravels, gravel-sand and clay mixtures
	SANDS MORE THAN HALF COARSE FRACTION IS SMALLER THAN NO. 4 SIEVE SIZE	CLEAN SANDS WITH LESS THAN 5% FINES	SW - Well graded sands, or gravelly sand mixtures SP - Poorly graded sands or gravelly sand mixtures
		SANDS WITH OVER 12 % FINES	SM - Silty sand, sand-silt mixtures SC - Clayey sand, sand-clay mixtures
FINE-GRAINED SOILS MORE THAN HALF OF MAT'L SMALLER THAN #200 SIEVE	SILTS AND CLAYS LIQUID LIMIT 50 % OR LESS		ML - Inorganic silt with low to medium plasticity CL - Inorganic clay with low to medium plasticity OL - Low plasticity organic silts and clays
	SILTS AND CLAYS LIQUID LIMIT GREATER THAN 50 %		MH - Elastic silt with high plasticity CH - Fat clay with high plasticity OH - Highly plastic organic silts and clays
	HIGHLY ORGANIC SOILS		PT - Peat and other highly organic soils

For fine-grained soils with 15 to 29% retained on the #200 sieve, the words "with sand" or "with gravel" (whichever is predominant) are added to the group name.

For fine-grained soil with >30% retained on the #200 sieve, the words "sandy" or "gravelly" (whichever is predominant) are added to the group name.

GRAIN SIZES

U.S. STANDARD SERIES SIEVE SIZE				CLEAR SQUARE SIEVE OPENINGS			
200	40	10	4	3/4 "		3"	12"
SILTS AND CLAYS	SAND			GRAVEL		COBBLES	BOULDERS
	FINE	MEDIUM	COARSE	FINE	COARSE		

RELATIVE DENSITY

SANDS AND GRAVELS	BLOWS/FOOT (S.P.T.)
VERY LOOSE	0-4
LOOSE	4-10
MEDIUM DENSE	10-30
DENSE	30-50
VERY DENSE	OVER 50

CONSISTENCY

SILTS AND CLAYS	STRENGTH*
VERY SOFT	0-1/4
SOFT	1/4-1/2
MEDIUM STIFF	1/2-1
STIFF	1-2
VERY STIFF	2-4
HARD	OVER 4

SAMPLER SYMBOLS

- Modified California (3" O.D.) sampler
- California (2.5" O.D.) sampler
- S.P.T. - Split spoon sampler
- Shelby Tube
- Continuous Core
- Bag Samples
- Grab Samples
- NR No Recovery

MOISTURE CONDITION

DRY	Dusty, dry to touch
MOIST	Damp but no visible water
WET	Visible freewater

LINE TYPES

- Solid - Layer Break
- Dashed - Gradational or approximate layer break

GROUND-WATER SYMBOLS

- Groundwater level during drilling
- Stabilized groundwater level

(S.P.T.) Number of blows of 140 lb. hammer falling 30" to drive a 2-inch O.D. (1-3/8 inch I.D.) sampler

* Unconfined compressive strength in tons/sq. ft., asterisk on log means determined by pocket penetrometer

ENGEO
Expect Excellence

LOG OF BORING 1-B1

ENGEO INCORPORATED

Geotechnical Exploration
MSN Orange SW & Olive Ave UP
Novato, California
11667.000.000

DATE DRILLED: 12/5/2014
HOLE DEPTH: Approx. 10½ ft.
HOLE DIAMETER: 4.0 in.
SURF ELEV (NAVD 1929): Approx. 44 ft.

LOGGED / REVIEWED BY: D. Bernardi / JK
DRILLING CONTRACTOR: Britton Exploration
DRILLING METHOD: Solid Flight Auger
HAMMER TYPE: Automatic Trip Hammer

Depth in Feet	Elevation in Feet	Sample Type	DESCRIPTION	Log Symbol	Water Level	Blow Count/Foot	Atterberg Limits: Liquid Limit	Atterberg Limits: Plastic Limit	Atterberg Limits: Plasticity Index	Fines Content (% passing #200 sieve)	Moisture Content (% dry weight)	Dry Unit Weight (pcf)	Unconfined Strength (tsf) *field approx
			6 inches of ASPHALT CONCRETE										
			8 inches of AGGREGATE BASE										
			POORLY GRADED GRAVEL WITH CLAY AND SAND (GP), dark gray, medium dense, moist, subangular fine gravel, subangular fine- to coarse-grained sand, (FILL)			17							
	40		METAMORPHIC ROCK, dark gray, extremely weak to very weak, completely weathered to highly weathered			50/3"							
5													
						50/5"							
	35												
10						50/1"							
			Bottom of boring at 10 foot 1 inch below ground surface (bgs) Perched groundwater encountered at 3 feet bgs Boring terminated in refusal conditions in bedrock										

LOG OF BORING 1-B2

ENGEO INCORPORATED

Geotechnical Exploration
MSN Orange SW & Olive Ave UP
Novato, California
11667.000.000

DATE DRILLED: 12/5/2014
HOLE DEPTH: Approx. 26 ft.
HOLE DIAMETER: 4.0 in.
SURF ELEV (NAVD 1929): Approx. 35 ft.

LOGGED / REVIEWED BY: D. Bernardi / JK
DRILLING CONTRACTOR: Britton Exploration
DRILLING METHOD: Solid Flight Auger
HAMMER TYPE: Automatic Trip Hammer

Depth in Feet	Elevation in Feet	Sample Type	DESCRIPTION	Log Symbol	Water Level	Blow Count/Foot	Atterberg Limits: Liquid Limit	Atterberg Limits: Plastic Limit	Atterberg Limits: Plasticity Index	Fines Content (% passing #200 sieve)	Moisture Content (% dry weight)	Dry Unit Weight (pcf)	Unconfined Strength (tsf) *field approx
			GRAVEL WITH SAND AND CLAY (GP), brownish gray, loose, moist, fine to coarse gravel, fine- to coarse-grained sand, (FILL)										
			3-icnh lense of ASPHALT CONCRETE at 1 1/2 feet bgs										
			Becomes gray, brown, and red			12							
5	30		CLAYEY GRAVEL WITH SAND (GC), reddish brown, dense, wet, fine gravel, fine- to coarse-grained sand, (FILL)			71	33	21	12	26	16.5	112.8	0.60
			CLAYEY SAND WITH GRAVEL (SC), reddish brown, dense, moist, fine gravel, angular fine- to coarse-grained sand, subangular, (BEDROCK DERIVED FILL)			48							
10	25		Becomes multicolored (gray, green, red, reddish brown)			29							2.0* > 4.5*
			Becomes medium dense			29							
15	20					17							
			Becomes reddish brown with gray, and becomes loose to medium dense			10							
20	15		Becomes dark reddish brown			10							
			Becomes dark gray and greenish gray										
			LEAN CLAY (CL), dark brown, stiff, moist, (NATIVE)			13					16.9	110.8	1.7
25	10		LEAN CLAY (CL), grayish brown, very stiff, moist			15							
			Bottom of boring at 26 feet bgs Perched groundwater encountered at 3 feet bgs										

DIST	COUNTY	ROUTE	POST MILES TOTAL PROJECT	SHEET No	TOTAL SHEETS
04	Marin	101	18.9/25.8	----	----

GEOTECHNICAL PROFESSIONAL — DATE 2/13/15

PLANS APPROVAL DATE

REGISTERED PROFESSIONAL ENGINEER — JEFFREY A. FIPPIN — No. 2631 — GEOTECHNICAL — STATE OF CALIFORNIA

The State of California or its officers or agents shall not be responsible for the accuracy or completeness of electronic copies of this plan sheet.

TAM
781 LINCOLN AVE, SUITE 160
SAN RAFAEL, CALIFORNIA 94901

ENGEO
2010 CROW CANYON PLACE, SUITE 250
SAN RAMON, CALIFORNIA 94583
(925) 866-9000
FAX (888) 279-2698

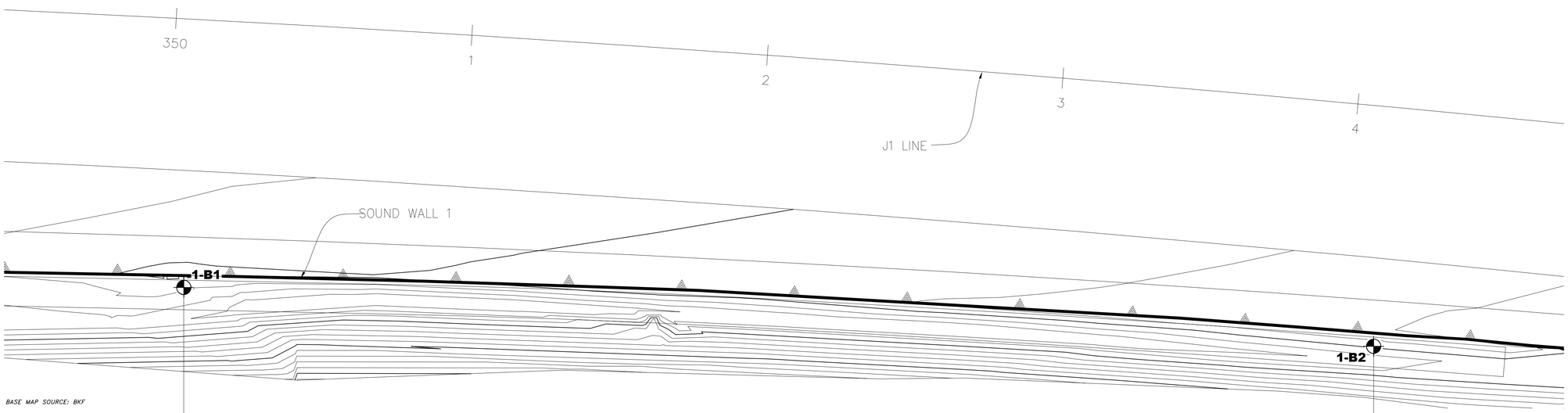

BASE MAP SOURCE: BKF

PLAN
1"=20'

EXPLANATION
ALL LOCATIONS ARE APPROXIMATE

1-B2 BORING (ENGEO, 2014)

0 FEET 20
0 METERS 10

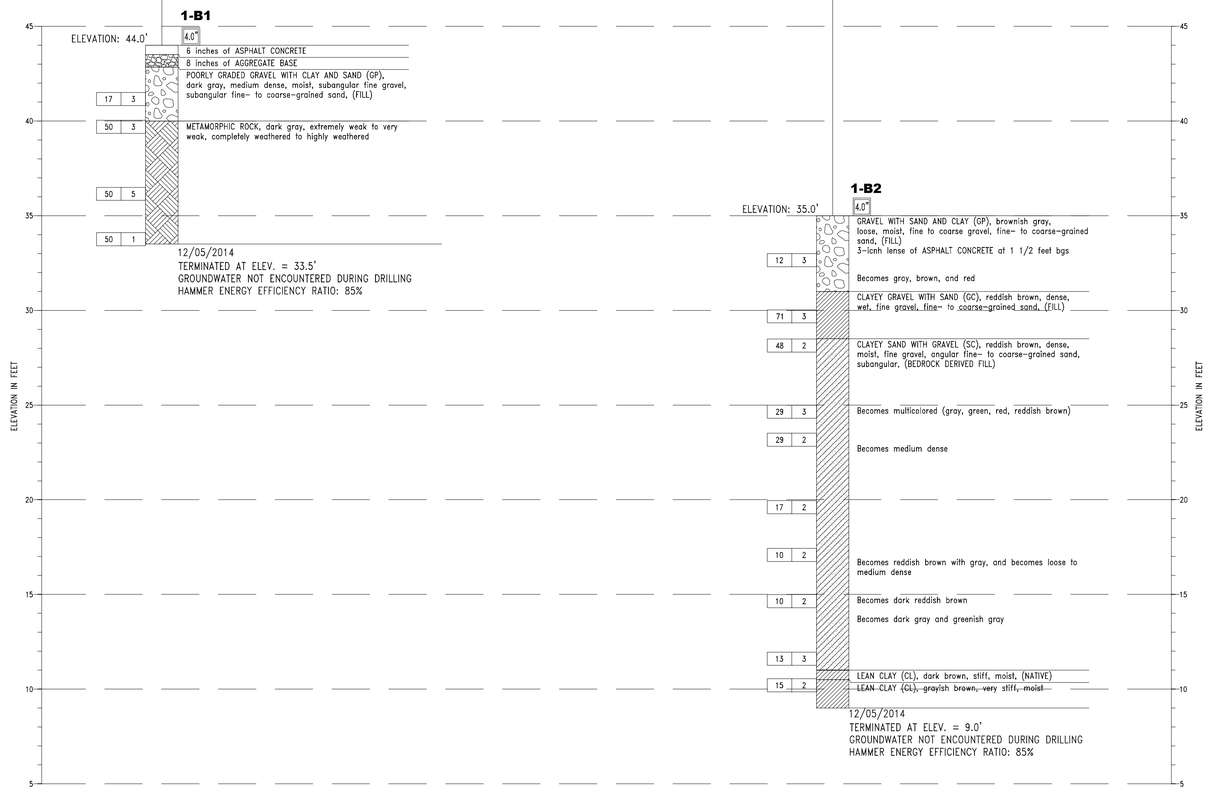

NOTES:

1)THIS LOTB SHEET WAS PREPARED IN ACCORDANCE WITH THE CALTRANS SOIL & ROCK LOGGING, CLASSIFICATION, & PRESENTATION MANUAL (2010 EDITION).
2) SEE 2010 STANDARD PLANS A10F AND A10G FOR SOIL LEGEND.

SW1-5

DESIGN OVERSIGHT	DRAWN BY	S. PATTERSON	ENGEO — FIELD INVESTIGATION BY:
SIGN OFF DATE	CHECKED BY	J. FIPPIN	DATE: DEC. 5, 2014

PREPARED FOR THE STATE OF CALIFORNIA DEPARTMENT OF TRANSPORTATION

JEFFREY A. FIPPIN — PROJECT ENGINEER

BRIDGE NO. —
POST MILES —

SOUND WALL 1 AND 2
LOG OF TEST BORINGS 1 OF 1

GS GEOTECHNICAL LOG OF TEST BORINGS SHEET (ENGLISH) (REV. 03/14/12)

ORIGINAL SCALE IN INCHES FOR REDUCED PLANS 0 1 2 3

UNIT: 0716
PROJECT NUMBER & PHASE: 04140002211
CONTRACT NO.: 04-264H3

DISREGARD PRINTS BEARING EARLIER REVISION DATES → 2/27/14 2/13/15 3/16/15

SHEET - OF -

DGN-1116670000000-LOTB-Geotech-Soundwall1-2-0215.dwg

FILE => $REQUEST

USERNAME => $USER DATE PLOTTED => $DATE TIME PLOTTED => $TIME

DIST	COUNTY	ROUTE	POST MILES TOTAL PROJECT	SHEET No	TOTAL SHEETS
04	MRN	101	18.9/25.8	____	____

GEOTECHNICAL PROFESSIONAL — DATE 2/13/15

PLANS APPROVAL DATE

REGISTERED PROFESSIONAL ENGINEER — JEFFREY A. FIPPIN — No. 2631 — GEOTECHNICAL — STATE OF CALIFORNIA

The State of California or its officers or agents shall not be responsible for the accuracy or completeness of electronic copies of this plan sheet.

TAM
781 LINCOLN AVE, SUITE 160
SAN RAFAEL, CALIFORNIA 94901

ENGEO
2010 CROW CANYON PLACE, SUITE 250
SAN RAMON, CALIFORNIA 94583
(925) 866-9000
FAX (888) 279-2698

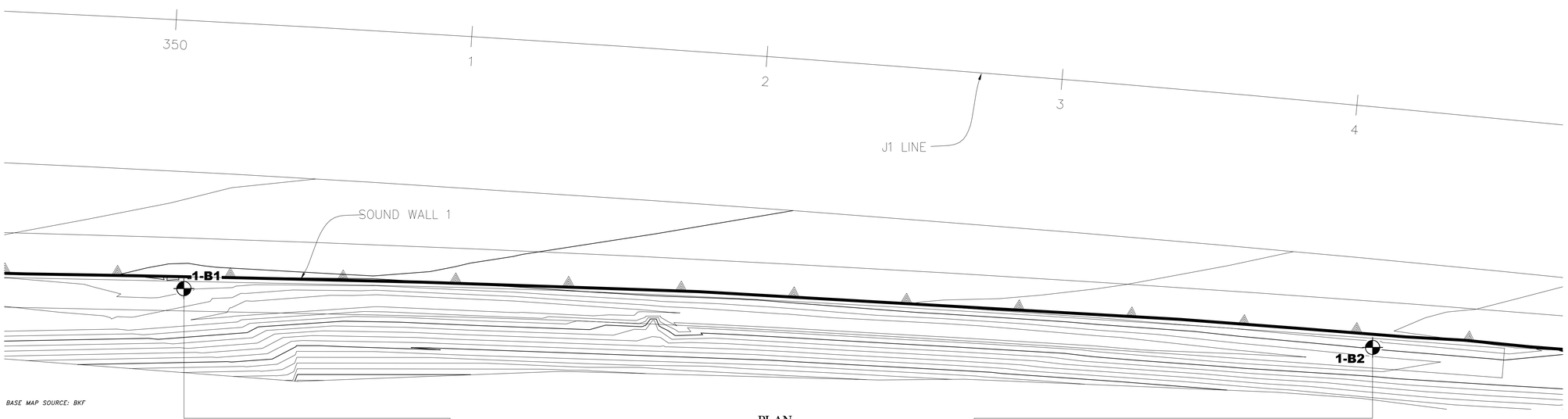

BASE MAP SOURCE: BKF

PLAN
1"=20'

EXPLANATION
ALL LOCATIONS ARE APPROXIMATE

1-B2 BORING (ENGEO, 2014)

0 FEET 20
0 METERS 10

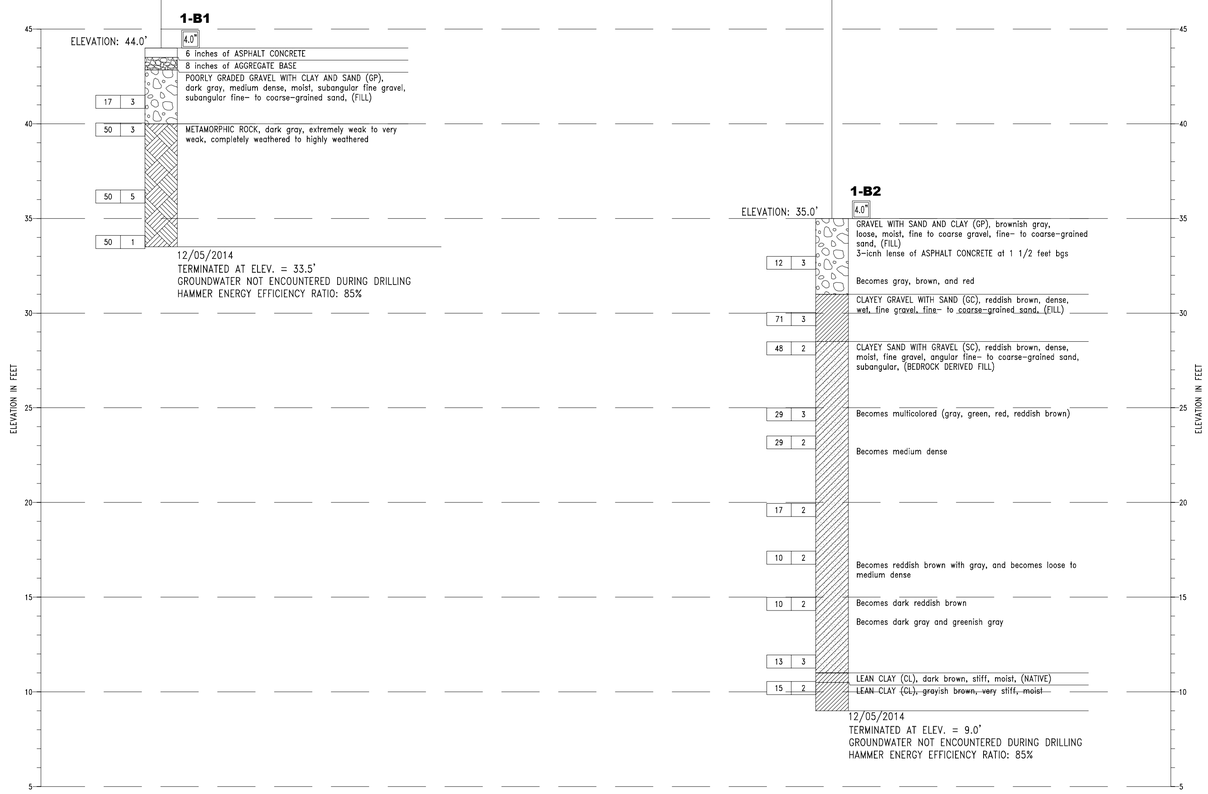

NOTES:

1)THIS LOTB SHEET WAS PREPARED IN ACCORDANCE WITH THE CALTRANS SOIL & ROCK LOGGING, CLASSIFICATION, & PRESENTATION MANUAL (2010 EDITION).
2) SEE 2010 STANDARD PLANS A10F AND A10G FOR SOIL LEGEND.

DESIGN OVERSIGHT	DRAWN BY	S. PATTERSON	ENGEO — FIELD INVESTIGATION BY:
SIGN OFF DATE	CHECKED BY	J. FIPPIN	DATE: DEC. 5, 2014

PREPARED FOR THE STATE OF CALIFORNIA DEPARTMENT OF TRANSPORTATION

JEFFREY A. FIPPIN — PROJECT ENGINEER

BRIDGE NO. 27-0092R — POST MILES R21.47

OLIVE AVENUE UC (MODIFICATION)
LOG OF TEST BORINGS 1 OF 3

GS GEOTECHNICAL LOG OF TEST BORINGS SHEET (ENGLISH) (REV. 03/14/12)

ORIGINAL SCALE IN INCHES FOR REDUCED PLANS 0 1 2 3

UNIT: 0716
PROJECT NUMBER & PHASE: 04140002211
CONTRACT NO.: 04-264H3

DISREGARD PRINTS BEARING EARLIER REVISION DATES → REVISION DATES 2/28/14 2/13/15 3/16/15

SHEET 10 OF 12

FILE => $REQUEST

DGN-11667000000-LOTB-Geotech-OliveAveUC-0215.dwg

USERNAME => $USER DATE PLOTTED => $DATE TIME PLOTTED => $TIME

BENCH MARK

PRHV29 Elev. 37.6′

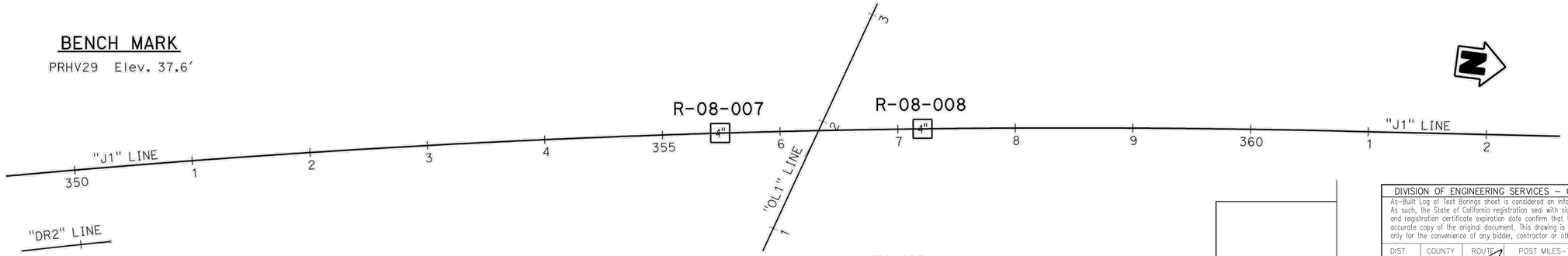

PLAN

1"=50′

DIVISION OF ENGINEERING SERVICES – GEOTECHNICAL SERVICES					
As-Built Log of Test Borings sheet is considered an informational document only. As such, the State of California registration seal with signature, license number and registration certificate expiration date confirm that this is a true and accurate copy of the original document. This drawing is available and presented only for the convenience of any bidder, contractor or other interested party.					
DIST.	COUNTY	ROUTE	POST MILES–TOTAL PROJECT	Sheet No.	Total Sheets
04	MRN	101	18.9/25.8		
GEOTECHNICAL PROFESSIONAL			2/13/15 DATE		
OLIVE AVENUE UC (MODIFICATION)					
LOG OF TEST BORINGS 2 OF 3					
NOTE: A COPY OF THIS LOG OF TEST BORINGS IS AVAILABLE AT OFFICE OF STRUCTURE MAINTENANCE AND INVESTIGATIONS, SACRAMENTO, CALIFORNIA			UNIT: 0716 CONTRACT NO.: 04–264H3 PROJECT NUMBER & PHASE: 0414000221		
BRIDGE No.	Sheet	of			
27–0092R	11	12			

REGISTERED PROFESSIONAL ENGINEER JEFFREY A. TIPPIN No. 2631 GEOTECHNICAL STATE OF CALIFORNIA

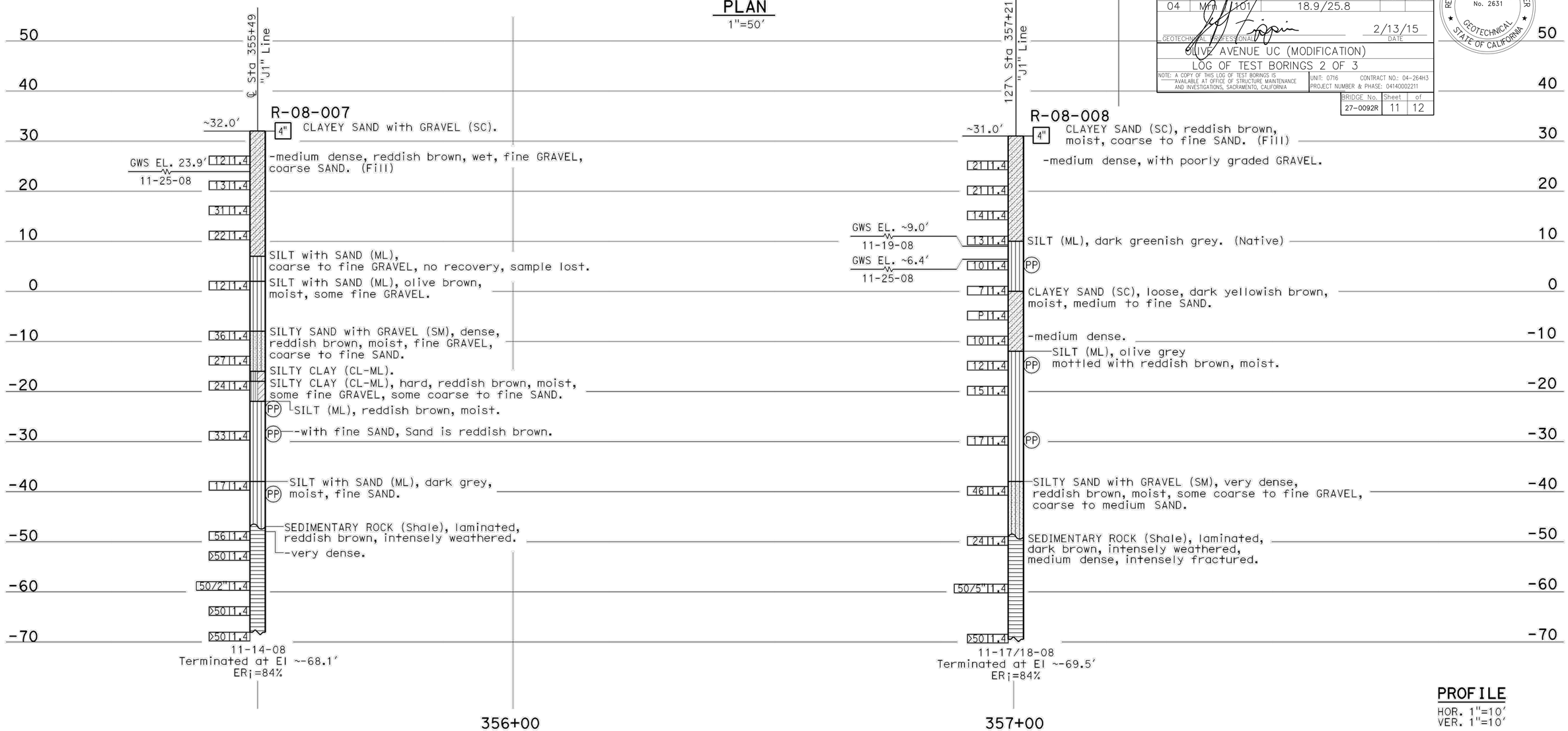

PROFILE

HOR. 1"=10′
VER. 1"=10′

ENGINEERING SERVICES		GEOTECHNICAL SERVICES	STATE OF CALIFORNIA DEPARTMENT OF TRANSPORTATION	DIVISION OF ENGINEERING SERVICES OFFICE OF GEOTECHNICAL DESIGN BRANCH 8	BRIDGE NO. 27-0092R	OLIVE AVENUE UC (WIDEN)
FUNCTIONAL SUPERVISOR	DRAWN BY: M. Reynolds	FIELD INVESTIGATION BY: J. Moore			POST MILES R21.47	LOG OF TEST BORINGS
NAME: M. Momenzadeh	CHECKED BY: C. Risden					
OGS CIVIL LOG OF TEST BORINGS SHEET	ORIGINAL SCALE IN INCHES FOR REDUCED PLANS 0 1 2 3			CU 04 EA 264061	DISREGARD PRINTS BEARING EARLIER REVISION DATES →	REVISION DATES 03-15-08 — SHEET 2 OF 3

LEGEND OF BORING OPERATIONS

- Penetrometer
- 2½" Cone Penetrometer
- Sampler Boring (Dry)
- Rotary Boring (Wet)
- Auger Boring (Dry)
- Jet Boring
- Core Boring
- Test Pit

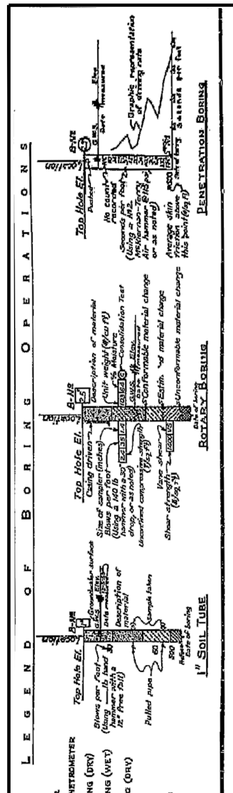

LEGEND OF EARTH MATERIALS

- Gravel
- Silty Clay or Clayey Silt
- Sand
- Peat, Muck, Organic Matter
- Silt
- Fill Material
- Clay
- Igneous Rock
- Sandy Clay or Clayey Sand
- Sedimentary Rock
- Sandy Silt or Silty Sand
- Metamorphic Rock

CLASSIFICATION OF MATERIAL BASED ON STANDARD GRADE SIZE LIMITS

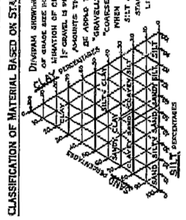

NOTE: Classification of earth material as shown on this sheet is based upon field inspection and is not to be construed to imply mechanical analysis.

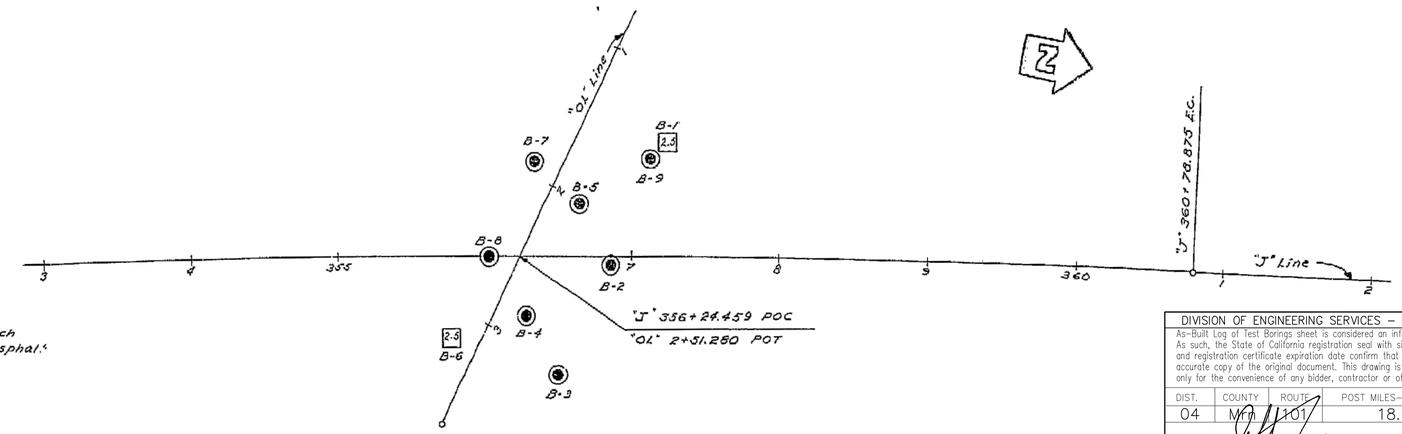

PLAN
1" = 50'

BM # P7 Pt.13
Fd RR Spike with punch mark set flush with asphalt S. edge of Olive Ave. 6.15' Lt. "J" 356+95.5
Elev. 11.69

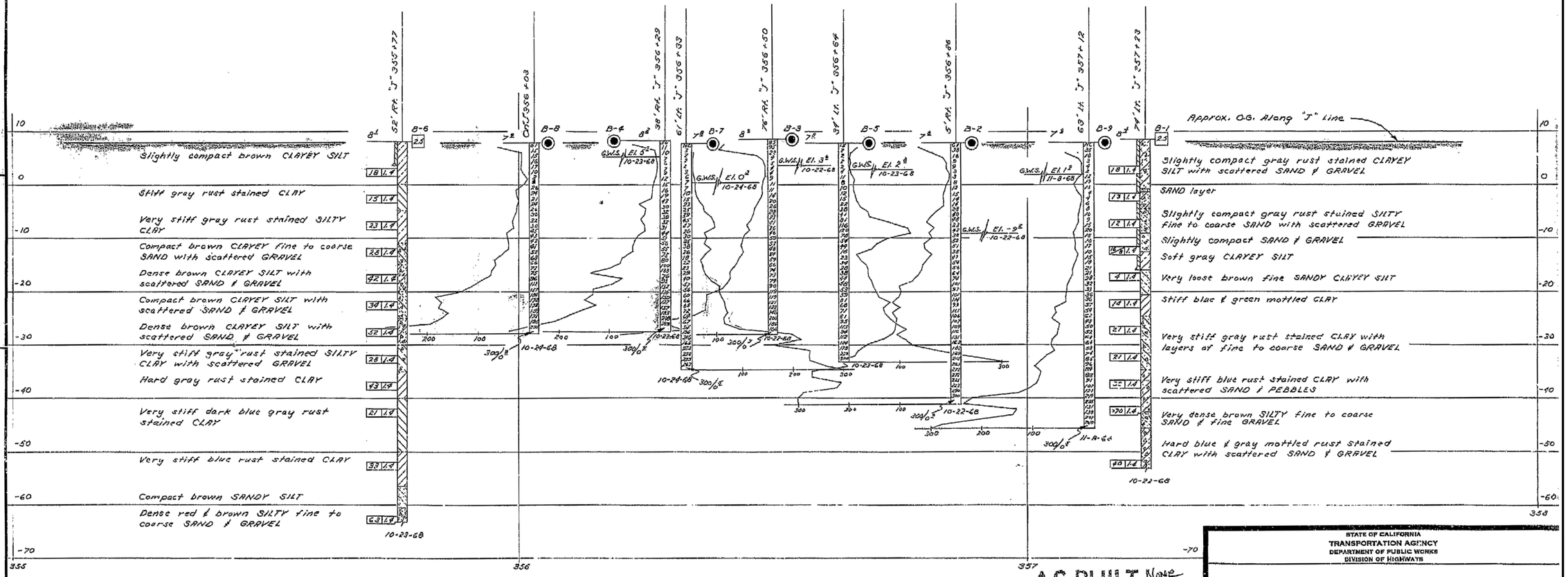

PROFILE
1" = 10'

DIVISION OF ENGINEERING SERVICES – GEOTECHNICAL SERVICES					
As-Built Log of Test Borings sheet is considered an informational document only. As such, the State of California registration seal with signature, license number and registration certificate expiration date confirm that this is a true and accurate copy of the original document. This drawing is available and presented only for the convenience of any bidder, contractor or other interested party.					
DIST.	COUNTY	ROUTE	POST MILES–TOTAL PROJECT	Sheet No.	Total Sheets
04	MRN	1101	18.9/25.8		
GEOTECHNICAL PROFESSIONAL			DATE 2/13/15		
OLIVE AVENUE UC (MODIFICATION)					
LOG OF TEST BORINGS 3 OF 3					
NOTE: A COPY OF THIS LOG OF TEST BORINGS IS AVAILABLE AT OFFICE OF STRUCTURE MAINTENANCE AND INVESTIGATIONS, SACRAMENTO, CALIFORNIA		UNIT: 0716 CONTRACT NO.: 04-264H3 PROJECT NUMBER & PHASE: 04140002211			
BRIDGE No.	Sheet	of			
27-0092R	12	12			

REGISTERED PROFESSIONAL ENGINEER JEFFREY A. FIPPIN No. 2631 GEOTECHNICAL STATE OF CALIFORNIA

AS BUILT None 4/5/96
CORRECTIONS BY C.S. Foster
CONTRACT NO. 04-120373
DATE 10-27-75

MICROFILMED

STATE OF CALIFORNIA
TRANSPORTATION AGENCY
DEPARTMENT OF PUBLIC WORKS
DIVISION OF HIGHWAYS

OLIVE AVE U.C.

LOG OF TEST BORINGS

BRIDGE NO.	POST MILE	DRAWING NO.	SHEET	OF
27-92 R/L	21.5		3	3

APPENDIX B

Laboratory Test Data

APPENDIX B

Particle Size Distribution Report

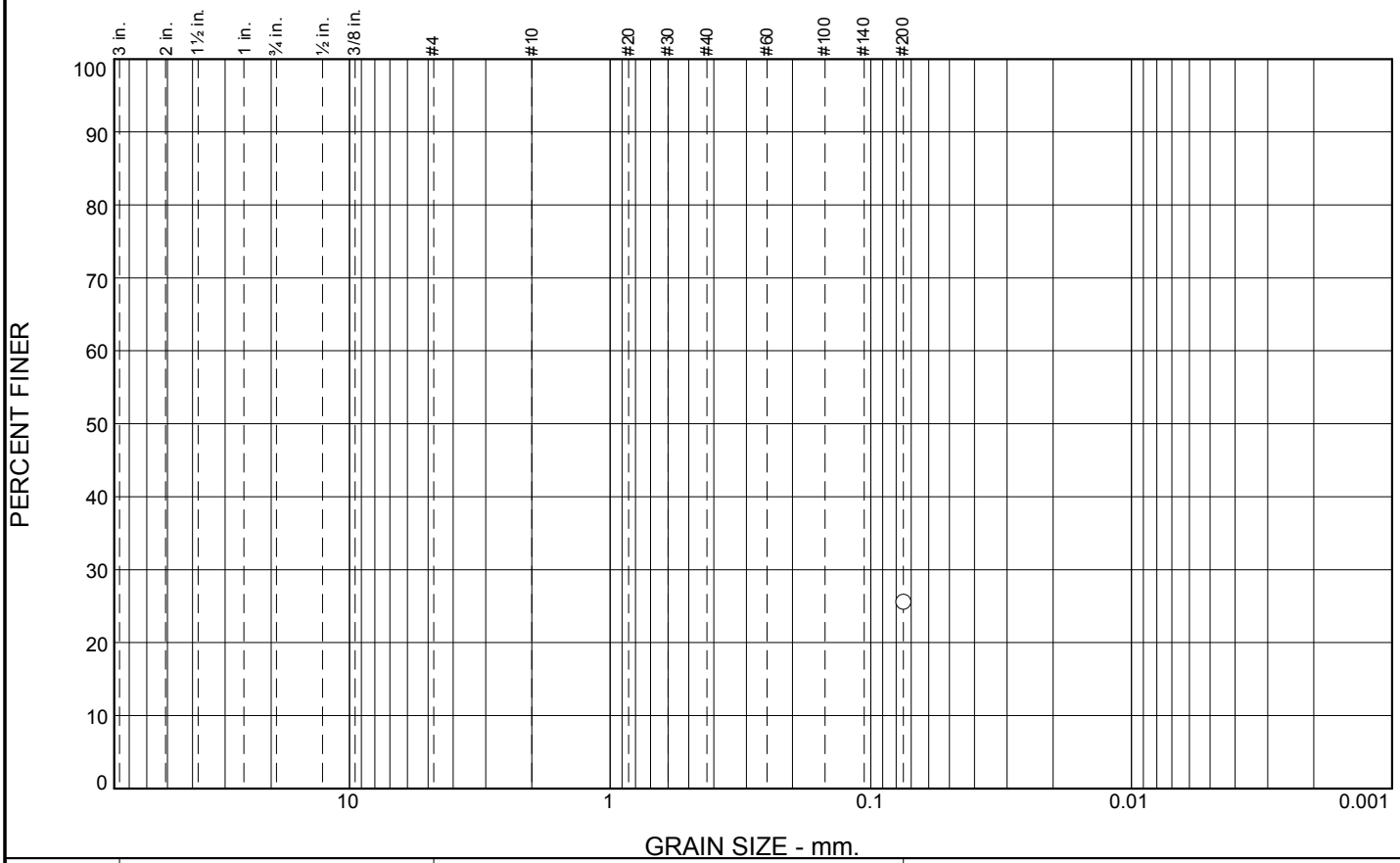

% +75mm	% Gravel		% Sand			% Fines	
	Coarse	Fine	Coarse	Medium	Fine	Silt	Clay
						25.6	

SIEVE SIZE	PERCENT FINER	SPEC.* PERCENT	PASS? (X=NO)
#200	25.6		

* (no specification provided)

Soil Description

See exploration logs

Atterberg Limits

PL= 21 LL= 33 PI= 12

Coefficients

D_{90}= D_{85}= D_{60}=
D_{50}= D_{30}= D_{15}=
D_{10}= C_u= C_c=

Classification

USCS= AASHTO=

Remarks

GS: ASTM D1140, PI: ASTM D4318

Sample Number: 1-B2 @ 5.5-6 **Depth:** 5.5-6.0 ft

Date: 12/17/14

ENGEO INCORPORATED

Client: Biggs Cardosa Associates, Inc.
Project: TAM MSN Mitigation and Orange Ave. Sound Wall

Project No: 11667.000.000

Tested By: J Lawton **Checked By:** D Seibold

LIQUID AND PLASTIC LIMITS TEST REPORT

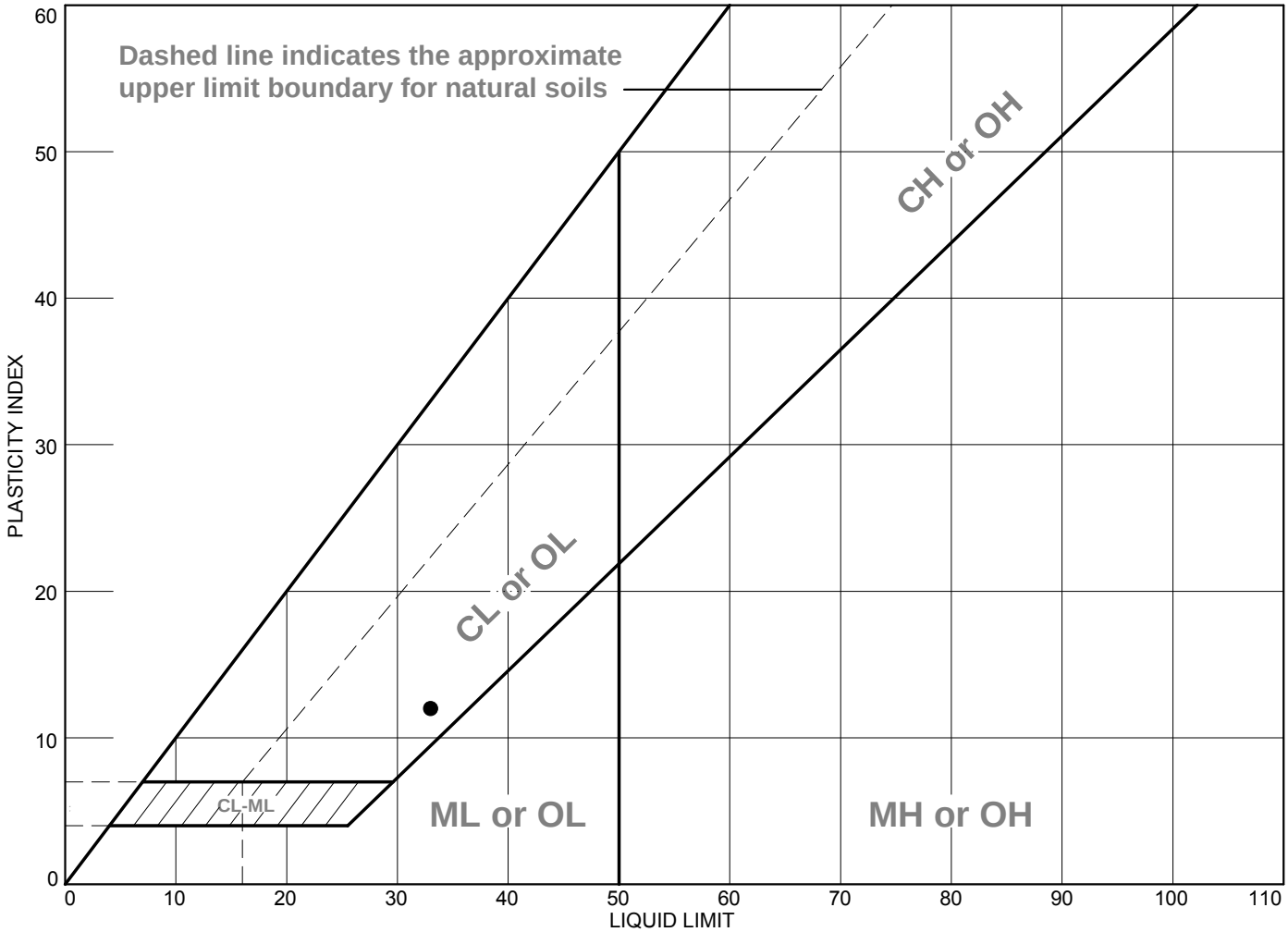

	MATERIAL DESCRIPTION	LL	PL	PI	%<#40	%<#200	USCS
●	See exploration logs	33	21	12		25.6	

Project No. 11667.000.000 **Client:** Biggs Cardosa Associates, Inc.

Project: TAM MSN Mitigation and Orange Ave. Sound Wall

●**Depth:** 5.5-6.0 ft **Sample Number:** 1-B2 @ 5.5-6

Remarks:

●PI: ASTM D4318,
GS: ASTM D1140

ENGEO INCORPORATED

Tested By: J. Lawton **Checked By:** D. Seibold

UNCONFINED COMPRESSION TEST REPORT
(ASTM D2166)

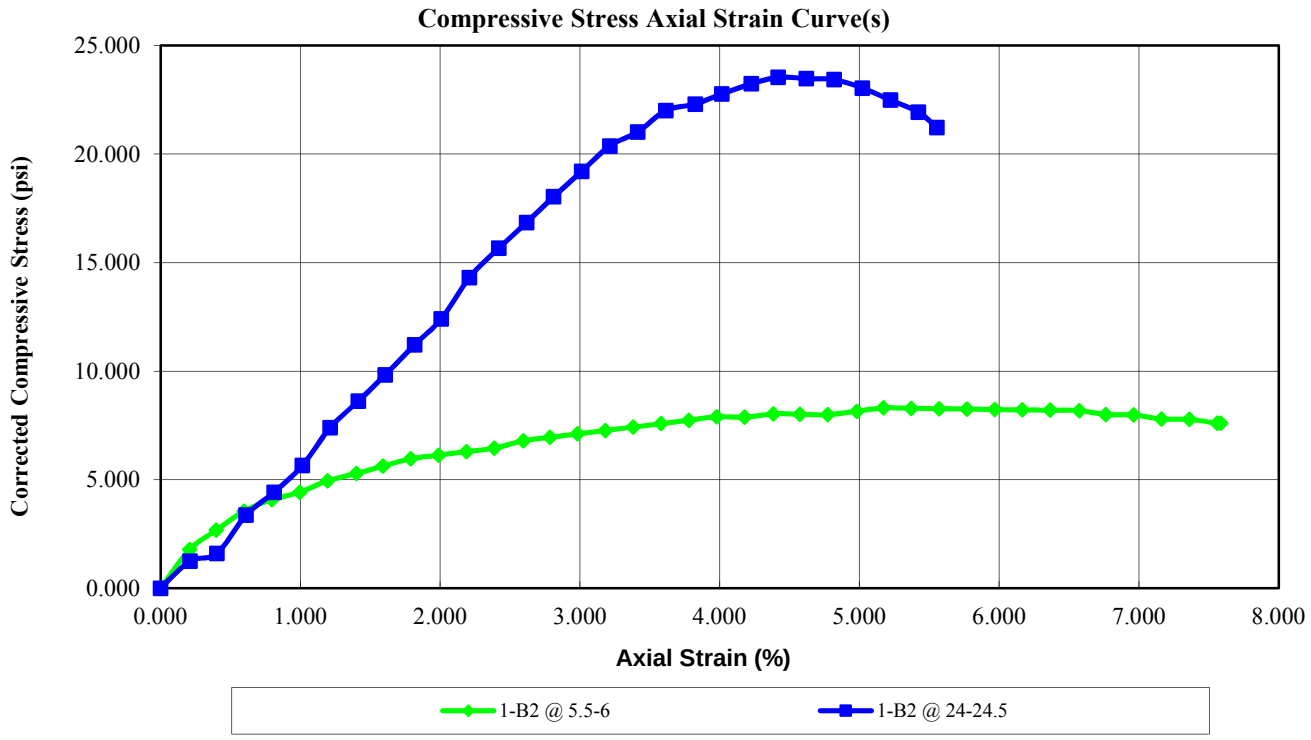

BEFORE TEST	SPECIMEN 1-B2@5.5-6	1-B2@24-24.5
Moisture Content (%)	16.5	16.9
Dry Density (pcf)	112.8	110.8
Saturation (%)	93.86	90.95
Void Ratio	0.47	0.49
Diameter (in)	2.415	2.417
Height (in)	5.070	5.022
Height-To-Diameter Ratio	2.099	2.078
TEST DATA		
Unconfined Compressive Strength (psf)	1195.558	3388.235
Undrained Shear Strength (psf)	597.779	1694.118
Strain Rate (in./min.)	0.05	0.05
Specific Gravity	2.65	2.65
Strain at Failure (%)	5.2	4.42

SPECIMEN	DESCRIPTION
1-B2@5.5-6	See exploration logs
1-B2@24-24.5	See exploration logs

PROJECT NAME: TAM MSN Mitigation and Orange Avenue
PROJECT NO: 11667.000.000
CLIENT: Biggs Cardosa and Associates, Inc.
LOCATION: Novato, California
PHASE NO: GEX

Test Date: 12/15/2014
Tested By: J Lawton
Reviewed By: D Seibold

ENGEO
Expect Excellence

APPENDIX C

Corrosion Analysis

APPENDIX C

California State Certified Laboratory No. 2153

CERCO analytical
1100 Willow Pass Court, Suite A
Concord, CA 94520-1006
925 462 2771 Fax. 925 462 2775
www.cercoanalytical.com

16 December, 2014

Job No.1412136
Cust. No.10169

Ms. Janet Kan
ENGEO Inc.
2010 Crow Canyon Place, Suite 250
San Ramon, CA 94583

Subject: Project No.: 11667.000.000
Project Name: Hwy 101 Soundwall
Corrosivity Analysis – Caltrans Test Methods

Dear Ms. Kan:

Pursuant to your request, CERCO Analytical has analyzed the soil samples submitted on December 12 & 15, 2014. Based on the analytical results, this brief corrosivity evaluation is enclosed for your consideration.

Based upon the resistivity and conductivity measurements, these samples are classified as "moderately corrosive". All buried iron, steel, cast iron, ductile iron, galvanized steel and dielectric coated steel or iron should be properly protected against corrosion depending upon the critical nature of the structure. All buried metallic pressure piping such as ductile iron firewater pipelines should be protected against corrosion.

The chloride ion concentrations reflect none detected with a detection limit of 15 mg/kg.

The sulfate ion concentrations ranged 72 to 150 mg/kg and are determined to be insufficient to damage reinforced concrete structures and cement mortar-coated steel at these locations.

The pH of the soils ranged from 8.10 to 8.30, which does not present corrosion problems for buried iron, steel, mortar-coated steel and reinforced concrete structures.

This corrosivity evaluation is based on general corrosion engineering standards and is non-specific in nature. For specific long-term corrosion control design recommendations or consultation, please call *JDH Corrosion Consultants, Inc. at (925) 927-6630*.

We appreciate the opportunity of working with you on this project. If you have any questions, or if you require further information, please do not hesitate to contact us.

Very truly yours,
CERCO ANALYTICAL, INC.

J. Darby Howard, Jr., P.E.
President

JDH/jdl
Enclosure

California State Certified Laboratory No. 2153

CERCO analytical
1100 Willow Pass Court, Suite A
Concord, CA 94520-1006
925 462 2771 Fax. 925 462 2775
www.cercoanalytical.com

Client: Engeo Incorporation
Client's Project No.: 11667.000.000
Client's Project Name: Hwy 101 Soundwall
Date Sampled: 5-Dec-14
Date Received: 12/12 & 15/14
Matrix: Soil
Authorization: Signed Chain of Custody

Date of Report: 16-Dec-2014

Job/Sample No.	Sample I.D.	Moisture (%)	pH	Min.Resistivity (ohms-cm)	Conductivity (umhos/cm)* (1)	Chloride (mg/kg)*	Sulfate (mg/kg)*
1412136-001	1-B-1 @ 8.5	-	8.10	-	300	N.D.	72
1412136-002	Composite 1-B2 @ 7.0 & 10.5	-	8.30	2,200	-	N.D.	150

Method:	CT 226 (a)	CT 643 (b)	CT 643 (b)	ASTM D1125M	CT 422 (c)	CT 417 (c)
Detection Limit:	-	-	-	10	15	15
Date Analyzed:	-	16-Dec-2014	15-Dec-2014	16-Dec-2014	16-Dec-2014	16-Dec-2014

* Results Reported on an "As Received" Basis (a) Rev. July 2010 (b) Rev. June 2007 (c) Rev. November 2006

(1) Unable to use the CalTrans soil box as insufficient amount of soil

Cheryl McMillen
Laboratory Director

Quality Control Summary - All laboratory quality control parameters were found to be within established limits

APPENDIX D

Design Calculations

APPENDIX D

Soil Profile
Abutment 1

Top El.	Top Depth	Bottom Depth	Thickness	Soil	Unit Weight (pcf)	Blow Count N	Friction (deg)	Su (psf)
30.3	0	6	6	Sand	120	10	35	-
24.3	5	16	11	Sand	120	30	35	-
14.3	15	24	9	Sand	120	10	28	-
6.3	23	44	21	Clay	120	15	-	1500
-13.7	43	54	11	Sand	120	35	40	-
-23.7	53	74	21	Clay	120	35	-	4000
-43.7	73	84	11	Clay	120	21	-	3500

Top of Pile at El. 20.3; GW at El. 2.3 (blue text line, NVGD 29)

Design Calculations
Abutment 1

Nomial Side Resistance (skin friction only)

24" CIDH	
πB =	6.28

Elev	Depth below TOP of pile	γ	Kp*tan phi	σ_p	σ_v	β	α	fsn	lbs	kips
20	0	120	2.58	15111.603	1236	1.26	-	1551	0	0
15	5	120	2.58	15111.603	1836	1.00	-	1836.6	57698	58
10	10	120	1.47	6274.997	2436	0.44	-	1071.5	91360	91
7	13	120	1.47	6274.997	2796	0.41	-	1152.8	113089	113
2	**18**	**120**	**-**	**-**	**3396**	**-**	**0.55**	**825.0**	139007	139
-5	25	120	-	-	3799.2	-	0.55	825.0	175293	175
-10	30	120	-	-	4087.2	-	0.55	825.0	201211	201
-13	33	120	-	-	4260	-	0.55	825.0	216762	217
-20	40	120	3.86	17094.955	4663.2	0.69	-	3221.6	358456	358
-23	43	120	3.86	17094.955	4836	0.67	-	3263.8	419976	420
-30	50	120	-	-	5239.2	-	0.51	2043.1	509838	510
-35	55	120	-	-	5527.2	-	0.51	2043.1	574026	574
-40	60	120	-	-	5815.2	-	0.51	2043.1	638213	638
-43	63	120	-	-	5988	-	0.51	2043.1	676725	677
-50	70	120	-	-	6391.2	-	0.53	1870.5	758995	759
-55	75	120	-	-	6679.2	-	0.53	1870.5	817760	818
-60	80	120	-	-	6967.2	-	0.53	1870.5	876524	877

Pile Settlement

Abut 1 P (lb)	136000
A (in^2)	452
f'c (psi)	3000
E (psi)	3122018.578
Abut 1 Length (ft)	30
Abut1 δ_E (in)	0.03

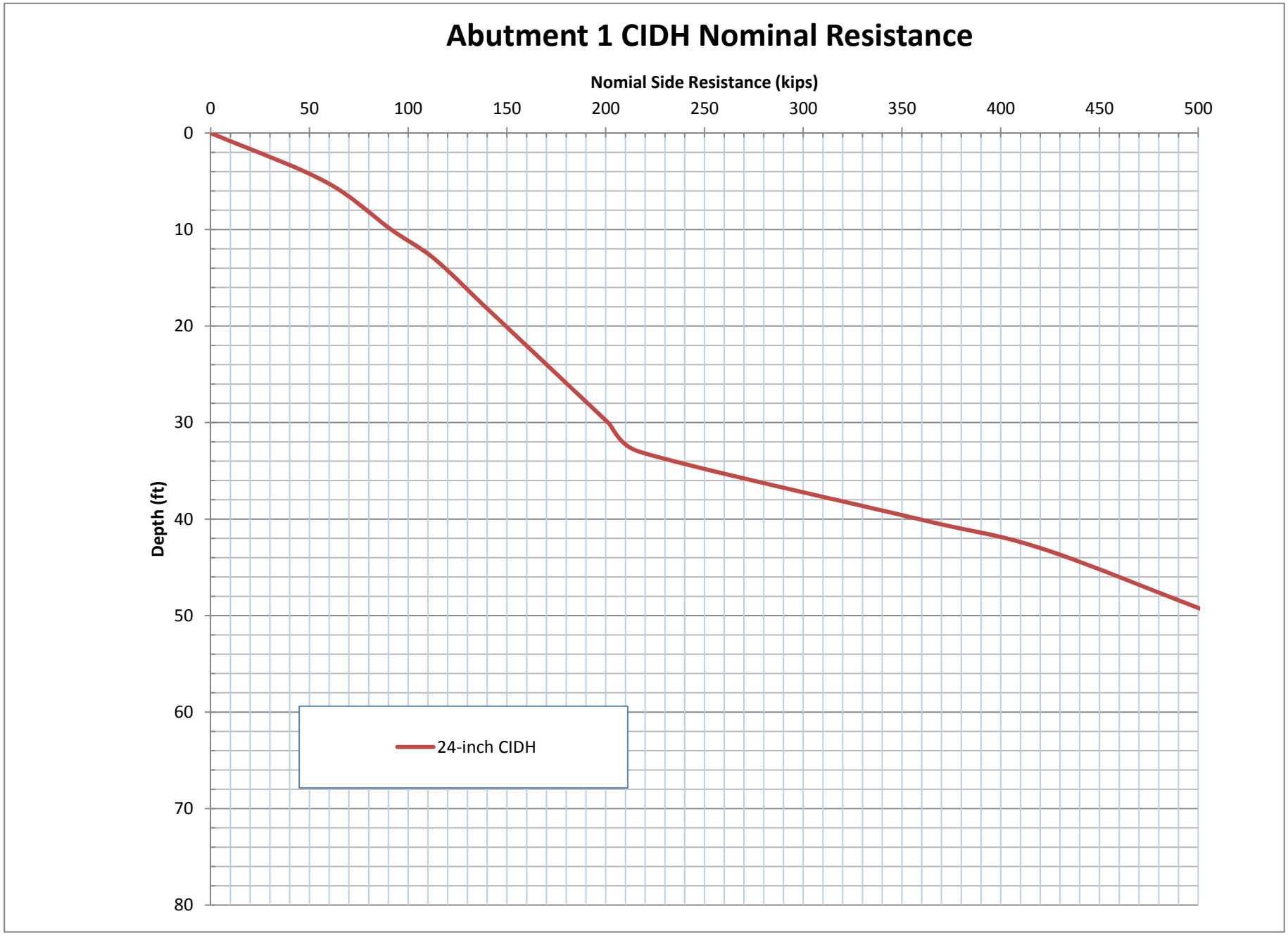
Abutment 1 CIDH Nominal Resistance
Nomial Side Resistance (kips)
0
50
100
150
200
250
300
350
400
450
500
Depth (ft)
0
10
20
30
40
50
60
70
80
24-inch CIDH

Soil Profile
Abutment 2

Top El.	Top Depth	Bottom Depth	Thickness	Soil	Unit Weight (pcf)	Blow Count N	Friction (deg)	Su (psf)
30.3	0	6	6	Sand	120	10	35	
24.3	5	16	11	Sand	120	30	35	
14.3	15	24	9	Sand	120	10	28	
6.3	23	44	21	Clay	120	15		1500
-13.7	43	54	11	Sand	120	35	40	
-23.7	53	74	21	Clay	120	35		4000
-43.7	73	84	11	Clay	120	21		3500

Top of Pile at El. 18.4; GW at El. 2.3 (blue text line, NVGD 29)

Abutment 2

Elev	Depth below TOP of pile	γ	Kp*tan phi	σ_p	σ_v	β	α	fsn	Nomial Side Resistance (skin friction only) 24" CIDH πB = 6.28 lbs	kips
18	0	120	2.58	15111.603	1476	1.13		1673	0	0
12	6	120	1.47	6274.997	2196	0.46		1014.1	38231	38
8	10	120	1.47	6274.997	2676	0.42		1126.2	66537	67
4	14	120			3156		0.55	825.0	87271	87
0	18	120			3636		0.55	825.0	108006	108
-7	25	120			4039.2		0.55	825.0	144291	144
-12	30	120			4327.2		0.55	825.0	170209	170
-16	34	120	3.86	17094.955	4807.2	0.68		3256.8	252062	252
-22	40	120	3.86	17094.955	5152.8	0.65		3338.6	377924	378
-26	44	120			5383.2		0.51	766.2	397180	397
-32	50	120			5728.8		0.51	2043.1	474205	474
-37	55	120			6016.8		0.51	2043.1	538392	538
-42	60	120			6304.8		0.51	2043.1	602579	603
-46	64	120			6535.2		0.53	2137.7	656306	656
-52	70	120			6880.8		0.53	1870.5	726824	727
-57	75	120			7168.8		0.53	1870.5	785588	786
-62	80	120			7456.8		0.53	1870.5	844352	844

Pile Settlement

Abut 2 P (lb)	193000
A (in^2)	452
f'c (psi)	3000
E (psi)	3122018.578
Abut 2 Length (ft)	40
Abut 2 δ_E (in)	0.07

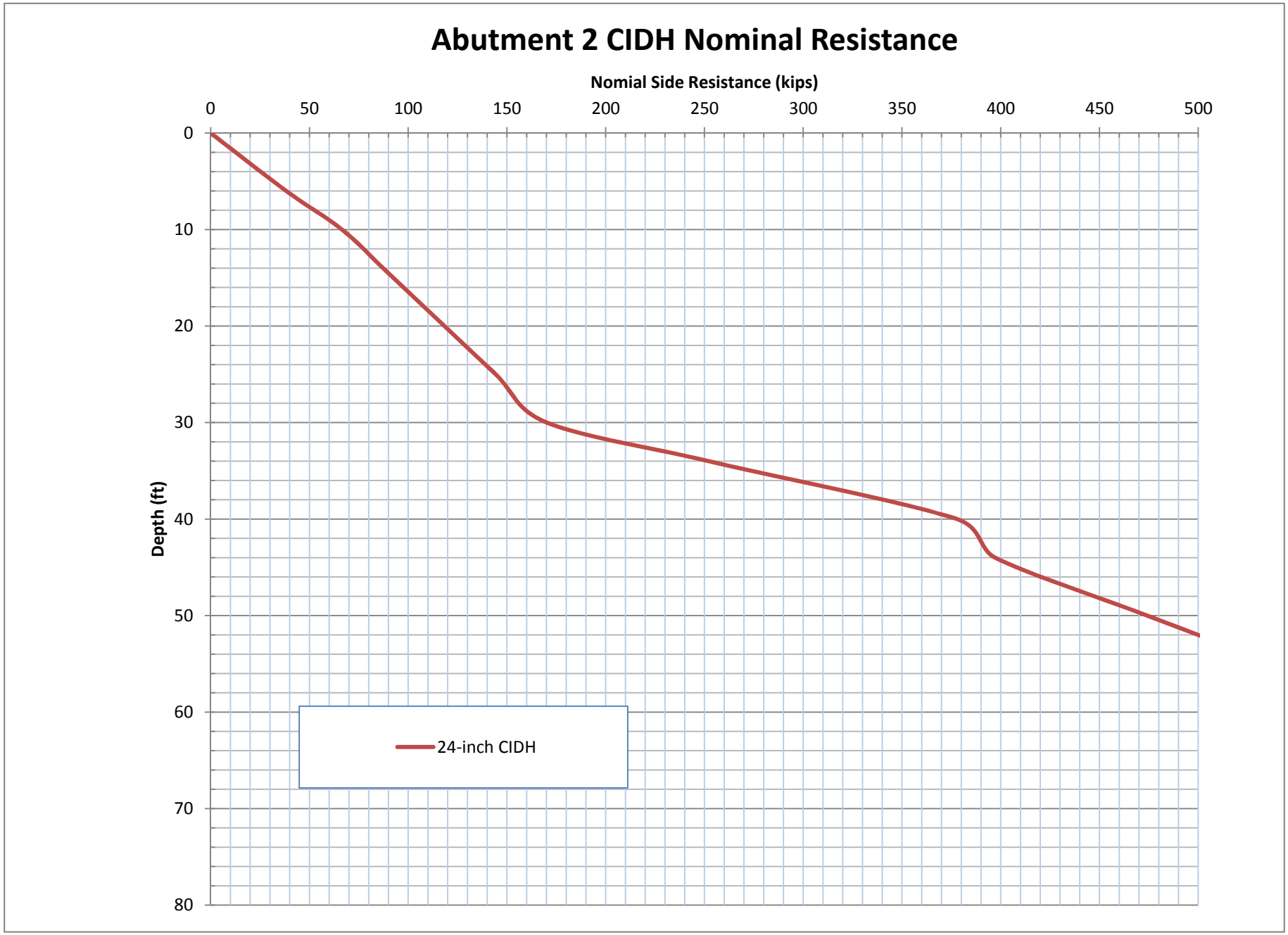
Abutment 2 CIDH Nominal Resistance
Nomial Side Resistance (kips)
0
50
100
150
200
250
300
350
400
450
500
Depth (ft)
0
10
20
30
40
50
60
70
80
24-inch CIDH

Abutment Alternative Soil Profile
Abutment 2 - Based on Borings R-08-007 and R-08-008 Composite profile

Top El.	Top Depth	Bottom Depth	Thickness	Soil	Unit Weight (pcf)	Blow Count N	Friction (deg)	Su (psf)
34	0	25	25	Sand	120	26	35	-
9	25	35	10	Clay	120			1600
-1	35	45	10	Sand	120	12	32	-
-11	45	70	25	Clay	120		-	2500
-36	70	80	10	Gravel	120	50	40	-
-46	80	150	70	Bedrock	120		-	10000

Top of Pile at El. 18.4; GW at El. 2.3 (blue text line, NVGD 29)

Abutment 2

Elev	Depth below TOP of pile	γ	Kp*tan phi	σ_p	σ_v	β	α	fsn	Nomial Side Resistance (skin friction only) 24" CIDH πB = 6.28 lbs	kips
18	0	120	2.58	14011.971	1920	0.93	-	1793	0	0
14	4	120	2.58	14011.971	2400	0.82	-	1971.5	49550	50
9	9	120	-	-	3000	-	0.55	880.0	77196	77
5	13	120	-	-	3480	-	0.55	880.0	99313	99
2.3	**15.7**	**120**	**-**	**-**	**3804**	**-**	**0.55**	**880.0**	114242	114
-1	19	120	2.03	13579.149	3994	0.56	-	2243.9	160768	161
-6	24	120	2.03	13579.149	4282	0.54	-	2318.6	233608	234
-11	29	120	-	-	4570	-	0.55	1375.0	276805	277
-17	35	120	-	-	4916	-	0.55	1375.0	328642	329
-22	40	120	-	-	5204	-	0.55	1375.0	371839	372
-24	42	120	-	-	5319	-	0.55	1375.0	389117	389
-32	50	120	-	-	5780	-	0.55	1375.0	458232	458
-42	60	120	-	-	6356	-	0.55	1375.0	544626	545
-52	70	120	-	-	6932	-	0.55	1375.0	631020	631

Pile Settlement

Abut 2 P (lb)	193000
A (in^2)	452
f'c (psi)	3000
E (psi)	3122018.578
Abut 2 Length (ft)	40
Abut 2 δ_E (in)	0.07

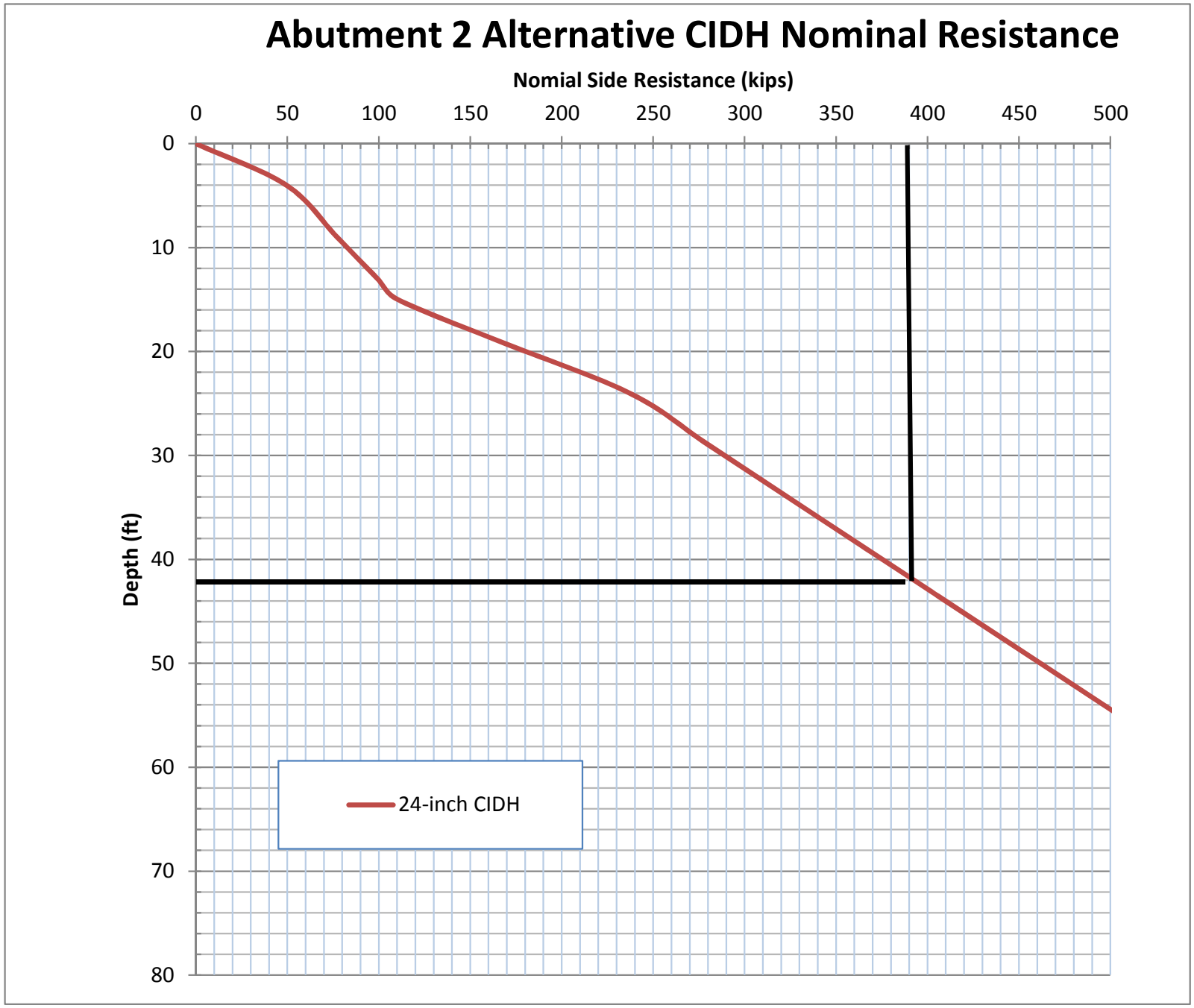
Abutment 2 Alternative CIDH Nominal Resistance
Nomial Side Resistance (kips)
0
50
100
150
200
250
300
350
400
450
500
Depth (ft)
0
10
20
30
40
50
60
70
80
24-inch CIDH

Soil Profile

Abutment 1 and Abutment 2

Top El. (ft)	Top Depth (ft)	Bottom Depth	Thickness	Soil	Unit Weight (pcf)	Blow Count N	Friction (deg)	Su (psf)
34	0	6	6	Sand	120	10	35	-
28	5	16	11	Sand	120	30	35	-
18	15	24	9	Sand	120	10	28	-
10	23	44	21	Clay	120	15	-	1500
-10	43	54	11	Sand	120	35	40	-
-20	53	74	21	Clay	120	35	-	4000
-40	73	80	7	Clay	120	21	-	3500

Axial Load Capacity

Abutment 1 and Abutment 2

24" CIDH	
πB =	6.28

Elev (ft)	Depth below Top of pile (ft)	γ	Kp*tan phi	σ_p	σ_v	β	α	fsn	lbs	kips
23	0	120	2.58	15111.6	1320	1.21	-	1596	0	0
17	6	120	2.58	15111.6	2040	0.94	-	1921.0	72420	72
13	10	120	1.47	6274.997	2520	0.43	-	1090.9	99838	100
9	14	120	1.47	6274.997	3000	0.40	-	1196.6	129913	130
5	**18**	**120**	**-**	**-**	**3480**	**-**	**0.55**	**825.0**	**150647**	**151**
-2	25	120	-	-	3883.2	-	0.55	825.0	186933	187
-7	30	120	-	-	4171.2	-	0.55	825.0	212851	213
-11	34	120	-	-	4401.6	-	0.55	825.0	233585	234
-17	40	120	3.86	17094.95	4747.2	0.68	-	3242.2	355815	356
-21	44	120	3.86	17094.95	4977.6	0.66	-	3297.6	438692	439
-27	50	120	-	-	5323.2	-	0.51	2043.1	515717	516
-32	55	120	-	-	5611.2	-	0.51	2043.1	579904	580
-37	60	120	-	-	5899.2	-	0.51	2043.1	644091	644
-41	64	120	-	-	6129.6	-	0.51	2043.1	695441	695
-47	70	120	-	-	6475.2	-	0.53	1870.5	765958	766
-52	75	120	-	-	6763.2	-	0.53	1870.5	824722	825
-57	80	120	-	-	7051.2	-	0.53	1870.5	883487	883

Top of Pile at El. 23.5; GW at El. 5 (blue text line)

Pile Settlement

Abut 1 P (lb)	136000
Abut 2 P (lb)	193000
A (in^2)	452
f'c (lb/in2)	3000
E (lb/in^2)	3122019
Abut 1 Length (ft)	38
Abut 2 Length (ft)	42
Abut1 δ_E (in)	0.04
Abut 2 δ_E (in)	0.07

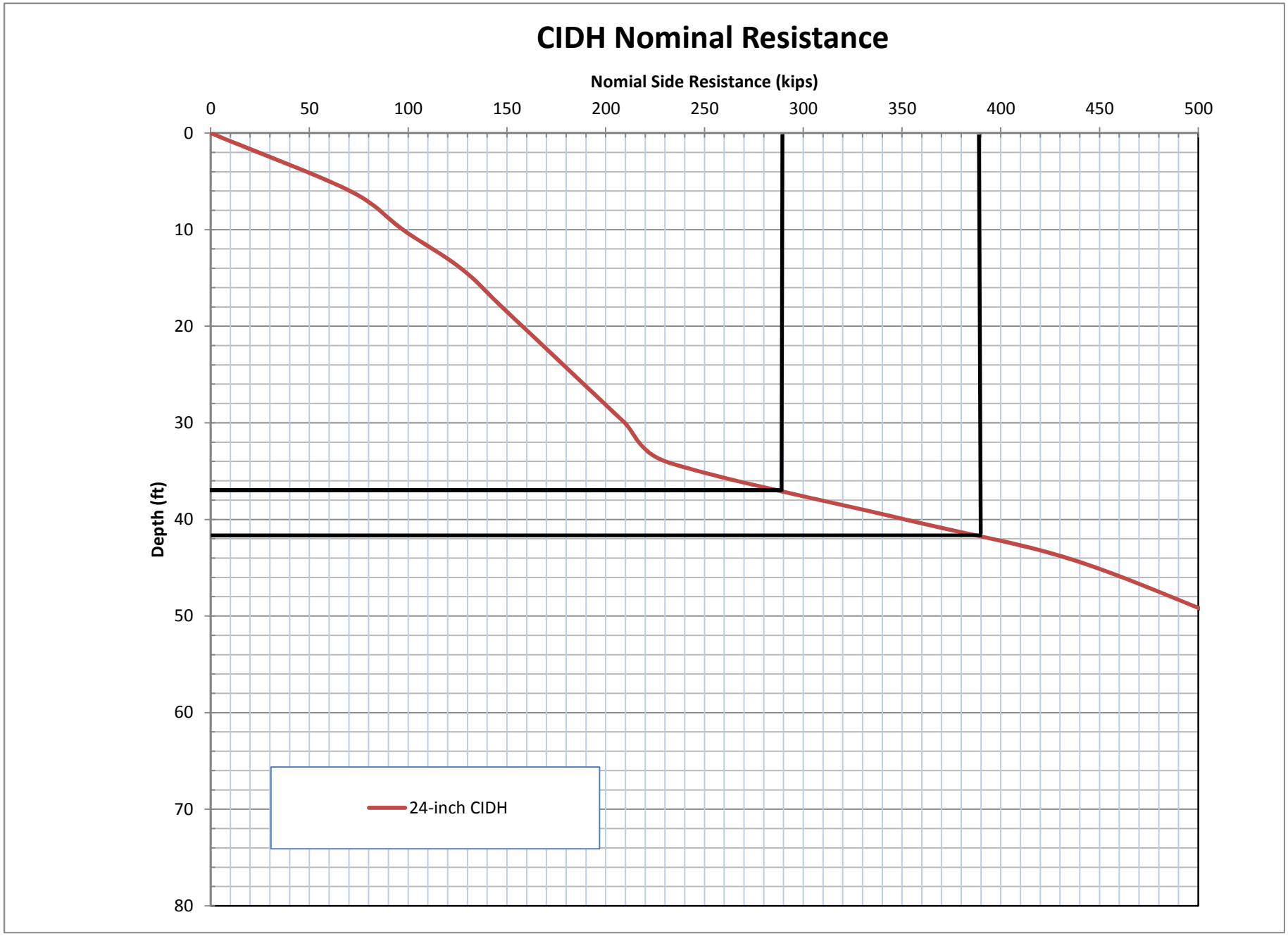
CIDH Nominal Resistance
Nomial Side Resistance (kips)
0
50
100
150
200
250
300
350
400
450
500
Depth (ft)
0
10
20
30
40
50
60
70
80
24-inch CIDH

APPENDIX E

Supplemental Subsurface Data From 2008 Borings

APPENDIX E

LOGGED BY	BEGIN DATE	COMPLETION DATE	BOREHOLE LOCATION (Lat/Long or North/East and Datum)	HOLE ID
JM	11-19-08	11-19-08	2233171.0 ft / 5967909.5 ft NAD83	R-08-007
DRILLING CONTRACTOR: Caltrans			BOREHOLE LOCATION (Offset, Station, Line): ' Lt Sta ~	SURFACE ELEVATION: ~32.9 ft NGVD29
DRILLING METHOD: Rotary Wash			DRILL RIG: CS 2000 (truck)	BOREHOLE DIAMETER: 4 in
SAMPLER TYPE(S) AND SIZE(S) (ID): SPT(1.4"), Shelby(2.87")			SPT HAMMER TYPE: automatic, 140 lbs.	HAMMER EFFICIENCY, ERi: 84%
BOREHOLE BACKFILL AND COMPLETION: Bentonite pellets/soil cuttings			GROUNDWATER READINGS: DURING DRILLING N/A - Rotary Was; AFTER DRILLING (DATE) 26.5 ft on11-25-08	TOTAL DEPTH OF BORING: 100.1 ft

ELEVATION (ft)	DEPTH (ft)	DESCRIPTION	Sample Location	Sample Number	Blows per 6 in.	Blows per foot	Recovery (%)	RQD (%)	Moisture Content (%)	Dry Unit Weight (pcf)	Shear Strength (tsf)	Drilling Method	Casing Depth	Remarks
	0	CLAYEY SAND with GRAVEL (SC).												Pampas grass on top of fill.
	1													
30.95	2													
	3													
28.95	4													
	5	CLAYEY SAND with GRAVEL (SC); medium dense; reddish brown; wet; fine GRAVEL; coarse SAND [ENGINEERED FILL].	X		7 5 7	12	61							Engineered fill from rock cut.
26.95	6													
	7													
24.95	8													
	9													
22.95	10	At EL. 22.9 ft, grades to medium dense; olive brown.	X		5 5 8	13	17							Engineered fill from rock cut.
	11													
20.95	12													
	13	Increasing sand content.												
18.95	14													
	15	Dense [ENGINEERED FILL].	X		10 17 14	31	33							Engineered fill from rock cut.
16.95	16													
	17													
14.95	18	At EL. 14.9 ft, observed cobble sized material.												
	19													
12.95	20	Dense [ENGINEERED FILL].	X		7 12 10	22	67							Engineered fill from rock cut.
	21													
10.95	22	Engineered fill content decreasing. Clay/silt content increasing..												
	23													
8.95	24													
	25													

(continued)

Department of Transportation
Division of Engineering Services
Geotechnical Services
Office of Geotechnical Design - West

REPORT TITLE				HOLE ID
BORING RECORD				R-08-007
DIST. 04	COUNTY Marin	ROUTE 101	POSTMILE D18.6/D22.3	EA 04-264061
PROJECT OR BRIDGE NAME: Marin-Sonoma Narrows				
BRIDGE NUMBER 27-92 R/L	PREPARED BY J. Moore	DATE 12-18-08	SHEET 1 of 4	

CALTRANS BORING RECORD MET+ENG FIXED MARIN-SONOMA-NARROWS SEGMENT A.GPJ CALTRANS LIBRARY 040808.GLB 02/04/09

ELEVATION (ft)	DEPTH (ft)	DESCRIPTION	Blows per 6 in.	Blows per foot	Recovery (%)	Shear Strength (tsf)	Remarks
	25	At EL. 7.9 ft, grades to (SILT with SAND) (ML); coarse to fine GRAVEL; No recovery; sample lost.			0		0 psi, drill head weight push.
6.95	26						
	27	~~PI=13~~			75		Drilled down to 27-ft. Pushed shelb again. 0 psi, drill head weight push.
4.95	28	PI=13					
	29						
2.95	30	PI=7		0.8		PP = 3.0 TV = 0.8	
	31	SILT with SAND (ML); stiff; olive brown; moist; some fine GRAVEL.	4 5 7	12	78		
0.95	32						
	33			0.4		PP = 1.0 TV = 0.4	
-1.05	34						
	35	~~PI=4~~			92		500 psi push.
-3.05	36	PI=4					
	37	Increasing sand and gravel content.					
-5.05	38						
	39						
-7.05	40	SILTY SAND with GRAVEL (SM); dense; reddish brown; moist; some fine GRAVEL; coarse to fine SAND.	9 13 23	36	100	PP = 4.5	
	41						
-9.05	42						
	43						
-11.05	44						
	45	Dense.	7 11 16	27	100	PP = 4.5	
-13.05	46						
	47						
-15.05	48	At EL. -15.1 ft, grades to (SILTY CLAY) (CL-ML); Decreasing sand/gravel content. Increasing clay/silt content.					
	49						
-17.05	50	SILTY CLAY (CL-ML); hard; reddish brown; moist; some fine GRAVEL; some coarse to fine SAND.	9 11 13	24	89		
	51						
-19.05	52						
	53	Increasing sand/gravel content.					
-21.05	54	At EL. -21.1 ft, grades to (SILT) (ML); soft; reddish brown; moist.					
	55						

(continued)

Department of Transportation
Division of Engineering Services
Geotechnical Services
Office of Geotechnical Design - West

REPORT TITLE				HOLE ID
BORING RECORD				**R-08-007**
DIST. **04**	COUNTY **Marin**	ROUTE **101**	POSTMILE **D18.6/D22.3**	EA **04-264061**
PROJECT OR BRIDGE NAME **Marin-Sonoma Narrows**				
BRIDGE NUMBER **27-92 R/L**	PREPARED BY **J. Moore**	DATE **12-18-08**	SHEET **2 of 4**	

CALTRANS BORING RECORD MET+ENG FIXED MARIN-SONOMA-NARROWS SEGMENT A.GPJ CALTRANS LIBRARY 040808.GLB 02/04/09

ELEVATION (ft)	DEPTH (ft)	DESCRIPTION	Sample Location	Sample Number	Blows per 6 in.	Blows per foot	Recovery (%)	RQD (%)	Moisture Content (%)	Dry Unit Weight (pcf)	Shear Strength (tsf)	Drilling Method	Casing Depth	Remarks
	55	SILTY CLAY (CL-ML) *(continued)*.												
-23.05	56					0.7					PP = 2.5 TV = 0.7			
	57													
-25.05	58	Increasing sand/gravel content.												
	59	Decreasing sand/gravel content.												
		PI = 29												
-27.05	60	At EL. -27.1 ft, with hard; fine SAND; Sand is reddish brown.	X		9	33	100							
	61		X		13 20						PP = 4.5			
-29.05	62													
	63													
-31.05	64													
	65	At EL. -31.6 ft, grades to brown/reddish brown to dark gray. Fine reddish brown sand grades to fine gray sand.												
-33.05	66													
	67													
-35.05	68					1.3					PP = 4.5 TV = 1.3			
	69													
-37.05	70	SILT with SAND (ML); very stiff; dark gray; moist; fine SAND.	X		5	17	100							
	71		X		7 10						PP = 3.5			
-39.05	72	PI = 42												
	73					0.85					PP = 4.25 TV = 0.85			
-41.05	74													
	75													
-43.05	76													
	77					0.8					PP = 3.5 TV = 0.8			
-45.05	78													
	79	At EL. -46.1 ft, grades to												
-47.05	80	Very dense.	X		18	56	67							Drilling becoming more difficult. Punchcore sampling stopped here. Drilling and SPT sampling only to 100-ft.
	81		X		26 30									
-49.05	82													
	83													
-51.05	84	Same.	X		50=4"		67							
	85													

(continued)

Department of Transportation
Division of Engineering Services
Geotechnical Services
Office of Geotechnical Design - West

REPORT TITLE				HOLE ID
BORING RECORD				**R-08-007**
DIST. **04**	COUNTY **Marin**	ROUTE **101**	POSTMILE **D18.6/D22.3**	EA **04-264061**
PROJECT OR BRIDGE NAME **Marin-Sonoma Narrows**				
BRIDGE NUMBER **27-92 R/L**	PREPARED BY **J. Moore**	DATE **12-18-08**	SHEET **3 of 4**	

CALTRANS BORING RECORD MET+ENG FIXED MARIN-SONOMA-NARROWS SEGMENT A.GPJ CALTRANS LIBRARY 040808.GLB 02/04/09

ELEVATION (ft)	DEPTH (ft)	Material Graphics	DESCRIPTION	Sample Location	Sample Number	Blows per 6 in.	Blows per foot	Recovery (%)	RQD (%)	Moisture Content (%)	Dry Unit Weight (pcf)	Shear Strength (tsf)	Drilling Method	Casing Depth	Remarks
	85		SEDIMENTARY ROCK (Shale) *(continued)*.												
-53.05	86														
	87														
-55.05	88														
	89														
-57.05	90		Same.	X		25		75							
	91					50=2"									
-59.05	92														Drill Chatter
	93														
-61.05	94														
	95		Same.	X		50=6"		100							
-63.05	96														
	97														
-65.05	98														
	99														
-67.05	100		Same, material is crushed.			50=1"		100							
			Bottom of borehole at 100.1 ft bgs												
	101														
-69.05	102														
	103														
-71.05	104														
	105														
-73.05	106														
	107														
-75.05	108														
	109														
-77.05	110														
	111														
-79.05	112														
	113														
-81.05	114														
	115														

Department of Transportation
Division of Engineering Services
Geotechnical Services
Office of Geotechnical Design - West

REPORT TITLE				HOLE ID
BORING RECORD				**R-08-007**
DIST. **04**	COUNTY **Marin**	ROUTE **101**	POSTMILE **D18.6/D22.3**	EA **04-264061**
PROJECT OR BRIDGE NAME **Marin-Sonoma Narrows**				
BRIDGE NUMBER **27-92 R/L**	PREPARED BY **J. Moore**	DATE **12-18-08**	SHEET **4 of 4**	

CALTRANS BORING RECORD MET+ENG FIXED MARIN-SONOMA-NARROWS SEGMENT A.GPJ CALTRANS LIBRARY 040808.GLB 02/04/09

Log of Shelby Tube

CTL No.:	603-013	Date:	2/13/2009
Company Name:	PB	Run By:	MD
Project Name:	Marin-Sonoma	Reduced By:	RU
Project No.:	04-264061		
Boring:	**R-08-007**	Sample:	Depth (ft.): **27-29**

	Top	Length (in.)	Depth
		36	
		35	
		34	
		33	
		32	
		31	
		30	
		29	
		28	
		27	
		26	
	24" Tube	25	
		24	
		23	
		22	
		21	
		20	
	Empty	19	
		18	
Brown Sandy CLAY		17	
		16	
		15	
		14	
		13	
		12	
	Sieve/Hydrometer	11	
Brown Sandy Lean CLAY →	PI	10	
		9	
		8	
		7	
		6	
Gray Clayey SAND		5	
		4	
		3	
Gray CLAY w/ soft pocket		2	
		1	
	Tip		

NOTE: All descriptions are visual descriptions unless classification tests were performed on that portion of the tube.

Log of Shelby Tube

CTL No.:	603-013	Date:	2/13/2009
Company Name:	PB	Run By:	MD
Project Name:	Marin-Sonoma	Reduced By:	RU
Project No.:	04-264061		
Boring:	**R-08-007**	Sample:	Depth (ft.): **35-37**

	Top	Length (in.)	Depth
		36	
		35	
		34	
		33	
		32	
		31	
		30	
		29	
		28	
		27	
		26	
	24" Tube	25	
		24	
	Empty	23	
		22	
Brown Sandy SILT (slightly plastic)		21	
		20	
Brown Silty SAND		19	
		18	
		17	
Brown Sandy CLAY		16	
		15	
		14	
		13	
		12	
	Sieve/Hydrometer	11	
	PI	10	
Brown Silty, Clayey SAND →		9	
		8	
		7	
		6	
		5	
		4	
Brown Clayey SAND w/ Gravel		3	
		2	
		1	
	Tip		

NOTE: All descriptions are visual descriptions unless classification tests were performed on that portion of the tube.

LIQUID AND PLASTIC LIMITS TEST REPORT

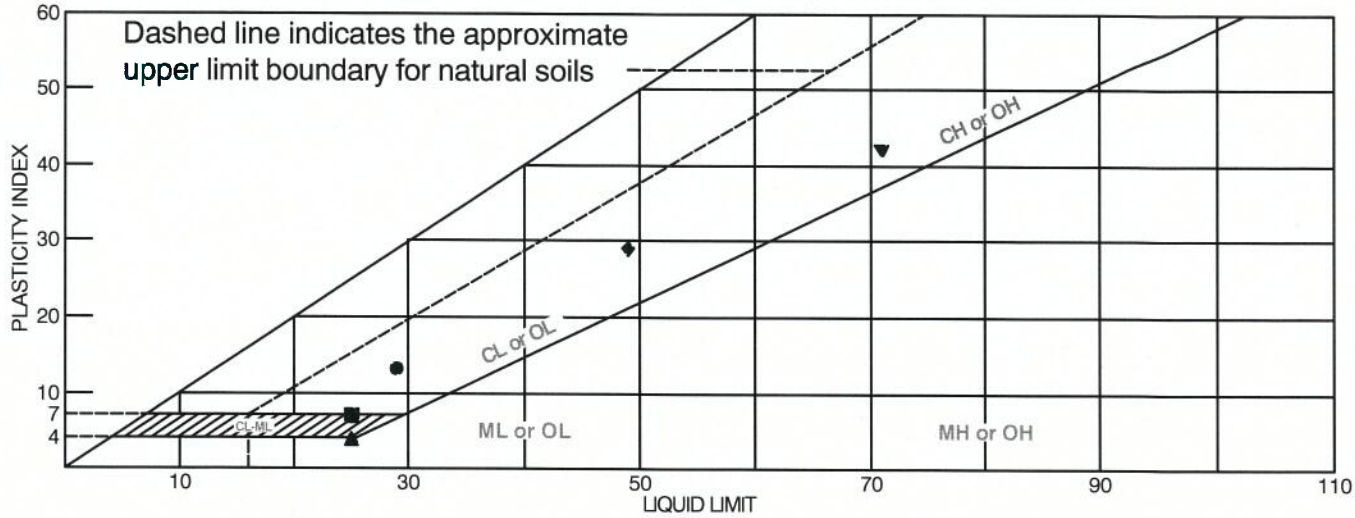

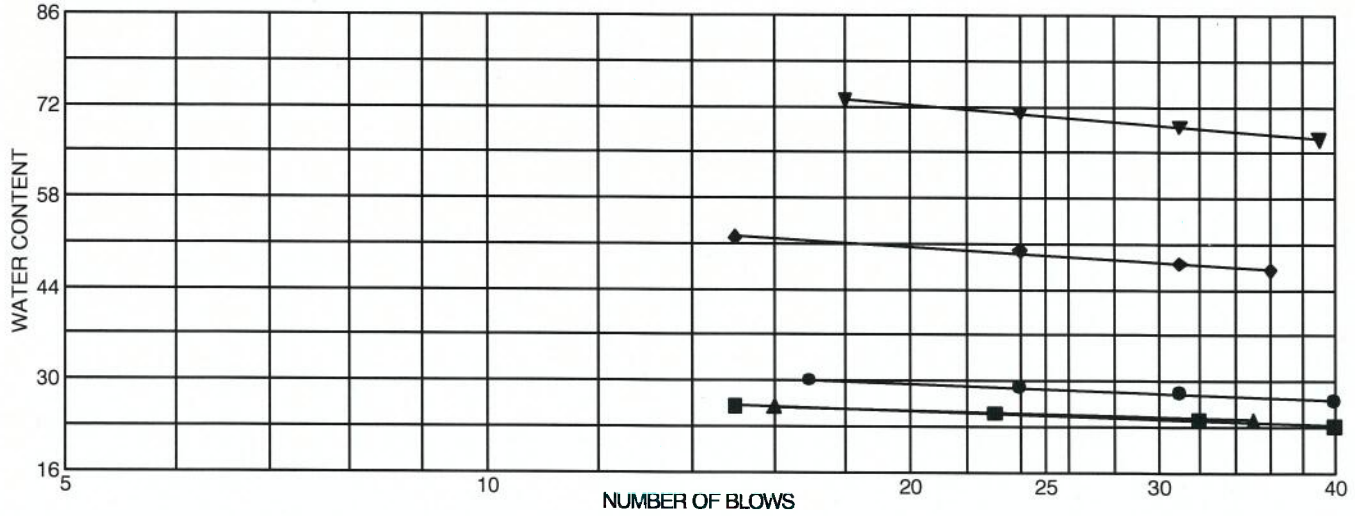

	MATERIAL DESCRIPTION	LL	PL	PI	%<#40	%<#200	USCS
●	Brown Sandy Lean CLAY	29	16	13	83.9	67.8	CL
■	Light Olive Brown Sandy Silty CLAY	25	18	7	80.6	53.6	CL-ML
▲	Brown Silty, Clayey SAND	25	21	4	63.8	28.3	SC-SM
◆	Mottled Grayish Brown Lean Clayey SAND	49	20	29			
▼	Gray Fat CLAY	71	29	42	96.4	91.4	CH

Project No. 603-013 **Client:** PB

Project: Marin-Sonoma Narrows - 04-264061

● **Source:** R-08-007 **Elev./Depth:** 27-29'
■ **Source:** R-08-007 **Elev./Depth:** 30'
▲ **Source:** R-08-007 **Elev./Depth:** 35-37'
◆ **Source:** R-08-007 **Elev./Depth:** 60'
▼ **Source:** R-08-007 **Elev./Depth:** 70'

Remarks:
●
■
▲
◆
▼

LIQUID AND PLASTIC LIMITS TEST REPORT

COOPER TESTING LABORATORY

Figure

LOGGED BY	BEGIN DATE	COMPLETION DATE	BOREHOLE LOCATION (Lat/Long or North/East and Datum)	HOLE ID
JM	11-17-08	11-18-08	2233336.0 ft / 5967887.3 ft NAD83	R-08-008
DRILLING CONTRACTOR			BOREHOLE LOCATION (Offset, Station, Line)	SURFACE ELEVATION
Caltrans			' Lt Sta ~	~32.8 ft NGVD29
DRILLING METHOD			DRILL RIG	BOREHOLE DIAMETER
Rotary Wash			CS 2000 (truck)	4 in
SAMPLER TYPE(S) AND SIZE(S) (ID)			SPT HAMMER TYPE	HAMMER EFFICIENCY, ERi
SPT(1.4"), Shelby(2.87")			automatic, 140 lbs.	84%
BOREHOLE BACKFILL AND COMPLETION			GROUNDWATER READINGS: DURING DRILLING / AFTER DRILLING (DATE)	TOTAL DEPTH OF BORING
Bentonite pellets/soil cuttings			N/A - Rotary Was24.6 ft on11-25-08	100.5 ft

ELEVATION (ft)	DEPTH (ft)	Material Graphics	DESCRIPTION	Sample Location	Sample Number	Blows per 6 in.	Blows per foot	Recovery (%)	RQD (%)	Moisture Content (%)	Dry Unit Weight (pcf)	Shear Strength (tsf)	Drilling Method / Casing Depth	Remarks
	0		CLAYEY SAND (SC); medium dense; reddish brown; moist; coarse to fine SAND [ENGINEERED FILL].											Pampas grass on surface.
	1													
30.83	2													
	3													
28.83	4													
	5		Medium dense; Same, with compacted weathered rock. (Increasing coarse gravel content.) [ENGINEERED FILL].	X		9 10 11	21	89						
26.83	6													
	7													
24.83	8											PP = 4.5		
	9													
22.83	10		Medium dense; Same [ENGINEERED FILL].	X		9 10 11	21	89						
	11													
20.83	12													
	13		Increasing coarse sand and fine gravel content.											
18.83	14													
	15		Medium dense; Same [ENGINEERED FILL].	X		8 7 7	14	89						
16.83	16													
	17													
14.83	18		Increasing silt content.											
	19													
12.83	20		Medium dense; Same [ENGINEERED FILL]. Sand content decreases.	X		5 5 8	13	100						
	21		SILT (ML); medium stiff; dark greenish gray.											
10.83	22													
	23													
8.83	24						0.95					TV = 0.95		
	25													

(continued)

Department of Transportation
Division of Engineering Services
Geotechnical Services
Office of Geotechnical Design - West

REPORT TITLE				HOLE ID
BORING RECORD				R-08-008
DIST. 04	COUNTY Marin	ROUTE 101	POSTMILE D18.6/D22.3	EA 04-264061
PROJECT OR BRIDGE NAME: Marin-Sonoma Narrows				
BRIDGE NUMBER 27-92 R/L	PREPARED BY J. Moore	DATE 12-19-08	SHEET 1 of 4	

CALTRANS BORING RECORD MET+ENG FIXED MARIN-SONOMA-NARROWS SEGMENT A.GPJ CALTRANS LIBRARY 040808.GLB 02/04/09

ELEVATION (ft)	DEPTH (ft)	DESCRIPTION	Blows per 6 in.	Blows per foot	Recovery (%)	Shear Strength (tsf)	Remarks
	25	Medium dense; Same. SILT (ML) *(continued)*. PI = 25	4 4 6	10	78	PP = 1.5	
6.83	26						
	27					PP = 1.5	
4.83	28	CLAYEY SAND (SC).					
	29	Sand content increases.					
2.83	30	PI = 7 CLAYEY SAND (SC); loose; dark yellowish brown; moist; medium to fine SAND.	4 3 4	7	44		Clayey SAND/SAND with Clay.
	31						
0.83	32						
	33						
-1.17	34						
	35	Same.			92		Push with drill head weight only, zero pressure.
-3.17	36	PI = Non Plastic					
	37						
-5.17	38						
	39						
-7.17	40	Medium dense; Same.	6 4 6	10	100	PP = 1.75	
	41						
-9.17	42	Sand content decreases.					
	43	SILT (ML); medium stiff; olive gray mottled with reddish brown; moist.					
-11.17	44			0.5		PP = 1.75 TV = 0.5	
	45	Very stiff. PI = 31	5 5 7	12	100	PP = 2.25	
-13.17	46						
	47						
-15.17	48						
	49						
-17.17	50	PI = 23 Very stiff; same.		0.85		PP = 1.5 TV = 0.85	
	51		4 7 8	15	100	PP = 0.5	
-19.17	52						
	53			0.95		PP = 3.0 TV = 0.95	
-21.17	54						
	55						

(continued)

Department of Transportation
Division of Engineering Services
Geotechnical Services
Office of Geotechnical Design - West

REPORT TITLE				HOLE ID
BORING RECORD				**R-08-008**
DIST. **04**	COUNTY **Marin**	ROUTE **101**	POSTMILE **D18.6/D22.3**	EA **04-264061**
PROJECT OR BRIDGE NAME **Marin-Sonoma Narrows**				
BRIDGE NUMBER **27-92 R/L**	PREPARED BY **J. Moore**	DATE **12-19-08**	SHEET **2 of 4**	

CALTRANS BORING RECORD MET+ENG FIXED MARIN-SONOMA-NARROWS SEGMENT A.GPJ CALTRANS LIBRARY 040808.GLB 02/04/09

ELEVATION (ft)	DEPTH (ft)	DESCRIPTION	Sample Location	Sample Number	Blows per 6 in.	Blows per foot	Recovery (%)	RQD (%)	Moisture Content (%)	Dry Unit Weight (pcf)	Shear Strength (tsf)	Drilling Method	Casing Depth	Remarks
	55	SILT (ML) *(continued)*.												
-23.17	56													
	57					0.975					PP = 4.25 TV = 0.975			
-25.17	58													
	59													
-27.17	60	Very stiff; same.			4 8 9	17	83							
	61										PP = 1.75			
-29.17	62													
	63													
-31.17	64	Increasing sand and gravel content. Sand grades medium to coarse. Gravel grades fine to coarse.				1.0					PP = 4.25 TV = 1.0			
	65													
-33.17	66													
	67					0.3					PP = 4.5 TV = 0.3			
-35.17	68													
	69	Decreasing silt content. SILTY SAND with GRAVEL (SM); very dense; reddish brown; moist; some coarse to fine GRAVEL; coarse to medium SAND.												
-37.17	70	Very dense.			5 23 23	46	100							
	71													
-39.17	72													No recovery to 75-ft. Punchcore lost.
	73													
-41.17	74													
	75													
-43.17	76													
	77													
-45.17	78													
	79	Grades to completely weathered weak rock.												
-47.17	80	Dense.			7 11 13	24	67							Franciscan Formation (Shale, Mudstone, Greenstone).
	81													
-49.17	82													
	83													
-51.17	84													
	85													

(continued)

Department of Transportation
Division of Engineering Services
Geotechnical Services
Office of Geotechnical Design - West

REPORT TITLE				HOLE ID
BORING RECORD				**R-08-008**
DIST. **04**	COUNTY **Marin**	ROUTE **101**	POSTMILE **D18.6/D22.3**	EA **04-264061**
PROJECT OR BRIDGE NAME **Marin-Sonoma Narrows**				
BRIDGE NUMBER **27-92 R/L**	PREPARED BY **J. Moore**	DATE **12-19-08**	SHEET **3 of 4**	

CALTRANS BORING RECORD MET+ENG FIXED MARIN-SONOMA-NARROWS SEGMENT A.GPJ CALTRANS LIBRARY 040808.GLB 02/04/09

ELEVATION (ft)	DEPTH (ft)	Material Graphics	DESCRIPTION	Sample Location	Sample Number	Blows per 6 in.	Blows per foot	Recovery (%)	RQD (%)	Moisture Content (%)	Dry Unit Weight (pcf)	Shear Strength (tsf)	Drilling Method	Casing Depth	Remarks
	85		SEDIMENTARY ROCK (Shale) *(continued)*.												
-53.17	86														
	87		With calcite infilling.												
-55.17	88														
	89														
-57.17	90		Same.	X		16 50=5"		92							
	91														Drilling becoming much more difficult. Still using punchcore method.
-59.17	92														
	93														
-61.17	94		Becoming highly weathered.												
	95														
-63.17	96														
	97														
-65.17	98														
	99														
-67.17	100		Same, highly weathered.	X		50=6"		100							
			Bottom of borehole at 100.5 ft bgs												
	101														
-69.17	102														
	103														
-71.17	104														
	105														
-73.17	106														
	107														
-75.17	108														
	109														
-77.17	110														
	111														
-79.17	112														
	113														
-81.17	114														
	115														

Department of Transportation
Division of Engineering Services
Geotechnical Services
Office of Geotechnical Design - West

REPORT TITLE				HOLE ID
BORING RECORD				**R-08-008**
DIST. **04**	COUNTY **Marin**	ROUTE **101**	POSTMILE **D18.6/D22.3**	EA **04-264061**
PROJECT OR BRIDGE NAME **Marin-Sonoma Narrows**				
BRIDGE NUMBER **27-92 R/L**	PREPARED BY **J. Moore**	DATE **12-19-08**	SHEET **4 of 4**	

CALTRANS BORING RECORD MET+ENG FIXED MARIN-SONOMA-NARROWS SEGMENT A.GPJ CALTRANS LIBRARY 040808.GLB 02/04/09

Log of Shelby Tube

CTL No.:	603-013	Date:	2/13/2009
Company Name:	PB	Run By:	MD
Project Name:	Marin-Sonoma	Reduced By:	RU
Project No.:	04-264061		
Boring:	**R-08-008**	Sample:	Depth (ft.): **35-37**

	Top	Length (in.)	Depth
		36	
		35	
		34	
		33	
		32	
		31	
		30	
		29	
		28	
		27	
		26	
	24" Tube	25	
		24	
	Empty	23	
		22	
		21	
Brown Clayey SAND w/ Gravel		20	
		19	
		18	
		17	
		16	
Brown Silty SAND →	Sieve/Hydrometer	15	
	PI	14	
		13	
		12	
		11	
		10	
		9	
		8	
Brown CLAY		7	
		6	
		5	
		4	
		3	
		2	
		1	
	Tip		

NOTE: All descriptions are visual descriptions unless classification tests were performed on that portion of the tube.

Log of Shelby Tube

CTL No.:	603-013	Date:	2/13/2009
Company Name:	PB	Run By:	MD
Project Name:	Marin-Sonoma	Reduced By:	RU
Project No.:	04-264061		
Boring:	**R-08-008**	Sample:	Depth (ft.): **35-37**

	Top	Length (in.)	Depth
		36	
		35	
		34	
		33	
		32	
		31	
		30	
		29	
		28	
		27	
		26	
	24" Tube	25	
		24	
	Empty	23	
		22	
		21	
Brown Clayey SAND w/ Gravel		20	
		19	
		18	
		17	
		16	
Brown Silty SAND →	Sieve/Hydrometer PI	15	
		14	
		13	
		12	
		11	
		10	
		9	
		8	
Brown CLAY		7	
		6	
		5	
		4	
		3	
		2	
		1	
	Tip		

NOTE: All descriptions are visual descriptions unless classification tests were performed on that portion of the tube.

LIQUID AND PLASTIC LIMITS TEST REPORT

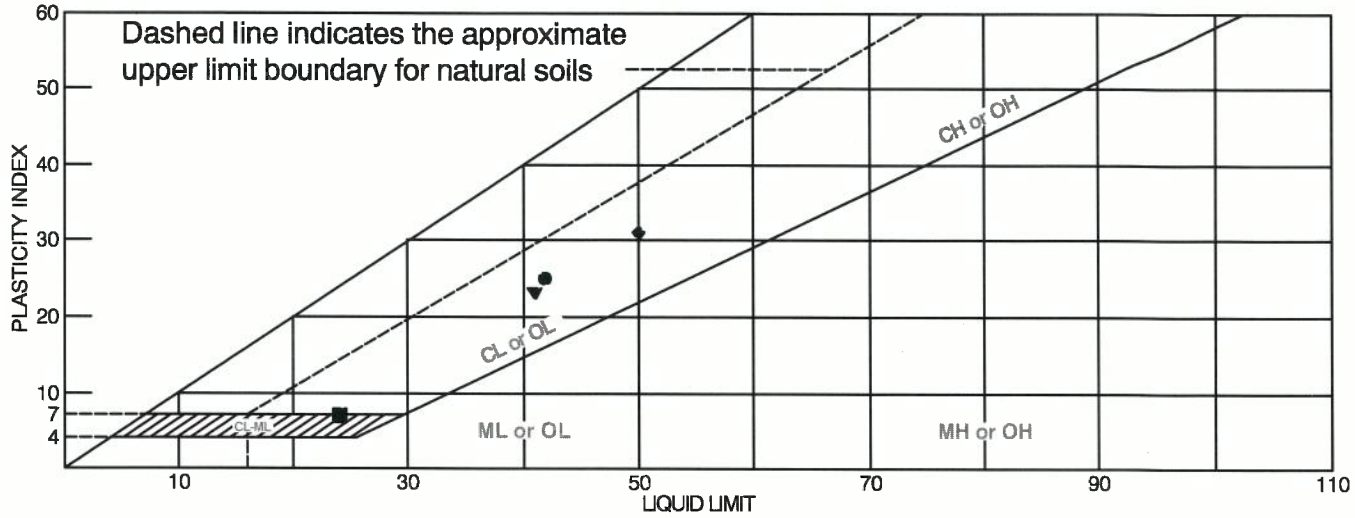

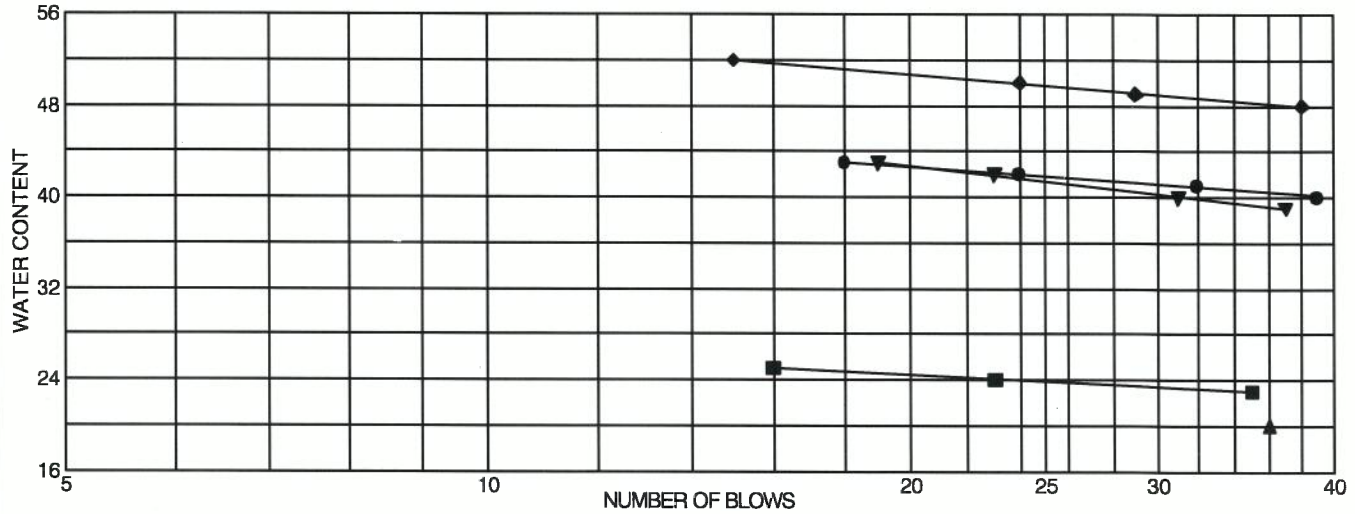

	MATERIAL DESCRIPTION	LL	PL	PI	%<#40	%<#200	USCS
●	Gray Lean Clayey SAND	42	17	25			
■	Brown Silty, Clayey SAND	24	17	7	68.3	31.9	SC-SM
▲	Brown Silty SAND		NP	NP	87.2	31.1	SM
◆	Mottled Gray Fat CLAY	50	19	31	97.6	89.9	CH
▼	Yellow Lean CLAY	41	18	23			

Project No. 603-013 **Client:** PB

Project: Marin-Sonoma Narrows - 04-264061

● **Source:** R-08-008 **Elev./Depth:** 25'
■ **Source:** R-08-008 **Elev./Depth:** 30'
▲ **Source:** R-08-008 **Elev./Depth:** 35-37'
◆ **Source:** R-08-008 **Elev./Depth:** 45'
▼ **Source:** R-08-008 **Elev./Depth:** 50'

Remarks:
●
■
▲Could not roll out. Sample slides in bowl. Non-plastic.
◆
▼

LIQUID AND PLASTIC LIMITS TEST REPORT

COOPER TESTING LABORATORY

Figure

APPENDIX F

Response to Caltrans Comments

APPENDIX F

Office of Special Funded Projects
Comment & Response Form

(Revised 08/2011)

General Project Information (OSFP Liaison to complete)		**Review Phase** (OSFP Liaison to complete)	**Reviewer Information** (Reviewer Liaison to complete)	
Dist:	**04**	☐ PSR/PDS (Review No.)	Reviewer Name:	**Betty Lee/Caroline Chen**
Proj ID (Phase):	**0414000221**	☐ APS/PSR (Review No.)	Functional Unit:	**GDW**
EA:	**04-264H31**	☐ APS/PR (Review No.)	Cost Center:	**59-3660**
Project Name:	**MRN- 101, PM 18.8/25.8, Olive Ave UC (MSN-L1A2)**	☐ Type Selection	Phone Number:	**510-286-4825/916-227-5386**
OSFP Liaison:	**Emil Vergara**	☐ 65% PS&E Unchecked Details	e-mail:	**Betty.lee@dot.ca.gov Caroline.chen@dot.ca.gov**
Phone:	**(916) 227-8360**	X PS&E (Review No. 3)	Date of Review:	**4-2-2015**
E-mail:	**Emil.vergara@dot.ca.gov**	☐ Construction	Structure Name*:	**Olive Ave UC (Modification) & Soundwalls**
		Other:_FOUNDATION REPORT—3RD REVIEW	Br No*:	**27-0092R**
			(*Use if necessary to when comment sheets are by individual structure)	

Consultant Information (to be filled in by Consultant)

Consultant Structure Lead (First and Last Name)	Structure Consultant Firm	Phone Number	E-mail	Response Date
Ines Li, PE	**Biggs Cardosa Assoc. Inc**	**408-296-5515**	**Ili@biggscardosa.com**	**4/23/2015**

#	Doc. (See Note 1)	Page, Section, or SSP	Review Comments	Consultant Responses	Caltrans Response	Consultant Response #2
1			Comments are made based on the review of foundation report dated 3/13/2015, prepared by ENGEO., and structure plans dated 3/19/2015 prepared by Biggs Cardosa Associates Inc..			
2	FR	LOTBs	Boreholes 1-B1 and 1-B2: 1. The groundwater is not specified. Please indicate whether the groundwater was not measured or not encountered during field investigation.	1 – 5: The changes have been made		

Note 1: Abbreviations for Typical Documents (if Abbr. is not below, type in the document type)					
P=Structure Plans	SP=Special Provisions	FR=Foundation Rpt	DC=Design Calcs	TS=Type Sel. Report	QCC=Quant. Check Calcs
RP=Road Plans	E=Estimate	H=Hydraulics Rpt	CC=Check Calcs	QC=Quant. Calcs	

✓= Comment Resolved (for Reviewer's use)

Submittal Data (Reviewer to complete)
Project ID: Reviewer: Str Name*:
Date of Review: Functional Unit: Br No*. ___ *=if applicable

#	Doc. (See Note 1)	Page, Section, or SSP	Review Comments		Consultant Responses	✓
			2. Change vertical axis labeling from "DEPTH IN FEET" to "ELEVATION IN FEET." 3. Change "TERMINATED ELEV." To "TERMINATED AT ELEV." 4. Add hammer energy efficiency ratio at the bottom of each boring log. 5. Please add notes: 1) This LOTB sheet was prepared in accordance with the Caltrans Soil & Rock Logging, Classification, & Presentation Manual (2010 Edition). 2) See 2010 Standard Plans A10F and A10G for Soil Legend.			
3	FR		Regarding Comment #9: 1) Since ENGEO is hired to do the geotechnical report, it is not acceptable to cite another report to justify a conclusion which data do not support. It should do its own independent evaluation. 2) Soil data of the following boreholes do not support the conclusion of low liquefaction potential: B-1 (10/22/68) 1-B2 (12/5/14) R-08-007 (11/17/08) R-08-008 (11/14/08)	1-B2 is not included because it is above the water table. Liquefaction Calculations are added in Appendix E, Added additional explanation to Section 3.3, Page 4 and 5 While we acknowledge that a conservative	This project is for the entire Olive Ave undercrossing, not just Abut 1. It is unconservative to use only the data of Borehole B-6 while the data of all other 5 boreholes in the vicinity show liquefaction potential. This is shown in Engeo's calculations in	We received additional information from Borings R-08-007 and R-08-008 courtesy of Caltrans. This data, inclusive of lab testing and logs of shelby tubes indicates that the soil previously identified as sandy is primarily silty and the liquefaction risk is nominal

Note 1: Abbreviations for Typical Documents (if Abbr. is not below, type in the document type)					
P=Structure Plans	SP=Special Provisions	FR=Foundation Rpt	DC=Design Calcs	TS=Type Sel. Report	QCC=Quant. Check Calcs
RP=Road Plans	E=Estimate	H=Hydraulics Rpt	CC=Check Calcs	QC=Quant. Calcs	

✓= Comment Resolved (for Reviewer's use)

Submittal Data (Reviewer to complete)
Project ID: Reviewer: Str Name*:
Date of Review: Functional Unit: Br No*. ___ *=if applicable

#	Doc. (See Note 1)	Page, Section, or SSP	Review Comments	Consultant Responses		✓
			3) Liquefaction map by Wentworth et al (2000) is a *regional* map.	evaluation of the data in the LOTBs indicates that liquefaction is possible at the bridge, this evaluation is performed using limited laboratory data. The existing boring closest to the abutment widening did not encounter liquefiable soil. We do not recommend liquefaction be considered in design of the CIDH piles for the abutment widening because: 1) They will be integrated with a foundation that was not designed for liquefaction thus enhancing potential differential foundation movement 2) The closest	Appendix E. As for Engeo's recommendation to not consider liquefaction in the design of the CIDH piles because they would "enhance the potential differential foundation movement", we disagree from a geotechnical perspective. **Caltrans Structural Engineer: Please comment on this issue from the structural perspective.** Please provide mitigation measures for the settlements calculated.		

Note 1: Abbreviations for Typical Documents (if Abbr. is not below, type in the document type)					
P=Structure Plans	SP=Special Provisions	FR=Foundation Rpt	DC=Design Calcs	TS=Type Sel. Report	QCC=Quant. Check Calcs
RP=Road Plans	E=Estimate	H=Hydraulics Rpt	CC=Check Calcs	QC=Quant. Calcs	

✓= Comment Resolved (for Reviewer's use)

Submittal Data (Reviewer to complete)
Project ID: Reviewer: Str Name*:
Date of Review: Functional Unit: Br No*. ___ *=if applicable

#	Doc. (See Note 1)	Page, Section, or SSP	Review Comments	Consultant Responses		✓
				boring did not encounter liquefiable soil		
4	FR	Page 9	Table 4.2.2-4, page 9: Please remove Column "Nominal Driving Resistance." This only applies to driven piles.	Column Removed, Page 9		
5	FR	Appendix D	Soil profile: Soil layer between El -13.7 to -23.7 is identified as sand with friction angle 40 degree as presented in the attached calculation. This does not seem to be supported by Borings R-08-007 and R-08-008.	This is based on Boring B-6 1968 Boring. Uncorrected Blow Counts at this elevation are up to 42. This is the closest boring to the abutment widening. The referenced borings were drilled in the median. According to Meyehof, Non corrected blowcounts between 30 to 50 can yield friction angles between 40 and 45 degrees.	Boring B-6 was used for the calculations of both Abut 1 and Abut 2 when it is only closes to Abut 1. All other boreholes show clayey silt in this elevation. Friction angle of 40 degrees is too high for this soil material.	We have also evaluated Abutment 2 using a composite of borings R-08-007 and R-08-008 and evaluated the pile length under tis soil profile. The revised evaluation indicates a 42 foot long pile matching the original analysis.
6	FR		Title page of report: "Olive Avenue UP" should be changed to "Olive Avenue UC." Please also include bridge number. Change title "Foundation Exploration" to "Foundation Report."	Added, Title Page		

Note 1: Abbreviations for Typical Documents (if Abbr. is not below, type in the document type)					
P=Structure Plans	SP=Special Provisions	FR=Foundation Rpt	DC=Design Calcs	TS=Type Sel. Report	QCC=Quant. Check Calcs
RP=Road Plans	E=Estimate	H=Hydraulics Rpt	CC=Check Calcs	QC=Quant. Calcs	

✓= Comment Resolved (for Reviewer's use)

Submittal Data (Reviewer to complete)

Project ID: Reviewer: Str Name*:

Date of Review: Functional Unit: Br No*. ___ *=if applicable

#	Doc. (See Note 1)	Page, Section, or SSP	Review Comments	Consultant Responses		✓
7	P	Sheet 40	If this LOTB sheet is the only one for soundwalls, change the title from "Log of Test Boring 1 of 3" to "Log of Test Boring 1 of 1."	Changed		
8			Please include the previous comments and responses in the appendix of the submitted FR.	Added in Appendix F		

Note 1: Abbreviations for Typical Documents (if Abbr. is not below, type in the document type)					
P=Structure Plans	SP=Special Provisions	FR=Foundation Rpt	DC=Design Calcs	TS=Type Sel. Report	QCC=Quant. Check Calcs
RP=Road Plans	E=Estimate	H=Hydraulics Rpt	CC=Check Calcs	QC=Quant. Calcs	

✓= Comment Resolved (for Reviewer's use)

OSFP Rev Form 12/2010

2. Bridge No. 27-0092R as-built drawings

DIST	COUNTY	ROUTE	POST MILES TOTAL PROJECT	SHEET No	TOTAL SHEETS
04	Mrn	101	18.6/R22.3	522	542

REGISTERED CIVIL ENGINEER 03-08-10 DATE

8-9-10
PLANS APPROVAL DATE

REGISTERED PROFESSIONAL ENGINEER Keng Mun Low No. C49361 Exp. 09-30-10 CIVIL STATE OF CALIFORNIA

The State of California or its officers or agents shall not be responsible for the accuracy or completeness of electronic copies of this plan sheet.

NOTES:

① Reconstruct and new slope paving, portion.
② Remove existing barrier and overhang.
③ Concrete Barrier Type 736
④ Temporary Railing (Type K), see "ROAD PLANS."
⑤ Match existing cross slope.
⑥ Closure pour, 2'-3¾"± and varies. See "FALSEWORK RELEASE" note in "INDEX TO PLANS" sheet.
⑦ Remove existing MBGR, see "ROAD PLANS."
⑧ 2 - 2" Dia conduits for fiber optic lines, see "ELECTRICAL PLANS."

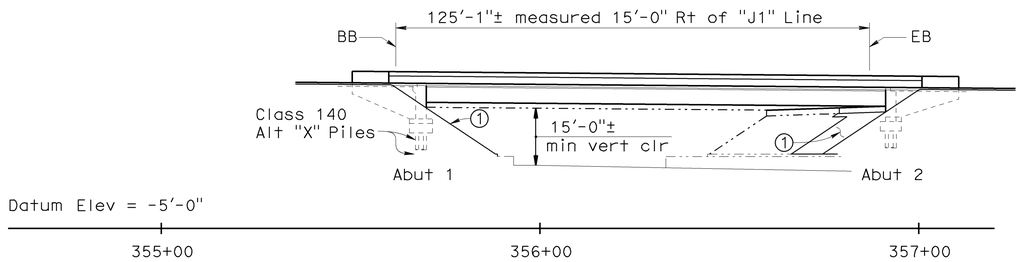

MIRRORED ELEVATION

1 " = 20'-0"

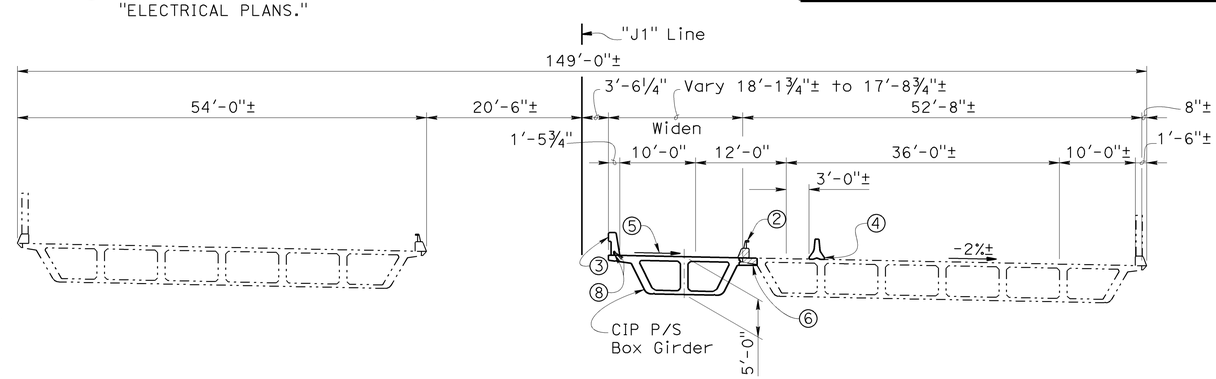

TYPICAL SECTION

1 " = 10'-0"

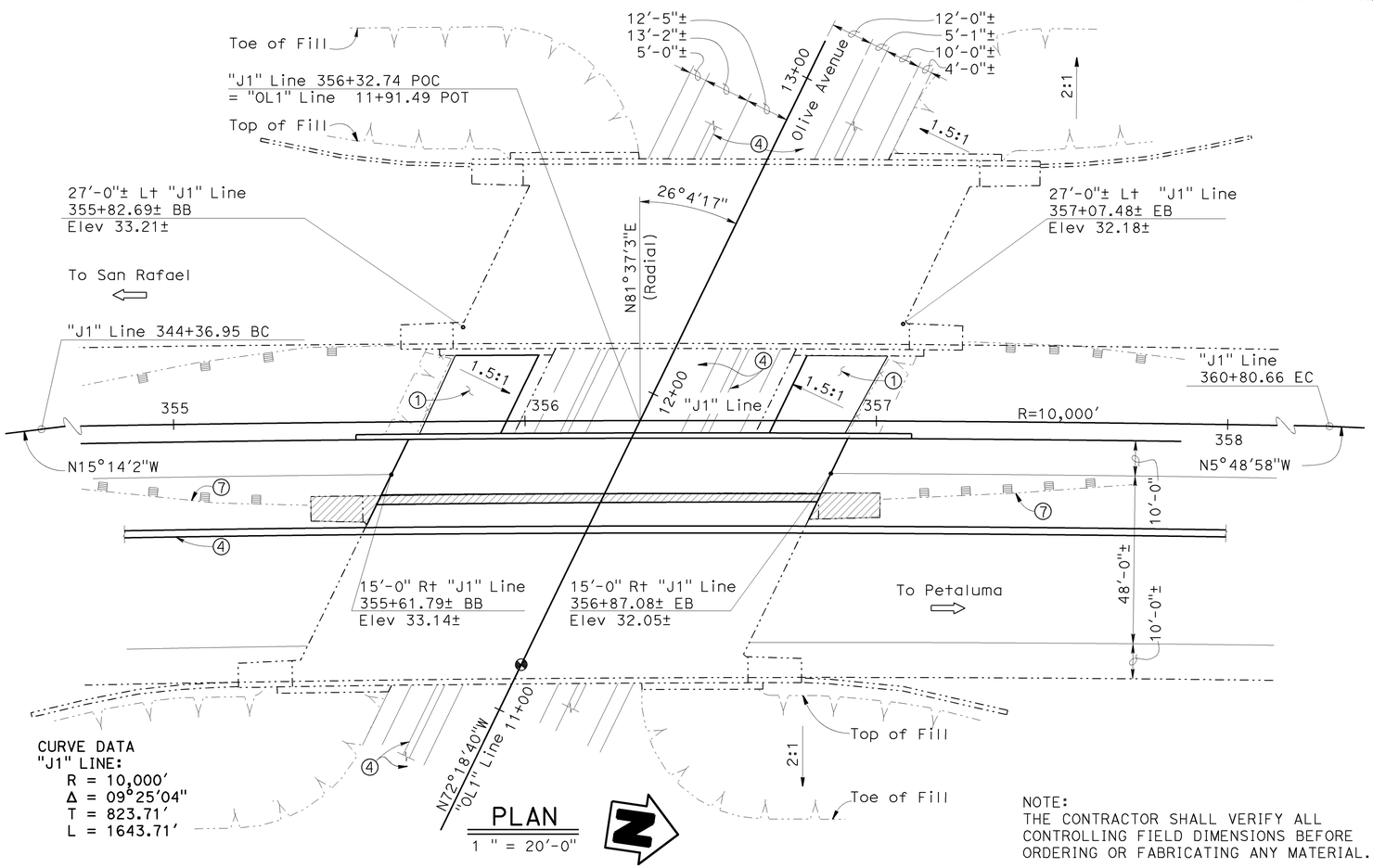

CURVE DATA
"J1" LINE:
R = 10,000'
Δ = 09°25'04"
T = 823.71'
L = 1643.71'

PLAN

1 " = 20'-0"

LEGEND:

- Indicates existing structure
- Indicates new construction
- Indicates Point of Minimum Vertical Clearance
- Indicates removal of existing concrete and bridge railing

QUANTITIES

SALVAGE METAL BRIDGE RAILING	163	LF
BRIDGE REMOVAL (PORTION), LOCATION C	LUMP	SUM
STRUCTURE EXCAVATION (BRIDGE)	175	CY
STRUCTURE BACKFILL (BRIDGE)	117	CY
FURNISH PILING (CLASS 140)(ALTERNATIVE X)	813	LF
DRIVE PILE (CLASS 140)(ALTERNATIVE X)	12	EA
PRESTRESSING CAST-IN-PLACE CONCRETE	LUMP	SUM
STRUCTURAL CONCRETE, BRIDGE FOOTING	29	CY
STRUCTURAL CONCRETE, BRIDGE	201	CY
DRILL AND BOND DOWEL	21	LF
JACKING SUPERSTRUCTURE	LUMP	SUM
BAR REINFORCING STEEL (BRIDGE)	63,000	LB
8" PERFORATED STEEL PIPE UNDERDRAIN (.064" THICK)	48	LF
8" CORRUGATED STEEL PIPE DOWNDRAIN (.064" THICK)	53	LF
SLOPE PAVING (CONCRETE)(CONCRETE PAVER)	2,100	SQFT
CONCRETE BARRIER (TYPE 736)	163	LF

NOTE:
THE CONTRACTOR SHALL VERIFY ALL CONTROLLING FIELD DIMENSIONS BEFORE ORDERING OR FABRICATING ANY MATERIAL.

ALL DIMENSIONS ARE IN FEET UNLESS OTHERWISE SHOWN

NO AS BUILT CORRECTIONS

CONTRACT NO: 04-264064
TRANSFER DATE: 04-30-2014
FIELD CORRECTION DATE: 11-13-2012
CORRECTIONS TRANSFERRED BY: AC
FIELD CORRECTIONS BY: LONG LY

Brian Mori
DESIGN ENGINEER

	BY	CHECKED			
DESIGN	R. Amir	A. Menke	LOAD & RESISTANCE FACTOR DESIGN	LIVE LOADING: "HL93 W/'LOW-BOY' AND PERMIT DESIGN VEHICLE"	
DETAILS	T. Kusumi	R. Amir	LAYOUT	K. M. Low	R. Amir
QUANTITIES	T. Kusumi	M. Beall	SPECIFICATIONS	Todd Geerts	PLANS AND SPECS COMPARED Todd Geerts

ORIGINAL SCALE IN INCHES FOR REDUCED PLANS 0 1 2 3

STATE OF CALIFORNIA
DEPARTMENT OF TRANSPORTATION

DIVISION OF ENGINEERING SERVICES
STRUCTURE DESIGN
DESIGN BRANCH 8

CU 04
EA 264061

BRIDGE NO. 27-0092R
POST MILE R21.47

OLIVE AVENUE UC (WIDEN)
GENERAL PLAN

DISREGARD PRINTS BEARING EARLIER REVISION DATES

REVISION DATES: 01-14-10 02-11-10 02-22-10 02-25-10 05-03-10 03-11-10 03-15-10 10-28-09 12-15-09

SHEET 1 OF 21

STRUCTURES DESIGN GENERAL PLAN SHEET (ENGLISH) (REV.07-24-06)

FILE => 27-0092r-a-gp01.dgn

USERNAME => s133915 DATE PLOTTED => 29-APR-2015 TIME PLOTTED => 11:08

DIST	COUNTY	ROUTE	POST MILES TOTAL PROJECT	SHEET No	TOTAL SHEETS
04	Mrn	101	18.6/R22.3	523	542

REGISTERED CIVIL ENGINEER 03-08-10 DATE

8-9-10
PLANS APPROVAL DATE

REGISTERED PROFESSIONAL ENGINEER Keng Mun Low No. C49361 Exp. 09-30-10 CIVIL STATE OF CALIFORNIA

The State of California or its officers or agents shall not be responsible for the accuracy or completeness of electronic copies of this plan sheet.

INDEX TO PLANS

SHEET NO.	TITLE
1	GENERAL PLAN
2	INDEX TO PLANS
3	FOUNDATION PLAN
4	ABUTMENT 1 LAYOUT
5	ABUTMENT 2 LAYOUT
6	ABUTMENT DETAILS NO. 1
7	ABUTMENT DETAILS NO. 2
8	ABUTMENT DETAILS NO. 3
9	ABUTMENT DETAILS NO. 4
10	TYPICAL SECTION
11	GIRDER LAYOUT
12	LONGITUDINAL SECTION
13	ADDITIONAL GIRDER REINFORCEMENT
14	RIGHT BRIDGE CONSTRUCTION SEQUENCE
15	RIGHT BRIDGE SLOPE PAVING DETAILS NO. 1
16	RIGHT BRIDGE SLOPE PAVING DETAILS NO. 2
17	LOG OF TEST BORINGS 1 OF 5
18	LOG OF TEST BORINGS 2 OF 5
19	LOG OF TEST BORINGS 3 OF 5
20	LOG OF TEST BORINGS 4 OF 5
21	LOG OF TEST BORINGS 5 OF 5

STANDARD PLANS DATED MAY 2006

PLAN NO.	PLAN TITLE
A10A	ACRONYMS AND ABBREVIATIONS (SHEET 1 OF 2)
A10B	ACRONYMS AND ABBREVIATIONS (SHEET 2 OF 2)
A10C	SYMBOLS (SHEET 1 OF 2)
A10D	SYMBOLS (SHEET 2 OF 2)
A62C	LIMITS OF PAYMENT FOR EXCAVATION AND BACKFILL BRIDGE
B0-1	BRIDGE DETAILS
B0-3	BRIDGE DETAILS
B0-5	BRIDGE DETAILS
B0-13	BRIDGE DETAILS
B2-5	PILE DETAILS CLASS 90 AND CLASS 140
B7-1	BOX GIRDER DETAILS
B8-5	CAST-IN-PLACE PRESTRESSED GIRDER DETAILS
B11-56	CONCRETE BARRIER TYPE 736

STANDARD PLAN SHEET NO.

DETAIL NO.

GENERAL NOTES
LOAD AND RESISTANCE FACTOR DESIGN

DESIGN: AASHTO LRFD Bridge Design Specifications, 4th edition and the Caltrans Amendments, preface dated Dec 2009

SEISMIC DESIGN: CALTRANS SEISMIC DESIGN CRITERIA (SDC) Version 1.4 June 2006

DEAD LOAD: Includes 35 psf for future wearing surface

LIVE LOADING: "HL93 and permit design load"

SEISMIC LOADING: SDC ARS Curve for Soil Profile D (M = 7.0±0.25) (Peak Rock Acceleration = 0.3 g)

REINFORCED CONCRETE: f_y = 60 ksi, f'_c = 3.6 ksi, n = 8

PRESTRESSED CONCRETE: See "Prestressing Notes" on "GIRDER LAYOUT" sheet

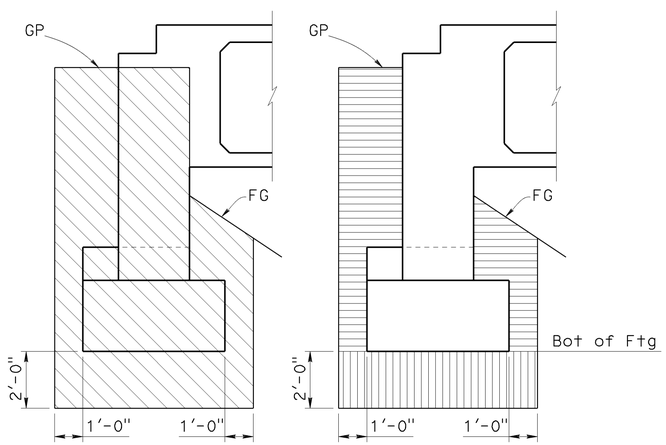

EXCAVATION BACKFILL

Structure Excavation
Structure Backfill
¾" inch Max Class 2 Aggregate Base compacted to 95% relative compaction

STRUCTURE EXCAVATION / BACKFILL LIMITS OF PAYMENT

No scale

FALSEWORK RELEASE

Alternative 1:

Falsework shall be released as soon as permitted by the specifications. Deck closure pour shall not be placed sooner than 60 days after the falsework has been released.

Alternative 2:

Falsework shall not be released less than 28 days after the last concrete has been placed. Deck closure pour shall not be placed sooner than 14 days after the falsework has been released.

When Falsework Release Alternative 2 is used, camber values are 0.75 times those shown.

PILE DATA TABLE

Location	Pile Type	Nominal Resistance (kips)		Design Tip Elevations (ft)	Specified Tip Elevation (ft)	Nominal Driving Resistance (kips)
		Compression	Tension			
Abut 1	Class 140 Alt "X"	280	0	-47 (a) -11 (b)	-47	280
Abut 2	Class 140 Alt "X"	280	0	-47 (a) -27 (b)	-47	280

Note:
1. Design tip elevations for Abutments are controlled by:
   (a) Compression
   (b) Settlement

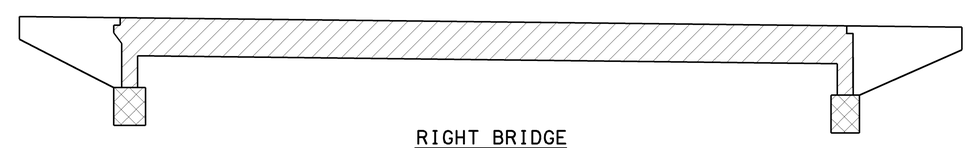

RIGHT BRIDGE

Structural Concrete, Bridge (6500 psi)
Structural Concrete, Bridge Footing
Structural Concrete, Bridge

CONCRETE STRENGTH AND TYPE LIMITS

No scale

NOTE:
THE CONTRACTOR SHALL VERIFY ALL CONTROLLING FIELD DIMENSIONS BEFORE ORDERING OR FABRICATING ANY MATERIAL.

NO AS BUILT CORRECTIONS
CORRECTIONS TRANSFERRED BY: AC
FIELD CORRECTIONS BY: LONG LY
TRANSFER DATE: 04-30-2014
FIELD CORRECTION DATE: 11-13-2012
CONTRACT NO: 04-264064

DESIGN	BY R. Amir	CHECKED A. Menke	
DETAILS	BY T. Kusumi/C. Cancino	CHECKED R. Amir	
QUANTITIES	BY T. Kusumi	CHECKED M. Beall	

STATE OF CALIFORNIA
DEPARTMENT OF TRANSPORTATION

DIVISION OF ENGINEERING SERVICES
STRUCTURE DESIGN
DESIGN BRANCH 8

BRIDGE NO. 27-0092R
POST MILE R21.47

OLIVE AVENUE UC (WIDEN)
INDEX TO PLANS

STRUCTURES DESIGN DETAIL SHEET (ENGLISH) (REV. 10/25/05)

ORIGINAL SCALE IN INCHES FOR REDUCED PLANS 0 1 2 3

CU 04
EA 264061

DISREGARD PRINTS BEARING EARLIER REVISION DATES

REVISION DATES: 03-05-10 03-11-10 03-15-10 10-28-09 11-12-09 11-30-09 01-14-10 01-16-10 02-23-10

SHEET 2 OF 21

FILE => 27-0092r-a-itp.dgn

USERNAME => s133075 DATE PLOTTED => 29-APR-2015 TIME PLOTTED => 11:08

DIST	COUNTY	ROUTE	POST MILES TOTAL PROJECT	SHEET No	TOTAL SHEETS
04	Mrn	101	18.6/R22.3	524	542

REGISTERED CIVIL ENGINEER 03-08-10 DATE

8-9-10
PLANS APPROVAL DATE

The State of California or its officers or agents shall not be responsible for the accuracy or completeness of electronic copies of this plan sheet.

REGISTERED PROFESSIONAL ENGINEER
Keng Mun Low
No. C49361
Exp. 09-30-10
CIVIL
STATE OF CALIFORNIA

CURVE DATA

No.	R	Δ	T	L
Ⓐ	10000.00	9°25'04"	823.71	1643.71

Notes:

1. Elec Line, Fiber Optic Line, Tele Line, Water Line, Gas Line, Sewer Line Per Dist. Map
2. All Dia. of Tree on construction class

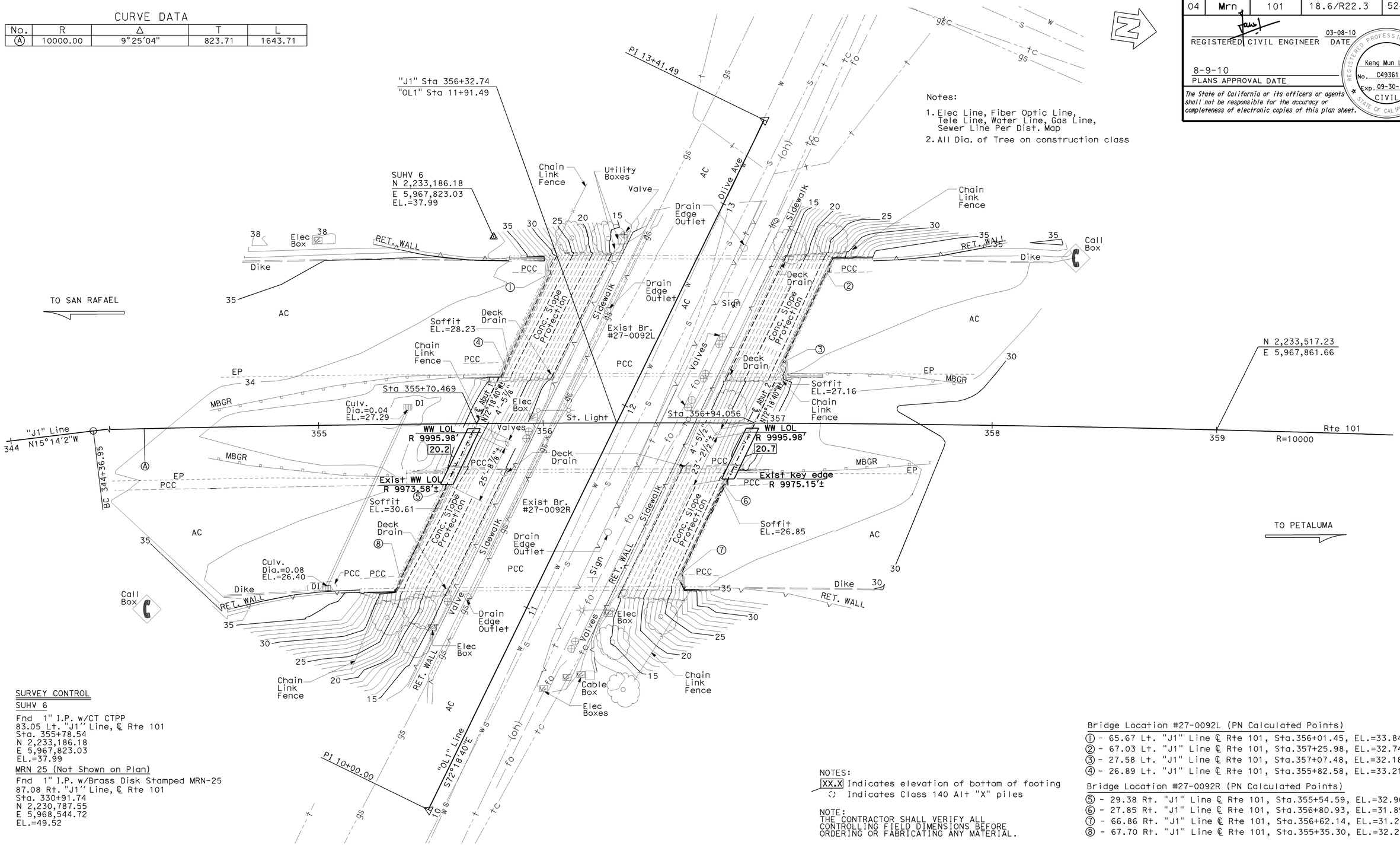

SURVEY CONTROL

SUHV 6

Fnd 1" I.P. w/CT CTPP
83.05 Lt. "J1" Line, ℄ Rte 101
Sta. 355+78.54
N 2,233,186.18
E 5,967,823.03
EL.=37.99

MRN 25 (Not Shown on Plan)

Fnd 1" I.P. w/Brass Disk Stamped MRN-25
87.08 Rt. "J1" Line, ℄ Rte 101
Sta. 330+91.74
N 2,230,787.55
E 5,968,544.72
EL.=49.52

NOTES:
XX.X Indicates elevation of bottom of footing
◯ Indicates Class 140 Alt "X" piles

NOTE:
THE CONTRACTOR SHALL VERIFY ALL CONTROLLING FIELD DIMENSIONS BEFORE ORDERING OR FABRICATING ANY MATERIAL.

Bridge Location #27-0092L (PN Calculated Points)

① - 65.67 Lt. "J1" Line ℄ Rte 101, Sta.356+01.45, EL.=33.84±
② - 67.03 Lt. "J1" Line ℄ Rte 101, Sta.357+25.98, EL.=32.74±
③ - 27.58 Lt. "J1" Line ℄ Rte 101, Sta.357+07.48, EL.=32.18±
④ - 26.89 Lt. "J1" Line ℄ Rte 101, Sta.355+82.58, EL.=33.21±

Bridge Location #27-0092R (PN Calculated Points)

⑤ - 29.38 Rt. "J1" Line ℄ Rte 101, Sta.355+54.59, EL.=32.90±
⑥ - 27.85 Rt. "J1" Line ℄ Rte 101, Sta.356+80.93, EL.=31.85±
⑦ - 66.86 Rt. "J1" Line ℄ Rte 101, Sta.356+62.14, EL.=31.24±
⑧ - 67.70 Rt. "J1" Line ℄ Rte 101, Sta.355+35.30, EL.=32.27±

PRELIMINARY INVESTIGATION SECTION

SCALE	VERT.DATUM NAVD 88	PHOTOGRAMMETRY AS OF: X		
1"=20'	HORZ.DATUM NAD 83 (1991.35)	SURVEYED BY District	CHECKED BY Tom Gillet 11/2008	
ALIGNMENT TIES Dist. Traverse Sheet		DRAFTED BY Sharon Zheng 11/2008	CHECKED BY T.Zolnikova 11/2008	

	BY	CHECKED
DESIGN	R. Amir	A. Menke
DETAILS	T. Kusumi	R. Amir
QUANTITIES	T. Kusumi	M. Beall

STATE OF CALIFORNIA
DEPARTMENT OF TRANSPORTATION

DIVISION OF ENGINEERING SERVICES
STRUCTURE DESIGN
DESIGN BRANCH 8

BRIDGE NO. 27-0092R/L
POST MILE 21.47

OLIVE AVE UC BRIDGE (WIDEN)
FOUNDATION PLAN

STRUCTURES FOUNDATION PLAN SHEET (ENGLISH) (REV. 10/25/05)

ORIGINAL SCALE IN INCHES FOR REDUCED PLANS 0 1 2 3

CU 04
EA 264061

DISREGARD PRINTS BEARING EARLIER REVISION DATES

REVISION DATES: 12/18/08 01/13/09 02-02-09 05-06-09 06-01-09 10-28-09 03-15-10

SHEET 3 OF 21

FILE => 27-0092r-e-fp101.dgn

NO AS BUILT CORRECTIONS

CORRECTIONS TRANSFERRED BY: AC
FIELD CORRECTIONS BY: LONG LY

TRANSFER DATE: 04-30-2014
FIELD CORRECTION DATE: 11-13-2012

CONTRACT NO: 04-264064

USERNAME = s133975 DATE PLOTTED => 29-APR-2015 TIME PLOTTED => 11:08

DIST	COUNTY	ROUTE	POST MILES TOTAL PROJECT	SHEET No	TOTAL SHEETS
04	Mrn	101	18.6/R22.3	525R1	542

REGISTERED CIVIL ENGINEER 03-08-10 DATE

8-9-10
PLANS APPROVAL DATE

The State of California or its officers or agents shall not be responsible for the accuracy or completeness of electronic copies of this plan sheet.

REGISTERED PROFESSIONAL ENGINEER Keng Mun Low No. C49361 Exp. 09-30-10 CIVIL STATE OF CALIFORNIA

LEGENDS:
- Indicates existing Class 140 piles
- Indicates new Class 140 Alt "X" piles
- Indicates existing structure
- Indicates new construction
- Indicates bearing pad
- Indicates limits of remove Exist Conc and Reinf to depth of 1'-0"
- Indicates limits of remove Exist Conc and Reinf to depth of 3'-0"

NOTES:
2
1. For typical details, see "LONGITUDINAL SECTION" supplemental sheet.
2. Slope paving not shown.
3. For "SECTION B-B" and "SECTION E-E", see "ABUTMENT DETAILS NO. 2" sheet.
4. For "SECTION X-X", see "ABUTMENT DETAILS NO. 4" sheet.
5. For abutment and wingwall corner details, see "CORNER DETAIL FOR SKEW OVER 20°" (B0-1)
6. Place key after stressing is completed.
7. Extend Abutment horizontal reinforcement into abutment closure pour and lap-splice to closure pour reinforcement.
8. Backfill front and back of Abut after stressing is completed. Wingwall not to be placed until structure has been prestressed.

NOTE:
THE CONTRACTOR SHALL VERIFY ALL CONTROLLING FIELD DIMENSIONS BEFORE ORDERING OR FABRICATING ANY MATERIAL.

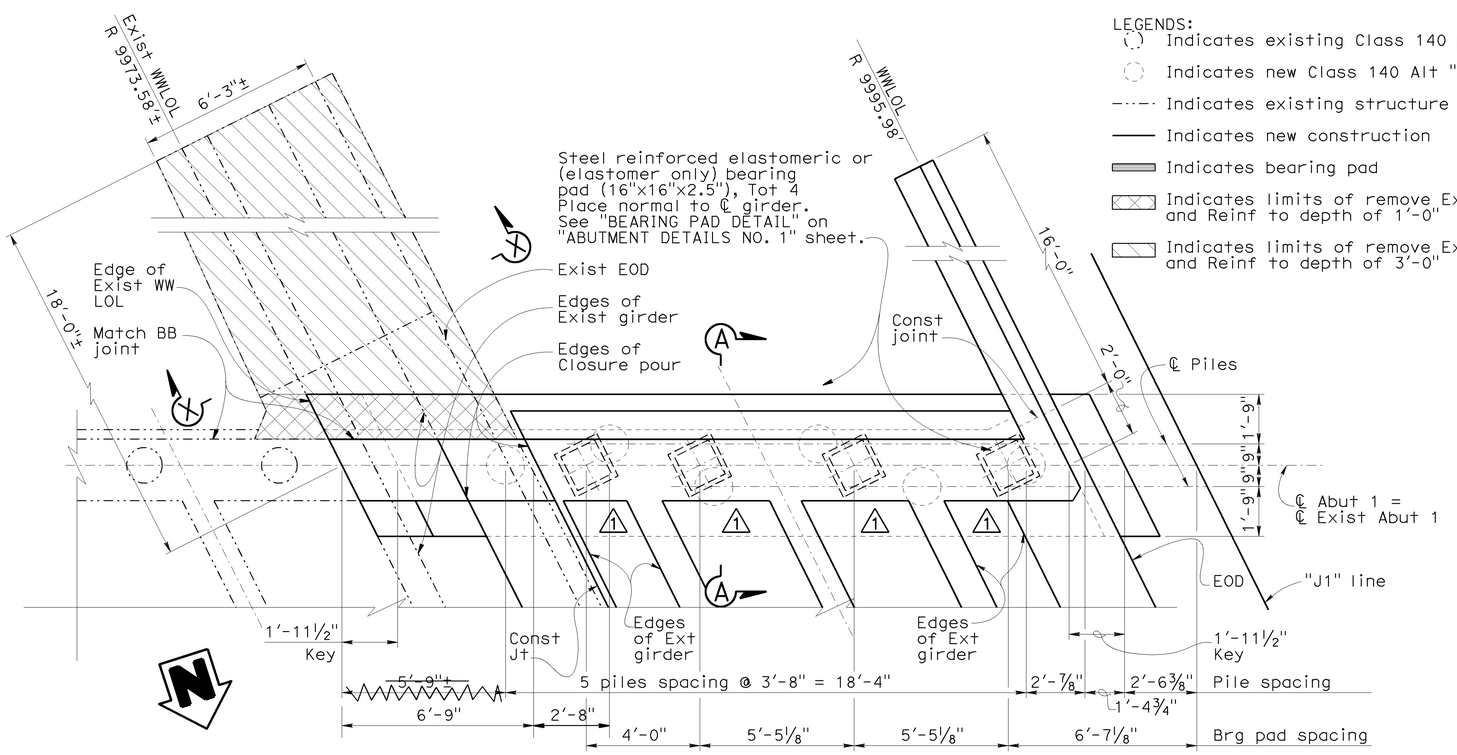

PLAN
⅜" = 1'-0"

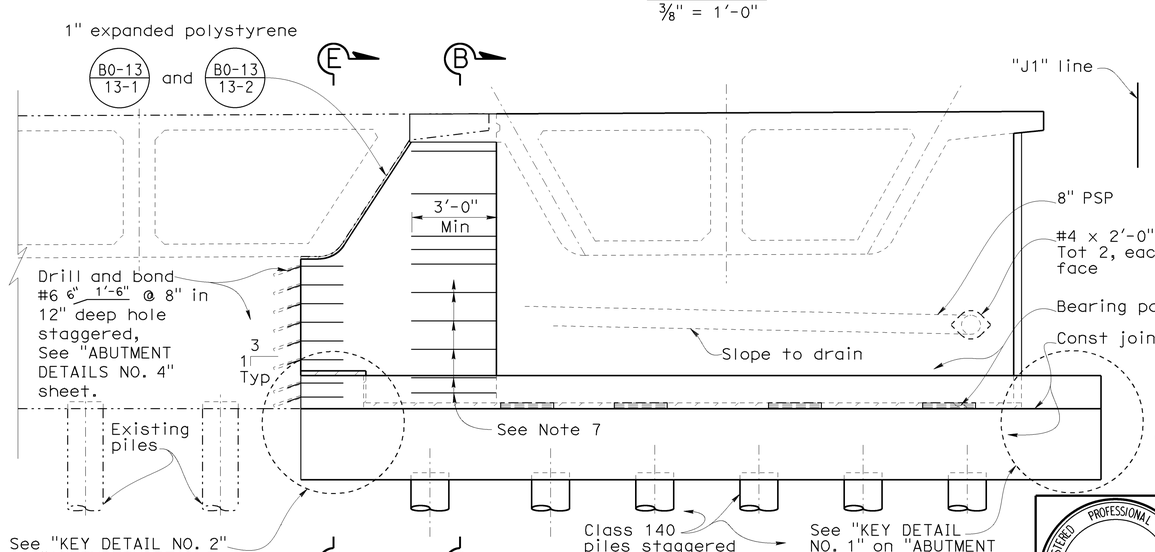

Note:
Barrier not shown for clarity.

ELEVATION
⅜" = 1'-0"

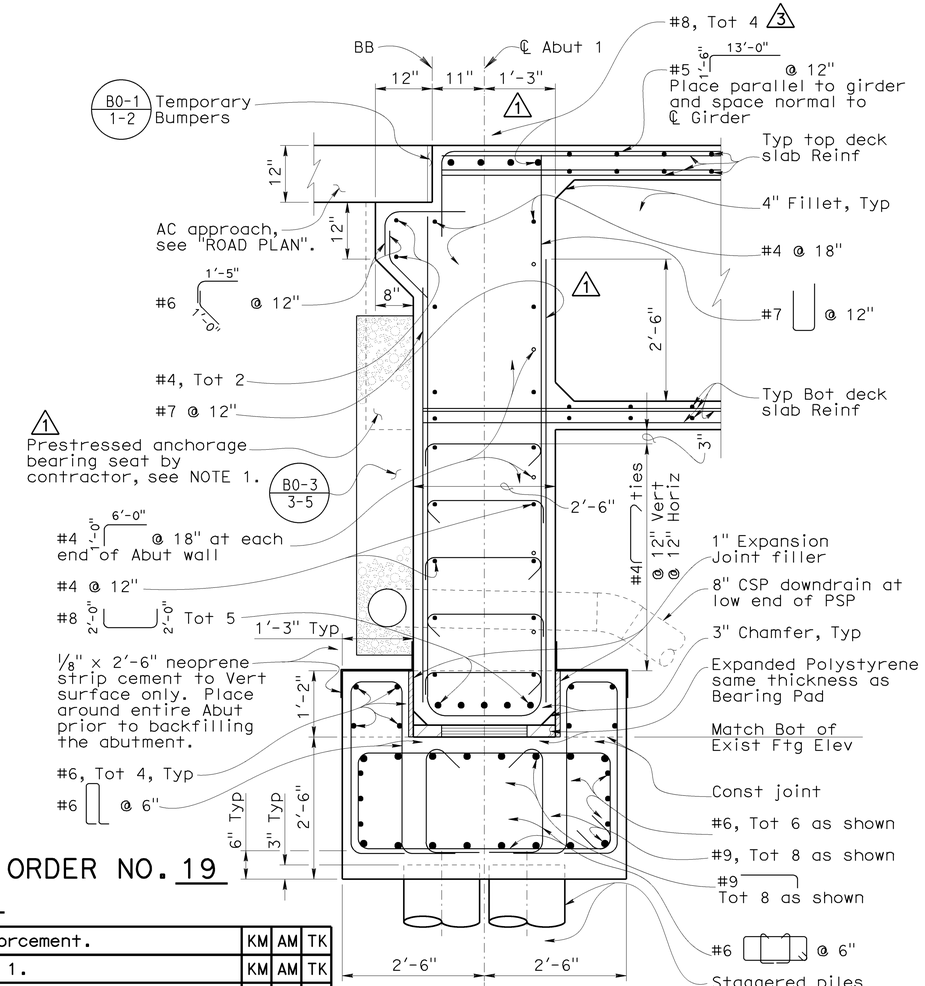

SECTION A-A
¾" = 1'-0"

CONTRACT CHANGE ORDER NO. 19
SHEET 23 OF 26

REGISTERED PROFESSIONAL ENGINEER Keng Mun Low No. C49361 Exp. 09-30-12 CIVIL STATE OF CALIFORNIA

MARK	DATE	REVISION(S) & DESCRIPTIONS	DES	CHK	DET
3	10-12-11	Revised reinforcement.	KM	AM	TK
2	10-10-11	Modified NOTE 1.	KM	AM	TK
1	10-10-11	Added prestressed anchorage bearing seat, and adjusted diaphragm thickness and reinforcement.	KM	AM	TK

REGISTERED CIVIL ENGINEER: DATE: 10-12-11

	BY	CHECKED
DESIGN	R. Amir	A. Menke
DETAILS	T. Kusumi/C. Cancino	R. Amir
QUANTITIES	T. Kusumi	M. Beall

STATE OF CALIFORNIA
DEPARTMENT OF TRANSPORTATION

DIVISION OF ENGINEERING SERVICES
STRUCTURE DESIGN
DESIGN BRANCH 8

BRIDGE NO. 27-0092R
POST MILE R21.47

OLIVE AVENUE UC (WIDEN)
ABUTMENT 1 LAYOUT

STRUCTURES DESIGN DETAIL SHEET (ENGLISH) (REV. 10/25/05)

ORIGINAL SCALE IN INCHES FOR REDUCED PLANS 0 1 2 3

CU 04
EA 264061

DISREGARD PRINTS BEARING EARLIER REVISION DATES

REVISION DATES: 10-05-09 10-28-09 11-20-09 01-14-10 01-16-10 02-17-10 03-15-10 08-28-09 09-09-09

SHEET 4 OF 21

FILE => 27-0092r-f-a01_lo1.cco

AS BUILT CORRECTIONS

CORRECTIONS TRANSFERRED BY: AC
FIELD CORRECTIONS BY: LONG LY

TRANSFER DATE: 04-30-2014
FIELD CORRECTION DATE: 11-13-2012

CONTRACT NO: 04-264064

USERNAME => s133975 DATE PLOTTED => 29-APR-2015 TIME PLOTTED => 11:08

DIST	COUNTY	ROUTE	POST MILES TOTAL PROJECT	SHEET No	TOTAL SHEETS
04	Mrn	101	18.6/R22.3	526R1	542

REGISTERED CIVIL ENGINEER 03-08-10 DATE

8-9-10
PLANS APPROVAL DATE

REGISTERED PROFESSIONAL ENGINEER Keng Mun Low No. C49361 Exp. 09-30-10 CIVIL STATE OF CALIFORNIA

The State of California or its officers or agents shall not be responsible for the accuracy or completeness of electronic copies of this plan sheet.

LEGENDS:
- Indicates existing Class 140 piles
- Indicates new Class 140 Alt "X" piles
- Indicates existing structure
- Indicates new construction
- Indicates bearing pad
- Indicates limits of remove Exist Conc and Reinf to depth of 1'-0"
- Indicates limits of remove Exist Conc and Reinf to depth of 3'-0"

NOTES:
1. For typical details, see "LONGITUDINAL SECTION" supplemental sheet. (2)
2. Fold neoprene into joint to allow for bridge movement. Place neoprene around entire abutment.
3. Slope paving not shown.
4. For "SECTION D-D", see "ABUTMENT DETAILS NO. 2" sheet.
5. For "SECTION F-F", and "SECTION G-G", "SECTION Y-Y", see "ABUTMENT DETAILS NO. 3" sheet.
6. For "SECTION X-X", see "ABUTMENT DETAILS NO. 4" sheet.
7. Place key after stressing is completed.
8. Extend Abutment horizontal reinforcement into abutment closure pour and lap-splice to closure pour reinforcement.
9. Backfill front and back of Abut after stressing is completed. Wingwall not to be placed until structure has been prestressed.

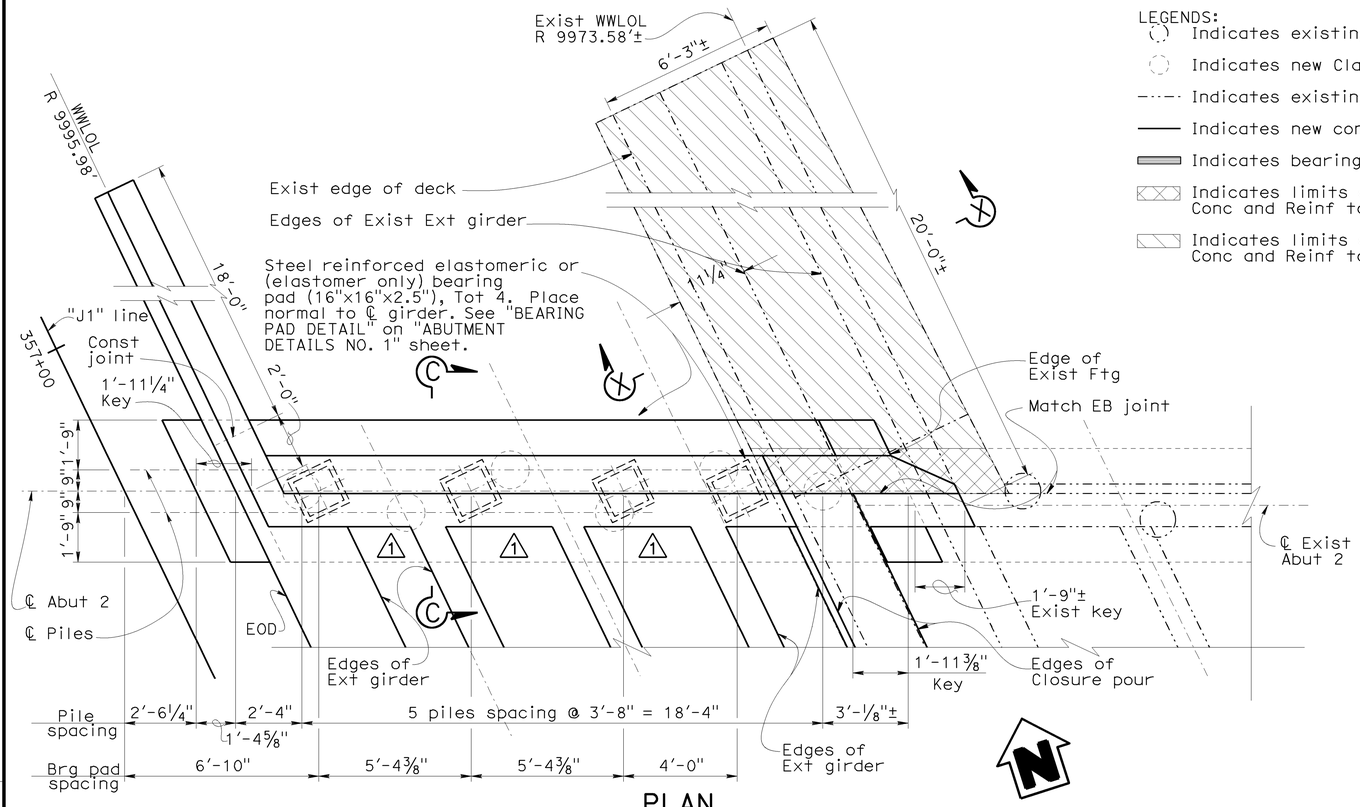

PLAN
⅜" = 1'-0"

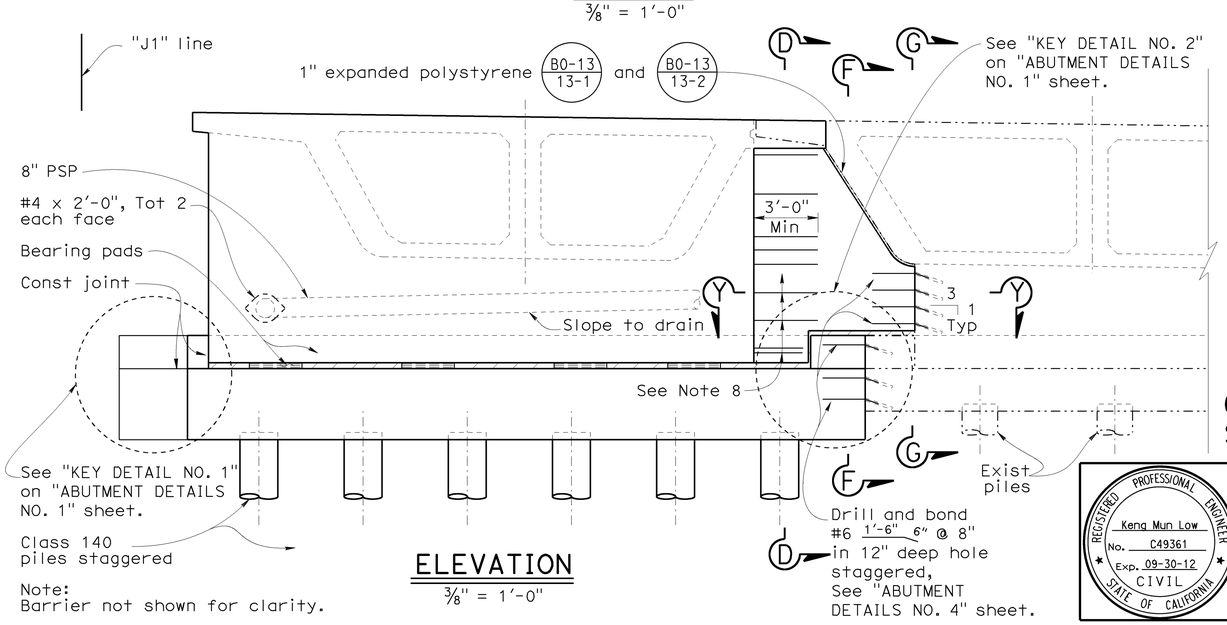

Note:
Barrier not shown for clarity.

ELEVATION
⅜" = 1'-0"

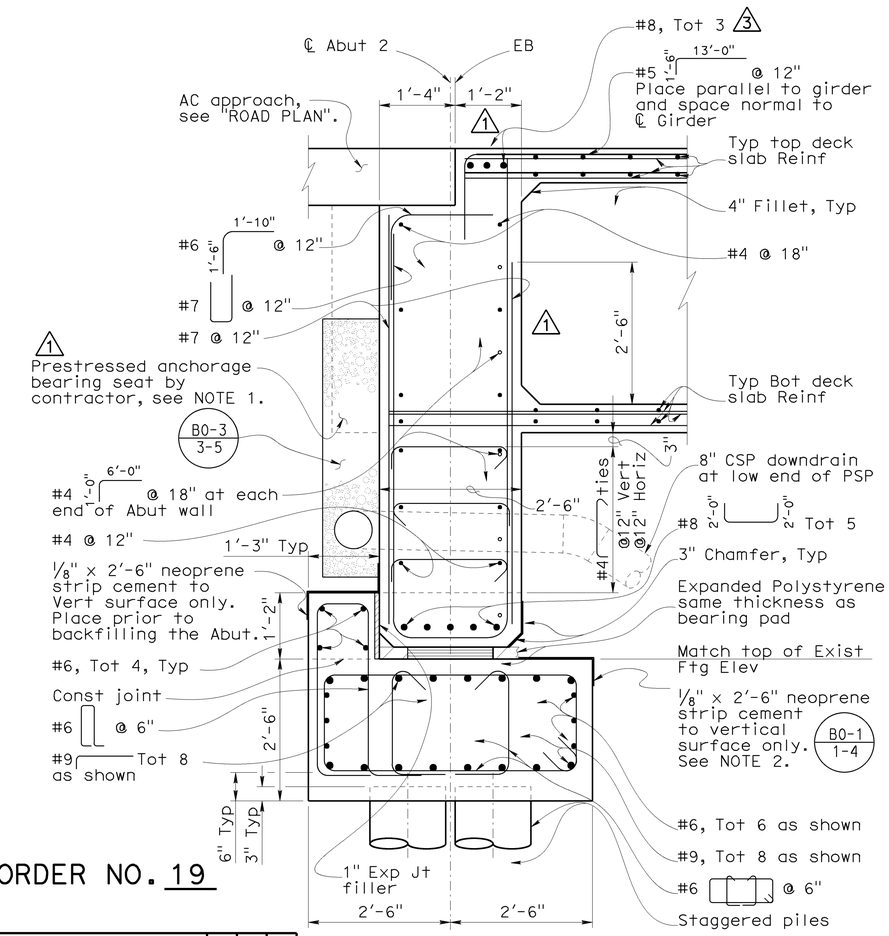

SECTION C-C
¾" = 1'-0"

NOTE:
THE CONTRACTOR SHALL VERIFY ALL CONTROLLING FIELD DIMENSIONS BEFORE ORDERING OR FABRICATING ANY MATERIAL.

CONTRACT CHANGE ORDER NO. 19
SHEET 24 OF 26

REGISTERED PROFESSIONAL ENGINEER Keng Mun Low No. C49361 Exp. 09-30-12 CIVIL STATE OF CALIFORNIA

MARK	DATE	REVISION(S) DESCRIPTIONS	DES	CHK	DET
3	10-12-11	Revised reinforcement.	KM	AM	TK
2	10-10-11	Modified NOTE 1.	KM	AM	TK
1	10-10-11	Added prestressed anchorage bearing seat, and adjusted diaphragm thickness and reinforcement.	KM	AM	TK

REGISTERED CIVIL ENGINEER: DATE: 10-12-11

	BY	CHECKED
DESIGN	R. Amir	A. Menke
DETAILS	T. Kusumi/C. Cancino	R. Amir
QUANTITIES	T. Kusumi	M. Beall

STATE OF CALIFORNIA
DEPARTMENT OF TRANSPORTATION

DIVISION OF ENGINEERING SERVICES
STRUCTURE DESIGN
DESIGN BRANCH 8

BRIDGE NO. 27-0092R
POST MILE R21.47

OLIVE AVENUE UC (WIDEN)
ABUTMENT 2 LAYOUT

STRUCTURES DESIGN DETAIL SHEET (ENGLISH) (REV. 10/25/05)

ORIGINAL SCALE IN INCHES FOR REDUCED PLANS 0 1 2 3

CU 04
EA 264061

DISREGARD PRINTS BEARING EARLIER REVISION DATES

REVISION DATES: 10-05-09 10-28-09 11-30-09 12-24-09 01-14-10 01-16-10 02-17-10 03-15-10 09-09-09

SHEET 5 OF 21

FILE => 27-0092r-f-a02_lo1.cco

NO AS BUILT CORRECTIONS

CORRECTIONS TRANSFERRED BY: AC
FIELD CORRECTIONS BY: LONG LY

TRANSFER DATE: 04-30-2014
FIELD CORRECTION DATE: 11-13-2012

CONTRACT NO: 04-264064

USERNAME => s133975 DATE PLOTTED => 29-APR-2015 TIME PLOTTED => 11:08

DIST	COUNTY	ROUTE	POST MILES TOTAL PROJECT	SHEET No	TOTAL SHEETS
04	Mrn	101	18.6/R22.3	527	542

REGISTERED CIVIL ENGINEER 03-08-10 DATE

8-9-10
PLANS APPROVAL DATE

REGISTERED PROFESSIONAL ENGINEER Keng Mun Low No. C49361 Exp. 09-30-10 CIVIL STATE OF CALIFORNIA

The State of California or its officers or agents shall not be responsible for the accuracy or completeness of electronic copies of this plan sheet.

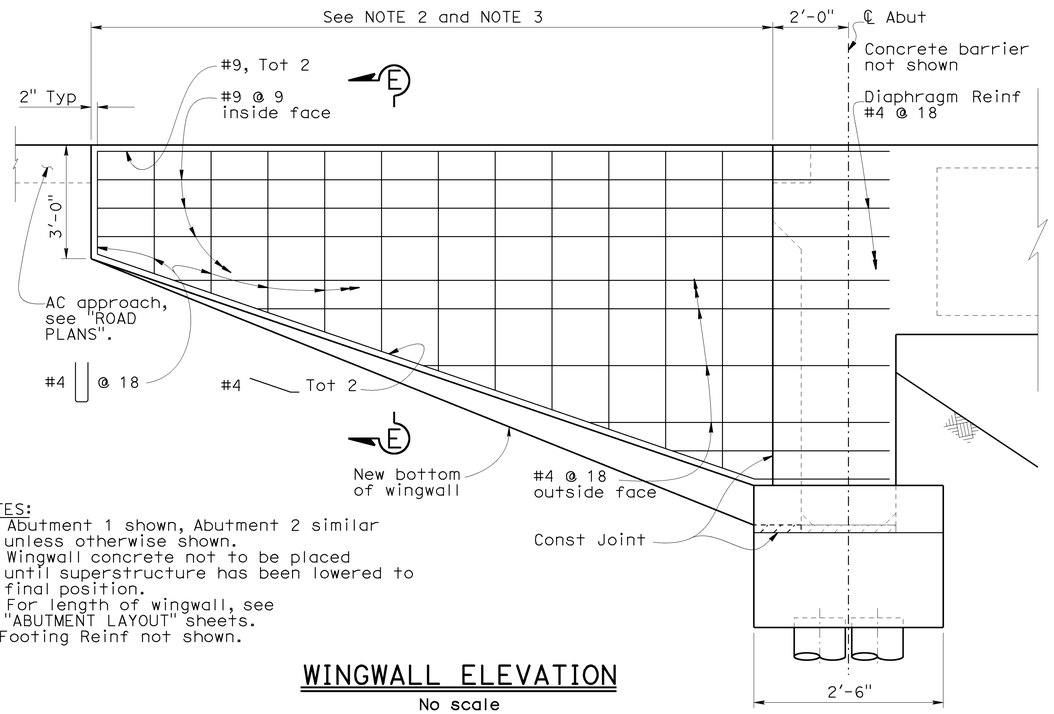

NOTES:
1. Abutment 1 shown, Abutment 2 similar unless otherwise shown.
2. Wingwall concrete not to be placed until superstructure has been lowered to final position.
3. For length of wingwall, see "ABUTMENT LAYOUT" sheets.
4. Footing Reinf not shown.

WINGWALL ELEVATION
No scale

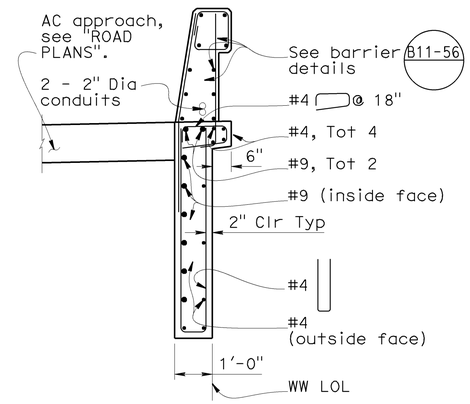

Note:
Slope paving not shown

SECTION E-E
½" = 1'-0"

B0-1

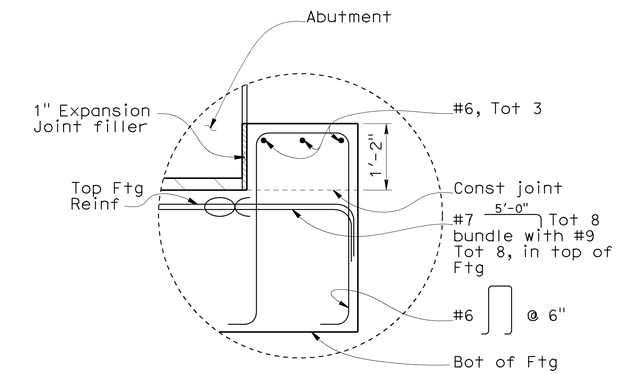

KEY DETAIL NO. 1
¾" = 1'-0"

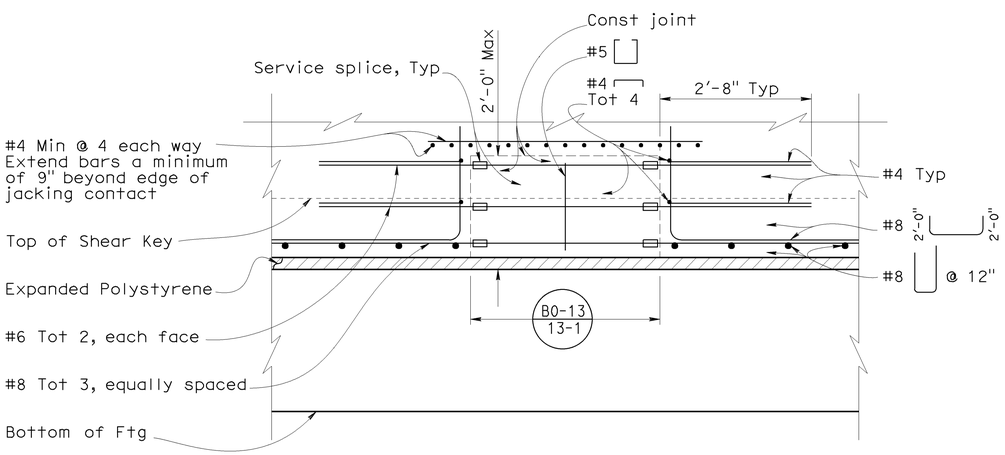

LEGEND:
☐ Service splice

JACKING RECESS - ELEVATION
¾" = 1'-0"

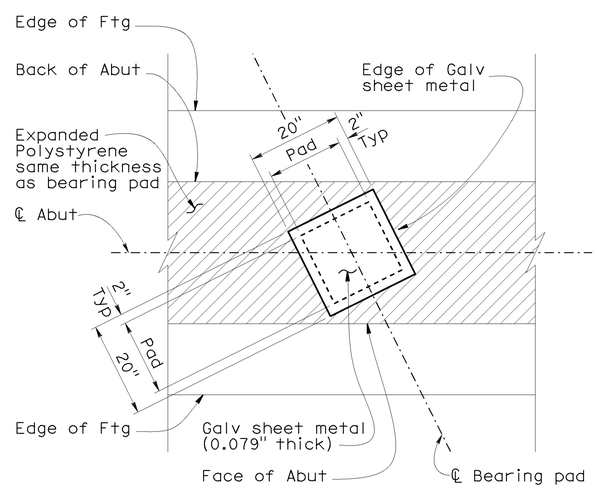

Notes:
1. Coat top of bearing pad with silicone grease prior to placing sheet metal
2. Pads to be level and fully bearing after lowering superstructure

BEARING PAD DETAIL
¾" = 1'-0"

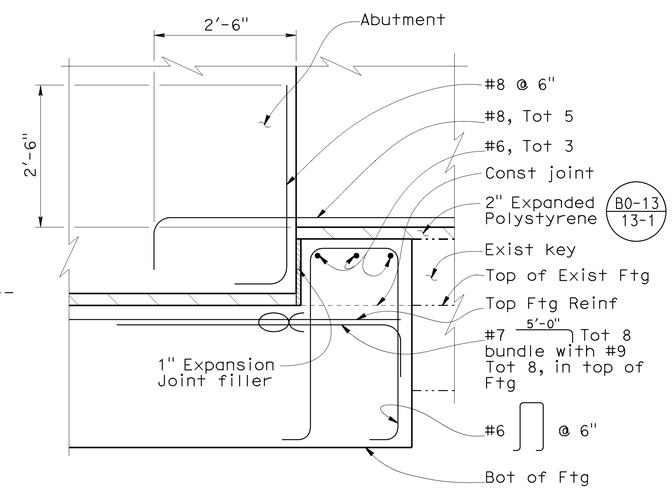

KEY DETAIL NO. 2
¾" = 1'-0"

NOTE:
THE CONTRACTOR SHALL VERIFY ALL CONTROLLING FIELD DIMENSIONS BEFORE ORDERING OR FABRICATING ANY MATERIAL.

DESIGN	BY R. Amir	CHECKED A. Menke	
DETAILS	BY T. Kusumi/C. Cancino	CHECKED R. Amir	
QUANTITIES	BY T. Kusumi	CHECKED M. Beall	

STATE OF CALIFORNIA
DEPARTMENT OF TRANSPORTATION

DIVISION OF ENGINEERING SERVICES
STRUCTURE DESIGN
DESIGN BRANCH 8

BRIDGE NO. 27-0092R
POST MILE R21.47

OLIVE AVENUE UC (WIDEN)
ABUTMENT DETAILS NO. 1

STRUCTURES DESIGN DETAIL SHEET (ENGLISH) (REV. 10/25/05)

ORIGINAL SCALE IN INCHES FOR REDUCED PLANS 0 1 2 3

CU 04
EA 264061

DISREGARD PRINTS BEARING EARLIER REVISION DATES

REVISION DATES: 01-16-10 03-15-10 05-15-09 05-28-09 06-22-09 08-28-09 10-28-09 12-15-09 01-14-10

SHEET 6 OF 21

FILE => 27-0092r-f-a02dt01.dgn

AS BUILT CORRECTIONS

CORRECTIONS TRANSFERRED BY: AC
FIELD CORRECTIONS BY: LONG LY

TRANSFER DATE: 04-30-2014
FIELD CORRECTION DATE: 11-13-2012

CONTRACT NO: 04-264064

USERNAME => s133975 DATE PLOTTED => 29-APR-2015 TIME PLOTTED => 11:09

DIST	COUNTY	ROUTE	POST MILES TOTAL PROJECT	SHEET No	TOTAL SHEETS
04	Mrn	101	18.6/R22.3	528	542

REGISTERED CIVIL ENGINEER 03-08-10 DATE

8-9-10
PLANS APPROVAL DATE

REGISTERED PROFESSIONAL ENGINEER Keng Mun Low No. C49361 Exp. 09-30-10 CIVIL STATE OF CALIFORNIA

The State of California or its officers or agents shall not be responsible for the accuracy or completeness of electronic copies of this plan sheet.

LEGENDS:

—·—·— Indicates existing structure

——— Indicates new construction

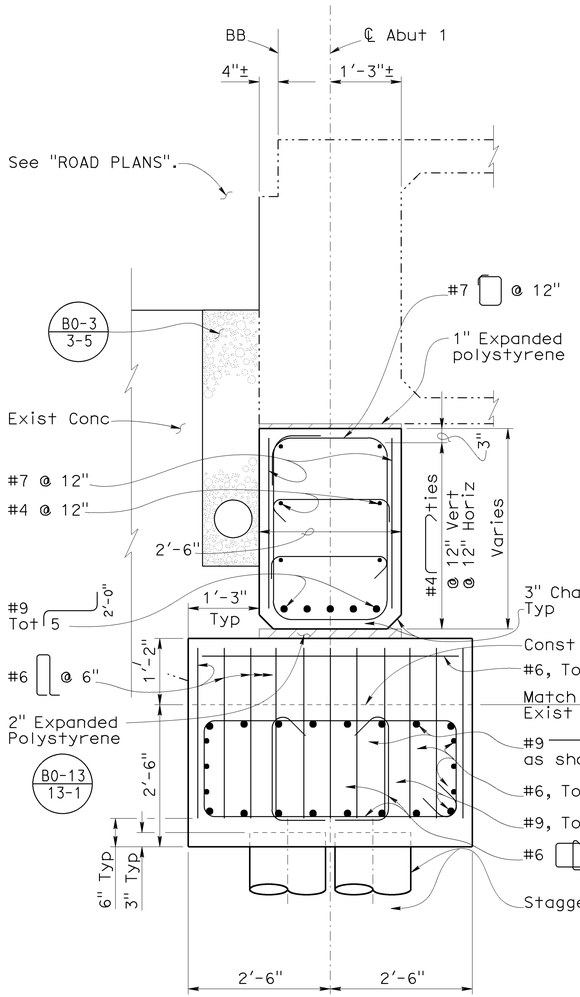

SECTION E-E

3/4" = 1'-0"

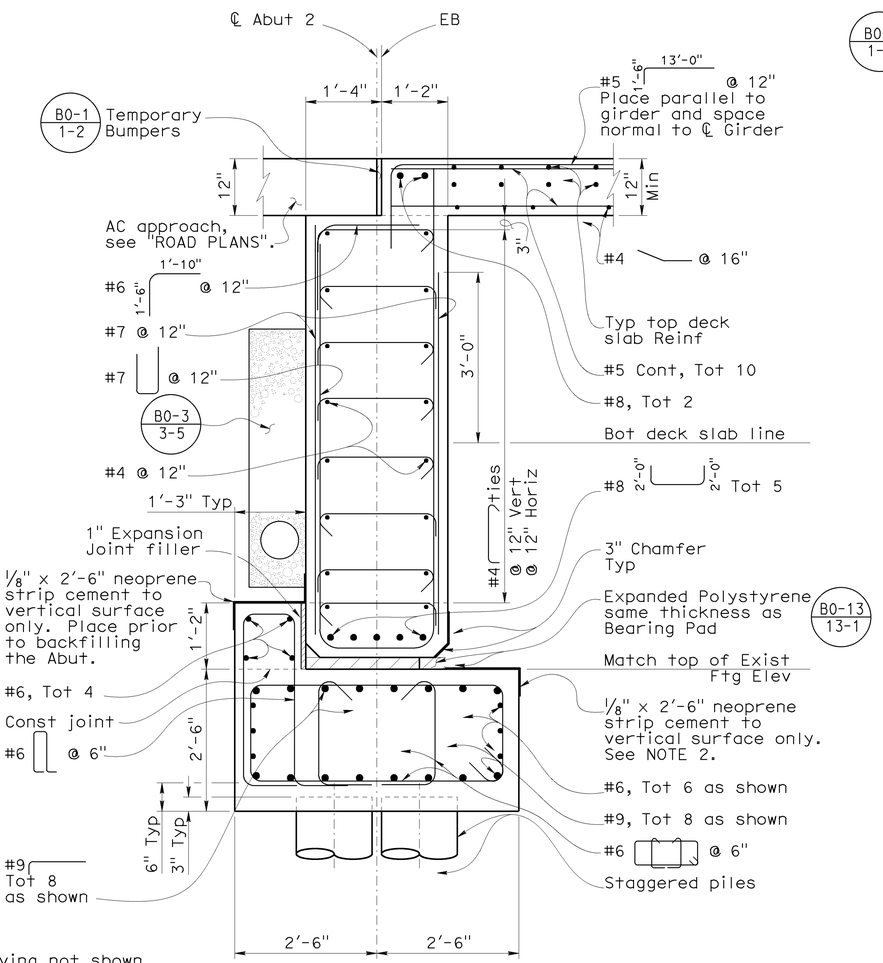

SECTION D-D

3/4" = 1'-0"

NOTES:
1. Slope paving not shown
2. Fold neoprene into joint to allow for bridge movement. Place neoprene around entire abutment.

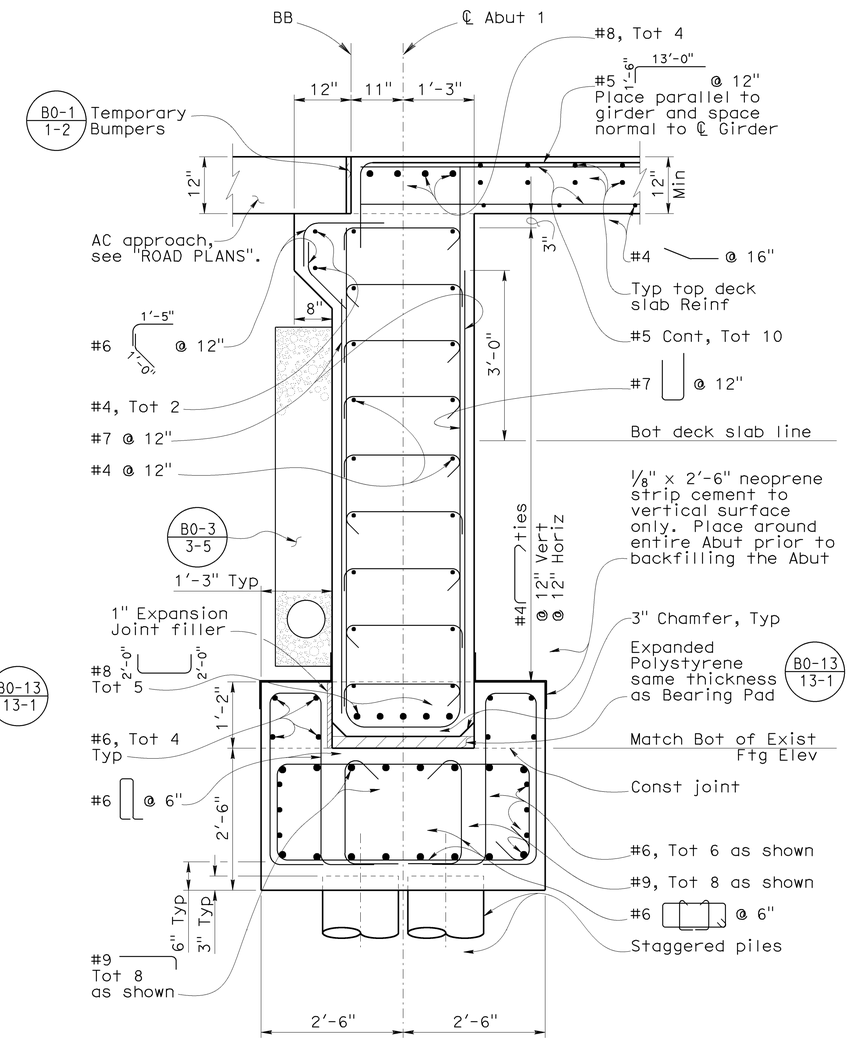

SECTION B-B

3/4" = 1'-0"

NOTE:
THE CONTRACTOR SHALL VERIFY ALL CONTROLLING FIELD DIMENSIONS BEFORE ORDERING OR FABRICATING ANY MATERIAL.

	BY	CHECKED
DESIGN	R. Amir	A. Menke
DETAILS	T. Kusumi/C. Cancino	R. Amir
QUANTITIES	T. Kusumi	M. Beall

STATE OF CALIFORNIA
DEPARTMENT OF TRANSPORTATION

DIVISION OF ENGINEERING SERVICES
STRUCTURE DESIGN
DESIGN BRANCH 8

BRIDGE NO. 27-0092R
POST MILE R21.47

OLIVE AVENUE UC (WIDEN)
ABUTMENT DETAILS NO. 2

STRUCTURES DESIGN DETAIL SHEET (ENGLISH) (REV. 10/25/05)

ORIGINAL SCALE IN INCHES FOR REDUCED PLANS 0 1 2 3

CU 04
EA 264061

DISREGARD PRINTS BEARING EARLIER REVISION DATES

REVISION DATES: 01-14-10 01-16-10 01-26-10 03-15-10 08-24-09 09-04-09 10-05-09 10-28-09 11-30-09

SHEET 7 OF 21

FILE => 27-0092r-f-a02dt02.dgn

NO AS BUILT CORRECTIONS

CORRECTIONS TRANSFERRED BY: AC
FIELD CORRECTIONS BY: LONG LY

TRANSFER DATE: 04-30-2014
FIELD CORRECTION DATE: 11-13-2012

CONTRACT NO: 04-264064

USERNAME => s133975 DATE PLOTTED => 29-APR-2015 TIME PLOTTED => 11:09

DIST	COUNTY	ROUTE	POST MILES TOTAL PROJECT	SHEET No	TOTAL SHEETS
04	Mrn	101	18.6/R22.3	529	542

REGISTERED CIVIL ENGINEER 03-08-10 DATE

8-9-10
PLANS APPROVAL DATE

REGISTERED PROFESSIONAL ENGINEER Keng Mun Low No. C49361 Exp. 09-30-10 CIVIL STATE OF CALIFORNIA

The State of California or its officers or agents shall not be responsible for the accuracy or completeness of electronic copies of this plan sheet.

LEGENDS:

—·—·— Indicates existing structure

——— Indicates new construction

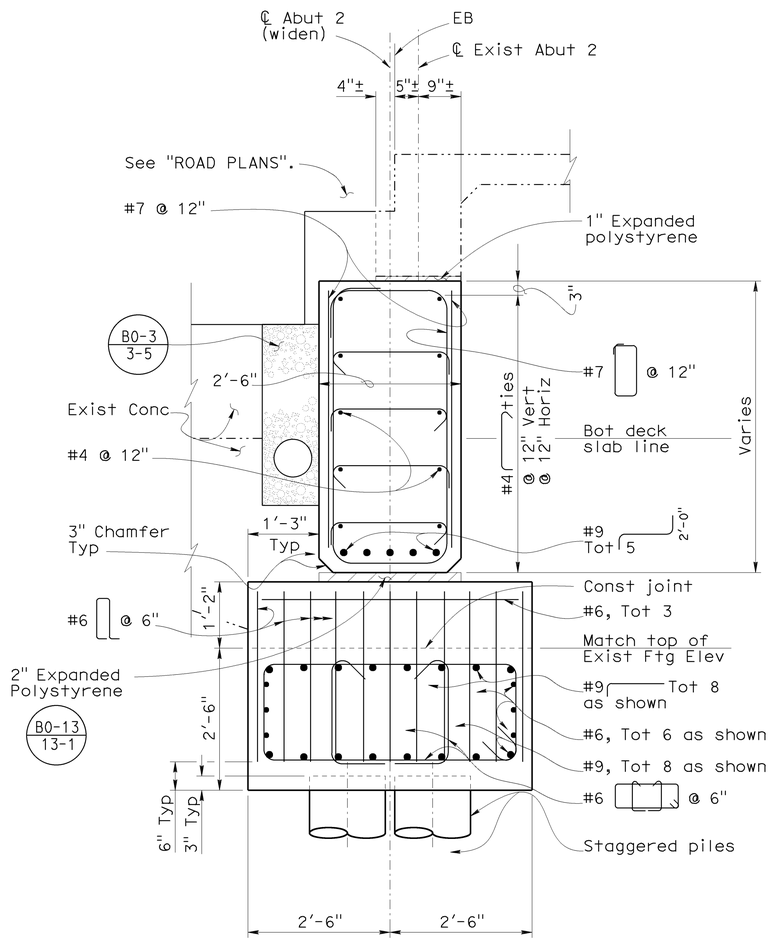

SECTION F-F

3/4" = 1'-0"

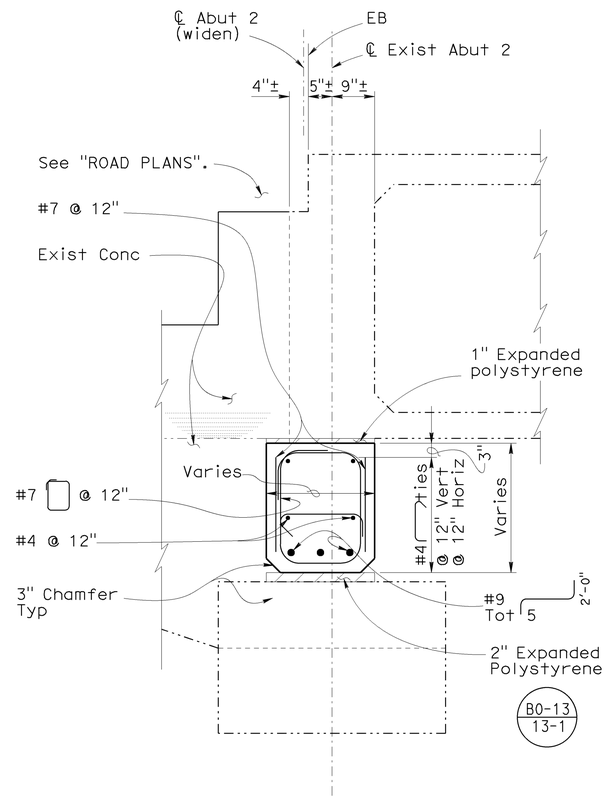

SECTION G-G

3/4" = 1'-0"

NOTES:
1. Slope paving not shown
2. Exist piles not shown

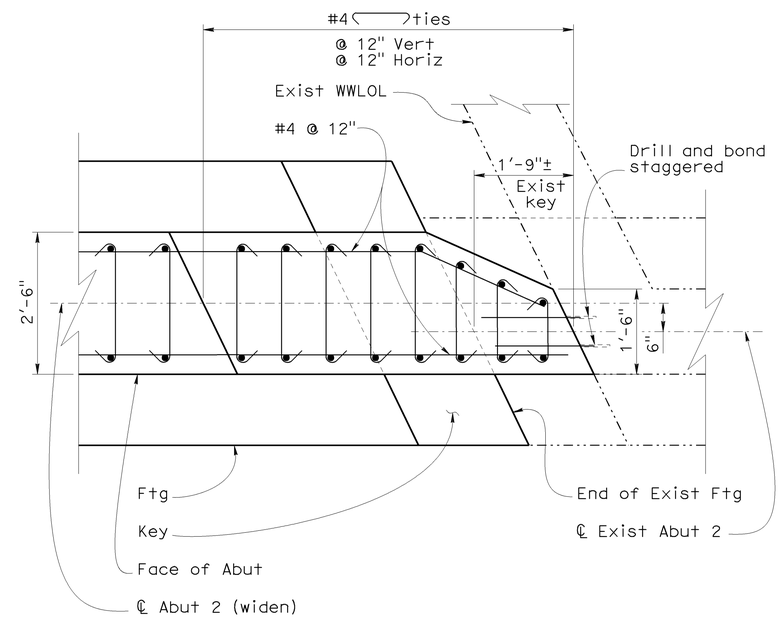

SECTION Y-Y

3/4" = 1'-0"

NOTE:
THE CONTRACTOR SHALL VERIFY ALL CONTROLLING FIELD DIMENSIONS BEFORE ORDERING OR FABRICATING ANY MATERIAL.

	BY	CHECKED
DESIGN	R. Amir	A. Menke
DETAILS	T. Kusumi/C. Cancino	R. Amir
QUANTITIES	T. Kusumi	M. Beall

STATE OF CALIFORNIA
DEPARTMENT OF TRANSPORTATION

DIVISION OF ENGINEERING SERVICES
STRUCTURE DESIGN
DESIGN BRANCH 8

BRIDGE NO. 27-0092R
POST MILE R21.47

OLIVE AVENUE UC (WIDEN)
ABUTMENT DETAILS NO. 3

STRUCTURES DESIGN DETAIL SHEET (ENGLISH) (REV. 10/25/05)

ORIGINAL SCALE IN INCHES FOR REDUCED PLANS 0 1 2 3

CU 04
EA 264061

DISREGARD PRINTS BEARING EARLIER REVISION DATES

REVISION DATES: 01-16-10 01-26-10 03-15-10 06-22-09 09-09-09 10-05-09 10-28-09 11-30-09 01-14-10

SHEET 8 OF 21

FILE => 27-0092r-f-a02dt03.dgn

NO AS BUILT CORRECTIONS

CORRECTIONS TRANSFERED BY: AC
FIELD CORRECTIONS BY: LONG LY

TRANSFER DATE: 04-30-2014
FIELD CORRECTION DATE: 11-13-2012

CONTRACT NO: 04-264064

USERNAME => s133975 DATE PLOTTED => 29-APR-2015 TIME PLOTTED => 11:03

DIST	COUNTY	ROUTE	POST MILES TOTAL PROJECT	SHEET No	TOTAL SHEETS
04	Mrn	101	18.6/R22.3	530	542

REGISTERED CIVIL ENGINEER 03-08-10 DATE

8-9-10
PLANS APPROVAL DATE

REGISTERED PROFESSIONAL ENGINEER Keng Mun Low No. C49361 Exp. 09-30-10 CIVIL STATE OF CALIFORNIA

The State of California or its officers or agents shall not be responsible for the accuracy or completeness of electronic copies of this plan sheet.

NO AS BUILT CORRECTIONS

CORRECTIONS TRANSFERRED BY: AC
FIELD CORRECTIONS BY: LONG LY

TRANSFER DATE: 04-30-2014
FIELD CORRECTION DATE: 11-13-2012

CONTRACT NO: 04-264064

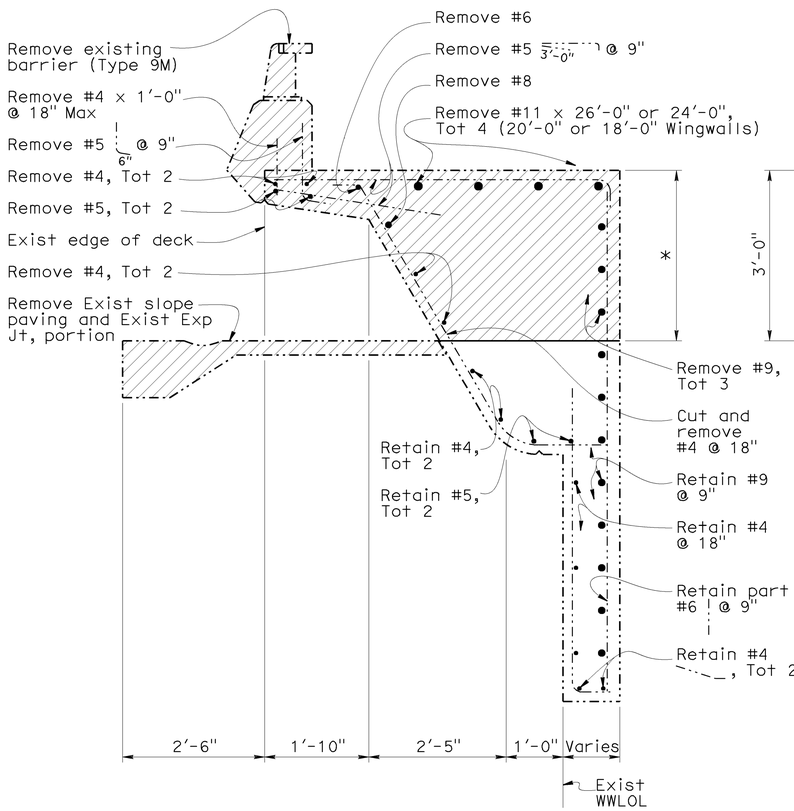

EXISTING

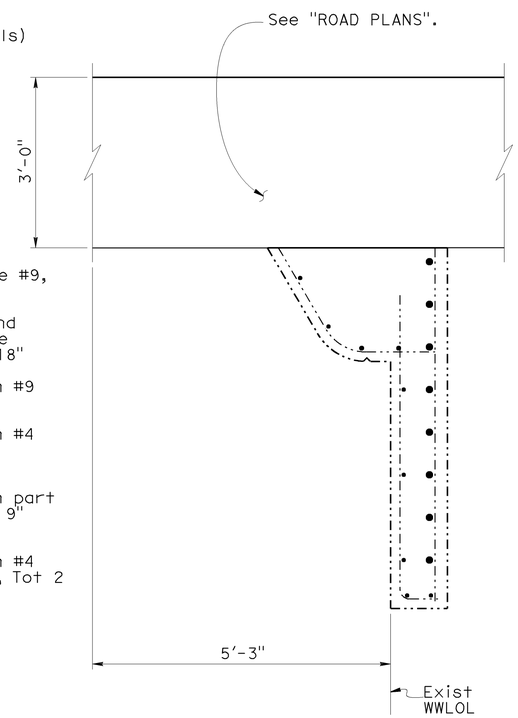

RECONSTRUCTION

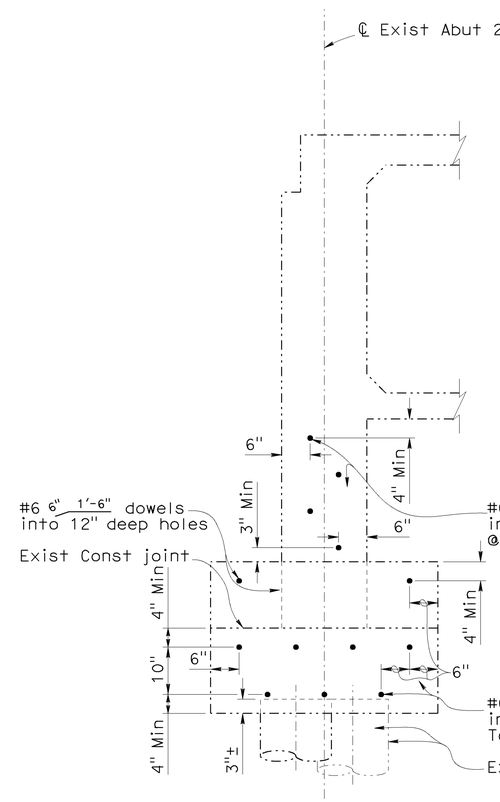

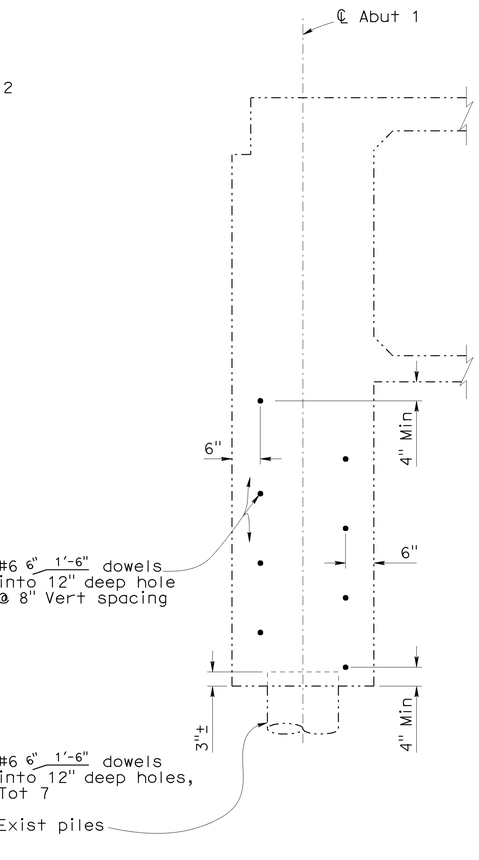

NOTE:
Exist Reinf not shown.

LEGENDS: Apply to this sheet only.

Indicates limits of remove existing concrete and Type (9M) barrier. Place new AC Approach. (See "ROADWAY PLANS".)

Indicates existing structure

Indicates new construction

* Indicates dimension of removal of concrete and reinforcement for 3'-0" depth only.

SECTION X-X

3/4" = 1'-0"

ABUTMENT 2 DRILL AND BOND PATTERN

3/4" = 1'-0"

ABUTMENT 1 DRILL AND BOND PATTERN

3/4" = 1'-0"

NOTE:
THE CONTRACTOR SHALL VERIFY ALL CONTROLLING FIELD DIMENSIONS BEFORE ORDERING OR FABRICATING ANY MATERIAL.

	BY	CHECKED
DESIGN	R. Amir	A. Menke
DETAILS	T. Kusumi	R. Amir
QUANTITIES	T. Kusumi	M. Beall

STATE OF CALIFORNIA
DEPARTMENT OF TRANSPORTATION

DIVISION OF ENGINEERING SERVICES
STRUCTURE DESIGN
DESIGN BRANCH 8

BRIDGE NO. 27-0092R
POST MILE R21.47

OLIVE AVENUE UC (WIDEN)
ABUTMENT DETAILS NO. 4

STRUCTURES DESIGN DETAIL SHEET (ENGLISH) (REV. 10/25/05)

ORIGINAL SCALE IN INCHES FOR REDUCED PLANS 0 1 2 3

CU 04
EA 264061

DISREGARD PRINTS BEARING EARLIER REVISION DATES

REVISION DATES: 11-15-08 05-05-09 06-04-09 10-26-09 11-30-09 01-14-10 02-11-10 03-15-10

SHEET 9 OF 21

FILE => 27-0092r-f-a02dt04.dgn

USERNAME => s133975 DATE PLOTTED => 23-APR-2015 TIME PLOTTED => 11:09

DIST	COUNTY	ROUTE	POST MILES TOTAL PROJECT	SHEET No.	TOTAL SHEETS
04	Mrn	101	18.6/R22.3	530S1	542

REGISTERED CIVIL ENGINEER 10-26-11 DATE

8-9-10
PLANS APPROVAL DATE

REGISTERED PROFESSIONAL ENGINEER
Keng Mun Low
No. C49361
Exp. 09-30-12
CIVIL
STATE OF CALIFORNIA

The State of California or its officers or agents shall not be responsible for the accuracy or completeness of electronic copies of this plan sheet.

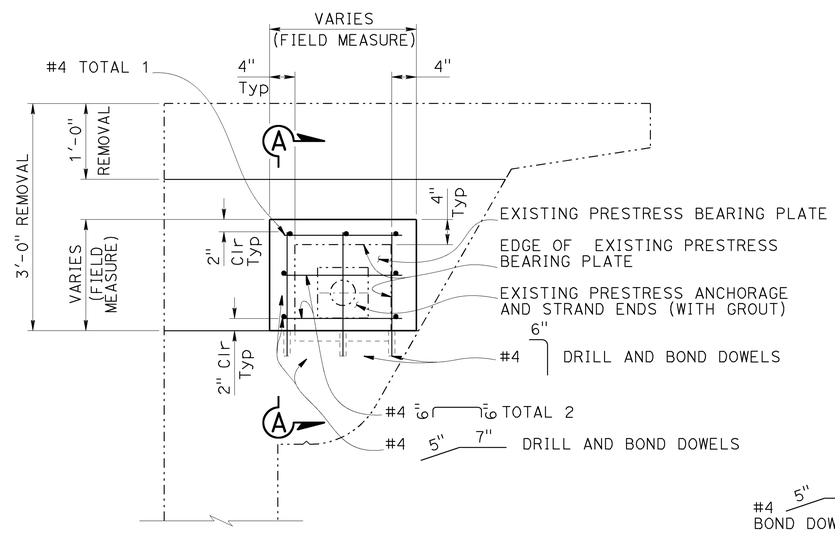

CONCRETE CAP DETAILS
No Scale

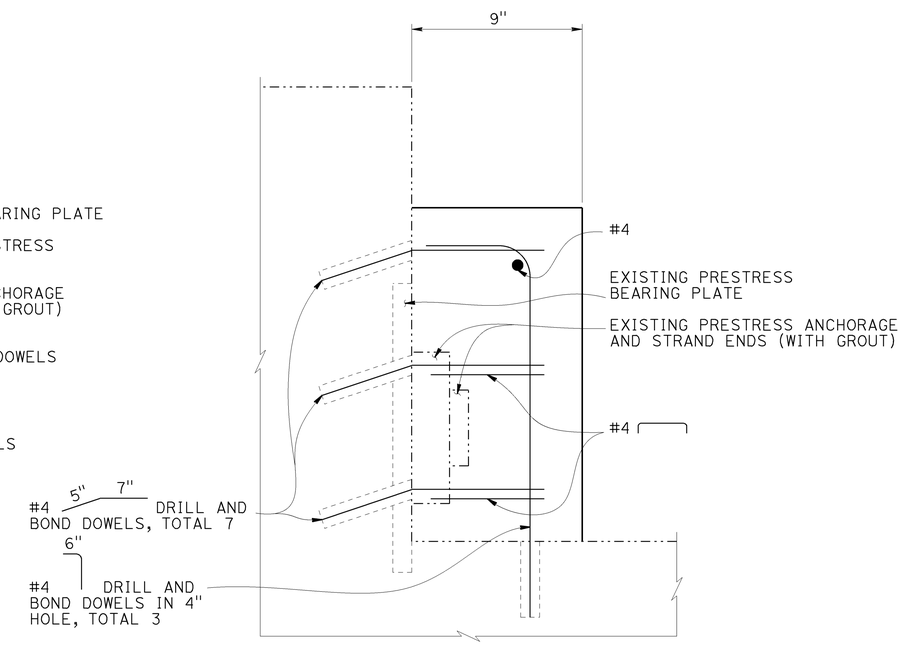

SECTION A-A
No Scale

NOTE:
Concrete barrier not shown.

NOTE:
THE CONTRACTOR SHALL VERIFY ALL CONTROLLING FIELD DIMENSIONS BEFORE ORDERING OR FABRICATING ANY MATERIAL.

CONTRACT CHANGE ORDER NO. ___
SHEET ___ OF ___

SUPPLEMENTAL SHEET

DESIGN	BY Keng M Low	CHECKED Nora Kyo	
DETAILS	BY T. Kusumi	CHECKED Keng M Low	
QUANTITIES	BY Keng M Low	CHECKED Nora Kyo	

STATE OF CALIFORNIA
DEPARTMENT OF TRANSPORTATION

DIVISION OF ENGINEERING SERVICES
STRUCTURE DESIGN
DESIGN BRANCH 8

BRIDGE NO. 27-0092R
POST MILE R21.47

OLIVE AVENUE UC (WIDEN)
ABUTMENT DETAILS NO. 4

STRUCTURES DESIGN DETAIL SHEET (ENGLISH) (REV. 09-01-10)

ORIGINAL SCALE IN INCHES FOR REDUCED PLANS 0 1 2 3

UNIT: 04
PROJECT NUMBER & PHASE: NA
CONTRACT NO.: 04-264061

DISREGARD PRINTS BEARING EARLIER REVISION DATES

REVISION DATES: 10-14-11 10-24-11 10-25-11 10-26-11

SHEET 9 OF 21

FILE => 27-0092r-f-a02dt04.cco

NO AS BUILT CORRECTIONS
CORRECTIONS TRANSFERRED BY: AC
FIELD CORRECTIONS BY: CONTRACT NO. 04-264061
TRANSFER DATE 09-30-2014
FIELD CORRECTION DATE 8-12-2014

USERNAME => s133975 DATE PLOTTED => 29-APR-2015 TIME PLOTTED => 11:09

DIST	COUNTY	ROUTE	POST MILES TOTAL PROJECT	SHEET No	TOTAL SHEETS
04	Mrn	101	18.6/R22.3	531	542

REGISTERED CIVIL ENGINEER 03-08-10 DATE

8-9-10
PLANS APPROVAL DATE

The State of California or its officers or agents shall not be responsible for the accuracy or completeness of electronic copies of this plan sheet.

REGISTERED PROFESSIONAL ENGINEER Keng Mun Low No. C49361 Exp. 09-30-10 CIVIL STATE OF CALIFORNIA

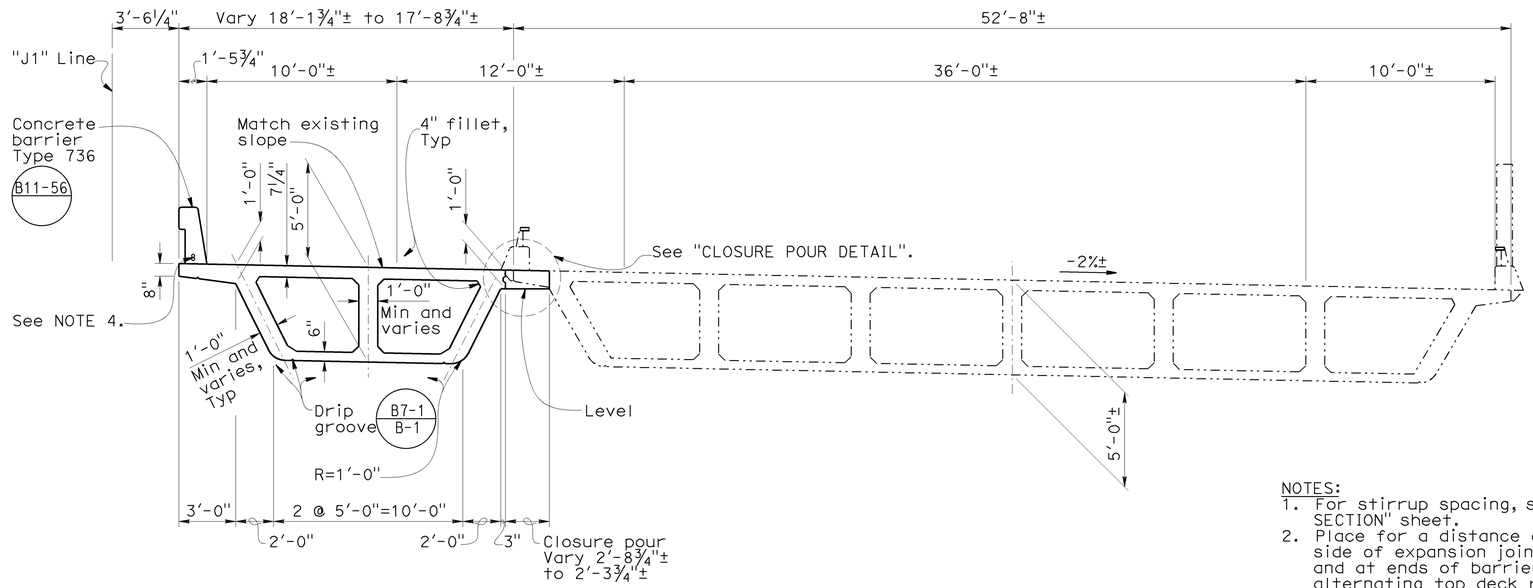

TYPICAL SECTION

¼" = 1'-0"

(See NOTE 3.)

NOTES:
1. For stirrup spacing, see "LONGITUDINAL SECTION" sheet.
2. Place for a distance of 5'-0" each side of expansion joint in barrier rail and at ends of barrier rail. Bundle with alternating top deck reinforcing bar in overhang.
3. Left bridge not shown.
4. 2 - 2" Dia conduits for fiber optic lines, see "ELECTRICAL PLANS."

LEGENDS:

Indicates bridge removal (portion)

Indicates existing structure

Indicates new construction

○ Denotes additional reinforcement, see "ADDITIONAL GIRDER REINFORCEMENT" sheet.

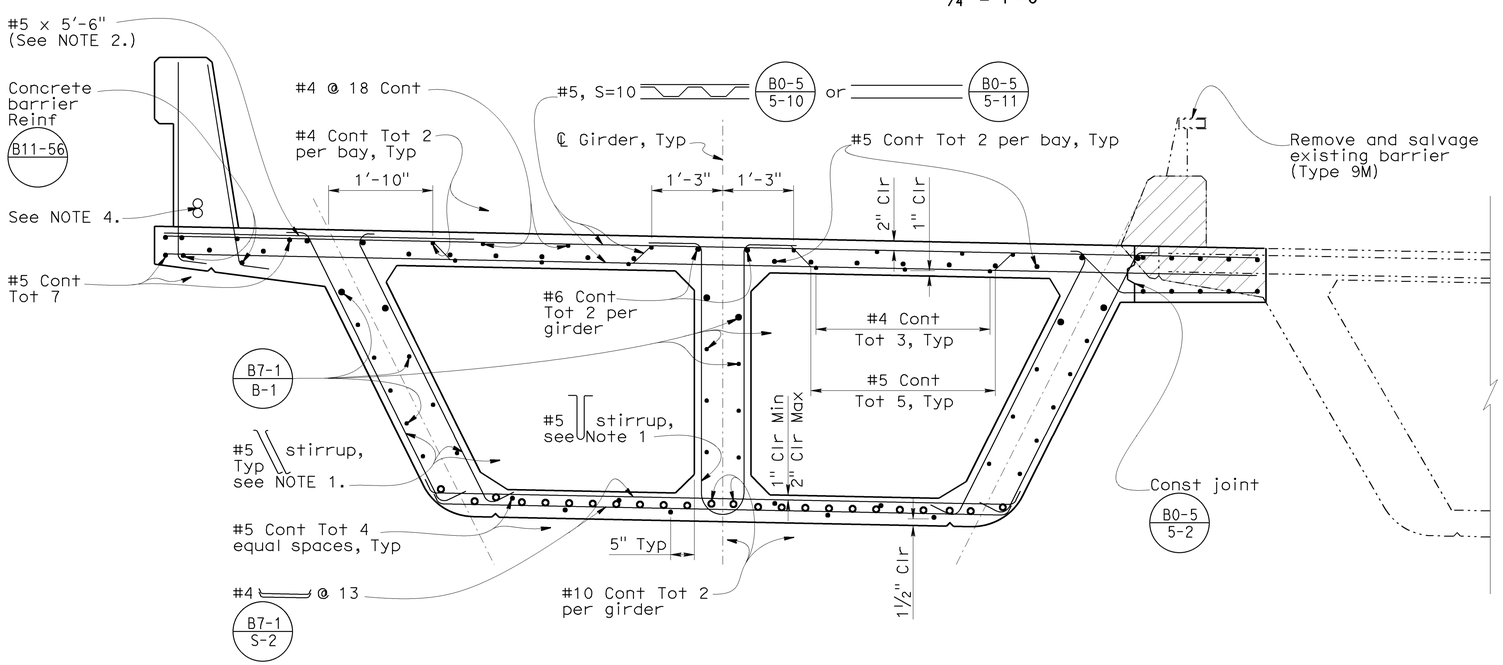

TYPICAL SECTION - RIGHT BRIDGE

¾" = 1'-0"

B0-5 B7-1 B8-5

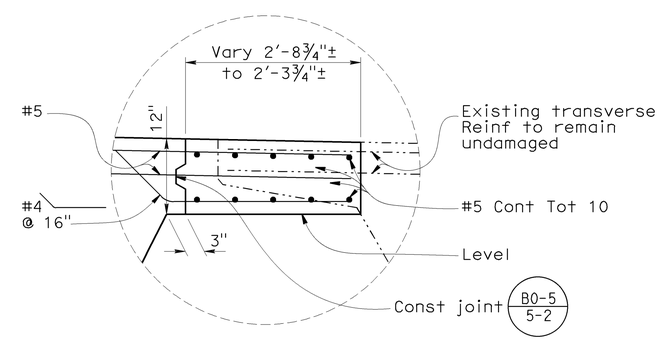

CLOSURE POUR DETAIL

1 " = 1'-0"

NOTE:
THE CONTRACTOR SHALL VERIFY ALL CONTROLLING FIELD DIMENSIONS BEFORE ORDERING OR FABRICATING ANY MATERIAL.

	BY	CHECKED
DESIGN	R. Amir	A. Menke
DETAILS	T. Kusumi	R. Amir
QUANTITIES	T. Kusumi	M. Beall

STATE OF CALIFORNIA
DEPARTMENT OF TRANSPORTATION

DIVISION OF ENGINEERING SERVICES
STRUCTURE DESIGN
DESIGN BRANCH 8

BRIDGE NO. 27-0092R
POST MILE R21.47

OLIVE AVENUE UC (WIDEN)
TYPICAL SECTION

STRUCTURES DESIGN DETAIL SHEET (ENGLISH) (REV. 10/25/05)

ORIGINAL SCALE IN INCHES FOR REDUCED PLANS 0 1 2 3

CU 04
EA 264061

DISREGARD PRINTS BEARING EARLIER REVISION DATES

REVISION DATES: 01-16-08 08-27-08 11-07-08 01-26-09 05-15-09 10-26-09 12-15-09 12-24-09 01-14-10 03-15-10

SHEET 10 OF 21

FILE => 27-0092r-k-ts01.dgn

NO AS BUILT CORRECTIONS

CORRECTIONS TRANSFERRED BY: AC
FIELD CORRECTIONS BY: LONG LY

TRANSFER DATE: 04-30-2014
FIELD CORRECTION DATE: 11-13-2012

CONTRACT NO: 04-264064

USERNAME => s133975 DATE PLOTTED => 29-APR-2015 TIME PLOTTED => 11:09

DIST	COUNTY	ROUTE	POST MILES TOTAL PROJECT	SHEET No	TOTAL SHEETS
04	Mrn	101	18.6/R22.3	532	542

REGISTERED CIVIL ENGINEER 03-08-10 DATE

8-9-10
PLANS APPROVAL DATE

REGISTERED PROFESSIONAL ENGINEER
Keng Mun Low
No. C49361
Exp. 09-30-10
CIVIL
STATE OF CALIFORNIA

The State of California or its officers or agents shall not be responsible for the accuracy or completeness of electronic copies of this plan sheet.

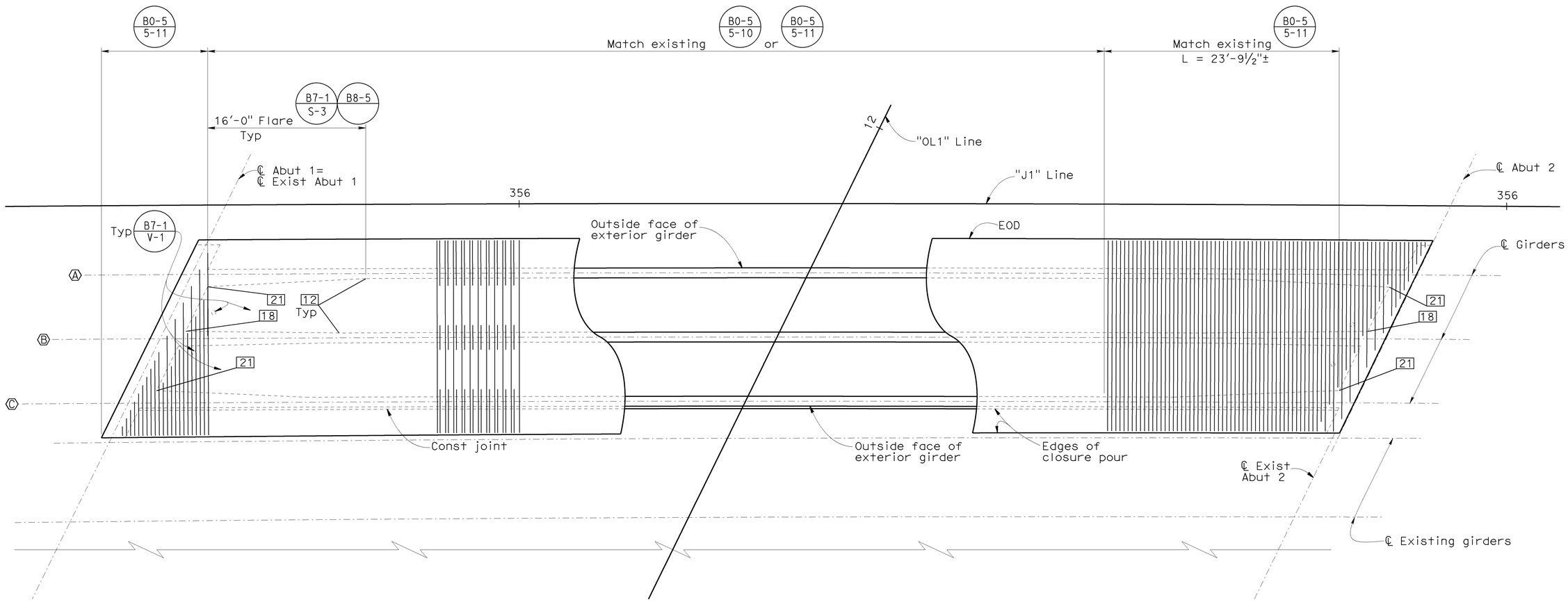

GIRDER LAYOUT

3/16" = 1'-0"

NOTES:

1. Extend alternate top bar 18" into diaphragm. Stop remaining Reinf 3" from face of diaphragm.
2. Ⓐ Indicates girder identification
3. ▭ Indicates girder stem width in inches
4. Flare length measured from face of end diaphragm.

NOTE:
THE CONTRACTOR SHALL VERIFY ALL CONTROLLING FIELD DIMENSIONS BEFORE ORDERING OR FABRICATING ANY MATERIAL.

	BY	CHECKED
DESIGN	R. Amir	A. Menke
DETAILS	T. Kusumi	R. Amir
QUANTITIES	T. Kusumi	M. Beall

STATE OF CALIFORNIA
DEPARTMENT OF TRANSPORTATION

DIVISION OF ENGINEERING SERVICES
STRUCTURE DESIGN
DESIGN BRANCH 8

BRIDGE NO. 27-0092R
POST MILE R21.47

OLIVE AVENUE UC (WIDEN)
GIRDER LAYOUT

STRUCTURES DESIGN DETAIL SHEET (ENGLISH) (REV. 10/25/05)

ORIGINAL SCALE IN INCHES FOR REDUCED PLANS 0 1 2 3

CU 04
EA 264061

DISREGARD PRINTS BEARING EARLIER REVISION DATES

REVISION DATES: 08-08-08, 11-03-08, 05-05-09, 10-28-09, 01-14-10, 03-15-10

SHEET 11 OF 21

FILE => 27-0092r-l-g_lo01.dgn

NO AS BUILT CORRECTIONS

CORRECTIONS TRANSFERRED BY: AC
FIELD CORRECTIONS BY: LONG LY

TRANSFER DATE: 04-30-2014
FIELD CORRECTION DATE: 11-13-2012

CONTRACT NO: 04-264064

USERNAME => s133975 DATE PLOTTED => 29-APR-2015 TIME PLOTTED => 11:09

DIST	COUNTY	ROUTE	POST MILES TOTAL PROJECT	SHEET No	TOTAL SHEETS
04	Mrn	101	18.6/R22.3	533R1	542

REGISTERED CIVIL ENGINEER 03-08-10 DATE

8-9-10
PLANS APPROVAL DATE

REGISTERED PROFESSIONAL ENGINEER Keng Mun Low No. C49361 Exp. 09-30-10 CIVIL STATE OF CALIFORNIA

The State of California or its officers or agents shall not be responsible for the accuracy or completeness of electronic copies of this plan sheet.

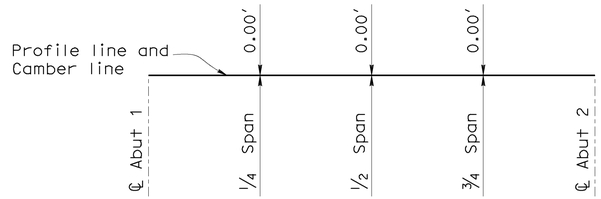

1 CAMBER DIAGRAM

No scale

Does not include allowance for falsework settlement

PRESTRESSING NOTES

270 ksi Low Relaxation Strands:

P_{jack} = 6500 kips

Anchor Set = 3/8 in

Total Number of Girders = 3

Distribution of prestress force (P_{jack}) between girders shall not exceed the ratio of 3:2. Maximum final force variation between girders shall not exceed 725 kips.

Concrete: f'_c = 6.5 ksi @ 28 days

4 f'_{ci} = 4.0 ksi @ time of stressing

Contractor shall submit elongation calculations based on initial stress at

2 ⊠ = 0.965 times jacking stress.

One end stressing shall be performed from either end.

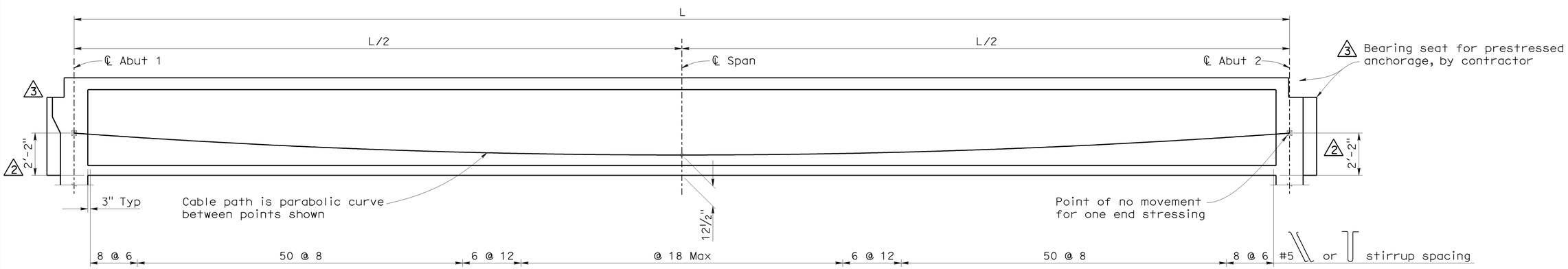

MARK	DATE	REVISION(S) DESCRIPTIONS	DES	CHK	DET
4	10-10-11	Adjusted initial concrete strength	KM	AM	TK
3	10-10-11	Added prestressed anchorage bearing seat and adjusted diaphragm thickness	KM	AM	TK
2	10-10-11	Adjusted initial jacking stress value and cable path dimension	KM	AM	TK
1	10-10-11	Adjusted camber diagram	KM	AM	TK

REGISTERED PROFESSIONAL ENGINEER Keng Mun Low No. C49361 Exp. 09-30-12 CIVIL STATE OF CALIFORNIA

REGISTERED CIVIL ENGINEER: DATE: 10-12-11

LONGITUDINAL SECTION

No scale

RSP: B0-5 | B7-1 S-3 | B8-5

NOTE:
THE CONTRACTOR SHALL VERIFY ALL CONTROLLING FIELD DIMENSIONS BEFORE ORDERING OR FABRICATING ANY MATERIAL.

CONTRACT CHANGE ORDER NO. 19
SHEET 25 OF 26

NO AS BUILT CORRECTIONS

CORRECTIONS TRANSFERRED BY: AC
FIELD CORRECTIONS BY: LONG LY

TRANSFER DATE: 04-30-2014
FIELD CORRECTION DATE: 11-13-2012

CONTRACT NO: 04-264064

DESIGN	BY R. Amir	CHECKED A. Menke	
DETAILS	BY T. Kusumi	CHECKED R. Amir	
QUANTITIES	BY T. Kusumi	CHECKED M. Beall	

STATE OF CALIFORNIA
DEPARTMENT OF TRANSPORTATION

DIVISION OF ENGINEERING SERVICES
STRUCTURE DESIGN
DESIGN BRANCH 8

BRIDGE NO. 27-0092R
POST MILE R21.47

OLIVE AVENUE UC (WIDEN)
LONGITUDINAL SECTION

STRUCTURES DESIGN DETAIL SHEET (ENGLISH) (REV. 10/25/05)

ORIGINAL SCALE IN INCHES FOR REDUCED PLANS 0 1 2 3

CU 04
EA 264061

DISREGARD PRINTS BEARING EARLIER REVISION DATES

REVISION DATES: 08-06-08 10-08-08 11-03-08 05-05-09 06-01-09 07-31-09 10-28-09 01-14-10 03-03-10 03-15-10

SHEET 12 OF 21

FILE => 27-0092r-m-lsec.cco

USERNAME => s133975 DATE PLOTTED => 29-APR-2015 TIME PLOTTED => 11:03

DIST	COUNTY	ROUTE	POST MILES TOTAL PROJECT	SHEET No.	TOTAL SHEETS
04	Mrn	101	18.6/R22.3	533S1	542

REGISTERED CIVIL ENGINEER 12-01-11 DATE

8-9-10
PLANS APPROVAL DATE

REGISTERED PROFESSIONAL ENGINEER Keng Mun Low No. C49361 Exp. 09-30-12 CIVIL STATE OF CALIFORNIA

The State of California or its officers or agents shall not be responsible for the accuracy or completeness of electronic copies of this plan sheet.

Notes:
1. See "Detail A" and "Detail B" for prestress reinforcing details for girder adjacent to closure pour.
2. Recess for anchorage shall be filled with concrete after stressing is completed, typical.
3. Adjust the slope of vertical legs of #6 to match prestress build-out shape at exterior girder, typical.
4. Adjust the spacing of horizontal legs of #6 to clear prestressing duct work, typical.

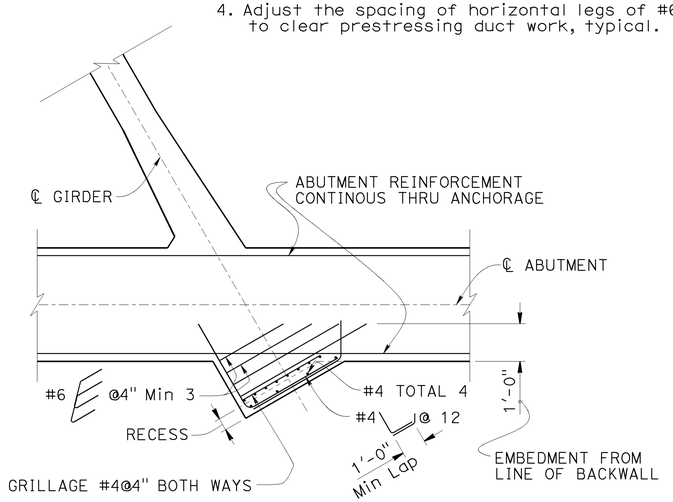

BEARING SEAT FOR PRESTRESSED ANCHORAGE AT DIAPHRAGM
NO SCALE

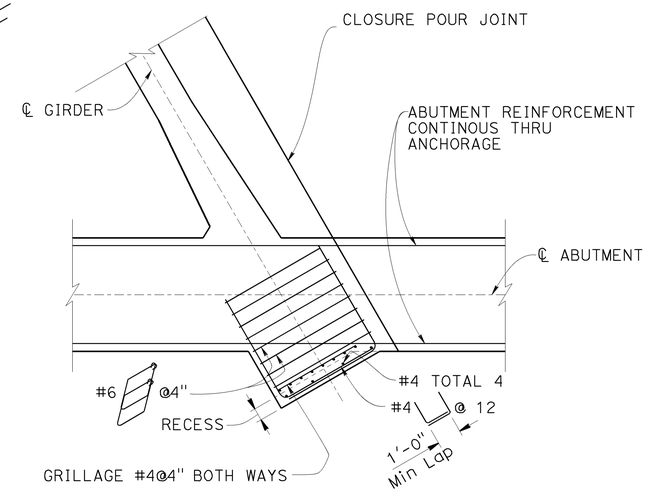

DETAIL A
NO SCALE

Notes
Adjust the spacing of horizontal legs of #6 to clear prestressing duct work, typical

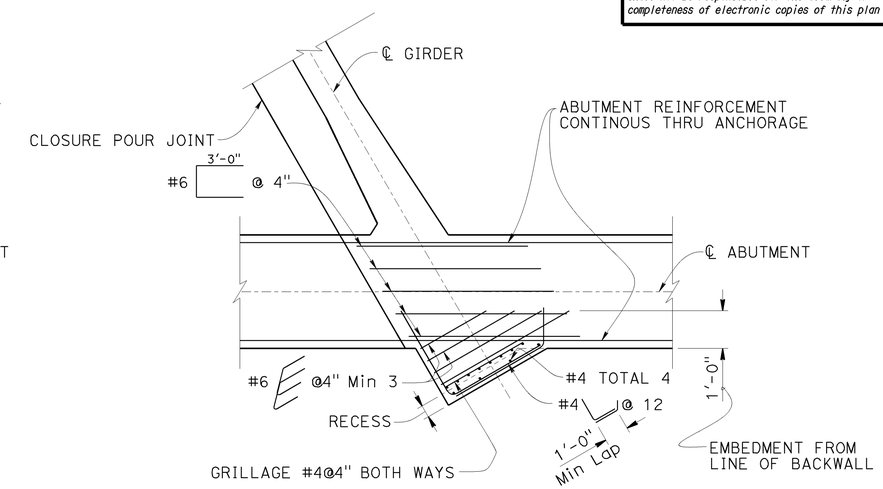

DETAIL B
NO SCALE

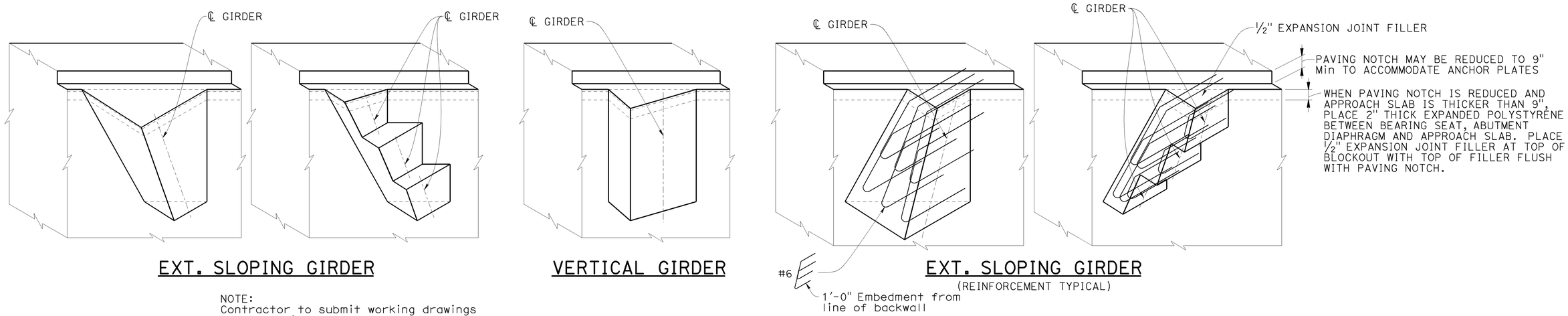

EXT. SLOPING GIRDER

VERTICAL GIRDER

EXT. SLOPING GIRDER
(REINFORCEMENT TYPICAL)

NOTE:
Contractor to submit working drawings to the Engineer for approval.

BEARING SEAT ILLUSTRATIONS
NO SCALE

NOTE:
THE CONTRACTOR SHALL VERIFY ALL CONTROLLING FIELD DIMENSIONS BEFORE ORDERING OR FABRICATING ANY MATERIAL.

CONTRACT CHANGE ORDER NO. 19
26 26

SUPPLEMENTAL SHEET

	BY	CHECKED
DESIGN	Keng M Low	Adam Menke
DETAILS	Eric Hallstrom	Keng M Low
QUANTITIES	Keng M Low	Keng M Low

STATE OF CALIFORNIA
DEPARTMENT OF TRANSPORTATION

DIVISION OF ENGINEERING SERVICES
STRUCTURE DESIGN
DESIGN BRANCH 8

BRIDGE NO. 27-0092R
POST MILE R21.47

OLIVE AVENUE UC (WIDEN)
LONGITUDINAL SECTION

STRUCTURES DESIGN DETAIL SHEET (ENGLISH) (REV. 09-01-10)

ORIGINAL SCALE IN INCHES FOR REDUCED PLANS 0 1 2 3

UNIT: 04
PROJECT NUMBER & PHASE: NA
CONTRACT NO.: 04-264061

DISREGARD PRINTS BEARING EARLIER REVISION DATES

REVISION DATES: ~~10-06-11~~ 12-01-11

SHEET 12 OF 21

FILE => 27-0092r-m-lsec2.cco

NO AS BUILT CORRECTIONS

CORRECTIONS TRANSFERRED BY: AC TRANSFER DATE 09-30-2014
FIELD CORRECTIONS BY: FIELD CORRECTION DATE 8-13-2012
CONTRACT NO. 04-264061

DIST	COUNTY	ROUTE	POST MILES TOTAL PROJECT	SHEET No	TOTAL SHEETS
04	Mrn	101	18.6/R22.3	534	542

REGISTERED CIVIL ENGINEER 03-08-10 DATE

8-9-10
PLANS APPROVAL DATE

REGISTERED PROFESSIONAL ENGINEER
Keng Mun Low
No. C49361
Exp. 09-30-10
CIVIL
STATE OF CALIFORNIA

The State of California or its officers or agents shall not be responsible for the accuracy or completeness of electronic copies of this plan sheet.

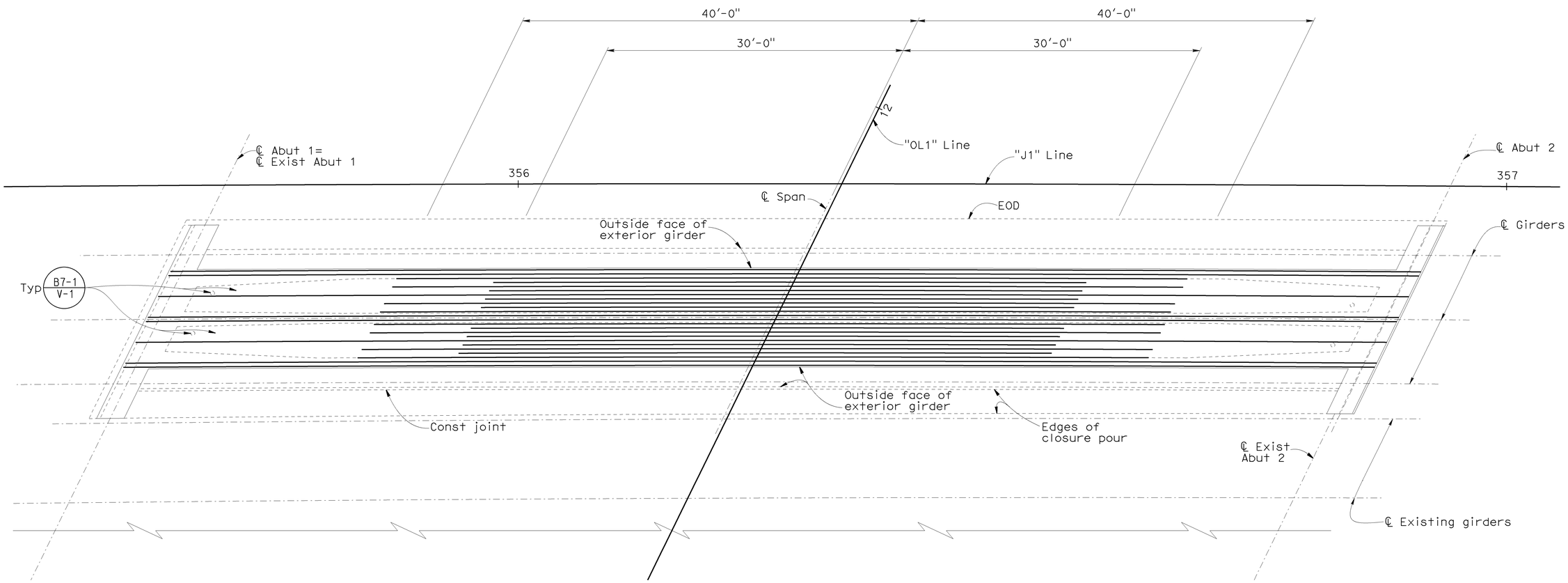

BOTTOM REINFORCEMENT

3/16" = 1'-0"

NOTES:
1. No splices allowed.
2. All bars shall be #10.
3. All bars shall be evenly spaced between girders.

NOTE:
THE CONTRACTOR SHALL VERIFY ALL CONTROLLING FIELD DIMENSIONS BEFORE ORDERING OR FABRICATING ANY MATERIAL.

	BY	CHECKED
DESIGN	R. Amir	A. Menke
DETAILS	T. Kusumi	R. Amir
QUANTITIES	T. Kusumi	M. Beall

STATE OF CALIFORNIA
DEPARTMENT OF TRANSPORTATION

DIVISION OF ENGINEERING SERVICES
STRUCTURE DESIGN
DESIGN BRANCH 8

BRIDGE NO. 27-0092R
POST MILE R21.47

OLIVE AVENUE UC (WIDEN)
ADDITIONAL GIRDER REINFORCEMENT

STRUCTURES DESIGN DETAIL SHEET (ENGLISH) (REV. 10/25/05)

ORIGINAL SCALE IN INCHES FOR REDUCED PLANS 0 1 2 3

CU 04
EA 264061

DISREGARD PRINTS BEARING EARLIER REVISION DATES

REVISION DATES: 08-06-08, 11-03-08, 05-05-09, 10-26-09, 03-15-10

SHEET 13 OF 21

FILE => 27-0092r-o-gbot01.dgn

NO AS BUILT CORRECTIONS
CORRECTIONS TRANSFERRED BY: AC
FIELD CORRECTIONS BY: LONG LY
TRANSFER DATE: 04-30-2014
FIELD CORRECTION DATE: 11-13-2012
CONTRACT NO: 04-264064

USERNAME => s133975 DATE PLOTTED => 29-APR-2015 TIME PLOTTED => 11:03

DIST	COUNTY	ROUTE	POST MILES TOTAL PROJECT	SHEET No	TOTAL SHEETS
04	Mrn	101	18.6/R22.3	535	542

REGISTERED CIVIL ENGINEER 03-08-10 DATE

8-9-10
PLANS APPROVAL DATE

REGISTERED PROFESSIONAL ENGINEER Keng Mun Low No. C49361 Exp. 09-30-10 CIVIL STATE OF CALIFORNIA

The State of California or its officers or agents shall not be responsible for the accuracy or completeness of electronic copies of this plan sheet.

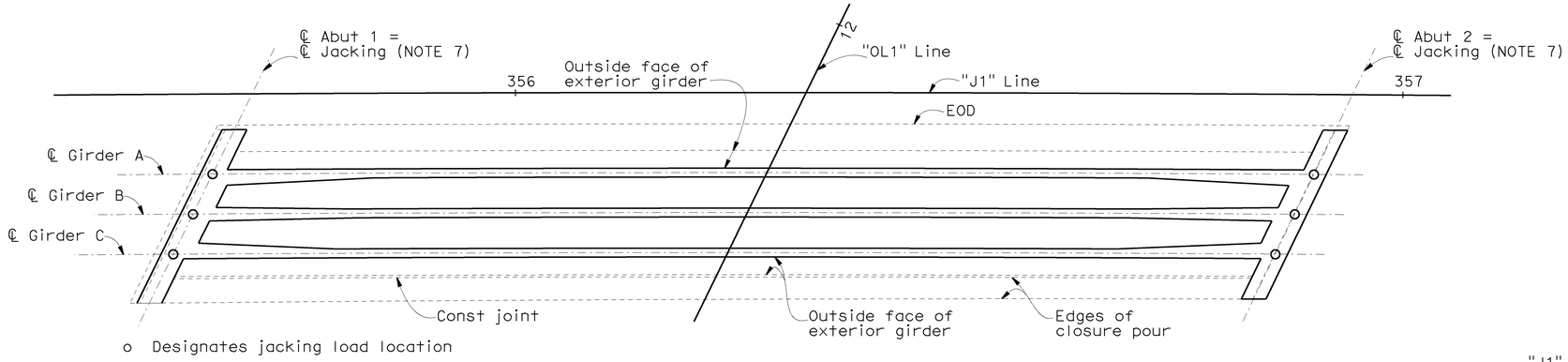

JACKING LOADS - PLAN

1/8" = 1'-0"

ESTIMATED JACKING LOADS (kip)

℄ Jacking Location	℄ Girder A	℄ Girder B	℄ Girder C
Abut 1	205	138	138
Abut 2	138	138	205

NOTES:

1. Estimated jacking loads at locations shown include an estimation of load distribution based on skewed supports.
2. Estimated jacking loads include unfactored dead load only.
3. The Contractor shall verify the actual total load at each ℄ Jacking location before lowering the structure. The CG of the actual jacking loads shall correspond to the CG of the estimated jacking loads at each ℄ Jacking location.
4. The structure shall be lowered simultaneously at each jacking location. The relative displacement between jacks shall not exceed 1/4".
5. The Contractor shall design the lowering system and submit shop drawings for approval.
6. Jacking recesses at Abutments are shown for illustration only. Actual sizes and locations to be determined by the Contractor and subject to the approval of the Engineer.
7. A minimum of three jacks shall be used at each ℄ Jacking location.
8. Piles are not shown.
9. Not all reinforcements are shown.
10. See "ABUTMENT 1 LAYOUT" sheet.
11. See "ABUTMENT 2 LAYOUT" sheet.

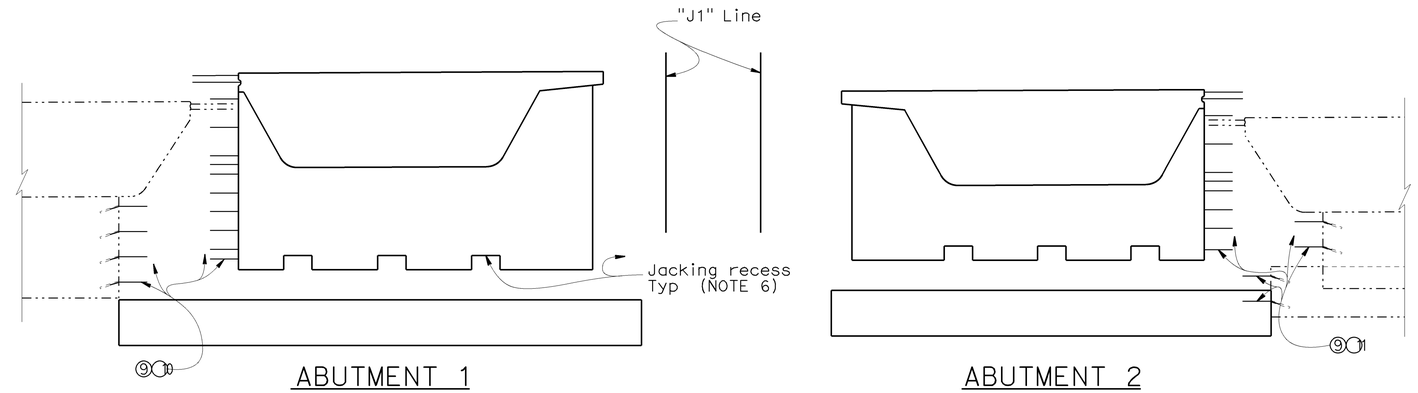

ABUTMENT 1 ABUTMENT 2

SUPERSTRUCTURE IN RAISED POSITION

No scale

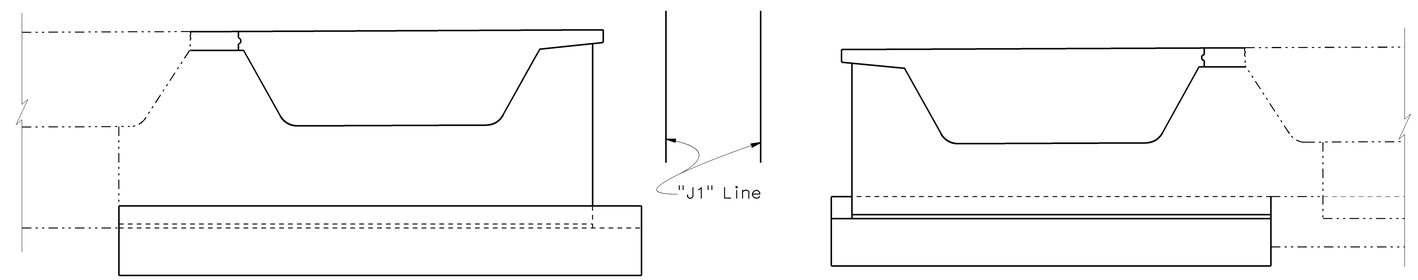

ABUTMENT 1 ABUTMENT 2

SUPERSTRUCTURE IN FINAL POSITION

No scale

CONSTRUCTION SEQUENCE:

1. Cast Superstructure in raised position.
2. Stress, grout tendons and cast prestress blockouts.
3. Provide temporary vertical and lateral support and remove falsework.
4. Install jacks and lower Superstructure.
5. Construct Wingwalls and Concrete Barrier on Bridge.
6. Construct Deck and Abutment closure pour.
7. Cast Abutment Shear Keys.

Note:
The construction sequence may be modified as approved by the Engineer.

NOTE:
THE CONTRACTOR SHALL VERIFY ALL CONTROLLING FIELD DIMENSIONS BEFORE ORDERING OR FABRICATING ANY MATERIAL.

	BY	CHECKED
DESIGN	R. Amir	A. Menke
DETAILS	T. Kusumi	R. Amir
QUANTITIES	T. Kusumi	M. Beall

STATE OF CALIFORNIA
DEPARTMENT OF TRANSPORTATION

DIVISION OF ENGINEERING SERVICES
STRUCTURE DESIGN
DESIGN BRANCH 8

BRIDGE NO. 27-0092R
POST MILE R21.47

OLIVE AVENUE UC (WIDEN)
RIGHT BRIDGE CONSTRUCTION SEQUENCE

STRUCTURES DESIGN DETAIL SHEET (ENGLISH) (REV. 10/25/05)

ORIGINAL SCALE IN INCHES FOR REDUCED PLANS 0 1 2 3

CU 04
EA 264061

DISREGARD PRINTS BEARING EARLIER REVISION DATES

REVISION DATES: 10-06-08 11-03-08 11-18-08 05-05-09 10-28-09 03-15-10

SHEET 14 OF 21

FILE => 27-0092r-r-rconstseq01.dgn

NO AS BUILT CORRECTIONS

CONTRACT NO: 04-264064

TRANSFER DATE: 04-30-2014
FIELD CORRECTION DATE: 11-13-2012

CORRECTIONS TRANSFERRED BY: AC
FIELD CORRECTIONS BY: LONG LY

USERNAME => s133975 DATE PLOTTED => 29-APR-2015 TIME PLOTTED => 11:03

DIST	COUNTY	ROUTE	POST MILES TOTAL PROJECT	SHEET No	TOTAL SHEETS
04	Mrn	101	18.6/R22.3	536	542

REGISTERED CIVIL ENGINEER 03-08-10 DATE

8-9-10
PLANS APPROVAL DATE

REGISTERED PROFESSIONAL ENGINEER
Keng Mun Low
No. C49361
Exp. 09-30-10
CIVIL
STATE OF CALIFORNIA

The State of California or its officers or agents shall not be responsible for the accuracy or completeness of electronic copies of this plan sheet.

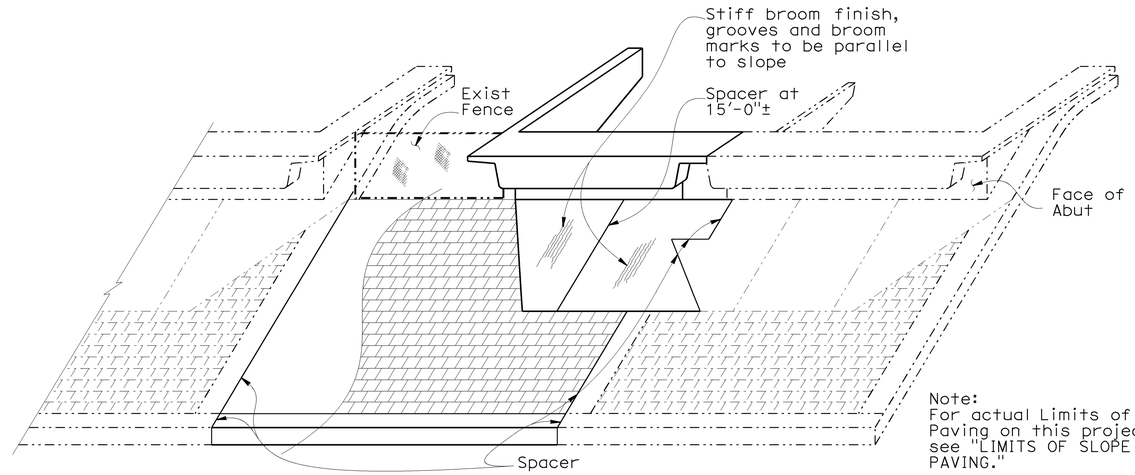

Note:
For actual Limits of Slope Paving on this project, see "LIMITS OF SLOPE PAVING."

PICTORIAL VIEW OF TYPICAL INSTALLATION

No Scale

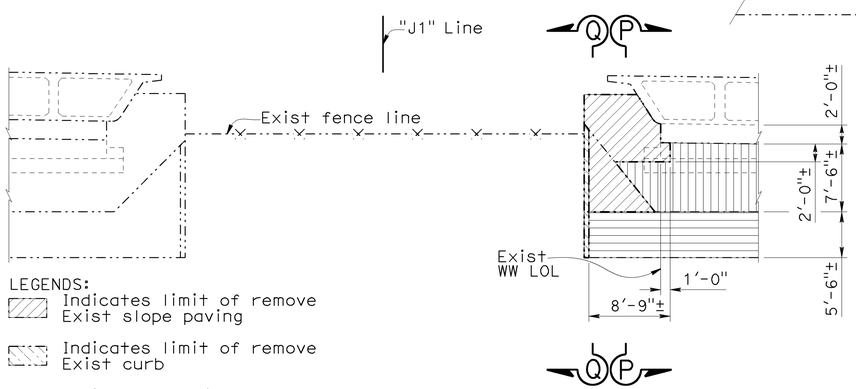

LEGENDS:
- Indicates limit of remove Exist slope paving
- Indicates limit of remove Exist curb
- Indicates retain Exist paving
- Indicates retain Exist Conc paver (6"x6") blocks

EXISTING

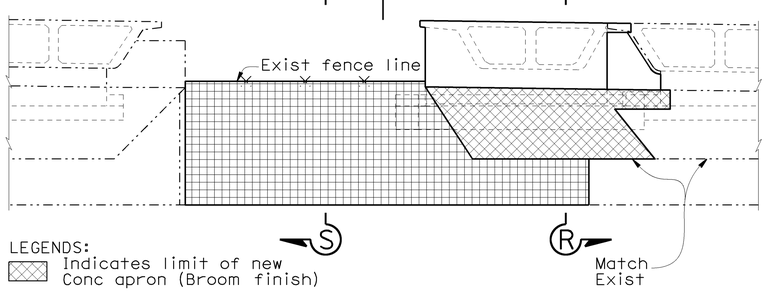

LEGENDS:
- Indicates limit of new Conc apron (Broom finish)
- Indicates limit of new Conc paver (6"x6") blocks

RECONSTRUCTION

ELEVATION VIEW OF INSTALLATION

No scale

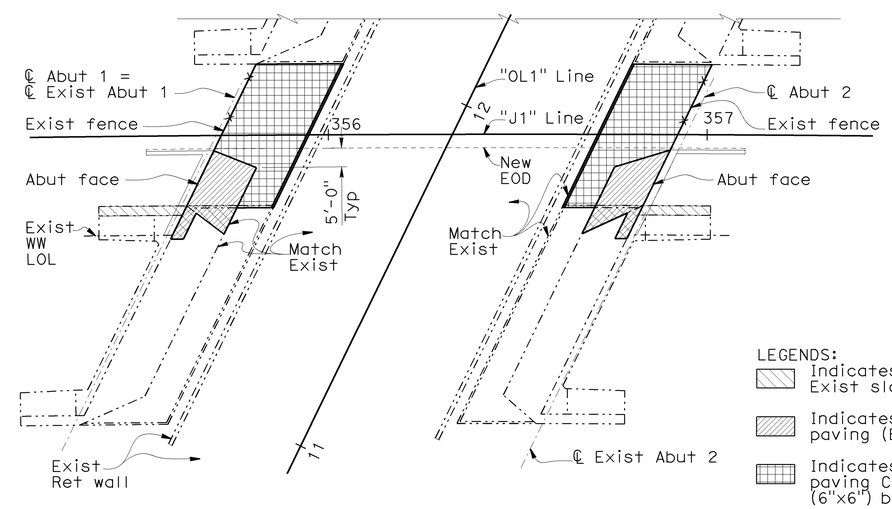

LEGENDS:
- Indicates remove Exist slope paving
- Indicates new slope paving (Broom finish)
- Indicates new slope paving Conc paver (6"x6") blocks

LIMITS OF SLOPE PAVING

No Scale

NOTE:
THE CONTRACTOR SHALL VERIFY ALL CONTROLLING FIELD DIMENSIONS BEFORE ORDERING OR FABRICATING ANY MATERIAL.

	BY	CHECKED
DESIGN	R. Amir	A. Menke
DETAILS	T. Kusumi	R. Amir
QUANTITIES	T. Kusumi	M. Beall

STATE OF CALIFORNIA
DEPARTMENT OF TRANSPORTATION

DIVISION OF ENGINEERING SERVICES
STRUCTURE DESIGN
DESIGN BRANCH 8

BRIDGE NO. 27-0092R
POST MILE R21.47

OLIVE AVENUE UC (WIDEN)
RIGHT BRIDGE SLOPE PAVING DETAILS NO.1

STRUCTURES DESIGN DETAIL SHEET (ENGLISH) (REV. 10/25/05)

ORIGINAL SCALE IN INCHES FOR REDUCED PLANS 0 1 2 3

CU 04
EA 264061

DISREGARD PRINTS BEARING EARLIER REVISION DATES

REVISION DATES: 05-15-09, 05-28-09, 06-01-09, 10-28-09, 12-30-09, 01-14-10, 03-14-10, 03-15-10

SHEET 15 OF 21

FILE => 27-0092r-u-slope01.dgn

NO AS BUILT CORRECTIONS
CORRECTIONS TRANSFERRED BY: AC
FIELD CORRECTIONS BY: LONG LY
TRANSFER DATE: 04-30-2014
FIELD CORRECTION DATE: 11-13-2012
CONTRACT NO: 04-264064

USERNAME => s133975 DATE PLOTTED => 29-APR-2015 TIME PLOTTED => 11:09

DIST	COUNTY	ROUTE	POST MILES TOTAL PROJECT	SHEET No	TOTAL SHEETS
04	Mrn	101	18.6/R22.3	537	542

REGISTERED CIVIL ENGINEER 03-08-10 DATE

8-9-10
PLANS APPROVAL DATE

REGISTERED PROFESSIONAL ENGINEER Keng Mun Low No. C49361 Exp. 09-30-10 CIVIL STATE OF CALIFORNIA

The State of California or its officers or agents shall not be responsible for the accuracy or completeness of electronic copies of this plan sheet.

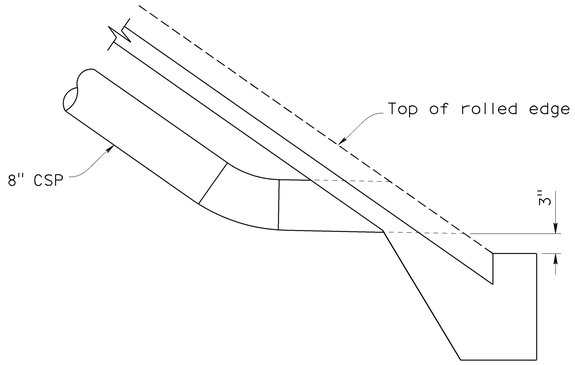

DRAINAGE DETAIL
No Scale

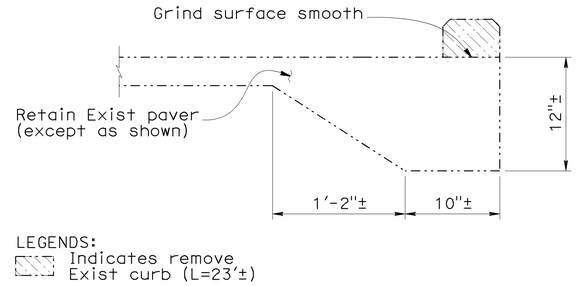

SECTION T-T
No scale

NOTES:
1. Conc barrier not shown.
2. Piles not shown.
3. Conc paver shall be gray color.

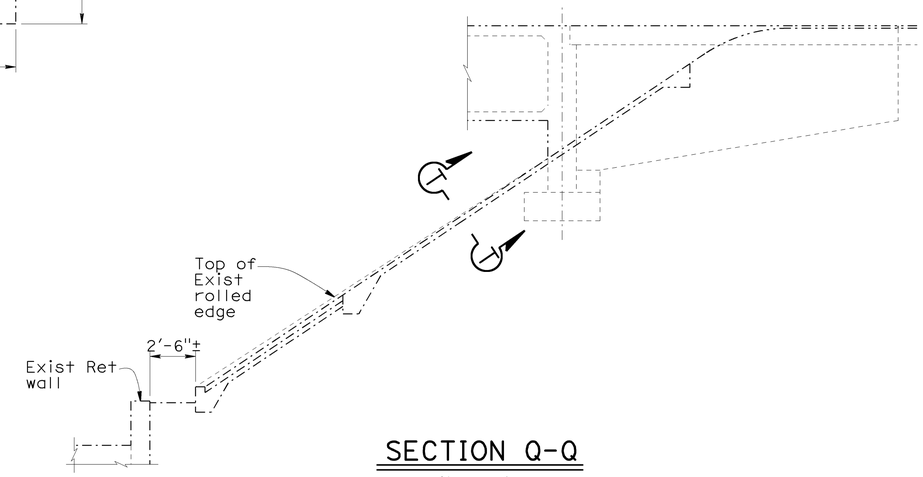

SECTION Q-Q
No scale

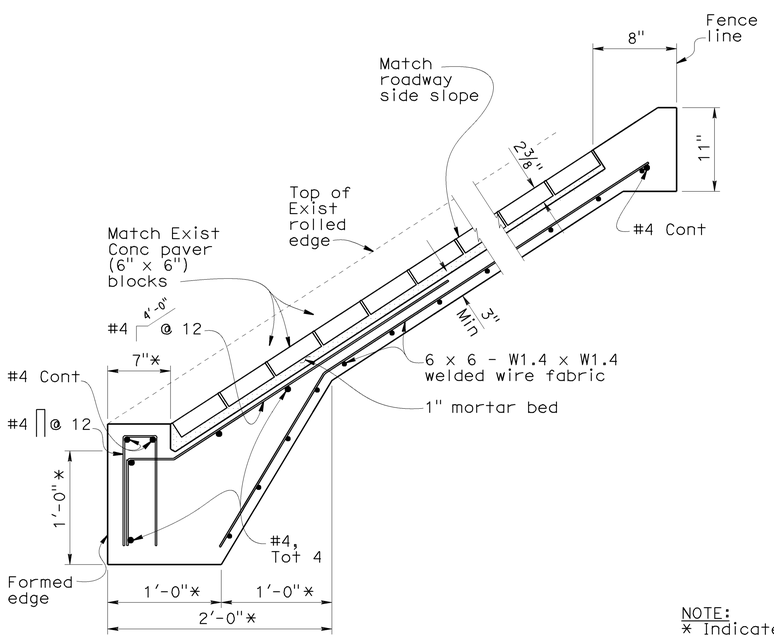

SECTION S-S
No scale

NOTE:
* Indicates match Exist

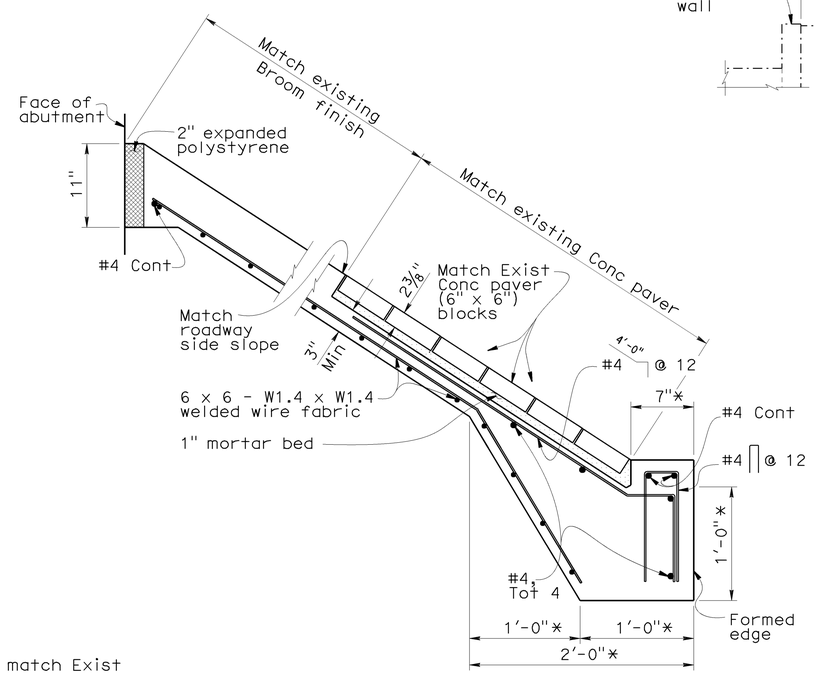

SECTION R-R
No scale

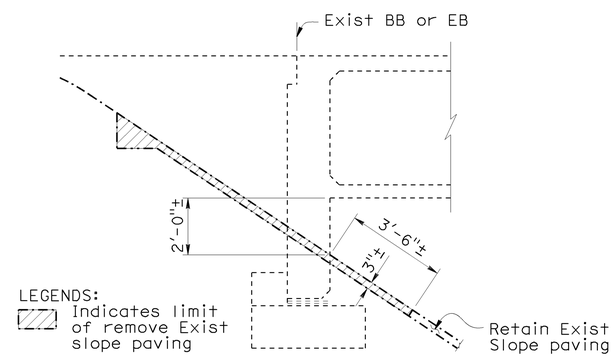

SECTION P-P
No scale

NOTE:
THE CONTRACTOR SHALL VERIFY ALL CONTROLLING FIELD DIMENSIONS BEFORE ORDERING OR FABRICATING ANY MATERIAL.

	BY	CHECKED
DESIGN	R. Amir	A. Menke
DETAILS	T. Kusumi	R. Amir
QUANTITIES	T. Kusumi	M. Beall

STATE OF CALIFORNIA
DEPARTMENT OF TRANSPORTATION

DIVISION OF ENGINEERING SERVICES
STRUCTURE DESIGN
DESIGN BRANCH 8

BRIDGE NO. 27-0092R
POST MILE R21.47

OLIVE AVENUE UC (WIDEN)
RIGHT BRIDGE SLOPE PAVING DETAILS NO. 2

STRUCTURES DESIGN DETAIL SHEET (ENGLISH) (REV. 10/25/05)

ORIGINAL SCALE IN INCHES FOR REDUCED PLANS 0 1 2 3

CU 04
EA 264061

DISREGARD PRINTS BEARING EARLIER REVISION DATES

REVISION DATES: 12-30-09 01-14-10 02-17-10 03-03-10 03-15-10

SHEET 16 OF 21

FILE => 27-0092r-u-slope02.dgn

NO AS BUILT CORRECTIONS
CORRECTIONS TRANSFERRED BY: AC
FIELD CORRECTIONS BY: LONG LY
TRANSFER DATE: 04-30-2014
FIELD CORRECTION DATE: 11-13-2012
CONTRACT NO: 04-264064

USERNAME => s133975 DATE PLOTTED => 29-APR-2015 TIME PLOTTED => 11:09

DIST	COUNTY	ROUTE	POST MILES TOTAL PROJECT	SHEET No	TOTAL SHEETS
04	Mrn	101	18.6/R22.3	538	542

REGISTERED CIVIL ENGINEER — DATE 03-08-10

PLANS APPROVAL DATE 8-9-10

REGISTERED PROFESSIONAL ENGINEER — John C. Moore No. 61792 Exp. 6-30-11 CIVIL — STATE OF CALIFORNIA

The State of California or its officers or agents shall not be responsible for the accuracy or completeness of electronic copies of this plan sheet.

BENCH MARK

PRHV29 Elev. 37.6′

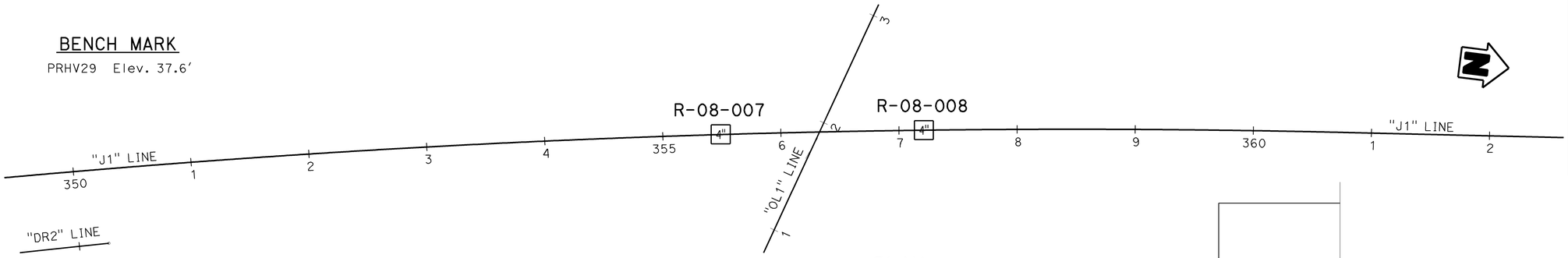

PLAN

1"=50′

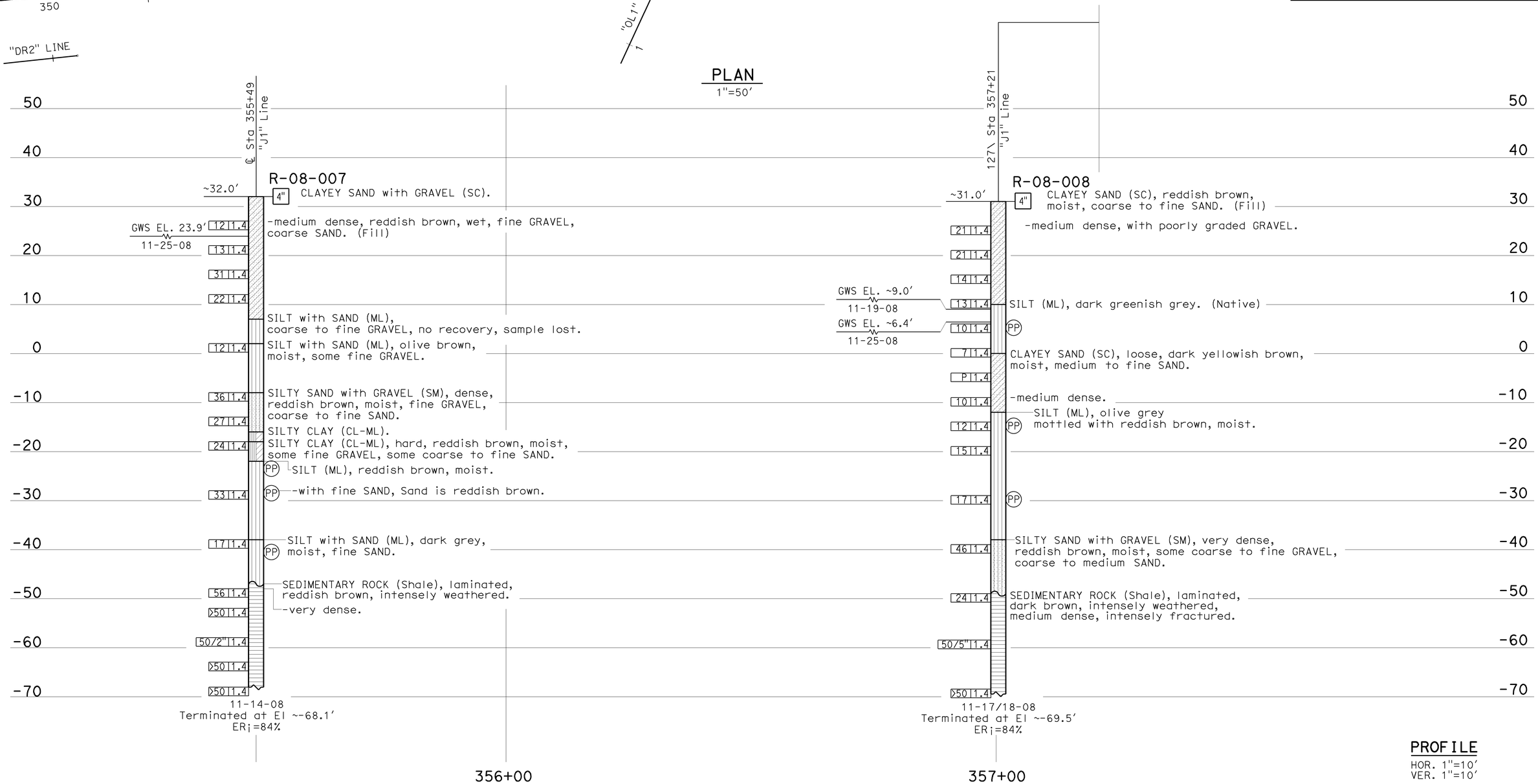

PROFILE

HOR. 1"=10′
VER. 1"=10′

ENGINEERING SERVICES	GEOTECHNICAL SERVICES	STATE OF CALIFORNIA DEPARTMENT OF TRANSPORTATION	DIVISION OF ENGINEERING SERVICES OFFICE OF GEOTECHNICAL DESIGN BRANCH 8	BRIDGE NO. 27-0092R / POST MILES R21.47	OLIVE AVENUE UC (WIDEN) LOG OF TEST BORINGS 1 OF 5
FUNCTIONAL SUPERVISOR NAME: M. Momenzadeh	DRAWN BY: M. Reynolds; CHECKED BY: C. Risden	FIELD INVESTIGATION BY: J. Moore			

OGS CIVIL LOG OF TEST BORINGS SHEET — ORIGINAL SCALE IN INCHES FOR REDUCED PLANS 0 1 2 3 — CU 04 EA 264061 — DISREGARD PRINTS BEARING EARLIER REVISION DATES 03-15-08 — REVISION DATES — SHEET 17 OF 21

FILE => 27-0092r-z-1tb01.dgn

NO AS BUILT CORRECTIONS

CORRECTIONS TRANSFERRED BY: AC FIELD CORRECTIONS BY: LONG LY

TRANSFER DATE: 04-30-2014 FIELD CORRECTION DATE: 11-13-2012

CONTRACT NO: 04-264064

USERNAME => s133975 DATE PLOTTED => 29-APR-2015 TIME PLOTTED => 11:09

DIST	COUNTY	ROUTE	POST MILES TOTAL PROJECT	SHEET No	TOTAL SHEETS
04	Mrn	101	18.6/R22.3	539	542

John C. Moore 03-08-10
REGISTERED CIVIL ENGINEER DATE

8-9-10
PLANS APPROVAL DATE

REGISTERED PROFESSIONAL ENGINEER John C. Moore No. 61792 Exp. 6-30-11 CIVIL STATE OF CALIFORNIA

The State of California or its officers or agents shall not be responsible for the accuracy or completeness of electronic copies of this plan sheet.

REFERENCE: CALTRANS SOIL & ROCK LOGGING, CLASSIFICATION, AND PRESENTATION MANUAL (JUNE 2007)

CEMENTATION

Description	Criteria
Weak	Crumbles or breaks with handling or little finger pressure.
Moderate	Crumbles or breaks with considerable finger pressure.
Strong	Will not crumble or break with finger pressure.

CONSISTENCY OF COHESIVE SOILS

Description	Unconfined Compressive Strength (tsf)	Pocket Penetrometer Measurement (tsf)	Torvane Measurement (tsf)	Field Approximation
Very Soft	< 0.25	< 0.25	< 0.12	Easily penetrated several inches by fist
Soft	0.25 to 0.50	0.25 to 0.50	0.12 to 0.25	Easily penetrated several inches by thumb
Medium Stiff	0.50 to 1.0	0.50 to 1.0	0.25 to 0.50	Penetrated several inches by thumb with moderate effort
Stiff	1 to 2	1 to 2	0.50 to 1.0	Readily indented by thumb but penetrated only with great effort
Very Stiff	2 to 4	2 to 4	1.0 to 2.0	Readily indented by thumbnail
Hard	> 4.0	> 4.0	> 2.0	Indented by thumbnail with difficulty

BOREHOLE IDENTIFICATION

Symbol	Hole Type	Description
Size	A	Auger Boring
Size	R P	Rotary drilled boring Rotary percussion boring (air)
Size	R	Rotary drilled diamond core
Size	HD HA	Hand driven (1-inch soil tube) Hand Auger
●	D	Dynamic Cone Penetration Boring
▲	CPT	Cone Penetration Test (ASTM D 5778-95)
⬚	O	Other

Note: Size in inches.

PLASTICITY OF FINE-GRAINED SOILS

Description	Criteria
Nonplastic	A 1/8-inch thread cannot be rolled at any water content.
Low	The thread can barely be rolled and the lump cannot be formed when drier than the plastic limit.
Medium	The thread is easy to roll and not much time is required to reach the plastic limit. The thread cannot be rerolled after reaching the plastic limit. The lump crumbles when drier than the plastic limit.
High	It takes considerable time rolling and kneading to reach the plastic limit. The thread can be rerolled several times after reaching the plastic limit. The lump can be formed without crumbling when drier than the plastic limit.

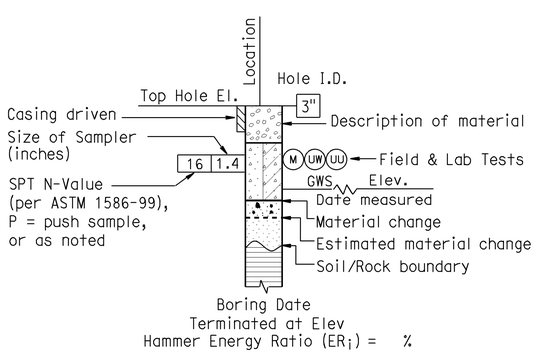

ROTARY BORING

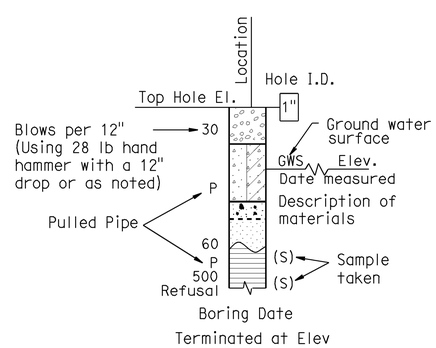

HAND BORING

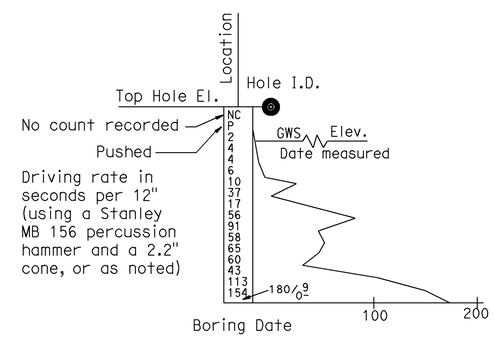

DYNAMIC CONE PENETRATION BORING

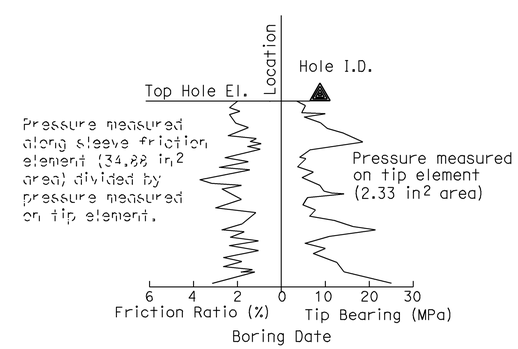

CONE PENETRATION TEST (CPT) SOUNDING

ENGINEERING SERVICES		GEOTECHNICAL SERVICES
FUNCTIONAL SUPERVISOR	PREPARED BY M. Reynolds	
NAME: M. Momenzadeh	CHECKED BY C. Risden	J. Moore

STATE OF CALIFORNIA DEPARTMENT OF TRANSPORTATION

DIVISION OF ENGINEERING SERVICES OFFICE OF GEOTECHNICAL DESIGN BRANCH 8

BRIDGE NO. 27-0092R
POST MILE R21.47

SOIL LEGEND
LOG OF TEST BORINGS 2 of 5

GS LOTB SOIL LEGEND

ORIGINAL SCALE IN INCHES FOR REDUCED PLANS 0 1 2 3

CU 04
EA 264061

DISREGARD PRINTS BEARING EARLIER REVISION DATES 03-15-10

REVISION DATES

SHEET 18 OF 21

FILE => 27-0092r-z-lltb02.dgn

NO AS BUILT CORRECTIONS
CORRECTIONS TRANSFERRED BY: AC
FIELD CORRECTIONS BY: LONG LY
TRANSFER DATE: 04-30-2014
FIELD CORRECTION DATE: 11-13-2012
CONTRACT NO: 04-264064

USERNAME => s133975 DATE PLOTTED => 29-APR-2015 TIME PLOTTED => 11:09

DIST	COUNTY	ROUTE	POST MILES TOTAL PROJECT	SHEET No	TOTAL SHEETS
04	Mrn	101	18.6/R22.3	540	542

REGISTERED CIVIL ENGINEER — DATE 03-08-10

8-9-10
PLANS APPROVAL DATE

REGISTERED PROFESSIONAL ENGINEER — John C. Moore — No. 61792 — Exp. 6-30-11 — CIVIL — STATE OF CALIFORNIA

The State of California or its officers or agents shall not be responsible for the accuracy or completeness of electronic copies of this plan sheet.

REFERENCE: CALTRANS SOIL & ROCK LOGGING, CLASSIFICATION, AND PRESENTATION MANUAL (JUNE 2007)

GROUP SYMBOLS AND NAMES

Graphic/Symbol	Group Names	Graphic/Symbol	Group Names
GW	Well-graded GRAVEL Well-graded GRAVEL with SAND	CL	Lean CLAY Lean CLAY with SAND Lean CLAY with GRAVEL SANDY lean CLAY SANDY lean CLAY with GRAVEL GRAVELLY lean CLAY GRAVELLY lean CLAY with SAND
GP	Poorly graded GRAVEL Poorly graded GRAVEL with SAND		
GW-GM	Well-graded GRAVEL with SILT Well-graded GRAVEL with SILT and SAND	CL-ML	SILTY CLAY SILTY CLAY with SAND SILTY CLAY with GRAVEL SANDY SILTY CLAY SANDY SILTY CLAY with GRAVEL GRAVELLY SILTY CLAY GRAVELLY SILTY CLAY with SAND
GW-GC	Well-graded GRAVEL with CLAY (or SILTY CLAY) Well-graded GRAVEL with CLAY and SAND (or SILTY CLAY and SAND)		
GP-GM	Poorly graded GRAVEL with SILT Poorly graded GRAVEL with SILT and SAND	ML	SILT SILT with SAND SILT with GRAVEL SANDY SILT SANDY SILT with GRAVEL GRAVELLY SILT GRAVELLY SILT with SAND
GP-GC	Poorly graded GRAVEL with CLAY (or SILTY CLAY) Poorly graded GRAVEL with CLAY and SAND (or SILTY CLAY and SAND)		
GM	SILTY GRAVEL SILTY GRAVEL with SAND	OL	ORGANIC lean CLAY ORGANIC lean CLAY with SAND ORGANIC lean CLAY with GRAVEL SANDY ORGANIC lean CLAY SANDY ORGANIC lean CLAY with GRAVEL GRAVELLY ORGANIC lean CLAY GRAVELLY ORGANIC lean CLAY with SAND
GC	CLAYEY GRAVEL CLAYEY GRAVEL with SAND		
GC-GM	SILTY, CLAYEY GRAVEL SILTY, CLAYEY GRAVEL with SAND	OL	ORGANIC SILT ORGANIC SILT with SAND ORGANIC SILT with GRAVEL SANDY ORGANIC SILT SANDY ORGANIC SILT with GRAVEL GRAVELLY ORGANIC SILT GRAVELLY ORGANIC SILT with SAND
SW	Well-graded SAND Well-graded SAND with GRAVEL		
SP	Poorly graded SAND Poorly graded SAND with GRAVEL	CH	Fat CLAY Fat CLAY with SAND Fat CLAY with GRAVEL SANDY fat CLAY SANDY fat CLAY with GRAVEL GRAVELLY fat CLAY GRAVELLY fat CLAY with SAND
SW-SM	Well-graded SAND with SILT Well-graded SAND with SILT and GRAVEL		
SW-SC	Well-graded SAND with CLAY (or SILTY CLAY) Well-graded SAND with CLAY and GRAVEL (or SILTY CLAY and GRAVEL)	MH	Elastic SILT Elastic SILT with SAND Elastic SILT with GRAVEL SANDY elastic SILT SANDY elastic SILT with GRAVEL GRAVELLY elastic SILT GRAVELLY elastic SILT with SAND
SP-SM	Poorly graded SAND with SILT Poorly graded SAND with SILT and GRAVEL		
SP-SC	Poorly graded SAND with CLAY (or SILTY CLAY) Poorly graded SAND with CLAY and GRAVEL (or SILTY CLAY and GRAVEL)	OH	ORGANIC fat CLAY ORGANIC fat CLAY with SAND ORGANIC fat CLAY with GRAVEL SANDY ORGANIC fat CLAY SANDY ORGANIC fat CLAY with GRAVEL GRAVELLY ORGANIC fat CLAY GRAVELLY ORGANIC fat CLAY with SAND
SM	SILTY SAND SILTY SAND with GRAVEL		
SC	CLAYEY SAND CLAYEY SAND with GRAVEL	OH	ORGANIC elastic SILT ORGANIC elastic SILT with SAND ORGANIC elastic SILT with GRAVEL SANDY ORGANIC elastic SILT SANDY ORGANIC elastic SILT with GRAVEL GRAVELLY ORGANIC elastic SILT GRAVELLY ORGANIC elastic SILT with SAND
SC-SM	SILTY, CLAYEY SAND SILTY, CLAYEY SAND with GRAVEL		
PT	PEAT	OL/OH	ORGANIC SOIL ORGANIC SOIL with SAND ORGANIC SOIL with GRAVEL SANDY ORGANIC SOIL SANDY ORGANIC SOIL with GRAVEL GRAVELLY ORGANIC SOIL GRAVELLY ORGANIC SOIL with SAND
	COBBLES COBBLES and BOULDERS BOULDERS		

FIELD AND LABORATORY TESTING

- (C) Consolidation (ASTM D 2435)
- (CL) Collapse Potential (ASTM D 5333)
- (CP) Compaction Curve (CTM 216)
- (CR) Corrosivity Testing (CTM 643, CTM 422, CTM 417)
- (CU) Consolidated Undrained Triaxial (ASTM D 4767)
- (DS) Direct Shear (ASTM D 3080)
- (EI) Expansion Index (ASTM D 4829)
- (M) Moisture Content (ASTM D 2216)
- (OC) Organic Content-% (ASTM D 2974)
- (P) Permeability (CTM 220)
- (PA) Particle Size Analysis (ASTM D 422)
- (PI) Plasticity Index (AASHTO T 90) Liquid Limit (AASHTO T 89)
- (PL) Point Load Index (ASTM D 5731)
- (PM) Pressure Meter
- (PP) Pocket Penetrometer
- (R) R-Value (CTM 301)
- (SE) Sand Equivalent (CTM 217)
- (SG) Specific Gravity (AASHTO T 100)
- (SL) Shrinkage Limit (ASTM D 427)
- (SW) Swell Potential (ASTM D 4546)
- (TV) Pocket Torvane
- (UC) Unconfined Compression-Soil (ASTM D 2166) Unconfined Compression-Rock (ASTM D 2938)
- (UU) Unconsolidated Undrained Triaxial (ASTM D 2850)
- (UW) Unit Weight (ASTM D 4767)
- (VS) Vane Shear (AASHTO T 223)

APPARENT DENSITY OF COHESIONLESS SOILS

Description	SPT N_{60} (Blows / 12 inches)
Very loose	0 - 4
Loose	5 - 10
Medium Dense	11 - 30
Dense	31 - 50
Very Dense	> 50

MOISTURE

Description	Criteria
Dry	Absence of moisture, dusty, dry to the touch
Moist	Damp but no visible water
Wet	Visible free water, usually soil is below water table

PERCENT OR PROPORTION OF SOILS

Description	Criteria
Trace	Particles are present but estimated to be less than 5%
Few	5 to 10%
Little	15 to 25%
Some	30 to 45%
Mostly	50 to 100%

PARTICLE SIZE

Description		Size
Boulder		> 12"
Cobble		3" to 12"
Gravel	Coarse	3/4" to 3"
	Fine	No. 4 to 3/4"
Sand	Coarse	No. 10 to No. 4
	Medium	No. 40 to No. 10
	Fine	No. 200 to No. 40

NO AS BUILT CORRECTIONS

CONTRACT NO: 04-264064
TRANSFER DATE: 04-30-2014
FIELD CORRECTION DATE: 11-13-2012
CORRECTIONS TRANSFERED BY: AC
FIELD CORRECTIONS BY: LONG LY

ENGINEERING SERVICES		GEOTECHNICAL SERVICES
FUNCTIONAL SUPERVISOR	PREPARED BY M. Reynolds	
NAME: M. Momenzadeh	CHECKED BY C. Risden	J. Moore

STATE OF CALIFORNIA DEPARTMENT OF TRANSPORTATION

DIVISION OF ENGINEERING SERVICES OFFICE OF GEOTECHNICAL DESIGN BRANCH 8

BRIDGE NO. 27-0092R
POST MILE R21.47

SOIL LEGEND
LOG OF TEST BORINGS 3 of 5

GS LOTB SOIL LEGEND

ORIGINAL SCALE IN INCHES FOR REDUCED PLANS 0 1 2 3

CU 04
EA 264061

DISREGARD PRINTS BEARING EARLIER REVISION DATES 03-15-10

REVISION DATES

SHEET 19 OF 21

FILE => 27-0092r-z-lltb03.dgn

USERNAME => s133975 DATE PLOTTED => 29-APR-2015 TIME PLOTTED => 11:09

DIST	COUNTY	ROUTE	POST MILES TOTAL PROJECT	SHEET No	TOTAL SHEETS
04	Mrn	101	18.6/R22.3	541	542

REGISTERED CIVIL ENGINEER — DATE 03-08-10

8-9-10
PLANS APPROVAL DATE

REGISTERED PROFESSIONAL ENGINEER — John C. Moore — No. 61792 — Exp. 6-30-11 — CIVIL — STATE OF CALIFORNIA

The State of California or its officers or agents shall not be responsible for the accuracy or completeness of electronic copies of this plan sheet.

REFERENCE: CALTRANS SOIL & ROCK LOGGING, CLASSIFICATION, AND PRESENTATION MANUAL (JUNE 2007)

PERCENT CORE RECOVERY (REC) & ROCK QUALITY DESIGNATION (RQD)

$$REC = \frac{\sum \text{Length of the recovered core pieces (inches)}}{\text{Total length of core run (inches)}} \times 100\%$$

$$RQD = \frac{\sum \text{Length of intact core pieces} \geq 4''}{\text{Total length of core run (inches)}} \times 100\%$$

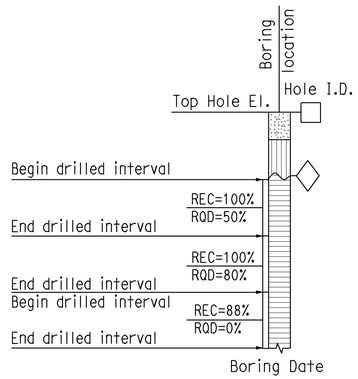

RELATIVE STRENGTH OF INTACT ROCK

Term	Uniaxial Compressive Strength (PSI)
Extremely Strong	> 30,000
Very Strong	14,500 - 30,000
Strong	7,000 - 14,500
Medium Strong	3,500 - 7,000
Weak	700 - 3,500
Very Weak	150 - 700
Extremely Weak	< 150

BEDDING SPACING

Description	Thickness / Spacing
Massive	Greater than 10 ft
Very thickly bedded	3 to 10 ft
Thickly bedded	1 to 3 ft
Moderately bedded	3-5/8" to 1 ft
Thinly bedded	1-1/4" to 3-5/8"
Very thinly bedded	3/8" to 1-1/4"
Laminated	Less than 3/8"

LEGEND OF ROCK MATERIALS

- IGNEOUS ROCK
- SEDIMENTARY ROCK
- METAMORPHIC ROCK

ROCK HARDNESS

Description	Criteria
Extremely Hard	Specimen cannot be scratched with a pocket knife or sharp pick; can only be chipped with repeated heavy hammer blows.
Very Hard	Specimen cannot be scratched with a pocket knife or sharp pick. Breaks with repeated heavy hammer blows.
Hard	Specimen can be scratched with a pocket knife or sharp pick with difficulty (heavy pressure). Heavy hammer blows required to break specimen.
Moderately Hard	Specimen can be scratched with pocket knife or sharp pick with light or moderate pressure. Core breaks with moderate hammer pressure.
Moderately Soft	Specimen can be grooved 1/6" deep with a pocket knife or sharp pick with moderate or heavy pressure. Breaks with light hammer blow or heavy manual pressure.
Soft	Specimen can be grooved or gouged easily by a pocket knife or sharp pick with light pressure, can be scratched with fingernail. Breaks with light to moderate manual pressure.
Very Soft	Specimen can be readily indented, grooved or gouged with fingernail, or carved with a pocket knife. Breaks with light manual pressure.

FRACTURE DENSITY

Description	Observed Fracture Density
Unfractured	No fractures.
Very slightly fractured	Lengths greater than 3 feet.
Slightly fractured	Lengths from 1 to 3 feet with few lengths less than 1 foot or greater than 3 feet.
Moderately fractured	Lengths mostly in 4" to 1 foot range with most lengths about 8"
Intensely fractured	Lengths average from 1 to 4" with scattered fragmented intervals with lengths less than 4"
Very intensely fractured	Mostly chips and fragments with a few scattered short core lengths.

Combination descriptors (such as "Very intensely to intensely fractured") are used where equal distribution of both fracture density characteristics is present over a significant interval or exposure, or where characteristics are "in between" the descriptor definitions. Only two adjacent descriptors may be combined.

WEATHERING DESCRIPTORS FOR INTACT ROCK

Description	Diagnostic features					General Characteristics
	Chemical Weathering-Discoloration and/or oxidation		Mechanical Weathering-Grain boundary conditions (disaggregation) primarily for granitics and some coarse-grained sediments	Texture and Solutioning		
	Body of Rock	Fracture Surfaces		Texture	Solutioning	
Fresh	No discoloration, not oxidized.	No discoloration or oxidation.	No separation, intact (tight).	No change.	No solutioning.	Hammer rings when crystalline rocks are struck.
Slightly Weathered	Discoloration or oxidation is limited to surface of, or short distance from, fractures; some feldspar crystals are dull.	Minor to complete discoloration or oxidation of most surfaces.	No visible separation, intact (tight).	Preserved.	Minor leaching of some soluble minerals may be noted.	Hammer rings when crystalline rocks are struck. Body of rock not weakened.
Moderately Weathered	Discoloration or oxidation extends from fractures usually throughout; Fe-Mg minerals are "rusty," feldspar crystals are "cloudy."	All fracture surfaces are discolored or oxidized.	Partial separation of boundaries visible.	Generally preserved.	Soluble minerals may be mostly leached.	Hammer does not ring when rock is struck. Body of rock is slightly weakened.
Intensely Weathered	Discoloration or oxidation throughout; all feldspars and Fe-Mg minerals are altered to clay to some extent; or chemical alteration produces in-situ disaggregation, see grain boundary conditions.	All fracture surfaces are discolored or oxidized, surfaces friable.	Partial separation, rock is friable; in semiarid conditions granitics are disaggregated.	Texture altered by chemical disintegration (hydration, argillation).	Leaching of soluble minerals may be complete.	Dull sound when struck with hammer, usually can be broken with moderate to heavy manual pressure or by light hammer blow without reference to planes of weakness such as incipient or hairline fractures, or veinlets. Rock is significantly weakened.
Decomposed	Discolored or oxidized throughout, but resistant minerals such as quartz may be unaltered; all feldspars and Fe-Mg minerals are completely altered to clay.		Complete separation of grain boundaries (disaggregated).	Resembles a soil, partial or complete remnant rock structure may be preserved; leaching of soluble minerals usually complete.		Can be granulated by hand. Resistant minerals such as quartz may be present as "stringers" or "dikes."

Combination descriptors (such as "slightly weathered to fresh") are permissible where equal distribution of both weathering characteristics is present over significant intervals or where characteristics present are "in between" the diagnostic feature. However, combination descriptors should not be used where significant, identifiable zones can be delineated. Only two adjacent descriptors may be combined. "Very intensely weathered" is the combination descriptor for "intensely weathered to decomposed."

NO AS BUILT CORRECTIONS

CORRECTIONS TRANSFERRED BY: AC
FIELD CORRECTIONS BY: LONG LY

TRANSFER DATE: 04-30-2014
FIELD CORRECTION DATE: 11-13-2012

CONTRACT NO: 04-264064

ENGINEERING SERVICES		GEOTECHNICAL SERVICES
FUNCTIONAL SUPERVISOR	PREPARED BY M. Reynolds	FIELD INVESTIGATION BY:
NAME: M. Momenzadeh	CHECKED BY C. Risden	J. Moore

GS LOTB ROCK LEGEND

ORIGINAL SCALE IN INCHES FOR REDUCED PLANS 0 1 2 3

STATE OF CALIFORNIA DEPARTMENT OF TRANSPORTATION

DIVISION OF ENGINEERING SERVICES OFFICE OF GEOTECHNICAL DESIGN BRANCH 8

CU 04
EA 264061

BRIDGE NO. 27-0092R
POST MILE R21.47

DISREGARD PRINTS BEARING EARLIER REVISION DATES 03-15-10

ROCK LEGEND
LOG OF TEST BORINGS 4 OF 5

SHEET 20 OF 21

FILE => 27-0092r-z-1tb04.dgn

USERNAME => s133975 DATE PLOTTED => 29-APR-2015 TIME PLOTTED => 11:09

NO AS BUILT CORRECTIONS

CORRECTIONS TRANSFERRED BY: AC
FIELD CORRECTIONS BY: LONG LY

TRANSFER DATE: 01-31-2014
FIELD CORRECTION DATE: 11-13-2012

CONTRACT NO: 04-264064

DIST.	COUNTY	ROUTE	POST MILES—TOTAL PROJECT	SHEET NO.	TOTAL SHEETS
04	Mrn	101	18.2/23.3	267	312

DESIGN SECTION SUPERVISOR — REGISTERED CIVIL ENGINEER NO. 41165

DATE APPROVED November 3, 1971

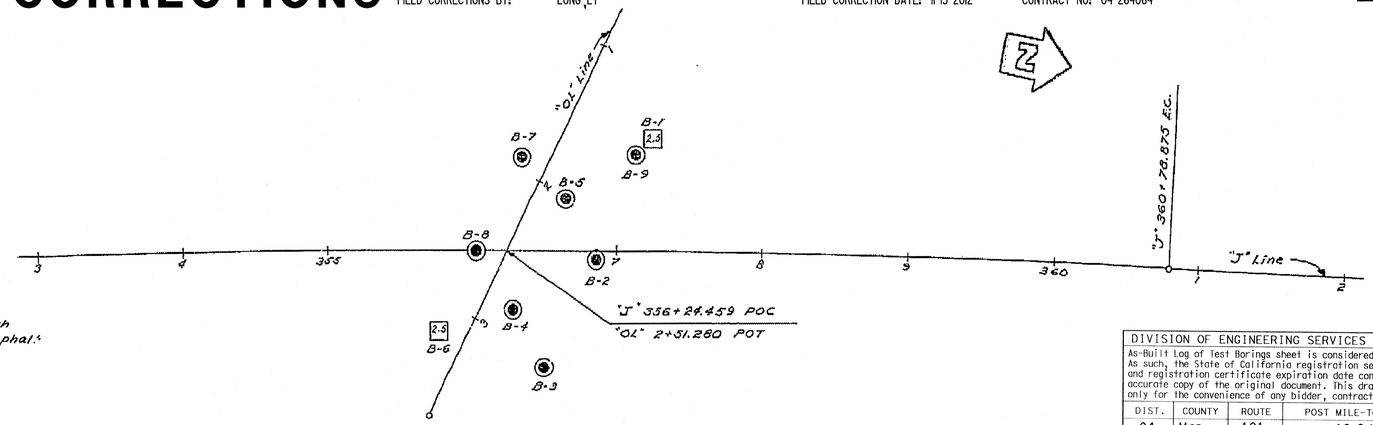

BM # P7 Pt.13
Fd RR Spike with punch mark set flush with asphalt S. edge of Olive Ave. 615' Lt. "J" 358+95±
Elev. 11.69

PLAN
1"=50'

DIVISION OF ENGINEERING SERVICES - GEOTECHNICAL SERVICES

As-Built Log of Test Borings sheet is considered an informational document only. As such, the State of California registration seal with signature, license number and registration certificate expiration date confirm that this is a true and accurate copy of the original document. This drawing is available and presented only for the convenience of any bidder, contractor or other interested party.

DIST.	COUNTY	ROUTE	POST MILE-TOTAL PROJECT	Sheet No.	Total Sheets
04	Mrn	101	18.6/R22.3	542	542

REGISTERED CIVIL ENGINEER — DATE 3/8/10

REGISTERED PROFESSIONAL ENGINEER — John Moore — No. C61792 — Exp. 6-30-11 — CIVIL — STATE OF CALIFORNIA

OLIVE AVENUE UC (WIDEN)

LOG OF TEST BORINGS 5 OF 5

NOTE: A COPY OF THIS LOG OF TEST BORINGS IS AVAILABLE AT OFFICE OF STRUCTURE MAINTENANCE AND INVESTIGATIONS, SACRAMENTO, CALIFORNIA

CU: 04
EA: 264061

BRIDGE No. 27-0092R

Sheet 21 of 21

TO ACCOMPANY PLANS DATED 8-9-10

LEGEND OF BORING OPERATIONS

Penetrometer
2¼" Cone Penetrometer
Sampler Boring (Dry)
Rotary Boring (Wet)
Auger Boring (Dry)
Rotary Boring
Jet Boring
Core Boring
Test Pit

Penetration Boring
Rotary Boring
1" Soil Tube

LEGEND OF EARTH MATERIALS

Gravel
Sand
Silt
Clay
Silty Clay or Clayey Silt
Sandy Clay or Clayey Sand
Sandy Silt or Silty Sand
Peat and/or Organic Matter
Fill Material
Igneous Rock
Sedimentary Rock
Metamorphic Rock

CLASSIFICATION OF MATERIAL BASED ON STANDARD GRADE SIZE LIMITS

Diagram showing the basis for estimates of grade size distribution used in determination of class names. Situations in which the "gravelly" may be applied to the class name, viz. "gravelly sand." The terms "gravel" and "gravelly" are used when used to describe sand, silt and gravel. Refer to standard grade size limits.

NOTE: Classification of earth material as shown on this sheet is based upon field inspection and is not to be construed to imply mechanical analysis.

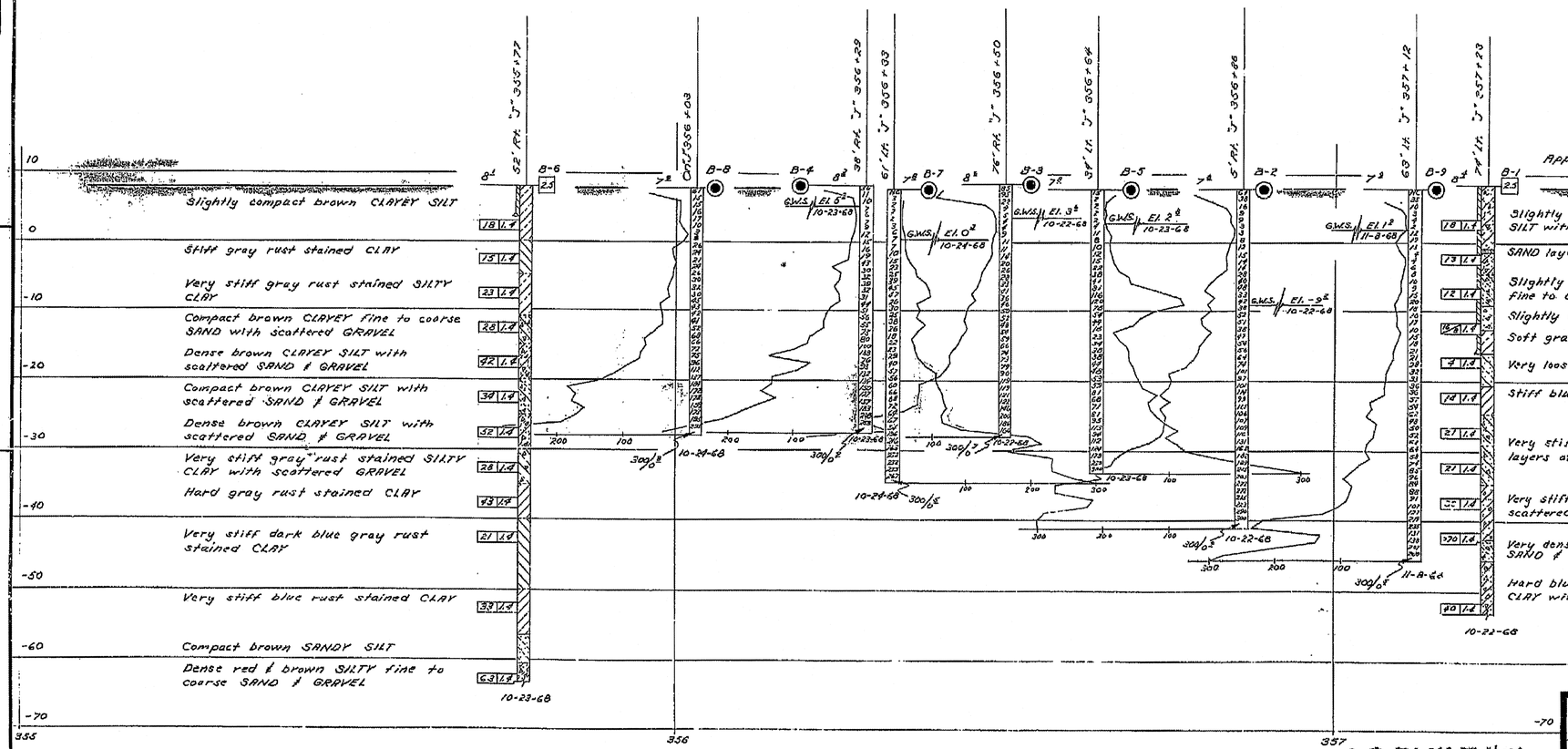

PROFILE
1"=10'

AS BUILT None 4-5-76
CORRECTIONS BY C.S. Foster
CONTRACT NO. 04-120373
DATE 10-27-75

AS BUILT PLANS
Contract No. 04-120374
Date Completed —
Document No. 4000 81048

MICROFILMED

STATE OF CALIFORNIA
TRANSPORTATION AGENCY
DEPARTMENT OF PUBLIC WORKS
DIVISION OF HIGHWAYS

OLIVE AVE U.C.

LOG OF TEST BORINGS

BRIDGE NO.	POST MILE	DRAWING NO.	SHEET	OF
27-92 R/L	2.15		12	12

REVISION DATES (PRELIMINARY STAGE ONLY)

WO 120371
CU 04219
PR-2792-2

Disregard prints bearing earlier revision dates

FILENAME => 27-0092r-z-ltb05.tif

BRIDGE DEPARTMENT
ENGINEERING GEOLOGY SECTION

FIELD STUDY	W. R. Wilkins	10-68
DRAWN	W. M. Horn	11-21-68
CHECKED	M. Apostolos	11-9-69

Approval Recommended by: Engineering Geologist

267

DIST.	COUNTY	ROUTE	POST MILES—TOTAL PROJECT	SHEET NO.	TOTAL SHEETS
04	Mrn	101	10.2 / 23.3	256	312

BRIDGE ENGINEER — REGISTERED CIVIL ENGINEER NUMBER 5

ASSISTANT STATE HIGHWAY ENGINEER — REGISTERED CIVIL ENGINEER NUMBER 5890

DATE APPROVED November 8, 1971

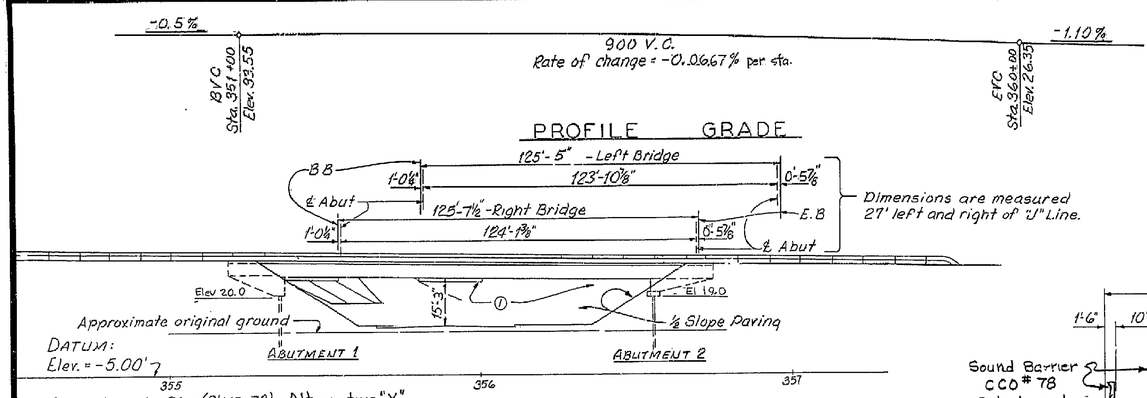

Driven Concrete Piles (Class 70) Alternative "X"

Design Loading 70 Ton

Avg.	High	Low	
~~-35.7 Estimated Tip elev.~~			Abut 1Rt. -40.0
-43.8	-36.7	-48.7	Abut 2Rt. -40.0 Rt to -33.0 Lt.*
-41.0	-36.7	-45.7	Abut 1Lt. -40.0 Rt to -50.0 Lt.*
-48.7	—	—	Abut 2Lt. -53.0

Specified Tip elev: Abut 1Rt. -35.0
Abut 2Rt. -35.0 Rt. to -48.0 Lt.*
Abut 1Lt. -35.0 Rt. to -45.0 Lt.*
Abut 2Lt. -48.0

* Pile tip elevations vary linearly between elevations shown.

ELEVATION

Scale: 1" = 20'-0"

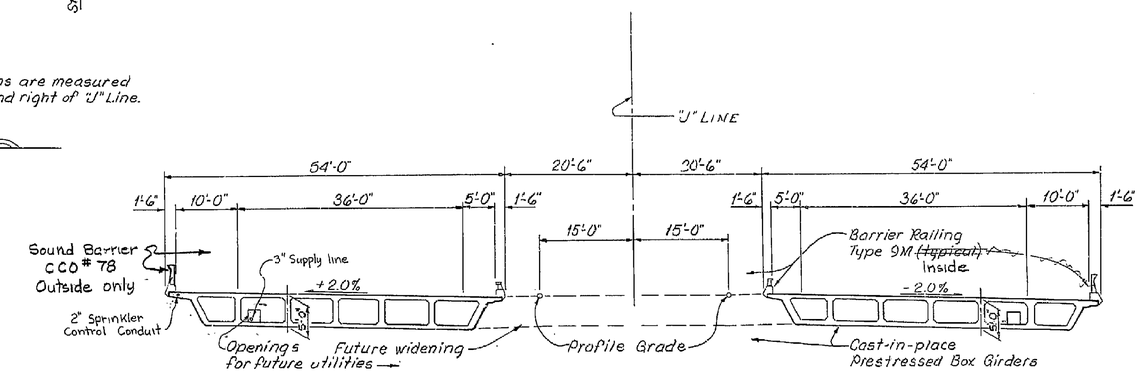

TYPICAL SECTION

Scale: 1" = 10'-0"

For permanent elevations see grid grades sheet.

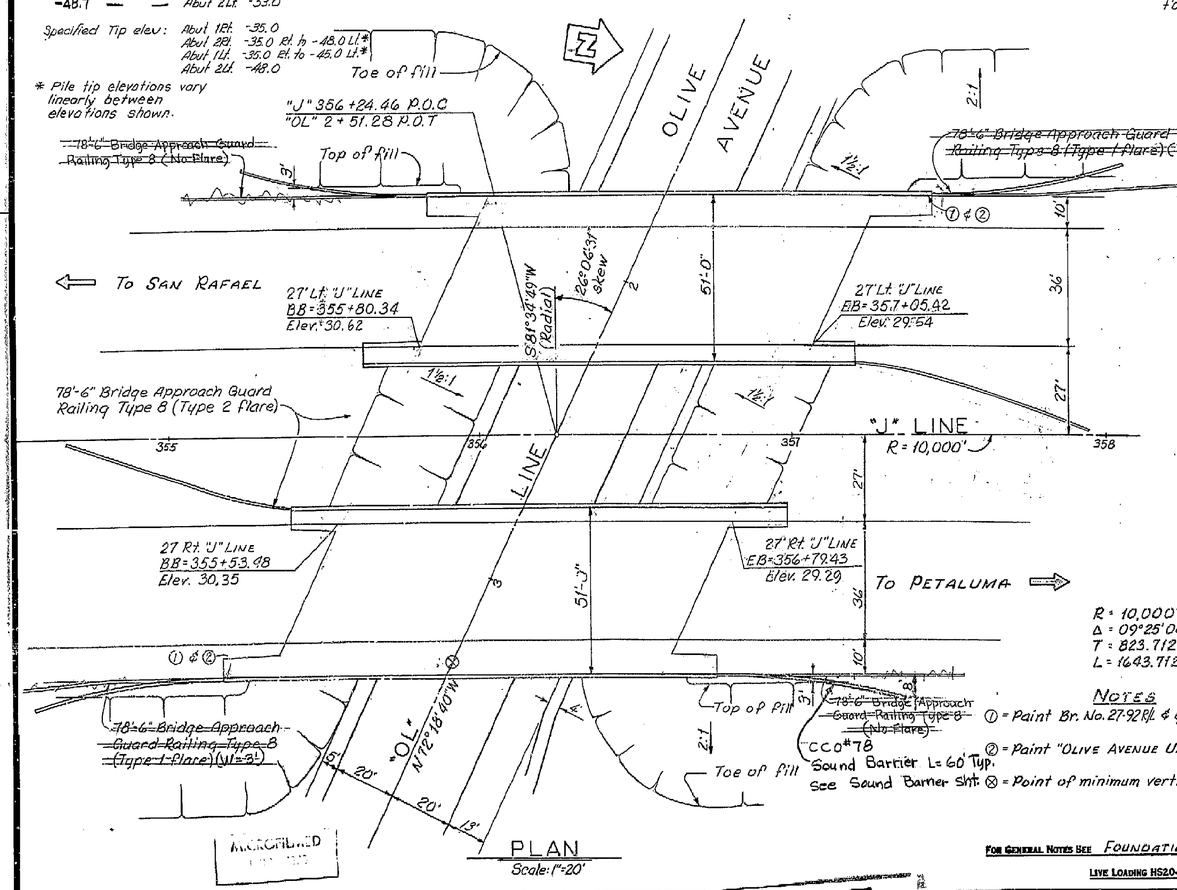

PLAN

Scale: 1" = 20'

① = Paint Br. No. 27-92 R/L & year constructed.
② = Paint "Olive Avenue Undercrossing."
⊗ = Point of minimum vertical clearance.

For General Notes See Foundation Plan

Live Loading HS20-44 and Alternative

APPROXIMATE QUANTITIES

TEMPORARY CABLE ANCHOR ASSEMBLY	4 EA
TEMPORARY RAILING (TYPE L)	430 LF
3" SUPPLY LINE (BRIDGE)	198 LF
FURNISH CONCRETE PILING (CLASS 70)	2,635 LF
DRIVE CONCRETE PILE (CLASS 70)	40 EA
PRESTRESSING CAST-IN-PLACE CONCRETE	LUMP SUM
8" PERFORATED STEEL PIPE UNDERDRAIN (.064" THICK)	168 LF
8" CORRUGATED STEEL PIPE DOWNDRAIN (.064" THICK)	168 LF
SLOPE PAVING (CONCRETE)	50 CY
BRIDGE APPROACH GUARD RAILING (TYPE 8) (PAINTED)	472 LF
METAL RAILING (TYPE 9) ~~(PAINTED)~~ C.C.O. # 119	644 LF

FINAL QUANTITIES

STRUCTURE EXCAVATION (BRIDGE)	405 CY
STRUCTURE BACKFILL (BRIDGE)	230 CY
STRUCTURE CONCRETE, BRIDGE FOOTING	24 CY
STRUCTURE CONCRETE, BRIDGE	245 CY
CAST-IN-PLACE PRESTRESSED CONCRETE (GRADE 35-50)	810 CY
BAR REINFORCING STEEL (BRIDGE)	184,000 LB
CLASS 1 PERMEABLE MATERIAL	40 CY
MISCELLANEOUS METAL (BRIDGE)	30 LB

INDEX TO PLANS

SHEET NO.	TITLE
1.	GENERAL PLAN
2.	GRID GRADES
3.	FOUNDATION PLAN
4.	ABUTMENT DETAILS NO. 1
5.	ABUTMENT DETAILS NO. 2
6.	TYPICAL SECTION
7.	GIRDER LAYOUT
8-	UTILITY OPENINGS - BOX GIRDER
9.	BARRIER RAILING TYPE 9M
10.	SLOPE PAVING DETAILS
11.	SUPPLY LINE AND COMMUNICATION AND SPRINKLER CONTROL CONDUITS
12.	LOG OF TEST BORINGS

STANDARD PLANS DATED JANUARY, 1971

A62-B,2	EXCAVATION AND BACKFILL, BRIDGES AND WALLS
B0-1,5	BRIDGE DETAILS
B2-5	CONCRETE PILE DETAILS - CLASS 70
B7-1	BOX GIRDER DETAILS
B8-5	CAST-IN-PLACE PRESTRESSED GIRDER DETAILS
B11-30	TEMPORARY RAILINGS
B11-36,37	BRIDGE APPROACH GUARD RAILING TYPE 8
B11-43	METAL RAILING DETAILS TYPES 9 AND 11

AS BUILT LF 5/76
CORRECTIONS BY C.S. Foster
CONTRACT NO. 04-120373
DATE 10-27-75

BRIDGE DEPARTMENT
... DESIGN SECTION 5
Section Supervisor Ralph E. Bouchamp
Project Engineer R A Baldwin

DESIGN	By E. H. SPEATH	Checked	
DETAILS	By Leonard Yee 7/69	Checked	
LAYOUT	By EHS	Checked	
QUANTITIES	By	Checked	LAI FONG
SPECIFICATIONS	By	Plans and Specs. Compared	10-71
Approval Recommended by		Registered Civil Engr. License No. 7289	

STATE OF CALIFORNIA
TRANSPORTATION AGENCY
DEPARTMENT OF PUBLIC WORKS
DIVISION OF HIGHWAYS

OLIVE AVENUE UNDERCROSSING

LOCATED IN THE CITY OF NOVATO IN MARIN COUNTY

GENERAL PLAN

BRIDGE NO.	POST MILE	DRAWING NO.	SHEET	OF
27-92 R/L	21.5		1	12

REVISION DATES (PRELIMINARY STAGE ONLY)

Disregard prints bearing earlier revision dates

WO 120371
CU 04219

256

AS BUILT PLANS
Contract No. 04-120374
Date Completed —
Document No. 4000 81041

I HEREBY CERTIFY THAT THIS IS A TRUE AND ACCURATE COPY OF THE ABOVE DOCUMENT TAKEN UNDER MY DIRECTION AND CONTROL ON THIS DATE IN SACRAMENTO, CALIFORNIA PURSUANT TO AUTHORIZATION BY THE DIRECTOR OF TRANSPORTATION.

DATE 6/28/76 SIGNATURE Dick Meadows TITLE Microfilm Supervisor

ClibPDF - www.fastio.com

DIST.	COUNTY	ROUTE	POST MILES—TOTAL PROJECT	SHEET NO.	TOTAL SHEETS
04	Mrn.	101	18.2/23.3	257	312

R. E. Hawkins
DESIGN SECTION SUPERVISOR REGISTERED CIVIL ENGINEER 9186

DATE APPROVED November 8, 1971

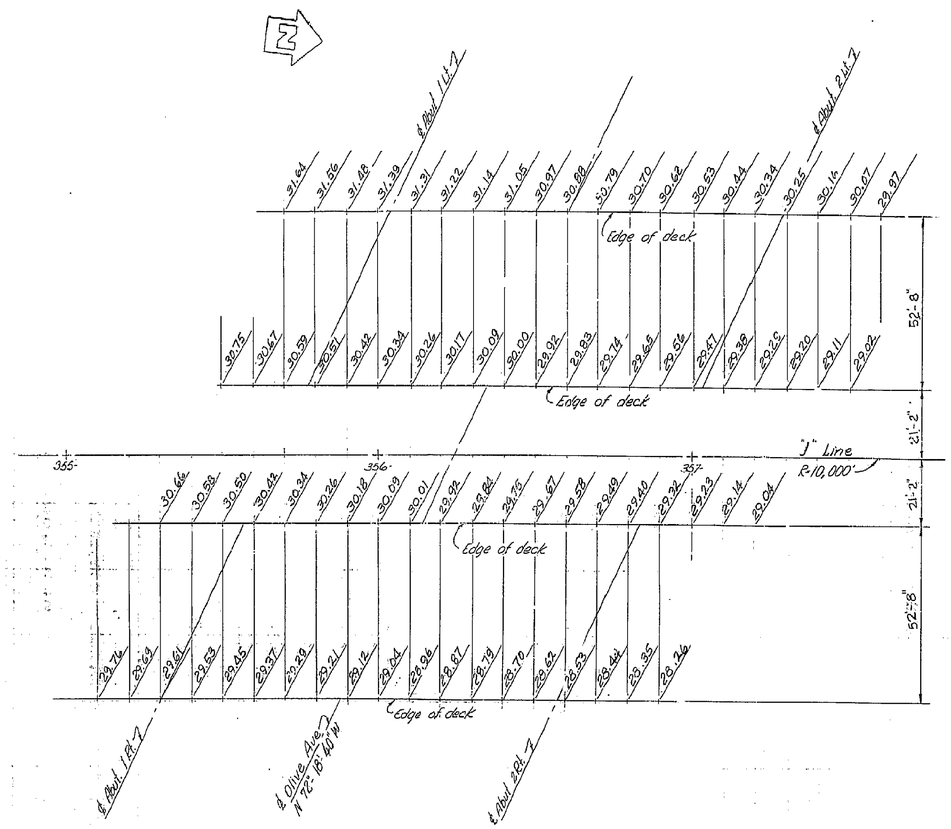

Scale: 1"=20'

Location of Railing Bolts	Elevation	
	Lt Br. Rt. Railing	Rt. Br. Lt. Railing
End W.W.	32.230	31.975
Abut 1	32.165	31.920
1/2 Span 1	31.760	31.570
Abut 2	30.975	30.850
End W.W.	30.805	30.700

Note: Elevations are figured radially from profile line at 10' intervals measured along "J" line.
Elevations do not include camber

AS BUILT
CORRECTIONS BY C.S. Foster 4-5-76
CONTRACT NO. 04-120373
DATE 10-27-75

AS BUILT PLANS
Contract No. 04-120374
Date Completed —
Document No. 4000 8048

257

BRIDGE DEPARTMENT DESIGN SECTION 5	STATE OF CALIFORNIA TRANSPORTATION AGENCY DEPARTMENT OF PUBLIC WORKS DIVISION OF HIGHWAYS
Project Engineer R F Boulware	OLIVE AVENUE UNDERCROSSING
DESIGN By EHS / Checked Dave Hung	GRID GRADES
DETAILS By H. Wong 9/65 / Checked Dave Hung	BRIDGE NO. 27-92 R/L · POST MILE 21.5 · DRAWING NO. · SHEET 2 OF 12
QUANTITIES By H. Wong / Checked L.A. FONG	

WO 120371
CU 04219

Disregard prints bearing earlier revision dates →

REVISION DATES (PRELIMINARY STAGE ONLY) 12/1/70

I HEREBY CERTIFY THAT THIS IS A TRUE AND ACCURATE COPY OF THE ABOVE DOCUMENT TAKEN UNDER MY DIRECTION AND CONTROL ON THIS DATE IN SACRAMENTO, CALIFORNIA PURSUANT TO

ClibPDF - www.fastio.com

DIST.	COUNTY	ROUTE	POST MILES—TOTAL PROJECT	SHEET NO.	TOTAL SHEETS
04	Mrn	101	18.2/23.3	258	312

DESIGN REVIEW CONSULTANT — DATE APPROVED November 8, 1971

General Notes

Design: A.A.S.H.O. Dated 1969 with revisions and as supplemented by Bridge Planning and Design Manual.

Live Loading: HS20-44 and alternative

Reinforced Concrete: Fs = 24,000 P.S.I., Except =20,000 P.S.I. in Transverse deck slabs and stirrups

Fc = 1,300 P.S.I., Except =1,200 P.S.I. in Transverse deck slabs.

N=10

Prestressed Concrete: Fc = 4,400 P.S.I.

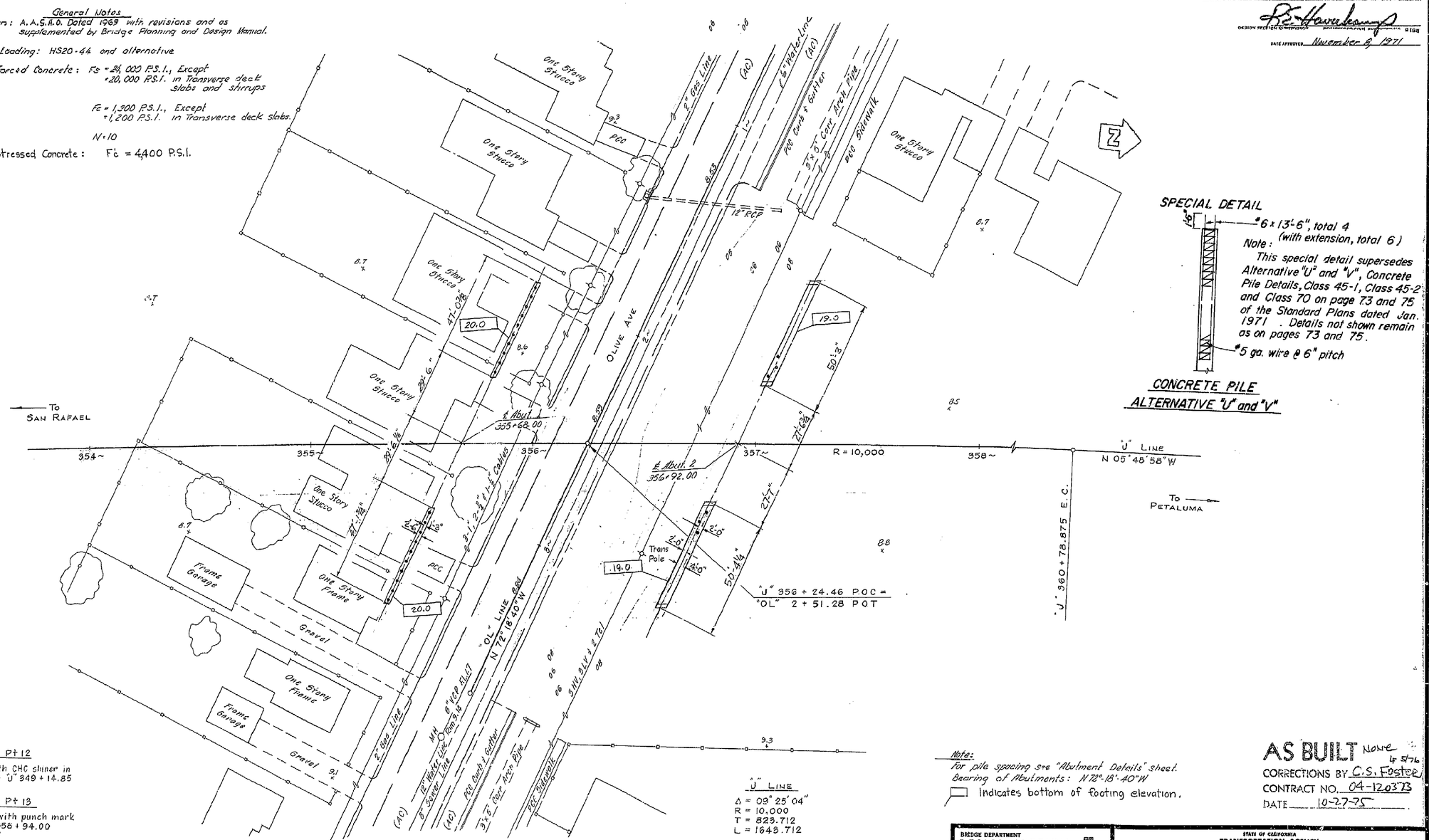

"U" LINE
Δ = 09° 25' 04"
R = 10,000
T = 823.712
L = 1643.712

SPECIAL DETAIL

Note: This special detail supersedes Alternative "U" and "V", Concrete Pile Details, Class 45-1, Class 45-2 and Class 70 on page 73 and 75 of the Standard Plans dated Jan. 1971. Details not shown remain as on pages 73 and 75.

CONCRETE PILE ALTERNATIVE "U" and "V"

P7 - Pt 12
Fd T-bar with CHC shiner in PCC. 677' Lt "U" 349 + 14.85
Elev. 14.24

P7 - Pt 13
R/R spike with punch mark 616' Lt "U" 358 + 94.00
Elev. 11.877

Note: For pile spacing see "Abutment Details" sheet.
Bearing of Abutments: N 72°-18'-40" W
Indicates bottom of footing elevation.

AS BUILT None 4-5-76
CORRECTIONS BY C.S. Foster
CONTRACT NO. 04-120373
DATE 10-27-75

SCALE	1" = 20'
LEVEL DATUM	MSL
FOR ALINEMENT TIES SEE	PR-2792-4 I.T.S.
CONTOURS AS OF	4-69
SITE PLAN FROM	DISTRICT DATA
SURVEY BY	DUB DATE 4-17-69
DRAWN BY	DWP DATE 4-69
TRACED BY	JLL DATE 4-29-69

258

AS BUILT PLANS
Contract No. 04 120374
Date Completed —
Document No. 4000 80048

BRIDGE DEPARTMENT
DESIGN SECTION 5
Project Engineer R J Barlow

DESIGN	By	EHS
	Checked	Dave Strong
DETAILS	By	R.C. Wirnes 8/69
	Checked	Dave Strong
QUANTITIES	By	R. Wirnes
	Checked	LA Fong

STATE OF CALIFORNIA
TRANSPORTATION AGENCY
DEPARTMENT OF PUBLIC WORKS
DIVISION OF HIGHWAYS

OLIVE AVENUE UNDERCROSSING

FOUNDATION PLAN

BRIDGE NO.	POST MILE	DRAWING NO.	SHEET	OF
27-92 R/L	21.5		3	12

WO 120371
CU 04219

Disregard prints bearing earlier revision dates

REVISION DATES (PRELIMINARY STAGE ONLY)

I HEREBY CERTIFY THAT THIS IS A TRUE AND ACCURATE COPY OF THE ABOVE DOCUMENT TAKEN UNDER MY DIRECTION AND CONTROL ON THIS DATE, IN SACRAMENTO, CALIFORNIA PURSUANT TO AUTHORIZATION BY THE DIRECTOR OF TRANSPORTATION.

DATE SIGNATURE TITLE

ClibPDF - www.fastio.com

DIST.	COUNTY	ROUTE	POST MILES—TOTAL PROJECT	SHEET NO.	TOTAL SHEETS
04	Mrn.	101	18.2/23.3	259	312

DESIGN SECTION SUPERVISOR — REGISTERED CIVIL ENGINEER NO. 51112

DATE APPROVED November 8, 1971

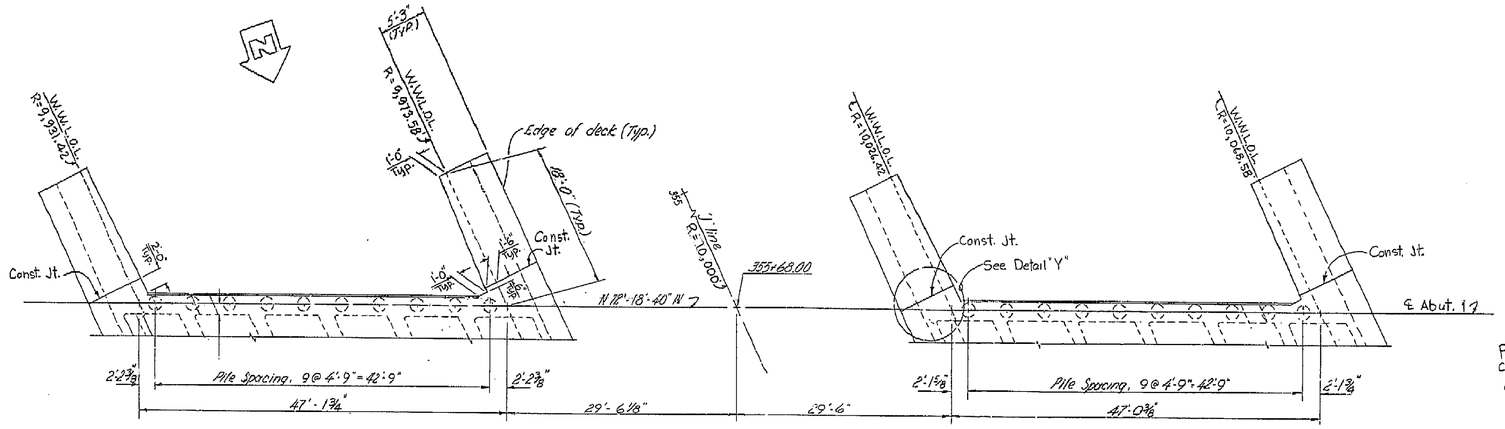

ABUTMENT 1-RT.
1/8" = 1'-0"

ABUTMENT 1-LT.
1/8" = 1'-0"

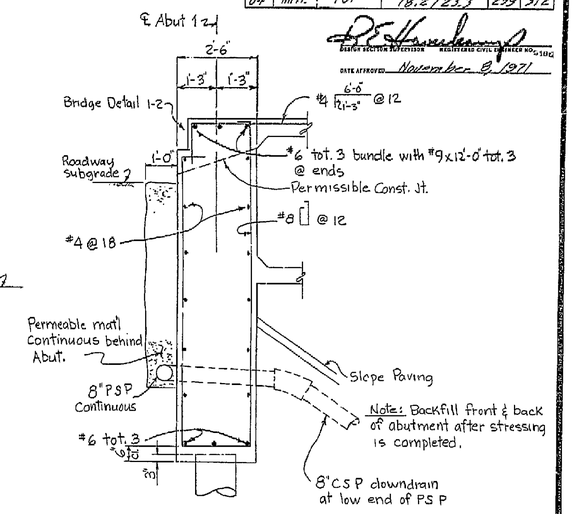

ABUTMENT SECTION
1/2" = 1'-0"

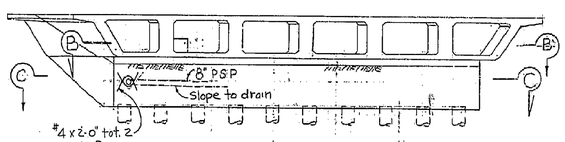

TYPICAL ELEVATION
1/8" = 1'-0"

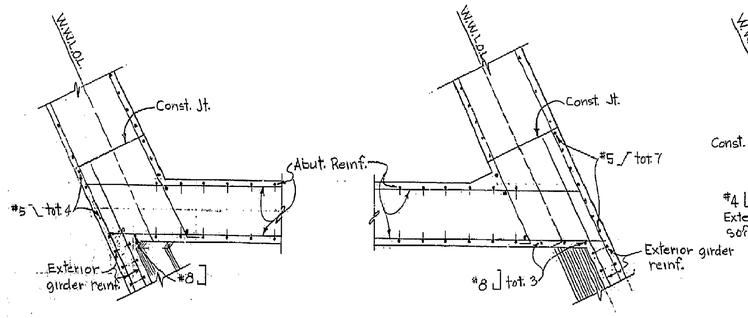

SECTION B-B
3/8" = 1'-0"

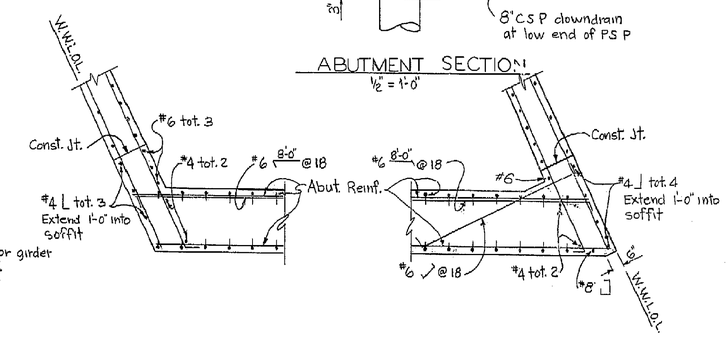

SECTION C-C
3/8" = 1'-0"

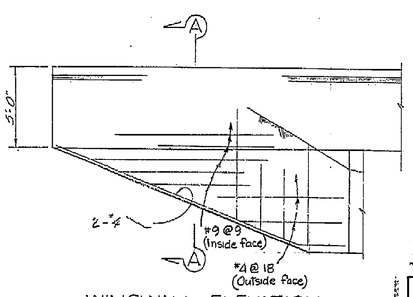

WINGWALL ELEVATION
1/4" = 1'-0"

Note: Construct wingwalls after stressing is completed.

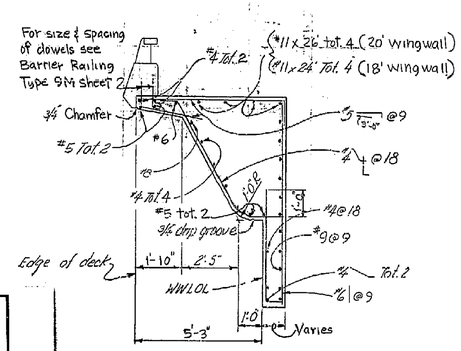

SECTION A-A
3/8" = 1'-0"

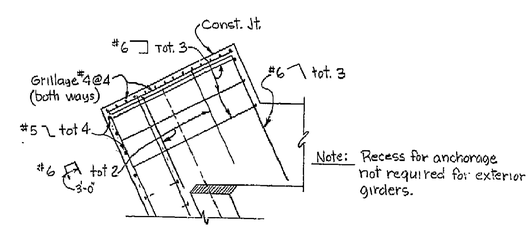

Note: Recess for anchorage not required for exterior girders.

ACUTE CORNER SIMILAR
DETAIL "Y"
1/2" = 1'-0"

AS BUILT NONE
CORRECTIONS BY C.S. Foster
CONTRACT NO. 04-120372
DATE 10-27-75

AS BUILT PLANS
Contract No. 04-120374
Date Completed —
Document No. 4000 81048

259

BRIDGE DEPARTMENT DESIGN SECTION 5		
Project Engineer R.J. Barlow		
DESIGN	By EHS	
	Checked Dave Jung	
DETAILS	By B.F. Winner 10/69	
	Checked Paul Zung	
QUANTITIES	By B.F. Winner	
	Checked LAI FONG	

STATE OF CALIFORNIA
TRANSPORTATION AGENCY
DEPARTMENT OF PUBLIC WORKS
DIVISION OF HIGHWAYS

OLIVE AVENUE UNDERCROSSING

ABUTMENT DETAILS NO. 1

BRIDGE NO.	POST MILE	DRAWING NO.	SHEET	OF
27-98 R/L	21.5		4	12

WO 120371
CU 04219

Disregard prints bearing earlier revision dates

REVISION DATES (PRELIMINARY STAGE ONLY)

I HEREBY CERTIFY THAT THIS IS A TRUE AND ACCURATE COPY OF THE ABOVE DOCUMENT TAKEN UNDER MY DIRECTION AND CONTROL ON THIS DATE IN SACRAMENTO, CALIFORNIA PURSUANT TO AUTHORIZATION BY THE DIRECTOR OF TRANSPORTATION.

DATE 6/22/76 SIGNATURE Nicholas Meadows TITLE Nicholas Meadows

ClibPDF - www.fastio.com

260

DIST.	COUNTY	ROUTE	POST MILES—TOTAL PROJECT	SHEET NO.	TOTAL SHEETS
04	Mrn.	101	18.2/23.3	260	312

R E Kandelman
BRIDGE SECTION SUPERVISOR REGISTERED CIVIL ENGINEER NO. 19112
DATE APPROVED November 8, 1971

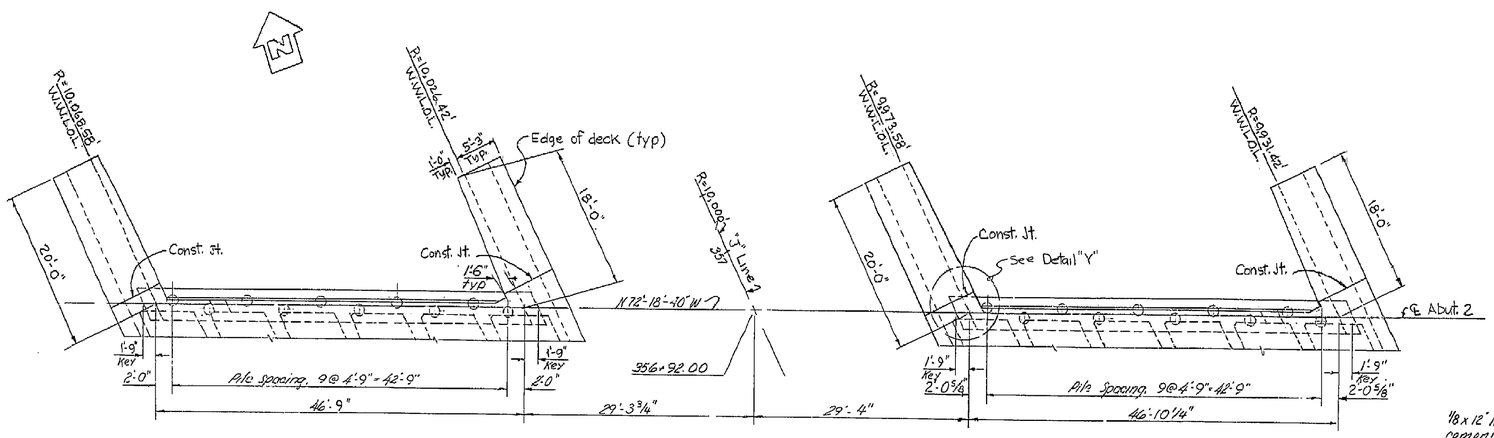

ABUTMENT 2-LT.
1/8" = 1'-0"

ABUTMENT 2-RT
1/8" = 1'-0"

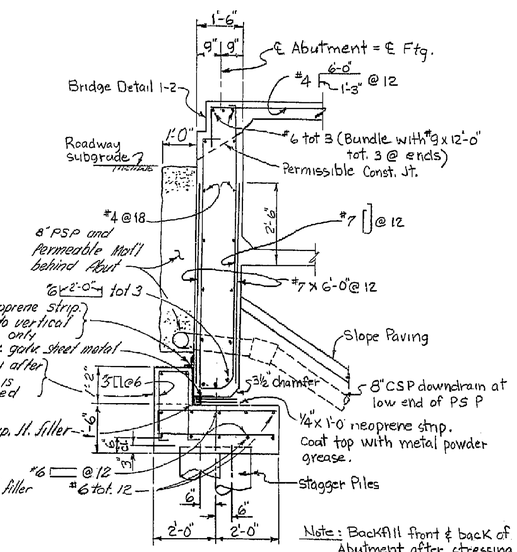

Note: Backfill front & back of Abutment after stressing is completed.

ABUTMENT SECTION
1/2" = 1'-0"

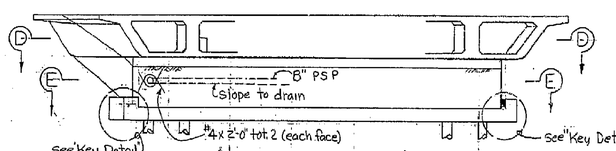

TYPICAL ELEVATION
1/8" = 1'-0"

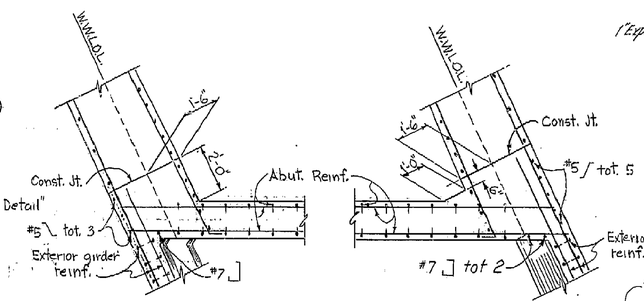

SECTION D-D
3/8" = 1'-0"

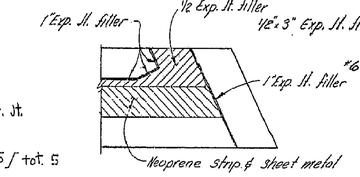

LIMITS OF EXP. JT. FILLER
3/8" = 1'-0"

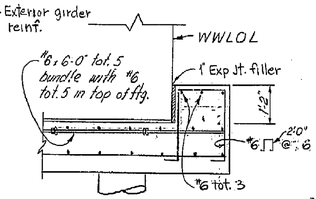

KEY DETAIL
1/2" = 1'-0"

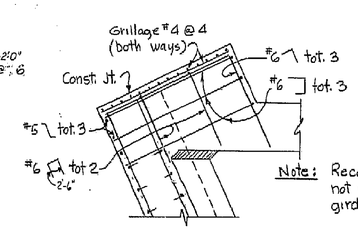

Note: Recess for anchorage not required for exterior girders.

ACUTE CORNER SIMILAR

DETAIL "Y"
1/2" = 1'-0"

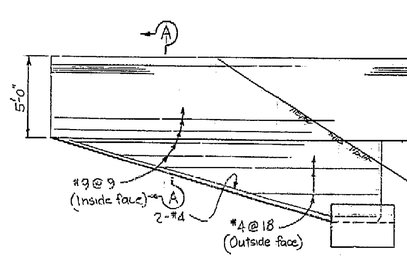

Note: Wingwall concrete not to be placed until structure has been stressed. for "Section A-A" see "Abutment Details No. 1" sheet.

WINGWALL ELEVATION
1/4" = 1'-0"

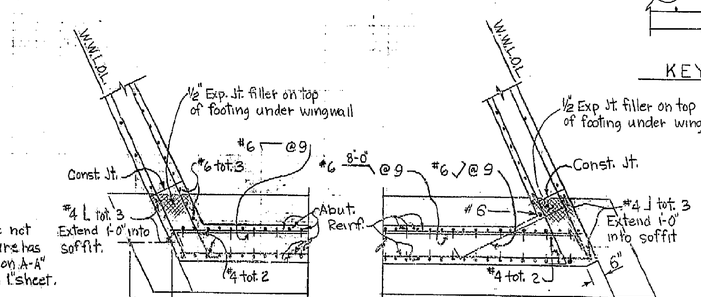

SECTION E-E
3/8" = 1'-0"

AS BUILT NONE
4-5-76
CORRECTIONS BY C.S. Foster
CONTRACT NO. 04-120373
DATE 10-27-75

AS BUILT PLANS
Contract No. 04-120374
Date Completed —
Document No. 4000 51049

260

BRIDGE DEPARTMENT DESIGN SECTION 5	STATE OF CALIFORNIA TRANSPORTATION AGENCY DEPARTMENT OF PUBLIC WORKS DIVISION OF HIGHWAYS
Project Engineer R F Barlow	OLIVE AVENUE UNDERCROSSING
DESIGN by EHS Checked Dave Hung	ABUTMENT DETAILS NO. 2
DETAILS by J. Dawson 10/69 Checked Dave Hung	BRIDGE NO. 27-92 R/L · POST MILE 21.5 · DRAWING NO. · SHEET 5 OF 12
QUANTITIES by J. Wimmy Checked LAI FONG	

WO 120371
CU 04219

Disregard prints bearing earlier revision dates →

REVISION DATES (PRELIMINARY STAGE ONLY)

I HEREBY CERTIFY THAT THIS IS A TRUE AND ACCURATE COPY OF THE ABOVE DOCUMENT TAKEN UNDER MY DIRECTION AND CONTROL ON THIS DATE IN SACRAMENTO, CALIFORNIA PURSUANT TO AUTHORIZATION BY THE DIRECTOR OF TRANSPORTATION.

ClibPDF - www.fastio.com

DIST.	COUNTY	ROUTE	POST MILES—TOTAL PROJECT	SHEET No.	TOTAL SHEETS
04	Mrn.	101	18.2/23.3	261	312

R. E. Hawkins
DESIGN SECTION SUPERVISOR REGISTERED CIVIL ENGINEER No. 21106

DATE APPROVED November 8, 1971

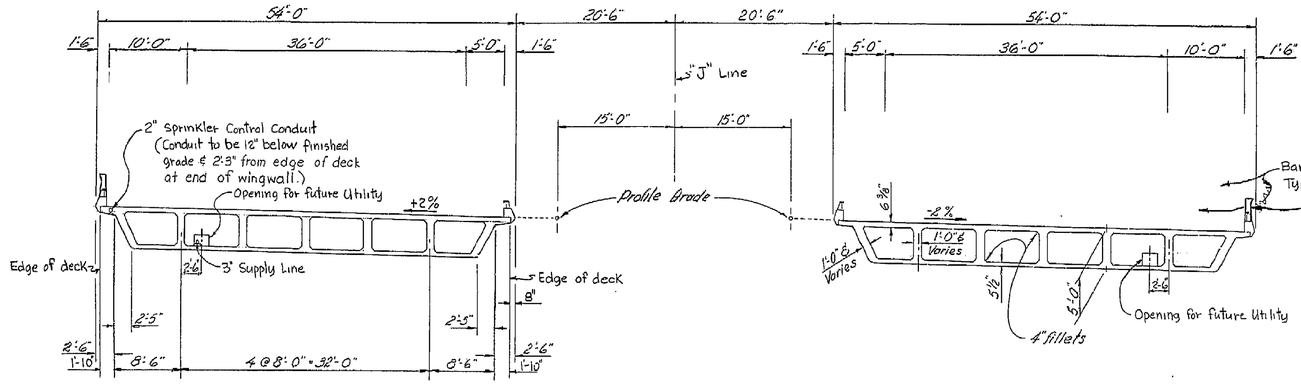

TYPICAL SECTION
1/8" = 1'-0"

SPECIAL DETAIL

Note: This special detail supercedes "Additional Reinf. At Flare of Ducts" on sheet B8-5 of the Standard Plans-Jan. 1971

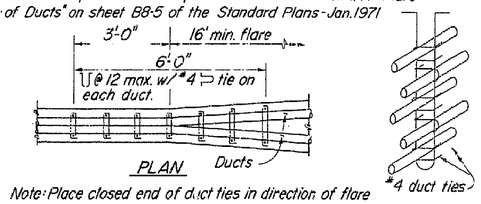

Note: Place closed end of duct ties in direction of flare

STIRRUP REINFORCEMENT AT FLARE OF GIRDER STEM

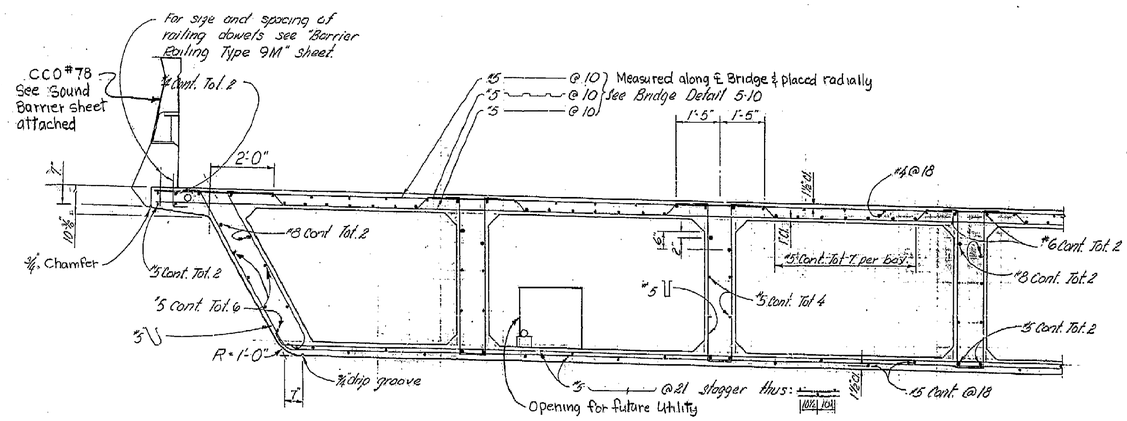

Note: Lt. Bridge shown Rt. Bridge similar.

PART SECTION
1/2" = 1'-0"

AS BUILT
CORRECTIONS BY C.S. Foster
CONTRACT NO. 04-120373
DATE 10-27-75

ACCEPTED

AS BUILT PLANS
Contract No. 04-120374
Date Completed —
Document No. 4000 8104

261

BRIDGE DEPARTMENT DESIGN SECTION 5	STATE OF CALIFORNIA TRANSPORTATION AGENCY DEPARTMENT OF PUBLIC WORKS DIVISION OF HIGHWAYS
Project Engineer R. J. Barlow	OLIVE AVENUE UNDERCROSSING
DESIGN by EHS / Checked	TYPICAL SECTION
DETAILS by / Checked	BRIDGE NO. 27-92 R/L · POST MILE 21.5 · DRAWING NO. · SHEET 6 OF 12
QUANTITIES by / Checked LAI FONG	

WO 120371
CU 04219

Disregard prints bearing earlier revision dates

REVISION DATES (PRELIMINARY STAGE ONLY)

I HEREBY CERTIFY THAT THIS IS A TRUE AND ACCURATE COPY OF THE ABOVE DOCUMENT TAKEN UNDER MY DIRECTION AND CONTROL ON THIS DATE IN SACRAMENTO, CALIFORNIA PURSUANT TO AUTHORIZATION BY THE DIRECTOR OF TRANSPORTATION.

DATE SIGNATURE TITLE

ClibPDF - www.fastio.com

DIST.	COUNTY	ROUTE	POST MILES—TOTAL PROJECT	SHEET NO.	TOTAL SHEETS
04	Mrn.	101	18.2/23.3	262	312

DESIGN SECTION SUPERVISOR — REGISTERED CIVIL ENGINEER NO. 9108

DATE APPROVED November 8, 1971

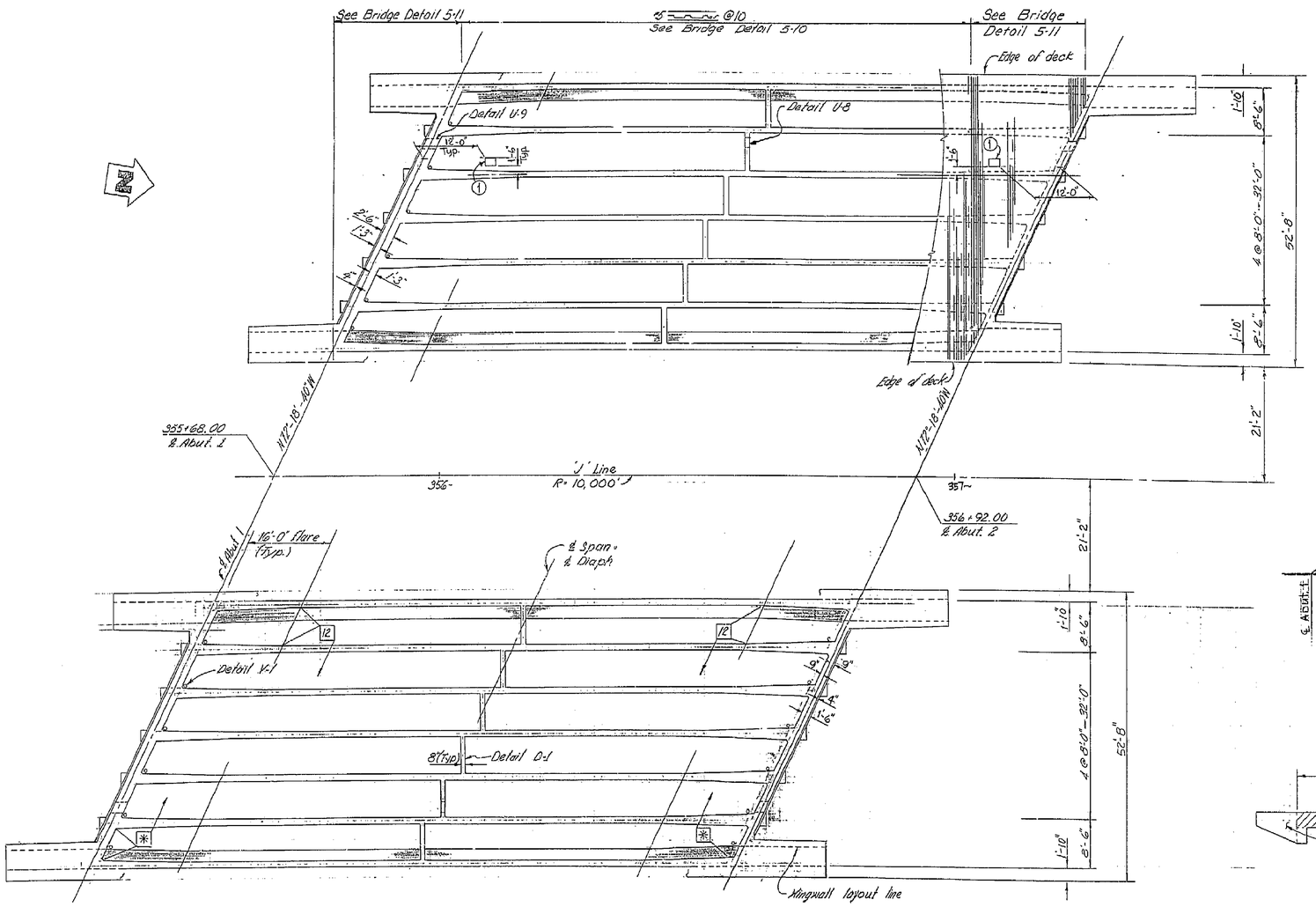

PLAN
3/32" = 1'-0"

Note: 12 Indicates girder stem width in inches

✱ Flare as necessary to provide min of 1½" concrete covering the ducts.

① Indicates Utility Access Door in bottom slab.

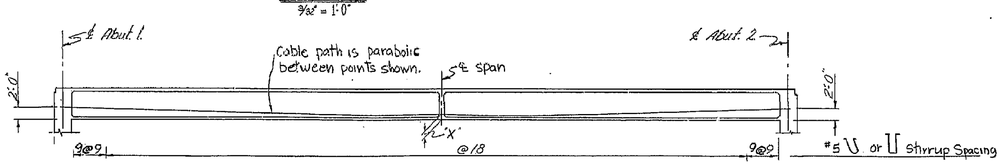

LONGITUDINAL SECTION
3/32" = 1'-0"

Prestressing Notes

Working Force: The total force per bridge at ℄ span remaining after losses including those due to creep and shrinkage of concrete and creep of steel have occurred shall not be less than:

"X" in inches	Working force in Kips
8" Min.	9,800
12" Max.	10,900

Concrete: Total number of girders = 7 per bridge.
f'c = 4400 P.S.I. @ 28 days
f'ci = 3500 P.S.I. @ Time of stressing

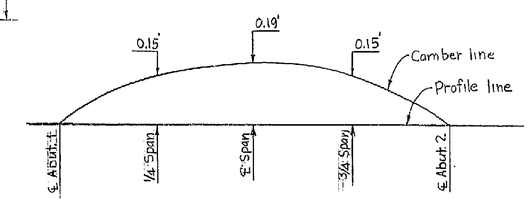

CAMBER DIAGRAM
No Scale
(Does not include allowance for falsework settlement)

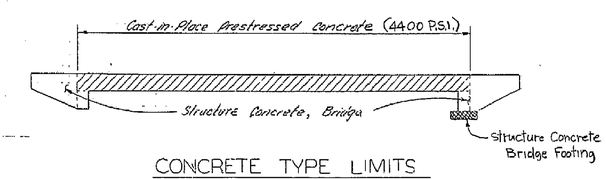

CONCRETE TYPE LIMITS

AS BUILT NONE
LF 5/7/76
CORRECTIONS BY C.S. Foster
CONTRACT NO. 04-120373
DATE 10-27-75

BRIDGE DEPARTMENT
DESIGN SECTION 5

Project Engineer R. F. Barlow
DESIGN By EHS
Checked Dave Kung
DETAILS By J. Wenney 09/69
Checked Dave Kung
QUANTITIES By J. Wenney
Checked LAI FONG

STATE OF CALIFORNIA
TRANSPORTATION AGENCY
DEPARTMENT OF PUBLIC WORKS
DIVISION OF HIGHWAYS

OLIVE AVENUE UNDERCROSSING

GIRDER LAYOUT

BRIDGE NO.	POST MILE	DRAWING NO.	SHEET	OF
27-92 R/L	21.5		7	12

WO 120371
CU 04219

Disregard prints bearing earlier revision dates

REVISION DATES (PRELIMINARY STAGE ONLY)

262

AS BUILT PLANS
Contract No. 04-120374
Date Completed —
Document No. 4000 81048

I HEREBY CERTIFY THAT THIS IS A TRUE AND ACCURATE COPY OF THE ABOVE DOCUMENT TAKEN UNDER MY DIRECTION AND CONTROL ON THIS DATE IN SACRAMENTO, CALIFORNIA PURSUANT TO AUTHORIZATION BY THE DIRECTOR OF TRANSPORTATION.

ClibPDF - www.fastio.com

DIST	COUNTY	ROUTE	POST MILES TOTAL PROJECT	SHEET No.	TOTAL SHEETS
04	Mrn	101	18.2/23.3	263	312

BRIDGE ENGINEER — CIVIL ENGINEER—LICENSE 3385
APPROVED November 9, 1971

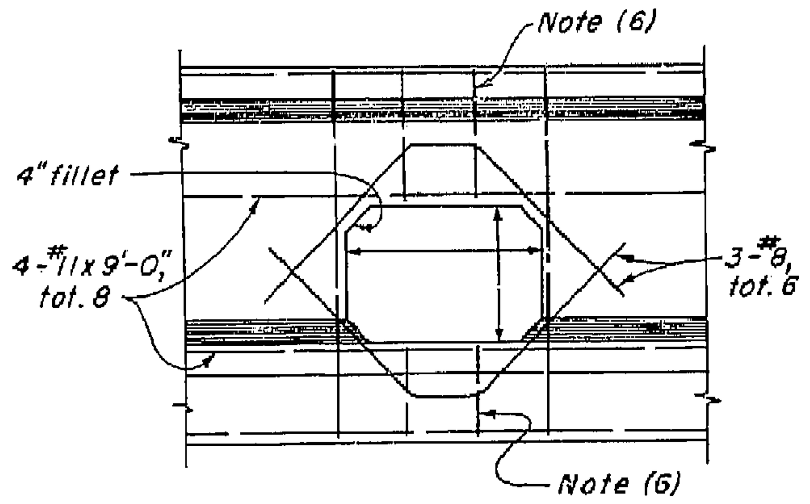

TYPICAL
DETAIL U1

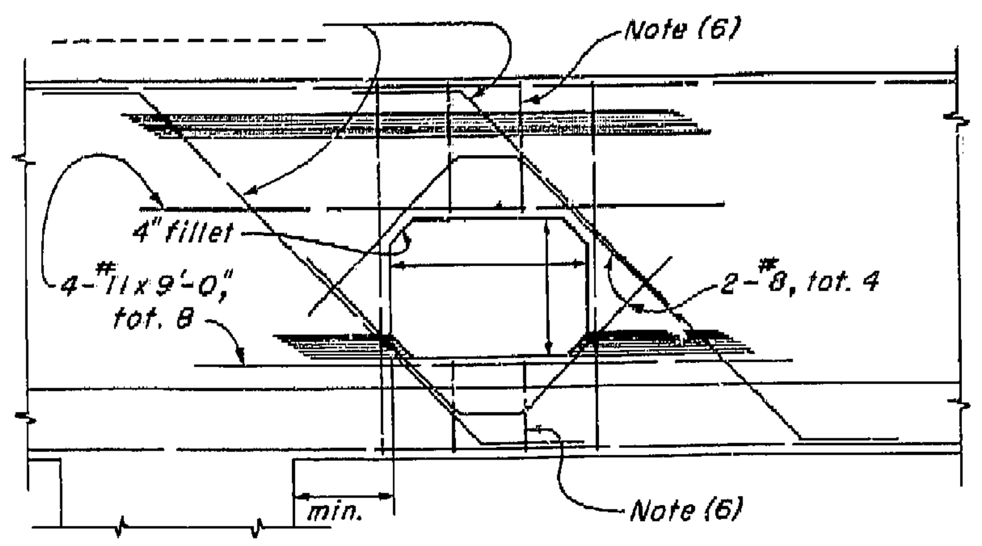

NEAR COLUMN
DETAIL U2

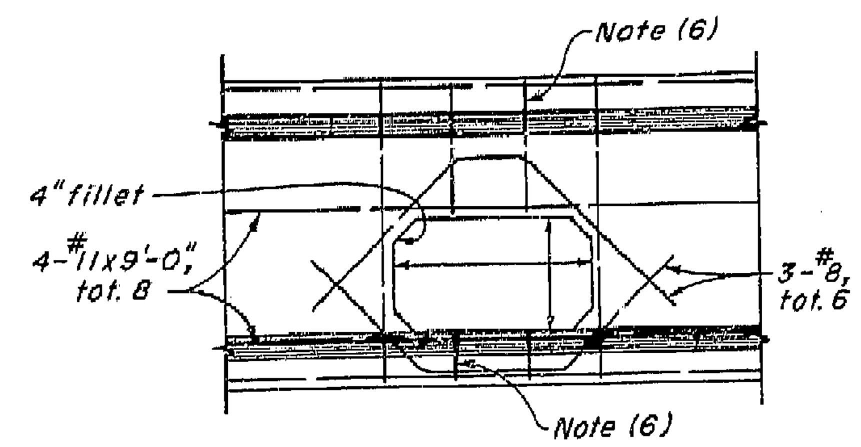

TYPICAL
DETAIL U3

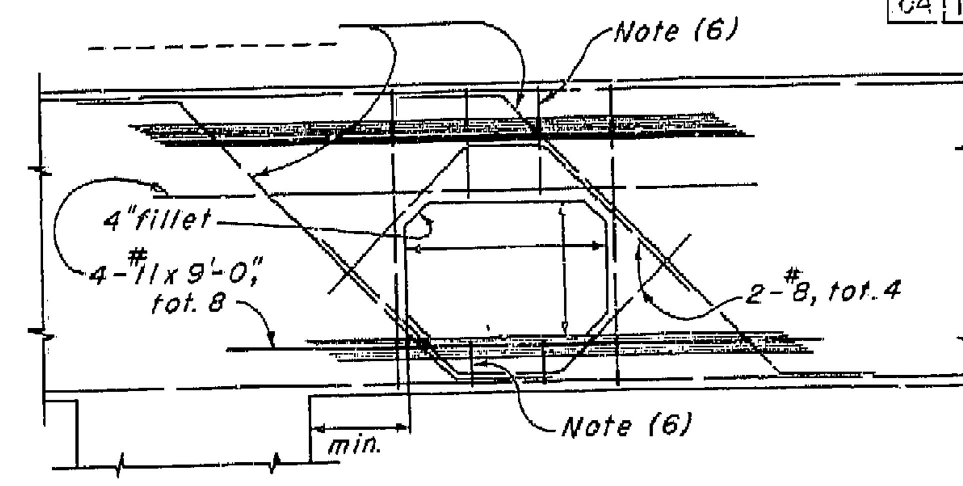

NEAR COLUMN
DETAIL U4

BENT CAP

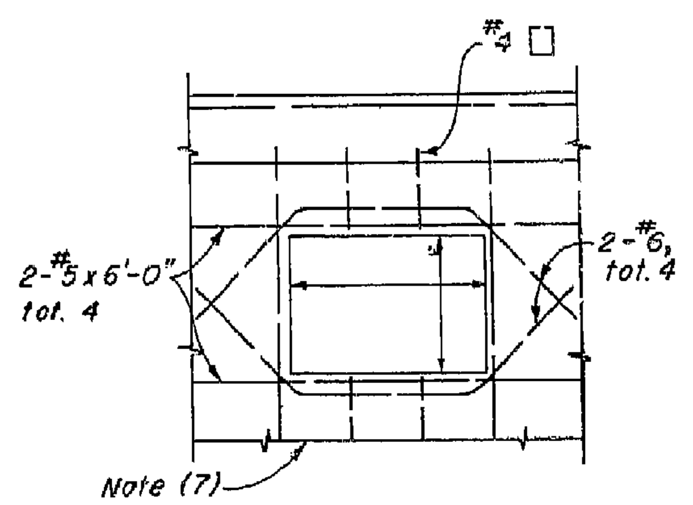

RIGID FRAME
DETAIL U5

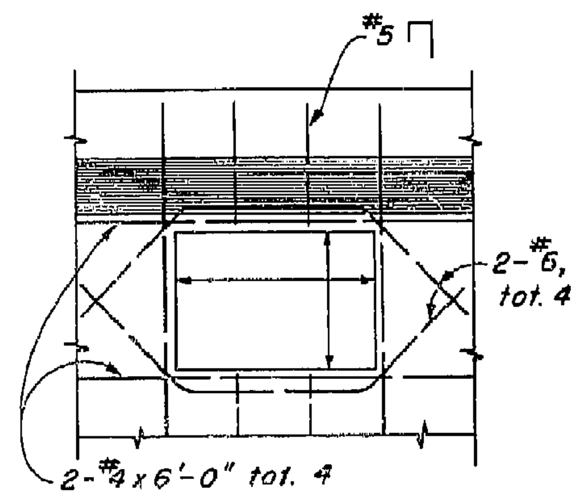

CANTILEVER TYPE
DETAIL U6

ABUTMENT BACKWALL

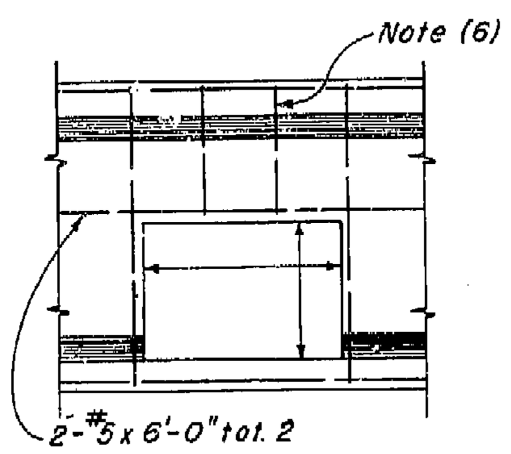

END
DETAIL U7

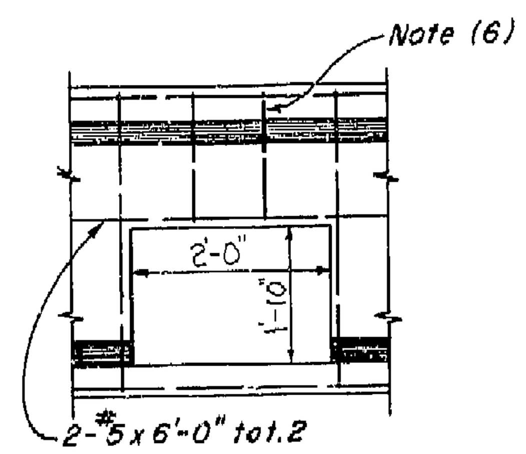

INTERMEDIATE
DETAIL U8

DIAPHRAGMS

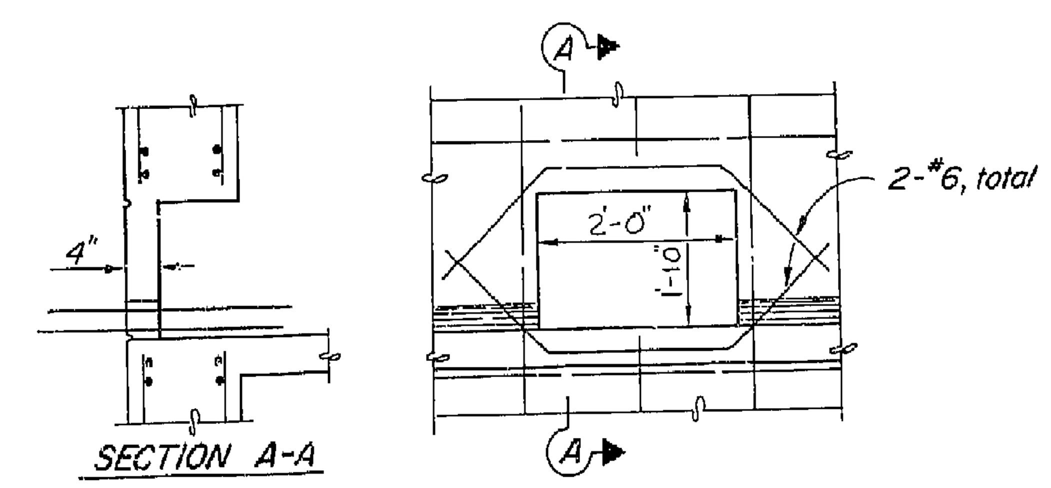

PROVISION FOR FUTURE UTILITY THROUGH ABUTMENT BACKWALL
DETAIL U9

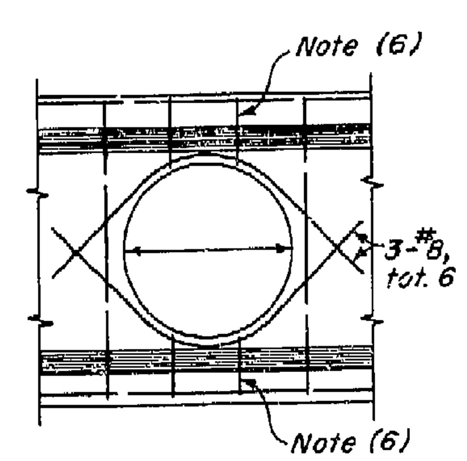

TYPICAL
DETAIL U12

BENT CAP

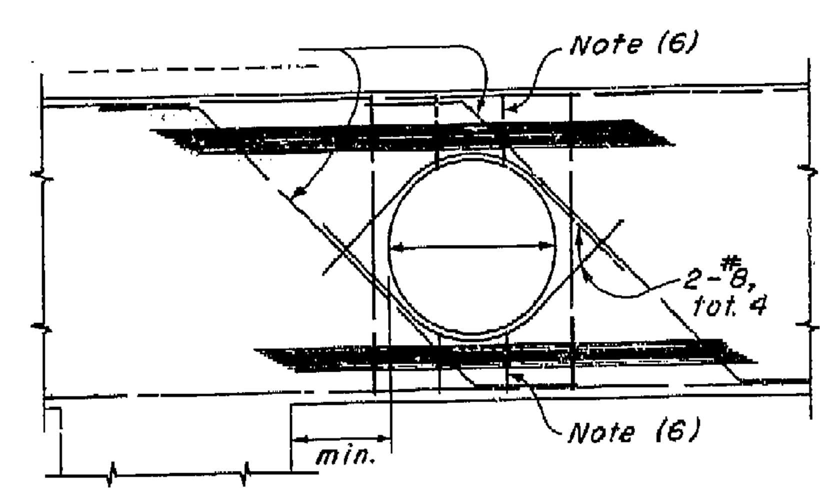

NEAR COLUMN
DETAIL U13

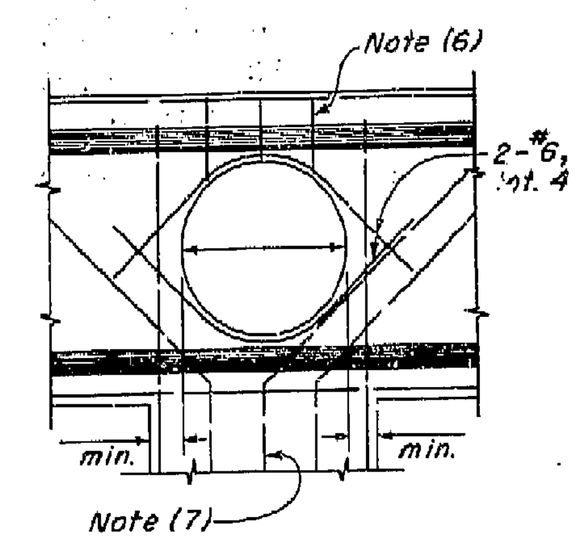

AT COLUMN
DETAIL U14

NOTES

(1) For exact location and direction of openings see other sheets.
(2) Location and size of utility openings may be modified as directed by the Engineer, provided minimum dimensions are maintained.
(3) Girders not shown, see other sheets.
(4) Seal around utilities at abutments to be of sufficient strength to withstand earth pressure.
(5) All reinforcement detailed to be placed in addition to reinforcement shown on other sheets.
(6) Stirrups are same size as adjacent stirrups shown on other sheets.
(7) Main reinforcement to clear opening as detailed on other sheets.

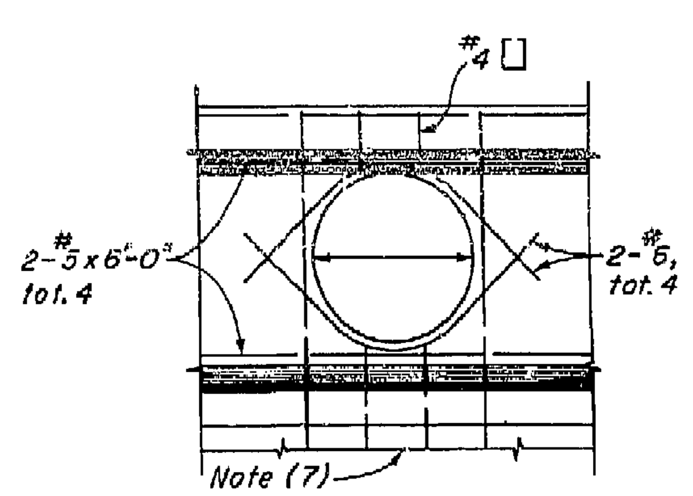

RIGID FRAME
DETAIL U15

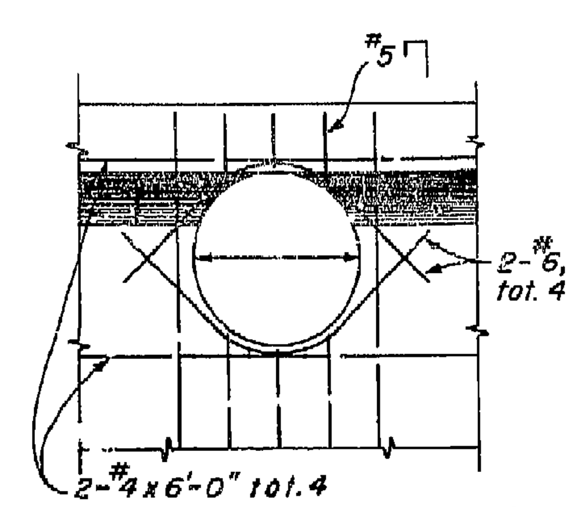

CANTILEVER TYPE
DETAIL U16

ABUTMENT BACKWALL

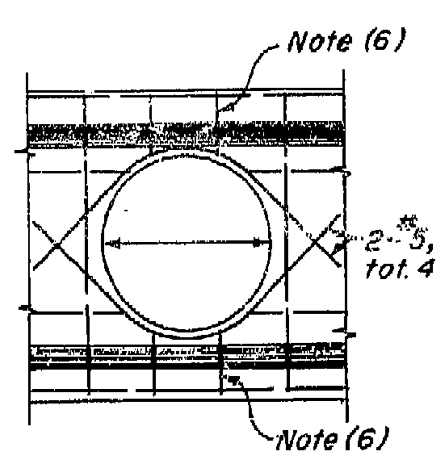

END
DETAIL U17

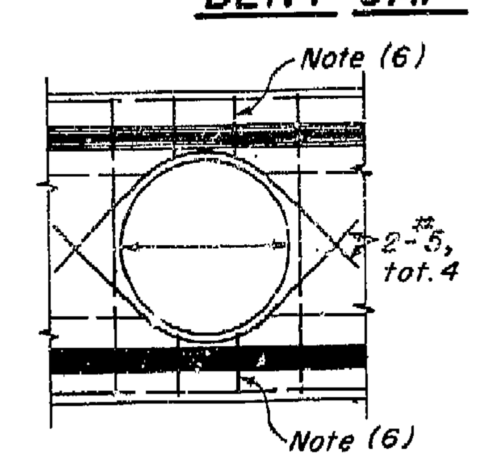

INTERMEDIATE
DETAIL U18

DIAPHRAGMS

AS BUILT PLANS
Contract No. 04-120374
Date Completed —
Document No. 4000 8048

MICROFILMED JUN 3 1976

AS BUILT 4-5/76
CORRECTIONS BY C.S. Foster
CONTRACT NO. 04-120373
DATE 10-27-75

3/70	STATE OF CALIFORNIA BUSINESS AND TRANSPORTATION AGENCY DEPARTMENT OF PUBLIC WORKS DIVISION OF HIGHWAYS	XS 16-49

OLIVE AVENUE UNDERCROSSING

UTILITY OPENINGS - BOX GIRDER

BRIDGE NO.	POST MILE	DRAWING NO.	SHEET	OF
27-92R/L	21.5		8	12

W.O — Disregard prints bearing earlier revision dates → REVISION DATES (PRELIMINARY STAGE ONLY) 12/10/76

STANDARD DRAWING
DESIGN K.E. Bailey 3-56 | Checked T.J. Kasowska 3/56
DETAILS J.M.E. MOY 3/56 | Checked 7/56
STATE OF CALIFORNIA DEPARTMENT OF PUBLIC WORKS DIVISION OF HIGHWAYS
BRIDGE DEPARTMENT

Rev.: Bar totals 2/9/61
Revised Title Block / Deleted "Details U9, U10 and U11" 21 APR 65 EJS.
Revised Title 29 Nov 66 - EJS
Revised Reinf "Sec A-A" Detail U9 3/70 EJS

263

I HEREBY CERTIFY THAT THIS IS A TRUE AND ACCURATE COPY OF THE ABOVE DOCUMENT TAKEN UNDER MY DIRECTION AND CONTROL ON THIS DATE IN SACRAMENTO, CALIFORNIA PURSUANT TO AUTHORIZATION BY THE DIRECTOR OF TRANSPORTATION.
DATE | SIGNATURE | TITLE

ClibPDF - www.fastio.com

DIST.	COUNTY	ROUTE	POST MILES—TOTAL PROJECT	SHEET NO.	TOTAL SHEETS
04	Mrn	101	18.2/23.3	244	312

BRIDGE ENGINEER — REGISTERED CIVIL ENGINEER No. 5585

DATE APPROVED NOVEMBER 1, 1968

STATE HIGHWAY ENGINEER — REGISTERED CIVIL ENGINEER No. 5645

To accompany plans dated November 8, 1971

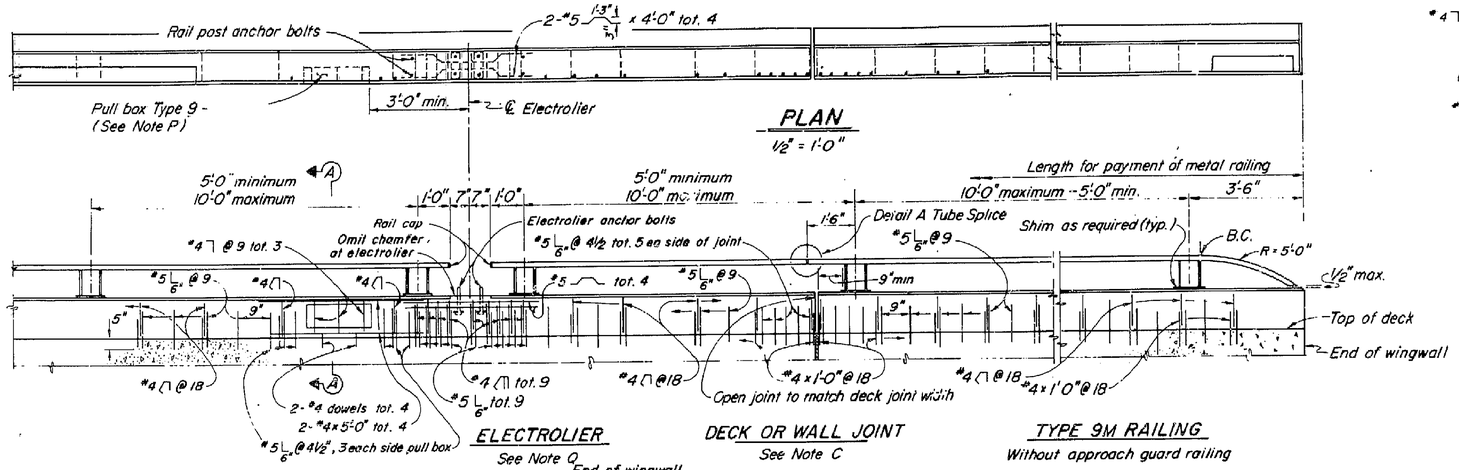

PLAN
½" = 1'-0"

ELECTROLIER
See Note Q

DECK OR WALL JOINT
See Note C

ELEVATION
½" = 1'-0"

TYPE 9M RAILING
Without approach guard railing

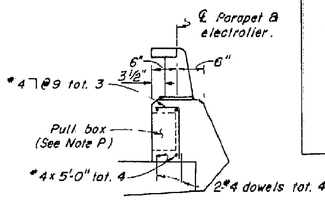

SECTION A-A
¾" = 1'-0"

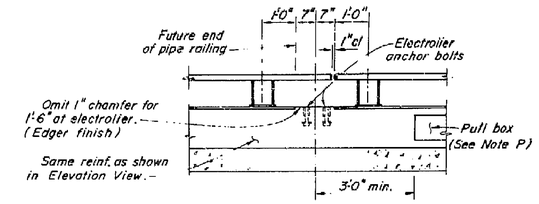

FUTURE ELECTROLIER
½" = 1'-0"

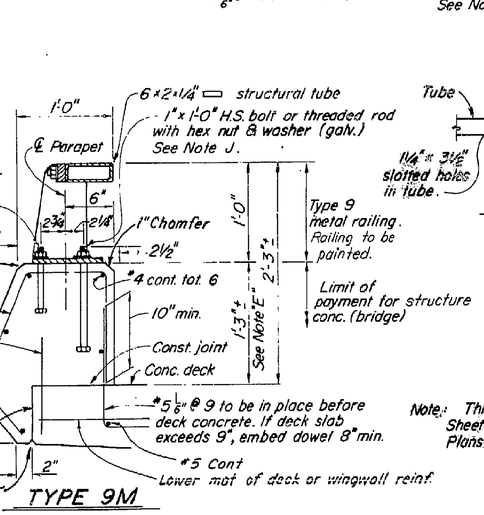

TYPE 9M

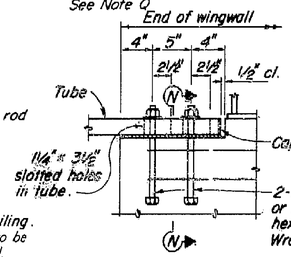

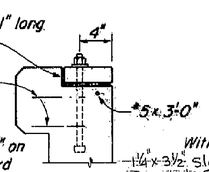

SECTION N-N

Note: This special detail supersedes "Detail B" on Sheet No. B 11-37, page 114, of the Standard Plans dated January 1971.

DETAIL B

SPECIAL DETAIL

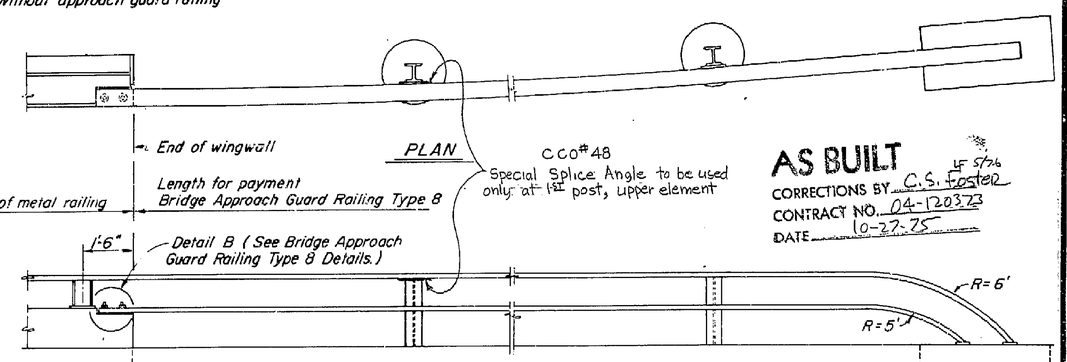

TYPE 9M RAILING
With Bridge Approach Guard Railing

AS BUILT
CORRECTIONS BY C.S. Foster
CONTRACT NO. 04-120323
DATE 10-27-75

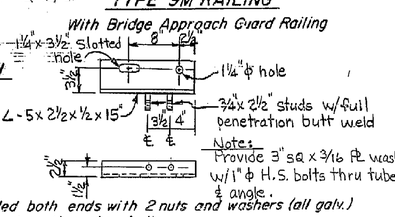

Notes:
Provide 3" sq x 3/16 ft. washers w/1" ϕ H.S. bolts thru tube & angle.

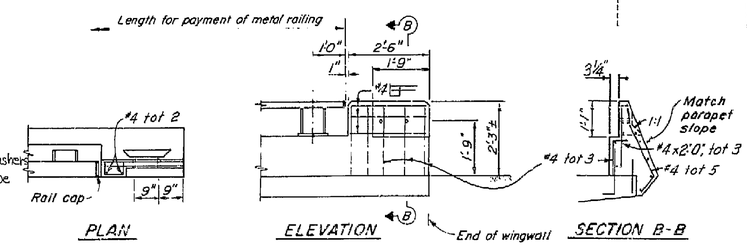

PLAN — ELEVATION — SECTION B-B

METAL BEAM GUARD RAIL ANCHORAGE
½" = 1'-0"

Note: For Metal Beam Guard Rail connection details see Standard Plan A79C

A. Tubing shall be shop bent or fabricated to fit horizontal curve when radius is less than 950'.
B. Posts shall be normal to railing.
C. Tube splice shall be located in the tube spanning deck joints. Increase joint width in tube to match deck opening and increase sleeve length correspondingly.
E. Dimensions will vary with cross slope and with certain thicknesses of surfacing. See brige plans.
G. Walls are to be backfilled before railing is placed.
H. Clearance to reinforcing steel in curb and railing to be 1". Longitudinal reinforcement to stop at all joints.
J. High strength rods threaded both ends with 2 nuts and washers (all galv.) may be substituted for high strength anchor bolts.
K. Torque rail to post nuts to 175 ft. lbs.
L. Tubing shall be continuous over not less than two posts except a short length is permitted near deck joints, electroliers or other railing discontinuities.
M. All exposed corners shall be ground smooth.
N. Galvanize rail assembly after fabrication.
O. Locate pull box near mid-point between posts, but not in same panel as deck joints or electroliers
P. Reinforcement is shown for Type 9 pull box. If Type 9A pull box is to be used refer to "Type 9A Pull Box" sheet.
Q. See Project Plans for electrolier locations.
R. For details not shown, see "Metal Railing Details - Types 9 & 11."

STATE OF CALIFORNIA
BUSINESS AND TRANSPORTATION AGENCY
DEPARTMENT OF PUBLIC WORKS
DIVISION OF HIGHWAYS

11/68 — XS-9-84

OLIVE AVENUE UNDERCROSSING

BARRIER RAILING TYPE 9M

BRIDGE NO.	POST MILE	DRAWING NO.	SHEET	OF
27-92 R/L	21.5		9	12

10/68: Add Paymt of rail @ Rail Anchor Rev. Paymt of rail & conc. @ Type 9 & Elev.; Note A,E,L	11/68 Rev. Rail Anchor Add Note Q, R
Elim. rail cap @ each down end	Rev. posts @ 9A w/ BAGR

WO
CU

Disregard prints bearing earlier revision dates

REVISION DATES: 7/1/74 — 7/1/76 — 7/1/78 — 7/1/80 — 7/1/82

AS BUILT PLANS
Contract No. 04-120314
Date Completed
Document No. 4000 8/1/84

I HEREBY CERTIFY THAT THIS IS A TRUE AND ACCURATE COPY OF THE ABOVE DOCUMENT TAKEN UNDER MY DIRECTION AND CONTROL ON THIS DATE IN SACRAMENTO, CALIFORNIA PURSUANT TO AUTHORIZATION BY THE DIRECTOR OF TRANSPORTATION.

DATE 6/28/76 — SIGNATURE — TITLE Microfilm Supervisor

DAB-25-70

ClibPDF - www.fastio.com

DIST.	COUNTY	ROUTE	POST MILES—TOTAL PROJECT	SHEET NO.	TOTAL SHEETS
04	Mrn	101	18.2 /23.3	265	312

R E Hawkins
DESIGN SECTION SUPERVISOR — REGISTERED CIVIL ENGINEER NO. 9186
DATE APPROVED November 8, 1971

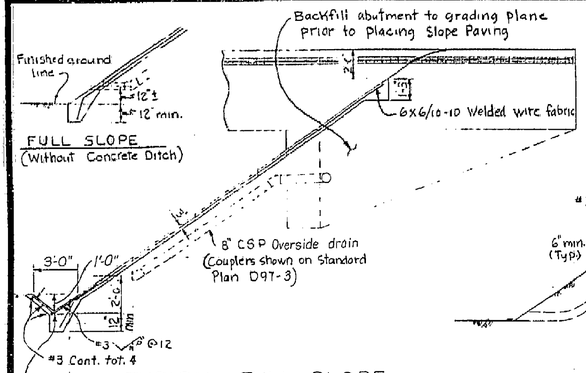

TYPICAL FULL SLOPE

Atherton Ave. O.H.
Delong Ave. O.H.
Franklin Ave. O.H.
North Novato O.H.

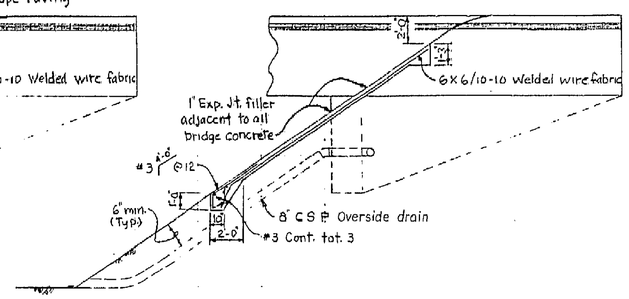

TYPICAL ½ SLOPE

Olive Ave. U.C.
Atherton Ave O.C.
Delong Ave. O.C.

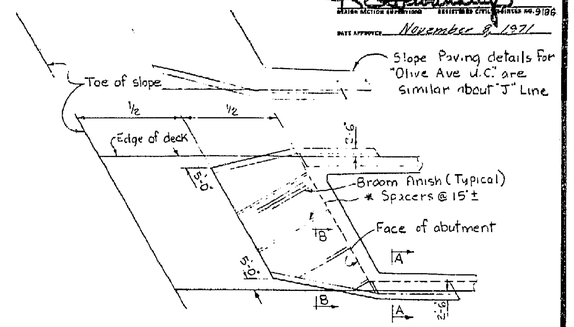

LIMITS OF ½ SLOPE PAVING
No Scale

* Or as directed by Engineer to provide uniform Spacing

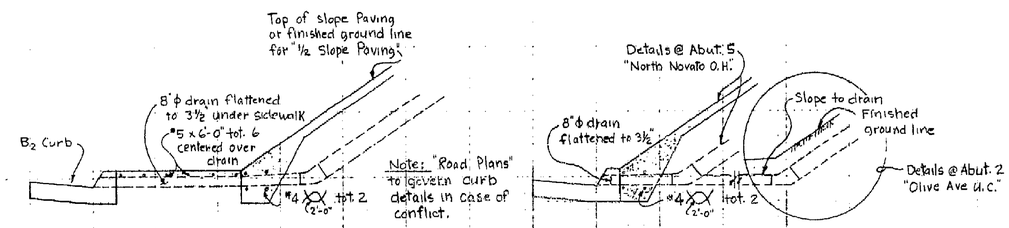

Note: "Road Plans" to govern curb details in case of conflict.

TYPICAL - WITH SIDEWALK
Full slope Paving shown, ½ Slope Paving similar

TYPICAL - WITH CURB

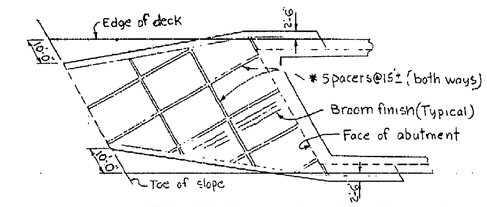

LIMITS OF FULL SLOPE PAVING
No Scale

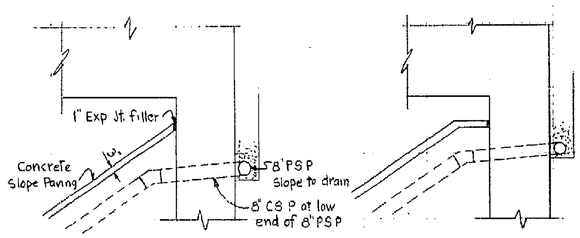

TYPICAL - DRAIN
(No Berm)

TYPICAL - DRAIN
(With Berm)

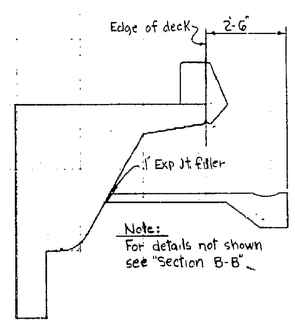

Note:
For details not shown see "Section B-B"

SECTION A-A

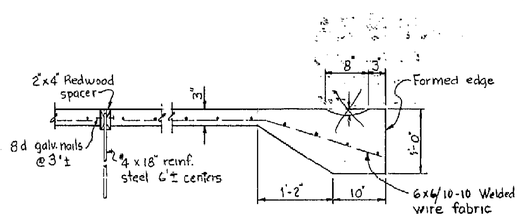

SECTION B-B

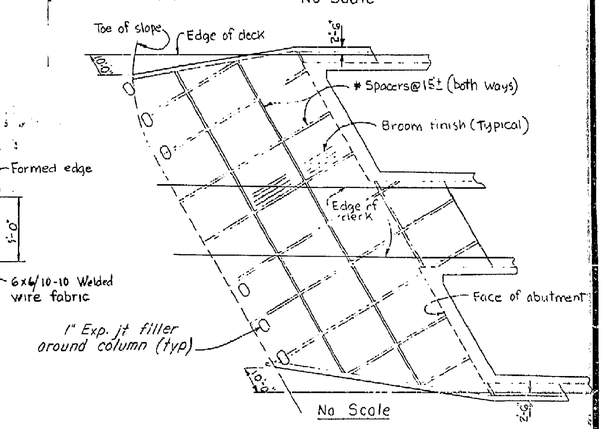

No Scale

LIMITS OF FULL SLOPE PAVING
Franklin Ave. O.H. and North Novato O.H. only

Note: Slope paving not to be placed until after structure has been stressed.

AS BUILT
CORRECTIONS BY C.S. Foster
CONTRACT NO. 04-120373
DATE 10-27-75

AS BUILT PLANS
Contract No. 04-120374
Date Completed —
Document No. 4/000 5047

AMICROFILMED
JUN 2 1976

265

BRIDGE DEPARTMENT
DESIGN SECTION 5
Project Engineer R. T. Fuller

DESIGN	By Barlow	8/70
	Checked Dave Chang	
DETAILS	By LAI FONG	
	Checked Dave Chang	
QUANTITIES	By [illegible]	
	Checked LAI FONG	

STATE OF CALIFORNIA
TRANSPORTATION AGENCY
DEPARTMENT OF PUBLIC WORKS
DIVISION OF HIGHWAYS

OLIVE AVENUE UNDERCROSSING

SLOPE PAVING DETAILS

BRIDGE NO.	POST MILE	WO	SHEET	OF
27-92 R/L	21.5	120131 CU 04213	10	12

Disregard prints bearing earlier revision dates →

REVISION DATES (PRELIMINARY STAGE ONLY)

I HEREBY CERTIFY THAT THIS IS A TRUE AND ACCURATE COPY OF THE ABOVE DOCUMENT TAKEN UNDER MY DIRECTION AND CONTROL ON THIS DATE IN SACRAMENTO, CALIFORNIA PURSUANT TO

ClibPDF - www.fastio.com

DIST.	COUNTY	ROUTE	POST MILES—TOTAL PROJECT	SHEET No.	TOTAL SHEETS
04	Mrn	101	18.2 / 23.3	266	312

R E Hawkins
BRIDGE SECTION ENGINEER — BRIDGE DESIGN ENGINEER

DATE APPROVED November 8, 1971

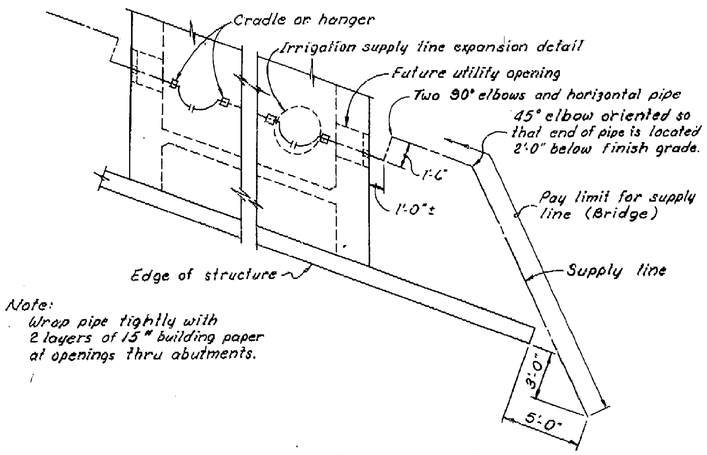

Note:
Wrap pipe tightly with 2 layers of 15# building paper at openings thru abutments.

PLAN-IRRIGATION SUPPLY LINE

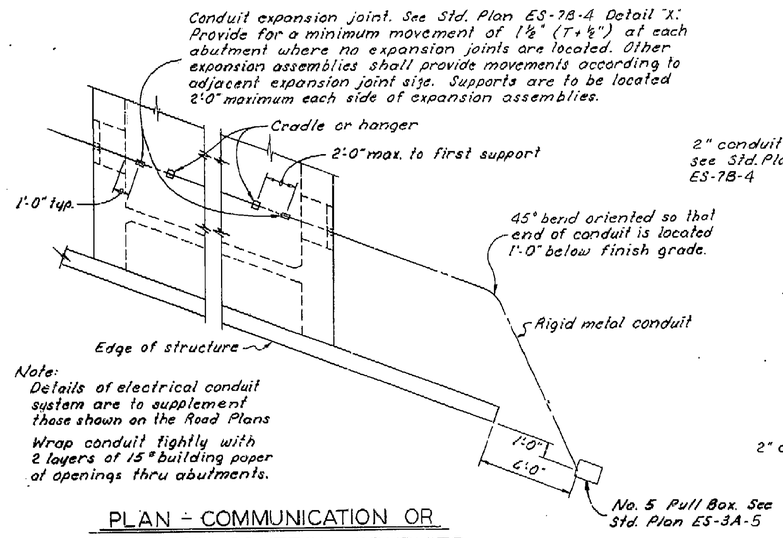

Note:
Details of electrical conduit system are to supplement those shown on the Road Plans
Wrap conduit tightly with 2 layers of 15# building paper at openings thru abutments.

PLAN - COMMUNICATION OR SPRINKLER CONTROL CONDUITS

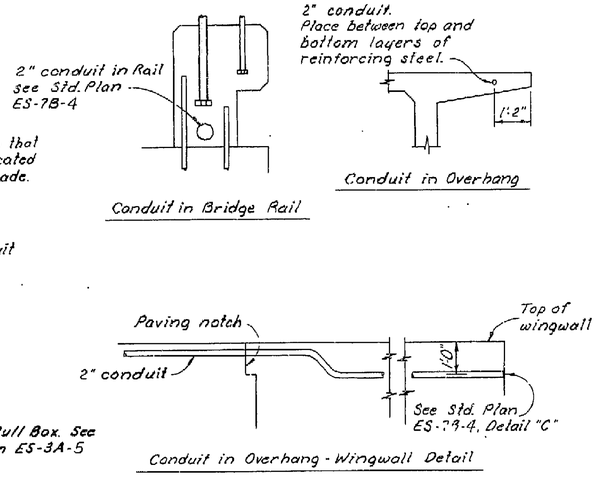

ALTERNATIVE CONDUIT LOCATIONS
(For 2" conduit only)

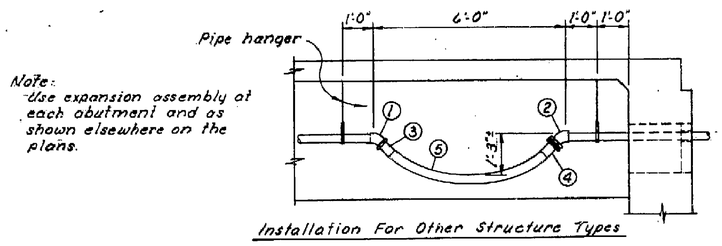

Note:
Use expansion assembly at each abutment and as shown elsewhere on the plans.

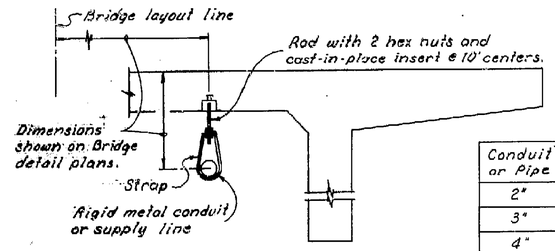

Conduit or Pipe	Rod	Strap
2"	5/8"	13 ga. × 1"
3"	½"	13 ga. × 1"
4"	5/8"	12 ga. × 1½"
5"	5/8"	12 ga. × 1½"
6"	¾"	10 ga. × 1½"
8"	7/8"	10 ga. × 1½"

AS BUILT NONE
CORRECTIONS BY C.S. Foster
CONTRACT NO. 04-120373
DATE 10-27-75

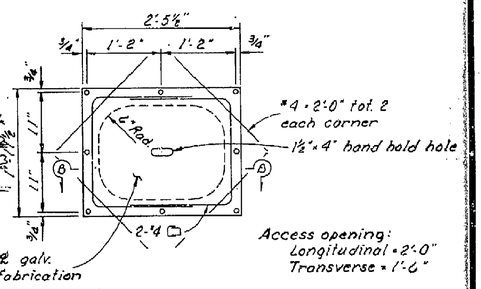

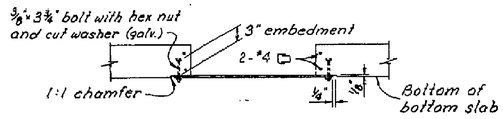

UTILITY ACCESS DOOR

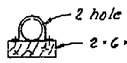

DETAIL A

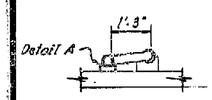

SECTION A-A

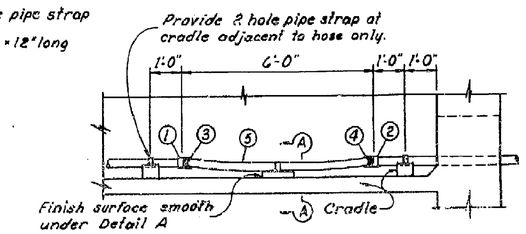

Box Girder Installation

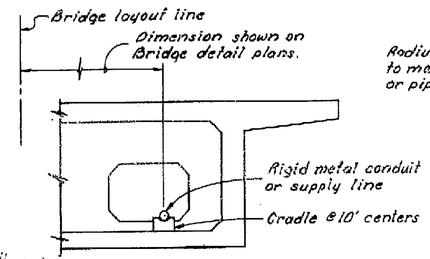

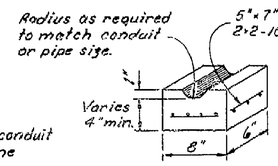

Note:
Cradle to be precast concrete. Secure to bottom slab with epoxy adhesive.

TYPICAL SECTIONS

① 45° pipe elbow.
② 45° pipe street elbow.
③ Hose fitting with male pipe threads to withstand 200 P.S.I.
④ Hose fitting with swivel nut to withstand 200 P.S.I.
⑤ Hose - 6'-3" ± length. (I.D. shall be nominal size of pipe)

IRRIGATION SUPPLY LINE EXPANSION DETAIL

266

MICROFILMED

BRIDGE DEPARTMENT
DESIGN SECTION 5
Project Engineer R F BARLOW
DESIGN By EHS
Checked D MOY
DETAILS By LAI FONG
Checked D MOY
QUANTITIES By
Checked LAI FONG

STATE OF CALIFORNIA
TRANSPORTATION AGENCY
DEPARTMENT OF PUBLIC WORKS
DIVISION OF HIGHWAYS

OLIVE AVENUE UNDERCROSSING
SUPPLY LINE AND COMMUNICATION & SPRINKLER CONTROL CONDUITS

BRIDGE NO.	POST MILE	DRAWING NO.	SHEET	OF
27-92 R/L	21.5		11	12

REVISION DATES (PRELIMINARY STAMP ONLY)
12/16/70 1/14/71

WO
CU
6/70
Disregard prints bearing earlier date

AS BUILT PLANS
Contract No. 04-120374
Date Completed —
Document No. 4000 8104

I HEREBY CERTIFY THAT THIS IS A TRUE AND ACCURATE COPY OF THE ABOVE DOCUMENT TAKEN UNDER MY DIRECTION AND CONTROL ON THIS DATE IN SACRAMENTO, CALIFORNIA PURSUANT TO AUTHORIZATION BY THE DIRECTOR OF TRANSPORTATION.
DATE SIGNATURE TITLE

ClibPDF - www.fastio.com

DIST.	COUNTY	ROUTE	POST MILES—TOTAL PROJECT	SHEET NO.	TOTAL SHEETS
04	Mrn	101	18.2/23.3	267	312

DESIGN SECTION SUPERVISOR — REGISTERED CIVIL ENGINEER NO. 9188

DATE APPROVED November 8, 1971

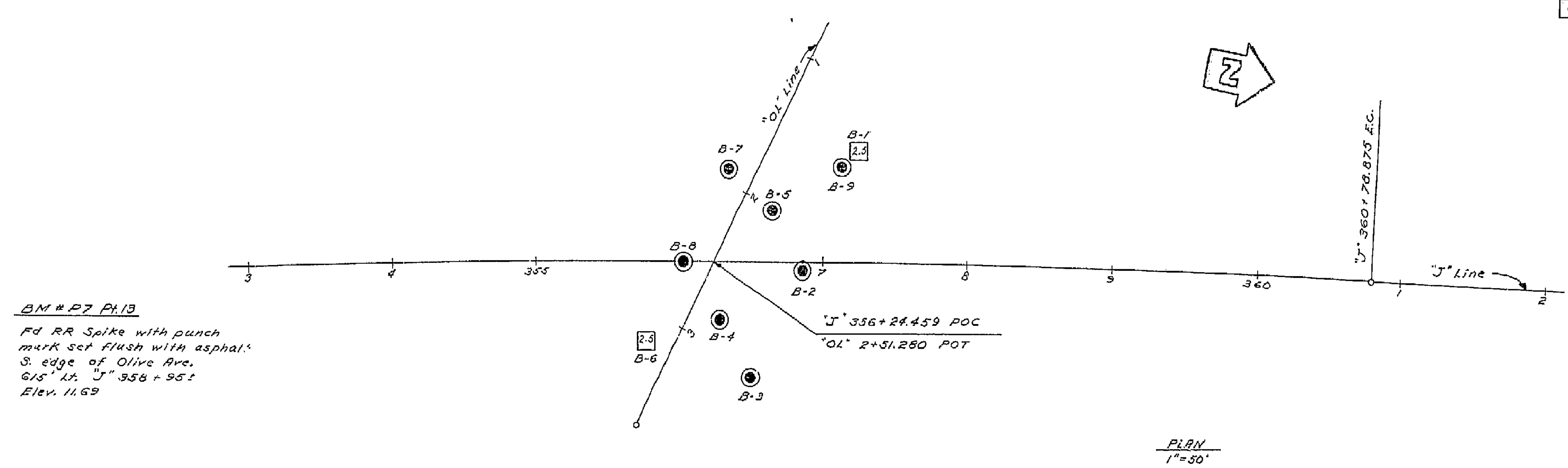

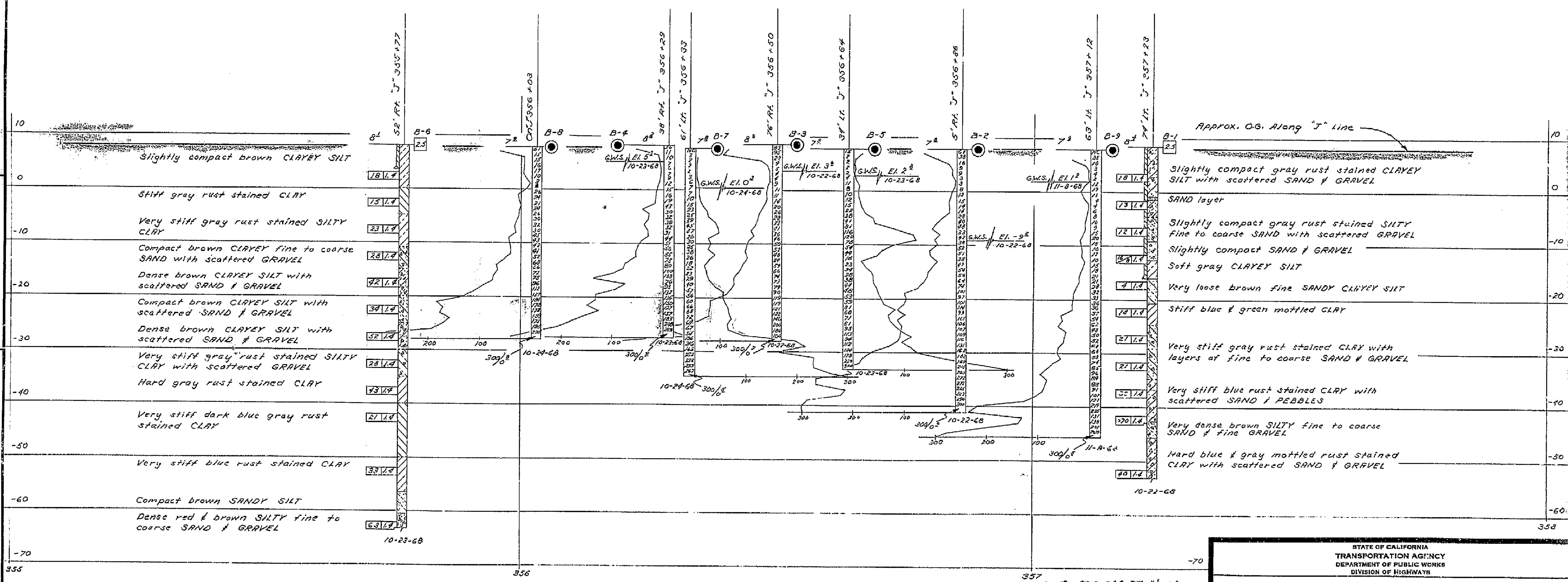

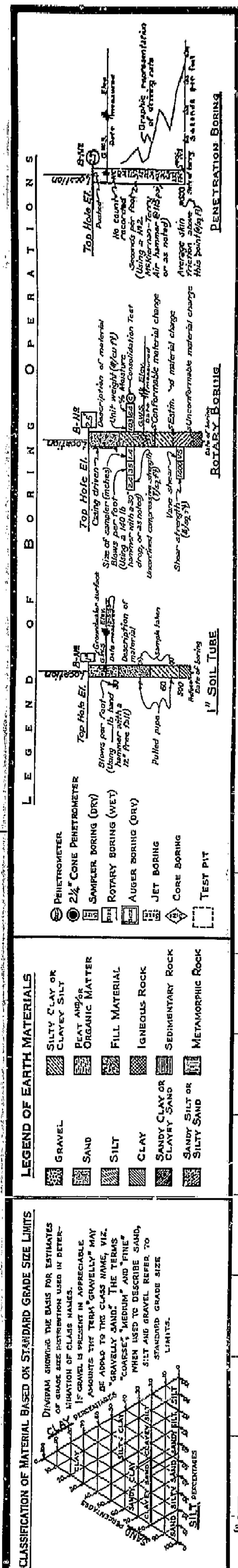

NOTE: Classification of earth material as shown on this sheet is based upon field inspection and is not to be construed to imply mechanical analysis.

FIELD STUDY	By R. Wilhelms 10-68
DRAWN	By M.W. Horn 11-21-68
CHECKED	By J. Apostolos 1-9-69

Approval Recommended by — Engineering Geologist

BRIDGE DEPARTMENT
ENGINEERING GEOLOGY SECTION

267

MICROFILMED

AS BUILT PLANS
Contract No. 04-120374
Date Completed –
Document No. 4000 8048

AS BUILT None 4/5/76
CORRECTIONS BY C.S. Foster
CONTRACT NO. 04-120373
DATE 10-27-75

WO 120371 CU 04219 PR-2792-2

Disregard prints bearing earlier revision dates →

REVISION DATES (PRELIMINARY STAGE ONLY) 12/8/68 12/16/71

STATE OF CALIFORNIA
TRANSPORTATION AGENCY
DEPARTMENT OF PUBLIC WORKS
DIVISION OF HIGHWAYS

OLIVE AVE U.C.

LOG OF TEST BORINGS

BRIDGE NO.	27-92 R/L	POST MILE	21.5	DRAWING NO.		SHEET 12	OF 12

I HEREBY CERTIFY THAT THIS IS A TRUE AND ACCURATE COPY OF THE ABOVE DOCUMENT TAKEN UNDER MY DIRECTION AND CONTROL ON THIS DATE IN SACRAMENTO, CALIFORNIA PURSUANT TO

ClibPDF - www.fastio.com

3. Results of Environmental Soil Sampling, Marin/Sonoma Narrow Mitigation Project, Orange Sound Wall on NB Route 101, Novato, California

Project No.
11667.000.000

EA 04-264H3
Project ID: 0414000221
MSN L1A2 MARIN MITIGATION/SOUNDWALL PROJECT

March 13, 2015

Ms. Mahvash Harms
Biggs Cardosa Associates, Inc.
865 The Alameda
San Jose, CA 95126-3133

Subject: Marin/Sonoma Narrow Mitigation Project
Orange Sound Wall on NB Route 101
Novato, California

RESULTS OF ENVIRONMENTAL SOIL SAMPLING

Dear Ms. Harms:

ENGEO performed environmental sampling services for the above-referenced property (Property) in Novato, California. The purpose of the soil sampling was to characterize a 3- to 4-foot-high berm along the northbound of Route 101. We understand that the existing berm will be flattened and removed during construction of the proposed Orange sound wall.

SOIL SAMPLING AND LAB TESTING

On December 5, 2014, eight samples were collected from four locations as shown on Figure 1, adjacent to northbound Highway 101 roughly between De Long Avenue and Atherton Avenue. With the aid of a hand auger[i], the soil samples were recovered using 2-inch-diameter by 6-inch-long stainless steel liners. Samples were collected at depths ranging between approximately 1 inch below the ground surface to approximately 3 feet[ii] below ground surface. The samples were sealed with Teflon®, plastic end caps and electrical tape, and preserved in an ice-cooled chest before being transported under documented chain-of-custody to Torrent Analytical, a state-accredited fixed-base analytical laboratory located in Milpitas, California.

[i] The hand sampling equipment was decontaminated using an alconox wash and a distilled water rinse between sampling depths and sample locations.

[ii] A hard stratum is encountered at approximately 3 feet below ground surface, resulting in hand auger refusal.

ANALYTICAL RESULTS

A total of eight discrete samples were collected and analyzed for the following analytes:

- TPH-gasoline with BTEX /MTBE and VOCs (EPA 8260)
- TPH-diesel and motor oil with silica gel cleanup (EPA 8015)
- CAM-17 metals (EPA 7471 and 6010)
- Asbestos (Carb 435 1,000 point count)

Four of the eight samples exhibited low-levels of TPH-motor oil. Select metals were also detected in all eight samples collected. The laboratory results are summarized in the following table.

TABLE 1
Laboratory Results for Samples S1 through S4

Analytes	Sample Location, Depth and Detected Concentrations, mg/kg							
	S1@1"	S1@3'	S2@9"	S2@2.75'	S3@6"	S3@3'	S4@3"	S4@2.5'
TPH-gas w/BTEX/MTBE	ND	ND	ND	ND	ND	ND	ND	ND
TPH- diesel	ND	ND	ND	ND	ND	ND	ND	ND
TPH-motor oil	ND	13	ND	ND	ND	15	13	24
Arsenic	6.0	5.2	4.5	6.4	5.5	5.5	5.5	6.7
Barium	180	170	170	200	210	210	210	240
Chromium	55	51	23	51	49	58	42	48
Cobalt	13	12	13	13	14	16	13	14
Copper	29	28	36	36	31	30	34	57
Lead	11	15	13	15	9.8	11	160	12
Nickel	64	50	37	53	67	64	54	70
Thallium	ND	ND	ND	ND	ND	ND	ND	9.0
Vanadium	27	32	25	34	29	30	28	36
Zinc	48	44	52	50	46	50	61	52
Other Metals	ND	ND	ND	ND	ND	ND	ND	ND
Asbestos	ND	ND	ND	ND	ND	ND	ND	ND

ND- Non-detect with respect to laboratory reporting limits.

The reported concentrations of TPH-motor oil are well below its respective Environmental Screening Level (ESL-Table K-1) for residential and worker exposure. In addition, NOA is non-detected in all samples.

With the exception of arsenic and lead, the results for metals shown in Table 1 are below the Regional Screening Levels (RSL) for residential/commercial use. The reported concentrations of arsenic are above its respective Regional Screening Level (RSL) for residential/commercial use; however, these concentrations fall within expected typical background levels and would not be considered an environmental concern to the project. Lead concentrations detected in Sample S4@3" exceeds the residential screening level of 80 mg/kg; however, the detected lead concentration is below the commercial screening level of 320 mg/kg.

DISCUSSION AND CLOSING

The reported concentrations of chromium and lead are below the applicable screening level for commercial use, unless the soil is to be transported on public right-of-ways. In the event the soil is to be transported, soluble chromium and lead analyses may be required. The laboratory results attached should be provided to the transporter for review.

If you have any questions regarding the contents of this letter, please do not hesitate to contact us.

Sincerely,

ENGEO Incorporated

Richard Gandolfo
rg/spm/jf

Shawn P. Munger, CHG

Attachments: Figure 1 – Site Plan
Laboratory Analysis Report by Torrent Laboratory Inc.

COPYRIGHT © 2014 BY ENGEO INCORPORATED. THIS DOCUMENT MAY NOT BE REPRODUCED IN WHOLE OR IN PART BY ANY MEANS WHATSOEVER, NOR MAY IT BE QUOTED OR EXCERPTED WITHOUT THE EXPRESS WRITTEN CONSENT OF ENGEO INCORPORATED.

G:\drafting\DRAFTING2_Dwg_10000 to 12999\11667\ENV\11667000000-ENV-1-SitePlan-1214.dwg Plot Date:12-18-14 pcrockett

EXPLANATION

ALL LOCATIONS ARE APPROXIMATE

S-4 SAMPLE

N

0 FEET 200

0 METERS 100

BASE MAP SOURCE: GOOGLE EARTH PRO

ENGEO Expect Excellence

SITE PLAN

MARIN/SONOMA NARROW MITIGATION PROJECT

NOVATO, CALIFORNIA

PROJECT NO.: 11667.000.000	FIGURE NO. 1
SCALE: AS SHOWN	
DRAWN BY: SRP	CHECKED BY: JK

ORIGINAL FIGURE PRINTED IN COLOR

Engeo (San Ramon)
2010 Crow Canyon Place,#250
San Ramon, California 94583
Tel: (925) 866-9000
Fax: (925) 866-0199

RE: TAM MSN Mitigation & Orange Ave Sound Wall

Work Order No.: 1412041 Rev: 1

Dear Richard Gandolfo:

Torrent Laboratory, Inc. received 8 sample(s) on December 05, 2014 for the analyses presented in the following Report.

All data for associated QC met EPA or laboratory specification(s) except where noted in the case narrative.

Torrent Laboratory, Inc. is certified by the State of California, ELAP #1991. If you have any questions regarding these test results, please feel free to contact the Project Management Team at (408)263-5258; ext 204.

Yelena Brodskaya
Technical Manager

December 16, 2014
Date

Date: 12/16/2014

Client: Engeo (San Ramon)

Project: TAM MSN Mitigation & Orange Ave Sound Wall

Work Order: 1412041

CASE NARRATIVE

No issues encountered with the receiving, preparation, analysis or reporting of the results associated with this work order.

Unless otherwise indicated in the following narrative, no results have been method and/or field blank corrected.

Reported results relate only to the items/samples tested by the laboratory.

This report shall not be reproduced, except in full, without the written approval of Torrent Analytical, Inc.

Analytical Comments for Asbestos CARB435B, Note: Analysis subcontracted to CA ELAP approved laboratory EMSL. Sub-contract data will follow under separate cover.

REVISIONS

Report revised to include subcontracted Asbestos data. Data appears as an attachment at the end of the Torrent generated report.

Rev. 1 (12/16/14)

Sample Result Summary

Report prepared for: Richard Gandolfo
Engeo (San Ramon)

Date Received: 12/05/14
Date Reported: 12/16/14

S1@1" 1412041-001

Parameters:	Analysis Method	DF	MDL	PQL	Results	Unit
Arsenic	SW6010B	1	0.25	1.7	6.0	mg/Kg
Barium	SW6010B	1	0.07	5.0	180	mg/Kg
Chromium	SW6010B	1	0.0500	5.0	55	mg/Kg
Cobalt	SW6010B	1	0.055	5.0	13	mg/Kg
Copper	SW6010B	1	0.650	5.0	29	mg/Kg
Lead	SW6010B	1	0.14	1.0	11	mg/Kg
Nickel	SW6010B	1	0.0500	5.0	64	mg/Kg
Vanadium	SW6010B	1	0.18	5.0	27	mg/Kg
Zinc	SW6010B	1	0.25	5.0	48	mg/Kg

S1@3' 1412041-002

Parameters:	Analysis Method	DF	MDL	PQL	Results	Unit
Arsenic	SW6010B	1	0.25	1.7	5.2	mg/Kg
Barium	SW6010B	1	0.07	5.0	170	mg/Kg
Chromium	SW6010B	1	0.0500	5.0	51	mg/Kg
Cobalt	SW6010B	1	0.055	5.0	12	mg/Kg
Copper	SW6010B	1	0.650	5.0	28	mg/Kg
Lead	SW6010B	1	0.14	1.0	15	mg/Kg
Nickel	SW6010B	1	0.0500	5.0	50	mg/Kg
Vanadium	SW6010B	1	0.18	5.0	32	mg/Kg
Zinc	SW6010B	1	0.25	5.0	44	mg/Kg
TPH as Motor Oil (SG)	SW8015B(M)	1	1.0	10	13	mg/Kg

Sample Result Summary

Report prepared for: Richard Gandolfo
Engeo (San Ramon)

Date Received: 12/05/14
Date Reported: 12/16/14

S2@9" 1412041-003

Parameters:	Analysis Method	DF	MDL	PQL	Results	Unit
Arsenic	SW6010B	1	0.25	1.7	4.5	mg/Kg
Barium	SW6010B	1	0.07	5.0	170	mg/Kg
Chromium	SW6010B	1	0.0500	5.0	23	mg/Kg
Cobalt	SW6010B	1	0.055	5.0	13	mg/Kg
Copper	SW6010B	1	0.650	5.0	36	mg/Kg
Lead	SW6010B	1	0.14	1.0	13	mg/Kg
Nickel	SW6010B	1	0.0500	5.0	37	mg/Kg
Vanadium	SW6010B	1	0.18	5.0	25	mg/Kg
Zinc	SW6010B	1	0.25	5.0	52	mg/Kg

S2@2.75' 1412041-004

Parameters:	Analysis Method	DF	MDL	PQL	Results	Unit
Arsenic	SW6010B	1	0.25	1.7	6.4	mg/Kg
Barium	SW6010B	1	0.07	5.0	200	mg/Kg
Chromium	SW6010B	1	0.0500	5.0	51	mg/Kg
Cobalt	SW6010B	1	0.055	5.0	13	mg/Kg
Copper	SW6010B	1	0.650	5.0	36	mg/Kg
Lead	SW6010B	1	0.14	1.0	15	mg/Kg
Nickel	SW6010B	1	0.0500	5.0	53	mg/Kg
Vanadium	SW6010B	1	0.18	5.0	34	mg/Kg
Zinc	SW6010B	1	0.25	5.0	50	mg/Kg

Sample Result Summary

Report prepared for: Richard Gandolfo
Engeo (San Ramon)

Date Received: 12/05/14
Date Reported: 12/16/14

S3@6" 1412041-005

Parameters:	Analysis Method	DF	MDL	PQL	Results	Unit
Arsenic	SW6010B	1	0.25	1.7	5.5	mg/Kg
Barium	SW6010B	1	0.07	5.0	210	mg/Kg
Chromium	SW6010B	1	0.0500	5.0	49	mg/Kg
Cobalt	SW6010B	1	0.055	5.0	14	mg/Kg
Copper	SW6010B	1	0.650	5.0	31	mg/Kg
Lead	SW6010B	1	0.14	1.0	9.8	mg/Kg
Nickel	SW6010B	1	0.0500	5.0	67	mg/Kg
Vanadium	SW6010B	1	0.18	5.0	29	mg/Kg
Zinc	SW6010B	1	0.25	5.0	46	mg/Kg

S3@3' 1412041-006

Parameters:	Analysis Method	DF	MDL	PQL	Results	Unit
Arsenic	SW6010B	1	0.25	1.7	5.5	mg/Kg
Barium	SW6010B	1	0.07	5.0	210	mg/Kg
Chromium	SW6010B	1	0.0500	5.0	58	mg/Kg
Cobalt	SW6010B	1	0.055	5.0	16	mg/Kg
Copper	SW6010B	1	0.650	5.0	30	mg/Kg
Lead	SW6010B	1	0.14	1.0	11	mg/Kg
Nickel	SW6010B	1	0.0500	5.0	64	mg/Kg
Vanadium	SW6010B	1	0.18	5.0	30	mg/Kg
Zinc	SW6010B	1	0.25	5.0	50	mg/Kg
TPH as Motor Oil (SG)	SW8015B(M)	1	1.0	10	15	mg/Kg

Sample Result Summary

Report prepared for: Richard Gandolfo
Engeo (San Ramon)

Date Received: 12/05/14
Date Reported: 12/16/14

S4@3" 1412041-007

Parameters:	Analysis Method	DF	MDL	PQL	Results	Unit
Arsenic	SW6010B	1	0.25	1.7	5.5	mg/Kg
Barium	SW6010B	1	0.07	5.0	210	mg/Kg
Chromium	SW6010B	1	0.0500	5.0	42	mg/Kg
Cobalt	SW6010B	1	0.055	5.0	13	mg/Kg
Copper	SW6010B	1	0.650	5.0	34	mg/Kg
Lead	SW6010B	1	0.14	1.0	160	mg/Kg
Nickel	SW6010B	1	0.0500	5.0	54	mg/Kg
Vanadium	SW6010B	1	0.18	5.0	28	mg/Kg
Zinc	SW6010B	1	0.25	5.0	61	mg/Kg
TPH as Motor Oil (SG)	SW8015B(M)	1	1.0	10	13	mg/Kg

S4@2.5' 1412041-008

Parameters:	Analysis Method	DF	MDL	PQL	Results	Unit
Arsenic	SW6010B	1	0.25	1.7	6.7	mg/Kg
Barium	SW6010B	1	0.07	5.0	240	mg/Kg
Chromium	SW6010B	1	0.0500	5.0	48	mg/Kg
Cobalt	SW6010B	1	0.055	5.0	14	mg/Kg
Copper	SW6010B	1	0.650	5.0	57	mg/Kg
Lead	SW6010B	1	0.14	1.0	12	mg/Kg
Nickel	SW6010B	1	0.0500	5.0	70	mg/Kg
Thallium	SW6010B	1	0.49	7.5	9.0	mg/Kg
Vanadium	SW6010B	1	0.18	5.0	36	mg/Kg
Zinc	SW6010B	1	0.25	5.0	52	mg/Kg
TPH as Motor Oil (SG)	SW8015B(M)	1	1.0	10	24	mg/Kg

Torrent LABORATORY, INC.

SAMPLE RESULTS

Report prepared for: Richard Gandolfo
Engeo (San Ramon)

Date Received: 12/05/14
Date Reported: 12/16/14

Client Sample ID:	S1@1"	**Lab Sample ID:**	1412041-001A
Project Name/Location:	TAM MSN Mitigation & Orange Ave Sound W	**Sample Matrix:**	Soil
Project Number:	11667.00.000.000		
Date/Time Sampled:	12/05/14 / 9:45		
Tag Number:	TAM MSN Mitigation & Orange Ave Sound Wall		

Parameters:	Analysis Method	Prep Date	Date Analyzed	DF	MDL	PQL	Results	Lab Qualifier	Unit	Analytical Batch	Prep Batch
Antimony	SW6010B	12/5/14	12/08/14	1	0.20	5.0	ND		mg/Kg	423505	13293
Arsenic	SW6010B	12/5/14	12/08/14	1	0.25	1.7	6.0		mg/Kg	423505	13293
Barium	SW6010B	12/5/14	12/08/14	1	0.07	5.0	180		mg/Kg	423505	13293
Beryllium	SW6010B	12/5/14	12/08/14	1	0.0800	2.0	ND		mg/Kg	423505	13293
Cadmium	SW6010B	12/5/14	12/08/14	1	0.0550	1.0	ND		mg/Kg	423505	13293
Chromium	SW6010B	12/5/14	12/08/14	1	0.0500	5.0	55		mg/Kg	423505	13293
Cobalt	SW6010B	12/5/14	12/08/14	1	0.055	5.0	13		mg/Kg	423505	13293
Copper	SW6010B	12/5/14	12/08/14	1	0.650	5.0	29		mg/Kg	423505	13293
Lead	SW6010B	12/5/14	12/08/14	1	0.14	1.0	11		mg/Kg	423505	13293
Molybdenum	SW6010B	12/5/14	12/08/14	1	0.120	5.0	ND		mg/Kg	423505	13293
Nickel	SW6010B	12/5/14	12/08/14	1	0.0500	5.0	64		mg/Kg	423505	13293
Selenium	SW6010B	12/5/14	12/08/14	1	0.42	5.0	ND		mg/Kg	423505	13293
Silver	SW6010B	12/5/14	12/08/14	1	0.37	5.0	ND		mg/Kg	423505	13293
Thallium	SW6010B	12/5/14	12/08/14	1	0.49	7.5	ND		mg/Kg	423505	13293
Vanadium	SW6010B	12/5/14	12/08/14	1	0.18	5.0	27		mg/Kg	423505	13293
Zinc	SW6010B	12/5/14	12/08/14	1	0.25	5.0	48		mg/Kg	423505	13293

Parameters:	Analysis Method	Prep Date	Date Analyzed	DF	MDL	PQL	Results	Lab Qualifier	Unit	Analytical Batch	Prep Batch
Mercury	SW7471A	12/5/14	12/09/14	1	0.2	0.50	ND		mg/Kg	423520	13305

Parameters:	Analysis Method	Prep Date	Date Analyzed	DF	MDL	PQL	Results	Lab Qualifier	Unit	Analytical Batch	Prep Batch
MTBE	SW8260B	NA	12/08/14	1	2.6	10	ND		ug/Kg	423539	NA
Benzene	SW8260B	NA	12/08/14	1	1.5	10	ND		ug/Kg	423539	NA
Toluene	SW8260B	NA	12/08/14	1	0.98	10	ND		ug/Kg	423539	NA
Ethyl Benzene	SW8260B	NA	12/08/14	1	0.86	10	ND		ug/Kg	423539	NA
m,p-Xylene	SW8260B	NA	12/08/14	1	1.9	10	ND		ug/Kg	423539	NA
o-Xylene	SW8260B	NA	12/08/14	1	0.66	5.0	ND		ug/Kg	423539	NA
(S) Dibromofluoromethane	SW8260B	NA	12/08/14	1	59.8	148	87.2		%	423539	NA
(S) Toluene-d8	SW8260B	NA	12/08/14	1	55.2	133	85.1		%	423539	NA
(S) 4-Bromofluorobenzene	SW8260B	NA	12/08/14	1	55.8	141	104		%	423539	NA

Torrent LABORATORY, INC.

SAMPLE RESULTS

Report prepared for: Richard Gandolfo
Engeo (San Ramon)

Date Received: 12/05/14
Date Reported: 12/16/14

Client Sample ID:	S1@1"	**Lab Sample ID:**	1412041-001A
Project Name/Location:	TAM MSN Mitigation & Orange Ave Sound W	**Sample Matrix:**	Soil
Project Number:	11667.00.000.000		
Date/Time Sampled:	12/05/14 / 9:45		
Tag Number:	TAM MSN Mitigation & Orange Ave Sound Wall		

Parameters:	Analysis Method	Prep Date	Date Analyzed	DF	MDL	PQL	Results	Lab Qualifier	Unit	Analytical Batch	Prep Batch
TPH(Gasoline)	8260TPH	12/8/14	12/08/14	1	30	100	ND		ug/Kg	423539	13311
(S) 4-Bromofluorobenzene	8260TPH	12/8/14	12/08/14	1	43.9	127	44.8		%	423539	13311

Parameters:	Analysis Method	Prep Date	Date Analyzed	DF	MDL	PQL	Results	Lab Qualifier	Unit	Analytical Batch	Prep Batch
TPH as Diesel (SG)	SW8015B(M)	12/8/14	12/08/14	1	0.66	2.0	ND		mg/Kg	423527	13297
TPH as Motor Oil (SG)	SW8015B(M)	12/8/14	12/08/14	1	1.0	10	ND		mg/Kg	423527	13297
Pentacosane (S)	SW8015B(M)	12/8/14	12/08/14	1	49.9	144	111		%	423527	13297

Torrent LABORATORY, INC.

SAMPLE RESULTS

Report prepared for: Richard Gandolfo
Engeo (San Ramon)

Date Received: 12/05/14
Date Reported: 12/16/14

Client Sample ID:	S1@3'	**Lab Sample ID:**	1412041-002A
Project Name/Location:	TAM MSN Mitigation & Orange Ave Sound W	**Sample Matrix:**	Soil
Project Number:	11667.00.000.000		
Date/Time Sampled:	12/05/14 / 10:20		
Tag Number:	TAM MSN Mitigation & Orange Ave Sound Wall		

Parameters:	Analysis Method	Prep Date	Date Analyzed	DF	MDL	PQL	Results	Lab Qualifier	Unit	Analytical Batch	Prep Batch
Antimony	SW6010B	12/5/14	12/08/14	1	0.20	5.0	ND		mg/Kg	423505	13293
Arsenic	SW6010B	12/5/14	12/08/14	1	0.25	1.7	5.2		mg/Kg	423505	13293
Barium	SW6010B	12/5/14	12/08/14	1	0.07	5.0	170		mg/Kg	423505	13293
Beryllium	SW6010B	12/5/14	12/08/14	1	0.0800	2.0	ND		mg/Kg	423505	13293
Cadmium	SW6010B	12/5/14	12/08/14	1	0.0550	1.0	ND		mg/Kg	423505	13293
Chromium	SW6010B	12/5/14	12/08/14	1	0.0500	5.0	51		mg/Kg	423505	13293
Cobalt	SW6010B	12/5/14	12/08/14	1	0.055	5.0	12		mg/Kg	423505	13293
Copper	SW6010B	12/5/14	12/08/14	1	0.650	5.0	28		mg/Kg	423505	13293
Lead	SW6010B	12/5/14	12/08/14	1	0.14	1.0	15		mg/Kg	423505	13293
Molybdenum	SW6010B	12/5/14	12/08/14	1	0.120	5.0	ND		mg/Kg	423505	13293
Nickel	SW6010B	12/5/14	12/08/14	1	0.0500	5.0	50		mg/Kg	423505	13293
Selenium	SW6010B	12/5/14	12/08/14	1	0.42	5.0	ND		mg/Kg	423505	13293
Silver	SW6010B	12/5/14	12/08/14	1	0.37	5.0	ND		mg/Kg	423505	13293
Thallium	SW6010B	12/5/14	12/08/14	1	0.49	7.5	ND		mg/Kg	423505	13293
Vanadium	SW6010B	12/5/14	12/08/14	1	0.18	5.0	32		mg/Kg	423505	13293
Zinc	SW6010B	12/5/14	12/08/14	1	0.25	5.0	44		mg/Kg	423505	13293

Parameters:	Analysis Method	Prep Date	Date Analyzed	DF	MDL	PQL	Results	Lab Qualifier	Unit	Analytical Batch	Prep Batch
Mercury	SW7471A	12/5/14	12/09/14	1	0.2	0.50	ND		mg/Kg	423520	13305

Parameters:	Analysis Method	Prep Date	Date Analyzed	DF	MDL	PQL	Results	Lab Qualifier	Unit	Analytical Batch	Prep Batch
MTBE	SW8260B	NA	12/08/14	1	2.6	10	ND		ug/Kg	423539	NA
Benzene	SW8260B	NA	12/08/14	1	1.5	10	ND		ug/Kg	423539	NA
Toluene	SW8260B	NA	12/08/14	1	0.98	10	ND		ug/Kg	423539	NA
Ethyl Benzene	SW8260B	NA	12/08/14	1	0.86	10	ND		ug/Kg	423539	NA
m,p-Xylene	SW8260B	NA	12/08/14	1	1.9	10	ND		ug/Kg	423539	NA
o-Xylene	SW8260B	NA	12/08/14	1	0.66	5.0	ND		ug/Kg	423539	NA
(S) Dibromofluoromethane	SW8260B	NA	12/08/14	1	59.8	148	90.3		%	423539	NA
(S) Toluene-d8	SW8260B	NA	12/08/14	1	55.2	133	83.9		%	423539	NA
(S) 4-Bromofluorobenzene	SW8260B	NA	12/08/14	1	55.8	141	90.6		%	423539	NA

Torrent LABORATORY, INC.

SAMPLE RESULTS

Report prepared for: Richard Gandolfo
Engeo (San Ramon)

Date Received: 12/05/14
Date Reported: 12/16/14

Client Sample ID:	S1@3'	**Lab Sample ID:**	1412041-002A
Project Name/Location:	TAM MSN Mitigation & Orange Ave Sound W	**Sample Matrix:**	Soil
Project Number:	11667.00.000.000		
Date/Time Sampled:	12/05/14 / 10:20		
Tag Number:	TAM MSN Mitigation & Orange Ave Sound Wall		

Parameters:	Analysis Method	Prep Date	Date Analyzed	DF	MDL	PQL	Results	Lab Qualifier	Unit	Analytical Batch	Prep Batch
TPH(Gasoline)	8260TPH	12/8/14	12/08/14	1	30	100	ND		ug/Kg	423539	13311
(S) 4-Bromofluorobenzene	8260TPH	12/8/14	12/08/14	1	43.9	127	50.4		%	423539	13311

Parameters:	Analysis Method	Prep Date	Date Analyzed	DF	MDL	PQL	Results	Lab Qualifier	Unit	Analytical Batch	Prep Batch
TPH as Diesel (SG)	SW8015B(M)	12/8/14	12/08/14	1	0.66	2.0	ND		mg/Kg	423527	13297
TPH as Motor Oil (SG)	SW8015B(M)	12/8/14	12/08/14	1	1.0	10	13		mg/Kg	423527	13297
Pentacosane (S)	SW8015B(M)	12/8/14	12/08/14	1	49.9	144	75.0		%	423527	13297

Torrent LABORATORY, INC.

SAMPLE RESULTS

Report prepared for: Richard Gandolfo
Engeo (San Ramon)

Date Received: 12/05/14
Date Reported: 12/16/14

Client Sample ID:	S2@9"	**Lab Sample ID:**	1412041-003A
Project Name/Location:	TAM MSN Mitigation & Orange Ave Sound W	**Sample Matrix:**	Soil
Project Number:	11667.00.000.000		
Date/Time Sampled:	12/05/14 / 10:45		
Tag Number:	TAM MSN Mitigation & Orange Ave Sound Wall		

Parameters:	Analysis Method	Prep Date	Date Analyzed	DF	MDL	PQL	Results	Lab Qualifier	Unit	Analytical Batch	Prep Batch
Antimony	SW6010B	12/5/14	12/08/14	1	0.20	5.0	ND		mg/Kg	423505	13293
Arsenic	SW6010B	12/5/14	12/08/14	1	0.25	1.7	4.5		mg/Kg	423505	13293
Barium	SW6010B	12/5/14	12/08/14	1	0.07	5.0	170		mg/Kg	423505	13293
Beryllium	SW6010B	12/5/14	12/08/14	1	0.0800	2.0	ND		mg/Kg	423505	13293
Cadmium	SW6010B	12/5/14	12/08/14	1	0.0550	1.0	ND		mg/Kg	423505	13293
Chromium	SW6010B	12/5/14	12/08/14	1	0.0500	5.0	23		mg/Kg	423505	13293
Cobalt	SW6010B	12/5/14	12/08/14	1	0.055	5.0	13		mg/Kg	423505	13293
Copper	SW6010B	12/5/14	12/08/14	1	0.650	5.0	36		mg/Kg	423505	13293
Lead	SW6010B	12/5/14	12/08/14	1	0.14	1.0	13		mg/Kg	423505	13293
Molybdenum	SW6010B	12/5/14	12/08/14	1	0.120	5.0	ND		mg/Kg	423505	13293
Nickel	SW6010B	12/5/14	12/08/14	1	0.0500	5.0	37		mg/Kg	423505	13293
Selenium	SW6010B	12/5/14	12/08/14	1	0.42	5.0	ND		mg/Kg	423505	13293
Silver	SW6010B	12/5/14	12/08/14	1	0.37	5.0	ND		mg/Kg	423505	13293
Thallium	SW6010B	12/5/14	12/08/14	1	0.49	7.5	ND		mg/Kg	423505	13293
Vanadium	SW6010B	12/5/14	12/08/14	1	0.18	5.0	25		mg/Kg	423505	13293
Zinc	SW6010B	12/5/14	12/08/14	1	0.25	5.0	52		mg/Kg	423505	13293

Parameters:	Analysis Method	Prep Date	Date Analyzed	DF	MDL	PQL	Results	Lab Qualifier	Unit	Analytical Batch	Prep Batch
Mercury	SW7471A	12/5/14	12/09/14	1	0.2	0.50	ND		mg/Kg	423520	13305

Parameters:	Analysis Method	Prep Date	Date Analyzed	DF	MDL	PQL	Results	Lab Qualifier	Unit	Analytical Batch	Prep Batch
MTBE	SW8260B	NA	12/08/14	1	2.6	10	ND		ug/Kg	423539	NA
Benzene	SW8260B	NA	12/08/14	1	1.5	10	ND		ug/Kg	423539	NA
Toluene	SW8260B	NA	12/08/14	1	0.98	10	ND		ug/Kg	423539	NA
Ethyl Benzene	SW8260B	NA	12/08/14	1	0.86	10	ND		ug/Kg	423539	NA
m,p-Xylene	SW8260B	NA	12/08/14	1	1.9	10	ND		ug/Kg	423539	NA
o-Xylene	SW8260B	NA	12/08/14	1	0.66	5.0	ND		ug/Kg	423539	NA
(S) Dibromofluoromethane	SW8260B	NA	12/08/14	1	59.8	148	81.4		%	423539	NA
(S) Toluene-d8	SW8260B	NA	12/08/14	1	55.2	133	83.8		%	423539	NA
(S) 4-Bromofluorobenzene	SW8260B	NA	12/08/14	1	55.8	141	90.9		%	423539	NA

Torrent LABORATORY, INC.

SAMPLE RESULTS

Report prepared for: Richard Gandolfo
Engeo (San Ramon)

Date Received: 12/05/14
Date Reported: 12/16/14

Client Sample ID:	S2@9"	**Lab Sample ID:**	1412041-003A
Project Name/Location:	TAM MSN Mitigation & Orange Ave Sound W	**Sample Matrix:**	Soil
Project Number:	11667.00.000.000		
Date/Time Sampled:	12/05/14 / 10:45		
Tag Number:	TAM MSN Mitigation & Orange Ave Sound Wall		

Parameters:	Analysis Method	Prep Date	Date Analyzed	DF	MDL	PQL	Results	Lab Qualifier	Unit	Analytical Batch	Prep Batch
TPH(Gasoline)	8260TPH	12/8/14	12/08/14	1	30	100	ND		ug/Kg	423539	13311
(S) 4-Bromofluorobenzene	8260TPH	12/8/14	12/08/14	1	43.9	127	53.3		%	423539	13311

Parameters:	Analysis Method	Prep Date	Date Analyzed	DF	MDL	PQL	Results	Lab Qualifier	Unit	Analytical Batch	Prep Batch
TPH as Diesel (SG)	SW8015B(M)	12/8/14	12/08/14	1	0.66	2.0	ND		mg/Kg	423527	13297
TPH as Motor Oil (SG)	SW8015B(M)	12/8/14	12/08/14	1	1.0	10	ND		mg/Kg	423527	13297
Pentacosane (S)	SW8015B(M)	12/8/14	12/08/14	1	49.9	144	76.2		%	423527	13297

Torrent LABORATORY, INC.

SAMPLE RESULTS

Report prepared for: Richard Gandolfo
Engeo (San Ramon)

Date Received: 12/05/14
Date Reported: 12/16/14

Client Sample ID:	S2@2.75'	**Lab Sample ID:**	1412041-004A
Project Name/Location:	TAM MSN Mitigation & Orange Ave Sound W	**Sample Matrix:**	Soil
Project Number:	11667.00.000.000		
Date/Time Sampled:	12/05/14 / 10:55		
Tag Number:	TAM MSN Mitigation & Orange Ave Sound Wall		

Parameters:	Analysis Method	Prep Date	Date Analyzed	DF	MDL	PQL	Results	Lab Qualifier	Unit	Analytical Batch	Prep Batch
Antimony	SW6010B	12/5/14	12/08/14	1	0.20	5.0	ND		mg/Kg	423505	13293
Arsenic	SW6010B	12/5/14	12/08/14	1	0.25	1.7	6.4		mg/Kg	423505	13293
Barium	SW6010B	12/5/14	12/08/14	1	0.07	5.0	200		mg/Kg	423505	13293
Beryllium	SW6010B	12/5/14	12/08/14	1	0.0800	2.0	ND		mg/Kg	423505	13293
Cadmium	SW6010B	12/5/14	12/08/14	1	0.0550	1.0	ND		mg/Kg	423505	13293
Chromium	SW6010B	12/5/14	12/08/14	1	0.0500	5.0	51		mg/Kg	423505	13293
Cobalt	SW6010B	12/5/14	12/08/14	1	0.055	5.0	13		mg/Kg	423505	13293
Copper	SW6010B	12/5/14	12/08/14	1	0.650	5.0	36		mg/Kg	423505	13293
Lead	SW6010B	12/5/14	12/08/14	1	0.14	1.0	15		mg/Kg	423505	13293
Molybdenum	SW6010B	12/5/14	12/08/14	1	0.120	5.0	ND		mg/Kg	423505	13293
Nickel	SW6010B	12/5/14	12/08/14	1	0.0500	5.0	53		mg/Kg	423505	13293
Selenium	SW6010B	12/5/14	12/08/14	1	0.42	5.0	ND		mg/Kg	423505	13293
Silver	SW6010B	12/5/14	12/08/14	1	0.37	5.0	ND		mg/Kg	423505	13293
Thallium	SW6010B	12/5/14	12/08/14	1	0.49	7.5	ND		mg/Kg	423505	13293
Vanadium	SW6010B	12/5/14	12/08/14	1	0.18	5.0	34		mg/Kg	423505	13293
Zinc	SW6010B	12/5/14	12/08/14	1	0.25	5.0	50		mg/Kg	423505	13293

Parameters:	Analysis Method	Prep Date	Date Analyzed	DF	MDL	PQL	Results	Lab Qualifier	Unit	Analytical Batch	Prep Batch
Mercury	SW7471A	12/5/14	12/09/14	1	0.2	0.50	ND		mg/Kg	423520	13305

Parameters:	Analysis Method	Prep Date	Date Analyzed	DF	MDL	PQL	Results	Lab Qualifier	Unit	Analytical Batch	Prep Batch
MTBE	SW8260B	NA	12/08/14	1	2.6	10	ND		ug/Kg	423539	NA
Benzene	SW8260B	NA	12/08/14	1	1.5	10	ND		ug/Kg	423539	NA
Toluene	SW8260B	NA	12/08/14	1	0.98	10	ND		ug/Kg	423539	NA
Ethyl Benzene	SW8260B	NA	12/08/14	1	0.86	10	ND		ug/Kg	423539	NA
m,p-Xylene	SW8260B	NA	12/08/14	1	1.9	10	ND		ug/Kg	423539	NA
o-Xylene	SW8260B	NA	12/08/14	1	0.66	5.0	ND		ug/Kg	423539	NA
(S) Dibromofluoromethane	SW8260B	NA	12/08/14	1	59.8	148	80.0		%	423539	NA
(S) Toluene-d8	SW8260B	NA	12/08/14	1	55.2	133	85.6		%	423539	NA
(S) 4-Bromofluorobenzene	SW8260B	NA	12/08/14	1	55.8	141	96.1		%	423539	NA

Torrent LABORATORY, INC.

SAMPLE RESULTS

Report prepared for: Richard Gandolfo
Engeo (San Ramon)

Date Received: 12/05/14
Date Reported: 12/16/14

Client Sample ID:	S2@2.75'	**Lab Sample ID:**	1412041-004A
Project Name/Location:	TAM MSN Mitigation & Orange Ave Sound W	**Sample Matrix:**	Soil
Project Number:	11667.00.000.000		
Date/Time Sampled:	12/05/14 / 10:55		
Tag Number:	TAM MSN Mitigation & Orange Ave Sound Wall		

Parameters:	Analysis Method	Prep Date	Date Analyzed	DF	MDL	PQL	Results	Lab Qualifier	Unit	Analytical Batch	Prep Batch
TPH(Gasoline)	8260TPH	12/8/14	12/08/14	1	30	100	ND		ug/Kg	423539	13311
(S) 4-Bromofluorobenzene	8260TPH	12/8/14	12/08/14	1	43.9	127	46.1		%	423539	13311

Parameters:	Analysis Method	Prep Date	Date Analyzed	DF	MDL	PQL	Results	Lab Qualifier	Unit	Analytical Batch	Prep Batch
TPH as Diesel (SG)	SW8015B(M)	12/8/14	12/08/14	1	0.66	2.0	ND		mg/Kg	423527	13297
TPH as Motor Oil (SG)	SW8015B(M)	12/8/14	12/08/14	1	1.0	10	ND		mg/Kg	423527	13297
Pentacosane (S)	SW8015B(M)	12/8/14	12/08/14	1	49.9	144	71.4		%	423527	13297

Torrent LABORATORY, INC.

SAMPLE RESULTS

Report prepared for: Richard Gandolfo
Engeo (San Ramon)

Date Received: 12/05/14
Date Reported: 12/16/14

Client Sample ID:	S3@6"	**Lab Sample ID:**	1412041-005A
Project Name/Location:	TAM MSN Mitigation & Orange Ave Sound W	**Sample Matrix:**	Soil
Project Number:	11667.00.000.000		
Date/Time Sampled:	12/05/14 / 11:10		
Tag Number:	TAM MSN Mitigation & Orange Ave Sound Wall		

Parameters:	Analysis Method	Prep Date	Date Analyzed	DF	MDL	PQL	Results	Lab Qualifier	Unit	Analytical Batch	Prep Batch
Antimony	SW6010B	12/5/14	12/08/14	1	0.20	5.0	ND		mg/Kg	423505	13293
Arsenic	SW6010B	12/5/14	12/08/14	1	0.25	1.7	5.5		mg/Kg	423505	13293
Barium	SW6010B	12/5/14	12/08/14	1	0.07	5.0	210		mg/Kg	423505	13293
Beryllium	SW6010B	12/5/14	12/08/14	1	0.0800	2.0	ND		mg/Kg	423505	13293
Cadmium	SW6010B	12/5/14	12/08/14	1	0.0550	1.0	ND		mg/Kg	423505	13293
Chromium	SW6010B	12/5/14	12/08/14	1	0.0500	5.0	49		mg/Kg	423505	13293
Cobalt	SW6010B	12/5/14	12/08/14	1	0.055	5.0	14		mg/Kg	423505	13293
Copper	SW6010B	12/5/14	12/08/14	1	0.650	5.0	31		mg/Kg	423505	13293
Lead	SW6010B	12/5/14	12/08/14	1	0.14	1.0	9.8		mg/Kg	423505	13293
Molybdenum	SW6010B	12/5/14	12/08/14	1	0.120	5.0	ND		mg/Kg	423505	13293
Nickel	SW6010B	12/5/14	12/08/14	1	0.0500	5.0	67		mg/Kg	423505	13293
Selenium	SW6010B	12/5/14	12/08/14	1	0.42	5.0	ND		mg/Kg	423505	13293
Silver	SW6010B	12/5/14	12/08/14	1	0.37	5.0	ND		mg/Kg	423505	13293
Thallium	SW6010B	12/5/14	12/08/14	1	0.49	7.5	ND		mg/Kg	423505	13293
Vanadium	SW6010B	12/5/14	12/08/14	1	0.18	5.0	29		mg/Kg	423505	13293
Zinc	SW6010B	12/5/14	12/08/14	1	0.25	5.0	46		mg/Kg	423505	13293

Parameters:	Analysis Method	Prep Date	Date Analyzed	DF	MDL	PQL	Results	Lab Qualifier	Unit	Analytical Batch	Prep Batch
Mercury	SW7471A	12/5/14	12/09/14	1	0.2	0.50	ND		mg/Kg	423520	13305

Parameters:	Analysis Method	Prep Date	Date Analyzed	DF	MDL	PQL	Results	Lab Qualifier	Unit	Analytical Batch	Prep Batch
MTBE	SW8260B	NA	12/08/14	1	2.6	10	ND		ug/Kg	423539	NA
Benzene	SW8260B	NA	12/08/14	1	1.5	10	ND		ug/Kg	423539	NA
Toluene	SW8260B	NA	12/08/14	1	0.98	10	ND		ug/Kg	423539	NA
Ethyl Benzene	SW8260B	NA	12/08/14	1	0.86	10	ND		ug/Kg	423539	NA
m,p-Xylene	SW8260B	NA	12/08/14	1	1.9	10	ND		ug/Kg	423539	NA
o-Xylene	SW8260B	NA	12/08/14	1	0.66	5.0	ND		ug/Kg	423539	NA
(S) Dibromofluoromethane	SW8260B	NA	12/08/14	1	59.8	148	85.6		%	423539	NA
(S) Toluene-d8	SW8260B	NA	12/08/14	1	55.2	133	84.2		%	423539	NA
(S) 4-Bromofluorobenzene	SW8260B	NA	12/08/14	1	55.8	141	93.9		%	423539	NA

Torrent LABORATORY, INC.

SAMPLE RESULTS

Report prepared for: Richard Gandolfo
Engeo (San Ramon)

Date Received: 12/05/14
Date Reported: 12/16/14

Client Sample ID:	S3@6"	**Lab Sample ID:**	1412041-005A
Project Name/Location:	TAM MSN Mitigation & Orange Ave Sound W	**Sample Matrix:**	Soil
Project Number:	11667.00.000.000		
Date/Time Sampled:	12/05/14 / 11:10		
Tag Number:	TAM MSN Mitigation & Orange Ave Sound Wall		

Parameters:	Analysis Method	Prep Date	Date Analyzed	DF	MDL	PQL	Results	Lab Qualifier	Unit	Analytical Batch	Prep Batch
TPH(Gasoline)	8260TPH	12/8/14	12/08/14	1	30	100	ND		ug/Kg	423539	13311
(S) 4-Bromofluorobenzene	8260TPH	12/8/14	12/08/14	1	43.9	127	47.4		%	423539	13311

Parameters:	Analysis Method	Prep Date	Date Analyzed	DF	MDL	PQL	Results	Lab Qualifier	Unit	Analytical Batch	Prep Batch
TPH as Diesel (SG)	SW8015B(M)	12/8/14	12/08/14	1	0.66	2.0	ND		mg/Kg	423527	13297
TPH as Motor Oil (SG)	SW8015B(M)	12/8/14	12/08/14	1	1.0	10	ND		mg/Kg	423527	13297
Pentacosane (S)	SW8015B(M)	12/8/14	12/08/14	1	49.9	144	81.9		%	423527	13297

Torrent LABORATORY, INC.

SAMPLE RESULTS

Report prepared for: Richard Gandolfo
Engeo (San Ramon)

Date Received: 12/05/14
Date Reported: 12/16/14

Client Sample ID:	S3@3'	**Lab Sample ID:**	1412041-006A
Project Name/Location:	TAM MSN Mitigation & Orange Ave Sound W	**Sample Matrix:**	Soil
Project Number:	11667.00.000.000		
Date/Time Sampled:	12/05/14 / 11:20		
Tag Number:	TAM MSN Mitigation & Orange Ave Sound Wall		

Parameters:	Analysis Method	Prep Date	Date Analyzed	DF	MDL	PQL	Results	Lab Qualifier	Unit	Analytical Batch	Prep Batch
Antimony	SW6010B	12/5/14	12/08/14	1	0.20	5.0	ND		mg/Kg	423505	13293
Arsenic	SW6010B	12/5/14	12/08/14	1	0.25	1.7	5.5		mg/Kg	423505	13293
Barium	SW6010B	12/5/14	12/08/14	1	0.07	5.0	210		mg/Kg	423505	13293
Beryllium	SW6010B	12/5/14	12/08/14	1	0.0800	2.0	ND		mg/Kg	423505	13293
Cadmium	SW6010B	12/5/14	12/08/14	1	0.0550	1.0	ND		mg/Kg	423505	13293
Chromium	SW6010B	12/5/14	12/08/14	1	0.0500	5.0	58		mg/Kg	423505	13293
Cobalt	SW6010B	12/5/14	12/08/14	1	0.055	5.0	16		mg/Kg	423505	13293
Copper	SW6010B	12/5/14	12/08/14	1	0.650	5.0	30		mg/Kg	423505	13293
Lead	SW6010B	12/5/14	12/08/14	1	0.14	1.0	11		mg/Kg	423505	13293
Molybdenum	SW6010B	12/5/14	12/08/14	1	0.120	5.0	ND		mg/Kg	423505	13293
Nickel	SW6010B	12/5/14	12/08/14	1	0.0500	5.0	64		mg/Kg	423505	13293
Selenium	SW6010B	12/5/14	12/08/14	1	0.42	5.0	ND		mg/Kg	423505	13293
Silver	SW6010B	12/5/14	12/08/14	1	0.37	5.0	ND		mg/Kg	423505	13293
Thallium	SW6010B	12/5/14	12/08/14	1	0.49	7.5	ND		mg/Kg	423505	13293
Vanadium	SW6010B	12/5/14	12/08/14	1	0.18	5.0	30		mg/Kg	423505	13293
Zinc	SW6010B	12/5/14	12/08/14	1	0.25	5.0	50		mg/Kg	423505	13293

Parameters:	Analysis Method	Prep Date	Date Analyzed	DF	MDL	PQL	Results	Lab Qualifier	Unit	Analytical Batch	Prep Batch
Mercury	SW7471A	12/5/14	12/09/14	1	0.2	0.50	ND		mg/Kg	423520	13305

Parameters:	Analysis Method	Prep Date	Date Analyzed	DF	MDL	PQL	Results	Lab Qualifier	Unit	Analytical Batch	Prep Batch
MTBE	SW8260B	NA	12/08/14	1	2.6	10	ND		ug/Kg	423539	NA
Benzene	SW8260B	NA	12/08/14	1	1.5	10	ND		ug/Kg	423539	NA
Toluene	SW8260B	NA	12/08/14	1	0.98	10	ND		ug/Kg	423539	NA
Ethyl Benzene	SW8260B	NA	12/08/14	1	0.86	10	ND		ug/Kg	423539	NA
m,p-Xylene	SW8260B	NA	12/08/14	1	1.9	10	ND		ug/Kg	423539	NA
o-Xylene	SW8260B	NA	12/08/14	1	0.66	5.0	ND		ug/Kg	423539	NA
(S) Dibromofluoromethane	SW8260B	NA	12/08/14	1	59.8	148	90.7		%	423539	NA
(S) Toluene-d8	SW8260B	NA	12/08/14	1	55.2	133	86.8		%	423539	NA
(S) 4-Bromofluorobenzene	SW8260B	NA	12/08/14	1	55.8	141	96.2		%	423539	NA

Torrent LABORATORY, INC.

SAMPLE RESULTS

Report prepared for: Richard Gandolfo
Engeo (San Ramon)

Date Received: 12/05/14
Date Reported: 12/16/14

Client Sample ID:	S3@3'	**Lab Sample ID:**	1412041-006A
Project Name/Location:	TAM MSN Mitigation & Orange Ave Sound W	**Sample Matrix:**	Soil
Project Number:	11667.00.000.000		
Date/Time Sampled:	12/05/14 / 11:20		
Tag Number:	TAM MSN Mitigation & Orange Ave Sound Wall		

Parameters:	Analysis Method	Prep Date	Date Analyzed	DF	MDL	PQL	Results	Lab Qualifier	Unit	Analytical Batch	Prep Batch
TPH(Gasoline)	8260TPH	12/8/14	12/08/14	1	30	100	ND		ug/Kg	423539	13311
(S) 4-Bromofluorobenzene	8260TPH	12/8/14	12/08/14	1	43.9	127	47.4		%	423539	13311

Parameters:	Analysis Method	Prep Date	Date Analyzed	DF	MDL	PQL	Results	Lab Qualifier	Unit	Analytical Batch	Prep Batch
TPH as Diesel (SG)	SW8015B(M)	12/8/14	12/08/14	1	0.66	2.0	ND		mg/Kg	423527	13297
TPH as Motor Oil (SG)	SW8015B(M)	12/8/14	12/08/14	1	1.0	10	15		mg/Kg	423527	13297
Pentacosane (S)	SW8015B(M)	12/8/14	12/08/14	1	49.9	144	83.7		%	423527	13297

Torrent LABORATORY, INC.

SAMPLE RESULTS

Report prepared for: Richard Gandolfo
Engeo (San Ramon)

Date Received: 12/05/14
Date Reported: 12/16/14

Client Sample ID:	S4@3"	**Lab Sample ID:**	1412041-007A
Project Name/Location:	TAM MSN Mitigation & Orange Ave Sound W	**Sample Matrix:**	Soil
Project Number:	11667.00.000.000		
Date/Time Sampled:	12/05/14 / 11:35		
Tag Number:	TAM MSN Mitigation & Orange Ave Sound Wall		

Parameters:	Analysis Method	Prep Date	Date Analyzed	DF	MDL	PQL	Results	Lab Qualifier	Unit	Analytical Batch	Prep Batch
Antimony	SW6010B	12/5/14	12/08/14	1	0.20	5.0	ND		mg/Kg	423505	13293
Arsenic	SW6010B	12/5/14	12/08/14	1	0.25	1.7	5.5		mg/Kg	423505	13293
Barium	SW6010B	12/5/14	12/08/14	1	0.07	5.0	210		mg/Kg	423505	13293
Beryllium	SW6010B	12/5/14	12/08/14	1	0.0800	2.0	ND		mg/Kg	423505	13293
Cadmium	SW6010B	12/5/14	12/08/14	1	0.0550	1.0	ND		mg/Kg	423505	13293
Chromium	SW6010B	12/5/14	12/08/14	1	0.0500	5.0	42		mg/Kg	423505	13293
Cobalt	SW6010B	12/5/14	12/08/14	1	0.055	5.0	13		mg/Kg	423505	13293
Copper	SW6010B	12/5/14	12/08/14	1	0.650	5.0	34		mg/Kg	423505	13293
Lead	SW6010B	12/5/14	12/08/14	1	0.14	1.0	160		mg/Kg	423505	13293
Molybdenum	SW6010B	12/5/14	12/08/14	1	0.120	5.0	ND		mg/Kg	423505	13293
Nickel	SW6010B	12/5/14	12/08/14	1	0.0500	5.0	54		mg/Kg	423505	13293
Selenium	SW6010B	12/5/14	12/08/14	1	0.42	5.0	ND		mg/Kg	423505	13293
Silver	SW6010B	12/5/14	12/08/14	1	0.37	5.0	ND		mg/Kg	423505	13293
Thallium	SW6010B	12/5/14	12/08/14	1	0.49	7.5	ND		mg/Kg	423505	13293
Vanadium	SW6010B	12/5/14	12/08/14	1	0.18	5.0	28		mg/Kg	423505	13293
Zinc	SW6010B	12/5/14	12/08/14	1	0.25	5.0	61		mg/Kg	423505	13293

Parameters:	Analysis Method	Prep Date	Date Analyzed	DF	MDL	PQL	Results	Lab Qualifier	Unit	Analytical Batch	Prep Batch
Mercury	SW7471A	12/5/14	12/09/14	1	0.2	0.50	ND		mg/Kg	423520	13305

Parameters:	Analysis Method	Prep Date	Date Analyzed	DF	MDL	PQL	Results	Lab Qualifier	Unit	Analytical Batch	Prep Batch
MTBE	SW8260B	NA	12/08/14	1	2.6	10	ND		ug/Kg	423539	NA
Benzene	SW8260B	NA	12/08/14	1	1.5	10	ND		ug/Kg	423539	NA
Toluene	SW8260B	NA	12/08/14	1	0.98	10	ND		ug/Kg	423539	NA
Ethyl Benzene	SW8260B	NA	12/08/14	1	0.86	10	ND		ug/Kg	423539	NA
m,p-Xylene	SW8260B	NA	12/08/14	1	1.9	10	ND		ug/Kg	423539	NA
o-Xylene	SW8260B	NA	12/08/14	1	0.66	5.0	ND		ug/Kg	423539	NA
(S) Dibromofluoromethane	SW8260B	NA	12/08/14	1	59.8	148	82.5		%	423539	NA
(S) Toluene-d8	SW8260B	NA	12/08/14	1	55.2	133	85.3		%	423539	NA
(S) 4-Bromofluorobenzene	SW8260B	NA	12/08/14	1	55.8	141	91.8		%	423539	NA

Torrent LABORATORY, INC.

SAMPLE RESULTS

Report prepared for: Richard Gandolfo
Engeo (San Ramon)

Date Received: 12/05/14
Date Reported: 12/16/14

Client Sample ID:	S4@3"	**Lab Sample ID:**	1412041-007A
Project Name/Location:	TAM MSN Mitigation & Orange Ave Sound W	**Sample Matrix:**	Soil
Project Number:	11667.00.000.000		
Date/Time Sampled:	12/05/14 / 11:35		
Tag Number:	TAM MSN Mitigation & Orange Ave Sound Wall		

Parameters:	Analysis Method	Prep Date	Date Analyzed	DF	MDL	PQL	Results	Lab Qualifier	Unit	Analytical Batch	Prep Batch
TPH(Gasoline)	8260TPH	12/8/14	12/08/14	1	30	100	ND		ug/Kg	423539	13311
(S) 4-Bromofluorobenzene	8260TPH	12/8/14	12/08/14	1	43.9	127	46.4		%	423539	13311

Parameters:	Analysis Method	Prep Date	Date Analyzed	DF	MDL	PQL	Results	Lab Qualifier	Unit	Analytical Batch	Prep Batch
TPH as Diesel (SG)	SW8015B(M)	12/8/14	12/08/14	1	0.66	2.0	ND		mg/Kg	423527	13297
TPH as Motor Oil (SG)	SW8015B(M)	12/8/14	12/08/14	1	1.0	10	13		mg/Kg	423527	13297
Pentacosane (S)	SW8015B(M)	12/8/14	12/08/14	1	49.9	144	96.4		%	423527	13297

Torrent LABORATORY, INC.

SAMPLE RESULTS

Report prepared for: Richard Gandolfo
Engeo (San Ramon)

Date Received: 12/05/14
Date Reported: 12/16/14

Client Sample ID:	S4@2.5'	**Lab Sample ID:**	1412041-008A
Project Name/Location:	TAM MSN Mitigation & Orange Ave Sound W	**Sample Matrix:**	Soil
Project Number:	11667.00.000.000		
Date/Time Sampled:	12/05/14 / 11:42		
Tag Number:	TAM MSN Mitigation & Orange Ave Sound Wall		

Parameters:	Analysis Method	Prep Date	Date Analyzed	DF	MDL	PQL	Results	Lab Qualifier	Unit	Analytical Batch	Prep Batch
Antimony	SW6010B	12/5/14	12/08/14	1	0.20	5.0	ND		mg/Kg	423505	13293
Arsenic	SW6010B	12/5/14	12/08/14	1	0.25	1.7	6.7		mg/Kg	423505	13293
Barium	SW6010B	12/5/14	12/08/14	1	0.07	5.0	240		mg/Kg	423505	13293
Beryllium	SW6010B	12/5/14	12/08/14	1	0.0800	2.0	ND		mg/Kg	423505	13293
Cadmium	SW6010B	12/5/14	12/08/14	1	0.0550	1.0	ND		mg/Kg	423505	13293
Chromium	SW6010B	12/5/14	12/08/14	1	0.0500	5.0	48		mg/Kg	423505	13293
Cobalt	SW6010B	12/5/14	12/08/14	1	0.055	5.0	14		mg/Kg	423505	13293
Copper	SW6010B	12/5/14	12/08/14	1	0.650	5.0	57		mg/Kg	423505	13293
Lead	SW6010B	12/5/14	12/08/14	1	0.14	1.0	12		mg/Kg	423505	13293
Molybdenum	SW6010B	12/5/14	12/08/14	1	0.120	5.0	ND		mg/Kg	423505	13293
Nickel	SW6010B	12/5/14	12/08/14	1	0.0500	5.0	70		mg/Kg	423505	13293
Selenium	SW6010B	12/5/14	12/08/14	1	0.42	5.0	ND		mg/Kg	423505	13293
Silver	SW6010B	12/5/14	12/08/14	1	0.37	5.0	ND		mg/Kg	423505	13293
Thallium	SW6010B	12/5/14	12/08/14	1	0.49	7.5	9.0		mg/Kg	423505	13293
Vanadium	SW6010B	12/5/14	12/08/14	1	0.18	5.0	36		mg/Kg	423505	13293
Zinc	SW6010B	12/5/14	12/08/14	1	0.25	5.0	52		mg/Kg	423505	13293

Parameters:	Analysis Method	Prep Date	Date Analyzed	DF	MDL	PQL	Results	Lab Qualifier	Unit	Analytical Batch	Prep Batch
Mercury	SW7471A	12/5/14	12/09/14	1	0.2	0.50	ND		mg/Kg	423520	13305

Parameters:	Analysis Method	Prep Date	Date Analyzed	DF	MDL	PQL	Results	Lab Qualifier	Unit	Analytical Batch	Prep Batch
MTBE	SW8260B	NA	12/08/14	1	2.6	10	ND		ug/Kg	423539	NA
Benzene	SW8260B	NA	12/08/14	1	1.5	10	ND		ug/Kg	423539	NA
Toluene	SW8260B	NA	12/08/14	1	0.98	10	ND		ug/Kg	423539	NA
Ethyl Benzene	SW8260B	NA	12/08/14	1	0.86	10	ND		ug/Kg	423539	NA
m,p-Xylene	SW8260B	NA	12/08/14	1	1.9	10	ND		ug/Kg	423539	NA
o-Xylene	SW8260B	NA	12/08/14	1	0.66	5.0	ND		ug/Kg	423539	NA
(S) Dibromofluoromethane	SW8260B	NA	12/08/14	1	59.8	148	86.4		%	423539	NA
(S) Toluene-d8	SW8260B	NA	12/08/14	1	55.2	133	83.2		%	423539	NA
(S) 4-Bromofluorobenzene	SW8260B	NA	12/08/14	1	55.8	141	89.2		%	423539	NA

Torrent LABORATORY, INC.

SAMPLE RESULTS

Report prepared for: Richard Gandolfo
Engeo (San Ramon)

Date Received: 12/05/14
Date Reported: 12/16/14

Client Sample ID:	S4@2.5'	**Lab Sample ID:**	1412041-008A
Project Name/Location:	TAM MSN Mitigation & Orange Ave Sound W	**Sample Matrix:**	Soil
Project Number:	11667.00.000.000		
Date/Time Sampled:	12/05/14 / 11:42		
Tag Number:	TAM MSN Mitigation & Orange Ave Sound Wall		

Parameters:	Analysis Method	Prep Date	Date Analyzed	DF	MDL	PQL	Results	Lab Qualifier	Unit	Analytical Batch	Prep Batch
TPH(Gasoline)	8260TPH	12/8/14	12/08/14	1	30	100	ND		ug/Kg	423539	13311
(S) 4-Bromofluorobenzene	8260TPH	12/8/14	12/08/14	1	43.9	127	44.1		%	423539	13311

Parameters:	Analysis Method	Prep Date	Date Analyzed	DF	MDL	PQL	Results	Lab Qualifier	Unit	Analytical Batch	Prep Batch
TPH as Diesel (SG)	SW8015B(M)	12/8/14	12/08/14	1	0.66	2.0	ND		mg/Kg	423527	13297
TPH as Motor Oil (SG)	SW8015B(M)	12/8/14	12/08/14	1	1.0	10	24		mg/Kg	423527	13297
Pentacosane (S)	SW8015B(M)	12/8/14	12/08/14	1	49.9	144	109		%	423527	13297

MB Summary Report

Work Order:	1412041	**Prep Method:**	3050	**Prep Date:**	12/05/14	**Prep Batch:**	13293
Matrix:	Soil	**Analytical Method:**	SW6010B	**Analyzed Date:**	12/08/14	**Analytical Batch:**	423505
Units:	mg/Kg						

Parameters	MDL	PQL	Method Blank Conc.	Lab Qualifier
Antimony	0.20	5.0	ND	
Arsenic	0.25	1.7	0.60	
Barium	0.07	5.0	0.53	
Beryllium	0.0800	2.0	ND	
Cadmium	0.055	1.0	ND	
Chromium	0.050	5.0	0.15	
Cobalt	0.055	5.0	ND	
Copper	0.65	5.0	ND	
Lead	0.14	1.0	0.29	
Molybdenum	0.12	5.0	0.20	
Nickel	0.050	5.0	0.090	
Selenium	0.42	5.0	0.59	
Silver	0.37	5.0	ND	
Thallium	0.49	5.0	ND	
Vanadium	0.18	5.0	ND	
Zinc	0.25	5.0	1.8	

Work Order:	1412041	**Prep Method:**	3546_TPHSG	**Prep Date:**	12/08/14	**Prep Batch:**	13297
Matrix:	Soil	**Analytical Method:**	SW8015B(M)	**Analyzed Date:**	12/08/14	**Analytical Batch:**	423527
Units:	mg/Kg						

Parameters	MDL	PQL	Method Blank Conc.	Lab Qualifier
TPH as Diesel (SG)	0.66	2.0	ND	
TPH as Motor Oil (SG)	1.0	10	1.8	
Pentacosane (S)			89.1	

Work Order:	1412041	**Prep Method:**	7471	**Prep Date:**	12/05/14	**Prep Batch:**	13305
Matrix:	Soil	**Analytical Method:**	SW7471A	**Analyzed Date:**	12/09/14	**Analytical Batch:**	423520
Units:	mg/Kg						

Parameters	MDL	PQL	Method Blank Conc.	Lab Qualifier
Mercury	0.2	0.50	ND	

MB Summary Report

Work Order:	1412041	**Prep Method:**	5035	**Prep Date:**	12/08/14	**Prep Batch:**	13311
Matrix:	Soil	**Analytical Method:**	8260TPH	**Analyzed Date:**	12/08/14	**Analytical Batch:**	423539
Units:	ug/Kg						

Parameters	MDL	PQL	Method Blank Conc.	Lab Qualifier
TPH(Gasoline)	30	100	71	
(S) 4-Bromofluorobenzene			57.3	

MB Summary Report

Work Order:	1412041	**Prep Method:**	NA	**Prep Date:**	NA	**Prep Batch:**	NA
Matrix:	Soil	**Analytical Method:**	SW8260B	**Analyzed Date:**	12/08/14	**Analytical Batch:**	423539
Units:	ug/Kg						

Parameters	MDL	PQL	Method Blank Conc.	Lab Qualifier
Dichlorodifluoromethane	4.4	10	ND	
Chloromethane	4.6	10	ND	
Vinyl Chloride	2.6	10	ND	
Bromomethane	4.7	10	ND	
Trichlorofluoromethane	2.9	10	ND	
1,1-Dichloroethene	1.5	10	ND	
Freon 113	3.7	10	ND	
Methylene Chloride	2.0	50	ND	
trans-1,2-Dichloroethene	1.1	10	ND	
MTBE	2.6	10	ND	
tert-Butanol	21	50	ND	
Diisopropyl ether (DIPE)	2.2	10	ND	
1,1-Dichloroethane	1.3	10	ND	
ETBE	2.4	10	ND	
cis-1,2-Dichloroethene	1.8	10	ND	
2,2-Dichloropropane	1.2	10	ND	
Bromochloromethane	2.3	10	ND	
Chloroform	1.2	10	ND	
Carbon Tetrachloride	1.6	10	ND	
1,1,1-Trichloroethane	1.2	10	ND	
1,1-Dichloropropene	1.4	10	ND	
Benzene	1.5	10	ND	
TAME	2.1	10	ND	
1,2-Dichloroethane	1.9	10	ND	
Trichloroethylene	3.9	10	ND	
Dibromomethane	2.2	10	ND	
1,2-Dichloropropane	1.3	10	ND	
Bromodichloromethane	1.1	10	ND	
cis-1,3-Dichloropropene	1.4	10	ND	
Toluene	0.98	10	3.6	
Tetrachloroethylene	1.8	10	ND	
trans-1,3-Dichloropropene	1.2	10	ND	
1,1,2-Trichloroethane	1.8	10	ND	
Dibromochloromethane	1.1	10	ND	
1,3-Dichloropropane	2.1	10	ND	
1,2-Dibromoethane	1.7	10	ND	
Ethyl Benzene	0.86	10	ND	
Chlorobenzene	4.2	10	ND	
1,1,1,2-Tetrachloroethane	0.86	10	ND	
m,p-Xylene	1.9	10	ND	
o-Xylene	0.66	5.0	0.69	

MB Summary Report

Work Order:	1412041	**Prep Method:**	NA	**Prep Date:**	NA	**Prep Batch:**	NA
Matrix:	Soil	**Analytical Method:**	SW8260B	**Analyzed Date:**	12/08/14	**Analytical Batch:**	423539
Units:	ug/Kg						

Parameters	MDL	PQL	Method Blank Conc.	Lab Qualifier
Styrene	0.77	10	1.3	
Bromoform	1.9	10	ND	
Isopropyl Benzene	1.2	10	ND	
n-Propylbenzene	1.4	10	ND	
Bromobenzene	1.2	10	ND	
1,1,2,2-Tetrachloroethane	3.0	10	ND	
1,3,5-Trimethylbenzene	1.1	10	ND	
1,2,3-Trichloropropane	3.3	10	ND	
4-Chlorotoluene	1.6	10	ND	
2-Chlorotoluene	1.6	10	ND	
tert-Butylbenzene	1.4	10	ND	
1,2,4-Trimethylbenzene	1.1	10	ND	
sec-Butyl Benzene	1.6	10	ND	
p-Isopropyltoluene	1.5	10	ND	
1,3-Dichlorobenzene	1.8	10	ND	
1,4-Dichlorobenzene	1.5	10	ND	
n-Butylbenzene	2.2	10	ND	
1,2-Dichlorobenzene	1.3	10	ND	
1,2-Dibromo-3-Chloropropane	4.2	10	ND	
Hexachlorobutadiene	2.6	10	ND	
1,2,4-Trichlorobenzene	2.1	10	ND	
Naphthalene	2.8	10	ND	
1,2,3-Trichlorobenzene	2.9	10	ND	
Ethanol	5.0	20	ND	TIC
(S) Dibromofluoromethane			83.3	
(S) Toluene-d8			81.5	
(S) 4-Bromofluorobenzene			89.2	

LCS/LCSD Summary Report

Raw values are used in quality control assessment.

Work Order:	1412041	**Prep Method:**	3050	**Prep Date:**	12/05/14	**Prep Batch:**	13293
Matrix:	Soil	**Analytical Method:**	SW6010B	**Analyzed Date:**	12/08/14	**Analytical Batch:**	423505
Units:	mg/Kg						

Parameters	MDL	PQL	Method Blank Conc.	Spike Conc.	LCS % Recovery	LCSD % Recovery	LCS/LCSD % RPD	% Recovery Limits	% RPD Limits	Lab Qualifier
Antimony	0.20	5.0	ND	50	99.6	102	2.18	30.7 - 130	30	
Arsenic	0.25	1.7	0.60	50	97.2	102	4.82	71 - 121	30	
Barium	0.07	5.0	0.53	50	107	105	1.89	70.2 - 130	30	
Beryllium	0.0800	2.0	ND	50	103	104	1.25	73.3 - 115	30	
Cadmium	0.055	1.0	ND	50	98.5	101	2.31	68.7 - 110	30	
Chromium	0.050	5.0	0.15	50	103	105	1.83	76 - 116	30	
Cobalt	0.055	5.0	ND	50	99.6	102	2.48	57.4 - 122	30	
Copper	0.65	5.0	ND	50	112	109	2.99	74.8 - 119	30	
Lead	0.14	1.0	0.29	50	98.4	100	1.81	67.9 - 118	30	
Molybdenum	0.12	5.0	0.20	50	106	110	3.25	62.9 - 123	30	
Nickel	0.050	5.0	0.090	50	98.9	101	2.00	61.5 - 122	30	
Selenium	0.42	5.0	0.59	50	93.5	95.2	1.75	62 - 111	30	
Silver	0.37	5.0	ND	50	105	103	2.41	81.1 - 109	30	
Thallium	0.49	5.0	ND	50	98.8	101	1.81	39.2 - 125	30	
Vanadium	0.18	5.0	ND	50	109	107	2.23	65.8 - 122	30	
Zinc	0.25	5.0	1.8	50	103	104	0.774	59.9 - 122	30	

Work Order:	1412041	**Prep Method:**	3546_TPHSG	**Prep Date:**	12/08/14	**Prep Batch:**	13297
Matrix:	Soil	**Analytical Method:**	SW8015B(M)	**Analyzed Date:**	12/08/14	**Analytical Batch:**	423527
Units:	mg/Kg						

Parameters	MDL	PQL	Method Blank Conc.	Spike Conc.	LCS % Recovery	LCSD % Recovery	LCS/LCSD % RPD	% Recovery Limits	% RPD Limits	Lab Qualifier
TPH as Diesel (SG)	0.66	2.0	ND	25	61.9	72.2	15.4	50.8 - 111	30	
Pentacosane (S)			1.8	100	79.1	87.4		49.9 - 144		

Work Order:	1412041	**Prep Method:**	7471	**Prep Date:**	12/05/14	**Prep Batch:**	13305
Matrix:	Soil	**Analytical Method:**	SW7471A	**Analyzed Date:**	12/09/14	**Analytical Batch:**	423520
Units:	mg/Kg						

Parameters	MDL	PQL	Method Blank Conc.	Spike Conc.	LCS % Recovery	LCSD % Recovery	LCS/LCSD % RPD	% Recovery Limits	% RPD Limits	Lab Qualifier
Mercury	0.2	0.50	ND	1.25	97.1	86.3	11.9	80.5 - 133	30	

LCS/LCSD Summary Report

Raw values are used in quality control assessment.

Work Order:	1412041	**Prep Method:**	5035	**Prep Date:**	12/08/14	**Prep Batch:**	13311
Matrix:	Soil	**Analytical Method:**	8260TPH	**Analyzed Date:**	12/08/14	**Analytical Batch:**	423539
Units:	ug/Kg						

Parameters	MDL	PQL	Method Blank Conc.	Spike Conc.	LCS % Recovery	LCSD % Recovery	LCS/LCSD % RPD	% Recovery Limits	% RPD Limits	Lab Qualifier
TPH(Gasoline)	30	100	71	1000	82.3	88.4	7.08	64.0 - 133.2	30	
(S) 4-Bromofluorobenzene			57.3	50	64.5	58.3		43.9 - 127		

Work Order:	1412041	**Prep Method:**	NA	**Prep Date:**	NA	**Prep Batch:**	NA
Matrix:	Soil	**Analytical Method:**	SW8260B	**Analyzed Date:**	12/08/14	**Analytical Batch:**	423539
Units:	ug/Kg						

Parameters	MDL	PQL	Method Blank Conc.	Spike Conc.	LCS % Recovery	LCSD % Recovery	LCS/LCSD % RPD	% Recovery Limits	% RPD Limits	Lab Qualifier
1,1-Dichloroethene	1.5	10	ND	50	68.1	67.4	1.17	53.7 - 139	30	
Benzene	1.5	10	ND	50	81.2	82.6	1.71	66.5 - 135	30	
Trichloroethylene	3.9	10	ND	50	70.7	75.1	5.96	57.5 - 150	30	
Toluene	0.98	10	ND	50	83.8	80.6	3.85	56.8 - 134	30	
Chlorobenzene	4.2	10	ND	50	78.2	81.0	3.49	57.4 - 134	30	
(S) Dibromofluoromethane			ND	50	81.2	83.8		59.8 - 148		
(S) Toluene-d8			ND	50	88.4	83.5		55.2 - 133		
(S) 4-Bromofluorobenzene			ND	50	88.6	85.3		55.8 - 141		

MS/MSD Summary Report

Raw values are used in quality control assessment.

Work Order:	1412041	**Prep Method:**	3050	**Prep Date:**	12/05/14	**Prep Batch:**	13293
Matrix:	**Soil**	**Analytical Method:**	SW6010B	**Analyzed Date:**	12/08/14	**Analytical Batch:**	423505
Spiked Sample:	1412041-001A						
Units:	mg/Kg						

Parameters	MDL	PQL	Sample Conc.	Spike Conc.	MS % Recovery	MSD % Recovery	MS/MSD % RPD	% Recovery Limits	% RPD Limits	Lab Qualifier
Antimony	0.20	5.0	0.00	50	75.2	72.3	3.88	30.7 - 130	30	
Arsenic	0.25	1.7	0.12	50	91.9	91.0	0.966	71 - 121	30	
Barium	0.07	5.0	3.7	50	119	109	1.98	70.2 - 130	30	
Beryllium	0.0800	2.0	0.00	50	93.2	91.9	1.45	73.3 - 115	30	
Cadmium	0.055	1.0	0.00	50	95.4	95.4	0.0314	68.7 - 110	30	
Chromium	0.050	5.0	1.1	50	106	107	0.277	76 - 116	30	
Cobalt	0.055	5.0	0.26	50	91.4	91.8	0.681	57.4 - 122	30	
Copper	0.65	5.0	0.58	50	102	104	0.933	74.8 - 119	30	
Lead	0.14	1.0	0.21	50	92.2	90.7	1.16	67.9 - 118	30	
Molybdenum	0.12	5.0	0.00	50	94.7	93.7	1.04	62.9 - 123	30	
Nickel	0.050	5.0	1.3	50	83.2	90.0	3.23	61.5 - 122	30	
Selenium	0.42	5.0	0.00	50	88.1	88.5	0.419	62 - 111	30	
Silver	0.37	5.0	0.00	50	99.9	100	0.400	81.1 - 109	30	
Thallium	0.49	5.0	0.00	50	86.2	86.8	0.717	39.2 - 125	30	
Vanadium	0.18	5.0	0.54	50	100	110	6.11	65.8 - 122	30	
Zinc	0.25	5.0	0.97	50	84.4	81.8	1.22	59.9 - 122	30	

Work Order:	1412041	**Prep Method:**	7471	**Prep Date:**	12/05/14	**Prep Batch:**	13305
Matrix:	**Soil**	**Analytical Method:**	SW7471A	**Analyzed Date:**	12/09/14	**Analytical Batch:**	423520
Spiked Sample:	1412041-001A						
Units:	mg/Kg						

Parameters	MDL	PQL	Sample Conc.	Spike Conc.	MS % Recovery	MSD % Recovery	MS/MSD % RPD	% Recovery Limits	% RPD Limits	Lab Qualifier
Mercury	0.2	0.50	0.0008	1.25	78.6	77.9	0.878	60 - 140	30	

MS/MSD Summary Report

Raw values are used in quality control assessment.

Work Order:	1412041	**Prep Method:**	NA	**Prep Date:**	NA	**Prep Batch:**	NA
Matrix:	**Soil**	**Analytical Method:**	SW8260B	**Analyzed Date:**	12/08/14	**Analytical Batch:**	423539
Spiked Sample:	1412041-008A						
Units:	ug/Kg						

Parameters	MDL	PQL	Sample Conc.	Spike Conc.	MS % Recovery	MSD % Recovery	MS/MSD % RPD	% Recovery Limits	% RPD Limits	Lab Qualifier
Benzene	1.5	10	0	50	92.0	95.1	3.28	66.5 - 135	30	
Toluene	0.98	10	0	50	90.7	85.9	5.41	56.8 - 134	30	
(S) Dibromofluoromethane				50	86.1	87.4		59.8 - 148		
(S) Toluene-d8				50	96.0	90.0		55.2 - 133		
(S) 4-Bromofluorobenzene				50	98.4	93.0		55.8 - 141		

Laboratory Qualifiers and Definitions

DEFINITIONS:

Accuracy/Bias (% Recovery) - The closeness of agreement between an observed value and an accepted reference value.
Blank (Method/Preparation Blank) -MB/PB - An analyte-free matrix to which all reagents are added in the same volumes/proportions as used in sample processing. The method blank is used to document contamination resulting from the analytical process.
Duplicate - a field sample and/or laboratory QC sample prepared in duplicate following all of the same processes and procedures used on the original sample (sample duplicate, LCSD, MSD)
Laboratory Control Sample (LCS ad LCSD) - A known matrix spiked with compounds representative of the target analyte(s). This is used to document laboratory performance.
Matrix - the component or substrate that contains the analyte of interest (e.g., - groundwater, sediment, soil, waste water, etc)
Matrix Spike (MS/MSD) - Client sample spiked with identical concentrations of target analyte (s). The spiking occurs prior to the sample preparation and analysis. They are used to document the precision and bias of a method in a given sample matrix.
Method Detection Limit (MDL) - the minimum concentration of a substance that can be measured and reported with a 99% confidence that the analyte concentration is greater than zero
Practical Quantitation Limit (PQL) - a laboratory determined value at 2 to 5 times above the MDL that can be reproduced in a manner that results in a 99% confidence level that the result is both accurate and precise. PQLs reflect all preparation factors and/or dilution factors that have been applied to the sample during the preparation and/or analytical processes.
Precision (%RPD) - The agreement among a set of replicate/duplicate measurements without regard to known value of the replicates
Surrogate (S) or (Surr) - An organic compound which is similar to the target analyte(s) in chemical composition and behavior in the analytical process, but which is not normally found in environmental samples. Surrogates are used in most organic analysis to demonstrate matrix compatibility with the chosen method of analysis
Tentatively Identified Compound (TIC) - A compound not contained within the analytical calibration standards but present in the GCMS library of defined compounds. When the library is searched for an unknown compound, it can frequently give a tentative identification to the compound based on retention time and primary and secondary ion match. TICs are reported as estimates and are candidates for further investigation.
Units: the unit of measure used to express the reported result - **mg/L** and ***mg/Kg*** (equivalent to PPM - parts per million in **liquid** and ***solid***), **ug/L** and ***ug/Kg*** (equivalent to PPB - parts per billion in **liquid** and ***solid***), **ug/m3**, ***mg.m3***, **ppbv** and ***ppmv*** (all units of measure for reporting concentrations in air), **%** (equivalent to 10000 ppm or 1,000,000 ppb), **ug/Wipe** (concentration found on the surface of a single Wipe usually taken over a 100cm2 surface)

LABORATORY QUALIFIERS:

B - Indicates when the anlayte is found in the associated method or preparation blank
D - Surrogate is not recoverable due to the necessary dilution of the sample
E - Indicates the reportable value is outside of the calibration range of the instrument but within the linear range of the instrument (unless otherwise noted) Values reported with an E qualifier should be considered as estimated.
H- Indicates that the recommended holding time for the analyte or compound has been exceeded
J- Indicates a value between the method MDL and PQL and that the reported concentration should be considered as estimated rather the quantitative
NA - Not Analyzed
N/A - Not Applicable
NR - Not recoverable - a matrix spike concentration is not recoverable due to a concentration within the original sample that is greater than four times the spike concentration added
R- The % RPD between a duplicate set of samples is outside of the absolute values established by laboratory control charts
S- Spike recovery is outside of established method and/or laboratory control limits. Further explanation of the use of this qualifier should be included within a case narrative
X -Used to indicate that a value based on pattern identification is within the pattern range but not typical of the pattern found in standards. Further explanation may or may not be provided within the sample footnote and/or the case narrative.

Sample Receipt Checklist

Client Name: Engeo (San Ramon)

Project Name: TAM MSN Mitigation & Orange Ave Sound Wall

Work Order No.: 1412041

Date and Time Received: 12/5/2014 14:35

Received By: ng

Physically Logged By: ng

Checklist Completed By: ng

Carrier Name: FedEx

Chain of Custody (COC) Information

Chain of custody present?	Yes
Chain of custody signed when relinquished and received?	Yes
Chain of custody agrees with sample labels?	Yes
Custody seals intact on sample bottles?	Not Present

Sample Receipt Information

Custody seals intact on shipping container/cooler?	Not Present
Shipping Container/Cooler In Good Condition?	Yes
Samples in proper container/bottle?	Yes
Samples containers intact?	Yes
Sufficient sample volume for indicated test?	Yes

Sample Preservation and Hold Time (HT) Information

All samples received within holding time?	Yes			
Container/Temp Blank temperature in compliance?	Yes	Temperature:	7	°C
Water-VOA vials have zero headspace?	No VOA vials submitted			
Water-pH acceptable upon receipt?	N/A			

pH Checked by: na

pH Adjusted by: na

Login Summary Report

Client ID:	TL5123 Engeo (San Ramon)	**QC Level:**	
Project Name:	TAM MSN Mitigation & Orange Ave Sound Wall	**TAT Requested:**	3 day:25
Project # :	11667.00.000.000	**Date Received:**	12/5/2014
Report Due Date:	12/10/2014	**Time Received:**	14:35

Comments:

Work Order # : ***1412041***

WO Sample ID	Client Sample ID	Collection Date/Time	Matrix	Scheduled Disposal	Sample On Hold	Test On Hold	Requested Tests	Subbed
1412041-001A	S1@1"	12/05/14 9:45	Soil	06/03/15				
							S_7471BHG S_6010BCAM17 SUB_AsbestosCARB 435B S_8260MBTEX S_TPHDOSG S_GCMS-GRO	Yes
Sample Note:	Standard 3 day TAT. TPHg, TPHd, mo with silica gel c/up, MTBE, BTEX, CAM 17, Asbestos CARB 435B(1K ct.).							
1412041-002A	S1@3'	12/05/14 10:20	Soil	06/03/15				
							S_7471BHG SUB_AsbestosCARB 435B S_TPHDOSG S_8260MBTEX S_GCMS-GRO S_6010BCAM17	Yes
1412041-003A	S2@9"	12/05/14 10:45	Soil	06/03/15				
							S_7471BHG SUB_AsbestosCARB 435B S_8260MBTEX S_TPHDOSG S_GCMS-GRO S_6010BCAM17	Yes
1412041-004A	S2@2.75'	12/05/14 10:55	Soil	06/03/15				
							S_7471BHG S_GCMS-GRO S_TPHDOSG S_8260MBTEX SUB_AsbestosCARB 435B S_6010BCAM17	Yes
1412041-005A	S3@6"	12/05/14 11:10	Soil	06/03/15				
							S_7471BHG S_TPHDOSG S_8260MBTEX	

Login Summary Report

Client ID: TL5123 Engeo (San Ramon)

Project Name: TAM MSN Mitigation & Orange Ave Sound Wall

Project # : 11667.00.000.000

Report Due Date: 12/10/2014

QC Level:

TAT Requested: 3 day:25

Date Received: 12/5/2014

Time Received: 14:35

Comments:

Work Order # : ***1412041***

WO Sample ID	Client Sample ID	Collection Date/Time	Matrix	Scheduled Disposal	Sample On Hold	Test On Hold	Requested Tests	Subbed
1412041-006A	S3@3'	12/05/14 11:20	Soil	06/03/15			S_GCMS-GRO SUB_AsbestosCARB 435B S_6010BCAM17 S_7471BHG	Yes
1412041-007A	S4@3"	12/05/14 11:35	Soil	06/03/15			SUB_AsbestosCARB 435B S_TPHDOSG S_8260MBTEX S_GCMS-GRO S_6010BCAM17 S_7471BHG	Yes
1412041-008A	S4@2.5'	12/05/14 11:42	Soil	06/03/15			SUB_AsbestosCARB 435B S_8260MBTEX S_TPHDOSG S_GCMS-GRO S_6010BCAM17 S_7471BHG	Yes

Torrent LABORATORY, INC.

CHAIN OF CUSTODY RECORD

1412041

PROJECT NUMBER: 11667.00.000.000
PROJECT NAME: TAM MSN Mitigation and Orange Ave Sound Wall
SAMPLED BY: (SIGNATURE/PRINT) Richard Gandolfo
PROJECT MANAGER: Richard Gandolfo/ Janet Kan
ROUTING: E-MAIL rgandolfo@engeo.com jkan@engeo.com Hard Copy No

	SAMPLE NUMBER	DATE	TIME	MATRIX	NUMBER OF CONTAINERS	CONTAINER SIZE	PRESERVATIVE	TPH-d/mo with silica gel cleanup	CAM-17	TPH-gas with MTBE/BTEX	Total Lead (6010)	Asbestos (CARB 435, 1K ct.)	REMARKS REQUIRED DETECTION LIMITS
001A	S1@1"	12/05/14	9:45 AM	S	1	2x6 ss	ice	x	x	x	x	x	
002A	S1@3'	12/05/14	10:20 AM	S	1	2x6 ss	ice	x	x	x	x	x	
003A	S2@9"	12/05/14	10:45 AM	S	1	2x6 ss	ice	x	x	x	x	x	
004A	S2@2075'	12/05/14	10:55 AM	S	1	2x6 ss	ice	x	x	x	x	x	
005A	S3@6"	12/05/14	11:10 AM	S	1	2x6 ss	ice	x	x	x	x	x	
006A	S3@3'	12/05/14	11:20 AM	S	1	2x6 ss	ice	x	x	x	x	x	
007A	S4@3"	12/05/14	11:35 AM	S	1	2x6 ss	ice	x	x	x	x	x	
008A	S4@2.5'	12/05/14	11:42 AM	S	1	2x6 ss	ice	x	x	x	x	x	

3 DAY STANDARD

RELINQUISHED BY: (SIGNATURE)	DATE/TIME	RECEIVED BY: (SIGNATURE)	RELINQUISHED BY: (SIGNATURE)	DATE/TIME	RECEIVED BY: (SIGNATURE)
	14:00 12-5-14			Dec 12 2:35	NAVIN G.
RELINQUISHED BY: (SIGNATURE)	DATE/TIME	RECEIVED BY: (SIGNATURE)	RELINQUISHED BY: (SIGNATURE)	DATE/TIME	RECEIVED BY: (SIGNATURE)
RELINQUISHED BY: (SIGNATURE)	DATE/TIME	RECEIVED FOR LABORATORY BY: (SIGNATURE)	DATE/TIME		

standard 3-day TAT
~~Lab to filter for metals~~ Temp. 7°C

ENGEO INCORPORATED
2010 CROW CANYON PL (STE 250)
SAN RAMON, CALIFORNIA 94583
(925) 837-2973 FAX (888) 279-2698
WWW.ENGEO.COM

DISTRIBUTION: ORIGINAL ACCOMPANIES SHIPMENT; COPY TO PROJECT FIELD FILES

FedEx City

REC NG LIN NG LBL NG LIR

EMSL Analytical, Inc
2235 Polvorosa Ave , Suite 230, San Leandro, CA 94577
Phone/Fax: (510) 895-3675 / (510) 895-3680
http://www.EMSL.com sanleandrolab@emsl.com

EMSL Order:	091417947
CustomerID:	TORR80
CustomerPO:	1412041
ProjectID:	

Attn: **Kathie Evans**
Torrent Laboratory, Inc.
483 Sinclair Frontage Rd.
Milpitas, CA 95035

Phone:	(408) 263-5258
Fax:	(408) 263-8293
Received:	12/08/14 12:00 PM
Analysis Date:	12/15/2014
Collected:	12/5/2014

Project: **1412041**

Test Report: PLM Analysis of Bulk Samples for Asbestos via EPA 600/R-93/116 Method with CARB 435 Prep (Milling). Level B for 0.1% Target Analytical Sensitivity

Sample	Description	Appearance	Non-Asbestos % Fibrous	Non-Asbestos % Non-Fibrous	Asbestos % Type
1412041-001A *091417947-0001*		Brown Non-Fibrous Homogeneous		100.00% Non-fibrous (other)	**None Detected**
1412041-002A *091417947-0002*		Brown Non-Fibrous Homogeneous		100.00% Non-fibrous (other)	**None Detected**
1412041-003A *091417947-0003*		Brown Non-Fibrous Homogeneous		100.00% Non-fibrous (other)	**None Detected**
1412041-004A *091417947-0004*		Brown Non-Fibrous Homogeneous		100.00% Non-fibrous (other)	**None Detected**
1412041-005A *091417947-0005*		Brown Non-Fibrous Homogeneous		100.00% Non-fibrous (other)	**None Detected**
1412041-006A *091417947-0006*		Brown Non-Fibrous Homogeneous		100.00% Non-fibrous (other)	**None Detected**
1412041-007A *091417947-0007*		Brown Non-Fibrous Homogeneous		100.00% Non-fibrous (other)	**None Detected**

Analyst(s)

Matthew Batongbacal (8)

Chris Dojlidko, Laboratory Manager
or other approved signatory

This report relates only to the samples listed above and may not be reproduced except in full, without EMSL's written approval. This report must not be used by the client to claim product certification, approval, or endorsement by NVLAP, NIST, or any agency of the federal government. EMSL is not responsible for sample collection activities or method limitations. Some samples may contain asbestos fibers below the resolution limit of PLM. EMSL recommends that samples reported as none detected or less then the limit of detection undergo additional analysis via TEM. Unless otherwise noted, the results in this report have not been blank corrected.Samples received in good condition unless otherwise noted.

Samples analyzed by EMSL Analytical, Inc San Leandro, CA

Initial report from 12/15/2014 17:13:58

EMSL Analytical, Inc
2235 Polvorosa Ave , Suite 230, San Leandro, CA 94577
Phone/Fax: (510) 895-3675 / (510) 895-3680
http://www.EMSL.com sanleandrolab@emsl.com

EMSL Order:	091417947
CustomerID:	TORR80
CustomerPO:	1412041
ProjectID:	

Attn: **Kathie Evans**
Torrent Laboratory, Inc.
483 Sinclair Frontage Rd.
Milpitas, CA 95035

Phone:	(408) 263-5258
Fax:	(408) 263-8293
Received:	12/08/14 12:00 PM
Analysis Date:	12/15/2014
Collected:	12/5/2014

Project: **1412041**

Test Report: PLM Analysis of Bulk Samples for Asbestos via EPA 600/R-93/116 Method with CARB 435 Prep (Milling). Level B for 0.1% Target Analytical Sensitivity

			Non-Asbestos		Asbestos
Sample	**Description**	**Appearance**	**% Fibrous**	**% Non-Fibrous**	**% Type**
1412041-008A *091417947-0008*		Brown Non-Fibrous Homogeneous		100.00% Non-fibrous (other)	**None Detected**

Analyst(s)

Matthew Batongbacal (8)

Chris Dojlidko, Laboratory Manager
or other approved signatory

This report relates only to the samples listed above and may not be reproduced except in full, without EMSL's written approval. This report must not be used by the client to claim product certification, approval, or endorsement by NVLAP, NIST, or any agency of the federal government. EMSL is not responsible for sample collection activities or method limitations. Some samples may contain asbestos fibers below the resolution limit of PLM. EMSL recommends that samples reported as none detected or less then the limit of detection undergo additional analysis via TEM. Unless otherwise noted, the results in this report have not been blank corrected.Samples received in good condition unless otherwise noted.

Samples analyzed by EMSL Analytical, Inc San Leandro, CA

Initial report from 12/15/2014 17:13:58

THIS IS THE LAST PAGE OF THE REPORT.

OrderID: 091417947

№ 091417948
№ 091417947

CHAIN OF CUSTODY

Torrent LABORATORY, INC

483 Sinclair Frontage Road
Milpitas, CA 95035
Phone: 408.263.5258
FAX: 408.263.8293
www.torrentlab.com

NOTE: SHADED AREAS ARE FOR TORRENT LAB USE ONLY

LAB WORK ORDER NO
CoC141205003

Company Name: Torrent Laboratory, Inc
Address: 483 Sinclair Frontage Road
City Milpitas State: CA
Telephone: 408.263 5258 FAX: 408.263.8293
Contact: Kathie Evans
Contact Email. pm@torrentlaboratory.com

Company Name: EMSL Analytical, Inc
Address 2235 Polvorosa Ave, Suite 230
City. San Leandro State: California Zip Code: 94577
Telephone 510-895-3675 FAX
Contact Name: EMSL
Special Instructions/Comments Please analyze for asbestos CARB 435B on 5-day TAT. Thanks
P.O. #: 1412041 EMAIL :

TURNAROUND TIME:

- [ ] 10 Work Days
- [ ] 7 Work Days
- [x] 5 Work Days
- [ ] 3 Work Days
- [ ] 2 Work Days
- [ ] 1 Work Days
- [ ] Noon-Nxt Day
- [ ] 2 - 8 Hours
- [ ] Other

SAMPLE TYPE: Soil

REPORT FORMAT:

- [ ] QC Level IV
- [ ] EDF
- [ ] Excel/EDD

ANALYSIS REQUESTED

LAB ID	CLIENT'S SAMPLE I.D.	DATE/TIME SAMPLED	MATRIX	# OF CONT	CONT TYPE	SUB_AsbestosCARB435B	SUB_AsbestosCARB435B						REMARKS
	1412041-001A	12/5/2014/9:45	Soil	1	4 oz Jar								
	1412041-002A	12/5/2014/10.20	Soil	1									
	1412041-003A	12/5/2014/10.45	Soil	1									
	1412041-004A	12/5/2014/10:55	Soil	1									
	1412041-005A	12/5/2014/11 10	Soil	1									
	1412041-006A	12/5/2014/11 20	Soil	1									
	1412041-007A	12/5/2014/11 35	Soil	1									
	1412041-008A	12/5/2014/11:42	Soil	1									

	Relinquished By:	Print:	Date:	Time:	Received By:	Print:	Date:	Time:
1	[signature]	NAVIN G	12-5-14	4:05pm	[signature]		12.8.14	12pm
2	Relinquished By:	Print:	Date:	Time:	Received By:		Date:	Time:

Were Samples Received in Good Condition? [ ] YES [ ] NO Samples on Ice? [ ] YES [ ] NO Method of Shipment _____ Sample seals intact? [ ] YES [ ] NO [ ] N/A

NOTE: Samples are discarded by the laboratory 30 days from date of receipt unless other arrangements are made.

Log In By. Date: Log In Reviewed By: Date:

4. Water Quality Information Handout

WATER QUALITY INFORMATION HANDOUT
CONTRACT NO. 04-264H34

MARIN SONOMA NARROWS (MSN) MITIGATION AND ORANGE AVENUE SOUND WALL PROJECT
IN MARIN COUNTY ON ROUTE 101
FROM THE US 101/SR 37 SEPARATION IN NOVATO TO MARIN/SONOMA COUNTY LINE
04-MRN-101-PM 18.9/25.8

Dist	COUNTY	ROUTE	POST MILES TOTAL PROJECT	SHEET No.	TOTAL SHEETS
4	Mrn	101	18.9/25.8		

REGISTERED CIVIL ENGINEER DATE

PLANS APPROVAL DATE

REGISTERED PROFESSIONAL ENGINEER N.V. BERNARDI No. 45407 Exp. 9/30/16 CIVIL STATE OF CALIFORNIA

THE STATE OF CALIFORNIA OR ITS OFFICERS OR AGENTS SHALL NOT BE RESPONSIBLE FOR THE ACCURACY OR COMPLETENESS OF SCANNED COPIES OF THIS PLAN SHEET.

BKF ENGINEERS
4670 WILLOW ROAD, SUITE 250
PLEASANTON, CA. 94588

TAM
781 LINCOLN AVENUE, SUITE 160
SAN RAFAEL, CA 94901

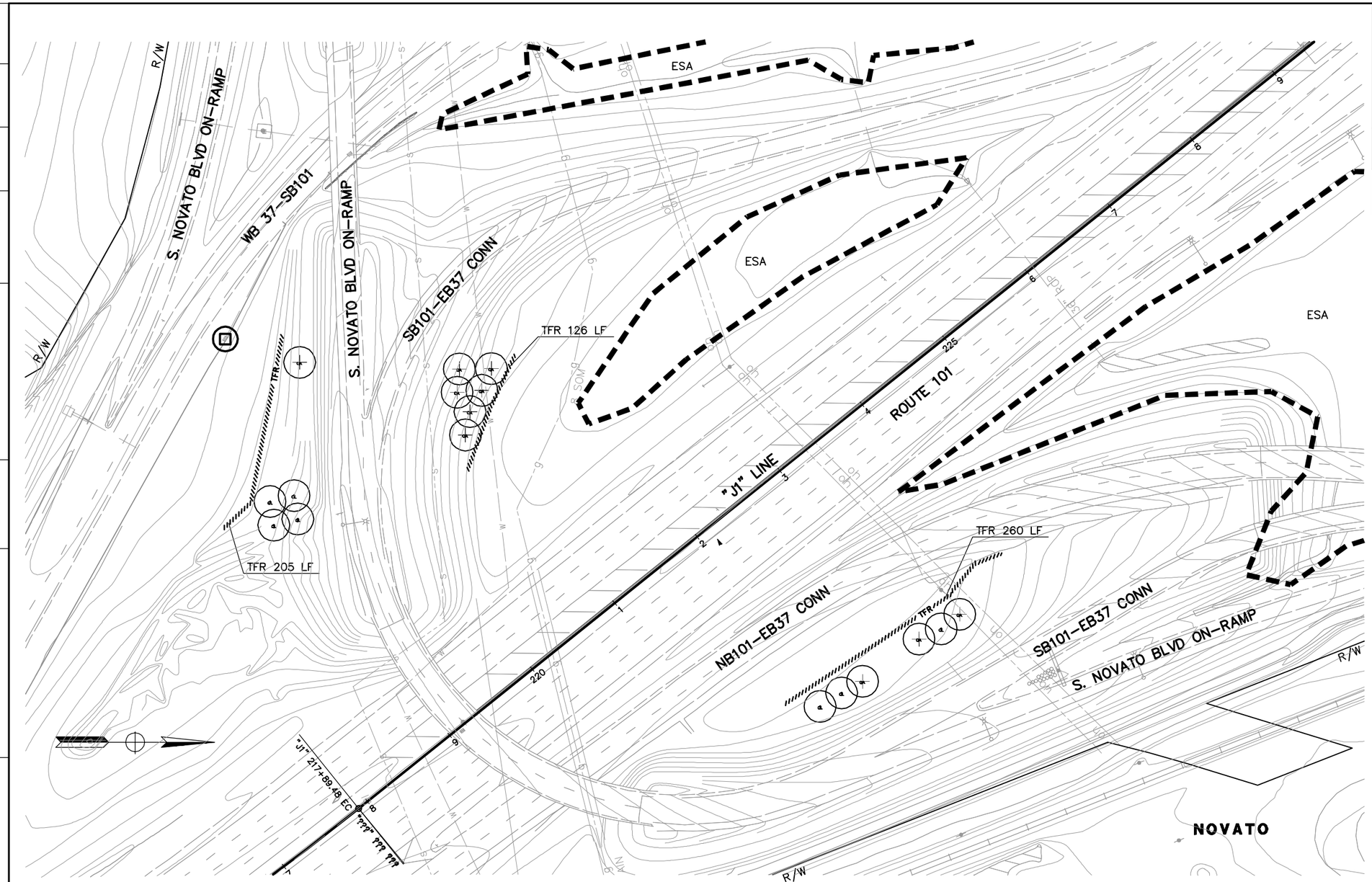

NOTE:

TEMPORARY BMP LOCATIONS ARE DESIGNED BASED ON DISTURBED AREAS AND WATER FLOW PATTERNS INFORMATION AVAILABLE AT DESIGN PHASE. CONTRACTOR IS RESPONSIBLE TO DEVELOP A WATER POLLUTION CONTROL PROGRAM (WPCP) THAT STABILIZES ALL DISTURBED AREAS THAT WERE NOT EXPECTED TO BE DISTURBED AND COMPLIES WITH PERMITS, LICENSES, AGREEMENTS AND CERTIFICATIONS (PLAC'S).

ABBREVIATIONS:

ESA	ENVIRONMENTAL SENSITIVE AREA
TFR	TEMPORARY FIBER ROLL
TSF	TEMPORARY SILT FENCE

LEGEND:

	TEMPORARY DRAINAGE INLET PROTECTION
TSF	TEMPORARY SILT FENCE
TFR	TEMPORARY FIBER ROLL
	TEMPORARY CONSTRUCTION ENTRANCE
WASH	TEMPORARY CONCRETE WASHOUT
	TEMPORARY COVER
ESA	ENVIRONMENTAL SENSITIVE AREA

TEMPORARY WATER POLLUTION CONTROL PLAN

SCALE: 1" = 50'

WPC-1

LAST REVISION 11-10-14

REVISED BY	DATE REVISED

CALCULATED-DESIGNED BY
CHECKED BY

CONSULTANT FUNCTIONAL SUPERVISOR
NATALINA V. BERNARDI

STATE OF CALIFORNIA – DEPARTMENT OF TRANSPORTATION
Caltrans

BORDER LAST REVISED 7/2/2010 | USERNAME => $USER DGN FILE => $REQUEST | RELATIVE BORDER SCALE IS IN INCHES 0 1 2 3 | UNIT 0716 | PROJECT NUMBER & PHASE 04140002211

Dist	COUNTY	ROUTE	POST MILES TOTAL PROJECT	SHEET No.	TOTAL SHEETS
4	Mrn	101	18.9/25.8		

REGISTERED CIVIL ENGINEER DATE

PLANS APPROVAL DATE

REGISTERED PROFESSIONAL ENGINEER N.V. BERNARDI No. 45407 Exp. 9/30/16 CIVIL STATE OF CALIFORNIA

THE STATE OF CALIFORNIA OR ITS OFFICERS OR AGENTS SHALL NOT BE RESPONSIBLE FOR THE ACCURACY OR COMPLETENESS OF SCANNED COPIES OF THIS PLAN SHEET.

BKF ENGINEERS
4670 WILLOW ROAD, SUITE 250
PLEASANTON, CA. 94588

TAM
781 LINCOLN AVENUE, SUITE 160
SAN RAFAEL, CA 94901

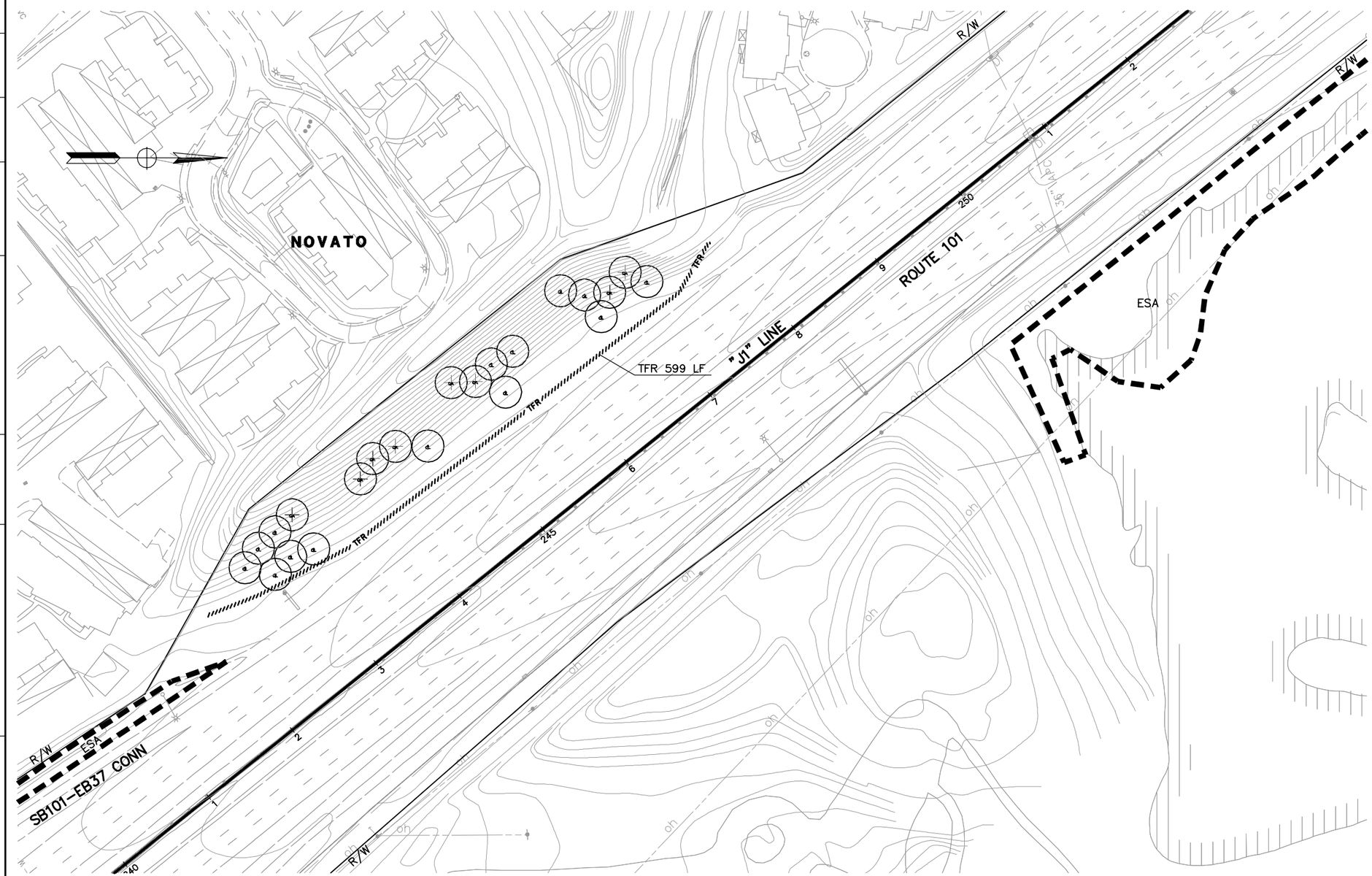

TEMPORARY WATER POLLUTION CONTROL PLAN

SCALE: 1" = 50'

FOR NOTE, ABBREVIATIONS AND LEGEND, SEE SHEET WPC-1

WPC-2

REVISED BY	DATE REVISED

CALCULATED-DESIGNED BY
CHECKED BY

CONSULTANT FUNCTIONAL SUPERVISOR
NATALINA V. BERNARDI

STATE OF CALIFORNIA – DEPARTMENT OF TRANSPORTATION
Caltrans®

P:\Grp41\U1048-10\WPC\SHEET3\WPC3-02 (for 2998 only).dwg 08 Apr 2015 7:21:01pm pmen

LAST REVISION 11-10-14

BORDER LAST REVISED 7/2/2010 | USERNAME =>$USER DGN FILE => $REQUEST | RELATIVE BORDER SCALE IS IN INCHES 0 1 2 3 | UNIT 0716 | PROJECT NUMBER & PHASE 04140002211

Dist	COUNTY	ROUTE	POST MILES TOTAL PROJECT	SHEET No.	TOTAL SHEETS
4	Mrn	101	18.9/25.8		

REGISTERED CIVIL ENGINEER DATE

PLANS APPROVAL DATE

REGISTERED PROFESSIONAL ENGINEER N.V. BERNARDI No. 45407 Exp. 9/30/16 CIVIL STATE OF CALIFORNIA

THE STATE OF CALIFORNIA OR ITS OFFICERS OR AGENTS SHALL NOT BE RESPONSIBLE FOR THE ACCURACY OR COMPLETENESS OF SCANNED COPIES OF THIS PLAN SHEET.

BKF ENGINEERS
4670 WILLOW ROAD, SUITE 250
PLEASANTON, CA. 94588

TAM
781 LINCOLN AVENUE, SUITE 160
SAN RAFAEL, CA 94901

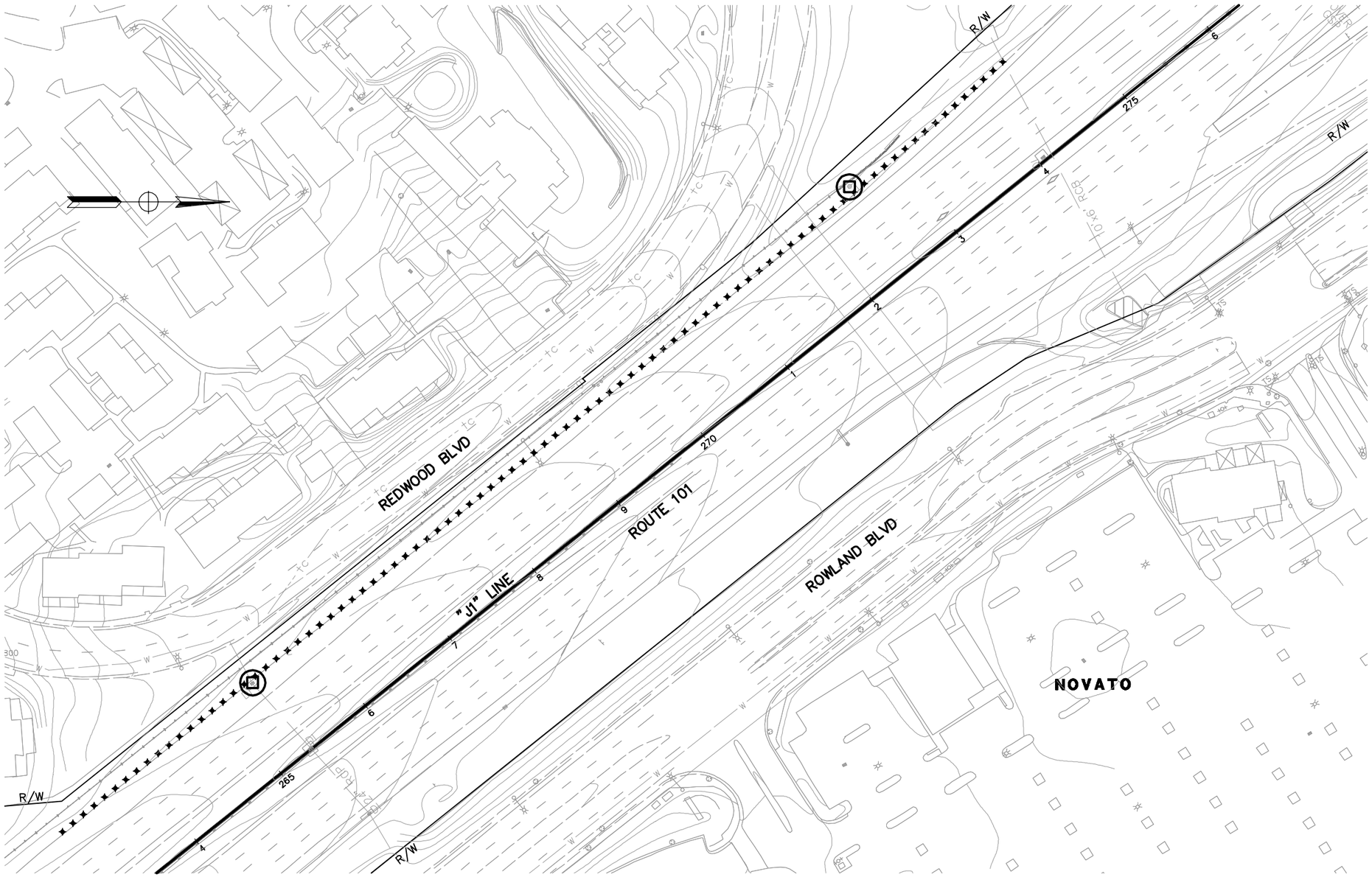

TEMPORARY WATER POLLUTION CONTROL PLAN

SCALE: 1" = 50'

FOR NOTE, ABBREVIATIONS AND LEGEND, SEE SHEET WPC-1

WPC-3

REVISED BY | DATE REVISED

CALCULATED-DESIGNED BY | CHECKED BY

CONSULTANT FUNCTIONAL SUPERVISOR
NATALINA V. BERNARDI

STATE OF CALIFORNIA – DEPARTMENT OF TRANSPORTATION
Caltrans

LAST REVISION 11-10-14

BORDER LAST REVISED 7/2/2010 | USERNAME =>$USER DGN FILE => $REQUEST | RELATIVE BORDER SCALE IS IN INCHES 0 1 2 3 | UNIT 0716 | PROJECT NUMBER & PHASE 04140002211

Dist	COUNTY	ROUTE	POST MILES TOTAL PROJECT	SHEET No.	TOTAL SHEETS
4	Mrn	101	18.9/25.8		

REGISTERED CIVIL ENGINEER DATE

PLANS APPROVAL DATE

REGISTERED PROFESSIONAL ENGINEER N.V. BERNARDI No. 45407 Exp. 9/30/16 CIVIL STATE OF CALIFORNIA

THE STATE OF CALIFORNIA OR ITS OFFICERS OR AGENTS SHALL NOT BE RESPONSIBLE FOR THE ACCURACY OR COMPLETENESS OF SCANNED COPIES OF THIS PLAN SHEET.

BKF ENGINEERS
4670 WILLOW ROAD, SUITE 250
PLEASANTON, CA. 94588

TAM
781 LINCOLN AVENUE, SUITE 160
SAN RAFAEL, CA 94901

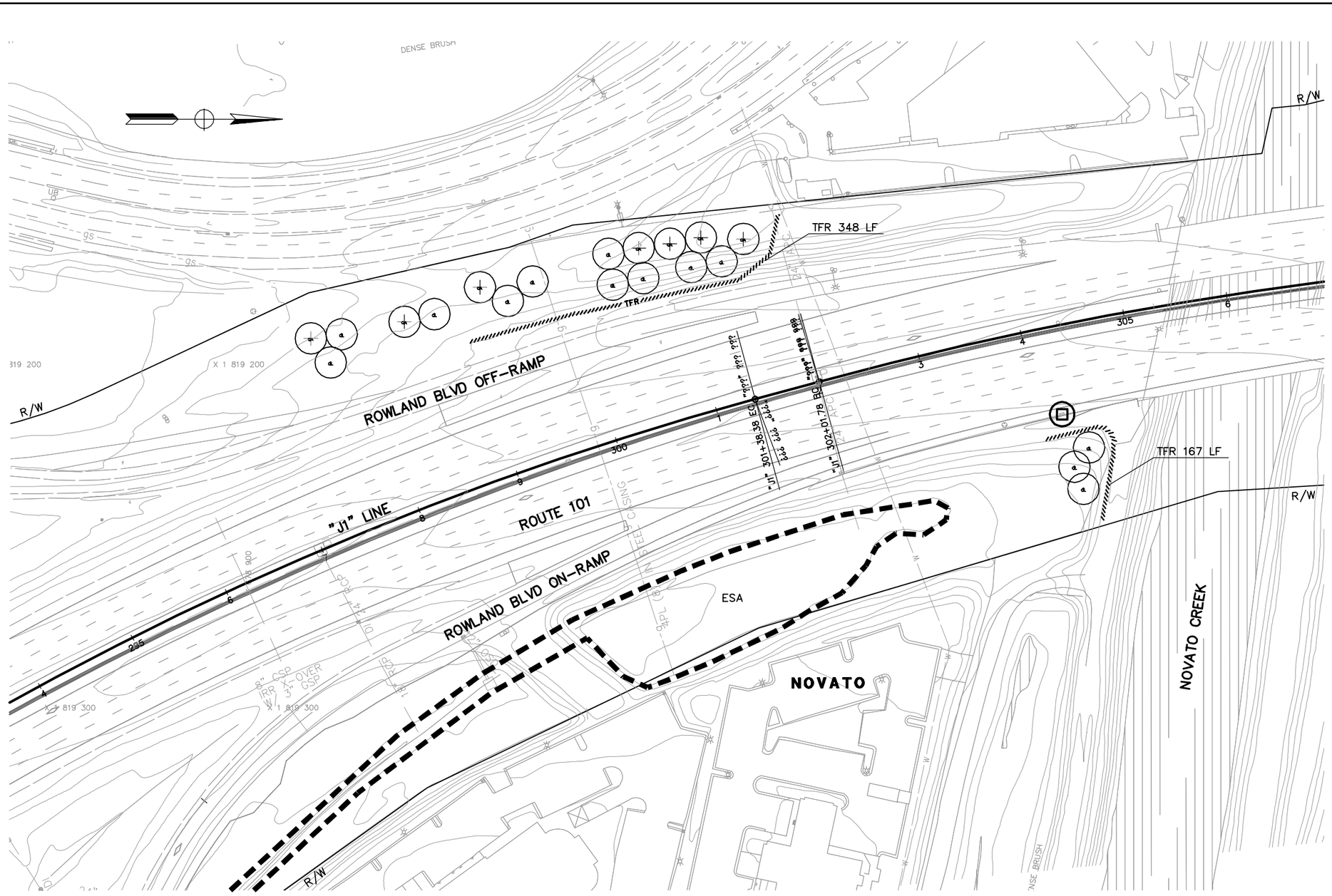

TEMPORARY WATER POLLUTION CONTROL PLAN

SCALE: 1" = 50'

FOR NOTE, ABBREVIATIONS AND LEGEND, SEE SHEET WPC-1

WPC-4

LAST REVISION 11-10-14

REVISED BY | DATE REVISED

CALCULATED-DESIGNED BY | CHECKED BY

CONSULTANT FUNCTIONAL SUPERVISOR
NATALINA V. BERNARDI

STATE OF CALIFORNIA – DEPARTMENT OF TRANSPORTATION
Caltrans

BORDER LAST REVISED 7/2/2010 | USERNAME =>$USER DGN FILE => $REQUEST | RELATIVE BORDER SCALE IS IN INCHES 0 1 2 3 | UNIT 0716 | PROJECT NUMBER & PHASE 04140002211

Dist	COUNTY	ROUTE	POST MILES TOTAL PROJECT	SHEET No.	TOTAL SHEETS
4	Mrn	101	18.9/25.8		

REGISTERED CIVIL ENGINEER DATE

PLANS APPROVAL DATE

REGISTERED PROFESSIONAL ENGINEER N.V. BERNARDI No. 45407 Exp. 9/30/16 CIVIL STATE OF CALIFORNIA

THE STATE OF CALIFORNIA OR ITS OFFICERS OR AGENTS SHALL NOT BE RESPONSIBLE FOR THE ACCURACY OR COMPLETENESS OF SCANNED COPIES OF THIS PLAN SHEET.

BKF ENGINEERS
4670 WILLOW ROAD, SUITE 250
PLEASANTON, CA. 94588

TAM
781 LINCOLN AVENUE, SUITE 160
SAN RAFAEL, CA 94901

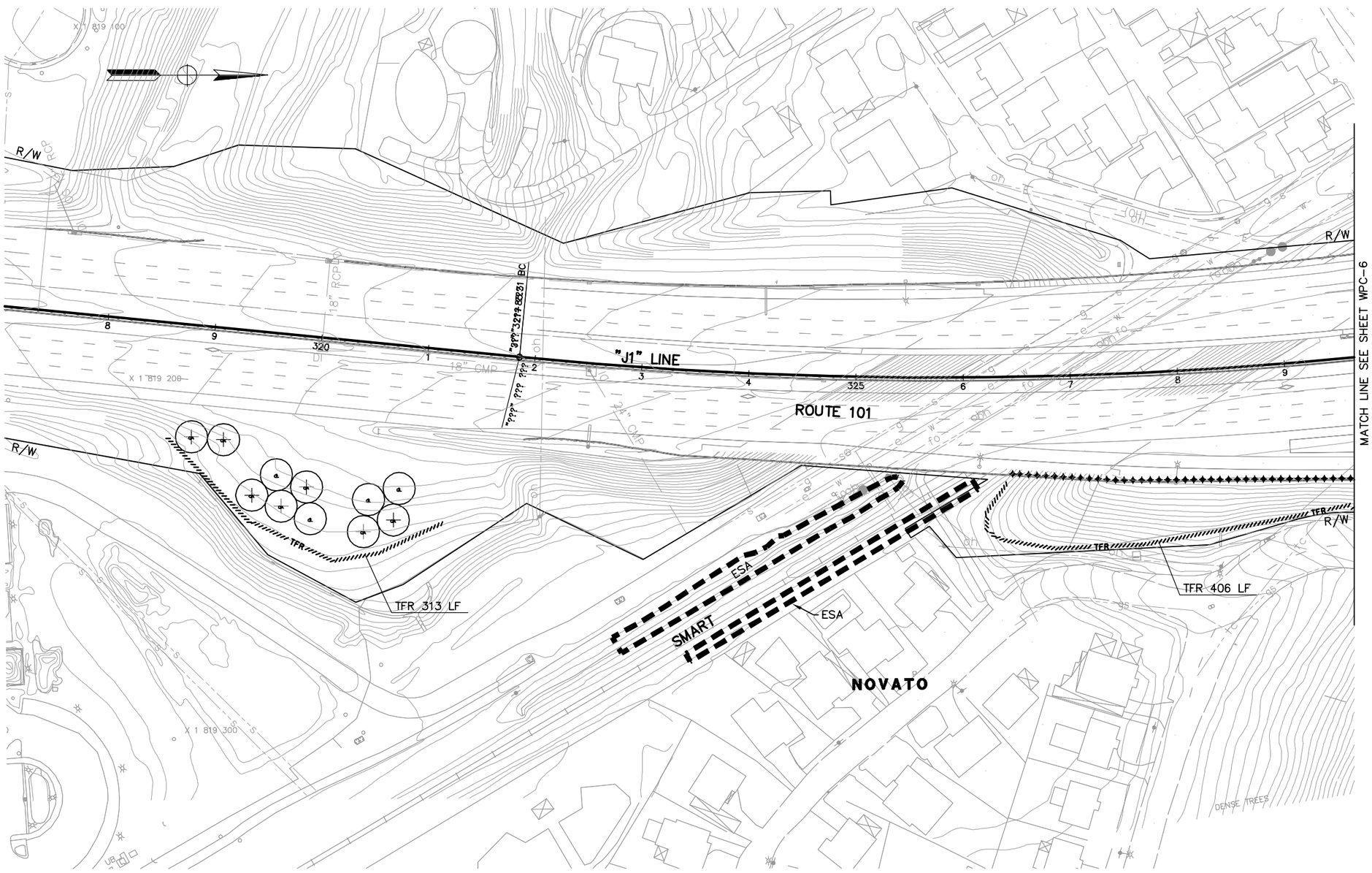

TEMPORARY WATER POLLUTION CONTROL PLAN

SCALE: 1" = 50'

FOR NOTE, ABBREVIATIONS AND LEGEND, SEE SHEET WPC-1

WPC-5

REVISED BY | DATE REVISED

CALCULATED-DESIGNED BY | CHECKED BY

CONSULTANT FUNCTIONAL SUPERVISOR
NATALINA V. BERNARDI

STATE OF CALIFORNIA – DEPARTMENT OF TRANSPORTATION
Caltrans

LAST REVISION 11-10-14

BORDER LAST REVISED 7/2/2010 | USERNAME => $USER DGN FILE => $REQUEST | RELATIVE BORDER SCALE IS IN INCHES 0 1 2 3 | UNIT 0716 | PROJECT NUMBER & PHASE 04140002211

Dist	COUNTY	ROUTE	POST MILES TOTAL PROJECT	SHEET No.	TOTAL SHEETS
4	Mrn	101	18.9/25.8		

REGISTERED CIVIL ENGINEER DATE

PLANS APPROVAL DATE

REGISTERED PROFESSIONAL ENGINEER N.V. BERNARDI No. 45407 Exp. 9/30/16 CIVIL STATE OF CALIFORNIA

THE STATE OF CALIFORNIA OR ITS OFFICERS OR AGENTS SHALL NOT BE RESPONSIBLE FOR THE ACCURACY OR COMPLETENESS OF SCANNED COPIES OF THIS PLAN SHEET.

BKF ENGINEERS
4670 WILLOW ROAD, SUITE 250
PLEASANTON, CA. 94588

TAM
781 LINCOLN AVENUE, SUITE 160
SAN RAFAEL, CA 94901

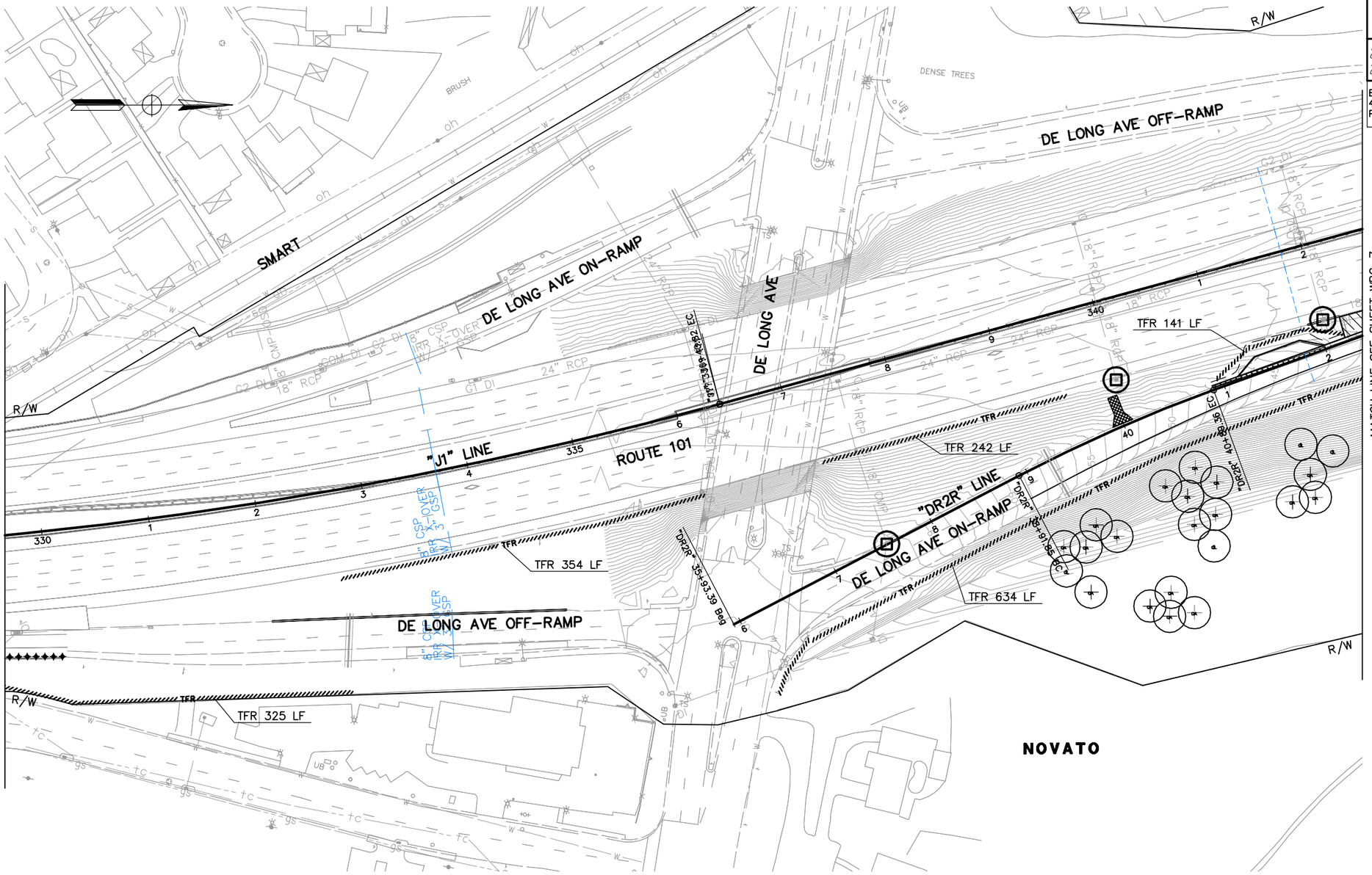

TEMPORARY WATER POLLUTION CONTROL PLAN

SCALE: 1" = 50'

FOR NOTE, ABBREVIATIONS AND LEGEND, SEE SHEET WPC-1

WPC-6

STATE OF CALIFORNIA – DEPARTMENT OF TRANSPORTATION

Caltrans

CONSULTANT FUNCTIONAL SUPERVISOR: NATALINA V. BERNARDI

CALCULATED-DESIGNED BY

CHECKED BY

REVISED BY

DATE REVISED

LAST REVISION 11-10-14

BORDER LAST REVISED 7/2/2010 | USERNAME => $USER | DGN FILE => $REQUEST | RELATIVE BORDER SCALE IS IN INCHES 0 1 2 3 | UNIT 0716 | PROJECT NUMBER & PHASE 04140002211

Dist	COUNTY	ROUTE	POST MILES TOTAL PROJECT	SHEET No.	TOTAL SHEETS
4	Mrn	101	18.9/25.8		

REGISTERED CIVIL ENGINEER DATE

PLANS APPROVAL DATE

REGISTERED PROFESSIONAL ENGINEER N.V. BERNARDI No. 45407 Exp. 9/30/16 CIVIL STATE OF CALIFORNIA

THE STATE OF CALIFORNIA OR ITS OFFICERS OR AGENTS SHALL NOT BE RESPONSIBLE FOR THE ACCURACY OR COMPLETENESS OF SCANNED COPIES OF THIS PLAN SHEET.

BKF ENGINEERS
4670 WILLOW ROAD, SUITE 250
PLEASANTON, CA. 94588

TAM
781 LINCOLN AVENUE, SUITE 160
SAN RAFAEL, CA 94901

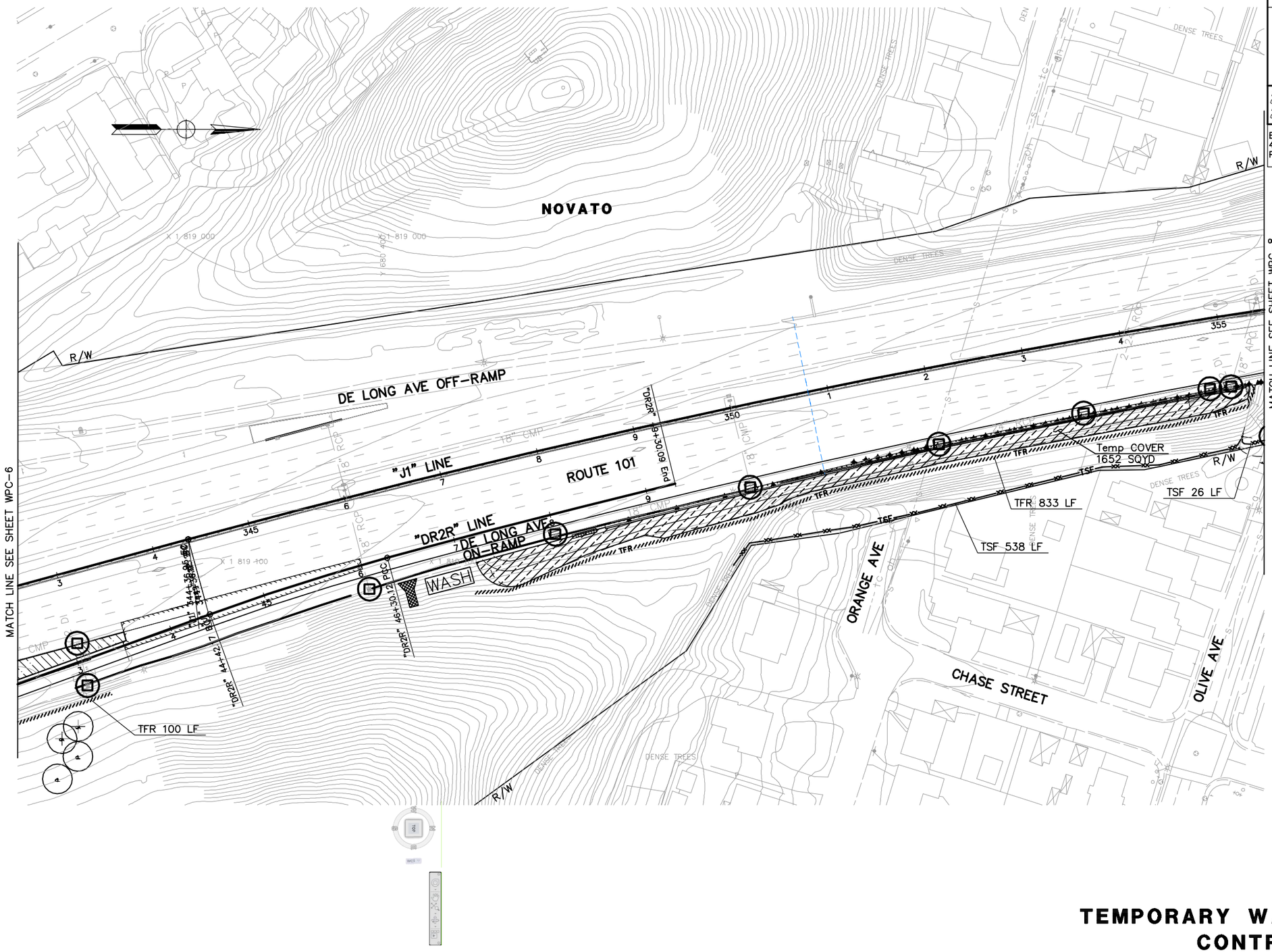

TEMPORARY WATER POLLUTION CONTROL PLAN

SCALE: 1" = 50'

FOR NOTE, ABBREVIATIONS AND LEGEND, SEE SHEET WPC-1

WPC-7

LAST REVISION 11-10-14

REVISED BY | DATE REVISED

CALCULATED-DESIGNED BY | CHECKED BY

CONSULTANT FUNCTIONAL SUPERVISOR
NATALINA V. BERNARDI

STATE OF CALIFORNIA – DEPARTMENT OF TRANSPORTATION
Caltrans

BORDER LAST REVISED 7/2/2010 | USERNAME => $USER | DGN FILE => $REQUEST | RELATIVE BORDER SCALE IS IN INCHES 0 1 2 3 | UNIT 0716 | PROJECT NUMBER & PHASE 04140002211

Dist	COUNTY	ROUTE	POST MILES TOTAL PROJECT	SHEET No.	TOTAL SHEETS
4	Mrn	101	18.9/25.8		

REGISTERED CIVIL ENGINEER DATE

PLANS APPROVAL DATE

REGISTERED PROFESSIONAL ENGINEER N.V. BERNARDI No. 45407 Exp. 9/30/16 CIVIL STATE OF CALIFORNIA

THE STATE OF CALIFORNIA OR ITS OFFICERS OR AGENTS SHALL NOT BE RESPONSIBLE FOR THE ACCURACY OR COMPLETENESS OF SCANNED COPIES OF THIS PLAN SHEET.

BKF ENGINEERS
4670 WILLOW ROAD, SUITE 250
PLEASANTON, CA. 94588

TAM
781 LINCOLN AVENUE, SUITE 160
SAN RAFAEL, CA 94901

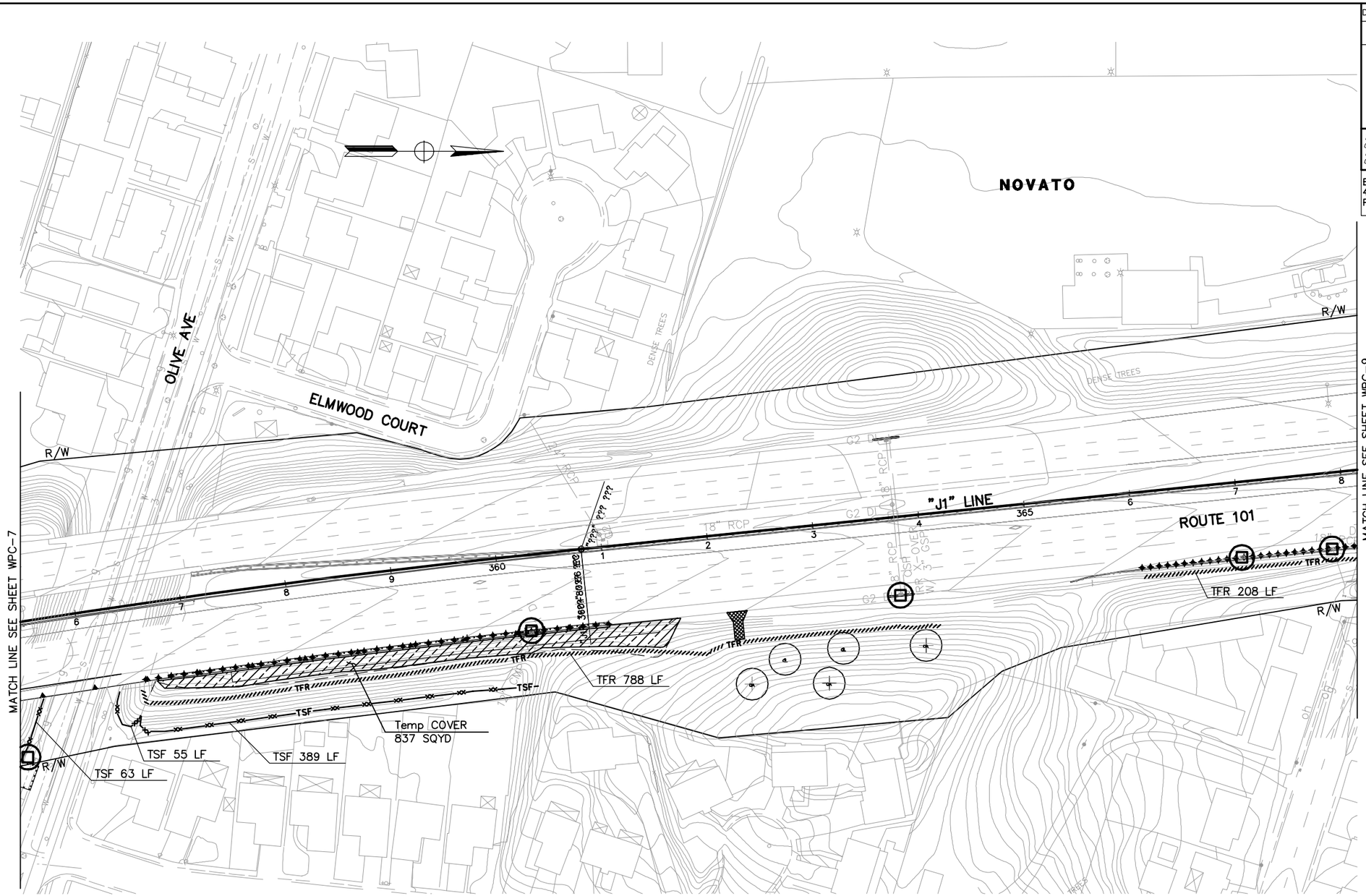

TEMPORARY WATER POLLUTION CONTROL PLAN

SCALE: 1" = 50'

FOR NOTE, ABBREVIATIONS AND LEGEND, SEE SHEET WPC-1

WPC-8

REVISED BY | DATE REVISED

CALCULATED-DESIGNED BY | CHECKED BY

CONSULTANT FUNCTIONAL SUPERVISOR
NATALINA V. BERNARDI

STATE OF CALIFORNIA – DEPARTMENT OF TRANSPORTATION
Caltrans

LAST REVISION 11-10-14

BORDER LAST REVISED 7/2/2010 | USERNAME =>$USER DGN FILE => $REQUEST | RELATIVE BORDER SCALE IS IN INCHES 0 1 2 3 | UNIT 0716 | PROJECT NUMBER & PHASE 04140002211

Dist	COUNTY	ROUTE	POST MILES TOTAL PROJECT	SHEET No.	TOTAL SHEETS
4	Mrn	101	18.9/25.8		

REGISTERED CIVIL ENGINEER DATE

PLANS APPROVAL DATE

REGISTERED PROFESSIONAL ENGINEER N.V. BERNARDI No. 45407 Exp. 9/30/16 CIVIL STATE OF CALIFORNIA

THE STATE OF CALIFORNIA OR ITS OFFICERS OR AGENTS SHALL NOT BE RESPONSIBLE FOR THE ACCURACY OR COMPLETENESS OF SCANNED COPIES OF THIS PLAN SHEET.

BKF ENGINEERS
4670 WILLOW ROAD, SUITE 250
PLEASANTON, CA. 94588

TAM
781 LINCOLN AVENUE, SUITE 160
SAN RAFAEL, CA 94901

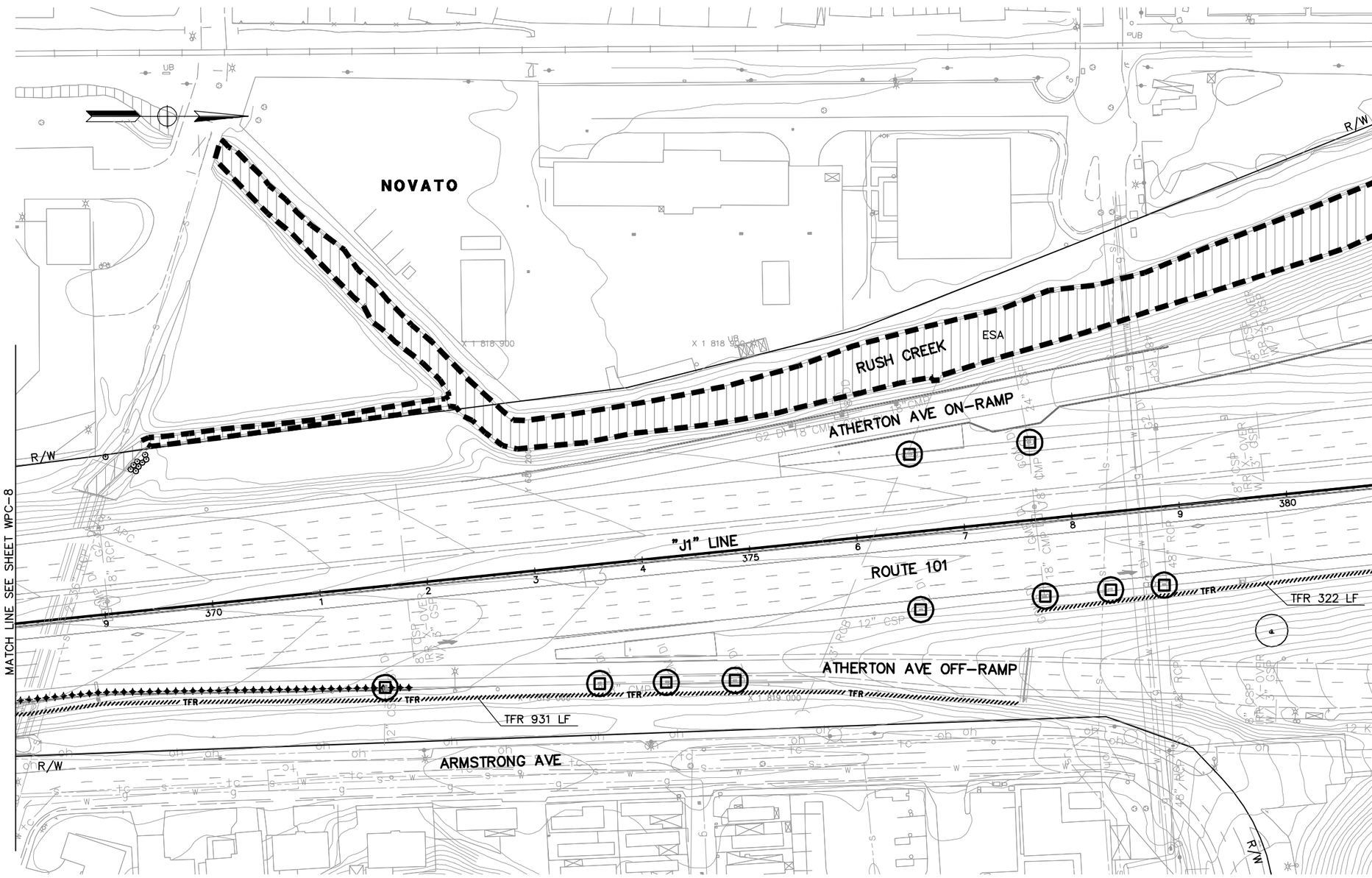

TEMPORARY WATER POLLUTION CONTROL PLAN

SCALE: 1" = 50'

FOR NOTE, ABBREVIATIONS AND LEGEND, SEE SHEET WPC-1

WPC-9

REVISED BY | DATE REVISED

CALCULATED-DESIGNED BY | CHECKED BY

CONSULTANT FUNCTIONAL SUPERVISOR
NATALINA V. BERNARDI

STATE OF CALIFORNIA – DEPARTMENT OF TRANSPORTATION
Caltrans

LAST REVISION 11-10-14

BORDER LAST REVISED 7/2/2010 | USERNAME => $USER DGN FILE => $REQUEST | RELATIVE BORDER SCALE IS IN INCHES 0 1 2 3 | UNIT 0716 | PROJECT NUMBER & PHASE 04140002211

Dist	COUNTY	ROUTE	POST MILES TOTAL PROJECT	SHEET No.	TOTAL SHEETS
4	Mrn	101	18.9/25.8		

REGISTERED CIVIL ENGINEER DATE

PLANS APPROVAL DATE

REGISTERED PROFESSIONAL ENGINEER N.V. BERNARDI No. 45407 Exp. 9/30/16 CIVIL STATE OF CALIFORNIA

THE STATE OF CALIFORNIA OR ITS OFFICERS OR AGENTS SHALL NOT BE RESPONSIBLE FOR THE ACCURACY OR COMPLETENESS OF SCANNED COPIES OF THIS PLAN SHEET.

BKF ENGINEERS
4670 WILLOW ROAD, SUITE 250
PLEASANTON, CA. 94588

TAM
781 LINCOLN AVENUE, SUITE 160
SAN RAFAEL, CA 94901

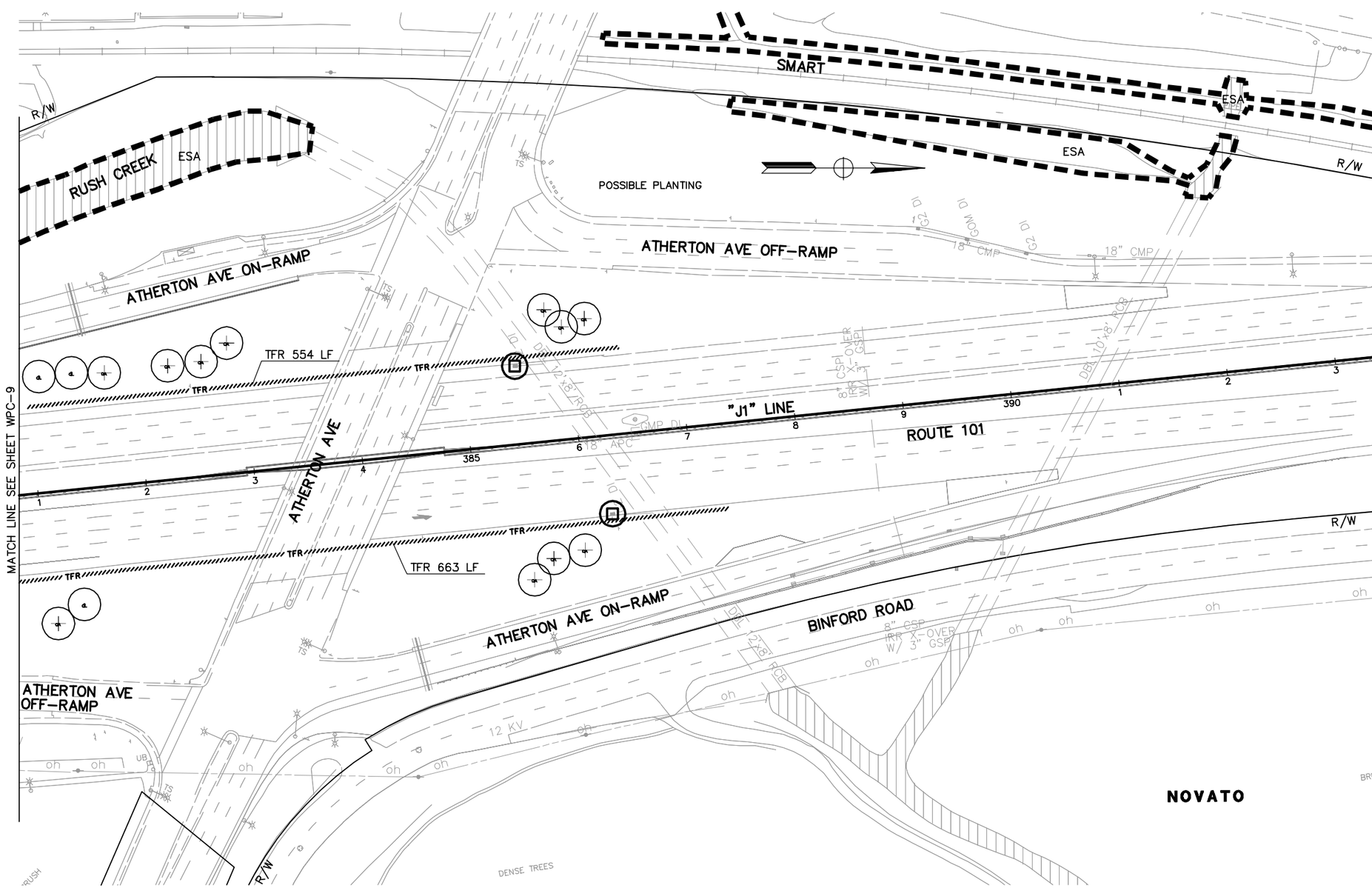

TEMPORARY WATER POLLUTION CONTROL PLAN

SCALE: 1" = 50'

FOR NOTE, ABBREVIATIONS AND LEGEND, SEE SHEET WPC-1

WPC-10

REVISED BY | DATE REVISED

CALCULATED-DESIGNED BY | CHECKED BY

CONSULTANT FUNCTIONAL SUPERVISOR
NATALINA V. BERNARDI

STATE OF CALIFORNIA – DEPARTMENT OF TRANSPORTATION
Caltrans

LAST REVISION 11-10-14

BORDER LAST REVISED 7/2/2010 | USERNAME => $USER DGN FILE => $REQUEST | RELATIVE BORDER SCALE IS IN INCHES 0 1 2 3 | UNIT 0716 | PROJECT NUMBER & PHASE 04140002211

Dist	COUNTY	ROUTE	POST MILES TOTAL PROJECT	SHEET No.	TOTAL SHEETS
4	Mrn	101	18.9/25.8		

REGISTERED CIVIL ENGINEER DATE

PLANS APPROVAL DATE

REGISTERED PROFESSIONAL ENGINEER N.V. BERNARDI No. 45407 Exp. 9/30/16 CIVIL STATE OF CALIFORNIA

THE STATE OF CALIFORNIA OR ITS OFFICERS OR AGENTS SHALL NOT BE RESPONSIBLE FOR THE ACCURACY OR COMPLETENESS OF SCANNED COPIES OF THIS PLAN SHEET.

BKF ENGINEERS
4670 WILLOW ROAD, SUITE 250
PLEASANTON, CA. 94588

TAM
781 LINCOLN AVENUE, SUITE 160
SAN RAFAEL, CA 94901

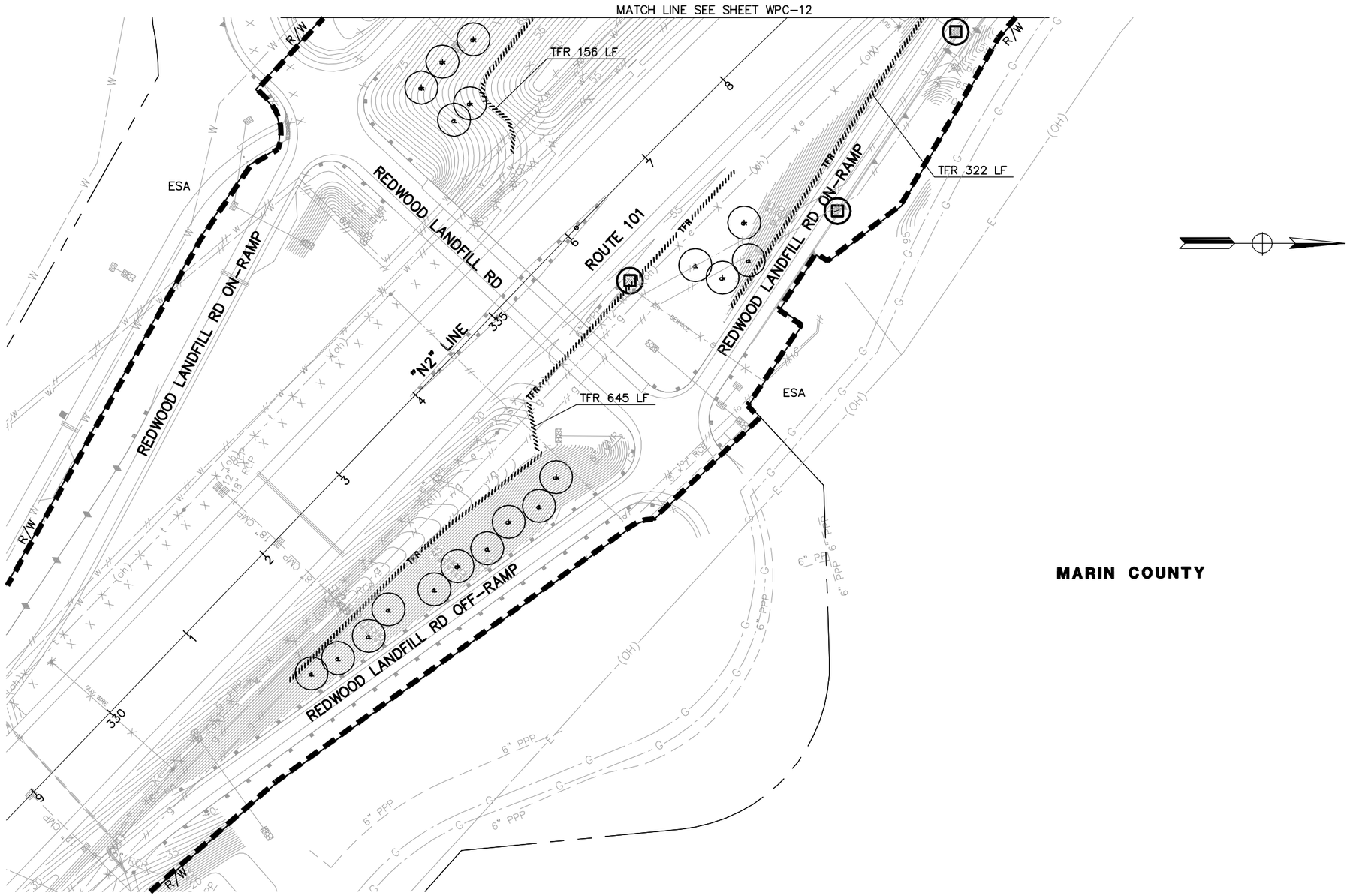

MARIN COUNTY

TEMPORARY WATER POLLUTION CONTROL PLAN

SCALE: 1" = 50'

FOR NOTE, ABBREVIATIONS AND LEGEND, SEE SHEET WPC-1

WPC-11

LAST REVISION 11-10-14

REVISED BY | DATE REVISED

CALCULATED-DESIGNED BY | CHECKED BY

CONSULTANT FUNCTIONAL SUPERVISOR
NATALINA V. BERNARDI

STATE OF CALIFORNIA – DEPARTMENT OF TRANSPORTATION
Caltrans

BORDER LAST REVISED 7/2/2010 | USERNAME =>$USER DGN FILE => $REQUEST | RELATIVE BORDER SCALE IS IN INCHES 0 1 2 3 | UNIT 0716 | PROJECT NUMBER & PHASE 04140002211

Dist	COUNTY	ROUTE	POST MILES TOTAL PROJECT	SHEET No.	TOTAL SHEETS
4	Mrn	101	18.9/25.8		

REGISTERED CIVIL ENGINEER DATE

PLANS APPROVAL DATE

REGISTERED PROFESSIONAL ENGINEER N.V. BERNARDI No. 45407 Exp. 9/30/16 CIVIL STATE OF CALIFORNIA

THE STATE OF CALIFORNIA OR ITS OFFICERS OR AGENTS SHALL NOT BE RESPONSIBLE FOR THE ACCURACY OR COMPLETENESS OF SCANNED COPIES OF THIS PLAN SHEET.

BKF ENGINEERS
4670 WILLOW ROAD, SUITE 250
PLEASANTON, CA. 94588

TAM
781 LINCOLN AVENUE, SUITE 160
SAN RAFAEL, CA 94901

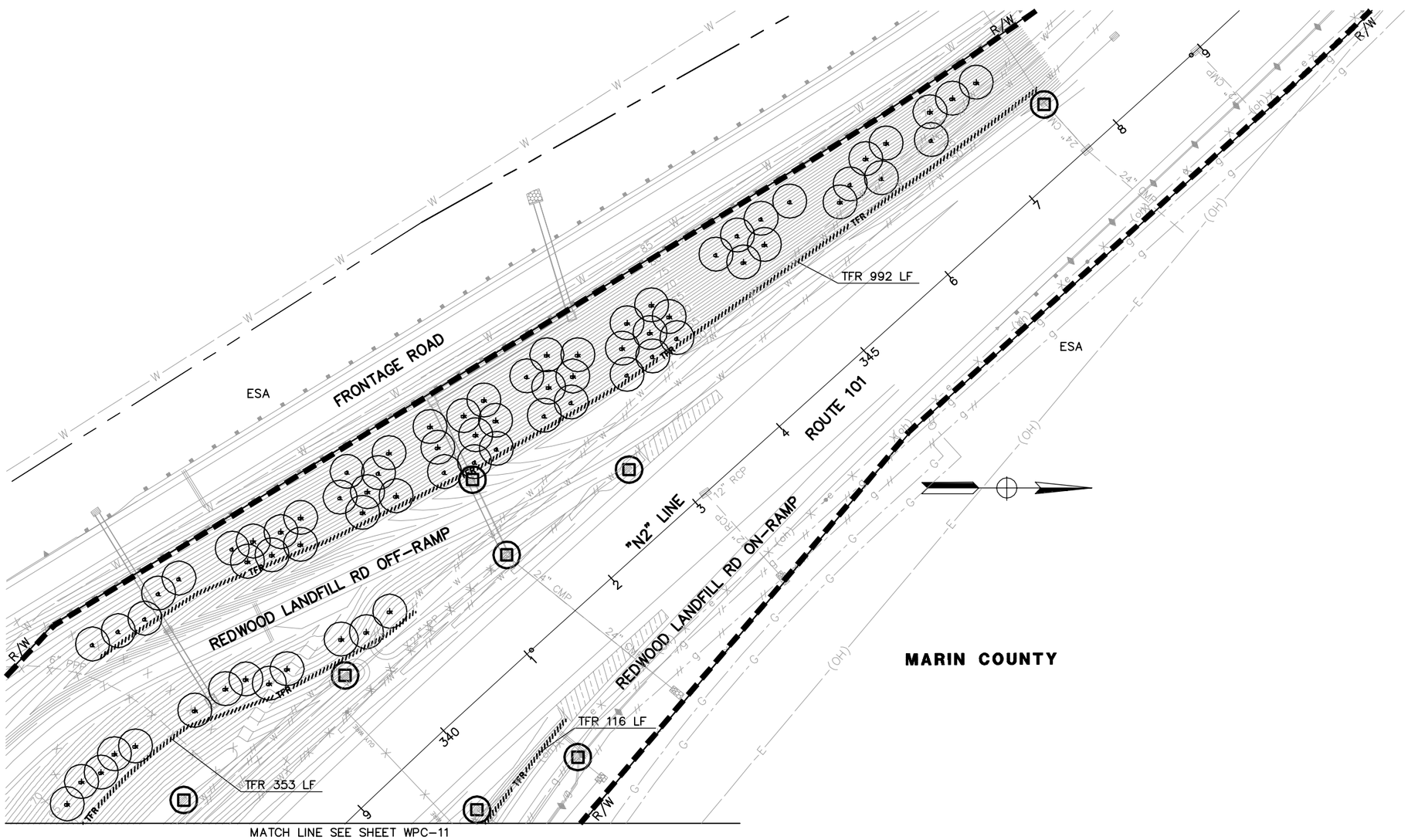

FOR NOTE, ABBREVIATIONS AND LEGEND, SEE SHEET WPC-1

TEMPORARY WATER POLLUTION CONTROL PLAN

SCALE: 1" = 50'

WPC-12

REVISED BY | DATE REVISED

CALCULATED-DESIGNED BY | CHECKED BY

CONSULTANT FUNCTIONAL SUPERVISOR
NATALINA V. BERNARDI

STATE OF CALIFORNIA – DEPARTMENT OF TRANSPORTATION
Caltrans

LAST REVISION 11-10-14

BORDER LAST REVISED 7/2/2010 | USERNAME =>$USER DGN FILE => $REQUEST | RELATIVE BORDER SCALE IS IN INCHES 0 1 2 3 | UNIT 0716 | PROJECT NUMBER & PHASE 04140002211

5. Bay Area Clean Water Agencies (BACWA): Bay Area Recycled Water Commercial Truck Fill Location Guide, January 2015

BACWA
BAY AREA
CLEAN WATER
AGENCIES

Bay Area Recycled Water Commercial Truck Fill Facilities Location Guide

January 2015

WHITLEY BURCHETT *& Associates*

Background

This Guide was prepared by Whitley Burchett & Associates under contract with Bay Area Clean Water Agencies and under the direction of the BACWA Recycled Water Committee. The Guide was prepared in response to inquiries of commercial recycled water truck fill facilities in the Bay Area. It is the Recycled Water Committee's intention to update this Guide annually. If you see any information that should be updated, have a facility to add to this Guide, or have any questions please email Info@bacwa.org.

Disclaimer

The intent of this Guide is to provide prospective water haulers with general information regarding the location of Bay Area Recycled Water Commercial Truck Fill Facilities, permit requirements, and associated fees for recycled water. Information in this Guide represents data collected in the fall of 2014. Please contact agencies directly for current information.

Cover Photos

Top row from left to right:	San Francisco Public Utilities Commission, Dublin San Ramon Services District
Bottom row:	East Bay Municipal Utility District

Acknowledgements

This Guide was prepared in conjunction with the BACWA agencies. The time spent by agencies providing program information and review of this document is greatly appreciated.

Electronic Version

The BACWA Truck Fill Guide is available on the BACWA website at http://bacwa.org.

TABLE OF CONTENTS

Bay Area Commercial Recycled Water Truck Fill Facilities Location Map…… ii
List of Agencies with Commercial Fill Facilities Sorted by County/City……iii

SECTION 1 - RECYCLED WATER COMMERCIAL TRUCK FILL FACILITIES INFORMATION

Calistoga, City of…… 1
Central Contra Costa Sanitary District……2
Dublin San Ramon Services District……..……3
East Bay Municipal Utility District…… 4
Livermore, City of…… 5
Marin Municipal Water District……6
Milpitas, City of…… 7
Napa Sanitation District…… 8
North Marin Water District…… 9
Oro Loma/East Bay Dischargers Authority…… 10
Palo Alto, City of……11
Petaluma, City of……12
Redwood City, City of……13
San Francisco International Airport……14
San Francisco Public Utilities Commission……15
Santa Rosa, City of……16
Sonoma County Water Agency……17
South Bay Water Recycling and City of San Jose……18
Sunnyvale, City of……19
Yountville, Town of……..20

SECTION 2 - ADDITIONAL COMMERCIAL TRUCK FILL FACILITIES IN 2015

Commercial Fill Facilities Planned to be Operational in 2015…… 21

SECTION 3 - POTENTIAL FUTURE COMMERCIAL TRUCK FILL FACILITIES

Agencies That May Consider Fill Facilities in the Future…… 22

SECTION 4 - Recycled Water Uses Allowed in California

Recycled Water Uses Allowed in California…… 23

Bay Area Commercial Recycled Water Truck Fill Facilities Location Map

* Indicates the general location of a truck fill facility.

List of Agencies with Recycled Water Commercial Truck Fill Facilities Sorted by County/City

COUNTY/CITY	AGENCY	PAGE NO.
ALAMEDA COUNTY		
Dublin	Dublin San Ramon Services District	3
Livermore	City of Livermore	5
Oakland	East Bay Municipal Utility District	4
San Lorenzo	Oro Loma/East Bay Dischargers Authority	10
CONTRA COSTA COUNTY		
Concord	Central Contra Costa Sanitary District	2
Martinez	Central Contra Costa Sanitary District	2
Richmond	East Bay Municipal Utility District	4
MARIN COUNTY		
Novato	North Marin Water District	9
San Rafael	Marin Municipal Water District	6
NAPA COUNTY		
Calistoga	City of Calistoga	1
Napa	Napa Sanitation District	8
Yountville	Town of Yountville	20
SAN FRANCISCO		
San Francisco	San Francisco Public Utilities Commission	15
SAN MATEO COUNTY		
San Francisco	San Francisco International Airport	14
Redwood City	City of Redwood City	13
SANTA CLARA COUNTY		
Milpitas	City of Milpitas	7
Palo Alto	City of Palo Alto	11
San Jose	South Bay Water Recycling and City of San Jose	18
Sunnyvale	City of Sunnyvale	19
SONOMA COUNTY		
Petaluma	City of Petaluma	12
Santa Rosa	City of Santa Rosa	16
Sonoma	Sonoma County Water Agency	17

SECTION 1

Recycled Water Commercial Truck Fill Facilities Information

CITY OF CALISTOGA

707.942.2782

www.ci.calistoga.ca.us

Recycled Water Fill Facilities:

Treatment Plant: Yes

Distribution System: No

Can water be used outside of this agency's service area? No

Hydrant Fill Facilities

Location: None

Number of Fill Facilities:

Connection Device:

Quality:

Truck Size Limits:

Quantity Limitations per Trip:

Truck Weight Limits:

Other Restrictions:

Additional Access Information:

Fill Facilities at Treatment Plant

Location: Dunaweal Wastewater Treatment Plant (call for address)

Quality: Disinfected Tertiary

Type of Connection: Side

Quantity Limitations per Trip: No Minimum
Maximum up to truck limit

Hours: Mon-Fri 7 a.m. - 3:30 p.m.

Appointment Required: No

Quantity Limitations per Day: No Minimum
Maximum 50,000 gal

Truck Size Limits: None

Truck Weight Limits: None

Additional Access Information:

Training

Required: No

Duration:

Who:

Frequency:

Schedule:

Location:

Length of time to become authorized truck hauler: 1 business day

Signage

Area Use Signage Required: No

Vehicle Signage Required: Yes

Signs Provided by Water Agency: N/A

Signs Provided by Water Agency: Yes

Vehicle Inspection

Required: No

Inspection Location:

Duration:

Re-inspection Required:

How to schedule:

Fees

Water: No Charge

Training: No Charge

Connection Device: No Charge

Permit: No Charge

Vehicle Signage: No Charge

Use Area Signage: N/A

Other:

CENTRAL CONTRA COSTA SANITARY DISTRICT

925.228.9500

www.centralsan.org

Recycled Water Fill Facilities:

Treatment Plant: No

Distribution System: Yes

Can water be used outside of this agency's service area? Yes

Hydrant Fill Facilities

Location: Locations in Concord (Willow Way) and Martinez (Marsh Drive)

Number of Fill Facilities: 3

Connection Device: Hydrant key and Construction meter

Quality: Disinfected Tertiary

Truck Size Limits: Max. truck length 18 ft.

Quantity Limitations per Trip: No Minimum Maximum 6,000 gal

Truck Weight Limits: No limit

Other Restrictions:

Additional Access Information: Fill times: Mon.-Fri. 7 a.m. - 5 p.m. (can be negotiated)

Fill Facilities at Treatment Plant

Location: None

Quality:

Type of Connection:

Quantity Limitations per Trip:

Hours:

Appointment Required:

Quantity Limitations per Day:

Truck Size Limits:

Truck Weight Limits:

Additional Access Information:

Training

Required: Yes

Duration: 15 minutes

Who: Either Truck Owner, Truck Driver, or Customer using water

Frequency: Only Once

Schedule: By Appointment

Location: Recycled Water Treatment Plant

Length of time to become authorized truck hauler: 1 business day

Signage

Area Use Signage Required: No

Vehicle Signage Required: Yes

Signs Provided by Water Agency: N/A

Signs Provided by Water Agency: Yes

Vehicle Inspection

Required: No

Inspection Location:

Duration:

Re-inspection Required:

How to schedule:

Fees

Water: $3.28 per 1,000 gal

Training: No Charge

Connection Device: $750 (refundable deposit)

Permit: No Charge

Vehicle Signage: No Charge

Use Area Signage: N/A

Other:

DUBLIN SAN RAMON SERVICES DISTRICT

925.875.2334

www.dsrsd.com

Recycled Water Fill Facilities:

Treatment Plant: Yes
Distribution System: Yes
Can water be used outside of this agency's service area? Yes

Hydrant Fill Facilities

Location: Dublin, CA - see website for locations
Number of Fill Facilities: 10+
Connection Device: Construction Meter
Quality: Disinfected Tertiary
Truck Size Limits: None
Quantity Limitations per Trip: No Minimum
Maximum up to truck limit
Truck Weight Limits: None
Other Restrictions: Permit plus $1,000 refundable deposit for meter required.
Additional Access Information: Obtain permit and meter at 7051 Dublin Blvd, Dublin.

Fill Facilities at Treatment Plant

Location: DSRSD Wastewater Treatment Plant
7399 Johnson Drive, Pleasanton
Quality: Disinfected Tertiary
Type of Connection: Overhead and Large Hose Bib
Quantity Limitations per Trip: No Minimum
Maximum up to truck limit
Hours: 24 hrs/day, 7 days/wk*
Appointment Required: No
Quantity Limitations per Day: No Minimum
No Maximum
Truck Size Limits: None
Truck Weight Limits: None
Additional Access Information: *After business hours truck drivers must use special gate access code to enter the plant. The access code is valid only during hours specified in the permit.

Training

Required: Yes
Duration: 15 min
Who: Truck Owner and Driver
Frequency: Once
Schedule: By Appointment
Location: Recycled Water Plant
Length of time to become authorized truck hauler: 1 business day

Signage

Area Use Signage Required: No
Vehicle Signage Required: Yes
Signs Provided by Water Agency: N/A
Signs Provided by Water Agency: Yes

Vehicle Inspection

Required: No
Inspection Location:
Duration:
Re-inspection Required:
How to schedule:

Fees

Water: Hydrant- check with DSRSD for current fee; Plant- $10/truck load
Training: No Charge
Permit: Hydrant- No permit fee; Treatment Plant- $73/year
Connection Device: Hydrant access- $1,000 deposit for construction meter; Treatment Plant- No connection device charge
Use Area Signage: N/A
Vehicle Signage: No Charge
Other:

EAST BAY MUNICIPAL UTILITY DISTRICT

510.287.1346

www.ebmud.com

Recycled Water Fill Facilities:

Treatment Plant: Yes

Distribution System: No

Can water be used outside of this agency's service area? Check with EBMUD

Hydrant Fill Facilities

Location: None

Number of Fill Facilities:

Connection Device:

Quality:

Truck Size Limits:

Quantity Limitations per Trip:

Truck Weight Limits:

Other Restrictions:

Additional Access Information: www.ebmud.com, search "Recycled Water Truck Program"

Fill Facilities at Treatment Plant

Locations: 1) EBMUD Wastewater Treatment Plant, Oakland
2) North Richmond Water Recycling Plant, Richmond

Quality: Disinfected Tertiary

Type of Connection: Hydrant

Quantity Limitations per Trip: No Minimum
Maximum up to truck limit

Hours: 24 hrs/day, 7 days/wk

Appointment Required: Only for first visit

Quantity Limitations per Day: No Minimum
No Maximum

Truck Size Limits: None

Truck Weight Limits: None

Additional Access Information: 1) EBMUD Wastewater Treatment Plant - enter through the main security gate at the plant to obtain access to the fill hydrant. 2) North Richmond Plant - hydrant is located outside of the plant gate and is accessible with a hydrant key.

Training

Required: Yes

Duration: 15 minutes

Who: Truck Driver

Frequency: Once

Schedule: By Appointment

Location: Recycled Water Plant

Length of time to become authorized truck hauler: 5 business days

Signage

Area Use Signage Required: No

Vehicle Signage Required: Yes

Signs Provided by Water Agency: N/A

Signs Provided by Water Agency: Yes

Vehicle Inspection

Required: Yes

Inspection Location: Recycled Water Plant

Duration: Less than 1 hour

Re-inspection Required: No

How to schedule: To be conducted at time of training

Fees

Water: No Charge

Training: No Charge

Connection Device: No Charge

Permit: No Charge

Vehicle Signage: No Charge

Use Area Signage: N/A

Other:

CITY OF LIVERMORE

925.960.8138

Recycled Water Fill Facilities:

Treatment Plant: No

Distribution System: Yes

Can water be used outside of this agency's service area? No

Hydrant Fill Facilities

Location: Call for address

Number of Fill Facilities: 10+

Connection Device: Construction meter and Hydrant Key

Quality: Disinfected Tertiary

Truck Size Limits: No limit

Quantity Limitations per Trip: No Minimum
Maximum up to truck limit

Truck Weight Limits: No limit

Other Restrictions:

Additional Access Information:

Fill Facilities at Treatment Plant

Location: None

Quality:

Type of Connection:

Quantity Limitations per Trip:

Hours:

Appointment Required:

Quantity Limitations per Day:

Truck Size Limits:

Truck Weight Limits:

Additional Access Information:

Training

Required: Yes

Duration: 2 hours or less

Who: Truck Driver

Frequency: Once

Schedule: At time of hydrant meter deposit

Location: Administration Building

Length of time to become authorized truck hauler: 1 business day

Signage

Area Use Signage Required: Yes

Vehicle Signage Required: Yes

Signs Provided by Water Agency: Yes

Signs Provided by Water Agency: Yes

Vehicle Inspection

Required: No

Inspection Location:

Duration:

Re-inspection Required:

How to schedule:

Fees

Water: $2.37 per CCF

Training: No Charge

Connection Device: $1,000

Permit: No Charge

Vehicle Signage: Varies

Use Area Signage: No Charge

Other: Monthly service charge of $195.30

MARIN MUNICIPAL WATER DISTRICT

415.945.1557

Recycled Water Fill Facilities:

Treatment Plant: No

Distribution System: Yes

Can water be used outside of this agency's service area? No

Hydrant Fill Facilities

Location: Call for location

Number of Fill Facilities: 1

Connection Device: Hose Bib

Quality: Disinfected Tertiary

Truck Size Limits: No limit

Quantity Limitations per Trip: No Minimum
Maximum up to truck limit

Truck Weight Limits: No limit

Other Restrictions:

Additional Access Information:

Fill Facilities at Treatment Plant

Location: None

Quality:

Type of Connection:

Quantity Limitations per Trip:

Hours:

Appointment Required:

Quantity Limitations per Day:

Truck Size Limits:

Truck Weight Limits:

Additional Access Information:

Training

Required: Yes

Duration: 2 hours or less

Who: Truck Driver

Frequency: Once

Schedule: By Appointment

Location: Administration Building or Hydrant Fill Facility

Length of time to become authorized truck hauler: 6 business days

Signage

Area Use Signage Required: Yes

Vehicle Signage Required: Yes

Signs Provided by Water Agency: Yes

Signs Provided by Water Agency: Yes

Vehicle Inspection

Required: Yes

Inspection Location: Administration Building

Duration: 1 hour or less

Re-inspection Required: Annually

How to schedule: Appointment

Fees

Water: Tier 1: 0-100 CCF @ $2.57 per CCF; Tier 2: 101-150 CCF @ $7.48 per CCF Tier 3: over 150 CCF @ $14.97 per CCF

Training: No Charge

Connection Device: No Charge

Permit: No Charge

Vehicle Signage: No Charge

Use Area Signage: No Charge

Other:

CITY OF MILPITAS

408.586.3355

www.ci.milpitas.ca.gov

Recycled Water Fill Facilities:

Treatment Plant: No

Distribution System: Yes

Can water be used outside of this agency's service area? Yes

Hydrant Fill Facilities

Location: Call for locations

Number of Fill Facilities: 5

Connection Device: Hydrant key and Construction meter

Quality: Disinfected Tertiary

Truck Size Limits: check with City

Quantity Limitations per Trip: No Minimum
Maximum up to truck limit

Truck Weight Limits: check with City

Other Restrictions: M-F: 7 a.m. to 7 p.m.

Additional Access Information: Secure access. Gate key to be provided at training.

Fill Facilities at Treatment Plant

Location: None

Quality:

Type of Connection:

Quantity Limitations per Trip:

Hours:

Appointment Required:

Quantity Limitations per Day:

Truck Size Limits:

Truck Weight Limits:

Additional Access Information:

Training

Required: Yes

Duration: 1 hour

Who: Truck Owner, Truck Driver, and Customer

Frequency: Once

Schedule: By Appointment and Semi-Annually

Location: Administration Building or Hydrant fill facility

Length of time to become authorized truck hauler: 2 business days

Signage

Area Use Signage Required: Yes

Vehicle Signage Required: Yes

Signs Provided by Water Agency: No

Signs Provided by Water Agency: Yes

Vehicle Inspection

Required: Yes

Inspection Location: Administration Building or Hydrant fill facility

Duration: 1 hour or less

How to schedule: Appointment

Re-inspection Required: Annually

Fees

Water: $2.65 per HCF

Training: No Charge

Connection Device: $2,000

Permit: No Charge

Vehicle Signage: No charge

Use Area Signage: No charge

Other: Monthly fee of $75

NAPA SANITATION DISTRICT

707.258.6029

www.napasan.com

Recycled Water Fill Facilities:

Treatment Plant: Yes
Distribution System: No
Can water be used outside of this agency's service area? Yes

Hydrant Fill Facilities

Location: None
Number of Fill Facilities:
Connection Device:
Quality:
Truck Size Limits:
Quantity Limitations per Trip:
Truck Weight Limits:
Other Restrictions:
Additional Access Information:

Fill Facilities at Treatment Plant

Location: Soscol Water Recycling Facility (call for address)
Quality: Disinfected Tertiary
Type of Connection: Side
Quantity Limitations per Trip: No Minimum
Maximum up to truck limit
Hours: 7:30 a.m. - 4:30 p.m. Daily
Appointment Required: No
Quantity Limitations per Day: No Minimum
No Maximum
Truck Size Limits: None
Truck Weight Limits: None
Additional Access Information:

Training

Required: Yes
Duration: 2 hours or less
Who: Truck Owner, Truck Driver, and Customer
Frequency: Once, plus Annual Refresher
Schedule: By Appointment
Location: Recycled Water Plant
Length of time to become authorized truck hauler: 2 business days

Signage

Area Use Signage Required: Yes
Vehicle Signage Required: Yes
Signs Provided by Water Agency: Yes
Signs Provided by Water Agency: Yes

Vehicle Inspection

Required: Yes
Inspection Location: Recycled Water Plant
Duration: 15 min
Re-inspection Required:
How to schedule: By Appointment

Fees

Water: $0.98 per 1,000 gal
Training: No Charge
Connection Device: No Charge
Permit: $50
Vehicle Signage: $6 per sticker and $10.50 per plastic sign
Use Area Signage: $6 per sticker and $10.50 per plastic sign
Other:

NORTH MARIN WATER DISTRICT

415.761.8912

www.nmwd.com

Recycled Water Fill Facilities:

Treatment Plant: No

Distribution System: Yes

Can water be used outside of this agency's service area? No

Hydrant Fill Facilities

Location: Call for address

Number of Fill Facilities: 10+

Connection Device: Hydrant key

Quality: Disinfected Tertiary

Truck Size Limits: No limit

Quantity Limitations per Trip: No Minimum
Maximum up to truck limit

Truck Weight Limits: No limit

Other Restrictions:

Additional Access Information:

Fill Facilities at Treatment Plant

Location: None

Quality:

Type of Connection:

Quantity Limitations per Trip:

Hours:

Appointment Required:

Quantity Limitations per Day:

Truck Size Limits:

Truck Weight Limits:

Additional Access Information:

Training

Required: No

Duration:

Who:

Frequency:

Schedule:

Location:

Length of time to become authorized truck hauler: 1 business day

Signage

Area Use Signage Required: No

Vehicle Signage Required: Yes

Signs Provided by Water Agency: N/A

Signs Provided by Water Agency: Yes

Vehicle Inspection

Required: No

Inspection Location:

Duration:

Re-inspection Required:

How to schedule:

Fees

Water: $5.00 per load; no max.

Training: N/A

Connection Device: No Charge

Permit: No Charge

Vehicle Signage: No Charge

Use Area Signage: N/A

Other:

ORO LOMA

510.276.4700

Recycled Water Fill Facilities:

Treatment Plant: Yes

Distribution System: No

Can water be used outside of this agency's service area? Yes

Hydrant Fill Facilities

Location: None

Number of Fill Facilities:

Connection Device:

Quality:

Truck Size Limits:

Quantity Limitations per Trip:

Truck Weight Limits:

Other Restrictions:

Additional Access Information:

Fill Facilities at Treatment Plant

Location: Oro Loma Treatment Facility (call for address)

Quality: Disinfected Secondary-2.2

Type of Connection: Overhead

Quantity Limitations per Trip: No Minimum
Maximum up to truck limit

Hours: M-F: 6 a.m. - 5 p.m.

Appointment Required: No

Quantity Limitations per Day: No Minimum
No Maximum

Truck Size Limits: None

Truck Weight Limits: None

Additional Access Information:

Training

Required: Yes

Duration: 15 min

Who: Truck Driver

Frequency: Once

Schedule: By Appointment

Location: Recycled Water Plant

Length of time to become authorized truck hauler: 1 business day

Signage

Area Use Signage Required: No

Vehicle Signage Required: No

Signs Provided by Water Agency: N/A

Signs Provided by Water Agency: N/A

Vehicle Inspection

Required: No

Inspection Location:

Duration:

Re-inspection Required:

How to schedule:

Fees

Water: No Charge

Training: No Charge

Connection Device: No Charge

Permit: No Charge

Vehicle Signage: N/A

Use Area Signage: N/A

Other:

CITY OF PALO ALTO

650.329.2598

Recycled Water Fill Facilities:

Treatment Plant: Yes
Distribution System: No
Can water be used outside of this agency's service area? Yes

Hydrant Fill Facilities

Location: None
Number of Fill Facilities:
Connection Device:
Quality:
Truck Size Limits:
Quantity Limitations per Trip:
Truck Weight Limits:
Other Restrictions:
Additional Access Information:

Fill Facilities at Treatment Plant

Location: Palo Alto Regional Water Quality Control Plant (call for address)
Quality: Disinfected Tertiary
Type of Connection: Overhead and Side
Quantity Limitations per Trip: No Minimum
Maximum up to truck limit
Hours: Mon-Fri 6:30 a.m. - 5 p.m.
Appointment Required: No
Quantity Limitations per Day: No Minimum
No Maximum
Truck Size Limits: None
Truck Weight Limits: None
Additional Access Information:

Training

Required: Yes
Duration: 2 hours or less
Who: Truck Driver
Frequency: Once
Schedule: By Appointment
Location: Recycled Water Plant
Length of time to become authorized truck hauler: 1 business day

Signage

Area Use Signage Required: Yes
Vehicle Signage Required: Yes
Signs Provided by Water Agency: No
Signs Provided by Water Agency: No

Vehicle Inspection

Required: No
Inspection Location:
Duration:
Re-inspection Required:
How to schedule:

Fees

Water: No Charge
Training: No Charge
Connection Device: No Charge
Permit: $50 per year
Vehicle Signage: User provides
Use Area Signage: User provides
Other:

CITY OF PETALUMA

707.776.3726

Recycled Water Fill Facilities:

Treatment Plant: Yes

Distribution System: No

Can water be used outside of this agency's service area? Yes

Hydrant Fill Facilities

Location: None

Number of Fill Facilities:

Connection Device:

Quality:

Truck Size Limits:

Quantity Limitations per Trip:

Truck Weight Limits:

Other Restrictions:

Additional Access Information:

Fill Facilities at Treatment Plant

Location: Ellis Creek Water Recycling Facility (call for address)

Quality: Disinfected Tertiary

Type of Connection: Overhead

Quantity Limitations per Trip: No Minimum
Maximum up to truck limit

Hours: Mon-Fri 7 a.m. - 4:30 p.m.

Appointment Required: No

Quantity Limitations per Day: No Minimum
No Maximum

Truck Size Limits: None

Truck Weight Limits: None

Additional Access Information:

Training

Required: Yes

Duration: 2 hours or less

Who: Truck Driver and
Customer using water

Frequency: Once

Location: Recycled Water Plant

Schedule: By Appointment

Additional Permit Requirement: City inspects all recycled water use sites, and performs cross connection checks. City issues permit to recycled water user. Recycled water user must contact City to initiate water hauling. Time to issue permit varies.

Length of time to become authorized truck hauler: Varies. Contact City.

Signage

Area Use Signage Required: Yes

Vehicle Signage Required: Yes

Signs Provided by Water Agency: Yes

Signs Provided by Water Agency: Yes

Vehicle Inspection

Required: No

Inspection Location:

Duration:

Re-inspection Required:

How to schedule:

Fees

Water: $1.88 per HCF

Training: No Charge

Connection Device: No Charge

Permit: No Charge

Vehicle Signage: No Charge

Use Area Signage: No Charge

Other:

CITY OF REDWOOD CITY

650.780.7470

Recycled Water Fill Facilities:

Treatment Plant: No

Distribution System: Yes

Can water be used outside of this agency's service area? Yes

Hydrant Fill Facilities

Location: Call for address

Number of Fill Facilities: 4

Connection Device: Construction Meter

Quality: Disinfected Tertiary

Truck Size Limits: No limit

Quantity Limitations per Trip: No Minimum
Maximum up to truck limit

Truck Weight Limits: No limit

Other Restrictions:

Additional Access Information:

Fill Facilities at Treatment Plant

Location:

Quality:

Type of Connection:

Quantity Limitations per Trip:

Hours:

Appointment Required:

Quantity Limitations per Day:

Truck Size Limits:

Truck Weight Limits:

Additional Access Information:

Training

Required: Yes

Duration: 2 hours or less

Who: Truck Owner, Truck Driver, and Customer using water

Frequency: Once

Location: Administration Building

Schedule: By Appointment

Length of time to become authorized truck hauler: 5 business days

Signage

Area Use Signage Required: Yes

Vehicle Signage Required: Yes

Signs Provided by Water Agency: Yes

Signs Provided by Water Agency: Yes

Vehicle Inspection

Required: No

Inspection Location:

Duration:

Re-inspection Required:

How to schedule:

Fees

Water: Contact City

Training: Contact City

Connection Device: Contact City

Permit: Contact City

Vehicle Signage: No Charge

Use Area Signage: No Charge

Other:

SAN FRANCISCO INTERNATIONAL AIRPORT

650.821.8380

Recycled Water Fill Facilities:

Treatment Plant: Yes

Distribution System: No

Can water be used outside of this agency's service area? No

Hydrant Fill Facilities

Location: None

Number of Fill Facilities:

Connection Device:

Quality:

Truck Size Limits:

Quantity Limitations per Trip:

Truck Weight Limits:

Other Restrictions:

Additional Access Information:

Fill Facilities at Treatment Plant

Location: Mel Leong Treatment Plant

Quality: Disinfected Secondary-23

Type of Connection: Hydrant

Quantity Limitations per Trip: No Minimum
Maximum up to truck limit

Hours: 24 hrs/day, 7 days/wk

Appointment Required: No

Quantity Limitations per Day: No Minimum
No Maximum

Truck Size Limits: None

Truck Weight Limits: None

Additional Access Information:

Training

Required: Yes

Duration: 2 hours or less

Who: Truck Driver

Frequency: Once

Schedule: By Appointment

Location: Treatment Plant

Length of time to become authorized truck hauler: 5 business days

Signage

Area Use Signage Required: No

Vehicle Signage Required: Yes

Signs Provided by Water Agency: N/A

Signs Provided by Water Agency: Yes

Vehicle Inspection

Required: Yes

Inspection Location: Recycled Water Plant

Duration: 1 hour or less

Re-inspection Required: One random audit per year

How to schedule: Appointment

Fees

Water: No Charge

Training: No Charge

Connection Device: No Charge

Permit: No Charge

Vehicle Signage: No Charge

Use Area Signage: N/A

Other:

SAN FRANCISCO PUBLIC UTILITIES COMMISSION

415.695.7378

Recycled Water Fill Facilities:

Treatment Plant: Yes
Distribution System: No
Can water be used outside of this agency's service area? No

Hydrant Fill Facilities

Location: None
Number of Fill Facilities:
Connection Device:
Quality:
Truck Size Limits:
Quantity Limitations per Trip:
Truck Weight Limits:
Other Restrictions:
Additional Access Information:

Fill Facilities at Treatment Plant

Location: South East Treatment Plant
750 Phelps Street, San Francisco
Quality: Disinfected Secondary-23
Type of Connection: Overhead and Side
Quantity Limitations per Trip: No Minimum
Hours: 24 hrs/day, 7 days/week
Maximum up to truck limit
Appointment Required:
Quantity Limitations per Day: No Minimum
Truck Size Limits: None
No Maximum
Truck Weight Limits: None
Additional Access Information: Access code and PIN provided at permit issuance

Training

Required: Yes
Duration: 2 hours or less
Who: Truck Driver
Frequency: Once
Schedule: By Appointment
Location: Treatment Plant
Length of time to become authorized truck hauler: 3 business days

Signage

Area Use Signage Required: Yes
Vehicle Signage Required: Yes
Signs Provided by Water Agency: No
Signs Provided by Water Agency: Yes

Vehicle Inspection

Required: Yes
Inspection Location: Truck Fill Facility
Duration: 1 hour or less
Re-inspection Required: Not required
How to schedule: Appointment

Fees

Water: No Charge
Training: No Charge
Connection Device: No Charge
Permit: No Charge
Vehicle Signage: No Charge
Use Area Signage: No Charge
Other:

CITY OF SANTA ROSA

707.543.3938

Recycled Water Fill Facilities:

Treatment Plant: Yes

Distribution System: No

Can water be used outside of this agency's service area? Yes

Hydrant Fill Facilities

Location: None

Number of Fill Facilities:

Connection Device:

Quality:

Truck Size Limits:

Quantity Limitations per Trip:

Truck Weight Limits:

Other Restrictions:

Additional Access Information:

Fill Facilities at Treatment Plant

Location: Santa Rosa Subregional Water Reuse Plant

Quality: Disinfected Tertiary

Type of Connection: Hydrant

Quantity Limitations per Trip: No Minimum
Maximum up to truck limit

Hours: Mon-Fri 8 a.m. - 5:30 p.m.

Appointment Required: No

Quantity Limitations per Day: No Minimum
No Maximum

Truck Size Limits: None

Truck Weight Limits: None

Additional Access Information:

Training

Required: No

Duration:

Who:

Frequency:

Schedule:

Location:

Length of time to become authorized truck hauler: 1 business day

Signage

Area Use Signage Required: No

Vehicle Signage Required: Yes

Signs Provided by Water Agency: N/A

Signs Provided by Water Agency: No

Vehicle Inspection

Required: No

Inspection Location:

Duration:

Re-inspection Required:

How to schedule:

Fees

Water: $5.09 per 1,000 gal

Training: No Charge

Connection Device: No Charge

Permit: $15.00 per year

Vehicle Signage: N/A

Use Area Signage: No Charge

Other:

SONOMA COUNTY WATER AGENCY

707.521.1865

www.scwa.ca.gov

Recycled Water Fill Facilities:

Treatment Plant: Yes

Distribution System: No

Can water be used outside of this agency's service area? Yes

Hydrant Fill Facilities

Location: None

Number of Fill Facilities:

Connection Device:

Quality:

Truck Size Limits:

Quantity Limitations per Trip:

Truck Weight Limits:

Other Restrictions:

Additional Access Information:

Fill Facilities at Treatment Plant

Locations: Sonoma Valley County Sanitation District (call for address)

Quality: Disinfected Tertiary

Type of Connection: Side

Quantity Limitations per Trip: No Minimum
Maximum up to truck limit

Hours: Mon-Fri 8 a.m. - 4 p.m.; with permission could be 24/7

Quantity Limitations per Day: No Minimum
No Maximum

Appointment Required: No

Truck Size Limits: None

Truck Weight Limits: None

Additional Access Information: Contact treatment plant for site access outside of business hours

Training

Required: Yes

Duration: 2 hours or less

Who: Truck Driver

Frequency: With each new application

Schedule: By Appointment

Location: Recycled Water Plant

Length of time to become authorized truck hauler: 5 business days

Signage

Area Use Signage Required: No

Vehicle Signage Required: Yes

Signs Provided by Water Agency: N/A

Signs Provided by Water Agency: Yes

Vehicle Inspection

Required: Yes

Inspection Location: Recycled Water Plant

Duration: 1 hour or less

Re-inspection Required: With each new application

How to schedule: Appointment

Fees

Water: $5.00 per 1,000 gal

Training: No Charge

Connection Device: $100 deposit

Permit: $300

Vehicle Signage: First set free

Use Area Signage: N/A

Other:

SOUTH BAY WATER RECYCLING

408.277.3671

Recycled Water Fill Facilities:

Treatment Plant: Yes
Distribution System: Yes
Can water be used outside of this agency's service area? Yes

Hydrant Fill Facilities

Location: Call for location
Number of Fill Facilities: 10+
Connection Device: Hydrant Key and Construction Meter
Quality: Disinfected Tertiary
Truck Size Limits: TBD during inspection
Quantity Limitations per Trip: No Minimum
Maximum up to truck limit
Truck Weight Limits: TBD during inspection
Other Restrictions:
Additional Access Information: Secured access. Gate access code or gate key to be provided at training.

Fill Facilities at Treatment Plant

Location: San Jose/Santa Clara Regional Wastewater Facility
700 Los Esteros Rd., San Jose
Quality: Disinfected Tertiary
Type of Connection: Hydrant
Quantity Limitations per Trip: No Minimum
Maximum up to truck limit
Hours: Mon-Fri 7 a.m. - 4 p.m.
Appointment Required: No
Quantity Limitations per Day: No Minimum
No Maximum
Truck Size Limits: None
Truck Weight Limits: None
Additional Access Information:

Training

Required: Yes
Duration: 2 hours or less
Who: Truck Owner, Truck Driver, and Customer using water
Frequency: Annually
Location: At Water Retailer Office
Schedule: By Appointment
Length of time to become authorized truck hauler: 1 business day

Signage

Area Use Signage Required: Yes
Vehicle Signage Required: Yes
Signs Provided by Water Agency: Yes
Signs Provided by Water Agency: Yes

Vehicle Inspection

Required: Yes
Inspection Location: Corp Yard
Duration: 1 hour or less
Re-inspection Required: Annually
How to schedule: Appointment

Fees

Water: Contact City
Training: Contact City
Connection Device: Contact City
Permit: Contact City
Vehicle Signage: Contact City
Use Area Signage: Contact City
Other:

CITY OF SUNNYVALE

408.760.7560

Recycled Water Fill Facilities:

Treatment Plant: Yes
Distribution System: No
Can water be used outside of this agency's service area? Yes

Hydrant Fill Facilities

Location: None

Number of Fill Facilities:
Connection Device:
Quality:
Truck Size Limits:
Quantity Limitations per Trip:
Truck Weight Limits:
Other Restrictions:
Additional Access Information:

Fill Facilities at Treatment Plant

Location: Sunnyvale Water Pollution Control Plant (call for address)

Quality: Disinfected Tertiary
Type of Connection: Hydrant
Quantity Limitations per Trip: No Minimum
Maximum up to truck limit
Hours: Mon-Fri 7 a.m. - 4 p.m.
Appointment Required: No
Quantity Limitations per Day: No Minimum
No Maximum
Truck Size Limits: None
Truck Weight Limits: None
Additional Access Information:

Training

Required: Yes
Duration: 2 hours or less
Who: Truck Owner, Truck Driver, and Customer using water
Frequency: Annually
Schedule: By Appointment
Location: Agency Corp Yard
Length of time to become authorized truck hauler: 8+ business days

Signage

Area Use Signage Required: Yes
Vehicle Signage Required: Yes
Signs Provided by Water Agency: No
Signs Provided by Water Agency: No

Vehicle Inspection

Required: Yes
Inspection Location: Corp Yard
Duration: 1 hour or less
Re-inspection Required: Annually
How to schedule: Appointment

Fees

Water: No Charge
Training: No Charge
Connection Device: No Charge
Permit: No Charge
Vehicle Signage: User provides
Use Area Signage: User provides
Other:

TOWN OF YOUNTVILLE

707.944.2988

townofyounvtille.com

Recycled Water Fill Facilities:

Treatment Plant: Yes

Distribution System: No

Can water be used outside of this agency's service area? No, not without authorization

Hydrant Fill Facilities

Location: None

Number of Fill Facilities: 0

Connection Device:

Quality:

Truck Size Limits:

Quantity Limitations per Trip:

Truck Weight Limits:

Other Restrictions:

Additional Access Information:

Fill Facilities at Treatment Plant

Location: Town of Yountville Wastewater Reclamation Facility
7501 Solano Avenue, Yountville, CA 94599

Quality: Disinfected Tertiary and Disinfected Secondary-2.2

Type of Connection: Hydrant and Side

Quantity Limitations per Trip: No Minimum
Maximum 5,000 gal

Hours: Mon-Fri 8 a.m. - 3:30 p.m.

Appointment Required: Yes, for initial fill-up and training

Quantity Limitations per Day: No Minimum
Maximum 25,000 gal per day

Truck Size Limits: None

Truck Weight Limits: None

Additional Access Information:

Training

Required: Yes

Duration: 2 hours or less

Who: Truck Owner, Truck Driver, and Customer using water

Frequency: Annually

Location: Wastewater Reclamation Facility

Schedule: By Appointment

Length of time to become authorized truck hauler: 3 business days

Signage

Area Use Signage Required: Yes

Vehicle Signage Required: No

Signs Provided by Water Agency: No

Signs Provided by Water Agency: N/A

Vehicle Inspection

Required: No

Inspection Location:

Duration:

Re-inspection Required:

How to schedule:

Fees

Water: $992 for first 100,000 gal

Training: No Charge

Connection Device: No Charge

Permit: $350

Vehicle Signage: N/A

Use Area Signage: User provides

Other:

SECTION 2

Additional Commercial Truck Fill Facilities in 2015

Commercial Fill Facilities Planned to be Operational in 2015

COUNTY/CITY	AGENCY
SAN MATEO COUNTY	
Pacifica	North Coast County Water District (contact for availability) Contact: www.nccwd.com
SONOMA COUNTY	
Windsor	Town of Windsor (operational Spring 2015) Contact: (707) 838-5343

SECTION 3

Potential Future Commercial Truck Fill Facilities

Agencies That May Consider Commerical Fill Facilities in the Future

At the time this Guide was prepared, the agencies below indicated they may consider development of commercial fill facilities, in particular if the drought continues.

COUNTY/CITY	AGENCY
ALAMEDA COUNTY	
Piedmont	City of Piedmont
Union City	Union Sanitary District
CONTRA COSTA COUNTY	
Antioch	Delta Diablo Sanitation District
Brentwood	City of Brentwood
Richmond	West County Wastewater District
MARIN COUNTY	
San Rafael	Ross Valley Sanitary District
SAN FRANCISCO	
South San Francisco	South San Francisco
SAN MATEO COUNTY	
Menlo Park	West Bay Sanitary District
San Mateo	City of San Mateo
SOLANO COUNTY	
Benicia	City of Benicia
SONOMA COUNTY	
Guerneville	Sonoma County Water Agency
Petaluma	City of Petaluma
Santa Rosa	City of Santa Rosa
Santa Rosa	Sonoma County Water Agency
Sonoma	Sonoma County Water Agency

SECTION 4

Recycled Water Uses Allowed in California

Recycled Water Uses Allowed[1] in California

Use of Recycled Water	Treatment Level: Disinfected Tertiary Recycled Water	Disinfected Secondary – 2.2 Recycled Water	Disinfected Secondary – 23 Recycled Water	Undisinfected Secondary Recycled Water
Irrigation of:				
Food crops where recycled water contacts the edible portion of the crop, including all root crops	**Allowed**	Not Allowed	Not Allowed	Not Allowed
Parks and playgrounds	**Allowed**	Not Allowed	Not Allowed	Not Allowed
School yards	**Allowed**	Not Allowed	Not Allowed	Not Allowed
Residential landscaping	**Allowed**	Not Allowed	Not Allowed	Not Allowed
Unrestricted-access golf courses	**Allowed**	Not Allowed	Not Allowed	Not Allowed
Any other irrigation uses not prohibited by other provisions of the California Code of Regulations	**Allowed**	Not Allowed	Not Allowed	Not Allowed
Food crops, surface-irrigated, above-ground edible portion, and not contacted by recycled water	**Allowed**	**Allowed**	Not Allowed	Not Allowed
Cemeteries	**Allowed**	**Allowed**	**Allowed**	Not Allowed
Freeway landscaping	**Allowed**	**Allowed**	**Allowed**	Not Allowed
Restricted-access golf courses	**Allowed**	**Allowed**	**Allowed**	Not Allowed
Ornamental nursery stock and sod farms with unrestricted public access	**Allowed**	**Allowed**	**Allowed**	Not Allowed
Pasture for milk animals for human consumption	**Allowed**	**Allowed**	**Allowed**	Not Allowed
Non-edible vegetation with access control to prevent use as a park, playground or school yard	**Allowed**	**Allowed**	**Allowed**	Not Allowed
Orchards with no contact between edible portion and recycled water	**Allowed**	**Allowed**	Not Allowed[2]	Not Allowed[2]
Vineyards with no contact between edible portion and recycled water	**Allowed**	**Allowed**	Not Allowed[2]	Not Allowed[2]
Non food-bearing trees, including Christmas trees not irrigated less than 14 days before harvest	**Allowed**	**Allowed**	**Allowed**	**Allowed**
Fodder and fiber crops and pasture for animals not producing milk for human consumption	**Allowed**	**Allowed**	**Allowed**	**Allowed**
Seed crops not eaten by humans	**Allowed**	**Allowed**	**Allowed**	**Allowed**
Food crops undergoing commercial pathogen-destroying processing before consumption by humans	**Allowed**	**Allowed**	**Allowed**	**Allowed**
Ornamental nursery stock, sod farms not irrigated less than 14 day before harvest	**Allowed**	**Allowed**	**Allowed**	**Allowed**
Supply for impoundment:				
Non-restricted recreational impoundments, with supplemental monitoring for pathogenic organisms	**Allowed[3]**	Not Allowed	Not Allowed	Not Allowed
Restricted recreational impoundments and publicly-accessible fish hatcheries	**Allowed**	**Allowed**	Not Allowed	Not Allowed
Landscape impoundments without decorative fountains	**Allowed**	**Allowed**	**Allowed**	Not Allowed
Supply for cooling or air conditioning:				
Industrial or commercial cooling or air conditioning involving cooling tower, evaporative condenser, or spraying that creates a mist	**Allowed[4]**	Not Allowed	Not Allowed	Not Allowed
Industrial or commercial cooling or air conditioning not involving cooling tower, evaporative condenser, or spraying that creates a mist	**Allowed**	**Allowed**	**Allowed**	Not Allowed

Recycled Water Uses Allowed[1] in California
(continued)

Use of Recycled Water	Treatment Level			
	Disinfected Tertiary Recycled Water	Disinfected Secondary – 2.2 Recycled Water	Disinfected Secondary – 23 Recycled Water	Undisinfected Secondary Recycled Water
Other uses:				
Groundwater recharge	**Allowed** under special case-by-case permits by RWQCBs[5]			
Flushing toilets and urinals	**Allowed**	Not Allowed	Not Allowed	Not Allowed
Priming drain traps	**Allowed**	Not Allowed	Not Allowed	Not Allowed
Industrial process water that may contact workers	**Allowed**	Not Allowed	Not Allowed	Not Allowed
Structural fire fighting	**Allowed**	Not Allowed	Not Allowed	Not Allowed
Decorative fountains	**Allowed**	Not Allowed	Not Allowed	Not Allowed
Commercial laundries	**Allowed**	Not Allowed	Not Allowed	Not Allowed
Consolidation of backfill material around potable water pipelines	**Allowed**	Not Allowed	Not Allowed	Not Allowed
Artificial snow making for commercial outdoor uses	**Allowed**	Not Allowed	Not Allowed	Not Allowed
Commercial car washes, not heating the water, excluding the general public from washing process	**Allowed**	Not Allowed	Not Allowed	Not Allowed
Industrial process water that will not come into contact with workers	**Allowed**	**Allowed**	**Allowed**	Not Allowed
Industrial boiler feedwater	**Allowed**	**Allowed**	**Allowed**	Not Allowed
Non-structural fire fighting	**Allowed**	**Allowed**	**Allowed**	Not Allowed
Backfill consolidation around non-potable piping	**Allowed**	**Allowed**	**Allowed**	Not Allowed
Soil compaction	**Allowed**	**Allowed**	**Allowed**	Not Allowed
Mixing concrete	**Allowed**	**Allowed**	**Allowed**	Not Allowed
Dust control on roads and streets	**Allowed**	**Allowed**	**Allowed**	Not Allowed
Cleaning roads, sidewalks, and outdoor work areas	**Allowed**	**Allowed**	**Allowed**	Not Allowed
Flushing sanitary sewers	**Allowed**	**Allowed**	**Allowed**	**Allowed**

This summary is prepared from the December 2, 2000-adopted Title 22 Water Recycling Criteria and supersedes all earlier versions. Prepared by Bahman Sheikh and edited by EBMUD Office of Water Recycling, who acknowledge this is a summary and not the formal version of the regulations referenced above.

[1] Refer to the full text of the December 2, 2000 version of Title 22: California Code of Regulations, Chapter 3 Water Recycling Criteria. This chart is only an informal summary of the uses allowed in this version, with the exception of orchards and vineyards noted as "Not Allowed[2]" on page 1 and explained below.

[2] Per California Department of Public Health letter of January 8, 2003 to California Regional Water Quality Control Boards.

[3] Allowed with "conventional tertiary treatment." Additional monitoring for two years or more is necessary with direct filtration.

[4] Drift eliminators and/or biocides are required if public or employees can be exposed to mist.

[5] Refer to Groundwater Recharge Guidelines, available from the California Department of Public Health.

2013