DIST	COUNTY	ROUTE	POST MILES TOTAL PROJECT	SHEET No	TOTAL SHEETS
04	Nap,Sol	12	2.8/3.3, 0.0/2.6	501	617

P.K. Chen 12/09/09
REGISTERED STRUCTURAL ENGINEER DATE

11-22-10
PLANS APPROVAL DATE

REGISTERED PROFESSIONAL ENGINEER PO-KANG CHEN No. S3112 Exp. 9/30/11 STRUCTURAL STATE OF CALIFORNIA

The State of California or its officers or agents shall not be responsible for the accuracy or completeness of electronic copies of this plan sheet.

SOLANO TRANSPORTATION AUTHORITY
ONE HARBOR CENTER, SUITE 130
SUISUN CITY, CA 94585

MARK THOMAS & COMPANY, INC.
1960 ZANKER ROAD
SAN JOSE, CA 95112

LEGEND

⊡ = Location of Soil Nail Assembly

□ = Location of Proof Soil Test Nail Assembly

SV = Vertical spacing of Soil Nail Assembly, SV = 5'-0" Max Typical
= 6'-0" Max for Bottom Row

Notes:

1. For 'General Notes' and 'Soil/Rock Design Parameters', see "General Plan No. 6" and "General Plan No. 7" sheet.
2. For 'Soil Nail Schedules', see "Structure Plan No. 1" sheet.

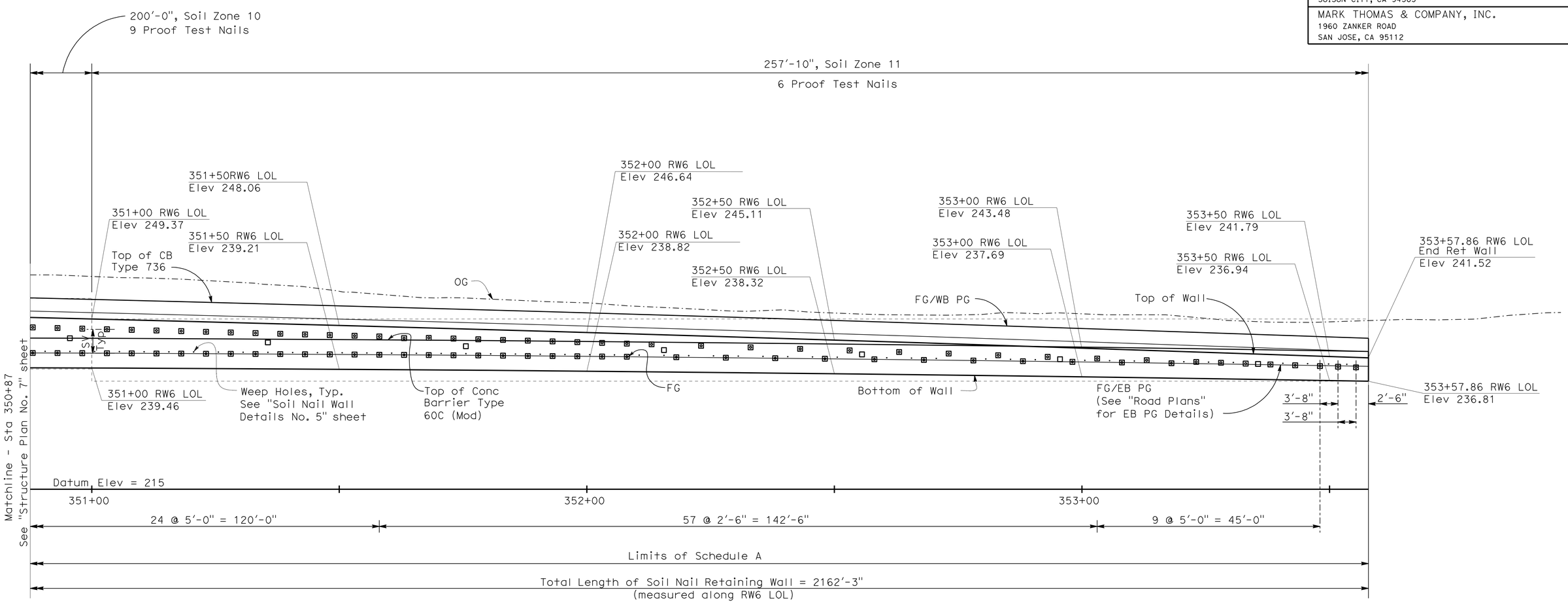

ELEVATION

1" = 10'

Tracy L. Bertram
DESIGN OVERSIGHT Tracy L Bertram

1-7-10
SIGN OFF DATE

	BY	CHECKED
DESIGN	P PARK	P CHEN
DETAILS	H. MISTRY	P PARK
QUANTITIES	K WONG	S GARAPALLY

PREPARED FOR THE STATE OF CALIFORNIA DEPARTMENT OF TRANSPORTATION

HARSHAD MISTRY
PROJECT ENGINEER

BRIDGE No. 23E0012
POST MILE 1.2

RETAINING WALL No. 6
STRUCTURE PLAN No. 8

DESIGN DETAIL SHEET (ENGLISH) (REV. 2/25/05)
W:\SOLANO TA - 58-0151B SR 12 JAMESON CANYON\STRUCTURES\CADD\XREF\58-0151B-BORDER STRUCTURE DETAILS_22 X 34_SOLANO.DWG 9/4/2008 9:18:30 AM

ORIGINAL SCALE IN INCHES FOR REDUCED PLANS 0 1 2 3

CU 04264
EA 264141

DISREGARD PRINTS BEARING EARLIER REVISION DATES →

REVISION DATES (PRELIMINARY STAGE ONLY): ~~3/13/09~~ ~~8/03/09~~ ~~11/06/09~~ 12/09/09

SHEET 62 OF 171

FILE => 23E0012-g-sp08.dgn

USERNAME => trlenard DATE PLOTTED => 23-NOV-2010 TIME PLOTTED => 08:09

DIST	COUNTY	ROUTE	POST MILES TOTAL PROJECT	SHEET No	TOTAL SHEETS
04	Nap,Sol	12	2.8/3.3, 0.0/2.6	502	617

P.K. Chen 12/09/09
REGISTERED STRUCTURAL ENGINEER DATE

11-22-10
PLANS APPROVAL DATE

REGISTERED PROFESSIONAL ENGINEER
PO-KANG CHEN
No. S3112
Exp. 9/30/11
STRUCTURAL
STATE OF CALIFORNIA

The State of California or its officers or agents shall not be responsible for the accuracy or completeness of electronic copies of this plan sheet.

SOLANO TRANSPORTATION AUTHORITY
ONE HARBOR CENTER, SUITE 130
SUISUN CITY, CA 94585

MARK THOMAS & COMPANY, INC.
1960 ZANKER ROAD
SAN JOSE, CA 95112

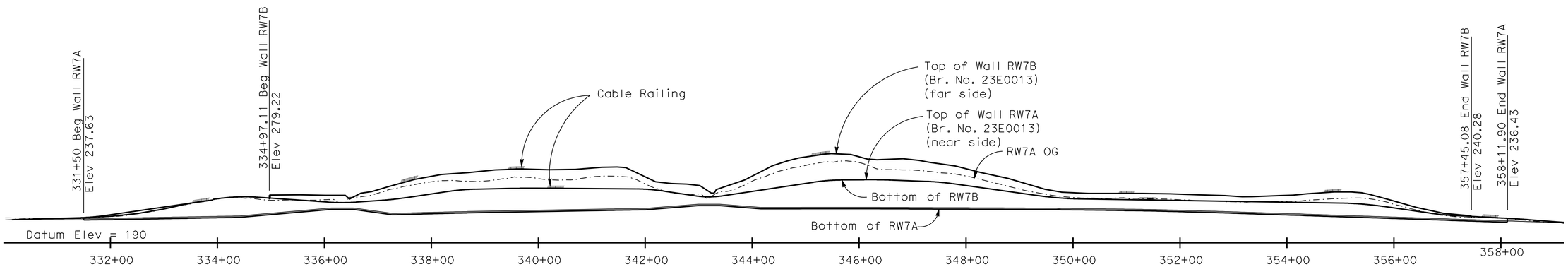

RW7A & 7B PROFILE

1" = 100'

Tracy L. Bertram DESIGN OVERSIGHT Tracy L Bertram	DESIGN	BY C VASQUEZ	CHECKED P PARK	LOAD FACTOR DESIGN		
1-7-10 SIGN OFF DATE	DETAILS	BY H. MISTRY	CHECKED P PARK	LAYOUT	BY C HII	CHECKED F QUACH
	QUANTITIES	BY K WONG	CHECKED S GARAPALLY	SPECIFICATIONS	BY H MISTRY	PLANS AND SPECS COMPARED P CHEN

PREPARED FOR THE STATE OF CALIFORNIA DEPARTMENT OF TRANSPORTATION

HARSHAD MISTRY
PROJECT ENGINEER

BRIDGE No. 23E0013
POST MILES 1.2

RETAINING WALL No. 7A & 7B

KEY MAP

DESIGN GENERAL PLAN SHEET (ENGLISH) (REV.2/25/05)

ORIGINAL SCALE IN INCHES FOR REDUCED PLANS 0 1 2 3

CU 04264
EA 264141

DISREGARD PRINTS BEARING EARLIER REVISION DATES

REVISION DATES (PRELIMINARY STAGE ONLY): ~~3/13/09~~ ~~8/05/09~~ ~~11/06/09~~ 12/09/09

SHEET 63 OF 171

FILE => 23E0013aa-a-K.dgn

USERNAME => friehard DATE PLOTTED => 23-NOV-2010 TIME PLOTTED => 08:09

DIST	COUNTY	ROUTE	POST MILES TOTAL PROJECT	SHEET No	TOTAL SHEETS
04	Nap,Sol	12	2.8/3.3, 0.0/2.6	503	617

P.K. Chen 12/09/09
REGISTERED STRUCTURAL ENGINEER DATE

11-22-10
PLANS APPROVAL DATE

REGISTERED PROFESSIONAL ENGINEER PO-KANG CHEN No. S3112 Exp. 9/30/11 STRUCTURAL STATE OF CALIFORNIA

The State of California or its officers or agents shall not be responsible for the accuracy or completeness of electronic copies of this plan sheet.

SOLANO TRANSPORTATION AUTHORITY
ONE HARBOR CENTER, SUITE 130
SUISUN CITY, CA 94585

MARK THOMAS & COMPANY, INC.
1960 ZANKER ROAD
SAN JOSE, CA 95112

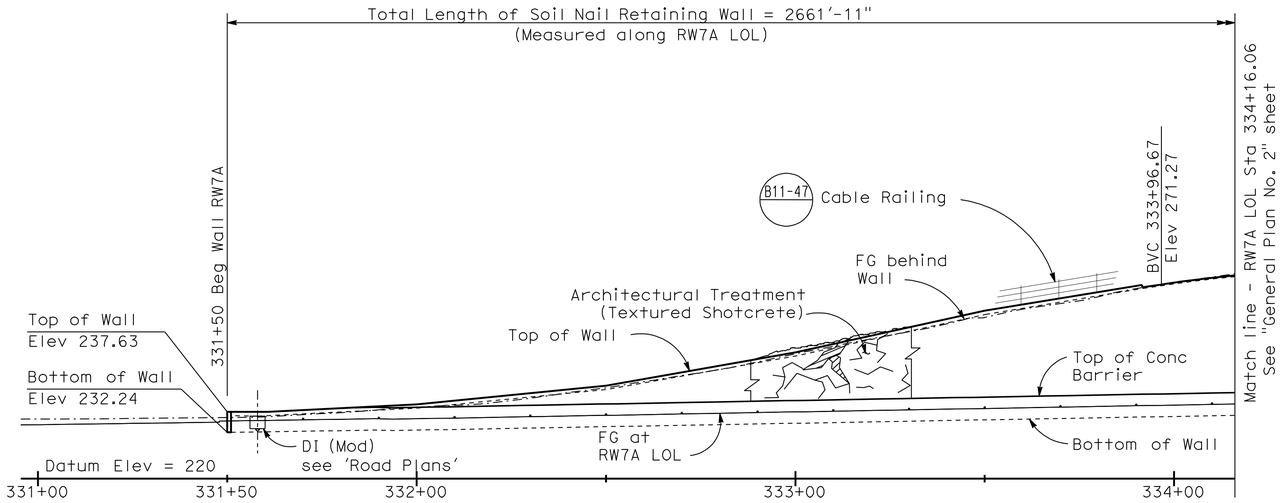

DEVELOPED ELEVATION
1" = 20'

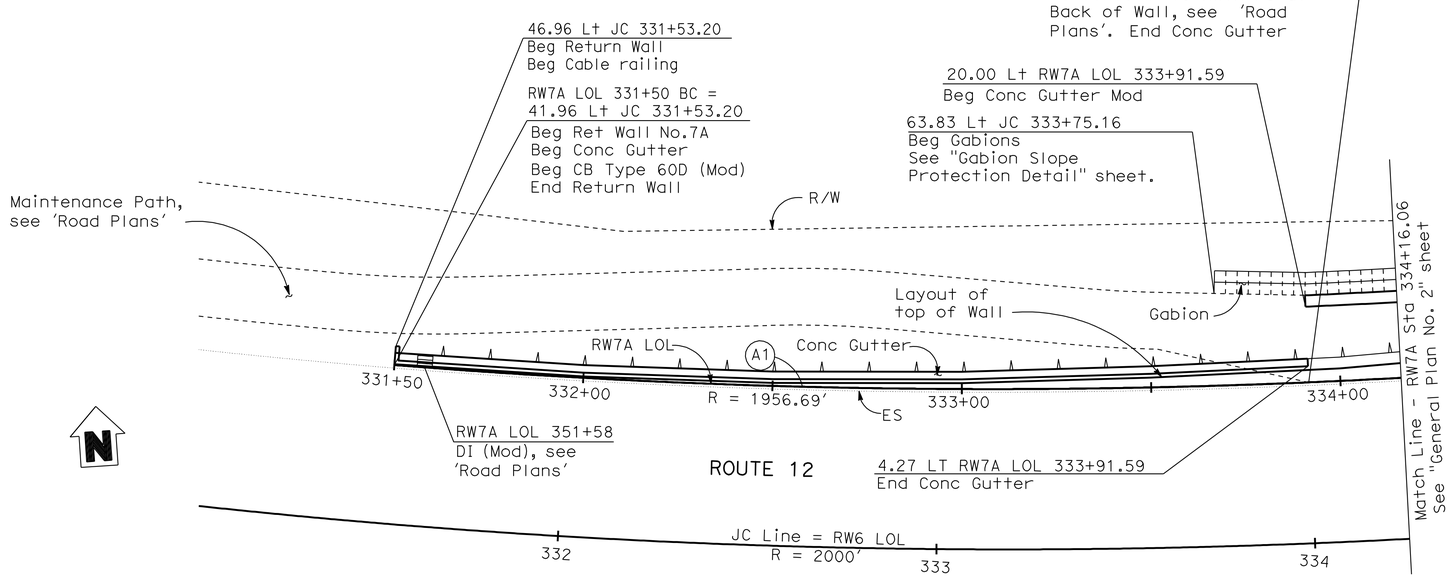

PLAN
1" = 20'

Notes:

1. The Contractor shall verify all controlling field dimensions before ordering or fabricating any material.
2. For Soil Nail Wall 'General Notes' and 'Typical Section', see "General Plan No. 8 & 9" sheet.
3. For Architectural Treatment, see "Architectural Treatment" sheet.
4. For Utilities, see 'Road Plans'.
5. For Drainage Systems, see "Soil Nail Wall Details No. 4" sheet.
6. For complete Right of Way data, see Right of Way Engineering at District Office.

RETAINING WALL #7A
QUANTITIES

STRUCTURE EXCAVATION (ROCK - SOIL NAIL WALL)	1,650	CY
STRUCTURE EXCAVATION (SOIL NAIL WALL)	11,340	CY
STRUCTURE BACKFILL (SOIL NAIL WALL)	300	CY
SOIL NAIL ASSEMBLY	94,200	LF
ARCHITECTURAL TREATMENT (TEXTURED SHOTCRETE)	65,500	SQFT
BAR REINFORCING STEEL (RETAINING WALL)	266,000	LB
SHOTCRETE	2,780	CY
PREPARE AND STAIN CONCRETE	77,900	SQFT
MINOR CONCRETE (GUTTER)	2,673	LF
CABLE RAILING	2,673	LF
CONCRETE BARRIER (TYPE 60D MODIFIED)	2,663	LF

CURVE DATA

No.	R	Δ	T	L
A1	1956.69'	08°21'59"	143.11'	285.72'

Tracy L Bertram
DESIGN OVERSIGHT Tracy L Bertram
1-7-10
SIGN OFF DATE

	BY	CHECKED		BY	CHECKED
DESIGN	C VASQUEZ	P PARK	LOAD FACTOR DESIGN		
DETAILS	H. MISTRY	P PARK	LAYOUT	C HII	F QUACH
QUANTITIES	K WONG	S GARAPALLY	SPECIFICATIONS	H MISTRY	PLANS AND SPECS COMPARED P CHEN

DESIGN GENERAL PLAN SHEET (ENGLISH) (REV.2/25/05)

ORIGINAL SCALE IN INCHES FOR REDUCED PLANS 0 1 2 3

PREPARED FOR THE STATE OF CALIFORNIA DEPARTMENT OF TRANSPORTATION

HARSHAD MISTRY
PROJECT ENGINEER

CU 04264
EA 264141

BRIDGE No. 23E0013
POST MILES 1.2

RETAINING WALL No. 7A
GENERAL PLAN No. 1

DISREGARD PRINTS BEARING EARLIER REVISION DATES

REVISION DATES (PRELIMINARY STAGE ONLY): ~~3/13/09~~ ~~8/05/09~~ ~~11/06/09~~ 12/09/09

SHEET 64 OF 171

FILE => 23E0013a-a-gp01.dgn

USERNAME => hriendard DATE PLOTTED => 23-NOV-2010 TIME PLOTTED => 08:09

DIST	COUNTY	ROUTE	POST MILES TOTAL PROJECT	SHEET No	TOTAL SHEETS
04	Nap,Sol	12	2.8/3.3, 0.0/2.6	504	617

P.K. Chen 12/09/09
REGISTERED STRUCTURAL ENGINEER DATE

11-22-10
PLANS APPROVAL DATE

REGISTERED PROFESSIONAL ENGINEER PO-KANG CHEN No. S3112 Exp. 9/30/11 STRUCTURAL STATE OF CALIFORNIA

The State of California or its officers or agents shall not be responsible for the accuracy or completeness of electronic copies of this plan sheet.

SOLANO TRANSPORTATION AUTHORITY
ONE HARBOR CENTER, SUITE 130
SUISUN CITY, CA 94585

MARK THOMAS & COMPANY, INC.
1960 ZANKER ROAD
SAN JOSE, CA 95112

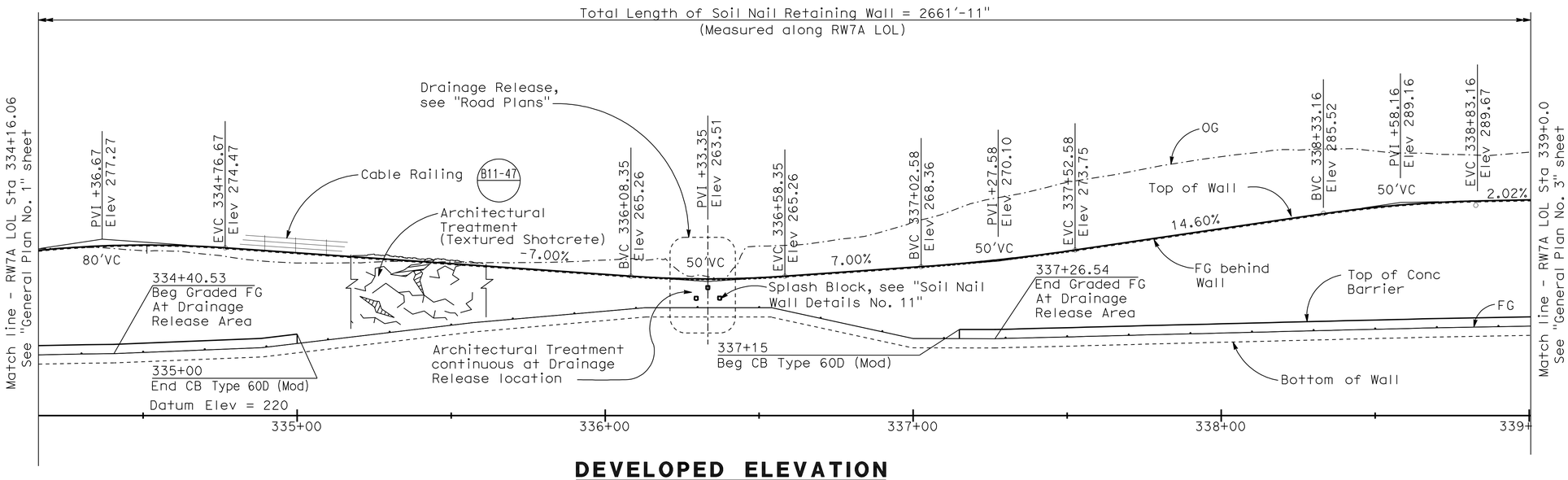

DEVELOPED ELEVATION

1" = 20'

CURVE DATA

No.	R	Δ	T	L
A2	80.00'	59°08'19"	42.66'	78.38'
A3	85.00'	79°17'31"	70.43'	117.63'
A4	45.00'	31°23'39"	12.64'	24.66'
A5	80.00'	62°20'37"	48.40'	87.05'
A6	1956.69'	00°52'48"	15.03'	30.05'

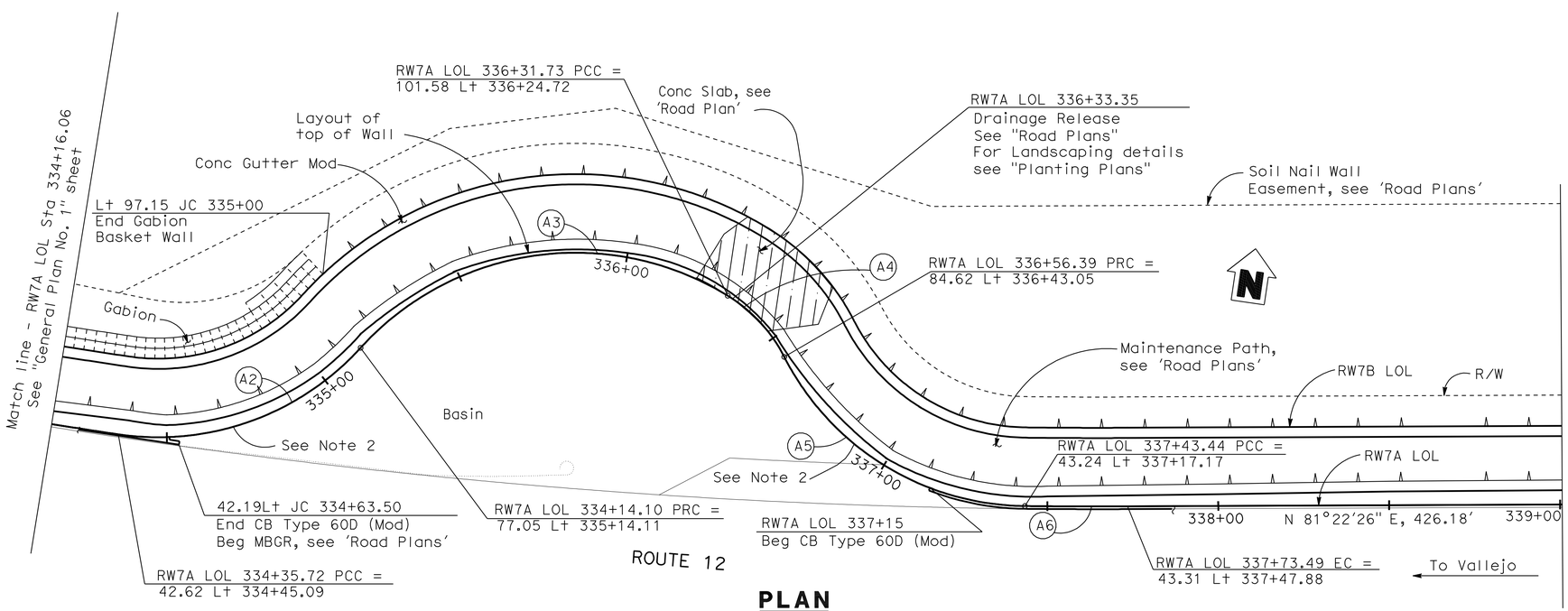

PLAN

1" = 20'

Notes:

1. The Contractor shall verify all controlling field dimensions before ordering or fabricating any material.
2. At convex surfaces, soil nail inclination shall be adjusted to max / min 5° so as to avoid interference with each other. Also, the construction shall be carried out to allow adjoining soil nail grouting to be cured before constructing the next nail.
3. For Soil Nail Wall 'General Notes' and 'Typical Section', see "General Plan No. 8 & 9" sheet.
4. For Architectural Treatment, see "Architectural Treatment" sheet.
5. For Utilities, see 'Road Plans'.
6. For Drainage Systems, see "Soil Nail Wall Details No. 4" sheet.
7. For complete Right of Way data, see Right of Way Engineering at District Office.
8. Cable Railing shall be continuous at drainage release.

Tracy L Bertram DESIGN OVERSIGHT Tracy L Bertram 1-7-10 SIGN OFF DATE	DESIGN	BY C VASQUEZ	CHECKED P PARK	LOAD FACTOR DESIGN	
	DETAILS	BY H. MISTRY	CHECKED P PARK	LAYOUT BY C HII	CHECKED F QUACH
	QUANTITIES	BY K WONG	CHECKED S GARAPALLY	SPECIFICATIONS BY H MISTRY	PLANS AND SPECS COMPARED P CHEN

PREPARED FOR THE STATE OF CALIFORNIA DEPARTMENT OF TRANSPORTATION

HARSHAD MISTRY
PROJECT ENGINEER

BRIDGE No. 23E0013
POST MILES 1.2

RETAINING WALL No. 7A
GENERAL PLAN No. 2

DESIGN GENERAL PLAN SHEET (ENGLISH) (REV.2/25/05)

ORIGINAL SCALE IN INCHES FOR REDUCED PLANS 0 1 2 3

CU 04264
EA 264141

DISREGARD PRINTS BEARING EARLIER REVISION DATES

REVISION DATES (PRELIMINARY STAGE ONLY): ~~3/13/09~~ ~~8/05/09~~ ~~11/06/09~~ 12/09/09

SHEET 65 OF 171

FILE => 23E0013a-a-gp02.dgn

USERNAME => trienard DATE PLOTTED => 23-NOV-2010 TIME PLOTTED => 08:09

DIST	COUNTY	ROUTE	POST MILES TOTAL PROJECT	SHEET No	TOTAL SHEETS
04	Nap,Sol	12	2.8/3.3, 0.0/2.6	505	617

P.K. Chen 12/09/09
REGISTERED STRUCTURAL ENGINEER DATE

11-22-10
PLANS APPROVAL DATE

REGISTERED PROFESSIONAL ENGINEER PO-KANG CHEN No. S3112 Exp. 9/30/11 STRUCTURAL STATE OF CALIFORNIA

The State of California or its officers or agents shall not be responsible for the accuracy or completeness of electronic copies of this plan sheet.

SOLANO TRANSPORTATION AUTHORITY
ONE HARBOR CENTER, SUITE 130
SUISUN CITY, CA 94585

MARK THOMAS & COMPANY, INC.
1960 ZANKER ROAD
SAN JOSE, CA 95112

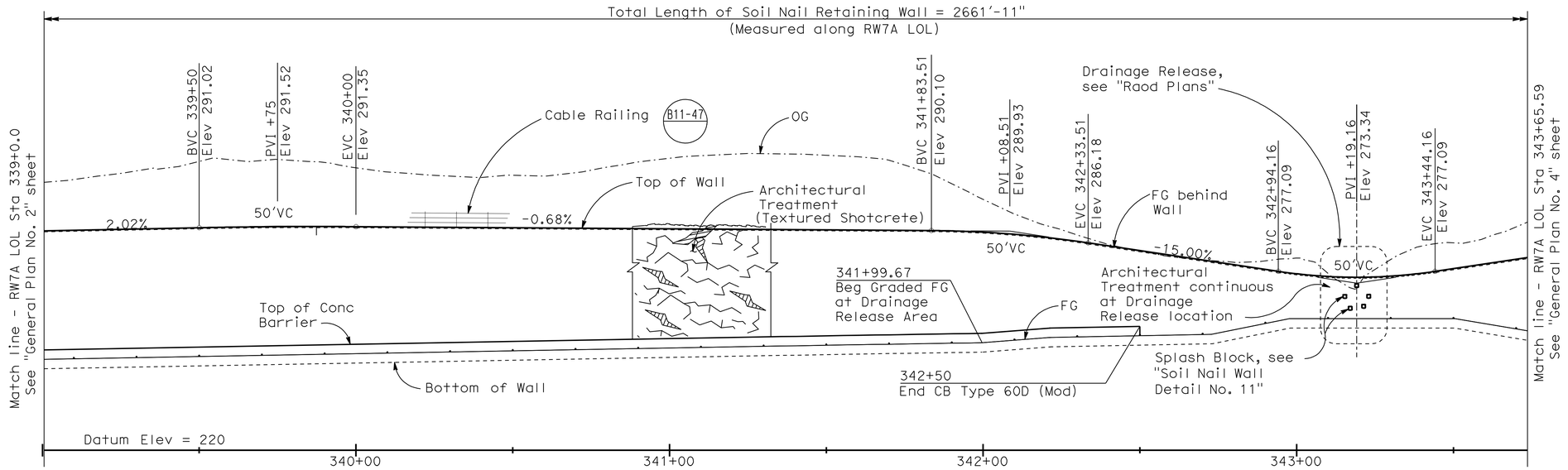

DEVELOPED ELEVATION

1" = 20'

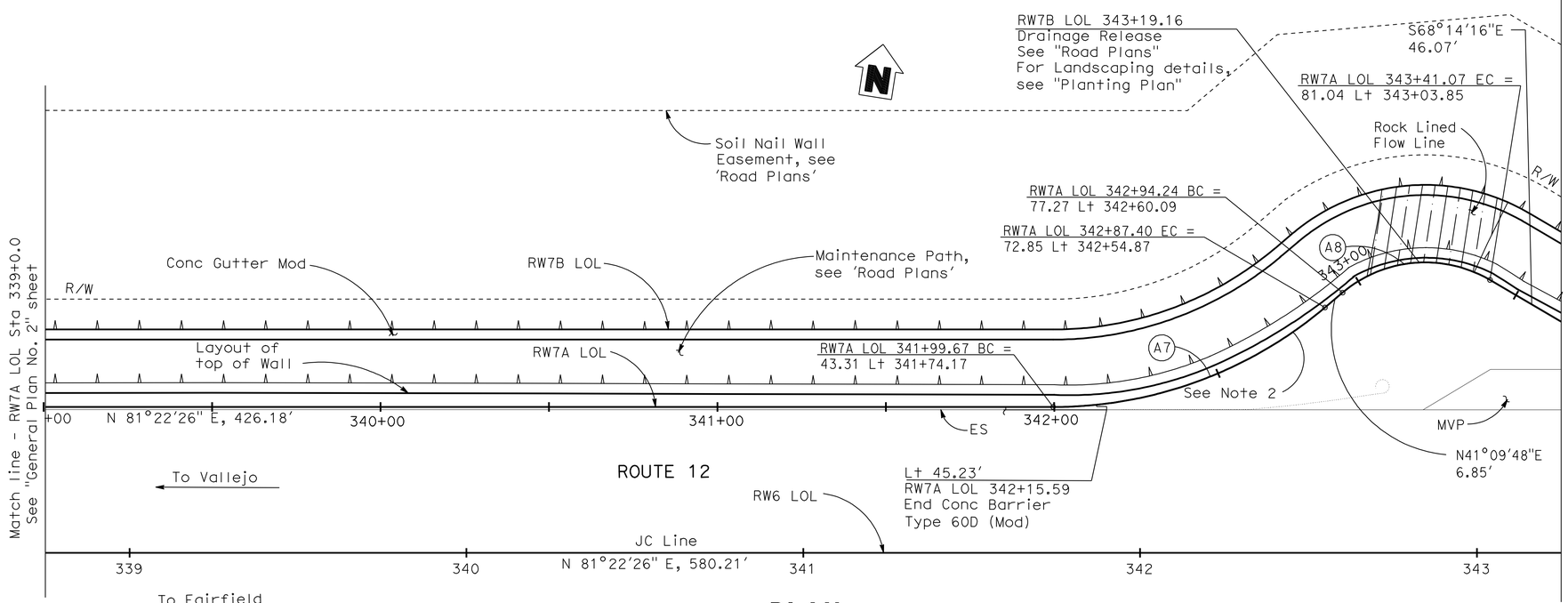

PLAN

1" = 20'

Notes:

1. The Contractor shall verify all controlling field dimensions before ordering or fabricating any material.
2. At convex surfaces, soil nail inclination shall be adjusted to max / min 5° so as to avoid interference with each other. Also, the construction shall be carried out to allow adjoining soil nail grouting to be cured before constructing the next nail.
3. For Soil Nail Wall 'General Notes' and 'Typical Section', see "General Plan No. 8 & 9" sheet.
4. For Architectural Treatment, see "Architectural Treatment" sheet.
5. For Utilities, see 'Road Plans'.
6. For Drainage Systems, see "Soil Nail Wall Details No. 4" sheet.
7. For complete Right of Way data, see Right of Way Engineering at District Office.
8. Cable Railing shall be continuous at drainage release.

Tracy L Bertram
DESIGN OVERSIGHT Tracy L Bertram
1-7-10
SIGN OFF DATE

	BY	CHECKED			
DESIGN	C VASQUEZ	P PARK	LOAD FACTOR DESIGN		
DETAILS	H. MISTRY	P PARK	LAYOUT	C HII	F QUACH
QUANTITIES	K WONG	S GARAPALLY	SPECIFICATIONS	H MISTRY	PLANS AND SPECS COMPARED P CHEN

DESIGN GENERAL PLAN SHEET (ENGLISH) (REV.2/25/05)

PREPARED FOR THE STATE OF CALIFORNIA DEPARTMENT OF TRANSPORTATION

ORIGINAL SCALE IN INCHES FOR REDUCED PLANS 0 1 2 3

HARSHAD MISTRY
PROJECT ENGINEER

CU 04264
EA 264141

BRIDGE No. 23E0013
POST MILES 1.2

RETAINING WALL No. 7A
GENERAL PLAN No. 3

DISREGARD PRINTS BEARING EARLIER REVISION DATES

REVISION DATES (PRELIMINARY STAGE ONLY): ~~3/13/09~~ ~~8/05/09~~ ~~11/06/09~~ 12/09/09

SHEET 66 OF 171

FILE => 23E0013a-a-gp03.dgn

USERNAME => trlenard DATE PLOTTED => 23-NOV-2010 TIME PLOTTED => 08:10

DIST	COUNTY	ROUTE	POST MILES TOTAL PROJECT	SHEET No	TOTAL SHEETS
04	Nap,Sol	12	2.8/3.3, 0.0/2.6	506	617

P.K. Chen 12/09/09
REGISTERED STRUCTURAL ENGINEER DATE

11-22-10
PLANS APPROVAL DATE

REGISTERED PROFESSIONAL ENGINEER PO-KANG CHEN No. S3112 Exp. 9/30/11 STRUCTURAL STATE OF CALIFORNIA

The State of California or its officers or agents shall not be responsible for the accuracy or completeness of electronic copies of this plan sheet.

SOLANO TRANSPORTATION AUTHORITY
ONE HARBOR CENTER, SUITE 130
SUISUN CITY, CA 94585

MARK THOMAS & COMPANY, INC.
1960 ZANKER ROAD
SAN JOSE, CA 95112

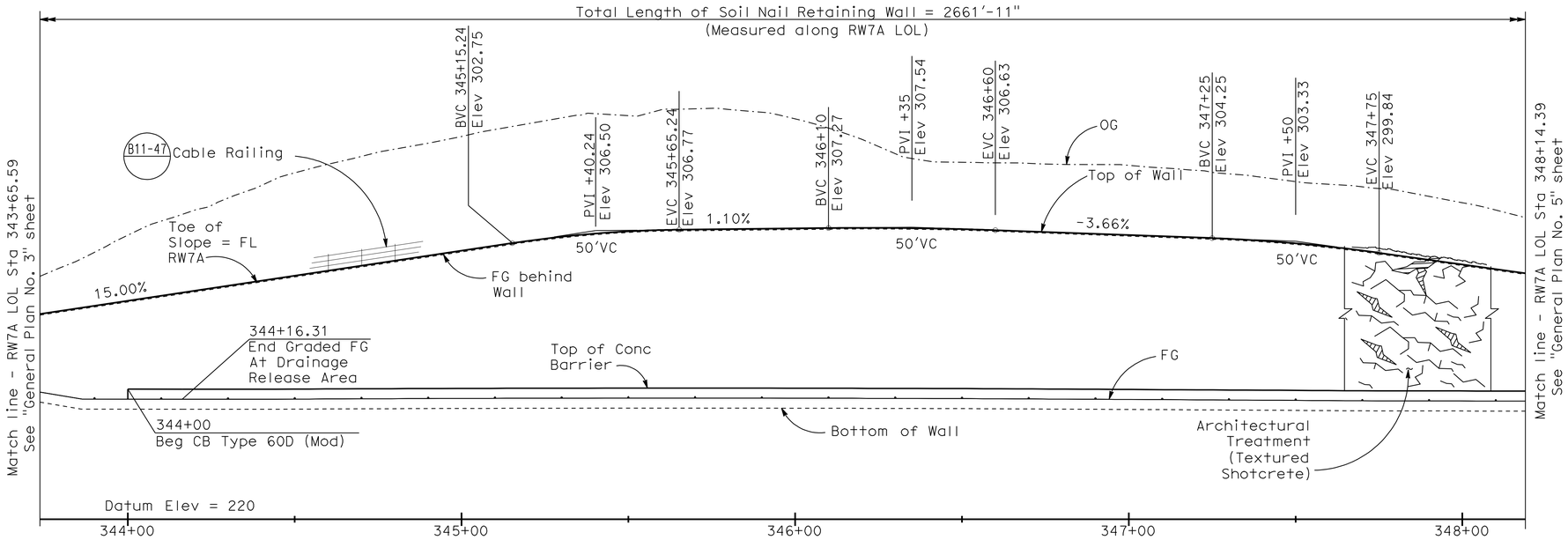

DEVELOPED ELEVATION
1" = 20'

CURVE DATA

No.	R	Δ	T	L
A9	100.00'	31°39'33"	28.35'	55.26'
A10	2852.19'	07°43'12"	192.44'	384.31'

Notes:

1. The Contractor shall verify all controlling field dimensions before ordering or fabricating any material.
2. At convex surfaces, soil nail inclination shall be adjusted to max / min 5° so as to avoid interference with each other. Also, the construction shall be carried out to allow adjoining soil nail grouting to be cured before constructing the next nail.
3. For Soil Nail Wall 'General Notes' and 'Typical Section', see "General Plan No. 8 & 9" sheet.
4. For Architectural Treatment, see "Architectural Treatment" sheet.
5. For Utilities, see 'Road Plans'.
6. For Drainage Systems, see "Soil Nail Wall Details No. 5" sheet.
7. For complete Right of Way data, see Right of Way Engineering at District Office.

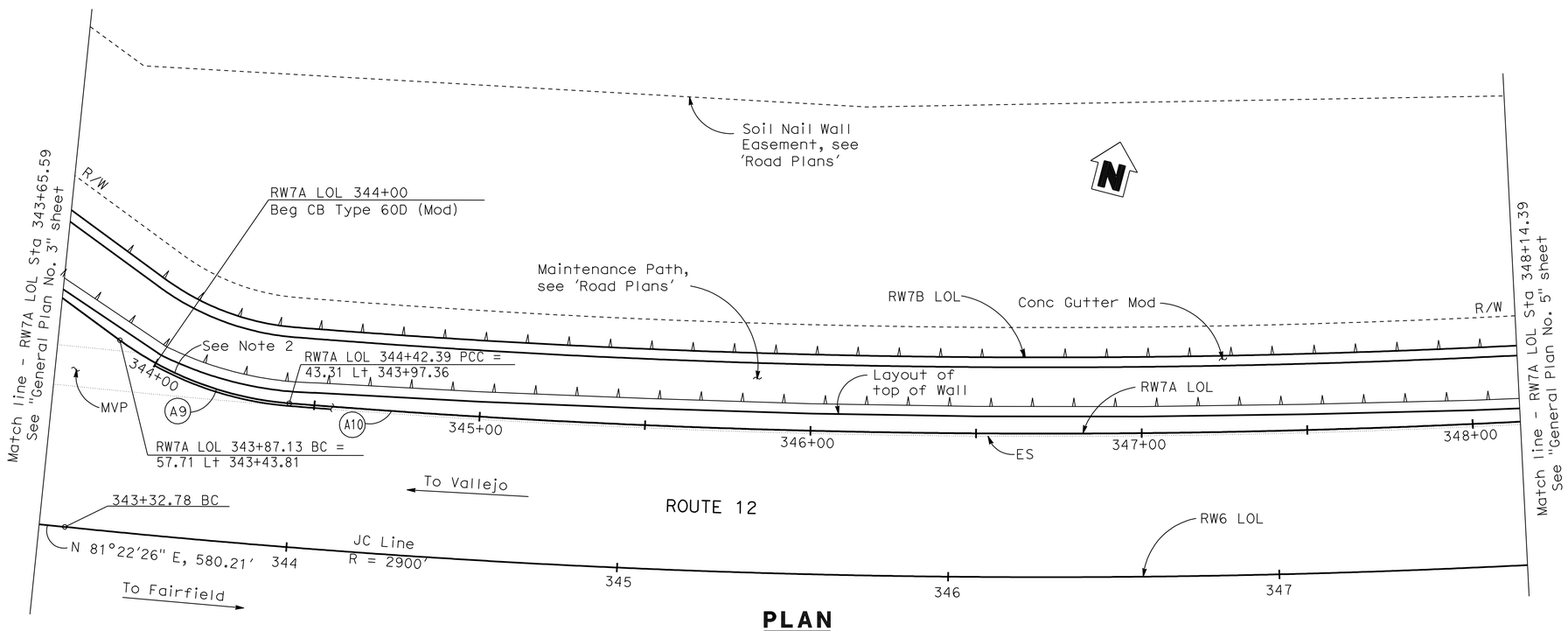

PLAN
1" = 20'

DESIGN OVERSIGHT Tracy L Bertram	DESIGN	BY C VASQUEZ	CHECKED P PARK	LOAD FACTOR DESIGN		
1-7-10 SIGN OFF DATE	DETAILS	BY H. MISTRY	CHECKED P PARK	LAYOUT	BY C HII	CHECKED F QUACH
	QUANTITIES	BY K WONG	CHECKED S GARAPALLY	SPECIFICATIONS	BY H MISTRY	PLANS AND SPECS COMPARED P CHEN

PREPARED FOR THE STATE OF CALIFORNIA DEPARTMENT OF TRANSPORTATION

HARSHAD MISTRY
PROJECT ENGINEER

CU 04264
EA 264141

BRIDGE No. 23E0013
POST MILES 1.2

RETAINING WALL No. 7A
GENERAL PLAN No. 4

DISREGARD PRINTS BEARING EARLIER REVISION DATES

REVISION DATES (PRELIMINARY STAGE ONLY)					SHEET	OF
3/13/09	8/05/09	11/06/09	12/09/09		67	171

DESIGN GENERAL PLAN SHEET (ENGLISH) (REV.2/25/05)

ORIGINAL SCALE IN INCHES FOR REDUCED PLANS 0 1 2 3

FILE => 23E0013a-a-gp04.dgn

USERNAME => trlenard DATE PLOTTED => 23-NOV-2010 TIME PLOTTED => 08:10

DIST	COUNTY	ROUTE	POST MILES TOTAL PROJECT	SHEET No	TOTAL SHEETS
04	Nap,Sol	12	2.8/3.3, 0.0/2.6	507	617

P.K. Chen 12/09/09
REGISTERED STRUCTURAL ENGINEER DATE

11-22-10
PLANS APPROVAL DATE

REGISTERED PROFESSIONAL ENGINEER
PO-KANG CHEN
No. S3112
Exp. 9/30/11
STRUCTURAL
STATE OF CALIFORNIA

The State of California or its officers or agents shall not be responsible for the accuracy or completeness of electronic copies of this plan sheet.

SOLANO TRANSPORTATION AUTHORITY
ONE HARBOR CENTER, SUITE 130
SUISUN CITY, CA 94585

MARK THOMAS & COMPANY, INC.
1960 ZANKER ROAD
SAN JOSE, CA 95112

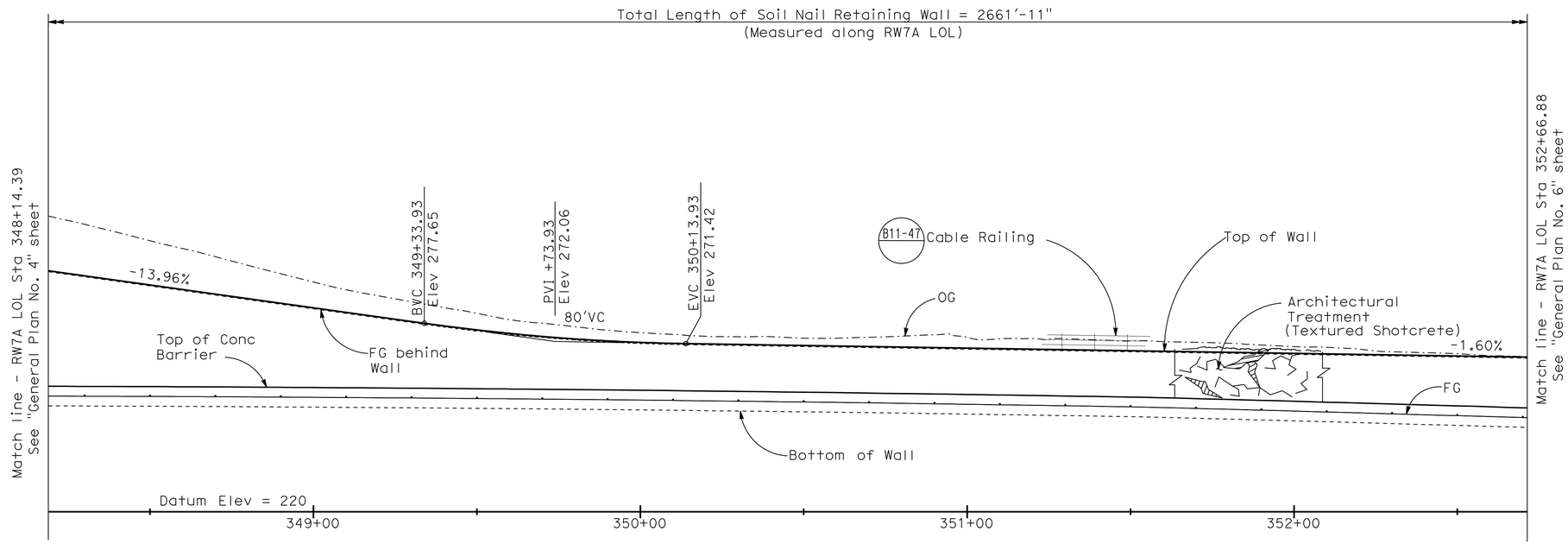

DEVELOPED ELEVATION

1" = 20'

CURVE DATA

No.	R	Δ	T	L
A11	2966.31'	12°51'00"	336.66'	670.45'

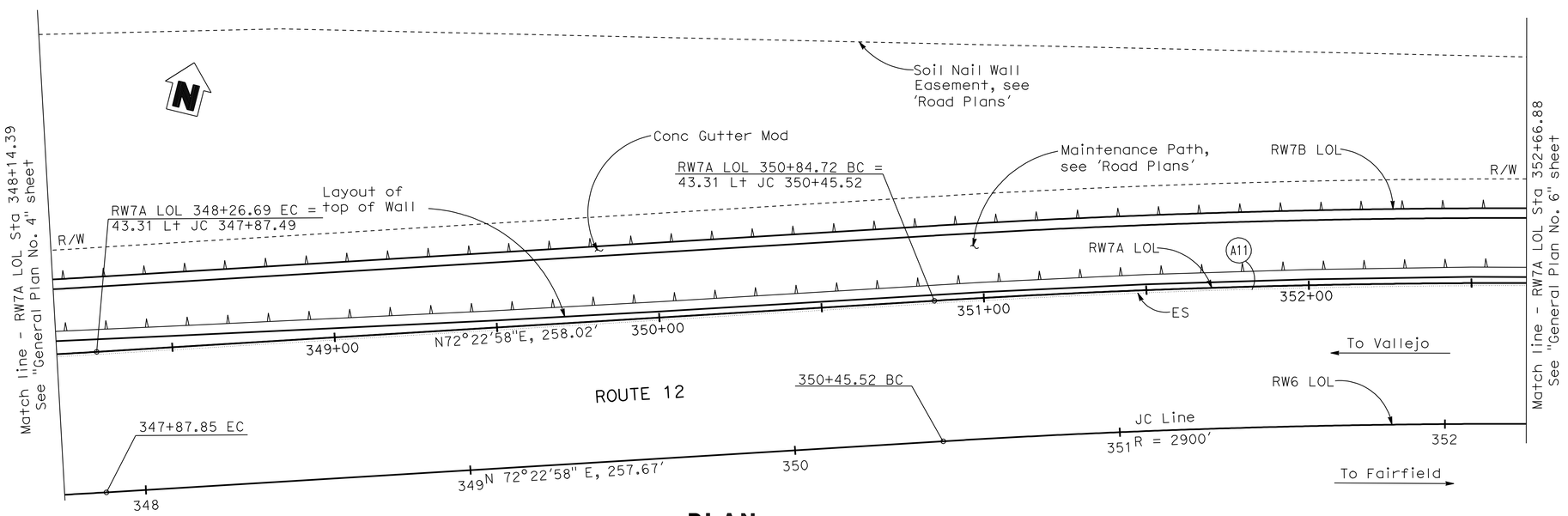

PLAN

1" = 20'

Notes:

1. The Contractor shall verify all controlling field dimensions before ordering or fabricating any material.
2. At convex surfaces, soil nail inclination shall be adjusted to max / min 5° so as to avoid interference with each other. Also, the construction shall be carried out to allow adjoining soil nail grouting to be cured before constructing the next nail.
3. For Soil Nail Wall 'General Notes' and 'Typical Section', see "General Plan No. 8 & 9" sheet.
4. For Architectural Treatment, see "Architectural Treatment" sheet.
5. For Utilities, see 'Road Plans'.
6. For Drainage Systems, see "Soil Nail Wall Details No. 5" sheet.
7. For complete Right of Way data, see Right of Way Engineering at District Office.

Tracy L Bertram
DESIGN OVERSIGHT Tracy L Bertram

1-7-10
SIGN OFF DATE

	BY	CHECKED				
DESIGN	C VASQUEZ	P PARK	LOAD FACTOR DESIGN			
DETAILS	H. MISTRY	P PARK	LAYOUT	C HII	F QUACH	
QUANTITIES	K WONG	S GARAPALLY	SPECIFICATIONS	H MISTRY	PLANS AND SPECS COMPARED P CHEN	

DESIGN GENERAL PLAN SHEET (ENGLISH) (REV.2/25/05)

ORIGINAL SCALE IN INCHES FOR REDUCED PLANS 0 1 2 3

PREPARED FOR THE STATE OF CALIFORNIA DEPARTMENT OF TRANSPORTATION

HARSHAD MISTRY
PROJECT ENGINEER

CU 04264
EA 264141

BRIDGE No. 23E0013
POST MILES 1.2

RETAINING WALL No. 7A
GENERAL PLAN No. 5

DISREGARD PRINTS BEARING EARLIER REVISION DATES

REVISION DATES (PRELIMINARY STAGE ONLY): ~~3/13/09~~ ~~8/05/09~~ ~~11/06/09~~ 12/09/09

SHEET 68 OF 171

FILE => 23E0013a-a-gp05.dgn

USERNAME => trienard DATE PLOTTED => 23-NOV-2010 TIME PLOTTED => 08:10

DIST	COUNTY	ROUTE	POST MILES TOTAL PROJECT	SHEET No	TOTAL SHEETS
04	Nap,Sol	12	2.8/3.3, 0.0/2.6	508	617

P.K. Chen 12/09/09
REGISTERED STRUCTURAL ENGINEER DATE

11-22-10
PLANS APPROVAL DATE

REGISTERED PROFESSIONAL ENGINEER PO-KANG CHEN No. S3112 Exp. 9/30/11 STRUCTURAL STATE OF CALIFORNIA

The State of California or its officers or agents shall not be responsible for the accuracy or completeness of electronic copies of this plan sheet.

SOLANO TRANSPORTATION AUTHORITY
ONE HARBOR CENTER, SUITE 130
SUISUN CITY, CA 94585

MARK THOMAS & COMPANY, INC.
1960 ZANKER ROAD
SAN JOSE, CA 95112

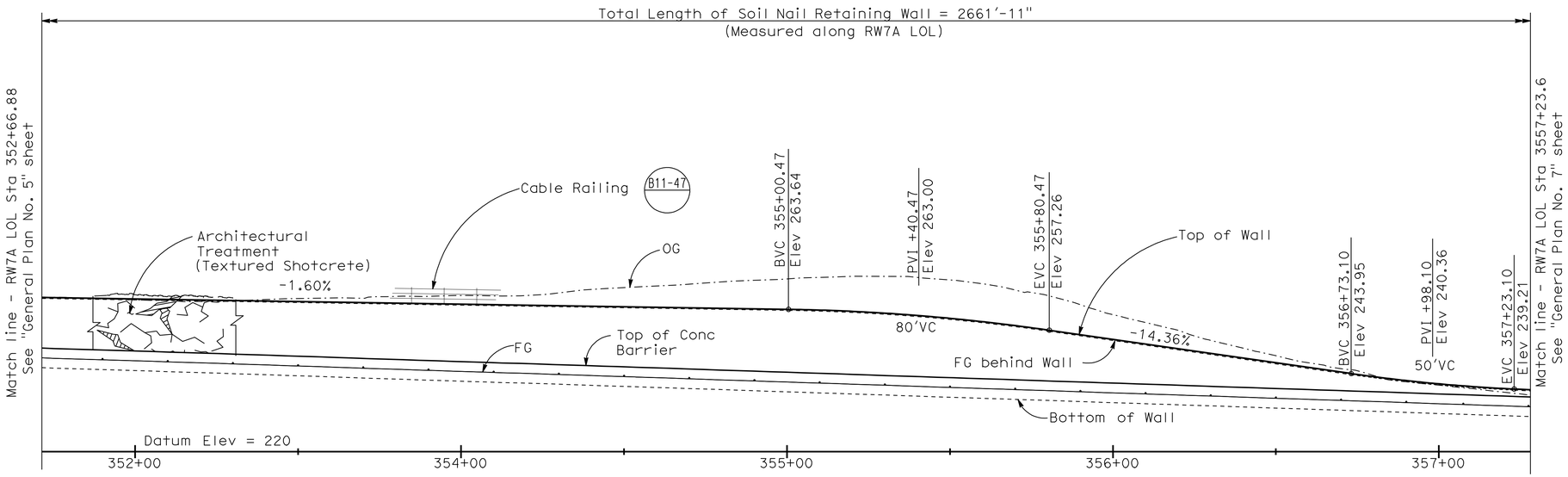

DEVELOPED ELEVATION

1" = 20'

CURVE DATA

No.	R	Δ	T	L
A11	2966.31'	12°51'00"	336.66'	670.45'

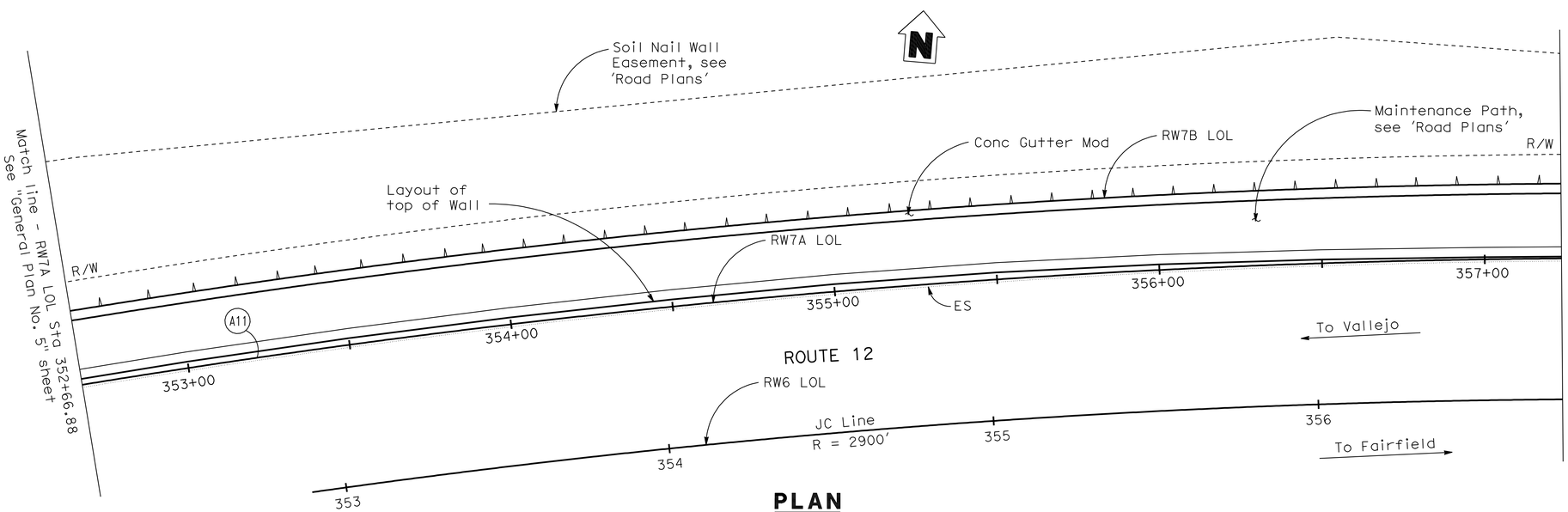

PLAN

1" = 20'

Notes:

1. The Contractor shall verify all controlling field dimensions before ordering or fabricating any material.
2. At convex surfaces, soil nail inclination shall be adjusted to max / min 5° so as to avoid interference with each other. Also, the construction shall be carried out to allow adjoining soil nail grouting to be cured before constructing the next nail.
3. For Soil Nail Wall 'General Notes' and 'Typical Section', see "General Plan No. 8 & 9" sheet.
4. For Architectural Treatment, see "Architectural Treatment" sheet.
5. For Utilities, see 'Road Plans'.
6. For Drainage Systems, see "Soil Nail Wall Details No. 5" sheet.
7. For complete Right of Way data, see Right of Way Engineering at District Office.

Tracy L Bertram
DESIGN OVERSIGHT Tracy L Bertram

1-7-10
SIGN OFF DATE

	BY	CHECKED		BY	CHECKED
DESIGN	C VASQUEZ	P PARK	LOAD FACTOR DESIGN		
DETAILS	H. MISTRY	P PARK	LAYOUT	C HII	F QUACH
QUANTITIES	K WONG	S GARAPALLY	SPECIFICATIONS	H MISTRY	PLANS AND SPECS COMPARED P CHEN

DESIGN GENERAL PLAN SHEET (ENGLISH) (REV.2/25/05)

ORIGINAL SCALE IN INCHES FOR REDUCED PLANS 0 1 2 3

PREPARED FOR THE STATE OF CALIFORNIA DEPARTMENT OF TRANSPORTATION

HARSHAD MISTRY
PROJECT ENGINEER

CU 04264
EA 264141

BRIDGE No. 23E0013
POST MILES 1.2

RETAINING WALL No. 7A
GENERAL PLAN No. 6

DISREGARD PRINTS BEARING EARLIER REVISION DATES

REVISION DATES (PRELIMINARY STAGE ONLY): ~~3/13/09~~ ~~8/05/09~~ ~~11/06/09~~ 12/09/09

SHEET 69 OF 171

FILE => 23E0013a-a-gp06.dgn

USERNAME => friendard DATE PLOTTED => 23-NOV-2010 TIME PLOTTED => 08:10

DIST	COUNTY	ROUTE	POST MILES TOTAL PROJECT	SHEET No	TOTAL SHEETS
04	Nap,Sol	12	2.8/3.3, 0.0/2.6	509	617

P.K. Chen 12/09/09
REGISTERED STRUCTURAL ENGINEER DATE

11-22-10
PLANS APPROVAL DATE

REGISTERED PROFESSIONAL ENGINEER PO-KANG CHEN No. S3112 Exp. 9/30/11 STRUCTURAL STATE OF CALIFORNIA

The State of California or its officers or agents shall not be responsible for the accuracy or completeness of electronic copies of this plan sheet.

SOLANO TRANSPORTATION AUTHORITY
ONE HARBOR CENTER, SUITE 130
SUISUN CITY, CA 94585

MARK THOMAS & COMPANY, INC.
1960 ZANKER ROAD
SAN JOSE, CA 95112

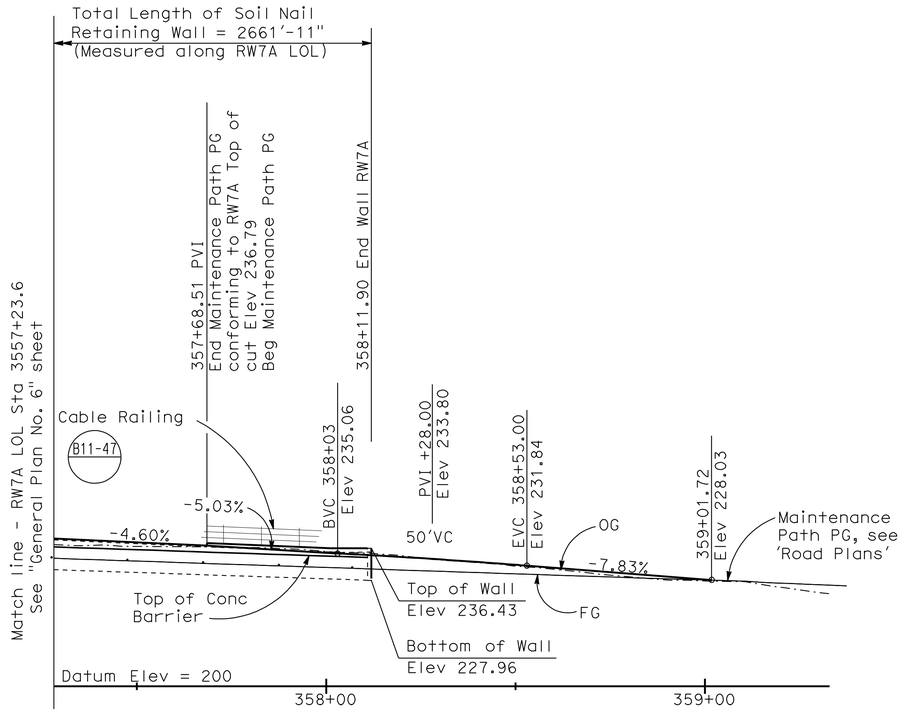

DEVELOPED ELEVATION

1" = 20'

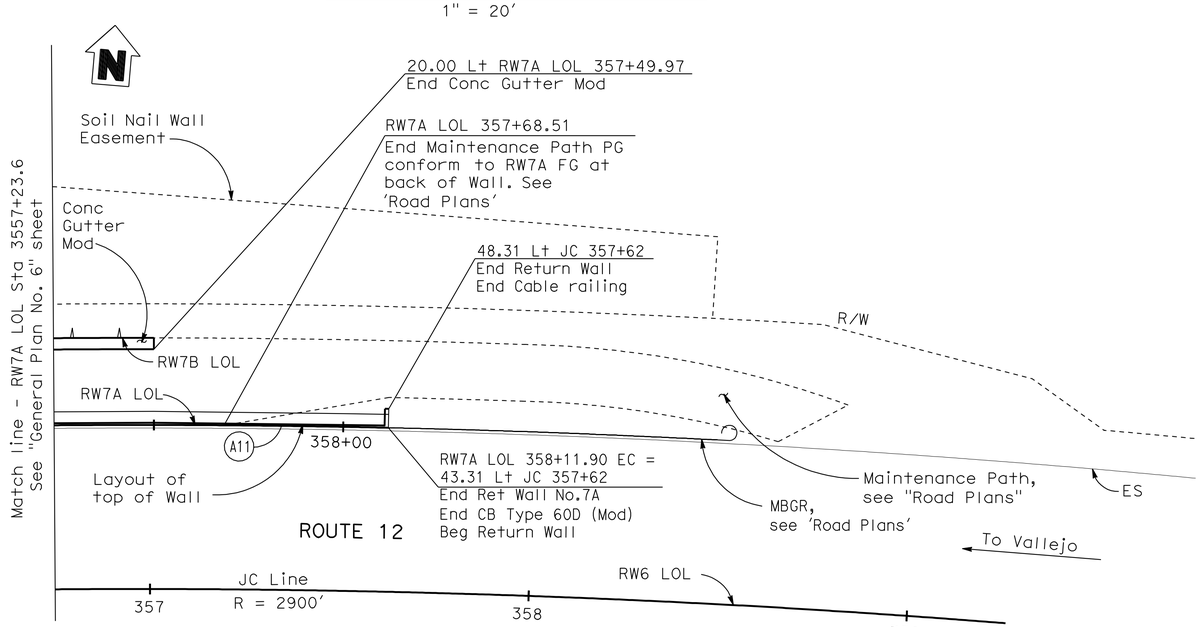

PLAN

1" = 20'

Notes:

1. The Contractor shall verify all controlling field dimensions before ordering or fabricating any material.
2. At convex surfaces, soil nail inclination shall be adjusted to max / min 5° so as to avoid interference with each other. Also, the construction shall be carried out to allow adjoining soil nail grouting to be cured before constructing the next nail.
3. For Soil Nail Wall 'General Notes' and 'Typical Section', see "General Plan No. 8 & 9" sheet.
4. For Architectural Treatment, see "Architectural Treatment" sheet.
5. For Utilities, see 'Road Plans'.
6. For Drainage Systems, see "Soil Nail Wall Details No. 5" sheet.
7. For complete Right of Way data, see Right of Way Engineering at District Office.

Tracy L Bertram
DESIGN OVERSIGHT Tracy L Bertram
1-7-10
SIGN OFF DATE

	BY	CHECKED			
DESIGN	C VASQUEZ	P PARK	LOAD FACTOR DESIGN		
DETAILS	H. MISTRY	P PARK	LAYOUT	C HII	F QUACH
QUANTITIES	K WONG	S GARAPALLY	SPECIFICATIONS	H MISTRY	PLANS AND SPECS COMPARED P CHEN

DESIGN GENERAL PLAN SHEET (ENGLISH) (REV.2/25/05)

ORIGINAL SCALE IN INCHES FOR REDUCED PLANS 0 1 2 3

PREPARED FOR THE STATE OF CALIFORNIA DEPARTMENT OF TRANSPORTATION

HARSHAD MISTRY
PROJECT ENGINEER

CU 04264
EA 264141

BRIDGE No. 23E0013
POST MILES 1.2

RETAINING WALL No. 7A
GENERAL PLAN No. 7

DISREGARD PRINTS BEARING EARLIER REVISION DATES

REVISION DATES (PRELIMINARY STAGE ONLY): ~~3/13/09~~ ~~8/05/09~~ ~~11/06/09~~ 12/09/09

SHEET 70 OF 171

FILE => 23E0013a-a-gp07.dgn

USERNAME => friegard DATE PLOTTED => 23-NOV-2010 TIME PLOTTED => 08:10

DIST	COUNTY	ROUTE	POST MILES TOTAL PROJECT	SHEET No	TOTAL SHEETS
04	Nap,Sol	12	2.8/3.3, 0.0/2.6	510	617

P.K. Chen 12/09/09
REGISTERED STRUCTURAL ENGINEER DATE

11-22-10
PLANS APPROVAL DATE

REGISTERED PROFESSIONAL ENGINEER PO-KANG CHEN No. S3112 Exp. 9/30/11 STRUCTURAL STATE OF CALIFORNIA

The State of California or its officers or agents shall not be responsible for the accuracy or completeness of electronic copies of this plan sheet.

SOLANO TRANSPORTATION AUTHORITY
ONE HARBOR CENTER, SUITE 130
SUISUN CITY, CA 94585

MARK THOMAS & COMPANY, INC.
1960 ZANKER ROAD
SAN JOSE, CA 95112

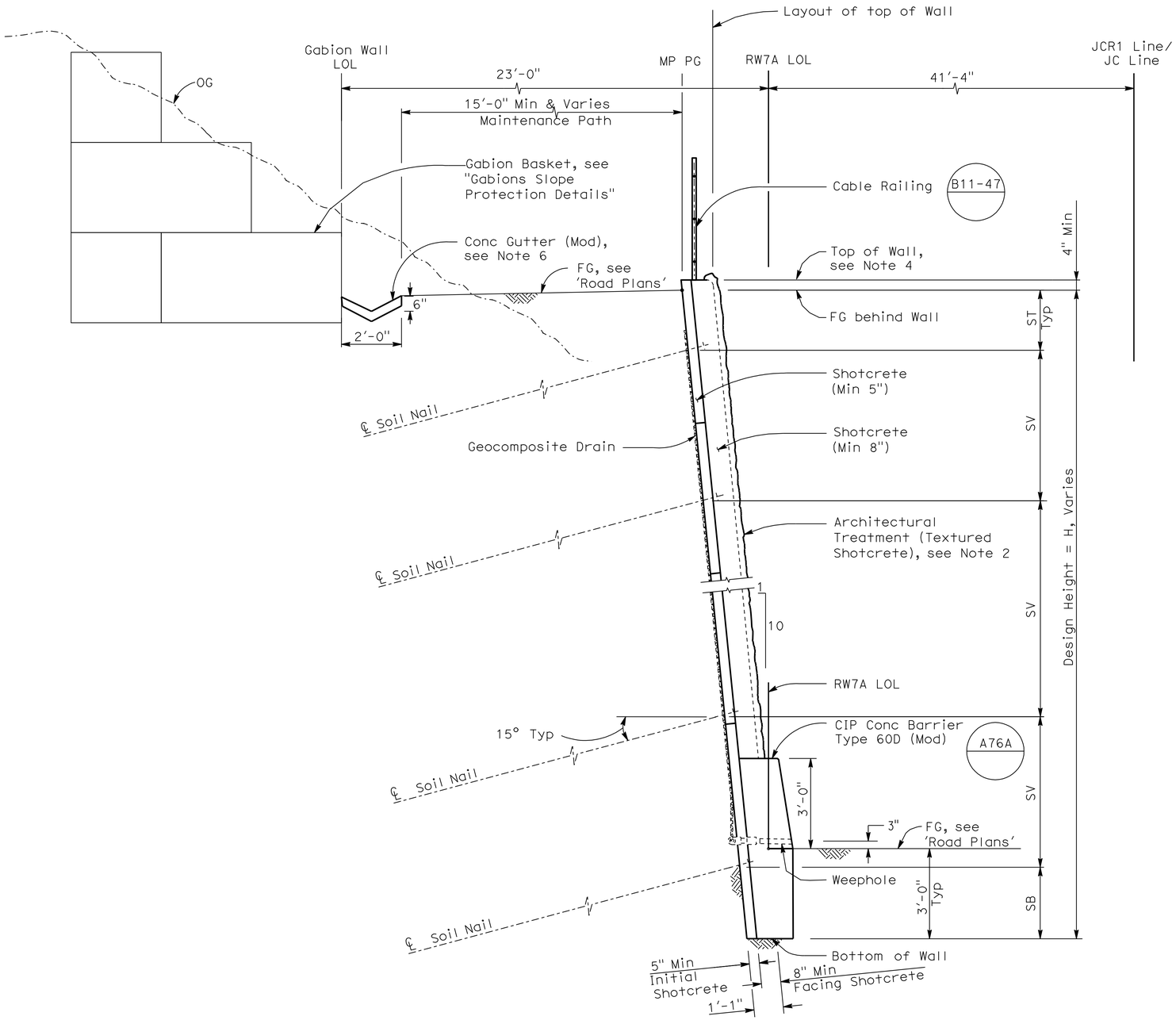

RW7A - TYPICAL SECTION
RETAINING WALL AT 1 TIER

1/2" = 1'-0"

LEGEND

ST = Vertical distance from top of cut elevation to first row of Soil Nails, ST = 2'-0"

SB = Vertical distance from bottom of wall to bottom level of the Soil Nail Assembly, SB = 2'-0" Min, SB = 3'-0" Max

SV = Vertical spacing of Soil Nail Assembly, SV = 5'-0" Max Typical
= 6'-0" Max for Bottom Row

LE = Embedment Length of Soil Nail, see 'Structure Plan' Sheets

GENERAL NOTES

Design: -Caltrans Bridge Design Specifications August 2004 (LFD) (2004 AASHTO with interims and revisions by Caltrans)
-FHWA Publication No. FHWAO-1F-03-017 Geotechnical Engineering Circular No. 7 - Soil Nail Walls

Seismic Criteria: K_h = 0.2g

Reinforced shotcrete:
fy = 60,000 psi
f'c = 4000 psi

Structural steel: ASTM designation:
A709/A709M, Grade 36

Soil nails: ASTM designation:
A615/A615M, Grade 60, fy = 60 ksi

Notes:

1. For Drainage information, see "Soil Nail Wall Details No. 4" sheet.
2. For limits of Architectural Treatment, see "Soil Nail Wall Details No. 1" sheet.
3. Stain Treatment shall be apply to all exposed RW & barrier surfaces.
4. Top of Wall elevations shall be verified in field.
5. For Soil Nail lengths, see "Structural Plan" sheets.
6. Construct modified Gutter with weakened plane joint (1/2"R x 1/2"deep scoured joint) @ 12' Max and expansion joint with 1/2" thick exp. joint filler @ 48' Max.
7. For 'Soil/Rock Design Parameters', see "General Plan No. 10" sheet.

USERNAME => trlenard DATE PLOTTED => 23-NOV-2010 TIME PLOTTED => 08:10

Tracy L Bertram
DESIGN OVERSIGHT Tracy L Bertram
1-7-10
SIGN OFF DATE

	BY	CHECKED		BY	CHECKED
DESIGN	C VASQUEZ	P PARK	LOAD FACTOR DESIGN		
DETAILS	H. MISTRY	P PARK	LAYOUT	C HII	F QUACH
QUANTITIES	K WONG	S GARAPALLY	SPECIFICATIONS	H MISTRY	PLANS AND SPECS COMPARED P CHEN

DESIGN GENERAL PLAN SHEET (ENGLISH) (REV.2/25/05)

ORIGINAL SCALE IN INCHES FOR REDUCED PLANS 0 1 2 3

PREPARED FOR THE STATE OF CALIFORNIA DEPARTMENT OF TRANSPORTATION

HARSHAD MISTRY
PROJECT ENGINEER

CU 04264
EA 264141

BRIDGE No. 23E0013
POST MILES 1.2

RETAINING WALL No. 7A
GENERAL PLAN No. 8

DISREGARD PRINTS BEARING EARLIER REVISION DATES

REVISION DATES (PRELIMINARY STAGE ONLY): ~~3/13/09~~ ~~8/05/09~~ ~~11/06/09~~ 12/09/09

SHEET 71 OF 171

FILE => 23E0013a-a-gp08.dgn

DIST	COUNTY	ROUTE	POST MILES TOTAL PROJECT	SHEET No	TOTAL SHEETS
04	Nap,Sol	12	2.8/3.3, 0.0/2.6	511	617

P.K. Chen 12/09/09
REGISTERED STRUCTURAL ENGINEER DATE

11-22-10
PLANS APPROVAL DATE

REGISTERED PROFESSIONAL ENGINEER PO-KANG CHEN No. S3112 Exp. 9/30/11 STRUCTURAL STATE OF CALIFORNIA

The State of California or its officers or agents shall not be responsible for the accuracy or completeness of electronic copies of this plan sheet.

SOLANO TRANSPORTATION AUTHORITY
ONE HARBOR CENTER, SUITE 130
SUISUN CITY, CA 94585

MARK THOMAS & COMPANY, INC.
1960 ZANKER ROAD
SAN JOSE, CA 95112

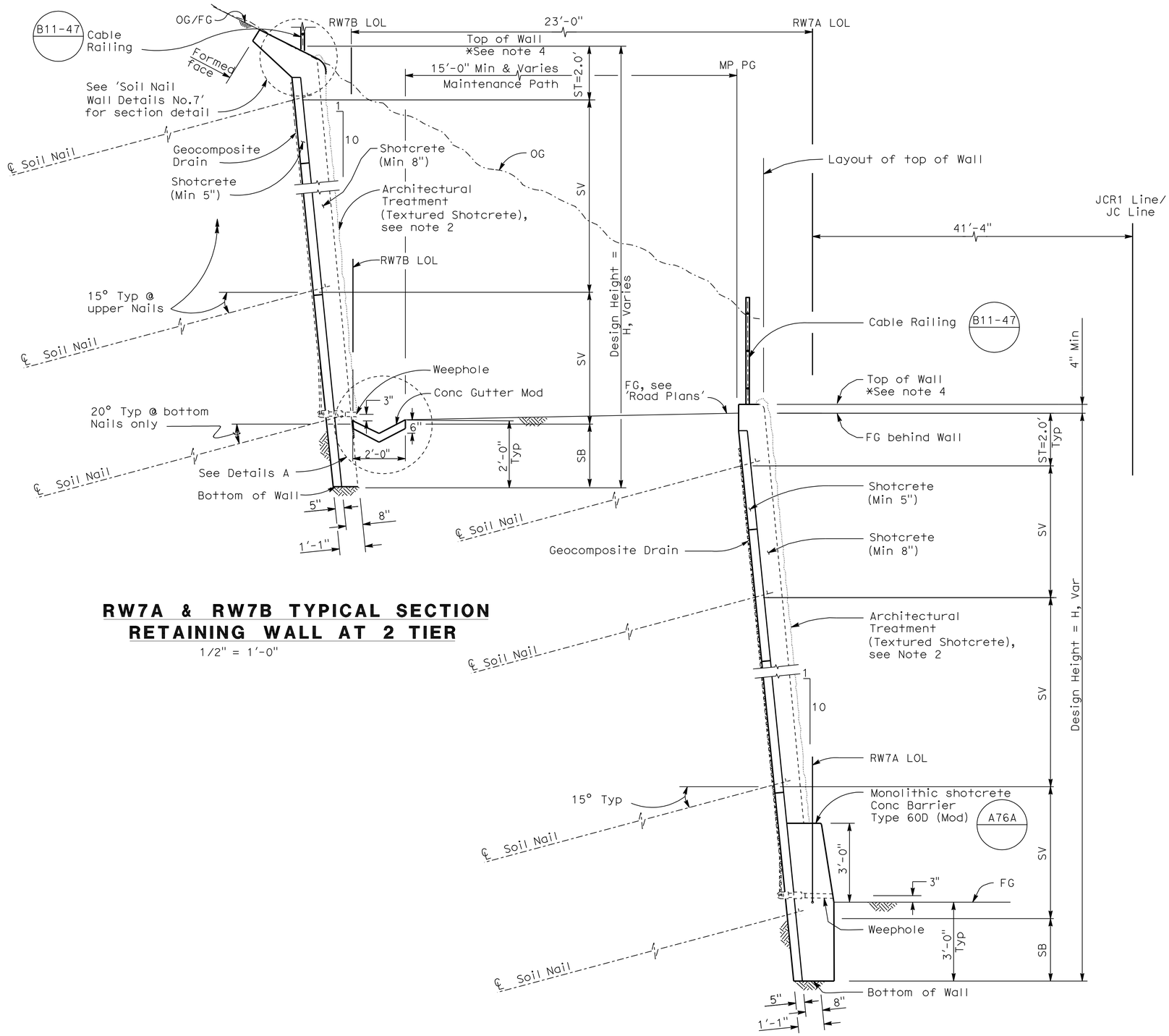

RW7A & RW7B TYPICAL SECTION RETAINING WALL AT 2 TIER

1/2" = 1'-0"

LEGEND

ST = Vertical distance from top of cut elevation to first row of Soil Nails, ST = 2'-0"

SB = Vertical distance from bottom of wall to bottom level of the Soil Nail Assembly, SB = 2'-0" Min, SB = 3'-6" Max

SV = Vertical spacing of Soil Nail Assembly, SV = 5'-0" Max Typical
= 6'-0" Max for Bottom Row

LE = Embedment Length of Soil Nail, see 'Structure Plan' Sheets

GENERAL NOTES

Design: -Caltrans Bridge Design Specifications August 2004 (LFD) (2004 AASHTO with interims and revisions by Caltrans)
-FHWA Publication No. FHWAO-1F-03-017 Geotechnical Engineering Circular No. 7 - Soil Nail Walls

Seismic Criteria: K_h = 0.2g

Reinforced shotcrete:
fy = 60,000 psi
f'c = 4000 psi

Structural steel: ASTM designation:
A709/A709M, Grade 36

Soil nails: ASTM designation:
A615/A615M, Grade 60, fy = 60 ksi

Tracy L Bertram
DESIGN OVERSIGHT Tracy L Bertram
1-7-10
SIGN OFF DATE

	BY	CHECKED		BY	CHECKED
DESIGN	C VASQUEZ	P PARK	LOAD FACTOR DESIGN		
DETAILS	H. MISTRY	P PARK	LAYOUT	C HII	F QUACH
QUANTITIES	K WONG	S GARAPALLY	SPECIFICATIONS	H MISTRY	PLANS AND SPECS COMPARED P CHEN

DESIGN GENERAL PLAN SHEET (ENGLISH) (REV.2/25/05)

ORIGINAL SCALE IN INCHES FOR REDUCED PLANS 0 1 2 3

PREPARED FOR THE STATE OF CALIFORNIA DEPARTMENT OF TRANSPORTATION

HARSHAD MISTRY
PROJECT ENGINEER

CU 04264
EA 264141

BRIDGE No. 23E0013
POST MILES 1.2

RETAINING WALL No. 7A
GENERAL PLAN No. 9

DISREGARD PRINTS BEARING EARLIER REVISION DATES

REVISION DATES (PRELIMINARY STAGE ONLY): ~~3/13/09~~ ~~8/05/09~~ ~~11/06/09~~ 12/09/09

SHEET 72 OF 171

FILE => 23E0013a-a-gp09.dgn

USERNAME => trlenard DATE PLOTTED => 23-NOV-2010 TIME PLOTTED => 08:10

DIST	COUNTY	ROUTE	POST MILES TOTAL PROJECT	SHEET No	TOTAL SHEETS
04	Nap,Sol	12	2.8/3.3, 0.0/2.6	512	617

P.K. Chen 12/09/09
REGISTERED STRUCTURAL ENGINEER DATE

11-22-10
PLANS APPROVAL DATE

REGISTERED PROFESSIONAL ENGINEER PO-KANG CHEN No. S3112 Exp. 9/30/11 STRUCTURAL STATE OF CALIFORNIA

The State of California or its officers or agents shall not be responsible for the accuracy or completeness of electronic copies of this plan sheet.

SOLANO TRANSPORTATION AUTHORITY
ONE HARBOR CENTER, SUITE 130
SUISUN CITY, CA 94585

MARK THOMAS & COMPANY, INC.
1960 ZANKER ROAD
SAN JOSE, CA 95112

SOIL/ROCK DESIGN PARAMETERS

*Depth measured below FG behind Wall

West of Sta 335+00

Depth*	Friction Angle	Cohesion	Soil Unit Weight	Design Pullout Resistance, Qd
0′ - 20′	36 degrees	0 psf	125 pcf	2.11 kip/ft
> 20′	36 degrees	400 psf	130 pcf	4.52 kip/ft

Sta 335+00 - 337+00

Depth*	Friction Angle	Cohesion	Soil Unit Weight	Design Pullout Resistance, Qd
0′ - 10′	30 degrees	250 psf	125 pcf	2.11 kip/ft
> 10′	36 degrees	400 psf	130 pcf	4.52 kip/ft

Sta 337+00 - 339+00

Depth*	Friction Angle	Cohesion	Soil Unit Weight	Design Pullout Resistance, Qd
0′ - 25′	36 degrees	400 psf	130 pcf	4.52 kip/ft
> 25′	36 degrees	750 psf	130 pcf	4.52 kip/ft

Sta 339+00 - 342+50

Depth*	Friction Angle	Cohesion	Soil Unit Weight	Design Pullout Resistance, Qd
0′ - 10′	36 degrees	400 psf	130 pcf	4.52 kip/ft
> 10′	36 degrees	750 psf	130 pcf	4.52 kip/ft

Sta 342+50 - 343+50

Depth*	Friction Angle	Cohesion	Soil Unit Weight	Design Pullout Resistance, Qd
All	30 degrees	250 psf	125 pcf	2.11 kip/ft

Sta 343+50 - 347+00

Depth*	Friction Angle	Cohesion	Soil Unit Weight	Design Pullout Resistance, Qd
0′ - 15′	36 degrees	2000 psf	135 pcf	7.54 kip/ft
> 15′	36 degrees	4000 psf	140 pcf	12.06 kip/ft

Sta 347+00 - 349+00

Depth*	Friction Angle	Cohesion	Soil Unit Weight	Design Pullout Resistance, Qd
0′ - 20′	36 degrees	400 psf	130 pcf	4.52 kip/ft
> 20′	36 degrees	2000 psf	135 pcf	7.54 kip/ft

East of Sta 349+00

Depth*	Friction Angle	Cohesion	Soil Unit Weight	Design Pullout Resistance, Qd
All	30 degrees	400 psf	125 pcf	2.11 kip/ft

Tracy L Bertram
DESIGN OVERSIGHT Tracy L Bertram
1-7-10
SIGN OFF DATE

DESIGN	BY P PARK	CHECKED P CHEN	LOAD FACTOR DESIGN		
DETAILS	BY H. MISTRY	CHECKED P PARK	LAYOUT	BY C HII	CHECKED F QUACH
QUANTITIES	BY K WONG	CHECKED S GARAPALLY	SPECIFICATIONS	BY H MISTRY	PLANS AND SPECS COMPARED P CHEN

DESIGN GENERAL PLAN SHEET (ENGLISH) (REV.2/25/05)

ORIGINAL SCALE IN INCHES FOR REDUCED PLANS 0 1 2 3

PREPARED FOR THE STATE OF CALIFORNIA DEPARTMENT OF TRANSPORTATION

HARSHAD MISTRY
PROJECT ENGINEER

CU 04264
EA 264141

BRIDGE No. 23E0012
POST MILES 1.2

RETAINING WALL No. 7A
GENERAL PLAN No. 10

DISREGARD PRINTS BEARING EARLIER REVISION DATES

REVISION DATES (PRELIMINARY STAGE ONLY): ~~3/13/09~~ ~~8/05/09~~ ~~11/06/09~~ 12/09/09

SHEET 73 OF 171

FILE => 23E0013a-a-gp10.dgn

USERNAME => trlenard DATE PLOTTED => 23-NOV-2010 TIME PLOTTED => 08:10

DIST	COUNTY	ROUTE	POST MILES TOTAL PROJECT	SHEET No	TOTAL SHEETS
04	Nap,Sol	12	2.8/3.3, 0.0/2.6	513	617

P.K. Chen 12/09/09
REGISTERED STRUCTURAL ENGINEER DATE

11-22-10
PLANS APPROVAL DATE

REGISTERED PROFESSIONAL ENGINEER PO-KANG CHEN No. S3112 Exp. 9/30/11 STRUCTURAL STATE OF CALIFORNIA

The State of California or its officers or agents shall not be responsible for the accuracy or completeness of electronic copies of this plan sheet.

SOLANO TRANSPORTATION AUTHORITY
ONE HARBOR CENTER, SUITE 130
SUISUN CITY, CA 94585

MARK THOMAS & COMPANY, INC.
1960 ZANKER ROAD
SAN JOSE, CA 95112

BENCHMARKS

Benchmark No.1
Set 2" brass disk (California Department of Transportation SW-532) in concrete along the southerly side of eastbound Highway 12, at PM 1.30, about 400 feet east of callbox SO-12-012; approximately 10.5 feet southerly of eastbound edge of pavement; approximately 39.6 feet easterly of power pole; approximately 12.4 feet northwesterly of chain link fence post.

Elevation: 232.057 Northing: 1836982.8840 Easting: 6510677.3300

Benchmark No.2
Set 1" iron pipe with red plastic plug and tack (California Department of Transportation SW-534) along the southerly side of eastbound Highway 12, at PM 1.68, behind the guard rail; approximately 3.2 feet northerly of a black chain link fence, approximately 31.5 feet northwesterly of black chain link fence post.

Elevation: 237.559 Northing: 1837356.8140 Easting: 6512667.0800

Notes:

1. For complete project control and monumentation data, see the survey records on file in the surveys department at the district office.
2. Contractor shall protect all existing monuments in place. If monument is damaged by contractor's operations, contractor shall replace at contractor's cost.
3. For Utilities, see 'Road plans'.
4. For complete Right of Way data, conatct Right of Way Engineering at the District Office.

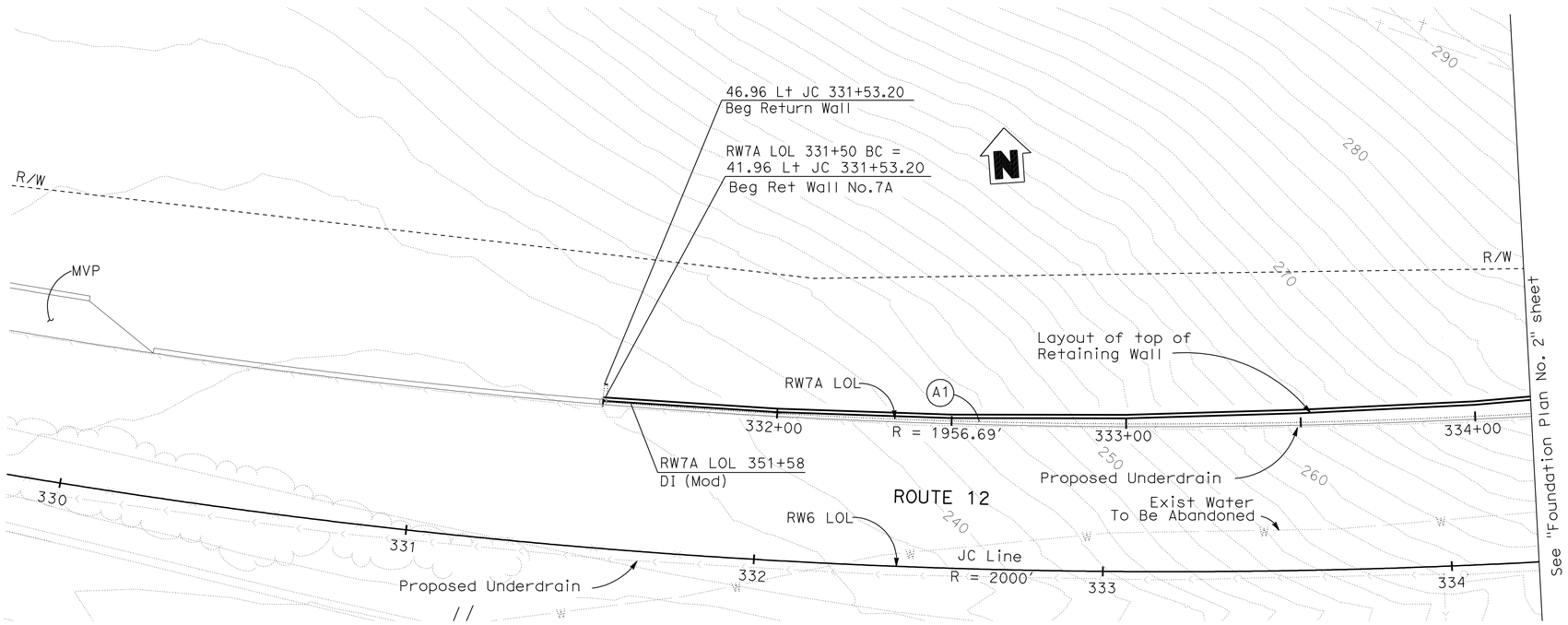

FOUNDATION PLAN
1" = 20'

CURVE DATA

No.	R	Δ	T	L
A1	1956.69'	08°21'59"	143.11'	285.72'

DATUM

Coordinates, bearings and distances are based on the California Coordinate System of 1983, NAVD 1988, Zone 2, CA-HPGN. Epoch 1991.35. Distances and stationing are grid distances. Distances are in feet. Supplementary information may be obtained from the district office, surveys branch or right of way engineering branch, 111 Grand Avenue, Oakland, California.

Tracy L Bertram 11/06/09
GEOTECHNICAL PROFESSIONAL APPROVAL DATE

Tracy L Bertram
DESIGN OVERSIGHT Tracy L Bertram
1-7-10
SIGN OFF DATE

SCALE: AS SHOWN	VERT.DATUM NAVD 88	HORZ.DATUM NAD 83	DESIGN	BY C VASQUEZ	CHECKED P PARK
PHOTOGRAMMETRY AS OF:		ALIGNMENT TIES	DETAILS	BY H MISTRY	CHECKED P PARK
SURVEYED	BY MTCo.	DRAFTED BY	QUANTITIES	BY K WONG	CHECKED S GARAPALLY
FIELD CHECKED	BY	CHECKED BY			

PREPARED FOR THE STATE OF CALIFORNIA DEPARTMENT OF TRANSPORTATION

HARSHAD MISTRY
PROJECT ENGINEER

BRIDGE No. 23E0013
POST MILE 1.2

RETAINING WALL No. 7A
FOUNDATION PLAN No. 1

FOUNDATION PLAN SHEET (ENGLISH) (REV. 2-25-05)

ORIGINAL SCALE IN INCHES FOR REDUCED PLANS 0 1 2 3

CU 04264
EA 264141

DISREGARD PRINTS BEARING EARLIER REVISION DATES

REVISION DATES (PRELIMINARY STAGE ONLY) ~~3/13/09~~ ~~8/05/09~~ ~~11/06/09~~ 12/09/09

SHEET 74 OF 171

FILE => 23e0013a-e-fp01.dgn

USERNAME => friehard DATE PLOTTED => 23-NOV-2010 TIME PLOTTED => 08:10

DIST	COUNTY	ROUTE	POST MILES TOTAL PROJECT	SHEET No	TOTAL SHEETS
04	Nap,Sol	12	2.8/3.3, 0.0/2.6	514	617

P.K. Chen 12/09/09
REGISTERED STRUCTURAL ENGINEER DATE

11-22-10
PLANS APPROVAL DATE

REGISTERED PROFESSIONAL ENGINEER PO-KANG CHEN No. S3112 Exp. 9/30/11 STRUCTURAL STATE OF CALIFORNIA

The State of California or its officers or agents shall not be responsible for the accuracy or completeness of electronic copies of this plan sheet.

SOLANO TRANSPORTATION AUTHORITY
ONE HARBOR CENTER, SUITE 130
SUISUN CITY, CA 94585

MARK THOMAS & COMPANY, INC.
1960 ZANKER ROAD
SAN JOSE, CA 95112

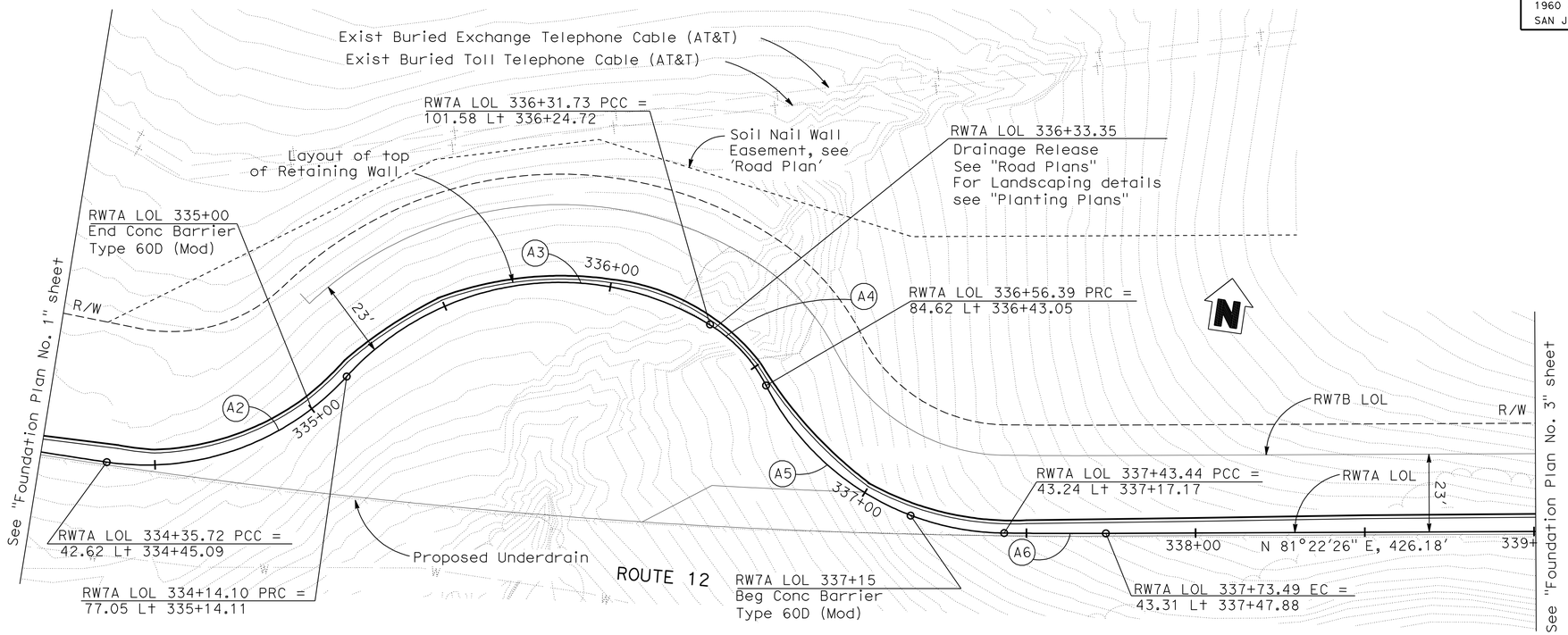

FOUNDATION PLAN
1" = 20'

CURVE DATA

No.	R	Δ	T	L
A2	80.00′	59°08′19"	42.66′	78.38′
A3	85.00′	79°17′31"	70.43′	117.63′
A4	45.00′	31°23′39"	12.64′	24.66′
A5	80.00′	62°20′37"	48.40′	87.05′
A6	1956.69′	00°52′48"	15.03′	30.05′

12/09/09
GEOTECHNICAL PROFESSIONAL APPROVAL DATE

Tracy L Bertram
DESIGN OVERSIGHT Tracy L Bertram
1-7-10
SIGN OFF DATE

SCALE: AS SHOWN | VERT.DATUM NAVD 88 | HORZ.DATUM NAD 83
PHOTOGRAMMETRY AS OF: | ALIGNMENT TIES
SURVEYED BY MTCo. | DRAFTED BY
FIELD CHECKED BY | CHECKED BY

	BY	CHECKED
DESIGN	C VASQUEZ	P PARK
DETAILS	H MISTRY	P PARK
QUANTITIES	K WONG	S GARAPALLY

PREPARED FOR THE STATE OF CALIFORNIA DEPARTMENT OF TRANSPORTATION

HARSHAD MISTRY
PROJECT ENGINEER

BRIDGE No.
POST MILE

RETAINING WALL No. 7A
FOUNDATION PLAN No. 2

FOUNDATION PLAN SHEET (ENGLISH) (REV. 2-25-05)

ORIGINAL SCALE IN INCHES FOR REDUCED PLANS 0 1 2 3

CU 04264
EA 264141

DISREGARD PRINTS BEARING EARLIER REVISION DATES

REVISION DATES (PRELIMINARY STAGE ONLY): ~~3/13/09~~ ~~8/05/09~~ ~~11/06/09~~ 12/09/09

SHEET 75 OF 171

FILE => 23e0013a-e-fp02.dgn

USERNAME => tflenard DATE PLOTTED => 23-NOV-2010 TIME PLOTTED => 08:10

DIST	COUNTY	ROUTE	POST MILES TOTAL PROJECT	SHEET No	TOTAL SHEETS
04	Nap,Sol	12	2.8/3.3, 0.0/2.6	515	617

P.K. Chen 12/09/09
REGISTERED STRUCTURAL ENGINEER DATE

11-22-10
PLANS APPROVAL DATE

REGISTERED PROFESSIONAL ENGINEER PO-KANG CHEN No. S3112 Exp. 9/30/11 STRUCTURAL STATE OF CALIFORNIA

The State of California or its officers or agents shall not be responsible for the accuracy or completeness of electronic copies of this plan sheet.

SOLANO TRANSPORTATION AUTHORITY
ONE HARBOR CENTER, SUITE 130
SUISUN CITY, CA 94585

MARK THOMAS & COMPANY, INC.
1960 ZANKER ROAD
SAN JOSE, CA 95112

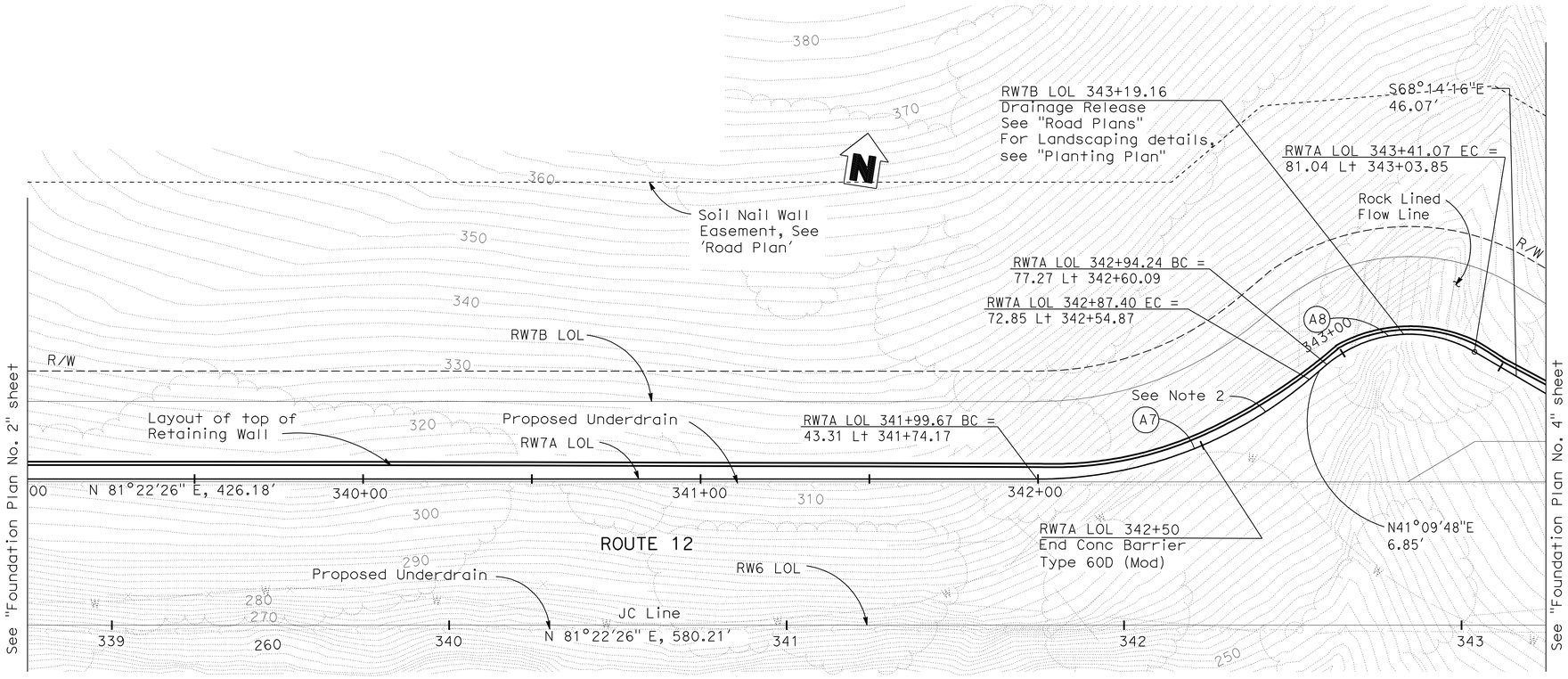

FOUNDATION PLAN
1" = 20'

CURVE DATA

No.	R	Δ	T	L
A7	125.00'	40°12'38"	45.76'	87.73'
A8	38.00'	70°35'56"	26.90'	46.82'

Tracy L Bertram 12/09/09
GEOTECHNICAL PROFESSIONAL APPROVAL DATE

Tracy L Bertram
DESIGN OVERSIGHT Tracy L Bertram
1-7-10
SIGN OFF DATE

SCALE: AS SHOWN | VERT.DATUM NAVD 88 | HORZ.DATUM NAD 83
PHOTOGRAMMETRY AS OF: | ALIGNMENT TIES
SURVEYED BY MTCo. | DRAFTED BY
FIELD CHECKED BY | CHECKED BY

	BY	CHECKED
DESIGN	C VASQUEZ	P PARK
DETAILS	H MISTRY	P PARK
QUANTITIES	K WONG	S GARAPALLY

PREPARED FOR THE STATE OF CALIFORNIA DEPARTMENT OF TRANSPORTATION

HARSHAD MISTRY
PROJECT ENGINEER

BRIDGE No. 23E0013
POST MILE 1.2

RETAINING WALL No. 7A
FOUNDATION PLAN No. 3

FOUNDATION PLAN SHEET (ENGLISH) (REV. 2-25-05)

ORIGINAL SCALE IN INCHES FOR REDUCED PLANS 0 1 2 3

CU 04264
EA 264141

DISREGARD PRINTS BEARING EARLIER REVISION DATES

REVISION DATES (PRELIMINARY STAGE ONLY)					SHEET	OF
~~3/13/09~~	~~8/05/09~~	~~11/06/09~~	12/09/09		76	171

FILE => 23e0013a-e-fp03.dgn

USERNAME => rrlenard DATE PLOTTED => 23-NOV-2010 TIME PLOTTED => 08:10

DIST	COUNTY	ROUTE	POST MILES TOTAL PROJECT	SHEET No	TOTAL SHEETS
04	Nap,Sol	12	2.8/3.3, 0.0/2.6	516	617

P.K. Chen 12/09/09
REGISTERED STRUCTURAL ENGINEER DATE

11-22-10
PLANS APPROVAL DATE

REGISTERED PROFESSIONAL ENGINEER PO-KANG CHEN No. S3112 Exp. 9/30/11 STRUCTURAL STATE OF CALIFORNIA

The State of California or its officers or agents shall not be responsible for the accuracy or completeness of electronic copies of this plan sheet.

SOLANO TRANSPORTATION AUTHORITY
ONE HARBOR CENTER, SUITE 130
SUISUN CITY, CA 94585

MARK THOMAS & COMPANY, INC.
1960 ZANKER ROAD
SAN JOSE, CA 95112

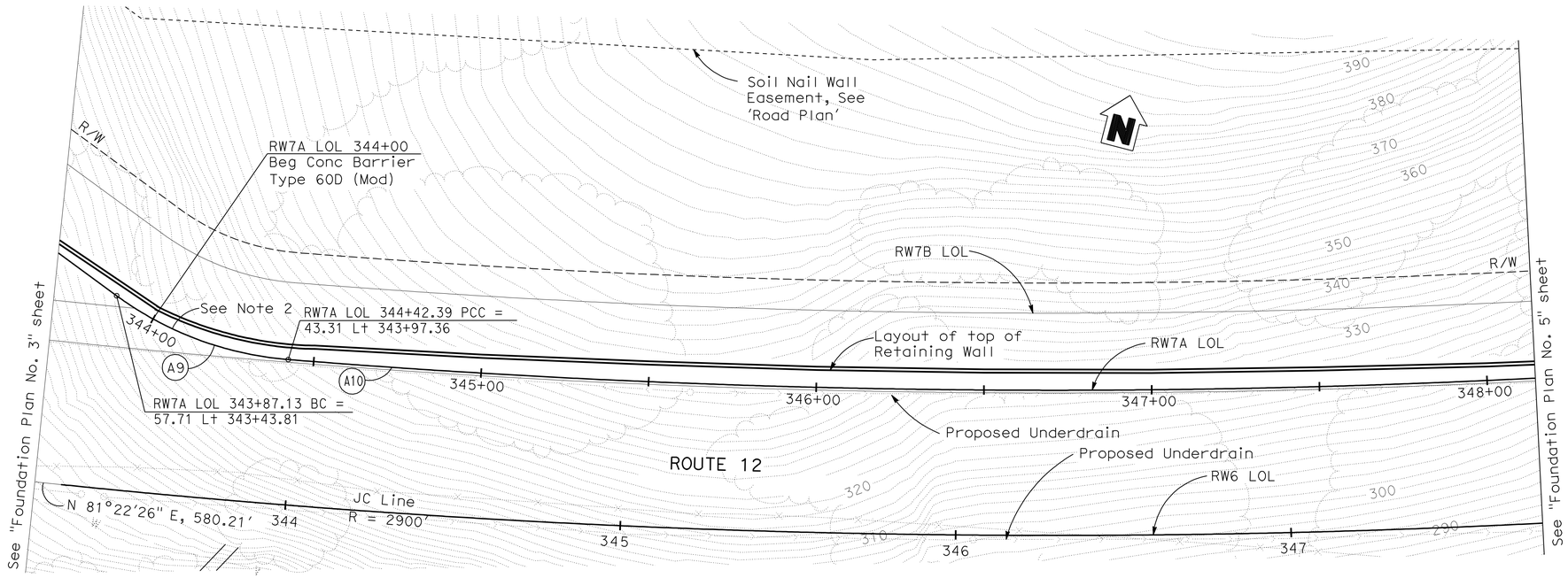

FOUNDATION PLAN
1" = 20'

CURVE DATA

No.	R	Δ	T	L
A9	100.00'	31°39'33"	28.35'	55.26'
A10	2852.19'	07°43'12"	192.44'	384.31'

Tracy L Bertram 12/09/09
GEOTECHNICAL PROFESSIONAL APPROVAL DATE

Tracy L Bertram
DESIGN OVERSIGHT Tracy L Bertram
1-7-10
SIGN OFF DATE

SCALE: AS SHOWN | VERT.DATUM NAVD 88 | HORZ.DATUM NAD 83
PHOTOGRAMMETRY AS OF: | ALIGNMENT TIES
SURVEYED BY MTCo. | DRAFTED BY
FIELD CHECKED BY | CHECKED BY

DESIGN BY C VASQUEZ CHECKED P PARK
DETAILS BY H MISTRY CHECKED P PARK
QUANTITIES BY K WONG CHECKED S GARAPALLY

PREPARED FOR THE STATE OF CALIFORNIA DEPARTMENT OF TRANSPORTATION

HARSHAD MISTRY
PROJECT ENGINEER

BRIDGE No. 23E0013
POST MILE 1.2

RETAINING WALL No. 7A
FOUNDATION PLAN No. 4

FOUNDATION PLAN SHEET (ENGLISH) (REV. 2-25-05)

ORIGINAL SCALE IN INCHES FOR REDUCED PLANS 0 1 2 3

CU 04264
EA 264141

DISREGARD PRINTS BEARING EARLIER REVISION DATES

REVISION DATES (PRELIMINARY STAGE ONLY): ~~3/13/09~~ ~~8/05/09~~ ~~11/06/09~~ 12/09/09

SHEET 77 OF 171

FILE => 23e0013a-e-fp04.dgn

USERNAME => rlenard DATE PLOTTED => 23-NOV-2010 TIME PLOTTED => 08:11

DIST	COUNTY	ROUTE	POST MILES TOTAL PROJECT	SHEET No	TOTAL SHEETS
04	Nap,Sol	12	2.8/3.3, 0.0/2.6	517	617

P.K. Chen 12/09/09
REGISTERED STRUCTURAL ENGINEER DATE

11-22-10
PLANS APPROVAL DATE

REGISTERED PROFESSIONAL ENGINEER PO-KANG CHEN No. S3112 Exp. 9/30/11 STRUCTURAL STATE OF CALIFORNIA

The State of California or its officers or agents shall not be responsible for the accuracy or completeness of electronic copies of this plan sheet.

SOLANO TRANSPORTATION AUTHORITY
ONE HARBOR CENTER, SUITE 130
SUISUN CITY, CA 94585

MARK THOMAS & COMPANY, INC.
1960 ZANKER ROAD
SAN JOSE, CA 95112

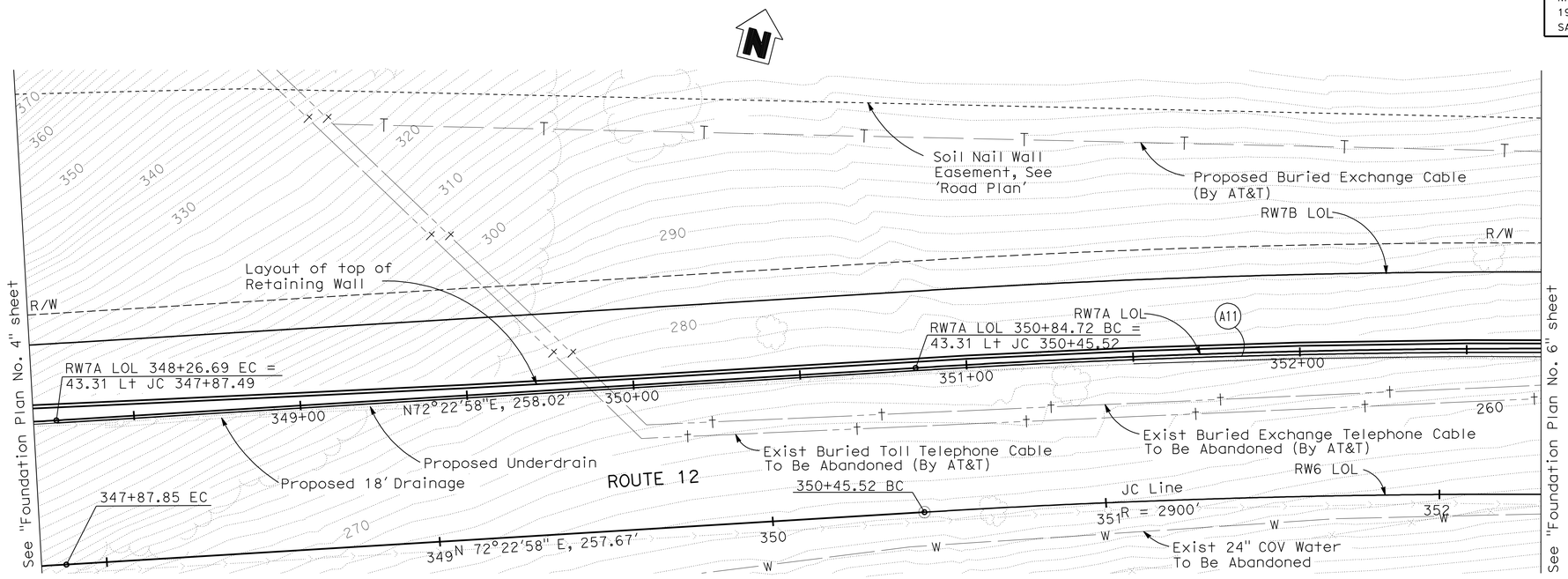

FOUNDATION PLAN
1" = 20'

CURVE DATA

No.	R	Δ	T	L
A11	2966.31'	12°51'00"	336.66'	670.45'

Tracy L Bertram 12/09/09
GEOTECHNICAL PROFESSIONAL APPROVAL DATE

Tracy L Bertram
DESIGN OVERSIGHT Tracy L Bertram

1-7-10
SIGN OFF DATE

FOUNDATION PLAN SHEET (ENGLISH) (REV. 2-25-05)

SCALE: AS SHOWN	VERT.DATUM NAVD 88	HORZ.DATUM NAD 83	
PHOTOGRAMMETRY AS OF:		ALIGNMENT TIES	
SURVEYED	BY MTCo.	DRAFTED	BY
FIELD CHECKED	BY	CHECKED	BY

DESIGN	BY C VASQUEZ	CHECKED P PARK	
DETAILS	BY H MISTRY	CHECKED P PARK	
QUANTITIES	BY K WONG	CHECKED S GARAPALLY	

ORIGINAL SCALE IN INCHES FOR REDUCED PLANS 0 1 2 3

PREPARED FOR THE STATE OF CALIFORNIA DEPARTMENT OF TRANSPORTATION

HARSHAD MISTRY
PROJECT ENGINEER

CU 04264
EA 264141

BRIDGE No. 23E0013
POST MILE 1.2

RETAINING WALL No. 7A
FOUNDATION PLAN No. 5

DISREGARD PRINTS BEARING EARLIER REVISION DATES

REVISION DATES (PRELIMINARY STAGE ONLY): ~~3/13/09~~ ~~8/05/09~~ ~~11/06/09~~ 12/09/09

SHEET 78 OF 171

FILE => 23e0013a-e-fp05.dgn

USERNAME => friehard DATE PLOTTED => 23-NOV-2010 TIME PLOTTED => 08:11

DIST	COUNTY	ROUTE	POST MILES TOTAL PROJECT	SHEET No	TOTAL SHEETS
04	Nap,Sol	12	2.8/3.3, 0.0/2.6	518	617

P.K. Chen 12/09/09
REGISTERED STRUCTURAL ENGINEER DATE

11-22-10
PLANS APPROVAL DATE

REGISTERED PROFESSIONAL ENGINEER PO-KANG CHEN No. S3112 Exp. 9/30/11 STRUCTURAL STATE OF CALIFORNIA

The State of California or its officers or agents shall not be responsible for the accuracy or completeness of electronic copies of this plan sheet.

SOLANO TRANSPORTATION AUTHORITY
ONE HARBOR CENTER, SUITE 130
SUISUN CITY, CA 94585

MARK THOMAS & COMPANY, INC.
1960 ZANKER ROAD
SAN JOSE, CA 95112

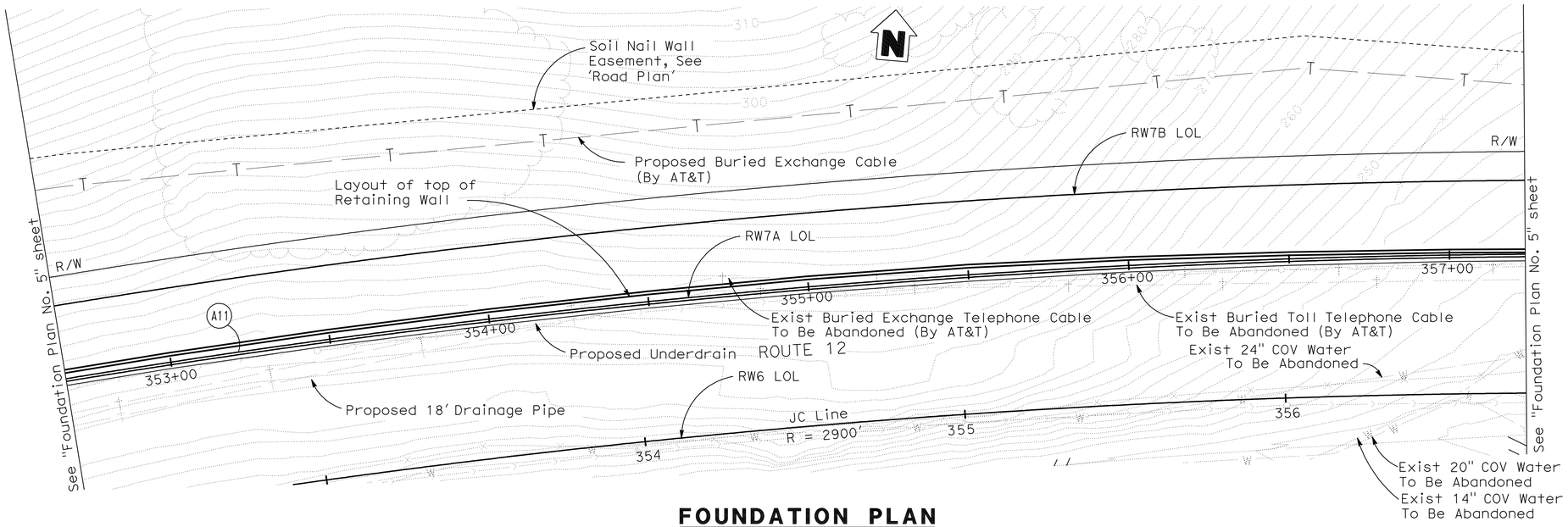

FOUNDATION PLAN
1" = 20'

CURVE DATA

No.	R	Δ	T	L
A11	2966.31'	12°51'00"	336.66'	670.45'

GEOTECHNICAL PROFESSIONAL APPROVAL DATE 12/09/09

Tracy L Bertram
DESIGN OVERSIGHT Tracy L Bertram
1-7-10
SIGN OFF DATE

FOUNDATION PLAN SHEET (ENGLISH) (REV. 2-25-05)

SCALE: AS SHOWN	VERT.DATUM NAVD 88	HORZ.DATUM NAD 83	
PHOTOGRAMMETRY AS OF:		ALIGNMENT TIES	
SURVEYED	BY MTCo.	DRAFTED	BY
FIELD CHECKED	BY	CHECKED	BY

DESIGN	BY C VASQUEZ	CHECKED P PARK	
DETAILS	BY H MISTRY	CHECKED P PARK	
QUANTITIES	BY K WONG	CHECKED S GARAPALLY	

ORIGINAL SCALE IN INCHES FOR REDUCED PLANS 0 1 2 3

PREPARED FOR THE STATE OF CALIFORNIA DEPARTMENT OF TRANSPORTATION

HARSHAD MISTRY
PROJECT ENGINEER

CU 04264
EA 264141

BRIDGE No. 23E0013
POST MILE 1.2

RETAINING WALL No. 7A
FOUNDATION PLAN No. 6

DISREGARD PRINTS BEARING EARLIER REVISION DATES

REVISION DATES (PRELIMINARY STAGE ONLY): ~~3/13/09~~ ~~8/05/09~~ 11/06/09

SHEET 79 OF 171

FILE => 23e0013a-e-fp06.dgn

USERNAME => trlenard DATE PLOTTED => 23-NOV-2010 TIME PLOTTED => 08:11

DIST	COUNTY	ROUTE	POST MILES TOTAL PROJECT	SHEET No	TOTAL SHEETS
04	Nap,Sol	12	2.8/3.3, 0.0/2.6	519	617

P.K. Chen 12/09/09
REGISTERED STRUCTURAL ENGINEER DATE

11-22-10
PLANS APPROVAL DATE

REGISTERED PROFESSIONAL ENGINEER
PO-KANG CHEN
No. S3112
Exp. 9/30/11
STRUCTURAL
STATE OF CALIFORNIA

The State of California or its officers or agents shall not be responsible for the accuracy or completeness of electronic copies of this plan sheet.

SOLANO TRANSPORTATION AUTHORITY
ONE HARBOR CENTER, SUITE 130
SUISUN CITY, CA 94585

MARK THOMAS & COMPANY, INC.
1960 ZANKER ROAD
SAN JOSE, CA 95112

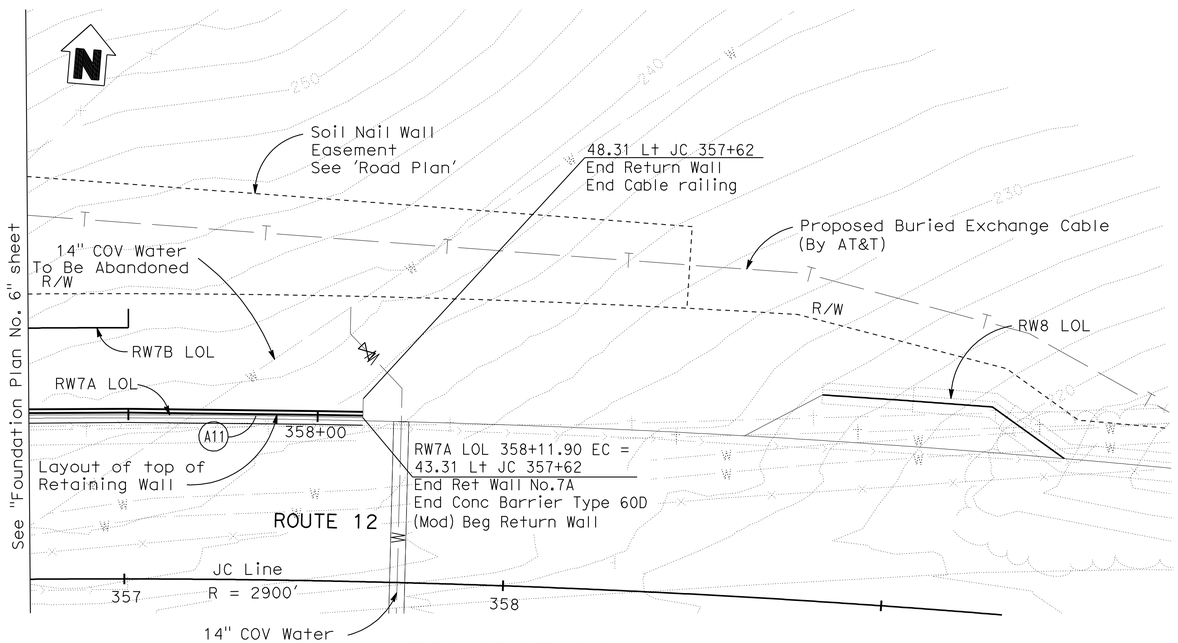

FOUNDATION PLAN
1" = 20'

Tracy L Bertram 12/09/09
GEOTECHNICAL PROFESSIONAL APPROVAL DATE

Tracy L Bertram DESIGN OVERSIGHT	SCALE: AS SHOWN	VERT.DATUM NAVD 88	HORZ.DATUM NAD 83	DESIGN BY C VASQUEZ	CHECKED P PARK
1-7-10 SIGN OFF DATE	PHOTOGRAMMETRY AS OF:	ALIGNMENT TIES		DETAILS BY H MISTRY	CHECKED P PARK
	SURVEYED BY MTCo.	DRAFTED BY		QUANTITIES BY K WONG	CHECKED S GARAPALLY
	FIELD CHECKED BY	CHECKED BY			

FOUNDATION PLAN SHEET (ENGLISH) (REV. 2-25-05)

ORIGINAL SCALE IN INCHES FOR REDUCED PLANS 0 1 2 3

PREPARED FOR THE STATE OF CALIFORNIA DEPARTMENT OF TRANSPORTATION

HARSHAD MISTRY
PROJECT ENGINEER

CU 04264
EA 264141

BRIDGE No. 23E0013
POST MILE 1.2

RETAINING WALL No. 7A
FOUNDATION PLAN No. 7

DISREGARD PRINTS BEARING EARLIER REVISION DATES →

REVISION DATES (PRELIMINARY STAGE ONLY): ~~3/13/09~~ ~~8/05/09~~ ~~11/06/09~~ 12/09/09

SHEET 80 OF 171

FILE => 23e0013a-e-fp07.dgn

USERNAME => trienard DATE PLOTTED => 23-NOV-2010 TIME PLOTTED => 08:11

DIST	COUNTY	ROUTE	POST MILES TOTAL PROJECT	SHEET No	TOTAL SHEETS
04	Nap,Sol	12	2.8/3.3, 0.0/2.6	520	617

P.K. Chen 12/09/09
REGISTERED STRUCTURAL ENGINEER DATE

11-22-10
PLANS APPROVAL DATE

REGISTERED PROFESSIONAL ENGINEER PO-KANG CHEN No. S3112 Exp. 9/30/11 STRUCTURAL STATE OF CALIFORNIA

The State of California or its officers or agents shall not be responsible for the accuracy or completeness of electronic copies of this plan sheet.

SOLANO TRANSPORTATION AUTHORITY
ONE HARBOR CENTER, SUITE 130
SUISUN CITY, CA 94585

MARK THOMAS & COMPANY, INC.
1960 ZANKER ROAD
SAN JOSE, CA 95112

LEGEND

⊡ = Location of Soil Nail Assembly

□ = Location of Proof Soil Test Nail Assembly

SV = Vertical spacing of Soil Nail Assembly, SV = 5'-0" Max Typical
= 6'-0" Max for Bottom Row

Notes:

1. The inclination of all nails shall be 15°.
2. The exact location of the Proof Soil Test Nails to be determined by the Engineer.
3. For details of Soil Nail Assembly, Shotcrete, Return Wall, Cable Railing and other miscellaneous details, see the appropriate "Soil Nail Wall Details" sheets.
4. All Soil Nail profile lines are parallel to top of cut except the bottom row which is parallel to bottom of the wall.
5. Soil Nails shall be placed normal to shotcrete surface in the plan view.
6. Test Nails can be relocated at the Engineer's discretion.
7. For Details of Architectural Treatment see "Architectural Treatment Details" sheets.
8. For Details of Wall Drainage, see "Soil Nail Wall Details No. 4" sheet.
9. For 'General Notes' and 'Soil/Rock Design Parameters', see "General Plan No. 8" and "General Plan No. 9" sheet.
10. For Drain Pipe installation, see "Soil Nail Wall Details No. 5" sheet.
11. For vertical curve at top of wall slope change, see B3-8

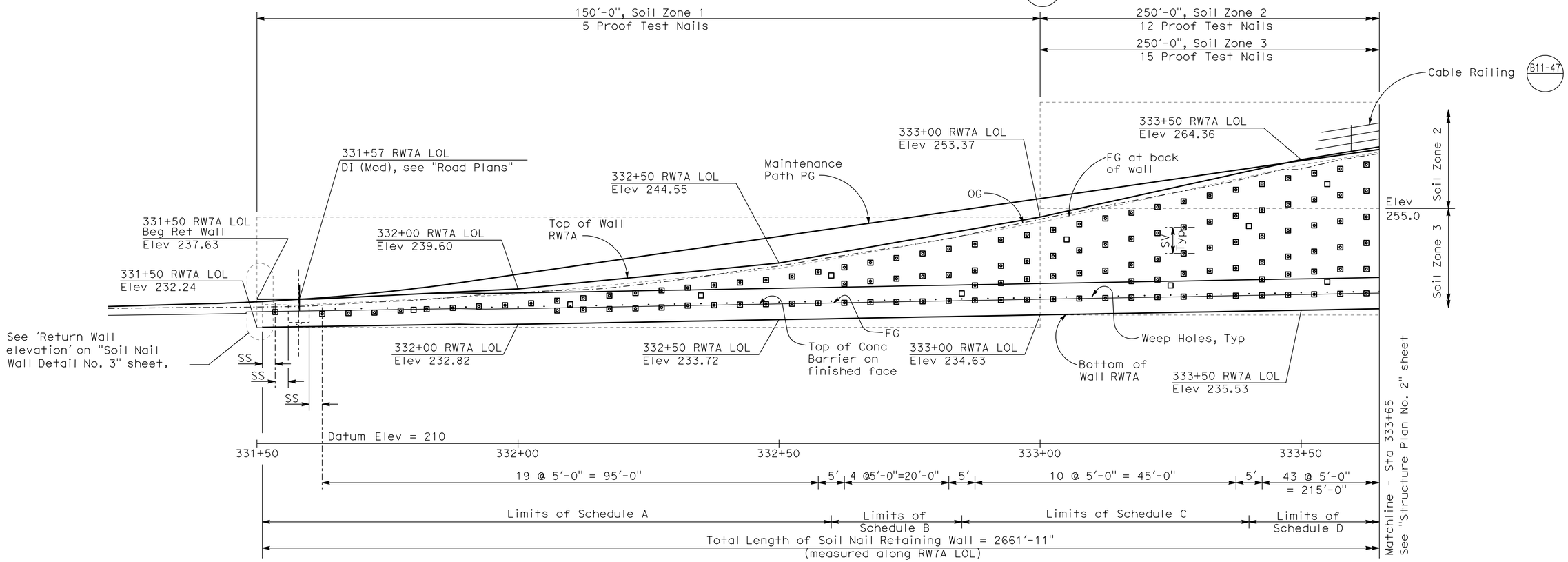

ELEVATION

1" = 10'

Schedule A		
Soil Nail Rebar Size	#8	
Number of Soil Nail Rows	1 & 2	
Row No. (From Top to Bottom)	1	2
Embedment Length, LE (ft)	15	15

Schedule B			
Soil Nail Rebar Size	#8		
Number of Soil Nail Rows	3		
Row No. (From Top to Bottom)	1	2	3
Embedment Length, LE (ft)	15	15	15

Schedule C					
Soil Nail Rebar Size	#8				
Number of Soil Nail Rows	4 & 5				
Row No. (From Top to Bottom)	1	2	3	4	5
Embedment Length, LE (ft)	22	22	22	15	15

Tracy L. Bertram
DESIGN OVERSIGHT Tracy L Bertram
1-7-10
SIGN OFF DATE

	BY	CHECKED
DESIGN	C VASQUEZ	P PARK
DETAILS	H. MISTRY	P PARK
QUANTITIES	K WONG	S GARAPALLY

PREPARED FOR THE STATE OF CALIFORNIA DEPARTMENT OF TRANSPORTATION

HARSHAD MISTRY
PROJECT ENGINEER

BRIDGE No. 23E0013
POST MILE 1.2

RETAINING WALL No. 7A
STRUCTURE PLAN No. 1

DESIGN DETAIL SHEET (ENGLISH) (REV. 2/25/05)
W:\SOLANO TA - 58-0151B SR 12 JAMESON CANYON\STRUCTURES\CADD\XREF\58-0151B-BORDER STRUCTURE DETAILS_22 X 34_SOLANO.DWG 9/4/2008 9:18:30 AM

ORIGINAL SCALE IN INCHES FOR REDUCED PLANS 0 1 2 3

CU 04264
EA 264141

DISREGARD PRINTS BEARING EARLIER REVISION DATES

REVISION DATES (PRELIMINARY STAGE ONLY): ~~3/13/09~~ ~~8/03/09~~ ~~11/06/09~~ 12/09/09

SHEET 81 OF 171

FILE => 23E0013a-g-sp01.dgn

USERNAME => frlenard DATE PLOTTED => 23-NOV-2010 TIME PLOTTED => 08:11

DIST	COUNTY	ROUTE	POST MILES TOTAL PROJECT	SHEET No	TOTAL SHEETS
04	Nap,Sol	12	2.8/3.3, 0.0/2.6	521	617

P.K. Chen 12/09/09
REGISTERED STRUCTURAL ENGINEER DATE

11-22-10
PLANS APPROVAL DATE

REGISTERED PROFESSIONAL ENGINEER PO-KANG CHEN No. S3112 Exp. 9/30/11 STRUCTURAL STATE OF CALIFORNIA

The State of California or its officers or agents shall not be responsible for the accuracy or completeness of electronic copies of this plan sheet.

SOLANO TRANSPORTATION AUTHORITY
ONE HARBOR CENTER, SUITE 130
SUISUN CITY, CA 94585

MARK THOMAS & COMPANY, INC.
1960 ZANKER ROAD
SAN JOSE, CA 95112

LEGEND

⊡ = Location of Soil Nail Assembly

□ = Location of Proof Soil Test Nail Assembly

SV = Vertical spacing of Soil Nail Assembly, SV = 5'-0" Max Typical
= 6'-0" Max for Bottom Row

Notes:

1. For 'General Notes' and 'Soil/Rock Design Parameters', see "General Plan No. 8" and "General Plan No. 9" sheet.
2. For vertical curve at top of wall slope change, see B3-8

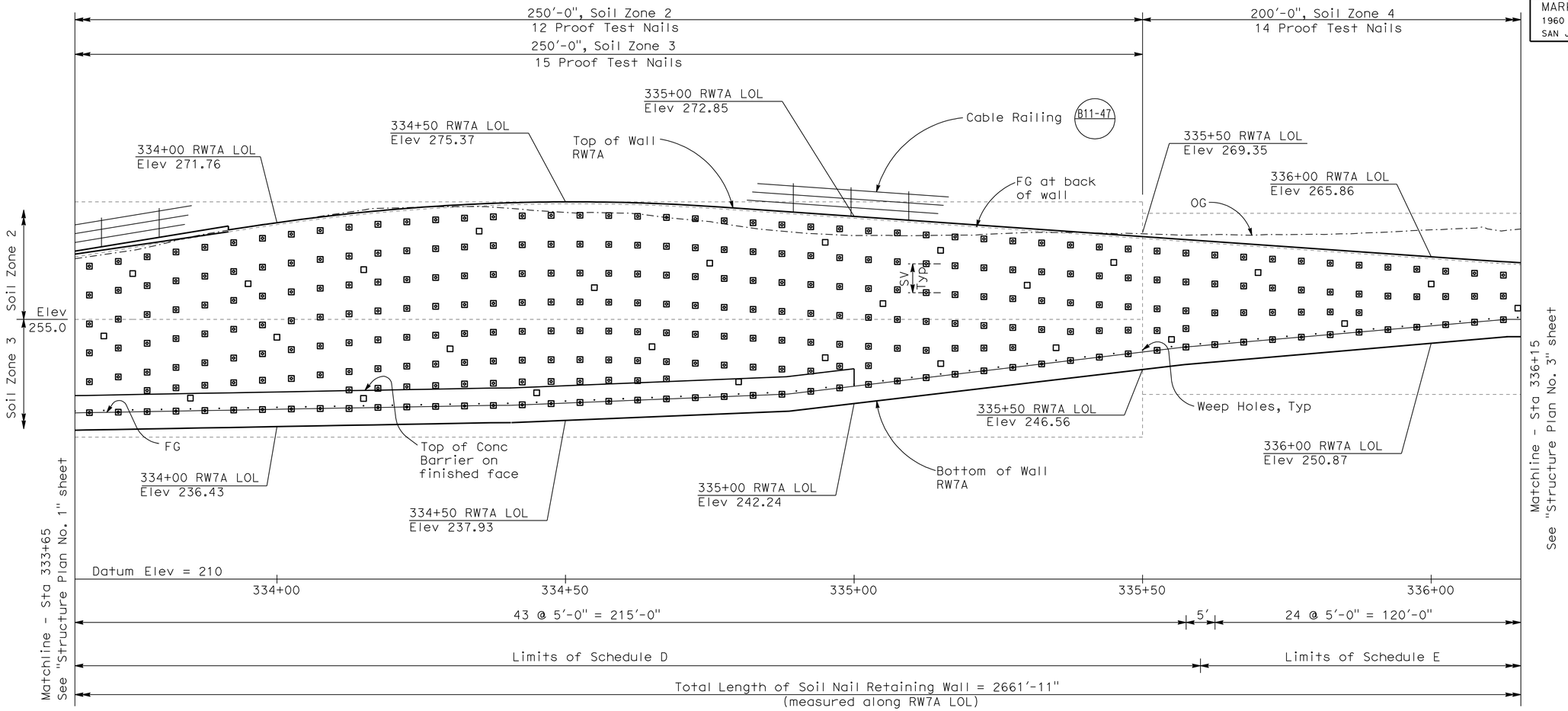

ELEVATION

1" = 10'

Schedule D								
Soil Nail Rebar Size	#10							
Number of Soil Nail Rows	5, 6, 7 & 8							
Row No. (From Top to Bottom)	1	2	3	4	5	6	7	8
Embedment Length, LE (ft)	24	24	24	16	16	16	15	15

Schedule E				
Soil Nail Rebar Size	#8			
Number of Soil Nail Rows	3 & 4			
Row No. (From Top to Bottom)	1	2	3	4
Embedment Length, LE (ft)	18	18	18	15

Tracy L. Bertram
DESIGN OVERSIGHT Tracy L Bertram

1-7-10
SIGN OFF DATE

	BY	CHECKED
DESIGN	C VASQUEZ	P PARK
DETAILS	H. MISTRY	P PARK
QUANTITIES	K WONG	S GARAPALLY

PREPARED FOR THE STATE OF CALIFORNIA DEPARTMENT OF TRANSPORTATION

HARSHAD MISTRY
PROJECT ENGINEER

BRIDGE No. 23E0013
POST MILE 1.2

RETAINING WALL No. 7A
STRUCTURE PLAN No. 2

DESIGN DETAIL SHEET (ENGLISH) (REV. 2/25/05)
W:\SOLANO TA - 58-0151B SR 12 JAMESON CANYON\STRUCTURES\CADD\XREF\58-0151B-BORDER STRUCTURE DETAILS_22 X 34_SOLANO.DWG 9/4/2008 9:18:30 AM

ORIGINAL SCALE IN INCHES FOR REDUCED PLANS 0 1 2 3

CU 04264
EA 264141

DISREGARD PRINTS BEARING EARLIER REVISION DATES

REVISION DATES (PRELIMINARY STAGE ONLY): ~~3/13/09~~ ~~8/03/09~~ ~~11/06/09~~ 12/09/09

SHEET 82 OF 171

FILE => 23E0013a-g-sp02.dgn

USERNAME => trlenard DATE PLOTTED => 23-NOV-2010 TIME PLOTTED => 08:11

DIST	COUNTY	ROUTE	POST MILES TOTAL PROJECT	SHEET No	TOTAL SHEETS
04	Nap,Sol	12	2.8/3.3, 0.0/2.6	522	617

P.K. Chen 12/09/09
REGISTERED STRUCTURAL ENGINEER DATE

11-22-10
PLANS APPROVAL DATE

REGISTERED PROFESSIONAL ENGINEER PO-KANG CHEN No. S3112 Exp. 9/30/11 STRUCTURAL STATE OF CALIFORNIA

The State of California or its officers or agents shall not be responsible for the accuracy or completeness of electronic copies of this plan sheet.

SOLANO TRANSPORTATION AUTHORITY
ONE HARBOR CENTER, SUITE 130
SUISUN CITY, CA 94585

MARK THOMAS & COMPANY, INC.
1960 ZANKER ROAD
SAN JOSE, CA 95112

LEGEND

⊡ = Location of Soil Nail Assembly

□ = Location of Proof Soil Test Nail Assembly

SV = Vertical spacing of Soil Nail Assembly, SV = 5'-0" Max Typical
= 6'-0" Max for Bottom Row

Notes:

1. For 'General Notes' and 'Soil/Rock Design Parameters', see "General Plan No. 8" and "General Plan No. 9" sheet.
2. Vertical curve at top of wall slope change, see B3-8

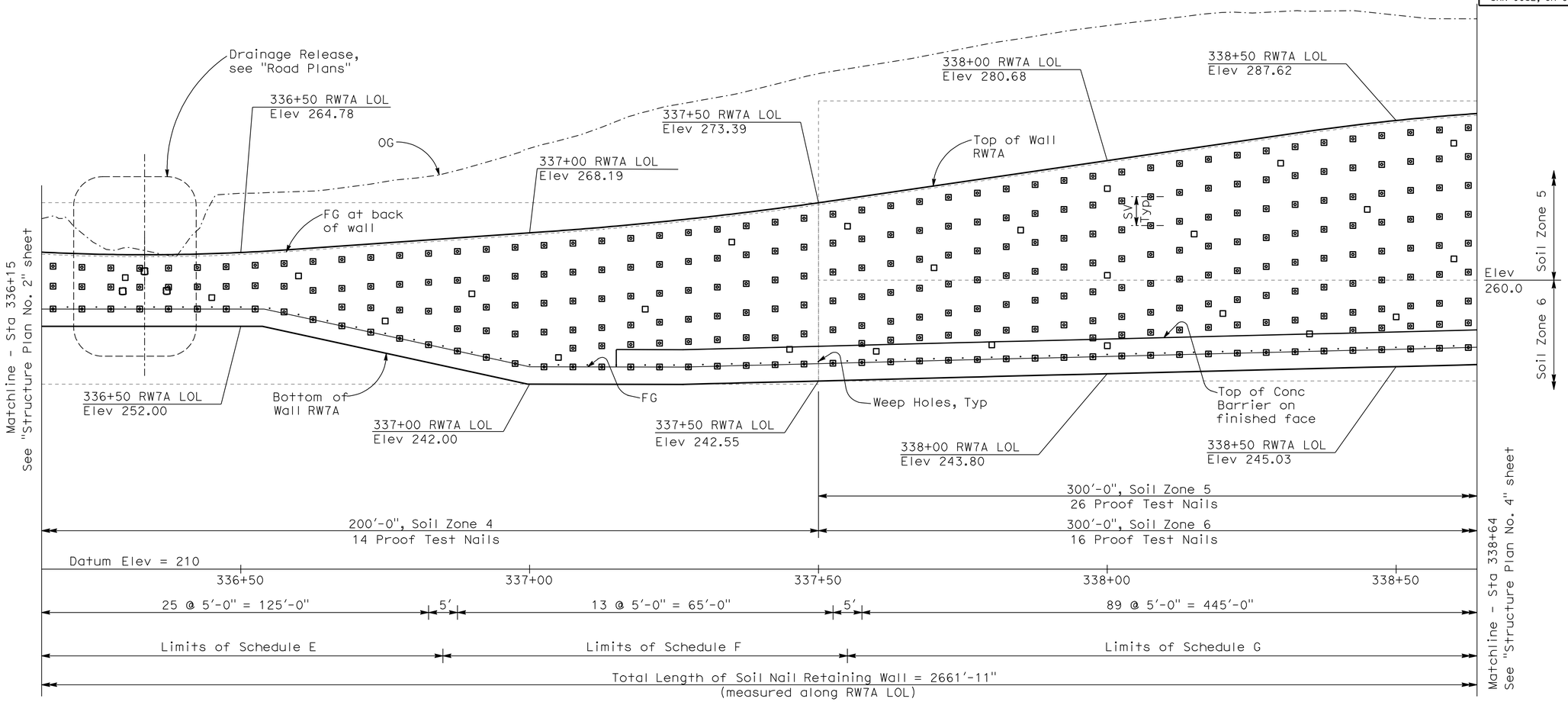

ELEVATION
1" = 10'

Schedule F						
Soil Nail Rebar Size	#8					
Number of Soil Nail Rows	5 & 6					
Row No. (From Top to Bottom)	1	2	3	4	5	6
Embedment Length, LE (ft)	25	25	25	17	17	17

Tracy L. Bertram
DESIGN OVERSIGHT Tracy L Bertram
1-7-10
SIGN OFF DATE

	BY	CHECKED
DESIGN	C VASQUEZ	P PARK
DETAILS	H. MISTRY	P PARK
QUANTITIES	K WONG	S GARAPALLY

PREPARED FOR THE STATE OF CALIFORNIA DEPARTMENT OF TRANSPORTATION

HARSHAD MISTRY
PROJECT ENGINEER

BRIDGE No. 23E0013
POST MILE 1.2

RETAINING WALL No. 7A
STRUCTURE PLAN No. 3

DISREGARD PRINTS BEARING EARLIER REVISION DATES → 3/13/09 8/03/09 11/06/09 12/09/09

SHEET 83 OF 171

DESIGN DETAIL SHEET (ENGLISH) (REV. 2/25/05)
W:\SOLANO TA - 58-0151B SR 12 JAMESON CANYON\STRUCTURES\CADD\XREF\58-0151B-BORDER STRUCTURE DETAILS_22 X 34_SOLANO.DWG 9/4/2008 9:18:30 AM

ORIGINAL SCALE IN INCHES FOR REDUCED PLANS 0 1 2 3

CU 04264
EA 264141

FILE => 23E0013a-g-sp03.dgn

USERNAME => trlenard DATE PLOTTED => 23-NOV-2010 TIME PLOTTED => 08:11

DIST	COUNTY	ROUTE	POST MILES TOTAL PROJECT	SHEET No	TOTAL SHEETS
04	Nap,Sol	12	2.8/3.3, 0.0/2.6	523	617

P.K. Chen 12/09/09
REGISTERED STRUCTURAL ENGINEER DATE

11-22-10
PLANS APPROVAL DATE

REGISTERED PROFESSIONAL ENGINEER PO-KANG CHEN No. S3112 Exp. 9/30/11 STRUCTURAL STATE OF CALIFORNIA

The State of California or its officers or agents shall not be responsible for the accuracy or completeness of electronic copies of this plan sheet.

SOLANO TRANSPORTATION AUTHORITY
ONE HARBOR CENTER, SUITE 130
SUISUN CITY, CA 94585

MARK THOMAS & COMPANY, INC.
1960 ZANKER ROAD
SAN JOSE, CA 95112

LEGEND

⊡ = Location of Soil Nail Assembly

□ = Location of Proof Soil Test Nail Assembly

SV = Vertical spacing of Soil Nail Assembly, SV = 5'-0" Max Typical
= 6'-0" Max for Bottom Row

Notes:

1. For 'General Notes' and 'Soil/Rock Design Parameters', see "General Plan No. 8" and "General Plan No. 9" sheet.
2. For vertical curve at top of wall slope change, see B3-8

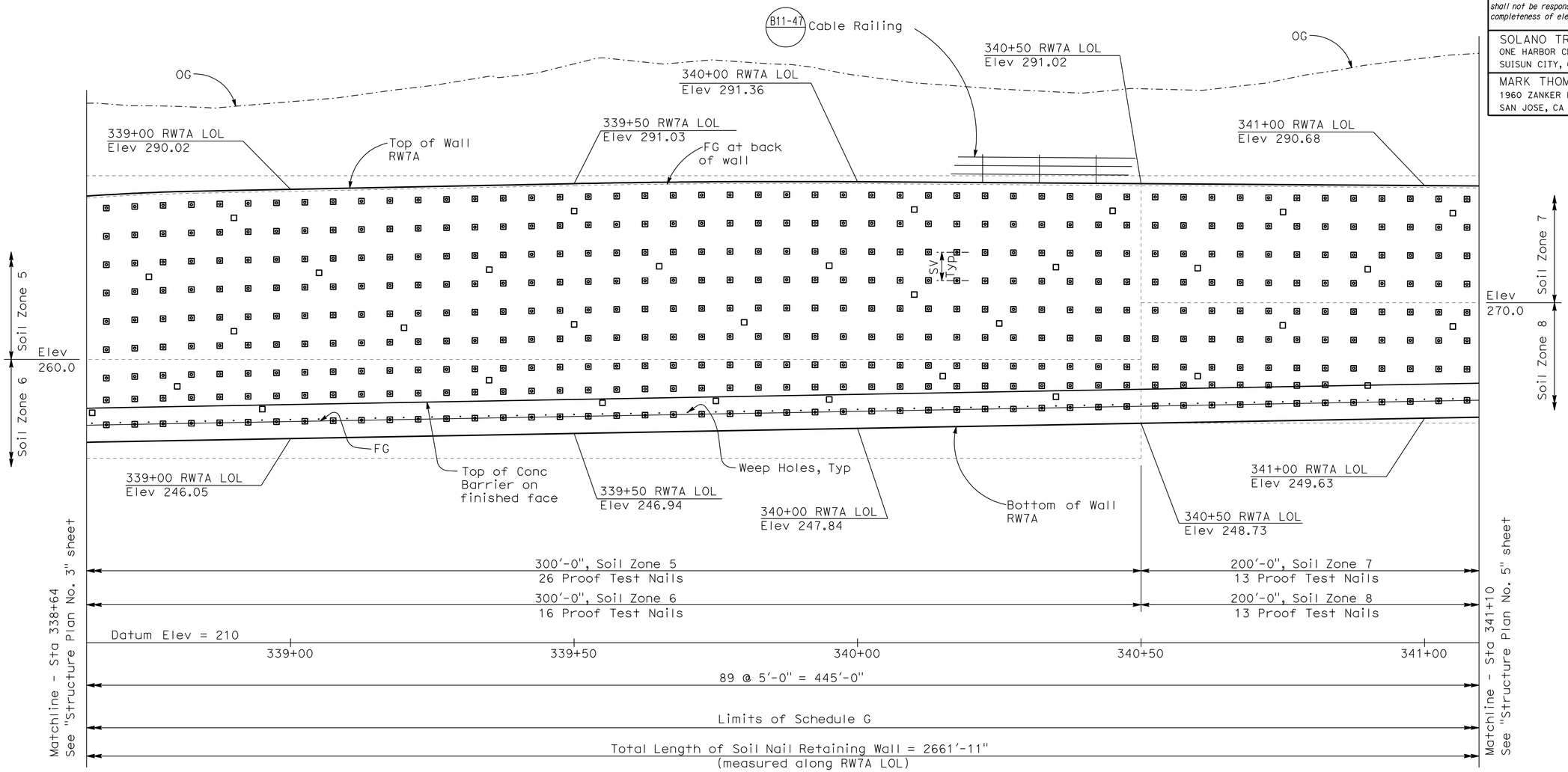

ELEVATION

1" = 10'

Schedule G									
Soil Nail Rebar Size	#10								
Number of Soil Nail Rows	7, 8 & 9								
Row No. (From Top to Bottom)	1	2	3	4	5	6	7	8	9
Embedment Length, LE (ft)	40	40	40	34	34	34	24	24	18

DESIGN OVERSIGHT

SIGN OFF DATE

	BY	CHECKED
DESIGN	C VASQUEZ	P PARK
DETAILS	H. MISTRY	P PARK
QUANTITIES	K WONG	S GARAPALLY

PREPARED FOR THE STATE OF CALIFORNIA DEPARTMENT OF TRANSPORTATION

HARSHAD MISTRY
PROJECT ENGINEER

BRIDGE No. 23E0013
POST MILE 1.2

RETAINING WALL No. 7A
STRUCTURE PLAN No. 4

DESIGN DETAIL SHEET (ENGLISH) (REV. 2/25/05)
W:\SOLANO TA - 58-0151B SR 12 JAMESON CANYON\STRUCTURES\CADD\XREF\58-0151B-BORDER STRUCTURE DETAILS_22 X 34_SOLANO.DWG 9/4/2008 9:18:30 AM

ORIGINAL SCALE IN INCHES FOR REDUCED PLANS 0 1 2 3

CU 04264
EA 264141

DISREGARD PRINTS BEARING EARLIER REVISION DATES

REVISION DATES (PRELIMINARY STAGE ONLY): ~~3/13/09~~ ~~8/03/09~~ ~~11/06/09~~ 12/09/09

SHEET 84 OF 171

FILE => 23E0013a-g-sp04.dgn

USERNAME => trlenard DATE PLOTTED => 23-NOV-2010 TIME PLOTTED => 08:11

DIST	COUNTY	ROUTE	POST MILES TOTAL PROJECT	SHEET No	TOTAL SHEETS
04	Nap,Sol	12	2.8/3.3, 0.0/2.6	524	617

P.K. Chen 12/09/09
REGISTERED STRUCTURAL ENGINEER DATE

11-22-10
PLANS APPROVAL DATE

REGISTERED PROFESSIONAL ENGINEER PO-KANG CHEN No. S3112 Exp. 9/30/11 STRUCTURAL STATE OF CALIFORNIA

The State of California or its officers or agents shall not be responsible for the accuracy or completeness of electronic copies of this plan sheet.

SOLANO TRANSPORTATION AUTHORITY
ONE HARBOR CENTER, SUITE 130
SUISUN CITY, CA 94585

MARK THOMAS & COMPANY, INC.
1960 ZANKER ROAD
SAN JOSE, CA 95112

LEGEND

⊡ = Location of Soil Nail Assembly

□ = Location of Proof Soil Test Nail Assembly

SV = Vertical spacing of Soil Nail Assembly, SV = 5'-0" Max Typical
= 6'-0" Max for Bottom Row

Notes:

1. For 'General Notes' and 'Soil/Rock Design Parameters', see "General Plan No. 8" and "General Plan No. 9" sheet.
2. For vertical curve at top of wall slope change, see B3-8

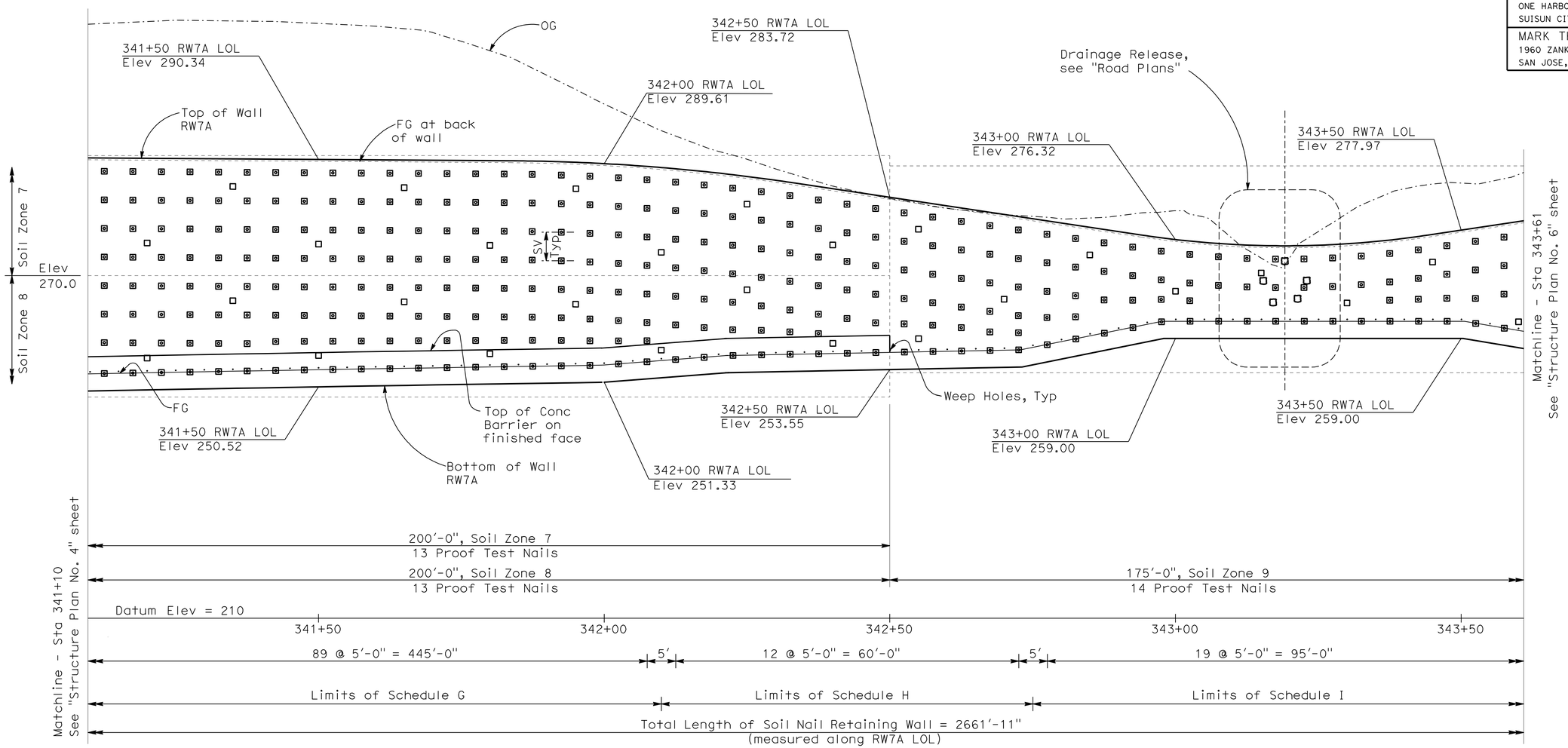

ELEVATION

1" = 10'

Schedule H							
Soil Nail Rebar Size	#10						
Number of Soil Nail Rows	6 & 7						
Row No. (From Top to Bottom)	1	2	3	4	5	6	7
Embedment Length, LE (ft)	35	35	35	23	23	23	16

Schedule I					
Soil Nail Rebar Size	#8				
Number of Soil Nail Rows	3, 4, & 5				
Row No. (From Top to Bottom)	1	2	3	4	5
Embedment Length, LE (ft)	23	23	23	15	15

Tracy L. Bertram
DESIGN OVERSIGHT Tracy L Bertram

1-7-10
SIGN OFF DATE

	BY	CHECKED
DESIGN	C VASQUEZ	P PARK
DETAILS	H. MISTRY	P PARK
QUANTITIES	K WONG	S GARAPALLY

PREPARED FOR THE STATE OF CALIFORNIA DEPARTMENT OF TRANSPORTATION

HARSHAD MISTRY
PROJECT ENGINEER

BRIDGE No. 23E0013
POST MILE 1.2

RETAINING WALL No. 7A
STRUCTURE PLAN No. 5

DESIGN DETAIL SHEET (ENGLISH) (REV. 2/25/05)
W:\SOLANO TA - 58-0151B SR 12 JAMESON CANYON\STRUCTURES\CADD\XREF\58-0151B-BORDER STRUCTURE DETAILS_22 X 34_SOLANO.DWG 9/4/2008 9:18:30 AM

ORIGINAL SCALE IN INCHES FOR REDUCED PLANS 0 1 2 3

CU 04264
EA 264141

FILE => 23E0013a-g-sp05.dgn

DISREGARD PRINTS BEARING EARLIER REVISION DATES

REVISION DATES (PRELIMINARY STAGE ONLY): ~~3/13/09~~ ~~8/03/09~~ ~~11/06/09~~ 12/09/09

SHEET 85 OF 171

USERNAME => trlenard DATE PLOTTED => 23-NOV-2010 TIME PLOTTED => 08:11

DIST	COUNTY	ROUTE	POST MILES TOTAL PROJECT	SHEET No	TOTAL SHEETS
04	Nap,Sol	12	2.8/3.3, 0.0/2.6	525	617

P.K. Chen 12/09/09
REGISTERED STRUCTURAL ENGINEER DATE

11-22-10
PLANS APPROVAL DATE

REGISTERED PROFESSIONAL ENGINEER PO-KANG CHEN No. S3112 Exp. 9/30/11 STRUCTURAL STATE OF CALIFORNIA

The State of California or its officers or agents shall not be responsible for the accuracy or completeness of electronic copies of this plan sheet.

SOLANO TRANSPORTATION AUTHORITY
ONE HARBOR CENTER, SUITE 130
SUISUN CITY, CA 94585

MARK THOMAS & COMPANY, INC.
1960 ZANKER ROAD
SAN JOSE, CA 95112

LEGEND

⊡ = Location of Soil Nail Assembly

□ = Location of Proof Soil Test Nail Assembly

SV = Vertical spacing of Soil Nail Assembly, SV = 5'-0" Max Typical
= 6'-0" Max for Bottom Row

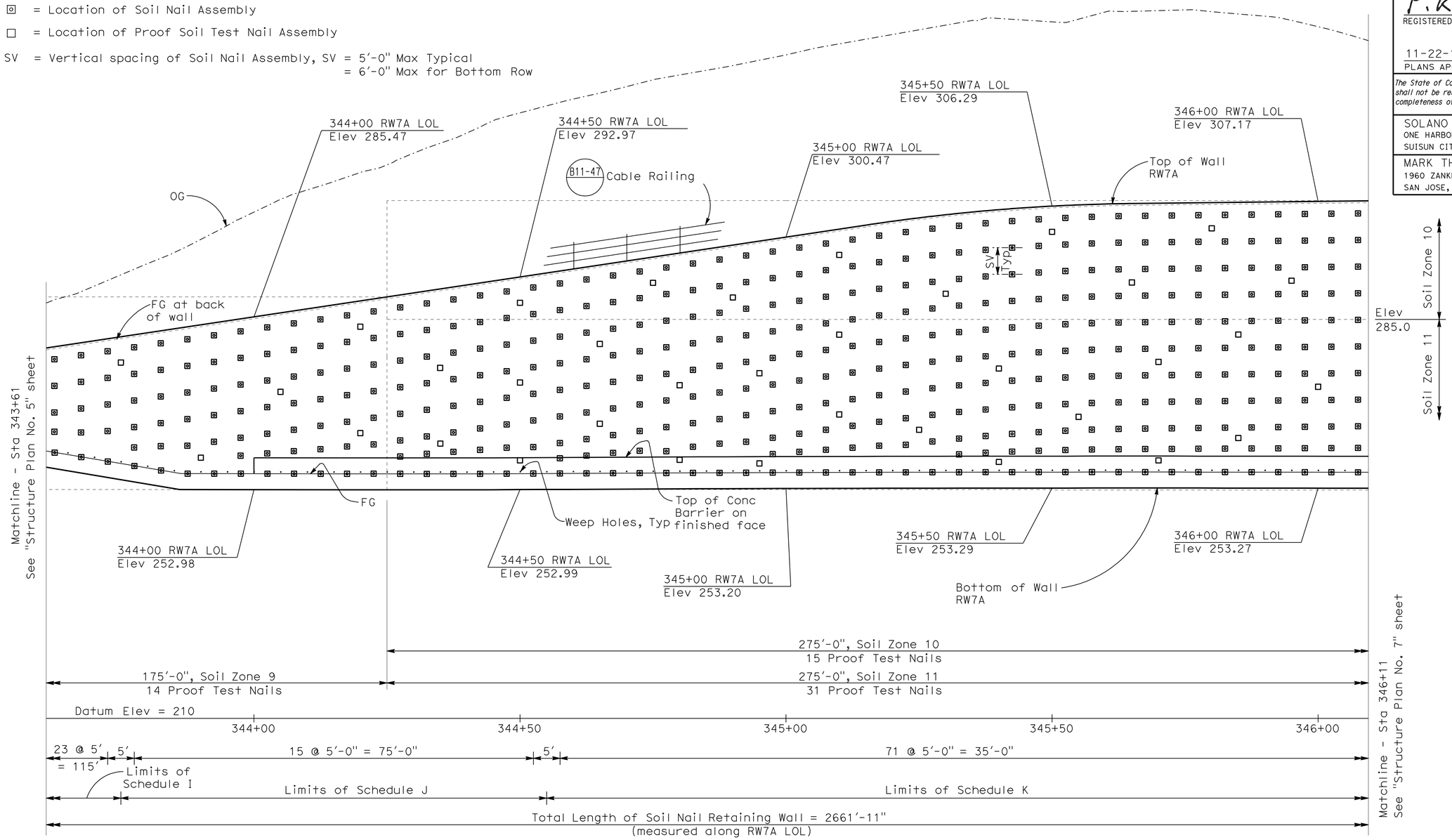

Schedule J								
Soil Nail Rebar Size	#11							
Number of Soil Nail Rows	6, 7, & 8							
Row No. (From Top to Bottom)	1	2	3	4	5	6	7	8
Embedment Length, LE (ft)	28	28	28	20	20	20	15	15

ELEVATION
1" = 10'

Schedule K											
Soil Nail Rebar Size	#11										
Number of Soil Nail Rows	9, 10, & 11										
Row No. (From Top to Bottom)	1	2	3	4	5	6	7	8	9	10	11
Embedment Length, LE (ft)	35	35	35	30	30	30	25	25	20	15	15

Notes:

1. For 'General Notes' and 'Soil/Rock Design Parameters', see "General Plan No. 8" and "General Plan No. 9" sheet.
2. For vertical curve at top of wall slope change, see B3-8

Tracy L. Bertram
DESIGN OVERSIGHT Tracy L Bertram
1-7-10
SIGN OFF DATE

	BY	CHECKED
DESIGN	C VASQUEZ	P PARK
DETAILS	H. MISTRY	P PARK
QUANTITIES	K WONG	S GARAPALLY

PREPARED FOR THE STATE OF CALIFORNIA DEPARTMENT OF TRANSPORTATION

HARSHAD MISTRY
PROJECT ENGINEER

BRIDGE No. 23E0013
POST MILE 1.2

RETAINING WALL No. 7A
STRUCTURE PLAN No. 6

DESIGN DETAIL SHEET (ENGLISH) (REV. 2/25/05)
W:\SOLANO TA - 58-0151B SR 12 JAMESON CANYON\STRUCTURES\CADD\XREF\58-0151B-BORDER STRUCTURE DETAILS_22 X 34_SOLANO.DWG 9/4/2008 9:18:30 AM

ORIGINAL SCALE IN INCHES FOR REDUCED PLANS 0 1 2 3

CU 04264
EA 264141

DISREGARD PRINTS BEARING EARLIER REVISION DATES

REVISION DATES (PRELIMINARY STAGE ONLY): ~~3/13/09~~ ~~8/03/09~~ ~~11/06/09~~ 12/09/09

SHEET 86 OF 171

FILE => 23E0013a-g-sp06.dgn

USERNAME => trienard DATE PLOTTED => 23-NOV-2010 TIME PLOTTED => 08:11

DIST	COUNTY	ROUTE	POST MILES TOTAL PROJECT	SHEET No	TOTAL SHEETS
04	Nap,Sol	12	2.8/3.3, 0.0/2.6	526	617

P.K. Chen 12/09/09
REGISTERED STRUCTURAL ENGINEER DATE

11-22-10
PLANS APPROVAL DATE

REGISTERED PROFESSIONAL ENGINEER PO-KANG CHEN No. S3112 Exp. 9/30/11 STRUCTURAL STATE OF CALIFORNIA

The State of California or its officers or agents shall not be responsible for the accuracy or completeness of electronic copies of this plan sheet.

SOLANO TRANSPORTATION AUTHORITY
ONE HARBOR CENTER, SUITE 130
SUISUN CITY, CA 94585

MARK THOMAS & COMPANY, INC.
1960 ZANKER ROAD
SAN JOSE, CA 95112

LEGEND

⊡ = Location of Soil Nail Assembly

□ = Location of Proof Soil Test Nail Assembly

SV = Vertical spacing of Soil Nail Assembly, SV = 5'-0" Max Typical
= 6'-0" Max for Bottom Row

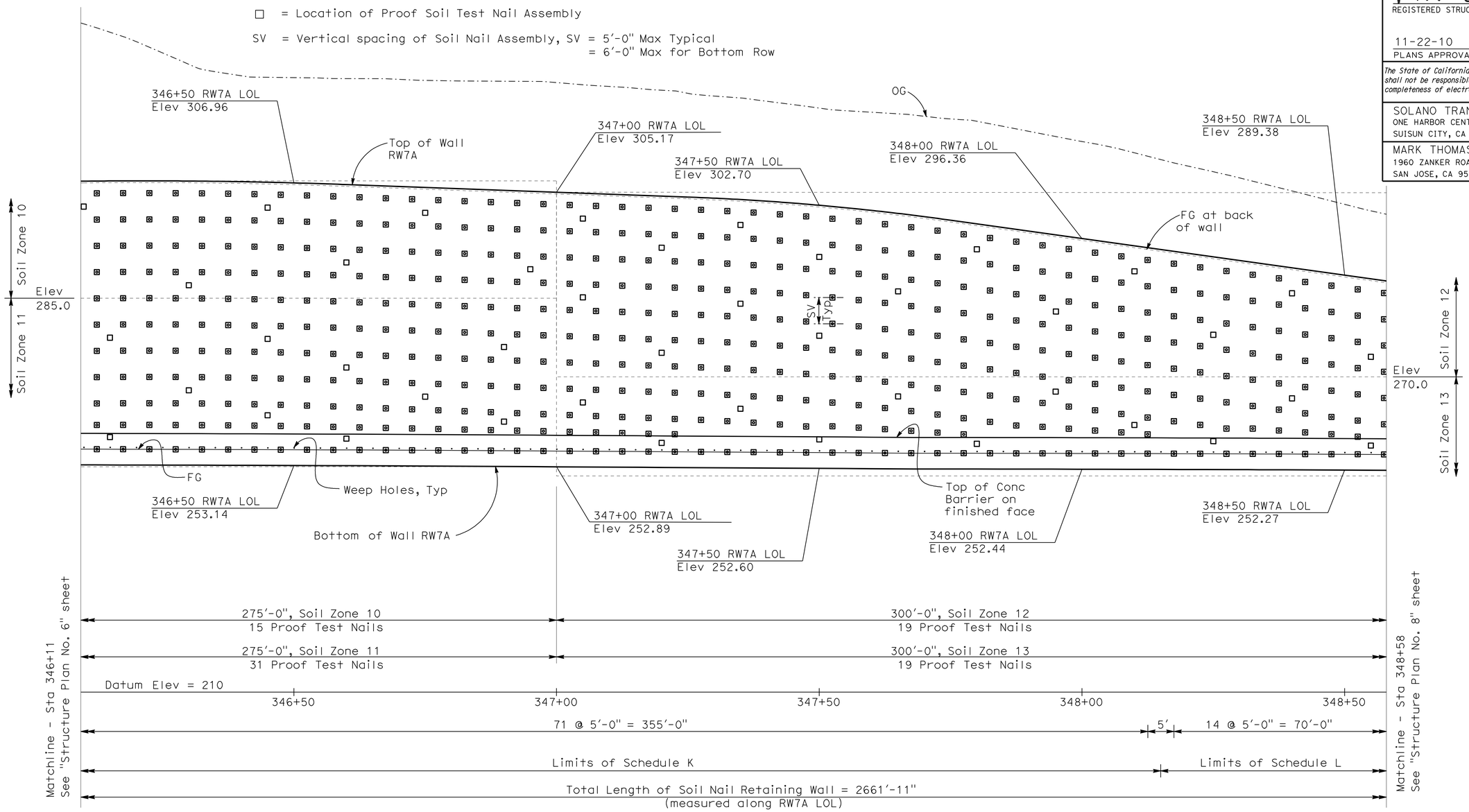

ELEVATION

1" = 10'

Notes:

1. For 'General Notes' and 'Soil/Rock Design Parameters', see "General Plan No. 8" and "General Plan No. 9" sheet.
2. For vertical curve at top of wall slope change, see B3-8

Schedule L								
Soil Nail Rebar Size	#10							
Number of Soil Nail Rows	7 & 8							
Row No. (From Top to Bottom)	1	2	3	4	5	6	7	8
Embedment Length, LE (ft)	25	25	25	25	20	20	20	15

Tracy L. Bertram
DESIGN OVERSIGHT Tracy L Bertram
1-7-10
SIGN OFF DATE

	BY	CHECKED
DESIGN	C VASQUEZ	P PARK
DETAILS	H. MISTRY	P PARK
QUANTITIES	K WONG	S GARAPALLY

PREPARED FOR THE STATE OF CALIFORNIA DEPARTMENT OF TRANSPORTATION

HARSHAD MISTRY
PROJECT ENGINEER

BRIDGE No. 23E0013
POST MILE 1.2

RETAINING WALL No. 7A
STRUCTURE PLAN No. 7

DESIGN DETAIL SHEET (ENGLISH) (REV. 2/25/05)
W:\SOLANO TA - 58-0151B SR 12 JAMESON CANYON\STRUCTURES\CADD\XREF\58-0151B-BORDER STRUCTURE DETAILS_22 X 34_SOLANO.DWG 9/4/2008 9:18:30 AM

ORIGINAL SCALE IN INCHES FOR REDUCED PLANS 0 1 2 3

CU 04264
EA 264141

DISREGARD PRINTS BEARING EARLIER REVISION DATES

REVISION DATES (PRELIMINARY STAGE ONLY) ~~3/13/09~~ ~~8/03/09~~ ~~11/06/09~~ 12/09/09

SHEET 87 OF 171

FILE => 23E0013a-g-sp07.dgn

USERNAME => trlenard DATE PLOTTED => 23-NOV-2010 TIME PLOTTED => 08:11

DIST	COUNTY	ROUTE	POST MILES TOTAL PROJECT	SHEET No	TOTAL SHEETS
04	Nap,Sol	12	2.8/3.3, 0.0/2.6	527	617

P.K. Chen 12/09/09
REGISTERED STRUCTURAL ENGINEER DATE

11-22-10
PLANS APPROVAL DATE

REGISTERED PROFESSIONAL ENGINEER PO-KANG CHEN No. S3112 Exp. 9/30/11 STRUCTURAL STATE OF CALIFORNIA

The State of California or its officers or agents shall not be responsible for the accuracy or completeness of electronic copies of this plan sheet.

SOLANO TRANSPORTATION AUTHORITY
ONE HARBOR CENTER, SUITE 130
SUISUN CITY, CA 94585

MARK THOMAS & COMPANY, INC.
1960 ZANKER ROAD
SAN JOSE, CA 95112

LEGEND

⊡ = Location of Soil Nail Assembly

□ = Location of Proof Soil Test Nail Assembly

SV = Vertical spacing of Soil Nail Assembly, SV = 5'-0" Max Typical
= 6'-0" Max for Bottom Row

Notes:

1. For 'General Notes' and 'Soil/Rock Design Parameters', see "General Plan No. 8" and "General Plan No. 9" sheet.
2. For vertical curve at top of wall slope change, see B3-8

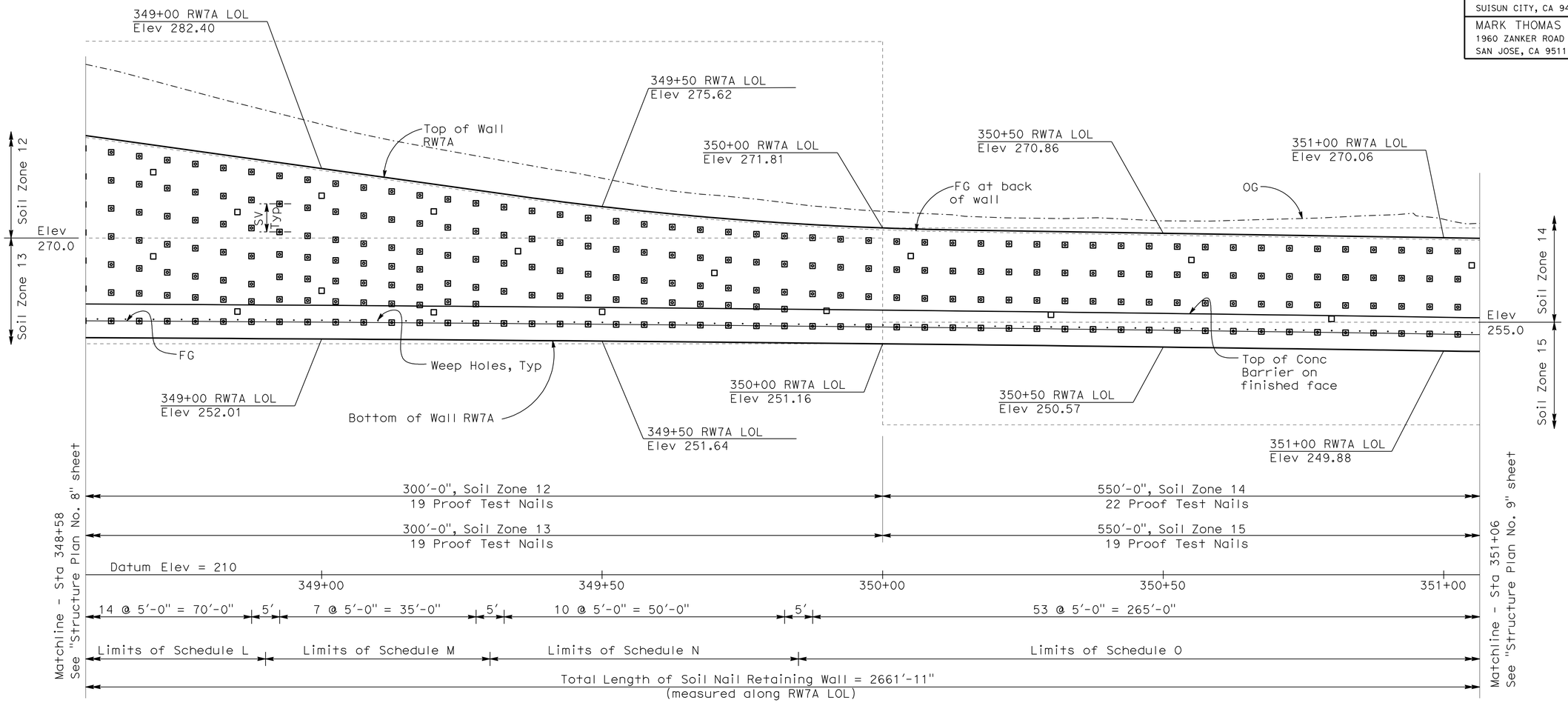

ELEVATION

1" = 10'

Schedule M							
Soil Nail Rebar Size	#10						
Number of Soil Nail Rows	6 & 7						
Row No. (From Top to Bottom)	1	2	3	4	5	6	7
Embedment Length, LE (ft)	44	44	44	44	36	36	36

Schedule N					
Soil Nail Rebar Size	#8				
Number of Soil Nail Rows	5				
Row No. (From Top to Bottom)	1	2	3	4	5
Embedment Length, LE (ft)	40	40	40	32	32

Schedule O				
Soil Nail Rebar Size	#8			
Number of Soil Nail Rows	4			
Row No. (From Top to Bottom)	1	2	3	4
Embedment Length, LE (ft)	22	22	22	15

Tracy L. Bertram
DESIGN OVERSIGHT Tracy L Bertram

1-7-10
SIGN OFF DATE

	BY	CHECKED
DESIGN	C VASQUEZ	P PARK
DETAILS	H. MISTRY	P PARK
QUANTITIES	K WONG	S GARAPALLY

PREPARED FOR THE STATE OF CALIFORNIA DEPARTMENT OF TRANSPORTATION

HARSHAD MISTRY
PROJECT ENGINEER

BRIDGE No. 23E0013
POST MILE 1.2

RETAINING WALL No. 7A
STRUCTURE PLAN No. 8

DESIGN DETAIL SHEET (ENGLISH) (REV. 2/25/05)
W:\SOLANO TA - 58-0151B SR 12 JAMESON CANYON\STRUCTURES\CADD\XREF\58-0151B-BORDER STRUCTURE DETAILS_22 X 34_SOLANO.DWG 9/4/2008 9:18:30 AM

ORIGINAL SCALE IN INCHES FOR REDUCED PLANS 0 1 2 3

CU 04264
EA 264141

DISREGARD PRINTS BEARING EARLIER REVISION DATES → ~~3/13/09~~ ~~8/03/09~~ ~~11/06/09~~ 12/09/09

SHEET 88 OF 171

FILE => 23E0013a-g-sp08.dgn

USERNAME => trlenard DATE PLOTTED => 23-NOV-2010 TIME PLOTTED => 08:12

DIST	COUNTY	ROUTE	POST MILES TOTAL PROJECT	SHEET No	TOTAL SHEETS
04	Nap,Sol	12	2.8/3.3, 0.0/2.6	528	617

P.K. Chen 12/09/09
REGISTERED STRUCTURAL ENGINEER DATE

11-22-10
PLANS APPROVAL DATE

REGISTERED PROFESSIONAL ENGINEER PO-KANG CHEN No. S3112 Exp. 9/30/11 STRUCTURAL STATE OF CALIFORNIA

The State of California or its officers or agents shall not be responsible for the accuracy or completeness of electronic copies of this plan sheet.

SOLANO TRANSPORTATION AUTHORITY
ONE HARBOR CENTER, SUITE 130
SUISUN CITY, CA 94585

MARK THOMAS & COMPANY, INC.
1960 ZANKER ROAD
SAN JOSE, CA 95112

LEGEND

⊡ = Location of Soil Nail Assembly

□ = Location of Proof Soil Test Nail Assembly

SV = Vertical spacing of Soil Nail Assembly, SV = 5'-0" Max Typical
= 6'-0" Max for Bottom Row

Notes:

1. For 'General Notes' and 'Soil/Rock Design Parameters', see "General Plan No. 8" and "General Plan No. 9" sheet.
2. For vertical curve at top of wall slope change, see B3-8

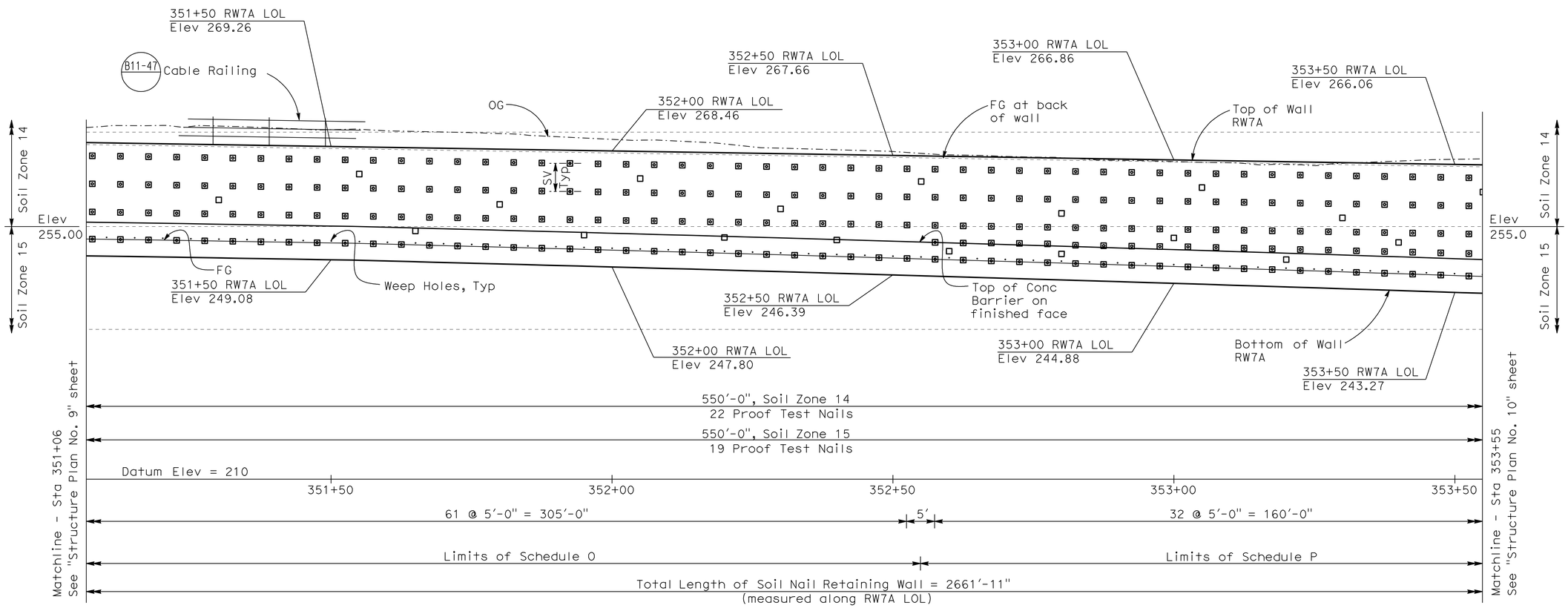

ELEVATION

1" = 10'

Schedule P					
Soil Nail Rebar Size	#8				
Number of Soil Nail Rows	5				
Row No. (From Top to Bottom)	1	2	3	4	5
Embedment Length, LE (ft)	32	32	32	22	22

Tracy L. Bertram
DESIGN OVERSIGHT Tracy L Bertram
1-7-10
SIGN OFF DATE

	BY	CHECKED
DESIGN	C VASQUEZ	P PARK
DETAILS	H. MISTRY	P PARK
QUANTITIES	K WONG	S GARAPALLY

PREPARED FOR THE STATE OF CALIFORNIA DEPARTMENT OF TRANSPORTATION

HARSHAD MISTRY
PROJECT ENGINEER

BRIDGE No. 23E0013
POST MILE 1.2

RETAINING WALL No. 7A
STRUCTURE PLAN No. 9

DISREGARD PRINTS BEARING EARLIER REVISION DATES → 3/13/09 8/03/09 11/06/09 12/09/09

SHEET 89 OF 171

DESIGN DETAIL SHEET (ENGLISH) (REV. 2/25/05)
W:\SOLANO TA - 58-0151B SR 12 JAMESON CANYON\STRUCTURES\CADD\XREF\58-0151B-BORDER STRUCTURE DETAILS_22 X 34_SOLANO.DWG 9/4/2008 9:18:30 AM

ORIGINAL SCALE IN INCHES FOR REDUCED PLANS 0 1 2 3

CU 04264
EA 264141

FILE => 23E0013a-g-sp09.dgn

USERNAME => trlenard DATE PLOTTED => 23-NOV-2010 TIME PLOTTED => 08:12

DIST	COUNTY	ROUTE	POST MILES TOTAL PROJECT	SHEET No	TOTAL SHEETS
04	Nap,Sol	12	2.8/3.3, 0.0/2.6	529	617

P.K. Chen 12/09/09
REGISTERED STRUCTURAL ENGINEER DATE

11-22-10
PLANS APPROVAL DATE

REGISTERED PROFESSIONAL ENGINEER PO-KANG CHEN No. S3112 Exp. 9/30/11 STRUCTURAL STATE OF CALIFORNIA

The State of California or its officers or agents shall not be responsible for the accuracy or completeness of electronic copies of this plan sheet.

SOLANO TRANSPORTATION AUTHORITY
ONE HARBOR CENTER, SUITE 130
SUISUN CITY, CA 94585

MARK THOMAS & COMPANY, INC.
1960 ZANKER ROAD
SAN JOSE, CA 95112

LEGEND

⊡ = Location of Soil Nail Assembly

□ = Location of Proof Soil Test Nail Assembly

SV = Vertical spacing of Soil Nail Assembly, SV = 5'-0" Max Typical
= 6'-0" Max for Bottom Row

Notes:

1. For 'General Notes', 'Soil/Rock Design Parameters' and, see "General Plan No. 8" and "General Plan No. 9" sheet.
2. For vertical curve at top of wall slope change, see B3-8

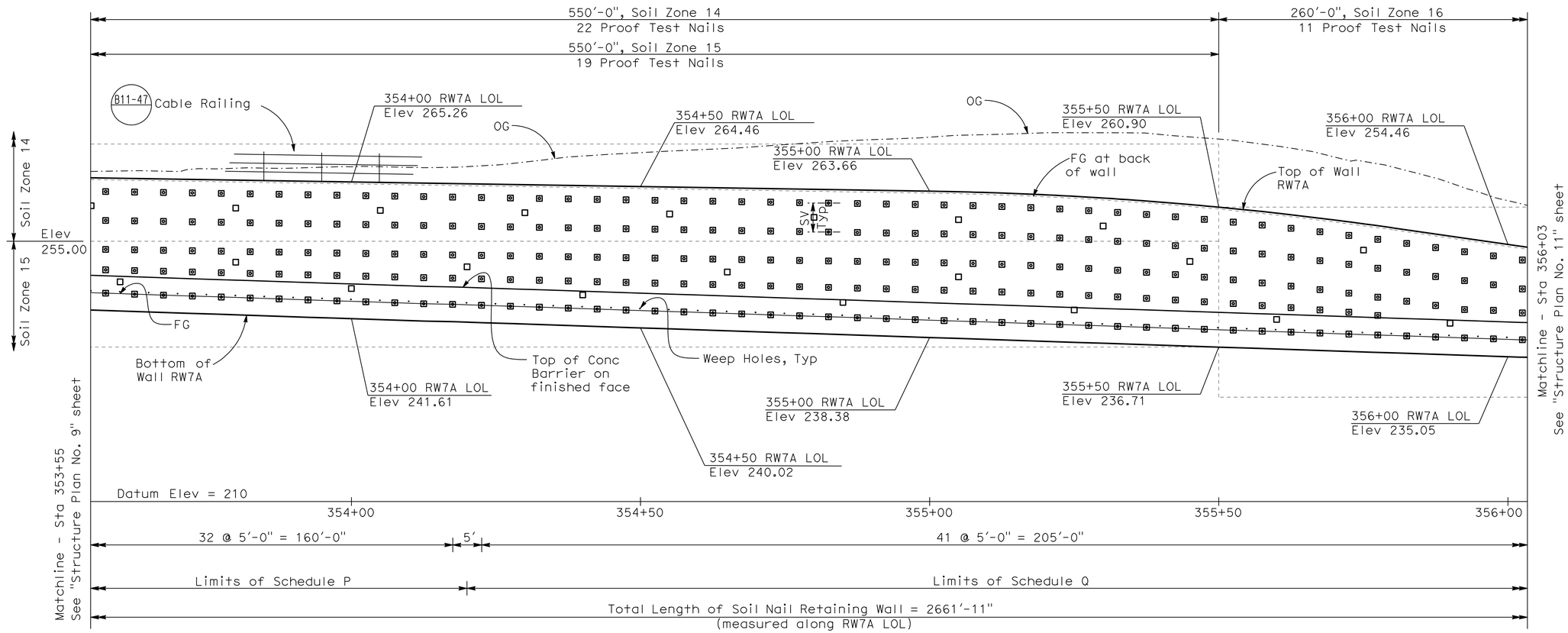

ELEVATION
1" = 10'

Schedule Q					
Soil Nail Rebar Size	#8				
Number of Soil Nail Rows	4 & 5				
Row No. (From Top to Bottom)	1	2	3	4	5
Embedment Length, LE (ft)	36	36	36	29	29

Tracy L. Bertram
DESIGN OVERSIGHT Tracy L Bertram
1-7-10
SIGN OFF DATE

	BY	CHECKED
DESIGN	C VASQUEZ	P PARK
DETAILS	H. MISTRY	P PARK
QUANTITIES	K WONG	S GARAPALLY

PREPARED FOR THE STATE OF CALIFORNIA DEPARTMENT OF TRANSPORTATION

HARSHAD MISTRY
PROJECT ENGINEER

BRIDGE No. 23E0013
POST MILE 1.2

RETAINING WALL No. 7A
STRUCTURE PLAN No. 10

DESIGN DETAIL SHEET (ENGLISH) (REV. 2/25/05)
W:\SOLANO TA - 58-0151B SR 12 JAMESON CANYON\STRUCTURES\CADD\XREF\58-0151B-BORDER STRUCTURE DETAILS_22 X 34_SOLANO.DWG 9/4/2008 9:18:30 AM

ORIGINAL SCALE IN INCHES FOR REDUCED PLANS 0 1 2 3

CU 04264
EA 264141

DISREGARD PRINTS BEARING EARLIER REVISION DATES

REVISION DATES (PRELIMINARY STAGE ONLY): ~~3/13/09~~ ~~8/03/09~~ ~~11/06/09~~ 12/09/09

SHEET 90 OF 171

FILE => 23E0013a-g-sp10.dgn

USERNAME => trlenard DATE PLOTTED => 23-NOV-2010 TIME PLOTTED => 08:12

DIST	COUNTY	ROUTE	POST MILES TOTAL PROJECT	SHEET No	TOTAL SHEETS
04	Nap,Sol	12	2.8/3.3, 0.0/2.6	530	617

P.K. Chen 12/09/09
REGISTERED STRUCTURAL ENGINEER DATE

11-22-10
PLANS APPROVAL DATE

REGISTERED PROFESSIONAL ENGINEER PO-KANG CHEN No. S3112 Exp. 9/30/11 STRUCTURAL STATE OF CALIFORNIA

The State of California or its officers or agents shall not be responsible for the accuracy or completeness of electronic copies of this plan sheet.

SOLANO TRANSPORTATION AUTHORITY
ONE HARBOR CENTER, SUITE 130
SUISUN CITY, CA 94585

MARK THOMAS & COMPANY, INC.
1960 ZANKER ROAD
SAN JOSE, CA 95112

LEGEND

⊡ = Location of Soil Nail Assembly

□ = Location of Proof Soil Test Nail Assembly

SV = Vertical spacing of Soil Nail Assembly, SV = 5'-0" Max Typical
= 6'-0" Max for Bottom Row

Notes:

1. For 'General Notes' and 'Soil/Rock Design Parameters', see "General Plan No. 8" and "General Plan No. 9" sheet.
2. For vertical curve at top of wall slope change, see B3-8

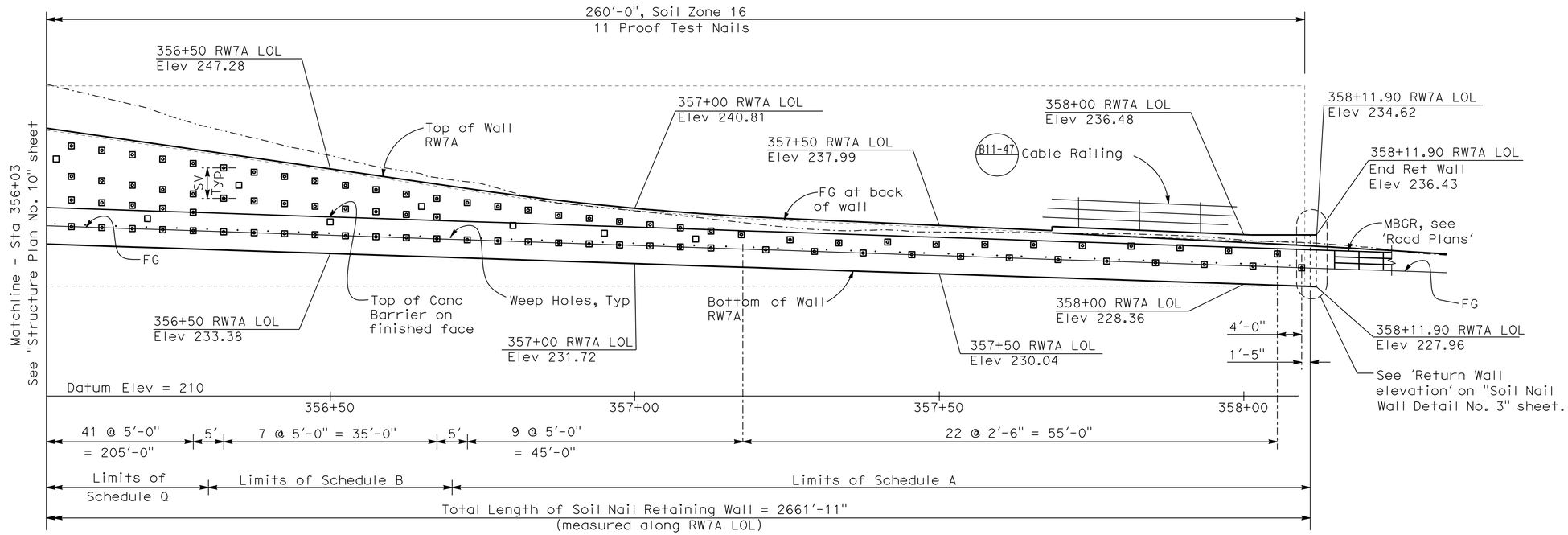

ELEVATION

1" = 10'

Tracy L. Bertram
DESIGN OVERSIGHT Tracy L Bertram

1-7-10
SIGN OFF DATE

	BY	CHECKED
DESIGN	C VASQUEZ	P PARK
DETAILS	H. MISTRY	P PARK
QUANTITIES	K WONG	S GARAPALLY

PREPARED FOR THE STATE OF CALIFORNIA DEPARTMENT OF TRANSPORTATION

HARSHAD MISTRY
PROJECT ENGINEER

BRIDGE No. 23E0013
POST MILE 1.2

RETAINING WALL No. 7A
STRUCTURE PLAN No. 11

DESIGN DETAIL SHEET (ENGLISH) (REV. 2/25/05)
W:\SOLANO TA - 58-0151B SR 12 JAMESON CANYON\STRUCTURES\CADD\XREF\58-0151B-BORDER STRUCTURE DETAILS_22 X 34_SOLANO.DWG 9/4/2008 9:18:30 AM

ORIGINAL SCALE IN INCHES FOR REDUCED PLANS 0 1 2 3

CU 04264
EA 264141

DISREGARD PRINTS BEARING EARLIER REVISION DATES

REVISION DATES (PRELIMINARY STAGE ONLY): ~~3/13/09~~ ~~8/03/09~~ ~~11/06/09~~ 12/09/09

SHEET 91 OF 171

FILE => 23E0013a-g-sp11.dgn

USERNAME => tfrienard DATE PLOTTED => 23-NOV-2010 TIME PLOTTED => 08:12

DIST	COUNTY	ROUTE	POST MILES TOTAL PROJECT	SHEET No	TOTAL SHEETS
04	Nap,Sol	12	2.8/3.3, 0.0/2.6	531	617

P.K. Chen 12/09/09
REGISTERED STRUCTURAL ENGINEER DATE

11-22-10
PLANS APPROVAL DATE

REGISTERED PROFESSIONAL ENGINEER PO-KANG CHEN No. S3112 Exp. 9/30/11 STRUCTURAL STATE OF CALIFORNIA

The State of California or its officers or agents shall not be responsible for the accuracy or completeness of electronic copies of this plan sheet.

SOLANO TRANSPORTATION AUTHORITY
ONE HARBOR CENTER, SUITE 130
SUISUN CITY, CA 94585

MARK THOMAS & COMPANY, INC.
1960 ZANKER ROAD
SAN JOSE, CA 95112

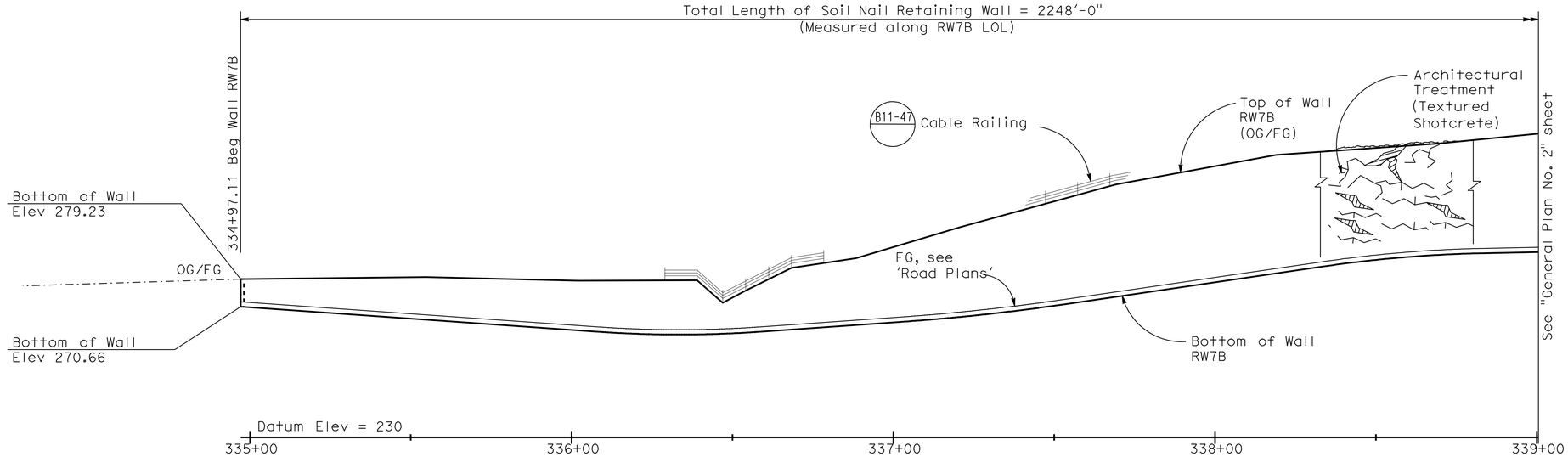

DEVELOPED ELEVATION

1" = 20'

Notes:

1. The Contractor shall verify all controlling field dimensions before ordering or fabricating any material.
2. For 'General Notes' and 'Typical Section', see "General Plan No. 6" sheet.
3. For Architectural Treatment, see "Architectural Treatment" sheet.
4. This plan accurate for Retaining Wall work only.
5. For Utilities, see "Road Plans".
6. For Drainage Systems, see "Soil Nail Wall Details No. 5" sheet.
7. For complete Right of Way data, see Right of Way Engineering at District Office.
8. At convex surfaces, soil nail inclination shall be adjusted to max / min 5° so as to avoid interference with each other. Also, the construction shall be carried out to allow adjoining soil nail grouting to be cured before constructing the next nail.

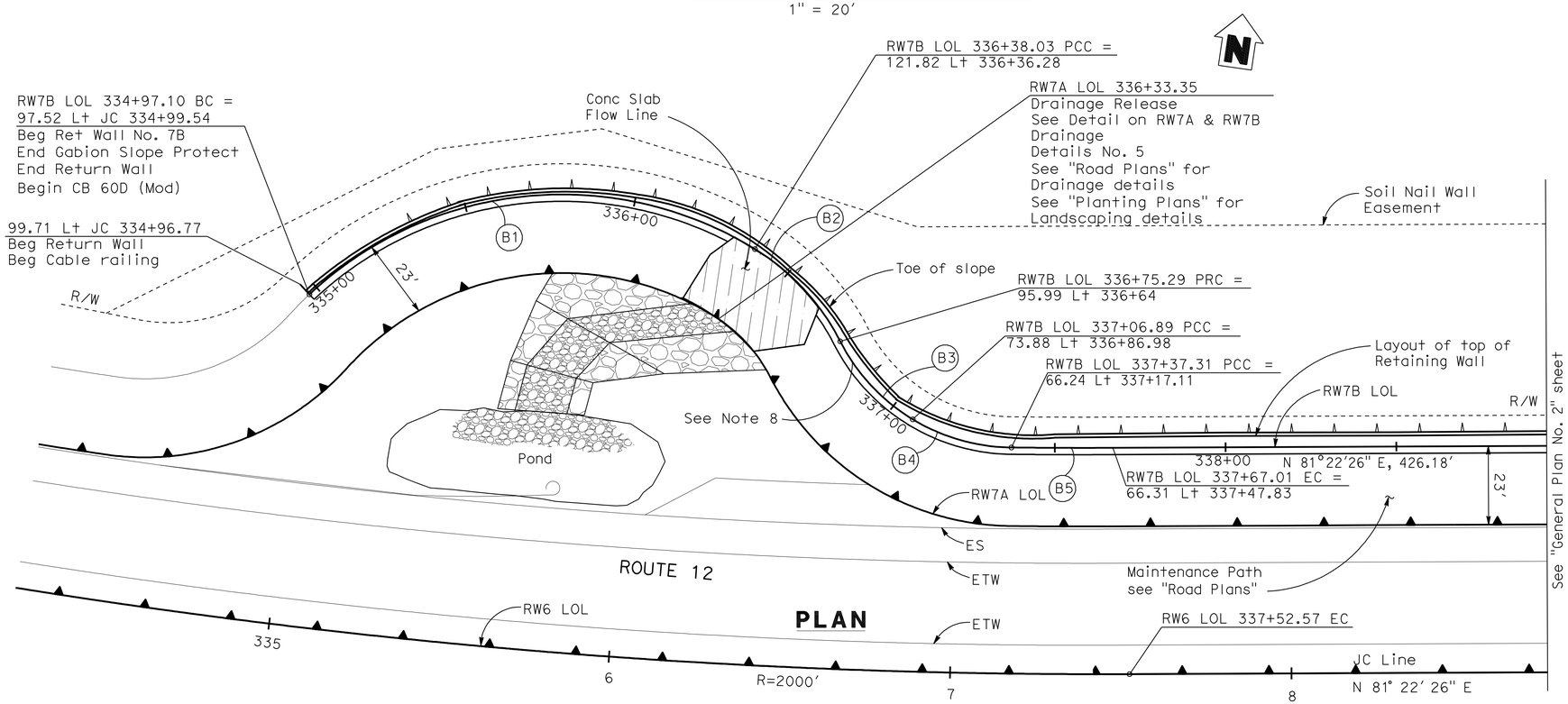

CURVE DATA

No.	R	Δ	T	L
B1	108.00'	74°45'44"	82.52'	140.92'
B2	68.00'	31°23'39"	19.11'	37.26'
B3	57.00'	31°45'50"	16.22'	31.60'
B4	57.00'	30°34'47"	15.58'	30.42'
B5	1933.69'	0°52'48"	14.85'	29.70'

RETAINING WALL #7B
QUANTITIES

STRUCTURE EXCAVATION (SOIL NAIL WALL)	8,420	CY
STRUCTURE BACKFILL (SOIL NAIL WALL)	170	CY
SOIL NAIL ASSEMBLY	72,500	LF
ARCHITECTURAL TREATMENT (TEXTURED SHOTCRETE)	59,800	SQFT
BAR REINFORCING STEEL (RETAINING WALL)	279,000	LB
SHOTCRETE	2,740	CY
PREPARE AND STAIN CONCRETE	64,200	SQFT
GABION	156	CY
MINOR CONCRETE (GUTTER)	2,250	LF
CABLE RAILING	2,250	LF

Tracy L. Bertram
DESIGN OVERSIGHT Tracy L Bertram
1-7-10
SIGN OFF DATE

DESIGN	BY C VASQUEZ	CHECKED P CHEN	LOAD FACTOR DESIGN		
DETAILS	BY H. MISTRY	CHECKED K WONG	LAYOUT	BY C HII	CHECKED F QUACH
QUANTITIES	BY K WONG	CHECKED S GARAPALLY	SPECIFICATIONS	BY H MISTRY	PLANS AND SPECS COMPARED P CHEN

DESIGN GENERAL PLAN SHEET (ENGLISH) (REV.2/25/05)

ORIGINAL SCALE IN INCHES FOR REDUCED PLANS 0 1 2 3

PREPARED FOR THE STATE OF CALIFORNIA DEPARTMENT OF TRANSPORTATION

HARSHAD MISTRY
PROJECT ENGINEER

CU 04264
EA 264141

BRIDGE No. 23E0013
POST MILES 1.2

RETAINING WALL No. 7B
GENERAL PLAN No. 1

DISREGARD PRINTS BEARING EARLIER REVISION DATES

REVISION DATES (PRELIMINARY STAGE ONLY): ~~3/13/09~~ ~~8/05/09~~ ~~11/06/09~~ 12/09/09

SHEET 92 OF 171

FILE => 23E0013b-a-gp01.dgn

USERNAME => hriendard DATE PLOTTED => 23-NOV-2010 TIME PLOTTED => 08:35

DIST	COUNTY	ROUTE	POST MILES TOTAL PROJECT	SHEET No	TOTAL SHEETS
04	Nap,Sol	12	2.8/3.3, 0.0/2.6	532	617

P.K. Chen 12/09/09
REGISTERED STRUCTURAL ENGINEER DATE

11-22-10
PLANS APPROVAL DATE

REGISTERED PROFESSIONAL ENGINEER PO-KANG CHEN No. S3112 Exp. 9/30/11 STRUCTURAL STATE OF CALIFORNIA

The State of California or its officers or agents shall not be responsible for the accuracy or completeness of electronic copies of this plan sheet.

SOLANO TRANSPORTATION AUTHORITY
ONE HARBOR CENTER, SUITE 130
SUISUN CITY, CA 94585

MARK THOMAS & COMPANY, INC.
1960 ZANKER ROAD
SAN JOSE, CA 95112

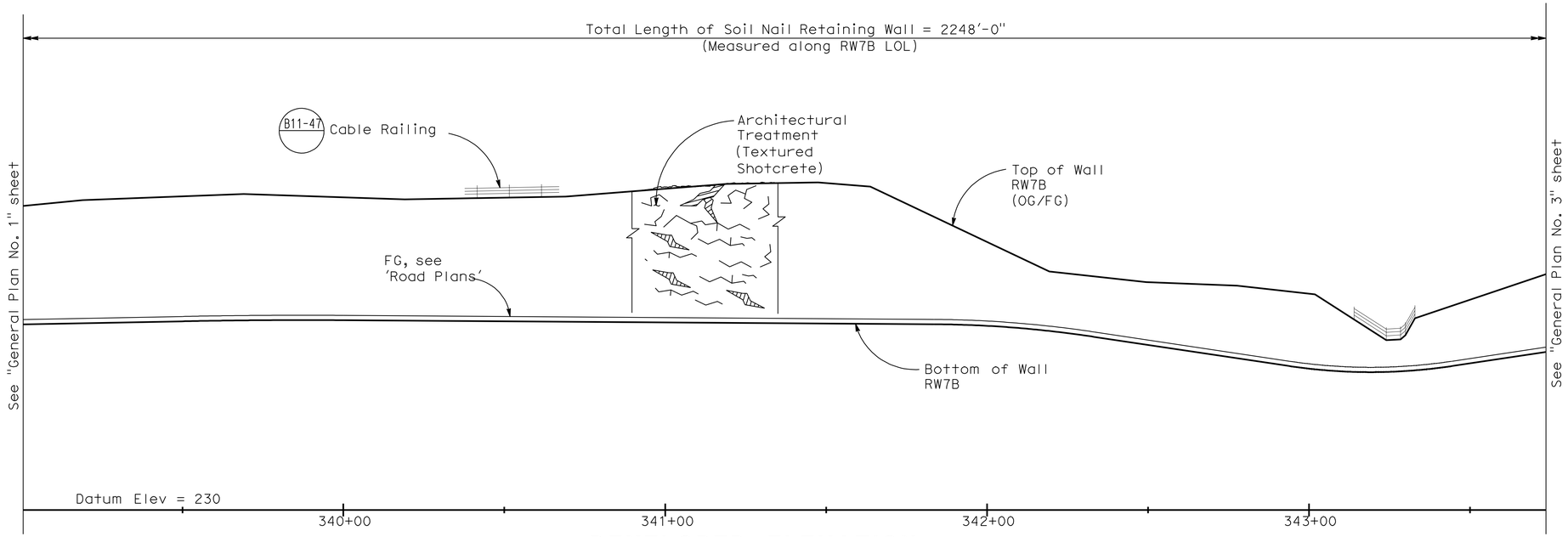

DEVELOPED ELEVATION

1" = 20'

CURVE DATA

No.	R	Δ	T	L
B6	102.00'	40°12'38"	37.34'	71.58'
B7	61.00'	70°35'56"	43.19'	75.16'

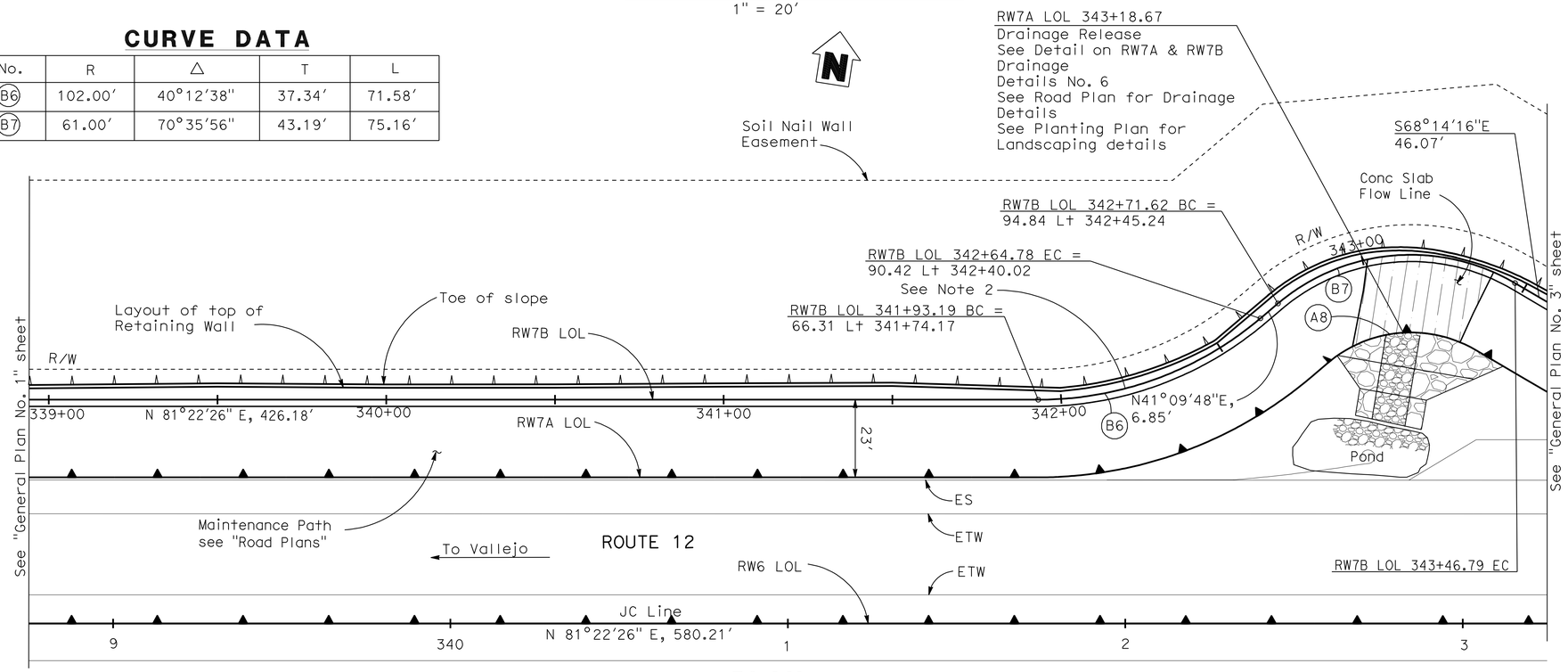

PLAN

1" = 20'

Note:

1. For complete Right of Way data, see Right of Way Engineering at District Office.
2. At convex surfaces, soil nail inclination shall be adjusted to max / min 5° so as to avoid interference with each other. Also, the construction shall be carried out to allow adjoining soil nail grouting to be cured before constructing the next nail.

Tracy L. Bertram
DESIGN OVERSIGHT Tracy L Bertram
1-7-10
SIGN OFF DATE

	BY	CHECKED			
DESIGN	C VASQUEZ	P CHEN	LOAD FACTOR DESIGN		
DETAILS	H. MISTRY	K WONG	LAYOUT	C HII	F QUACH
QUANTITIES	K WONG	S GARAPALLY	SPECIFICATIONS	H MISTRY	PLANS AND SPECS COMPARED P CHEN

DESIGN GENERAL PLAN SHEET (ENGLISH) (REV.2/25/05)

ORIGINAL SCALE IN INCHES FOR REDUCED PLANS 0 1 2 3

PREPARED FOR THE STATE OF CALIFORNIA DEPARTMENT OF TRANSPORTATION

HARSHAD MISTRY
PROJECT ENGINEER

CU 04264
EA 264141

BRIDGE No. 23E0013
POST MILES 1.2

RETAINING WALL No. 7B
GENERAL PLAN No. 2

DISREGARD PRINTS BEARING EARLIER REVISION DATES

REVISION DATES (PRELIMINARY STAGE ONLY): ~~3/13/09~~ ~~8/05/09~~ ~~11/06/09~~ 12/09/09

SHEET 93 OF 171

FILE => 23E0013b-a-gp02.dgn

USERNAME => rrlenard DATE PLOTTED => 23-NOV-2010 TIME PLOTTED => 08:35

DIST	COUNTY	ROUTE	POST MILES TOTAL PROJECT	SHEET No	TOTAL SHEETS
04	Nap,Sol	12	2.8/3.3, 0.0/2.6	533	617

P.K. Chen 12/09/09
REGISTERED STRUCTURAL ENGINEER DATE

11-22-10
PLANS APPROVAL DATE

REGISTERED PROFESSIONAL ENGINEER PO-KANG CHEN No. S3112 Exp. 9/30/11 STRUCTURAL STATE OF CALIFORNIA

The State of California or its officers or agents shall not be responsible for the accuracy or completeness of electronic copies of this plan sheet.

SOLANO TRANSPORTATION AUTHORITY
ONE HARBOR CENTER, SUITE 130
SUISUN CITY, CA 94585

MARK THOMAS & COMPANY, INC.
1960 ZANKER ROAD
SAN JOSE, CA 95112

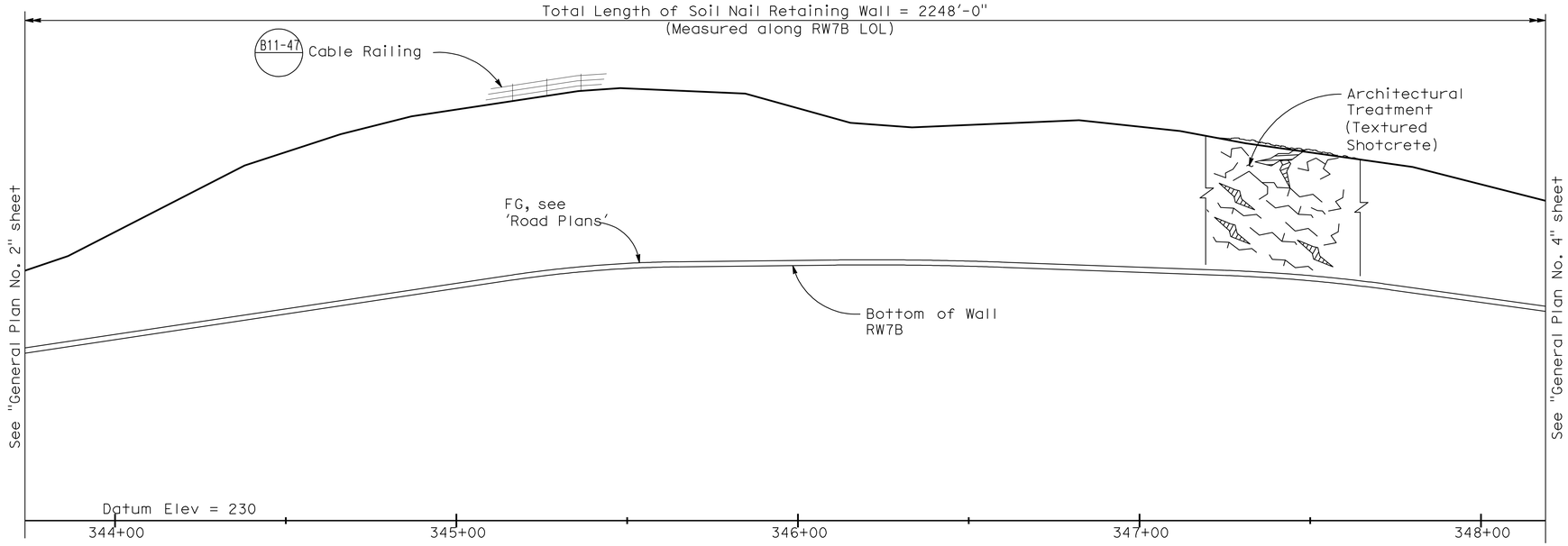

DEVELOPED ELEVATION
1" = 20'

CURVE DATA

No.	R	Δ	T	L
B8	77.00'	31°39'33"	21.83'	42.55'
B9	2829.19'	07°43'12"	190.89'	381.21'

Note:
1. For complete Right of Way data, see Right of Way Engineering at District Office.
2. At convex surfaces, soil nail inclination shall be adjusted to max / min 5° so as to avoid interference with each other. Also, the construction shall be carried out to allow adjoining soil nail grouting to be cured before constructing the next nail.

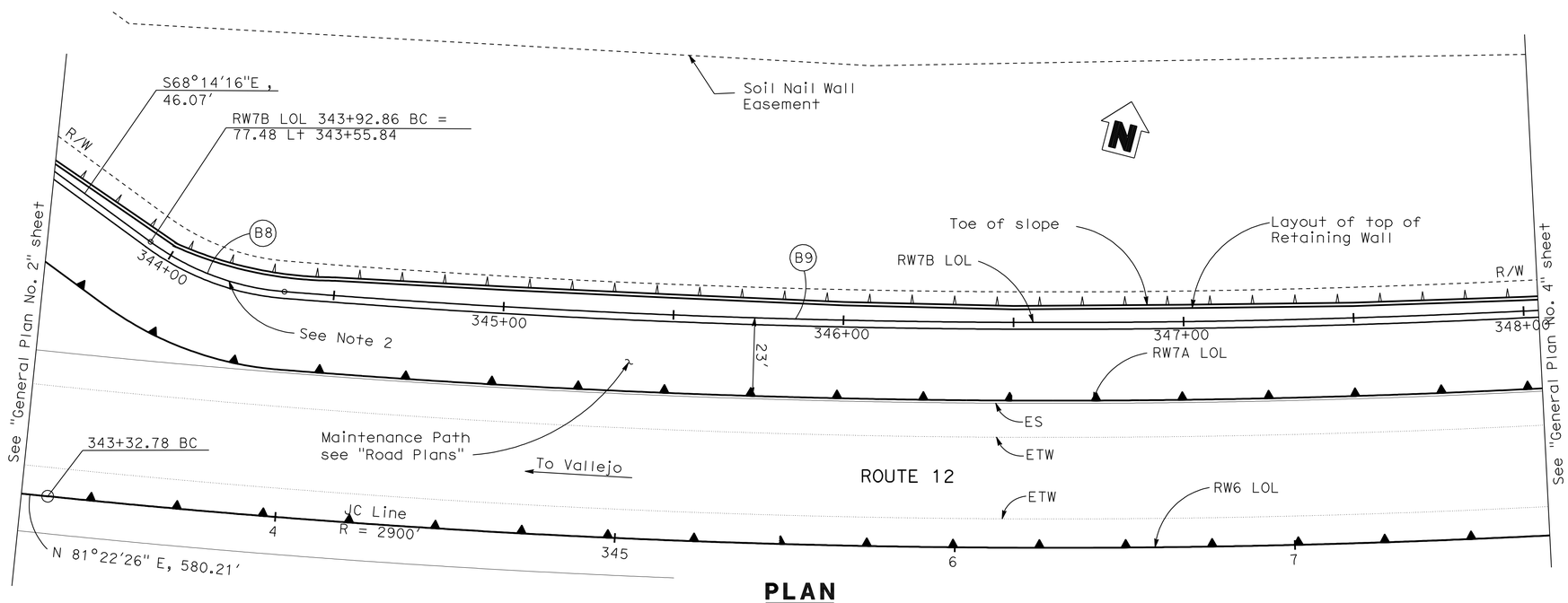

PLAN
1" = 20'

Tracy L. Bertram DESIGN OVERSIGHT Tracy L Bertram 1-7-10 SIGN OFF DATE	DESIGN	BY C VASQUEZ	CHECKED P CHEN	LOAD FACTOR DESIGN		
	DETAILS	BY H. MISTRY	CHECKED K WONG	LAYOUT	BY C HII	CHECKED F QUACH
	QUANTITIES	BY K WONG	CHECKED S GARAPALLY	SPECIFICATIONS	BY H MISTRY	PLANS AND SPECS COMPARED P CHEN

DESIGN GENERAL PLAN SHEET (ENGLISH) (REV.2/25/05)

ORIGINAL SCALE IN INCHES FOR REDUCED PLANS 0 1 2 3

PREPARED FOR THE STATE OF CALIFORNIA DEPARTMENT OF TRANSPORTATION

HARSHAD MISTRY
PROJECT ENGINEER

CU 04264
EA 264141

BRIDGE No. 23E0013
POST MILES 1.2

RETAINING WALL No. 7B
GENERAL PLAN No. 3

DISREGARD PRINTS BEARING EARLIER REVISION DATES

REVISION DATES (PRELIMINARY STAGE ONLY): ~~3/13/09~~ ~~8/05/09~~ ~~11/06/09~~ 12/09/09

SHEET 94 OF 171

FILE => 23E0013b-a-gp03.dgn

USERNAME => erlenard DATE PLOTTED => 23-NOV-2010 TIME PLOTTED => 08:35

DIST	COUNTY	ROUTE	POST MILES TOTAL PROJECT	SHEET No	TOTAL SHEETS
04	Nap,Sol	12	2.8/3.3, 0.0/2.6	534	617

P.K. Chen 12/09/09
REGISTERED STRUCTURAL ENGINEER DATE

11-22-10
PLANS APPROVAL DATE

REGISTERED PROFESSIONAL ENGINEER PO-KANG CHEN No. S3112 Exp. 9/30/11 STRUCTURAL STATE OF CALIFORNIA

The State of California or its officers or agents shall not be responsible for the accuracy or completeness of electronic copies of this plan sheet.

SOLANO TRANSPORTATION AUTHORITY
ONE HARBOR CENTER, SUITE 130
SUISUN CITY, CA 94585

MARK THOMAS & COMPANY, INC.
1960 ZANKER ROAD
SAN JOSE, CA 95112

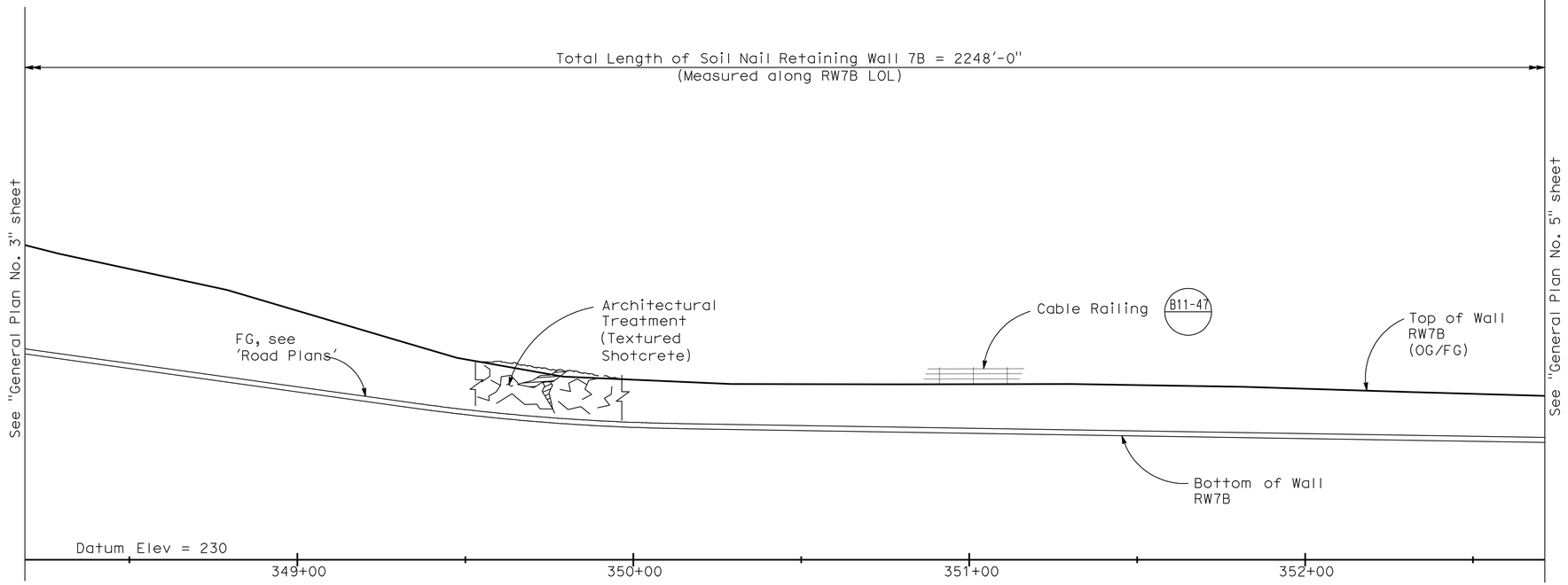

DEVELOPED ELEVATION

1" = 20'

Note:
1. For complete Right of Way data contact Right of Way Engineering at District Office.

CURVE DATA

No.	R	Δ	T	L
B10	2943.31'	14°09'20"	365.45'	727.18'

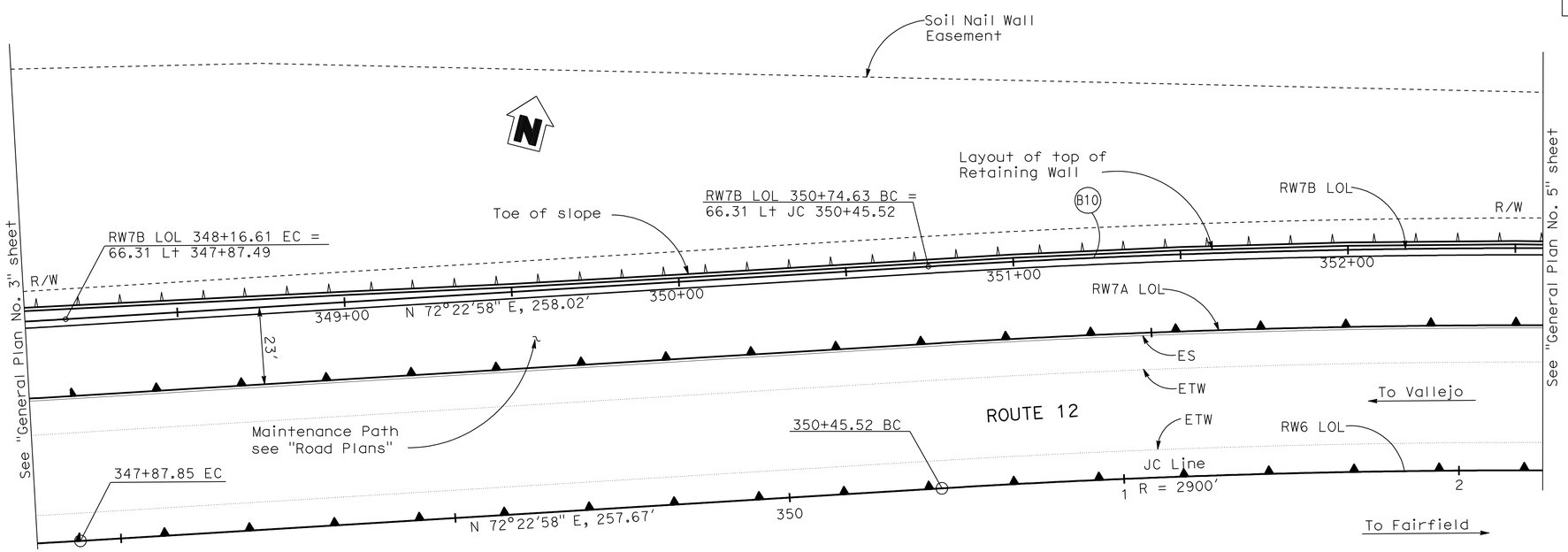

PLAN

1" = 20'

DESIGN OVERSIGHT Tracy L Bertram	DESIGN	BY C VASQUEZ	CHECKED P CHEN	LOAD FACTOR DESIGN		
1-7-10 SIGN OFF DATE	DETAILS	BY H. MISTRY	CHECKED K WONG	LAYOUT	BY C HII	CHECKED F QUACH
	QUANTITIES	BY K WONG	CHECKED S GARAPALLY	SPECIFICATIONS	BY H MISTRY	PLANS AND SPECS COMPARED P CHEN

DESIGN GENERAL PLAN SHEET (ENGLISH) (REV.2/25/05)

ORIGINAL SCALE IN INCHES FOR REDUCED PLANS 0 1 2 3

PREPARED FOR THE STATE OF CALIFORNIA DEPARTMENT OF TRANSPORTATION

HARSHAD MISTRY
PROJECT ENGINEER

CU 04264
EA 264141

BRIDGE No. 23E0013
POST MILES 1.2

RETAINING WALL No. 7B
GENERAL PLAN No. 4

DISREGARD PRINTS BEARING EARLIER REVISION DATES

REVISION DATES (PRELIMINARY STAGE ONLY): ~~3/13/09~~ ~~8/05/09~~ ~~11/06/09~~ 12/09/09

SHEET 95 OF 171

FILE => 23E0013b-a-gp04.dgn

USERNAME => friehard DATE PLOTTED => 23-NOV-2010 TIME PLOTTED => 08:35

DIST	COUNTY	ROUTE	POST MILES TOTAL PROJECT	SHEET No	TOTAL SHEETS
04	Nap,Sol	12	2.8/3.3, 0.0/2.6	535	617

P.K. Chen 12/09/09
REGISTERED STRUCTURAL ENGINEER DATE

11-22-10
PLANS APPROVAL DATE

REGISTERED PROFESSIONAL ENGINEER PO-KANG CHEN No. S3112 Exp. 9/30/11 STRUCTURAL STATE OF CALIFORNIA

The State of California or its officers or agents shall not be responsible for the accuracy or completeness of electronic copies of this plan sheet.

SOLANO TRANSPORTATION AUTHORITY
ONE HARBOR CENTER, SUITE 130
SUISUN CITY, CA 94585

MARK THOMAS & COMPANY, INC.
1960 ZANKER ROAD
SAN JOSE, CA 95112

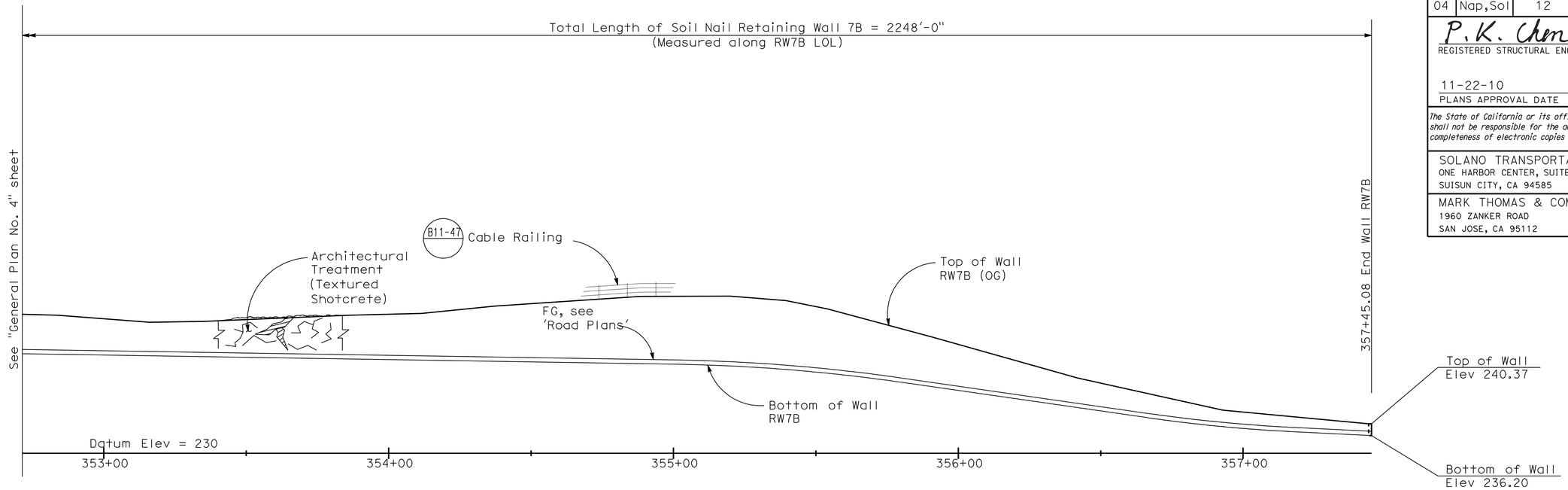

DEVELOPED ELEVATION
1" = 20'

CURVE DATA

No.	R	Δ	T	L
B10	2943.31'	14°09'20"	365.45'	727.18'

Note:
1. For complete Right of Way and accurate access data, see Right of Way Record Maps at district office.

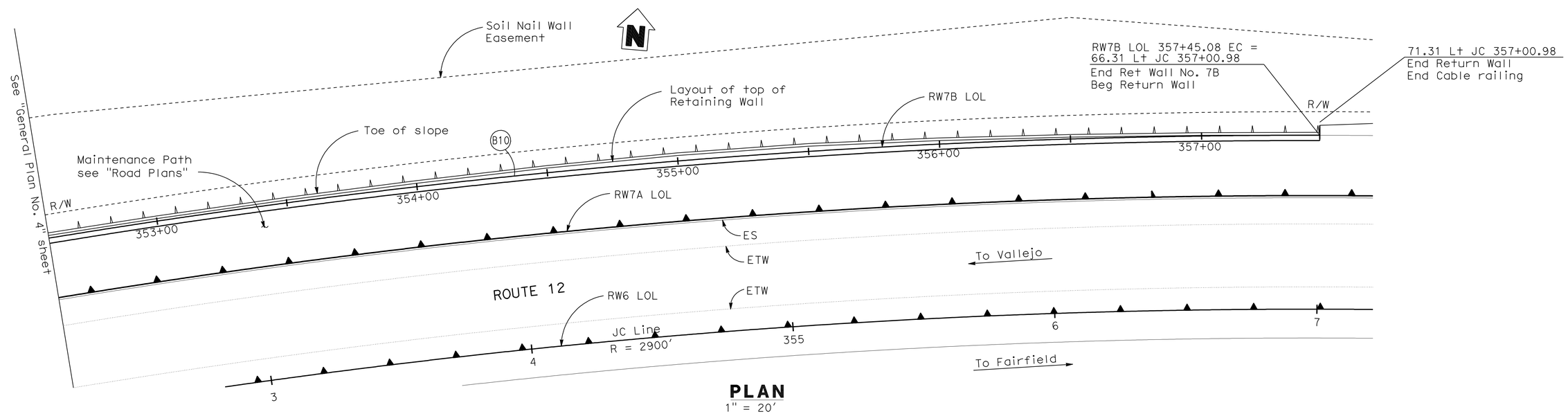

PLAN
1" = 20'

DESIGN OVERSIGHT Tracy L Bertram	DESIGN	BY C VASQUEZ	CHECKED P CHEN	LOAD FACTOR DESIGN		
1-7-10 SIGN OFF DATE	DETAILS	BY H. MISTRY	CHECKED K WONG	LAYOUT	BY C HII	CHECKED F QUACH
	QUANTITIES	BY K WONG	CHECKED S GARAPALLY	SPECIFICATIONS	BY H MISTRY	PLANS AND SPECS COMPARED P CHEN

DESIGN GENERAL PLAN SHEET (ENGLISH) (REV.2/25/05)

ORIGINAL SCALE IN INCHES FOR REDUCED PLANS 0 1 2 3

PREPARED FOR THE STATE OF CALIFORNIA DEPARTMENT OF TRANSPORTATION

HARSHAD MISTRY
PROJECT ENGINEER

CU 04264
EA 264141

BRIDGE No. 23E0013
POST MILES 1.2

RETAINING WALL No. 7B
GENERAL PLAN No. 5

DISREGARD PRINTS BEARING EARLIER REVISION DATES

REVISION DATES (PRELIMINARY STAGE ONLY): ~~3/13/09~~ ~~8/05/09~~ ~~11/06/09~~ 12/09/09

SHEET 96 OF 171

FILE => 23E0013b-a-gp05.dgn

USERNAME => trlenard DATE PLOTTED => 23-NOV-2010 TIME PLOTTED => 08:35

DIST	COUNTY	ROUTE	POST MILES TOTAL PROJECT	SHEET No	TOTAL SHEETS
04	Nap,Sol	12	2.8/3.3, 0.0/2.6	536	617

P.K. Chen 12/09/09
REGISTERED STRUCTURAL ENGINEER DATE

11-22-10
PLANS APPROVAL DATE

REGISTERED PROFESSIONAL ENGINEER PO-KANG CHEN No. S3112 Exp. 9/30/11 STRUCTURAL STATE OF CALIFORNIA

The State of California or its officers or agents shall not be responsible for the accuracy or completeness of electronic copies of this plan sheet.

SOLANO TRANSPORTATION AUTHORITY
ONE HARBOR CENTER, SUITE 130
SUISUN CITY, CA 94585

MARK THOMAS & COMPANY, INC.
1960 ZANKER ROAD
SAN JOSE, CA 95112

Notes:
1. For Drainage information see "Soil Nail Wall Details No. 5" sheet.
2. For limits of Architectural Treatment, see "Soil Nail Wall Details No. 1" sheet.
3. Stain Treatment shall be applied to all exposed Wall surfaces.
4. Top of Wall Elevations shall be verified in field.
5. Construct Concrete Gutter Mod with weakened plane joint (1/2"R x 1/2"deep scoured joint) @ 12' Max and expansion joint with 1/2" thick exp. joint maintained @ 48' Max.
6. For 'Soil/Rock Design Parameters', see "General Plan No. 7" sheet.

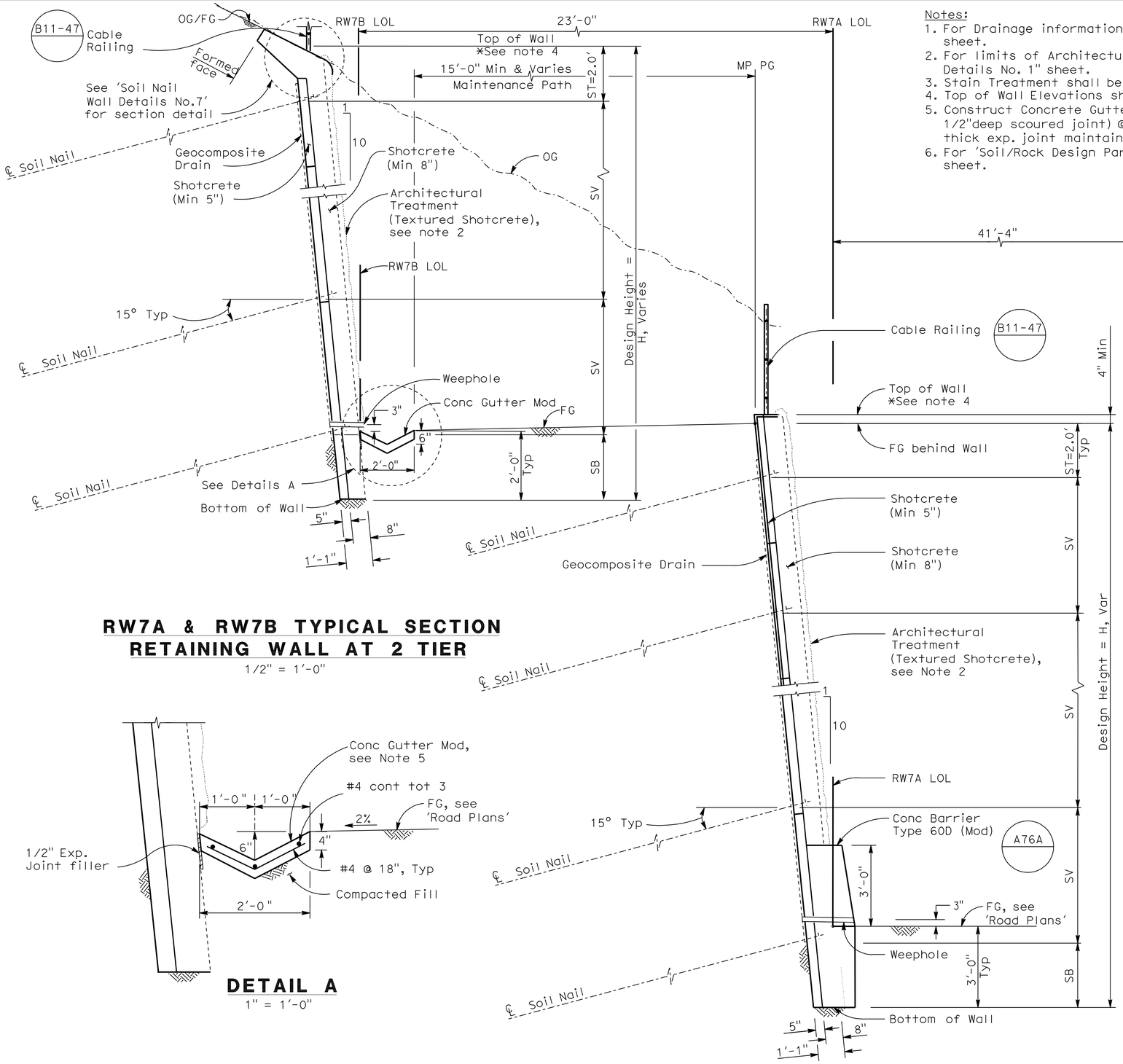

RW7A & RW7B TYPICAL SECTION RETAINING WALL AT 2 TIER

1/2" = 1'-0"

DETAIL A

1" = 1'-0"

LEGEND AND SYMBOLS

ST = Vertical distance from top of cut elevation to first row of Soil Nails, ST = 2.0 ft

SB = Vertical distance from bottom of wall to bottom level of the Soil Nail Assembly, SB (Min) = 2.0 ft SB (Max) = 3.5 ft

SV = Vertical spacing of Soil Nail Assembly SV (Min) = 1.5 ft SV (Max) = 5.0 ft

LE = Embedment Length of Soil Nail, see "Structure Plan" sheets

GENERAL NOTES

Design: Caltrans Bridge Design Specifications Sept 2004 (LFD) (1996 AASHTO with interims and revisions by Caltrans)

Seismic Criteria: K_h = 0.2g

Reinforced shotcrete:
fy = 60,000 psi
f'c = 4,000 psi

Structural steel: ASTM designation: A709/A709M, Grade 36

Soil nails: ASTM designation: A615/A615M, Grade 60, fy = 60 ksi
Punching shear capacity = 40 kips

Tracy L. Bertram
DESIGN OVERSIGHT Tracy L Bertram
1-7-10
SIGN OFF DATE

	BY	CHECKED			
DESIGN	C VASQUEZ	P CHEN	LOAD FACTOR DESIGN		
DETAILS	H. MISTRY	K WONG	LAYOUT	C HII	F QUACH
QUANTITIES	K WONG	S GARAPALLY	SPECIFICATIONS	H MISTRY	PLANS AND SPECS COMPARED P CHEN

PREPARED FOR THE STATE OF CALIFORNIA DEPARTMENT OF TRANSPORTATION

HARSHAD MISTRY
PROJECT ENGINEER

BRIDGE No. 23E0013
POST MILES 1.2

RETAINING WALL No. 7B
GENERAL PLAN No. 6

DESIGN GENERAL PLAN SHEET (ENGLISH) (REV.2/25/05)

ORIGINAL SCALE IN INCHES FOR REDUCED PLANS 0 1 2 3

CU 04264
EA 264141

DISREGARD PRINTS BEARING EARLIER REVISION DATES

REVISION DATES (PRELIMINARY STAGE ONLY): ~~3/13/09~~ ~~8/05/09~~ ~~11/06/09~~ 12/09/09

SHEET 97 OF 175

FILE => 23E0013b-a-gp06.dgn

USERNAME => rrlenard DATE PLOTTED => 23-NOV-2010 TIME PLOTTED => 08:35

DIST	COUNTY	ROUTE	POST MILES TOTAL PROJECT	SHEET No	TOTAL SHEETS
04	Nap,Sol	12	2.8/3.3, 0.0/2.6	537	617

P.K. Chen 12/09/09
REGISTERED STRUCTURAL ENGINEER DATE

11-22-10
PLANS APPROVAL DATE

REGISTERED PROFESSIONAL ENGINEER PO-KANG CHEN No. S3112 Exp. 9/30/11 STRUCTURAL STATE OF CALIFORNIA

The State of California or its officers or agents shall not be responsible for the accuracy or completeness of electronic copies of this plan sheet.

SOLANO TRANSPORTATION AUTHORITY
ONE HARBOR CENTER, SUITE 130
SUISUN CITY, CA 94585

MARK THOMAS & COMPANY, INC.
1960 ZANKER ROAD
SAN JOSE, CA 95112

SOIL/ROCK DESIGN PARAMETERS

*Depth measured below Top of Wall

West of Sta 335+00

Depth*	Friction Angle	Cohesion	Soil Unit Weight	Design Pullout Resistance, Qd
All	36 degrees	0 psf	125 pcf	2.11 kip/ft

Sta 335+00 - 337+00

Depth*	Friction Angle	Cohesion	Soil Unit Weight	Design Pullout Resistance, Qd
All	30 degrees	250 psf	125 pcf	2.11 kip/ft

Sta 337+00 - 339+00

Depth*	Friction Angle	Cohesion	Soil Unit Weight	Design Pullout Resistance, Qd
All	36 degrees	400 psf	130 pcf	4.52 kip/ft

Sta 339+00 - 342+50

Depth*	Friction Angle	Cohesion	Soil Unit Weight	Design Pullout Resistance, Qd
All	36 degrees	400 psf	130 pcf	4.52 kip/ft

Sta 342+50 - 343+50

Depth*	Friction Angle	Cohesion	Soil Unit Weight	Design Pullout Resistance, Qd
All	30 degrees	250 psf	125 pcf	2.11 kip/ft

Sta 343+50 - 347+00

Depth*	Friction Angle	Cohesion	Soil Unit Weight	Design Pullout Resistance, Qd
0′ - 35′	36 degrees	400 psf	130 pcf	4.52 kip/ft
> 35′	36 degrees	2000 psf	135 pcf	7.54 kip/ft

Sta 347+00 - 349+00

Depth*	Friction Angle	Cohesion	Soil Unit Weight	Design Pullout Resistance, Qd
All	36 degrees	400 psf	130 pcf	4.52 kip/ft

East of Sta 349+00

Depth*	Friction Angle	Cohesion	Soil Unit Weight	Design Pullout Resistance, Qd
All	30 degrees	400 psf	125 pcf	2.11 kip/ft

Tracy L. Bertram
DESIGN OVERSIGHT Tracy L Bertram
1-7-10
SIGN OFF DATE

	BY	CHECKED		BY	CHECKED
DESIGN	P PARK	P CHEN	LOAD FACTOR DESIGN		
DETAILS	H. MISTRY	P PARK	LAYOUT	C HII	F QUACH
QUANTITIES	K WONG	S GARAPALLY	SPECIFICATIONS	H MISTRY	PLANS AND SPECS COMPARED P CHEN

PREPARED FOR THE STATE OF CALIFORNIA DEPARTMENT OF TRANSPORTATION

HARSHAD MISTRY
PROJECT ENGINEER

BRIDGE No. 23E0012
POST MILES 1.2

RETAINING WALL No. 7B
GENERAL PLAN No. 7

DESIGN GENERAL PLAN SHEET (ENGLISH) (REV.2/25/05)

ORIGINAL SCALE IN INCHES FOR REDUCED PLANS 0 1 2 3

CU 04264
EA 264141

DISREGARD PRINTS BEARING EARLIER REVISION DATES

REVISION DATES (PRELIMINARY STAGE ONLY): ~~3/13/09~~ ~~8/05/09~~ ~~11/06/09~~ 12/09/09

SHEET 98 OF 171

FILE => 23E0013b-a-gp07.dgn

USERNAME => trlenard DATE PLOTTED => 23-NOV-2010 TIME PLOTTED => 08:36

DIST	COUNTY	ROUTE	POST MILES TOTAL PROJECT	SHEET No	TOTAL SHEETS
04	Nap,Sol	12	2.8/3.3, 0.0/2.6	538	617

P.K. Chen 12/09/09
REGISTERED STRUCTURAL ENGINEER DATE

11-22-10
PLANS APPROVAL DATE

REGISTERED PROFESSIONAL ENGINEER PO-KANG CHEN No. S3112 Exp. 9/30/11 STRUCTURAL STATE OF CALIFORNIA

The State of California or its officers or agents shall not be responsible for the accuracy or completeness of electronic copies of this plan sheet.

SOLANO TRANSPORTATION AUTHORITY
ONE HARBOR CENTER, SUITE 130
SUISUN CITY, CA 94585

MARK THOMAS & COMPANY, INC.
1960 ZANKER ROAD
SAN JOSE, CA 95112

BENCHMARKS

Benchmark No. 1:

Set 2" brass disk (California Department of Transportation SW-532) in concrete along the southerly side of eastbound Highway 12, at PM 1.30, about 400 feet east of callbox SO-12-012; approximately 10.5 feet southerly of eastbound edge of pavement; approximately 39.6 feet easterly of power pole; approximately 12.4 feet northwesterly of chain link fence post.

Elevation: 232.057 Northing: 1836982.8840 Easting: 6510677.3300

Benchmark No. 2:

Set 1" iron pipe with red plastic plug and tack (California Department of Transportation SW-534) along the southerly side of eastbound Highway 12, at PM 1.68, behind the guard rail; approximately 3.2 feet northerly of a black chain link fence, approximately 31.5 feet northwesterly of black chain link fence post.

Elevation: 237.559 Northing: 1837356.8140 Easting: 6512667.0800

Notes:

1. For complete project control and monumentation data, see the survey records on file in the surveys department at the district office.
2. Contractor shall protect all existing monuments in place. If monument is damaged by contractor's operations, contractor shall replace at contractor's cost.
3. For Utilities, see 'Road plans'.
4. For complete Right of Way data, contact Right of Way Engineering at the District Office.

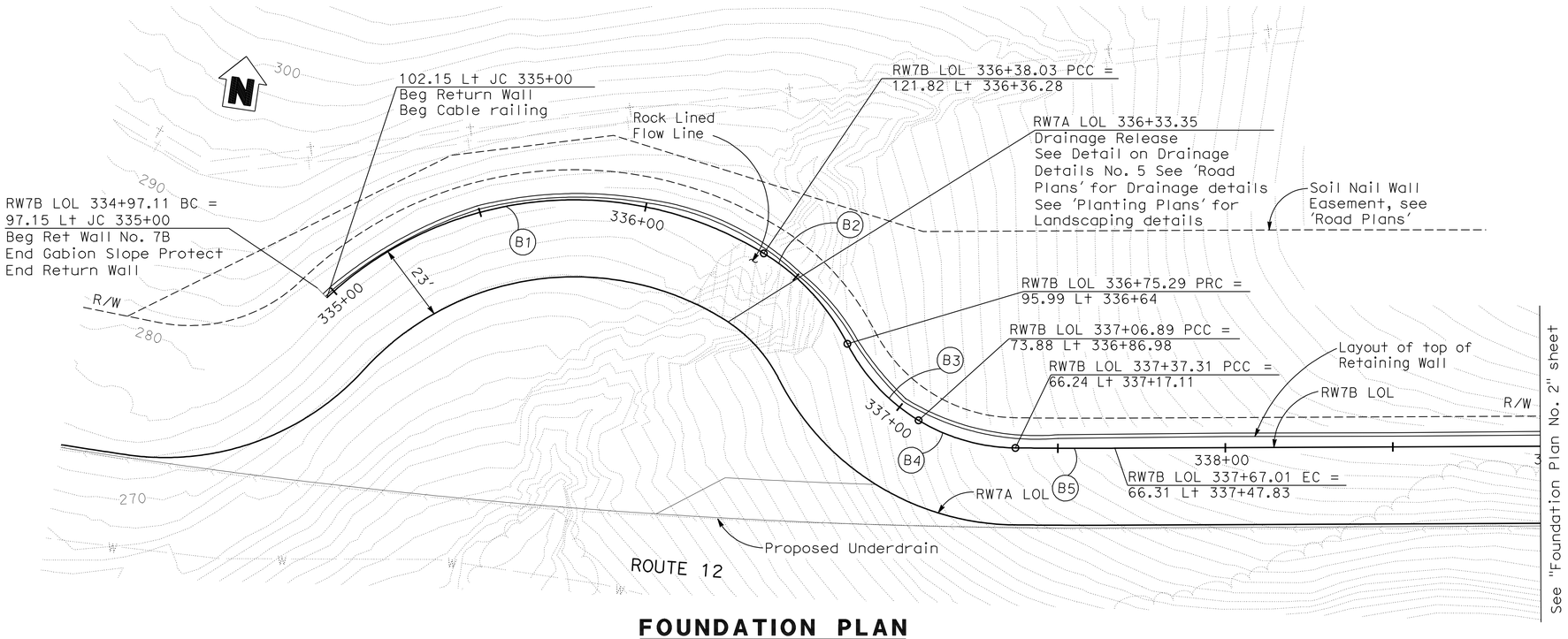

FOUNDATION PLAN

1" = 20'

CURVE DATA

No.	R	Δ	T	L
B1	108.00'	74°45'44"	82.52'	140.92'
B2	68.00'	31°23'39"	19.11'	37.26'
B3	57.00'	31°45'50"	16.22'	31.60'
B4	57.00'	30°34'47"	15.58'	30.42'
B5	1933.69'	0°52'48"	14.85'	29.70'

DATUM

Coordinates, bearings and distances are based on the California Coordinate System of 1983, NAVD 1988, Zone 2, CA-HPGN. Epoch 1991.35. Distances and stationing are grid distances. Distances are in feet. Supplementary information may be obtained from the district office, surveys branch or right of way engineering branch, 111 Grand Avenue, Oakland, California.

GEOTECHNICAL PROFESSIONAL APPROVAL DATE 12/09/09

Tracy L. Bertram
DESIGN OVERSIGHT Tracy L Bertram
1-7-10
SIGN OFF DATE

SCALE: AS SHOWN | VERT.DATUM NAVD 88 | HORZ.DATUM NAD 83
PHOTOGRAMMETRY AS OF: | ALIGNMENT TIES
SURVEYED BY MTCo. | DRAFTED BY
FIELD CHECKED BY | CHECKED BY

DESIGN	BY C. VASQUEZ	CHECKED P. CHEN	
DETAILS	BY H MISTRY	CHECKED K. WONG	
QUANTITIES	BY K. WONG	CHECKED S. GARAPALLY	

PREPARED FOR THE STATE OF CALIFORNIA DEPARTMENT OF TRANSPORTATION

HARSHAD MISTRY
PROJECT ENGINEER

BRIDGE No. 23E0013
POST MILE 1.2

RETAINING WALL No. 7B
FOUNDATION PLAN No. 1

FOUNDATION PLAN SHEET (ENGLISH) (REV. 2-25-05)

ORIGINAL SCALE IN INCHES FOR REDUCED PLANS 0 1 2 3

CU 04264
EA 264141

DISREGARD PRINTS BEARING EARLIER REVISION DATES

REVISION DATES (PRELIMINARY STAGE ONLY): ~~3/13/09~~ ~~8/05/09~~ ~~11/06/09~~ 12/09/09

SHEET 99 OF 171

FILE => 23e0013b-e-fp01.dgn

USERNAME => trlenard DATE PLOTTED => 23-NOV-2010 TIME PLOTTED => 08:36

DIST	COUNTY	ROUTE	POST MILES TOTAL PROJECT	SHEET No	TOTAL SHEETS
04	Nap,Sol	12	2.8/3.3, 0.0/2.6	539	617

P.K. Chen 12/09/09
REGISTERED STRUCTURAL ENGINEER DATE

11-22-10
PLANS APPROVAL DATE

REGISTERED PROFESSIONAL ENGINEER PO-KANG CHEN No. S3112 Exp. 9/30/11 STRUCTURAL STATE OF CALIFORNIA

The State of California or its officers or agents shall not be responsible for the accuracy or completeness of electronic copies of this plan sheet.

SOLANO TRANSPORTATION AUTHORITY
ONE HARBOR CENTER, SUITE 130
SUISUN CITY, CA 94585

MARK THOMAS & COMPANY, INC.
1960 ZANKER ROAD
SAN JOSE, CA 95112

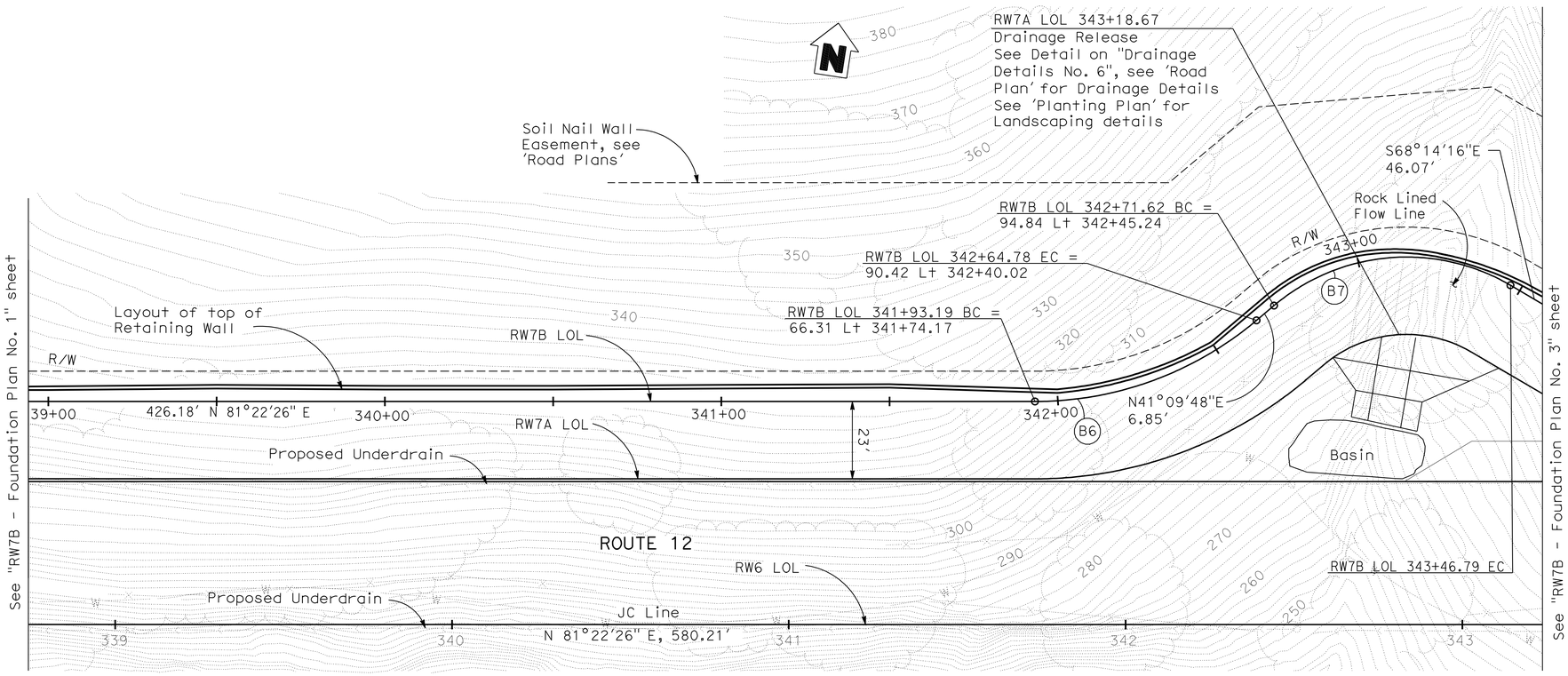

FOUNDATION PLAN
1" = 20'

Notes:

1. For Utilities, see 'Road Plans'.
2. For complete Right of Way data, contact Right of Way Engineering at the District Office.

CURVE DATA

No.	R	Δ	T	L
B6	102.00'	40°12'38"	37.34'	71.58'
B7	61.00'	70°35'56"	43.19'	75.16'

Tracy L. Bertram 12/09/09
GEOTECHNICAL PROFESSIONAL APPROVAL DATE

Tracy L. Bertram
DESIGN OVERSIGHT Tracy L Bertram
1-7-10
SIGN OFF DATE

SCALE: AS SHOWN | VERT.DATUM NAVD 88 | HORZ.DATUM NAD 83
PHOTOGRAMMETRY AS OF: | ALIGNMENT TIES
SURVEYED BY MTCo. | DRAFTED BY
FIELD CHECKED BY | CHECKED BY

DESIGN BY C. VASQUEZ CHECKED P. CHEN
DETAILS BY H MISTRY CHECKED K. WONG
QUANTITIES BY K. WONG CHECKED S. GARAPALLY

PREPARED FOR THE STATE OF CALIFORNIA DEPARTMENT OF TRANSPORTATION

HARSHAD MISTRY
PROJECT ENGINEER

BRIDGE No. 23E0013
POST MILE 1.2

RETAINING WALL No. 7B
FOUNDATION PLAN No. 2

FOUNDATION PLAN SHEET (ENGLISH) (REV. 2-25-05)

ORIGINAL SCALE IN INCHES FOR REDUCED PLANS 0 1 2 3

CU 04264
EA 264141

DISREGARD PRINTS BEARING EARLIER REVISION DATES → REVISION DATES (PRELIMINARY STAGE ONLY) ~~3/13/09~~ ~~8/05/09~~ ~~11/06/09~~ 12/09/09

SHEET 100 OF 171

FILE => 23e0013b-e-fp02.dgn

USERNAME => hrlenard DATE PLOTTED => 23-NOV-2010 TIME PLOTTED => 08:36

DIST	COUNTY	ROUTE	POST MILES TOTAL PROJECT	SHEET No	TOTAL SHEETS
04	Nap,Sol	12	2.8/3.3, 0.0/2.6	540	617

P.K. Chen 12/09/09
REGISTERED STRUCTURAL ENGINEER DATE

11-22-10
PLANS APPROVAL DATE

REGISTERED PROFESSIONAL ENGINEER PO-KANG CHEN No. S3112 Exp. 9/30/11 STRUCTURAL STATE OF CALIFORNIA

The State of California or its officers or agents shall not be responsible for the accuracy or completeness of electronic copies of this plan sheet.

SOLANO TRANSPORTATION AUTHORITY
ONE HARBOR CENTER, SUITE 130
SUISUN CITY, CA 94585

MARK THOMAS & COMPANY, INC.
1960 ZANKER ROAD
SAN JOSE, CA 95112

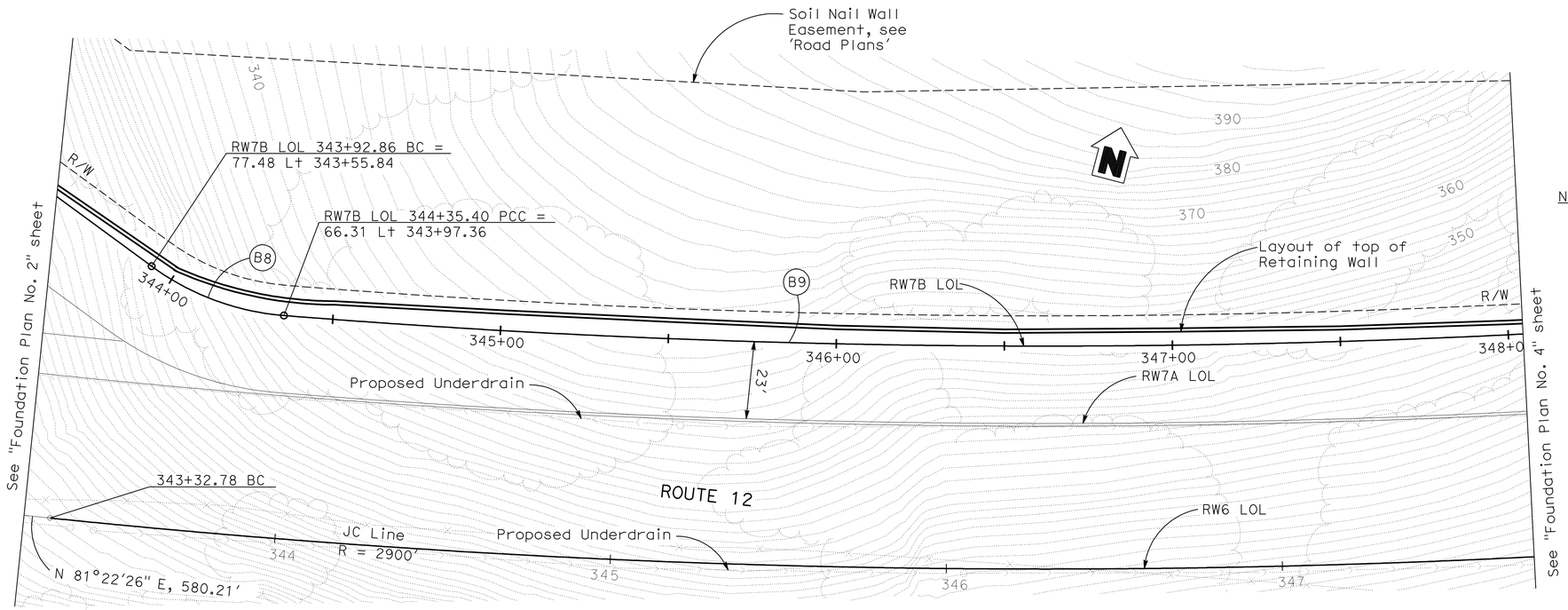

FOUNDATION PLAN
1" = 20'

Notes:

1. For Utilities, see 'Road Plans'.
2. For complete Right of Way data, contact Right of Way Engineering at the District Office.

CURVE DATA

No.	R	Δ	T	L
B8	77.00'	31°39'33"	21.83'	42.55'
B9	2829.19'	07°43'12"	190.89'	381.21'

GEOTECHNICAL PROFESSIONAL APPROVAL DATE 12/09/09

Tracy L Bertram
DESIGN OVERSIGHT Tracy L Bertram
1-7-10
SIGN OFF DATE

FOUNDATION PLAN SHEET (ENGLISH) (REV. 2-25-05)

SCALE: AS SHOWN | VERT.DATUM NAVD 88 | HORZ.DATUM NAD 83
PHOTOGRAMMETRY AS OF: | ALIGNMENT TIES
SURVEYED BY MTCo. | DRAFTED BY
FIELD CHECKED BY | CHECKED BY

DESIGN BY C. VASQUEZ CHECKED P. CHEN
DETAILS BY H MISTRY CHECKED K. WONG
QUANTITIES BY K. WONG CHECKED S. GARAPALLY

ORIGINAL SCALE IN INCHES FOR REDUCED PLANS 0 1 2 3

PREPARED FOR THE STATE OF CALIFORNIA DEPARTMENT OF TRANSPORTATION

HARSHAD MISTRY
PROJECT ENGINEER

CU 04264
EA 264141

BRIDGE No. 23E0013
POST MILE 1.2

RETAINING WALL No. 7B
FOUNDATION PLAN No. 3

DISREGARD PRINTS BEARING EARLIER REVISION DATES
REVISION DATES (PRELIMINARY STAGE ONLY) ~~3/13/09~~ ~~8/05/09~~ ~~11/06/09~~ 12/09/09
SHEET 101 OF 171

FILE => 23e0013b-e-fp03.dgn

USERNAME => friehard DATE PLOTTED => 23-NOV-2010 TIME PLOTTED => 08:36

DIST	COUNTY	ROUTE	POST MILES TOTAL PROJECT	SHEET No	TOTAL SHEETS
04	Nap,Sol	12	2.8/3.3, 0.0/2.6	541	617

P.K. Chen 12/09/09
REGISTERED STRUCTURAL ENGINEER DATE

11-22-10
PLANS APPROVAL DATE

REGISTERED PROFESSIONAL ENGINEER PO-KANG CHEN No. S3112 Exp. 9/30/11 STRUCTURAL STATE OF CALIFORNIA

The State of California or its officers or agents shall not be responsible for the accuracy or completeness of electronic copies of this plan sheet.

SOLANO TRANSPORTATION AUTHORITY
ONE HARBOR CENTER, SUITE 130
SUISUN CITY, CA 94585

MARK THOMAS & COMPANY, INC.
1960 ZANKER ROAD
SAN JOSE, CA 95112

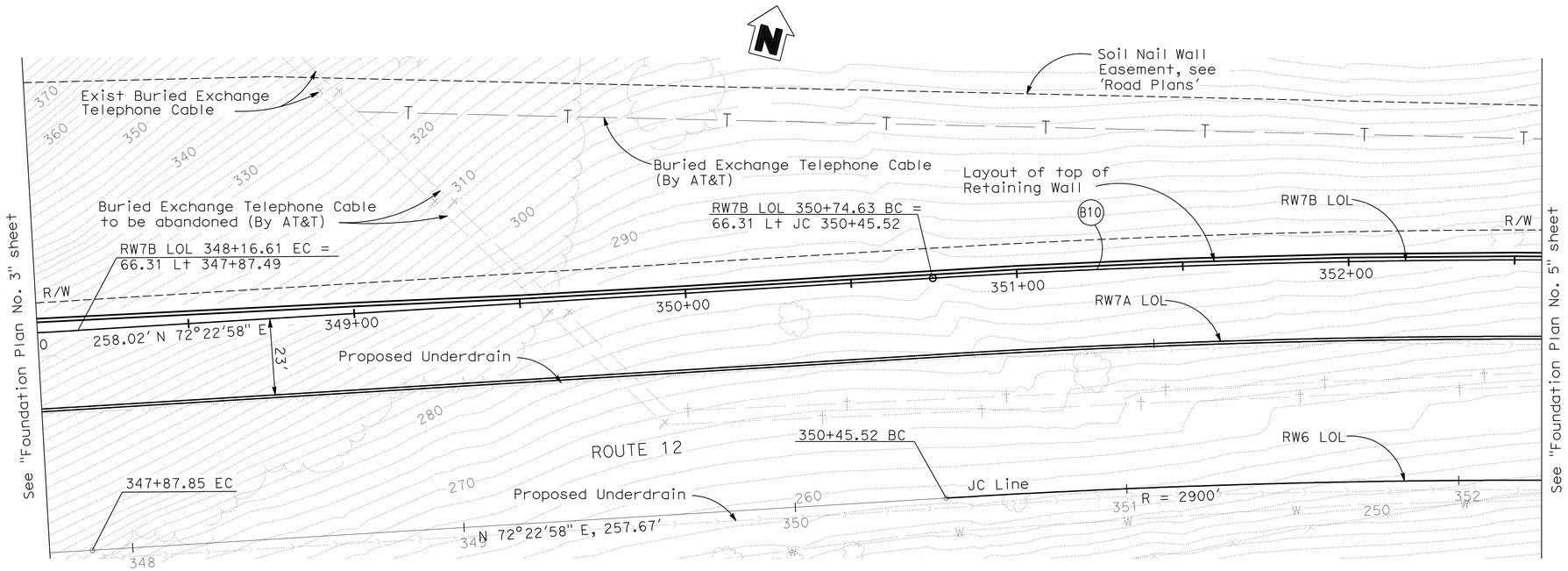

FOUNDATION PLAN
1" = 20'

Notes:

1. For Utilities, see 'Road Plans'.
2. For complete Right of Way data, contact Right of Way Engineering at the District Office.

CURVE DATA

No.	R	Δ	T	L
B10	2943.31'	14°09'20"	365.45'	727.18'

Tracy L. Bertram 12/09/09
GEOTECHNICAL PROFESSIONAL APPROVAL DATE

Tracy L. Bertram
DESIGN OVERSIGHT Tracy L Bertram

1-7-10
SIGN OFF DATE

FOUNDATION PLAN SHEET (ENGLISH) (REV. 2-25-05)

SCALE: AS SHOWN | VERT.DATUM NAVD 88 | HORZ.DATUM NAD 83
PHOTOGRAMMETRY AS OF: | ALIGNMENT TIES
SURVEYED BY MTCo. | DRAFTED BY
FIELD CHECKED BY | CHECKED BY

DESIGN BY C. VASQUEZ CHECKED P. CHEN
DETAILS BY H MISTRY CHECKED K. WONG
QUANTITIES BY K. WONG CHECKED S. GARAPALLY

ORIGINAL SCALE IN INCHES FOR REDUCED PLANS 0 1 2 3

PREPARED FOR THE STATE OF CALIFORNIA DEPARTMENT OF TRANSPORTATION

HARSHAD MISTRY
PROJECT ENGINEER

CU 04264
EA 264141

BRIDGE No. 23E0013
POST MILE 1.2

RETAINING WALL No. 7B
FOUNDATION PLAN No. 4

DISREGARD PRINTS BEARING EARLIER REVISION DATES
REVISION DATES (PRELIMINARY STAGE ONLY): ~~3/13/09~~ ~~8/05/09~~ ~~11/06/09~~ 12/09/09
SHEET 102 OF 171

FILE => 23e0013b-e-fp04.dgn

USERNAME => trienard DATE PLOTTED => 23-NOV-2010 TIME PLOTTED => 08:37

DIST	COUNTY	ROUTE	POST MILES TOTAL PROJECT	SHEET No	TOTAL SHEETS
04	Nap,Sol	12	2.8/3.3, 0.0/2.6	542	617

P.K. Chen 12/09/09
REGISTERED STRUCTURAL ENGINEER DATE

11-22-10
PLANS APPROVAL DATE

REGISTERED PROFESSIONAL ENGINEER
PO-KANG CHEN
No. S3112
Exp. 9/30/11
STRUCTURAL
STATE OF CALIFORNIA

The State of California or its officers or agents shall not be responsible for the accuracy or completeness of electronic copies of this plan sheet.

SOLANO TRANSPORTATION AUTHORITY
ONE HARBOR CENTER, SUITE 130
SUISUN CITY, CA 94585

MARK THOMAS & COMPANY, INC.
1960 ZANKER ROAD
SAN JOSE, CA 95112

Notes:

1. For Utilities, see 'Road Plans'.
2. For complete Right of Way data, contact Right of Way Engineering at the District Office.

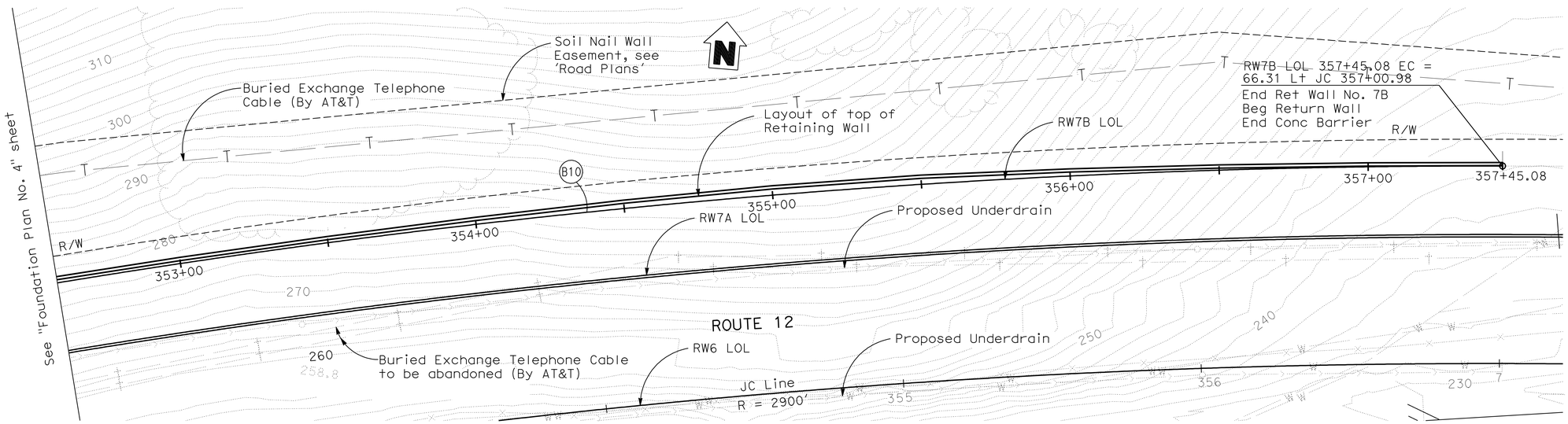

FOUNDATION PLAN

1" = 20'

CURVE DATA

No.	R	Δ	T	L
B10	2943.31'	14°09'20"	365.45'	727.18'

Tracy B. Bertram 12/09/09
GEOTECHNICAL PROFESSIONAL APPROVAL DATE

Tracy B. Bertram
DESIGN OVERSIGHT Tracy L Bertram

1-7-10
SIGN OFF DATE

FOUNDATION PLAN SHEET (ENGLISH) (REV. 2-25-05)

SCALE: AS SHOWN	VERT.DATUM NAVD 88	HORZ.DATUM NAD 83	
PHOTOGRAMMETRY AS OF:		ALIGNMENT TIES	
SURVEYED	BY MTCo.	DRAFTED	BY
FIELD CHECKED	BY	CHECKED	BY

DESIGN	BY C. VASQUEZ	CHECKED P. CHEN	
DETAILS	BY H MISTRY	CHECKED K. WONG	
QUANTITIES	BY K. WONG	CHECKED S. GARAPALLY	

ORIGINAL SCALE IN INCHES FOR REDUCED PLANS 0 1 2 3

PREPARED FOR THE STATE OF CALIFORNIA DEPARTMENT OF TRANSPORTATION

HARSHAD MISTRY
PROJECT ENGINEER

CU 04264
EA 264141

BRIDGE No. 23E0013
POST MILE 1.2

RETAINING WALL No. 7B
FOUNDATION PLAN No. 5

DISREGARD PRINTS BEARING EARLIER REVISION DATES →

REVISION DATES (PRELIMINARY STAGE ONLY)					SHEET	OF
~~3/13/09~~	~~8/05/09~~	~~11/06/09~~	12/09/09		103	171

FILE => 23e0013b-e-fp05.dgn

USERNAME => rrlenard DATE PLOTTED => 23-NOV-2010 TIME PLOTTED => 08:37

DIST	COUNTY	ROUTE	POST MILES TOTAL PROJECT	SHEET No	TOTAL SHEETS
04	Nap,Sol	12	2.8/3.3, 0.0/2.6	543	617

P.K. Chen
REGISTERED STRUCTURAL ENGINEER — 12/09/09 DATE

11-22-10
PLANS APPROVAL DATE

REGISTERED PROFESSIONAL ENGINEER — PO-KANG CHEN — No. S3112 — Exp. 9/30/11 — STRUCTURAL — STATE OF CALIFORNIA

The State of California or its officers or agents shall not be responsible for the accuracy or completeness of electronic copies of this plan sheet.

SOLANO TRANSPORTATION AUTHORITY
ONE HARBOR CENTER, SUITE 130
SUISUN CITY, CA 94585

MARK THOMAS & COMPANY, INC.
1960 ZANKER ROAD
SAN JOSE, CA 95112

LEGEND

⊡ = Location of Soil Nail Assembly

□ = Location of Proof Soil Test Nail Assembly

SV = Vertical spacing of Soil Nail Assembly, SV = 5'-0" Max Typical
= 6'-0" Max for Bottom Row

Notes:

1. The inclination of all nails shall be 15°.
2. The exact location of the Proof Soil Test Nails to be determined by the Engineer.
3. All Soil Nail profile lines are parallel to top of cut except the bottom row which is parallel to bottom of the wall.
4. Soil Nails shall be placed normal to shotcrete surface in the plan view.
5. Test Nails can be relocated at the Engineer's discretion.
6. For Details of Architectural Treatment see "Architectural Treatment Details" sheets.
7. For Details of Wall Drainage, see "Soil Nail Wall Details No. 4" sheet.
8. For 'General Notes' and 'Soil/Rock Design Parameters', see "General Plan No. 6" and "General Plan No. 7" sheets.
9. For Drain Pipe installation, see "Soil Nail Wall Details No. 5" sheet.
10. Cable railing shall be continuous throughout the wall. Post location shall be adjusted and posts added to work with the top of Wall sharp kinks for parallel cables.

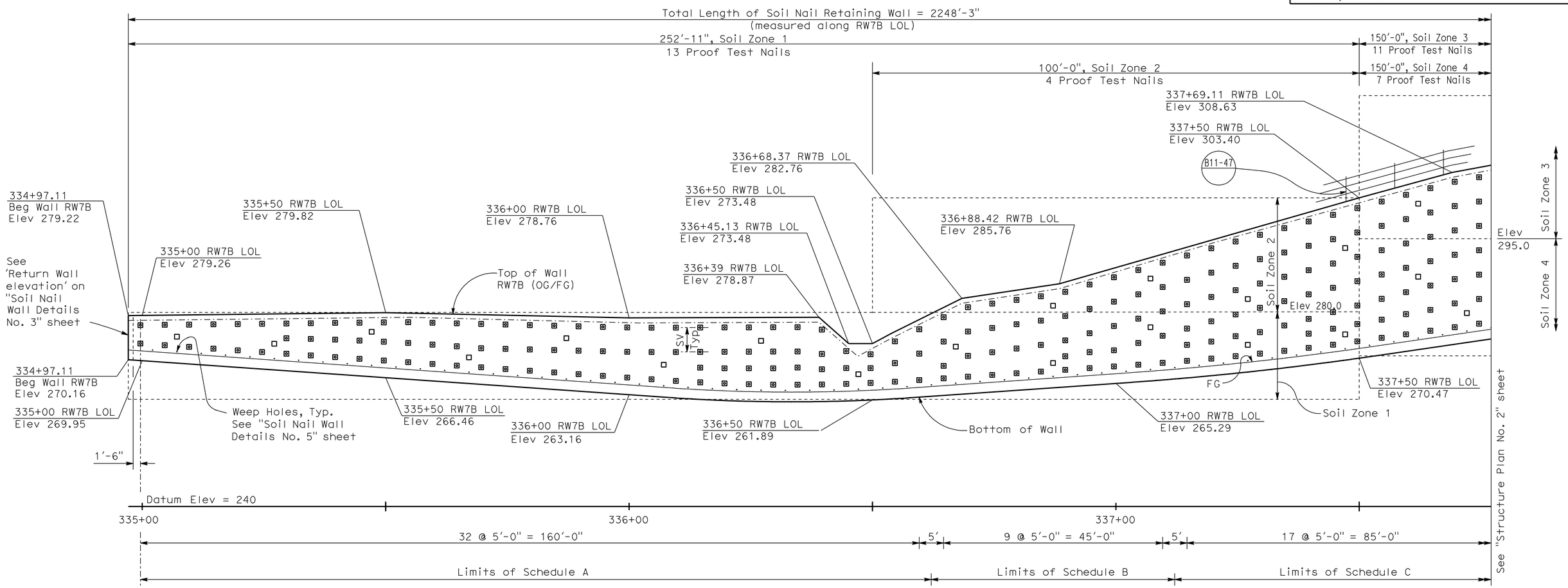

DEVELOPED ELEVATION

1" = 10'

Schedule A			
Soil Nail Rebar Size	#8		
Number of Soil Nail Rows	1, 2 & 3		
Row No. (From Top to Bottom)	1	2	3
Embedment Length, LE (ft)	15	15	15

Schedule B					
Soil Nail Rebar Size	#8				
Number of Soil Nail Rows	4 & 5				
Row No. (From Top to Bottom)	1	2	3	4	5
Embedment Length, LE (ft)	21	21	21	15	15

Schedule C							
Soil Nail Rebar Size	#8						
Number of Soil Nail Rows	6 & 7						
Row No. (From Top to Bottom)	1	2	3	4	5	6	7
Embedment Length, LE (ft)	25	25	25	20	20	20	15

Tracy L. Bertram
DESIGN OVERSIGHT — Tracy L Bertram

1-7-10
SIGN OFF DATE

DESIGN DETAIL SHEET (ENGLISH) (REV. 2/25/05)

	BY	CHECKED
DESIGN	C VASQUEZ	P CHEN
DETAILS	H. MISTRY	K WONG
QUANTITIES	K WONG	S GARAPALLY

ORIGINAL SCALE IN INCHES FOR REDUCED PLANS 0 1 2 3

PREPARED FOR THE STATE OF CALIFORNIA DEPARTMENT OF TRANSPORTATION

HARSHAD MISTRY
PROJECT ENGINEER

CU 04264
EA 264141

BRIDGE No. 23E0013
POST MILE 1.2

RETAINING WALL No. 7B
STRUCTURE PLAN No. 1

DISREGARD PRINTS BEARING EARLIER REVISION DATES → REVISION DATES (PRELIMINARY STAGE ONLY) ~~3/13/09~~ ~~8/03/09~~ ~~11/06/09~~ 12/09/09

SHEET 104 OF 171

FILE => 23E0013b-g-sp01.dgn

USERNAME => trlenard DATE PLOTTED => 23-NOV-2010 TIME PLOTTED => 08:37

DIST	COUNTY	ROUTE	POST MILES TOTAL PROJECT	SHEET No	TOTAL SHEETS
04	Nap,Sol	12	2.8/3.3, 0.0/2.6	544	617

P.K. Chen 12/09/09
REGISTERED STRUCTURAL ENGINEER DATE

11-22-10
PLANS APPROVAL DATE

REGISTERED PROFESSIONAL ENGINEER PO-KANG CHEN No. S3112 Exp. 9/30/11 STRUCTURAL STATE OF CALIFORNIA

The State of California or its officers or agents shall not be responsible for the accuracy or completeness of electronic copies of this plan sheet.

SOLANO TRANSPORTATION AUTHORITY
ONE HARBOR CENTER, SUITE 130
SUISUN CITY, CA 94585

MARK THOMAS & COMPANY, INC.
1960 ZANKER ROAD
SAN JOSE, CA 95112

LEGEND

⊡ = Location of Soil Nail Assembly

□ = Location of Proof Soil Test Nail Assembly

SV = Vertical spacing of Soil Nail Assembly, SV = 5'-0" Max Typical
= 6'-0" Max for Bottom Row

Notes:
1. For 'General Notes', 'Soil/Rock Design Parameters',see "General Plan No. 6" and "General Plan No. 7" sheets.

Schedule D								
Soil Nail Rebar Size	#10							
Number of Soil Nail Rows	7 & 8							
Row No. (From Top to Bottom)	1	2	3	4	5	6	7	8
Embedment Length, LE (ft)	35	35	35	25	25	25	15	15

Schedule E									
Soil Nail Rebar Size	#10								
Number of Soil Nail Rows	6, 7, 8 & 9								
Row No. (From Top to Bottom)	1	2	3	4	5	6	7	8	9
Embedment Length, LE (ft)	40	40	40	30	30	30	20	20	20

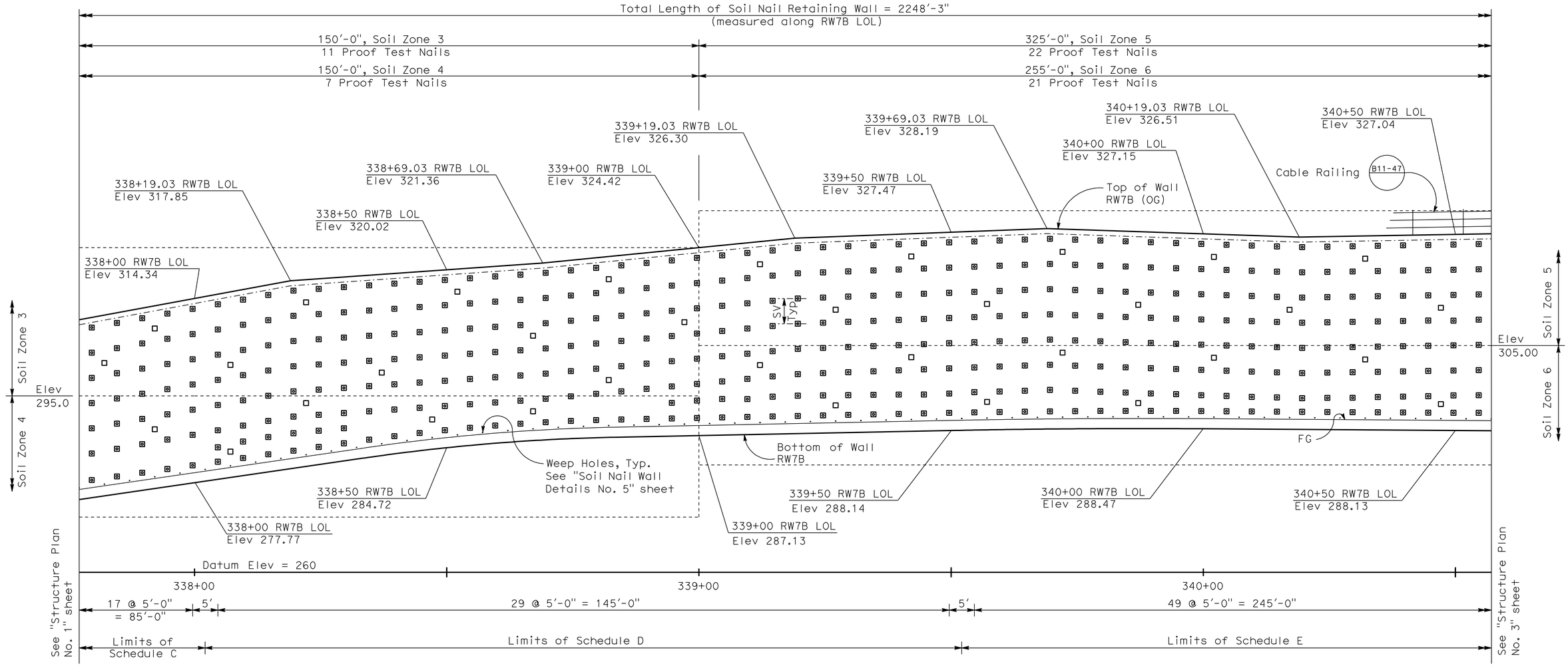

ELEVATION
1" = 10'

Tracy L. Bertram
DESIGN OVERSIGHT Tracy L Bertram

1-7-10
SIGN OFF DATE

	BY	CHECKED
DESIGN	C VASQUEZ	P CHEN
DETAILS	H. MISTRY	K WONG
QUANTITIES	K WONG	S GARAPALLY

PREPARED FOR THE STATE OF CALIFORNIA DEPARTMENT OF TRANSPORTATION

HARSHAD MISTRY
PROJECT ENGINEER

BRIDGE No. 23E0013
POST MILE 1.2

RETAINING WALL No. 7B
STRUCTURE PLAN No. 2

DESIGN DETAIL SHEET (ENGLISH) (REV. 2/25/05)

ORIGINAL SCALE IN INCHES FOR REDUCED PLANS 0 1 2 3

CU 04264
EA 264141

FILE => 23E0013b-g-sp02.dgn

DISREGARD PRINTS BEARING EARLIER REVISION DATES

REVISION DATES (PRELIMINARY STAGE ONLY): ~~3/13/09~~ ~~8/03/09~~ ~~11/06/09~~ 12/09/09

SHEET 105 OF 171

USERNAME => trlenard DATE PLOTTED => 23-NOV-2010 TIME PLOTTED => 08:37

DIST	COUNTY	ROUTE	POST MILES TOTAL PROJECT	SHEET No	TOTAL SHEETS
04	Nap,Sol	12	2.8/3.3, 0.0/2.6	545	617

P.K. Chen 12/09/09
REGISTERED STRUCTURAL ENGINEER DATE

11-22-10
PLANS APPROVAL DATE

REGISTERED PROFESSIONAL ENGINEER PO-KANG CHEN No. S3112 Exp. 9/30/11 STRUCTURAL STATE OF CALIFORNIA

The State of California or its officers or agents shall not be responsible for the accuracy or completeness of electronic copies of this plan sheet.

SOLANO TRANSPORTATION AUTHORITY
ONE HARBOR CENTER, SUITE 130
SUISUN CITY, CA 94585

MARK THOMAS & COMPANY, INC.
1960 ZANKER ROAD
SAN JOSE, CA 95112

LEGEND

⊡ = Location of Soil Nail Assembly

□ = Location of Proof Soil Test Nail Assembly

SV = Vertical spacing of Soil Nail Assembly, SV = 5'-0" Max Typical
= 6'-0" Max for Bottom Row

Notes:
1. For 'General Notes', 'Soil/Rock Design Parameters',see "General Plan No. 6" and "General Plan No. 7" sheets.

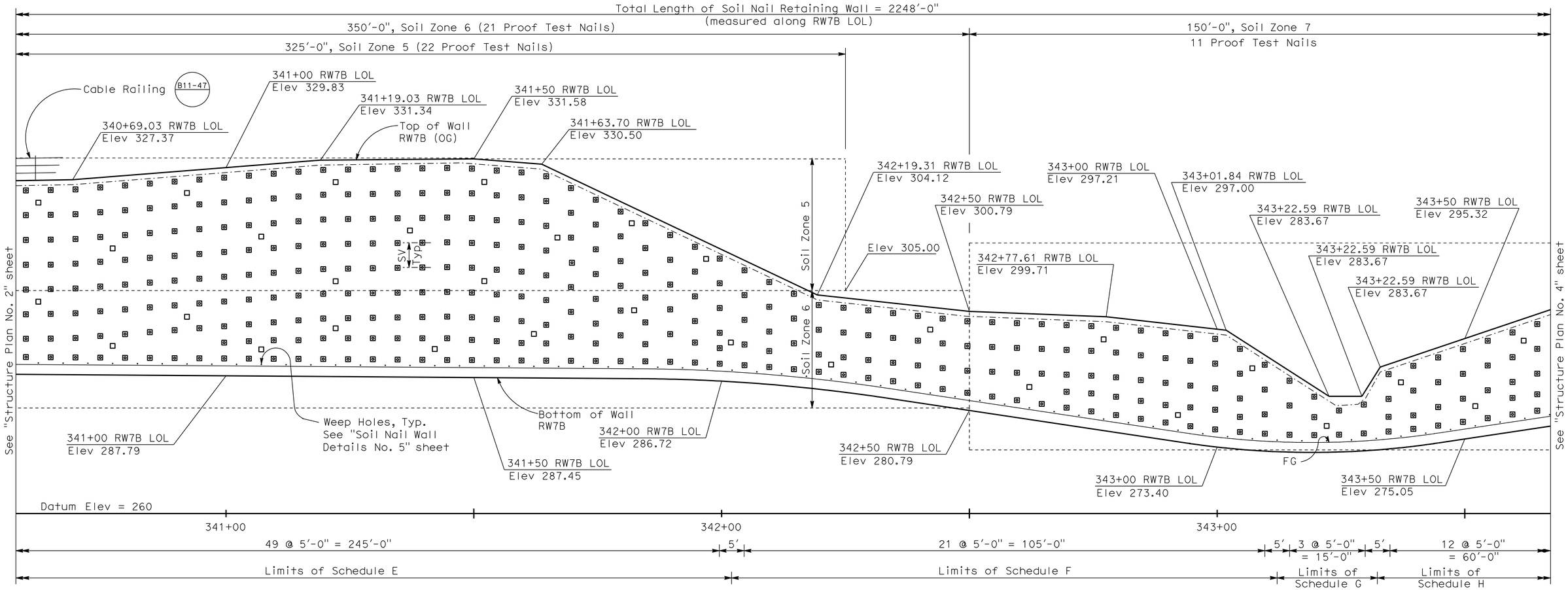

ELEVATION
1" = 10'

Schedule F					
Soil Nail Rebar Size	#11				
Number of Soil Nail Rows	4 & 5				
Row No. (From Top to Bottom)	1	2	3	4	5
Embedment Length, LE (ft)	45	45	35	24	24

Schedule G			
Soil Nail Rebar Size	#8		
Number of Soil Nail Rows	2 & 3		
Row No. (From Top to Bottom)	1	2	3
Embedment Length, LE (ft)	18	18	18

Schedule H						
Soil Nail Rebar Size	#10					
Number of Soil Nail Rows	4, 5 & 6					
Row No. (From Top to Bottom)	1	2	3	4	5	6
Embedment Length, LE (ft)	25	25	25	15	15	15

Tracy L. Bertram
DESIGN OVERSIGHT Tracy L Bertram
1-7-10
SIGN OFF DATE

DESIGN DETAIL SHEET (ENGLISH) (REV. 2/25/05)

	BY	CHECKED
DESIGN	C VASQUEZ	P CHEN
DETAILS	H. MISTRY	K WONG
QUANTITIES	K WONG	S GARAPALLY

ORIGINAL SCALE IN INCHES FOR REDUCED PLANS 0 1 2 3

PREPARED FOR THE STATE OF CALIFORNIA DEPARTMENT OF TRANSPORTATION

HARSHAD MISTRY
PROJECT ENGINEER

CU 04264
EA 264141

BRIDGE No. 23E0013
POST MILE 1.2

RETAINING WALL No. 7B
STRUCTURE PLAN No. 3

DISREGARD PRINTS BEARING EARLIER REVISION DATES

REVISION DATES (PRELIMINARY STAGE ONLY) ~~3/13/09~~ ~~8/03/09~~ ~~11/06/09~~ 12/09/09

SHEET 106 OF 171

FILE => 23E0013b-g-sp03.dgn

USERNAME => trlenard DATE PLOTTED => 23-NOV-2010 TIME PLOTTED => 08:37

DIST	COUNTY	ROUTE	POST MILES TOTAL PROJECT	SHEET No	TOTAL SHEETS
04	Nap,Sol	12	2.8/3.3, 0.0/2.6	546	617

P.K. Chen 12/09/09
REGISTERED STRUCTURAL ENGINEER DATE

11-22-10
PLANS APPROVAL DATE

REGISTERED PROFESSIONAL ENGINEER PO-KANG CHEN No. S3112 Exp. 9/30/11 STRUCTURAL STATE OF CALIFORNIA

The State of California or its officers or agents shall not be responsible for the accuracy or completeness of electronic copies of this plan sheet.

SOLANO TRANSPORTATION AUTHORITY
ONE HARBOR CENTER, SUITE 130
SUISUN CITY, CA 94585

MARK THOMAS & COMPANY, INC.
1960 ZANKER ROAD
SAN JOSE, CA 95112

LEGEND

⊡ = Location of Soil Nail Assembly

□ = Location of Proof Soil Test Nail Assembly

SV = Vertical spacing of Soil Nail Assembly, SV = 5'-0" Max Typical
= 6'-0" Max for Bottom Row

Notes:

1. For 'General Notes', 'Soil/Rock Design Parameters',see "General Plan No. 6" and "General Plan No. 7" sheets.

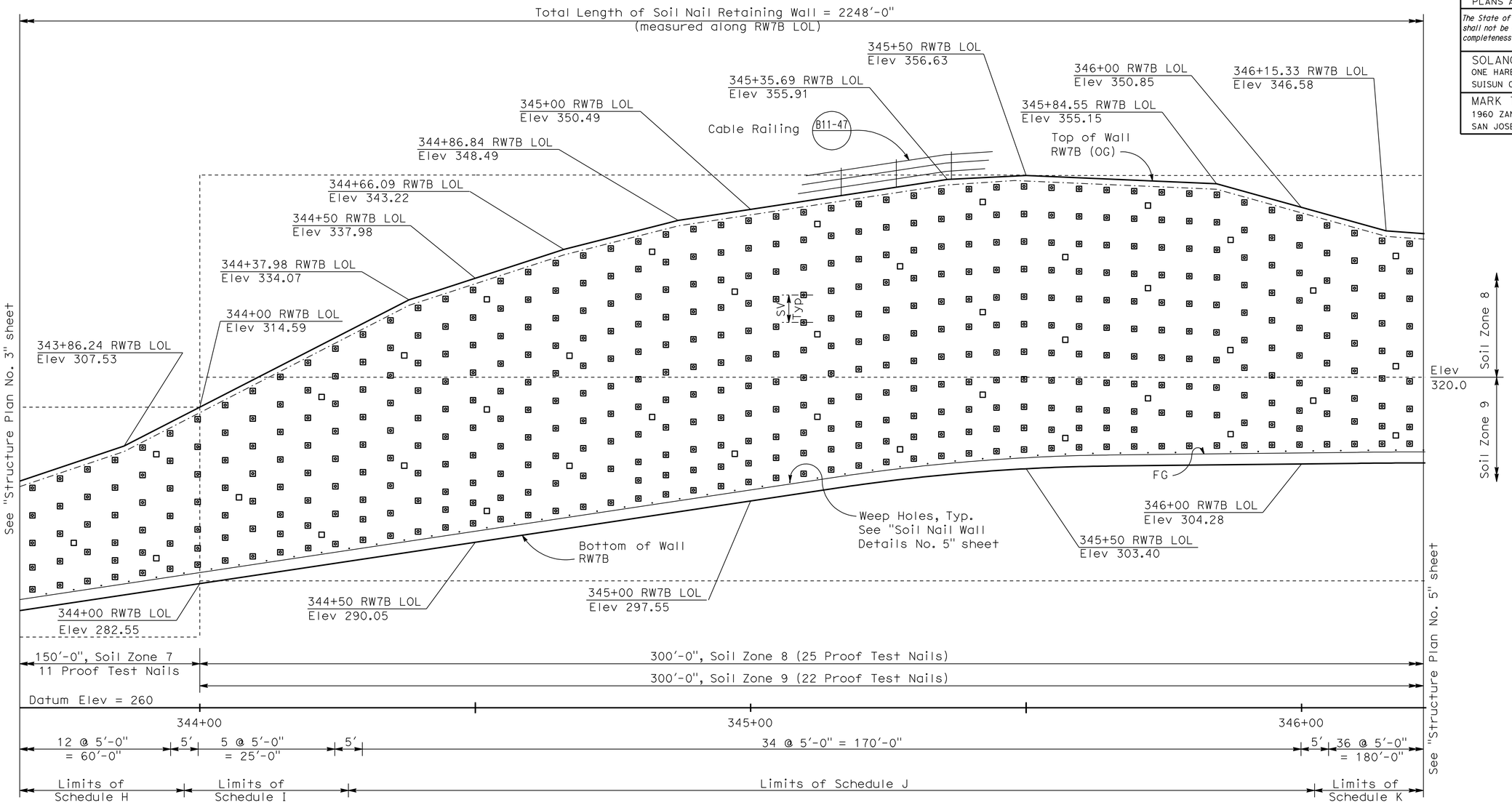

ELEVATION
1" = 10'

Schedule I								
Soil Nail Rebar Size	#10							
Number of Soil Nail Rows	7 & 8							
Row No. (From Top to Bottom)	1	2	3	4	5	6	7	8
Embedment Length, LE (ft)	30	30	30	25	25	25	15	15

Schedule J											
Soil Nail Rebar Size	#11										
Number of Soil Nail Rows	9, 10 & 11										
Row No. (From Top to Bottom)	1	2	3	4	5	6	7	8	9	10	11
Embedment Length, LE (ft)	39	39	39	32	32	32	25	25	15	15	15

Schedule K									
Soil Nail Rebar Size	#11								
Number of Soil Nail Rows	8 & 9								
Row No. (From Top to Bottom)	1	2	3	4	5	6	7	8	9
Embedment Length, LE (ft)	45	45	45	30	30	30	20	20	20

Tracy L. Bertram
DESIGN OVERSIGHT Tracy L Bertram
1-7-10
SIGN OFF DATE

	BY	CHECKED
DESIGN	C VASQUEZ	P CHEN
DETAILS	H. MISTRY	K WONG
QUANTITIES	K WONG	S GARAPALLY

PREPARED FOR THE
STATE OF CALIFORNIA
DEPARTMENT OF TRANSPORTATION

HARSHAD MISTRY
PROJECT ENGINEER

BRIDGE No. 23E0013
POST MILE 1.2

RETAINING WALL No. 7B
STRUCTURE PLAN No. 4

DISREGARD PRINTS BEARING EARLIER REVISION DATES
REVISION DATES (PRELIMINARY STAGE ONLY) ~~3/13/09~~ ~~8/03/09~~ ~~11/06/09~~ 12/09/09
SHEET 107 OF 171

DESIGN DETAIL SHEET (ENGLISH) (REV. 2/25/05)

ORIGINAL SCALE IN INCHES FOR REDUCED PLANS 0 1 2 3

CU 04264
EA 264141

FILE => 23E0013b-g-sp04.dgn

USERNAME => trlenard DATE PLOTTED => 23-NOV-2010 TIME PLOTTED => 08:37

DIST	COUNTY	ROUTE	POST MILES TOTAL PROJECT	SHEET No	TOTAL SHEETS
04	Nap,Sol	12	2.8/3.3, 0.0/2.6	547	617

P.K. Chen 12/09/09
REGISTERED STRUCTURAL ENGINEER DATE

11-22-10
PLANS APPROVAL DATE

REGISTERED PROFESSIONAL ENGINEER PO-KANG CHEN No. S3112 Exp. 9/30/11 STRUCTURAL STATE OF CALIFORNIA

The State of California or its officers or agents shall not be responsible for the accuracy or completeness of electronic copies of this plan sheet.

SOLANO TRANSPORTATION AUTHORITY
ONE HARBOR CENTER, SUITE 130
SUISUN CITY, CA 94585

MARK THOMAS & COMPANY, INC.
1960 ZANKER ROAD
SAN JOSE, CA 95112

LEGEND

⊡ = Location of Soil Nail Assembly

□ = Location of Proof Soil Test Nail Assembly

SV = Vertical spacing of Soil Nail Assembly, SV = 5'-0" Max Typical
= 6'-0" Max for Bottom Row

Notes:

1. For 'General Notes', 'Soil/Rock Design Parameters',see "General Plan No. 6" and "General Plan No. 7" sheets.

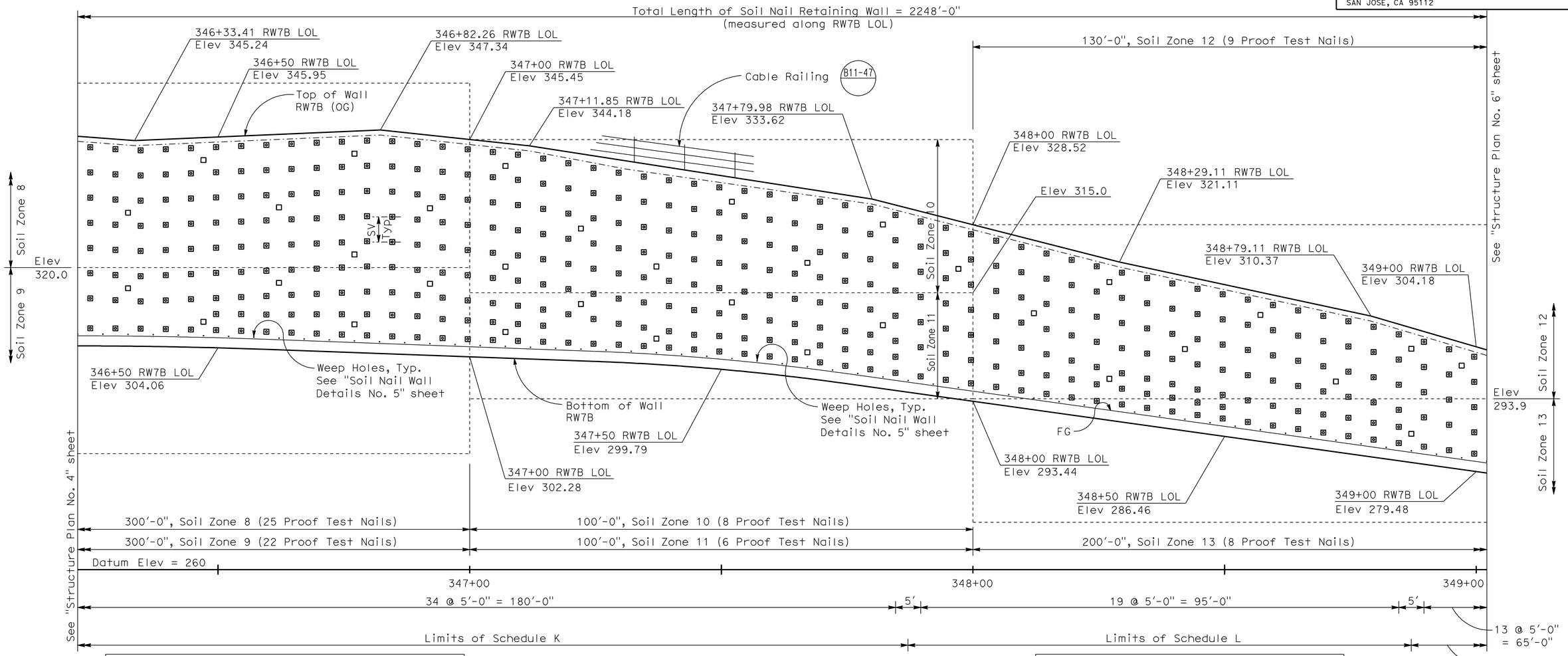

ELEVATION

1" = 10'

Schedule L							
Soil Nail Rebar Size	#11						
Number of Soil Nail Rows	6 & 7						
Row No. (From Top to Bottom)	1	2	3	4	5	6	7
Embedment Length, LE (ft)	38	38	38	27	27	27	15

Schedule M					
Soil Nail Rebar Size	#10				
Number of Soil Nail Rows	4 & 5				
Row No. (From Top to Bottom)	1	2	3	4	5
Embedment Length, LE (ft)	38	38	38	20	20

Tracy L. Bertram
DESIGN OVERSIGHT Tracy L Bertram

1-7-10
SIGN OFF DATE

DESIGN DETAIL SHEET (ENGLISH) (REV. 2/25/05)

	BY	CHECKED
DESIGN	C VASQUEZ	P CHEN
DETAILS	H. MISTRY	K WONG
QUANTITIES	K WONG	S GARAPALLY

ORIGINAL SCALE IN INCHES FOR REDUCED PLANS 0 1 2 3

PREPARED FOR THE STATE OF CALIFORNIA DEPARTMENT OF TRANSPORTATION

HARSHAD MISTRY
PROJECT ENGINEER

CU 04264
EA 264141

BRIDGE No. 23E0013
POST MILE 1.2

RETAINING WALL No. 7B
STRUCTURE PLAN No. 5

DISREGARD PRINTS BEARING EARLIER REVISION DATES

REVISION DATES (PRELIMINARY STAGE ONLY) ~~3/13/09~~ ~~8/03/09~~ ~~11/06/09~~ 12/09/09

SHEET 108 OF 171

FILE => 23E0013b-g-sp05.dgn

USERNAME => trienard DATE PLOTTED => 23-NOV-2010 TIME PLOTTED => 08:37

DIST	COUNTY	ROUTE	POST MILES TOTAL PROJECT	SHEET No	TOTAL SHEETS
04	Nap,Sol	12	2.8/3.3, 0.0/2.6	548	617

P.K. Chen 12/09/09
REGISTERED STRUCTURAL ENGINEER DATE

11-22-10
PLANS APPROVAL DATE

REGISTERED PROFESSIONAL ENGINEER PO-KANG CHEN No. S3112 Exp. 9/30/11 STRUCTURAL STATE OF CALIFORNIA

The State of California or its officers or agents shall not be responsible for the accuracy or completeness of electronic copies of this plan sheet.

SOLANO TRANSPORTATION AUTHORITY
ONE HARBOR CENTER, SUITE 130
SUISUN CITY, CA 94585

MARK THOMAS & COMPANY, INC.
1960 ZANKER ROAD
SAN JOSE, CA 95112

LEGEND

⊡ = Location of Soil Nail Assembly

□ = Location of Proof Soil Test Nail Assembly

SV = Vertical spacing of Soil Nail Assembly, SV = 5'-0" Max Typical
= 6'-0" Max for Bottom Row

Notes:

1. For 'General Notes', 'Soil/Rock Design Parameters',see "General Plan No. 6" and "General Plan No. 7" sheets.

Schedule N			
Soil Nail Rebar Size	#8		
Number of Soil Nail Rows	2 & 3		
Row No. (From Top to Bottom)	1	2	3
Embedment Length, LE (ft)	15	15	15

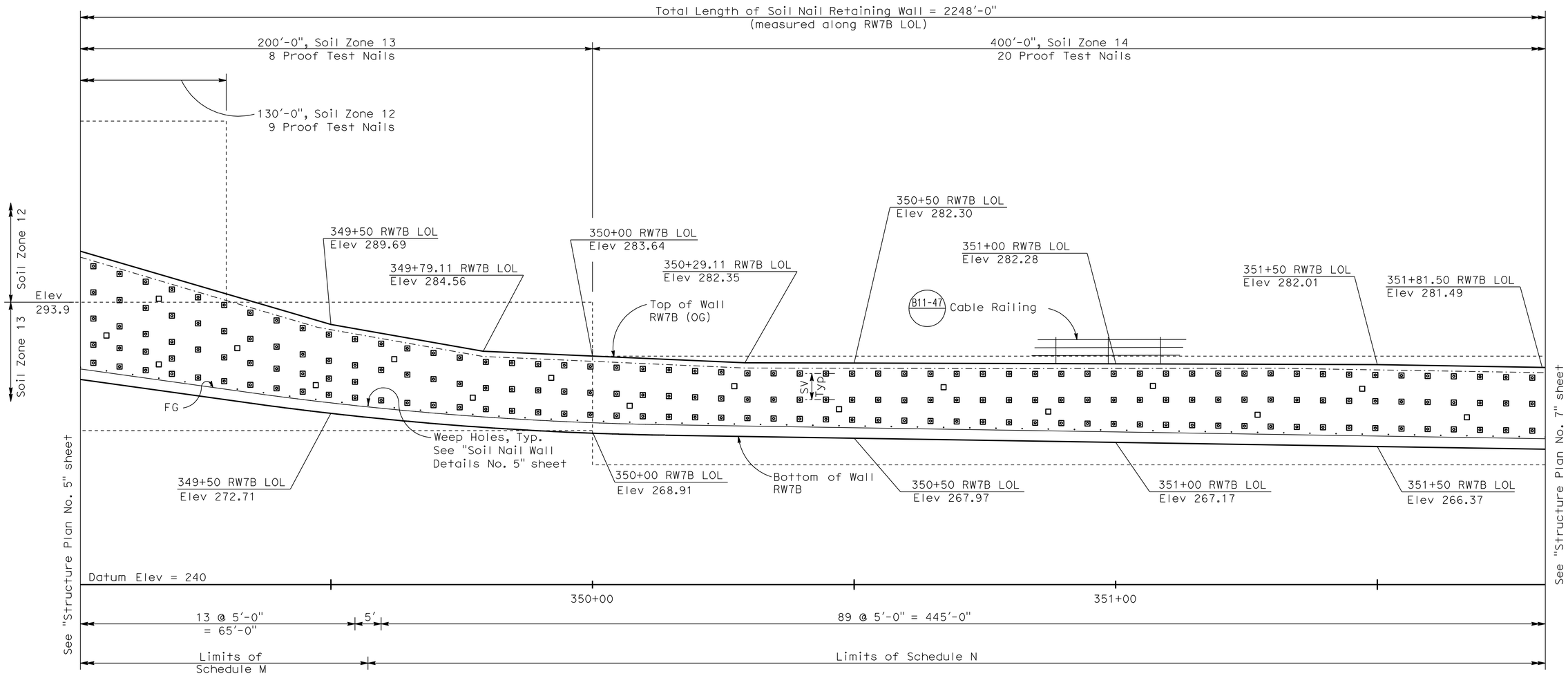

ELEVATION

1" = 10'

Tracy L. Bertram
DESIGN OVERSIGHT Tracy L Bertram
1-7-10
SIGN OFF DATE

DESIGN DETAIL SHEET (ENGLISH) (REV. 2/25/05)

	BY	CHECKED
DESIGN	C VASQUEZ	P CHEN
DETAILS	H. MISTRY	K WONG
QUANTITIES	K WONG	S GARAPALLY

ORIGINAL SCALE IN INCHES FOR REDUCED PLANS 0 1 2 3

PREPARED FOR THE STATE OF CALIFORNIA DEPARTMENT OF TRANSPORTATION

HARSHAD MISTRY
PROJECT ENGINEER

CU 04264
EA 264141

BRIDGE No. 23E0013
POST MILE 1.2

RETAINING WALL No. 7B
STRUCTURE PLAN No. 6

DISREGARD PRINTS BEARING EARLIER REVISION DATES

REVISION DATES (PRELIMINARY STAGE ONLY): ~~3/13/09~~ ~~8/03/09~~ ~~11/06/09~~ 12/09/09

SHEET 109 OF 171

FILE => 23E0013b-g-sp06.dgn

USERNAME => trlenard DATE PLOTTED => 23-NOV-2010 TIME PLOTTED => 08:37

DIST	COUNTY	ROUTE	POST MILES TOTAL PROJECT	SHEET No	TOTAL SHEETS
04	Nap,Sol	12	2.8/3.3, 0.0/2.6	549	617

P.K. Chen 12/09/09
REGISTERED STRUCTURAL ENGINEER DATE

11-22-10
PLANS APPROVAL DATE

REGISTERED PROFESSIONAL ENGINEER PO-KANG CHEN No. S3112 Exp. 9/30/11 STRUCTURAL STATE OF CALIFORNIA

The State of California or its officers or agents shall not be responsible for the accuracy or completeness of electronic copies of this plan sheet.

SOLANO TRANSPORTATION AUTHORITY
ONE HARBOR CENTER, SUITE 130
SUISUN CITY, CA 94585

MARK THOMAS & COMPANY, INC.
1960 ZANKER ROAD
SAN JOSE, CA 95112

LEGEND

⊡ = Location of Soil Nail Assembly

□ = Location of Proof Soil Test Nail Assembly

SV = Vertical spacing of Soil Nail Assembly, SV = 5'-0" Max Typical
= 6'-0" Max for Bottom Row

Notes:

1. For 'General Notes', 'Soil/Rock Design Parameters',see "General Plan No. 6" and "General Plan No. 7" sheets.

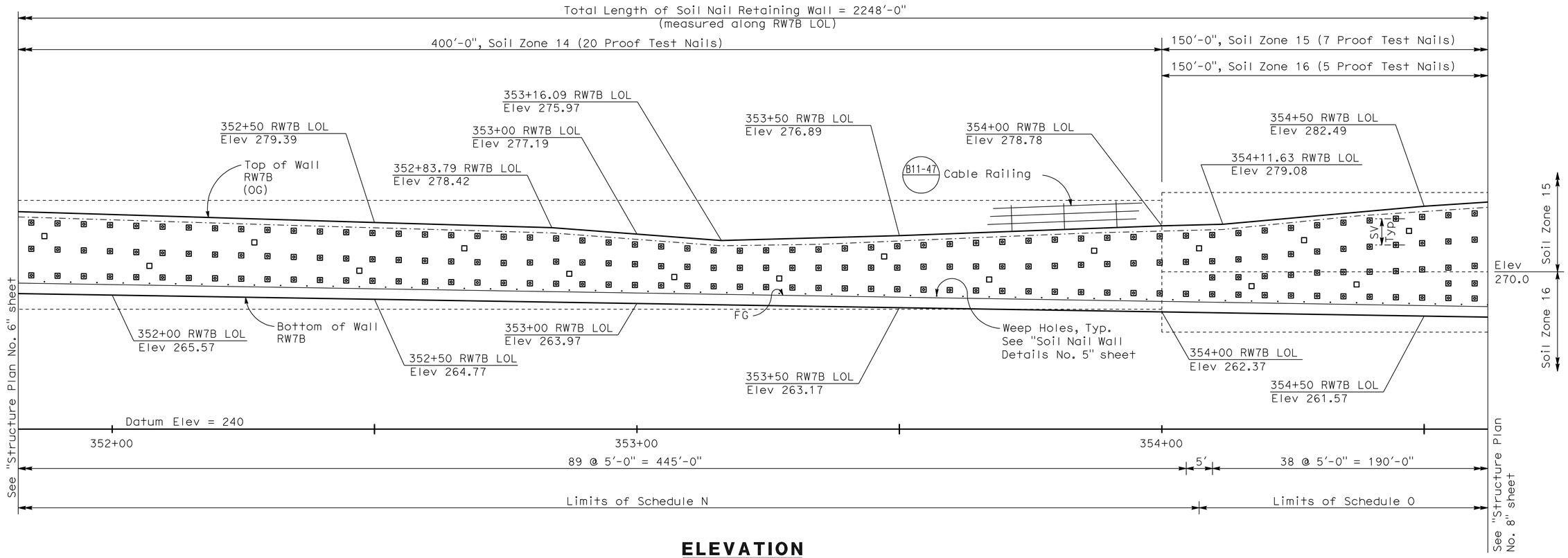

ELEVATION
1" = 10'

Schedule N			
Soil Nail Rebar Size	#8		
Number of Soil Nail Rows	2 & 3		
Row No. (From Top to Bottom)	1	2	3
Embedment Length, LE (ft)	15	15	15

Schedule O					
Soil Nail Rebar Size	#8				
Number of Soil Nail Rows	4 & 5				
Row No. (From Top to Bottom)	1	2	3	4	5
Embedment Length, LE (ft)	28	28	28	20	20

Tracy L. Bertram
DESIGN OVERSIGHT Tracy L Bertram
1-7-10
SIGN OFF DATE

DESIGN DETAIL SHEET (ENGLISH) (REV. 2/25/05)

	BY	CHECKED
DESIGN	C VASQUEZ	P CHEN
DETAILS	H. MISTRY	K WONG
QUANTITIES	K WONG	S GARAPALLY

ORIGINAL SCALE IN INCHES FOR REDUCED PLANS 0 1 2 3

PREPARED FOR THE STATE OF CALIFORNIA DEPARTMENT OF TRANSPORTATION

HARSHAD MISTRY
PROJECT ENGINEER

CU 04264
EA 264141

BRIDGE No. 23E0013
POST MILE 1.2

RETAINING WALL No. 7B
STRUCTURE PLAN No. 7

DISREGARD PRINTS BEARING EARLIER REVISION DATES → REVISION DATES (PRELIMINARY STAGE ONLY) ~~3/13/09~~ ~~8/03/09~~ ~~11/06/09~~ 12/09/09

SHEET 110 OF 171

FILE => 23E0013b-g-sp07.dgn

USERNAME => trlenard DATE PLOTTED => 23-NOV-2010 TIME PLOTTED => 08:37

DIST	COUNTY	ROUTE	POST MILES TOTAL PROJECT	SHEET No	TOTAL SHEETS
04	Nap,Sol	12	2.8/3.3, 0.0/2.6	550	617

P.K. Chen 12/09/09
REGISTERED STRUCTURAL ENGINEER DATE

11-22-10
PLANS APPROVAL DATE

REGISTERED PROFESSIONAL ENGINEER PO-KANG CHEN No. S3112 Exp. 9/30/11 STRUCTURAL STATE OF CALIFORNIA

The State of California or its officers or agents shall not be responsible for the accuracy or completeness of electronic copies of this plan sheet.

SOLANO TRANSPORTATION AUTHORITY
ONE HARBOR CENTER, SUITE 130
SUISUN CITY, CA 94585

MARK THOMAS & COMPANY, INC.
1960 ZANKER ROAD
SAN JOSE, CA 95112

LEGEND

⊡ = Location of Soil Nail Assembly

□ = Location of Proof Soil Test Nail Assembly

SV = Vertical spacing of Soil Nail Assembly, SV = 5'-0" Max Typical
= 6'-0" Max for Bottom Row

Notes:

1. For 'General Notes', 'Soil/Rock Design Parameters',see "General Plan No. 6" and "General Plan No. 7" sheets.

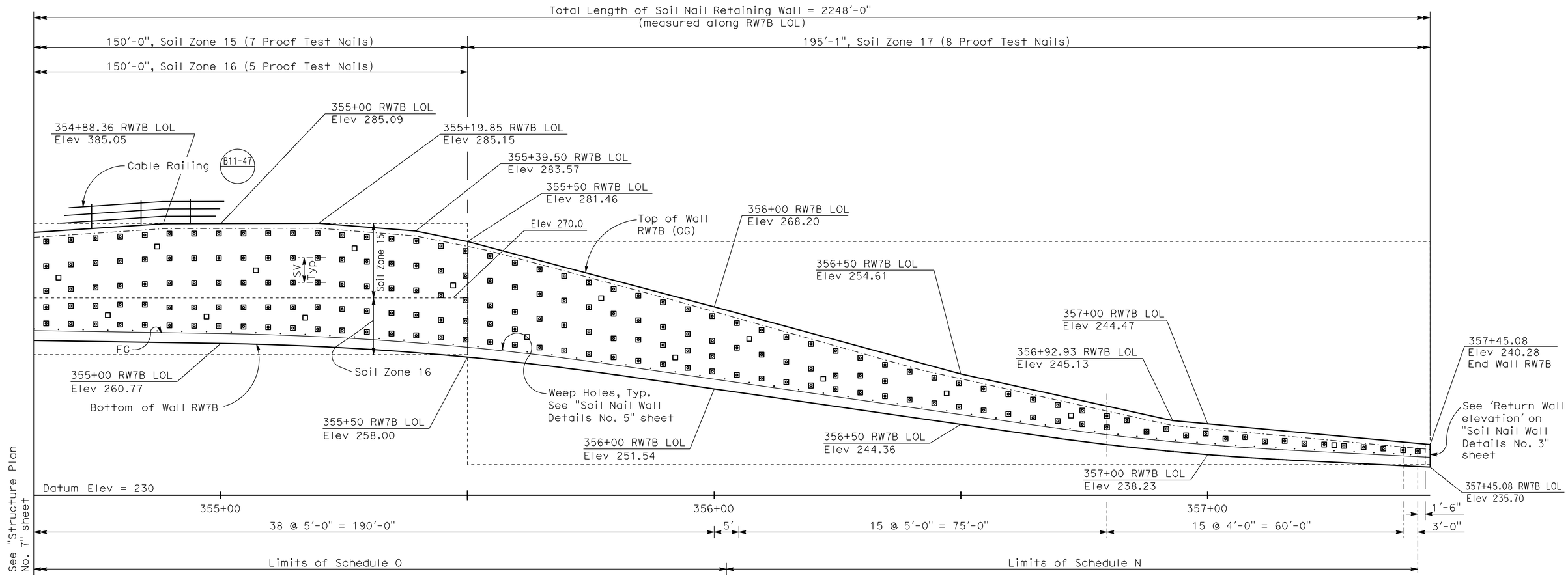

ELEVATION

1" = 10'

DESIGN OVERSIGHT Tracy L Bertram	DESIGN	BY C VASQUEZ	CHECKED P CHEN
1-7-10 SIGN OFF DATE	DETAILS	BY H. MISTRY	CHECKED K WONG
	QUANTITIES	BY K WONG	CHECKED S GARAPALLY

PREPARED FOR THE STATE OF CALIFORNIA DEPARTMENT OF TRANSPORTATION

HARSHAD MISTRY
PROJECT ENGINEER

BRIDGE No. 23E0013
POST MILE 1.2

RETAINING WALL No. 7B
STRUCTURE PLAN No. 8

DESIGN DETAIL SHEET (ENGLISH) (REV. 2/25/05)

ORIGINAL SCALE IN INCHES FOR REDUCED PLANS 0 1 2 3

CU 04264
EA 264141

DISREGARD PRINTS BEARING EARLIER REVISION DATES

REVISION DATES (PRELIMINARY STAGE ONLY): ~~3/13/09~~ ~~8/03/09~~ ~~11/06/09~~ 12/09/09

SHEET 111 OF 171

FILE => 23E0013b-g-sp08b.dgn

USERNAME => trlenard DATE PLOTTED => 23-NOV-2010 TIME PLOTTED => 08:37

DIST	COUNTY	ROUTE	POST MILES TOTAL PROJECT	SHEET No	TOTAL SHEETS
04	Nap,Sol	12	2.8/3.3, 0.0/2.6	551	617

P.K. Chen 12/09/09
REGISTERED STRUCTURAL ENGINEER DATE

11-22-10
PLANS APPROVAL DATE

REGISTERED PROFESSIONAL ENGINEER PO-KANG CHEN No. S3112 Exp. 9/30/11 STRUCTURAL STATE OF CALIFORNIA

The State of California or its officers or agents shall not be responsible for the accuracy or completeness of electronic copies of this plan sheet.

SOLANO TRANSPORTATION AUTHORITY
ONE HARBOR CENTER, SUITE 130
SUISUN CITY, CA 94585

MARK THOMAS & COMPANY, INC.
1960 ZANKER ROAD
SAN JOSE, CA 95112

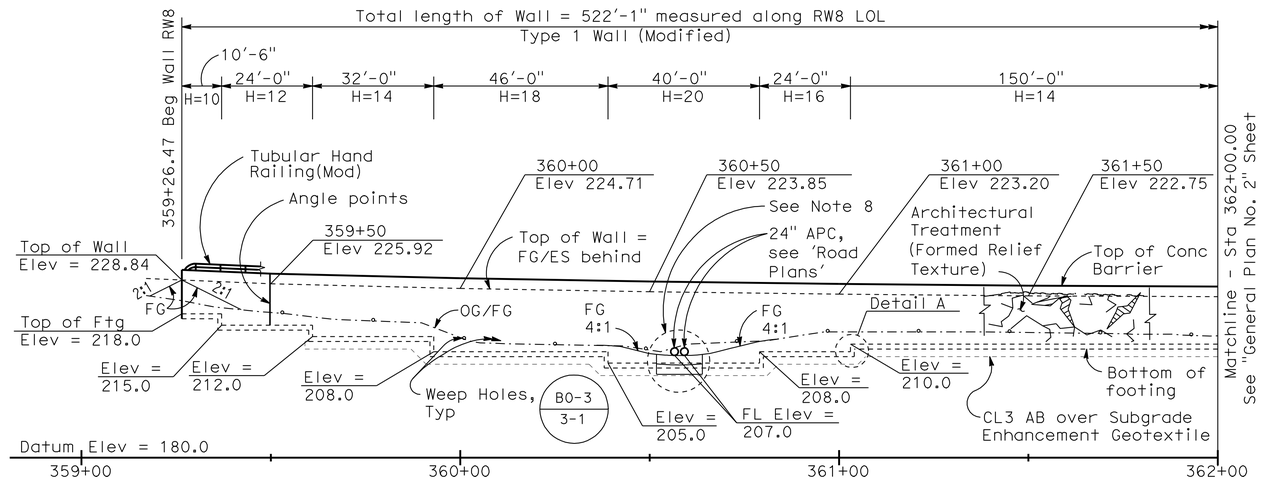

DEVELOPED MIRRORED ELEVATION

1" = 20'

Notes:

1. The Contractor shall verify all controlling field dimensions before ordering or fabricating any material.
2. For 'Typical Section', see "General Plan No. 2" sheet.
3. For Architectural Treatment, see "Retaining Wall Details No. 5" sheet.
4. For Finished Grade Elevations, see 'Road Plans'.
5. For Utilities, see 'Road Plans'.
6. For complete Right of Way and accurate access data, see Right of Way Record Maps at district office.
7. For 'Detail A', see "Retaining Wall Details No. 3" sheet.
8. For Box Culvert details, see "Retaining Wall Details No. 3" sheet.

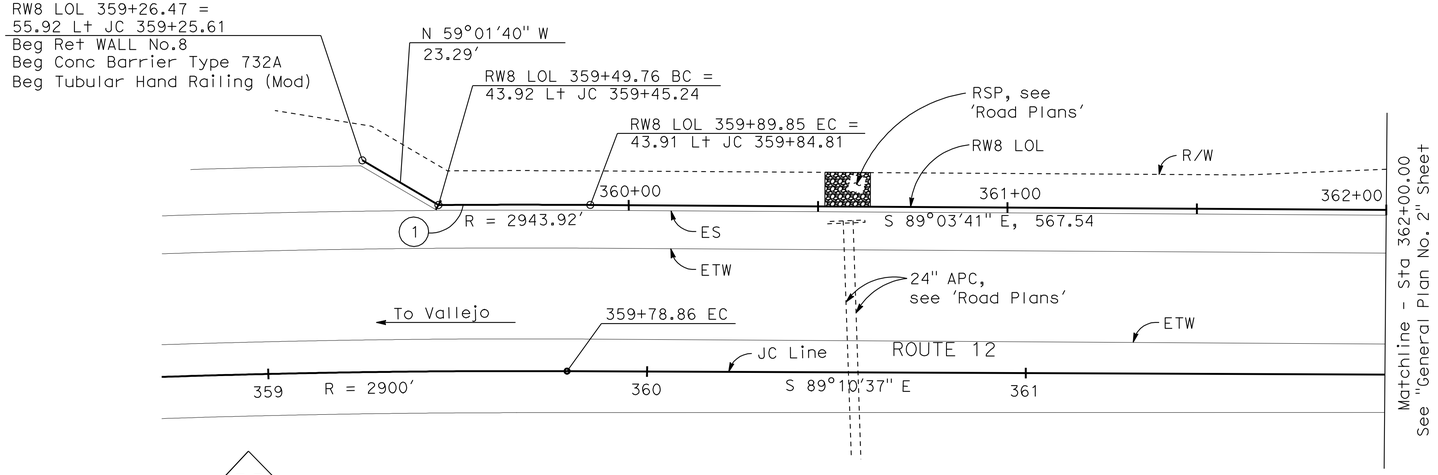

PLAN

1" = 20'

RETAINING WALL #8
QUANTITIES

STRUCTURE EXCAVATION (RETAINING WALL)	1,190	CY
STRUCTURE BACKFILL (RETAINING WALL)	1,140	CY
PERVIOUS BACKFILL MATERIAL (RETAINING WALL)	115	CY
SUBGRADE ENHANCEMENT GEOTEXTILE	1,000	SQYD
CLASS 3 AGGREGATE BASE	250	CY
STRUCTURAL CONCRETE, RETAINING WALL	610	CY
ARCHITECTURAL TREATMENT (FORMED RELIEF TEXTURE)	5,100	SQFT
BAR REINFORCING STEEL (RETAINING WALL)	83,500	LB
PREPARE AND STAIN CONCRETE	8,900	SQFT
TUBULAR HANDRAILING (MODIFIED)	568	LF
CONCRETE BARRIER (TYPE 732A)	568	LF

CURVE DATA

No.	R	Δ	T	L
1	2943.92'	0°46'48"	20.04'	40.08'

Tracy L. Bertram
DESIGN OVERSIGHT Tracy L Bertram
1-7-10
SIGN OFF DATE

	BY	CHECKED				
DESIGN	H MISTRY	P PARK	LOAD FACTOR DESIGN			
DETAILS	H. MISTRY	P PARK	LAYOUT	C HII	F QUACH	
QUANTITIES	P PARK	S GARAPALLY	SPECIFICATIONS	H MISTRY	PLANS AND SPECS COMPARED P CHEN	

PREPARED FOR THE STATE OF CALIFORNIA DEPARTMENT OF TRANSPORTATION

HARSHAD MISTRY
PROJECT ENGINEER

BRIDGE No. 23E0014
POST MILES 1.7

RETAINING WALL No. 8
GENERAL PLAN No. 1

DESIGN GENERAL PLAN SHEET (ENGLISH) (REV.2/25/05)

ORIGINAL SCALE IN INCHES FOR REDUCED PLANS 0 1 2 3

CU 04264
EA 264141

DISREGARD PRINTS BEARING EARLIER REVISION DATES

REVISION DATES (PRELIMINARY STAGE ONLY): ~~3/13/09~~ ~~8/05/09~~ ~~11/06/09~~ 12/09/09

SHEET 112 OF 171

FILE => 23E0014-a-gp01.dgn

USERNAME => trlenard DATE PLOTTED => 23-NOV-2010 TIME PLOTTED => 08:56

DIST	COUNTY	ROUTE	POST MILES TOTAL PROJECT	SHEET No	TOTAL SHEETS
04	Nap,Sol	12	2.8/3.3, 0.0/2.6	552	617

P.K. Chen 12/09/09
REGISTERED STRUCTURAL ENGINEER DATE

11-22-10
PLANS APPROVAL DATE

REGISTERED PROFESSIONAL ENGINEER PO-KANG CHEN No. S3112 Exp. 9/30/11 STRUCTURAL STATE OF CALIFORNIA

The State of California or its officers or agents shall not be responsible for the accuracy or completeness of electronic copies of this plan sheet.

SOLANO TRANSPORTATION AUTHORITY
ONE HARBOR CENTER, SUITE 130
SUISUN CITY, CA 94585

MARK THOMAS & COMPANY, INC.
1960 ZANKER ROAD
SAN JOSE, CA 95112

Notes:

1. The Contractor shall verify all controlling field dimensions before ordering or fabricating any material.
2. For Architectural Treatment, see "Retaining Wall Details No. 5" sheet.
3. For Finished Grade Elevations, see 'Road Plans'.
4. For Utilities, see 'Road Plans'.
5. For 'Detail A', see "Retaining Wall Details No. 3" sheet.
6. For complete Right of Way data, contact Right of Way Engineering at District Office.

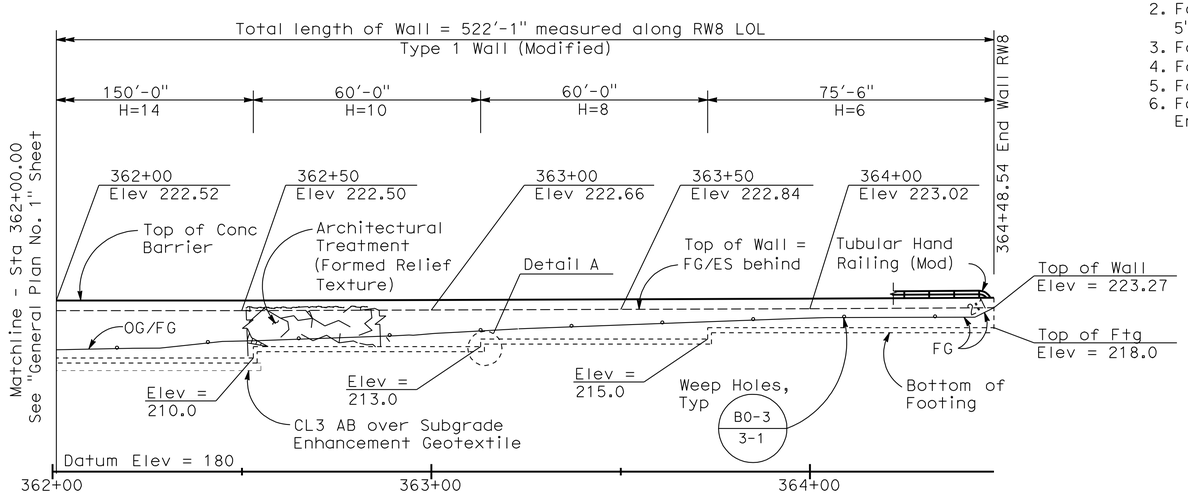

DEVELOPED MIRRORED ELEVATION

1" = 20'

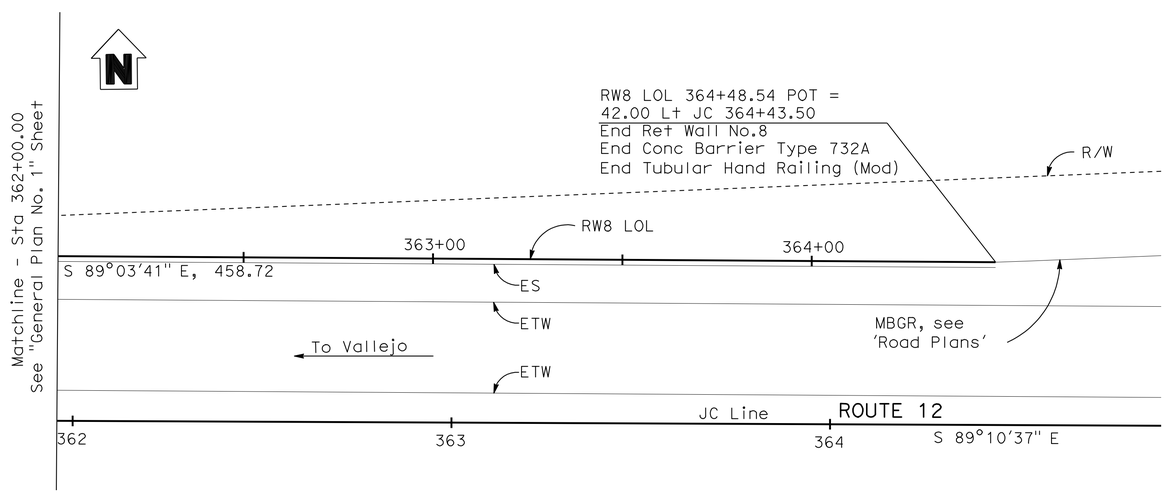

PLAN

1" = 20'

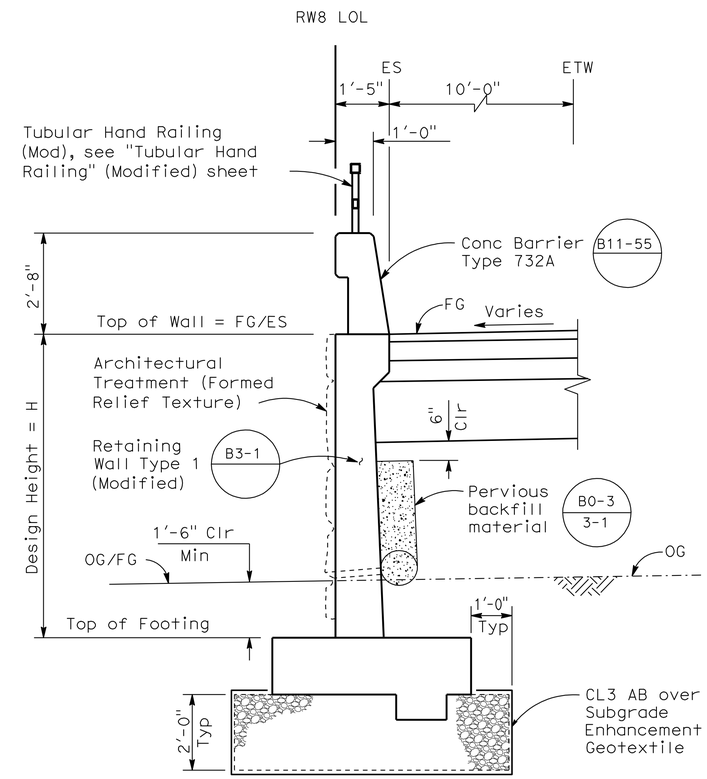

RW8 - TYPICAL SECTION

1/2" = 1'-0"

DESIGN OVERSIGHT Tracy L Bertram 1-7-10 SIGN OFF DATE	DESIGN	BY H. MISTRY	CHECKED P. PARK	LOAD FACTOR DESIGN		
	DETAILS	BY H. MISTRY	CHECKED P. PARK	LAYOUT	BY C HII	CHECKED F QUACH
	QUANTITIES	BY P. PARK	CHECKED S. GARAPALLY	SPECIFICATIONS	BY H MISTRY	PLANS AND SPECS COMPARED P CHEN

DESIGN GENERAL PLAN SHEET (ENGLISH) (REV.2/25/05)

ORIGINAL SCALE IN INCHES FOR REDUCED PLANS 0 1 2 3

PREPARED FOR THE STATE OF CALIFORNIA DEPARTMENT OF TRANSPORTATION

HARSHAD MISTRY
PROJECT ENGINEER

CU 04264
EA 264141

BRIDGE No. 23E0014
POST MILES 1.7

RETAINING WALL No. 8
GENERAL PLAN No. 2

DISREGARD PRINTS BEARING EARLIER REVISION DATES

REVISION DATES (PRELIMINARY STAGE ONLY): ~~3/13/09~~ ~~8/05/09~~ ~~11/06/09~~ 12/09/09

SHEET 113 OF 171

FILE => 23E0014-a-gp02.dgn

USERNAME => trlenard DATE PLOTTED => 23-NOV-2010 TIME PLOTTED => 08:56

DIST	COUNTY	ROUTE	POST MILES TOTAL PROJECT	SHEET No	TOTAL SHEETS
04	Nap,Sol	12	2.8/3.3, 0.0/2.6	553	617

P.K. Chen 12/09/09
REGISTERED STRUCTURAL ENGINEER DATE

11-22-10
PLANS APPROVAL DATE

REGISTERED PROFESSIONAL ENGINEER PO-KANG CHEN No. S3112 Exp. 9/30/11 STRUCTURAL STATE OF CALIFORNIA

The State of California or its officers or agents shall not be responsible for the accuracy or completeness of electronic copies of this plan sheet.

SOLANO TRANSPORTATION AUTHORITY
ONE HARBOR CENTER, SUITE 130
SUISUN CITY, CA 94585

MARK THOMAS & COMPANY, INC.
1960 ZANKER ROAD
SAN JOSE, CA 95112

BENCHMARKS

Benchmark No.1
Set 1" iron pipe with red plastic plug and tack (California Department of Transportation SW-534) along the southerly side of eastbound Highway 12, at PM 1.68, behind the guard rail; approximately 3.2 feet northerly of a black chain link fence, approximately 31.5 feet northwesterly of black chain link fence post.

Elevation: 237.559 Northing: 1837356.8140 Easting: 6512667.0800

Benchmark No.2
Set 2" brass disk (California Department of Transportation SW-535) in concrete along the northerly side of westbound Highway 12, at PM 1.8, approximately 13 feet northerly of westbound edge of pavement, approximately 14.4 feet northeasterly of sign post; approximately 10.8 feet southeasterly of chain link fence gate post; approximately 14.7 feet southwesterly of chain link fence gate post.

Elevation: 224.537 Northing: 1837498.3850 Easting: 6513192.8270

Notes:

1. Contractor shall verify all controlling dimensions before ordering or fabricating any material.
2. Contractor shall protect all existing monuments in place. if monument is damaged by contractor's operations, contractor shall replace at contractor's cost.
3. For Utilities, see 'Road plans'.
4. For complete Right of Way data, contact Right of Way Engineering at the District Office.

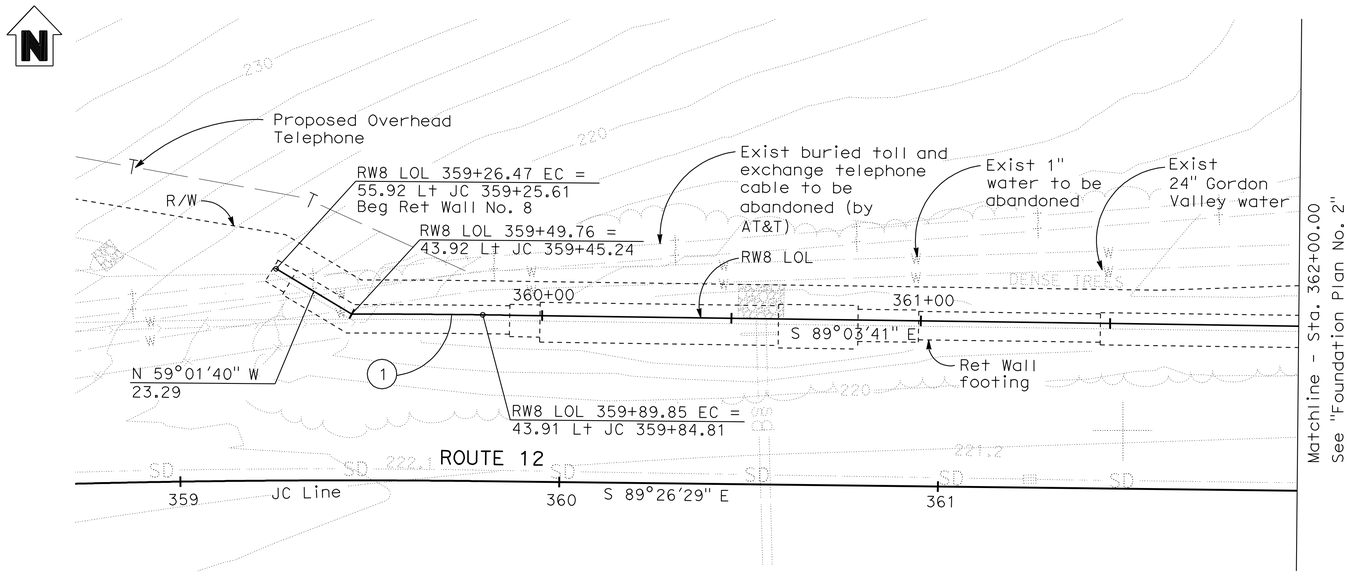

FOUNDATION PLAN

1" = 20'

CURVE DATA

No.	R	Δ	T	L
1	2943.92'	0°46'48"	20.04'	40.08'

DATUM

Coordinates, bearings and distances are based on the California Coordinate System of 1983, NAVD 1988, Zone 2, CA-HPGN. Epoch 1991.35. Distances and stationing are grid distances. Distances are in feet. Supplementary information may be obtained from the district office, surveys branch or right of way engineering branch, 111 Grand Avenue, Oakland, California.

Tracy L. Bertram 12/09/09
GEOTECHNICAL PROFESSIONAL APPROVAL DATE

Tracy L. Bertram
DESIGN OVERSIGHT Tracy L Bertram
1-7-10
SIGN OFF DATE

SCALE: AS SHOWN	VERT.DATUM NAVD 88	HORZ.DATUM NAD 83	
PHOTOGRAMMETRY AS OF:		ALIGNMENT TIES	
SURVEYED	BY MTCo.	DRAFTED	BY
FIELD CHECKED	BY	CHECKED	BY

DESIGN	BY H MISTRY	CHECKED P PARK	
DETAILS	BY H MISTRY	CHECKED P PARK	
QUANTITIES	BY P PARK	CHECKED S GARAPALLY	

PREPARED FOR THE STATE OF CALIFORNIA DEPARTMENT OF TRANSPORTATION

HARSHAD MISTRY
PROJECT ENGINEER

BRIDGE No. 23E0014
POST MILE 1.7

RETAINING WALL No. 8
FOUNDATION PLAN No. 1

FOUNDATION PLAN SHEET (ENGLISH) (REV. 2-25-05)

ORIGINAL SCALE IN INCHES FOR REDUCED PLANS 0 1 2 3

CU 04264
EA 264141

DISREGARD PRINTS BEARING EARLIER REVISION DATES

REVISION DATES (PRELIMINARY STAGE ONLY): ~~3/13/09~~ ~~8/05/09~~ ~~11/06/09~~ 12/09/09

SHEET 114 OF 171

FILE => 23e0014-e-fp01.dgn

USERNAME => trrenard DATE PLOTTED => 23-NOV-2010 TIME PLOTTED => 08:56

DIST	COUNTY	ROUTE	POST MILES TOTAL PROJECT	SHEET No	TOTAL SHEETS
04	Nap,Sol	12	2.8/3.3, 0.0/2.6	554	617

P.K. Chen 12/09/09
REGISTERED STRUCTURAL ENGINEER DATE

11-22-10
PLANS APPROVAL DATE

REGISTERED PROFESSIONAL ENGINEER
PO-KANG CHEN
No. S3112
Exp. 9/30/11
STRUCTURAL
STATE OF CALIFORNIA

The State of California or its officers or agents shall not be responsible for the accuracy or completeness of electronic copies of this plan sheet.

SOLANO TRANSPORTATION AUTHORITY
ONE HARBOR CENTER, SUITE 130
SUISUN CITY, CA 94585

MARK THOMAS & COMPANY, INC.
1960 ZANKER ROAD
SAN JOSE, CA 95112

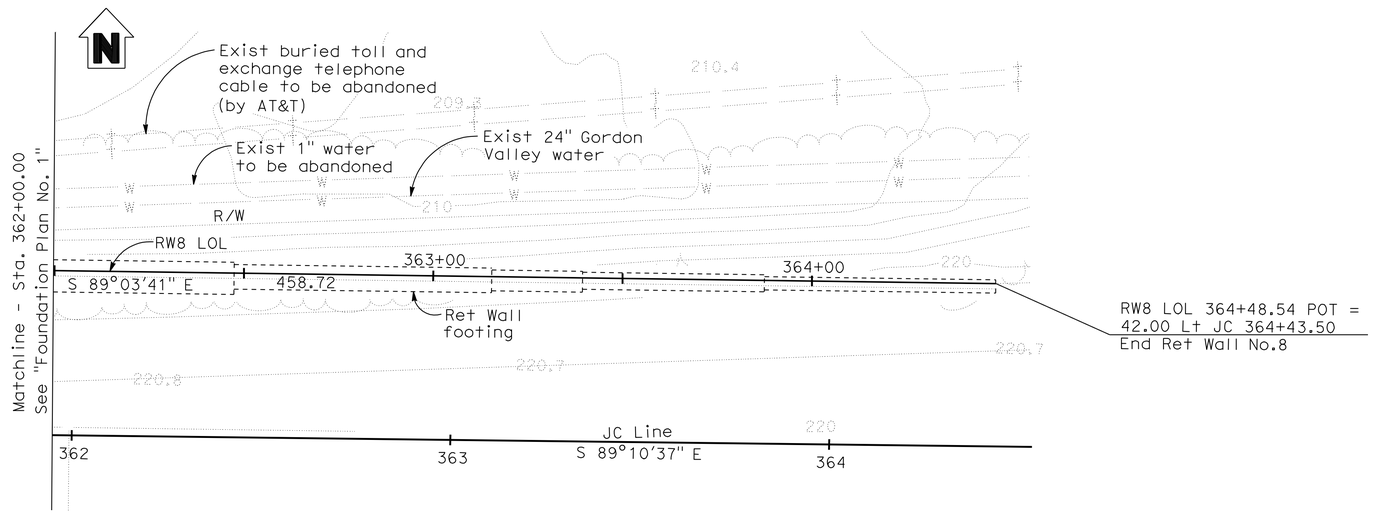

FOUNDATION PLAN

1" = 20'

Notes:

1. Contractor shall verify all controlling dimensions before ordering or fabricating any material.
2. Contractor shall protect all existing monuments in place. if monument is damaged by contractor's operations, contractor shall replace at contractor's cost.
3. For Utilities, see 'Road plans'.
4. For complete Right of Way data, contact Right of Way Engineering at the District Office.

DATUM

Coordinates, bearings and distances are based on the California Coordinate System of 1983, NAVD 1988, Zone 2, CA-HPGN. Epoch 1991.35. Distances and stationing are grid distances. Distances are in feet. Supplementary information may be obtained from the district office, surveys branch or right of way engineering branch, 111 Grand Avenue, Oakland, California.

Tracy L. Bertram 12/09/09
GEOTECHNICAL PROFESSIONAL APPROVAL DATE

Tracy L. Bertram
DESIGN OVERSIGHT Tracy L Bertram
1-7-10
SIGN OFF DATE

SCALE: AS SHOWN	VERT.DATUM NAVD 88	HORZ.DATUM NAD 83	
PHOTOGRAMMETRY AS OF:		ALIGNMENT TIES	
SURVEYED	BY MTCo.	DRAFTED	BY
FIELD CHECKED	BY	CHECKED	BY

DESIGN	BY H MISTRY	CHECKED P PARK	
DETAILS	BY H MISTRY	CHECKED P PARK	
QUANTITIES	BY P PARK	CHECKED S GARAPALLY	

PREPARED FOR THE STATE OF CALIFORNIA DEPARTMENT OF TRANSPORTATION

HARSHAD MISTRY
PROJECT ENGINEER

BRIDGE No.
POST MILE 1.7

RETAINING WALL No. 8
FOUNDATION PLAN No. 2

FOUNDATION PLAN SHEET (ENGLISH) (REV. 2-25-05)

ORIGINAL SCALE IN INCHES FOR REDUCED PLANS 0 1 2 3

CU 04264
EA 264141

DISREGARD PRINTS BEARING EARLIER REVISION DATES

REVISION DATES (PRELIMINARY STAGE ONLY): ~~3/13/09~~ ~~8/05/09~~ ~~11/06/09~~ 12/09/09

SHEET 115 OF 171

FILE => 23e0014-e-fp02.dgn

USERNAME => trlenard DATE PLOTTED => 23-NOV-2010 TIME PLOTTED => 08:56

DIST	COUNTY	ROUTE	POST MILES TOTAL PROJECT	SHEET No	TOTAL SHEETS
04	Nap,Sol	12	2.8/3.3, 0.0/2.6	555	617

P.K. Chen 12/09/09
REGISTERED STRUCTURAL ENGINEER DATE

11-22-10
PLANS APPROVAL DATE

REGISTERED PROFESSIONAL ENGINEER PO-KANG CHEN No. S3112 Exp. 9/30/11 STRUCTURAL STATE OF CALIFORNIA

The State of California or its officers or agents shall not be responsible for the accuracy or completeness of electronic copies of this plan sheet.

SOLANO TRANSPORTATION AUTHORITY
ONE HARBOR CENTER, SUITE 130
SUISUN CITY, CA 94585

MARK THOMAS & COMPANY, INC.
1960 ZANKER ROAD
SAN JOSE, CA 95112

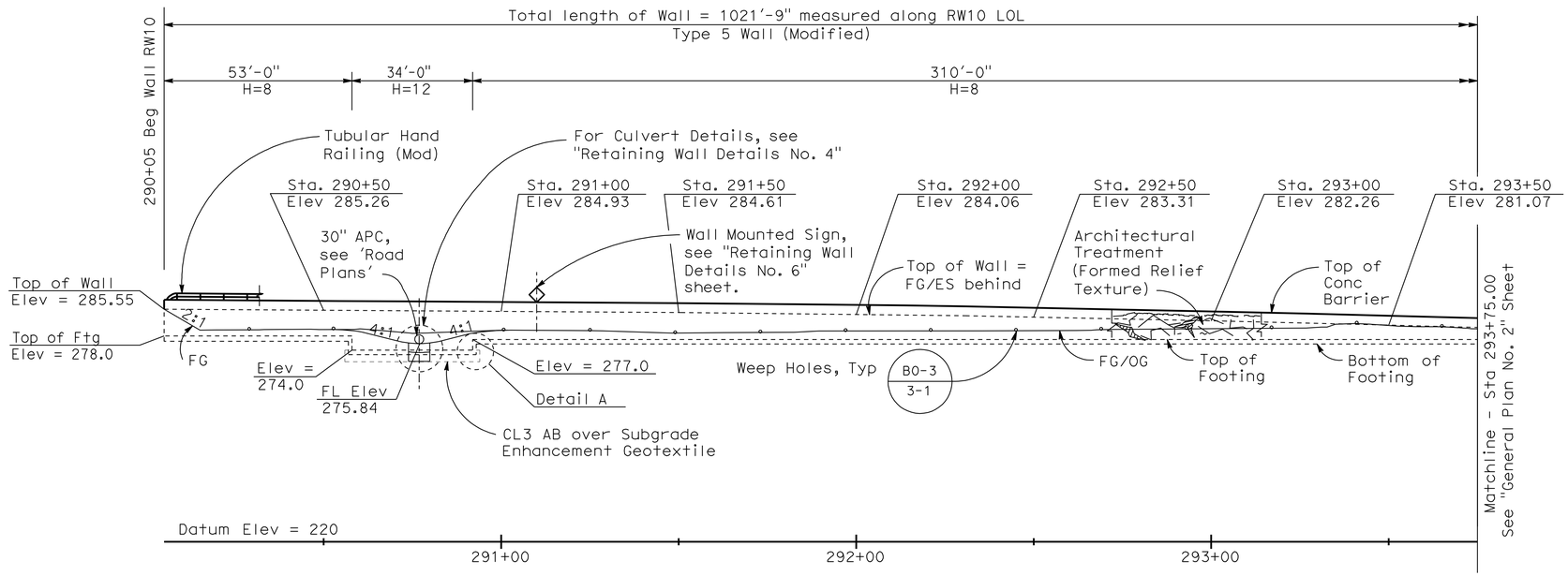

DEVELOPED ELEVATION

1" = 20'

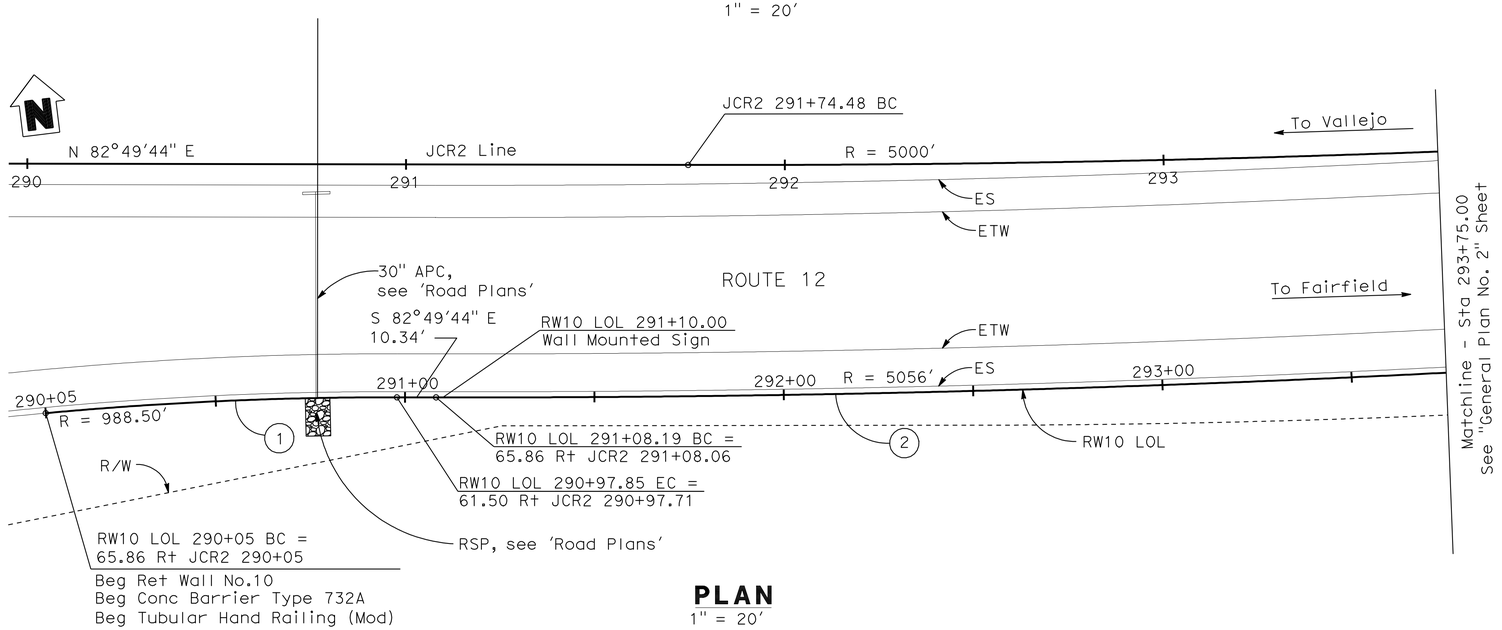

PLAN

1" = 20'

Notes:

1. The Contractor shall verify all controlling field dimensions before ordering or fabricating any material.
2. For 'Typical Section', see "General Plan No. 3" sheet.
3. For 'Detail A', see "Retaining Wall Details No. 3" sheet.
4. For Architectural Treatment, see "Architectural Treatment" sheet.
5. For Finished Grade Elevations, see 'Road Plans'.
6. For Utilities, see 'Road Plans'.
7. For complete Right of Way data, contact Right of Way Engineering at the district office.

RETAINING WALL #10
QUANTITIES

STRUCTURE EXCAVATION (RETAINING WALL)	1,650	CY
STRUCTURE BACKFILL (RETAINING WALL)	1,510	CY
PERVIOUS BACKFILL MATERIAL (RETAINING WALL)	110	CY
SUBGRADE ENHANCEMENT GEOTEXTILE	640	SQYD
CLASS 3 AGGREGATE BASE	200	CY
STRUCTURAL CONCRETE, RETAINING WALL	765	CY
ARCHITECTURAL TREATMENT (FORMED RELIEF TEXTURE)	6,300	SQFT
BAR REINFORCING STEEL (RETAINING WALL)	93,000	LB
PREPARE AND STAIN CONCRETE	13,100	SQFT
TUBULAR HANDRAILING (MODIFIED)	1,022	LF
CONCRETE BARRIER (TYPE 732A)	1,022	LF

CURVE DATA

No.	R	Δ	T	L
1	988.50'	5°22'54"	46.47'	92.84'
2	5056.00'	6°27'14"	285.06'	569.50'

Tracy L. Bertram
DESIGN OVERSIGHT Tracy L Bertram
1-7-10
SIGN OFF DATE

DESIGN	BY H MISTRY	CHECKED P PARK	LOAD FACTOR DESIGN		
DETAILS	BY H. MISTRY	CHECKED P PARK	LAYOUT	BY C HII	CHECKED F QUACH
QUANTITIES	BY P PARK	CHECKED S GARAPALLY	SPECIFICATIONS	BY H MISTRY	PLANS AND SPECS COMPARED P CHEN

DESIGN GENERAL PLAN SHEET (ENGLISH) (REV.2/25/05)

ORIGINAL SCALE IN INCHES FOR REDUCED PLANS 0 1 2 3

PREPARED FOR THE STATE OF CALIFORNIA DEPARTMENT OF TRANSPORTATION

HARSHAD MISTRY
PROJECT ENGINEER

CU 04264
EA 264141

BRIDGE No. 23E0015
POST MILES 0.4

RETAINING WALL No. 10
GENERAL PLAN No. 1

DISREGARD PRINTS BEARING EARLIER REVISION DATES

REVISION DATES (PRELIMINARY STAGE ONLY): ~~3/13/09~~ ~~8/05/09~~ ~~11/06/09~~ 12/09/09

SHEET 116 OF 171

FILE => 23E0015-a-gp01.dgn

USERNAME => hriehard DATE PLOTTED => 23-NOV-2010 TIME PLOTTED => 08:56

DIST	COUNTY	ROUTE	POST MILES TOTAL PROJECT	SHEET No	TOTAL SHEETS
04	Nap,Sol	12	2.8/3.3, 0.0/2.6	556	617

P.K. Chen 12/09/09
REGISTERED STRUCTURAL ENGINEER DATE

11-22-10
PLANS APPROVAL DATE

REGISTERED PROFESSIONAL ENGINEER PO-KANG CHEN No. S3112 Exp. 9/30/11 STRUCTURAL STATE OF CALIFORNIA

The State of California or its officers or agents shall not be responsible for the accuracy or completeness of electronic copies of this plan sheet.

SOLANO TRANSPORTATION AUTHORITY
ONE HARBOR CENTER, SUITE 130
SUISUN CITY, CA 94585

MARK THOMAS & COMPANY, INC.
1960 ZANKER ROAD
SAN JOSE, CA 95112

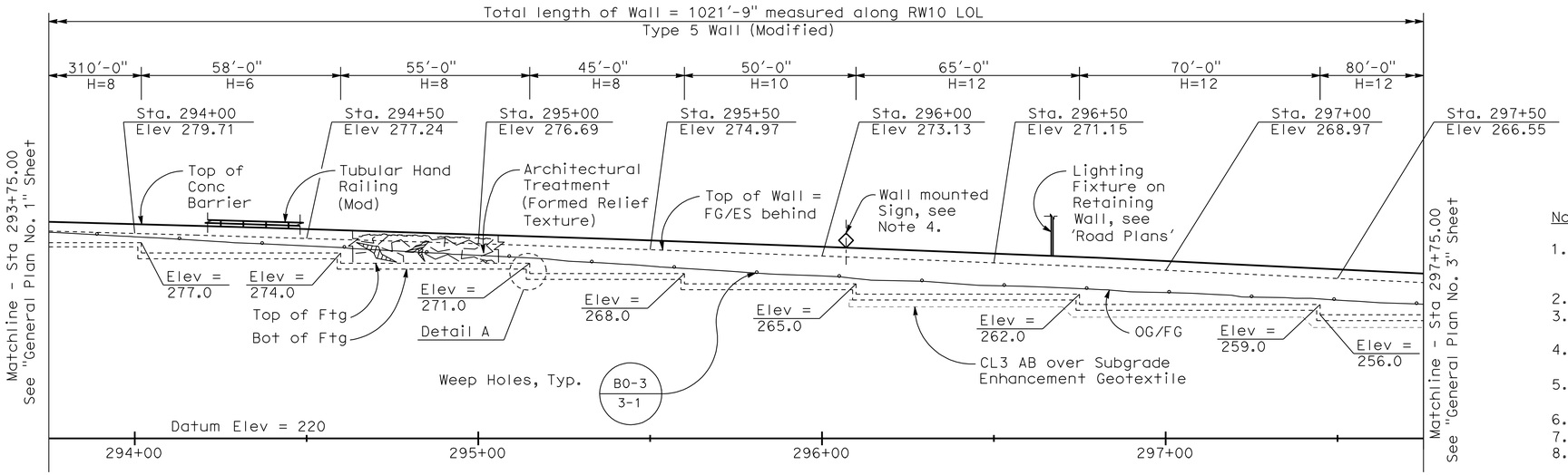

DEVELOPED ELEVATION

1" = 20'

Notes:

1. The Contractor shall verify all controlling field dimensions before ordering or fabricating any material.
2. For 'Typical Section', see "General Plan No. 3" sheet.
3. For 'Detail A', see "Retaining Wall Details No. 3" sheet.
4. For Wall Mounted Sign details, see "Retaining Wall Details No. 6" sheet.
5. For Architectural Treatment, see "Retaining Wall Details No. 5" sheet.
6. For Finished Grade Elevations, see 'Road Plans'.
7. For Utilities, see 'Road Plans'.
8. For complete Right of Way data, contact Right of Way Engineering at the district office.
9. CL3 Aggregate Base shall be 3'-0" thick between station 297+00 and 297+50, and 2'-0" thick everywhere else.

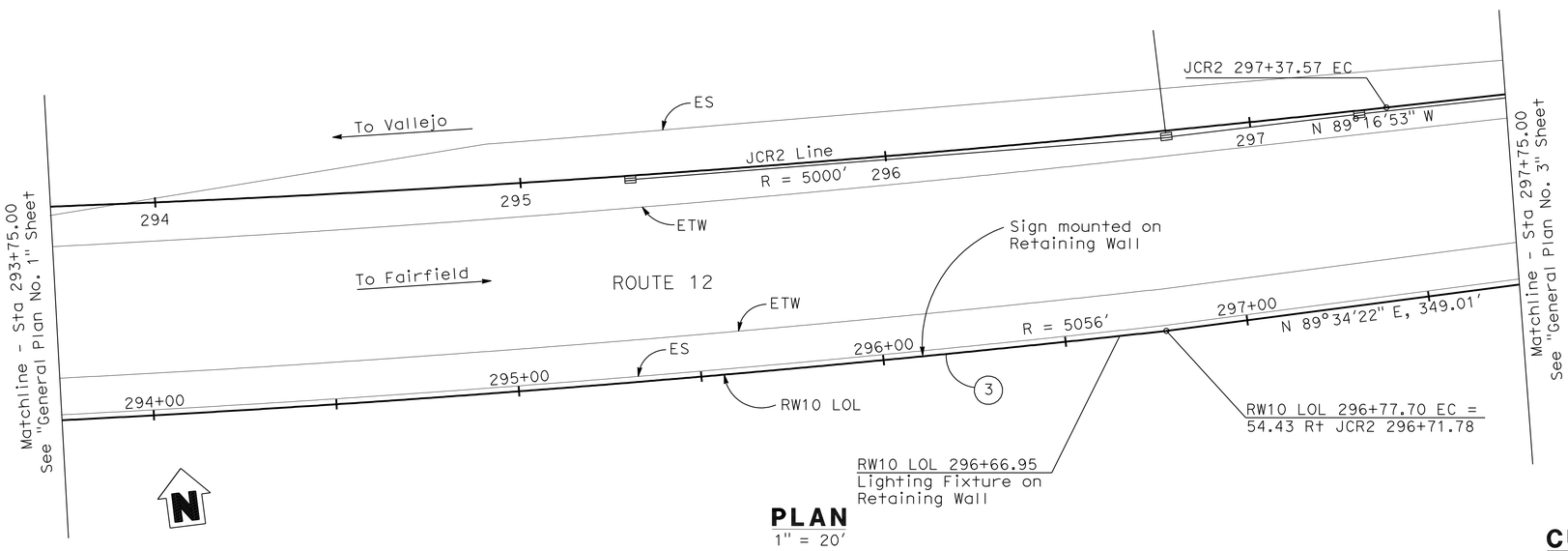

PLAN

1" = 20'

CURVE DATA

No.	R	Δ	T	L
3	5056.00'	6°27'14"	285.05'	569.51'

Tracy L. Bertram
DESIGN OVERSIGHT Tracy L Bertram
1-7-10
SIGN OFF DATE

DESIGN	BY H MISTRY	CHECKED P PARK	LOAD FACTOR DESIGN			
DETAILS	BY H. MISTRY	CHECKED P PARK	LAYOUT	BY C HII	CHECKED F QUACH	
QUANTITIES	BY P PARK	CHECKED S GARAPALLY	SPECIFICATIONS	BY H MISTRY	PLANS AND SPECS COMPARED P CHEN	

DESIGN GENERAL PLAN SHEET (ENGLISH) (REV.2/25/05)

ORIGINAL SCALE IN INCHES FOR REDUCED PLANS 0 1 2 3

PREPARED FOR THE STATE OF CALIFORNIA DEPARTMENT OF TRANSPORTATION

HARSHAD MISTRY
PROJECT ENGINEER

CU 04264
EA 264141

BRIDGE No. 23E0015
POST MILES 0.4

RETAINING WALL No. 10
GENERAL PLAN No. 2

DISREGARD PRINTS BEARING EARLIER REVISION DATES

REVISION DATES (PRELIMINARY STAGE ONLY): ~~3/13/09~~ ~~8/05/09~~ ~~11/06/09~~ 12/09/09

SHEET 117 OF 171

FILE => 23E0015-a-gp02.dgn

USERNAME => trlenard DATE PLOTTED => 23-NOV-2010 TIME PLOTTED => 08:57

DIST	COUNTY	ROUTE	POST MILES TOTAL PROJECT	SHEET No	TOTAL SHEETS
04	Nap,Sol	12	2.8/3.3, 0.0/2.6	557	617

P. K. Chen 12/09/09
REGISTERED STRUCTURAL ENGINEER DATE

11-22-10
PLANS APPROVAL DATE

The State of California or its officers or agents shall not be responsible for the accuracy or completeness of electronic copies of this plan sheet.

REGISTERED PROFESSIONAL ENGINEER PO-KANG CHEN No. S3112 Exp. 9/30/11 STRUCTURAL STATE OF CALIFORNIA

SOLANO TRANSPORTATION AUTHORITY
ONE HARBOR CENTER, SUITE 130
SUISUN CITY, CA 94585

MARK THOMAS & COMPANY, INC.
1960 ZANKER ROAD
SAN JOSE, CA 95112

Notes:

1. The Contractor shall verify all controlling field dimensions before ordering or fabricating any material.
2. For 'Detail A', see "Retaining Wall Details No. 3" sheet.
3. For Architectural Treatment, see "Retaining Wall Details No. 5" sheet.
4. For Finished Grade Elevations, see 'Road Plans'.
5. For Utilities, see 'Road Plans'.
6. For complete Right of Way data, contact Right of Way Engineering at the district office.
7. Exposed faces other than textured face (Top & barrier face above FG) shall be prepared and stained with same stain as on textured face. Extend the staining 3" below FG on road side.
8. CL3 Aggregate Base shall be 3'-0" thick between station 297+00 and 297+50, and 2'-0" thick everywhere else as shown.

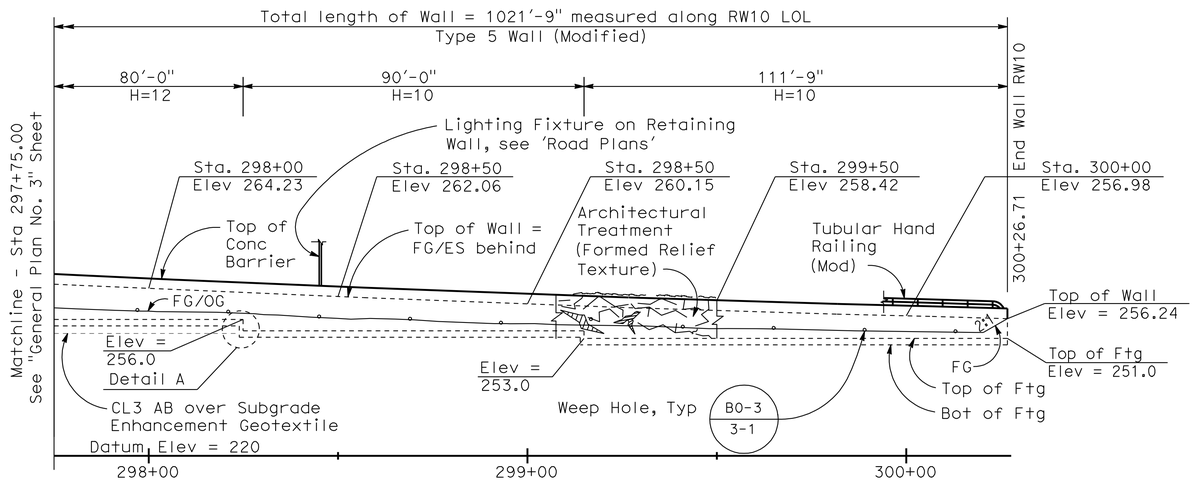

DEVELOPED ELEVATION

1" = 20'

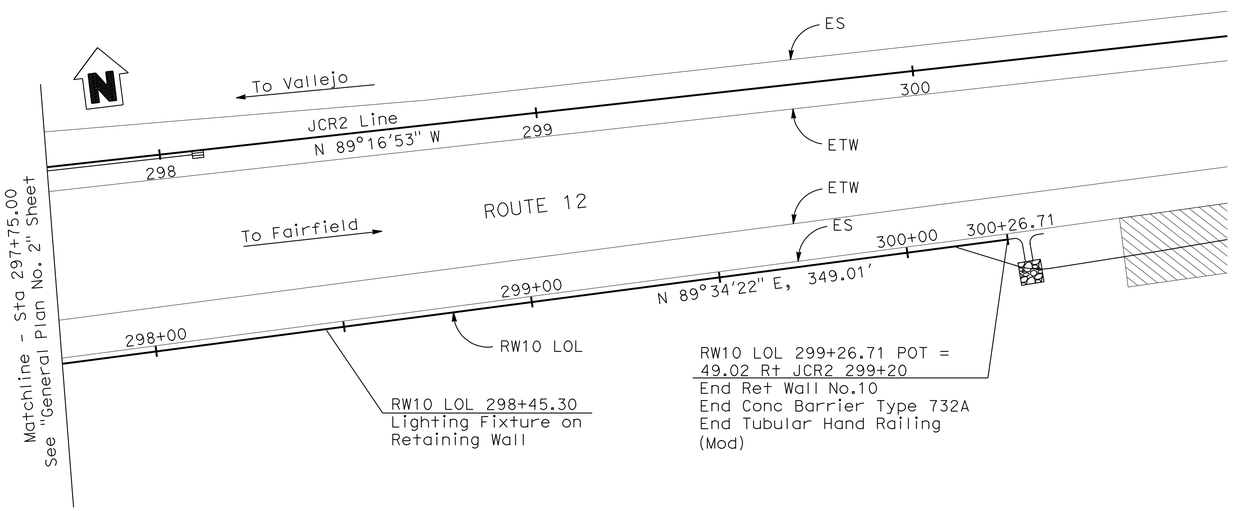

PLAN

1" = 20'

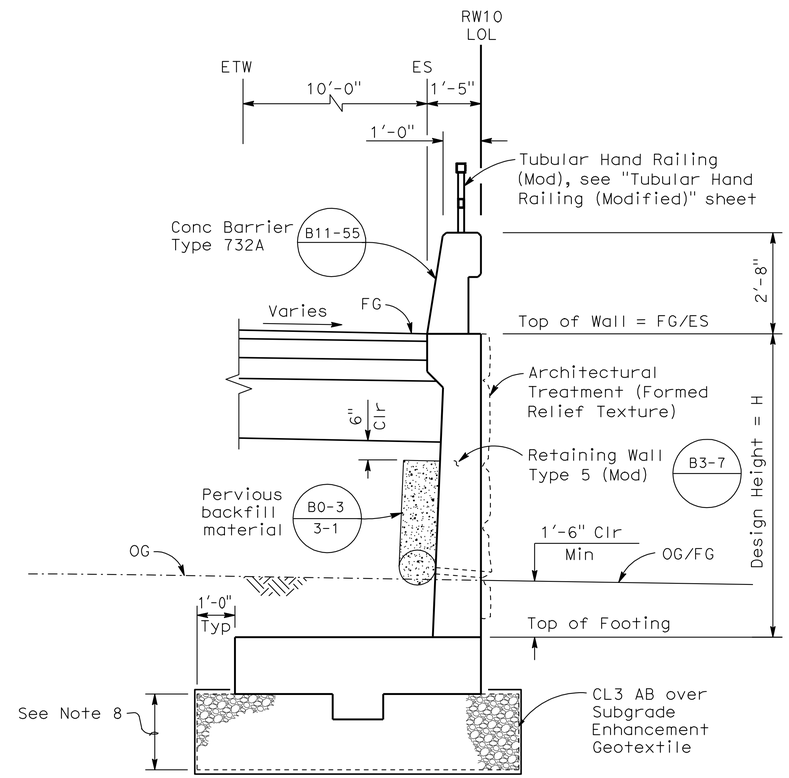

RW10 - TYPICAL SECTION

1/2" = 1'-0"

Tracy L Bertram DESIGN OVERSIGHT	DESIGN	BY H MISTRY	CHECKED P PARK	LOAD FACTOR DESIGN		
1-7-10 SIGN OFF DATE	DETAILS	BY H. MISTRY	CHECKED P PARK	LAYOUT	BY C HII	CHECKED F QUACH
	QUANTITIES	BY P PARK	CHECKED S GARAPALLY	SPECIFICATIONS	BY H MISTRY	PLANS AND SPECS COMPARED P CHEN

DESIGN GENERAL PLAN SHEET (ENGLISH) (REV.2/25/05)

ORIGINAL SCALE IN INCHES FOR REDUCED PLANS 0 1 2 3

PREPARED FOR THE STATE OF CALIFORNIA DEPARTMENT OF TRANSPORTATION

HARSHAD MISTRY
PROJECT ENGINEER

CU 04264
EA 264141

BRIDGE No. 23E0015
POST MILES 0.4

RETAINING WALL No. 10
GENERAL PLAN No. 3

DISREGARD PRINTS BEARING EARLIER REVISION DATES

REVISION DATES (PRELIMINARY STAGE ONLY): ~~3/13/09~~ ~~8/05/09~~ ~~11/06/09~~ 12/09/09

SHEET 118 OF 171

FILE => 23E0015-a-gp03.dgn

USERNAME => rfriendrd DATE PLOTTED => 23-NOV-2010 TIME PLOTTED => 08:57

DIST	COUNTY	ROUTE	POST MILES TOTAL PROJECT	SHEET No	TOTAL SHEETS
04	Nap,Sol	12	2.8/3.3, 0.0/2.6	558	617

P.K. Chen 12/09/09
REGISTERED STRUCTURAL ENGINEER DATE

11-22-10
PLANS APPROVAL DATE

The State of California or its officers or agents shall not be responsible for the accuracy or completeness of electronic copies of this plan sheet.

REGISTERED PROFESSIONAL ENGINEER PO-KANG CHEN No. S3112 Exp. 9/30/11 STRUCTURAL STATE OF CALIFORNIA

SOLANO TRANSPORTATION AUTHORITY
ONE HARBOR CENTER, SUITE 130
SUISUN CITY, CA 94585

MARK THOMAS & COMPANY, INC.
1960 ZANKER ROAD
SAN JOSE, CA 95112

BENCHMARKS

Benchamrk No.1
Set 3/4" iron pipe with tag (PM-0.55) along the southerly side of eastbound Highway 12, at PM 0.55, about 2 miles west of 12/80 Interchange, approximately 17.7 feet southerly of eastbound edge of pavement, approximately 1.9 feet southerly of marker; approximately 15.4 feet easterly of water valve; approximately 8.5 feet northerly of chain link fence.

Northing: 1837766.8170 Easting: 6506863.1580

Benchamrk No.2
Set 2" brass disk with iron pipe (California Department of Transportation SOL-48) in concrete along the southerly side of eastbound Highway 12, on dirt shoulder, approximately 150 feet easterly of Spurs trail, approximately 150 feet westerly of centerline of driveway for mailing address no. 1394; approximately 29 feet southerly of edge of pavement; approximately 2.8 feet northerly of a white board fence. Elevation: 251.036

Northing: 1837729.6610 Easting: 6508101.0390

Notes:

1. Contractor shall verify all controlling dimensions before ordering or fabricating any material.
2. Contractor shall protect all existing monuments in place. if monument is damaged by contractor's operations, contractor shall replace at contractor's cost.
3. For Utilities, see 'Road plans'.
4. For complete Right of Way data, contact Right of Way Engineering at the District Office.

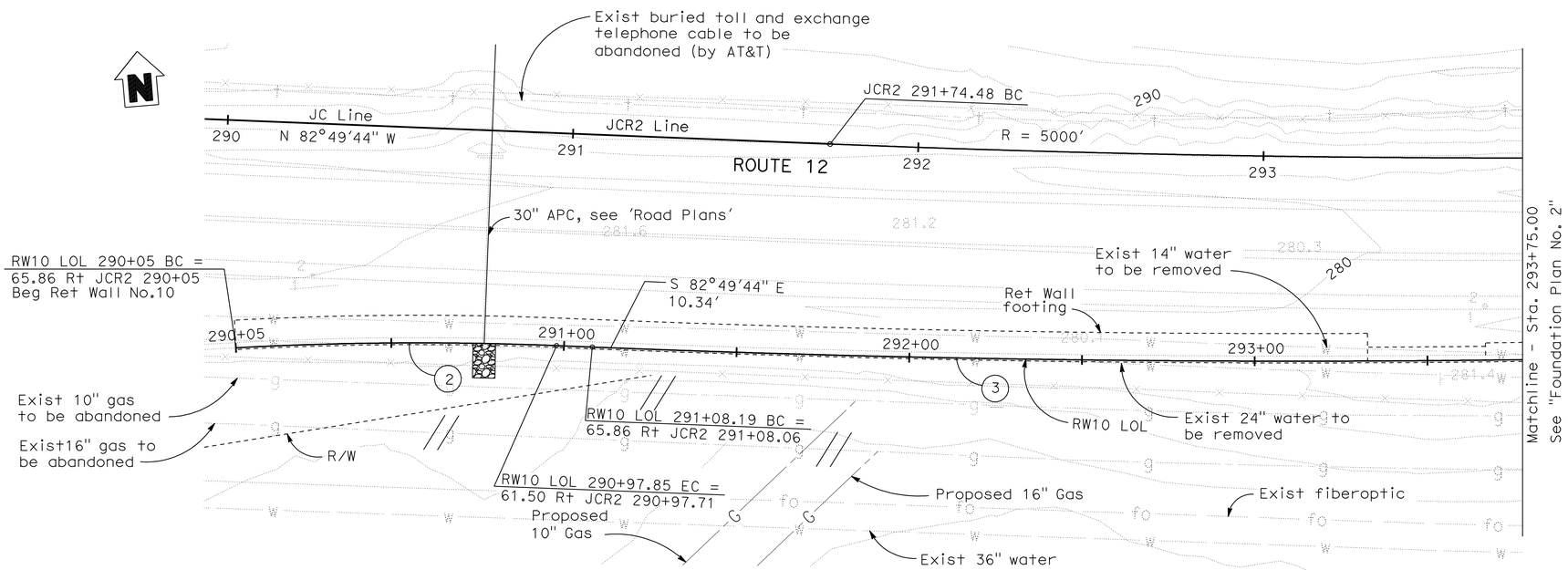

FOUNDATION PLAN

1" = 20'

CURVE DATA

No.	R	Δ	T	L
1	988.50'	5°22'54"	46.47'	92.84'
2	5056.00'	6°27'14"	285.06'	569.50'

DATUM

Coordinates, bearings and distances are based on the California Coordinate System of 1983, NAVD 1988, Zone 2, CA-HPGN. Epoch 1991.35. Distances and stationing are grid distances. Distances are in feet. Supplementary information may be obtained from the district office, surveys branch or right of way engineering branch, 111 Grand Avenue, Oakland, California.

Tracy L. Bertram 12/09/09
GEOTECHNICAL PROFESSIONAL APPROVAL DATE

Tracy L. Bertram
DESIGN OVERSIGHT Tracy L Bertram

1-7-10
SIGN OFF DATE

SCALE: AS SHOWN	VERT.DATUM NAVD 88	HORZ.DATUM NAD 83	
PHOTOGRAMMETRY AS OF:		ALIGNMENT TIES	
SURVEYED	BY MTCo.	DRAFTED	BY
FIELD CHECKED	BY	CHECKED	BY

DESIGN	BY H MISTRY	CHECKED P PARK	
DETAILS	BY H MISTRY	CHECKED P PARK	
QUANTITIES	BY P PARK	CHECKED S GARAPALLY	

PREPARED FOR THE STATE OF CALIFORNIA DEPARTMENT OF TRANSPORTATION

HARSHAD MISTRY
PROJECT ENGINEER

BRIDGE No. 23E0015
POST MILE 0.4

RETAINING WALL No. 10
FOUNDATION PLAN No. 1

FOUNDATION PLAN SHEET (ENGLISH) (REV. 2-25-05)

ORIGINAL SCALE IN INCHES FOR REDUCED PLANS 0 1 2 3

CU 04264
EA 264141

DISREGARD PRINTS BEARING EARLIER REVISION DATES

REVISION DATES (PRELIMINARY STAGE ONLY): ~~3/13/09~~ ~~8/05/09~~ ~~11/06/09~~ 12/09/09

SHEET 119 OF 171

FILE => 23e0015-e-fp01.dgn

USERNAME => trlenard DATE PLOTTED => 23-NOV-2010 TIME PLOTTED => 08:57

DIST	COUNTY	ROUTE	POST MILES TOTAL PROJECT	SHEET No	TOTAL SHEETS
04	Nap,Sol	12	2.8/3.3, 0.0/2.6	559	617

P.K. Chen 12/09/09
REGISTERED STRUCTURAL ENGINEER DATE

11-22-10
PLANS APPROVAL DATE

REGISTERED PROFESSIONAL ENGINEER
PO-KANG CHEN
No. S3112
Exp. 9/30/11
STRUCTURAL
STATE OF CALIFORNIA

The State of California or its officers or agents shall not be responsible for the accuracy or completeness of electronic copies of this plan sheet.

SOLANO TRANSPORTATION AUTHORITY
ONE HARBOR CENTER, SUITE 130
SUISUN CITY, CA 94585

MARK THOMAS & COMPANY, INC.
1960 ZANKER ROAD
SAN JOSE, CA 95112

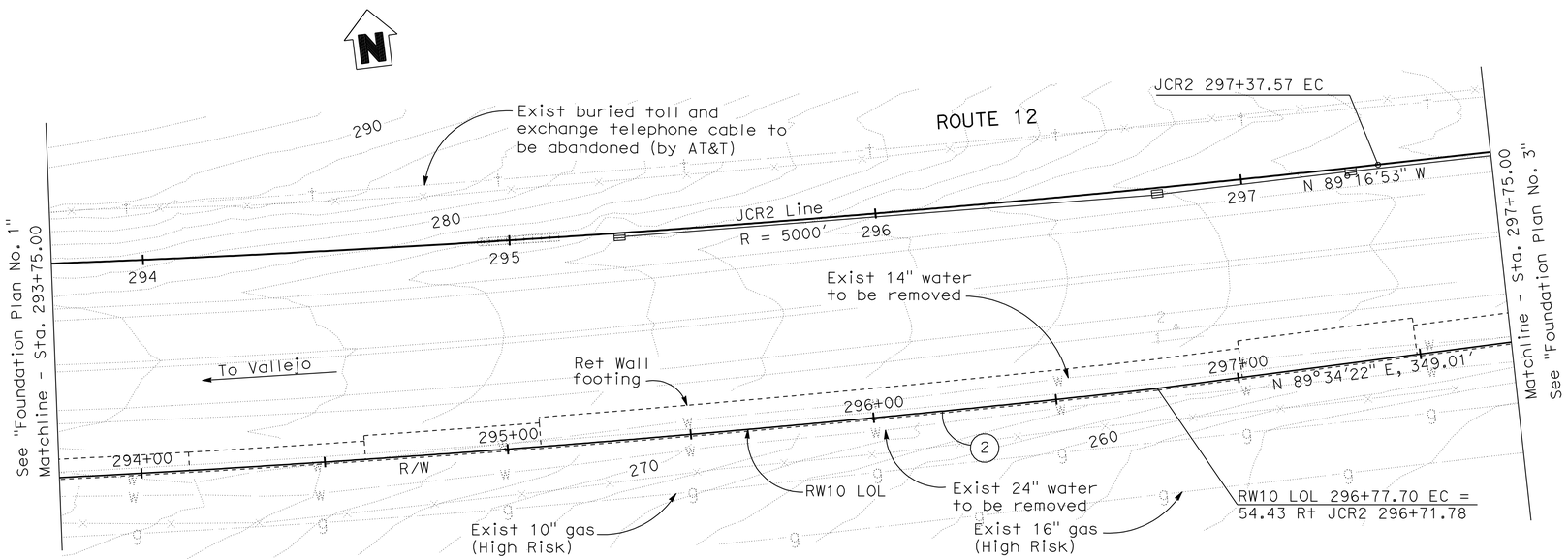

FOUNDATION PLAN

1" = 20'

Notes:

1. Contractor shall verify all controlling dimensions before ordering or fabricating any material.
2. Contractor shall protect all existing monuments in place. if monument is damaged by contractor's operations, contractor shall replace at contractor's cost.
3. For Utilities, see 'Road plans'.
4. For complete Right of Way data, contact Right of Way Engineering at the District Office.

Tracy L. Bertram 12/09/09
GEOTECHNICAL PROFESSIONAL APPROVAL DATE

Tracy L. Bertram
DESIGN OVERSIGHT Tracy L Bertram
1-7-10
SIGN OFF DATE

SCALE: AS SHOWN	VERT.DATUM NAVD 88	HORZ.DATUM NAD 83	DESIGN	BY H MISTRY	CHECKED P PARK
PHOTOGRAMMETRY AS OF:		ALIGNMENT TIES	DETAILS	BY H MISTRY	CHECKED P PARK
SURVEYED BY MTCo.		DRAFTED BY	QUANTITIES	BY P PARK	CHECKED S GARAPALLY
FIELD CHECKED BY		CHECKED BY			

FOUNDATION PLAN SHEET (ENGLISH) (REV. 2-25-05)

ORIGINAL SCALE IN INCHES FOR REDUCED PLANS 0 1 2 3

PREPARED FOR THE STATE OF CALIFORNIA DEPARTMENT OF TRANSPORTATION

HARSHAD MISTRY
PROJECT ENGINEER

CU 04264
EA 264141

BRIDGE No. 23E0015
POST MILE 0.4

RETAINING WALL No. 10
FOUNDATION PLAN No. 2

DISREGARD PRINTS BEARING EARLIER REVISION DATES

REVISION DATES (PRELIMINARY STAGE ONLY): ~~3/13/09~~ ~~8/05/09~~ ~~11/06/09~~ 12/09/09

SHEET 120 OF 171

FILE => 23e0015-e-fp02.dgn

USERNAME => trlenard DATE PLOTTED => 23-NOV-2010 TIME PLOTTED => 08:57

DIST	COUNTY	ROUTE	POST MILES TOTAL PROJECT	SHEET No	TOTAL SHEETS
04	Nap,Sol	12	2.8/3.3, 0.0/2.6	560	617

P.K. Chen 12/09/09
REGISTERED STRUCTURAL ENGINEER DATE

11-22-10
PLANS APPROVAL DATE

REGISTERED PROFESSIONAL ENGINEER PO-KANG CHEN No. S3112 Exp. 9/30/11 STRUCTURAL STATE OF CALIFORNIA

The State of California or its officers or agents shall not be responsible for the accuracy or completeness of electronic copies of this plan sheet.

SOLANO TRANSPORTATION AUTHORITY
ONE HARBOR CENTER, SUITE 130
SUISUN CITY, CA 94585

MARK THOMAS & COMPANY, INC.
1960 ZANKER ROAD
SAN JOSE, CA 95112

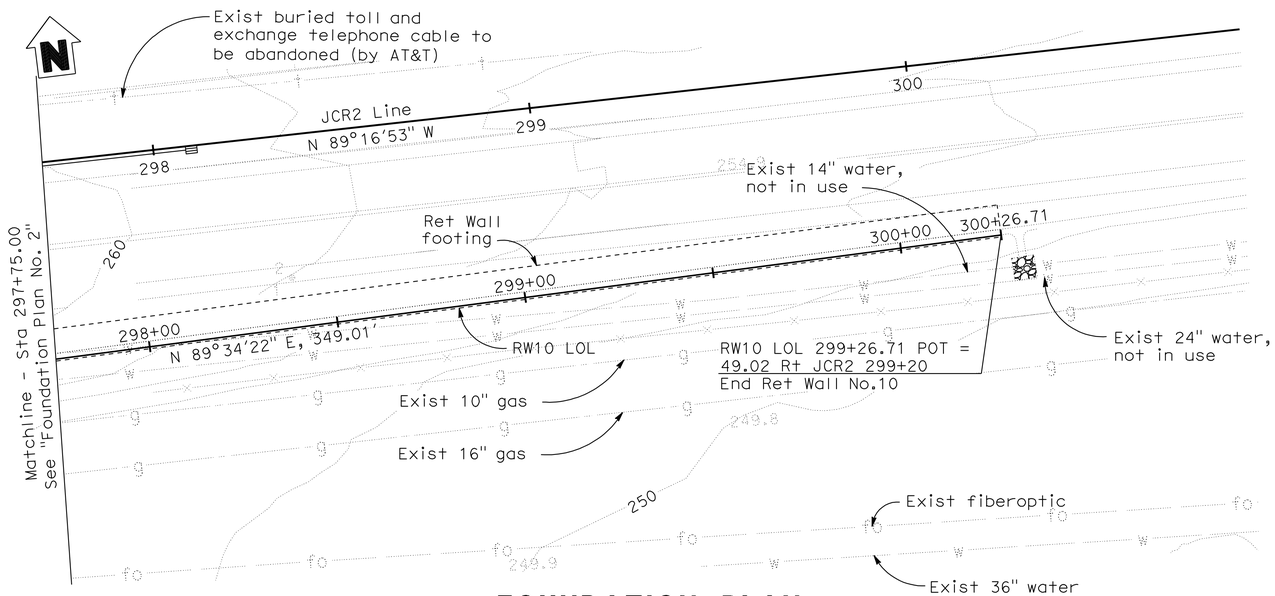

FOUNDATION PLAN

1" = 20'

Notes:

1. Contractor shall verify all controlling dimensions before ordering or fabricating any material.
2. Contractor shall protect all existing monuments in place. if monument is damaged by contractor's operations, contractor shall replace at contractor's cost.
3. For Utilities, see 'Road plans'.
4. For complete Right of Way data, contact Right of Way Engineering at the District Office.

GEOTECHNICAL PROFESSIONAL 12/09/09 APPROVAL DATE

Tracy L. Bertram
DESIGN OVERSIGHT Tracy L Bertram
1-7-10
SIGN OFF DATE

SCALE: AS SHOWN | VERT.DATUM NAVD 88 | HORZ.DATUM NAD 83
PHOTOGRAMMETRY AS OF: | ALIGNMENT TIES
SURVEYED BY MTCo. | DRAFTED BY
FIELD CHECKED BY | CHECKED BY

DESIGN	BY H MISTRY	CHECKED P PARK
DETAILS	BY H MISTRY	CHECKED P PARK
QUANTITIES	BY P PARK	CHECKED S GARAPALLY

PREPARED FOR THE STATE OF CALIFORNIA DEPARTMENT OF TRANSPORTATION

HARSHAD MISTRY
PROJECT ENGINEER

BRIDGE No. 23E0015
POST MILE 0.4

RETAINING WALL No. 10
FOUNDATION PLAN No. 3

FOUNDATION PLAN SHEET (ENGLISH) (REV. 2-25-05)

ORIGINAL SCALE IN INCHES FOR REDUCED PLANS 0 1 2 3

CU 04264
EA 264141

DISREGARD PRINTS BEARING EARLIER REVISION DATES

REVISION DATES (PRELIMINARY STAGE ONLY): ~~3/13/09~~ ~~8/05/09~~ ~~11/06/09~~ 12/09/09

SHEET 121 OF 171

FILE => 23e0015-e-fp03.dgn

USERNAME => arlenard DATE PLOTTED => 23-NOV-2010 TIME PLOTTED => 08:57

DIST	COUNTY	ROUTE	POST MILES TOTAL PROJECT	SHEET No	TOTAL SHEETS
04	Nap,Sol	12	2.8/3.3, 0.0/2.6	561	617

P.K. Chen 12/09/09
REGISTERED STRUCTURAL ENGINEER DATE

11-22-10
PLANS APPROVAL DATE

The State of California or its officers or agents shall not be responsible for the accuracy or completeness of electronic copies of this plan sheet.

REGISTERED PROFESSIONAL ENGINEER PO-KANG CHEN No. S3112 Exp. 9/30/11 STRUCTURAL STATE OF CALIFORNIA

SOLANO TRANSPORTATION AUTHORITY
ONE HARBOR CENTER, SUITE 130
SUISUN CITY, CA 94585

MARK THOMAS & COMPANY, INC.
1960 ZANKER ROAD
SAN JOSE, CA 95112

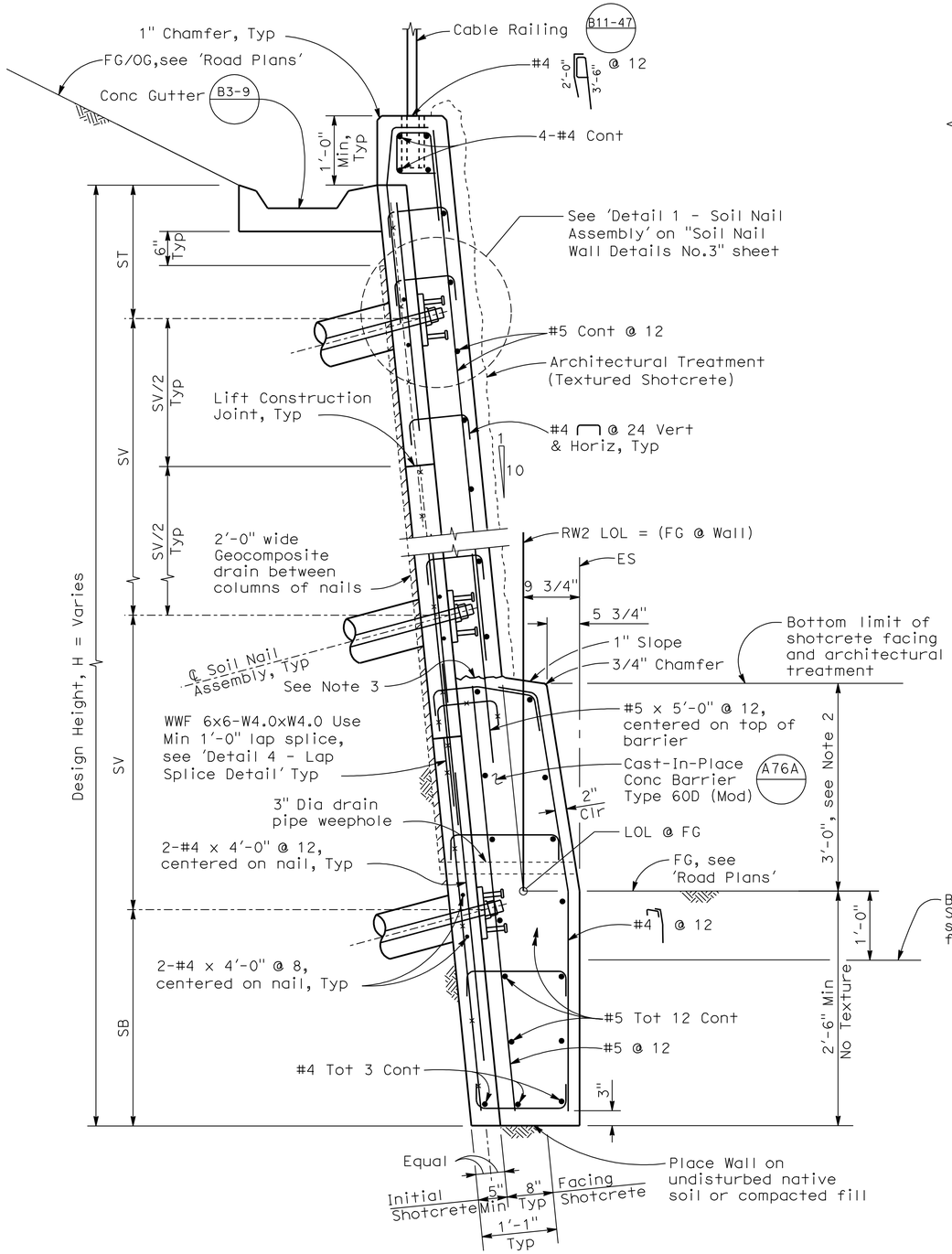

RW3A, 3C, 4B & 5A - TYPICAL SECTION

1"= 1'-0"

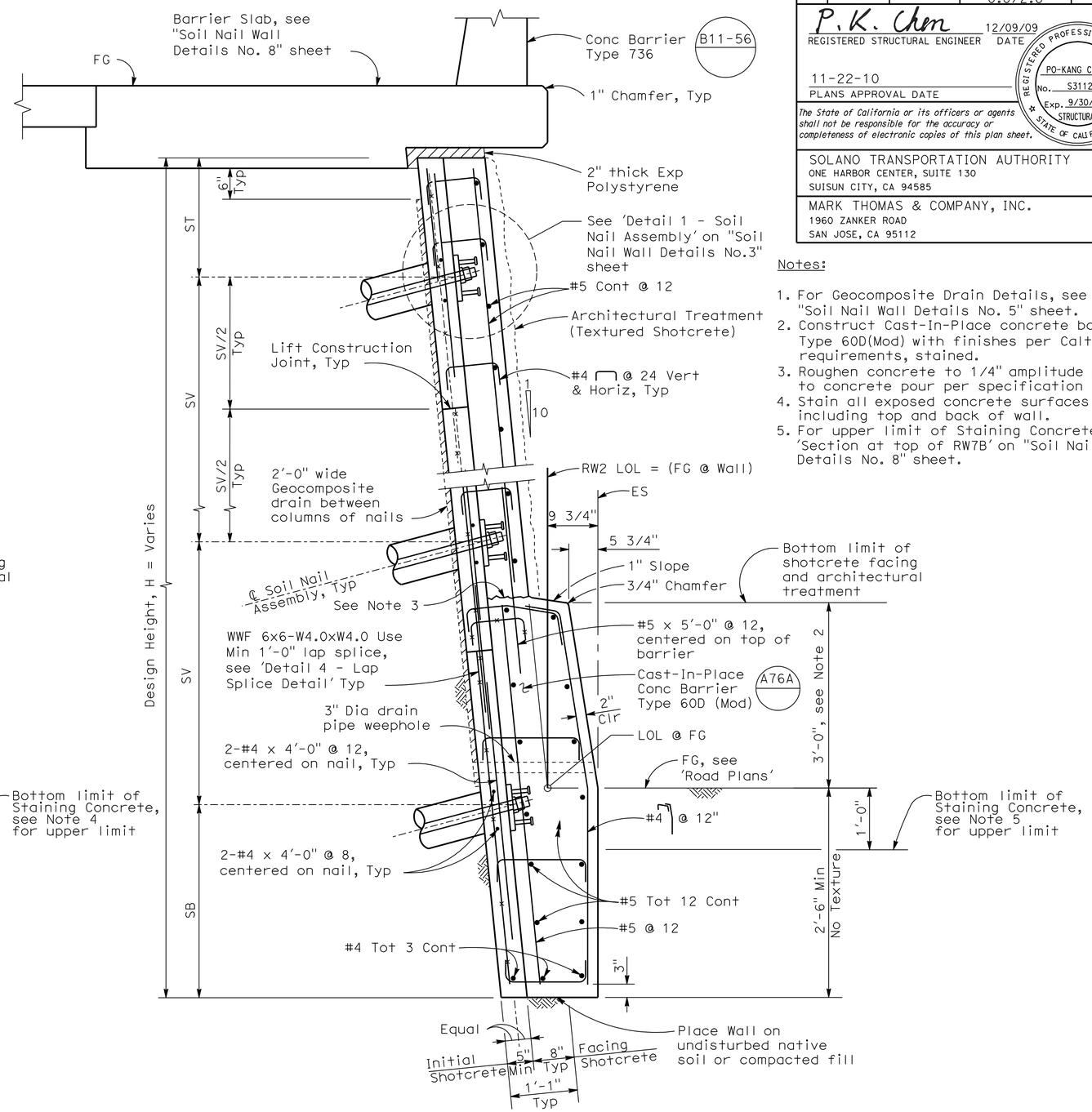

RW6 - TYPICAL SECTION

1"= 1'-0"

Notes:

1. For Geocomposite Drain Details, see "Soil Nail Wall Details No. 5" sheet.
2. Construct Cast-In-Place concrete barrier Type 60D(Mod) with finishes per Caltrans requirements, stained.
3. Roughen concrete to 1/4" amplitude prior to concrete pour per specification
4. Stain all exposed concrete surfaces including top and back of wall.
5. For upper limit of Staining Concrete, see 'Section at top of RW7B' on "Soil Nail Wall Details No. 8" sheet.

DESIGN OVERSIGHT

SIGN OFF DATE

	BY	CHECKED
DESIGN	C. VASQUEZ	P. CHEN
DETAILS	H. MISTRY	P. CHEN
QUANTITIES	K. WONG	S. GARAPALLY

PREPARED FOR THE STATE OF CALIFORNIA DEPARTMENT OF TRANSPORTATION

HARSHAD MISTRY
PROJECT ENGINEER

BRIDGE No.

POST MILE

RETAINING WALL DETAILS

SOIL NAIL WALL DETAILS No. 1

DESIGN DETAIL SHEET (ENGLISH) (REV. 2/25/05)
W:\SOLANO TA - 58-0151B SR 12 JAMESON CANYON\STRUCTURES\CADD\XREF\58-0151B-BORDER STRUCTURE DETAILS_22 X 34_SOLANO.DWG 9/4/2008 9:18:30 AM

ORIGINAL SCALE IN INCHES FOR REDUCED PLANS 0 1 2 3

CU 04264
EA 264141

DISREGARD PRINTS BEARING EARLIER REVISION DATES

REVISION DATES (PRELIMINARY STAGE ONLY) 3/13/09 8/03/09 11/06/09 12/09/09

SHEET 122 OF 171

FILE => 23E0015X-g-1snwd01.dgn

USERNAME => friemard DATE PLOTTED => 23-NOV-2010 TIME PLOTTED => 08:57

DIST	COUNTY	ROUTE	POST MILES TOTAL PROJECT	SHEET No	TOTAL SHEETS
04	Nap,Sol	12	2.8/3.3, 0.0/2.6	562	617

P.K. Chen 12/09/09
REGISTERED STRUCTURAL ENGINEER DATE

11-22-10
PLANS APPROVAL DATE

The State of California or its officers or agents shall not be responsible for the accuracy or completeness of electronic copies of this plan sheet.

REGISTERED PROFESSIONAL ENGINEER PO-KANG CHEN No. S3112 Exp. 9/30/11 STRUCTURAL STATE OF CALIFORNIA

SOLANO TRANSPORTATION AUTHORITY
ONE HARBOR CENTER, SUITE 130
SUISUN CITY, CA 94585

MARK THOMAS & COMPANY, INC.
1960 ZANKER ROAD
SAN JOSE, CA 95112

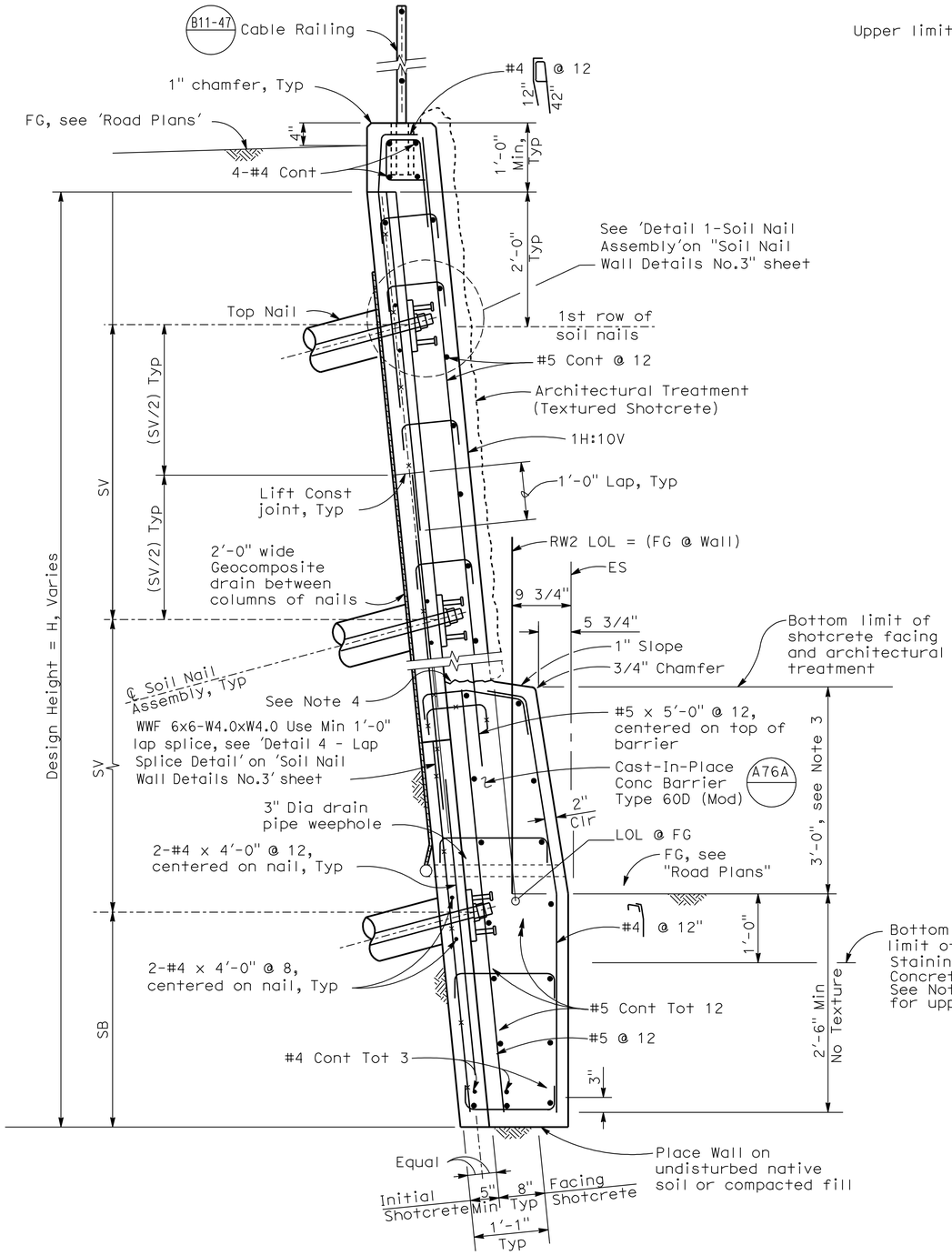

RW7A - TYPICAL SECTION

1"= 1'-0"

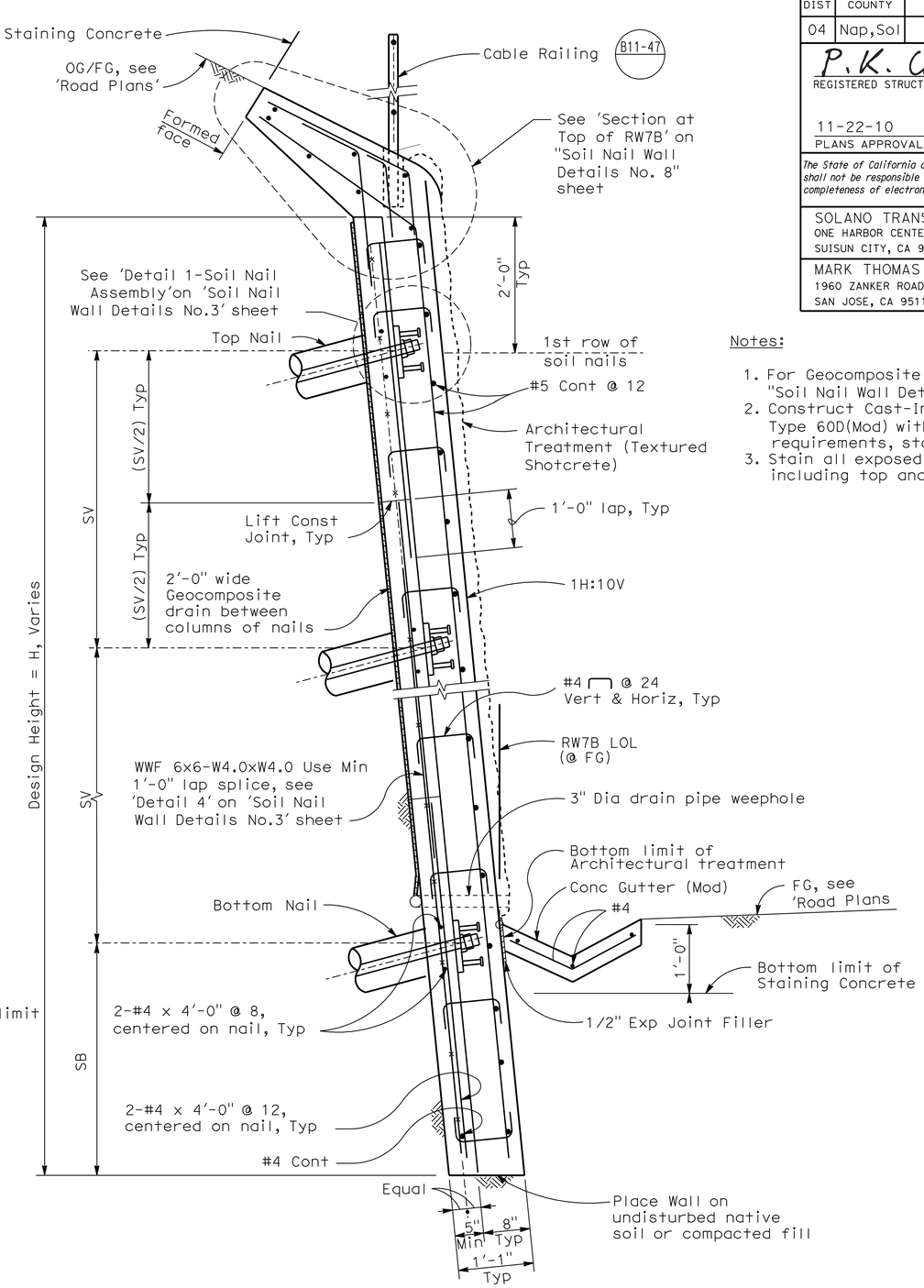

RW7B - TYPICAL SECTION

1"= 1'-0"

Notes:

1. For Geocomposite Drain Details, see "Soil Nail Wall Details No. 5" sheet.
2. Construct Cast-In-Place Concrete Barrier Type 60D(Mod) with finishes per Caltrans requirements, stained.
3. Stain all exposed concrete surfaces including top and back of wall.

DESIGN OVERSIGHT	DESIGN	BY H. MISTRY	CHECKED P. CHEN	PREPARED FOR THE STATE OF CALIFORNIA DEPARTMENT OF TRANSPORTATION
SIGN OFF DATE	DETAILS	BY H. MISTRY	CHECKED P. CHEN	HARSHAD MISTRY PROJECT ENGINEER
	QUANTITIES	BY K. WONG	CHECKED S. GARAPALLY	CU 04264 EA 264141

BRIDGE No.
POST MILE

RETAINING WALL DETAILS
SOIL NAIL WALL DETAILS No. 2

DISREGARD PRINTS BEARING EARLIER REVISION DATES → REVISION DATES (PRELIMINARY STAGE ONLY): ~~3/13/09~~ ~~8/03/09~~ ~~11/06/09~~ 12/09/09

SHEET 123 OF 171

DESIGN DETAIL SHEET (ENGLISH) (REV. 2/25/05)
W:\SOLANO TA - 58-0151B SR 12 JAMESON CANYON\STRUCTURES\CADD\XREF\58-0151B-BORDER STRUCTURE DETAILS_22 X 34_SOLANO.DWG 9/4/2008 9:18:30 AM

ORIGINAL SCALE IN INCHES FOR REDUCED PLANS 0 1 2 3

FILE => 23E0015X-g-1snwd02.dgn

USERNAME => trienard DATE PLOTTED => 23-NOV-2010 TIME PLOTTED => 08:57

DIST	COUNTY	ROUTE	POST MILES TOTAL PROJECT	SHEET No	TOTAL SHEETS
04	Nap,Sol	12	2.8/3.3, 0.0/2.6	563	617

P.K. Chen 12/09/09
REGISTERED STRUCTURAL ENGINEER DATE

11-22-10
PLANS APPROVAL DATE

REGISTERED PROFESSIONAL ENGINEER PO-KANG CHEN No. S3112 Exp. 9/30/11 STRUCTURAL STATE OF CALIFORNIA

The State of California or its officers or agents shall not be responsible for the accuracy or completeness of electronic copies of this plan sheet.

SOLANO TRANSPORTATION AUTHORITY
ONE HARBOR CENTER, SUITE 130
SUISUN CITY, CA 94585

MARK THOMAS & COMPANY, INC.
1960 ZANKER ROAD
SAN JOSE, CA 95112

Notes:

1. For Soil Nail 'Schedules', see "Structure Plan" sheets.
2. For Geocomposite Drain Details behind initial shotcrete, see "Soil Nail Wall Details No. 5" sheet.
3. For Soil Nail Steel bar sizes, see Soil Nail 'Schedule' on "Structure Plan" sheets.
4. Diameter of drilled holes shall be determined by the contractor.

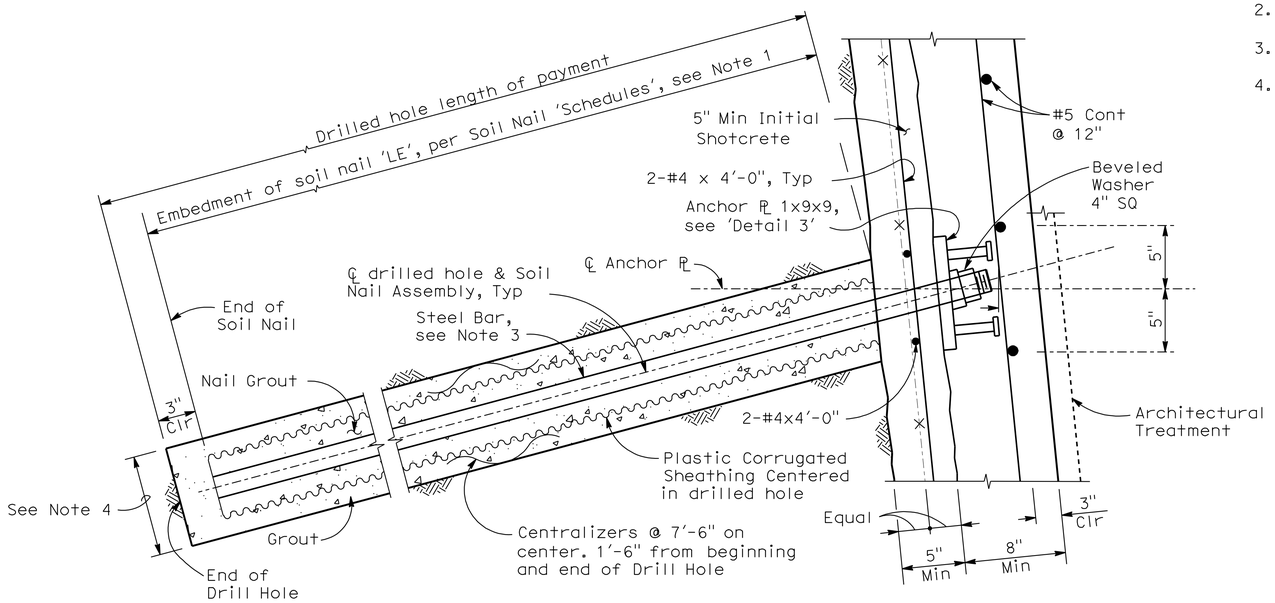

DETAIL 1 - SOIL NAIL ASSEMBLY

No Scale

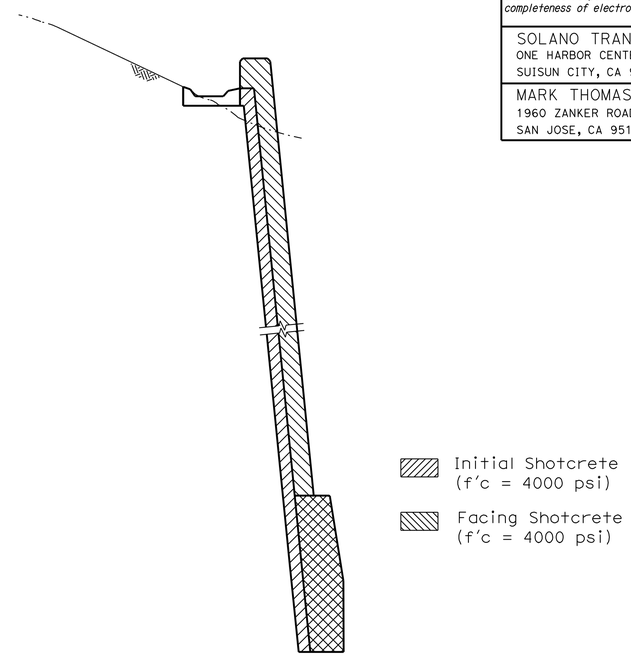

Note: Soil Nail Wall shown, Soldier Pile Tieback and Tieback Wall similar, except where shown otherwise.

CONCRETE STRENGTH AND TYPE LIMITS

No Scale

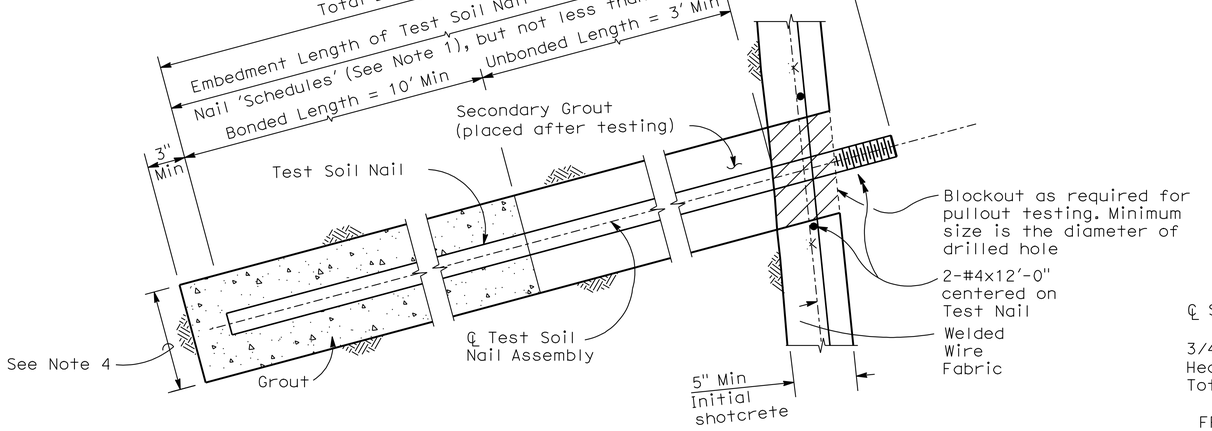

DETAIL 2 - TEST SOIL NAIL ASSEMBLY

No Scale

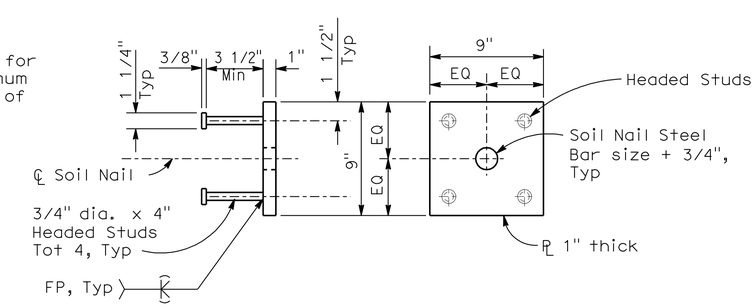

DETAIL 3 - ANCHOR PLATE

No Scale

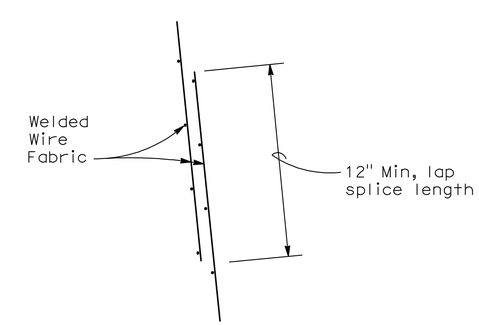

DETAIL 4 - LAP SPLICE DETAIL

No Scale

Tracy L. Bertram
DESIGN OVERSIGHT Tracy L Bertram
1-7-10
SIGN OFF DATE

DESIGN	BY H MISTRY	CHECKED P CHEN	
DETAILS	BY H. MISTRY	CHECKED P CHEN	
QUANTITIES	BY K WONG	CHECKED S GARAPALLY	

PREPARED FOR THE STATE OF CALIFORNIA DEPARTMENT OF TRANSPORTATION

HARSHAD MISTRY
PROJECT ENGINEER

BRIDGE No.
POST MILE

RETAINING WALL DETAILS
SOIL NAIL WALL DETAILS No. 3

DESIGN DETAIL SHEET (ENGLISH) (REV. 2/25/05)

ORIGINAL SCALE IN INCHES FOR REDUCED PLANS 0 1 2 3

CU 04264
EA 264141

DISREGARD PRINTS BEARING EARLIER REVISION DATES

REVISION DATES (PRELIMINARY STAGE ONLY): ~~3/13/09~~ ~~8/03/09~~ ~~11/06/09~~ 12/09/09

SHEET 124 OF 171

FILE => 23E0015X-g-1snwd03.dgn

USERNAME => trlenard DATE PLOTTED => 23-NOV-2010 TIME PLOTTED => 08:57

DIST	COUNTY	ROUTE	POST MILES TOTAL PROJECT	SHEET No	TOTAL SHEETS
04	Nap,Sol	12	2.8/3.3, 0.0/2.6	564	617

P.K. Chen
REGISTERED STRUCTURAL ENGINEER — 12/09/09 DATE

11-22-10
PLANS APPROVAL DATE

REGISTERED PROFESSIONAL ENGINEER — PO-KANG CHEN — No. S3112 — Exp. 9/30/11 — STRUCTURAL — STATE OF CALIFORNIA

The State of California or its officers or agents shall not be responsible for the accuracy or completeness of electronic copies of this plan sheet.

SOLANO TRANSPORTATION AUTHORITY
ONE HARBOR CENTER, SUITE 130
SUISUN CITY, CA 94585

MARK THOMAS & COMPANY, INC.
1960 ZANKER ROAD
SAN JOSE, CA 95112

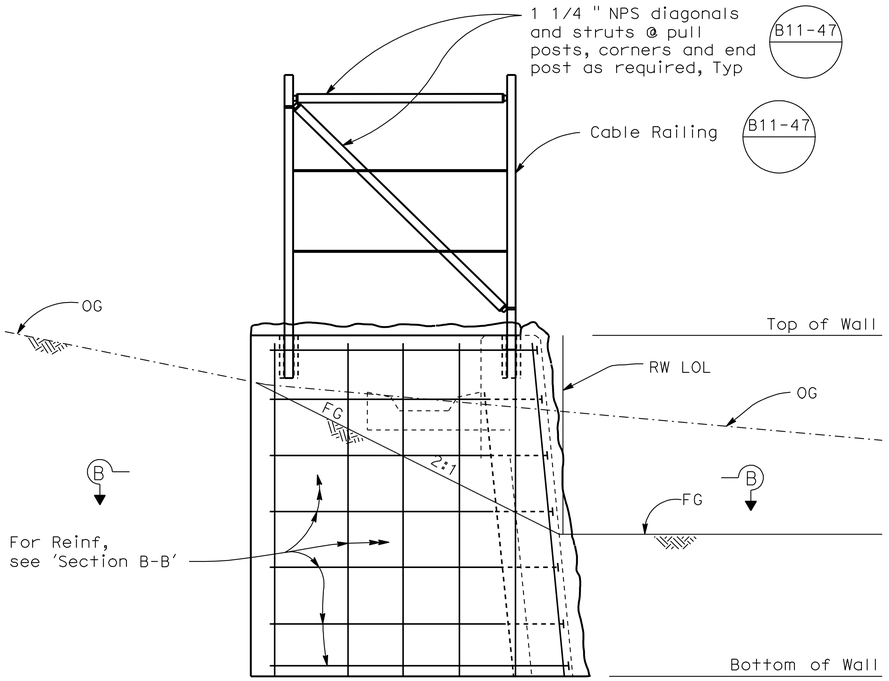

RETURN WALL ELEVATION
3/4" = 1'-0"

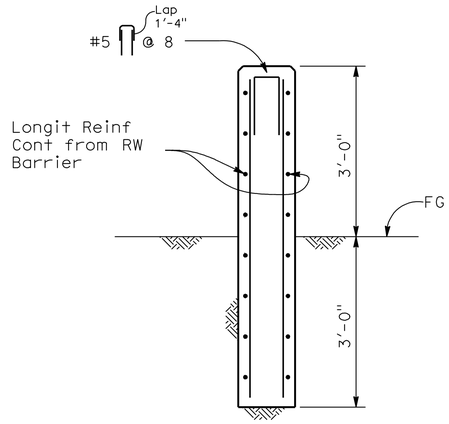

SECTION C-C
3/4" = 1'-0"

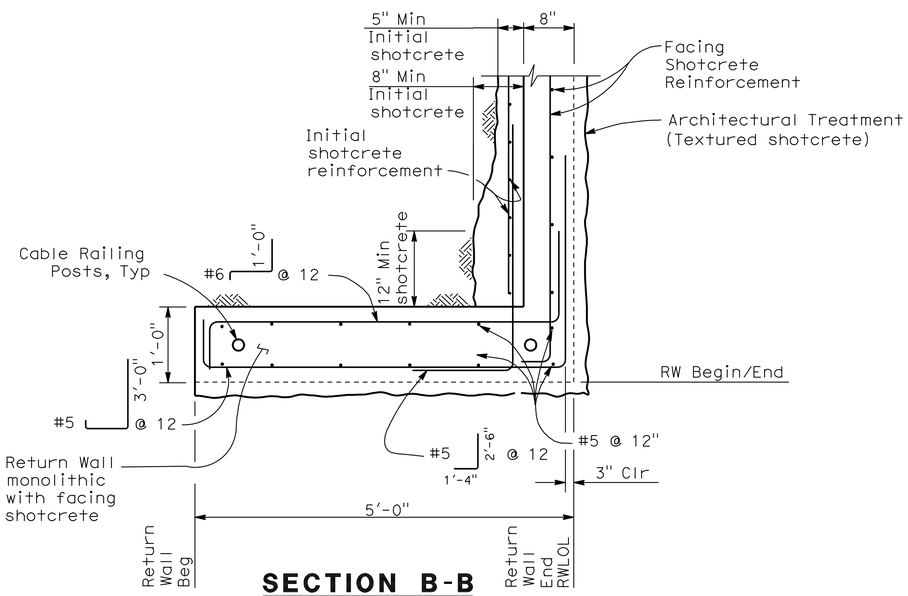

SECTION B-B
1"= 1'-0"

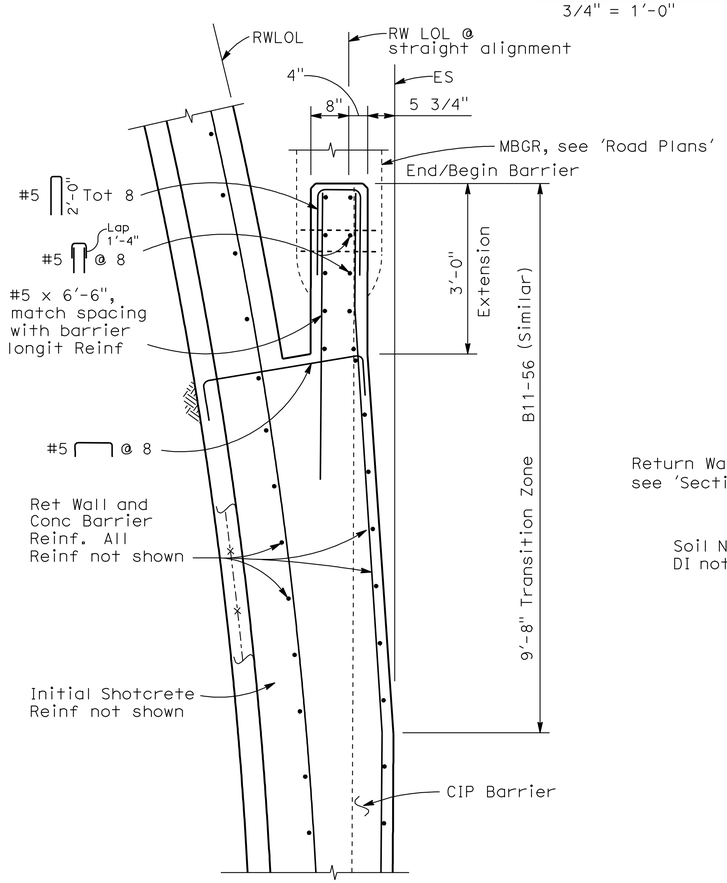

BARRIER TRANSITION @ CURVED RW
3/4" = 1'-0"

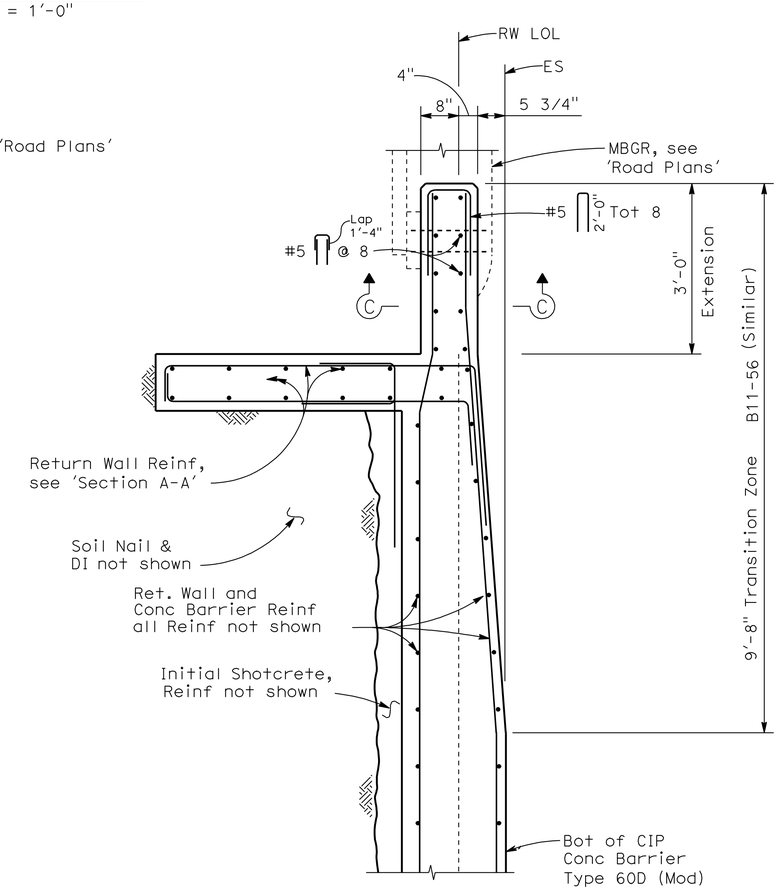

BARRIER TRANSITION @ RETURN WALL
3/4" = 1'-0"

Tracy L. Bertram
DESIGN OVERSIGHT — Tracy L Bertram

1-7-10
SIGN OFF DATE

DESIGN DETAIL SHEET (ENGLISH) (REV. 2/25/05)

	BY	CHECKED
DESIGN	H. MISTRY	P. CHEN
DETAILS	H. MISTRY	P. CHEN
QUANTITIES	K. WONG	S. GARAPALLY

ORIGINAL SCALE IN INCHES FOR REDUCED PLANS 0 1 2 3

PREPARED FOR THE STATE OF CALIFORNIA DEPARTMENT OF TRANSPORTATION

HARSHAD MISTRY
PROJECT ENGINEER

CU 04264
EA 264141

BRIDGE No.
POST MILE

RETAINING WALL DETAILS
SOIL NAIL WALL DETAILS No. 4

DISREGARD PRINTS BEARING EARLIER REVISION DATES → 3/13/09 8/03/09 11/06/09 12/09/09

SHEET 125 OF 171

FILE => 23E0015X-g-1snwd04.dgn

USERNAME => $NAME DATE PLOTTED => 23-NOV-2010 TIME PLOTTED => 08:58

Notes:

1. Base of wall to be placed against undesturbed material or compated fill.
2. Center geocomposite strips between soil nail columns.
3. ⊡ Indicates soil nail locations.

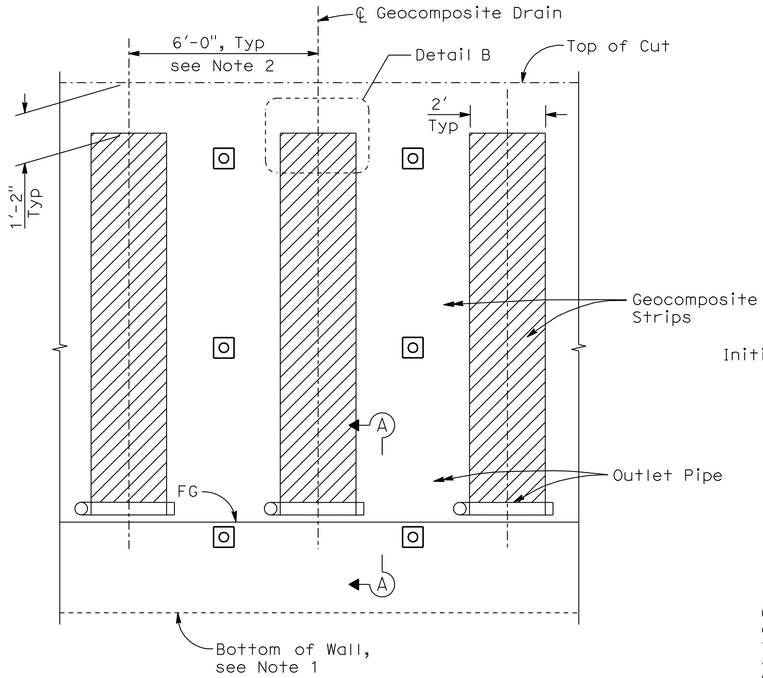

WALL PART ELEVATION

No Scale

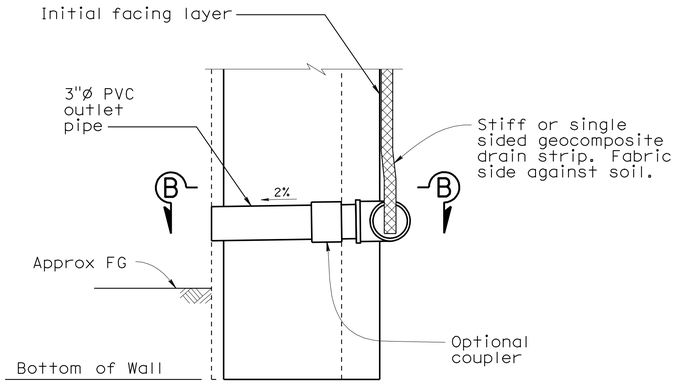

WALL DRAIN DETAIL AT WEEPHOLE

SECTION A-A

No scale

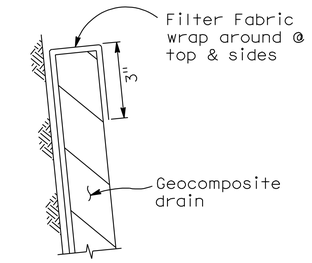

DETAIL B

No Scale

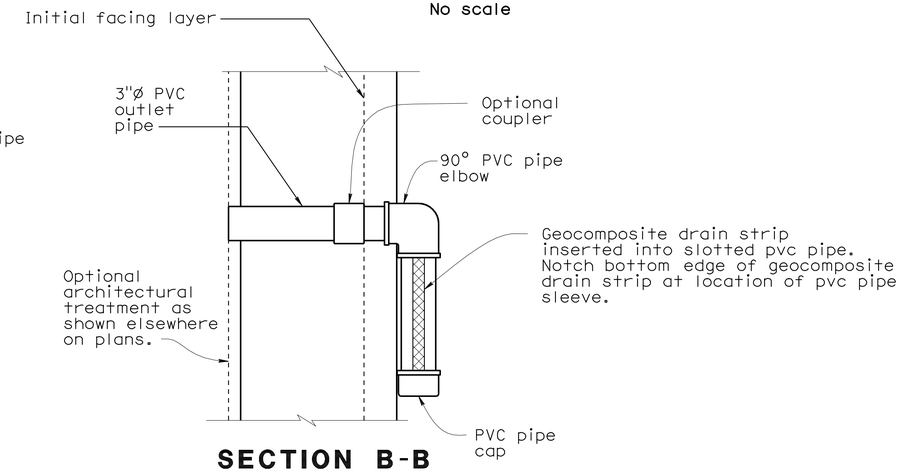

SECTION B-B

No Scale

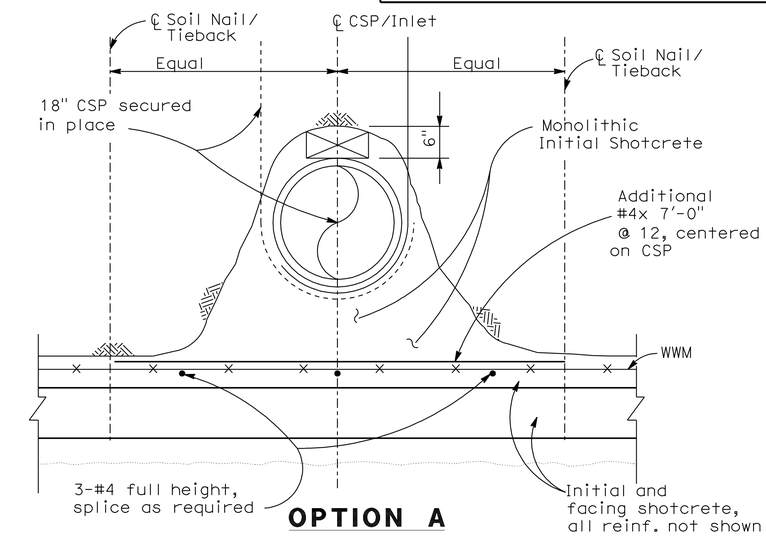

OPTION A

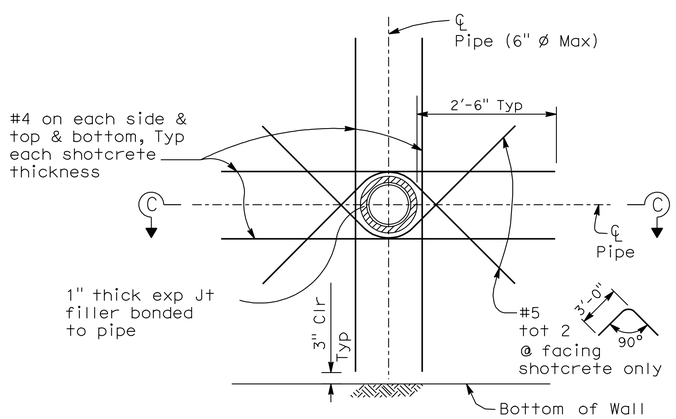

REINFORCEMENT AT PIPE OPENINGS

No Scale

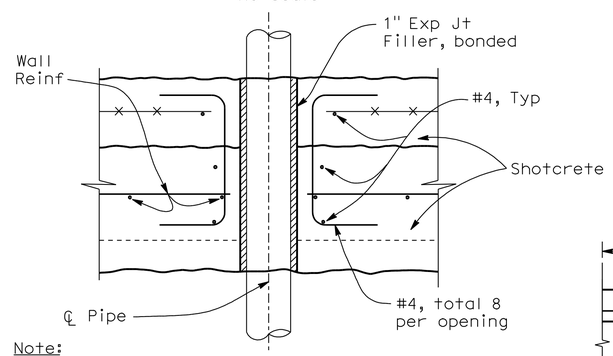

Note:

All reinforcement to clear opening by 2" minimum. Reinforcement shown is in addition to shotcrete wall reinforcement.

PLAN

SECTION C-C

No Scale

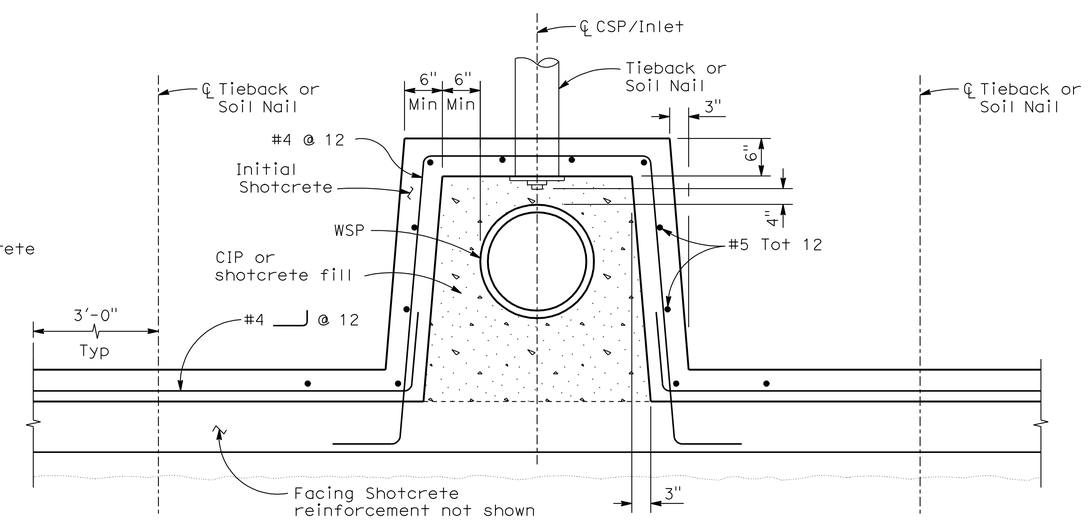

DRAIN PIPE INSTALLATION - OPTION B

1"= 1'-0"

DIST	COUNTY	ROUTE	POST MILES TOTAL PROJECT	SHEET No	TOTAL SHEETS
04	Nap,Sol	12	2.8/3.3, 0.0/2.6	565	617

P.K. Chen 12/09/09
REGISTERED STRUCTURAL ENGINEER DATE

11-22-10
PLANS APPROVAL DATE

REGISTERED PROFESSIONAL ENGINEER PO-KANG CHEN No. S3112 Exp. 9/30/11 STRUCTURAL STATE OF CALIFORNIA

The State of California or its officers or agents shall not be responsible for the accuracy or completeness of electronic copies of this plan sheet.

SOLANO TRANSPORTATION AUTHORITY
ONE HARBOR CENTER, SUITE 130
SUISUN CITY, CA 94585

MARK THOMAS & COMPANY, INC.
1960 ZANKER ROAD
SAN JOSE, CA 95112

Tracy L. Bertram
DESIGN OVERSIGHT Tracy L Bertram
1-7-10
SIGN OFF DATE

	BY	CHECKED
DESIGN	H. MISTRY	P. CHEN
DETAILS	H. MISTRY	P. CHEN
QUANTITIES	K. WONG	S. GARAPALLY

PREPARED FOR THE STATE OF CALIFORNIA DEPARTMENT OF TRANSPORTATION

HARSHAD MISTRY
PROJECT ENGINEER

BRIDGE No.
POST MILE

RETAINING WALL DETAILS

SOIL NAIL WALL DETAILS No. 5

DESIGN DETAIL SHEET (ENGLISH) (REV. 2/25/05)

ORIGINAL SCALE IN INCHES FOR REDUCED PLANS 0 1 2 3

CU 04264
EA 264141

DISREGARD PRINTS BEARING EARLIER REVISION DATES

REVISION DATES (PRELIMINARY STAGE ONLY) 3/13/09 8/03/09 11/06/09 12/09/09

SHEET 126 OF 171

FILE => 23E0015X-g-1snwd05.dgn

USERNAME => trlenard DATE PLOTTED => 23-NOV-2010 TIME PLOTTED => 08:58

DIST	COUNTY	ROUTE	POST MILES TOTAL PROJECT	SHEET No	TOTAL SHEETS
04	Nap,Sol	12	2.8/3.3, 0.0/2.6	566	617

P.K. Chen 12/09/09
REGISTERED STRUCTURAL ENGINEER DATE

11-22-10
PLANS APPROVAL DATE

REGISTERED PROFESSIONAL ENGINEER
PO-KANG CHEN
No. S3112
Exp. 9/30/11
STRUCTURAL
STATE OF CALIFORNIA

The State of California or its officers or agents shall not be responsible for the accuracy or completeness of electronic copies of this plan sheet.

SOLANO TRANSPORTATION AUTHORITY
ONE HARBOR CENTER, SUITE 130
SUISUN CITY, CA 94585

MARK THOMAS & COMPANY, INC.
1960 ZANKER ROAD
SAN JOSE, CA 95112

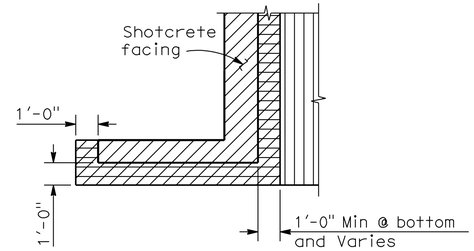

PLAN VIEW AT RETURN WALL

No Scale

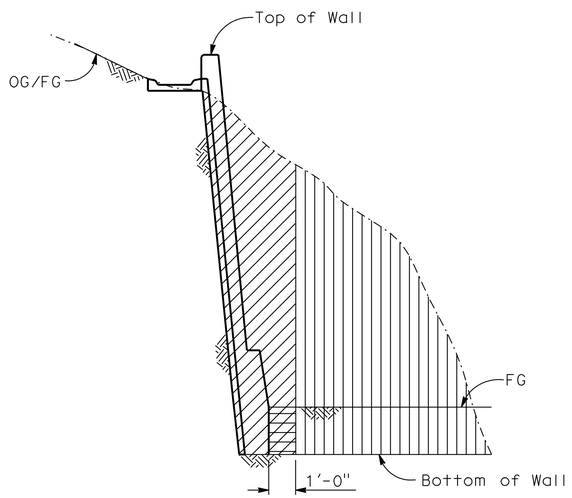

Note: Architectural Treatment not shown

RW3A, 3C, 4B & 5A - TYPICAL SECTION

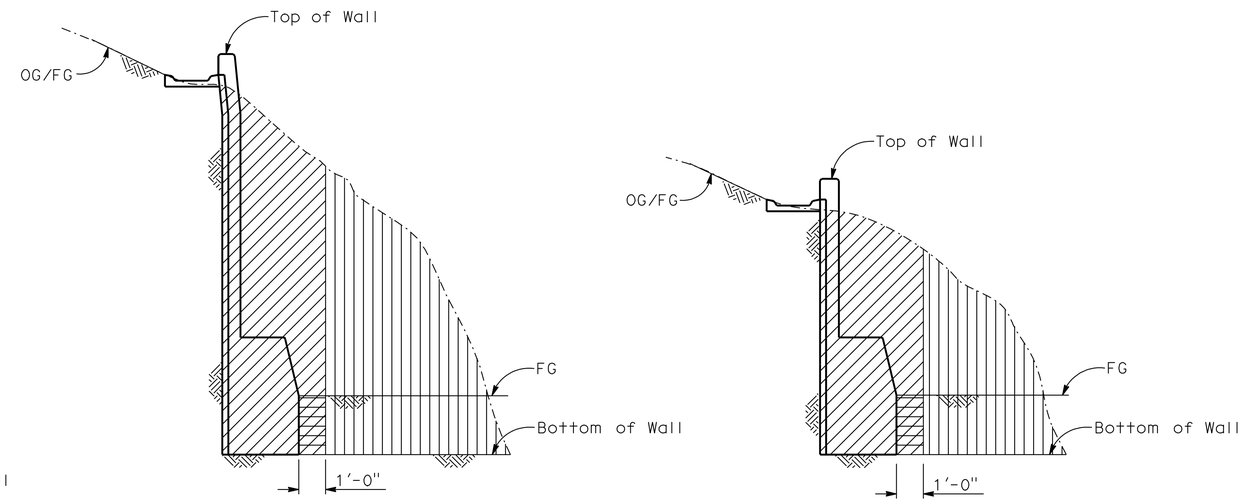

Note: Architectural Treatment not shown

RW5B - TYPICAL SECTIONS AT ELECTROLIER NOTCHES

Structure Excavation (Soil Nail Wall) | Structure Backfill (Soil Nail Wall) | Roadway Earthwork

LIMITS OF PAYMENT FOR EXCAVATION AND BACKFILL

No Scale

Tracy L. Bertram
DESIGN OVERSIGHT Tracy L Bertram
1-7-10
SIGN OFF DATE

DESIGN DETAIL SHEET (ENGLISH) (REV. 2/25/05)

	BY	CHECKED
DESIGN	H. MISTRY	P. CHEN
DETAILS	H. MISTRY	P. CHEN
QUANTITIES	K. WONG	S. GARAPALLY

ORIGINAL SCALE IN INCHES FOR REDUCED PLANS 0 1 2 3

PREPARED FOR THE STATE OF CALIFORNIA DEPARTMENT OF TRANSPORTATION

HARSHAD MISTRY
PROJECT ENGINEER

CU 04264
EA 264141

BRIDGE No.
POST MILE

RETAINING WALL DETAILS
SOIL NAIL WALL DETAILS No. 6

DISREGARD PRINTS BEARING EARLIER REVISION DATES → REVISION DATES (PRELIMINARY STAGE ONLY): ~~3/13/09~~ ~~8/03/09~~ ~~11/06/09~~ 12/09/09

SHEET 127 OF 171

FILE => 23E0015X-g-1snwd06.dgn

USERNAME => trlenard DATE PLOTTED => 23-NOV-2010 TIME PLOTTED => 08:58

DIST	COUNTY	ROUTE	POST MILES TOTAL PROJECT	SHEET No	TOTAL SHEETS
04	Nap,Sol	12	2.8/3.3, 0.0/2.6	567	617

P.K. Chen 12/09/09
REGISTERED STRUCTURAL ENGINEER DATE

11-22-10
PLANS APPROVAL DATE

REGISTERED PROFESSIONAL ENGINEER
PO-KANG CHEN
No. S3112
Exp. 9/30/11
STRUCTURAL
STATE OF CALIFORNIA

The State of California or its officers or agents shall not be responsible for the accuracy or completeness of electronic copies of this plan sheet.

SOLANO TRANSPORTATION AUTHORITY
ONE HARBOR CENTER, SUITE 130
SUISUN CITY, CA 94585

MARK THOMAS & COMPANY, INC.
1960 ZANKER ROAD
SAN JOSE, CA 95112

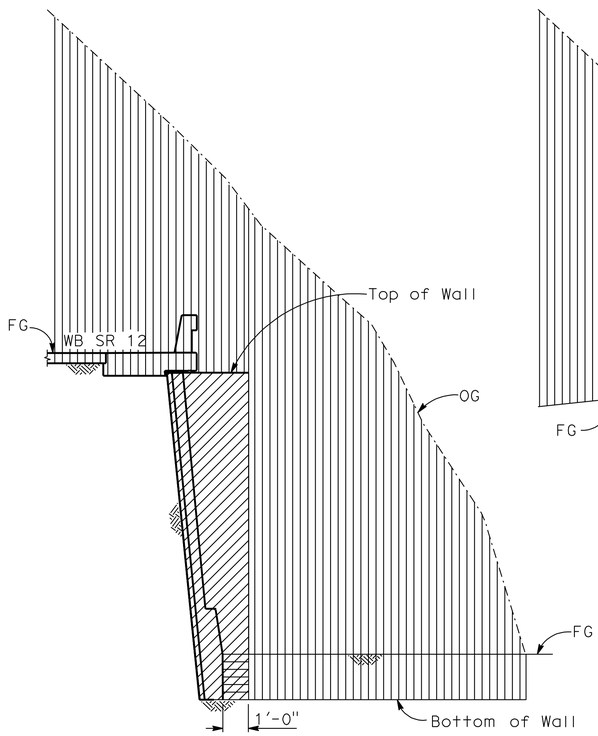

Note: Architectural Treatment not shown

RW6 - TYPICAL SECTION
No Scale

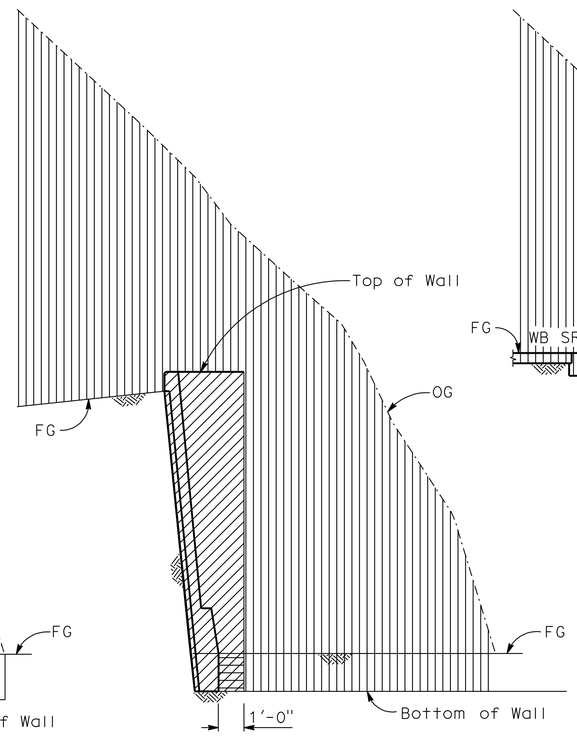

Note: Architectural Treatment not shown

RW7A - TYPICAL SECTION
No Scale

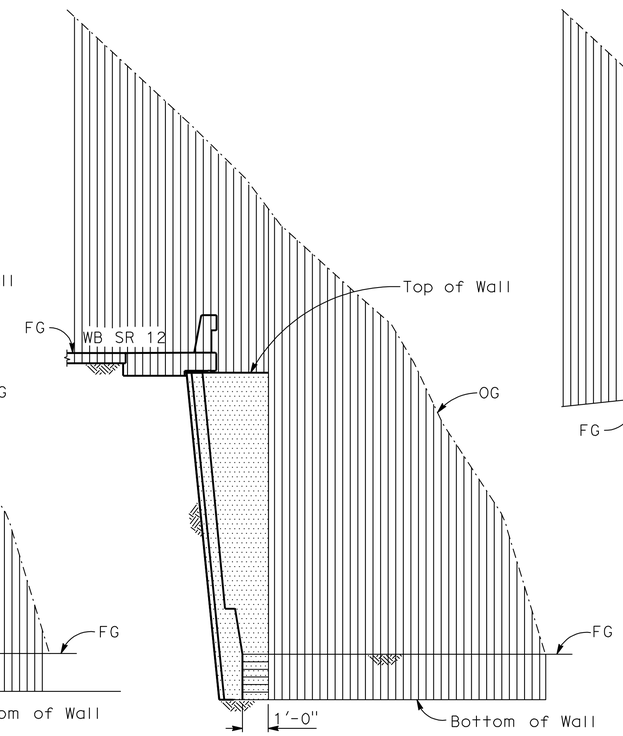

Note: Architectural Treatment not shown

RW6 - TYPICAL SECTION
JC Sta 343+50 to Sta 347+00 only
No Scale

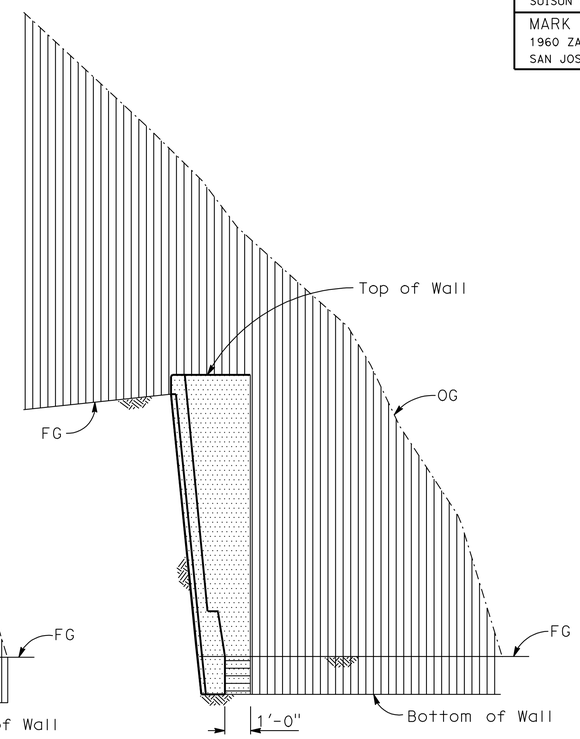

RW7A - TYPICAL SECTION
JC Sta 343+50 to Sta 347+00 only
No Scale

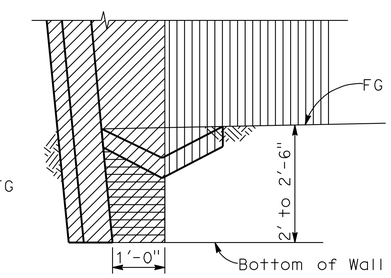

RW7B - TYPICAL SECTION
No Scale

Structure Excavation (Soil Nail Wall)

Structure Excavation (Rock)

Structure Backfill (Soil Nail Wall)

Roadway Earthwork, see 'Road Plans'

LIMITS OF PAYMENT FOR EXCAVATION AND BACKFILL
No Scale

Tracy L. Bertram
DESIGN OVERSIGHT Tracy L Bertram

1-7-10
SIGN OFF DATE

	BY	CHECKED
DESIGN	H. MISTRY	P. CHEN
DETAILS	H. MISTRY	P. CHEN
QUANTITIES	K. WONG	S. GARAPALLY

PREPARED FOR THE STATE OF CALIFORNIA DEPARTMENT OF TRANSPORTATION

HARSHAD MISTRY
PROJECT ENGINEER

BRIDGE No.
POST MILE

RETAINING WALL DETAILS
SOIL NAIL WALL DETAILS No. 7

DESIGN DETAIL SHEET (ENGLISH) (REV. 2/25/05)
W:\SOLANO TA - 58-0151B SR 12 JAMESON CANYON\STRUCTURES\CADD\XREF\58-0151B-BORDER STRUCTURE DETAILS_22 X 34_SOLANO.DWG 9/4/2008 9:18:30 AM

ORIGINAL SCALE IN INCHES FOR REDUCED PLANS 0 1 2 3

CU 04264
EA 264141

DISREGARD PRINTS BEARING EARLIER REVISION DATES

REVISION DATES (PRELIMINARY STAGE ONLY): ~~3/13/09~~ ~~8/03/09~~ ~~11/06/09~~ 12/09/09

SHEET 128 OF 171

FILE => 23E0015X-g-1snwd07.dgn

USERNAME => trlenard DATE PLOTTED => 23-NOV-2010 TIME PLOTTED => 08:58

DIST	COUNTY	ROUTE	POST MILES TOTAL PROJECT	SHEET No	TOTAL SHEETS
04	Nap,Sol	12	2.8/3.3, 0.0/2.6	568	617

P.K. Chen 12/09/09
REGISTERED STRUCTURAL ENGINEER DATE

11-22-10
PLANS APPROVAL DATE

REGISTERED PROFESSIONAL ENGINEER PO-KANG CHEN No. S3112 Exp. 9/30/11 STRUCTURAL STATE OF CALIFORNIA

The State of California or its officers or agents shall not be responsible for the accuracy or completeness of electronic copies of this plan sheet.

SOLANO TRANSPORTATION AUTHORITY
ONE HARBOR CENTER, SUITE 130
SUISUN CITY, CA 94585

MARK THOMAS & COMPANY, INC.
1960 ZANKER ROAD
SAN JOSE, CA 95112

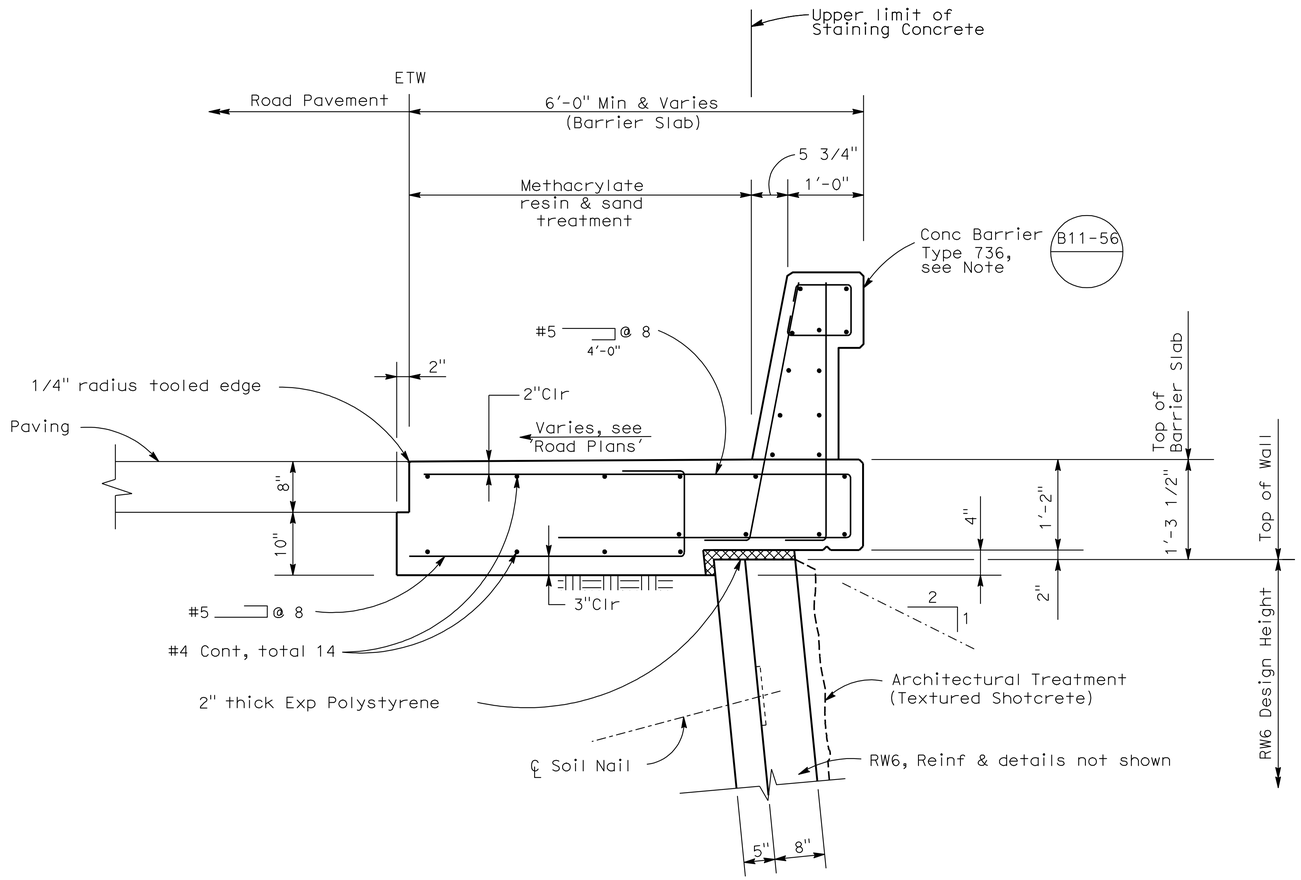

Note: Stain all exposed faces of Concrete Barrier and edge of Barrier Slab

SECTION AT TOP OF RW6 WITH CONCRETE BARRIER (TYPE 736)

1" = 1'-0"

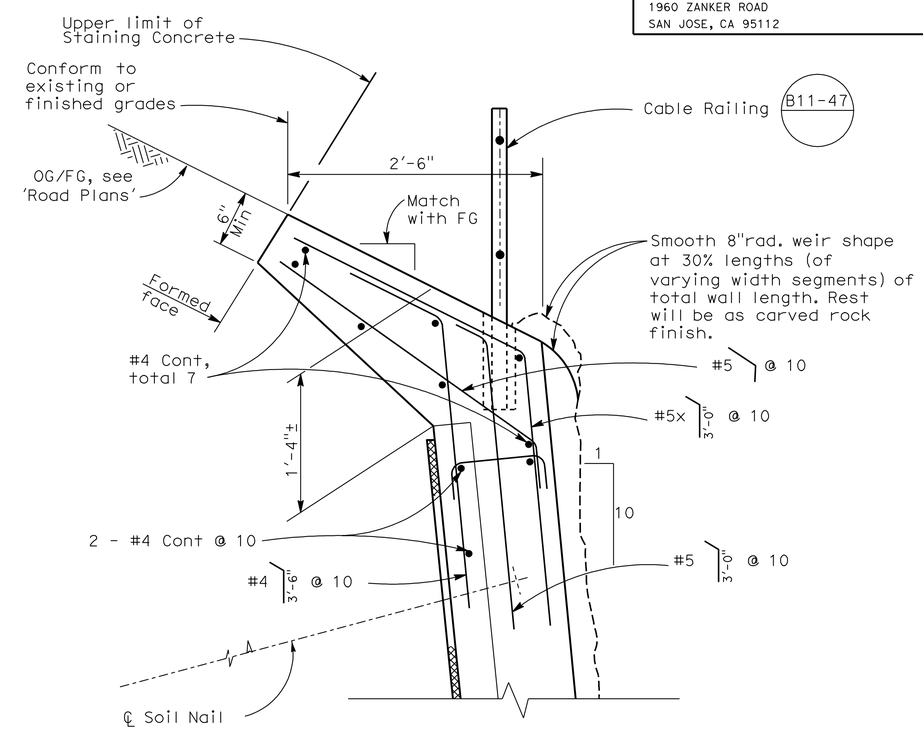

SECTION AT TOP OF RW7B

No Scale

Tracy L. Bertram
DESIGN OVERSIGHT Tracy L Bertram

1-7-10
SIGN OFF DATE

DESIGN	BY H. MISTRY	CHECKED P. CHEN	
DETAILS	BY H. MISTRY	CHECKED P. CHEN	
QUANTITIES	BY K. WONG	CHECKED S. GARAPALLY	

PREPARED FOR THE STATE OF CALIFORNIA DEPARTMENT OF TRANSPORTATION

HARSHAD MISTRY
PROJECT ENGINEER

BRIDGE No.
POST MILE

RETAINING WALL DETAILS
SOIL NAIL WALL DETAILS No. 8

DESIGN DETAIL SHEET (ENGLISH) (REV. 2/25/05)
#:\SOLANO TA - 58-0151B SR 12 JAMESON CANYON\STRUCTURES\CADD\XREF\58-0151B-BORDER STRUCTURE DETAILS_22 X 34_SOLANO.DWG 9/4/2008 9:18:30 AM

ORIGINAL SCALE IN INCHES FOR REDUCED PLANS 0 1 2 3

CU 04264
EA 264141

DISREGARD PRINTS BEARING EARLIER REVISION DATES

REVISION DATES (PRELIMINARY STAGE ONLY): ~~3/13/09~~ ~~8/03/09~~ ~~11/06/09~~ 12/09/09

SHEET 129 OF 171

FILE => 23E0015X-g-1snwd08.dgn

USERNAME => trlehard DATE PLOTTED => 23-NOV-2010 TIME PLOTTED => 08:58

DIST	COUNTY	ROUTE	POST MILES TOTAL PROJECT	SHEET No	TOTAL SHEETS
04	Nap,Sol	12	2.8/3.3, 0.0/2.6	569	617

P.K. Chen 12/09/09
REGISTERED STRUCTURAL ENGINEER DATE

11-22-10
PLANS APPROVAL DATE

REGISTERED PROFESSIONAL ENGINEER PO-KANG CHEN No. S3112 Exp. 9/30/11 STRUCTURAL STATE OF CALIFORNIA

The State of California or its officers or agents shall not be responsible for the accuracy or completeness of electronic copies of this plan sheet.

SOLANO TRANSPORTATION AUTHORITY
ONE HARBOR CENTER, SUITE 130
SUISUN CITY, CA 94585

MARK THOMAS & COMPANY, INC.
1960 ZANKER ROAD
SAN JOSE, CA 95112

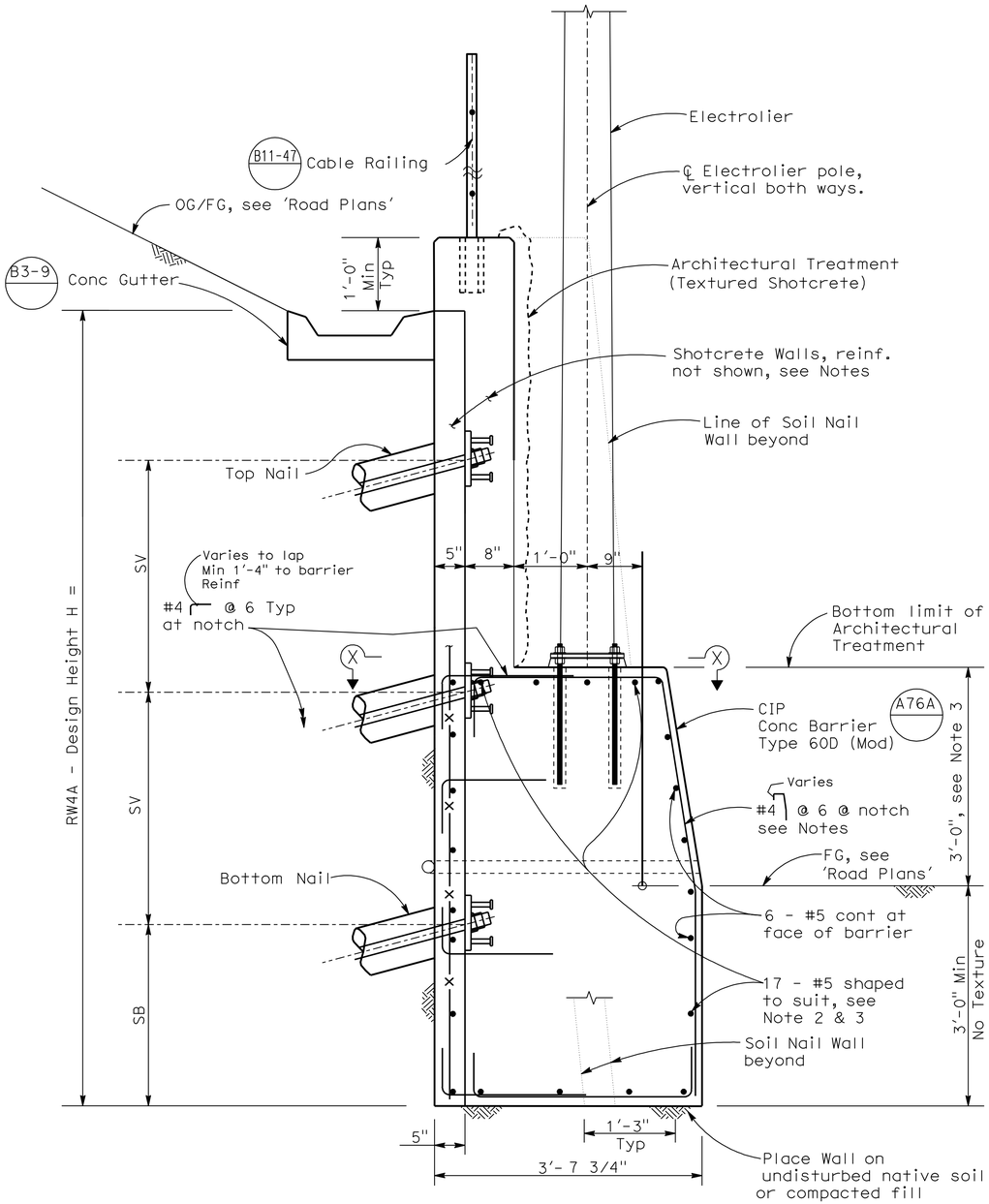

SECTION AT ELECTROLIER
RW4A - JCR2 Sta 287+90.80

1"= 1'-0"

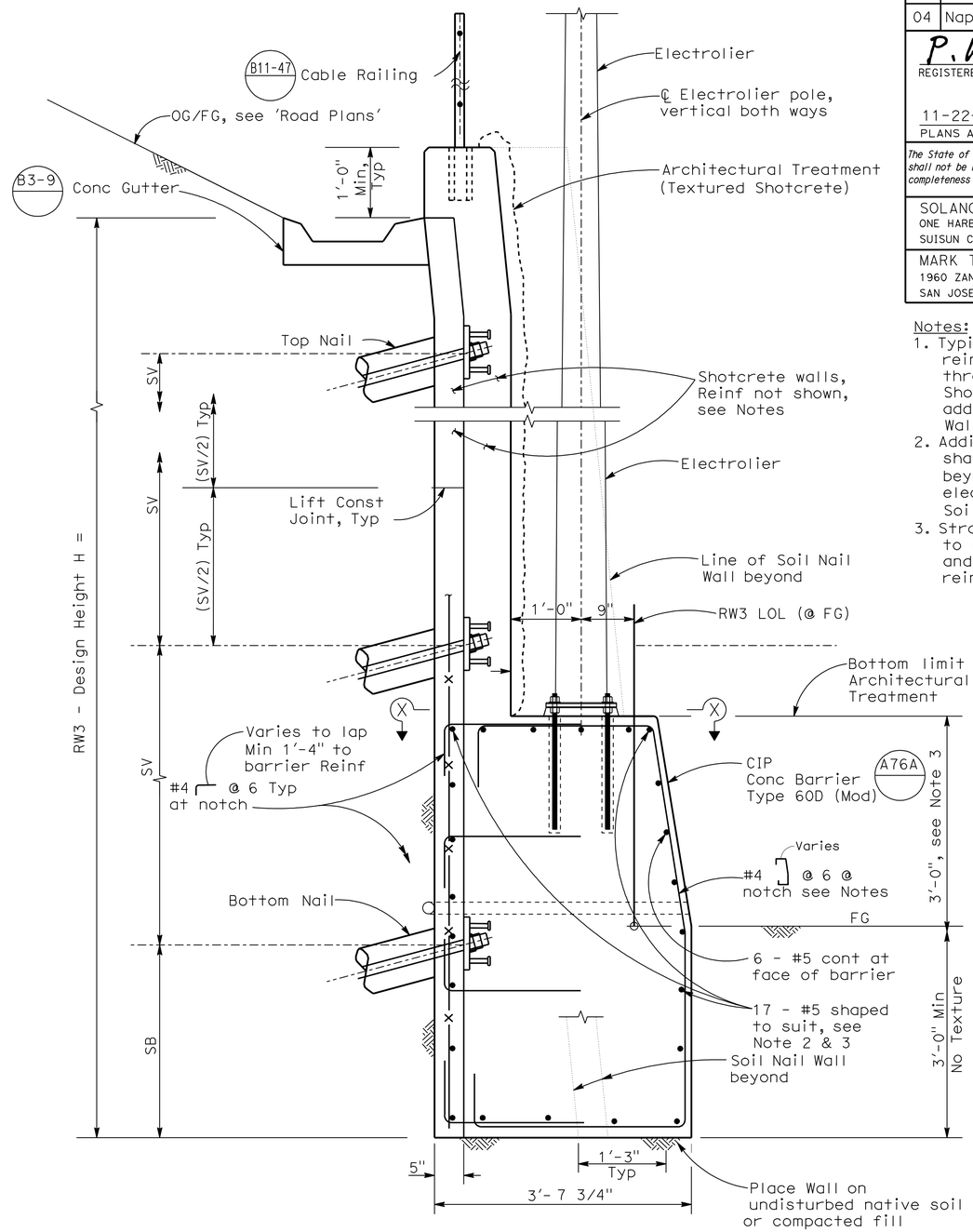

SECTION AT ELECTROLIER
RW3 - JC STA 276+71.04

1"= 1'-0"

Notes:
1. Typical Soil Nail Wall details & reinforcing to be continuous through notch area at electrolier. Shown reinforcement will be in addition to typical Soil Nail Wall reinforcement.
2. Additional reinforcing bars to be shaped to suit and extend 3'-0" beyond the shaped notch at electrolier, see 'Section X-X' on Soil Nail Details No. 10" sheet.
3. Straddle reinforcement so as not to interfere with Anchor plates and anchor bolts. Do not cut any reinforcing bars.

Tracy L. Bertram
DESIGN OVERSIGHT Tracy L Bertram
1-7-10
SIGN OFF DATE

DESIGN DETAIL SHEET (ENGLISH) (REV. 2/25/05)

	BY	CHECKED
DESIGN	H. MISTRY	P. CHEN
DETAILS	H. MISTRY	P. CHEN
QUANTITIES	K. WONG	S. GARAPALLY

ORIGINAL SCALE IN INCHES FOR REDUCED PLANS 0 1 2 3

PREPARED FOR THE STATE OF CALIFORNIA DEPARTMENT OF TRANSPORTATION

HARSHAD MISTRY
PROJECT ENGINEER

CU 04264
EA 264141

BRIDGE No.
POST MILE

RETAINING WALL DETAILS
SOIL NAIL WALL DETAILS No. 9

DISREGARD PRINTS BEARING EARLIER REVISION DATES

REVISION DATES (PRELIMINARY STAGE ONLY): ~~3/13/09~~ ~~8/03/09~~ ~~11/06/09~~ 12/09/09

SHEET 130 OF 171

FILE => 23E0015X-g-1snwd09.dgn

USERNAME => trienard DATE PLOTTED => 23-NOV-2010 TIME PLOTTED => 08:58

DIST	COUNTY	ROUTE	POST MILES TOTAL PROJECT	SHEET No	TOTAL SHEETS
04	Nap,Sol	12	2.8/3.3, 0.0/2.6	570	617

P.K. Chen 12/09/09
REGISTERED STRUCTURAL ENGINEER DATE

11-22-10
PLANS APPROVAL DATE

REGISTERED PROFESSIONAL ENGINEER PO-KANG CHEN No. S3112 Exp. 9/30/11 STRUCTURAL STATE OF CALIFORNIA

The State of California or its officers or agents shall not be responsible for the accuracy or completeness of electronic copies of this plan sheet.

SOLANO TRANSPORTATION AUTHORITY
ONE HARBOR CENTER, SUITE 130
SUISUN CITY, CA 94585

MARK THOMAS & COMPANY, INC.
1960 ZANKER ROAD
SAN JOSE, CA 95112

Notes:
1. The Contractor shall verify field dimension before ordering of fabricating any materials.

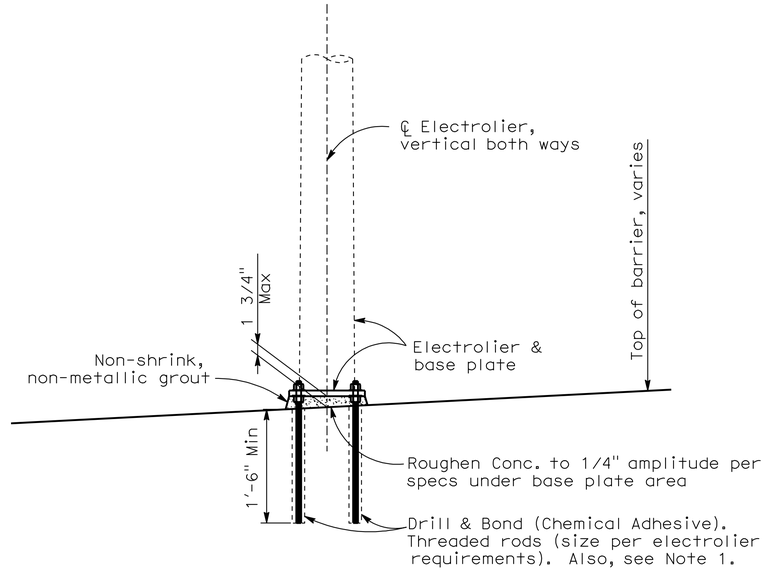

VIEW A-A
1"= 1'-0"

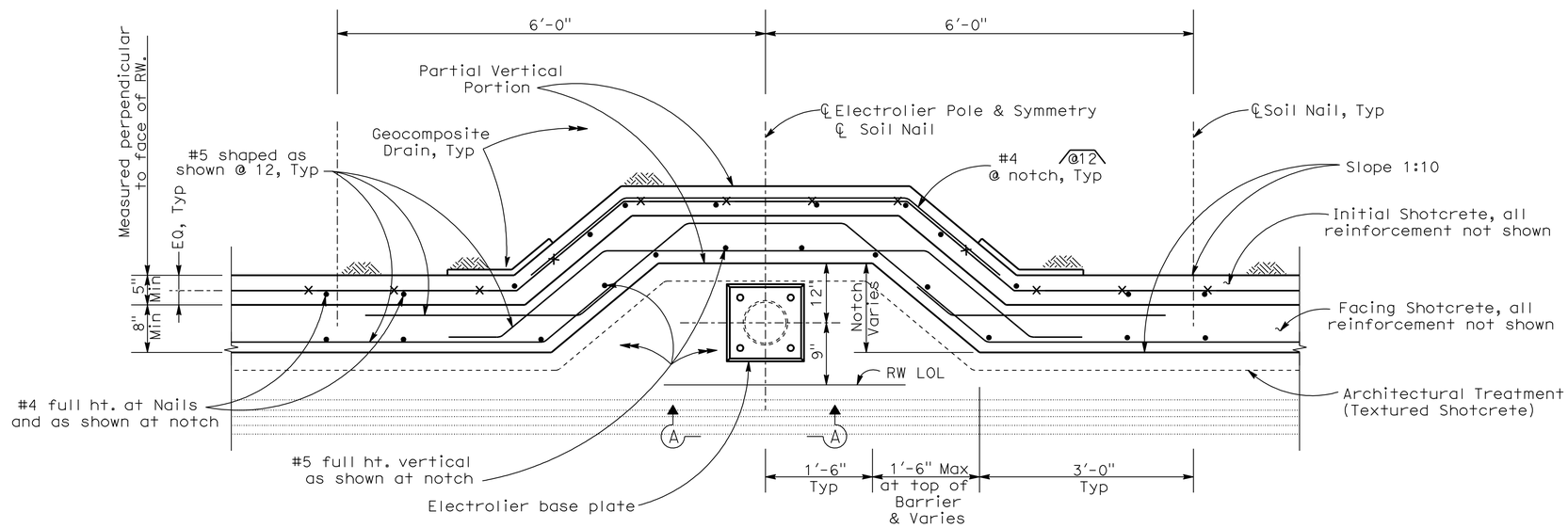

PLAN

SECTION X-X
1"= 1'-0"

Tracy L. Bertram
DESIGN OVERSIGHT Tracy L Bertram
1-7-10
SIGN OFF DATE

	BY	CHECKED
DESIGN	H. MISTRY	P. CHEN
DETAILS	H. MISTRY	P. CHEN
QUANTITIES	K. WONG	S. GARAPALLY

PREPARED FOR THE STATE OF CALIFORNIA DEPARTMENT OF TRANSPORTATION

HARSHAD MISTRY
PROJECT ENGINEER

BRIDGE No.
POST MILE

RETAINING WALL DETAILS
SOIL NAIL WALL DETAILS No. 10

DESIGN DETAIL SHEET (ENGLISH) (REV. 2/25/05)

ORIGINAL SCALE IN INCHES FOR REDUCED PLANS 0 1 2 3

CU 04264
EA 264141

DISREGARD PRINTS BEARING EARLIER REVISION DATES

REVISION DATES (PRELIMINARY STAGE ONLY) ~~3/13/09~~ ~~8/03/09~~ ~~11/06/09~~ 12/09/09

SHEET 131 OF 171

FILE => 23E0015X-g-1snwd10.dgn

USERNAME => trienard DATE PLOTTED => 23-NOV-2010 TIME PLOTTED => 08:58

DIST	COUNTY	ROUTE	POST MILES TOTAL PROJECT	SHEET No	TOTAL SHEETS
04	Nap,Sol	12	2.8/3.3, 0.0/2.6	571	617

P.K. Chen 12/09/09
REGISTERED STRUCTURAL ENGINEER DATE

11-22-10
PLANS APPROVAL DATE

REGISTERED PROFESSIONAL ENGINEER PO-KANG CHEN No. S3112 Exp. 9/30/11 STRUCTURAL STATE OF CALIFORNIA

The State of California or its officers or agents shall not be responsible for the accuracy or completeness of electronic copies of this plan sheet.

SOLANO TRANSPORTATION AUTHORITY
ONE HARBOR CENTER, SUITE 130
SUISUN CITY, CA 94585

MARK THOMAS & COMPANY, INC.
1960 ZANKER ROAD
SAN JOSE, CA 95112

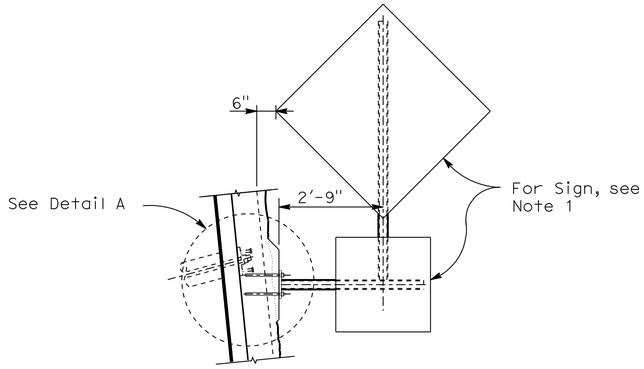

DETAIL AT SIGN INSTALLATION

No Scale

Note:
1. For signs and mounting brackets, see "Road Plans"

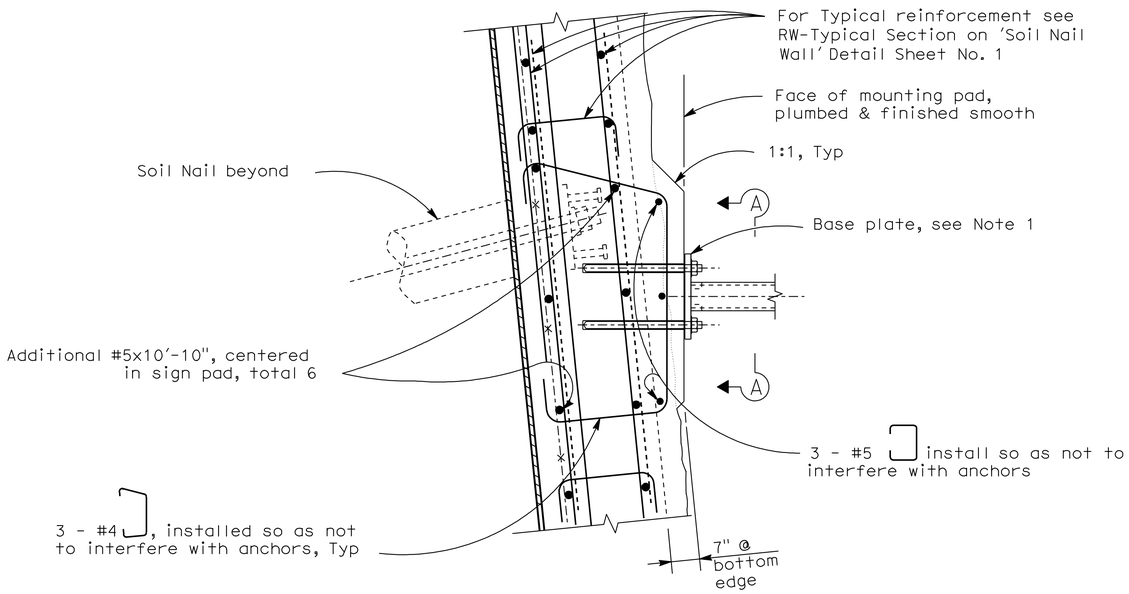

DETAIL A

1 1/2"= 1'-0"

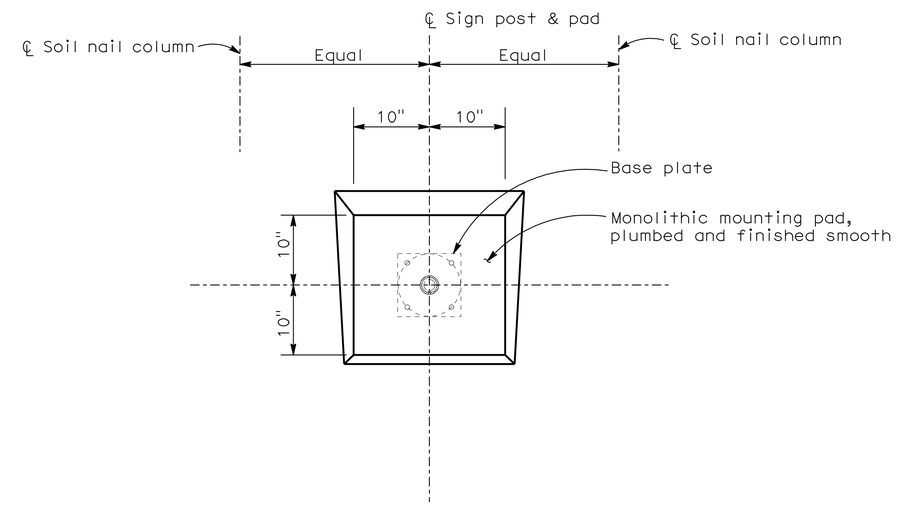

SECTION A-A

1"= 1'-0

Tracy L Bertram
DESIGN OVERSIGHT Tracy L Bertram

1-7-10
SIGN OFF DATE

DESIGN DETAIL SHEET (ENGLISH) (REV. 2/25/05)

	BY	CHECKED
DESIGN	H. MISTRY	P. CHEN
DETAILS	H. MISTRY	P. CHEN
QUANTITIES	K. WONG	S. GARAPALLY

ORIGINAL SCALE IN INCHES FOR REDUCED PLANS 0 1 2 3

PREPARED FOR THE STATE OF CALIFORNIA DEPARTMENT OF TRANSPORTATION

HARSHAD MISTRY
PROJECT ENGINEER

CU 04264
EA 264141

BRIDGE No.
POST MILE

RETAINING WALL DETAILS

SOIL NAIL WALL DETAILS No. 11

DISREGARD PRINTS BEARING EARLIER REVISION DATES

REVISION DATES (PRELIMINARY STAGE ONLY): ~~3/13/09~~ ~~8/03/09~~ ~~11/06/09~~ 12/09/09

SHEET 132 OF 171

FILE => 23E0015X-g-1snwd11.dgn

USERNAME => trlenard DATE PLOTTED => 23-NOV-2010 TIME PLOTTED => 08:58

DIST	COUNTY	ROUTE	POST MILES TOTAL PROJECT	SHEET No	TOTAL SHEETS
04	Nap,Sol	12	2.8/3.3, 0.0/2.6	572	617

P.K. Chen 12/09/09
REGISTERED STRUCTURAL ENGINEER DATE

11-22-10
PLANS APPROVAL DATE

REGISTERED PROFESSIONAL ENGINEER PO-KANG CHEN No. S3112 Exp. 9/30/11 STRUCTURAL STATE OF CALIFORNIA

The State of California or its officers or agents shall not be responsible for the accuracy or completeness of electronic copies of this plan sheet.

SOLANO TRANSPORTATION AUTHORITY
ONE HARBOR CENTER, SUITE 130
SUISUN CITY, CA 94585

MARK THOMAS & COMPANY, INC.
1960 ZANKER ROAD
SAN JOSE, CA 95112

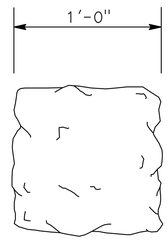

ELEVATION - SPLASH BLOCK

No Scale

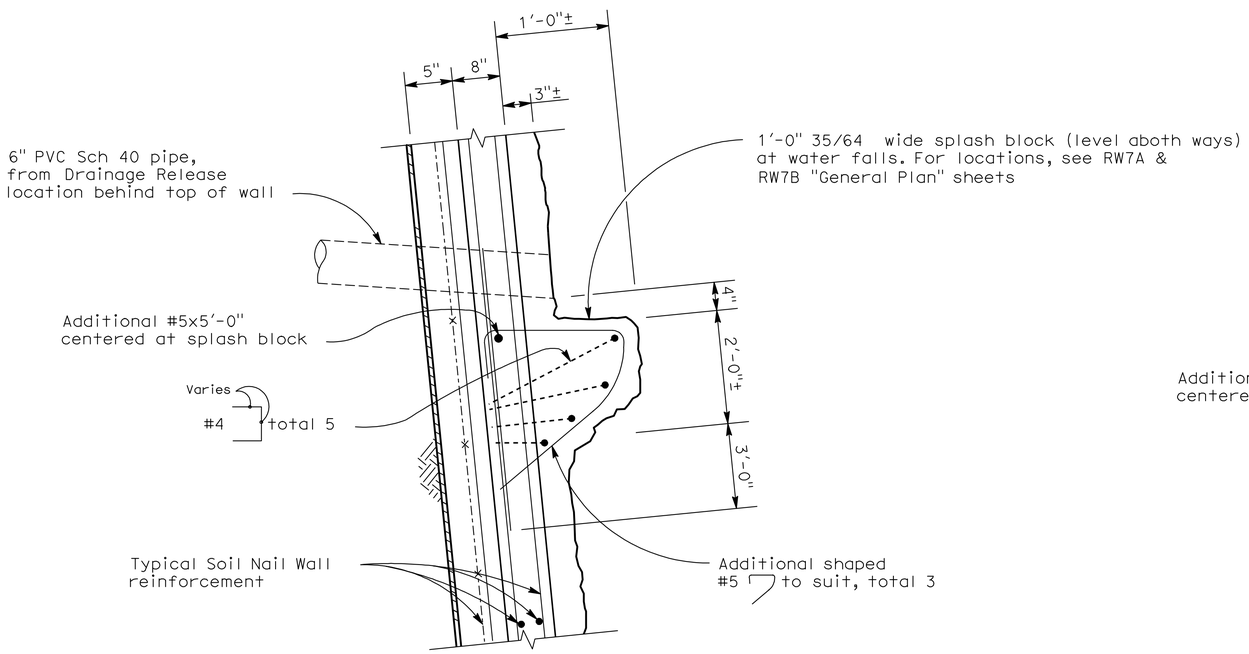

DETAIL A
RW7A - SPLASH BLOCKS WITH 6" PVC PIPE ON TOP OF BLOCK

No Scale

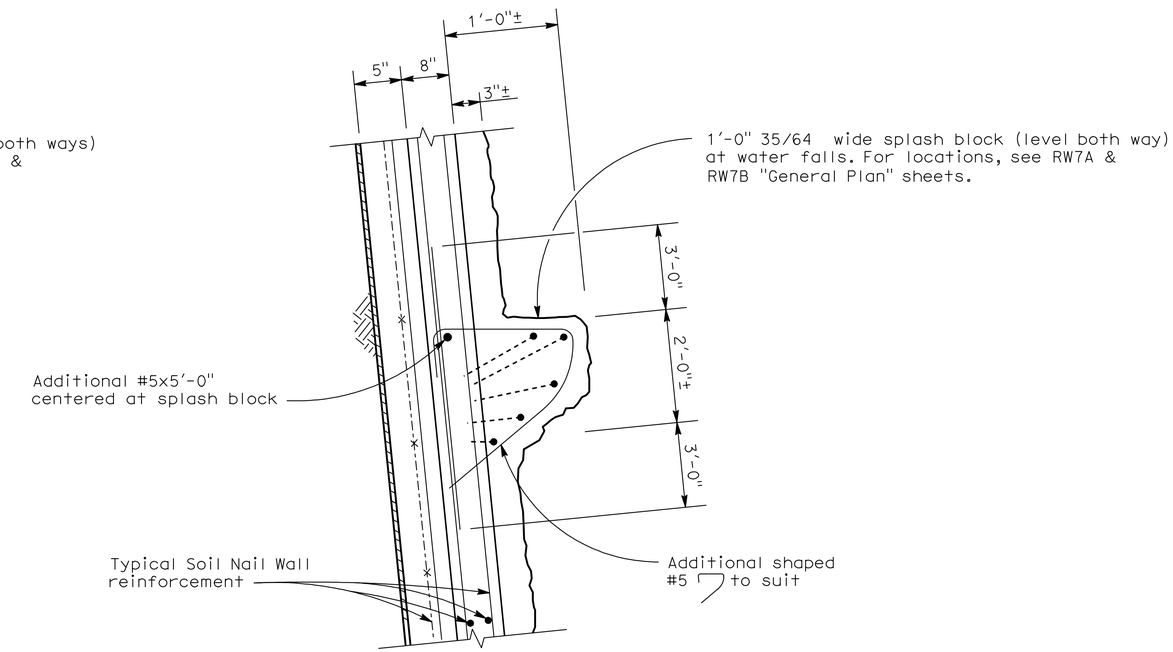

DETAIL B
RW7A - SPLASH BLOCKS

No Scale

Tracy L. Bertram
DESIGN OVERSIGHT Tracy L Bertram

1-7-10
SIGN OFF DATE

DESIGN DETAIL SHEET (ENGLISH) (REV. 2/25/05)

	BY	CHECKED
DESIGN	H. MISTRY	P. CHEN
DETAILS	H. MISTRY	P. CHEN
QUANTITIES	K. WONG	S. GARAPALLY

ORIGINAL SCALE IN INCHES FOR REDUCED PLANS 0 1 2 3

PREPARED FOR THE STATE OF CALIFORNIA DEPARTMENT OF TRANSPORTATION

HARSHAD MISTRY
PROJECT ENGINEER

CU 04264
EA 264141

BRIDGE No.
POST MILE

RETAINING WALL DETAILS
SOIL NAIL WALL DETAILS No. 12

DISREGARD PRINTS BEARING EARLIER REVISION DATES → REVISION DATES (PRELIMINARY STAGE ONLY) ~~3/13/09~~ ~~8/03/09~~ ~~11/06/09~~ 12/09/09

SHEET 133 OF 171

FILE => 23E0015X-g-1snwd12.dgn

USERNAME => trlenard DATE PLOTTED => 23-NOV-2010 TIME PLOTTED => 08:58

DIST	COUNTY	ROUTE	POST MILES TOTAL PROJECT	SHEET No	TOTAL SHEETS
04	Nap,Sol	12	2.8/3.3, 0.0/2.6	573	617

P.K. Chen 12/09/09
REGISTERED STRUCTURAL ENGINEER DATE

11-22-10
PLANS APPROVAL DATE

REGISTERED PROFESSIONAL ENGINEER PO-KANG CHEN No. S3112 Exp. 9/30/11 STRUCTURAL STATE OF CALIFORNIA

The State of California or its officers or agents shall not be responsible for the accuracy or completeness of electronic copies of this plan sheet.

SOLANO TRANSPORTATION AUTHORITY
ONE HARBOR CENTER, SUITE 130
SUISUN CITY, CA 94585

MARK THOMAS & COMPANY, INC.
1960 ZANKER ROAD
SAN JOSE, CA 95112

Notes:

1. For Geocomposite Drain Details, see "Soil Nail Wall Details No. 4" sheet.
2. Roughen concrete to 1/4 " amplitude prior to concrete pour per specification.

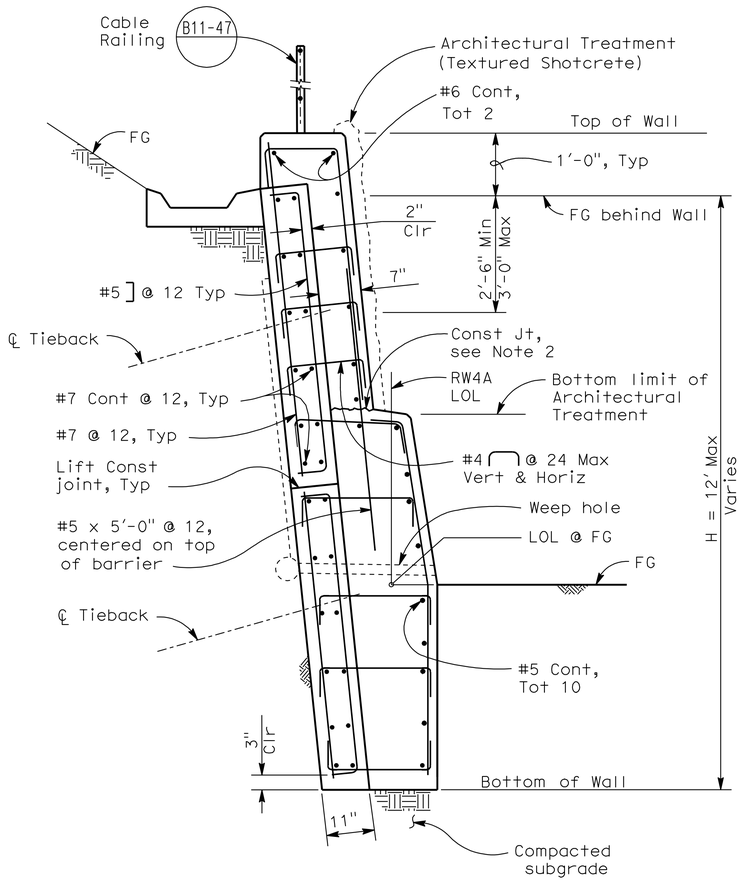

RW3B - DOUBLE LIFT TIEBACK WALL

3/4" = 1'-0"

Note: For notes and details not shown, see "Triple Lift Tieback Wall" detail on "Tieback Details No. 2" sheet.

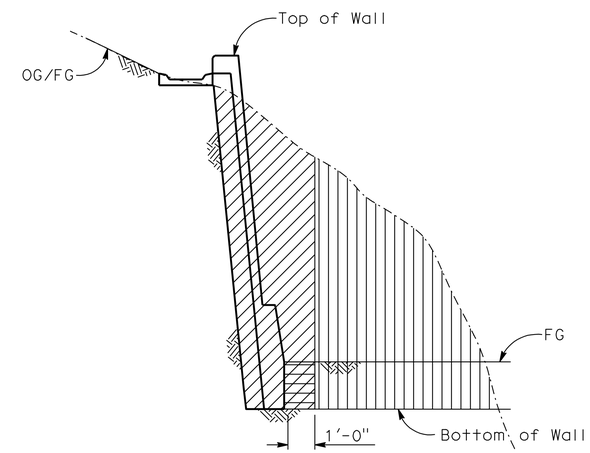

Note: Architectural Treatment not shown

RW3C & 4A - TYPICAL SECTION

Structure Backfill (Soil Nail Wall)
Roadway Earthwork

LIMITS OF PAYMENT FOR EXCAVATION AND BACKFILL

No Scale

Tracy L. Bertram
DESIGN OVERSIGHT Tracy L Bertram

1-7-10
SIGN OFF DATE

DESIGN DETAIL SHEET (ENGLISH) (REV. 2/25/05)

	BY	CHECKED
DESIGN	H. MISTRY	P. PARK
DETAILS	H. MISTRY	P. PARK
QUANTITIES	P. PARK	K. WONG

ORIGINAL SCALE IN INCHES FOR REDUCED PLANS 0 1 2 3

PREPARED FOR THE STATE OF CALIFORNIA DEPARTMENT OF TRANSPORTATION

HARSHAD MISTRY
PROJECT ENGINEER

CU 04264
EA 264141

BRIDGE No.
POST MILE

RETAINING WALL DETAILS
TIEBACK WALL DETAILS NO. 1

DISREGARD PRINTS BEARING EARLIER REVISION DATES → REVISION DATES (PRELIMINARY STAGE ONLY) ~~3/13/09~~ ~~8/03/09~~ ~~11/06/09~~ 12/24/09

SHEET 134 OF 171

FILE => 23E0015X-g-2twd01.dgn

USERNAME => trlenard DATE PLOTTED => 23-NOV-2010 TIME PLOTTED => 08:58

DIST	COUNTY	ROUTE	POST MILES TOTAL PROJECT	SHEET No	TOTAL SHEETS
04	Nap,Sol	12	2.8/3.3, 0.0/2.6	574	617

P.K. Chen 12/09/09
REGISTERED STRUCTURAL ENGINEER DATE

11-22-10
PLANS APPROVAL DATE

REGISTERED PROFESSIONAL ENGINEER PO-KANG CHEN No. S3112 Exp. 9/30/11 STRUCTURAL STATE OF CALIFORNIA

The State of California or its officers or agents shall not be responsible for the accuracy or completeness of electronic copies of this plan sheet.

SOLANO TRANSPORTATION AUTHORITY
ONE HARBOR CENTER, SUITE 130
SUISUN CITY, CA 94585

MARK THOMAS & COMPANY, INC.
1960 ZANKER ROAD
SAN JOSE, CA 95112

Notes:

1. For Geocomposite Drain Details, see "Soil Nail Wall Details No. 4" sheet.
2. Roughen concrete to 1/4" amplitude prior to concrete pour per specification

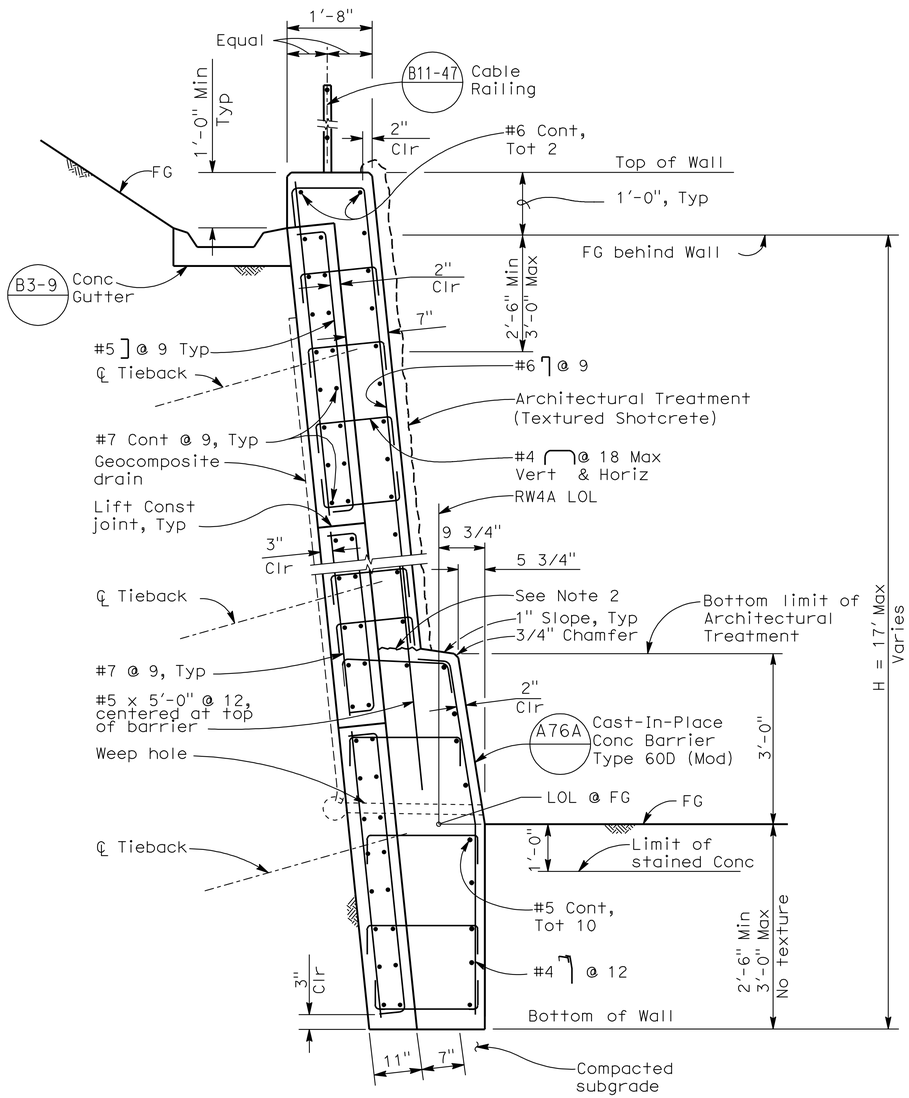

TRIPLE LIFT TIEBACK WALL

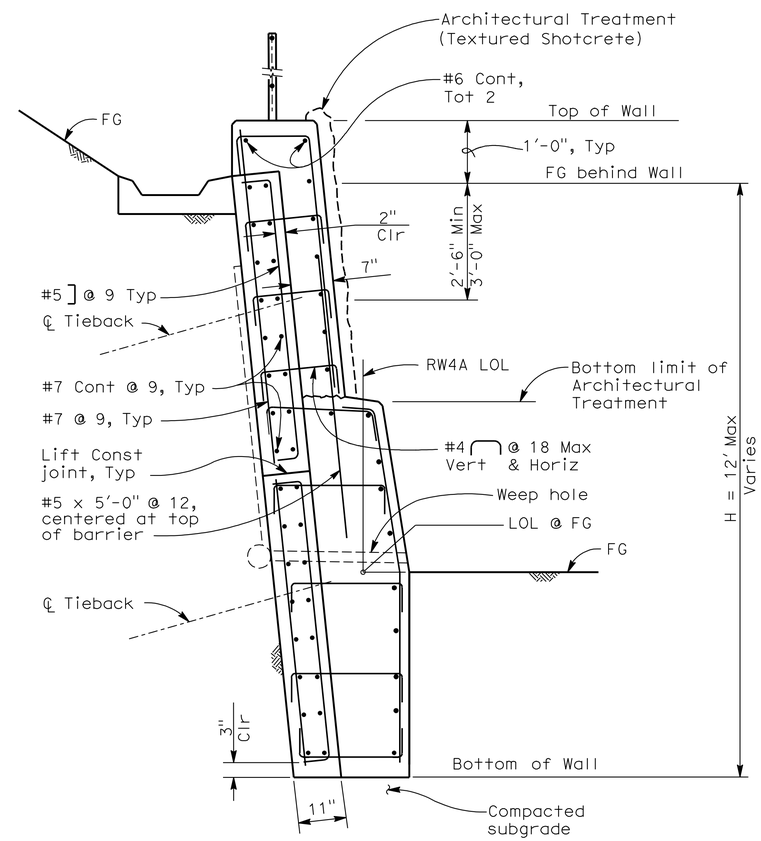

DOUBLE LIFT TIEBACK WALL

Note: For notes and details not shown, see "Triple Lift Tieback Wall" detail.

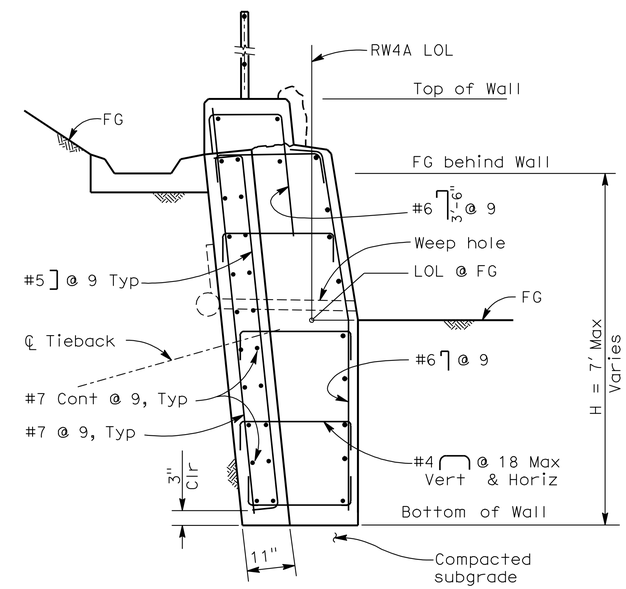

SINGLE LIFT TIEBACK WALL

Note: For notes and details not shown, see "Triple Lift Tieback Wall" detail.

RW4A - TIEBACK WALL DETAILS

3/4" = 1'-0"

Tracy L. Bertram
DESIGN OVERSIGHT Tracy L Bertram
1-7-10
SIGN OFF DATE

DESIGN DETAIL SHEET (ENGLISH) (REV. 2/25/05)

	BY	CHECKED
DESIGN	H. MISTRY	P. PARK
DETAILS	H. MISTRY	P. PARK
QUANTITIES	P. PARK	K. WONG

ORIGINAL SCALE IN INCHES FOR REDUCED PLANS 0 1 2 3

PREPARED FOR THE STATE OF CALIFORNIA DEPARTMENT OF TRANSPORTATION

HARSHAD MISTRY
PROJECT ENGINEER

CU 04264
EA 264141

BRIDGE No.
POST MILE

RETAINING WALL DETAILS
TIEBACK WALL DETAILS NO. 2

DISREGARD PRINTS BEARING EARLIER REVISION DATES

REVISION DATES (PRELIMINARY STAGE ONLY) ~~3/13/09~~ ~~8/03/09~~ ~~11/06/09~~ 12/24/09

SHEET 135 OF 171

FILE => 23E0015X-g-2twd02.dgn

USERNAME => trienord DATE PLOTTED => 23-NOV-2010 TIME PLOTTED => 08:59

DIST	COUNTY	ROUTE	POST MILES TOTAL PROJECT	SHEET No	TOTAL SHEETS
04	Nap,Sol	12	2.8/3.3, 0.0/2.6	575	617

P.K. Chen 12/09/09
REGISTERED STRUCTURAL ENGINEER DATE

11-22-10
PLANS APPROVAL DATE

REGISTERED PROFESSIONAL ENGINEER PO-KANG CHEN No. S3112 Exp. 9/30/11 STRUCTURAL STATE OF CALIFORNIA

The State of California or its officers or agents shall not be responsible for the accuracy or completeness of electronic copies of this plan sheet.

SOLANO TRANSPORTATION AUTHORITY
ONE HARBOR CENTER, SUITE 130
SUISUN CITY, CA 94585

MARK THOMAS & COMPANY, INC.
1960 ZANKER ROAD
SAN JOSE, CA 95112

NOTES:
1. Anchorage enclosure shall only be used when anchor head assembly is not enclosed in concrete.
2. Anchorage enclosure shall have provisions to allow injecting grout at low end and venting at high end. Galvanize after fabrication.
3. Silicone sealant to cover full width of flange.
4. Steel tube welded to bearing plate (min thickness = 1/4"). Galvanize assembly after fabrication
5. Steel tube welded to bearing plate inside diameter of steel tube to be 1" greater than outside diameter of smooth sheathing (min thickness = 1/4") Galvanize assembly after fabrication.
6. For other wall details, see elsewhere in structural plans.
7. Contractor shall verify all controlling field dimensions before ordering or fabricating any material.

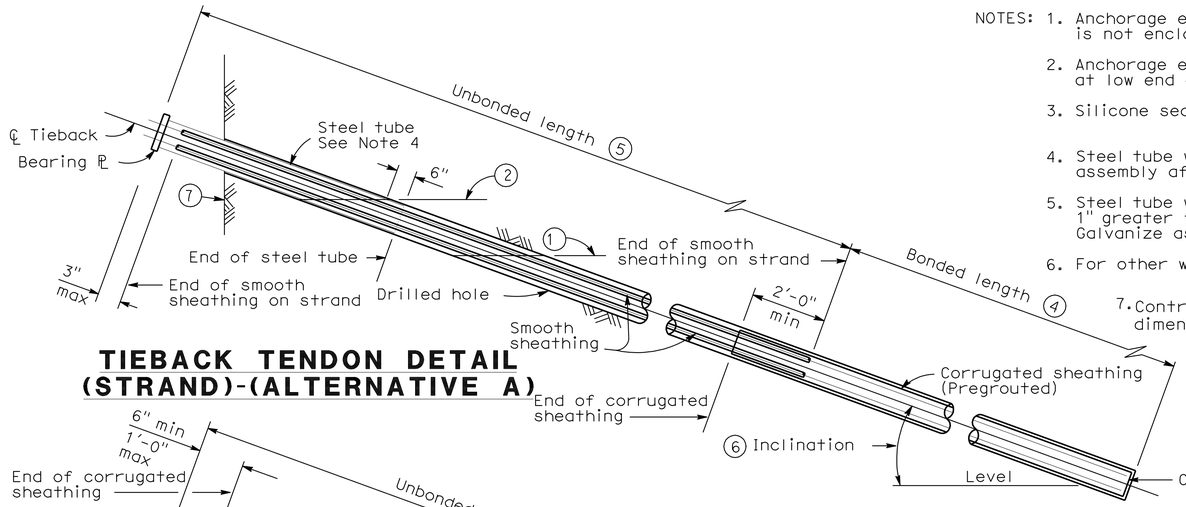

TIEBACK TENDON DETAIL (STRAND)-(ALTERNATIVE A)

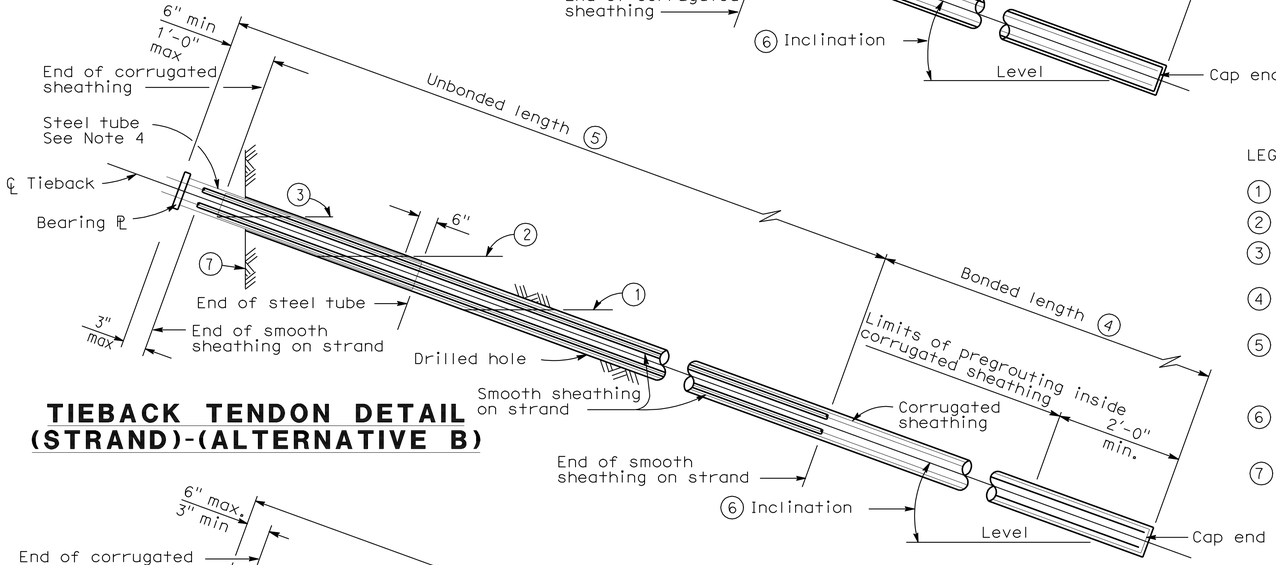

TIEBACK TENDON DETAIL (STRAND)-(ALTERNATIVE B)

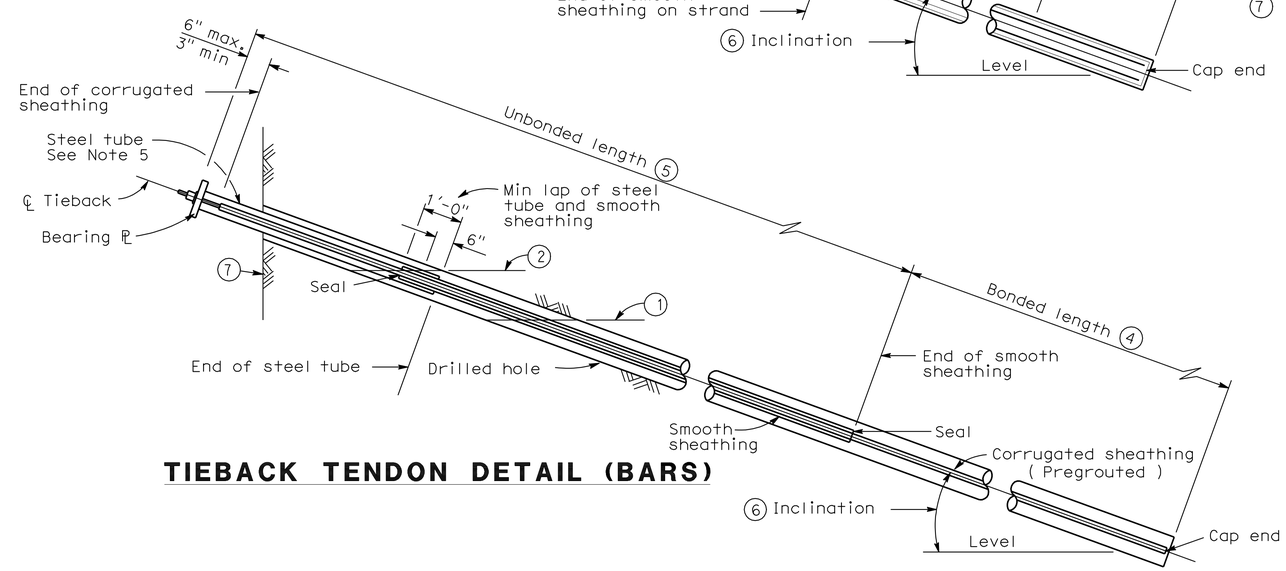

TIEBACK TENDON DETAIL (BARS)

LEGEND:
(1) Level of initial grouting
(2) Level of secondary grouting
(3) Level of initial grouting inside corrugated sheathing
(4) Bonded length shall be determined by the contractor
(5) For Unbonded length, see "RW3A, RW3B & RW3C-General Plan No. 6" and "RW4A&4B-GP No. 4" sheets ◇1
(6) For inclination, see "RW3A, RW3B & RW3C-General Plan No. 6" and "RW4A&4B-GP No. 4" sheets ◇1
(7) Face of Wall Excavation

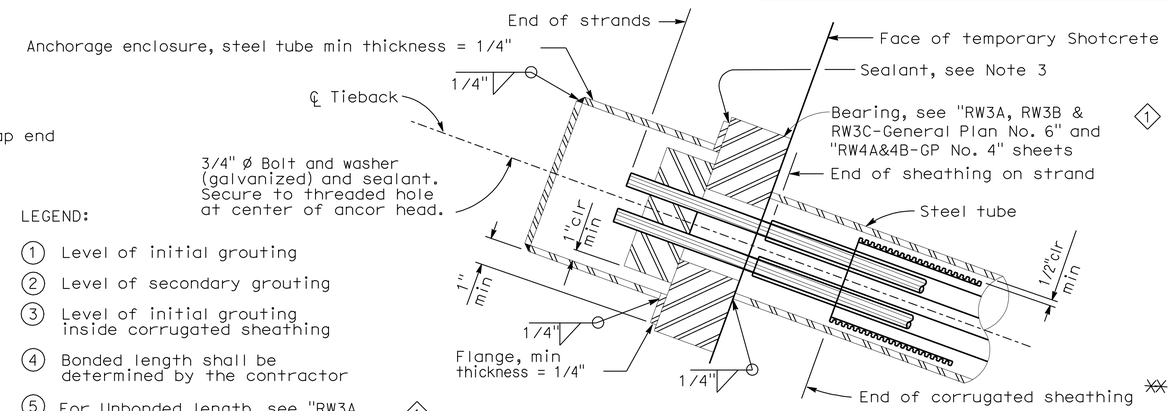

ALTERNATIVE X

✳✳Alternative B tendon only

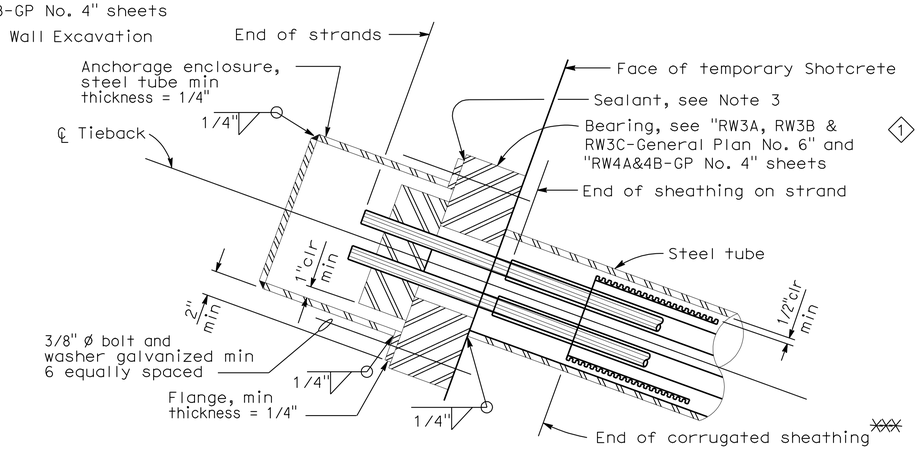

ALTERNATIVE Y

✳✳✳Alternative B tendon only

ANCHORAGE ENCLOSURE DETAILS

SPECIAL DETAILS

Tracy L. Bertram
DESIGN OVERSIGHT Tracy L Bertram
1-7-10
SIGN OFF DATE

◇1 Modified note

	BY	CHECKED
DESIGN	H. MISTRY	P. PARK
DETAILS	H. MISTRY	P. PARK
QUANTITIES	P. PARK	K. WONG

PREPARED FOR THE STATE OF CALIFORNIA DEPARTMENT OF TRANSPORTATION

HARSHAD MISTRY
PROJECT ENGINEER

BRIDGE No.
POST MILE

RETAINING WALL DETAILS
TIEBACK WALL DETAILS NO. 3

DESIGN DETAIL SHEET (ENGLISH) (REV. 2/25/05)

ORIGINAL SCALE IN INCHES FOR REDUCED PLANS 0 1 2 3

CU 04264
EA 264141

DISREGARD PRINTS BEARING EARLIER REVISION DATES
REVISION DATES (PRELIMINARY STAGE ONLY) 3/13/09 8/03/09 11/06/09 12/09/09

SHEET 136 OF 171

FILE => 23E0015X-g-2twd03.dgn

USERNAME => trlenard DATE PLOTTED => 23-NOV-2010 TIME PLOTTED => 08:59

DIST	COUNTY	ROUTE	POST MILES TOTAL PROJECT	SHEET No	TOTAL SHEETS
04	Nap,Sol	12	2.8/3.3, 0.0/2.6	576	617

P.K. Chen 12/09/09
REGISTERED STRUCTURAL ENGINEER DATE

11-22-10
PLANS APPROVAL DATE

REGISTERED PROFESSIONAL ENGINEER PO-KANG CHEN No. S3112 Exp. 9/30/11 STRUCTURAL STATE OF CALIFORNIA

The State of California or its officers or agents shall not be responsible for the accuracy or completeness of electronic copies of this plan sheet.

SOLANO TRANSPORTATION AUTHORITY
ONE HARBOR CENTER, SUITE 130
SUISUN CITY, CA 94585

MARK THOMAS & COMPANY, INC.
1960 ZANKER ROAD
SAN JOSE, CA 95112

Notes:
1. Typical Tieback Wall details & reinforcing to be continuous through notch area at electrolier. Shown reinforcement will be in addition to typical Tieback Wall reinforcement.
2. Additional reinforcing bars to be shaped to suit and extend 3'-0" beyond the shaped notch at electrolier, see Section.
3. Straddle reinforcement so as not to interfere with Anchor bolts.
4. For 'View A-A', see "Soil Nail Wall Details No. 10" sheet.

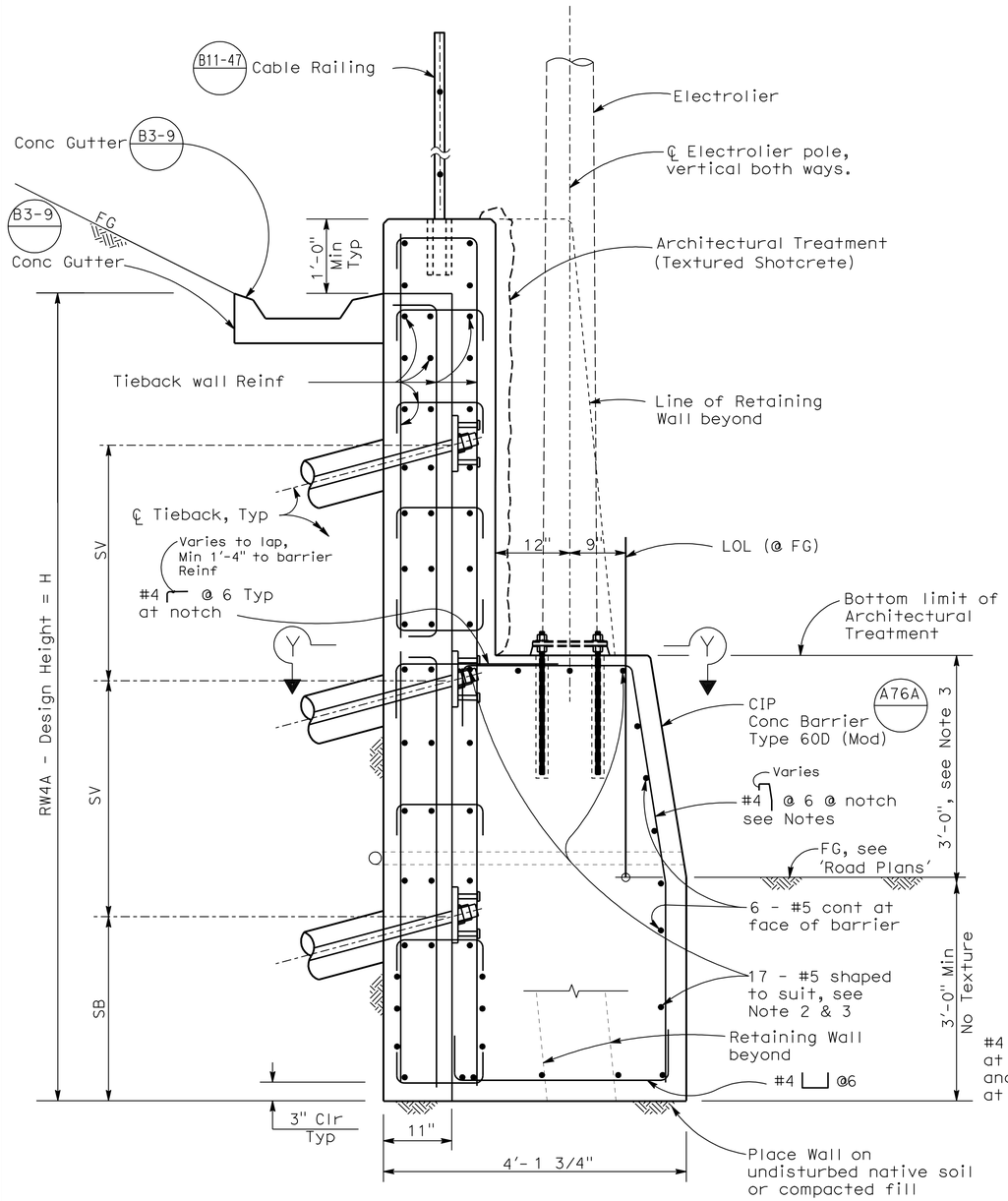

SECTION AT ELECTROLIER
RW4A - JCR2 Sta 287+90.80
1"= 1'-0"

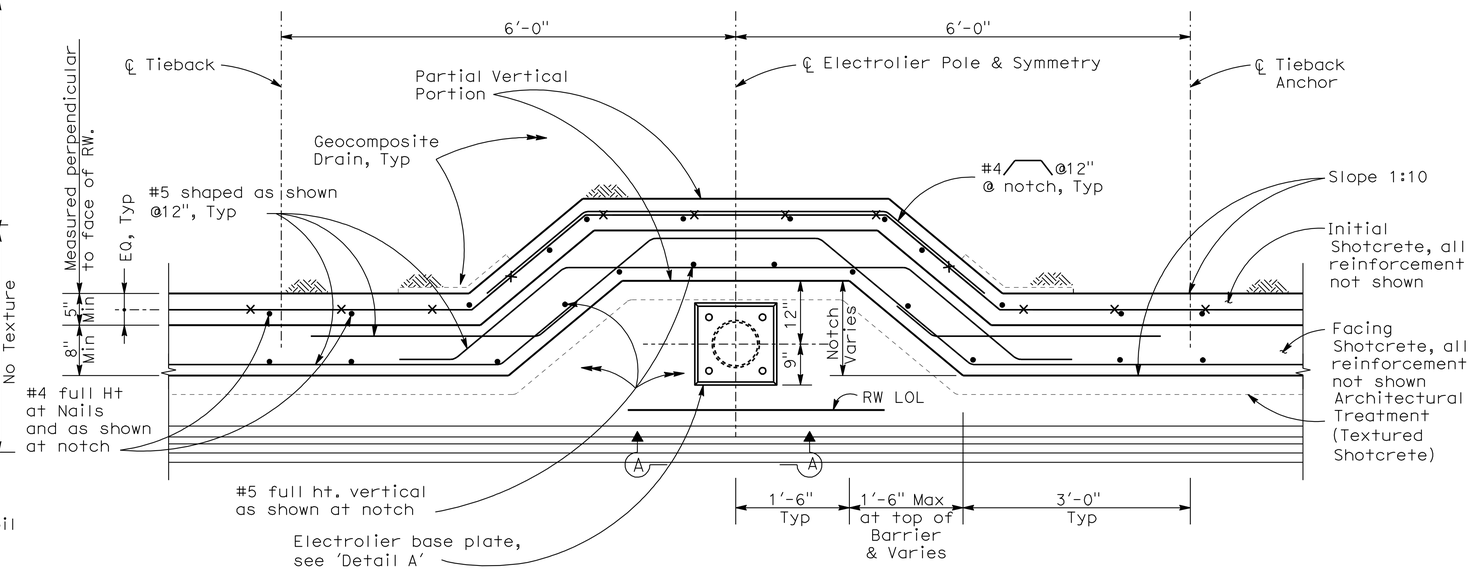

PLAN

SECTION Y-Y
1"= 1'-0"

Tracy L. Bertram
DESIGN OVERSIGHT Tracy L Bertram
1-7-10
SIGN OFF DATE

DESIGN	BY H. MISTRY	CHECKED P. PARK	
DETAILS	BY H. MISTRY	CHECKED P. PARK	
QUANTITIES	BY P. PARK	CHECKED K. WONG	

PREPARED FOR THE STATE OF CALIFORNIA DEPARTMENT OF TRANSPORTATION

HARSHAD MISTRY
PROJECT ENGINEER

BRIDGE No.
POST MILE

RETAINING WALL DETAILS
TIEBACK WALL DETAILS No. 4

DESIGN DETAIL SHEET (ENGLISH) (REV. 2/25/05)

ORIGINAL SCALE IN INCHES FOR REDUCED PLANS 0 1 2 3

CU 04264
EA 264141

DISREGARD PRINTS BEARING EARLIER REVISION DATES

REVISION DATES (PRELIMINARY STAGE ONLY): ~~3/13/09~~ ~~8/03/09~~ ~~11/06/09~~ 12/09/09

SHEET 137 OF 171

FILE => 23E0015X-g-2twd04.dgn

USERNAME => trlenard DATE PLOTTED => 23-NOV-2010 TIME PLOTTED => 08:59

DIST	COUNTY	ROUTE	POST MILES TOTAL PROJECT	SHEET No	TOTAL SHEETS
04	Nap,Sol	12	2.8/3.3, 0.0/2.6	577	617

P.K. Chen 12/09/09
REGISTERED STRUCTURAL ENGINEER DATE

11-22-10
PLANS APPROVAL DATE

REGISTERED PROFESSIONAL ENGINEER PO-KANG CHEN No. S3112 Exp. 9/30/11 STRUCTURAL STATE OF CALIFORNIA

The State of California or its officers or agents shall not be responsible for the accuracy or completeness of electronic copies of this plan sheet.

SOLANO TRANSPORTATION AUTHORITY
ONE HARBOR CENTER, SUITE 130
SUISUN CITY, CA 94585

MARK THOMAS & COMPANY, INC.
1960 ZANKER ROAD
SAN JOSE, CA 95112

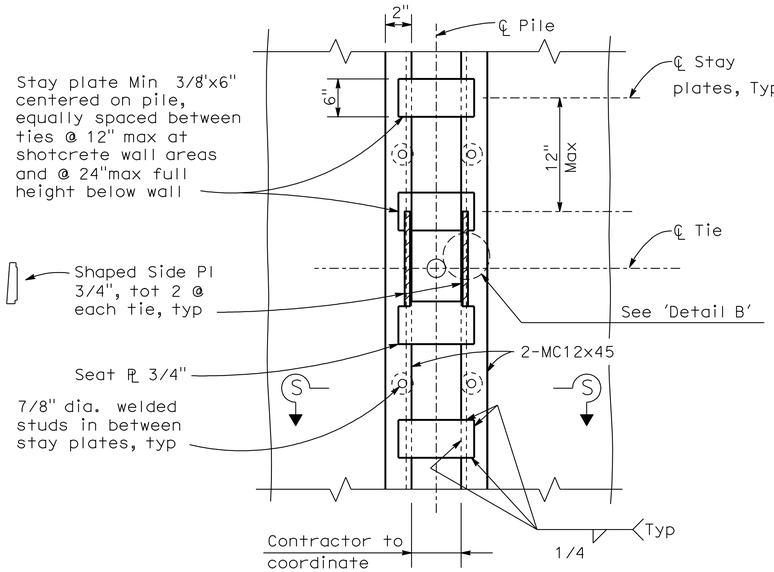

VIEW A-A
No Scale

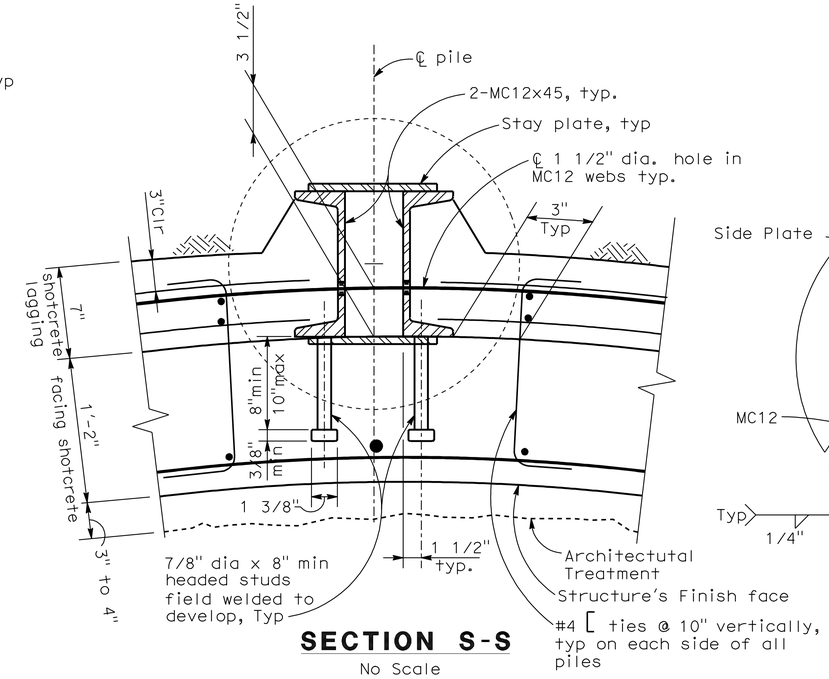

SECTION S-S
No Scale

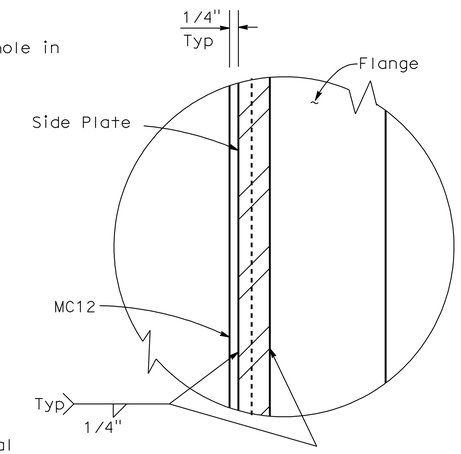

DETAIL B
No Scale

Notes:

1. Contractor shall verify all controlling field dimensions before ordering or fabricating any material.
2. Outer face horizontal reinforcement shall be shaped to keep 3" clearance to structural wall face. Use continuous bar as far as practical and splice only in the mid-distance between piles with 48" lap.
3. Inner face horizontal reinforcing bars shall be continuous as far as practical and shall be spliced over pile with 36" lap.
4. For Pile numberes, respective radii and Offsets, see 'Table A' on "Structure Plans 4 & 5" sheets.

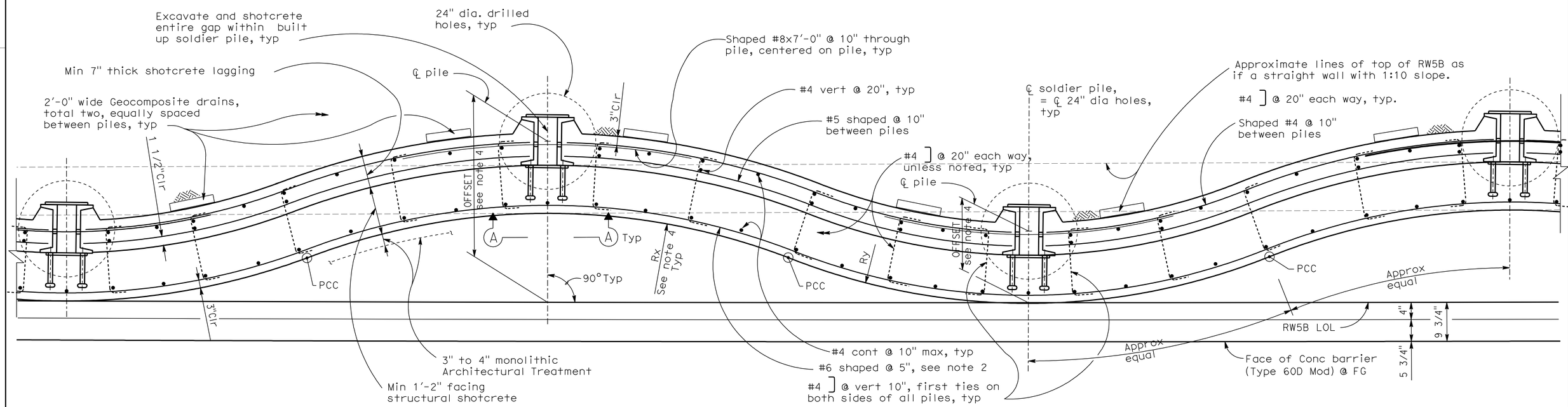

RW5B SOLDIER PILE TIE BACK WALL - REINF. DETAIL

1"=1'-0"

Tracy L Bertram
DESIGN OVERSIGHT
1-7-10
SIGN OFF DATE

	BY	CHECKED
DESIGN	H MISTRY	P CHEN
DETAILS	H. MISTRY	P CHEN
QUANTITIES	K WONG	S GARAPALLY

PREPARED FOR THE STATE OF CALIFORNIA DEPARTMENT OF TRANSPORTATION

HARSHAD MISTRY
PROJECT ENGINEER

BRIDGE No.
POST MILE

RETAINING WALL DETAILS

SOLDIER PILE TIEBACK WALL DETAILS No. 1

DESIGN DETAIL SHEET (ENGLISH) (REV. 2/25/05)

ORIGINAL SCALE IN INCHES FOR REDUCED PLANS 0 1 2 3

CU 04264
EA 264141

DISREGARD PRINTS BEARING EARLIER REVISION DATES

REVISION DATES (PRELIMINARY STAGE ONLY): ~~3/13/09~~ ~~8/03/09~~ ~~11/06/09~~ 12/09/09

SHEET 138 OF 171

FILE => 23E0015X-g-3sptwd01.dgn

USERNAME => trienard DATE PLOTTED => 23-NOV-2010 TIME PLOTTED => 08:59

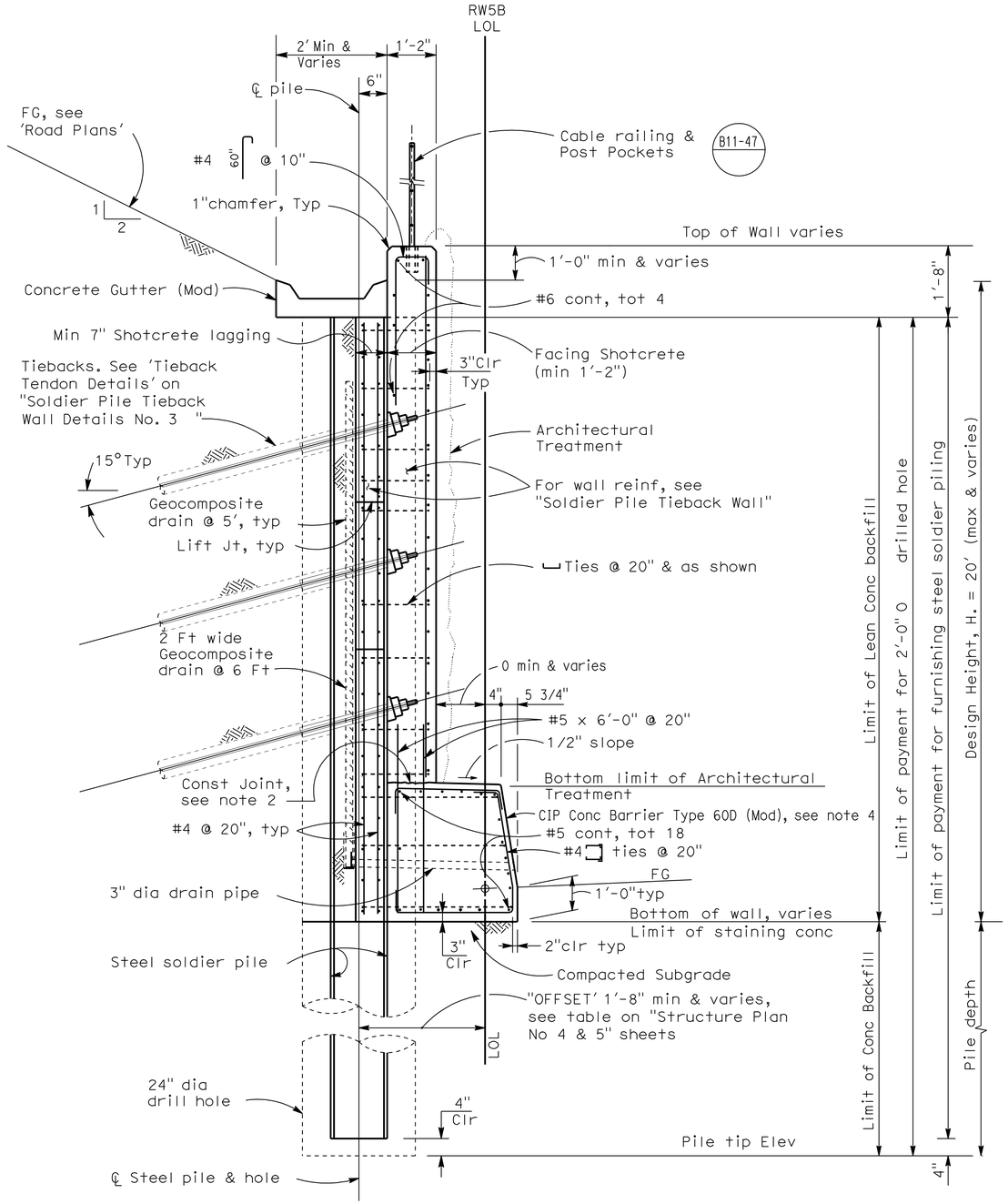

Note: For tieback wall height & pile depth, see Elevations on "Structure Plan" sheets.

SECTION A-A

No scale

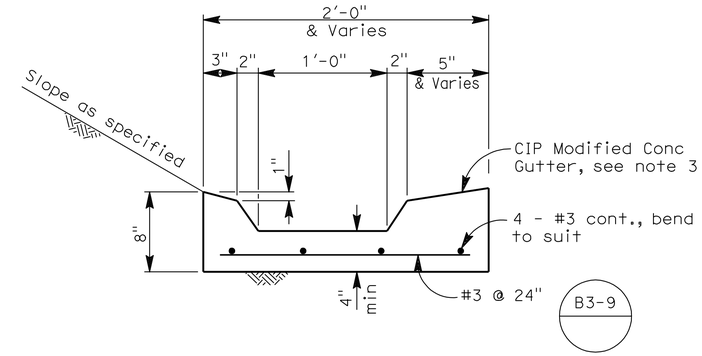

MODIFIED GUTTER DETAIL

No Scale

DIST	COUNTY	ROUTE	POST MILES TOTAL PROJECT	SHEET No	TOTAL SHEETS
04	Nap,Sol	12	2.8/3.3, 0.0/2.6	578	617

P. K. Chen 12/09/09
REGISTERED STRUCTURAL ENGINEER DATE

11-22-10
PLANS APPROVAL DATE

REGISTERED PROFESSIONAL ENGINEER PO-KANG CHEN No. S3112 Exp. 9/30/11 STRUCTURAL STATE OF CALIFORNIA

The State of California or its officers or agents shall not be responsible for the accuracy or completeness of electronic copies of this plan sheet.

SOLANO TRANSPORTATION AUTHORITY
ONE HARBOR CENTER, SUITE 130
SUISUN CITY, CA 94585

MARK THOMAS & COMPANY, INC.
1960 ZANKER ROAD
SAN JOSE, CA 95112

Notes:

1. Contractor shall field verify all controlling field dimensions before ordering or fabricating any material
2. At construction joints, roughen to existing or previously hardened concrete to 1/4" amplitude and clean per specifications prior to following concrete pour.
3. Modified Concrete Gutter shall have weakened plane (1/4"Rad x 1/2" deep scored) joints at 20'-0" (at least dimension location) and expansion joints at 40'-0".
4. Cast-in-place concrete barrier Type 60D (modified) at soldier pile shall have weakened plane (1/4"Rad x 1" deep scored) joints at 20'-0" at each even pile number locations to all exposed faces. All reinforcing bars shall be continuous through these joints.
5. For 2'-0" wide Geocomposite drain details, see "Soil Nail Walls Details No 5" sheet.

Tracy L. Bertram
DESIGN OVERSIGHT Tracy L Bertram
1-7-10
SIGN OFF DATE

DESIGN DETAIL SHEET (ENGLISH) (REV. 2/25/05)

	BY	CHECKED
DESIGN	H MISTRY	P CHEN
DETAILS	H. MISTRY	P CHEN
QUANTITIES	K WONG	S GARAPALLY

ORIGINAL SCALE IN INCHES FOR REDUCED PLANS 0 1 2 3

PREPARED FOR THE STATE OF CALIFORNIA DEPARTMENT OF TRANSPORTATION

HARSHAD MISTRY
PROJECT ENGINEER

CU 04264
EA 264141

BRIDGE No.
POST MILE

RETAINING WALL DETAILS

SOLDIER PILE TIEBACK WALL DETAILS No. 2

DISREGARD PRINTS BEARING EARLIER REVISION DATES

REVISION DATES (PRELIMINARY STAGE ONLY) 3/13/09 8/03/09 11/06/09 12/09/09

SHEET 139 OF 171

FILE => 23E0015X-g-3sptwd02.dgn

USERNAME => trlenard DATE PLOTTED => 23-NOV-2010 TIME PLOTTED => 08:59

DIST	COUNTY	ROUTE	POST MILES TOTAL PROJECT	SHEET No	TOTAL SHEETS
04	Nap,Sol	12	2.8/3.3, 0.0/2.6	579	617

P.K. Chen 12/09/09
REGISTERED STRUCTURAL ENGINEER DATE

11-22-10
PLANS APPROVAL DATE

REGISTERED PROFESSIONAL ENGINEER PO-KANG CHEN No. S3112 Exp. 9/30/11 STRUCTURAL STATE OF CALIFORNIA

The State of California or its officers or agents shall not be responsible for the accuracy or completeness of electronic copies of this plan sheet.

SOLANO TRANSPORTATION AUTHORITY
ONE HARBOR CENTER, SUITE 130
SUISUN CITY, CA 94585

MARK THOMAS & COMPANY, INC.
1960 ZANKER ROAD
SAN JOSE, CA 95112

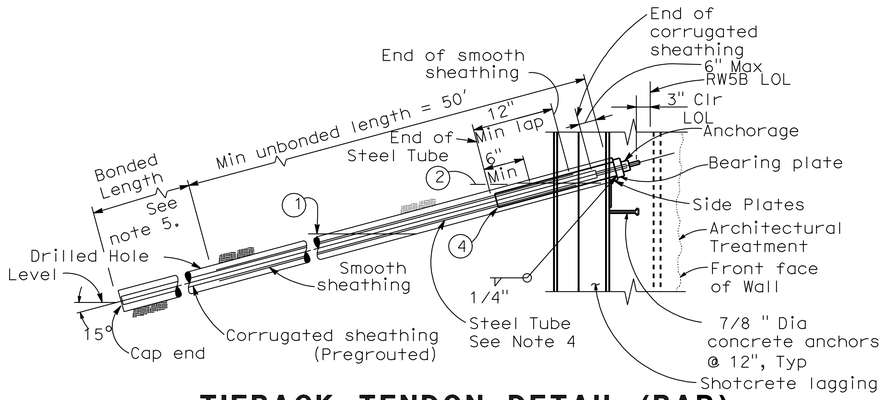

TIEBACK TENDON DETAIL (BAR)

No Scale

NOTES AND SYMBOLS:

1. The Contractor shall verify all controlling field dimensions before ordering or fabricating any material.
2. Tendon anchorage assembly details not shown.
3. 3" minimum cover over tieback anchorage required.
4. Steel tube welded to bearing plate (Min length = 3.5 Ft Min thickness = 0.2"). Galvanize assembly after fabrication.
5. Required bond length and bonding methods within shown limitations shall be determined by the Contractor.

(1) Level of initial grouting in drilled hole.
(2) Level of secondary grouting
(3) Level of initial grouting inside corrugated sheating.
(4) Internal compression seal between corrugated sheathing and smooth sheathing.

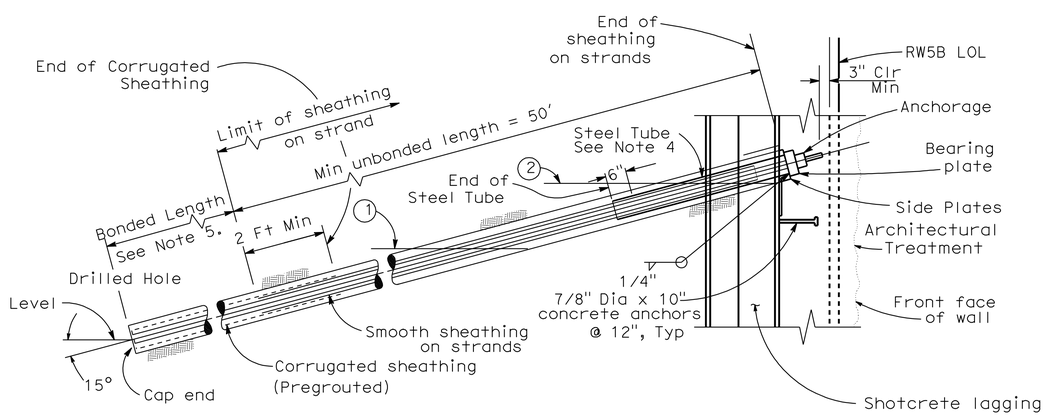

TIEBACK TENDON DETAIL (STRAND) ALTERNATIVE A

No Scale

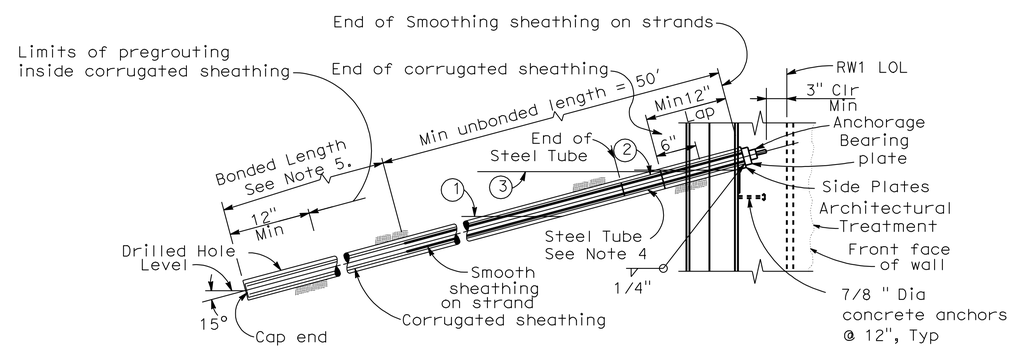

TIEBACK TENDON DETAIL (STRAND) ALTERNATIVE B

No Scale

Tracy L. Bertram
DESIGN OVERSIGHT Tracy L Bertram

1-7-10
SIGN OFF DATE

DESIGN DETAIL SHEET (ENGLISH) (REV. 2/25/05)

	BY	CHECKED
DESIGN	H MISTRY	P CHEN
DETAILS	H. MISTRY	P CHEN
QUANTITIES	K WONG	S GARAPALLY

ORIGINAL SCALE IN INCHES FOR REDUCED PLANS 0 1 2 3

PREPARED FOR THE STATE OF CALIFORNIA DEPARTMENT OF TRANSPORTATION

HARSHAD MISTRY
PROJECT ENGINEER

BRIDGE No.
POST MILE

RETAINING WALL DETAILS

SOLDIER PILE TIEBACK WALL DETAILS No. 3

CU 04264
EA 264141

DISREGARD PRINTS BEARING EARLIER REVISION DATES

REVISION DATES (PRELIMINARY STAGE ONLY): ~~3/13/09~~ ~~8/03/09~~ ~~11/06/09~~ 12/09/09

SHEET 140 OF 171

FILE => 23E0015X-g-3sptwd03.dgn

USERNAME => tfienard DATE PLOTTED => 23-NOV-2010 TIME PLOTTED => 08:59

Notes:

1. Base of wall to be placed against undisturbed material or compacted fill.
2. Center geocomposite strips between Tieback columns.
3. ⊕ Indicates Tieback locations.

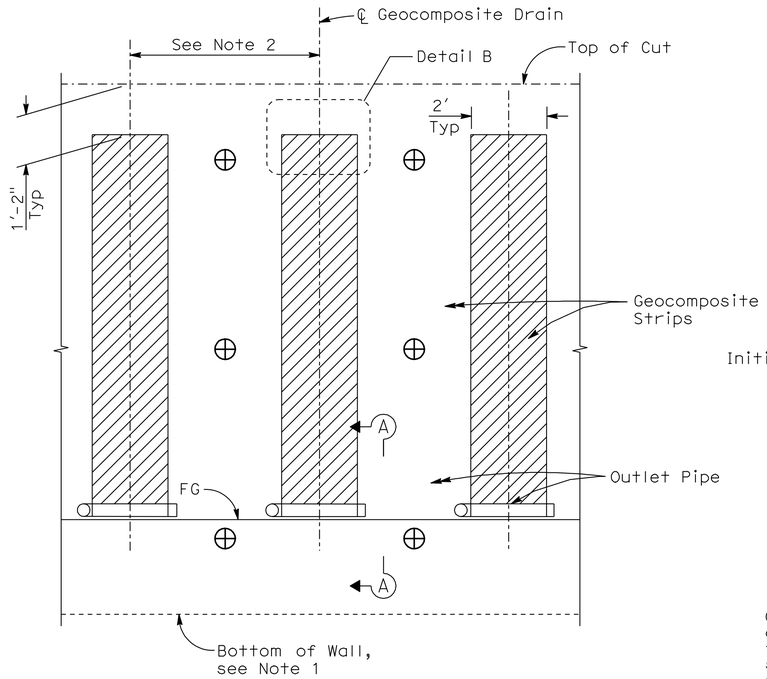

WALL PART ELEVATION

No Scale

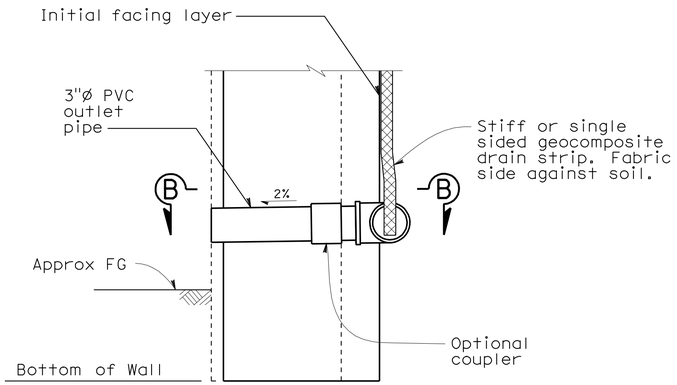

WALL DRAIN DETAIL AT WEEPHOLE

SECTION A-A

No scale

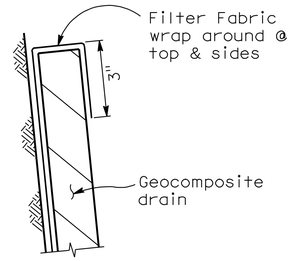

DETAIL B

No Scale

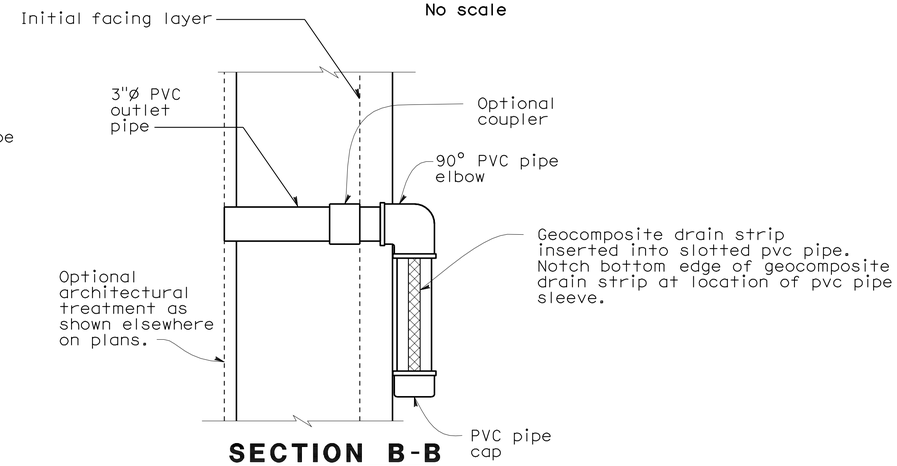

SECTION B-B

No Scale

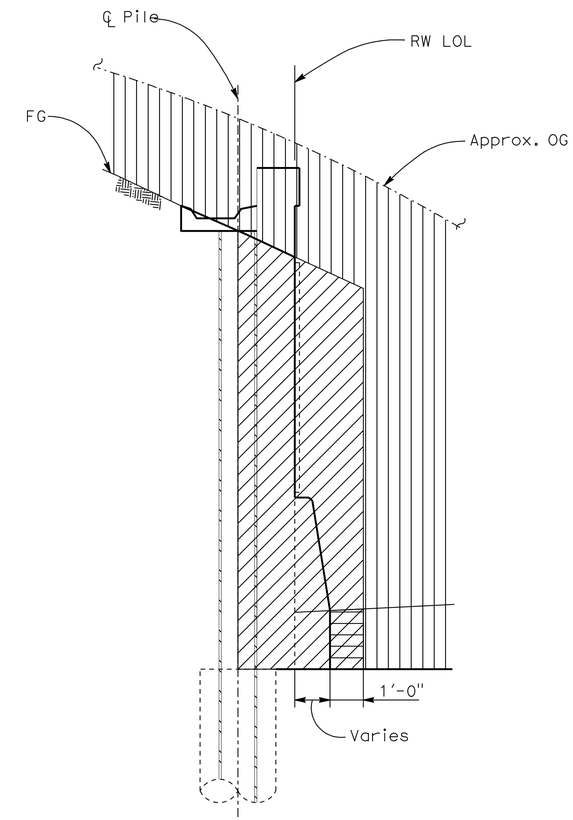

LIMITS OF PAYMENT FOR EXCAVATION AND BACKFILL

No Scale

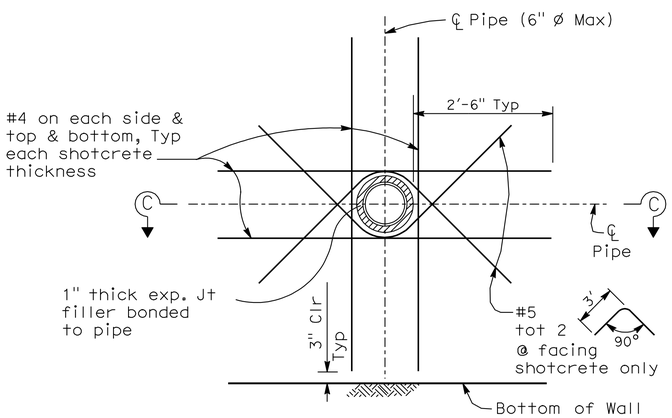

REINFORCEMENT AT PIPE OPENINGS

No Scale

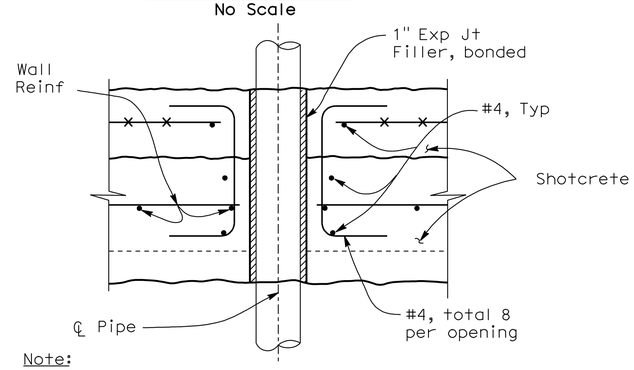

Note:

All reinforcement to clear opening by 2" minimum.
Reinforcement shown is in addition to shotcrete wall reinforcement.

PLAN

SECTION C-C

No Scale

DIST	COUNTY	ROUTE	POST MILES TOTAL PROJECT	SHEET No	TOTAL SHEETS
04	Nap,Sol	12	2.8/3.3, 0.0/2.6	580	617

P.K. Chen 12/09/09
REGISTERED STRUCTURAL ENGINEER DATE

11-22-10
PLANS APPROVAL DATE

REGISTERED PROFESSIONAL ENGINEER PO-KANG CHEN No. S3112 Exp. 9/30/11 STRUCTURAL STATE OF CALIFORNIA

The State of California or its officers or agents shall not be responsible for the accuracy or completeness of electronic copies of this plan sheet.

SOLANO TRANSPORTATION AUTHORITY
ONE HARBOR CENTER, SUITE 130
SUISUN CITY, CA 94585

MARK THOMAS & COMPANY, INC.
1960 ZANKER ROAD
SAN JOSE, CA 95112

Tracy L Bertram
DESIGN OVERSIGHT Tracy L Bertram
1-7-10
SIGN OFF DATE

DESIGN DETAIL SHEET (ENGLISH) (REV. 2/25/05)

	BY	CHECKED
DESIGN	H MISTRY	P CHEN
DETAILS	H. MISTRY	P CHEN
QUANTITIES	K WONG	S GARAPALLY

ORIGINAL SCALE IN INCHES FOR REDUCED PLANS 0 1 2 3

PREPARED FOR THE STATE OF CALIFORNIA DEPARTMENT OF TRANSPORTATION

HARSHAD MISTRY
PROJECT ENGINEER

CU 04264
EA 264141

BRIDGE No.
POST MILE

RETAINING WALL DETAILS

SOLDIER PILE TIEBACK WALL DETAILS No. 4

DISREGARD PRINTS BEARING EARLIER REVISION DATES

REVISION DATES (PRELIMINARY STAGE ONLY): ~~3/13/09~~ ~~8/03/09~~ ~~11/06/09~~ 12/09/09

SHEET 141 OF 171

FILE => 23E0015X-g-3sptwd04.dgn

USERNAME => $NAME DATE PLOTTED => 23-NOV-2010 TIME PLOTTED => 08:59

DIST	COUNTY	ROUTE	POST MILES TOTAL PROJECT	SHEET No	TOTAL SHEETS
04	Nap,Sol	12	2.8/3.3, 0.0/2.6	581	617

P.K. Chen
REGISTERED STRUCTURAL ENGINEER — DATE 12/09/09

11-22-10
PLANS APPROVAL DATE

REGISTERED PROFESSIONAL ENGINEER — PO-KANG CHEN — No. S3112 — Exp. 9/30/11 — STRUCTURAL — STATE OF CALIFORNIA

The State of California or its officers or agents shall not be responsible for the accuracy or completeness of electronic copies of this plan sheet.

SOLANO TRANSPORTATION AUTHORITY
ONE HARBOR CENTER, SUITE 130
SUISUN CITY, CA 94585

MARK THOMAS & COMPANY, INC.
1960 ZANKER ROAD
SAN JOSE, CA 95112

Note:

1. Unless otherwise noted, roughen concrete to 1/4 " amplitude and clean per specifications prior to next concrete pour at all construction joints.
2. Stain treatment shall be applied to all exposed Wall and Concrete Barrier surfaces.

Retaining Wall No. 8 - Type 1 (Mod) DATA								
H	6′	8′	10′	12′	14′	16′	18′	20′
W	4′-6"	5′-6"	6′-6"	7′-6"	8′-6"	9′-6"	10′-6"	11′-6"
C	1′-6"	1′-9"	2′-3"	2′-6"	2′-10"	3′-0"	3′-6"	3′-10"
B	3′-0"	3′-9"	4′-3"	5′-0"	5′-8"	6′-6"	7′-0"	7′-8"
F	1′-4"	1′-4"	1′-4"	1′-6"	1′-8"	1′-8"	2′-0"	2′-2"
Batter	-	-	-	-	1/8:12	1/4:12	3/8:12	1/2:12
K	8"	8"	12"	12"	16"	16"	18"	18"
ⓒ bars	#5 @ 8	#5 @ 8	#5 @ 8	#5 @ 8	#5 @ 16	#5 @ 16	#7 @ 16	#9 @ 16
ⓒ bars	-	-	-	-	#8 @ 16	#9 @ 16	#11 @ 16	#11 @ 16
ⓓ bars	#5 @ 12	#5 @ 8	#5 @ 8	#6 @ 8	#8 @ 12	#9 @ 12	#9 @ 6	#11 @ 8
ⓔ bars	-	-	-	-	#5 @ 12	#5 @ 12	#5 @ 6	#5 @ 6

Note: For Retaining Wall notes and details not shown, see B3-1

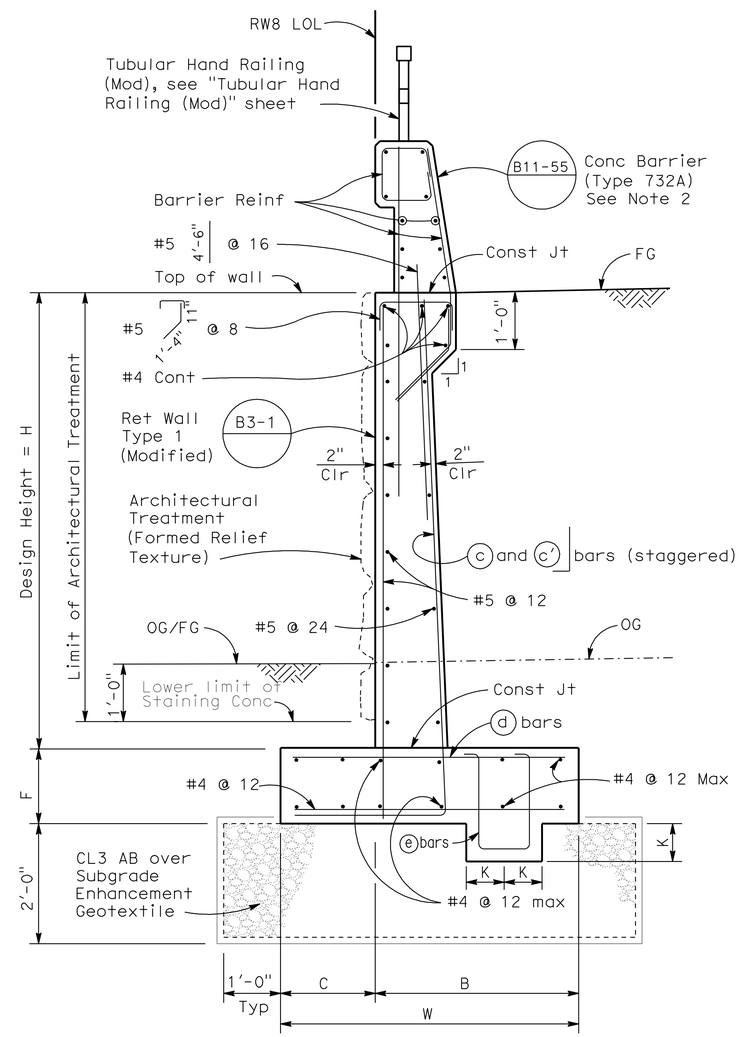

RW8 - TYPICAL SECTION

3/4" = 1′-0"

DESIGN OVERSIGHT Tracy L Bertram	DESIGN	BY H. MISTRY	CHECKED P. PARK	PREPARED FOR THE STATE OF CALIFORNIA DEPARTMENT OF TRANSPORTATION	HARSHAD MISTRY PROJECT ENGINEER
1-7-10 SIGN OFF DATE	DETAILS	BY H. MISTRY	CHECKED P. PARK		
	QUANTITIES	BY P. PARK	CHECKED S. GARAPALLY		

BRIDGE No.
POST MILE

RETAINING WALL DETAILS

RETAINING WALL DETAILS No. 1

DESIGN DETAIL SHEET (ENGLISH) (REV. 2/25/05)

ORIGINAL SCALE IN INCHES FOR REDUCED PLANS 0 1 2 3

CU 04264
EA 264141

DISREGARD PRINTS BEARING EARLIER REVISION DATES → REVISION DATES (PRELIMINARY STAGE ONLY) ~~3/13/09~~ ~~8/03/09~~ ~~11/06/09~~ 12/09/09

SHEET 142 OF 171

FILE => 23E0015X-g-4rwd01.dgn

USERNAME => hrlenard DATE PLOTTED => 23-NOV-2010 TIME PLOTTED => 10:03

DIST	COUNTY	ROUTE	POST MILES TOTAL PROJECT	SHEET No	TOTAL SHEETS
04	Nap,Sol	12	2.8/3.3, 0.0/2.6	582	617

P.K. Chen 12/09/09
REGISTERED STRUCTURAL ENGINEER DATE

11-22-10
PLANS APPROVAL DATE

REGISTERED PROFESSIONAL ENGINEER PO-KANG CHEN No. S3112 Exp. 9/30/11 STRUCTURAL STATE OF CALIFORNIA

The State of California or its officers or agents shall not be responsible for the accuracy or completeness of electronic copies of this plan sheet.

SOLANO TRANSPORTATION AUTHORITY
ONE HARBOR CENTER, SUITE 130
SUISUN CITY, CA 94585

MARK THOMAS & COMPANY, INC.
1960 ZANKER ROAD
SAN JOSE, CA 95112

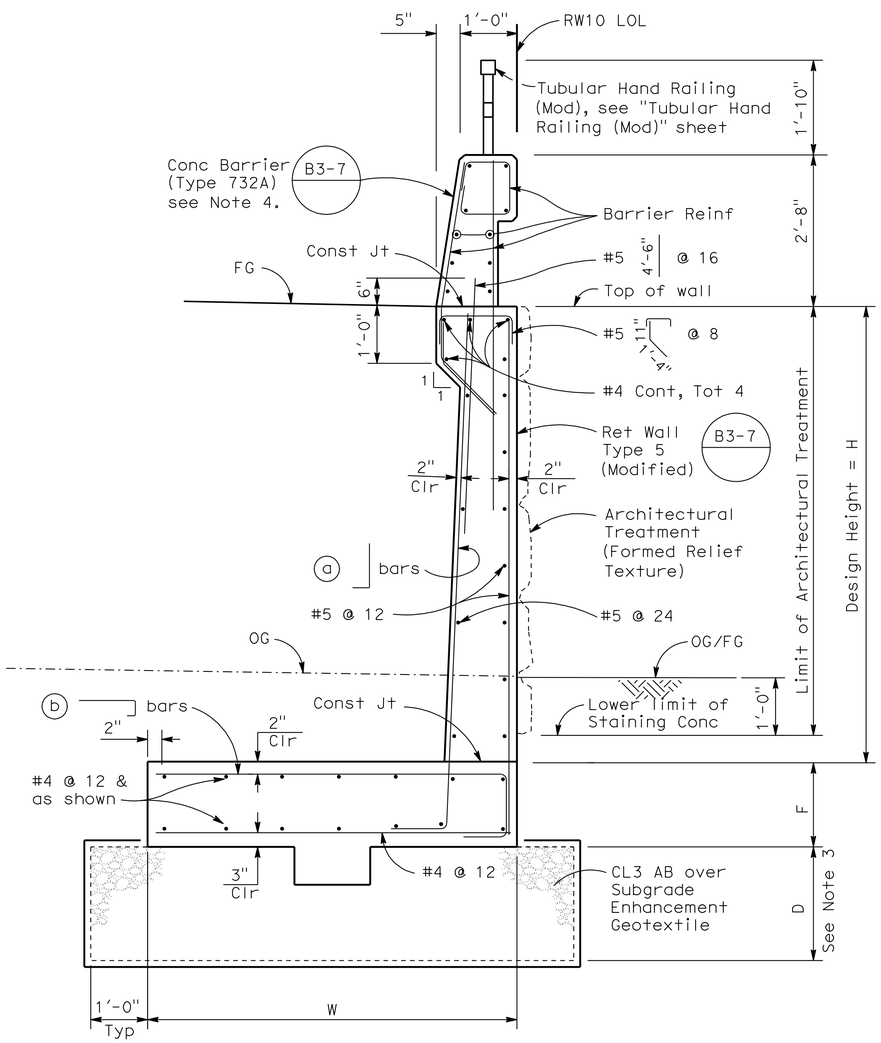

RW10 - TYPICAL SECTION

3/4" = 1'-0"

Notes:

1. Unless otherwise noted, roughen concrete to 1/4" amplitude and clean per specifications prior to next concrete pour at all construction joints.
2. Top of Wall Elevations shall be laid out in field based on 2'-8" above generalized ES finished grades. Ignore local ES depressions at drain inlets.
3. 'D' = Depth of CL3 AB. D = 3 feet from RW10 LOL Sta 297+00 to RW10 LOL 297+50. D = 2 feet at all other locations for RW10.
4. Stain treatment shall be applied to all exposed wall and concrete barrier surfaces.

Retaining Wall Type 5 (Mod) DATA				
H	6'	8'	10'	12'
W	4'-6"	5'-6"	7'-6"	9'-0"
F	1'-4"	1'-4"	1'-6"	1'-8"
Batter	None	None	100:3	100:6
ⓐ	#5 @ 8	#5 @ 8	#5 @ 6	#6 @ 8
ⓑ	#5 @ 8	#5 @ 8	#5 @ 6	#6 @ 8

Note: For Retaining Wall details not shown, see B3-7

Tracy L. Bertram
DESIGN OVERSIGHT Tracy L Bertram
1-7-10
SIGN OFF DATE

DESIGN DETAIL SHEET (ENGLISH) (REV. 2/25/05)

	BY	CHECKED
DESIGN	H. MISTRY	P. PARK
DETAILS	H. MISTRY	P. PARK
QUANTITIES	P. PARK	S. GARAPALLY

ORIGINAL SCALE IN INCHES FOR REDUCED PLANS 0 1 2 3

PREPARED FOR THE STATE OF CALIFORNIA DEPARTMENT OF TRANSPORTATION

HARSHAD MISTRY
PROJECT ENGINEER

CU 04264
EA 264141

BRIDGE No.
POST MILE

RETAINING WALL DETAILS

RETAINING WALL DETAILS No. 2

DISREGARD PRINTS BEARING EARLIER REVISION DATES → REVISION DATES (PRELIMINARY STAGE ONLY) ~~3/13/09~~ ~~8/03/09~~ ~~11/06/09~~ 12/24/09

SHEET 143 OF 171

FILE => 23E0015X-g-4rwd02.dgn

USERNAME => trlenard DATE PLOTTED => 23-NOV-2010 TIME PLOTTED => 10:03

DIST	COUNTY	ROUTE	POST MILES TOTAL PROJECT	SHEET No	TOTAL SHEETS
04	Nap,Sol	12	2.8/3.3, 0.0/2.6	583	617

P.K. Chen 12/09/09
REGISTERED STRUCTURAL ENGINEER DATE

11-22-10
PLANS APPROVAL DATE

REGISTERED PROFESSIONAL ENGINEER PO-KANG CHEN No. S3112 Exp. 9/30/11 STRUCTURAL STATE OF CALIFORNIA

The State of California or its officers or agents shall not be responsible for the accuracy or completeness of electronic copies of this plan sheet.

SOLANO TRANSPORTATION AUTHORITY
ONE HARBOR CENTER, SUITE 130
SUISUN CITY, CA 94585

MARK THOMAS & COMPANY, INC.
1960 ZANKER ROAD
SAN JOSE, CA 95112

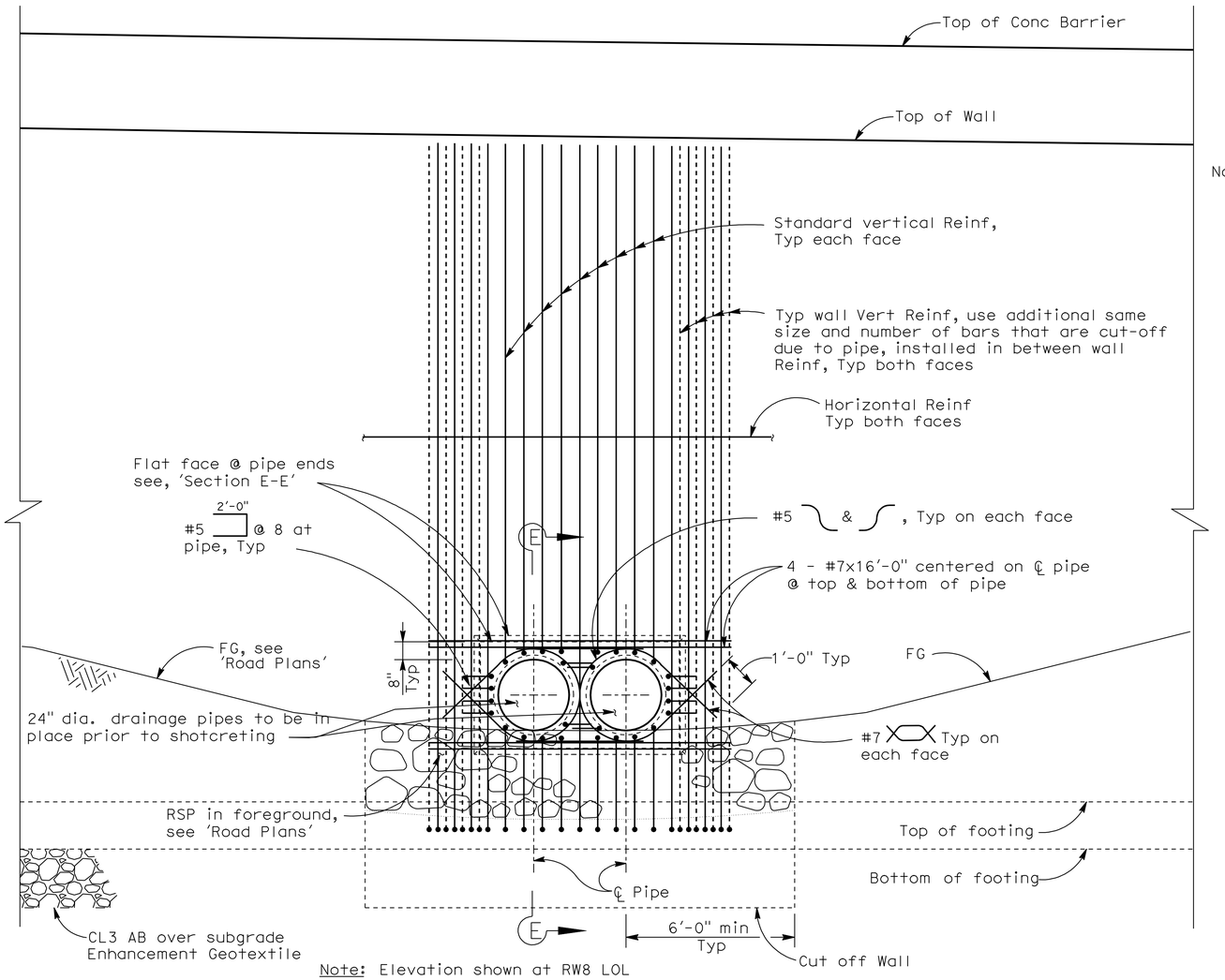

Note: Elevation shown at RW8 LOL

RW8 - ELEVATION AT CULVERT OPENING

No Scale

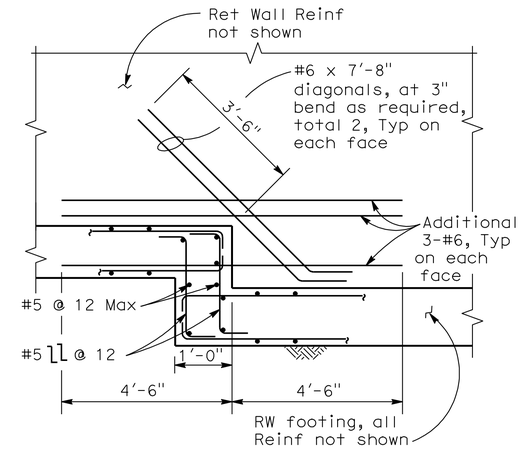

Note: Use shown additional reinforcement at wall where wall's weakened plane joint or expansion joint are not associated with footing step.

DETAIL A

1/2" = 1'-0"

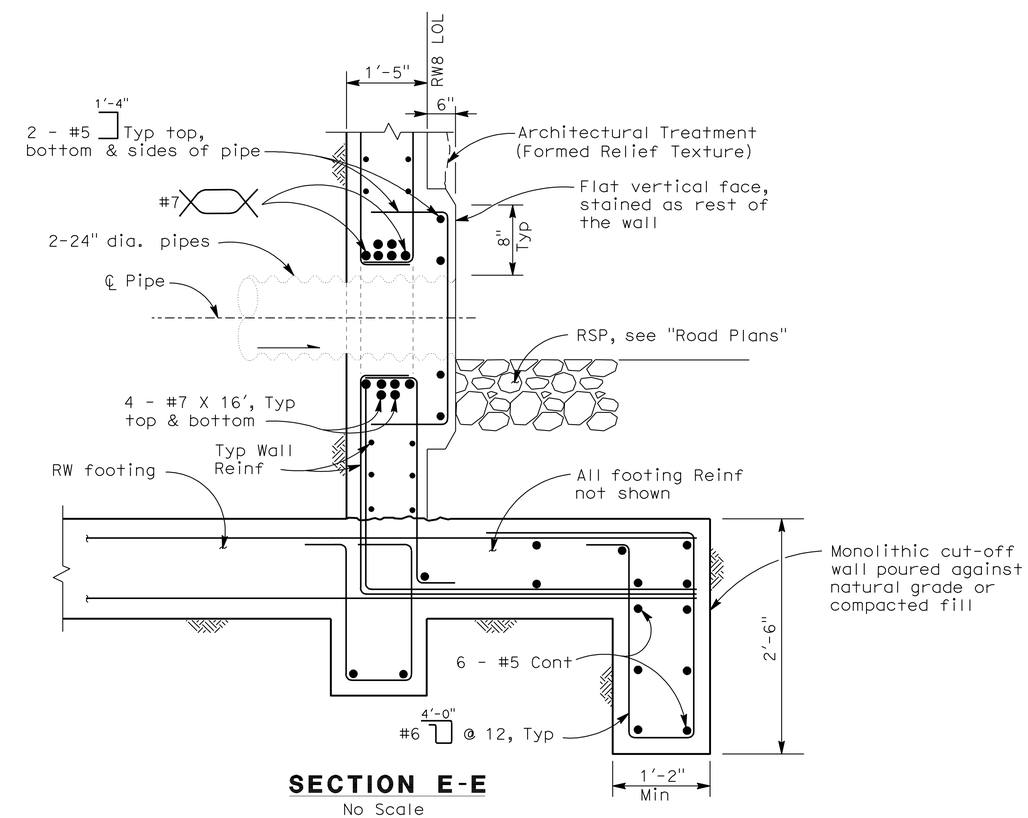

SECTION E-E

No Scale

DESIGN	BY H. MISTRY	CHECKED P. PARK	
DETAILS	BY H. MISTRY	CHECKED P. PARK	
QUANTITIES	BY P. PARK	CHECKED S. GARAPALLY	

Tracy L. Bertram
DESIGN OVERSIGHT Tracy L Bertram
1-7-10
SIGN OFF DATE

DESIGN DETAIL SHEET (ENGLISH) (REV. 2/25/05)

ORIGINAL SCALE IN INCHES FOR REDUCED PLANS 0 1 2 3

PREPARED FOR THE STATE OF CALIFORNIA DEPARTMENT OF TRANSPORTATION

HARSHAD MISTRY
PROJECT ENGINEER

CU 04264
EA 264141

BRIDGE No.
POST MILE

RETAINING WALL DETAILS

RETAINING WALL DETAILS No. 3

DISREGARD PRINTS BEARING EARLIER REVISION DATES → REVISION DATES (PRELIMINARY STAGE ONLY) ~~3/13/09~~ ~~8/03/09~~ ~~11/06/09~~ 12/09/09

SHEET 144 OF 171

FILE => 23E0015X-g-4rwd03.dgn

USERNAME => trlenard DATE PLOTTED => 23-NOV-2010 TIME PLOTTED => 10:04

DIST	COUNTY	ROUTE	POST MILES TOTAL PROJECT	SHEET No	TOTAL SHEETS
04	Nap,Sol	12	2.8/3.3, 0.0/2.6	584	617

P.K. Chen 12/09/09
REGISTERED STRUCTURAL ENGINEER DATE

11-22-10
PLANS APPROVAL DATE

REGISTERED PROFESSIONAL ENGINEER PO-KANG CHEN No. S3112 Exp. 9/30/11 STRUCTURAL STATE OF CALIFORNIA

The State of California or its officers or agents shall not be responsible for the accuracy or completeness of electronic copies of this plan sheet.

SOLANO TRANSPORTATION AUTHORITY
ONE HARBOR CENTER, SUITE 130
SUISUN CITY, CA 94585

MARK THOMAS & COMPANY, INC.
1960 ZANKER ROAD
SAN JOSE, CA 95112

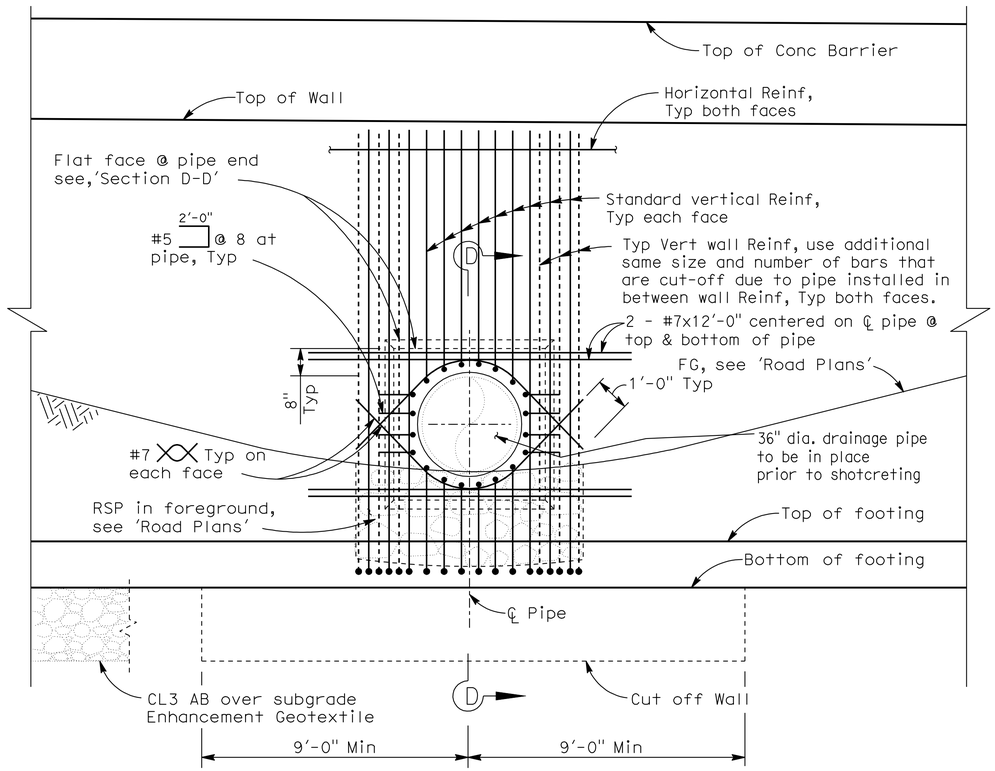

Note: Elevation shown at RW10 LOL

RW10 - ELEVATION AT CULVERT OPENING

No Scale

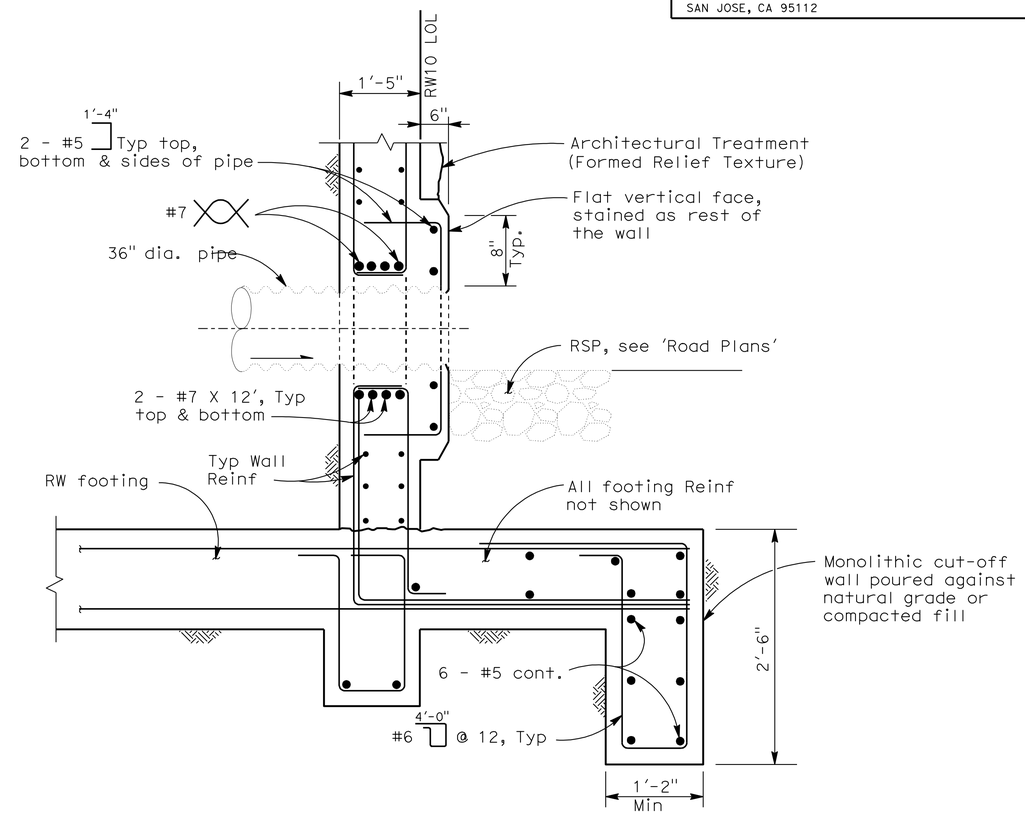

SECTION D-D

No Scale

DESIGN OVERSIGHT Tracy L Bertram
1-7-10
SIGN OFF DATE

DESIGN DETAIL SHEET (ENGLISH) (REV. 2/25/05)

	BY	CHECKED
DESIGN	H. MISTRY	P. PARK
DETAILS	H. MISTRY	P. PARK
QUANTITIES	P. PARK	S. GARAPALLY

ORIGINAL SCALE IN INCHES FOR REDUCED PLANS 0 1 2 3

PREPARED FOR THE STATE OF CALIFORNIA DEPARTMENT OF TRANSPORTATION

HARSHAD MISTRY
PROJECT ENGINEER

CU 04264
EA 264141

BRIDGE No.
POST MILE

RETAINING WALL DETAILS

RETAINING WALL DETAILS No. 4

DISREGARD PRINTS BEARING EARLIER REVISION DATES

REVISION DATES (PRELIMINARY STAGE ONLY): ~~3/13/09~~ ~~8/03/09~~ ~~11/06/09~~ 12/09/09

SHEET 145 OF 171

FILE => 23E0015X-g-4rwd04.dgn

USERNAME => $NAME DATE PLOTTED => 23-NOV-2010 TIME PLOTTED => 10:04

DIST	COUNTY	ROUTE	POST MILES TOTAL PROJECT	SHEET No	TOTAL SHEETS
04	Nap,Sol	12	2.8/3.3, 0.0/2.6	585	617

P.K. Chen
REGISTERED STRUCTURAL ENGINEER — DATE 12/09/09

11-22-10
PLANS APPROVAL DATE

REGISTERED PROFESSIONAL ENGINEER — PO-KANG CHEN — No. S3112 — Exp. 9/30/11 — STRUCTURAL — STATE OF CALIFORNIA

The State of California or its officers or agents shall not be responsible for the accuracy or completeness of electronic copies of this plan sheet.

SOLANO TRANSPORTATION AUTHORITY
ONE HARBOR CENTER, SUITE 130
SUISUN CITY, CA 94585

MARK THOMAS & COMPANY, INC.
1960 ZANKER ROAD
SAN JOSE, CA 95112

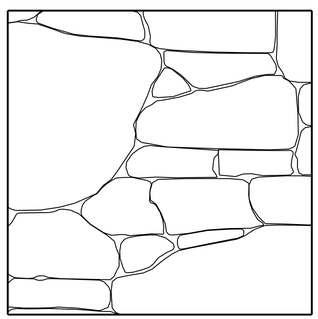

ELEVATION

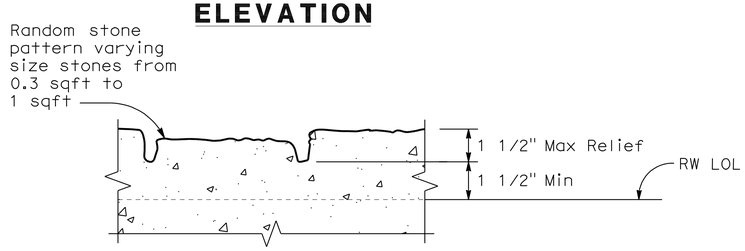

SECTION

ARCHITECTURAL TREATMENT - FORMED RELIEF TEXTURE

No Scale

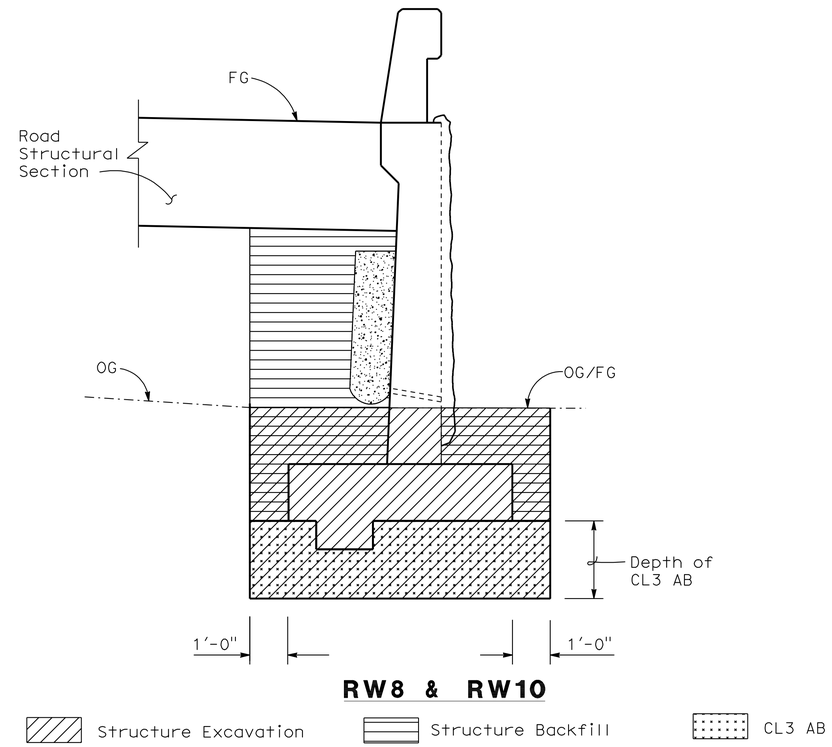

RW8 & RW10

LIMITS OF PAYMENT FOR EXCAVATION AND BACKFILL

No Scale

Tracy L. Bertram
DESIGN OVERSIGHT — Tracy L Bertram

1-7-10
SIGN OFF DATE

	BY	CHECKED
DESIGN	H. MISTRY	P. PARK
DETAILS	H. MISTRY	P. PARK
QUANTITIES	P. PARK	S. GARAPALLY

PREPARED FOR THE STATE OF CALIFORNIA DEPARTMENT OF TRANSPORTATION

HARSHAD MISTRY
PROJECT ENGINEER

BRIDGE No.
POST MILE

RETAINING WALL DETAILS

RETAINING WALL DETAILS No. 5

DESIGN DETAIL SHEET (ENGLISH) (REV. 2/25/05)

ORIGINAL SCALE IN INCHES FOR REDUCED PLANS 0 1 2 3

CU 04264
EA 264141

DISREGARD PRINTS BEARING EARLIER REVISION DATES → REVISION DATES (PRELIMINARY STAGE ONLY): ~~3/13/09~~ ~~8/03/09~~ ~~11/06/09~~ 12/24/09

SHEET 146 OF 171

FILE => 23E0015X-g-4rwd05.dgn

USERNAME => trlenard DATE PLOTTED => 23-NOV-2010 TIME PLOTTED => 10:04

DIST	COUNTY	ROUTE	POST MILES TOTAL PROJECT	SHEET No	TOTAL SHEETS
04	Nap,Sol	12	2.8/3.3, 0.0/2.6	586	617

P.K. Chen 12/09/09
REGISTERED STRUCTURAL ENGINEER DATE

11-22-10
PLANS APPROVAL DATE

REGISTERED PROFESSIONAL ENGINEER
PO-KANG CHEN
No. S3112
Exp. 9/30/11
STRUCTURAL
STATE OF CALIFORNIA

The State of California or its officers or agents shall not be responsible for the accuracy or completeness of electronic copies of this plan sheet.

SOLANO TRANSPORTATION AUTHORITY
ONE HARBOR CENTER, SUITE 130
SUISUN CITY, CA 94585

MARK THOMAS & COMPANY, INC.
1960 ZANKER ROAD
SAN JOSE, CA 95112

Note:
1. For signs and anchorage mounting brackets, see "Road Plans"

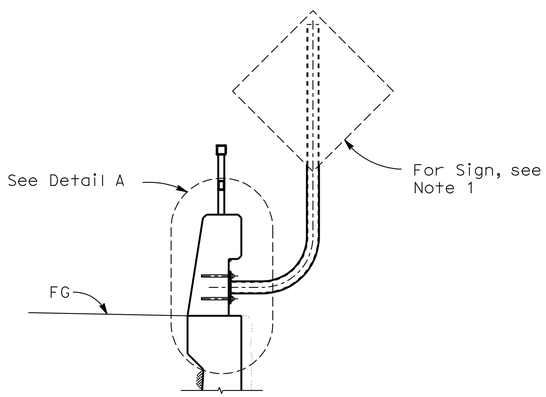

DETAIL AT SIGN INSTALLATION

1/2" = 1'-0"

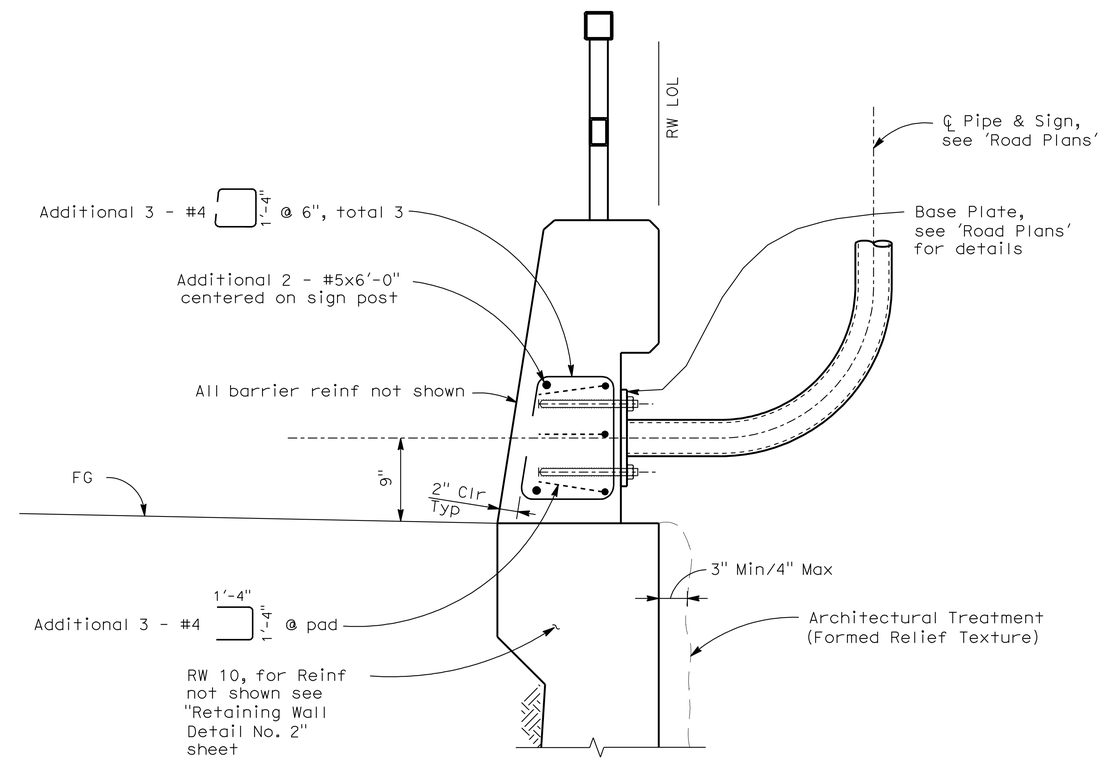

DETAIL A

1 1/2"= 1'-0"

Tracy L. Bertram
DESIGN OVERSIGHT Tracy L Bertram

1-7-10
SIGN OFF DATE

	BY	CHECKED
DESIGN	H. MISTRY	P. PARK
DETAILS	H. MISTRY	P. PARK
QUANTITIES	P. PARK	S. GARAPALLY

PREPARED FOR THE STATE OF CALIFORNIA DEPARTMENT OF TRANSPORTATION

HARSHAD MISTRY
PROJECT ENGINEER

BRIDGE No.
POST MILE

RETAINING WALL DETAILS

RETAINING WALL DETAILS No. 6

DISREGARD PRINTS BEARING EARLIER REVISION DATES

REVISION DATES (PRELIMINARY STAGE ONLY): ~~3/13/09~~ ~~8/03/09~~ ~~11/06/09~~ 12/09/09

SHEET 147 OF 171

DESIGN DETAIL SHEET (ENGLISH) (REV. 2/25/05)
W:\SOLANO TA - 58-0151B SR 12 JAMESON CANYON\STRUCTURES\CADD\XREF\58-0151B-BORDER STRUCTURE DETAILS_22 X 34_SOLANO.DWG 9/4/2008 9:18:30 AM

ORIGINAL SCALE IN INCHES FOR REDUCED PLANS 0 1 2 3

CU 04264
EA 264141

FILE => 23E0015X-g-4rwd06.dgn

USERNAME => trlenard DATE PLOTTED => 23-NOV-2010 TIME PLOTTED => 10:04

DIST	COUNTY	ROUTE	POST MILES TOTAL PROJECT	SHEET No	TOTAL SHEETS
04	Nap,Sol	12	2.8/3.3, 0.0/2.6	587	617

P. K. Chen 12/09/09
REGISTERED STRUCTURAL ENGINEER DATE

11-22-10
PLANS APPROVAL DATE

REGISTERED PROFESSIONAL ENGINEER PO-KANG CHEN No. S3112 Exp. 9/30/11 STRUCTURAL STATE OF CALIFORNIA

The State of California or its officers or agents shall not be responsible for the accuracy or completeness of electronic copies of this plan sheet.

SOLANO TRANSPORTATION AUTHORITY
ONE HARBOR CENTER, SUITE 130
SUISUN CITY, CA 94585

MARK THOMAS & COMPANY, INC.
1960 ZANKER ROAD
SAN JOSE, CA 95112

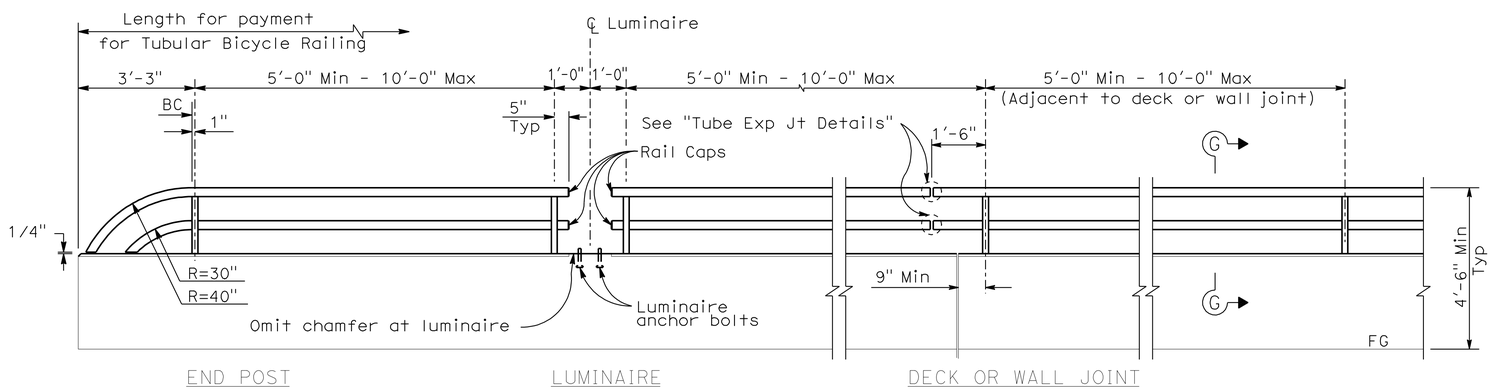

ELEVATION

Notes:

1. The Contractor shall verify all controlling field dimensions before ordering or fabricating any material.
2. Galvanize rail assembly after fabrication.
3. All post shall be vertical.
4. Rail tubes shall be shop bent and fabricated to fit horizontal and vertical curves.
5. Expansion Joints shall be located at 30'-0" Max.
6. Top rail tube shall be continuous over not less than two posts except a short length is permitted near deck or wall joints, electroliers, or other rail discontinuities.
7. For Railing details not shown or noted, see Caltrans 2006 Standard Plan B11-51.

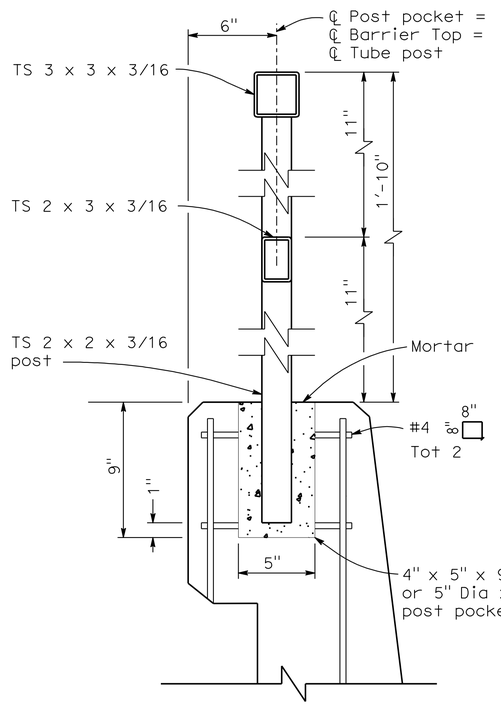

POST ANCHORAGE DETAILS B11-51

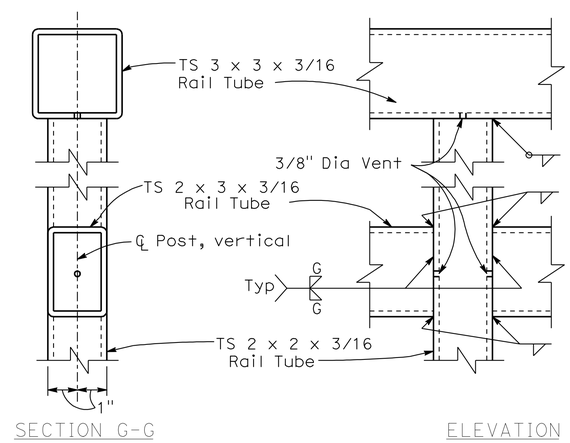

RAIL CONNECTION DETAILS

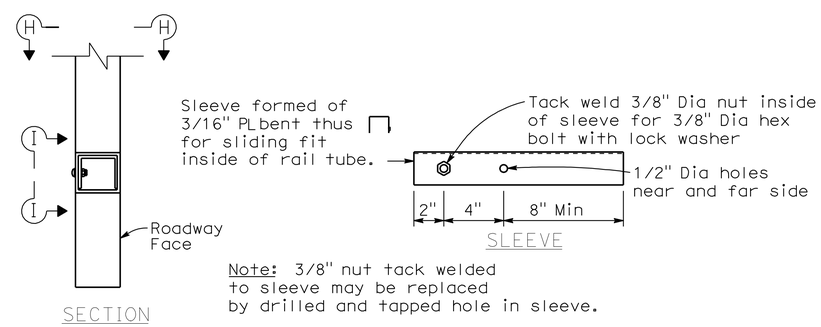

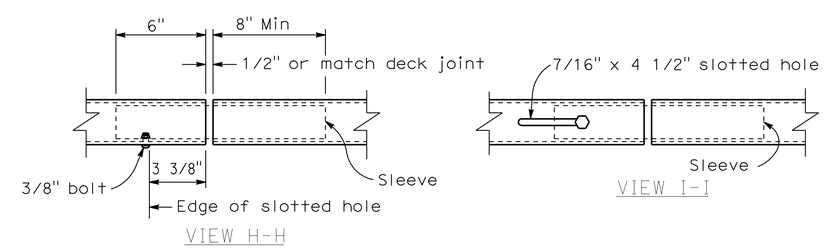

TUBE EXPANSION JOINT DETAILS

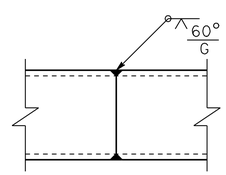

TUBE-WELDED SPLICE

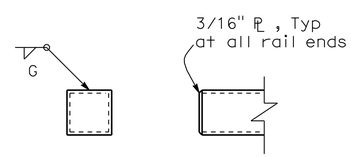

RAIL CAP

Tracy L. Bertram
DESIGN OVERSIGHT Tracy L Bertram

1-7-10
SIGN OFF DATE

	BY	CHECKED
DESIGN	H. MISTRY	P. PARK
DETAILS	H. MISTRY	P. PARK
QUANTITIES	P. PARK	S. GARAPALLY

PREPARED FOR THE STATE OF CALIFORNIA DEPARTMENT OF TRANSPORTATION

HARSHAD MISTRY
PROJECT ENGINEER

BRIDGE No.
POST MILE

RETAINING WALL DETAILS
TUBULAR HANDRAILING (MODIFIED)

DISREGARD PRINTS BEARING EARLIER REVISION DATES → 3/13/09 8/03/09 11/06/09 12/09/09

SHEET 148 OF 171

DESIGN DETAIL SHEET (ENGLISH) (REV. 2/25/05)
W:\SOLANO TA - 58-0151B SR 12 JAMESON CANYON\STRUCTURES\CADD\XREF\58-0151B-BORDER STRUCTURE DETAILS_22 X 34_SOLANO.DWG 9/4/2008 9:18:30 AM

ORIGINAL SCALE IN INCHES FOR REDUCED PLANS 0 1 2 3

CU 04264
EA 264141

FILE => 23E0015X-g-4thm.dgn

USERNAME => trlehard DATE PLOTTED => 23-NOV-2010 TIME PLOTTED => 10:04

DIST	COUNTY	ROUTE	POST MILES TOTAL PROJECT	SHEET No	TOTAL SHEETS
04	Nap,Sol	12	2.8/3.3, 0.0/2.6	588	617

P.K. Chen 12/09/09
REGISTERED STRUCTURAL ENGINEER DATE

11-22-10
PLANS APPROVAL DATE

REGISTERED PROFESSIONAL ENGINEER PO-KANG CHEN No. S3112 Exp. 9/30/11 STRUCTURAL STATE OF CALIFORNIA

The State of California or its officers or agents shall not be responsible for the accuracy or completeness of electronic copies of this plan sheet.

SOLANO TRANSPORTATION AUTHORITY
ONE HARBOR CENTER, SUITE 130
SUISUN CITY, CA 94585

MARK THOMAS & COMPANY, INC.
1960 ZANKER ROAD
SAN JOSE, CA 95112

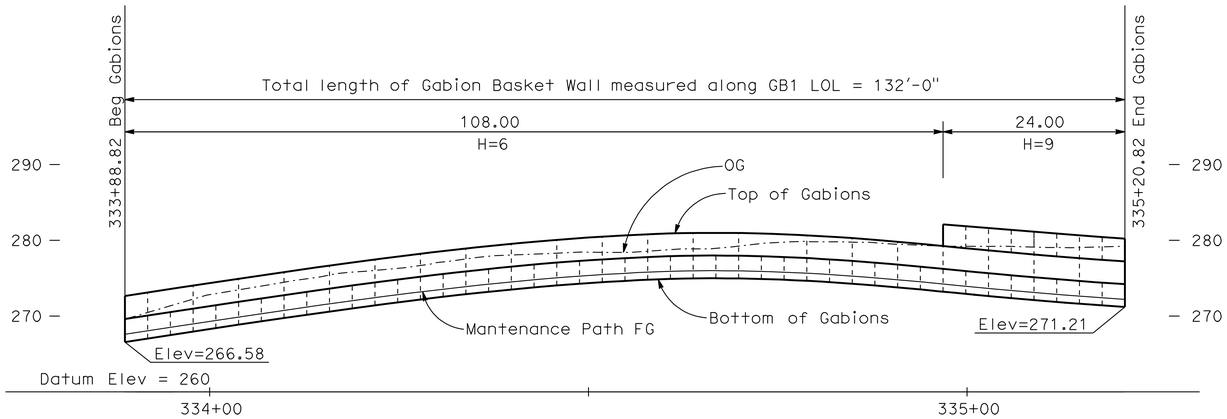

DEVELOPED ELEVATION
1" = 10'

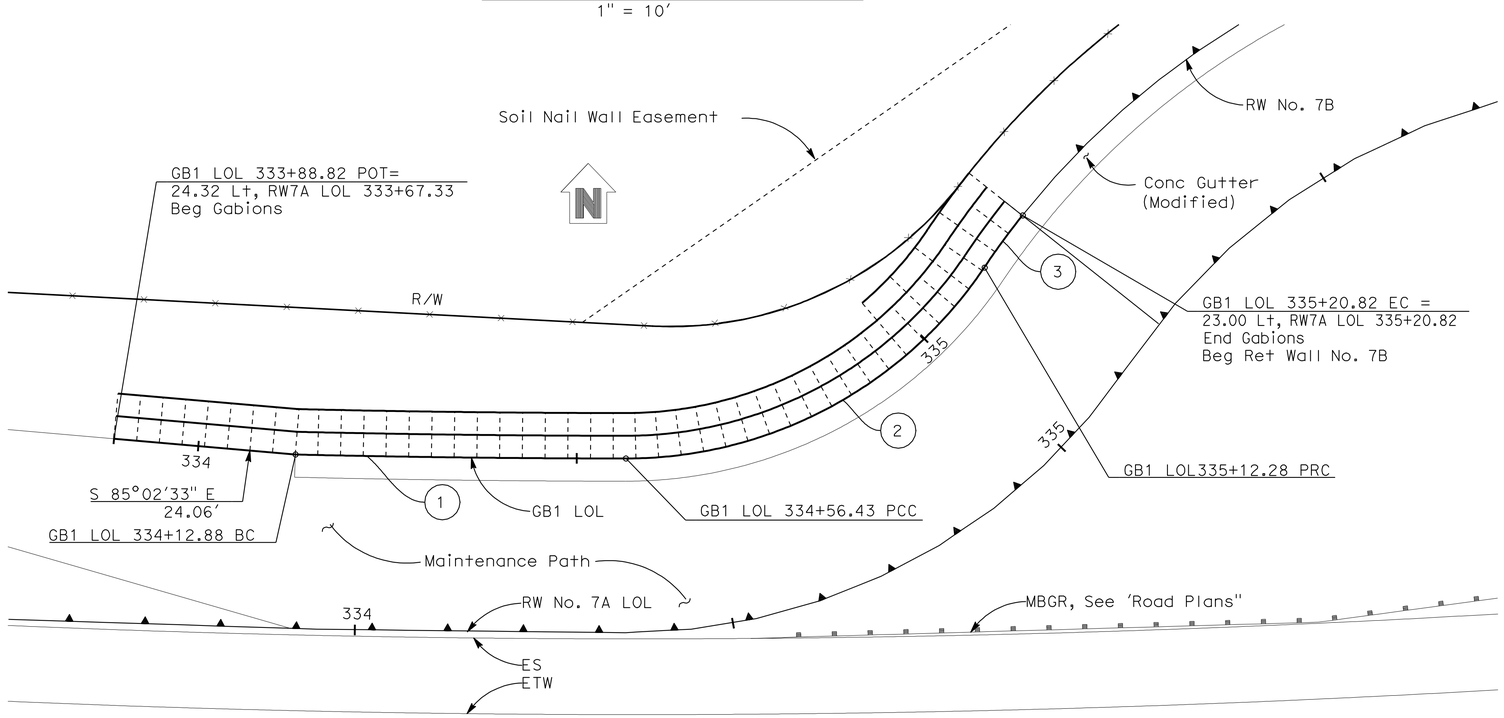

PLAN
1" = 10'

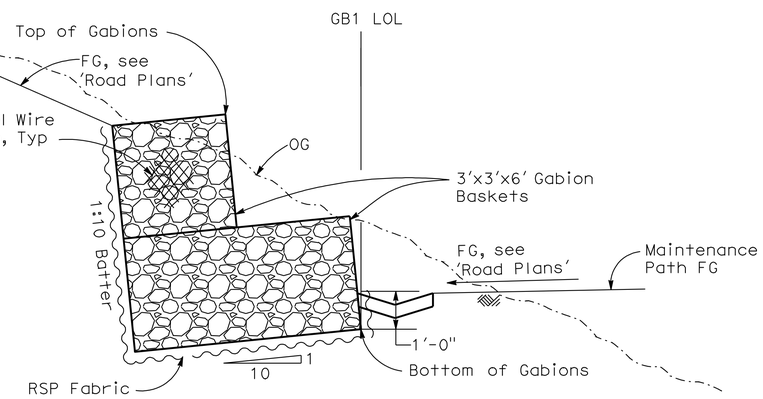

GABIONS - TYPICAL SECTION
1/2" = 1'-0"

CURVE DATA

No.	R	Δ	T	L
1	1933.69'	01°17'26"	21.78'	43.56'
2	57.00'	08°21'59"	30.40'	55.85'
3	108'	08°21'59"	4.27'	8.54'

Tracy L Bertram
DESIGN OVERSIGHT Tracy L Bertram
1-7-10
SIGN OFF DATE

	BY	CHECKED			
DESIGN	H. MISTRY	P. CHEN	LOAD FACTOR DESIGN		
DETAILS	H. MISTRY	P. CHEN	LAYOUT	C HII	F QUACH
QUANTITIES	K. WONG	S. GARAPALLY	SPECIFICATIONS	H MISTRY	PLANS AND SPECS COMPARED P CHEN

PREPARED FOR THE STATE OF CALIFORNIA DEPARTMENT OF TRANSPORTATION

HARSHAD MISTRY
PROJECT ENGINEER

CU 04264
EA 264141

BRIDGE No.
POST MILES

RETAINING WALL DETAILS
GABIONS SLOPE PROTECTION DETAILS

DISREGARD PRINTS BEARING EARLIER REVISION DATES

REVISION DATES (PRELIMINARY STAGE ONLY)					SHEET	OF
~~3/13/09~~	~~8/05/09~~	11/06/09			149	171

DESIGN GENERAL PLAN SHEET (ENGLISH) (REV.2/25/05)

ORIGINAL SCALE IN INCHES FOR REDUCED PLANS 0 1 2 3

FILE => 23E0015X-g-5gslp01.dgn

USERNAME => tfrienard DATE PLOTTED => 23-NOV-2010 TIME PLOTTED => 10:04

DIST	COUNTY	ROUTE	POST MILES TOTAL PROJECT	SHEET No	TOTAL SHEETS
04	Nap,Sol	12	2.8/3.3, 0.0/2.6	589	617

P.K. Chen 12/09/09
REGISTERED STRUCTURAL ENGINEER DATE

11-22-10
PLANS APPROVAL DATE

REGISTERED PROFESSIONAL ENGINEER PO-KANG CHEN No. S3112 Exp. 9/30/11 STRUCTURAL STATE OF CALIFORNIA

The State of California or its officers or agents shall not be responsible for the accuracy or completeness of electronic copies of this plan sheet.

SOLANO TRANSPORTATION AUTHORITY
ONE HARBOR CENTER, SUITE 130
SUISUN CITY, CA 94585

MARK THOMAS & COMPANY, INC.
1960 ZANKER ROAD
SAN JOSE, CA 95112

Notes:

1. Primary Strata Lines drawn on the front elevation are to be used as a guide for layout of primary strata line reinforcement. See "Architectural Treatment" sheet.
2. Secondary Strata Lines drawn on the front elevation are to be used as a general guide. Strata Lines shall be sculpted to mimic local geology.
3. This sheet accurate for Architectural Treatment only.
4. Architectural Treatment shall be continuous throughout the face of the wall.
5. Primary strata lines to be tapered into the top and bottom of wall.
6. Secondary strata lines are not to exceed 2" amplitude.
7. For Architectural Treatment limit see Typical Sections of each wall.

Legend:

Primary strata lines

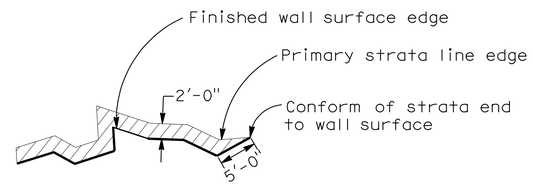

Secondary strata lines

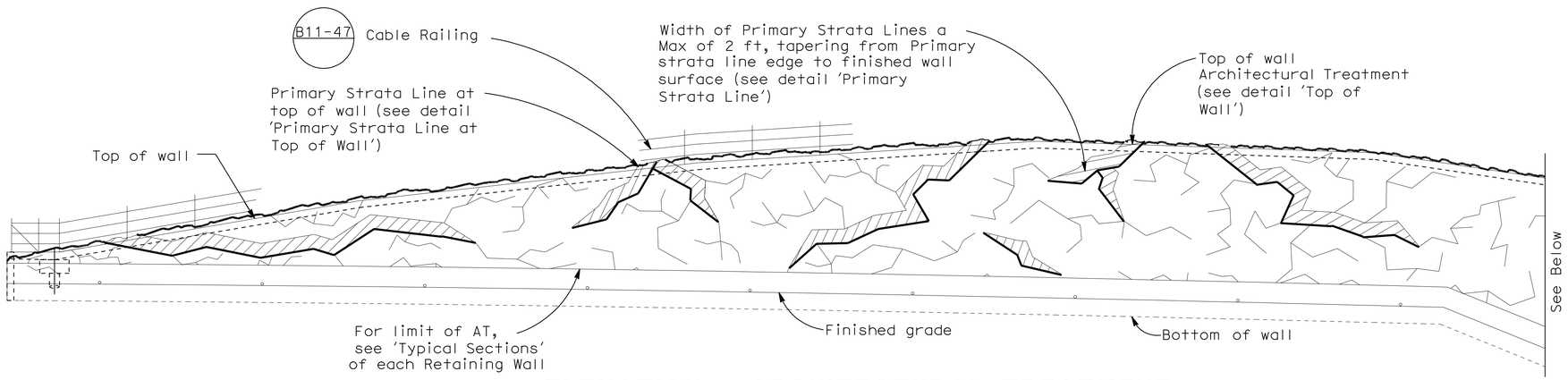

ELEVATION - ARCHITECTURAL TREATMENT

SCALE 1"=10'

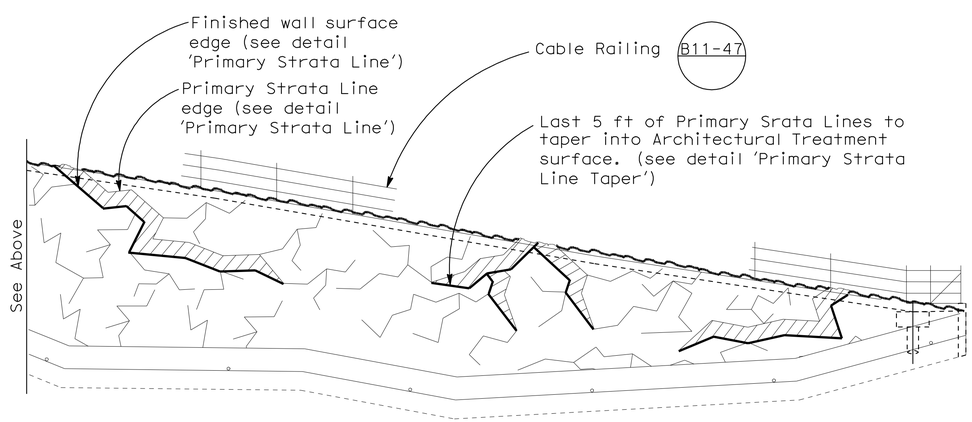

ELEVATION - ARCHITECTURAL TREATMENT

SCALE 1"=10'

Tracy L. Bertram
DESIGN OVERSIGHT Tracy L Bertram
1-7-10
SIGN OFF DATE

	BY	CHECKED
DESIGN	H MISTRY	P CHEN
DETAILS	H. MISTRY	P CHEN
QUANTITIES	K WONG	S GARAPALLY

PREPARED FOR THE STATE OF CALIFORNIA DEPARTMENT OF TRANSPORTATION

HARSHAD MISTRY
PROJECT ENGINEER

BRIDGE No.
POST MILE

RETAINING WALL DETAILS
ARCHITECTURAL TREATMENT

DISREGARD PRINTS BEARING EARLIER REVISION DATES → 3/13/09 8/03/09 11/06/09 12/09/09

REVISION DATES (PRELIMINARY STAGE ONLY) SHEET 150 OF 171

DESIGN DETAIL SHEET (ENGLISH) (REV. 2/25/05)
W:\SOLANO TA - 58-0151B SR 12 JAMESON CANYON\STRUCTURES\CADD\XREF\58-0151B-BORDER STRUCTURE DETAILS_22 X 34_SOLANO.DWG 9/4/2008 9:18:30 AM

ORIGINAL SCALE IN INCHES FOR REDUCED PLANS 0 1 2 3

CU 04264
EA 264141

FILE => 23E0015X-g-6at.dgn

USERNAME => trlenard DATE PLOTTED => 23-NOV-2010 TIME PLOTTED => 10:04

Notes:
1. Max 2" thick unreinforced shotcrete zone for Architectural Treatment.
2. Max 6" thick reinforced shotcrete zone for top of wall and primary strata where occurs Architectural Treatment.
3. See "Architectural Treatment" sheets for strata line.
4. See "Architectural Treatment Details No. 2" sheets for reinforcement detail.
5. Longitudinal bars shall taper to a point and be flush with the finished wall surface at primary strata line ends where it transitions into the wall face.
6. This sheet accurate for Architectural Treatment only.

DIST	COUNTY	ROUTE	POST MILES TOTAL PROJECT	SHEET No	TOTAL SHEETS
04	Nap,Sol	12	2.8/3.3, 0.0/2.6	590	617

P.K. Chen 12/09/09
REGISTERED STRUCTURAL ENGINEER DATE

11-22-10
PLANS APPROVAL DATE

REGISTERED PROFESSIONAL ENGINEER PO-KANG CHEN No. S3112 Exp. 9/30/11 STRUCTURAL STATE OF CALIFORNIA

The State of California or its officers or agents shall not be responsible for the accuracy or completeness of electronic copies of this plan sheet.

SOLANO TRANSPORTATION AUTHORITY
ONE HARBOR CENTER, SUITE 130
SUISUN CITY, CA 94585

MARK THOMAS & COMPANY, INC.
1960 ZANKER ROAD
SAN JOSE, CA 95112

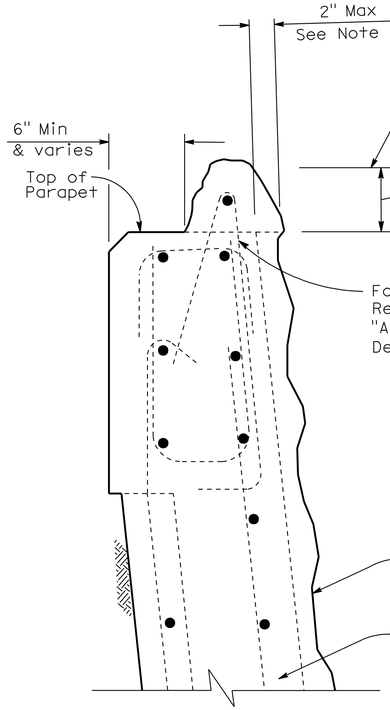

CROSS SECTION
TOP OF WALL
2" = 1'-0"

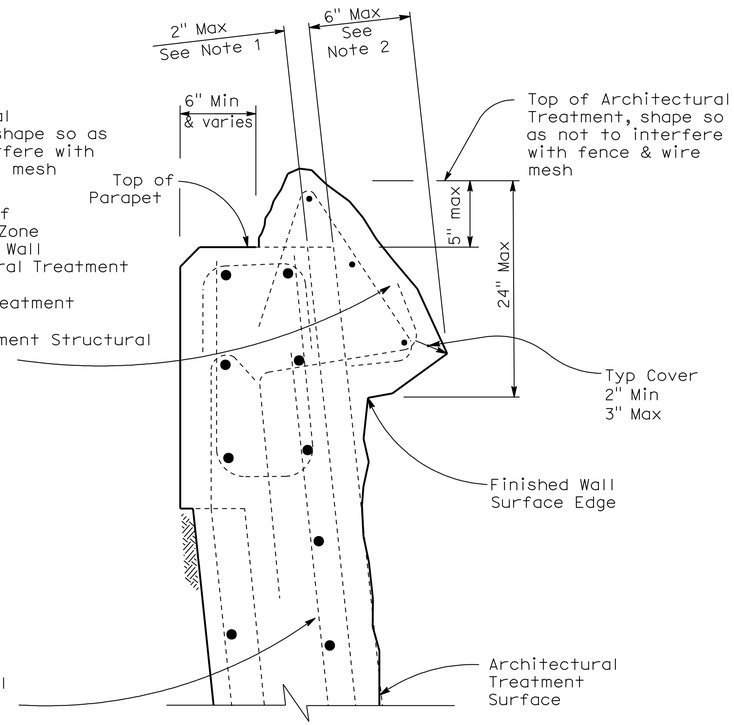

CROSS SECTION
PRIMARY STRATA LINE AT TOP OF WALL
2" = 1'-0"

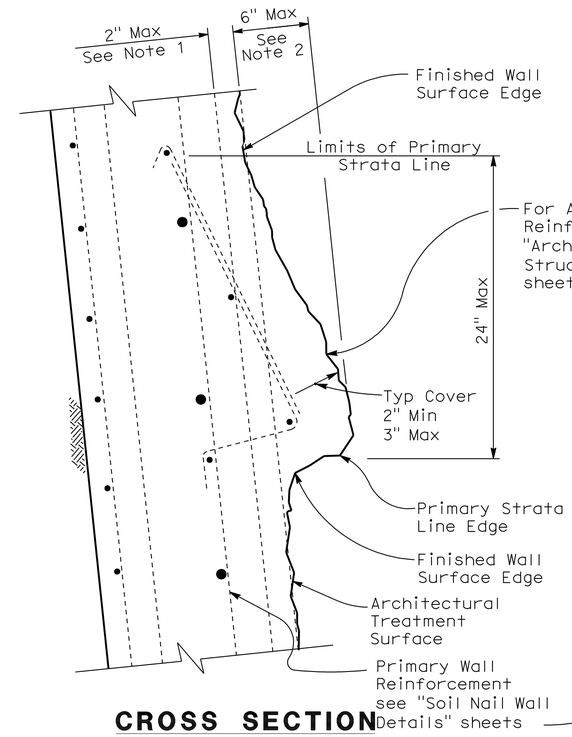

CROSS SECTION
PRIMARY STRATA LINE
2" = 1'-0"

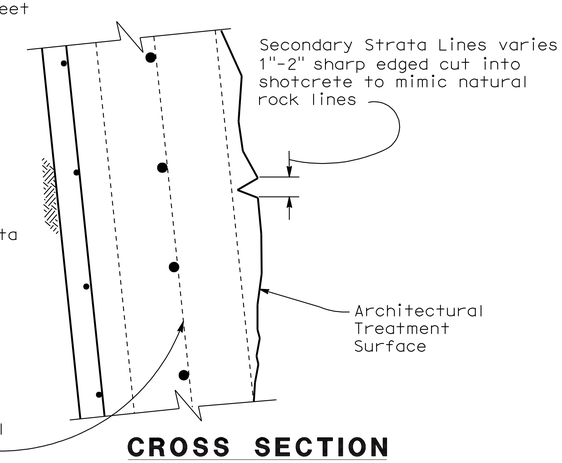

CROSS SECTION
SECONDARY STRATA LINE
2" = 1'-0"

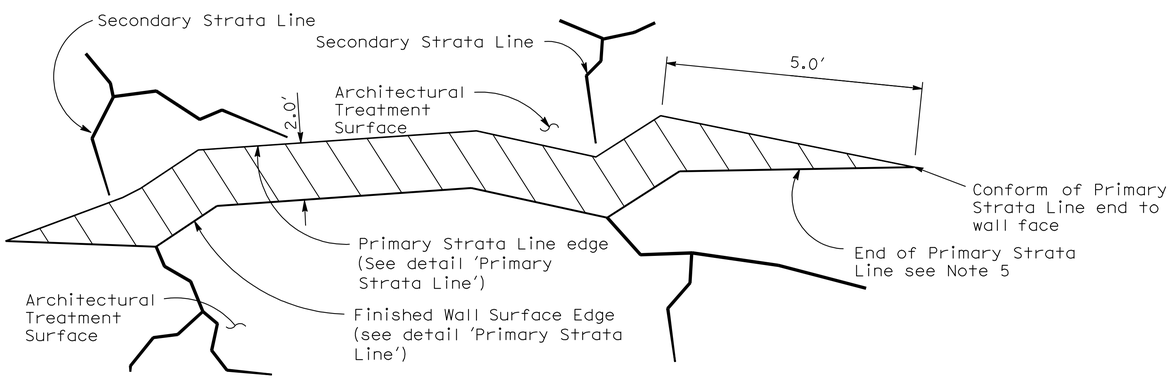

ELEVATION
PRIMARY STRATA LINE TAPER
3/8" = 1'-0"

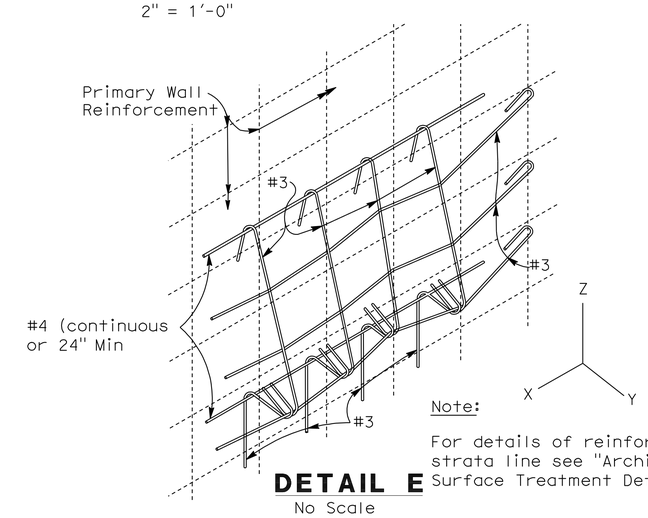

Note:
For details of reinforcement in primary strata line see "Architectural Wall Surface Treatment Details" sheet

DETAIL E
No Scale

Tracy L. Bertram
DESIGN OVERSIGHT Tracy L Bertram
1-7-10
SIGN OFF DATE

	BY	CHECKED
DESIGN	H MISTRY	P CHEN
DETAILS	H. MISTRY	P CHEN
QUANTITIES	K WONG	S GARAPALLY

PREPARED FOR THE STATE OF CALIFORNIA DEPARTMENT OF TRANSPORTATION

HARSHAD MISTRY
PROJECT ENGINEER

CU 04264
EA 264141

BRIDGE No.
POST MILE

RETAINING WALL DETAILS
ACHITECTURAL TREATMENT DETAILS No. 1

DISREGARD PRINTS BEARING EARLIER REVISION DATES → REVISION DATES (PRELIMINARY STAGE ONLY): ~~3/13/09~~ ~~8/03/09~~ ~~11/06/09~~ 12/09/09

SHEET 151 OF 171

DESIGN DETAIL SHEET (ENGLISH) (REV. 2/25/05)
W:\SOLANO TA - 58-0151B SR 12 JAMESON CANYON\STRUCTURES\CADD\XREF\58-0151B-BORDER STRUCTURE DETAILS_22 X 34_SOLANO.DWG 9/4/2008 9:18:30 AM

ORIGINAL SCALE IN INCHES FOR REDUCED PLANS 0 1 2 3

FILE => 23E0015X-g-7atd01.dgn

USERNAME => trienard DATE PLOTTED => 23-NOV-2010 TIME PLOTTED => 10:04

DIST	COUNTY	ROUTE	POST MILES TOTAL PROJECT	SHEET No	TOTAL SHEETS
04	Nap,Sol	12	2.8/3.3, 0.0/2.6	591	617

P.K. Chen 12/09/09
REGISTERED STRUCTURAL ENGINEER DATE

11-22-10
PLANS APPROVAL DATE

REGISTERED PROFESSIONAL ENGINEER PO-KANG CHEN No. S3112 Exp. 9/30/11 STRUCTURAL STATE OF CALIFORNIA

The State of California or its officers or agents shall not be responsible for the accuracy or completeness of electronic copies of this plan sheet.

SOLANO TRANSPORTATION AUTHORITY
ONE HARBOR CENTER, SUITE 130
SUISUN CITY, CA 94585

MARK THOMAS & COMPANY, INC.
1960 ZANKER ROAD
SAN JOSE, CA 95112

Notes:

1. Maximum 2" thick unreinforced shotcrete zone for Architectural Treatment.
2. Maximum 6" thick reinforced shotcrete zone for top of wall.
3. See "Architectural Treatment" and "Architectural Treatment Details" sheets.

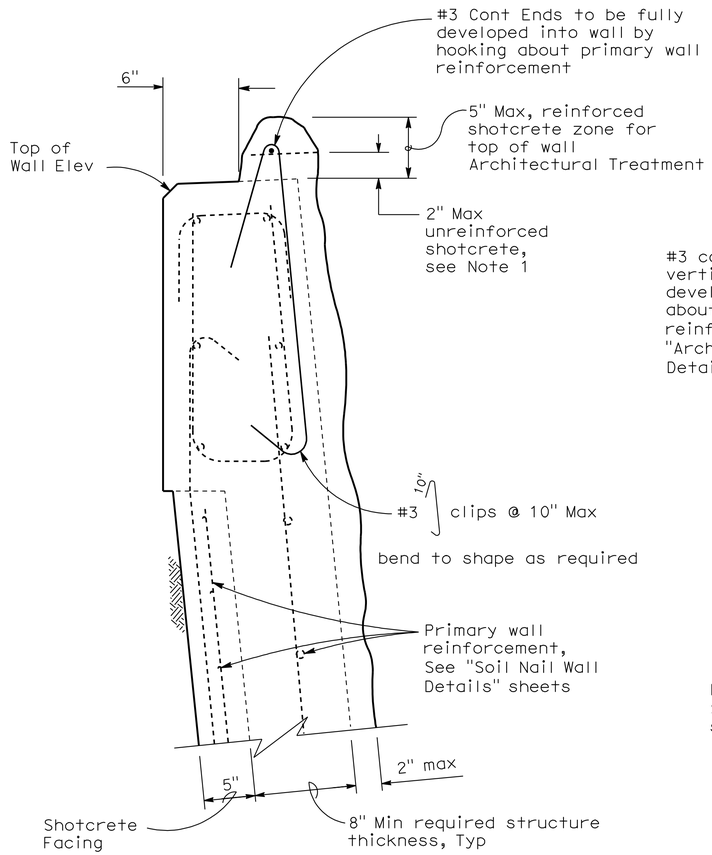

TOP OF WALL ARCHITECTURAL TREATMENT REINFORCEMENT

2" = 1'-0"

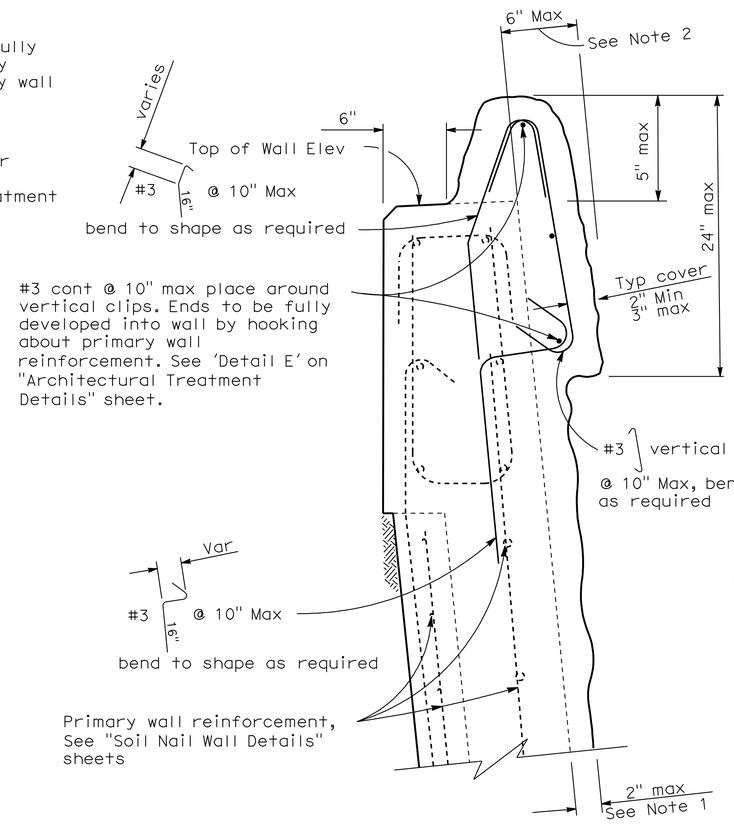

PRIMARY STRATA LINE AT TOP OF WALL ARCHITECTURAL TREATMENT REINFORCEMENT

2" = 1'-0"

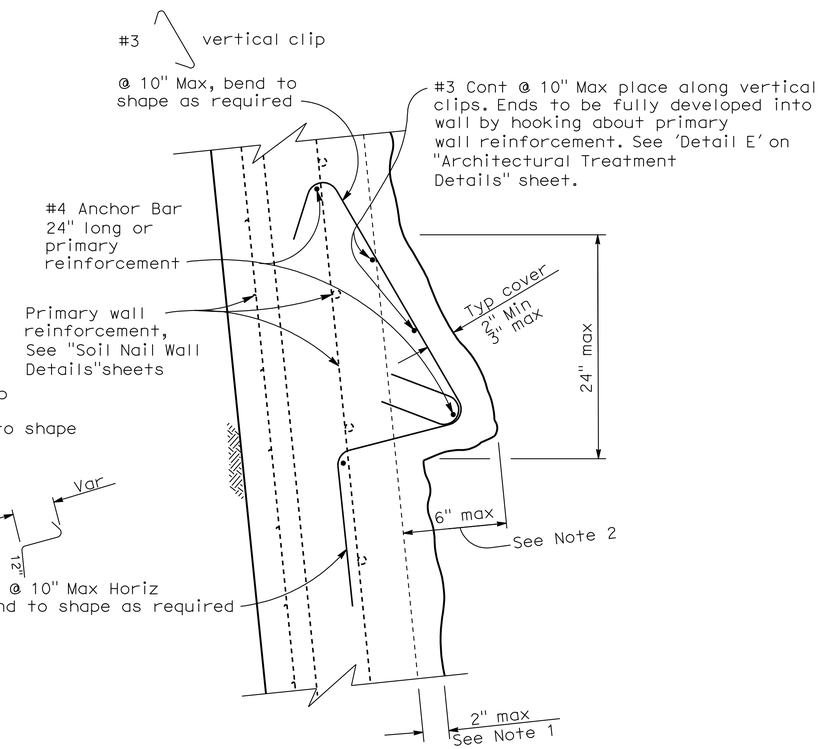

PRIMARY STRATA LINE ARCHITECTURAL TREATMENT REINFORCEMENT

2" = 1'-0"

Tracy L. Bertram
DESIGN OVERSIGHT Tracy L Bertram

1-7-10
SIGN OFF DATE

	BY	CHECKED
DESIGN	H MISTRY	P CHEN
DETAILS	H. MISTRY	P CHEN
QUANTITIES	K WONG	S GARAPALLY

PREPARED FOR THE STATE OF CALIFORNIA DEPARTMENT OF TRANSPORTATION

HARSHAD MISTRY
PROJECT ENGINEER

BRIDGE No.
POST MILE

ALL WALLS
ARCHITECTURAL TREATMENT DETAILS No. 2

DESIGN DETAIL SHEET (ENGLISH) (REV. 2/25/05)
W:\SOLANO TA - 58-0151B SR 12 JAMESON CANYON\STRUCTURES\CADD\XREF\58-0151B-BORDER STRUCTURE DETAILS_22 X 34_SOLANO.DWG 9/4/2008 9:18:30 AM

ORIGINAL SCALE IN INCHES FOR REDUCED PLANS 0 1 2 3

CU 04264
EA 264141

DISREGARD PRINTS BEARING EARLIER REVISION DATES

REVISION DATES (PRELIMINARY STAGE ONLY): ~~3/13/09~~ ~~8/03/09~~ ~~11/06/09~~ 12/09/09

SHEET 152 OF 171

FILE => 23E0015X-g-7atd02.dgn

USERNAME => trlenard DATE PLOTTED => 23-NOV-2010 TIME PLOTTED => 10:04

DIST	COUNTY	ROUTE	POST MILES TOTAL PROJECT	SHEET No	TOTAL SHEETS
04	Nap,Sol	12	2.8/3.3, 0.0/2.6	592	617

REGISTERED CIVIL ENGINEER — DATE 12/9/09

11-22-10
PLANS APPROVAL DATE

REGISTERED PROFESSIONAL ENGINEER — GARY PARIKH — No. G.E. 666 — Exp. 12/31/11 — GEOTECHNICAL — STATE OF CALIFORNIA

The State of California or its officers or agents shall not be responsible for the accuracy or completeness of scanned copies of this plan sheet.

PARIKH CONSULTANTS, INC.
2360 QUME DRIVE, SUITE A
SAN JOSE CA 95131

REFERENCE: CALTRANS SOIL & ROCK LOGGING, CLASSIFICATION, AND PRESENTATION MANUAL (JUNE 2007)

CEMENTATION

Description	Criteria
Weak	Crumbles or breaks with handling or little finger pressure.
Moderate	Crumbles or breaks with considerable finger pressure.
Strong	Will not crumble or break with finger pressure.

CONSISTENCY OF COHESIVE SOILS

Description	Unconfined Compressive Strength (tsf)	Pocket Penetrometer Measurement (tsf)	Torvane Measurement (tsf)	Field Approximation
Very Soft	< 0.25	< 0.25	< 0.12	Easily penetrated several inches by fist
Soft	0.25 to 0.50	0.25 to 0.50	0.12 to 0.25	Easily penetrated several inches by thumb
Medium Stiff	0.50 to 1.0	0.50 to 1.0	0.25 to 0.50	Penetrated several inches by thumb with moderate effort
Stiff	1 to 2	1 to 2	0.50 to 1.0	Readily indented by thumb but penetrated only with great effort
Very Stiff	2 to 4	2 to 4	1.0 to 2.0	Readily indented by thumbnail
Hard	> 4.0	> 4.0	> 2.0	Indented by thumbnail with difficulty

BOREHOLE IDENTIFICATION

Symbol	Hole Type	Description
Size	A	Auger Boring
Size	R P	Rotary drilled boring Rotary percussion boring (air)
Size	R	Rotary drilled diamond core
Size	HD HA	Hand driven (1-inch soil tube) Hand Auger
●	D	Dynamic Cone Penetration Boring
▲	CPT	Cone Penetration Test (ASTM D 5778-95)
⬚	O	Other

Note: Size in inches.

PLASTICITY OF FINE-GRAINED SOILS

Description	Criteria
Nonplastic	A 1/8-inch thread cannot be rolled at any water content.
Low	The thread can barely be rolled and the lump cannot be formed when drier than the plastic limit.
Medium	The thread is easy to roll and not much time is required to reach the plastic limit. The thread cannot be rerolled after reaching the plastic limit. The lump crumbles when drier than the plastic limit.
High	It takes considerable time rolling and kneading to reach the plastic limit. The thread can be rerolled several times after reaching the plastic limit. The lump can be formed without crumbling when drier than the plastic limit.

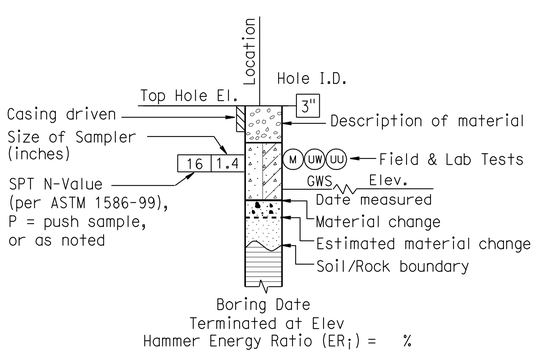

ROTARY BORING

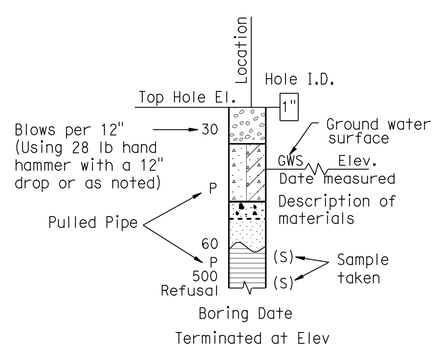

HAND BORING

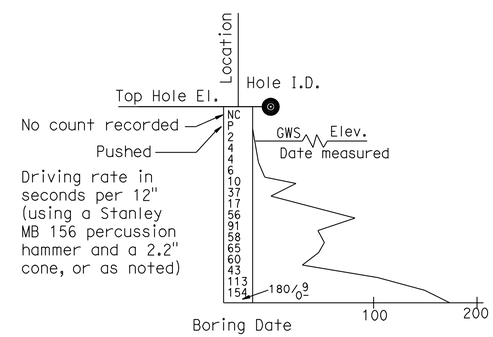

DYNAMIC CONE PENETRATION BORING

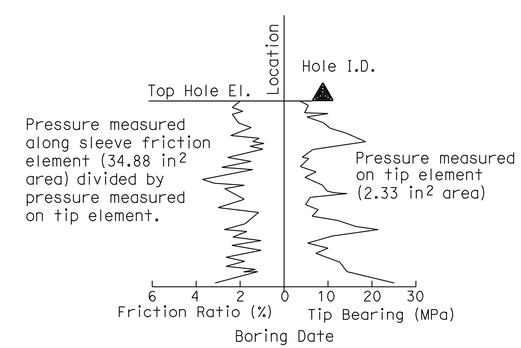

CONE PENETRATION TEST (CPT) SOUNDING

DESIGN OVERSIGHT — Tracy L Bertram
1-7-10
SIGN OFF DATE

DRAWN BY: L. TRAN
CHECKED BY: F. WANG

V. SANTOS
FIELD INVESTIGATION BY:
DATE: AUGUST 2009 TO OCTOBER 2009

PREPARED FOR THE STATE OF CALIFORNIA DEPARTMENT OF TRANSPORTATION

F. WANG
PROJECT ENGINEER

BRIDGE NO. –
POST MILES –

ROUTE 12/ JAMESON CANYON ROAD PROJECT

SOIL LEGEND NO. 1 OF 3

OGS CIVIL LOG OF TEST BORINGS SHEET (ENGLISH) (REV. 06-01-09)

ORIGINAL SCALE IN INCHES FOR REDUCED PLANS 0 1 2 3

CU 04264
EA 264131

DISREGARD PRINTS BEARING EARLIER REVISION DATES — REVISION DATES 11/6/09 12/9/09

SHEET 153 OF 171

FILE => 23E0015X-z-1SL01.dgn

USERNAME => rfriendard DATE PLOTTED => 23-NOV-2010 TIME PLOTTED => 10:06

REFERENCE: CALTRANS SOIL & ROCK LOGGING, CLASSIFICATION, AND PRESENTATION MANUAL (JUNE 2007)

DIST	COUNTY	ROUTE	POST MILES TOTAL PROJECT	SHEET No	TOTAL SHEETS
04	Nap,Sol	12	2.8/3.3, 0.0/2.6	593	617

REGISTERED CIVIL ENGINEER — DATE 12/9/09

11-22-10
PLANS APPROVAL DATE

REGISTERED PROFESSIONAL ENGINEER — GARY PARIKH — No. G.E. 666 — Exp. 12/31/11 — GEOTECHNICAL — STATE OF CALIFORNIA

The State of California or its officers or agents shall not be responsible for the accuracy or completeness of scanned copies of this plan sheet.

PARIKH CONSULTANTS, INC.
2360 QUME DRIVE, SUITE A
SAN JOSE CA 95131

GROUP SYMBOLS AND NAMES

Graphic/Symbol	Group Names	Graphic/Symbol	Group Names
GW	Well-graded GRAVEL Well-graded GRAVEL with SAND	CL	Lean CLAY Lean CLAY with SAND Lean CLAY with GRAVEL SANDY lean CLAY SANDY lean CLAY with GRAVEL GRAVELLY lean CLAY GRAVELLY lean CLAY with SAND
GP	Poorly graded GRAVEL Poorly graded GRAVEL with SAND		
GW-GM	Well-graded GRAVEL with SILT Well-graded GRAVEL with SILT and SAND	CL-ML	SILTY CLAY SILTY CLAY with SAND SILTY CLAY with GRAVEL SANDY SILTY CLAY SANDY SILTY CLAY with GRAVEL GRAVELLY SILTY CLAY GRAVELLY SILTY CLAY with SAND
GW-GC	Well-graded GRAVEL with CLAY (or SILTY CLAY) Well-graded GRAVEL with CLAY and SAND (or SILTY CLAY and SAND)		
GP-GM	Poorly graded GRAVEL with SILT Poorly graded GRAVEL with SILT and SAND	ML	SILT SILT with SAND SILT with GRAVEL SANDY SILT SANDY SILT with GRAVEL GRAVELLY SILT GRAVELLY SILT with SAND
GP-GC	Poorly graded GRAVEL with CLAY (or SILTY CLAY) Poorly graded GRAVEL with CLAY and SAND (or SILTY CLAY and SAND)		
GM	SILTY GRAVEL SILTY GRAVEL with SAND	OL	ORGANIC lean CLAY ORGANIC lean CLAY with SAND ORGANIC lean CLAY with GRAVEL SANDY ORGANIC lean CLAY SANDY ORGANIC lean CLAY with GRAVEL GRAVELLY ORGANIC lean CLAY GRAVELLY ORGANIC lean CLAY with SAND
GC	CLAYEY GRAVEL CLAYEY GRAVEL with SAND		
GC-GM	SILTY, CLAYEY GRAVEL SILTY, CLAYEY GRAVEL with SAND	OL	ORGANIC SILT ORGANIC SILT with SAND ORGANIC SILT with GRAVEL SANDY ORGANIC SILT SANDY ORGANIC SILT with GRAVEL GRAVELLY ORGANIC SILT GRAVELLY ORGANIC SILT with SAND
SW	Well-graded SAND Well-graded SAND with GRAVEL		
SP	Poorly graded SAND Poorly graded SAND with GRAVEL	CH	Fat CLAY Fat CLAY with SAND Fat CLAY with GRAVEL SANDY fat CLAY SANDY fat CLAY with GRAVEL GRAVELLY fat CLAY GRAVELLY fat CLAY with SAND
SW-SM	Well-graded SAND with SILT Well-graded SAND with SILT and GRAVEL		
SW-SC	Well-graded SAND with CLAY (or SILTY CLAY) Well-graded SAND with CLAY and GRAVEL (or SILTY CLAY and GRAVEL)	MH	Elastic SILT Elastic SILT with SAND Elastic SILT with GRAVEL SANDY elastic SILT SANDY elastic SILT with GRAVEL GRAVELLY elastic SILT GRAVELLY elastic SILT with SAND
SP-SM	Poorly graded SAND with SILT Poorly graded SAND with SILT and GRAVEL		
SP-SC	Poorly graded SAND with CLAY (or SILTY CLAY) Poorly graded SAND with CLAY and GRAVEL (or SILTY CLAY and GRAVEL)	OH	ORGANIC fat CLAY ORGANIC fat CLAY with SAND ORGANIC fat CLAY with GRAVEL SANDY ORGANIC fat CLAY SANDY ORGANIC fat CLAY with GRAVEL GRAVELLY ORGANIC fat CLAY GRAVELLY ORGANIC fat CLAY with SAND
SM	SILTY SAND SILTY SAND with GRAVEL		
SC	CLAYEY SAND CLAYEY SAND with GRAVEL	OH	ORGANIC elastic SILT ORGANIC elastic SILT with SAND ORGANIC elastic SILT with GRAVEL SANDY ORGANIC elastic SILT SANDY ORGANIC elastic SILT with GRAVEL GRAVELLY ORGANIC elastic SILT GRAVELLY ORGANIC elastic SILT with SAND
SC-SM	SILTY, CLAYEY SAND SILTY, CLAYEY SAND with GRAVEL		
PT	PEAT	OL/OH	ORGANIC SOIL ORGANIC SOIL with SAND ORGANIC SOIL with GRAVEL SANDY ORGANIC SOIL SANDY ORGANIC SOIL with GRAVEL GRAVELLY ORGANIC SOIL GRAVELLY ORGANIC SOIL with SAND
	COBBLES COBBLES and BOULDERS BOULDERS		

FIELD AND LABORATORY TESTING

C	Consolidation (ASTM D 2435)
CL	Collapse Potential (ASTM D 5333)
CP	Compaction Curve (CTM 216)
CR	Corrosivity Testing (CTM 643, CTM 422, CTM 417)
CU	Consolidated Undrained Triaxial (ASTM D 4767)
DS	Direct Shear (ASTM D 3080)
EI	Expansion Index (ASTM D 4829)
M	Moisture Content (ASTM D 2216)
OC	Organic Content-% (ASTM D 2974)
P	Permeability (CTM 220)
PA	Particle Size Analysis (ASTM D 422)
PI	Plasticity Index (AASHTO T 90) Liquid Limit (AASHTO T 89)
PL	Point Load Index (ASTM D 5731)
PM	Pressure Meter
PP	Pocket Penetrometer
R	R-Value (CTM 301)
SE	Sand Equivalent (CTM 217)
SG	Specific Gravity (AASHTO T 100)
SL	Shrinkage Limit (ASTM D 427)
SW	Swell Potential (ASTM D 4546)
TV	Pocket Torvane
UC	Unconfined Compression-Soil (ASTM D 2166) Unconfined Compression-Rock (ASTM D 2938)
UU	Unconsolidated Undrained Triaxial (ASTM D 2850)
UW	Unit Weight (ASTM D 4767)
VS	Vane Shear (AASHTO T 223)

APPARENT DENSITY OF COHESIONLESS SOILS

Description	SPT N_{60} (Blows / 12 inches)
Very loose	0 - 4
Loose	5 - 10
Medium Dense	11 - 30
Dense	31 - 50
Very Dense	> 50

MOISTURE

Description	Criteria
Dry	Absence of moisture, dusty, dry to the touch
Moist	Damp but no visible water
Wet	Visible free water, usually soil is below water table

PERCENT OR PROPORTION OF SOILS

Description	Criteria
Trace	Particles are present but estimated to be less than 5%
Few	5 to 10%
Little	15 to 25%
Some	30 to 45%
Mostly	50 to 100%

PARTICLE SIZE

Description		Size
Boulder		> 12"
Cobble		3" to 12"
Gravel	Coarse	3/4" to 3"
	Fine	No. 4 to 3/4"
Sand	Coarse	No. 10 to No. 4
	Medium	No. 40 to No. 10
	Fine	No. 200 to No. 40

DESIGN OVERSIGHT — Tracy L Bertram
1-7-10
SIGN OFF DATE

DRAWN BY: L. TRAN
CHECKED BY: F. WANG

V. SANTOS
FIELD INVESTIGATION BY:
DATE: AUGUST 2008 TO OCTOBER 2009

PREPARED FOR THE STATE OF CALIFORNIA DEPARTMENT OF TRANSPORTATION

F. WANG
PROJECT ENGINEER

BRIDGE NO. –
POST MILES –

ROUTE 12/ JAMESON CANYON ROAD PROJECT

SOIL LEGEND NO. 2 OF 3

OGS CIVIL LOG OF TEST BORINGS SHEET (ENGLISH) (REV. 06-01-09)

ORIGINAL SCALE IN INCHES FOR REDUCED PLANS 0 1 2 3

CU 04264
EA 264131

DISREGARD PRINTS BEARING EARLIER REVISION DATES — REVISION DATES 11/18/09 12/9/09

SHEET 154 OF 171

FILE => 23E0015X-z-2SL02.dgn

USERNAME => trlenard DATE PLOTTED => 23-NOV-2010 TIME PLOTTED => 10:05

REFERENCE: CALTRANS SOIL & ROCK LOGGING, CLASSIFICATION, AND PRESENTATION MANUAL (JUNE 2007)

DIST	COUNTY	ROUTE	POST MILES TOTAL PROJECT	SHEET No	TOTAL SHEETS
04	Nap,Sol	12	2.8/3.3, 0.0/2.6	594	617

REGISTERED CIVIL ENGINEER — DATE 12/9/09

11-22-10
PLANS APPROVAL DATE

The State of California or its officers or agents shall not be responsible for the accuracy or completeness of scanned copies of this plan sheet.

REGISTERED PROFESSIONAL ENGINEER — GARY PARIKH — No. G.E. 666 — Exp. 12/31/11 — GEOTECHNICAL — STATE OF CALIFORNIA

PARIKH CONSULTANTS, INC.
2360 QUME DRIVE, SUITE A
SAN JOSE CA 95131

PERCENT CORE RECOVERY (REC) & ROCK QUALITY DESIGNATION (RQD)

$$REC = \frac{\sum \text{Length of the recovered core pieces (inches)}}{\text{Total length of core run (inches)}} \times 100\%$$

$$RQD = \frac{\sum \text{Length of intact core pieces} \geq 4''}{\text{Total length of core run (inches)}} \times 100\%$$

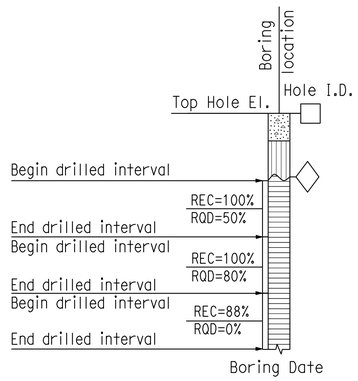

RELATIVE STRENGTH OF INTACT ROCK

Term	Uniaxial Compressive Strength (PSI)
Extremely Strong	> 30,000
Very Strong	14,500 - 30,000
Strong	7,000 - 14,500
Medium Strong	3,500 - 7,000
Weak	700 - 3,500
Very Weak	150 - 700
Extremely Weak	< 150

BEDDING SPACING

Description	Thickness / Spacing
Massive	Greater than 10 ft
Very thickly bedded	3 to 10 ft
Thickly bedded	1 to 3 ft
Moderately bedded	3-5/8" to 1 ft
Thinly bedded	1-1/4" to 3-5/8"
Very thinly bedded	3/8" to 1-1/4"
Laminated	Less than 3/8"

LEGEND OF ROCK MATERIALS

- IGNEOUS ROCK
- SEDIMENTARY ROCK
- METAMORPHIC ROCK

ROCK HARDNESS

Description	Criteria
Extremely Hard	Specimen cannot be scratched with a pocket knife or sharp pick; can only be chipped with repeated heavy hammer blows.
Very Hard	Specimen cannot be scratched with a pocket knife or sharp pick. Breaks with repeated heavy hammer blows.
Hard	Specimen can be scratched with a pocket knife or sharp pick with difficulty (heavy pressure). Heavy hammer blows required to break specimen.
Moderately Hard	Specimen can be scratched with pocket knife or sharp pick with light or moderate pressure. Core breaks with moderate hammer pressure.
Moderately Soft	Specimen can be grooved 1/6" deep with a pocket knife or sharp pick with moderate or heavy pressure. Breaks with light hammer blow or heavy manual pressure.
Soft	Specimen can be grooved or gouged easily by a pocket knife or sharp pick with light pressure, can be scratched with fingernail. Breaks with light to moderate manual pressure.
Very Soft	Specimen can be readily indented, grooved or gouged with fingernail, or carved with a pocket knife. Breaks with light manual pressure.

FRACTURE DENSITY

Description	Observed Fracture Density
Unfractured	No fractures.
Very slightly fractured	Lengths greater than 3 feet.
Slightly fractured	Lengths from 1 to 3 feet with few lengths less than 1 foot or greater than 3 feet.
Moderately fractured	Lengths mostly in 4" to 1 foot range with most lengths about 8"
Intensely fractured	Lengths average from 1 to 4" with scattered fragmented intervals with lengths less than 4"
Very intensely fractured	Mostly chips and fragments with a few scattered short core lengths.

Combination descriptors (such as "Very intensely to intensely fractured") are used where equal distribution of both fracture density characteristics is present over a significant interval or exposure, or where characteristics are "in between" the descriptor definitions. Only two adjacent descriptors may be combined.

WEATHERING DESCRIPTORS FOR INTACT ROCK

Description	Diagnostic features					General Characteristics
	Chemical Weathering-Discoloration and/or oxidation		Mechanical Weathering-Grain boundary conditions (disaggregation) primarily for granitics and some coarse-grained sediments	Texture and Solutioning		
	Body of Rock	Fracture Surfaces		Texture	Solutioning	
Fresh	No discoloration, not oxidized.	No discoloration or oxidation.	No separation, intact (tight).	No change.	No solutioning.	Hammer rings when crystalline rocks are struck.
Slightly Weathered	Discoloration or oxidation is limited to surface of, or short distance from, fractures; some feldspar crystals are dull.	Minor to complete discoloration or oxidation of most surfaces.	No visible separation, intact (tight).	Preserved.	Minor leaching of some soluble minerals may be noted.	Hammer rings when crystalline rocks are struck. Body of rock not weakened.
Moderately Weathered	Discoloration or oxidation extends from fractures usually throughout; Fe-Mg minerals are "rusty," feldspar crystals are "cloudy."	All fracture surfaces are discolored or oxidized.	Partial separation of boundaries visible.	Generally preserved.	Soluble minerals may be mostly leached.	Hammer does not ring when rock is struck. Body of rock is slightly weakened.
Intensely Weathered	Discoloration or oxidation throughout; all feldspars and Fe-Mg minerals are altered to clay to some extent; or chemical alteration produces in-situ disaggregation, see grain boundary conditions.	All fracture surfaces are discolored or oxidized, surfaces friable.	Partial separation, rock is friable; in semiarid conditions granitics are disaggregated.	Texture altered by chemical disintegration (hydration, argillation).	Leaching of soluble minerals may be complete.	Dull sound when struck with hammer, usually can be broken with moderate to heavy manual pressure or by light hammer blow without reference to planes of weakness such as incipient or hairline fractures, or veinlets. Rock is significantly weakened.
Decomposed	Discolored or oxidized throughout, but resistant minerals such as quartz may be unaltered; all feldspars and Fe-Mg minerals are completely altered to clay.		Complete separation of grain boundaries (disaggregated).	Resembles a soil, partial or complete remnant rock structure may be preserved; leaching of soluble minerals usually complete.		Can be granulated by hand. Resistant minerals such as quartz may be present as "stringers" or "dikes."

Combination descriptors (such as "slightly weathered to fresh") are permissible where equal distribution of both weathering characteristics is present over significant intervals or where characteristics present are "in between" the diagnostic feature. However, combination descriptors should not be used where significant, identifiable zones can be delineated. Only two adjacent descriptors may be combined. "Very intensely weathered" is the combination descriptor for "intensely weathered to decomposed."

DESIGN OVERSIGHT — Tracy L Bertram
1-7-10
SIGN OFF DATE

DRAWN BY: L. TRAN
CHECKED BY: F. WANG

V. SANTOS
FIELD INVESTIGATION BY:
DATE: AUGUST 2008 TO OCTOBER 2009

PREPARED FOR THE STATE OF CALIFORNIA DEPARTMENT OF TRANSPORTATION

F. WANG
PROJECT ENGINEER

BRIDGE NO. –
POST MILES –

ROUTE 12/ JAMESON CANYON ROAD PROJECT

SOIL LEGEND NO. 3 OF 3

OGS CIVIL LOG OF TEST BORINGS SHEET (ENGLISH) (REV. 06-01-09)

ORIGINAL SCALE IN INCHES FOR REDUCED PLANS 0 1 2 3

CU 04264
EA 264131

DISREGARD PRINTS BEARING EARLIER REVISION DATES 11/6/09 12/9/09

REVISION DATES

SHEET 155 OF 171

FILE => 23E0015X-z-3SL03.dgn

USERNAME => trrichard DATE PLOTTED => 23-NOV-2010 TIME PLOTTED => 10:05

DIST	COUNTY	ROUTE	POST MILES TOTAL PROJECT	SHEET No	TOTAL SHEETS
04	Nap,Sol	12	2.8/3.3, 0.0/2.6	595	617

GEOTECHNICAL PROFESSIONAL — DATE 12/9/09

11-22-10
PLANS APPROVAL DATE

REGISTERED PROFESSIONAL ENGINEER — GARY PARIKH — No. G.E. 666 — Exp. 12/31/11 — GEOTECHNICAL — STATE OF CALIFORNIA

The State of California or its officers or agents shall not be responsible for the accuracy or completeness of scanned copies of this plan sheet.

PARIKH CONSULTANTS, INC.
2360 QUME DRIVE, SUITE A
SAN JOSE CA 95131

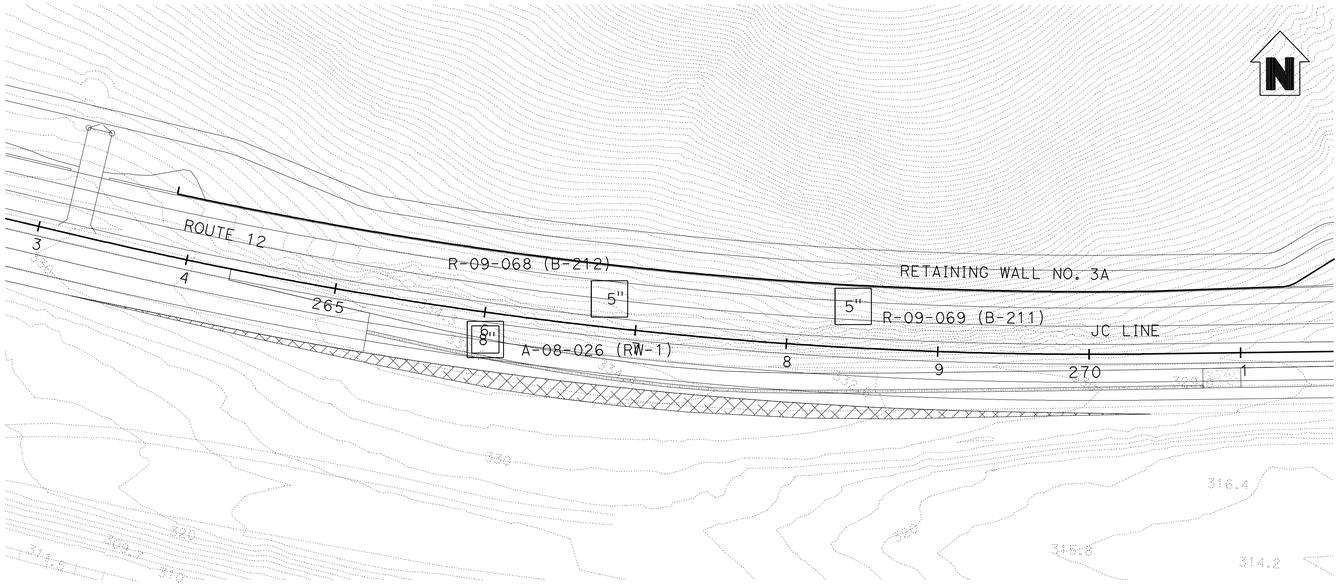

PLAN
1"=50'

Notes:
Standard Penetration Test Sampler: I.D. = 1.4"; O.D. = 2"
Modified California Sampler: I.D. = 2.5"; O.D. = 3"
Hammer Assembly: A 140 lb hammer with a 30" drop (Automatic Hammer)

This LOTB sheet was prepared in accordance with the Caltrans Soil & Rock Logging, Classification, and Presentation Manual (June 2007)

All dimensions are in feet unless otherwise shown

BENCHMARKS:
Benchmark No. 1 - Set 2" brass disk with iron pipe (California Department of Transportation SOL-47) in concrete along the southerly side of eastbound Highway 12, about 250 feet easterly of County Line. Elevation: 331.210 Northing: 1837897.3310 Easting: 6504250.128

Benchmark No. 2 - Set ¾" iron pipe with tag (PM-0.55) along the southerly side of eastbound Highway 12, at PM 0.55, about 2 5/64 miles west of 12/80 Interchange, approximately 17.7 feet southerly of eastbound edge of pavement, approximately 1.9 feet southerly of marker; approximately 15.4 feet easterly of water valve; approximately 8.5 feet northerly of chain link fence. Northing: 1837766.8170 Easting: 6506863.1580

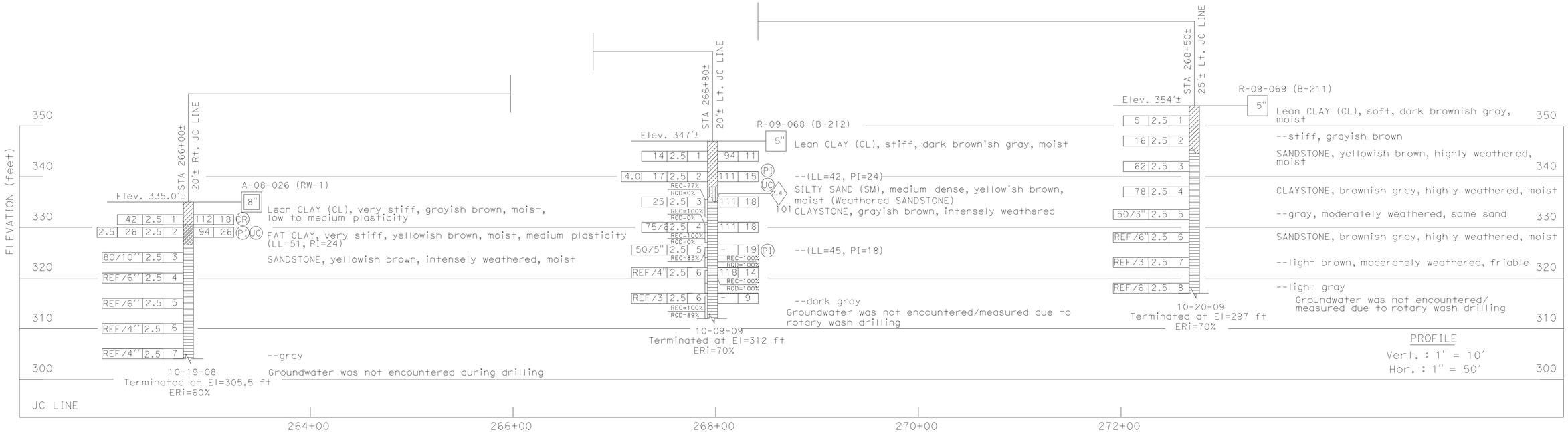

DESIGN OVERSIGHT Tracy L Bertram	DRAWN BY	L. TRAN	V. SANTOS — FIELD INVESTIGATION BY:
1-7-10 SIGN OFF DATE	CHECKED BY	F. WANG	DATE: OCTOBER 2008 & OCTOBER 2009

PREPARED FOR THE STATE OF CALIFORNIA DEPARTMENT OF TRANSPORTATION

F. WANG — PROJECT ENGINEER

BRIDGE NO. 23E0012 — POST MILES 0.0

ROUTE 12/JAMESON CANYON ROAD PROJECT
LOG OF TEST BORINGS NO. 1

OGS GEOTECHNICAL LOG OF TEST BORINGS SHEET (ENGLISH) (REV. 06-01-09)

ORIGINAL SCALE IN INCHES FOR REDUCED PLANS 0 1 2 3

CU 04264
EA 264131

DISREGARD PRINTS BEARING EARLIER REVISION DATES — REVISION DATES 11/5/09 12/9/09

SHEET 156 OF 171

FILE => 23E0015X-z-LOTB01.dgn

USERNAME => trlenard DATE PLOTTED => 23-NOV-2010 TIME PLOTTED => 10:05

DIST	COUNTY	ROUTE	POST MILES TOTAL PROJECT	SHEET No	TOTAL SHEETS
04	Nap,Sol	12	2.8/3.3, 0.0/2.6	596	617

GEOTECHNICAL PROFESSIONAL — 12/9/09 DATE

11-22-10
PLANS APPROVAL DATE

REGISTERED PROFESSIONAL ENGINEER — GARY PARIKH — No. G.E. 666 — Exp. 12/31/11 — GEOTECHNICAL — STATE OF CALIFORNIA

The State of California or its officers or agents shall not be responsible for the accuracy or completeness of scanned copies of this plan sheet.

PARIKH CONSULTANTS, INC.
2360 QUME DRIVE, SUITE A
SAN JOSE CA 95131

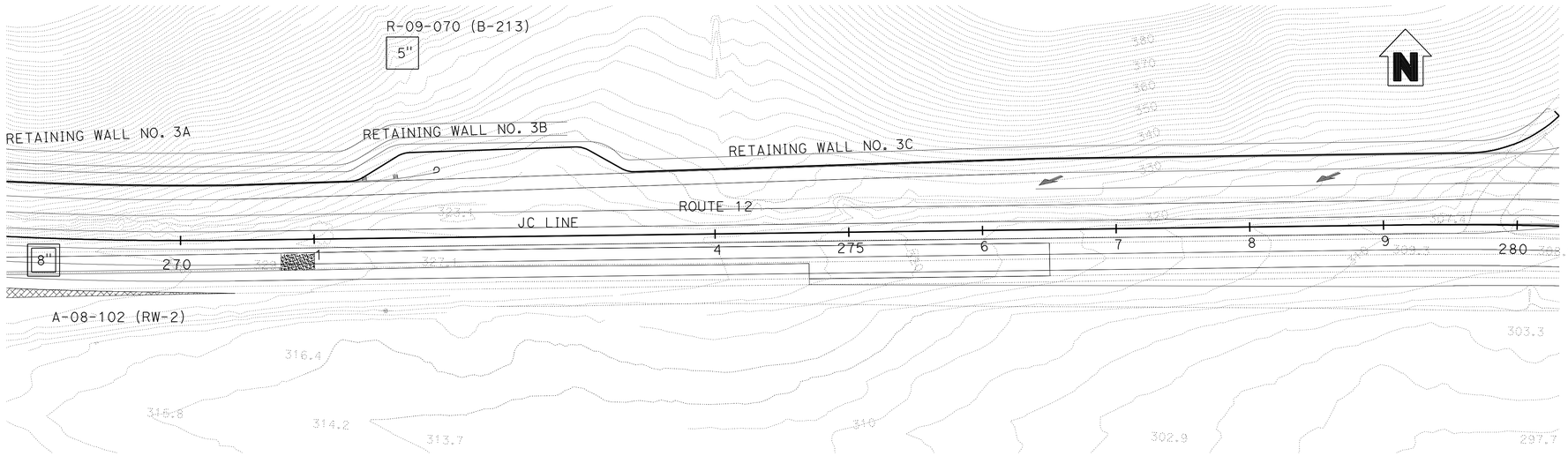

PLAN
1"=50'

BENCHMARKS:
Benchmark No. 1 - Set 2" brass disk with iron pipe (California Department of Transportation SOL-47) in concrete along the southerly side of eastbound Highway 12, about 250 feet easterly of County Line. Elevation: 331.210 Northing: 1837897.3310 Easting: 6504250.128

Benchmark No. 2 - Set ¾" iron pipe with tag (PM-0.55) along the southerly side of eastbound Highway 12, at PM 0.55, about 2 57/64 miles west of 12/80 Interchange, approximately 17.7 feet southerly of eastbound edge of pavement, approximately 1.9 feet southerly of marker; approximately 15.4 feet easterly of water valve; approximately 8.5 feet northerly of chain link fence. Northing: 1837766.8170 Easting: 6506863.1580

Notes:
Standard Penetration Test Sampler: I.D. = 1.4"; O.D. = 2"
Modified California Sampler: I.D. = 2.5"; O.D. = 3"
Hammer Assembly: A 140 lb hammer with a 30" drop (Automatic Hammer)

See sheet 1 & sheet 2 for the soil legend and sampler, hammer details

This LOTB sheet was prepared in accordance with the Caltrans Soil & Rock Logging, Classification, and Presentation Manual (June 2007)

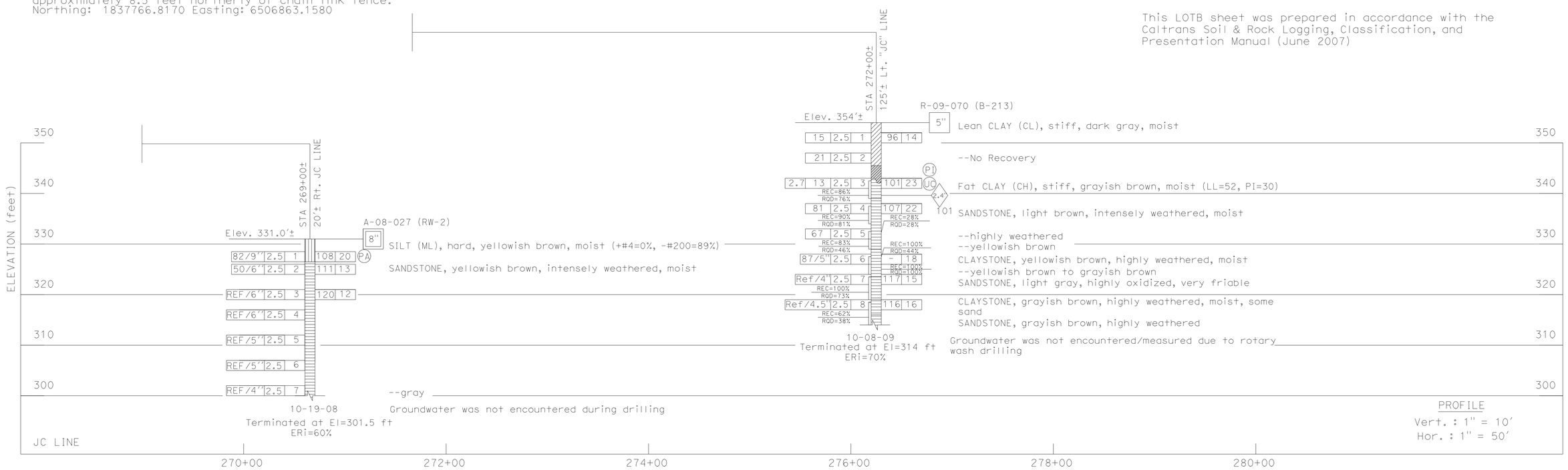

DESIGN OVERSIGHT Tracy L Bertram	DRAWN BY	L. TRAN	V. SANTOS FIELD INVESTIGATION BY:	PREPARED FOR THE STATE OF CALIFORNIA DEPARTMENT OF TRANSPORTATION	F. WANG PROJECT ENGINEER
1-7-10 SIGN OFF DATE	CHECKED BY	F. WANG	DATE: OCTOBER 2008 & OCTOBER 2009		

BRIDGE NO. 21E0012 — POST MILES 0.0

ROUTE 12/JAMESON CANYON ROAD PROJECT
LOG OF TEST BORINGS NO. 2

OGS GEOTECHNICAL LOG OF TEST BORINGS SHEET (ENGLISH) (REV. 06-01-09)

ORIGINAL SCALE IN INCHES FOR REDUCED PLANS 0 1 2 3

CU 04264
EA 264131

DISREGARD PRINTS BEARING EARLIER REVISION DATES — REVISION DATES 1/7/10 11/5/09 12/9/09

SHEET 157 OF 171

FILE => 23E0015x-z-LOTB02.dgn

USERNAME => trlenard DATE PLOTTED => 23-NOV-2010 TIME PLOTTED => 10:05

DIST	COUNTY	ROUTE	POST MILES TOTAL PROJECT	SHEET No	TOTAL SHEETS
04	Nap,Sol	12	2.8/3.3, 0.0/2.6	597	617

GEOTECHNICAL PROFESSIONAL — DATE 12/9/09

11-22-10
PLANS APPROVAL DATE

REGISTERED PROFESSIONAL ENGINEER — GARY PARIKH — No. G.E. 666 — Exp. 12/31/11 — GEOTECHNICAL — STATE OF CALIFORNIA

The State of California or its officers or agents shall not be responsible for the accuracy or completeness of scanned copies of this plan sheet.

PARIKH CONSULTANTS, INC.
2360 OUME DRIVE, SUITE A
SAN JOSE CA 95131

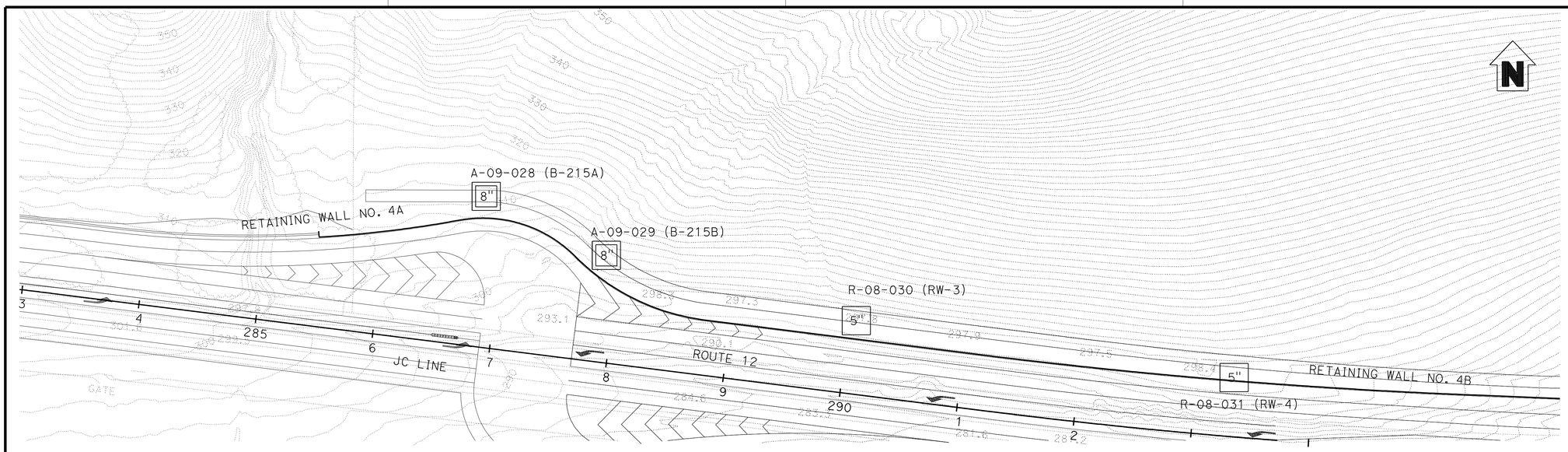

BENCHMARKS:
Benchmark No. 1 - Set 2" brass disk with iron pipe (California Department of Transportation SOL-47) in concrete along the southerly side of eastbound Highway 12, about 250 feet easterly of County Line. Elevation: 331.210 Northing: 1837897.3310 Easting: 6504250.128

Benchmark No. 2 - Set 3/4" iron pipe with tag (PM-0.55) along the southerly side of eastbound Highway 12, at PM 0.55, about 2 51/64 miles west of 12/80 Interchange, approximately 17.7 feet southerly of eastbound edge of pavement, approximately 1.9 feet southerly of marker; approximately 15.4 feet easterly of water valve; approximately 8.5 feet northerly of chain link fence. Northing: 1837766.8170 Easting: 6506863.1580

PLAN
1"=50'

Notes:
Standard Penetration Test Sampler: I.D. = 1.4"; O.D. = 2"
Modified California Sampler: I.D. = 2.5"; O.D. = 3"
Hammer Assembly: A 140 lb hammer with a 30" drop (Automatic Hammer)

This LOTB sheet was prepared in accordance with the Caltrans Soil & Rock Logging, Classification, and Presentation Manual (June 2007)

All dimensions are in feet unless otherwise shown

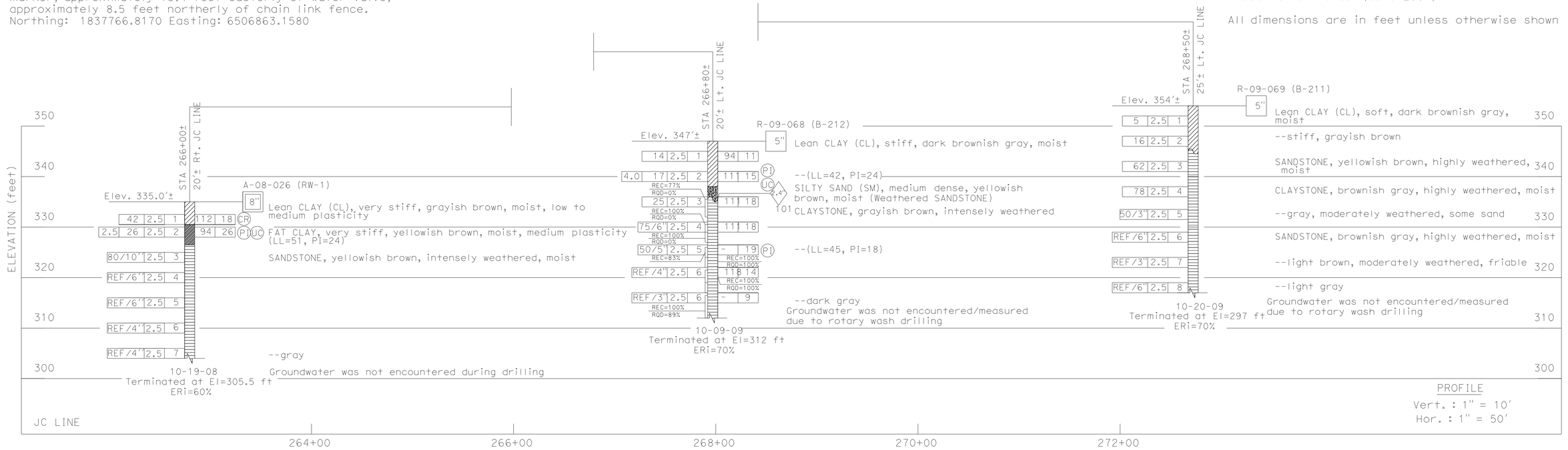

PROFILE
Vert. : 1" = 10'
Hor. : 1" = 50'

DESIGN OVERSIGHT Tracy L Bertram — 1-7-10 SIGN OFF DATE	DRAWN BY L. TRAN	V. SANTOS FIELD INVESTIGATION BY: DATE: JULY 2009	PREPARED FOR THE STATE OF CALIFORNIA DEPARTMENT OF TRANSPORTATION	F. WANG PROJECT ENGINEER	BRIDGE NO. 23E0010 POST MILES 0.3
	CHECKED BY F. WANG				

ROUTE 12/ JAMESON CANYON ROAD PROJECT
LOG OF TEST BORINGS NO. 3

OGS GEOTECHNICAL LOG OF TEST BORINGS SHEET (ENGLISH) (REV. 06-01-09)

ORIGINAL SCALE IN INCHES FOR REDUCED PLANS 0 1 2 3

CU 04264
EA 264131

DISREGARD PRINTS BEARING EARLIER REVISION DATES — REVISION DATES 1/30/09 11/6/09 12/9/09

SHEET 158 OF 171

FILE => 23E0015X-z-LOTB03.dgn

USERNAME => friehard DATE PLOTTED => 23-NOV-2010 TIME PLOTTED => 10:05

DIST	COUNTY	ROUTE	POST MILES TOTAL PROJECT	SHEET No	TOTAL SHEETS
04	Nap,Sol	12	2.8/3.3, 0.0/2.6	598	617

GEOTECHNICAL PROFESSIONAL — DATE 12/9/09

11-22-10
PLANS APPROVAL DATE

REGISTERED PROFESSIONAL ENGINEER — GARY PARIKH — No. G.E. 666 — Exp. 12/31/11 — GEOTECHNICAL — STATE OF CALIFORNIA

The State of California or its officers or agents shall not be responsible for the accuracy or completeness of scanned copies of this plan sheet.

PARIKH CONSULTANTS, INC.
2360 QUME DRIVE, SUITE A
SAN JOSE CA 95131

(SEE LOG OF TEST BORINGS, SHEET 1 OF 2, FOR BORING LOCATIONS)

Notes:
Standard Penetration Test Sampler: I.D. = 1.4"; O.D. = 2"
Modified California Sampler: I.D. = 2.5"; O.D. = 3"
Hammer Assembly: A 140 lb hammer with a 30" drop (Automatic Hammer)

This LOTB sheet was prepared in accordance with the Caltrans Soil & Rock Logging, Classification, and Presentation Manual (June 2007)

All dimensions are in feet unless otherwise shown

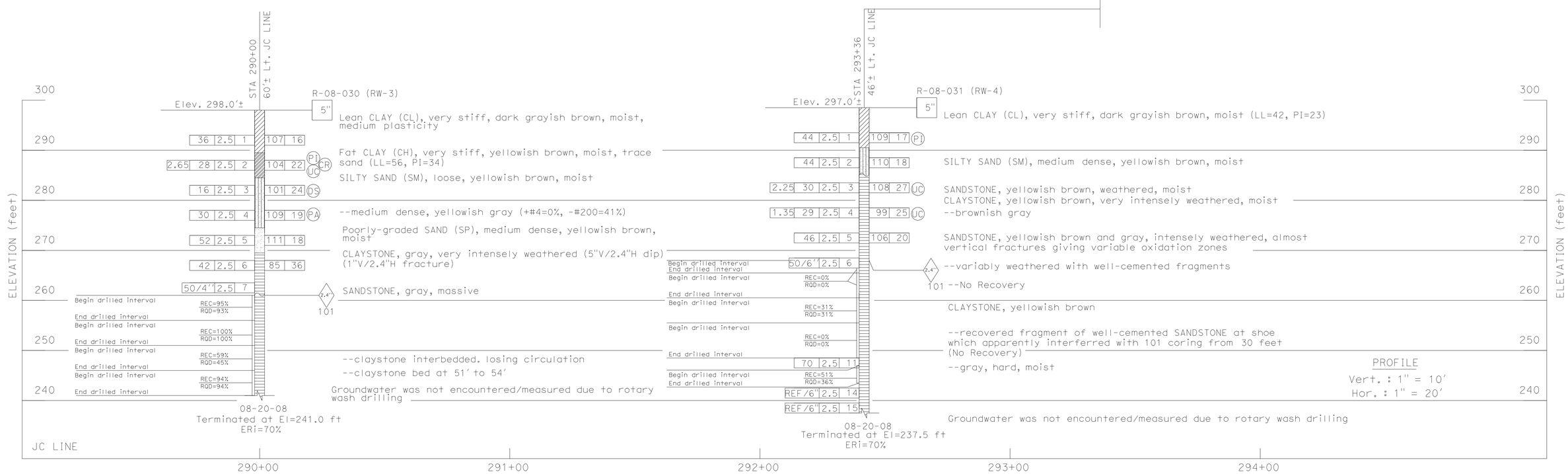

DESIGN OVERSIGHT Tracy L Bertram	DRAWN BY	L. TRAN	V. SANTOS FIELD INVESTIGATION BY:	PREPARED FOR THE STATE OF CALIFORNIA DEPARTMENT OF TRANSPORTATION	F. WANG PROJECT ENGINEER
1-7-10 SIGN OFF DATE	CHECKED BY	F. WANG	DATE: AUGUST 2008		

BRIDGE NO. 23E0010 — POST MILES 0.3

ROUTE 12/ JAMESON CANYON ROAD PROJECT
LOG OF TEST BORINGS NO. 4

OGS GEOTECHNICAL LOG OF TEST BORINGS SHEET (ENGLISH) (REV. 06-01-09)

ORIGINAL SCALE IN INCHES FOR REDUCED PLANS 0 1 2 3

CU 04264
EA 264131

DISREGARD PRINTS BEARING EARLIER REVISION DATES → 7/16/09 11/4/09 12/9/09

REVISION DATES

SHEET 159 OF 171

FILE => 23E0015X-z-LOTB04.dgn

USERNAME => trlenard DATE PLOTTED => 23-NOV-2010 TIME PLOTTED => 10:05

DIST	COUNTY	ROUTE	POST MILES TOTAL PROJECT	SHEET No	TOTAL SHEETS
04	Nap,Sol	12	2.8/3.3, 0.0/2.6	599	617

GEOTECHNICAL PROFESSIONAL — 12/9/09 DATE

11-22-10
PLANS APPROVAL DATE

REGISTERED PROFESSIONAL ENGINEER — GARY PARIKH — No. G.E. 666 — Exp. 12/31/11 — GEOTECHNICAL — STATE OF CALIFORNIA

The State of California or its officers or agents shall not be responsible for the accuracy or completeness of scanned copies of this plan sheet.

PARIKH CONSULTANTS, INC.
2360 QUME DRIVE, SUITE A
SAN JOSE CA 95131

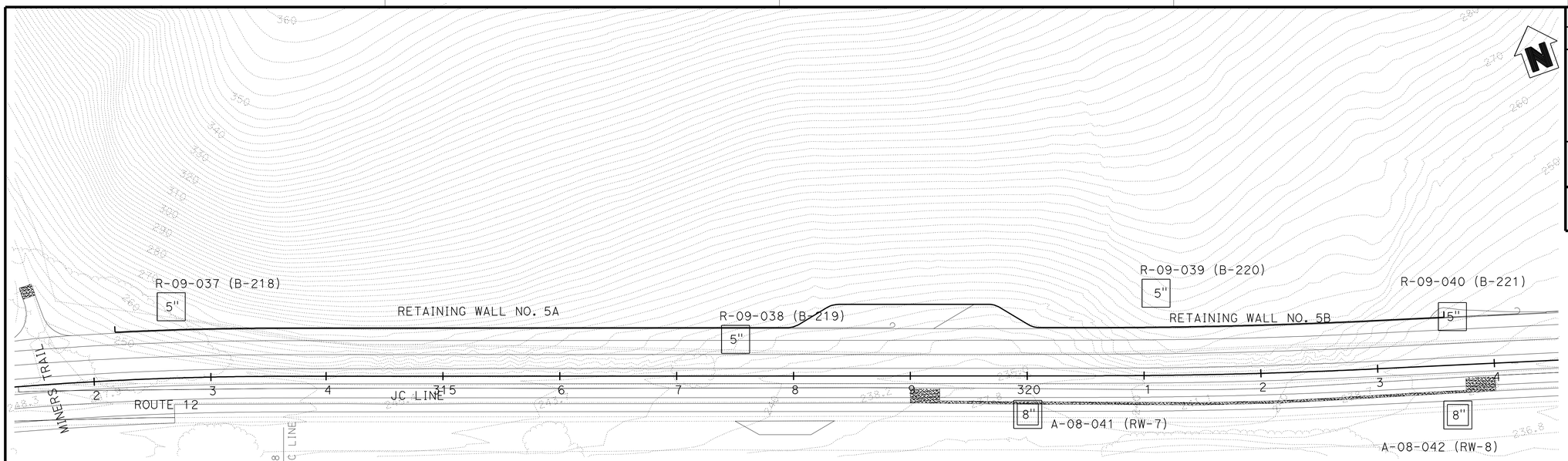

PLAN
1"=50'

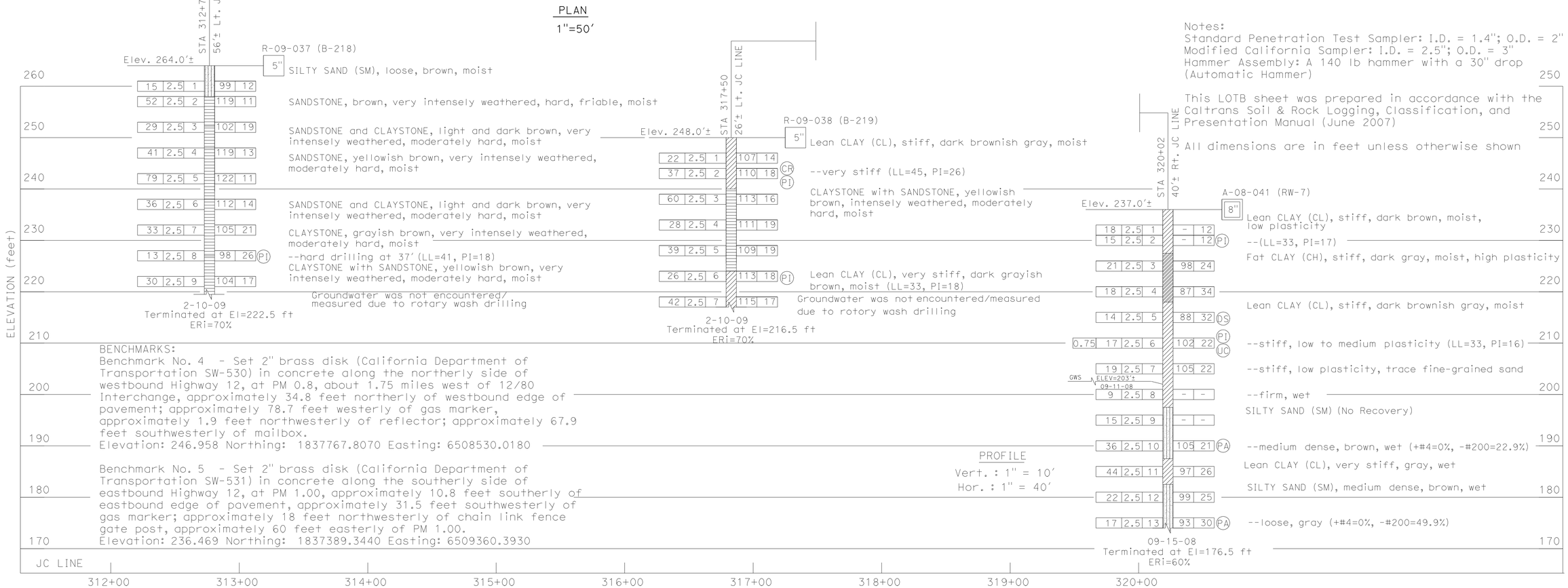

BENCHMARKS:
Benchmark No. 4 - Set 2" brass disk (California Department of Transportation SW-530) in concrete along the northerly side of westbound Highway 12, at PM 0.8, about 1.75 miles west of 12/80 Interchange, approximately 34.8 feet northerly of westbound edge of pavement; approximately 78.7 feet westerly of gas marker, approximately 1.9 feet northwesterly of reflector; approximately 67.9 feet southwesterly of mailbox.
Elevation: 246.958 Northing: 1837767.8070 Easting: 6508530.0180

Benchmark No. 5 - Set 2" brass disk (California Department of Transportation SW-531) in concrete along the southerly side of eastbound Highway 12, at PM 1.00, approximately 10.8 feet southerly of eastbound edge of pavement, approximately 31.5 feet southwesterly of gas marker; approximately 18 feet northwesterly of chain link fence gate post, approximately 60 feet easterly of PM 1.00.
Elevation: 236.469 Northing: 1837389.3440 Easting: 6509360.3930

PROFILE
Vert. : 1" = 10'
Hor. : 1" = 40'

Notes:
Standard Penetration Test Sampler: I.D. = 1.4"; O.D. = 2"
Modified California Sampler: I.D. = 2.5"; O.D. = 3"
Hammer Assembly: A 140 lb hammer with a 30" drop (Automatic Hammer)

This LOTB sheet was prepared in accordance with the Caltrans Soil & Rock Logging, Classification, and Presentation Manual (June 2007)

All dimensions are in feet unless otherwise shown

DESIGN OVERSIGHT Tracy L Bertram	DRAWN BY L. TRAN	V. SANTOS FIELD INVESTIGATION BY:	PREPARED FOR THE STATE OF CALIFORNIA DEPARTMENT OF TRANSPORTATION	F. WANG PROJECT ENGINEER	BRIDGE NO. 23E0011	ROUTE 12/JAMESON CANYON ROAD PROJECT
1-7-10 SIGN OFF DATE	CHECKED BY F. WANG	DATE: SEPTEMBER 2008 & OCTOBER 2008			POST MILES 0.9	LOG OF TEST BORINGS NO. 5

OGS GEOTECHNICAL LOG OF TEST BORINGS SHEET (ENGLISH) (REV. 06-01-09)

ORIGINAL SCALE IN INCHES FOR REDUCED PLANS 0 1 2 3

CU 04264
EA 264131

DISREGARD PRINTS BEARING EARLIER REVISION DATES — REVISION DATES 1/6/09 11/6/09 12/9/09

SHEET 160 OF 171

FILE => 23E0015X-z-LOTB05.dgn

USERNAME => trlenard DATE PLOTTED => 23-NOV-2010 TIME PLOTTED => 10:05

DIST	COUNTY	ROUTE	POST MILES TOTAL PROJECT	SHEET No	TOTAL SHEETS
04	Nap,Sol	12	2.8/3.3, 0.0/2.6	600	617

GEOTECHNICAL PROFESSIONAL — DATE 12/9/09

11-22-10
PLANS APPROVAL DATE

REGISTERED PROFESSIONAL ENGINEER — GARY PARIKH — No. G.E. 666 — Exp. 12/31/11 — GEOTECHNICAL — STATE OF CALIFORNIA

The State of California or its officers or agents shall not be responsible for the accuracy or completeness of scanned copies of this plan sheet.

PARIKH CONSULTANTS, INC.
2360 OUME DRIVE, SUITE A
SAN JOSE CA 95131

(SEE LOG OF TEST BORINGS, SHEET 1 OF 2, FOR BORING LOCATIONS)

Notes:
Standard Penetration Test Sampler: I.D. = 1.4"; O.D. = 2"
Modified California Sampler: I.D. = 2.5"; O.D. = 3"
Hammer Assembly: A 140 lb hammer with a 30" drop (Automatic Hammer)

This LOTB sheet was prepared in accordance with the Caltrans Soil & Rock Logging, Classification, and Presentation Manual (June 2007)

All dimensions are in feet unless otherwise shown

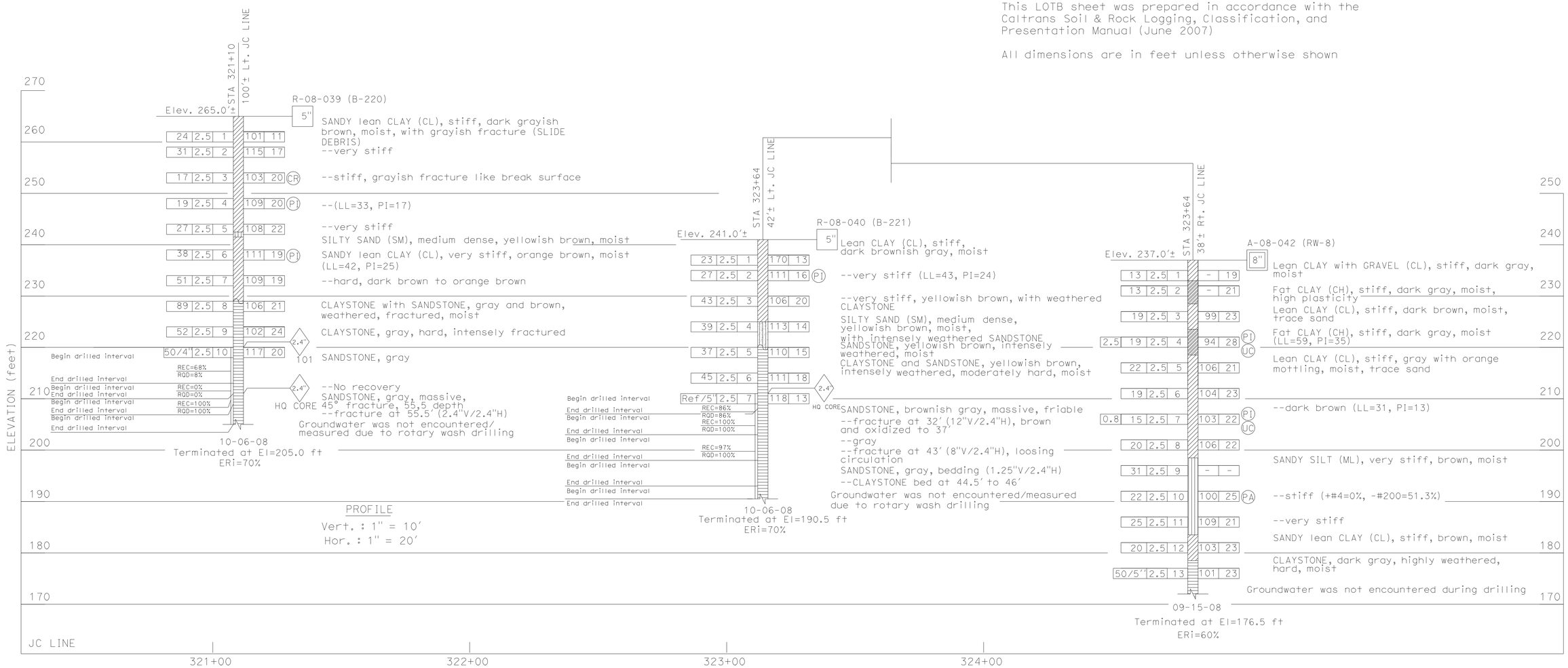

DESIGN OVERSIGHT — Tracy L Bertram	DRAWN BY	L. TRAN	V. SANTOS — FIELD INVESTIGATION BY:	PREPARED FOR THE STATE OF CALIFORNIA DEPARTMENT OF TRANSPORTATION	F. WANG — PROJECT ENGINEER
1-7-10 SIGN OFF DATE	CHECKED BY	F. WANG	DATE: SEPTEMBER 2008 & FEBURARY 2009		

BRIDGE NO. 23E0011 — POST MILES 0.9

ROUTE 12/ JAMESON CANYON ROAD PROJECT

LOG OF TEST BORINGS NO. 6

OGS GEOTECHNICAL LOG OF TEST BORINGS SHEET (ENGLISH) (REV. 06-01-09)

ORIGINAL SCALE IN INCHES FOR REDUCED PLANS 0 1 2 3

CU 04264
EA 264131

DISREGARD PRINTS BEARING EARLIER REVISION DATES — REVISION DATES 7/28/09 11/18/09 12/9/09

SHEET 161 OF 171

FILE => 23E0015X-z-LOTB06.dgn

USERNAME => trmikest DATE PLOTTED => 24-NOV-2010 TIME PLOTTED => 07:39