Dist	COUNTY	ROUTE	KILOMETER POST TOTAL PROJECT	SHEET No.	TOTAL SHEETS
04	Son	101	33.3	101	158

REGISTERED CIVIL ENGINEER 2/22/13 DATE

5-13-13
PLANS APPROVAL DATE

REGISTERED PROFESSIONAL ENGINEER Fred J. Witteborn No. 56272 Exp. 12-31-14 CIVIL STATE OF CALIFORNIA

THE STATE OF CALIFORNIA OR ITS OFFICERS OR AGENTS SHALL NOT BE RESPONSIBLE FOR THE ACCURACY OR COMPLETENESS OF ELECTRONIC COPIES OF THIS PLAN SHEET.

Caltrans Metric

TRAFFIC STRIPES, PAVEMENT MARKING AND PAVEMENT MARKERS

SHEET No.	STATION LIMITS	DETAIL No. OR PAVEMENT MARKING	LENGTH	PAVEMENT MARKER					THERMOPLASTIC TRAFFIC STRIPE					THERMOPLASTIC PAVEMENT MARKING				
				NON-REFLECTIVE		RETROREFLECTIVE								LIMIT LINE DIAGONAL CROSSWALK	ARROW TYPE			BIKE LANE
				TYPE A	TYPE AY	TYPE G	TYPE H	TYPE D	100 mm YELLOW	WHITE 100 mm	WHITE 150 mm	150 mm WHITE (BROKEN 2.44-1.22)	WHITE 200 mm		I	II	III	
			m	EA					m					m^2				
PD-2	R† CB 21+50 TO 21+73	27B	24							24								
	R† CB 21+50 TO 21+75	38A	25										25					
	A† CB 21+50 TO 21+76	38A	26										26					
	L† CB 21+50 TO 21+78	25A	28				5		28									
	L† & R† CB 21+70	ARROW TYPE III	2 EA														7.80	
	R† CB 21+70	ARROW TYPE II (B)	1 EA													5.48		
	A† CB 21+76	CROSSWALK (300 mm WHITE)	38											11.4				
	R† CC 22+27 TO 22+42	27B	15							15								
	A† CC 22+27	CROSSWALK (300 mm WHITE)	28											8.4				
	R† CC 22+42	ARROW TYPE I	2 EA												4.64			
	R† CC 22+30 TO 22+42	13	12	4		2												
	A† CC 22+34 TO 22+42	25A	8				2		8									
	R† CO 304+94 TO 305+34	39	40								40							
	R† CO 304+80 TO 305+34	10	54	24		5												
	R† CO 304+80.5 TO 305+06.5	37C	27	28		5												
	R† CO 305+06.5 TO 305+34	38C	29.5	42		5												
	R† & L† CO 304+76.5 TO 305+01	30	56		80			18										
	L† CO 305+01 TO 305+34	23	33		50			12										
	L† CO 304+68.8 TO 304+76.5	LIMIT LINE (300 mm WHITE LINE)	19											5.7				
	R† CO A† 305+06.5	ARROW TYPE III (L)	1 EA														3.9	
	R† CO A† 305+34	ARROW TYPE III (L)	1 EA														3.9	
	L† CO 304+76.5 TO 305+00	38C	23.5	32		8												
	L† CO 304+68 TO 305+34	10	132	54		12												
	L† CO 304+68.8 TO 305+06.5	39A	38									38						
	L† CO 305+06.5 TO 305+34	39	28								28							
	A† CO 305+34	CROSSWALK (300 mm WHITE LINE)	46											13.8				
	MORGAN S† NORTHBOUND	38A	13										13					
		23	13		20			4										
		CROSSWALK (300 mm WHITE LINE)	28											8.4				
		ARROW TYPE II (R)	1 EA													4.18		
		ARROW TYPE III (L)	1 EA														3.9	
	MORGAN S† SOUTHBOUND	38A	15										15					
		23	17		30			6										
		ARROW TYPE II (R)	1 EA													4.18		
		ARROW TYPE III (L)	1 EA														3.9	
		CROSSWALK (300 mm WHITE LINE)	26											7.8				
	THIS SHEET TOTAL PDQ-3			184	180	37	7	40	36	39	68	38	79	55.5	4.64	13.84	23.4	
	SHEET TOTAL PDQ-2			606		50	21		129	11	148		25	23.7		4.18	39.0	8.16
	SHEET TOTAL PDQ-1			388	302	70	2	68	3	7	204			20.4	4.64		35.1	5.10
	SHEET TOTAL SCQ-1			181		43												
	SUB-TOTAL			1359	482	200	30	108	168	57	420	38		99.6	9.28	18.02	97.5	13.26
	GRAND TOTAL			1841		338			225		458		104	237.66				

PAVEMENT DELINEATION QUANTITIES
PDQ-3

STATE OF CALIFORNIA - DEPARTMENT OF TRANSPORTATION
Caltrans DESIGN

FUNCTIONAL SUPERVISOR: JONATHAN LEE
CALCULATED-DESIGNED BY: FRED J. WITTEBORN
CHECKED BY: JONATHAN LEE
REVISED BY: FJW
DATE REVISED: 2/13/13

LAST REVISION 02-13-13 | DATE PLOTTED => 20-MAY-2013 | TIME PLOTTED => 06:47

Dist	COUNTY	ROUTE	KILOMETER POST TOTAL PROJECT	SHEET No.	TOTAL SHEETS
04	Son	101	33.3	102	158

REGISTERED CIVIL ENGINEER 2/26/13 DATE

5-13-13
PLANS APPROVAL DATE

REGISTERED PROFESSIONAL ENGINEER Jerilyn L. Struven No. 49964 Exp. 12-31-14 CIVIL STATE OF CALIFORNIA

THE STATE OF CALIFORNIA OR ITS OFFICERS OR AGENTS SHALL NOT BE RESPONSIBLE FOR THE ACCURACY OR COMPLETENESS OF ELECTRONIC COPIES OF THIS PLAN SHEET.

Caltrans Metric

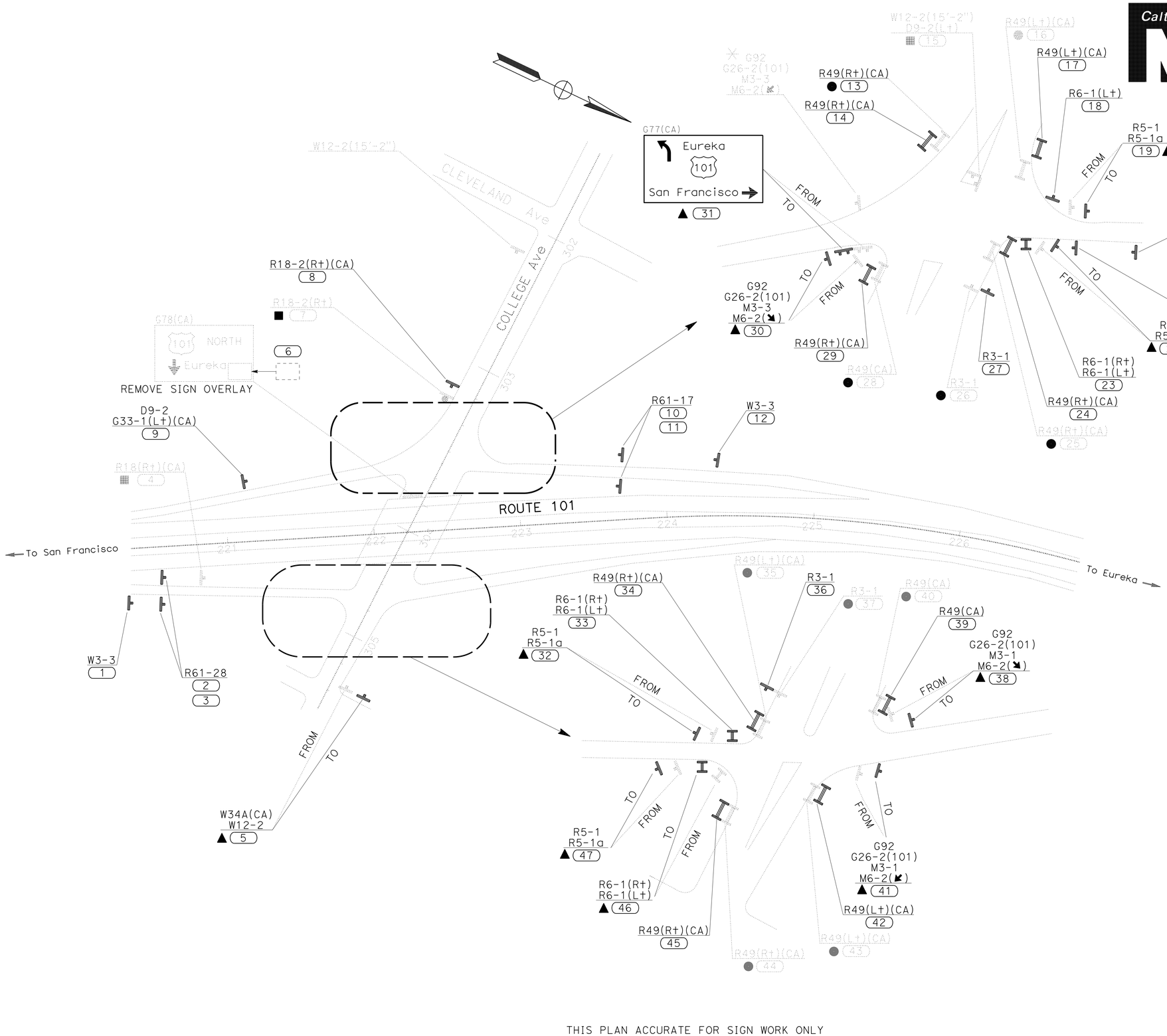

LEGEND:

- ✳ EXISTING SIGN TO REMAIN
- ■ REMOVE ROADSIDE SIGN
- ▲ RELOCATE ROADSIDE SIGN
- ● REMOVE ROADSIDE SIGN PANEL
- (No.) ROADSIDE SIGN NUMBER

NOTE:

1. EXACT LOCATION AND POSITION OF ROADSIDE SIGNS TO BE DETERMINED THE ENGINEER.

SIGN PLAN

NO SCALE

S-1

THIS PLAN ACCURATE FOR SIGN WORK ONLY

STATE OF CALIFORNIA - DEPARTMENT OF TRANSPORTATION
Caltrans
TRAFFIC

FUNCTIONAL SUPERVISOR: ROLAND AU-YEUNG
CALCULATED-DESIGNED BY: HERMINIO RUIDERA
CHECKED BY: JERILYN L. STRUVEN
REVISED BY / DATE REVISED

LAST REVISION 01-11-13
DATE PLOTTED => 20-MAY-2013
TIME PLOTTED => 07:50

Dist	COUNTY	ROUTE	KILOMETER POST TOTAL PROJECT	SHEET No.	TOTAL SHEETS
04	Son	101	33.3	103	158

REGISTERED CIVIL ENGINEER 2/26/13 DATE

5-13-13
PLANS APPROVAL DATE

REGISTERED PROFESSIONAL ENGINEER Jerilyn L. Struven No. 49964 Exp. 12-31-14 CIVIL STATE OF CALIFORNIA

THE STATE OF CALIFORNIA OR ITS OFFICERS OR AGENTS SHALL NOT BE RESPONSIBLE FOR THE ACCURACY OR COMPLETENESS OF ELECTRONIC COPIES OF THIS PLAN SHEET.

Caltrans Metric

ROADSIDE SIGN INSTALLATION

SHEET No.	SIGN No.	SIGN CODE	PANEL SIZE (mm)	POST LENGTH (m) 89 mm x 89 mm	POST LENGTH (m) 89 mm x 140 mm	ROADSIDE SIGN ONE POST	ROADSIDE SIGN TWO POST	INSTALL SIGN (STRAP SADDLE BRACKET METHOD)	REMOVE ROADSIDE SIGN	REMOVE ROADSIDE SIGN PANEL	RELOCATE ROADSIDE SIDE	REMARKS
						EA						
S-1	1	W3-3	1219 x 1219		5.23	1						
	2	R61-28	1219 x 762		4.23	1						
	3	R61-28	1219 x 762		4.23	1						
	4	R18-2(CA)							1			
	5	W12-2 W34A(CA)									1	
	6	OVERLAY										REMOVE SIGN OVERLAY
	7	R18-2(CA)							1			
	8	R18-2(CA)	762 x 762	3.96		1						
	9	D9-2 G33-1(L+)(CA)	610 x 610 60 x 150	4.05		1						
	10	R61-17(CA)	1219 x 762		4.23	1						
	11	R61-17(CA)	1219 x 762		4.23	1						
	12	W3-3	1219 x 1219		5.23	1						
	13	R49(R+)								1		
	14	R49(R+)(CA)	1067 x 457									ELECTRICAL PAY 1TEM
	15	W12-2 D9-2(L+)							1			
	16	R49(L+)(CA)								1		
	17	R49(L+)(CA)	1067 x 457									ELECTRICAL PAY 1TEM
	18	R6-1(L+)	900 x 300	1.83		1						
	19	R5-1 R5-1a									1	
	20	D9-2 G33-1(L+)	762 x 762 762 x 203	1.83		1						
	21	W34C(L+)(CA)	914 x 1372		4.88	1						15'-2"
	22	R5-1 R5-1a									1	
	23	R6-1(R+) R6-1(L+)	900 x 300 900 x 300	1.83		1						
	24	R49(R+)(CA)	1067 x 457									ELECTRICAL PAY ITEM
	25	R49(R+)(CA)								1		
	26	R3-1								1		
	27	R3-1	600 x 600					1				
	28	R49(R+)(CA)								1		
	29	R49(R+)(CA)	1067 x 457									ELECTRICAL PAY ITEM
	30	G92(CA) G26-2(101)(CA) M3-3 M6-2(↘)									1	
SHEET TOTAL						12		1	3	5	4	

ROADSIDE SIGN QUANTITIES

SQ-1

STATE OF CALIFORNIA - DEPARTMENT OF TRANSPORTATION
Caltrans
TRAFFIC

FUNCTIONAL SUPERVISOR: ROLAND AU-YEUNG
CALCULATED-DESIGNED BY: HERMINIO RUIDERA
CHECKED BY: JERILYN L. STRUVEN
REVISED BY
DATE REVISED

LAST REVISION 05-15-12 | DATE PLOTTED => 20-MAY-2013 | TIME PLOTTED => 07:50

Dist	COUNTY	ROUTE	KILOMETER POST TOTAL PROJECT	SHEET No.	TOTAL SHEETS
04	Son	101	33.3	104	158

REGISTERED CIVIL ENGINEER 2/26/13 DATE

5-13-13
PLANS APPROVAL DATE

REGISTERED PROFESSIONAL ENGINEER Jerilyn L. Struven No. 49964 Exp. 12-31-14 CIVIL STATE OF CALIFORNIA

THE STATE OF CALIFORNIA OR ITS OFFICERS OR AGENTS SHALL NOT BE RESPONSIBLE FOR THE ACCURACY OR COMPLETENESS OF ELECTRONIC COPIES OF THIS PLAN SHEET.

Caltrans Metric

ROADSIDE SIGN INSTALLATION

SHEET No.	SIGN No.	SIGN CODE	PANEL SIZE (mm)	POST LENGTH (m)(N) 89 mm x 89 mm	POST LENGTH (m)(N) 89 mm x 140 mm	ROADSIDE SIGN ONE POST	ROADSIDE SIGN TWO POST	INSTALL SIGN (STRAP SADDLE BRACKET METHOD)	REMOVE ROADSIDE SIGN	REMOVE ROADSIDE SIGN PANEL	RELOCATE ROADSIDE SIDE	REMARKS
						EA						
S-1	31	G77(CA)			5.23						1	
	32	R5-1									1	
		R5-1a										
	33	R6-1(R†)	900 x 300	1.83		1						
		R6-1(L†)	900 x 300									
	34	R49(L†)(CA)	1067 x 457									ELECTRICAL PAY ITEM
	35	R49(L†)(CA)								1		
	36	R3-1	600 x 600					1				
	37	R3-1								1		
	38	G92(CA)										
		G26-2(CA)									1	
		M6-2(↘)										
	39	R49(CA)										ELECTRICAL PAY ITEM
	40	R49(CA)								1		
	41	G92(CA)									1	
		G26-2(101)(CA)										
		M3-1										
		M6-2(↙)										
	42	R49(L†)(CA)	1067 x 457									ELECTRICAL PAY ITEM
	43	R49(L†)(CA)								1		
	44	R49(R†)(CA)								1		
	45	R49(R†)(CA)	1067 x 457									ELECTRICAL PAY ITEM
	46	R6-1(R†)									1	
		R6-1(L†)										
	47	R5-1									1	
		R5-1a										
TOTAL SHEET SQ-2						1		1		5	6	
TOTAL SHEET SQ-1						12		1	3	5	4	
GRAND TOTAL						13		2	3	10	10	

ROADSIDE SIGN QUANTITIES
SQ-2

REVISED BY	DATE REVISED

CALCULATED-DESIGNED BY	HERMINIO RUIDERA
CHECKED BY	JERILYN L. STRUVEN
FUNCTIONAL SUPERVISOR	ROLAND AU-YEUNG

STATE OF CALIFORNIA - DEPARTMENT OF TRANSPORTATION
Caltrans TRAFFIC

LAST REVISION 01-11-13 | DATE PLOTTED => 20-MAY-2013 | TIME PLOTTED => 07:50

Dist	COUNTY	ROUTE	KILOMETER POST TOTAL PROJECT	SHEET No.	TOTAL SHEETS
04	Son	101	33.3	105	158

REGISTERED CIVIL ENGINEER 2/26/13 DATE

5-13-13
PLANS APPROVAL DATE

REGISTERED PROFESSIONAL ENGINEER Jerilyn L. Struven No. 49964 Exp. 12-31-14 CIVIL STATE OF CALIFORNIA

THE STATE OF CALIFORNIA OR ITS OFFICERS OR AGENTS SHALL NOT BE RESPONSIBLE FOR THE ACCURACY OR COMPLETENESS OF ELECTRONIC COPIES OF THIS PLAN SHEET.

Caltrans Metric

SIGN PANEL SUMMARY

SHEET No.	SIGN No.	SIGN CODE	SIGN SIZE (mm x mm)	SIGN AREA (m^2)	SINGLE FACED	DOUBLE FACED	BACKGROUND SHEETING COLOR	BACKGROUND RETROREFLECTIVE ASTM TYPE	LEGEND SHEETING COLOR	LEGEND RETROREFLECTIVE ASTM TYPE	GRAPHIC FILM STANDARD	GRAPHIC FILM PREMIUM	ROADSIDE SIGN SINGLE SHEET FRP 3.4 mm (m^2)	ROADSIDE SIGN SINGLE SHEET FRAMED ALUMINUM 1.6 mm (m^2)	ROADSIDE SIGN SINGLE SHEET FRAMED ALUMINUM 2.0 mm (m^2)	REMARKS
S-1	1	W3-3	1220 x 1220	1.49	X		YELLOW	III	BLACK	PLAIN		X			1.49	
	2	R61-28	1220 x 760	0.93	X		WHITE	III	BLACK	PLAIN		X		0.93		
	3	R61-28	1220 x 760	0.93	X		WHITE	III	BLACK	PLAIN		X		0.93		
	8	R18-2(CA)	760 x 760	0.58	X		WHITE	III	BLACK	PLAIN		X		0.58		
	9	D9-2	610 x 610	0.37	X		BLUE	III	WHITE	IV		X		0.37		
		G33-1(CA)	610 x 150	0.09	X		BLUE	III	WHITE	IV		X		0.09		
	10	R61-17(CA)	1220 x 760	0.93	X		YELLOW	III	BLACK	PLAIN		X		0.93		
	11	R61-17(CA)	1220 x 760	0.93	X		WHITE	III	BLACK	PLAIN		X		0.93		
	12	W3-3	1220 x 1220	1.49	X		YELOW	III	BLACK	PLAIN		X			1.49	
	14	R49(R†)(CA)	1070 x 460	0.49	X		WHITE	III	BLACK	PLAIN		X		0.49		
	17	R49(L†)(CA)	1070 x 460	0.49	X		WHITE	III	BLACK	PLAIN		X		0.49		
	18	R6-1 (L†)	900 x 300	0.27	X		WHITE	III	BLACK	PLAIN		X		0.27		
	21	W34C(L†)	940 x 1370	1.29	X		YELLOW	III	BLACK	PLAIN		X		1.29		
	23	R6-1(R†)	900 x 300	0.27	X		WHITE	III	BLACK	PLAIN		X		1.27		
		R6-1(L†)	900 x 300	0.27	X		WHITE	III	BLACK	PLAIN		X		0.27		
	24	R49(R†)(CA)	1070 x 460	0.49	X		WHITE	III	BLACK	PLAIN		X		0.49		
	27	R3-1	600 x 600	0.36	X		WHITE	III	BLACK	PLAIN		X		0.36		
	29	R49(R†)(CA)	1070 x 460	0.49	X		WHITE	III	BLACK	PLAIN		X		0.49		
	33	R6-1(R†)	900 x 300	0.27	X		WHITE	III	BLACK	PLAIN		X		0.27		
		R6-1(L†)	900 x 300	0.27	X		WHITE	III	BLACK	PLAIN		X		0.27		
	35	R49(L†)(CA)	1070 x 460	0.49	X		WHITE	III	BLACK	PLAIN		X		0.49		
	42	R49(L†)(CA)	1070 x 460	0.49	X		WHITE	III	BLACK	PLAIN		X		0.49		
	45	R49(R†)(CA)	1070 x 460	0.49	X		WHITE	III	BLACK	PLAIN		X		0.49		
	46	R6-1(R†)	900 x 300	0.27	X		WHITE	III	BLACK	PLAIN		X		0.27		
		R6-1(L†)	900 x 300	0.27	X		WHITE	III	BLACK	PLAIN		X		0.27		
					TOTAL									12.73	2.98	

ROADSIDE SIGN QUANTITIES
SQ-3

STATE OF CALIFORNIA - DEPARTMENT OF TRANSPORTATION
Caltrans TRAFFIC

FUNCTIONAL SUPERVISOR: ROLAND AU-YEUNG
CALCULATED-DESIGNED BY: HERMINIO RUIDERA
CHECKED BY: JERILYN L. STRUVEN
REVISED BY / DATE REVISED

LAST REVISION 02-13-13 | DATE PLOTTED => 20-MAY-2013 | TIME PLOTTED => 07:50

Dist	COUNTY	ROUTE	KILOMETER POST TOTAL PROJECT	SHEET No.	TOTAL SHEETS
04	Son	101	33.3	106	158

REGISTERED CIVIL ENGINEER 2/22/13 DATE

5-13-13
PLANS APPROVAL DATE

REGISTERED PROFESSIONAL ENGINEER Fred J. Witteborn No. 56272 Exp. 12-31-14 CIVIL STATE OF CALIFORNIA

THE STATE OF CALIFORNIA OR ITS OFFICERS OR AGENTS SHALL NOT BE RESPONSIBLE FOR THE ACCURACY OR COMPLETENESS OF ELECTRONIC COPIES OF THIS PLAN SHEET.

Caltrans Metric

REMOVE CONCRETE

SHEET No.	STATION LIMITS	LOCATION	CURB	CURB & GUTTER	GUTTER	SIDEWALK	VALLEY GUTTER
			m			m^2	m^3
C-4/C-5	CO 302+04.126 TO 303+75.172	R+				478.9	
C-4/C-5	CO 302+04.126 TO 303+78.974	R+		174.8			
C-4/C-5	CO 302+16.598 TO 303+47.015	L+				365.2	
C-4/C-5	CO 302+16.598 TO 303+45.551	L+		129.0			
C-4	CO 302+86.746 TO 302+97.524	L+			10.8		
C-4	CO 302+97.524 TO 303+11.279	L+ (2-SIDES)	27.5				
C-4/C-5	CO 303+11.279 TO 303+20.60	L+			9.3		
C-5/C-6	CO 303+88.430 TO 304+85.250	R+		96.8			
C-5	CO 303+85.221 TO 304+70.883	R+				179.9	
C-5	CO 303+56+635 TO 304+45.625	L+		89.0			
C-5	CO 303+66.322 TO 304+52.067	L+				222.9	
C-6	CO 304+97.199 TO 305+38.156	R+		41.0			
C-5/C-6	CO 303.88.350 TO 305+38.156	R+				449.4	
C-6	CO 305+08.981 TO 305+22.592	R+			13.6		
C-5/C-6	CO 304+53.555 TO 305+38.286	L+		85.7			
C-5/C-6	CO 304+61.485 TO 305+38.286	L+				238.1	
C-6	CO 305+34 TO 305+57	L+					5.8
C-6	CO 305+33 TO 305+56	R+					11.4
TOTAL			27.5	616.3	33.7	1934.4	17.2

MINOR CONCRETE (MISCELLANEOUS CONSTRUCTION)

SHEET No.	STATION LIMITS	LOCATION	CURB (TYPE A1-150)	CURB (TYPE A2-150)	PCC ISLAND PAVING	SIDEWALK	CONCRETE GUTTER	VALLEY GUTTER
			m^3					
C-4	CO 302+83.114 TO 302+99.915	L+					1.6	
C-4/C-5	CO 302+04.126 TO 303+75.172	R+				42.0		
C-4/C-5	CO 302+04.126 TO 303+78.974	R+		25.2				
C-5	CO 303+44.484 TO 303+58.649	L+			2.7			
C-5	CO 303+44.484 TO 303+58.649	L+ ISLAND	2.5					
C-4/C-5	CO 303+65.511 TO 304+52.500	CENTER			21.5			
C-4/C-5	CO 302+16.598 TO 303+45.551	L+		18.6				
C-4/C-5	CO 302+16.598 TO 303+45.551	L+				29.6		
C-4	CO 302+99.915 TO 303+07.811	L+	0.5					
C-4	CO 303+00 TO 303+09.818	R+					1.6	
C-4	CO 303+07.810 TO 303+23.922	L+					1.6	
C-4	CO 303+25.705 TO 303+36.896	R+					1.6	
C-5	CO 303+62.963 TO 304+46.972	L+				25.2		
C-5	CO 303+56.635 TO 304+45.625	L+		12.8				
C-5	CO 303+85.221 TO 304+74.081	R+				26.7		
C-5/C-6	CO 303+88.430 TO 304+85.250	R+		13.9				
C-6	CO 304+90.414 TO 305+38.156	R+				14.3		
C-5/C-6	CO 304+57.125 TO 305+38.286	L+				15.0		
C-5/C-6	CO 304+52.555 TO 305+38.286	L+		9.5				
C-6	CO 304+82.638 TO 305+09.205	L+	1.7					
C-6	CO 304+97.199 TO 305+38.156	R+		5.9				
C-6	CO 305+07.773 TO 305+23.941	R+					1.6	
C-6	CO 305+34 TO 305+57	L+						6.8
C-6	CO 305+33 TO 305+56	R+						13.2
TOTAL			4.7	85.9	24.2	152.8	8.0	20.0
GRAND TOTAL			259.6					

IRRIGATION SLEEVES

LOCATION		SIDE		SIZE (mm) DN 50
LINE	STATION	R+	L+	LENGTH (m)
CO LINE	302+28	X		3.3
CO LINE	302+32		X	3.3
CO LINE	302+38	X		3.3
CO LINE	302+40		X	3.3
CO LINE	302+47	X		3.3
CO LINE	302+49		X	3.3
CO LINE	302+57	X		3.3
CO LINE	302+59		X	3.3
CO LINE	302+66	X		3.3
CO LINE	302+67		X	3.3
CO LINE	303+85		X	3.3
CO LINE	304+02	X		3.3
CO LINE	304+08	X		3.3
CO LINE	304+31		X	3.3
CO LINE	304+37		X	3.3
CO LINE	304+55	X		3.3
CO LINE	304+61	X		3.3
TOTAL				56.1

DN - DIAMETER NOMINAL
X - DENOTES REQUIREMENT

COLD PLANE AC PAVEMENT

SHEET No.	STATION TO STATION	45 mm Max
		m^2
L-1	302+03 TO 303+00	2028.3
L-2	301+00 TO 305+49.7	6241.6
TOTAL		8269.9

EARTHWORK QUANTITIES

SHEET No.	STATION LIMITS	ROADWAY EXCAVATION
		m^3
L-1	302+04.126 TO 303+00	685.9
L-2	303+00 TO 305+38.164	1912.8
TOTAL		2598.7

ROADWAY QUANTITY SUMMARY

SHEET No.	STATION	HOT MIX ASPHALT (TYPE A)	CLASS 2 AGGREGATE BASE	CLASS 3 AGGREGATE BASE	CLASS 4 AGGREGATE SUBBASE	TACK-COAT
		TONNE	m^3			TONNE
L-1	CO 302+03 TO 303+00	464.4		153.3	195.8	0.6
L-1	CO 302+83.114 TO 302+49.915		1.6			
L-2	CO 302+00 TO 305+49.7	1562.7		520.8	643.8	2.0
L-2	CO 305+34 TO 305+57		6.8			
L-2	CO 305+33 TO 305+56		13.2			
L-2	CO 303+00 TO 303+09.818		1.6			
L-2	CO 303+07.81 TO 303+23.922		1.6			
L-2	CO 303+25.705 TO 303+36.896		1.6			
L-2	CO 305+07.773 TO 305+23.941		1.6			
TOTAL		2029.1	28.0	674.1	839.6	2.6

REMOVE AC DIKE

SHEET No.	STATION TO STATION	REMOVE AC DIKE
		m
C-5	19.3 L+ CO 303+47.015 to 10.2 R+ CD 28+95	13.0
TOTAL		13.0

SUMMARY OF QUANTITIES

Q-1

FRED J. WITTEBORN — REVISED BY — FJW
DATE REVISED — 2/13/13
CALCULATED-DESIGNED BY — JONATHAN LEE
CHECKED BY
FUNCTIONAL SUPERVISOR — JONATHAN LEE

STATE OF CALIFORNIA - DEPARTMENT OF TRANSPORTATION
Caltrans DESIGN

LAST REVISION 02-13-13 | DATE PLOTTED => 20-MAY-2013 | TIME PLOTTED => 07:50

Dist	COUNTY	ROUTE	KILOMETER POST TOTAL PROJECT	SHEET No.	TOTAL SHEETS
04	Son	101	33.3	107	158

REGISTERED CIVIL ENGINEER 2/22/13 DATE

5-13-13
PLANS APPROVAL DATE

REGISTERED PROFESSIONAL ENGINEER Fred J. Witteborn No. 56272 Exp. 12-31-14 CIVIL STATE OF CALIFORNIA

THE STATE OF CALIFORNIA OR ITS OFFICERS OR AGENTS SHALL NOT BE RESPONSIBLE FOR THE ACCURACY OR COMPLETENESS OF ELECTRONIC COPIES OF THIS PLAN SHEET.

Caltrans Metric

CHAIN LINK FENCE

SHEET No.	STATION LIMITS	REMOVE CL FENCE	CL FENCE (TYPE CL-1.8)
		m	
L-2	CO 304+72.246 TO 304+80.213	16	
L-2	CO 304+72.246 TO 304+99.656		28
TOTAL		16	28

ISLAND CURB SEGMENTS

SHEET No.	STATION LIMITS	SALVAGE
		EA
L-2	CO 304+87.063 TO 305+19.981	29
TOTAL		29

RELOCATE HYDRANT

SHEET No.	STATION LIMITS	SIDE	EA
L-2	CO 303+04	L†	1
L-2	CO 303+34	R†	1
L-2	CO 305+33	R†	1
TOTAL			3

IMPORTED TOPSOIL

LOCATION (IN TREE WELL)	SIDE	QUANTITY
STATION LIMITS		m^3
CO 303+85	R†	0.42
CO 304+02	L†	0.42
CO 304+08	L†	0.42
CO 304+31	R†	0.42
CO 304+37	R†	0.42
CO 304+55	L†	0.42
CO 304+61	L†	0.42
TOTAL		2.94

TREE WELL

LOCATION		SIDE		PERIMETER FRAME (SF)	TREE GRATE (SF)	TREE GUARD (SF)	DECOMPOSED GRANITE (N)	CONSTRUCT TREE WELL
LINE	STATION	R†	L†	EA			(m3)	EA
CO LINE	302+28	X		1			0.15	1
CO LINE	302+32		X	1			0.15	1
CO LINE	302+38	X		1			0.15	1
CO LINE	302+40		X	1			0.15	1
CO LINE	302+47	X		1			0.15	1
CO LINE	302+49		X	1			0.15	1
CO LINE	302+57	X		1			0.15	1
CO LINE	302+59		X	1			0.15	1
CO LINE	302+66	X		1			0.15	1
CO LINE	302+67		X	1			0.15	1
CO LINE	303+85		X	1	1	1		1
CO LINE	304+02	X		1	1	1		1
CO LINE	304+08	X		1	1	1		1
CO LINE	304+31		X	1	1	1		1
CO LINE	304+37		X	1	1	1		1
CO LINE	304+55	X		1	1	1		1
CO LINE	304+61	X		1	1	1		1
TOTAL				17	7	7	1.5	17

(N)=NOT A SEPARATE PAY ITEM. FOR INFORMATION ONLY.
(SF) STATE FURNISHED

SUMMARY OF QUANTITIES
Q-2

STATE OF CALIFORNIA - DEPARTMENT OF TRANSPORTATION
Caltrans DESIGN

FUNCTIONAL SUPERVISOR: JONATHAN LEE
CALCULATED-DESIGNED BY: FRED J. WITTEBORN
CHECKED BY: JONATHAN LEE
REVISED BY: FJW
DATE REVISED: 2/13/13

LAST REVISION 02-13-13 | DATE PLOTTED => 20-MAY-2013 | TIME PLOTTED => 07:50

Dist	COUNTY	ROUTE	KILOMETER POST TOTAL PROJECT	SHEET No.	TOTAL SHEETS
04	Son	101	33.3	108	158

Susan M Lindsay
LICENSED LANDSCAPE ARCHITECT

5-13-13
PLANS APPROVAL DATE

LICENSED LANDSCAPE ARCHITECT
SUSAN M. LINDSAY NO. 2443
Susan M Lindsay
Signature
5-31-13
Renewal Date
1-16-13
Date
STATE OF CALIFORNIA

THE STATE OF CALIFORNIA OR ITS OFFICERS OR AGENTS SHALL NOT BE RESPONSIBLE FOR THE ACCURACY OR COMPLETENESS OF ELECTRONIC COPIES OF THIS PLAN SHEET.

Caltrans Metric

ABBREVIATIONS

AMEND — AMENDMENT
B & B — BALLED AND BURLAPPED
DIA — DIAMETER
EA — EACH
g — GRAM
Kg — KILOGRAM
m — METER
m^2 — SQUARE METER
m^3 — CUBIC METER
MAX — MAXIMUM
MIN — MINIMUM
mm — MILLIMETER
No — NUMBER
Pkt — PACKET
PLT ESTB — PLANT ESTABLISHMENT
PVMT — PAVEMENT
R/W — RIGHT OF WAY
SF — STATE FURNISHED
TRVD — TRAVELED

PLANT LIST AND PLANTING SPECIFICATIONS

PLANT GROUP	PLANT No	SYMBOL	BOTANICAL NAME	COMMON NAME	SIZE	QUANTITY EACH	HOLE SIZE (mm) DIA	HOLE SIZE (mm) DEPTH	BASIN TYPE	IRON SULFATE ①	SOIL AMEND ①	COMMERCIAL FERTILIZER ① PLANTING	COMMERCIAL FERTILIZER ① PLT ESTB	BASIN MULCH (m3)	STAKING	PLANTING LIMITS MINIMUM DISTANCE (m) FROM TRVD WAY	PVMT	FENCE	WALL	PAVED DITCH	EARTH DITCH	ON CENTER (m)	REMARKS
U	1	◌	LAGERSTROEMIA FAURIEI 'TUSCARORA'	CRAPE MYRTLE 'TUSCARORA'	No. 15	7	760	②	⑥	-	0.06 m^3	230 g	230 g	0.05 m3	⑥	-	④	④	④	④	④	④	TREE ⑧

APPLICABLE WHEN CIRCLED:

①- QUANTITIES SHOWN ARE "PER PLANT" UNLESS SHOWN AS m^2 APPLICATION RATES.
②- SUFFICIENT TO RECEIVE ROOT BALL.
3 - DOES NOT APPLY TO MULCH AREAS.
④- AS SHOWN ON PLANS.
5 - UNLESS OTHERWISE SHOWN ON PLANS.
⑥- SEE DETAIL.
7 - SEE SPECIAL PROVISIONS.
⑧- ROOT BARRIER REQUIRED. SEE DETAILS.

NOTE:

UNDERLINED PORTIONS OF BOTANICAL NAME INDICATE ABBREVIATIONS USED ON PLANTING PLANS.

REVISED BY | DATE REVISED
SUSAN ALDRICH | SUSAN LINDSAY
CALCULATED-DESIGNED BY | CHECKED BY
SENIOR LANDSCAPE ARCHITECT
JEANNE GORHAM

STATE OF CALIFORNIA - DEPARTMENT OF TRANSPORTATION
Caltrans LANDSCAPE ARCHITECTURE

PLANT LIST
PL-1

LAST REVISION 01-15-13 | DATE PLOTTED => 20-MAY-2013 | TIME PLOTTED => 07:50

Dist	COUNTY	ROUTE	KILOMETER POST TOTAL PROJECT	SHEET No.	TOTAL SHEETS
04	Son	101	33.3	109	158

Susan M Lindsay
LICENSED LANDSCAPE ARCHITECT

5-13-13
PLANS APPROVAL DATE

LICENSED LANDSCAPE ARCHITECT
SUSAN M. LINDSAY NO. 2443
Signature
5-31-13
Renewal Date
1-16-13
Date
STATE OF CALIFORNIA

THE STATE OF CALIFORNIA OR ITS OFFICERS OR AGENTS SHALL NOT BE RESPONSIBLE FOR THE ACCURACY OR COMPLETENESS OF ELECTRONIC COPIES OF THIS PLAN SHEET.

Caltrans Metric

FOR COMPLETE RIGHT OF WAY AND ACCURATE ACCESS DATA, SEE RIGHT OF WAY RECORD MAPS AT DISTRICT OFFICE.

IRRIGATION NOTES:

1. Unlabeled lateral pipe (SCH 40) downstream of remote control valves shall be 20 mm unless otherwise noted.
2. Quick coupling valves (QCV) shall be 20 mm installed on a swing joint (Type I) with a sprinkler protector (Type I), unless otherwise noted.
3. Trees shall have two 1.8 L/m (Type C-2 Modified) sprinklers each, symbol may be omitted for graphic clarity.
4. Plastic pipe (supply line)(main) shall be 40 mm PVC (SCH 40), unless otherwise noted.
5. Plastic pipe (supply line) installed under sidewalk shall be in irrigation sleeves.
6. Run CNC through exist SCC.

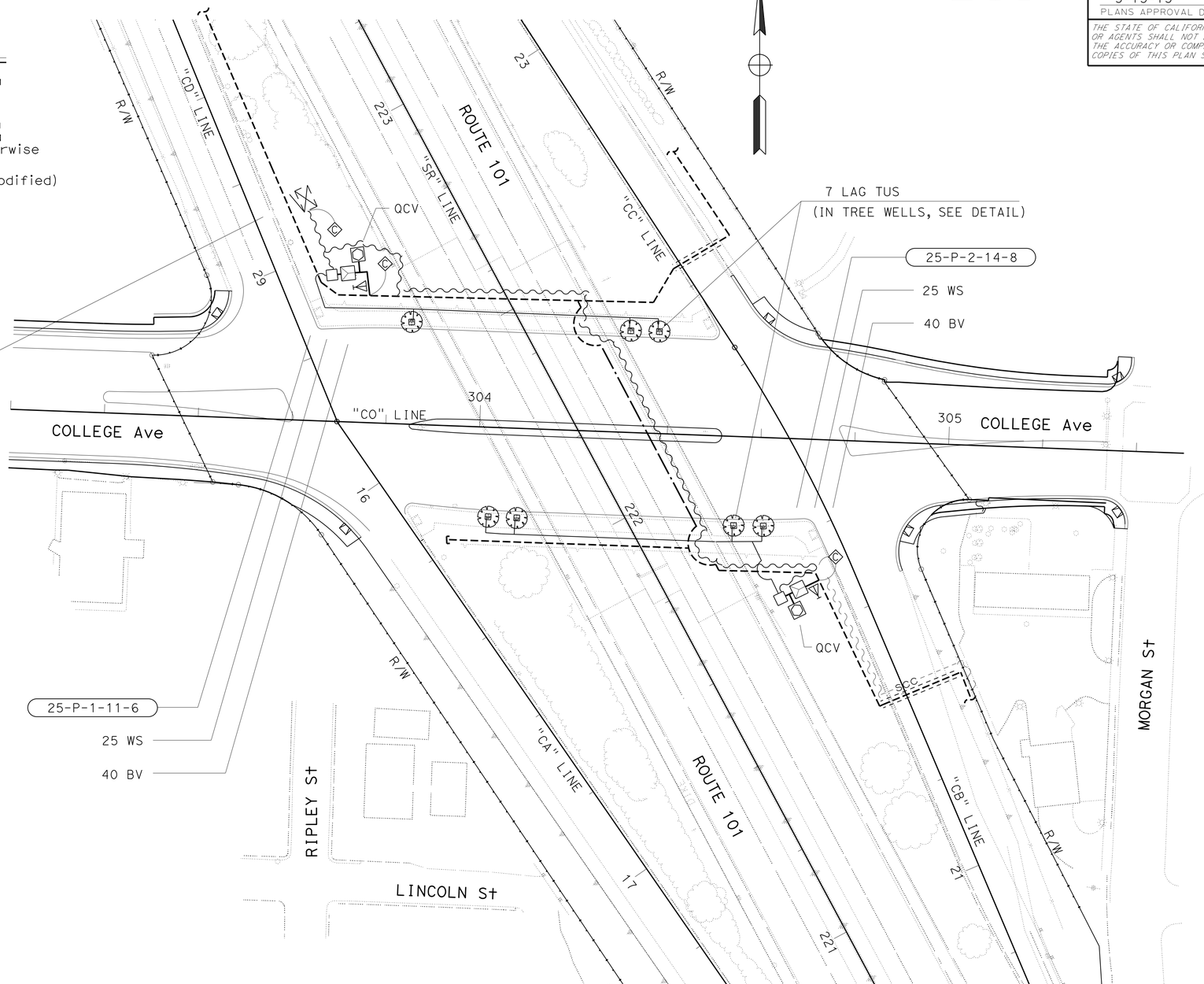

PLANTING AND IRRIGATION PLAN

SCALE 1:500

PI-1

APPROVED FOR PLANTING AND IRRIGATION WORK ONLY.

ALL IRRIGATION EQUIPMENT SIZES ARE IN MILLIMETERS (DIAMETER NOMINAL) UNLESS OTHERWISE SHOWN.

SENIOR LANDSCAPE ARCHITECT	JEANNE GORHAM
CALCULATED-DESIGNED BY	SUSAN ALDRICH
CHECKED BY	SUSAN LINDSAY
REVISED BY	
DATE REVISED	

STATE OF CALIFORNIA - DEPARTMENT OF TRANSPORTATION
Caltrans LANDSCAPE ARCHITECTURE

LAST REVISION 01-15-13 | DATE PLOTTED => 20-MAY-2013 | TIME PLOTTED => 07:50

Dist	COUNTY	ROUTE	KILOMETER POST TOTAL PROJECT	SHEET No.	TOTAL SHEETS
04	Son	101	33.3	110	158

Caltrans Metric

Susan M Lindsay
LICENSED LANDSCAPE ARCHITECT

5-13-13
PLANS APPROVAL DATE

LICENSED LANDSCAPE ARCHITECT — SUSAN M. LINDSAY NO. 2443 — Signature — 5-31-13 Renewal Date — 1-16-13 Date — STATE OF CALIFORNIA

THE STATE OF CALIFORNIA OR ITS OFFICERS OR AGENTS SHALL NOT BE RESPONSIBLE FOR THE ACCURACY OR COMPLETENESS OF ELECTRONIC COPIES OF THIS PLAN SHEET.

SPRINKLER SCHEDULE

SYMBOL	TYPE	DESCRIPTION	SPRAY PATTERN	OPERATING PRESSURE (KILOPASCAL) (kPa)	PRESSURE COMPENSATING	PLUS / MINUS 5% ② DISCHARGE: LITERS PER SECOND L/sec	LITERS PER MINUTE L/min	LITERS PER HOUR L/h	RADIUS (IN METERS)(m)	WIDTH x LENGTH (IN METERS)(m)	MATERIAL	INLET CONNECTION (NPT) (DN IN MILLIMETERS)(mm)	POSITIVE-LOCKING ADJ ARC STOP	BACKSPLASH PREVENTER	DIFFUSER PIN	DISTANCE CONTROL FLAP	ADJ DISCHARGE	RISER: TYPE	MATERIAL: PLASTIC	GALVANIZED	SIZE (IPS) (IN MILLIMETERS)(mm)	HEIGHT (IN MILLIMETERS)(mm)	FLOW SHUTOFF DEVICE	SWING JOINT (TYPE 1)	RISER SUPPORT	SPRINKLER PROTECTOR (TYPE)	REMARKS
●	C-2	MODIFIED FLOOD BUBBLER	-	207	X	-	1.8	-	-	-	PL	15	-	-	-	-	-	⑦	X	-	15	⑦	-	⑦	-	-	INSTALL IN (TYPE C-2 MODIFIED)

X IN BOX DENOTES REQUIREMENT

APPLICABLE WHEN CIRCLED BELOW:

1 - See Special Provisions.
② - If a pressure compensating device is specified, the discharge and radii shown reflect its use.
3 - Arc Stop shall be fitted with a nut and bolt.
4 - Vinyl-coated cast iron housing.
5 - Swing Joints required adjacent to shoulders, curbs, sidewalks, and dikes.
6 - Unless otherwise shown on plans.
⑦ - See detail.

ABBREVIATIONS

ADJ — adjustable
B/B — brass/bronze
B/B/PL — brass/bronze/plastic
B/PL — brass/plastic
CST — center strip
DN — diameter nominal
EST — end strip
F — full circle
F/P — full/part circle
H — half circle
IPS — iron pipe size
kPa — kilopascal
L/h — liters per hour
L/min — liters per minute
L/sec — liters per second
m — meters
mm — millimeters
NPT — national pipe thread
P — part circle
PL — plastic
Q — quarter circle
SST — side strip
T — third circle
TQ — three quarter circle
TT — two third circle

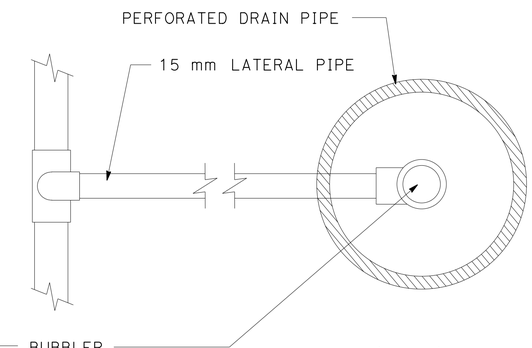

(PLAN)

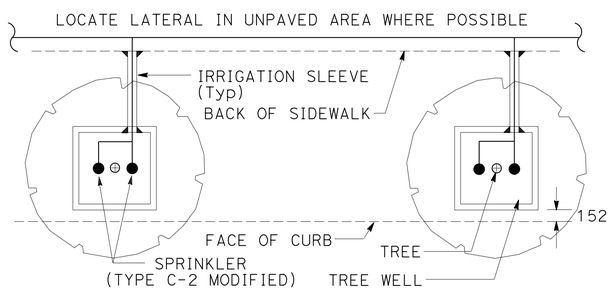

PLAN

TREE WELL IRRIGATION DETAIL (TYP)

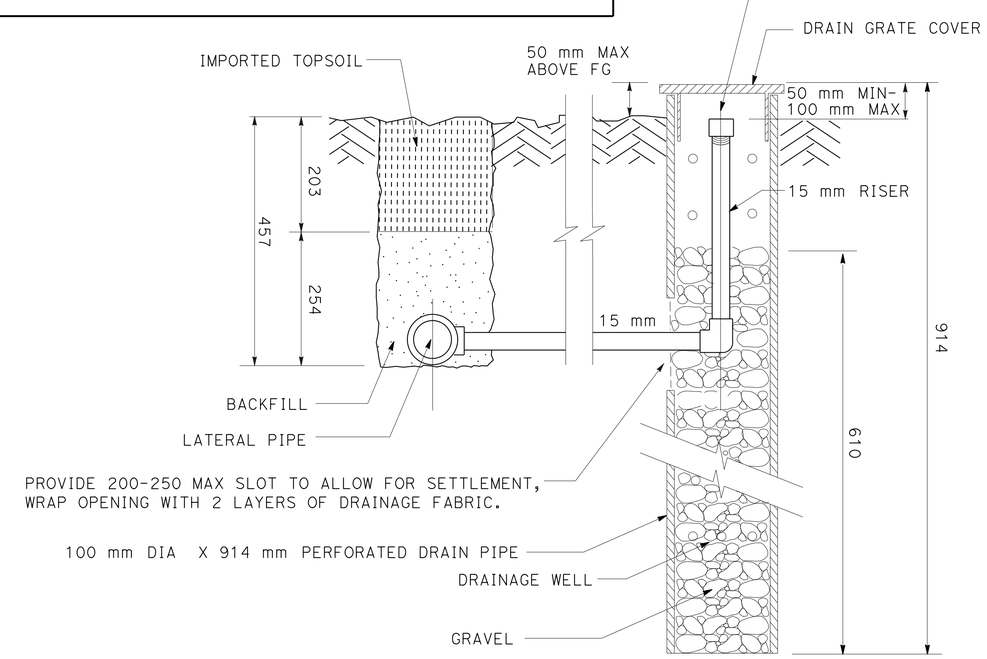

SPRINKLER (TYPE C-2 MODIFIED) IN TREE WELL
(SECTION)

ALL DIMENSIONS ARE IN MILLIMETERS UNLESS OTHERWISE SHOWN

LANDSCAPE DETAILS

NO SCALE

LD-1

STATE OF CALIFORNIA - DEPARTMENT OF TRANSPORTATION
Caltrans LANDSCAPE ARCHITECTURE

SENIOR LANDSCAPE ARCHITECT: JEANNE GORHAM
CALCULATED-DESIGNED BY: SUSAN ALDRICH
CHECKED BY: SUSAN LINDSAY
REVISED BY / DATE REVISED

LAST REVISION 01-15-13
DATE PLOTTED => 20-MAY-2013
TIME PLOTTED => 07:50

NOTE:
TREE GRATE, FRAME AND GUARD ARE STATE FURNISHED MATERIALS.

Dist	COUNTY	ROUTE	KILOMETER POST TOTAL PROJECT	SHEET No.	TOTAL SHEETS
04	Son	101	33.3	111	158

Susan M Lindsay
LICENSED LANDSCAPE ARCHITECT

5-13-13
PLANS APPROVAL DATE

LICENSED LANDSCAPE ARCHITECT
SUSAN M. LINDSAY NO. 2443
Signature 5-31-13
Renewal Date 1-16-13
Date
STATE OF CALIFORNIA

THE STATE OF CALIFORNIA OR ITS OFFICERS OR AGENTS SHALL NOT BE RESPONSIBLE FOR THE ACCURACY OR COMPLETENESS OF ELECTRONIC COPIES OF THIS PLAN SHEET.

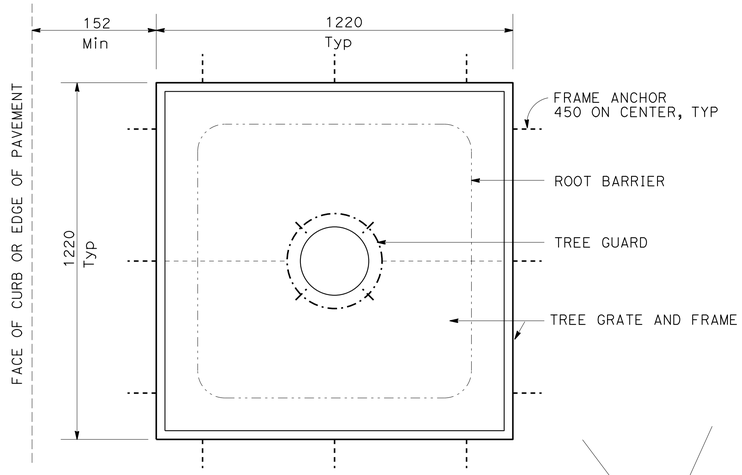

PLAN
TREE WELL, TREE GRATE, TREE GUARD AND FRAME

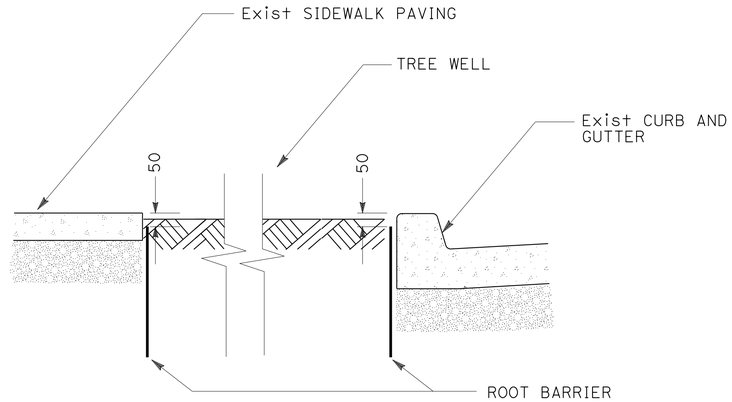

SECTION
ROOT BARRIER IN TREE WELL DETAIL (TYPICAL)

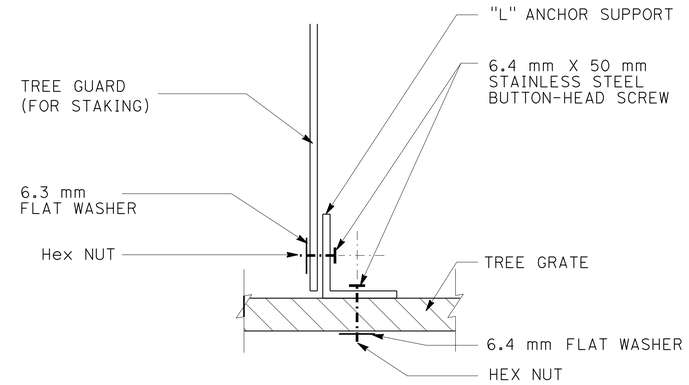

SECTION
TREE GUARD, TREE WELL ANCHOR ASSEMBLY

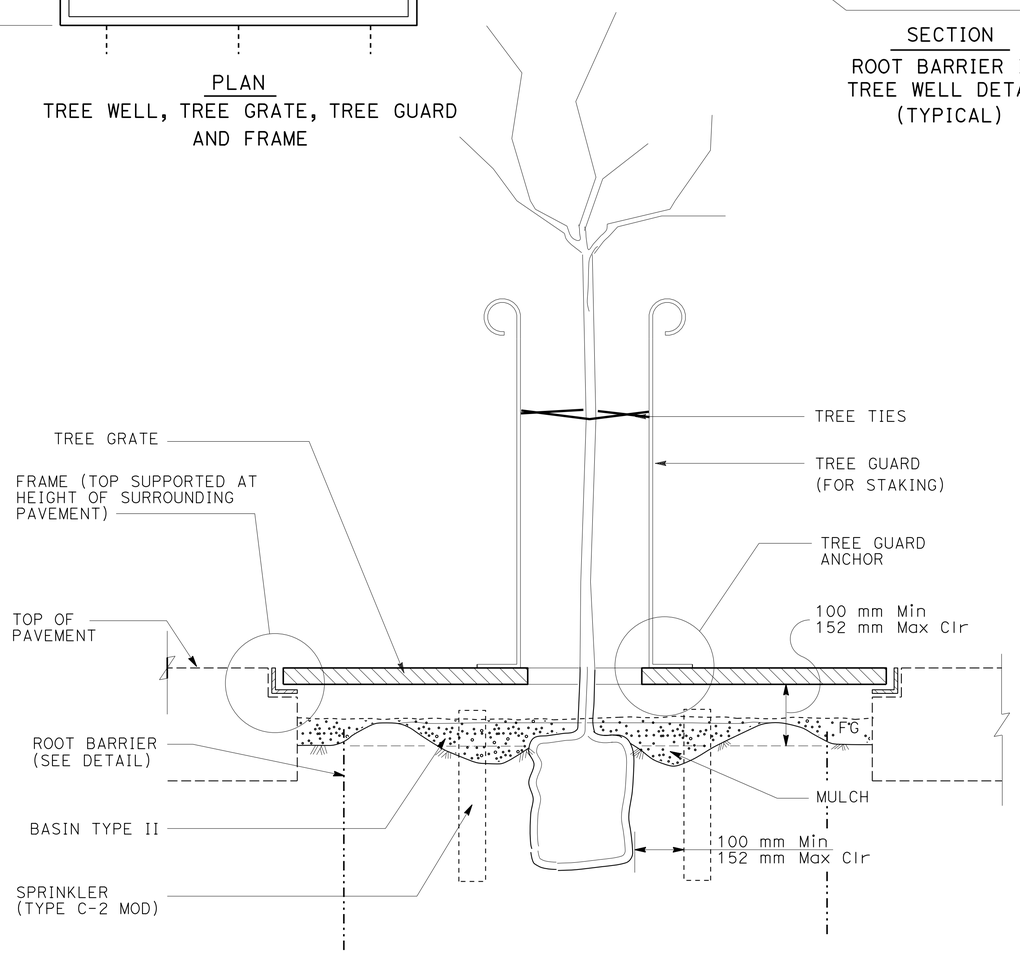

SECTION
TREE GRATE AND TREE GUARD

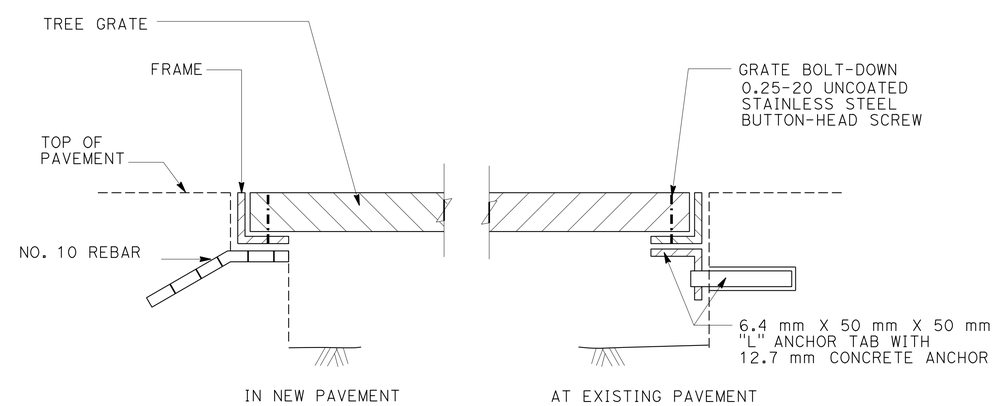

SECTION
TREE WELL FRAME AND ANCHOR

ALL DIMENSIONS ARE IN MILLIMETERS UNLESS OTHERWISE SHOWN

LANDSCAPE DETAILS

NO SCALE

LD-2

STATE OF CALIFORNIA - DEPARTMENT OF TRANSPORTATION
Caltrans
LANDSCAPE ARCHITECTURE

SENIOR LANDSCAPE ARCHITECT: JEANNE GORHAM
CALCULATED-DESIGNED BY: SUSAN ALDRICH
CHECKED BY: SUSAN LINDSAY
REVISED BY / DATE REVISED

LAST REVISION 02-19-13 | DATE PLOTTED => 20-MAY-2013 | TIME PLOTTED => 09:50

Dist	COUNTY	ROUTE	KILOMETER POST TOTAL PROJECT	SHEET No.	TOTAL SHEETS
04	Son	101	33.3	112	158

Caltrans Metric

Susan M Lindsay
LICENSED LANDSCAPE ARCHITECT

5-13-13
PLANS APPROVAL DATE

LICENSED LANDSCAPE ARCHITECT
SUSAN M. LINDSAY NO. 2443
Signature 5-31-13
Renewal Date 1-16-13
Date
STATE OF CALIFORNIA

THE STATE OF CALIFORNIA OR ITS OFFICERS OR AGENTS SHALL NOT BE RESPONSIBLE FOR THE ACCURACY OR COMPLETENESS OF ELECTRONIC COPIES OF THIS PLAN SHEET.

A

AB	aggregate base
ABS	acrylonitrile-butadiene-styrene
AC	asphalt concrete
Adj	adjacent/adjustable
AIC	auxiliary irrigation controller
Alt	alternative
AMEND	amendment
ARV	air release valve
AUTO	automatic
AUX	auxiliary
AVB	atmospheric vacuum breaker

B

B&B	balled and burlapped
B/B	brass/bronze
B/B/PL	brass/bronze/plastic
B/PL	brass/plastic
BFM	bonded fiber matrix
Bit Ctd	bituminous coated
BP	booster pump
BPA	backflow preventer assembly
BPAE	backflow preventer assembly in enclosure
BPE	backflow preventer enclosure
BV	ball valve

C

CAP	corrugated aluminum pipe
CARV	combination air release valve
CCA	cam coupler assembly
CEC	controller enclosure cabinet
CHDPE	corrugated high density polyethylene
CL	chain link
CNC	control and neutral conductors
Conc	concrete
Cond	conduit
CSP	corrugated steel pipe
CST	center strip
CV	check valve

D

Dia	diameter
DIP	ductile iron pipe
DN	diameter nominal

E

EA	each
Elect	electric/electrical
Elev	elevation
ENCL	enclosure
EP	edge of pavement
ES	edge of shoulder
EST	end strip
ESTB	establishment
ETW	edge of traveled way

F

F	full circle
F/P	full/part circle
FAU	filter assembly unit
FCV	flow control valve
FERT	fertilizer
FG	finished grade
FIPT	female iron pipe thread
FIS	fertilizer injector system
FL	flow line
FM	flow monitor
FS	flow sensor
Ft	foot/feet
FV	flush valve

G

Galv	galvanized
GARV	garden valve
GSP	galvanized steel pipe
GV	gate valve

H

H	half circle
HB	hose bib
HDPE	high density polyethylene
HP	horsepower/hinge point
HPL	high pressure line
Hwy	highway

I

IC	irrigation controller
ICC	irrigation controller(s) in controller enclosure cabinet
ID	inside diameter
IFS	irrigation filtration system
IPS	iron pipe size
IPT	iron pipe thread
Irr	irrigation

K

KP	kilometer post

L

L/h	liters per hour
L/min	liters per minute
L/s	liters per second

M

Max	maximum
MBGR	metal beam guard railing
MCV	manual control valve
MIC	master irrigation controller
Min	minimum
MIPT	male iron pipe thread
Misc	miscellaneous
Mtl	material
MVP	maintenance vehicle pullout

N

NCN	no common name
NL	nozzle line
No.	number
NPT	national pipe thread

O

O/C	on center
OD	outside diameter

P

P	part circle
PB	pull box
PCC	portland cement concrete
PE	polyethylene
Pkt	packet
PL	plastic
PLT	plant/planting
PLT ESTB	plant establishment
PM	post mile
PR	pressure rated
PRLV	pressure relief valve
PSFM	polymer stabilized fiber matrix
PSI	pounds per square inch
PRV	pressure reducing valve
PVC	polyvinyl chloride
Pvmt	pavement

Q

Q	quarter circle
QCV	quick coupling valve

R

R	radius
RCP	reinforced concrete pipe
RCV	remote control valve
RCVM	remote control valve (master)
RCVMF	remote control valve (master) w/ flow meter
RCW	recycled/reclaimed water
RECP	rolled erosion control product
REQ	required
R/W	right of way

S

S	slip
SCC	sprinkler control conduit
SCH	schedule
SF	state-furnished
Shld	shoulder
SST	side strip
Sta	station
Std	standard
SW	sidewalk/sound wall

T

T	third circle/thread
TLS	truck loading standpipe
TQ	three quarter circle
TRM	turf reinforcement mat
TRVD	traveled
TT	two third circle
Typ	typical

U

UG	underground

V

VAU	valve assembly unit

W

W	width
W/	with
WM	water meter
WS	wye strainer
WSP	welded steel pipe
WWM	welded wire mesh

NOTE:

FOR ADDITIONAL ABBREVIATIONS, SEE SHEETS C-7 AND C-8.

METRIC UNITS (SI)

SYMBOL	UNIT
mm	millimeter
M	meter
m^2	square meter
m^3	cubic meter
g	gram
kg	kilogram
s	second
KPa	kilopascal
L	liter
ha	hectare

STATE OF CALIFORNIA
DEPARTMENT OF TRANSPORTATION

ALL DIMENSIONS ARE IN MILLIMETERS UNLESS OTHERWISE SHOWN

PLANTING AND IRRIGATION ABBREVIATIONS

NO SCALE

LD-3

LAST REVISION 02-26-13
DATE PLOTTED => 20-MAY-2013
TIME PLOTTED => 07:50

STATE OF CALIFORNIA - DEPARTMENT OF TRANSPORTATION
Caltrans LANDSCAPE ARCHITECTURE

SENIOR LANDSCAPE ARCHITECT: JEANNE GORHAM
CALCULATED-DESIGNED BY: SUSAN ALDRICH
CHECKED BY: SUSAN LINDSAY
REVISED BY
DATE REVISED

Dist	COUNTY	ROUTE	KILOMETER POST TOTAL PROJECT	SHEET No.	TOTAL SHEETS
04	Son	101	33.3	113	158

Caltrans Metric

Susan M Lindsay
LICENSED LANDSCAPE ARCHITECT

5-13-13
PLANS APPROVAL DATE

LICENSED LANDSCAPE ARCHITECT — SUSAN M. LINDSAY NO. 2242 — Signature — 5-31-13 Renewal Date — 1-16-13 Date — STATE OF CALIFORNIA

THE STATE OF CALIFORNIA OR ITS OFFICERS OR AGENTS SHALL NOT BE RESPONSIBLE FOR THE ACCURACY OR COMPLETENESS OF ELECTRONIC COPIES OF THIS PLAN SHEET.

EXISTING	PROPOSED	ITEM DESCRIPTION
		WATER METER (WM)
		BACKFLOW PREVENTER ASSEMBLY (BPA)
		BACKFLOW PREVENTER ASSEMBLY IN ENCLOSURE (BPAE)
		BACKFLOW PREVENTER ENCLOSURE (BPE)
		BOOSTER PUMP (BP)
		TRUCK LOADING STANDPIPE (TLS)
	FS	FLOW SENSOR (FS)
X		MASTER IRRIGATION CONTROLLER (MIC)
		AUXILIARY IRRIGATION CONTROLLER (AIC)
		IRRIGATION CONTROLLER (IC)/ IRRIGATION CONTROLLER (IC) (BATTERY) IRRIGATION CONTROLLER (IC) (SOLAR)
		IRRIGATION CONTROLLER(S) IN CONTROLLER ENCLOSURE CABINET (ICC)
		CONTROL AND NEUTRAL CONDUCTORS (CNC)
SCC	SCC	SPRINKLER CONTROL CONDUIT (SCC)
		IRRIGATION CROSSOVER
		EXTEND IRRIGATION CROSSOVER
		IRRIGATION SLEEVE
dip	DIP	DUCTILE IRON PIPE (SUPPLY LINE) (MAIN) (DIP)
		GALVANIZED STEEL PIPE (SUPPLY LINE) (MAIN) (GSP)
		GALVANIZED STEEL PIPE (SUPPLY LINE) (LATERAL) (GSP)
		PLASTIC PIPE (PR 200) (SUPPLY LINE) (MAIN)
		PLASTIC PIPE (PR 200) (SUPPLY LINE) (LATERAL)
		PLASTIC PIPE (IRRIGATION LINE)
		REMOTE CONTROL VALVE (RCV) REMOTE CONTROL VALVE (MASTER) (RCVM) REMOTE CONTROL VALVE (MASTER) W/FLOW METER (RCVMF)
		MANUAL CONTROL VALVE (MCV)
		VALVE ASSEMBLY UNIT (VAU)
		WYE STRAINER (WS)
		FILTER ASSEMBLY UNIT (FAU)
		GATE VALVE (GV)
		BALL VALVE (BV)

EXISTING	PROPOSED	ITEM DESCRIPTION
		QUICK COUPLING VALVE (QCV)
		CAM COUPLER ASSEMBLY (CCA)
		PRESSURE REDUCING VALVE (PRV)
		PRESSURE RELIEF VALVE (PRLV)
		FLOW CONTROL VALVE (FCV)
		COMBINATION AIR RELEASE VALVE (CARV)
		CHECK VALVE (CV)
		FLUSH VALVE (FV)
		NOZZLE LINE W/TURNING UNION
		IRRIGATION SYSTEM
		IRRIGATION SYSTEM TO BE REMOVED
		CHAIN LINK GATE
		QUICK COUPLING VALVE W/SPRINKLER PROTECTOR
3	3	SPRINKLER W/SPRINKLER PROTECTOR
		CONNECT TO EXISTING SYSTEM
		CAP
		CAP EXISTING

VALVE CODE

RCV SIZE (mm)
IRRIGATION CONTROLLER
CONTROLLER STATION
VALVE IN PARALLEL (IF APPLICABLE)
L/m
QUANTITY OF SPRINKLERS (WHEN SHOWN)

* 63.5-A-2b-40 -60

MCV SIZE (mm)
VALVE NUMBER
L/m
QUANTITY OF TYPE SPRINKLERS (WHEN SHOWN)

* 50.8-3-30 -50

* VALVE CODES FOR EXISTING VALVES ARE SHOWN IN A DASHED ENCLOSURE.

STATE OF CALIFORNIA
DEPARTMENT OF TRANSPORTATION

ALL DIMENSIONS ARE IN MILLIMETERS UNLESS OTHERWISE SHOWN

PLANTING AND IRRIGATION SYMBOLS

NO SCALE

LD-4

LAST REVISION 02-26-13 | DATE PLOTTED => 20-MAY-2013 | TIME PLOTTED => 07:50

REVISED BY | DATE REVISED
SUSAN ALDRICH | SUSAN LINDSAY
CALCULATED-DESIGNED BY | CHECKED BY
SENIOR LANDSCAPE ARCHITECT
JEANNE GORHAM
STATE OF CALIFORNIA - DEPARTMENT OF TRANSPORTATION
Caltrans LANDSCAPE ARCHITECTURE

Dist	COUNTY	ROUTE	KILOMETER POST TOTAL PROJECT	SHEET No.	TOTAL SHEETS
04	Son	101	33.3	114	158

Susan M Lindsay
LICENSED LANDSCAPE ARCHITECT

5-13-13
PLANS APPROVAL DATE

LICENSED LANDSCAPE ARCHITECT
SUSAN M. LINDSAY NO. 2443
Signature 5-31-13
Renewal Date 1-16-13
Date
STATE OF CALIFORNIA

THE STATE OF CALIFORNIA OR ITS OFFICERS OR AGENTS SHALL NOT BE RESPONSIBLE FOR THE ACCURACY OR COMPLETENESS OF ELECTRONIC COPIES OF THIS PLAN SHEET.

Caltrans Metric

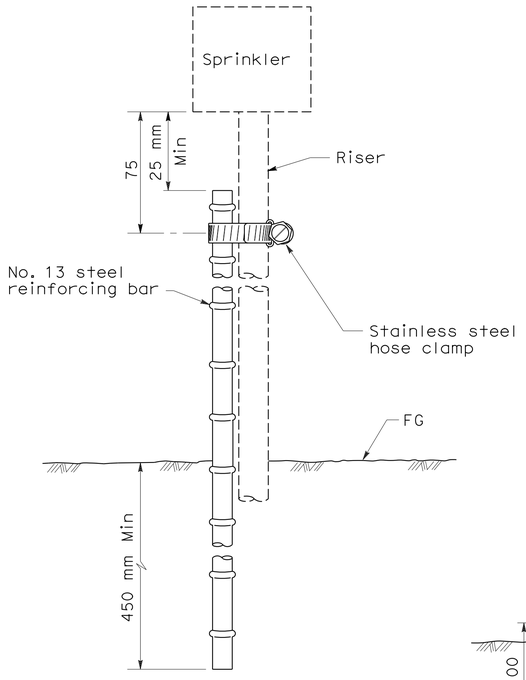

ELEVATION
RISER SUPPORT

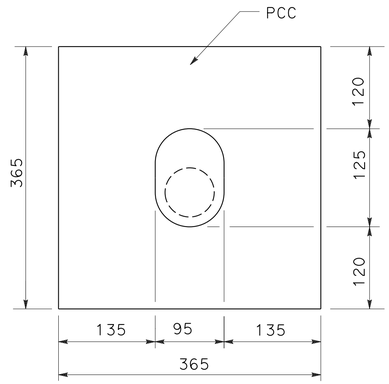

PLAN

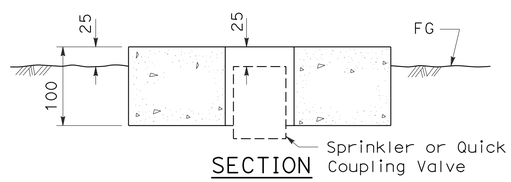

SECTION
SPRINKLER PROTECTOR TYPE I

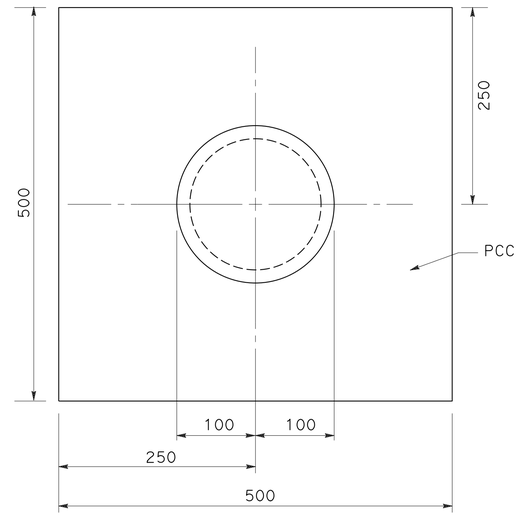

PLAN

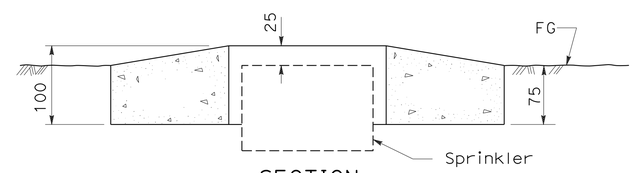

SECTION
SPRINKLER PROTECTOR TYPE II

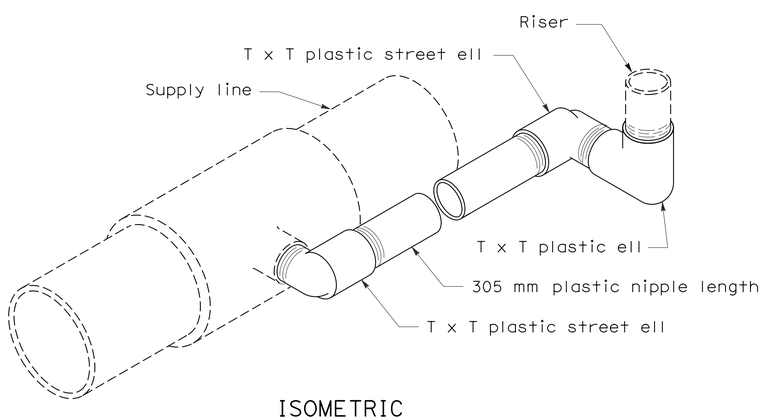

ISOMETRIC
SWING JOINT TYPE I

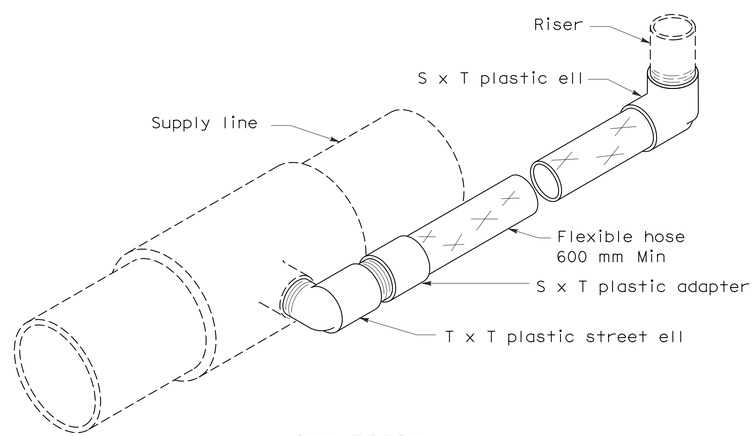

ISOMETRIC
SWING JOINT TYPE II

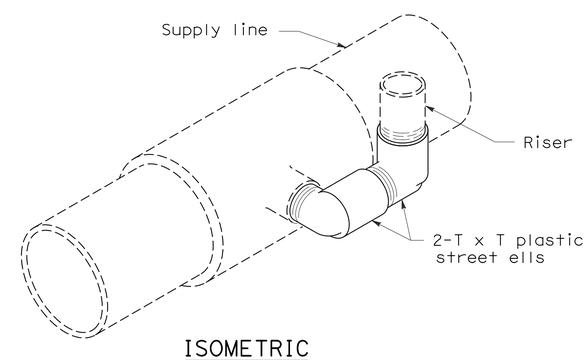

ISOMETRIC
SWING JOINT TYPE III

STATE OF CALIFORNIA
DEPARTMENT OF TRANSPORTATION

ALL DIMENSIONS ARE IN MILLIMETERS UNLESS OTHERWISE SHOWN

PLANTING AND IRRIGATION DETAILS

NO SCALE

LD-5

REVISED BY	DATE REVISED

CALCULATED-DESIGNED BY	SUSAN ALDRICH
CHECKED BY	SUSAN LINDSAY
SENIOR LANDSCAPE ARCHITECT	JEANNE GORHAM

STATE OF CALIFORNIA - DEPARTMENT OF TRANSPORTATION
Caltrans LANDSCAPE ARCHITECTURE

LAST REVISION 02-27-13 | DATE PLOTTED => 20-MAY-2013 | TIME PLOTTED => 07:50

Dist	COUNTY	ROUTE	KILOMETER POST TOTAL PROJECT	SHEET No.	TOTAL SHEETS
04	Son	101	33.3	115	158

Caltrans Metric

Susan M Lindsay
LICENSED LANDSCAPE ARCHITECT

5-13-13
PLANS APPROVAL DATE

LICENSED LANDSCAPE ARCHITECT — SUSAN M. LINDSAY NO. 2443 — Signature 5-31-13 Renewal Date — 1-16-13 Date — STATE OF CALIFORNIA

THE STATE OF CALIFORNIA OR ITS OFFICERS OR AGENTS SHALL NOT BE RESPONSIBLE FOR THE ACCURACY OR COMPLETENESS OF ELECTRONIC COPIES OF THIS PLAN SHEET.

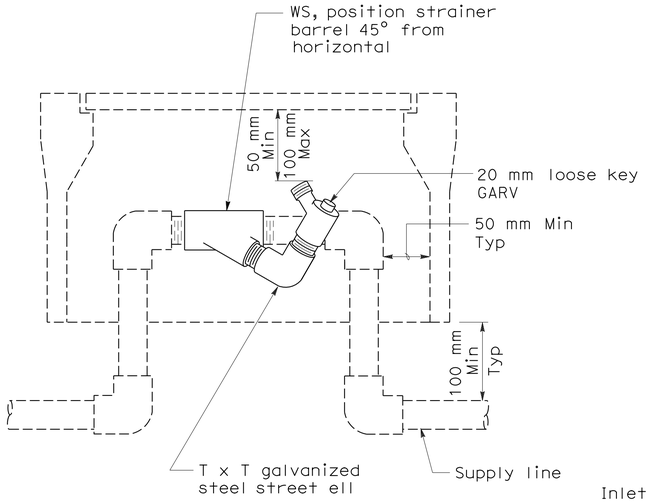

ELEVATION
WYE STRAINER

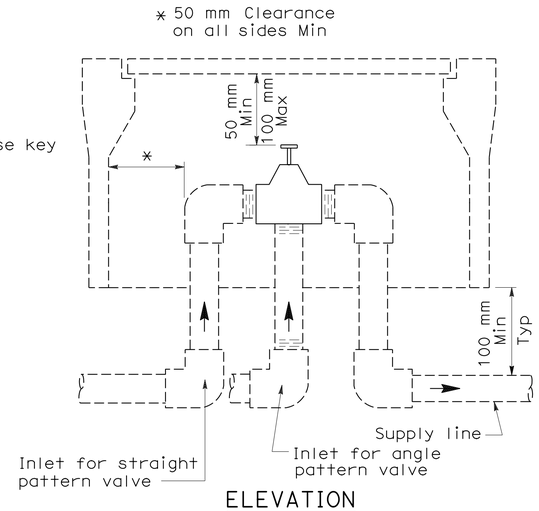

ELEVATION
VALVE

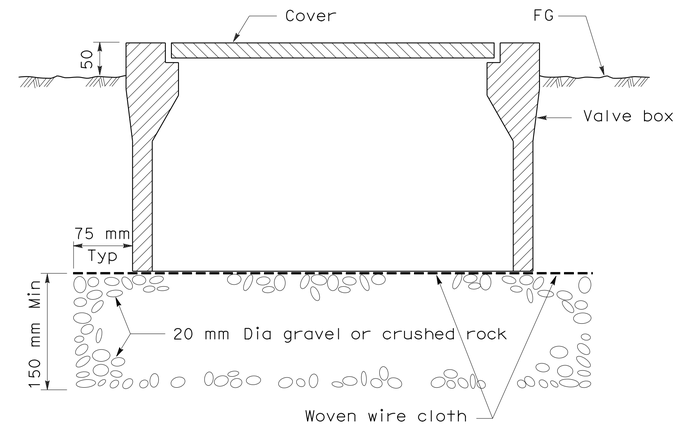

SECTION
VALVE BOX

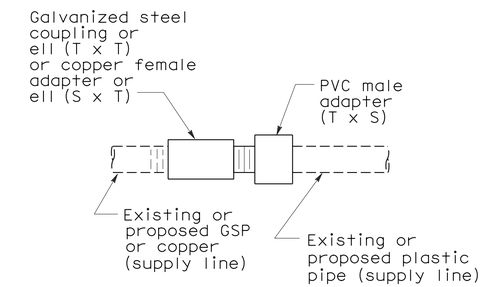

PLAN
GALVANIZED OR COPPER PIPE CONNECTION TO PLASTIC PIPE

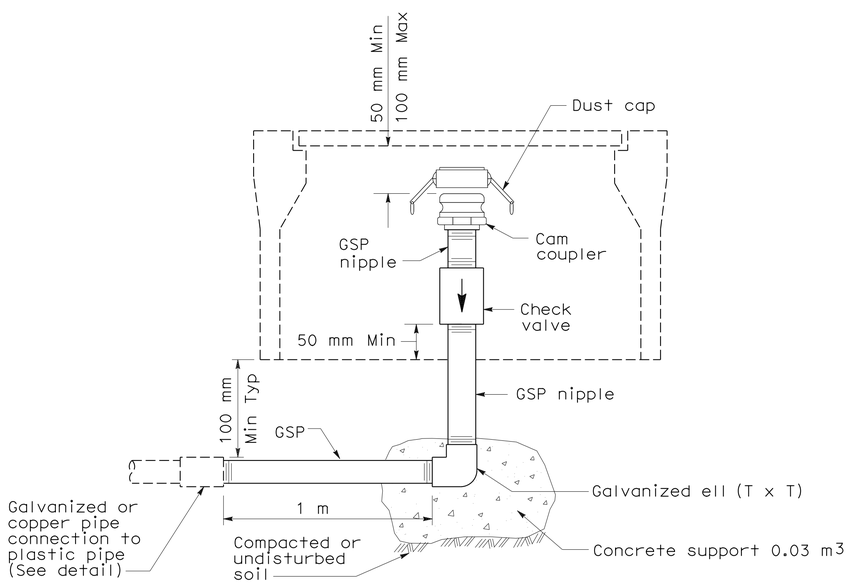

ELEVATION
CAM COUPLER ASSEMBLY

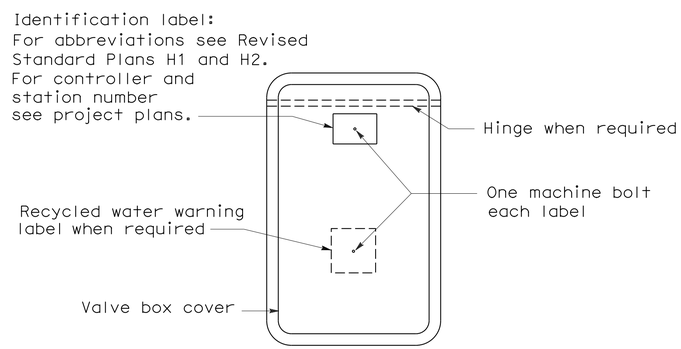

PLAN

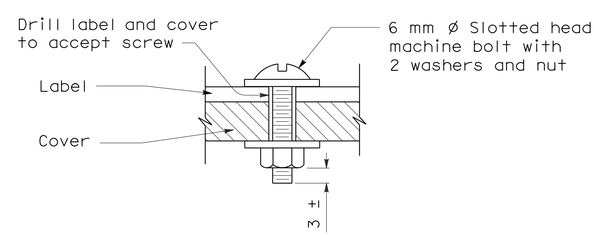

SECTION
VALVE BOX IDENTIFICATION

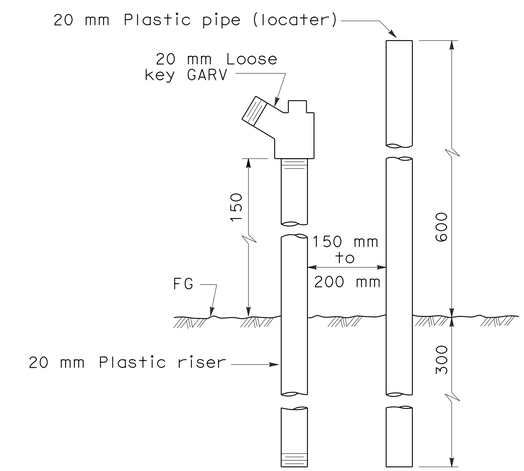

ELEVATION
FLUSH VALVE

STATE OF CALIFORNIA
DEPARTMENT OF TRANSPORTATION

ALL DIMENSIONS ARE IN MILLIMETERS UNLESS OTHERWISE SHOWN

PLANTING AND IRRIGATION DETAILS

NO SCALE

LD-6

STATE OF CALIFORNIA - DEPARTMENT OF TRANSPORTATION
Caltrans LANDSCAPE ARCHITECTURE

SENIOR LANDSCAPE ARCHITECT: JEANNE GORHAM
CALCULATED-DESIGNED BY: SUSAN ALDRICH
CHECKED BY: SUSAN LINDSAY
REVISED BY / DATE REVISED

LAST REVISION 02-26-13 | DATE PLOTTED => 20-MAY-2013 | TIME PLOTTED => 07:50

Dist	COUNTY	ROUTE	KILOMETER POST TOTAL PROJECT	SHEET No.	TOTAL SHEETS
04	Son	101	33.3	116	158

Caltrans Metric

Susan M Lindsay
LICENSED LANDSCAPE ARCHITECT

5-13-13
PLANS APPROVAL DATE

LICENSED LANDSCAPE ARCHITECT — SUSAN M. LINDSAY NO. 2445 — Signature — 5-31-13 Renewal Date — 1-16-13 Date — STATE OF CALIFORNIA

THE STATE OF CALIFORNIA OR ITS OFFICERS OR AGENTS SHALL NOT BE RESPONSIBLE FOR THE ACCURACY OR COMPLETENESS OF ELECTRONIC COPIES OF THIS PLAN SHEET.

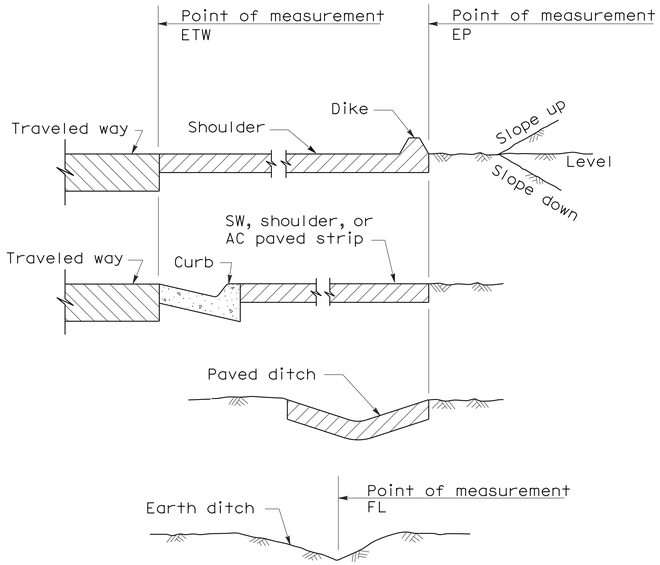

SECTION
POINTS OF MEASUREMENT

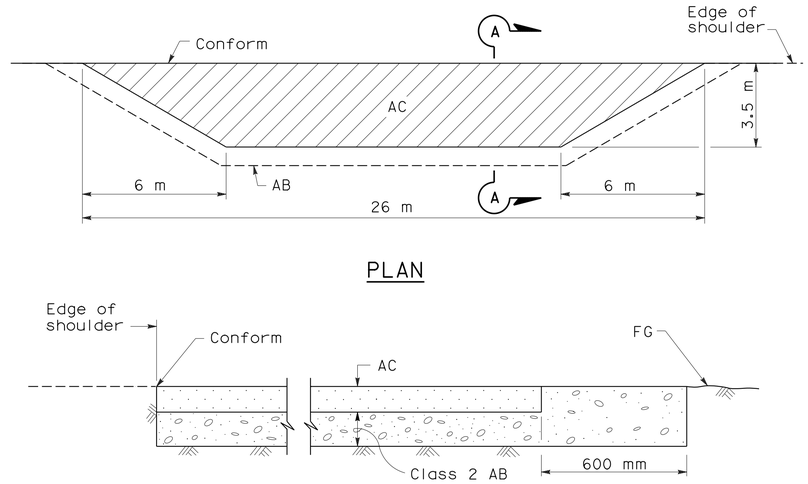

PLAN

SECTION A-A
MAINTENANCE VEHICLE PULLOUT

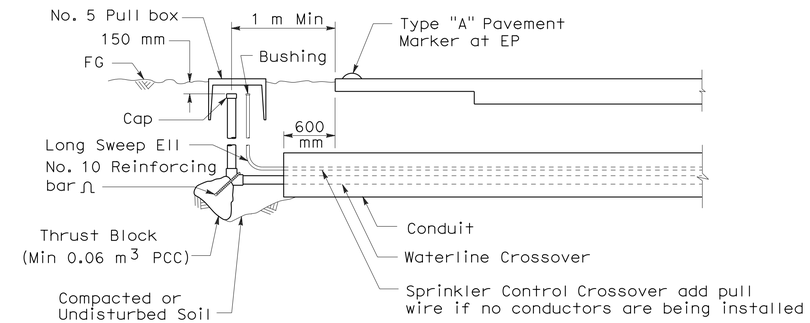

SECTION
IRRIGATION CROSSOVER

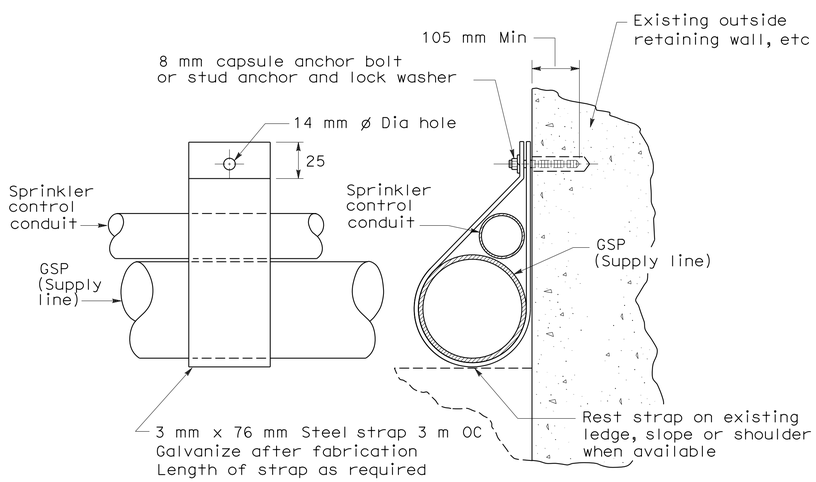

ELEVATION SECTION

PIPE ANCHOR TYPE I

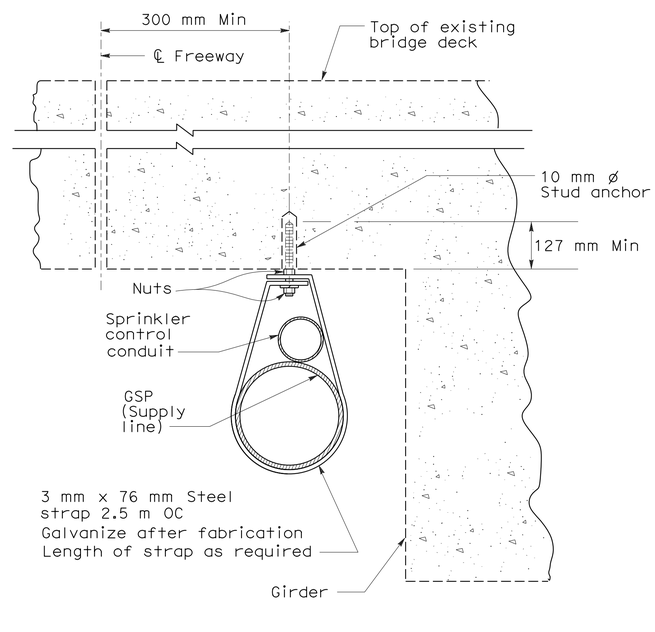

SECTION

PIPE ANCHOR TYPE II

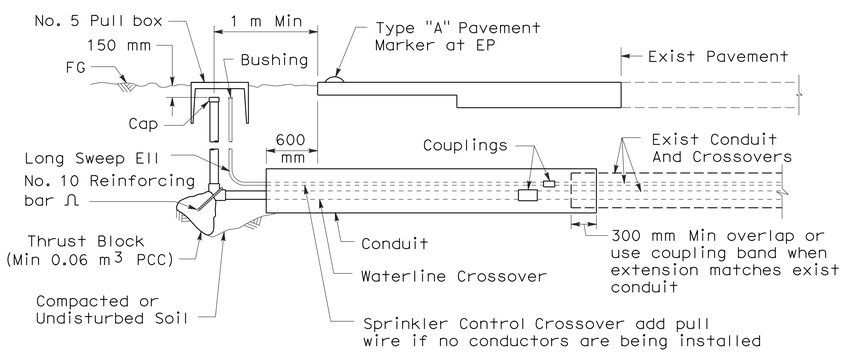

SECTION

EXTEND IRRIGATION CROSSOVER

STATE OF CALIFORNIA
DEPARTMENT OF TRANSPORTATION

ALL DIMENSIONS ARE IN
MILLIMETERS UNLESS OTHERWISE SHOWN

PLANTING AND IRRIGATION DETAILS

NO SCALE

LD-7

STATE OF CALIFORNIA - DEPARTMENT OF TRANSPORTATION
Caltrans LANDSCAPE ARCHITECTURE

SENIOR LANDSCAPE ARCHITECT: JEANNE GORHAM
CALCULATED-DESIGNED BY: SUSAN ALDRICH
CHECKED BY: SUSAN LINDSAY
REVISED BY / DATE REVISED

LAST REVISION 02-26-13 | DATE PLOTTED => 20-MAY-2013 | TIME PLOTTED => 07:50

Dist	COUNTY	ROUTE	KILOMETER POST TOTAL PROJECT	SHEET No.	TOTAL SHEETS
04	Son	101	33.3	117	158

Susan M Lindsay
LICENSED LANDSCAPE ARCHITECT

5-13-13
PLANS APPROVAL DATE

LICENSED LANDSCAPE ARCHITECT
SUSAN M. LINDSAY NO. 2443
Susan M Lindsay
Signature
5-31-13
Renewal Date
1-16-13
Date
STATE OF CALIFORNIA

THE STATE OF CALIFORNIA OR ITS OFFICERS OR AGENTS SHALL NOT BE RESPONSIBLE FOR THE ACCURACY OR COMPLETENESS OF ELECTRONIC COPIES OF THIS PLAN SHEET.

Caltrans Metric

NOTES:

1. TREE GRATE, FRAME AND GUARD ARE STATE FURNISHED MATERIALS.
2. DECOMPOSED GRANITE TO BE PLACED IN SELECTED TREE WELLS ONLY. SEE TABLE ON SHEET Q-2.

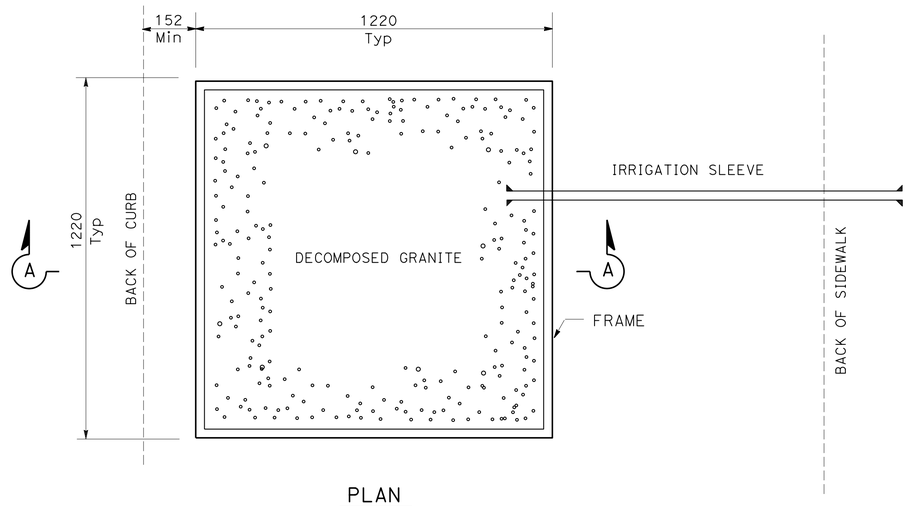

PLAN

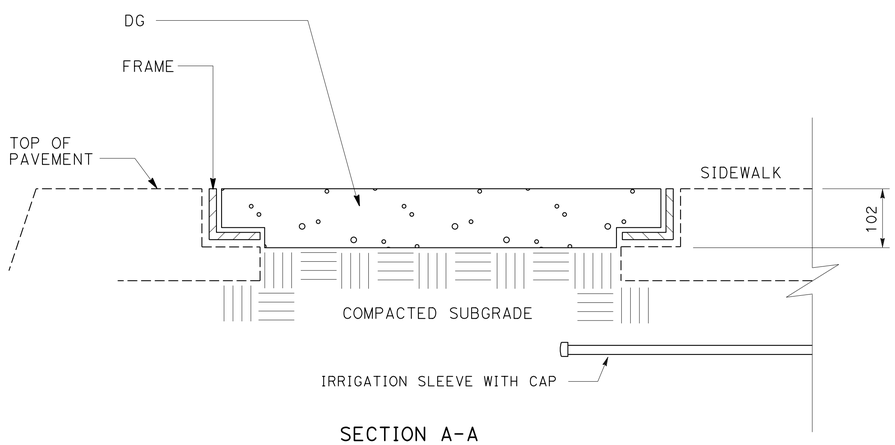

SECTION A-A

TREE WELL WITH FRAME

ALL DIMENSIONS ARE IN MILLIMETERS UNLESS OTHERWISE SHOWN

LANDSCAPE DETAILS

NO SCALE

LD-8

STATE OF CALIFORNIA - DEPARTMENT OF TRANSPORTATION
Caltrans
LANDSCAPE ARCHITECTURE

SENIOR LANDSCAPE ARCHITECT: SUSAN LINDSAY
CALCULATED-DESIGNED BY: SUSAN ALDRICH
CHECKED BY: SUSAN LINDSAY
REVISED BY
DATE REVISED

LAST REVISION 04-11-13
DATE PLOTTED => 20-MAY-2013
TIME PLOTTED => 09:58

Dist	COUNTY	ROUTE	KILOMETER POST TOTAL PROJECT	SHEET No.	TOTAL SHEETS
04	Son	101	33.3	118	158

Elaine Wong 1/14/13
REGISTERED ELECTRICAL ENGINEER DATE

5-13-13
PLANS APPROVAL DATE

REGISTERED PROFESSIONAL ENGINEER Elaine T. Wong No. 13753 Exp. 6-30-13 ELECT STATE OF CALIFORNIA

THE STATE OF CALIFORNIA OR ITS OFFICERS OR AGENTS SHALL NOT BE RESPONSIBLE FOR THE ACCURACY OR COMPLETENESS OF ELECTRONIC COPIES OF THIS PLAN SHEET.

Caltrans Metric

ELECTRICAL INDEX:

E-1 TO E-2	SIGNAL AND LIGHTING (INDEX, NOTES, SYMBOLS AND ABBREVIATIONS)
E-3	LIGHTING (CITY)
E-4	LIGHTING (CITY)
E-5 AND E-6	SIGNAL AND LIGHTING (LOCATION 1)
E-7 AND E-8	SIGNAL AND LIGHTING (LOCATION 2)
E-9 AND E-10	SIGNAL AND LIGHTING (CITY)
E-11 TO E-12	ELECTRICAL DETAILS
E-13 TO E-41	ELECTRICAL SYSTEM

GENERAL NOTES:

1. NO ABOVE GROUND ELECTRICAL WORK SHALL BE PERFORMED ON ANY SYSTEM WITHIN THE PROJECT SITE UNTIL ALL CONTRACTOR-FURNISHED ELECTRICAL MATERIALS FOR THAT INDIVIDUAL SYSTEM HAVE BEEN TESTED AND DELIVERED TO THE CONTRACTOR.

2. THE NEUTRAL CONDUCTOR SHALL RUN FROM THE SERVICE EQUIPMENT ENCLOSURE TO THE CONTROLLER CABINET WITHOUT SPLICING TO ANY OTHER NEUTRAL CONDUCTOR.

3. THE CLEARANCE BETWEEN THE BOTTOM OF THE LOWEST CIRCUIT BREAKER AND THE BOTTOM OF THE SERVICE EQUIPMENT ENCLOSURE FOR A TYPE III-A SERIES SHALL BE 610 mm MINIMUM

4. WHERE ONE OR MORE TRAFFIC SIGNAL DETECTOR(S) CONSIST OF A SEQUENCE OF 4 LOOPS IN A SINGLE LANE, THE FRONT LOOP CLOSEST TO THE LIMIT LINE OR CROSSWALK SHALL BE LOCATED 300 mm FROM THE LINE. THE SET OF 3 LOOPS OR 4 LOOPS ASSIGNED TO THE SAME LOOP DETECTOR LEAD-IN CABLE (DLC) SHALL BE CONNECTED IN SERIES FOR TRAFFIC SIGNAL SYSTEM ONLY AND NOT FOR RAMP METERING SYSTEM.

5. PULL BOXES FOR CIRCUITS LABELED "(CITY/COUNTY) CIRCUIT" ON THE PLANS SHALL NOT HAVE THE "CALTRANS" COVER MARKING. THE COVERS SHALL BE MARKED "CITY".

6. AT LEAST THREE WORKING DAYS PRIOR TO PERFORMING ANY WORK ON EACH EXISTING SYSTEM, THE CONTRACTOR SHALL NOTIFY THE DEPARTMENT OF TRANSPORTATION, ELECTRICAL AND SIGNAL MAINTENANCE SUPERINTENDENT, PHONE (415) 330-6500.

7. PULL BOX COVERS SHALL BE MARKED ''SIC'' FOR SIGNAL INTERCONNECT CIRCUIT.

8. SLEEVE NUTS SHALL BE USED ON TYPE 1-B STANDARD. FOUNDATIONS FOR TYPE 1-B STANDARDS SHALL CONFORM TO THE DETAILS ON E-28, "ANCHOR BOLTS WITH SLEEVE NUTS", EXCEPT THAT THE BOTTOM OF THE BASE PLATE SHALL BE FLUSH WITH THE FINISHED GRADE.

9. ALL PEDESTRIAN SIGNAL FACES SHALL BE LED COUNTDOWN TYPE.

SYMBOLS

EXISTING PEDESTRIAN SIGNAL DEVICE

ABBREVIATIONS:

CTID CALTRANS IDENTIFICATION

PROJECT NOTES:

1. INSTALL STATE-FURNISHED MODEL 2070 CONTROLLER ASSEMBLY AND STATE-FURNISHED MODEM, RELOCATE EXISTING CITY COMMUNICATION EQUIPMENT FROM EXISTING CABINET TO NEW CABINET AT THE DIRECTION OF THE ENGINEER.
2. INSTALL 53C, 3#2 (120/240 V SERVICE).
3. INSTALL 41C, 3#14 (120 V PEU).
4. INSTALL PULL BOX PER SERVICE UTILITY REQUIREMENTS.
5. SC BY PG&E. COVER SHALL BE MARKED AS CALTRANS/PG&E. THIS IS A PG&E TERMINATION POINT.
6. EXISTING 53C, 2#6 (120 V SERVICE TO CONTROLLER AT SIGNAL ROUTE 101 SB), 2#6 (120 V SERVICE TO CONTROLLER AT SIGNAL ROUTE 101 NB), 2#6 (240 V LIGHTING), 3#14 (120 V PEU).
7. INSTALL 53C, 2#6 (120 V SERVICE TO CONTROLLER AT SIGNAL ROUTE 101 SB), 2#8 (240 V LIGHTING).
8. EXISTING TYPE III-AF SERVICE EQUIPMENT ENCLOSURE TO REMAIN. FOR EXISTING SERVICE WIRING DIAGRAM SEE E-12.
9. INSTALL TYPE I PEDESTRIAN BARRICADE, SEE E-35.
10. INSTALL 78C, 2 CITY SIGNAL INTERCONNECT CABLE (IMSA 40-2), 1 SIGNAL INTERCONNECT CABLE (6 PAIR). 53C, MT.
11. INSTALL 53C, 1 CITY SIGNAL INTERCONNECT CABLE (IMSA 40-2), 53C, MT.
12. INSTALL 53C, 1 CITY SIGNAL INTERCONNECT CABLE (IMSA 40-2), 1 SIGNAL INTERCONNECT CABLE (6 PAIR). 53C, MT.
13. EXISTING 53C, REMOVE EXISTING SIC CABLES AND INSTALL 1 CITY SIGNAL INTERCONNECT CABLE (IMSA 40-2), 1 SIGNAL INTERCONNECT CABLE (6 PAIR). 53C, MT.
14. REINSTALL EMERGENCY VEHICLE DETECTOR ON SIGNAL SECTION, SEE EMERGENCY VEHICLE DETECTOR MOUNTING ON E-22.
15. INSTALL 53C, 2#6 (120 V SERVICE TO CONTROLLER AT SIGNAL ROUTE 101 NB), 2#6 (240 V LIGHTING), 4 DLC.
16. INSTALL 53C, 2#6 (120 V SERVICE TO CONTROLLER AT SIGNAL ROUTE 101 NB), 2#6 (240 V LIGHTING).
17. PART OF BID ITEM SIGNAL AND LIGHTING (LOCATION 2).
18. COUNT DOWN LED PEDESTRIAN SIGNAL HEAD.
19. INSTALL 3 m x 900 mm TYPE C DETECTOR LOOP, SEE DETAIL A ON E-23 AND E-24 AND 4.6 m x 900 mm TYPE C DETECTOR LOOP AS SHOWN ON E-6.
20. INSTALL PEU ON TOP OF TYPE 1-B STANDARD, SEE MOUNTING DETAIL ON E-34.

SIGNAL AND LIGHTING (INDEX, NOTES, SYMBOLS AND ABBREVIATIONS)

E-1

STATE OF CALIFORNIA - DEPARTMENT OF TRANSPORTATION
Caltrans

FUNCTIONAL SUPERVISOR: LAI HONG CHIU
CALCULATED-DESIGNED BY: WILLIAM Y. WONG
CHECKED BY: ELAINE T. WONG
REVISED BY: WYW
DATE REVISED: 1/14/13

LAST REVISION 02-07-13 | DATE PLOTTED => 20-MAY-2013 | TIME PLOTTED => 07:50

Dist	COUNTY	ROUTE	KILOMETER POST TOTAL PROJECT	SHEET No.	TOTAL SHEETS
04	Son	101	33.3	119	158

Elaine Wong 1/14/13
REGISTERED ELECTRICAL ENGINEER DATE

5-13-13
PLANS APPROVAL DATE

REGISTERED PROFESSIONAL ENGINEER Elaine T. Wong No. 13753 Exp. 6-30-13 ELECT STATE OF CALIFORNIA

THE STATE OF CALIFORNIA OR ITS OFFICERS OR AGENTS SHALL NOT BE RESPONSIBLE FOR THE ACCURACY OR COMPLETENESS OF ELECTRONIC COPIES OF THIS PLAN SHEET.

Caltrans Metric

PROJECT NOTES:

21 INSTALL 41C, 1 DLC.

22 INSTALL 41C, 2 DLC.

23 INSTALL 41C, 3 DLC.

24 INSTALL 41C, 4 DLC.

25 INSTALL 53C, 7 DLC.

26 EXISTING 41C, REMOVE EXISTING DLC AND INSTALL NEW 5 DLC.

27 REMOVE EXISTING DLC AND SPLICE NEW DLC TO EXISTING LOOP WIRES RESPECTIVELY IN EXISTING PULL BOX.

28 EXISTING 53C, INSTALL 3#2 (120/240 V SERVICE).

29 EXISTING 41C, REMOVE EXISTING DLC AND INSTALL NEW 2 DLC.

30 EXISTING PULL BOX WITH COVER MARKED "INTERCONNECT" TO REMAIN.

31 INSTALL 1 CITY SIGNAL INTERCONNECT CABLE (24 PAIR) THROUGH EXISTING CONDUIT RUNS AS SHOWN ON THE PLAN AND INTO EXISTING CONTROLLER CABINET AS DIRECTED BY THE ENGINEER.

32 EXISTING PG&E WOOD POLE WITH OR WITHOUT LIGHTING TO BE REMOVED BY OTHERS.

33 EXISTING OVERHEAD WIRES TO BE REMOVED BY OTHERS.

34 RC EXISTING CITY LIGHTING.

35 EXISTING IRRIGATION CONTROLLER ENCLOSURE CABINET TO REMAIN.

36 RC EXISTING IRRIGATION CONTROLLER.

37 RC EXISTING SERVICE EQUIPMENT ENCLOSURE FOR IRRIGATION.

38 EXISTING TYPE 1-B POLE WITH PEU FOR SOFFIT LIGHTING AND CITY LIGHTING TO REMAIN.

39 EXISTING 41C, 2#6 (240 V LIGHTING).

40 EXISTING 41C, 2#10 (120 V IRRIGATION).

41 EXISTING 41C, 2#8 (240 V SIGN ILLUMINATION), 2#10 (120 V IRRIGATION), 2#14 (120 V SIGN TEST SWITCH).

42 EXISTING 41C, 2#6 (120 V SERVICE TO EMS CONTROLLER), 2#8 (240 V SIGN ILLUMINATION), 2#10 (120 V IRRIGATION), 2#14 (120 V SIGN TEST SWITCH).

43 EXISTING 53C, 2#6 (120 V SERVICE TO RAMP METERING CONTROLLER), 2#6 (120 V SERVICE TO EMS CONTROLLER), 2#8 (240 V SIGN ILLUMINATION), 2#10 (120 V IRRIGATION), 2#14 (120 V SIGN TEST SWITCH).

44 INSTALL 41C, 2#6 (240 V LIGHTING).

45 INSTALL 41C, 2#10 (120 V IRRIGATION).

46 NOT USED.

47 PART OF BID ITEM SIGNAL AND LIGHTING (LOCATION 1).

48 INSTALL 41C, 5 DLC.

SIGNAL AND LIGHTING
(INDEX, NOTES, SYMBOLS AND ABBREVIATIONS)

E-2

REVISED BY	DATE REVISED
WYW	1/14/13

WILLIAM Y. WONG
ELANINE T. WONG
CALCULATED-DESIGNED BY
CHECKED BY
FUNCTIONAL SUPERVISOR
LAI HONG CHIU

STATE OF CALIFORNIA - DEPARTMENT OF TRANSPORTATION
Caltrans

LAST REVISION 01-09-13
DATE PLOTTED => 20-MAY-2013
TIME PLOTTED => 07:50

Dist	COUNTY	ROUTE	KILOMETER POST TOTAL PROJECT	SHEET No.	TOTAL SHEETS
04	Son	101	33.3	120	158

Elaine Wong 1/14/13
REGISTERED ELECTRICAL ENGINEER DATE

5-13-13
PLANS APPROVAL DATE

REGISTERED PROFESSIONAL ENGINEER Elaine T. Wong No. 13753 Exp. 6-30-13 ELECT STATE OF CALIFORNIA

THE STATE OF CALIFORNIA OR ITS OFFICERS OR AGENTS SHALL NOT BE RESPONSIBLE FOR THE ACCURACY OR COMPLETENESS OF ELECTRONIC COPIES OF THIS PLAN SHEET.

Caltrans Metric

FOR ACCURATE RIGHT OF WAY AND ACCESS DATA, CONTACT RIGHT OF WAY ENGINEERING AT THE DISTRICT OFFICE.

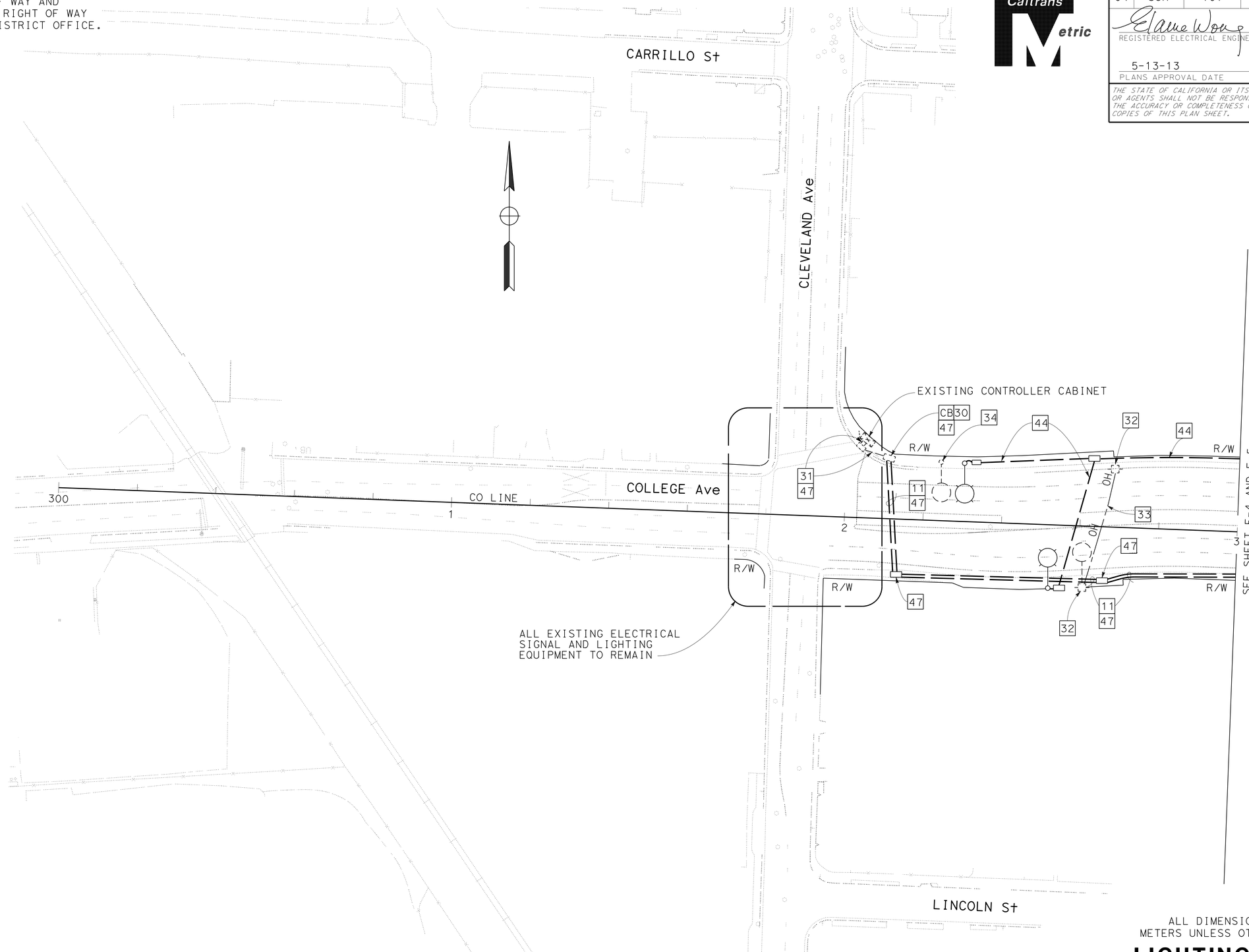

ALL DIMENSIONS ARE IN METERS UNLESS OTHERWISE SHOWN

LIGHTING (CITY)

SCALE 1:500

E-3

APPROVED FOR ELECTRICAL WORK ONLY

FOR NOTES, ABBREVIATIONS AND LEGEND, SEE SHEET E-1 & E-2

WILLIAM Y. WONG	REVISED BY: WYW
ELANINE T. WONG	DATE REVISED: 1/14/13
CALCULATED-DESIGNED BY	
CHECKED BY	
FUNCTIONAL SUPERVISOR: LAI HONG CHIU	

STATE OF CALIFORNIA - DEPARTMENT OF TRANSPORTATION

Caltrans

LAST REVISION 12-24-12 | DATE PLOTTED => 20-MAY-2013 | TIME PLOTTED => 08:03

Dist	COUNTY	ROUTE	KILOMETER POST TOTAL PROJECT	SHEET No.	TOTAL SHEETS
04	Son	101	33.3	121	158

Elaine Wong 1/14/13
REGISTERED ELECTRICAL ENGINEER DATE

5-13-13
PLANS APPROVAL DATE

REGISTERED PROFESSIONAL ENGINEER Elaine T. Wong No. 13753 Exp. 6-30-13 ELECT STATE OF CALIFORNIA

THE STATE OF CALIFORNIA OR ITS OFFICERS OR AGENTS SHALL NOT BE RESPONSIBLE FOR THE ACCURACY OR COMPLETENESS OF ELECTRONIC COPIES OF THIS PLAN SHEET.

Caltrans Metric

FOR ACCURATE RIGHT OF WAY AND ACCESS DATA, CONTACT RIGHT OF WAY ENGINEERING AT THE DISTRICT OFFICE.

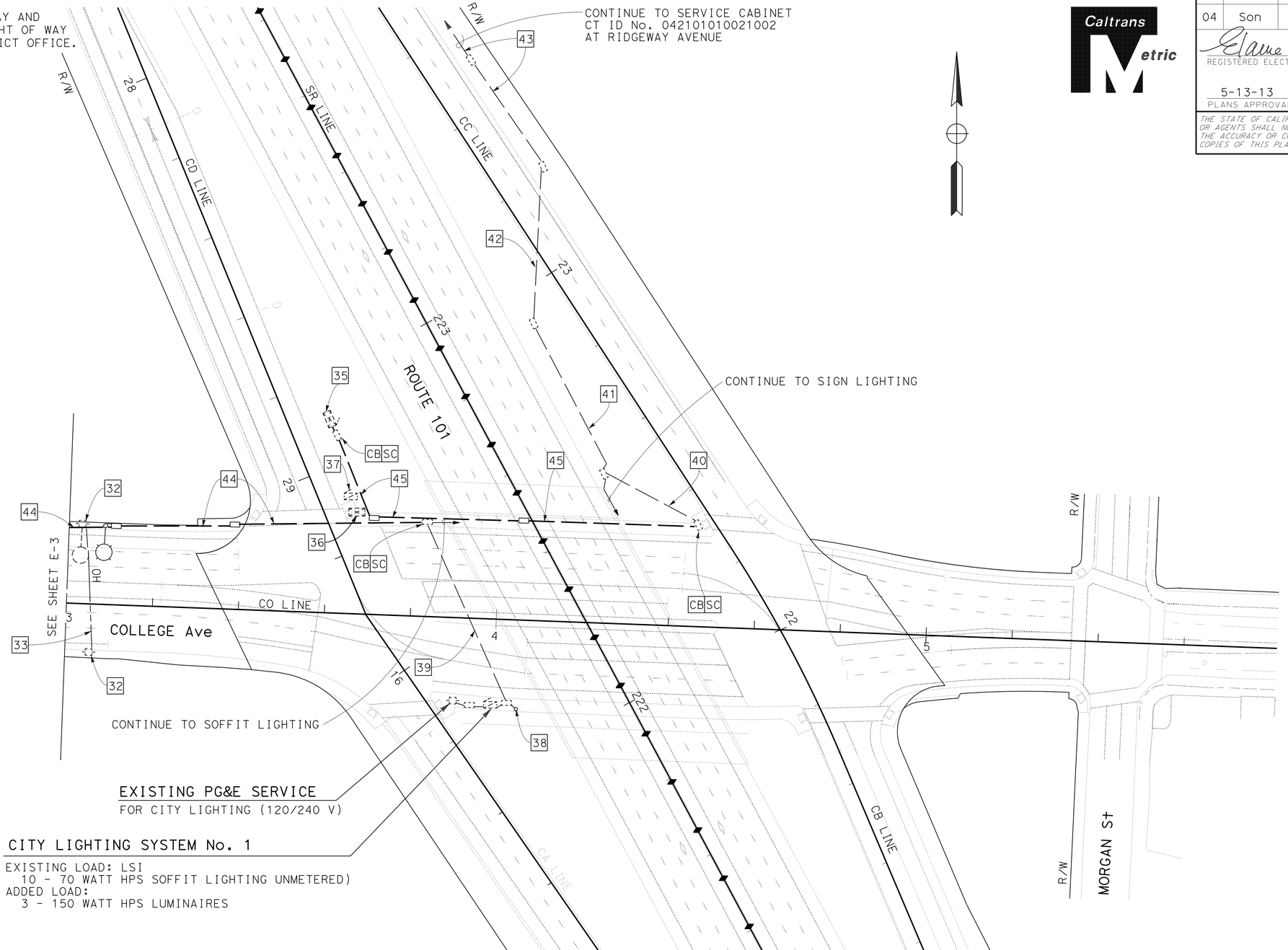

EXISTING PG&E SERVICE
FOR CITY LIGHTING (120/240 V)

CITY LIGHTING SYSTEM No. 1

EXISTING LOAD: LSI
10 - 70 WATT HPS SOFFIT LIGHTING UNMETERED)
ADDED LOAD:
3 - 150 WATT HPS LUMINAIRES

APPROVED FOR ELECTRICAL WORK ONLY

FOR NOTES, ABBREVIATIONS AND LEGEND, SEE SHEET E-1 & E-2

ALL DIMENSIONS ARE IN METERS UNLESS OTHERWISE SHOWN

LIGHTING (CITY)

SCALE 1:500

E-4

STATE OF CALIFORNIA - DEPARTMENT OF TRANSPORTATION
Caltrans
ELECTRICAL

FUNCTIONAL SUPERVISOR: LAI HONG CHIU
CALCULATED-DESIGNED BY: WILLIAM Y. WONG
CHECKED BY: ELANINE T. WONG
REVISED BY: WYW
DATE REVISED: 1/14/13

LAST REVISION DATE PLOTTED => 20-MAY-2013
TIME PLOTTED => 10:04
12-24-12

Dist	COUNTY	ROUTE	KILOMETER POST TOTAL PROJECT	SHEET No.	TOTAL SHEETS
04	Son	101	33.3	122	158

Elaine Wong 1/14/13
REGISTERED ELECTRICAL ENGINEER DATE

5-13-13
PLANS APPROVAL DATE

REGISTERED PROFESSIONAL ENGINEER Elaine T. Wong No. 13753 Exp. 6-30-13 ELECT STATE OF CALIFORNIA

THE STATE OF CALIFORNIA OR ITS OFFICERS OR AGENTS SHALL NOT BE RESPONSIBLE FOR THE ACCURACY OR COMPLETENESS OF ELECTRONIC COPIES OF THIS PLAN SHEET.

Caltrans Metric

FOR ACCURATE RIGHT OF WAY AND ACCESS DATA, CONTACT RIGHT OF WAY ENGINEERING AT THE DISTRICT OFFICE.

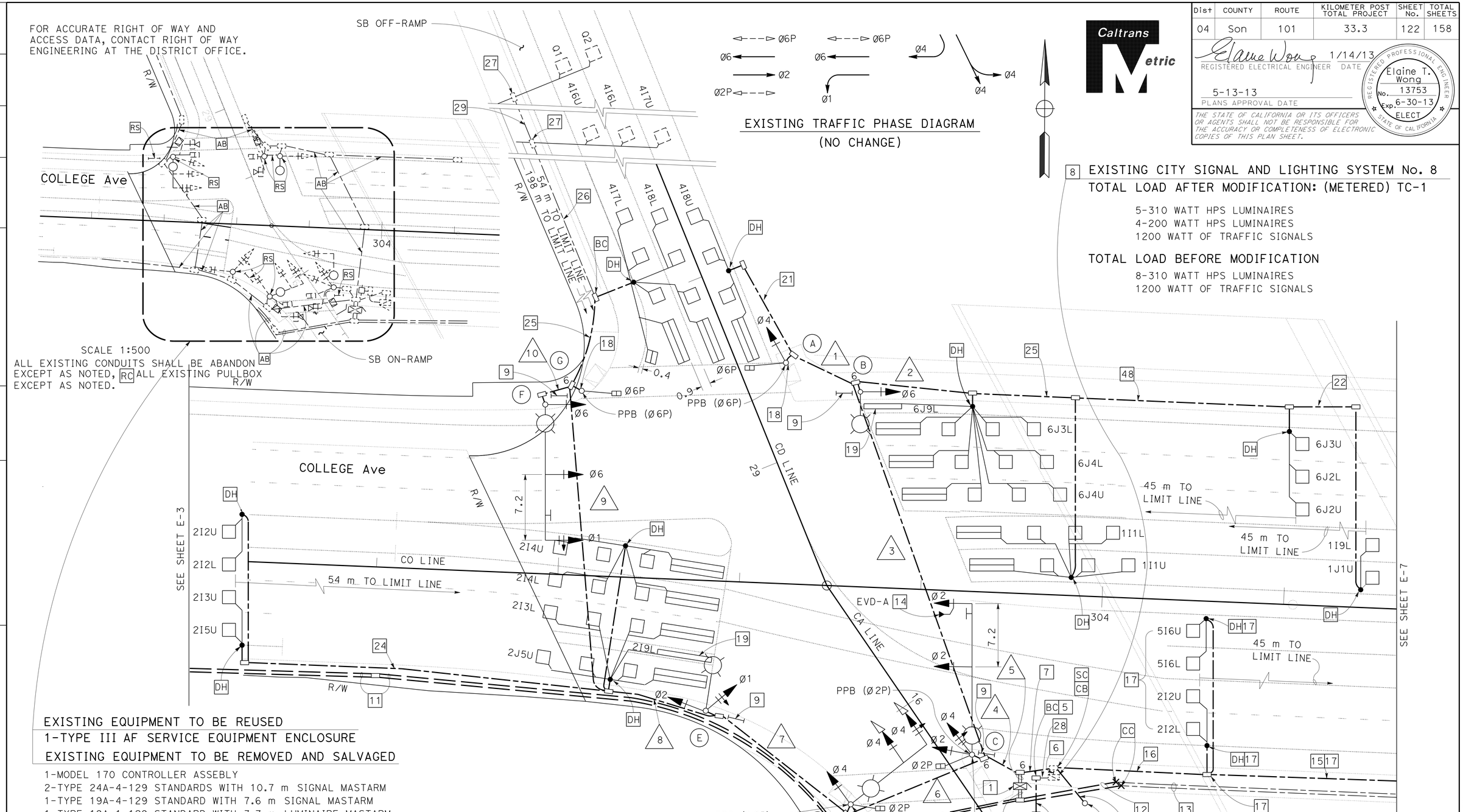

EXISTING TRAFFIC PHASE DIAGRAM
(NO CHANGE)

8 EXISTING CITY SIGNAL AND LIGHTING SYSTEM No. 8

TOTAL LOAD AFTER MODIFICATION: (METERED) TC-1

5-310 WATT HPS LUMINAIRES
4-200 WATT HPS LUMINAIRES
1200 WATT OF TRAFFIC SIGNALS

TOTAL LOAD BEFORE MODIFICATION

8-310 WATT HPS LUMINAIRES
1200 WATT OF TRAFFIC SIGNALS

SCALE 1:500
ALL EXISTING CONDUITS SHALL BE ABANDON EXCEPT AS NOTED, RC ALL EXISTING PULLBOX EXCEPT AS NOTED.

EXISTING EQUIPMENT TO BE REUSED
1-TYPE III AF SERVICE EQUIPMENT ENCLOSURE

EXISTING EQUIPMENT TO BE REMOVED AND SALVAGED

1-MODEL 170 CONTROLLER ASSEBLY
2-TYPE 24A-4-129 STANDARDS WITH 10.7 m SIGNAL MASTARM
1-TYPE 19A-4-129 STANDARD WITH 7.6 m SIGNAL MASTARM
1-TYPE 19A-1-129 STANDARD WITH 3.7 m LUMINAIRE MASTARM
2-TYPE 1-B STANDARDS
9-SIGNAL HEAD (3-300 mm)
4-LEFT TURN SIGNAL HEAD (3-300 mm)
4-PEDESTRIAN SIGNAL HEAD WITH AUDIBLE PEDESTRIAN SYSTEM
4-310 WATT HPS LUMINAIRES
4-PEDESTRIAN BARRICADES

ALL DIMENSIONS ARE IN METERS UNLESS OTHERWISE SHOWN

SIGNAL AND LIGHTING
(LOCATION 1)

SCALE 1:200

E-5

APPROVED FOR ELECTRICAL WORK ONLY

FOR NOTES, ABBREVIATIONS AND LEGEND, SEE SHEET E-1 & E-2

STATE OF CALIFORNIA - DEPARTMENT OF TRANSPORTATION
Caltrans
ELECTRICAL

FUNCTIONAL SUPERVISOR: LAI HONG CHIU
CALCULATED-DESIGNED BY: WILLIAM Y. WONG
CHECKED BY: ELANINETW. WONG
REVISED BY: WYW
DATE REVISED: 1/14/13

LAST REVISION 01-09-13 | DATE PLOTTED => 20-MAY-2013 | TIME PLOTTED => 08:03

BORDER LAST REVISED 3/1/2007 | USERNAME => s114926 | DGN FILE => 0400000693ua005.dgn | RELATIVE BORDER SCALE IS IN MILLIMETERS 0 20 40 60 80 | UNIT 0751 | PROJECT NUMBER & PHASE 0400000693

Dist	COUNTY	ROUTE	KILOMETER POST TOTAL PROJECT	SHEET No.	TOTAL SHEETS
04	Son	101	33.3	123	158

Elaine Wong 1/14/13
REGISTERED ELECTRICAL ENGINEER DATE

5-13-13
PLANS APPROVAL DATE

REGISTERED PROFESSIONAL ENGINEER Elaine T. Wong No. 13753 Exp. 6-30-13 ELECT STATE OF CALIFORNIA

THE STATE OF CALIFORNIA OR ITS OFFICERS OR AGENTS SHALL NOT BE RESPONSIBLE FOR THE ACCURACY OR COMPLETENESS OF ELECTRONIC COPIES OF THIS PLAN SHEET.

Caltrans Metric

CONDUCTOR SCHEDULE

CONDUCTOR DESIGNATION	NUMBER OF CONDUCTORS RUN NUMBER 1	2	3	4	5	6	7	8	9	10
No. 14 CONDUCTORS										
Ø1				6	6	6	6	3	3	3
Ø2				6	6	3	3			
Ø4	3		3	6	6	3				
Ø6			3	6	6	3	3	3	3	3
Ø2P/AUDIBLE PED				2	2	2				
Ø6P/AUDIBLE PED	2		2	4	4	2	2	2	2	
PPB (Ø2P)				1	1	1				
PPB (Ø6P)	1		1	2	2	1	1	1	1	
PPB NEUTRAL	1		1	2	2	1	1	1	1	
SPARES	3		3	6	6	3	3	3	3	3
TOTAL No. 14	10		13	41	41	25	19	13	13	9
EVD-A				1	1					
TOTAL EVD CABLES				1	1					
No. 6 CONDUCTORS										
240 V LIGHTING			2	2		2	2	2	2	2
SERVICE TO CONTROLLER					2					
SIGNAL NEUTRAL	1		1	2	2	1	1	1	1	1
TOTAL No. 6	1		3	4	4	3	3	3	3	3
DETECTOR CABLES										
1I1L		2	2	2	2					
1I1U		2	2	2	2					
1I9L		1	1	1	1					
1J1U		1	1	1	1					
2I2L				1	1	1	1	1		
2I2U				1	1	1	1	1		
2I3U				1	1	1	1	1		
2I3L				2	2	2	2	2		
2I4L				2	2	2	2	2		
2I4U				2	2	2	2	2		
2J5U				2	2	2	2	2		
2I5U				1	1	1	1	1		
2I9U				1	1	1	1	1		
4I6L				1	1	1	1	1	1	
4I6U				1	1	1	1	1	1	
4I7U				1	1	1	1	1	1	
4I7L				2	2	2	2	2	2	
4I8L				2	2	2	2	2	2	
4I8U	2		2	2	2					
QUEUE DETECTOR Q1				1	1	1	1	1	1	
QUEUE DETECTOR Q2				1	1	1	1	1	1	
6J2L		1	1	1	1					
6J2U		1	1	1	1					
6J3U		1	1	1	1					
6J3L		2	2	2	2					
6J4L		2	2	2	2					
6J4U		2	2	2	2					
6J9L		1	1	1	1					
TOTAL DETECTOR CABLES	1	11	18	40	40	22	22	22	9	
CONDUIT SIZE	53	53	78	78	TWO-91	103	91	91	91	78

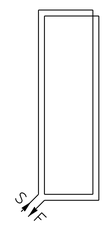

WINDING DETAIL

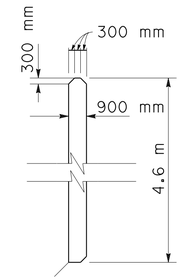

SAWCUT DETAIL

TYPE C LOOP DETECTOR CONFIGURATION

DETAIL A

POLE AND EQUIPMENT SCHEDULE

LOCATION	STANDARD TYPE	SMA (m)	LMA (m)	VEH. SIGNAL MOUNTING MAST ARM	POLE	PED SIGNAL MOUNTING	PPB Ø	LPS LUMINAIRE (WATTS)	SPECIAL REQUIREMENT *
A	1-B				TV-1-T	SP-1-T	6P		
B	19A-1-161		4.6		SV-1-T			310	NO SIGNAL MAST ARM IS REQUIRED
C	29-5-161	16.8	4.6	MAS MAS	SV-2-TB	SP-1-T	2P	200	INSTALL SIGN ON SIGNAL MAST ARM AS SHOWN ON SIGN PLANS
D	24-4-161	10.7	4.6	MAS MAS	SV-1-T	SP-1-T	2P	200	INSTALL RIGHT ANGLE VISORS ON SIGNAL HEADS ON MAST ARM
E	15TS				SV-2-TB			200	
F	29-5-161	15.2	4.6	MAS MAS	SV-1-T			200	INSTALL SIGN ON SIGNAL MAST ARM AS SHOWN ON SIGN PLANS
G	1-B					TP-1-T	6P		

** OTHER REQUIREMENTS ARE COVERED BY NOTES, LEGEND, SPECIAL PROVISIONS, AND STANDARD SPECIFICATIONS. FOR TYPE OF STANDARD, VEHICLE AND PEDESTRIAN SIGNAL MOUNTING, SEE STANDARD PLANS.*

SIGNAL AND LIGHTING
(LOCATION 1)
(CONDUCTOR, POLE AND EQUIPMENT SCHEDULES)

FOR NOTES, ABBREVIATIONS AND LEGEND, SEE SHEET E-1 & E-2

APPROVED FOR ELECTRICAL WORK ONLY

E-6

REVISED BY | DATE REVISED
ALEX KHOO | ELAINE T. WONG
CALCULATED-DESIGNED BY | CHECKED BY
FUNCTIONAL SUPERVISOR
LAI HONG CHIU

STATE OF CALIFORNIA - DEPARTMENT OF TRANSPORTATION
Caltrans
ELECTRICAL

LAST REVISION 12-24-12 | DATE PLOTTED => 20-MAY-2013 | TIME PLOTTED => 08:03

Dist	COUNTY	ROUTE	KILOMETER POST TOTAL PROJECT	SHEET No.	TOTAL SHEETS
04	Son	101	33.3	124	158

Elaine Wong 1/14/13
REGISTERED ELECTRICAL ENGINEER DATE

5-13-13
PLANS APPROVAL DATE

REGISTERED PROFESSIONAL ENGINEER Elaine T. Wong No. 13753 Exp. 6-30-13 ELECT STATE OF CALIFORNIA

THE STATE OF CALIFORNIA OR ITS OFFICERS OR AGENTS SHALL NOT BE RESPONSIBLE FOR THE ACCURACY OR COMPLETENESS OF ELECTRONIC COPIES OF THIS PLAN SHEET.

Caltrans Metric

FOR ACCURATE RIGHT OF WAY AND ACCESS DATA, CONTACT RIGHT OF WAY ENGINEERING AT THE DISTRICT OFFICE.

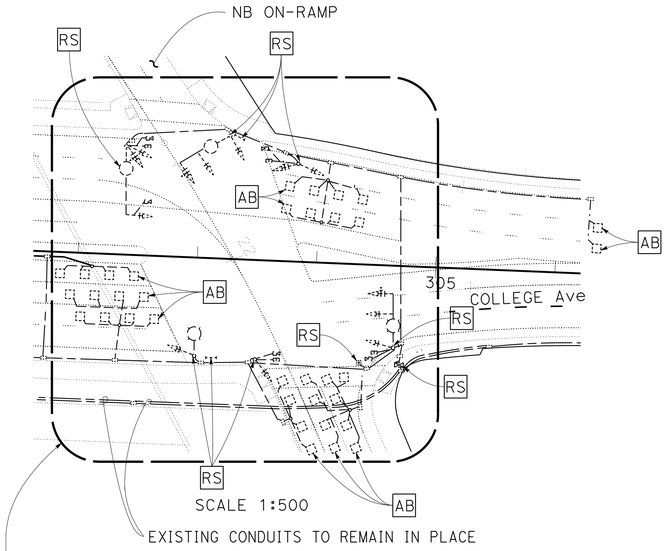

ALL EXISTING CONDUITS SHALL BE ABANDONED EXCEPT AS NOTED
RC ALL EXISTING PULL BOX EXCEPT AS NOTED

EXISTING EQUIPMENT TO BE REMOVED AND SALVAGED

1 - MODEL 170 CONTROLLER ASSEMBLY
2 - TYPE 19A STANDARD WITH 7.6 m SIGNAL MASTARM
1 - TYPE 19A STANDARD WITH 9.1 m SIGNAL MASTARM
1 - TYPE 19A STANDARD
2 - TYPE 1-B STANDARD
1 - PEDESTRIAN PUSH BUTTON POST
9 - SIGNAL HEADS (3-300 mm)
4 - LEFT TURN SIGNAL HEAD (3-300 mm)
4 - 310 WATT HPS LUMINAIRE
4 - AUDIBLE PEDESTRIAN SIGNAL
2 - PEDESTRIAN BARRICADE

STEADY DEMAND SEQUENCE

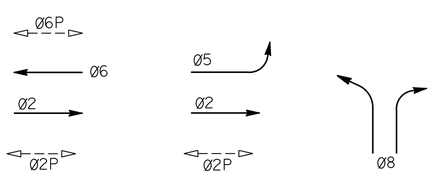

PROPOSED TRAFFIC PHASE DIAGRAM

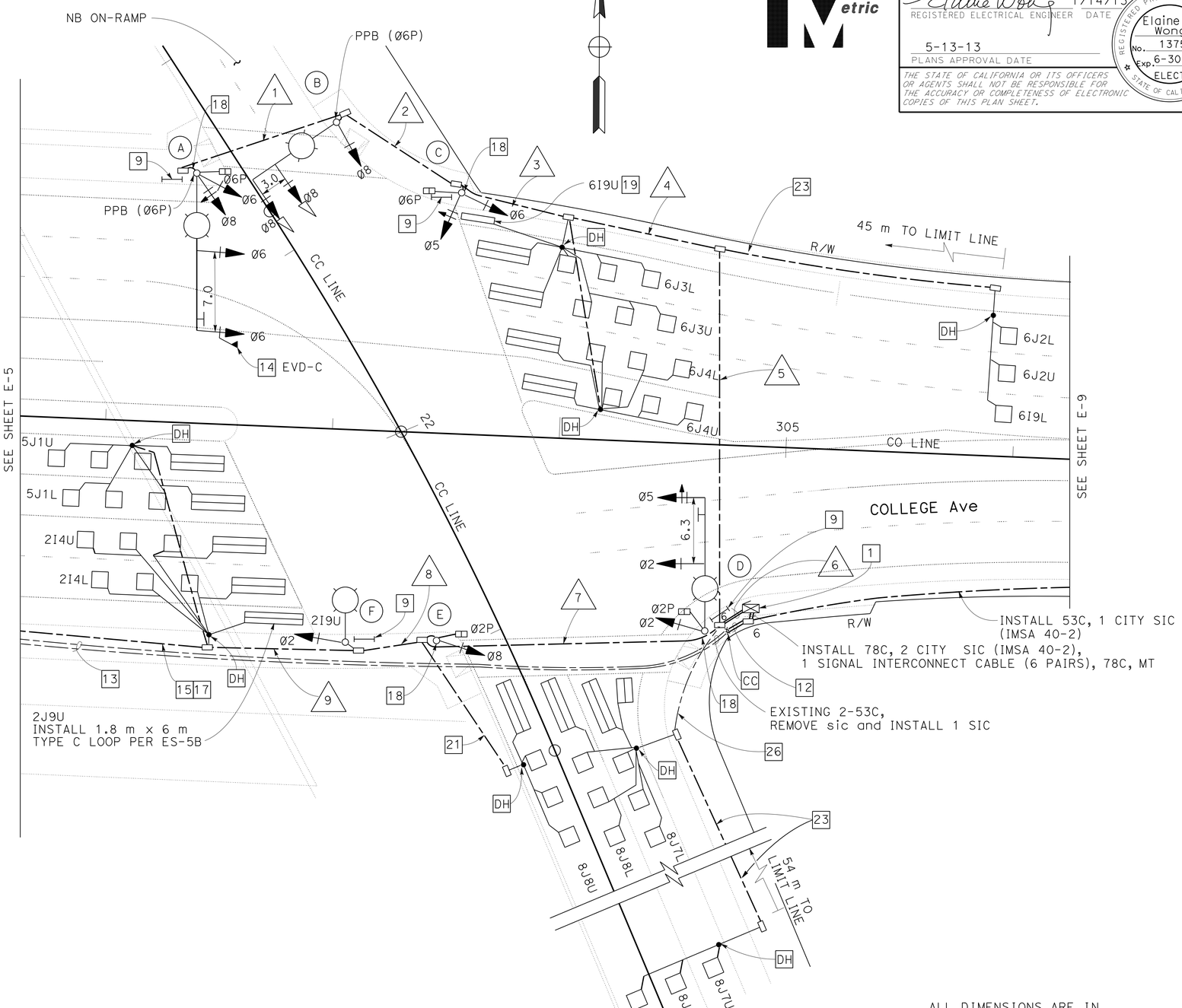

ALL DIMENSIONS ARE IN METERS UNLESS OTHERWISE SHOWN

SIGNAL AND LIGHTING (LOCATION 2)

SCALE 1:200

APPROVED FOR ELECTRICAL WORK ONLY

FOR NOTES, ABBREVIATIONS AND LEGEND, SEE SHEET E-1 & E-2

E-7

WILLIAM Y. WONG	REVISED BY: WYW
ELAINE T. WONG	DATE REVISED: 1/14/13
CALCULATED-DESIGNED BY	
CHECKED BY	
FUNCTIONAL SUPERVISOR: LAI HONG CHIU	

STATE OF CALIFORNIA - DEPARTMENT OF TRANSPORTATION
Caltrans
ELECTRICAL

LAST REVISION 01-09-13 | DATE PLOTTED => 20-MAY-2013 | TIME PLOTTED => 10:12

Dist	COUNTY	ROUTE	KILOMETER POST TOTAL PROJECT	SHEET No.	TOTAL SHEETS
04	Son	101	33.3	125	158

Elaine Wong 1/14/13
REGISTERED ELECTRICAL ENGINEER DATE

5-13-13
PLANS APPROVAL DATE

REGISTERED PROFESSIONAL ENGINEER Elaine T. Wong No. 13753 Exp. 6-30-13 ELECT STATE OF CALIFORNIA

THE STATE OF CALIFORNIA OR ITS OFFICERS OR AGENTS SHALL NOT BE RESPONSIBLE FOR THE ACCURACY OR COMPLETENESS OF ELECTRONIC COPIES OF THIS PLAN SHEET.

Caltrans Metric

CONDUCTOR SCHEDULE

CONDUCTOR DESIGNATION	NUMBER OF CONDUCTORS RUN NUMBER 1	2	3	4	5	6	7	8	9
No. 14 CONDUCTORS									
Ø2						3	3	3	
Ø5			3	3	3	3			
Ø6	3	3	3	3	3	3			
Ø8	3	3	3	3	3	6	3		
Ø2P/AUDIBLE PED						2	2		
Ø6P/AUDIBLE PED	2	2	2	2	2	2			
PPB (Ø2P)						1	1		
PPB (Ø6P)	1	1	1	1	1	1			
PPB NEUTRAL	1	1	1	1	1	2	1		
SPARES	3	3	3	3	3	6	3	3	
TOTAL No. 14	13	13	16	16	16	29	13	6	
EVD-C	1	1	1	1	1	1			
TOTAL EVD CABLES	1	1	1	1	1	1			
No. 6 CONDUCTORS									
240 V LIGHTING	2	2	2	2	2		2	2	2
SERVICE TO CONTROLLER						2	2	2	2
SIGNAL NEUTRAL	1	1	1	1	1	2	1	1	
TOTAL No. 6	3	3	3	3	3	4	5	5	4
DETECTOR CABLES									
2I2L						1	1	1	1
2I2U						1	1	1	1
2I4L						2	2	2	2
2I4U						2	2	2	2
2I9U						1	1	1	1
5J1L						2	2	2	2
5J1U						2	2	2	2
5I6L						1	1	1	1
5I6U						1	1	1	1
6J2L					1	1			
6J2U					1	1			
6J3L				2	2	2			
6J3U				2	2	2			
6J4L				2	2	2			
6J4U				2	2	2			
6I9L					1	1			
6I9U				1	1	1			
8J6L						1			
8J6U						1			
8J7L						2			
8J7U						1			
8J8L						2			
8J8U						2	2		
QUEUE DETECTOR									
TOTAL DETECTOR CABLES				9	12	34	15	13	13
CONDUIT SIZE	53	53	53	63	63	TWO-78	78	63	63

POLE AND EQUIPMENT SCHEDULE

LOCATION	STANDARD TYPE	SMA (m)	LMA (m)	VEH. SIGNAL MOUNTING MAST ARM	VEH. SIGNAL MOUNTING POLE	PED SIGNAL MOUNTING	PPB Ø	LPS LUMINAIRE (WATTS)	SPECIAL REQUIREMENT *
A	26A-4-161	12.2	4.6	MAS MAS	SV-2-TB	SP-1-T	6P	310	INSTALL SIGN ON SIGNAL MAST ARM AS SHOWN ON SIGN PLANS
B	24A-4-161	10.7	3.7	MAS MAS	SV-1-T		6P	310	INSTALL RIGHT ANGLE VISORS ON SIGNAL HEADS ON MAST ARM
C	1-B				TV-2-T	SP-1-T			
D	26A-4-161	12.2	4.6	MAS MAS	SV-1-T	SP-1-T	2P	310	INSTALL SIGN ON SIGNAL MAST ARM AS SHOWN ON SIGN PLANS
E	1-B				TV-1-T	SP-1-T	2P		
F	19A-1-161		3.7		SV-1-T			310	NO SIGNAL MAST ARM IS REQUIRED

** OTHER REQUIREMENTS ARE COVERED BY NOTES, LEGEND, SPECIAL PROVISIONS, AND STANDARD SPECIFICATIONS. FOR TYPE OF STANDARD, VEHICLE AND PEDESTRIAN SIGNAL MOUNTING, SEE STANDARD PLANS.*

APPROVED FOR ELECTRICAL WORK ONLY

FOR NOTES, ABBREVIATIONS AND LEGEND, SEE SHEET E-1 & E-2

SIGNAL AND LIGHTING
(LOCATION 2)
(CONDUCTOR, POLE AND EQUIPMENT SCHEDULES)

E-8

STATE OF CALIFORNIA - DEPARTMENT OF TRANSPORTATION
Caltrans ELECTRICAL

FUNCTIONAL SUPERVISOR: LAI HONG CHIU
CALCULATED-DESIGNED BY: WILLIAM Y. WONG
CHECKED BY: ELAINE T. WONG
REVISED BY: WYW
DATE REVISED: 1/14/13

LAST REVISION 01-09-13 | DATE PLOTTED => 20-MAY-2013 | TIME PLOTTED => 08:03

Dist	COUNTY	ROUTE	KILOMETER POST TOTAL PROJECT	SHEET No.	TOTAL SHEETS
04	Son	101	33.3	126	158

Elaine Wong 1/14/13
REGISTERED ELECTRICAL ENGINEER DATE

5-13-13
PLANS APPROVAL DATE

REGISTERED PROFESSIONAL ENGINEER Elaine T. Wong No. 13753 Exp. 6-30-13 ELECT STATE OF CALIFORNIA

THE STATE OF CALIFORNIA OR ITS OFFICERS OR AGENTS SHALL NOT BE RESPONSIBLE FOR THE ACCURACY OR COMPLETENESS OF ELECTRONIC COPIES OF THIS PLAN SHEET.

Caltrans Metric

FOR ACCURATE RIGHT OF WAY AND ACCESS DATA, CONTACT RIGHT OF WAY ENGINEERING AT THE DISTRICT OFFICE.

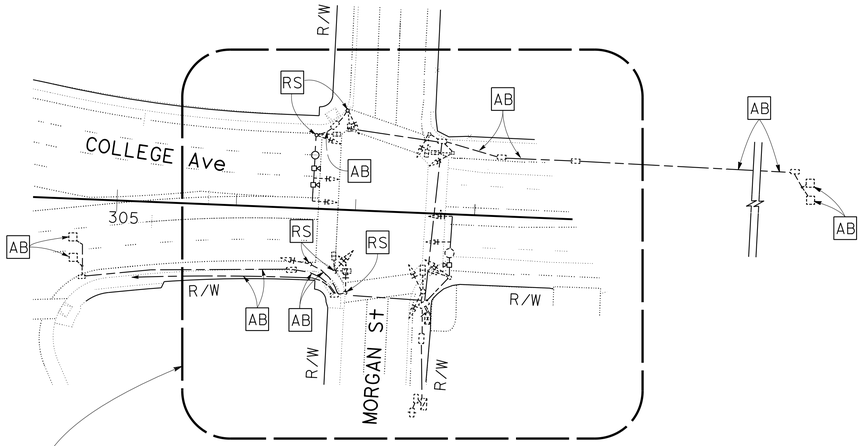

SCALE 1:500

EXISTING EQUIPMENT TO BE REUSED

1- MODEL 170 CONTROLLER ASSEMBLY
1- TYPE III - AF SERVICE EQUIPMENT ENCLOSURE
3- TYPE 1-B STANDARD WITH SIGNAL HEADS
1- TYPE 24 STANDARD WITH SIGNAL HEADS AND VIDEO CAMERA

EXISTING EQUIPMENT TO BE REMOVED AND SALVAGED

1- TYPE 17 STANDARD WITH 4.6 m SIGNAL MASTARM
3- TYPE 1-B STANDARDS
4- SIGNAL HEAD (3-200 mm)
1- SIGNAL HEAD (3-300 mm)
2- LEFT TURN SIGNAL HEAD (3-300 mm)
4- PEDESTRIAN SIGNAL HEAD
1- 310 WATT HPS LUMINAIRE
2- TRAFFIC SIGNAL VIDEO CAMERA

STEADY DEMAND SEQUENCE

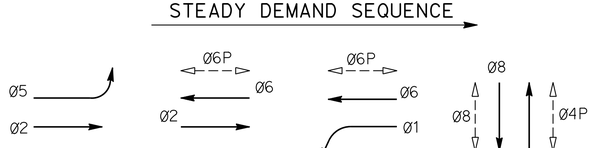

PROPOSED TRAFFIC PHASE DIAGRAM

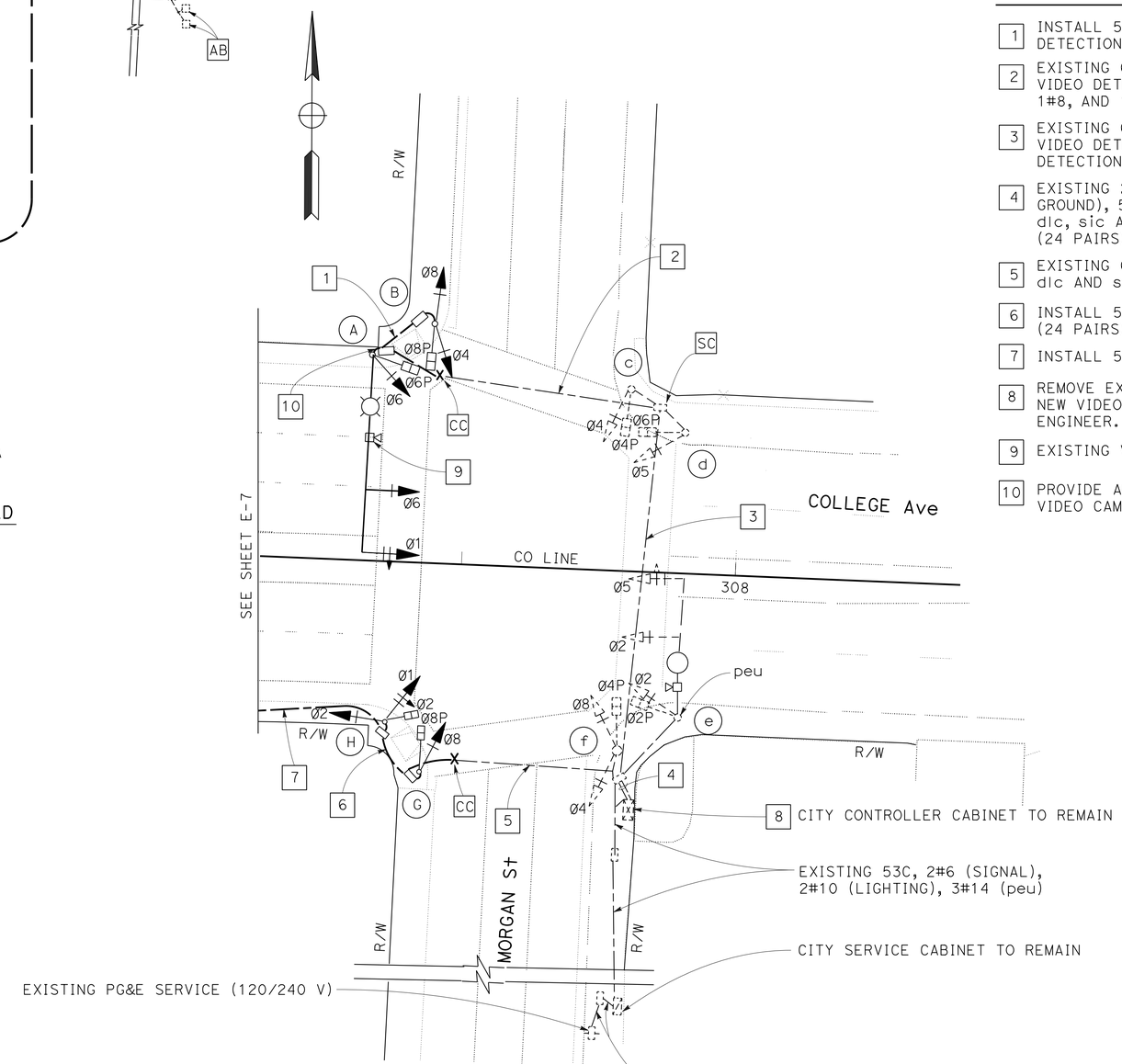

PROJECT NOTES: (FOR THIS SHEET ONLY)

1. INSTALL 53C, 13#14, 1#12, 1#8 AND 1 VIDEO DETECTION CABLE
2. EXISTING 63C, REMOVE EXISTING CONDUCTORS AND VIDEO DETECTION CABLE. INSTALL 22#14, 1#12, 3#10, 1#8, AND 1 VIDEO DETECTION CABLE.
3. EXISTING 63C, 30#14, 2#12, 4#10, 1#8, REMOVE EXISTING VIDEO DETECTION CABLE AND dlc, INSTALL NEW VIDEO DETECTION CABLE.
4. EXISTING 2-78C, 54#14, 4#12 (PPB GROUND), 5#10 (COMMON GROUND), 5#8 (EQUIPMENT GROUND), REMOVE EXISTING dlc, sic AND VIDEO DETECTION CABLE, INSTALL 1 CITY SIC (24 PAIRS) AND 1 VIDEO DETECTION CABLE.
5. EXISTING 63C, 24#14, 1#12, 2#8, 6#10, REMOVE EXISTING dlc AND sic, INSTALL 1 CITY SIC (24 PAIRS).
6. INSTALL 53C, 12#14, 1#12, 2#10, 4#8 AND 1 CITY SIC (24 PAIRS).
7. INSTALL 53C, 1 CITY SIC (24 PAIRS).
8. REMOVE EXISTING VIDEO DETECTION CABLE AND INSTALL NEW VIDEO DETECTION CABLE AS DIRECTED BY THE ENGINEER.
9. EXISTING VIDEO CAMERA TO BE REINSTALLED BY CITY CREW.
10. PROVIDE ADEQUATE SLACK OF VIDEO DETECTION CABLE FOR VIDEO CAMERA TO BE INSTALLED ON SIGNAL MAST ARM.

ALL DIMENSIONS ARE IN METERS UNLESS OTHERWISE SHOWN

SIGNAL AND LIGHTING (CITY)

SCALE 1:200

E-9

THIS PLAN IS ACCURATE FOR ELECTRICAL WORK ONLY

FOR NOTES, ABBREVIATIONS AND LEGEND, SEE SHEET E-1 & E-2

WYW	1/14/13	WILLIAM Y. WONG	ELAINE T. WONG
REVISED BY	DATE REVISED	CALCULATED-DESIGNED BY	CHECKED BY

FUNCTIONAL SUPERVISOR: LAI HONG CHIU

STATE OF CALIFORNIA - DEPARTMENT OF TRANSPORTATION
Caltrans
ELECTRICAL

LAST REVISION 01-09-13 | DATE PLOTTED => 20-MAY-2013 | TIME PLOTTED => 08:03

Dist	COUNTY	ROUTE	KILOMETER POST TOTAL PROJECT	SHEET No.	TOTAL SHEETS
04	Son	101	33.3	127	158

Elaine Wong 1/14/13
REGISTERED ELECTRICAL ENGINEER DATE

5-13-13
PLANS APPROVAL DATE

REGISTERED PROFESSIONAL ENGINEER Elaine T. Wong No. 13753 Exp. 6-30-13 ELECT STATE OF CALIFORNIA

THE STATE OF CALIFORNIA OR ITS OFFICERS OR AGENTS SHALL NOT BE RESPONSIBLE FOR THE ACCURACY OR COMPLETENESS OF ELECTRONIC COPIES OF THIS PLAN SHEET.

Caltrans Metric

POLE AND EQUIPMENT SCHEDULE

LOCATION	STANDARD TYPE	STANDARD SIG. MA (m)	STANDARD LUM. MA (m)	VEH. SIGNAL MOUNTING MAST ARM	VEH. SIGNAL MOUNTING POLE	PED SIGNAL MOUNTING	PPB Ø	HPS LUMINAIRE (WATTS)	SPECIAL REQUIREMENT *
A	19-4-161	9.1	4.6	MAS MAS	SV-1-T	SP-1-T	8P	200	
B	1-B				TV-2-T	SP-1-T	6P		
** c	** 1-B				** TV-1-T	** SP-1-T	** 6P		
** d	** 1-B				** TV-1-T	** SP-1-T	** 4P		
** e	** 19-3-113	7.6	3.7	MAS MAS	** SV-1-T	** SP-1-T	** 4P	200	
** f	** 1-B				** TV-2-T	** SP-1-T	** 2P		
G	1-B				TV-1-T	SP-1-T	2P		
H	1-B				TV-2-T	SP-1-T	8P		

* *OTHER REQUIREMENTS ARE COVERED BY NOTES, LEGEND, SPECIAL PROVISIONS, AND STANDARD SPECIFICATIONS. FOR TYPE OF STANDARD, VEHICLE AND PEDESTRIAN SIGNAL MOUNTING, SEE STANDARD PLANS.*

** *EXISTING EQUIPMENT TO REMAIN*

SIGNAL AND LIGHTING (CITY)

(CONDUCTOR, POLE AND EQUIPMENT SCHEDULES)

E-10

APPROVED FOR ELECTRICAL WORK

STATE OF CALIFORNIA - DEPARTMENT OF TRANSPORTATION
Caltrans ELECTRICAL

FUNCTIONAL SUPERVISOR: LAI HONG CHIU
CALCULATED-DESIGNED BY: WILLIAM Y. WONG
CHECKED BY: ELAINE T. WONG
REVISED BY: WYW
DATE REVISED: 1/14/13

LAST REVISION 12-24-12 DATE PLOTTED => 20-MAY-2013 TIME PLOTTED => 08:03

Dist	COUNTY	ROUTE	KILOMETER POST TOTAL PROJECT	SHEET No.	TOTAL SHEETS
04	Son	101	33.3	128	158

Elaine Wong 5/7/13
REGISTERED ELECTRICAL ENGINEER DATE

5-13-13
PLANS APPROVAL DATE

REGISTERED PROFESSIONAL ENGINEER Elaine T. Wong No. 13753 Exp. 6-30-13 ELECT STATE OF CALIFORNIA

THE STATE OF CALIFORNIA OR ITS OFFICERS OR AGENTS SHALL NOT BE RESPONSIBLE FOR THE ACCURACY OR COMPLETENESS OF ELECTRONIC COPIES OF THIS PLAN SHEET.

Caltrans Metric

LEFT RIGHT BOTH

PEDESTRIAN PUSH BUTTON SIGNS (R10-3)

DETAIL A

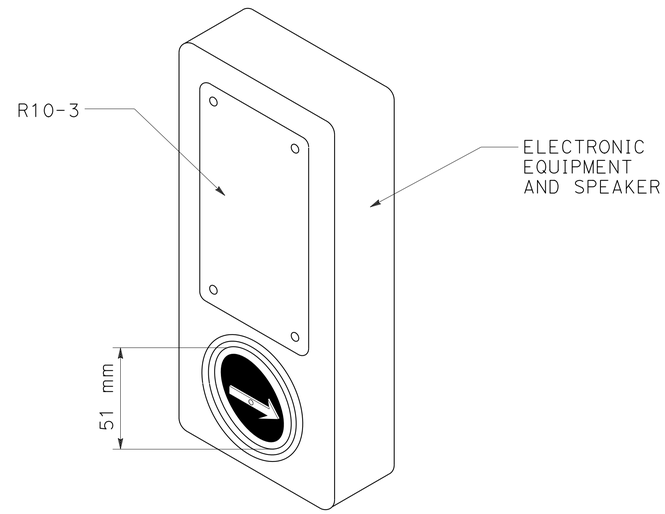

ACCESSIBLE PEDESTRIAN SIGNAL

DETAIL B

PERSON WALKING INTERVAL

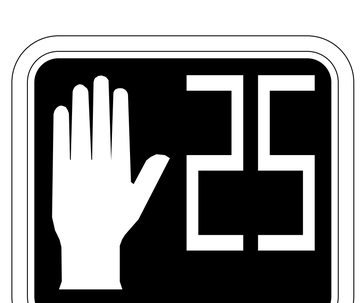

FLASHING UPRAISED HAND INTERVAL

STEADY UPRAISED HAND INTERVAL

PEDESTRIAN SIGNAL FACE

DETAIL C

ELECTRICAL DETAILS
(AUDIBLE PEDESTRIAN SIGNAL DEVICE MOUNTING DETAILS)

NO SCALE

E-11

STATE OF CALIFORNIA - DEPARTMENT OF TRANSPORTATION	FUNCTIONAL SUPERVISOR	CALCULATED-DESIGNED BY	WILLIAM Y. WONG
Caltrans	LAI HONG CHIU	CHECKED BY	ELANINE T. WONG
		REVISED BY	WYW
		DATE REVISED	1/14/13

LAST REVISION 05-06-13 DATE PLOTTED => 20-MAY-2013 TIME PLOTTED => 08:03

Dist	COUNTY	ROUTE	KILOMETER POST TOTAL PROJECT	SHEET No.	TOTAL SHEETS
04	Son	101	33.3	129	158

Elaine Wong 1/14/13
REGISTERED ELECTRICAL ENGINEER DATE

5-13-13
PLANS APPROVAL DATE

REGISTERED PROFESSIONAL ENGINEER Elaine T. Wong No. 13753 Exp. 6-30-13 ELECT STATE OF CALIFORNIA

THE STATE OF CALIFORNIA OR ITS OFFICERS OR AGENTS SHALL NOT BE RESPONSIBLE FOR THE ACCURACY OR COMPLETENESS OF ELECTRONIC COPIES OF THIS PLAN SHEET.

Caltrans Metric

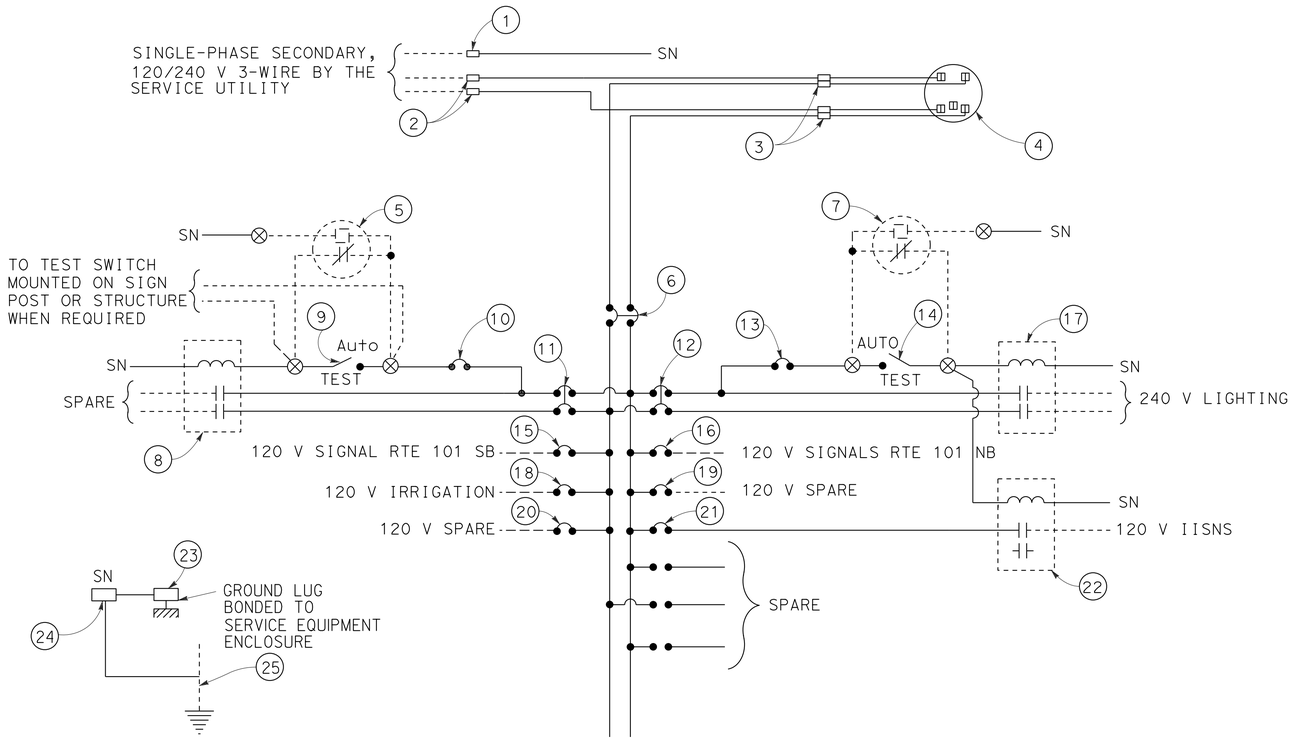

LEGEND:

P	POLE		EXTERNAL CONDUCTOR
CB	CIRCUIT BREAKER		CONDUCTOR OR BUS
A	AMPERE		TIE POINT
V	VOLT		CONDUCTOR COIL
SN	SOLID NEUTRAL		CONTACTOR, CONTACT NO
NO	NORMALLY OPEN		TERMINAL BLOCK
NC	NORMALLY CLOSED		CONTACTOR, CONTACT NC
			ENCLOSURE
			GROUND

120/240 V SERVICE WIRING DIAGRAM (TYPICAL)

TYPE III-A SERVICE (120/240 V) EQUIPMENT LEGEND

ITEM No.	COMPONENT	NAMEPLATE DESCRIPTION
1	NEUTRAL LUG	
2	LANDING LUG	
3	TEST BYPASS FACILITY	
4	METER SOCKET AND SUPPORT	
5	PHOTOELECTRIC UNIT	
6	100 A, 240 V, 2P, CB	MAIN BREAKER
7	PHOTOELECTRIC UNIT	
8	30 A, 2PNO, CONTACTOR	SPARE
9	15 A, 1P, TEST SWITCH	SPARE
10	15 A, 120 V, 1P, CB	SPARE
11	30 A, 240 V, 2P, CB	SPARE
12	30 A, 240 V, 2P, CB	LIGHTING
13	15 A, 120 V, 1P, CB	LIGHTING CONTROL

ITEM No.	COMPONENT	NAMEPLATE DESCRIPTION
14	15 A, 1P, TEST SWITCH	LIGHTING CONTROL TEST SWITCH
15	50 A, 120 V, 1P, CB	SIGNAL ROUTE 101 SB
16	50 A, 120 V, 1P, CB	SIGNAL ROUTE 101 NB
17	30 A, 2PNO, CONTACTOR	LIGHTING
18	20 A, 120 V, 1P, CB	IRRIGATION
19	30 A, 120 V, 1P, CB	SPARE
20	15 A, 120 V, 1P, CB	SPARE
21	15 A, 120 V, 1P, CB	IISNS
22	30 A, 2PNO, CONTACTOR	IISNS
23	GROUND LUG	
24	SOLID NEUTRAL TERMINAL STRIP	
25	GROUND ELECTRODE	

ELECTRICAL DETAILS
(EXISTING SERVICE EQUIPMENT AND WIRING DIAGRAM TYPE III-A SERIES)
NO SCALE

APPROVED FOR ELECTRICAL WORK

FOR NOTES, ABBREVIATIONS AND LEGEND, SEE SHEET E-1 & E-2

E-12

STATE OF CALIFORNIA - DEPARTMENT OF TRANSPORTATION
Caltrans
ELECTRICAL

FUNCTIONAL SUPERVISOR: LAI HONG CHIU
CALCULATED-DESIGNED BY: WILLIAM Y. WONG
CHECKED BY: ELAINE T. WONG
REVISED BY: WYW
DATE REVISED: 1/14/13

LAST REVISION 12-24-12 DATE PLOTTED => 20-MAY-2013 TIME PLOTTED => 08:03

Dist	COUNTY	ROUTE	KILOMETER POST TOTAL PROJECT	SHEET No.	TOTAL SHEETS
04	Son	101	33.3	130	158

Elaine Wong 5/7/13
REGISTERED ELECTRICAL ENGINEER DATE

5-13-13
PLANS APPROVAL DATE

REGISTERED PROFESSIONAL ENGINEER Elaine T. Wong No. 13753 Exp. 6-30-13 ELECT STATE OF CALIFORNIA

THE STATE OF CALIFORNIA OR ITS OFFICERS OR AGENTS SHALL NOT BE RESPONSIBLE FOR THE ACCURACY OR COMPLETENESS OF ELECTRONIC COPIES OF THIS PLAN SHEET.

Caltrans Metric

ELECTROLIERS

STANDARD TYPES
15, 15D
15 STRUCTURE
21, 21D STRUCTURE
30
31
32
35
36-20A

High mast lighting standard

Double arm lighting standard

Existing electrolier

Electrolier foundation (Future installation)

NOTES

1. Luminaires shall be 310 W HPS when installed on Type 21, 21D, 30, 31, 32, 35 and 36-20A Standards, unless otherwise specified. Luminaires shall be 200 W HPS when installed on other type standards or poles, unless otherwise specified.
2. Luminaires shall be the cutoff type, ANSI Type III medium cutoff lighting distribution, unless otherwise specified.
3. Variations noted adjacent to symbol on project plans.

Electrolier (see project notes or project plans)

Luminaire on wood pole

STANDARD NOTES

- AB Abandon. If applied to conduit, remove conductors.
- BC Install pull box in existing conduit run.
- BP Pedestrian barricade, type as indicated on plan.
- CB Install conduit into existing pull box.
- CC Connect new and existing conduit. Remove existing conductors and install conductors as indicated.
- CF Conduit to remain for future use. Remove conductors. Install pull wire or rope.
- DH Detector handhole.
- FA Foundation to be abandoned.
- IS Install sign on signal mast arm.
- NS No slip base on standard.
- PEC Photoelectric control.
- PEU Photoelectric unit.
- RC Equipment or material to be removed and become the property of the Contractor.
- RE Remove electrolier, fuses and ballast. Tape ends of conductors.
- RL Relocate equipment.
- RR Remove and reuse equipment.
- RS Remove and salvage equipment.
- SC Splice new to existing conductors.
- SD Service disconnect.
- SF Standard to remain for future use. Remove luminaire, pole conductors, fuses and ballast. Tape disconnects.
- TSP Telephone service point.

ABBREVIATIONS AND EQUIPMENT DESIGNATIONS

PROPOSED	EXISTING	
BBS	bbs	Battery backup system
BC	bc	Bolt circle
C	C	Conduit
CCTV	cctv	Closed circuit television
CKT	ckt	Circuit
CMS	cms	Changeable message sign
DLC	dlc	Loop detector lead-in cable
EMS	ems	Extinguishable message sign
EVC	evc	Emergency vehicle cable
EVD	evd	Emergency vehicle detector
FB	fb	Flashing beacon
FBCA	fbca	Flashing beacon control assembly
FBS	fbs	Flashing beacon with slip base
FO	fo	Fiber optic
G	G	Ground (Equipment Grounding Conductor)
GFCI	GFCI	Ground fault circuit interrupt
HAR	har	Highway advisory radio
HEX	hex	Hexagonal
HPS	hps	High pressure sodium
IISNS	iisns	Internally illuminated street name sign
ISL	isl	Induction sign lighting
LED	led	Light emitting diode
LMA	lma	Luminaire mast arm
LPS	lps	Low pressure sodium
LTG	ltg	Lighting
LUM	lum	Luminaire
MAT	mat	Mast arm mounted vehicle signal faces, top attachment
MAS	mas	Mast arm mounted vehicle signal faces, side attachment
MAS-4A	mas-4A	Mast arm mounted vehicle signal faces, side attachment - 4 signal section
MAS-4B	mas-4B	
MAS-4C	mas-4C	
MAS-5A	mas-5A	Mast arm mounted vehicle signal faces, side attachment - 5 signal section
MAS-5B	mas-5B	
MC	mc	Mercury contactor
M/M	m/m	Multiple to multiple transformer
MT	mt	Conduit with pull wire or rope only
MTG	mtg	Mounting
	mv	Mercury vapor lighting fixture
N	N	Neutral (Grounded Conductor)
NC	NC	Normally closed
NO	NO	Normally open
PB	pb	Pull box
PEC	pec	Photoelectric control (Type I, II, III, IV or V as shown)
PED	ped	Pedestrian
PEU	peu	Photoelectric unit
PPB	ppb	Pedestrian push button
RL	RL	Relocated equipment
RM	rm	Ramp metering
SB	sb	Slip base
SIC	sic	Signal interconnect cable
SIG	sig	Signal
SMA	sma	Signal mast arm
SNS	sns	Street name sign
SP	sp	Service point
TDC	tdc	Telephone demarcation cabinet
TMS	tms	Traffic monitoring station
TOS	tos	Traffic Operations System
VEH	veh	Vehicle
XFMR	xfmr	Transformer
COMM	comm	Communication
RWIS	rwis	Roadway weather information system

SOFFIT AND WALL MOUNTED LUMINAIRES

Pendant, 70 W HPS unless otherwise specified.

Flush, 70 W HPS unless otherwise specified.

Wall surface, 70 W HPS unless otherwise specified.

Existing soffit or wall luminaire to remain unmodified.

Existing soffit or wall luminaire to be modified as specified.

NOTE

Arrow indicates "street side" of luminaire.

ELECTRICAL SYSTEMS (SYMBOLS AND ABBREVIATIONS)

SCALE AS SHOWN

E-13

STATE OF CALIFORNIA - DEPARTMENT OF TRANSPORTATION
Caltrans ELECTRICAL

FUNCTIONAL SUPERVISOR: LAI HONG CHIU
CALCULATED-DESIGNED BY: WILLIAM Y. WONG
CHECKED BY: ELAINE T. WONG
REVISED BY: WYW
DATE REVISED: 1/14/13

LAST REVISION 05-06-13 | DATE PLOTTED => 20-MAY-2013 | TIME PLOTTED => 08:39

Dist	COUNTY	ROUTE	KILOMETER POST TOTAL PROJECT	SHEET No.	TOTAL SHEETS
04	Son	101	33.3	131	158

Elaine Wong 5/7/13
REGISTERED ELECTRICAL ENGINEER DATE

5-13-13
PLANS APPROVAL DATE

REGISTERED PROFESSIONAL ENGINEER Elaine T. Wong No. 13753 Exp. 6-30-13 ELECT STATE OF CALIFORNIA

THE STATE OF CALIFORNIA OR ITS OFFICERS OR AGENTS SHALL NOT BE RESPONSIBLE FOR THE ACCURACY OR COMPLETENESS OF ELECTRONIC COPIES OF THIS PLAN SHEET.

Caltrans Metric

CONDUIT

PROPOSED	EXISTING	
		Lighting conduit, unless otherwise indicated or noted
		Traffic signal conduit
—C—	—c—	Communication conduit
—T—	—t—	Telephone conduit
—F—	—f—	Fire alarm conduit
—FO—	—fo—	Fiber optic conduit
		Conduit termination (RSP ES-9A C)
R	r	Conduit riser in/on structure or Service pole

SERVICE EQUIPMENT

PROPOSED	EXISTING	
OH	oh	Overhead lines
U	u	Wood pole "U" indicates utility owned
		Pole guy-with anchor
		Utility transformer-ground mounted
III		Service equipment enclosure type
		Service equipment enclosure door indicates front of enclosure
T	t	Telephone demarcation cabinet

POLE-MOUNTED SERVICE DESIGNATION

Type of installation

TYPE H SERVICE - 8.8 m ← Pole height above grade

ILLUMINATED OVERHEAD SIGN

PROPOSED	EXISTING	
		Overhead sign - Single post
		Overhead sign - Two post
		Overhead sign - Mounted on structure
		Overhead sign with electrolier

SIGNAL EQUIPMENT

PROPOSED	EXISTING	
		Pedestrian signal face
		Pedestrian push button post
		Pedestrian barricade
		Vehicle signal face (with backplate, 3-Section: red, yellow and green)
		Vehicle signal face with angle visors
PV	PV	Modifications of basic symbols: "L" Indicates all non-arrow sections louvered "LG" Indicates louvered green section only "PV" Indicates 300 mm programmed visibility sections "200" indicates all 200 mm sections (only when specified)
		Type 15TS and Vehicle signal face
		Vehicle signal face with red, yellow and green left arrow sections
		Vehicle signal face with red and yellow sections and up green arrow
		Vehicle signal face (5 Section) with red, yellow and green sections and yellow and green right arrows
		Type 1 Standard and attached vehicle signal faces
		Standard with signal mast arm only and attached vehicle signal faces and internally illuminated street name sign
		Type 33 Standard, Left-turn vehicle signal face and sign
		Standard with luminaire and signal mast arms and attached vehicle signal faces
		Cantilever flashing beacon Type 9 Frame, with a sign unless otherwise specified or indicated
Y Y	Y Y	Type 15-FBS Standard with two vehicle signal face sections with lens, backplate and visor with a sign
R	Y	Flashing beacon. One vehicle signal face section with lens, backplate and visor. "R" indicates red indication, "Y" indicates yellow indication
		Controller assembly. Door indicates front of cabinet
		Guard post
		Type 1 Standard with "Meter On" sign
		Emergency vehicle detector

NOTES

1. All signal sections shall be 300 mm unless shown otherwise.
2. Signal heads shall be provided with backplates unless shown otherwise.
3. Signal indication shall be LED.

ELECTRICAL SYSTEMS (SYMBOLS AND ABBREVIATIONS)

SCALE AS SHOWN

E-14

WYW	1/14/13	WILLIAM Y. WONG	ELAINE T. WONG
REVISED BY	DATE REVISED	CALCULATED-DESIGNED BY	CHECKED BY
FUNCTIONAL SUPERVISOR	LAI HONG CHIU		

STATE OF CALIFORNIA - DEPARTMENT OF TRANSPORTATION
Caltrans
ELECTRICAL

LAST REVISION 05-06-13 | DATE PLOTTED => 20-MAY-2013 | TIME PLOTTED => 08:39

Dist	COUNTY	ROUTE	KILOMETER POST TOTAL PROJECT	SHEET No.	TOTAL SHEETS
04	Son	101	33.3	132	158

Elaine Wong 5/7/13
REGISTERED ELECTRICAL ENGINEER DATE

5-13-13
PLANS APPROVAL DATE

REGISTERED PROFESSIONAL ENGINEER Elaine T. Wong No. 13753 Exp. 6-30-13 ELECT STATE OF CALIFORNIA

THE STATE OF CALIFORNIA OR ITS OFFICERS OR AGENTS SHALL NOT BE RESPONSIBLE FOR THE ACCURACY OR COMPLETENESS OF ELECTRONIC COPIES OF THIS PLAN SHEET.

Caltrans Metric

EQUIPMENT IDENTIFICATION

ILLUMINATED SIGN IDENTIFICATION NUMBER:

Sign No. 12345
10 ISL SCI 1.0

- Sign number - Place on post or structure
- Transformer rating (kVA)
- Lighting control type
- Number and type of fixtures

Do NOT place on standard or structure

ELECTROLIER OR EQUIPMENT IDENTIFICATION NUMBER:

12345 - 4.6

- Mast arm length in meters, if shown. Do not place on standard or structure.
- Equipment number - Place on standard or structure. Existing equipment numbers are shown in parenthesis

CONDUIT AND CONDUCTOR IDENTIFICATION:

41C, 2#10, 15#14, 2 DLC

- Number and size of conductors and cables
- Size of conduit in millimeters

Ø1, Ø2, Ø2P, etc. — Traffic phase identification for signal faces, detectors and phase diagrams

1 2 3 — Project note numbers

A B C — Equipment description, installation or item numbers

1 2 3 — Conduit run numbers

SIGNAL AND LIGHTING STANDARD (TYPICAL DESIGNATION):

19A - 3 - 161

- Wind velocity=161 km/h
- Case 3 arm loading
- Standard type
- Standard Plan sheet number
- Detail number or letter

WIRING DIAGRAM LEGEND

P	Pole
CB	Circuit breaker
A	Ampere
V	Volt
M	Metered
UM	Unmetered
NB	Neutral bus
GB	Ground bus
G	Equipment grounding conductor
N	Grounded conductor (Neutral)

- External conductor
- Conductor or bus
- Tie point
- Contactor coil
- Contactor, Contact NO
- Terminal blocks
- Contactor, Contact NC
- Enclosure bond
- Grounding electrode
- Circuit breaker
- Receptacle

PULL BOXES

PROPOSED EXISTING

Pull box-No. 5 unless otherwise indicated or noted.

3 — 9A(21)

Pull box-Additional designations or descriptions

3 = No. 3½ pull box
5 = No. 5 pull box
6 = No. 6 pull box
7 = No. 7 (Ceiling pull box)
8 = No. 8 (Pendant soffit pull box)
9 = No. 9 pull box
9A = No. 9A pull box

(C) = Communications pull box
(E) = Pull box with extension
(S) = Sprinkler control pull box
(21) = Anchor bolts and conduit for future installation of Type 21 Standard
(T) = Traffic pull box

MISCELLANEOUS EQUIPMENT

PROPOSED	EXISTING	
CMS	cms	Changeable message sign
		Closed circuit television camera
		Highway advisory radio pole and antenna
EMS	ems	Extinguishable message sign
M V	m v	Detection device M = Microwave sensor V = Video image sensor

VEHICLE DETECTORS

5 J 9 U

- Vehicle detector designation
- U = Upper
  L = Lower
- Slot number in input file
- Input file (I or J)
- Phase

PROPOSED	EXISTING	
		Type A detector loop. Outline of sawcut shown.
		Type B detector loop. Outline of sawcut shown.
		Type C detector loop. Outline of sawcut shown.
		Type D detector loop. Outline of sawcut shown.
		Type E detector loop. Outline of sawcut shown.
		Type Q detector loop. Outline of sawcut shown.
		Magnetic detector
DH	dh	Detector handhole
		Microwave or video detection zone

ELECTRICAL SYSTEMS (SYMBOLS AND ABBREVIATIONS)

SCALE AS SHOWN

E-15

WYW	1/14/13	WILLIAM Y. WONG	ELAINE T. WONG
REVISED BY	DATE REVISED	CALCULATED-DESIGNED BY	CHECKED BY
FUNCTIONAL SUPERVISOR	LAI HONG CHIU		

STATE OF CALIFORNIA - DEPARTMENT OF TRANSPORTATION
Caltrans
ELECTRICAL

LAST REVISION 05-06-13 | DATE PLOTTED => 20-MAY-2013 | TIME PLOTTED => 08:39

Dist	COUNTY	ROUTE	KILOMETER POST TOTAL PROJECT	SHEET No.	TOTAL SHEETS
04	Son	101	33.3	133	158

Elaine Wong 5/7/13
REGISTERED ELECTRICAL ENGINEER DATE

5-13-13
PLANS APPROVAL DATE

REGISTERED PROFESSIONAL ENGINEER Elaine T. Wong No. 13753 Exp. 6-30-13 ELECT STATE OF CALIFORNIA

THE STATE OF CALIFORNIA OR ITS OFFICERS OR AGENTS SHALL NOT BE RESPONSIBLE FOR THE ACCURACY OR COMPLETENESS OF ELECTRONIC COPIES OF THIS PLAN SHEET.

Caltrans Metric

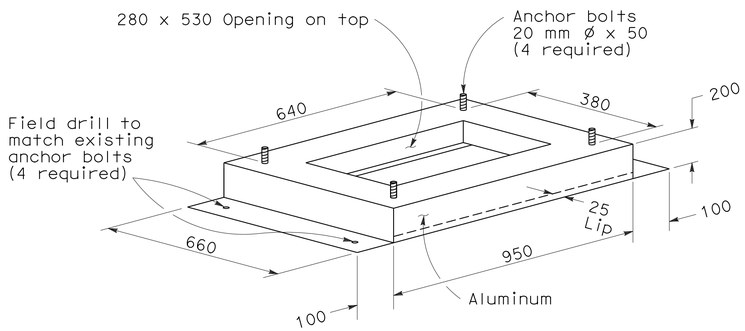

TYPE PR CABINET ADAPTER

1. Material: 4.78 thickness aluminum plate.
2. Mount adapter on Type P or Type R cabinet foundation.

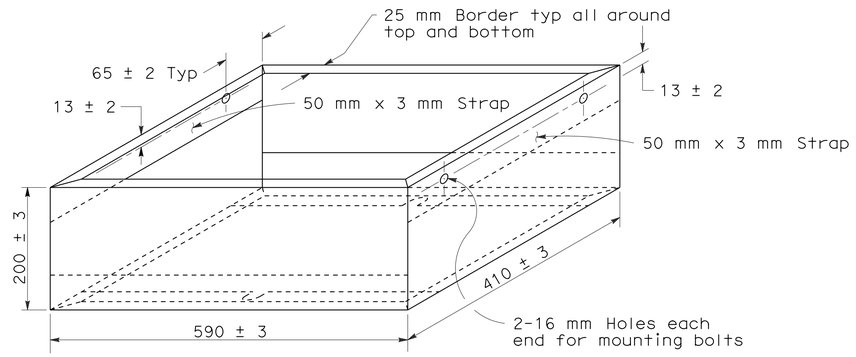

TYPE M CABINET ADAPTER

1. Mount adapter on Type M cabinet foundation.
2. Mounting bolts shall be 10 mm ø minimum size.
3. Aluminum (4.78 mm thickness).

The flasher transfer relay shall intermate with a CINCH-JONES Socket S-408-SB or equal connected as follows:

Pin No.	Circuit	Pin No.	Circuit
1	Coil	5	Common, Circuit #1
2	Coil	6	Common, Circuit #2
3	NC Circuit #1	7	NO Circuit #1
4	NC Circuit #2	8	NO Circuit #2

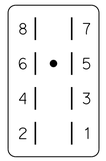

CONNECTOR SOCKET
FLASH TRANSFER RELAY

The flasher shall intermate with a CINCH-JONES Socket S-406-SB or equal connected as follows:

Pin No.	Circuit	Pin No.	Circuit
7	Load, Circuit #1	10	ac+
8	Load, Circuit #2	11	ac-
9	Chassis Ground	12	Not used

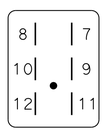

CONNECTOR SOCKET
SOLID STATE FLASHER UNIT

The Solid-state switching device shall intermate with a CINCH-JONES Socket S-2412-SB or equal connected as follows:

Pin No.	Circuit	Pin No.	Circuit
1	ac + Lights	7	Green or Walk Output
2	Chassis Ground	8	Yellow Input
3	Red or Don't Walk Output	9	dc+ (15 to 24 V)
4	Not used	10	Green or Walk Input
5	Yellow Output	11	ac-
6	Red or Don't Walk Input	12	Not used

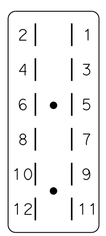

CONNECTOR SOCKET
SOLID STATE SWITCHING DEVICE

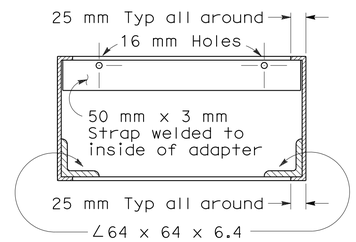

SECTION A-A

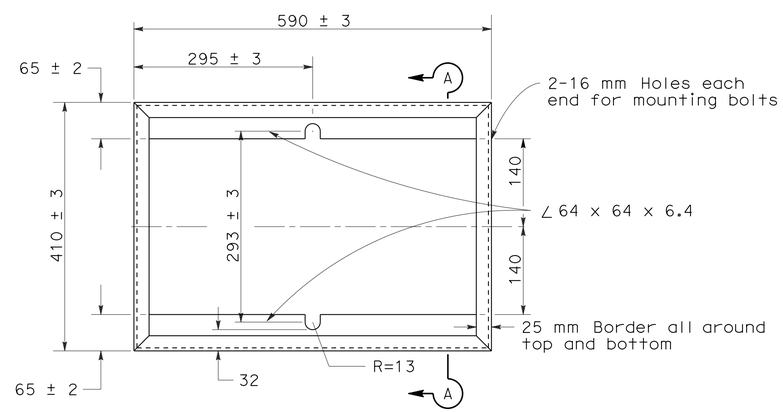

TOP VIEW

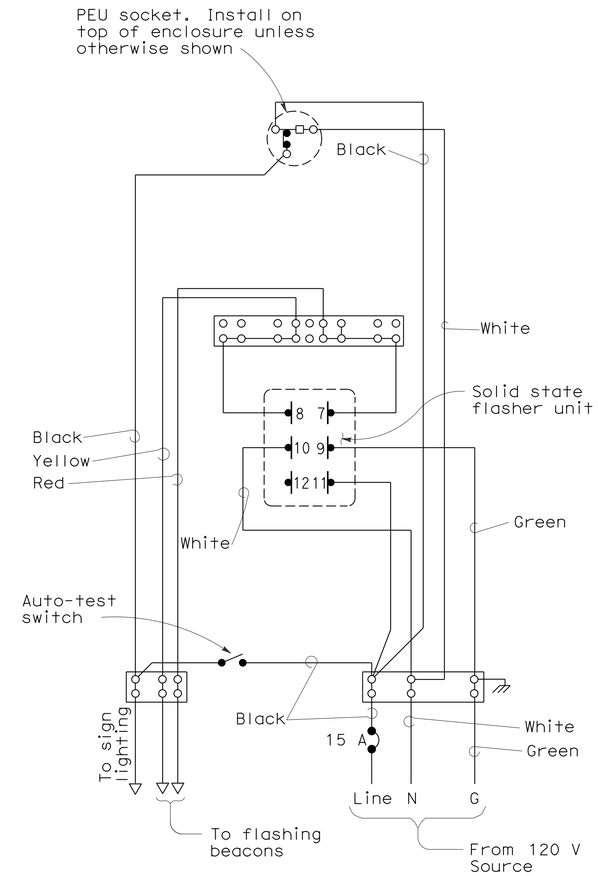

WIRING DIAGRAM
LED FLASHING BEACON CONTROL ASSEMBLY

ALL DIMENSIONS ARE IN
MILLIMETERS UNLESS OTHERWISE SHOWN

ELECTRICAL SYSTEMS (CONTROLLER CABINET DETAILS)

NO SCALE

E-16

REVISED BY	DATE REVISED

ELAINE T. WONG — CALCULATED-DESIGNED BY
CHECKED BY
LAI HONG CHIU — FUNCTIONAL SUPERVISOR

STATE OF CALIFORNIA - DEPARTMENT OF TRANSPORTATION
Caltrans

LAST REVISION 05-07-13 | DATE PLOTTED => 20-MAY-2013 | TIME PLOTTED => 10:23

Dist	COUNTY	ROUTE	KILOMETER POST TOTAL PROJECT	SHEET No.	TOTAL SHEETS
04	Son	101	33.3	134	158

Elaine Wong 5/7/13
REGISTERED ELECTRICAL ENGINEER DATE

5-13-13
PLANS APPROVAL DATE

REGISTERED PROFESSIONAL ENGINEER Elaine T. Wong No. 13753 Exp. 6-30-13 ELECT STATE OF CALIFORNIA

THE STATE OF CALIFORNIA OR ITS OFFICERS OR AGENTS SHALL NOT BE RESPONSIBLE FOR THE ACCURACY OR COMPLETENESS OF ELECTRONIC COPIES OF THIS PLAN SHEET.

Caltrans Metric

NOTES - CONTROLLER CABINETS

1. Cabinet dimensions are nominal.
2. Foundations shall be located to provide 600 mm minimum clearance between face of curb and any portion of cabinet.
3. Type G, M, P, R, S and Model 336 cabinets shall be installed with the back toward the nearest lane of traffic.
4. The controller cabinet ground bus shall be bonded to the controller equipment enclosure.
5. In unpaved areas, a raised portland cement concrete pad shall be constructed in front of each controller cabinet. Pad shall be 900 mm x 900 mm x 100 mm for Type G cabinets and shall be 900 mm x 100 mm thick x width of foundation for Types M, P, R, S and Model 336 cabinets.
6. In unpaved areas, the top of foundation for Type G, P, R and S cabinets shall be 150 mm above surrounding grade. Top of foundation for Type M or Model 336 cabinet shall be 460 mm above surrounding grade.
7. In sidewalks and other paved areas, top of foundation for Type G cabinet shall be level with surrounding grade. Top of foundation for Type P, R and S cabinets shall be 90 mm above surrounding grade.
8. The steel pedestal, base plate, bolt circle and foundation for Type G cabinet shall be the same as that shown for a Type 1-C Standard. Pedestal shall be 640 mm - 760 mm in length. Anchor bolts shall be 19 mm Ø x 460 mm with a 50 mm - 90° bend. Four bolts required per cabinet.
9. Type G cabinet shall be provided with a slipfitter to permit mounting an 114 mm outside diameter pedestal. Slipfitter shall be bolted to bottom of the cabinet.
10. Type G cabinet shall be provided with 8 screened, raintight holes, 13 mm diameter or larger, in the bottom of the cabinet.
11. A 25 mm drain shall be provided through the foundation of a Type M or Model 336 cabinet. Drain pipe shall be screened.
12. See Table for cabinet and foundation dimensions; "D" = Depth, "H" = Height and "W" = Width.
13. Cabinet shelves shall be adjustable for vertical spacing and shall be removable. Type M, P, R and S cabinets shall be provided with a minimum of two shelves.
14. Anchor bolts for Type M, P, R, S and Model 336 cabinets shall be 19 mm Ø x 460 mm with a 50 mm - 90° bend.
15. An approved mastic or caulking compound shall be placed on the foundation prior to placing the cabinet to seal openings between bottom of cabinet and foundation.
16. Controller units, plug-mounted equipment, shelf-mounted equipment and wall-mounted equipment shall be located to permit safe and easy removal or replacement without removing any other piece of equipment.
17. Cabinet fan may be installed at an alternate location near the top of the cabinet when approved by the Engineer.
18. Where telephone interconnect is required, a minimum of 130 mm clear vertical space shall be provided inside the cabinet for the equipment.
19. Telephone interconnect conductors shall be enclosed in a 21C or larger conduit through the foundation. Type 4 metal conduit shall be used to separate telephone and power conductors in cabinets and pedestals.
20. For Model 332, 334 and 336 cabinet details, see "Traffic signal controller equipment specifications".

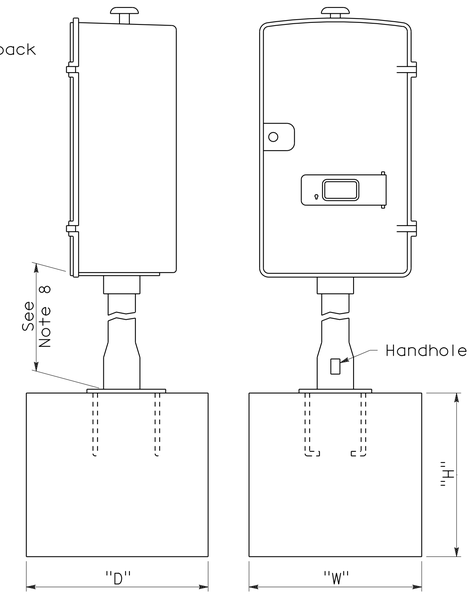

FOUNDATION FOR TYPE G CABINET

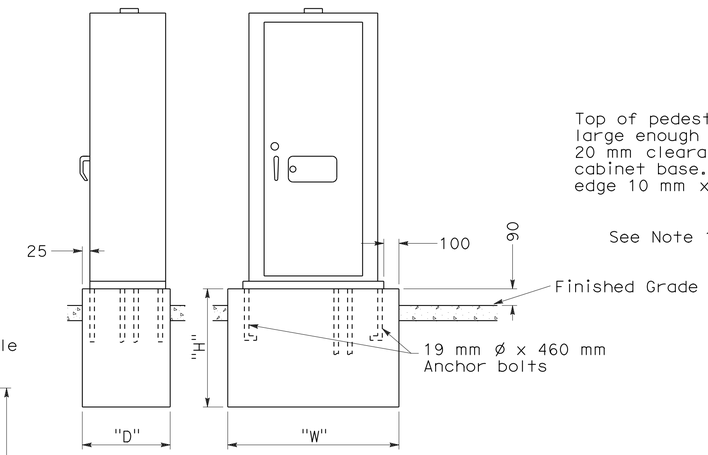

FOUNDATION FOR TYPE P, R AND S CABINETS

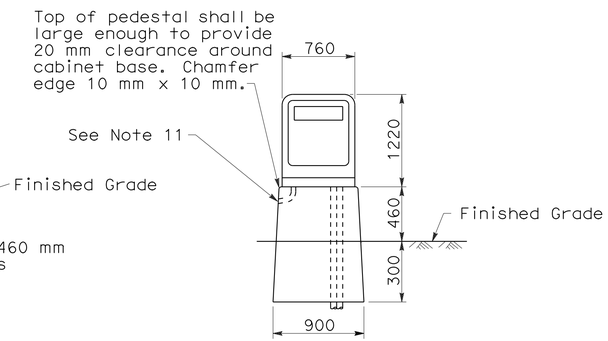

PEDESTAL FOUNDATION FOR TYPE M OR MODEL 336 CABINET

CABINET	FOUNDATION		
TYPE / MODEL	H (mm)	W (mm)	D (mm)
G	900	600	600
M 336	760	900	560
P	460	1330	710
R	460	1330	710
S	460	1820	710

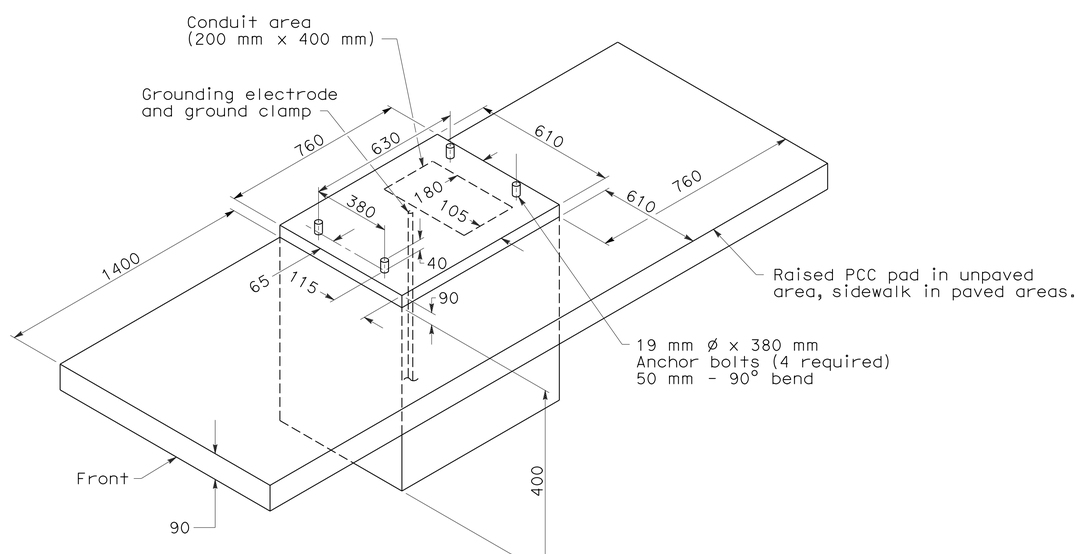

FOUNDATION DETAILS
For Model 332 and 334 cabinets

ALL DIMENSIONS ARE IN MILLIMETERS UNLESS OTHERWISE SHOWN

ELECTRICAL SYSTEMS (CONTROLLER CABINET DETAILS)

NO SCALE

E-17

STATE OF CALIFORNIA - DEPARTMENT OF TRANSPORTATION
Caltrans ELECTRICAL

FUNCTIONAL SUPERVISOR: LAI HONG CHIU
CALCULATED-DESIGNED BY: WILLIAM Y. WONG
CHECKED BY: ELAINE T. WONG
REVISED BY: WYW
DATE REVISED: 1/14/13

LAST REVISION 05-07-13 | DATE PLOTTED => 20-MAY-2013 | TIME PLOTTED => 10:23

Dist	COUNTY	ROUTE	KILOMETER POST TOTAL PROJECT	SHEET No.	TOTAL SHEETS
04	Son	101	33.3	135	158

Elaine Wong 5/7/13
REGISTERED ELECTRICAL ENGINEER DATE

5-13-13
PLANS APPROVAL DATE

REGISTERED PROFESSIONAL ENGINEER Elaine T. Wong No. 13753 Exp. 6-30-13 ELECT STATE OF CALIFORNIA

THE STATE OF CALIFORNIA OR ITS OFFICERS OR AGENTS SHALL NOT BE RESPONSIBLE FOR THE ACCURACY OR COMPLETENESS OF ELECTRONIC COPIES OF THIS PLAN SHEET.

Caltrans Metric

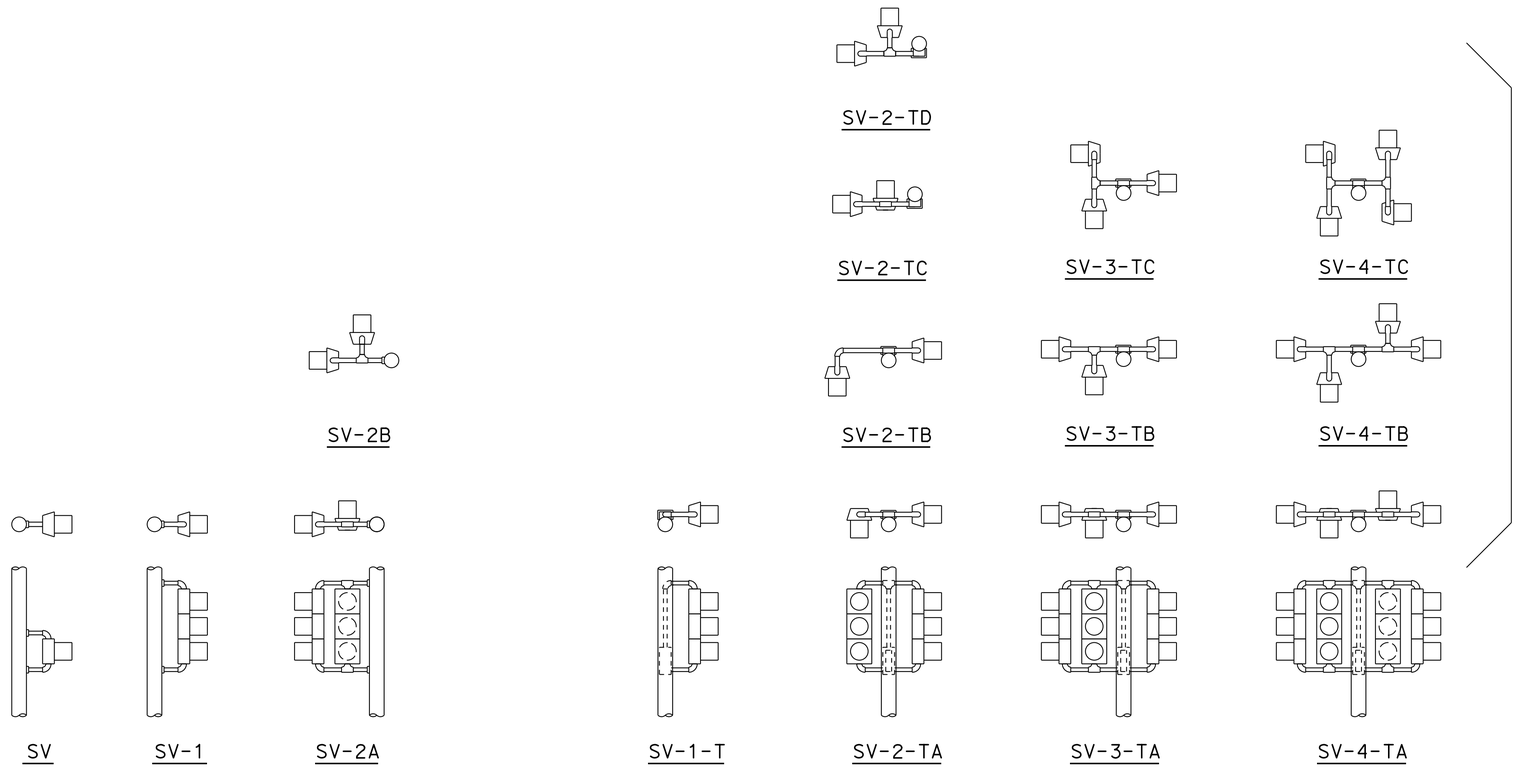

SIDE MOUNTINGS

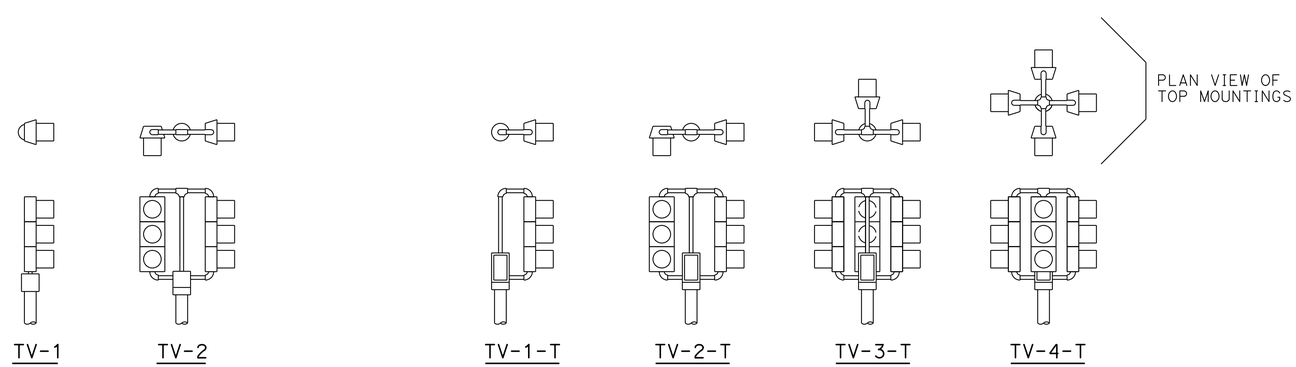

TOP MOUNTINGS

VEHICULAR SIGNALS AND MOUNTINGS

ABBREVIATIONS

TV	TOP MOUNTED VEHICLE SIGNALS
SV	SIDE MOUNTED VEHICLE SIGNALS
T	TERMINAL COMPARTMENT
1, 2, 3, 4	NUMBER OF SIGNAL FACES (3 - SECTION, UNLESS OTHERWISE INDICATED)
A, B, C, D	CONFIGURATION OF SIGNALS

NOTES:

1. MOUNTINGS SHALL BE ORIENTED TO PROVIDE MAXIMUM HORIZONTAL CLEARANCE TO ADJACENT ROADWAY.
2. BRACKET ARMS SHALL BE LONG ENOUGH TO PERMIT PROPER ALIGNMENT OF SIGNALS AND BACKPLATE INSTALLATION.
3. SEE STANDARD PLANS E-21 AND E-22 FOR ATTACHMENT FITTING DETAILS.

ALL DIMENSIONS ARE IN METERS UNLESS OTHERWISE SHOWN

ELECTRICAL SYSTEMS (SIGNAL HEADS AND MOUNTINGS)

NO SCALE

E-18

WILLIAM Y. WONG	REVISED BY: WYW
ELANINE T. WONG	DATE REVISED: 1/14/13
CALCULATED-DESIGNED BY	
CHECKED BY	
FUNCTIONAL SUPERVISOR: LAI HONG CHIU	

STATE OF CALIFORNIA - DEPARTMENT OF TRANSPORTATION
Caltrans
ELECTRICAL

LAST REVISION 05-07-13 | DATE PLOTTED => 20-MAY-2013 | TIME PLOTTED => 10:23

Dist	COUNTY	ROUTE	KILOMETER POST TOTAL PROJECT	SHEET No.	TOTAL SHEETS
04	Son	101	33.3	136	158

Elaine Wong 5/7/13
REGISTERED ELECTRICAL ENGINEER DATE

5-13-13
PLANS APPROVAL DATE

REGISTERED PROFESSIONAL ENGINEER Elaine T. Wong No. 13753 Exp. 6-30-13 ELECT STATE OF CALIFORNIA

THE STATE OF CALIFORNIA OR ITS OFFICERS OR AGENTS SHALL NOT BE RESPONSIBLE FOR THE ACCURACY OR COMPLETENESS OF ELECTRONIC COPIES OF THIS PLAN SHEET.

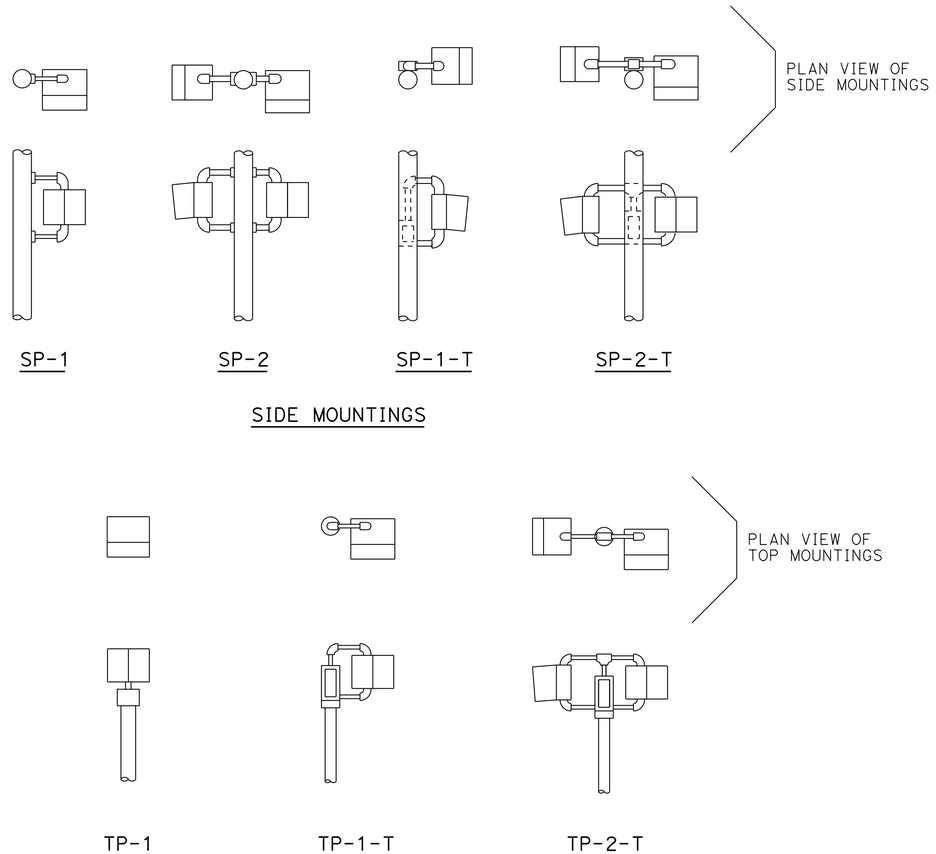

PEDESTRIAN SIGNALS AND MOUNTINGS

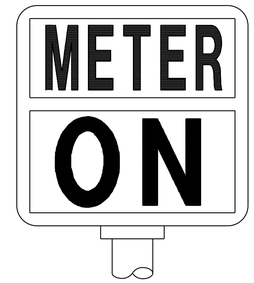

"METER ON" SIGN

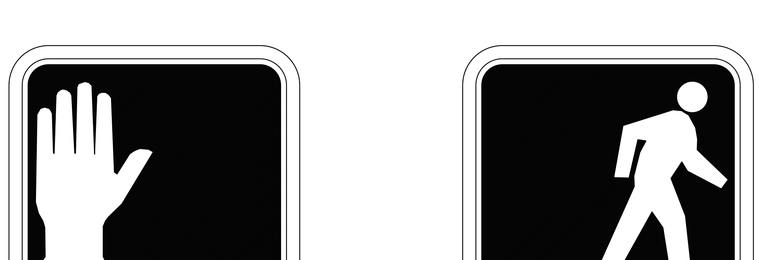

PEDESTRIAN SIGNAL FACE

SYMBOL TYPE

NOTES:

1. MOUNTING SHALL BE ORIENTED TO PROVIDE MAXIMUM HORIZONTAL CLEARANCE TO ADJACENT ROADWAY.
2. BRACKET ARMS SHALL BE LONG ENOUGH TO PERMIT PROPER ALIGNMENT OF SIGNALS.
3. SEE E-21 FOR ATTACHMENT FITTINGS DETAILS.

ABBREVIATIONS

TP	TOP MOUNTED PEDESTRIAN SIGNAL
SP	SIDE MOUNTED PEDESTRIAN SIGNAL
T	TERMINAL COMPARTMENT
1,2	NUMBER OF SIGNAL FACES

ALL DIMENSIONS ARE IN METERS UNLESS OTHERWISE SHOWN

ELECTRICAL SYSTEMS (SIGNAL HEADS AND MOUNTINGS)

NO SCALE

E-19

STATE OF CALIFORNIA - DEPARTMENT OF TRANSPORTATION
Caltrans
ELECTRICAL

FUNCTIONAL SUPERVISOR: LAI HONG CHIU
CALCULATED-DESIGNED BY: WILLIAM Y. WONG
CHECKED BY: ELANINE T. WONG
REVISED BY: WYW
DATE REVISED: 1/14/13

LAST REVISION 05-07-13 DATE PLOTTED => 20-MAY-2013 TIME PLOTTED => 10:23

Dist	COUNTY	ROUTE	KILOMETER POST TOTAL PROJECT	SHEET No.	TOTAL SHEETS
04	Son	101	33.3	137	158

Elaine Wong 1/14/13
REGISTERED ELECTRICAL ENGINEER DATE

5-13-13
PLANS APPROVAL DATE

REGISTERED PROFESSIONAL ENGINEER Elaine T. Wong No. 13753 Exp. 6-30-13 ELECT STATE OF CALIFORNIA

THE STATE OF CALIFORNIA OR ITS OFFICERS OR AGENTS SHALL NOT BE RESPONSIBLE FOR THE ACCURACY OR COMPLETENESS OF ELECTRONIC COPIES OF THIS PLAN SHEET.

Caltrans Metric

VISORS

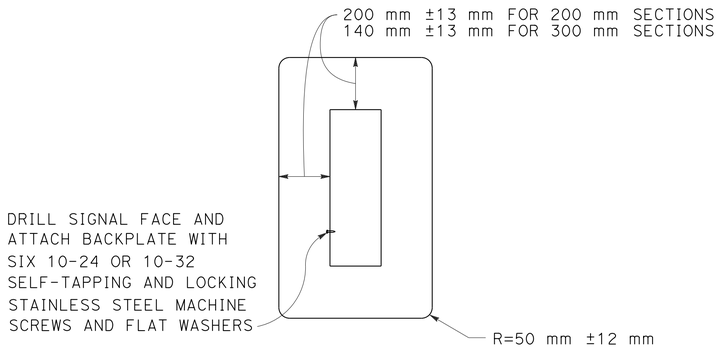

200 mm AND 300 mm SECTIONS

BACKPLATE

1.5 mm MINIMUM THICKNESS
3001-14 ALUMINUM, OR PLASTIC
WHEN SPECIFIED

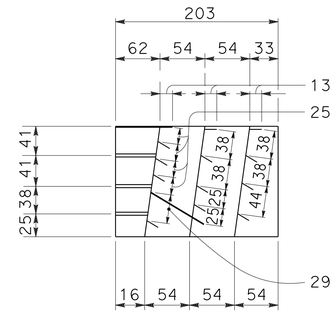

SECTION A-A

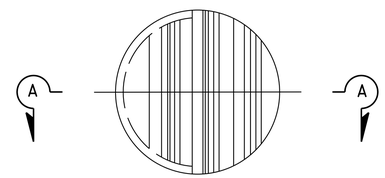

FRONT VIEW

DIRECTIONAL LOUVER

DIRECTIONAL LOUVERS SHALL BE ORIENTED AS DIRECTED BY THE ENGINEER AND SECURED IN PLACE WITH ONE PLATED BRASS MACHINE SCREW AND NUT.

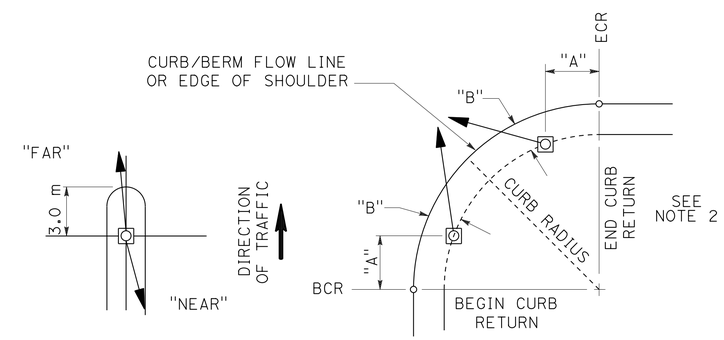

NOTES:

1. TYPICAL SIGNAL POLE PLACEMENT UNLESS DIMENSIONED ON PLANS.
2. FOR "A" AND "B" DIMENSIONS, SEE POLE SCHEDULE, OR AS DIRECTED BY THE ENGINEER.

SIGNAL STANDARD PLACEMENT DIMENSIONS AND EQUIPMENT LOCATIONS

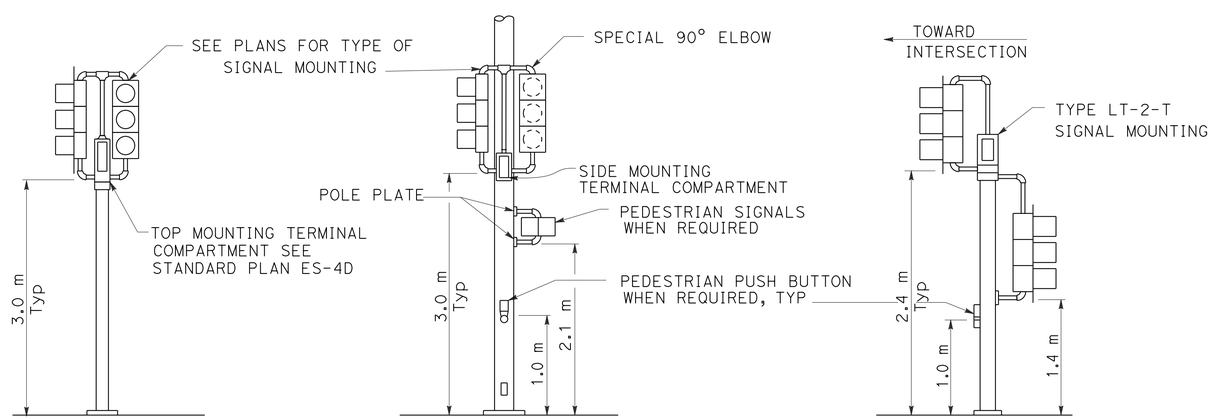

TOP MOUNTED SIGNALS (TV)
TYPE 1-A, 1-B, 1-C AND 1-D STANDARD AS INDICATED ON THE PLANS

SIDE MOUNTED SIGNALS (SV AND SP)
NORMALLY USED ON STANDARDS WITH LUMINAIRE OR SIGNAL MAST ARM

LEFT TURN LANE SIGNAL
TYPE 1-A, 1-B, 1-C AND 1-D STANDARD AS INDICATED ON PLANS

TYPICAL SIGNAL INSTALLATIONS

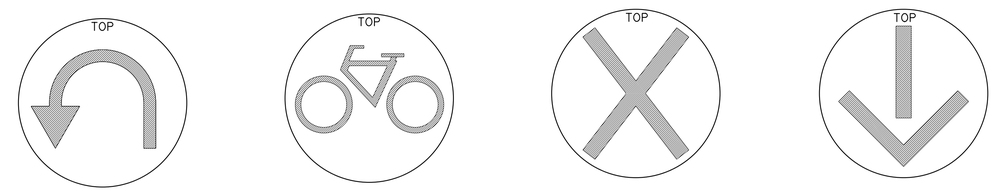

U-TURN SIGNAL FACE | BICYCLE SIGNAL FACE | LANE CONTROL SIGNAL FACE | LANE CONTROL SIGNAL FACE

ALL DIMENSIONS ARE IN MILLIMETERS UNLESS OTHERWISE SHOWN

ELECTRICAL SYSTEMS (SIGNAL HEADS AND MOUNTINGS)

NO SCALE

E-20

STATE OF CALIFORNIA - DEPARTMENT OF TRANSPORTATION
Caltrans
ELECTRICAL

FUNCTIONAL SUPERVISOR: LAI HONG CHIU
CALCULATED-DESIGNED BY: WILLIAM Y. WONG
CHECKED BY: ELANINE T. WONG
REVISED BY: WYW
DATE REVISED: 1/14/13

LAST REVISION 12-19-12
DATE PLOTTED => 20-MAY-2013
TIME PLOTTED => 07:26

Dist	COUNTY	ROUTE	KILOMETER POST TOTAL PROJECT	SHEET No.	TOTAL SHEETS
04	Son	101	33.3	138	158

Elaine Wong 1/14/13
REGISTERED ELECTRICAL ENGINEER DATE

5-13-13
PLANS APPROVAL DATE

REGISTERED PROFESSIONAL ENGINEER Elaine T. Wong No. 13753 Exp. 6-30-13 ELECT STATE OF CALIFORNIA

THE STATE OF CALIFORNIA OR ITS OFFICERS OR AGENTS SHALL NOT BE RESPONSIBLE FOR THE ACCURACY OR COMPLETENESS OF ELECTRONIC COPIES OF THIS PLAN SHEET.

Caltrans Metric

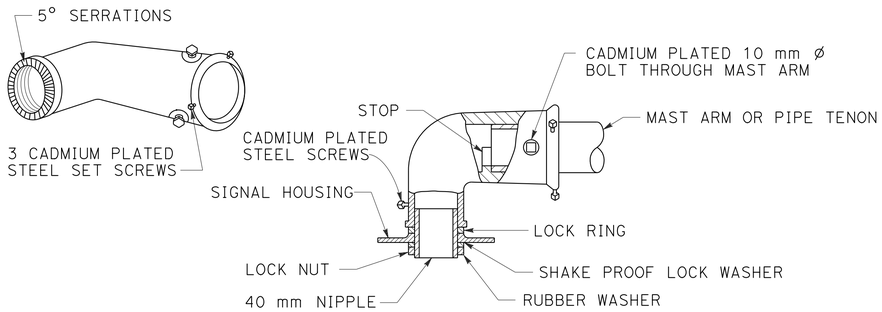

MAST ARM MOUNTING - TYPE "MAT"

FOR 2 NPS PIPE, SEE NOTE 1.

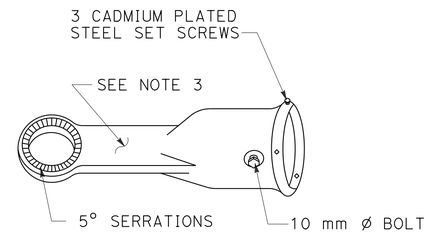

MAST ARM MOUNTING - TYPE "MAS"

FOR 2 NPS PIPE. SEE NOTE 1.

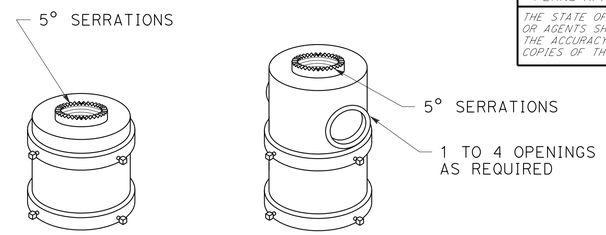

FOR ONE MOUNTING FOR MULITIPLE MOUNTINGS

TOP MOUNTINGS

FOR 4 NPS PIPE, SEE NOTE 2.

SIGNAL SLIP FITTERS

NOTES:

1. AFTER MAST ARM SIGNAL HAS BEEN PLUMBED AND SECURED, DRILL 11 mm HOLE THROUGH MAST ARM TENON IN LINE WITH SLIP FITTER HOLE. PLACE A CADMIUM PLATED 10 mm ø GALVANIZED BOLT WITH WASHER UNDER BOLT HEAD THROUGH HOLE AND SECURE WITH WASHER, NUT, AND LOCKNUT. SEAL OPENINGS BETWEEN MAST ARM MOUNTINGS AND MAST ARM WITH MASTIC.
2. (a) THREADED TOP MOUNTED SLIP FITTER OPENINGS SHALL BE 1½ NPS.
   (b) SERRATIONS IN FITTINGS SHALL MATCH THOSE ON BOTTOM OF SIGNAL HEADS OR IN LOCK RING.
   (c) TOP OPENING SHALL BE OFFSET WHEN BACKPLATE IS USED.
3. WIREWAY SHALL HAVE A CROSS SECTION AREA OF 600 mm² MINIMUM. MINIMUM WIDTH OF 13 mm.

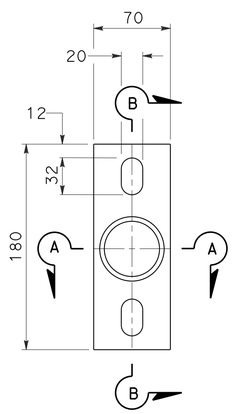

POLE PLATE

FOR SIDE MOUNTINGS

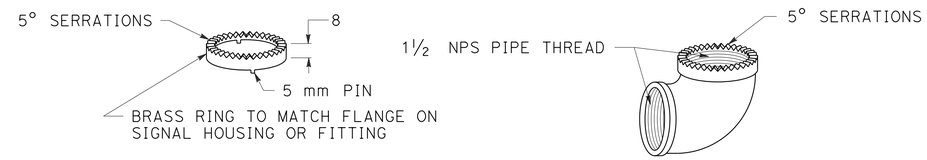

LOCK RING

USE WHERE LOCKING RING IS NOT INTEGRAL WITH SIGNAL HOUSING OR FITTING.

SPECIAL 90° ELBOW

ONE FOR EACH SIGNAL HEAD, EXCEPT THOSE WITH SPECIAL SLIP FITTER MOUNTING

MISCELLANEOUS MOUNTING HARDWARE

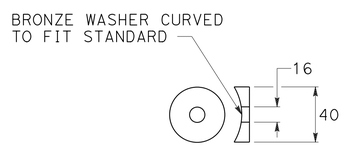

DETAIL "C"

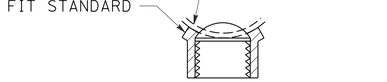

SECTION A-A

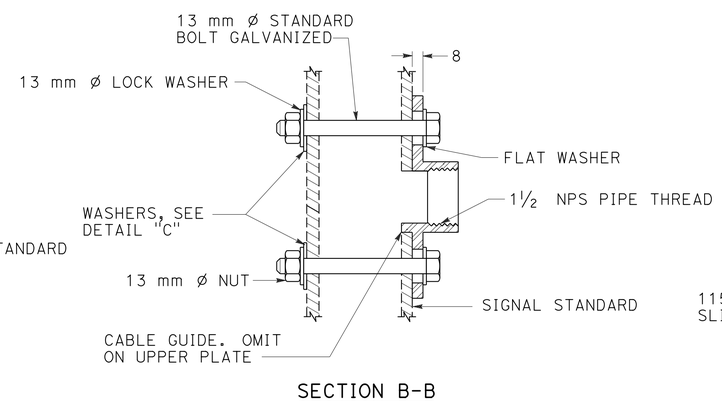

SECTION B-B

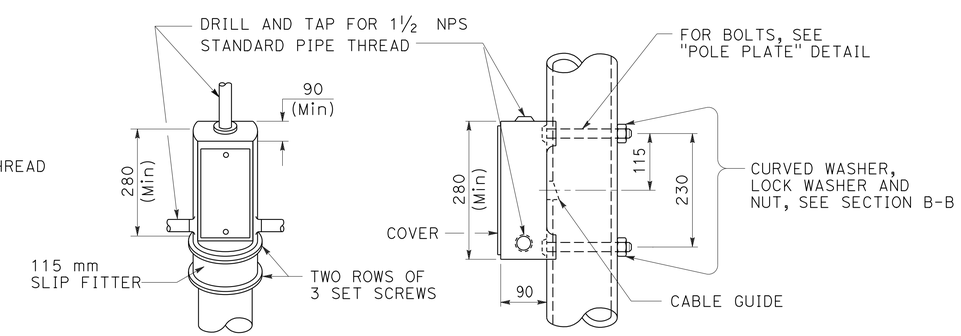

TOP MOUNTING SIDE MOUNTING

TERMINAL COMPARTMENTS

ALL DIMENSIONS ARE IN MILLIMETERS UNLESS OTHERWISE SHOWN

ELECTRICAL SYSTEMS (SIGNAL HEADS AND MOUNTINGS)

NO SCALE

E-21

STATE OF CALIFORNIA - DEPARTMENT OF TRANSPORTATION
Caltrans
ELECTRICAL

FUNCTIONAL SUPERVISOR: LAI HONG CHIU
CALCULATED-DESIGNED BY: WILLIAM Y. WONG
CHECKED BY: ELAINE T. WONG
REVISED BY: WYW
DATE REVISED: 1/14/13

LAST REVISION 12-18-12 | DATE PLOTTED => 20-MAY-2013 | TIME PLOTTED => 07:26

Dist	COUNTY	ROUTE	KILOMETER POST TOTAL PROJECT	SHEET No.	TOTAL SHEETS
04	Son	101	33.3	139	158

Elaine Wong 1/14/13
REGISTERED ELECTRICAL ENGINEER DATE

5-13-13
PLANS APPROVAL DATE

REGISTERED PROFESSIONAL ENGINEER Elaine T. Wong No. 13753 Exp. 6-30-13 ELECT STATE OF CALIFORNIA

THE STATE OF CALIFORNIA OR ITS OFFICERS OR AGENTS SHALL NOT BE RESPONSIBLE FOR THE ACCURACY OR COMPLETENESS OF ELECTRONIC COPIES OF THIS PLAN SHEET.

Caltrans Metric

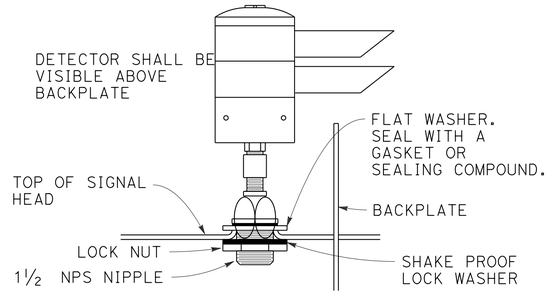

EMERGENCY VEHICLE DETECTOR MOUNTING

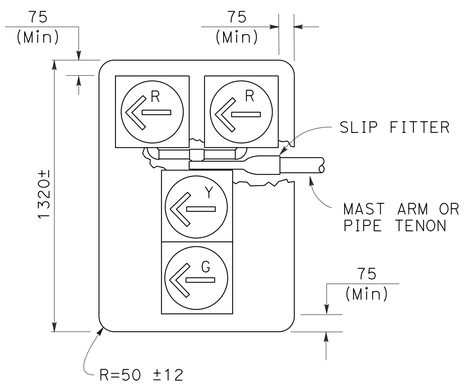

MAS-4A

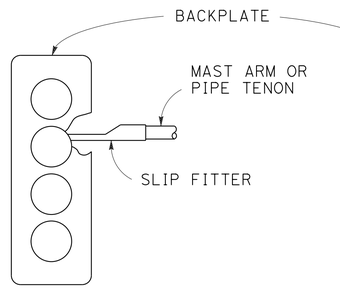

MAS-4B

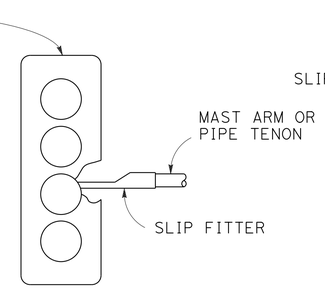

MAS-4C

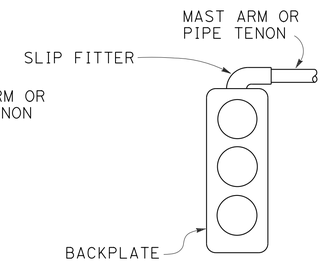

MAT

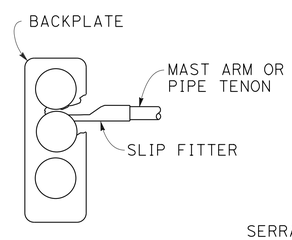

MAS

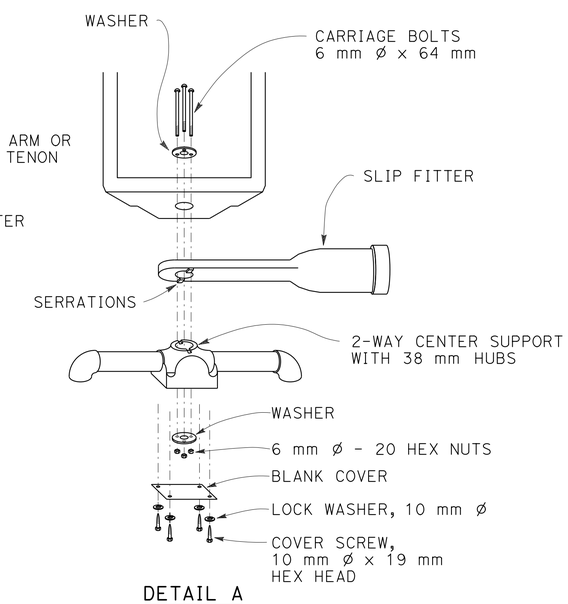

DETAIL A

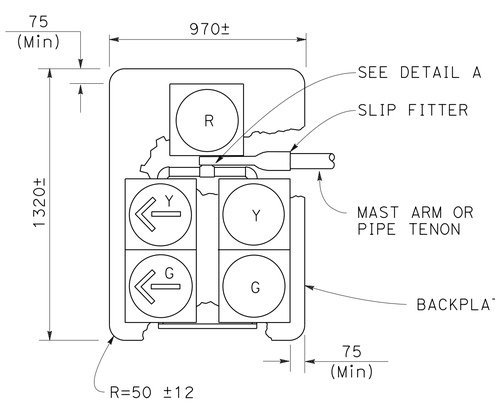

MAS-5A

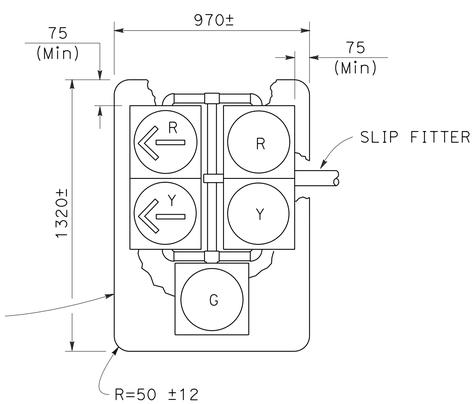

MAS-5B

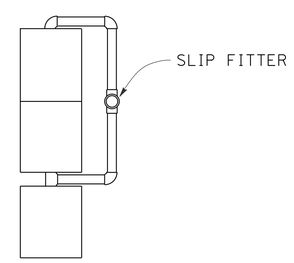

SIDE VIEW

MAST ARM MOUNTINGS

ALL DIMENSIONS ARE IN MILLIMETERS UNLESS OTHERWISE SHOWN

ELECTRICAL SYSTEMS (SIGNAL FACES AND MOUNTINGS)

NO SCALE

E-22

WILLIAM Y. WONG	REVISED BY: WYW
ELAINE T. WONG	DATE REVISED: 1/14/13
CALCULATED-DESIGNED BY	
CHECKED BY	
FUNCTIONAL SUPERVISOR	LAI HONG CHIU

STATE OF CALIFORNIA - DEPARTMENT OF TRANSPORTATION
Caltrans
ELECTRICAL

LAST REVISION 01-09-13 | DATE PLOTTED => 20-MAY-2013 | TIME PLOTTED => 07:26

Dist	COUNTY	ROUTE	KILOMETER POST TOTAL PROJECT	SHEET No.	TOTAL SHEETS
04	Son	101	33.3	140	158

Elaine Wong 1/14/13
REGISTERED ELECTRICAL ENGINEER DATE

5-13-13
PLANS APPROVAL DATE

REGISTERED PROFESSIONAL ENGINEER Elaine T. Wong No. 13753 Exp. 6-30-13 ELECT STATE OF CALIFORNIA

THE STATE OF CALIFORNIA OR ITS OFFICERS OR AGENTS SHALL NOT BE RESPONSIBLE FOR THE ACCURACY OR COMPLETENESS OF ELECTRONIC COPIES OF THIS PLAN SHEET.

Caltrans Metric

LOOP INSTALLATION PROCEDURE

1. LOOPS SHALL BE CENTERED IN LANES.
2. SAW SLOTS IN PAVEMENT FOR LOOP CONDUCTORS AS SHOWN IN DETAILS.
3. DISTANCE BETWEEN SIDE OF LOOP AND A LEAD-IN SAW CUT FROM ADJACENT DETECTORS SHALL BE 600 mm MINIMUM. DISTANCE BETWEEN LEAD-IN SAW CUTS SHALL BE 150 mm MINIMUM.
4. BOTTOM OF SAW SLOT SHALL BE SMOOTH WITH NO SHARP EDGES.
5. SLOTS SHALL BE WASHED UNTIL CLEAN, BLOWN OUT AND THOROUGHLY DRIED BEFORE INSTALLING LOOP CONDUCTORS.
6. ADJACENT LOOPS ON THE SAME SENSOR UNIT CHANNEL SHALL BE WOUND IN OPPOSITE DIRECTIONS.
7. IDENTIFY AND TAG LOOP CIRCUIT PAIRS IN THE PULL BOX WITH LOOP NUMBER, START (S) AND FINISH (F) OF CONDUCTOR. IDENTIFY AND TAG LEAD-IN-CABLE WITH SENSOR NUMBER AND PHASE.
8. INSTALL LOOP CONDUCTOR IN SLOT USING A 5 mm TO 6 mm THICK WOOD PADDLE. HOLD LOOP CONDUCTORS WITH WOOD PADDLES (AT THE BOTTOM OF THE SAWED SLOT) DURING SEALANT PLACEMENT.
9. NO MORE THAN 2 TWISTED PAIRS SHALL BE INSTALLED IN ONE SAWED SLOT.
10. ALLOW ADDITIONAL 1.5 m OF SLACK LENGTH OF CONDUCTOR FOR THE LEAD-IN RUN TO PULL BOX.
11. THE ADDITIONAL LENGTH OF EACH CONDUCTOR FOR EACH LOOP SHALL BE TWISTED TOGETHER INTO A PAIR (6 TURNS PER 1 m MINIMUM) BEFORE BEING PLACED IN THE SLOT AND CONDUIT LEADING TO PULL BOX.
12. TEST EACH LOOP CIRCUIT FOR CONTINUITY, CIRCUIT RESISTANCE AND INSULATION RESISTANCE AT THE PULL BOX BEFORE FILLING SLOTS.
13. FILL SLOTS AS SHOWN IN DETAILS.
14. SPLICE LOOP CONDUCTORS TO LEAD-IN-CABLE. SPLICES SHALL BE SOLDERED.
15. END OF LEAD-IN-CABLE AND TYPE 2 LOOP CONDUCTOR SHALL BE WATERPROOFED PRIOR TO INSTALLING IN CONDUIT TO PREVENT MOISTURE FROM ENTERING THE CABLE.
16. LEAD-IN-CABLE SHALL NOT BE SPLICED BETWEEN THE PULL BOX AND THE CONTROLLER CABINET TERMINALS.
17. TEST EACH LOOP CIRCUIT FOR CONTINUITY, CIRCUIT RESISTANCE AND INSULATION RESISTANCE AT THE CONTROLLER CABINET LOCATION.
18. WHERE LOOP CONDUCTORS ARE NOT TO BE SPLICED TO A LEAD-IN-CABLE, THE ENDS OF THE CONDUCTORS SHALL BE TAPED AND WATERPROOFED WITH ELECTRICAL INSULATING COATING.

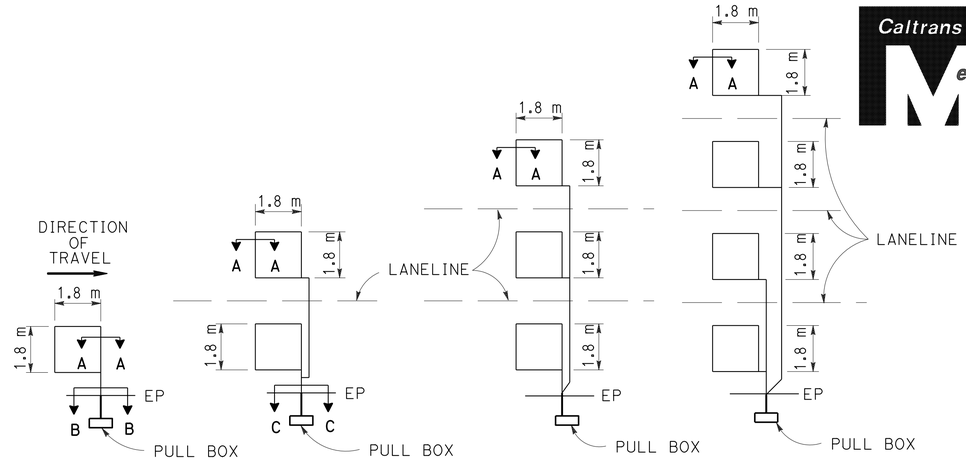

TYPE 1A INSTALLATION | TYPE 2A INSTALLATION | TYPE 3A INSTALLATION | TYPE 4A INSTALLATION

SAWCUT DETAILS

(TYPE A LOOP DETECTOR CONFIGURATIONS ILLUSTRATED)

1. 1A THRU 4A = 1 TYPE A LOOP CONFIGURATION IN EACH LANE.
2. 1B THRU 4B = 1 TYPE B LOOP CONFIGURATION IN EACH LANE.
3. 1C = 1 TYPE C LOOP CONFIGURATION ENTERING LANES AS REQUIRED.
4. 1D THRU 4D = 1 TYPE D LOOP CONFIGURATION IN EACH LANE.
5. 1E THRU 4E = 1 TYPE E LOOP CONFIGURATION IN EACH LANE.
6. 1Q THRU 4Q = 1 TYPE Q LOOP CONFIGURATION IN EACH LANE. (USE TYPE A, B, C, D, E OR Q LOOP DETECTOR CONFIGURATIONS ONLY WHEN SPECIFIED OR SHOWN ON PLANS)

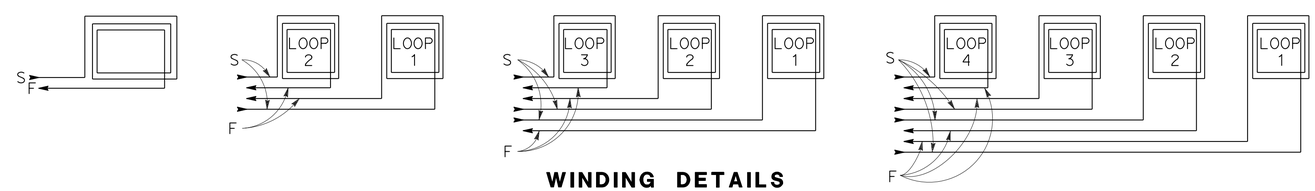

WINDING DETAILS

SEE NOTES 6 AND 7

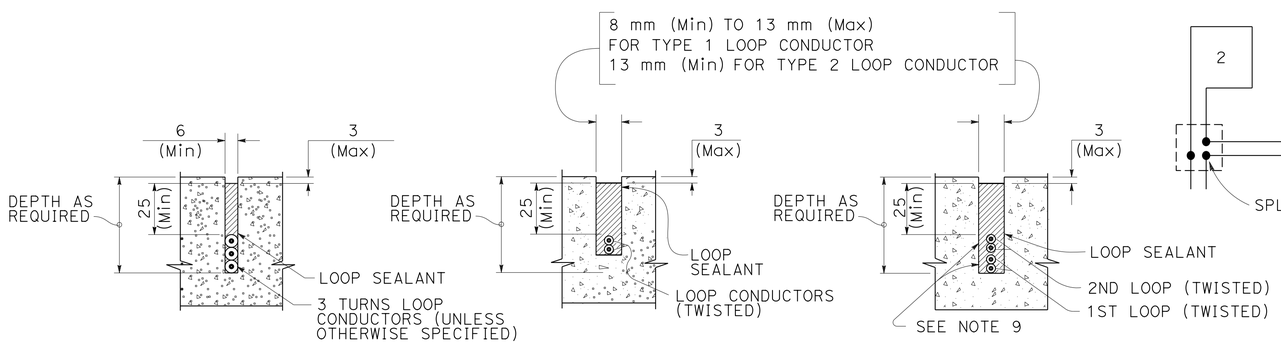

SECTION A-A | SECTION B-B | SECTION C-C

SLOT DETAILS - TYPE 1 AND TYPE 2 LOOP CONDUCTOR

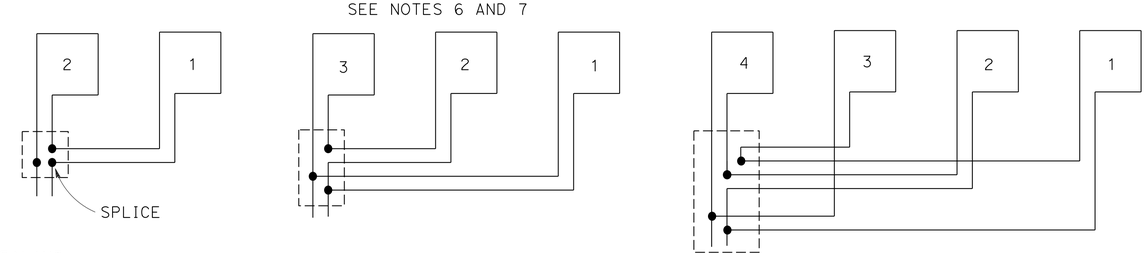

TYPICAL LOOP CONNECTIONS

(DASHED LINES REPRESENT THE PULL BOX)

ALL DIMENSIONS ARE IN MILLIMETERS UNLESS OTHERWISE SHOWN

ELECTRICAL SYSTEMS (DETECTORS)

NO SCALE

E-23

STATE OF CALIFORNIA - DEPARTMENT OF TRANSPORTATION
Caltrans
ELECTRICAL

FUNCTIONAL SUPERVISOR: LAI HONG CHIU
CALCULATED-DESIGNED BY: WILLIAM Y. WONG
CHECKED BY: ELAINE T. WONG
REVISED BY: WYW
DATE REVISED: 1/14/13

LAST REVISION DATE PLOTTED => 20-MAY-2013
12-18-12 TIME PLOTTED => 07:26

Dist	COUNTY	ROUTE	KILOMETER POST TOTAL PROJECT	SHEET No.	TOTAL SHEETS
04	Son	101	33.3	141	158

Elaine Wong 1/14/13
REGISTERED ELECTRICAL ENGINEER DATE

5-13-13
PLANS APPROVAL DATE

REGISTERED PROFESSIONAL ENGINEER Elaine T. Wong No. 13753 Exp. 6-30-13 ELECT STATE OF CALIFORNIA

THE STATE OF CALIFORNIA OR ITS OFFICERS OR AGENTS SHALL NOT BE RESPONSIBLE FOR THE ACCURACY OR COMPLETENESS OF ELECTRONIC COPIES OF THIS PLAN SHEET.

Caltrans Metric

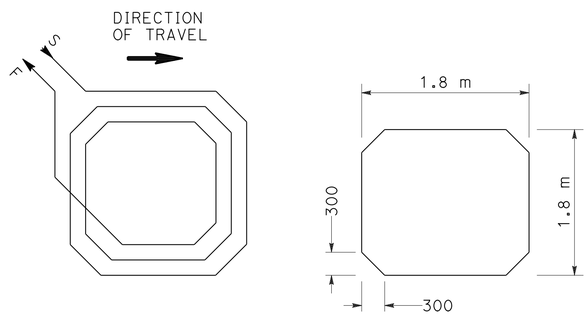

WINDING DETAIL SAWCUT DETAIL

TYPE A LOOP DETECTOR CONFIGURATION

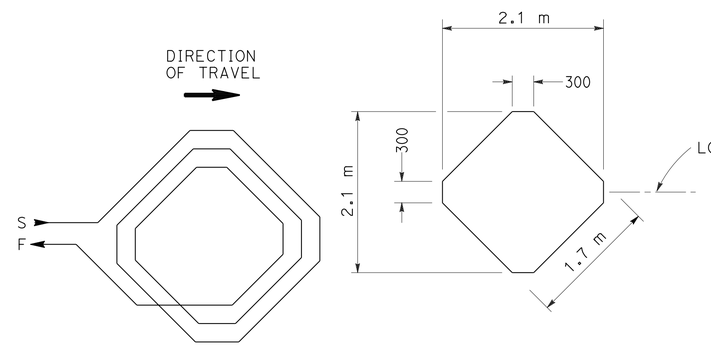

WINDING DETAIL SAWCUT DETAIL

TYPE B LOOP DETECTOR CONFIGURATION

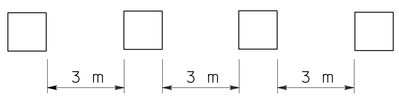

TYPICAL TYPE A INSTALLATION

SINGLE LANE

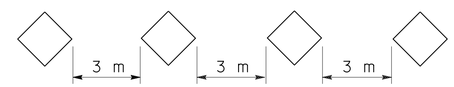

TYPICAL TYPE B INSTALLATION

SINGLE LANE

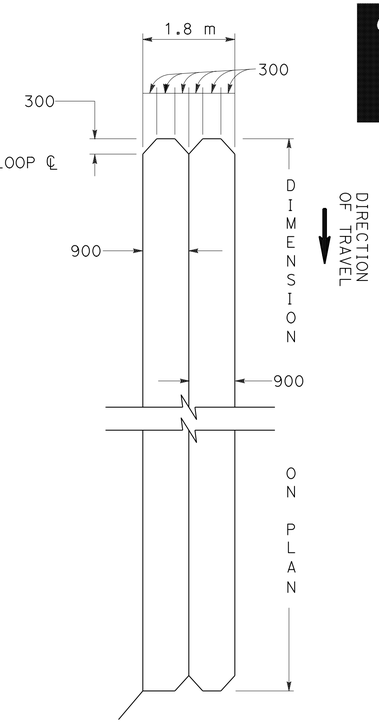

SAWCUT DETAIL

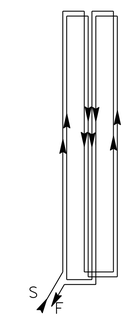

WINDING DETAIL

TYPE C LOOP DETECTOR CONFIGURATION

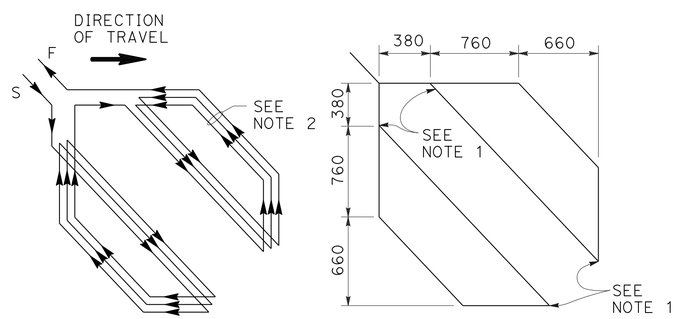

WINDING DETAIL SAWCUT DETAIL

TYPE D LOOP DETECTOR CONFIGURATION

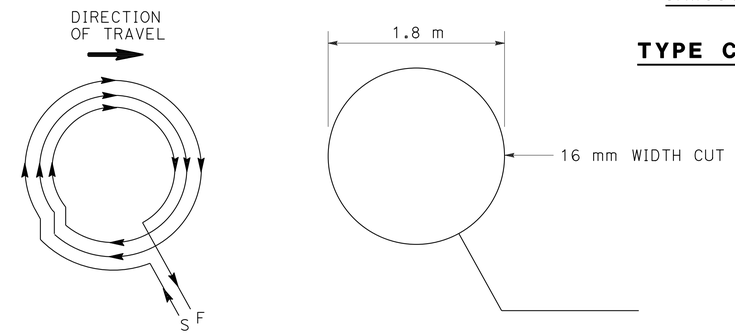

WINDING DETAIL SAWCUT DETAIL

TYPE E LOOP DETECTOR CONFIGURATION

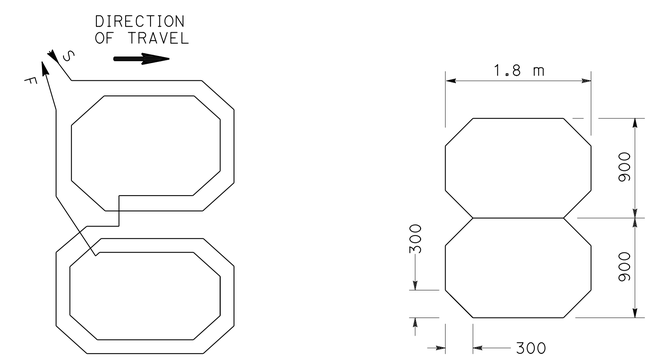

WINDING DETAIL SAWCUT DETAIL

TYPE Q LOOP DETECTOR CONFIGURATION

NOTES:

1. ROUND CORNERS OF ACUTE ANGLE SAWCUTS TO PREVENT DAMAGE TO CONDUCTORS.
2. INSTALL 3 TURNS WHEN ONLY ONE TYPE D LOOP IS ON A SENSOR UNIT CHANNEL. INSTALL 5 TURNS WHEN ONE TYPE D LOOP IS CONNECTED WITH 3 ADDITIONAL 1.8 m x 1.8 m LOOPS ON A SENSOR UNIT.

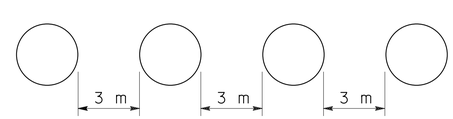

TYPICAL TYPE E INSTALLATION

SINGLE LANE

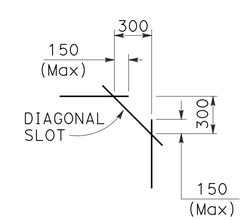

PLAN VIEW OF DIAGONAL SLOT AT CORNERS

ALL DIMENSIONS ARE IN MILLIMETERS UNLESS OTHERWISE SHOWN

ELECTRICAL SYSTEMS (DETECTORS)

NO SCALE

E-24

WILLIAM Y. WONG	REVISED BY: WYW
ELANINE T. WONG	DATE REVISED: 1/14/13
CALCULATED-DESIGNED BY	
CHECKED BY	
FUNCTIONAL SUPERVISOR: LAI HONG CHIU	

STATE OF CALIFORNIA - DEPARTMENT OF TRANSPORTATION
Caltrans
ELECTRICAL

LAST REVISION 12-18-12 | DATE PLOTTED => 20-MAY-2013 | TIME PLOTTED => 07:26

Dist	COUNTY	ROUTE	KILOMETER POST TOTAL PROJECT	SHEET No.	TOTAL SHEETS
04	Son	101	33.3	142	158

Elaine Wong 1/14/13
REGISTERED ELECTRICAL ENGINEER DATE

5-13-13
PLANS APPROVAL DATE

REGISTERED PROFESSIONAL ENGINEER Elaine T. Wong No. 13753 Exp. 6-30-13 ELECT STATE OF CALIFORNIA

THE STATE OF CALIFORNIA OR ITS OFFICERS OR AGENTS SHALL NOT BE RESPONSIBLE FOR THE ACCURACY OR COMPLETENESS OF ELECTRONIC COPIES OF THIS PLAN SHEET.

Caltrans Metric

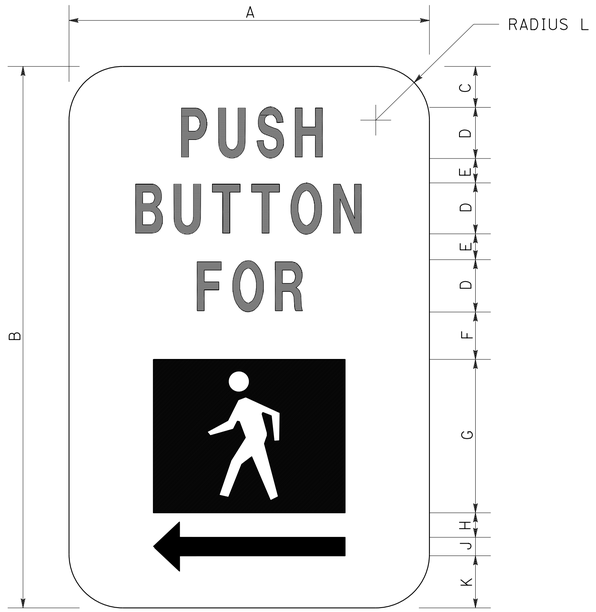

ALTERNATIVE SYMBOL AND ARROW DIRECTIONS:
LEFT, RIGHT OR BOTH

SIGN DIMENSIONS (mm)											
	A	B	C	D	E	F	G	H	J	K	L
NOMINAL	130	190	15	20	10	12	54	10	6	20	20

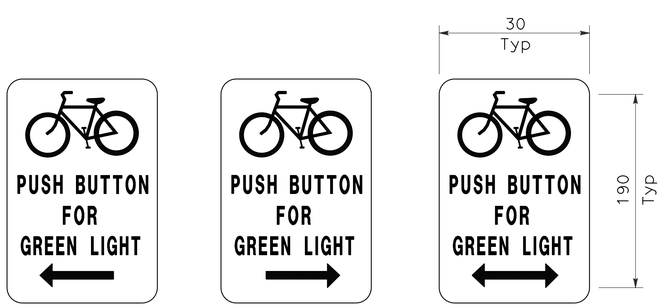

LEFT RIGHT BOTH

FOR BICYCLE LANES

(USE ONLY WHEN SPECIFIED)
BLACK LEGEND ON WHITE BACKGROUND

PEDESTRIAN PUSH BUTTON SIGNS

NOTE:

COLOR OF LEGEND AND ARROW ARE BLACK.
COLOR OF BACKGROUND AND SYMBOL ARE WHITE.

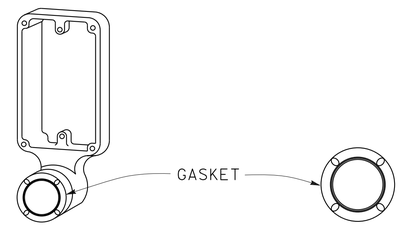

TYPE B TYPE C
(USE ONLY WHEN SPECIFIED)

PEDESTRIAN PUSH BUTTONS

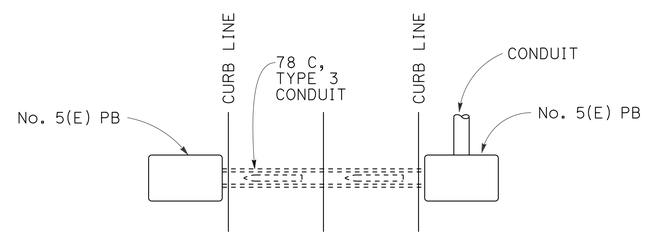

PLAN

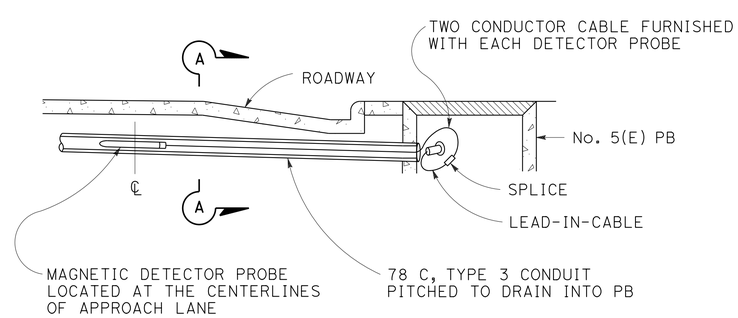

ELEVATION

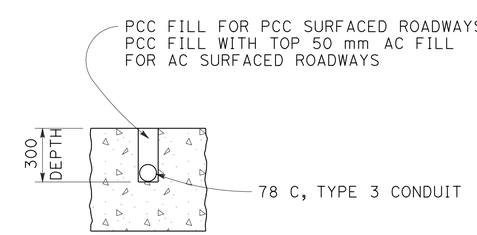

SECTION A-A

MAGNETIC VEHICLE DETECTOR INSTALLATION DETAILS

NOTES:

1. BACK CASTING SHAPE TO FIT CURVATURE OF POST.
2. PROVIDE COVER FITTING FOR TOP OF POST, WHEN PPB IS MOUNTED ON PEDESTRIAN PUSH BUTTON POST.
3. INSTALL PUSH BUTTON ON CROSSWALK SIDE OF STANDARD.
4. ACTUATOR SHALL BE 50 mm MINIMUM, IN DIAMETER.

ALL DIMENSIONS ARE IN MILLIMETERS UNLESS OTHERWISE SHOWN

ELECTRICAL SYSTEMS (DETECTORS)

NO SCALE

E-25

WILLIAM Y. WONG	REVISED BY	WYW	
ELANINE T. WONG	DATE REVISED	1/14/13	
CALCULATED-DESIGNED BY			
CHECKED BY			
FUNCTIONAL SUPERVISOR			
LAI HONG CHIU			

STATE OF CALIFORNIA - DEPARTMENT OF TRANSPORTATION
Caltrans
ELECTRICAL

LAST REVISION 01-09-13 DATE PLOTTED => 20-MAY-2013 TIME PLOTTED => 07:26

Dist	COUNTY	ROUTE	KILOMETER POST TOTAL PROJECT	SHEET No.	TOTAL SHEETS
04	Son	101	33.3	143	158

Caltrans Metric

Elaine Wong 1/14/13
REGISTERED ELECTRICAL ENGINEER DATE

5-13-13
PLANS APPROVAL DATE

REGISTERED PROFESSIONAL ENGINEER Elaine T. Wong No. 13753 Exp. 6-30-13 ELECT STATE OF CALIFORNIA

THE STATE OF CALIFORNIA OR ITS OFFICERS OR AGENTS SHALL NOT BE RESPONSIBLE FOR THE ACCURACY OR COMPLETENESS OF ELECTRONIC COPIES OF THIS PLAN SHEET.

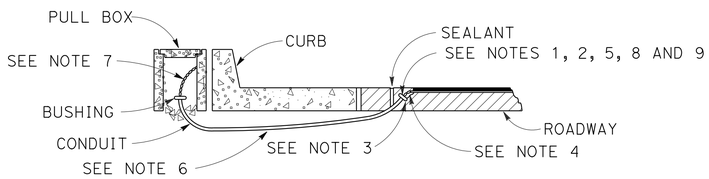

TYPE A

CURB TERMINATION DETAIL

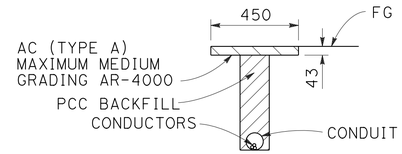

"T" TRENCH DETAIL

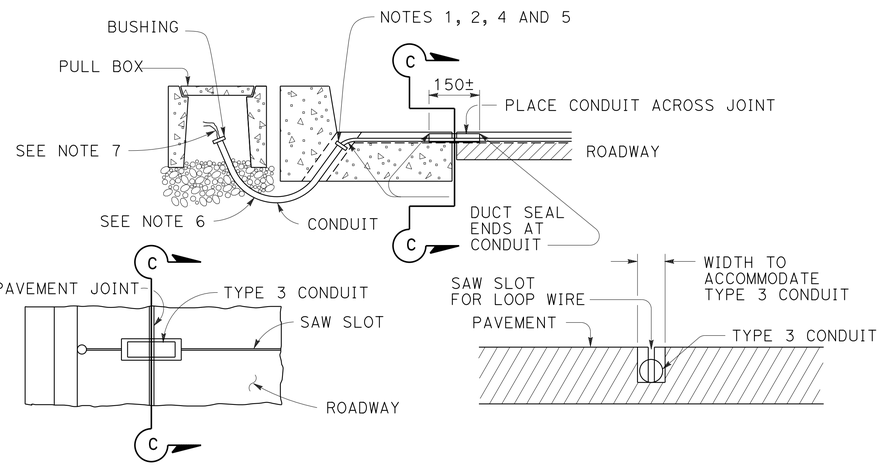

PLAN VIEW SECTION C-C

TYPE B

CURB TERMINATION DETAILS

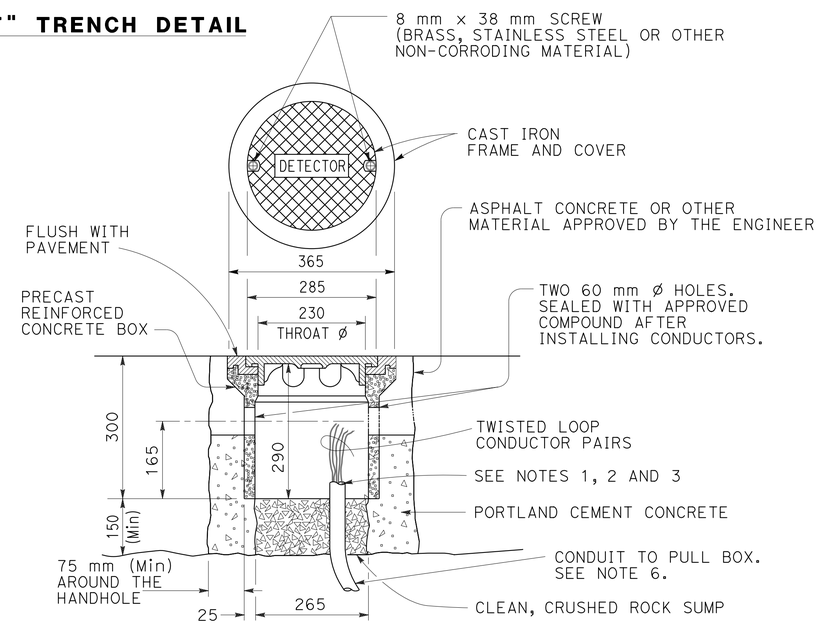

DETECTOR HANDHOLE DETAILS

NOTES: (THIS SHEET ONLY)

1. BUSHING SHALL BE USED AT END OF CONDUIT.
2. TAPE DETECTOR CONDUCTORS OR CABLES 75 mm EACH SIDE OF BUSHINGS.
3. INSTALL DUCT SEAL COMPOUND TO EACH END OF TERMINATION CONDUIT BEFORE INSTALLING SEALANT.
4. ROUND ALL SHARP EDGES WHERE DETECTOR CONDUCTORS OR CABLES HAVE TO PASS.
5. END OF CONDUIT SHALL BE 80 mm BELOW ROADWAY SURFACE.
6. CONDUIT SIZE / LOOP CONDUCTORS
   - 27 C MINIMUM — 1 TO 2 PAIRS
   - 41 C MINIMUM — 3 TO 4 PAIRS
   - 53 C MINIMUM — 5 OR MORE PAIRS
7. SPLICE DETECTOR CONDUCTORS OR CABLES TO LEAD-IN-CABLE RUN TO CONTROLLER CABINET.
8. LOCATION OF DETECTOR HANDHOLE WHEN SHOWN ON PLANS.
9. WHEN THE SHOULDER AND TRAVELED WAY ARE PAVED WITH THE SAME MATERIAL AND THERE IS NO JOINT BETWEEN THEM, THE CONDUIT SHALL EXTEND ONLY 600 mm INTO THE SHOULDER PAVEMENT.

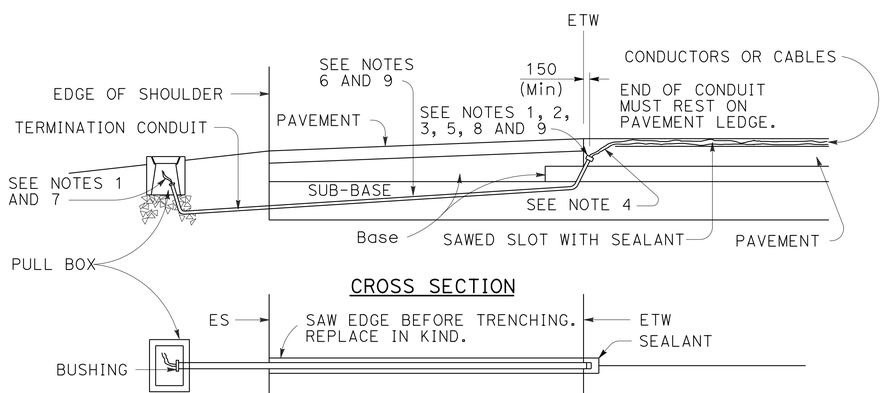

SHOULDER TERMINATION DETAILS

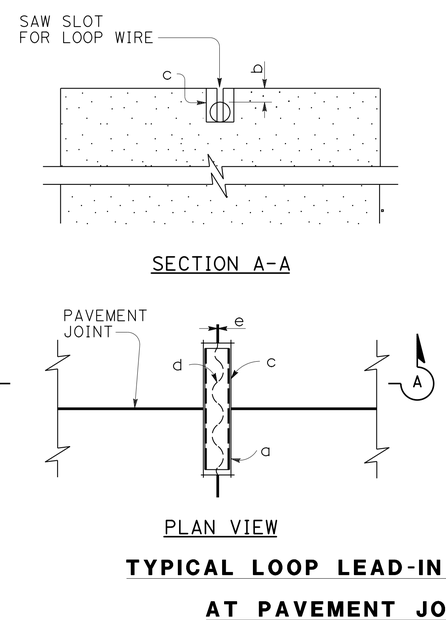

TYPICAL LOOP LEAD-IN DETAILS

AT PAVEMENT JOINT

NOTES:

a. 21 C, TYPE 3 CONDUIT 150 mm LONG MINIMUM, PLUG BOTH ENDS WITH DUCT COMPOUND TO KEEP OUT SEALANT.

b. 13 mm MINIMUM BETWEEN TOP OF CONDUIT AND PAVEMENT SURFACE.

c. SAW CUT SHALL NOT EXCEED 25 mm IN WIDTH AND 3 mm LONGER THAN CONDUIT TO BE INSTALLED.

d. CONDUCTORS WITH 13 mm MINIMUM SLACK INSIDE CONDUIT.

e. INDUCTIVE LOOP DETECTOR SAW SLOT.

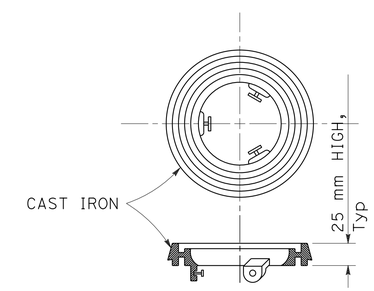

NOTE:
USE FOR TYPE A DETECTOR HANDHOLE ON PAVEMENT RESURFACING ONLY.

LOCKING GRADE RING

ALL DIMENSIONS ARE IN MILLIMETERS UNLESS OTHERWISE SHOWN

ELECTRICAL SYSTEMS (DETECTORS)

NO SCALE

E-26

REVISED BY	DATE REVISED
WYW	1/14/13

WILLIAM Y. WONG — ELAINE T. WONG — CALCULATED-DESIGNED BY — CHECKED BY

FUNCTIONAL SUPERVISOR: LAI HONG CHIU

STATE OF CALIFORNIA - DEPARTMENT OF TRANSPORTATION — ELECTRICAL — Caltrans

LAST REVISION 01-09-13 | DATE PLOTTED => 20-MAY-2013 | TIME PLOTTED => 07:27

Dist	COUNTY	ROUTE	KILOMETER POST TOTAL PROJECT	SHEET No.	TOTAL SHEETS
04	Son	101	33.3	144	158

REGISTERED CIVIL ENGINEER 5/7/13 DATE

5-13-13
PLANS APPROVAL DATE

REGISTERED PROFESSIONAL ENGINEER Fred J. Witteborn No. 56272 Exp. 12-31-14 CIVIL STATE OF CALIFORNIA

THE STATE OF CALIFORNIA OR ITS OFFICERS OR AGENTS SHALL NOT BE RESPONSIBLE FOR THE ACCURACY OR COMPLETENESS OF ELECTRONIC COPIES OF THIS PLAN SHEET.

Caltrans Metric

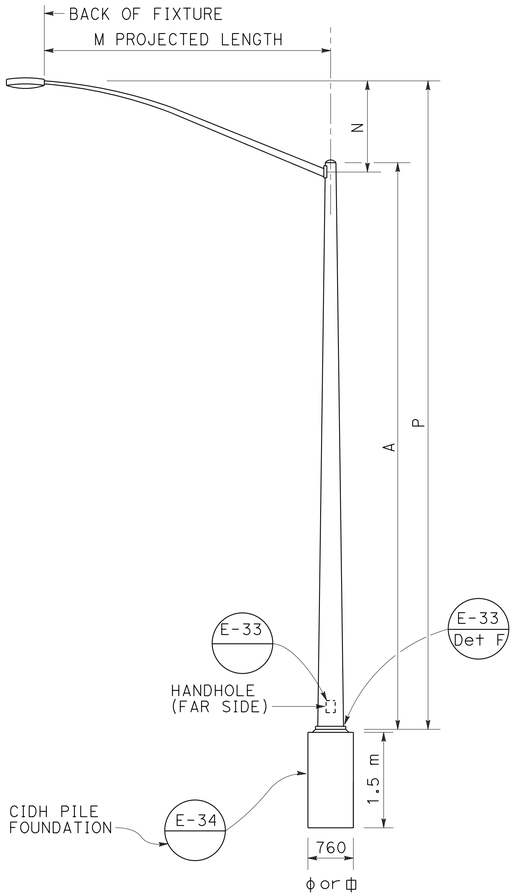

ELEVATION

TYPE 15 AND TYPE 21

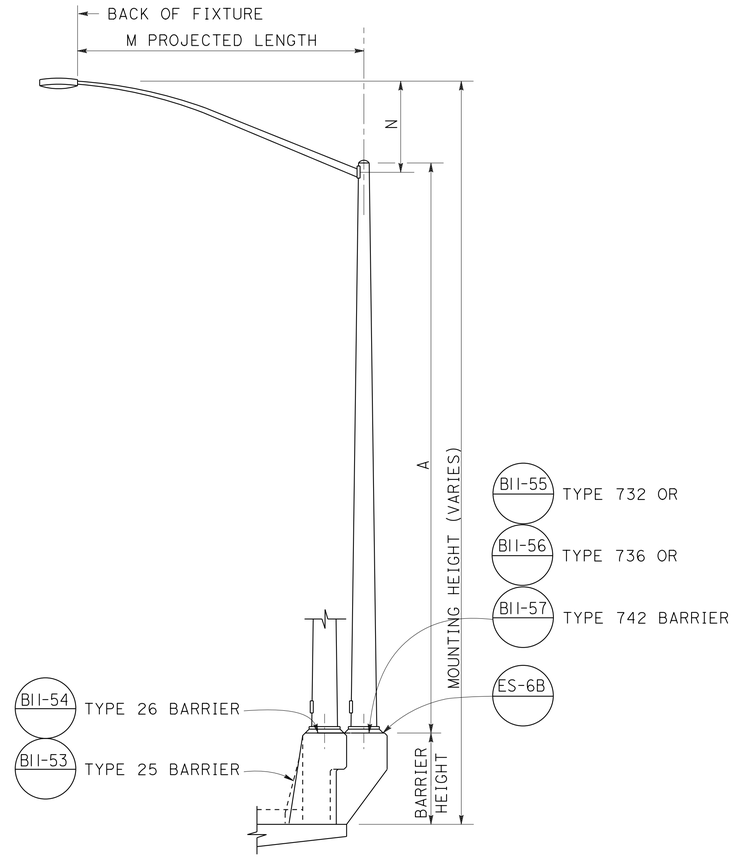

ELEVATION

TYPE 15 AND TYPE 21 BARRIER RAIL MOUNTED

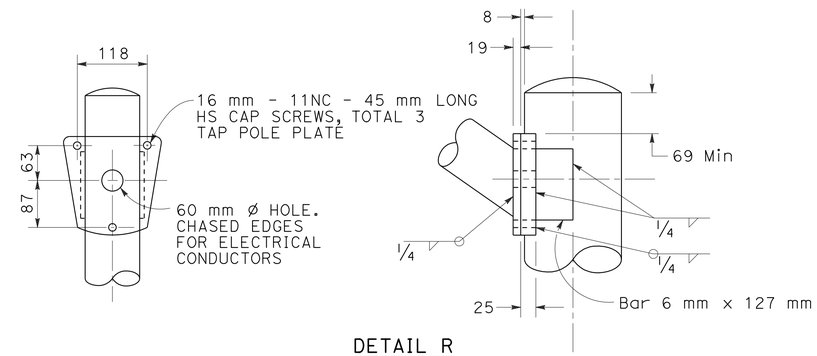

DETAIL R

LUMINAIRE ARM CONNECTION

HIGH STRENGTH CAP SCREWS

16 - 11NC - 45

- LENGTH (mm)
- THREADS (PER INCH)
- SIZE (mm)

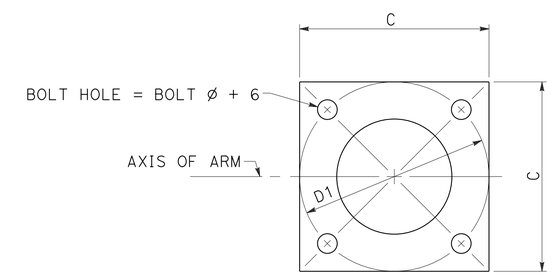

BASE PLATE

POLE TYPE	POLE DATA				BASE PLATE DATA				LUMINAIRE ARM
	A HEIGHT	Min OD BASE	Min OD TOP	WALL THICKNESS	C	DI BOLT CIRCLE	THICK-NESS	ANCHOR BOLTS SIZE	
	m	mm	mm	mm	mm				m
15	9.1	203	98	3.04	305	305	25	25 ø x 915 x 102*	1.8-4.6 [3.7]
21	10.7	219	98	3.04	305	305	25	SEE ES-6B	1.8-4.6 [3.7]

LUMINAIRE ARM DATA					
M PROJECTED LENGTH	N RISE	Min OD AT POLE	NOMINAL THICKNESS	P TYPE 15	P TYPE 21
m	mm	mm	mm	m	m
1.8	610±	83	3.04	9.5±	11.2±
2.4	760±	89	3.04	9.7±	11.3±
3.1	990±	98	3.04	9.9±	11.5±
3.7	1290±	98	3.04	10.3±	11.8±
4.6	1450±	108	3.04	10.3±	11.9±

NOTES:

1. ☐ INDICATES ARM LENGTH TO BE USED UNLESS OTHERWISE NOTED ON THE PLANS.
2. FOR ADDITIONAL NOTES, SEE E-33 AND E-34.

ALL DIMENSIONS ARE IN MILLIMETERS UNLESS OTHERWISE SHOWN

ELECTRICAL SYSTEMS (LIGHTING STANDARD TYPES 15 AND 21)

NO SCALE

E-27

REVISED BY	FJW	CALCULATED-DESIGNED BY	FRED J. WITTEBORN
DATE REVISED	2/13/13	CHECKED BY	JONATHAN LEE
FUNCTIONAL SUPERVISOR	JONATHAN LEE		

STATE OF CALIFORNIA - DEPARTMENT OF TRANSPORTATION
Caltrans DESIGN

LAST REVISION 05-06-13 DATE PLOTTED => 20-MAY-2013 TIME PLOTTED => 10:27

Dist	COUNTY	ROUTE	KILOMETER POST TOTAL PROJECT	SHEET No.	TOTAL SHEETS
04	Son	101	33.3	145	158

REGISTERED CIVIL ENGINEER 5/7/13 DATE

5-13-13
PLANS APPROVAL DATE

REGISTERED PROFESSIONAL ENGINEER Fred J. Witteborn No. 56272 Exp. 12-31-14 CIVIL STATE OF CALIFORNIA

THE STATE OF CALIFORNIA OR ITS OFFICERS OR AGENTS SHALL NOT BE RESPONSIBLE FOR THE ACCURACY OR COMPLETENESS OF ELECTRONIC COPIES OF THIS PLAN SHEET.

Caltrans Metric

NOTES

1. Pipe dimensions for pedestrian push button post are nominal. See ASTM A6M.

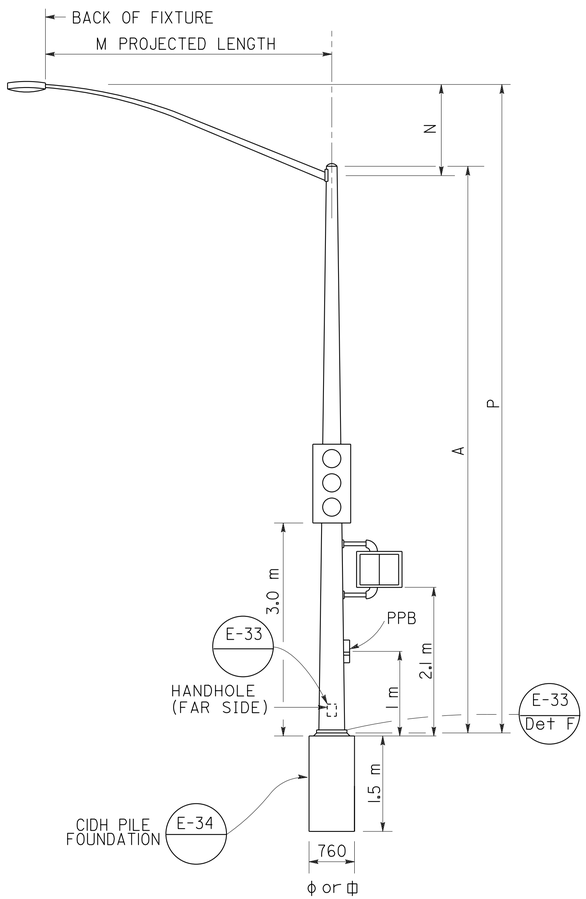

ELEVATION
TYPE 15TS STANDARD

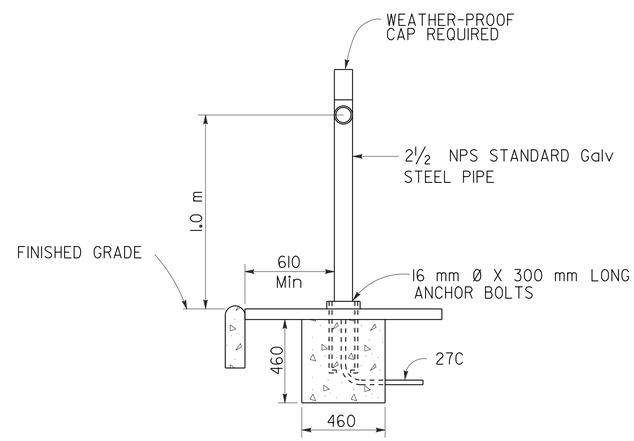

ELEVATION

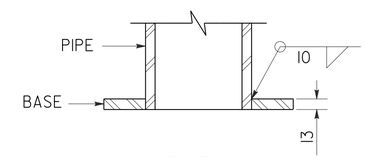

SECTION

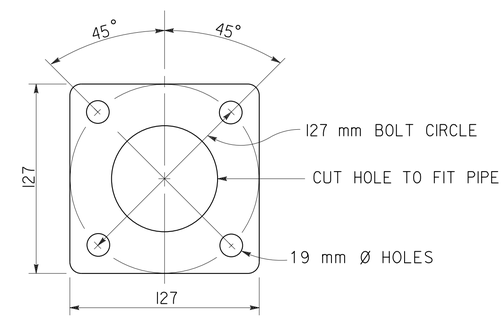

BASE PLATE
PPB POST

PEDESTRIAN PUSH BUTTON POST

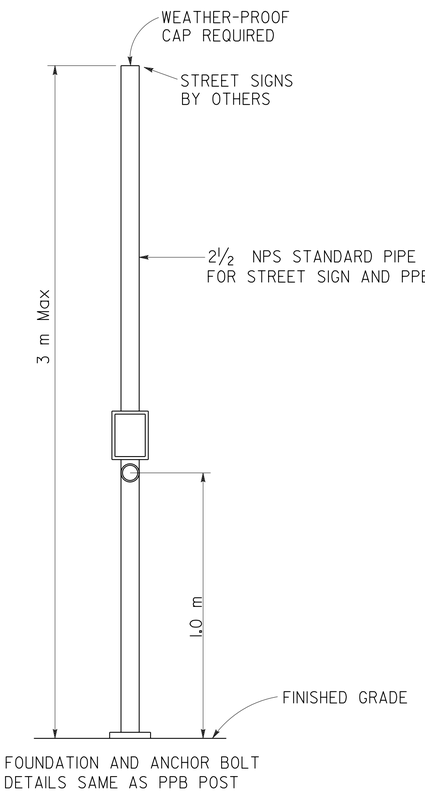

COMBINED STREET SIGN
PEDESTRIAN PUSH BUTTON POST

TYPE 15TS STANDARD

POLE DATA				BASE PLATE DATA			
A HEIGHT	Min OD		WALL THICKNESS	C	DI BOLT CIRCLE	THICKNESS	ANCHOR BOLTS SIZE
	BASE	TOP					
m	mm	mm	mm	mm			
9.1	203	98	4.55	305	305	25	32 ⌀ x 915 x 152

ALL DIMENSIONS ARE IN MILLIMETERS UNLESS OTHERWISE SHOWN

ELECTRICAL SYSTEMS (SIGNAL AND LIGHTING STANDARD PUSH BUTTON POSTS AND TYPE 15TS STANDARD)

NO SCALE

E-28

STATE OF CALIFORNIA - DEPARTMENT OF TRANSPORTATION
Caltrans DESIGN

FUNCTIONAL SUPERVISOR JONATHAN LEE
CALCULATED-DESIGNED BY FRED J. WITTEBORN
CHECKED BY JONATHAN LEE
REVISED BY FJW
DATE REVISED 2/13/13

LAST REVISION 02-07-13
DATE PLOTTED => 20-MAY-2013
TIME PLOTTED => 10:27

Dist	COUNTY	ROUTE	KILOMETER POST TOTAL PROJECT	SHEET No.	TOTAL SHEETS
04	Son	101	33.3	146	158

REGISTERED CIVIL ENGINEER 2/22/13 DATE

5-13-13
PLANS APPROVAL DATE

REGISTERED PROFESSIONAL ENGINEER Fred J. Witteborn No. 56272 Exp. 12-31-14 CIVIL STATE OF CALIFORNIA

THE STATE OF CALIFORNIA OR ITS OFFICERS OR AGENTS SHALL NOT BE RESPONSIBLE FOR THE ACCURACY OR COMPLETENESS OF ELECTRONIC COPIES OF THIS PLAN SHEET.

Caltrans Metric

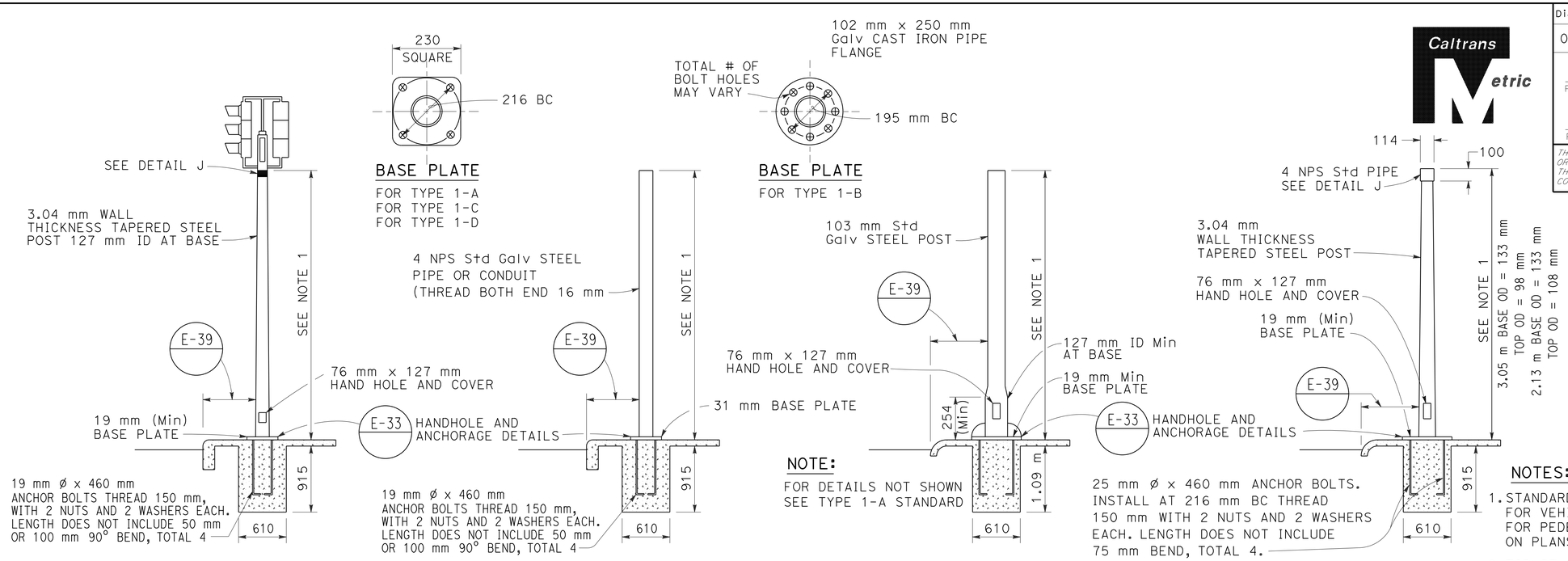

TYPE 1 SIGNAL STANDARDS

NOTES:

1. STANDARDS SHALL BE 3.05 m ± 50 mm FOR VEHICLE SIGNALS AND 2.13 m ± 50 mm FOR PEDESTRIAN SIGNALS UNLESS OTHERWISE NOTED ON PLANS.
2. TOP OF STANDARDS SHALL BE 114 mm OD.
3. CONDUITS SHALL EXTEND 50 mm MAXIMUM ABOVE FINISHED SURFACE OF FOUNDATION AND FOR TYPES 1-A, 1-C AND 1-D SHALL BE SLOPED TOWARD HANDHOLE.
4. ANCHOR BOLTS SHALL BE BONDED TO CONDUIT OR GROUNDING CONDUCTOR.
5. CONDUIT BETWEEN STANDARD AND ADJACENT PULL BOX SHALL BE 50 mm MINIMUM.
6. PAINT NUMBERS ON ROADWAY SIDE FACING TRAFFIC WHEN ELECTROLIER OR POST IS LEFT OF DIRECTION OF TRAFFIC.

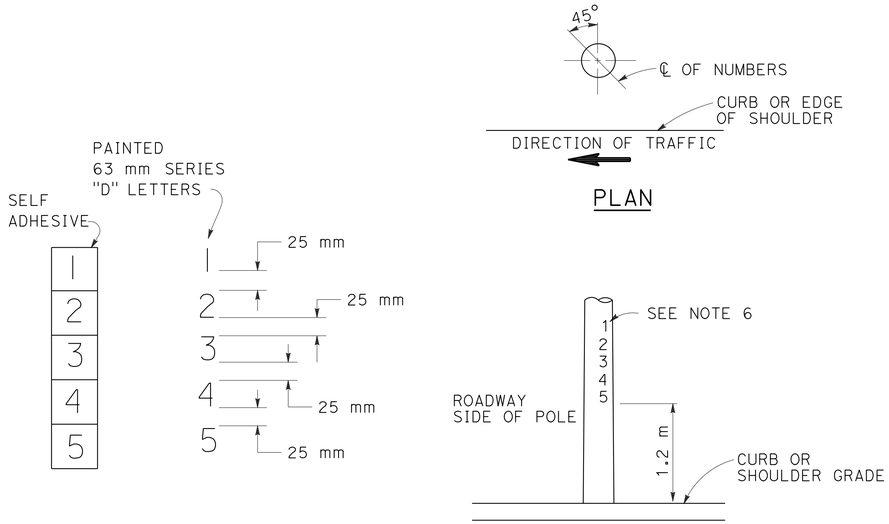

LOCATION OF EQUIPMENT NUMBERS ON STANDARDS AND POSTS

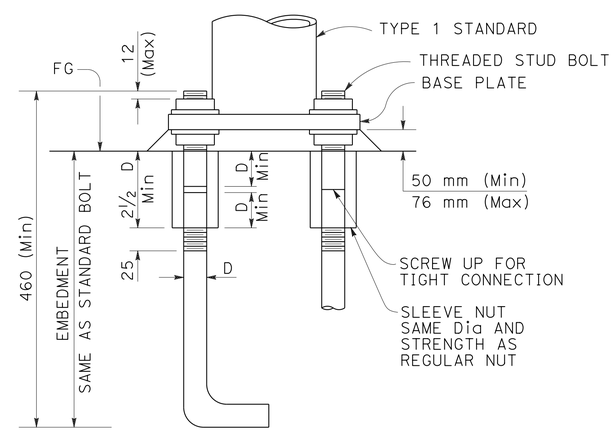

ANCHOR BOLTS WITH SLEEVE NUTS

SLEEVE NUTS TO BE USED ONLY WHEN SHOWN OR SPECIFIED ON PROJECT PLANS

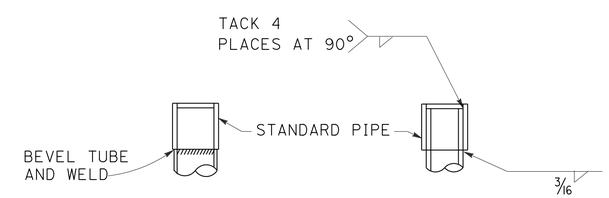

DETAIL J

TUBE MAY BE INSERTED INTO PIPE OR BUTTED AS REQUIRED

ALL DIMENSIONS ARE IN MILLIMETERS UNLESS OTHERWISE SHOWN

ELECTRICAL SYSTEMS (SIGNAL AND LIGHTING STANDARD TYPE 1 STANDARD AND EQUIPMENT NUMBERING)

NO SCALE

E-29

REVISED BY	DATE REVISED
FJW	2/13/13

CALCULATED-DESIGNED BY: FRED J. WITTEBORN
CHECKED BY: JONATHAN LEE
FUNCTIONAL SUPERVISOR: JONATHAN LEE

STATE OF CALIFORNIA - DEPARTMENT OF TRANSPORTATION
Caltrans DESIGN

LAST REVISION 02-07-13 | DATE PLOTTED => 20-MAY-2013 | TIME PLOTTED => 07:27

Dist	COUNTY	ROUTE	KILOMETER POST TOTAL PROJECT	SHEET No.	TOTAL SHEETS
04	Son	101	33.3	147	158

REGISTERED CIVIL ENGINEER 2/22/13 DATE

5-13-13
PLANS APPROVAL DATE

REGISTERED PROFESSIONAL ENGINEER Fred J. Witteborn No. 56272 Exp. 12-31-14 CIVIL STATE OF CALIFORNIA

THE STATE OF CALIFORNIA OR ITS OFFICERS OR AGENTS SHALL NOT BE RESPONSIBLE FOR THE ACCURACY OR COMPLETENESS OF ELECTRONIC COPIES OF THIS PLAN SHEET.

Caltrans Metric

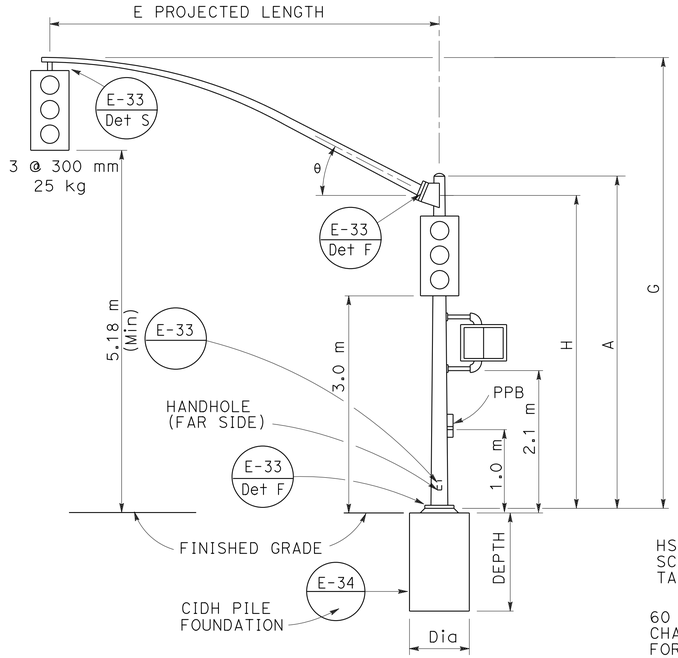

ELEVATION

TYPE 16-1-161, 18-1-161

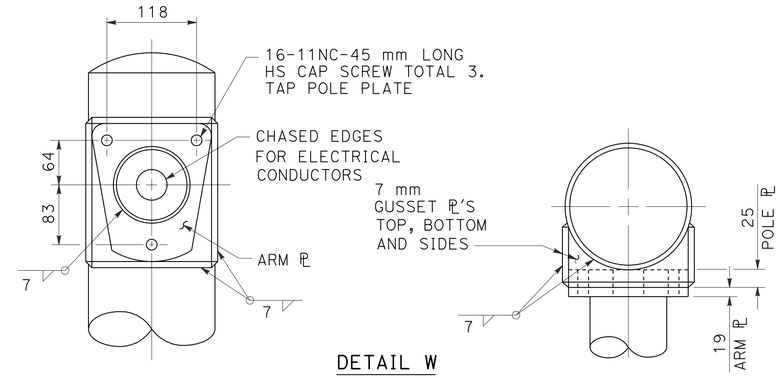

DETAIL W

LUMINAIRE ARM CONNECTION

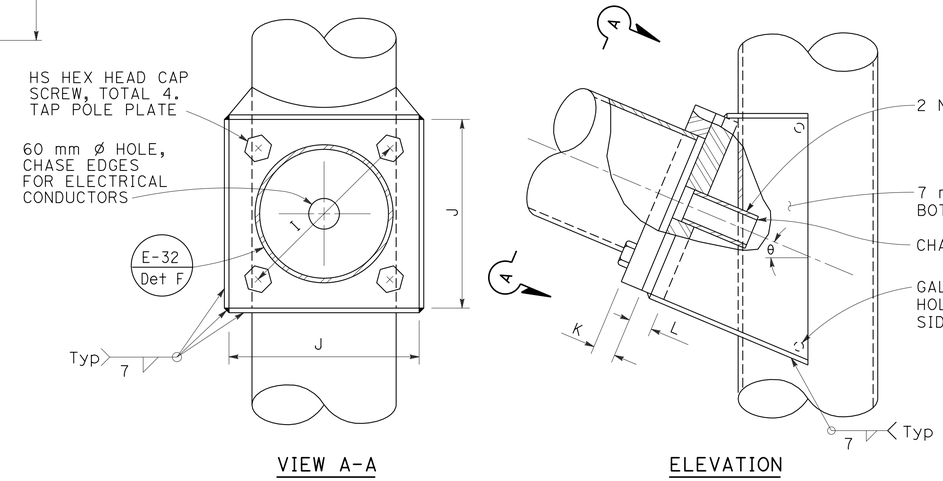

VIEW A-A ELEVATION

SIGNAL ARM CONNECTION DETAILS

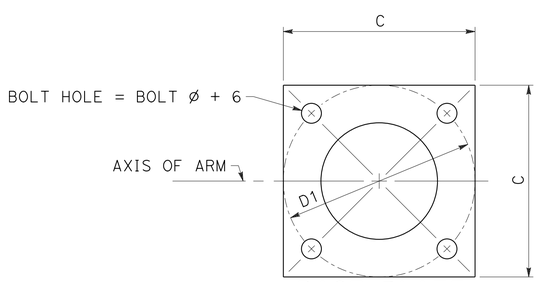

BASE PLATE

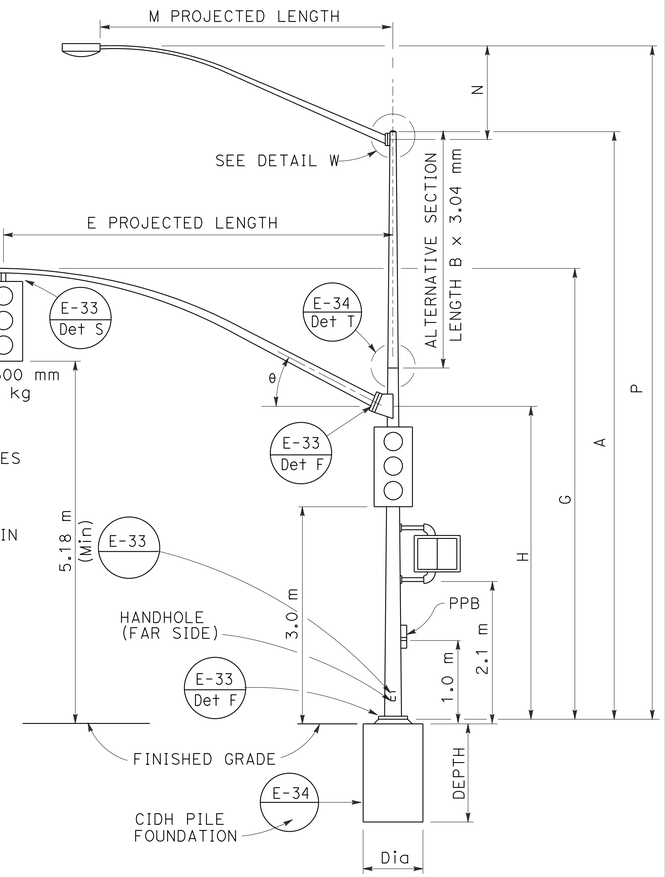

ELEVATION

TYPE 19-1-161, 19A-1-161

SIGNAL ARM DATA										
E Projected Length	G Mounting Height	H	Min OD At Pole	Thickness	I Bolt Circle	HS Cap Screws	J Plate Size	K Arm ℄ Thickness	L Pole ℄ Thickness	θ
m			mm							
4.6	6.6 ±	5.3	178	3.04	305	32-7NC-76	305	32	38	23°
6.1	6.6 ±		181							
7.6	6.9 ±	4.9	186							
9.1	7.0 ±		203							

LUMINAIRE ARM DATA					
M Projected Length	N Rise	Min OD at Pole	Thickness	P Mounting Height	
				9.1 Pole	10.7 Pole
m	mm			m	
1.8	610 ±	83	3.04	9.5 ±	11.1 ±
2.4	760 ±	89		9.7 ±	11.3 ±
3.1	990 ±	98		9.9 ±	11.5 ±
3.7	1290 ±			10.2 ±	11.8 ±
4.6	1450 ±	108		10.4 ±	12.0 ±

Pole Type	Load Case	Wind Velocity km/h	POLE DATA							BASE PLATE DATA				Luminaire Arm	Signal Arm	CIDH PILE FOUNDATION		
			A Height	Min OD		Thickness	Alternative Section			C	DI Bolt Circle	Thickness	Anchor Bolts			Diameter	Depth	Reinforced
				Base	Top		B Length	Bottom	Top				Size					
			m	mm			m	mm		mm				m		mm	m	
16-1-161	1	161	5.6	273	210	4.55	None			457	445	32	38 Ø x 1066 x 152	None	4.6, 6.1	760	2.2	Yes
18-1-161			5.2		214		None							None				
19-1-161			9.1		168		3.0	203	168					1.8-4.6 [3.7]	7.6, 9.1			
19A-1-161			10.7		151		4.6		151					1.8-4.6 [4.6]				

☐ Indicates arm length to be used unless otherwise noted on plans.

ALL DIMENSIONS ARE IN MILLIMETERS UNLESS OTHERWISE SHOWN

ELECTRICAL SYSTEMS (SIGNAL AND LIGHTING STANDARD CASE 1 ARM LOADING WIND VELOCITY = 161 km/h ARM LENGTHS 4.6 m TO 9.1 m)

NO SCALE

E-30

FUNCTIONAL SUPERVISOR	CALCULATED-DESIGNED BY	REVISED BY	DATE REVISED
JONATHAN LEE	FRED J. WITTEBORN	FJW	2/13/13
JONATHAN LEE	JONATHAN LEE		

STATE OF CALIFORNIA - DEPARTMENT OF TRANSPORTATION
Caltrans DESIGN

LAST REVISION 02-07-13 DATE PLOTTED => 20-MAR-2013 TIME PLOTTED => 07:27

Dist	COUNTY	ROUTE	KILOMETER POST TOTAL PROJECT	SHEET No.	TOTAL SHEETS
04	Son	101	33.3	148	158

REGISTERED CIVIL ENGINEER 2/22/13 DATE

5-13-13
PLANS APPROVAL DATE

REGISTERED PROFESSIONAL ENGINEER Fred J. Witteborn No. 56272 Exp. 12-31-14 CIVIL STATE OF CALIFORNIA

THE STATE OF CALIFORNIA OR ITS OFFICERS OR AGENTS SHALL NOT BE RESPONSIBLE FOR THE ACCURACY OR COMPLETENESS OF ELECTRONIC COPIES OF THIS PLAN SHEET.

Caltrans Metric

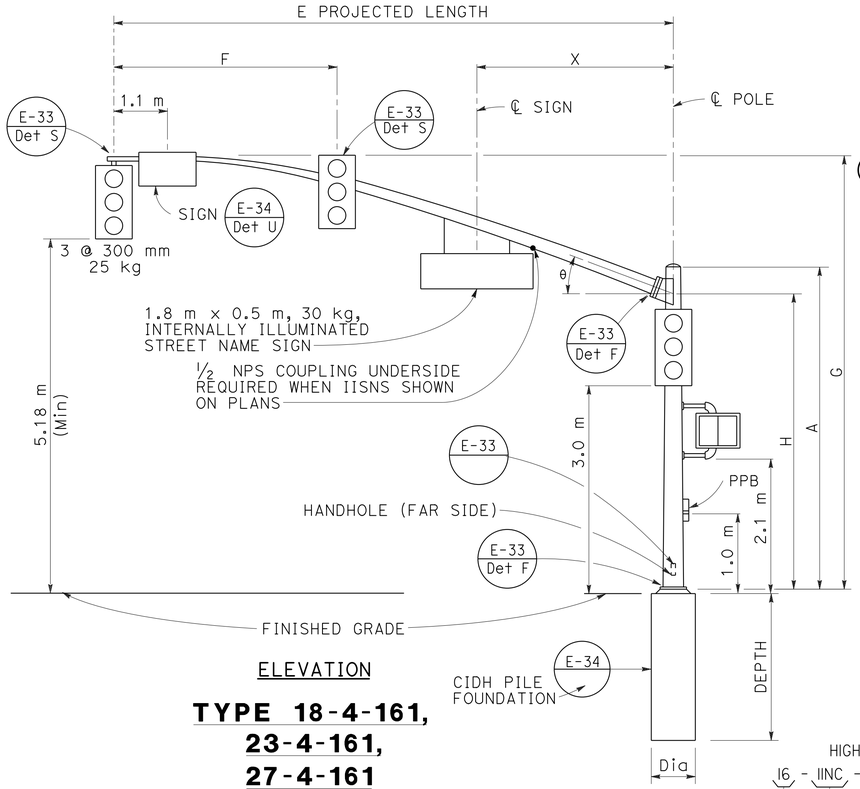

ELEVATION

TYPE 18-4-161, 23-4-161, 27-4-161

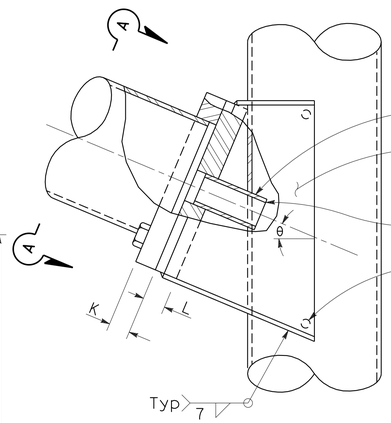

ELEVATION

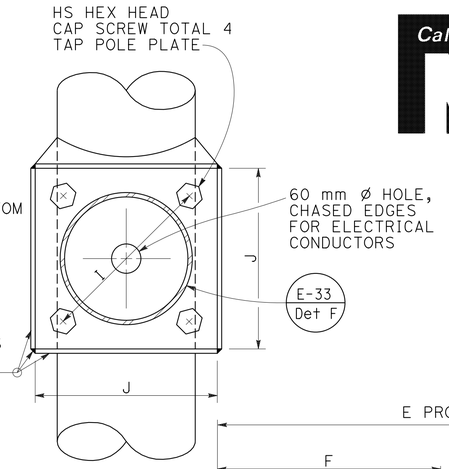

VIEW A-A

SIGNAL ARM CONNECTION DETAILS

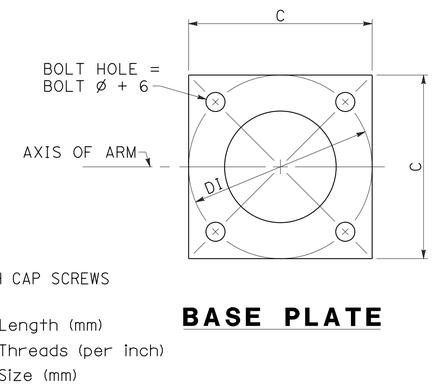

BASE PLATE

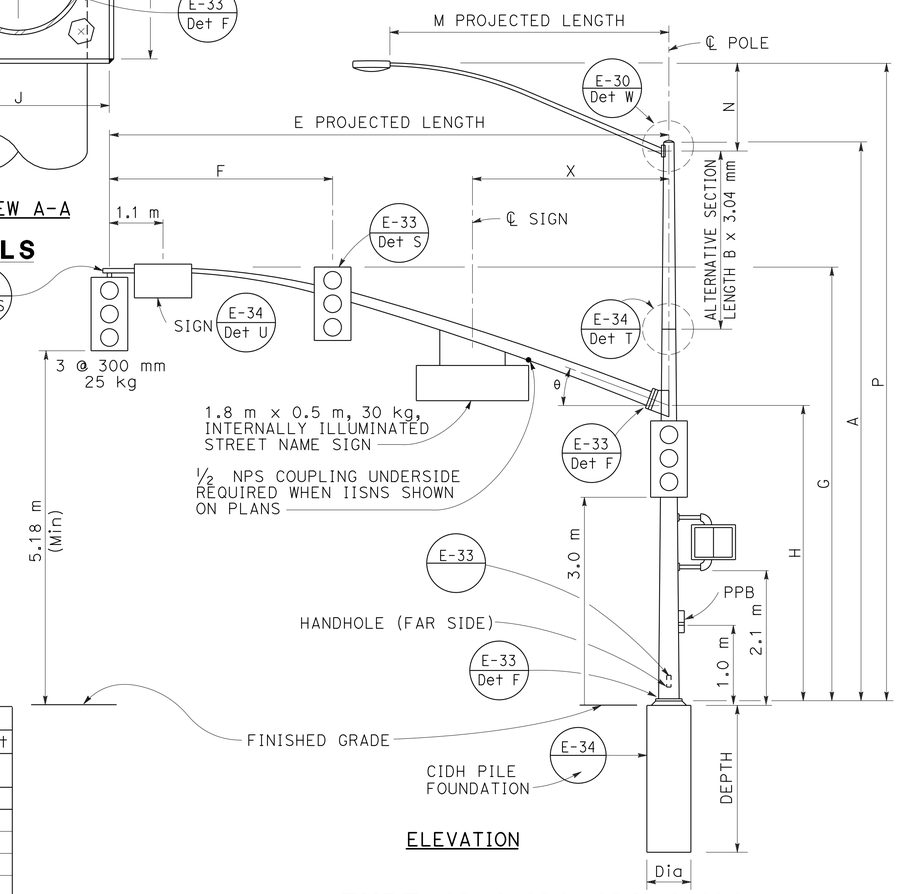

ELEVATION

TYPE 19-4-161, 19A-4-161, 24-4-161, 24A-4-161, 26-4-161, 26A-4-161

SIGNAL ARM DATA

E Projected Length	F Min Spacing	G Mounting Height	H	Min OD At Pole	Thickness	I Bolt Circle	HS Cap Screws	J Plate Size	K Arm ℙ Thickness	L Pole ℙ Thickness	θ	X Max
m				mm								m
7.6	3.1	6.9 ±	4.9	186	6.07	305	32-7NC-76	305	32	38	23°	3.2
9.1	3.7	7.0 ±		203								
10.7	4.3			221		343		343	38	45	21°	
12.2	4.6			238								4.0
13.7		7.2 ±		260							15°	

LUMINAIRE ARM DATA

M Projected Length	N Rise	Min OD at Pole	Thickness	P Mounting Height 9.1 Pole	P Mounting Height 10.7 Pole
m	mm			m	
1.8	610 ±	83	3.04	9.5 ±	11.1 ±
2.4	760 ±	89		9.7 ±	11.3 ±
3.1	990 ±	98		9.9 ±	11.5 ±
3.7	1290 ±			10.2 ±	11.8 ±
4.6	1450 ±	108		10.4 ±	12.0 ±

POLE DATA / BASE PLATE DATA / CIDH PILE FOUNDATION

Pole Type	Load Case	Wind Velocity km/h	A Height	Min OD Base	Min OD Top	Thickness	Alternative Section B Length	Alternative Section Bottom	Alternative Section Top	C	DI Bolt Circle	Thickness	Anchor Bolts Size	Luminaire Arm	Signal Arm	Diameter	Depth	Reinforced
			m	mm			m	mm		mm				m		mm	m	
18-4-161	4	161	5.2	305	229	6.07	None			457	457	38	51 ø x 1067 x 152	None	7.6, 9.1	914	2.7	Yes
19-4-161			9.1		203		3.1	238	203					1.8-4.6 3.7				
19A-4-161			10.7		186		4.6		186					1.8-4.6 4.6				
23-4-161			5.2		229		None							None	10.7			
24-4-161			9.1		203		3.1	238	203					1.8-4.6 3.7				
24A-4-161			10.7		186		4.6		186					1.8-4.6 4.6				
26-4-161			9.1	318	203	7.94	3.1	248	213					1.8-4.6 3.7	12.2, 13.7			
26A-4-161			10.7		186		4.6		196					1.8-4.6 4.6				
27-4-161			5.2		248		None							None				

☐ Indicates arm length to be used unless otherwise noted on plans.

ALL DIMENSIONS ARE IN MILLIMETERS UNLESS OTHERWISE SHOWN

ELECTRICAL SYSTEMS (SIGNAL AND LIGHTING STANDARD CASE 4 ARM LOADING WIND VELOCITY=161 km/h ARM LENGTHS 7.6 m TO 13.7 m

NO SCALE

E-31

REVISED BY	DATE REVISED
FJW	2/13/13

FRED J. WITTEBORN — CALCULATED-DESIGNED BY
JONATHAN LEE — CHECKED BY
JONATHAN LEE — FUNCTIONAL SUPERVISOR

STATE OF CALIFORNIA - DEPARTMENT OF TRANSPORTATION — DESIGN — Caltrans

LAST REVISION 02-07-13 | DATE PLOTTED => 20-MAY-2013 | TIME PLOTTED => 08:25

Dist	COUNTY	ROUTE	KILOMETER POST TOTAL PROJECT	SHEET No.	TOTAL SHEETS
04	Son	101	33.3	149	158

REGISTERED CIVIL ENGINEER 2/22/13 DATE

5-13-13
PLANS APPROVAL DATE

REGISTERED PROFESSIONAL ENGINEER Fred J. Witteborn No. 56272 Exp. 12-31-14 CIVIL STATE OF CALIFORNIA

THE STATE OF CALIFORNIA OR ITS OFFICERS OR AGENTS SHALL NOT BE RESPONSIBLE FOR THE ACCURACY OR COMPLETENESS OF ELECTRONIC COPIES OF THIS PLAN SHEET.

Caltrans Metric

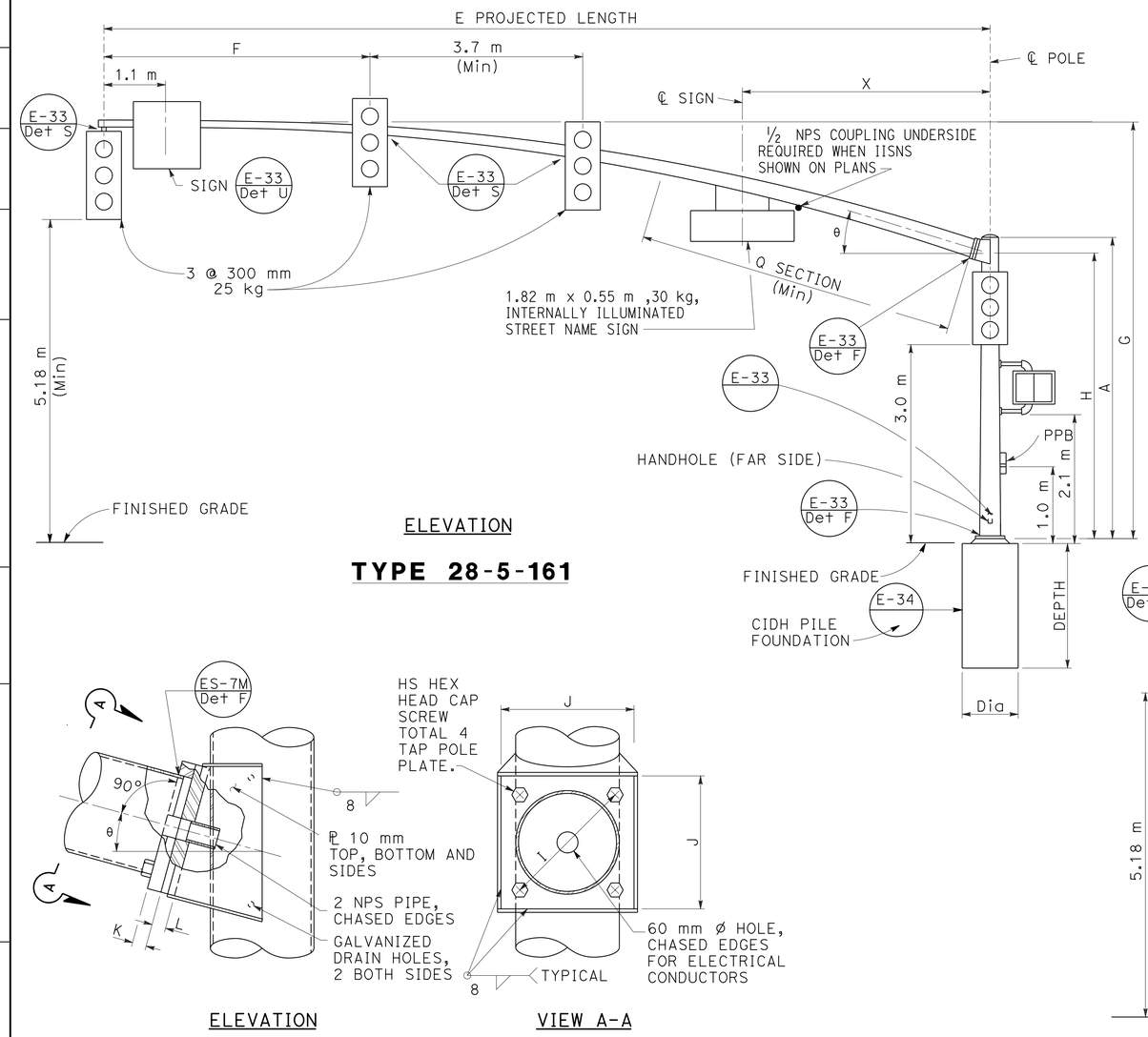

ELEVATION

TYPE 28-5-161

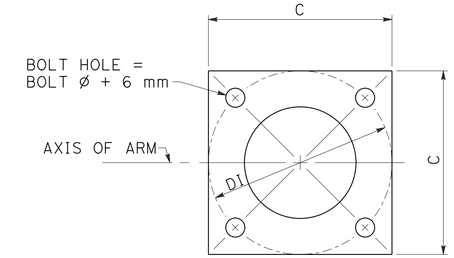

BASE PLATE

HIGH STRENGTH CAP SCREWS
16 - 11NC - 45
Length (mm)
Threads (per inch)
Size (mm)

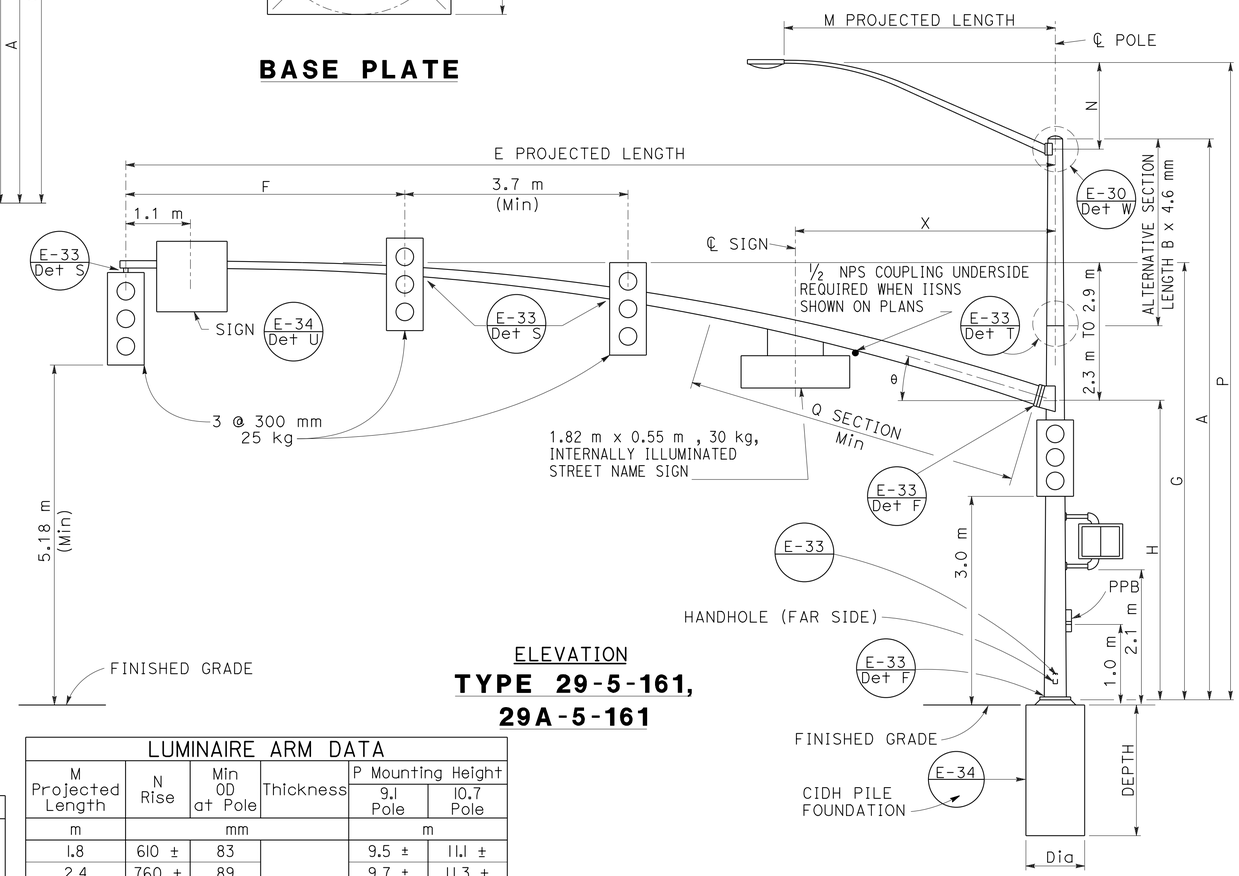

ELEVATION

TYPE 29-5-161, 29A-5-161

ELEVATION VIEW A-A

SIGNAL ARM CONNECTION DETAILS

SIGNAL ARM DATA															
E Projected Length	F Min Spacing	G Mounting Height	H	Min OD At Pole	Thickness	I Bolt Circle	HS Cap Screws	J Plate Size	K Arm ℗ Thickness	L Pole ℗ Thickness	θ	Q SECTION Length	Q SECTION Thickness	X Max
m				mm								m	mm	m
15.2	4.6	7.2 to 7.8	4.9	291	4.6	406	38-6NC-83	406	45	45	15°	5.5	6.1	4.3
16.8				311								7.0		

LUMINAIRE ARM DATA					
M Projected Length	N Rise	Min OD at Pole	Thickness	P Mounting Height 9.1 Pole	P Mounting Height 10.7 Pole
m	mm			m	
1.8	610 ±	83	3.04	9.5 ±	11.1 ±
2.4	760 ±	89		9.7 ±	11.3 ±
3.1	990 ±	98		9.9 ±	11.5 ±
3.7	1290 ±			10.2 ±	11.8 ±
4.6	1450 ±	108		10.4 ±	12.0 ±

Pole Type	Load Case	Wind Velocity km/h	POLE DATA A Height	Min OD Base	Min OD Top	Thickness	Alternative Section B Length	Alternative Section Bottom	Alternative Section Top	BASE PLATE DATA C	DI Bolt Circle	Thickness	Anchor Bolts Size	Luminaire Arm	Signal Arm	CIDH PILE FOUNDATION Diameter	Depth	Reinforced
			m	mm			m	mm		mm				m		mm	m	
28-5-161	5	161	5.2	356	297	7.94	None	286	251	533	533	45	51ø x 1067 x 152	None	15.2, 16.8	914	2.8	Yes
29-5-161			9.1		251		3.1							1.8 - 4.6 $\boxed{4.6}$				
29A-5-161			10.7		233		4.6		233	584	584							

☐ Indicates arm length to be used unless otherwise noted on plans.

ALL DIMENSIONS ARE IN MILLIMETERS UNLESS OTHERWISE SHOWN

ELECTRICAL SYSTEMS (SIGNAL AND LIGHTING STANDARD CASE 5 ARM LOADING WIND VELOCITY=161 km/h ARM LENGTHS 15.2 m TO 16.8 m

NO SCALE

E-32

REVISED BY	DATE REVISED
FJW	2/13/13

FRED J. WITTEBORN — CALCULATED-DESIGNED BY
JONATHAN LEE — CHECKED BY
JONATHAN LEE — FUNCTIONAL SUPERVISOR

STATE OF CALIFORNIA - DEPARTMENT OF TRANSPORTATION
Caltrans DESIGN

LAST REVISION 02-07-13 | DATE PLOTTED => 20-MAY-2013 | TIME PLOTTED => 08:25

Dist	COUNTY	ROUTE	KILOMETER POST TOTAL PROJECT	SHEET No.	TOTAL SHEETS
04	Son	101	33.3	150	158

REGISTERED CIVIL ENGINEER 2/22/13 DATE

5-13-13
PLANS APPROVAL DATE

REGISTERED PROFESSIONAL ENGINEER Fred J. Witteborn No. 56272 Exp. 12-31-14 CIVIL STATE OF CALIFORNIA

THE STATE OF CALIFORNIA OR ITS OFFICERS OR AGENTS SHALL NOT BE RESPONSIBLE FOR THE ACCURACY OR COMPLETENESS OF ELECTRONIC COPIES OF THIS PLAN SHEET.

Caltrans Metric

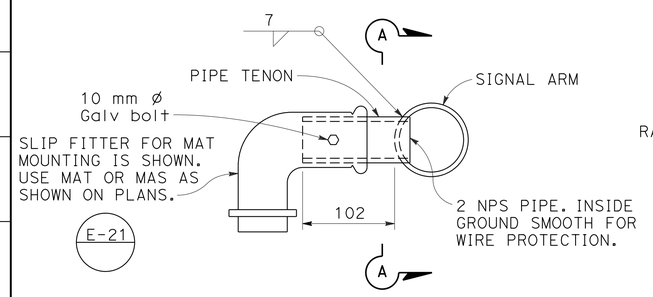

DETAIL S-SIDE TENON

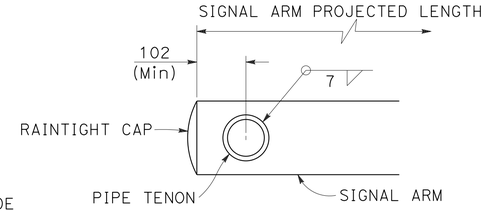

SECTION A-A

IDENTIFICATION NUMBER

ATTACH A STAMPED METAL TAG WITH EACH POLE'S INDENTIFICATION NUMBER TO SHAFT ABOVE HANDHOLE. 7 mm HIGH NUMBER MINIMUM. A SIMILAR TAG SHALL BE ATTACHED TO THE TOP OF THE SIGNAL MAST ARM NEAR THE POLE PLATE.

SAMPLE IDENTIFICATION NUMBER

TYPE	LOAD CASE	DESIGN WIND VELOCITY (kmh)	SIGNAL ARM LENGTH MAXIMUM	STANDARD PLAN YEAR	ONLY FOR POLES WITH FATIGUE RESISTANT WELDS
19A -	3 -	161 -	9.1 -	04 -	F

USE SL FOR SPECIAL LOAD CASE

PIPE TENONS

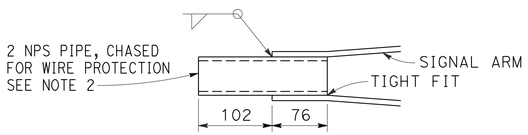

DETAIL TS-TIP TENON

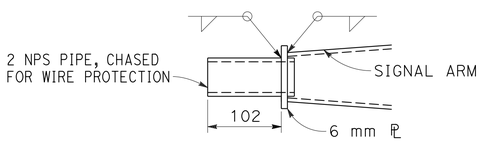

DETAIL TL-TIP TENON

THIS DETAIL SUPERSEDES DETAIL S WHEN SO DESIGNATED

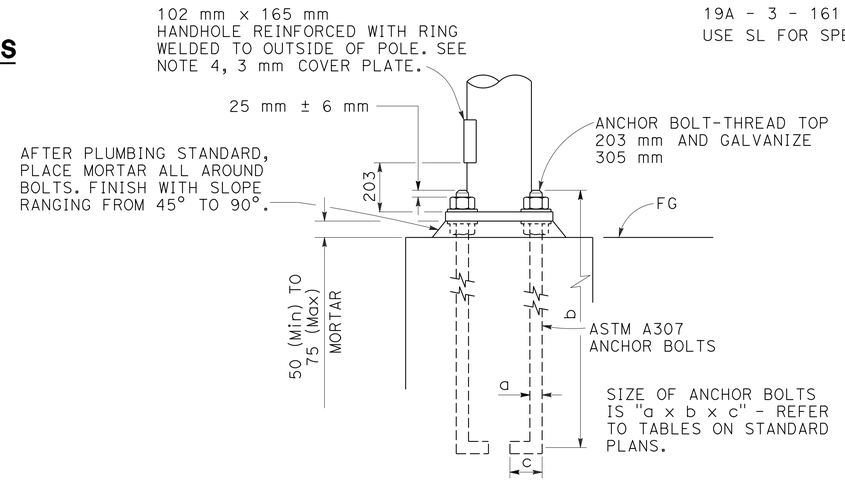

HANDHOLE AND ANCHORAGE DETAILS

GENERAL NOTES:

SPECIFICATIONS
DESIGN : AASHTO STANDARD SPECIFICATIONS FOR STRUCTURAL SUPPORTS FOR HIGHWAY SIGNS, LUMINAIRES AND TRAFFIC SIGNALS DATED 2001.

LOADING
WIND LOADINGS : 161 km/h

UNIT STRESSES
STRUCTURAL STEEL: FY = 330 MPa TAPERED STEEL TUBE
FY = 250 MPa UNLESS OTHERWISE NOTED

NOTES:

1. ASTM A307 ANCHOR BOLTS ARE REQUIRED FOR EACH POLE. PROVIDE A HEX NUT, LEVELING NUT AND 2 WASHERS FOR EACH BOLT.
2. LUMINAIRE ARMS SHALL BE ROUND, TAPERED STEEL TUBES, TAPER OF 11.45 mm / m TO 11.66 mm / m WITH AN END SECTION 60 mm OD FOR MOUNTING HARDWARE. EXTENSIONS OF 2 NPS STANDARD PIPE AND 178 mm LONG MAY BE USED AT THE OPTION OF THE MANUFACTURER. WHEN LOW PRESSURE SODIUM LUMINAIRES ARE REQUIRED, THE EXTENSION SHALL BE 381 mm.
3. SIGNAL ARMS SHALL BE ROUND, TAPERED STEEL TUBES, MAXIMUM TAPER 11.66 mm / m.
4. HANDHOLE REINFORCEMENT RING SHALL BE 6 mm x 51 mm FOR 3.04 mm TO 6.07 mm POLES, 9.53 mm x 51 mm FOR 7.94 mm.
5. HANDHOLES FOR LIGHTING STANDARDS SHALL BE LOCATED ON THE DOWNSTREAM SIDE OF THE POLE UNLESS OTHERWISE NOTED ON THE PLANS.
6. DETAIL F, FATIGUE RESISTANT WELD, IS REQUIRED AT SIGNAL ARM PLATE AND POLE BASE PLATE.
7. CAP SCREWS SHALL BE TIGHTENED BY THE TURN-OF-NUT METHOD X TURN TO FORM A SNUG TIGHT CONDITION. NO WASHER WILL BE REQUIRED.
8. DURING POLE ERECTION, THE POST SHALL BE RAKED AS NECESSARY WITH THE USE OF LEVELING NUTS TO PROVIDE A PLUMB POLE AXIS.
9. WHEN PROJECT PLANS SHOW A LESSER NUMBER OF SIGNS AND SIGNALS, THE PROJECT PLANS SHALL PREVAIL.
10. OUTSIDE DIAMETER, WALL THICKNESS, AND CORRESPONDING SECTION PROPERTIES AT THE BASE OF TRAFFIC SIGNAL POLES AND ARMS AS SHOWN IN THE STANDARD PLANS ARE MINIMUMS. UNLESS OTHERWISE SPECIFIED, ALTERNATIVE SECTIONS REQUIRE APPROVAL BY THE ENGINEER.

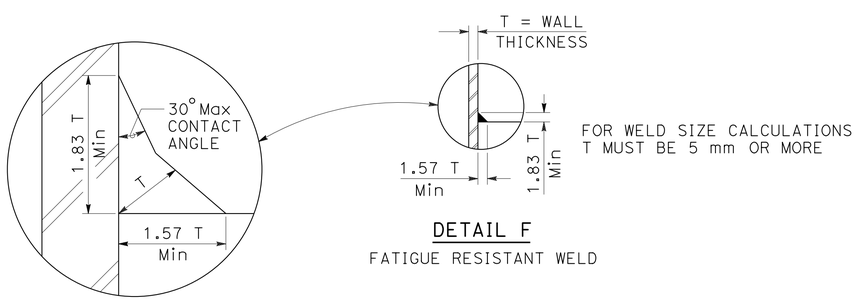

DETAIL F

FATIGUE RESISTANT WELD

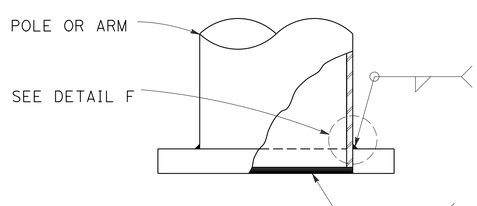

ELEVATION A

WELD SIZE	WALL THICKNESS
7	3.04
8	4.55
10	6.07
11	7.94
4	3.04
5	4.55
7	6.07
8	7.94

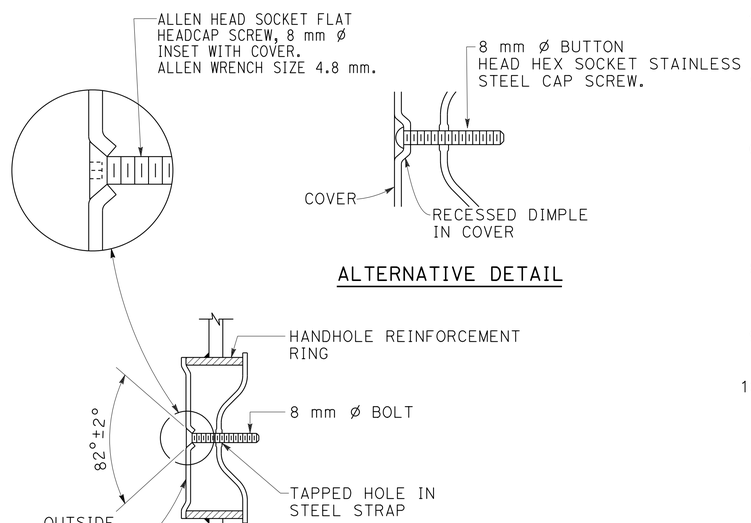

ALTERNATIVE DETAIL

TAMPER RESISTANT HANDHOLE COVER

ALL DIMENSIONS ARE IN MILLIMETERS UNLESS OTHERWISE SHOWN

ELECTRICAL SYSTEMS (SIGNAL AND LIGHTING STANDARDS DETAILS No. 1)

NO SCALE

E-33

REVISED BY	DATE REVISED
FJW	2/13/13

FRED J. WITTEBORN — CALCULATED-DESIGNED BY
JONATHAN LEE — CHECKED BY
JONATHAN LEE — FUNCTIONAL SUPERVISOR

STATE OF CALIFORNIA - DEPARTMENT OF TRANSPORTATION
Caltrans DESIGN

LAST REVISION 01-09-13 | DATE PLOTTED => 20-MAY-2013 | TIME PLOTTED => 08:25

Dist	COUNTY	ROUTE	KILOMETER POST TOTAL PROJECT	SHEET No.	TOTAL SHEETS
04	Son	101	33.3	151	158

REGISTERED CIVIL ENGINEER 2/22/13 DATE

5-13-13
PLANS APPROVAL DATE

REGISTERED PROFESSIONAL ENGINEER Fred J. Witteborn No. 56272 Exp. 12-31-14 CIVIL STATE OF CALIFORNIA

THE STATE OF CALIFORNIA OR ITS OFFICERS OR AGENTS SHALL NOT BE RESPONSIBLE FOR THE ACCURACY OR COMPLETENESS OF ELECTRONIC COPIES OF THIS PLAN SHEET.

Caltrans Metric

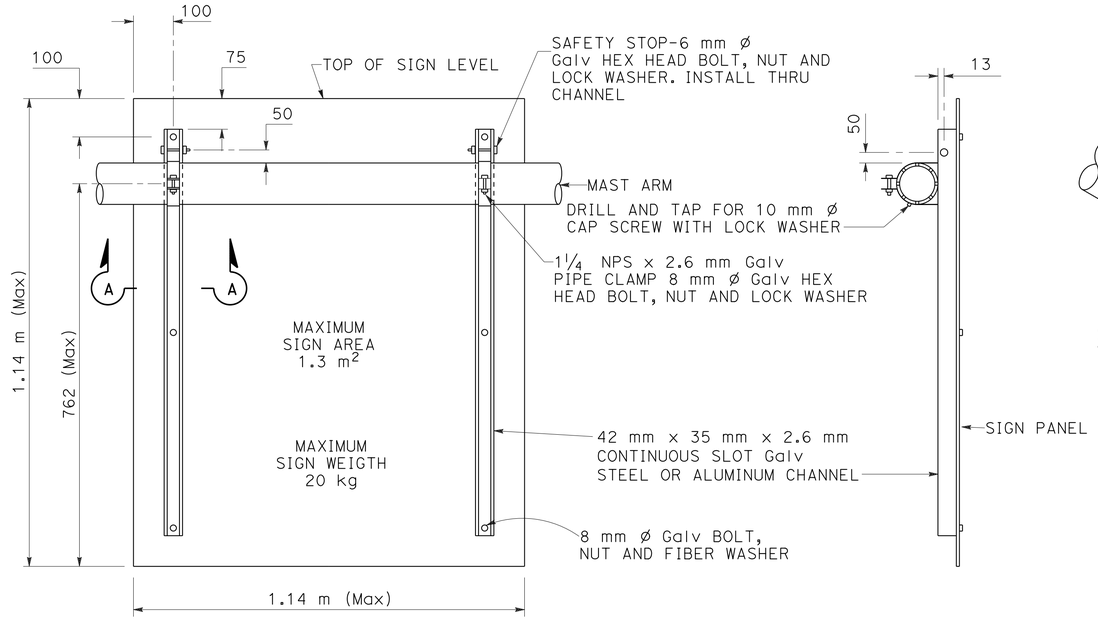

REAR VIEW

SIDE VIEW

DETAIL U

SIGN MOUNTING DETAILS

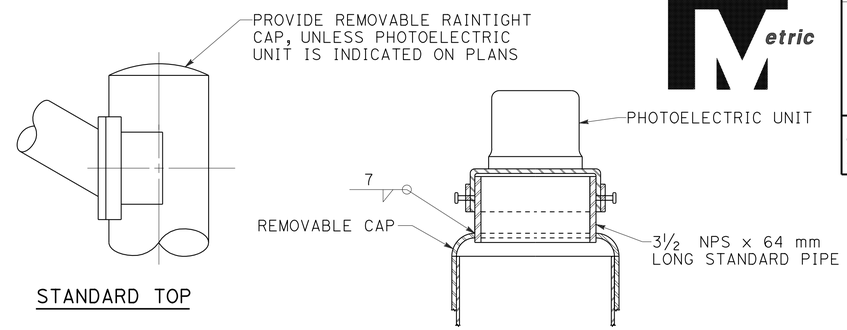

STANDARD TOP

MOUNTING ADAPTER FOR PHOTOELECTRIC UNIT

POLE TOP DETAILS

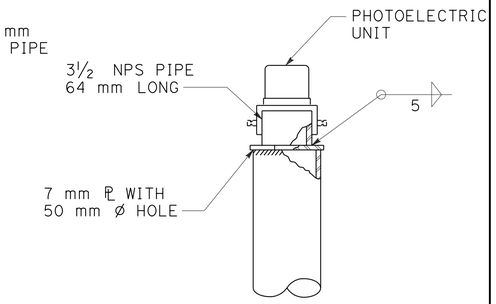

ALTERNATIVE MOUNTING ADAPTER

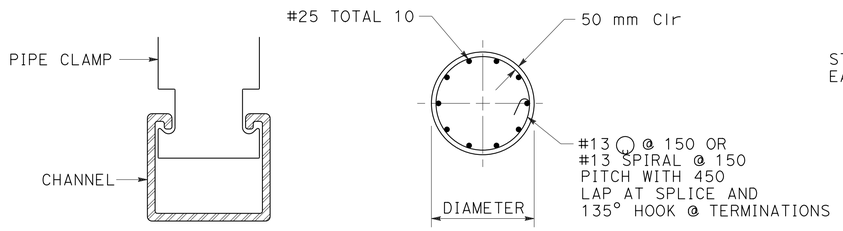

SECTION A-A

SECTION B-B

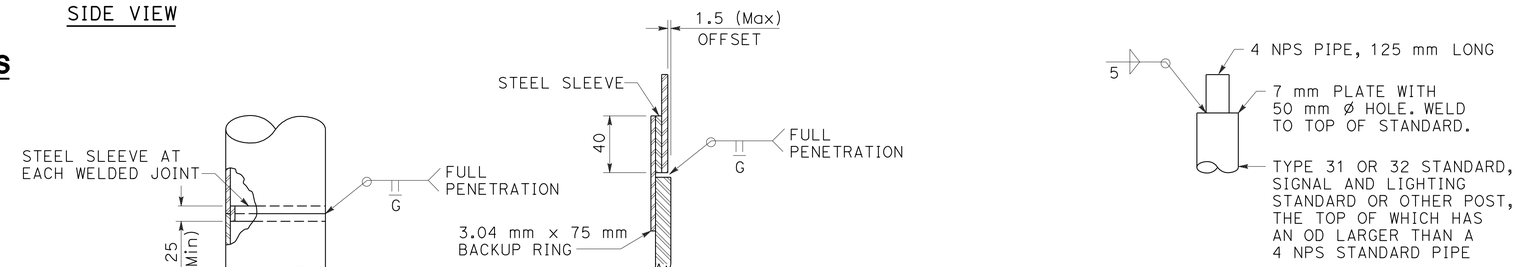

FOR UNIFORM TUBE THICKNESS

DETAIL T
AT TUBE THICKNESS CHANGE

POLE SPLICES

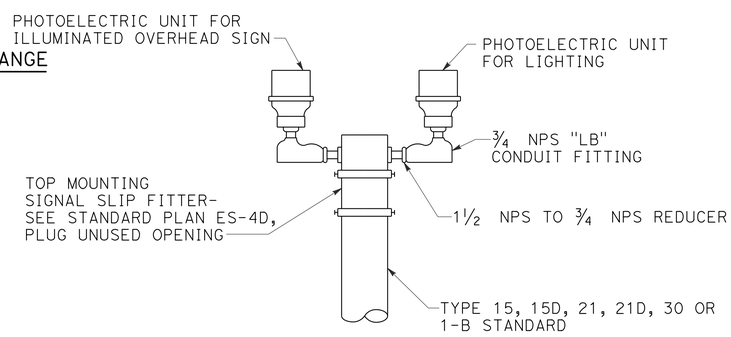

DUAL PHOTOELECTRIC UNIT MOUNTING DETAIL

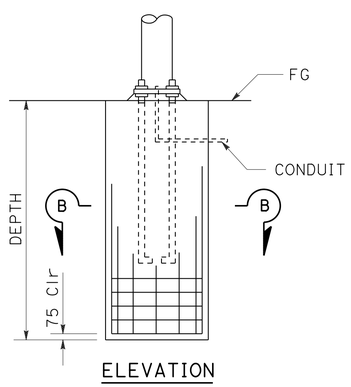

ELEVATION

CAST-IN-DRILLED HOLE PILE FOUNDATION

REINFORCED PILE

NOTE:
BOLT CIRCLES AND ANCHOR BOLT SIZES HAVE BEEN REVISED. THE CONTRACTOR SHALL VERIFY DEPENDENT DIMENSIONS FOR POLES TO BE INSTALLED ON EXISTING FOUNDATIONS BEFORE FABRICATING THE POLES.

ALL DIMENSIONS ARE IN MILLIMETERS UNLESS OTHERWISE SHOWN

ELECTRICAL SYSTEMS (SIGNAL AND LIGHTING STANDARDS DETAILS No. 2)

NO SCALE

E-34

STATE OF CALIFORNIA - DEPARTMENT OF TRANSPORTATION
Caltrans DESIGN

FUNCTIONAL SUPERVISOR: JONATHAN LEE
CALCULATED-DESIGNED BY: FRED J. WITTEBORN
CHECKED BY: JONATHAN LEE
REVISED BY: FJW
DATE REVISED: 2/13/13

LAST REVISION 02-07-13
DATE PLOTTED => 20-MAY-2013
TIME PLOTTED => 08:25

Dist	COUNTY	ROUTE	KILOMETER POST TOTAL PROJECT	SHEET No.	TOTAL SHEETS
04	Son	101	33.3	152	158

REGISTERED CIVIL ENGINEER 2/22/13 DATE

5-13-13
PLANS APPROVAL DATE

REGISTERED PROFESSIONAL ENGINEER Fred J. Witteborn No. 56272 Exp. 12-31-14 CIVIL STATE OF CALIFORNIA

THE STATE OF CALIFORNIA OR ITS OFFICERS OR AGENTS SHALL NOT BE RESPONSIBLE FOR THE ACCURACY OR COMPLETENESS OF ELECTRONIC COPIES OF THIS PLAN SHEET.

Caltrans Metric

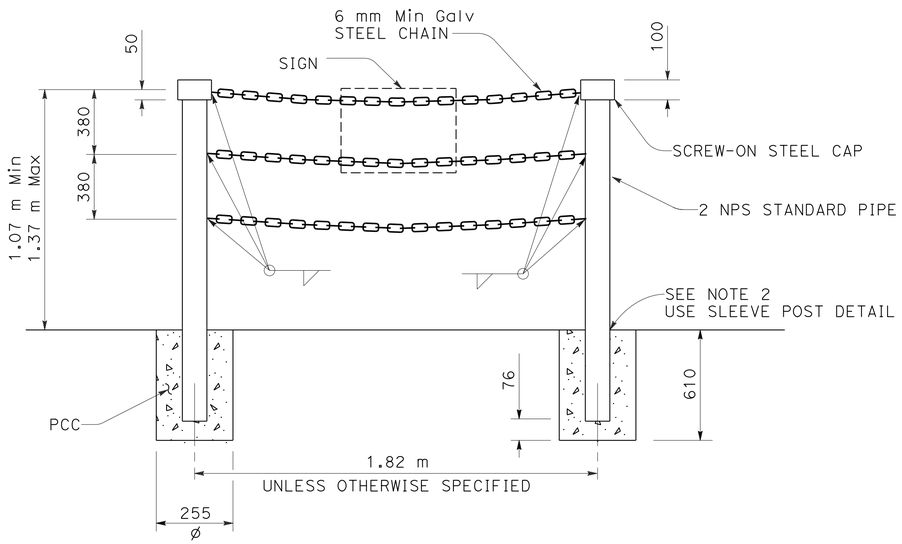

TYPE II

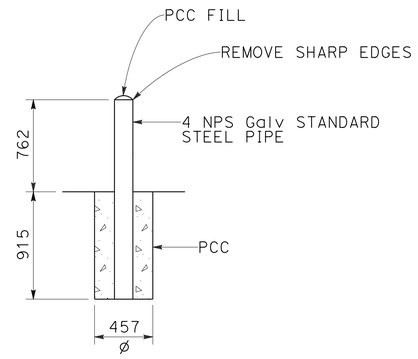

GUARD POST

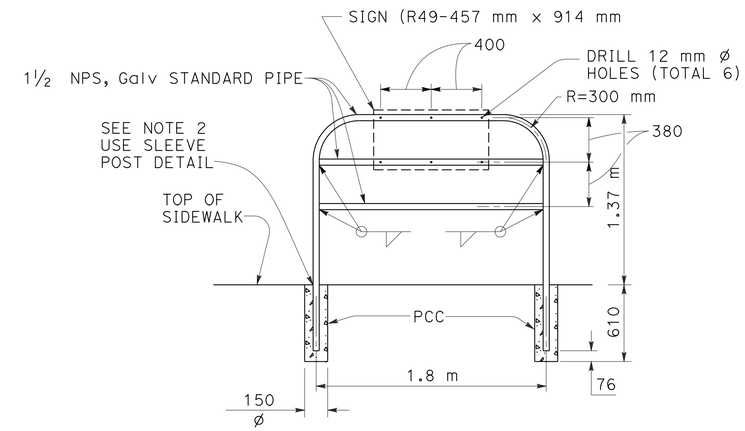

TYPE I

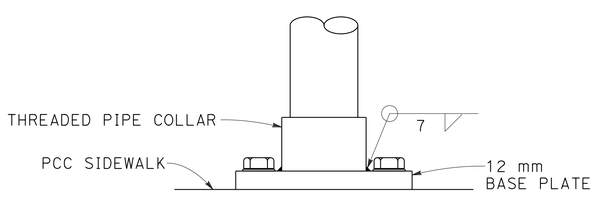

ELEVATION

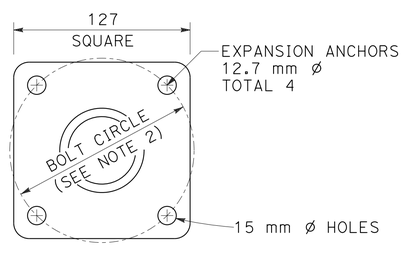

PLAN

POST ANCHORAGE DETAIL

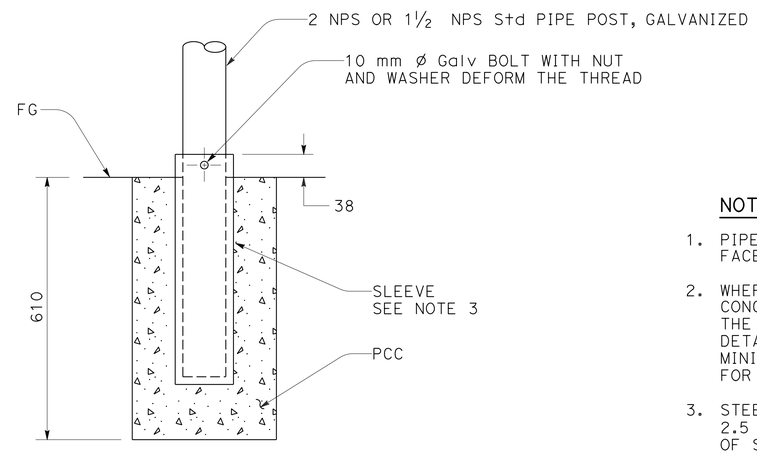

SLEEVE POST DETAIL

USE UNLESS OTHERWISE SPECIFIED
OR SHOWN ON PLANS

NOTES:

1. PIPE POST TO BE SET 460 mm BACK FROM FACE OF CURB UNLESS OTHERWISE SPECIFIED.
2. WHERE BARRICADE POSTS ARE INSTALLED IN EXISTING CONCRETE SIDEWALK, THE POST MAY BE ANCHORED TO THE SIDEWALK AS SHOWN IN THE "POST ANCHORAGE DETAIL". BOLT CIRCLE DIAMETER SHALL BE 102 mm MINIMUM FOR TYPE I BARRICADE AND 127 mm MINIMUM FOR TYPE II BARRICADE.
3. STEEL SLEEVE TO BE CONSTRUCTED WITH A DIAMETER 2.5 mm LARGER THAN POST. WALL THICKNESS OF SLEEVE TO BE SAME AS POST OR LARGER.
4. THE CONTRACTOR MAY SUBMIT ALTERNATIVE DETAILS FOR APPROVAL BY THE ENGINEER.
5. FOR MINIMUM PIPE DIAMETERS AND WALL THICKNESS REFER TO ASTM A6M.

ALL DIMENSIONS ARE IN
MILLIMETERS UNLESS OTHERWISE SHOWN

ELECTRICAL SYSTEMS (PEDESTRIAN BARRICADES)

NO SCALE

E-35

CALCULATED-DESIGNED BY	FRED J. WITTEBORN	REVISED BY	FJW
CHECKED BY	JONATHAN LEE	DATE REVISED	2/13/13
FUNCTIONAL SUPERVISOR	JONATHAN LEE		

STATE OF CALIFORNIA - DEPARTMENT OF TRANSPORTATION
Caltrans DESIGN

LAST REVISION 12-18-12 | DATE PLOTTED => 20-MAY-2013 | TIME PLOTTED => 08:25

Dist	COUNTY	ROUTE	KILOMETER POST TOTAL PROJECT	SHEET No.	TOTAL SHEETS
04	Son	101	33.3	153	158

Elaine Wong 5/7/13
REGISTERED ELECTRICAL ENGINEER DATE

5-13-13
PLANS APPROVAL DATE

REGISTERED PROFESSIONAL ENGINEER Elaine T. Wong No. 13753 Exp. 6-30-13 ELECT STATE OF CALIFORNIA

THE STATE OF CALIFORNIA OR ITS OFFICERS OR AGENTS SHALL NOT BE RESPONSIBLE FOR THE ACCURACY OR COMPLETENESS OF ELECTRONIC COPIES OF THIS PLAN SHEET.

Caltrans Metric

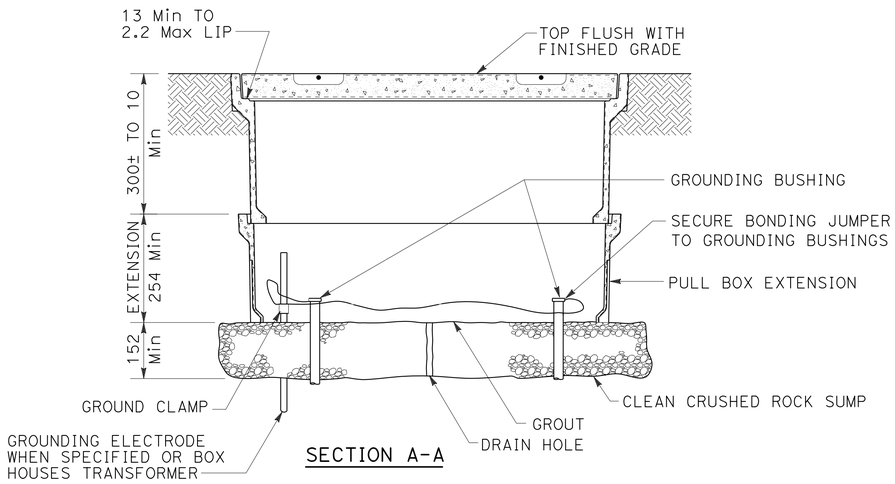

SECTION A-A

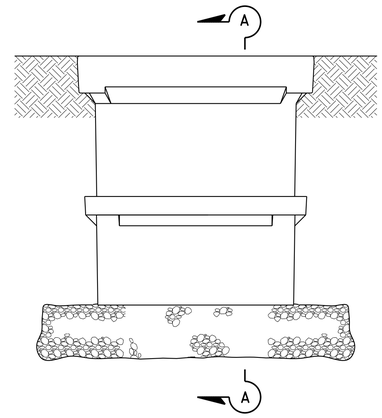

SIDE VIEW

INSTALLATION DETAILS

DETAIL A

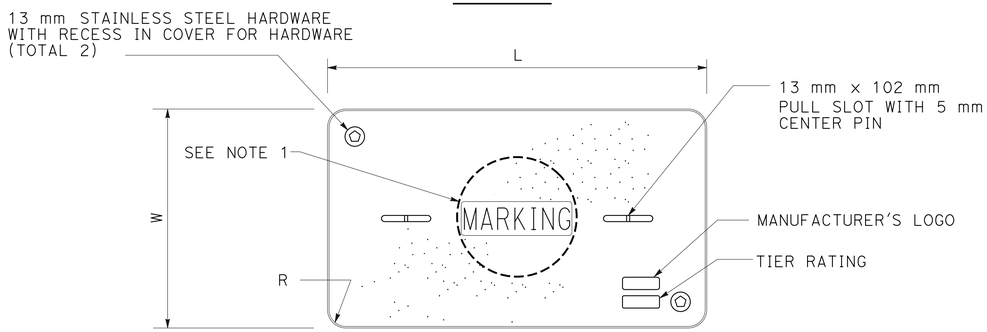

COVER TOP VIEW

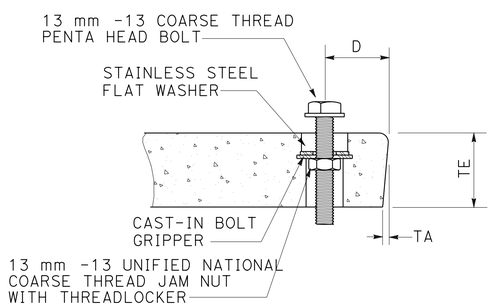

TYPICAL COVER CAPTIVE BOLT

(OR SIMILAR)

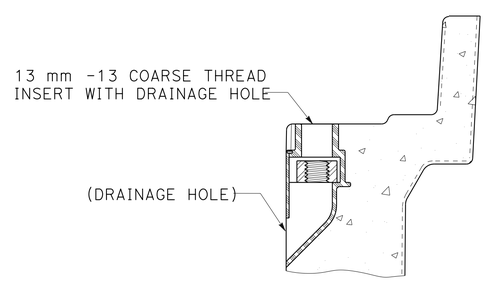

TYPICAL THREADED INSERT

(OR SIMILAR)

DIMENSION TABLE										
	PULL BOX			COVER						
PULL BOX	MINIMUM DEPTH BOX	MINIMUM DEPTH EXTENSION	MAXIMUM WEIGHT	L	W	R	TE	TA	D	MAXIMUM WEIGHT
No. 3½	12"	N/A	40 lb	1' - 3⅜"	10⅛"	1⅜"	2"	⅛"	1¾"	30 lb
No. 5	300	254	25 kg	286	350	35	50	3	44	27 kg
No. 6	300	254	31.75 kg	765	437	35	50	3	50	39 kg

NOTES ON PULL BOXES:

1. PULL BOX COVERS MUST BE MARKED AS FOLLOWS: "SERVICE" SERVICE CIRCUITS BETWEEN SERVICE POINT AND SERVICE DISCONNECT; "SPRINKLER-CONTROL" SPRINKLER CONTROL CIRCUITS, 50 V OR LESS; "CALTRANS" ON ALL PULL BOXES, EXCEPT PULL BOXES MARKED "SPRINKLER-CONTROL"; AND "TELEPHONE" TELEPHONE SERVICE;
   - A) No. 3½ PULL BOX.
     - 1) "SIGNAL" - TRAFFIC SIGNAL CIRCUITS WITH OR WITHOUT STREET OR SIGN LIGHTING CIRCUITS.
     - 2) "ST LIGHTING" - STREET OR SIGN LIGHTING CIRCUITS WHERE VOLTAGE IS UNDER 600 V.
   - B) No. 5, 6, 9 OR 9A PULL BOX.
     - 1) "TRAFFIC SIGNAL" - TRAFFIC SIGNAL CIRCUITS WITH OR WITHOUT STREET OR SIGN LIGHTING CIRCUITS.
     - 2) "STREET LIGHTING" - STREET OR SIGN LIGHTING CIRCUITS WHERE VOLTAGE IS UNDER 600 V.
     - 3) "STREET LIGHTING-HIGH VOLTAGE" - STREET OR SIGN LIGHTING CIRCUITS WHERE VOLTAGE IS ABOVE 600 V.
     - 4) "IRRIGATION" - CIRCUITS TO IRRIGATION CONTROLLER 120 V OR MORE.
     - 5) "RAMP METER" - RAMP METER CIRCUITS.
     - 6) "COUNT STATION" - COUNT OR SPEED MONITOR CIRCUITS.
     - 7) "COMMUNICATIONS" - COMMUNICATION CIRCUITS.
     - 8) "TOS COMMUNICATIONS" - TOS COMMUNICATION LINE.
     - 9) "TOS POWER" -TOS POWER.
     - 10) "TDC POWER" - TELEPHONE DEMARCATION CABINET POWER.
     - 11) "CCTV" - CLOSED CIRCUIT TELEVISION CIRCUITS.
     - 12) "TMS" - TRAFFIC MONITORING STATION CIRCUITS.
     - 13) "CMS" - CHANGEABLE MESSAGE SIGN CIRCUITS.
     - 14) "HAR" - HIGHWAY ADVISORY RADIO CIRCUITS.
2. THE NOMINAL DIMENSIONS OF THE OPENING IN WHICH THE COVER SETS MUST BE THE SAME AS THE COVER DIMENSIONS (L AND W) PLUS 3 mm OR GREATER.
3. COVERS AND BOXES MUST BE INTERCHANGEABLE WITH CALIFORNIA STANDARD. WHEN INTERCHANGED WITH A STANDARD, THE TOP SURFACES MUST BE FLUSH WITHIN 3 mm. TOP OUTSIDE RADIUS OF COVERS AND PULL BOXES MUST HAVE A 3 mm RADIUS.
4. PULL BOX EXTENSION MAY BE ANOTHER PULL BOX AS LONG AS THE BOTTOM EDGE OF THE PULL BOX CAN FIT INTO THE COVER OPENING.

ALL DIMENSIONS ARE IN
MILLIMETERS UNLESS OTHERWISE SHOWN

ELECTRICAL SYSTEMS (PULL BOX)

SCALE AS SHOWN

E-36

REVISED BY	WYW
DATE REVISED	1/14/13
CALCULATED-DESIGNED BY	WILLIAM Y. WONG
CHECKED BY	ELAINE T. WONG
FUNCTIONAL SUPERVISOR	LAI HONG CHIU

STATE OF CALIFORNIA - DEPARTMENT OF TRANSPORTATION
Caltrans
ELECTRICAL

LAST REVISION DATE PLOTTED => 20-MAY-2013
05-07-13 TIME PLOTTED => 07:57

Dist	COUNTY	ROUTE	KILOMETER POST TOTAL PROJECT	SHEET No.	TOTAL SHEETS
04	Son	101	33.3	154	158

Elaine Wong 1/14/13
REGISTERED ELECTRICAL ENGINEER DATE

5-13-13
PLANS APPROVAL DATE

REGISTERED PROFESSIONAL ENGINEER Elaine T. Wong No. 13753 Exp. 6-30-13 ELECT STATE OF CALIFORNIA

THE STATE OF CALIFORNIA OR ITS OFFICERS OR AGENTS SHALL NOT BE RESPONSIBLE FOR THE ACCURACY OR COMPLETENESS OF ELECTRONIC COPIES OF THIS PLAN SHEET.

Caltrans Metric

ISOLUX CURVE - MINIMUM

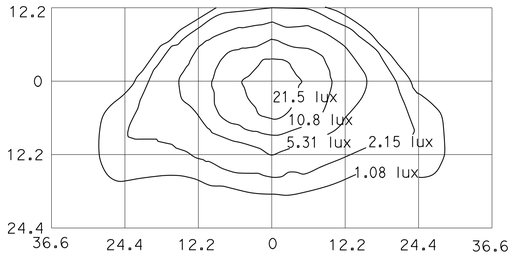

TYPE III MEDIUM CUTOFF

Cutoff Luminaire
10.4 m Mounting Height
Lamp operated at 22,000 lm
200-W high pressure sodium lamp
ANSI Designation S66

ISOLUX CURVE - MINIMUM

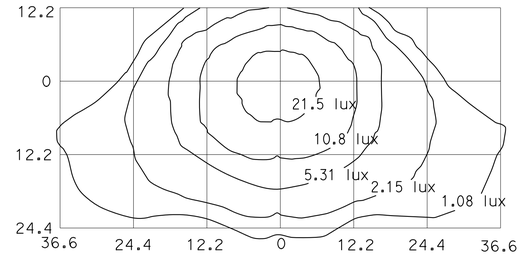

TYPE III MEDIUM CUTOFF

Cutoff Luminaire
12.2 m Mounting Height
Lamp operated at 37,000 lm
310-W high pressure sodium lamp
ANSI Designation S67

ISOLUX CURVE - MINIMUM

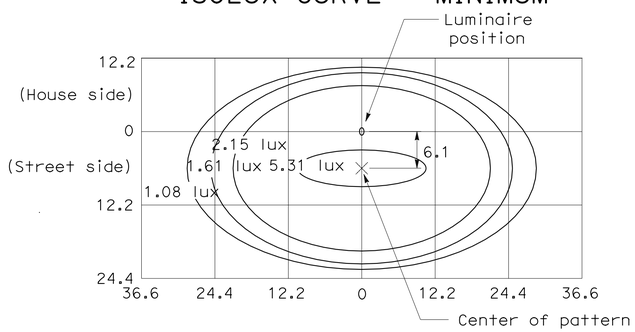

LED LUMINAIRE ROADWAY 1

200-W HPS Equivalent at 10.4 m Mounting Height

ISOLUX CURVE - MINIMUM

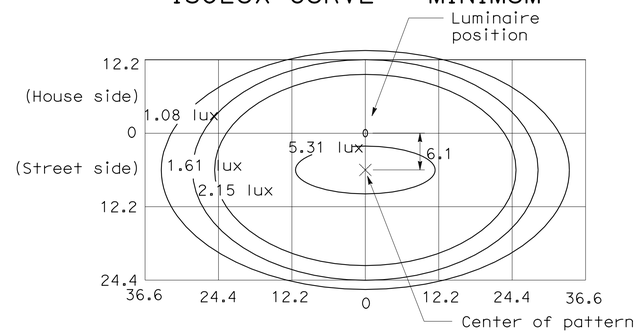

LED LUMINAIRE ROADWAY 2

310-W HPS Equivalent at 12.2 m Mounting Height

ISOLUX CURVE - MINIMUM

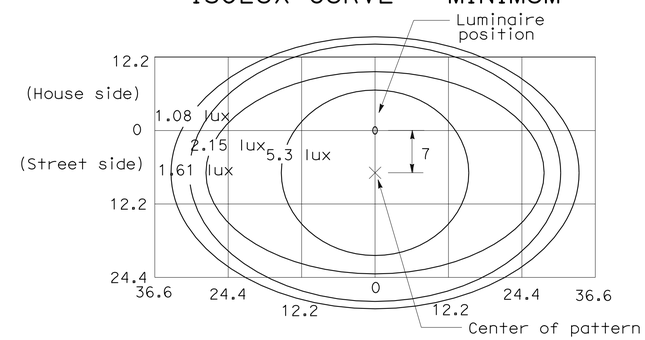

LED LUMINAIRE ROADWAY 4

400-W HPS Equivalent at 12.2 m Mounting Height

ISOLUX CURVE - MINIMUM

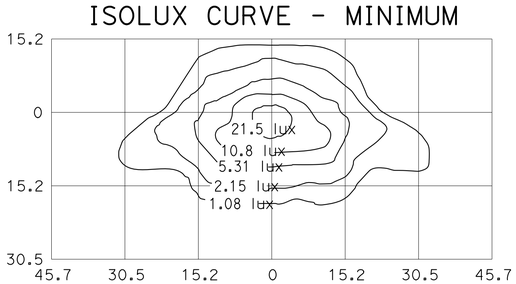

TYPE III MEDIUM CUTOFF

Cutoff Luminaire
9.1 m Mounting Height
Lamp operated at 16,000 lm
150-W high pressure sodium lamp
ANSI Designation S55

ISOLUX CURVE - MINIMUM

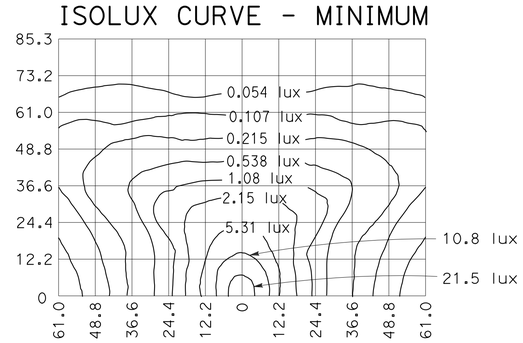

LOW PRESSURE SODIUM LUMINAIRE

12.2 m Mounting Height
Lamp operated at 33,000 lm
180-W low pressure sodium lamp

ALL DIMENSIONS ARE IN METERS UNLESS OTHERWISE SHOWN

ELECTRICAL SYSTEMS ISOLUX DIAGRAM

NO SCALE

E-37

WILLIAM Y. WONG	WYW	REVISED BY	
ELANINE T. WONG	1/14/13	DATE REVISED	
CALCULATED-DESIGNED BY			
CHECKED BY			
FUNCTIONAL SUPERVISOR	LAI HONG CHIU		

STATE OF CALIFORNIA - DEPARTMENT OF TRANSPORTATION
Caltrans
ELECTRICAL

LAST REVISION 12-26-12 | DATE PLOTTED => 20-MAY-2013 | TIME PLOTTED => 07:57

Dist	COUNTY	ROUTE	KILOMETER POST TOTAL PROJECT	SHEET No.	TOTAL SHEETS
04	Son	101	33.3	155	158

Elaine Wong 1/14/13
REGISTERED ELECTRICAL ENGINEER DATE

5-13-13
PLANS APPROVAL DATE

REGISTERED PROFESSIONAL ENGINEER Elaine T. Wong No. 13753 Exp. 6-30-13 ELECT STATE OF CALIFORNIA

THE STATE OF CALIFORNIA OR ITS OFFICERS OR AGENTS SHALL NOT BE RESPONSIBLE FOR THE ACCURACY OR COMPLETENESS OF ELECTRONIC COPIES OF THIS PLAN SHEET.

Caltrans Metric

ISOLUX CURVE - MINIMUM

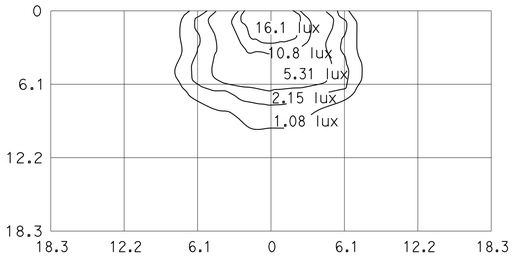

WALL LUMINAIRE

4.6 m Mounting Height
Lamp operated at 5,800 lm
70-W high pressure sodium lamp
ANSI Designation S62

ISOLUX CURVE - MINIMUM

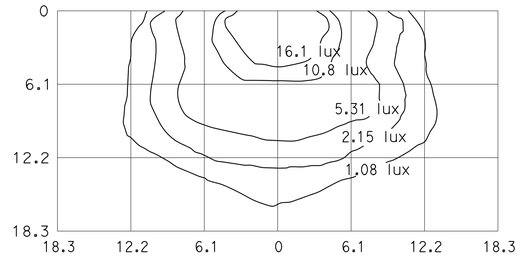

WALL LUMINAIRE

4.6 m Mounting Height
Lamp operated at 9,500 lm
100-W high pressure sodium lamp
ANSI Designation S54

ISOLUX CURVE - MINIMUM

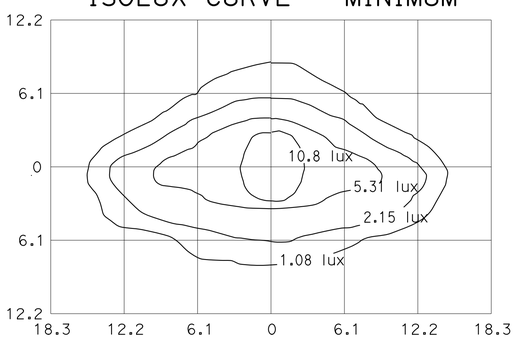

PENDANT SOFFIT LUMINAIRE TYPE III SHORT

5.2 m Mounting Height
Lamp operated at 5,800 lm
70-W high pressure sodium lamp
ANSI Designation S62

ISOLUX CURVE - MINIMUM

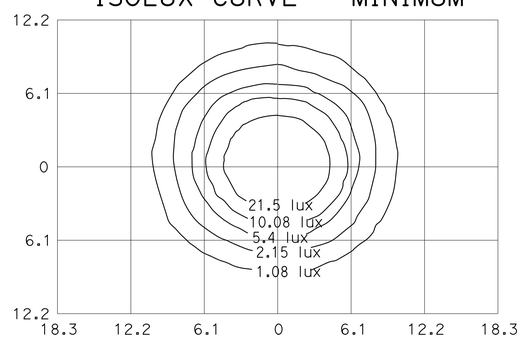

PENDANT SOFFIT LUMINAIRE

5.2 m Mounting Height
Lamp operated at 5,800 lm
70-W high pressure sodium lamp
ANSI Designation S62

ISOLUX CURVE - MINIMUM

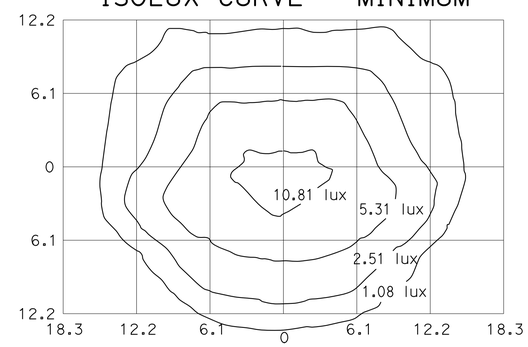

FLUSH SOFFIT LUMINAIRE

5.2 m Mounting Height
Lamp operated at 5,800 lm
70-W high pressure sodium lamp
ANSI Designation S62

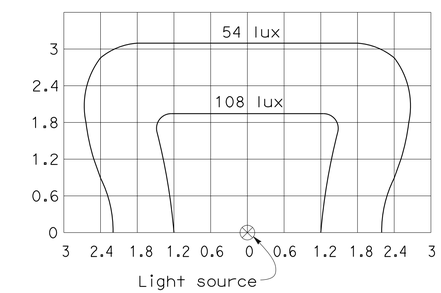

SIGN LIGHTING FIXTURE ISOLUX DIAGRAM

NOTES:

1. Curves represent the minimum lux of initial illumination on a 3 m x 6.1 m panel.
2. The lux shown are with the fixture attached to the light fixture mounting channel which places the center of the source 1.42 m in front of panel and 0.3 m below the bottom edge.
3. Applicable lamp: 85-W fluorescent phosphor coated induction lamp.

ALL DIMENSIONS ARE IN METERS UNLESS OTHERWISE SHOWN

ELECTRICAL SYSTEMS ISOLUX DIAGRAM

NO SCALE

E-38

REVISED BY	DATE REVISED
WYW	1/14/13

WILLIAM Y. WONG — CALCULATED-DESIGNED BY
ELANINE T. WONG — CHECKED BY
LAI HONG CHIU — FUNCTIONAL SUPERVISOR

STATE OF CALIFORNIA - DEPARTMENT OF TRANSPORTATION
Caltrans
ELECTRICAL

LAST REVISION 12-26-12 | DATE PLOTTED => 20-MAY-2013 | TIME PLOTTED => 07:57

Dist	COUNTY	ROUTE	KILOMETER POST TOTAL PROJECT	SHEET No.	TOTAL SHEETS
04	Son	101	33.3	156	158

Elaine Wong 5/7/13
REGISTERED ELECTRICAL ENGINEER DATE

5-13-13
PLANS APPROVAL DATE

REGISTERED PROFESSIONAL ENGINEER Elaine T. Wong No. 13753 Exp. 6-30-13 ELECT STATE OF CALIFORNIA

THE STATE OF CALIFORNIA OR ITS OFFICERS OR AGENTS SHALL NOT BE RESPONSIBLE FOR THE ACCURACY OR COMPLETENESS OF ELECTRONIC COPIES OF THIS PLAN SHEET.

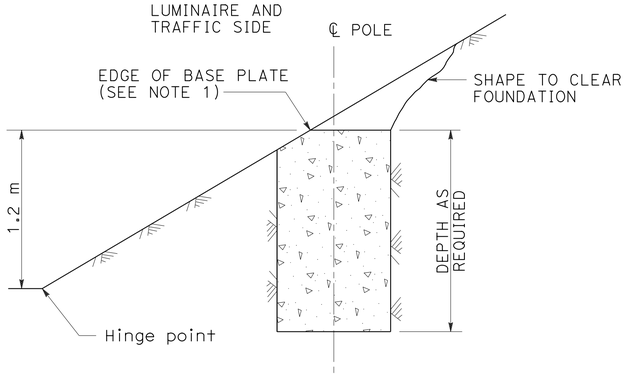

CUT SLOPES
STEEPER THAN 1:4
SEE NOTE 2

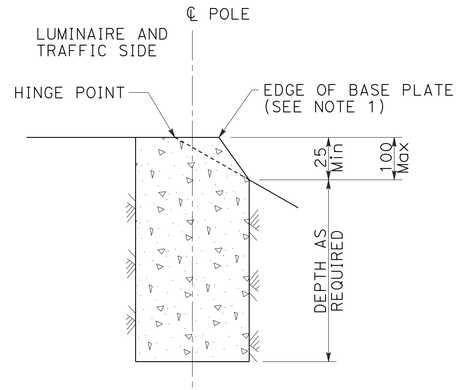

FILL SLOPES
STEEPER THAN 1:4
SEE NOTE 2

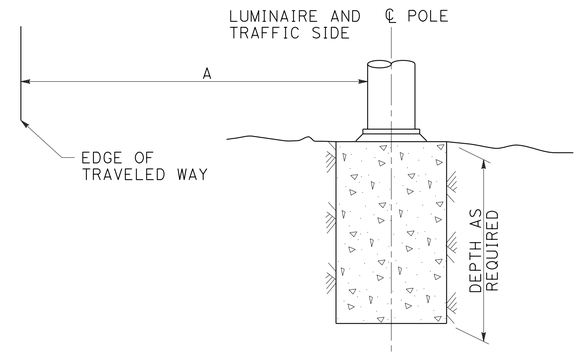

FLAT SECTIONS, CUT OR FILL SLOPES
1:4 OR FLATTER

STANDARD TYPE	SETBACK (DIMENSION A)
32	9 m Min
31, 36-20A	6 m Min
15, 15D, 15-SB, 21, 21D, 30	MAST ARM LENGTH (Min)

FOUNDATIONS ADJACENT TO ALL ROADWAYS EXCEPT IN SIDEWALK, MEDIAN AND ISLAND AREAS

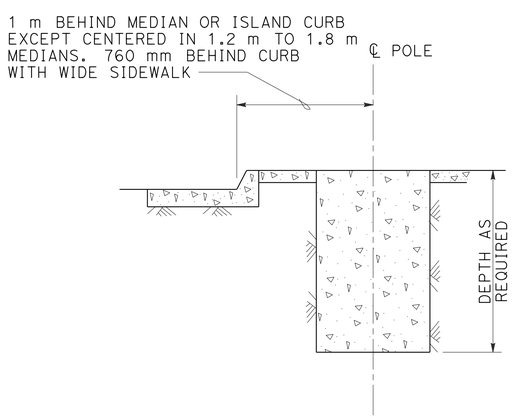

MEDIAN, ISLAND
OR WIDE SIDEWALK
(2 m WIDE AND WIDER)

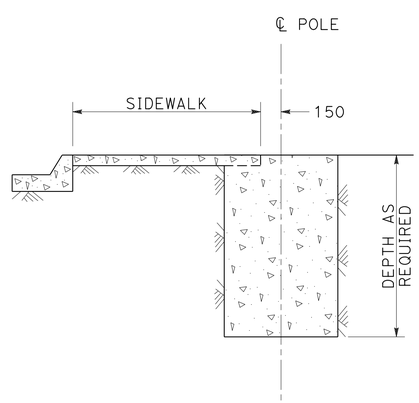

NARROW SIDEWALK
(LESS THAN 2 m WIDE)

FOUNDATIONS IN SIDEWALK, MEDIAN AND ISLAND AREAS

NOTES:

1. Where a portion of the foundation is above grade, the top edges shall have a 25 mm chamfer.
2. Horizontal setbacks on cut and fill slopes steeper than 1:4 shall not exceed the distance shown for flat sections.

ALL DIMENSIONS ARE IN MILLIMETERS UNLESS OTHERWISE SHOWN

ELECTRICAL SYSTEMS (FOUNDATION INSTALLATIONS)

NO SCALE

E-39

REVISED BY	DATE REVISED
WYW	1/14/13

WILLIAM Y. WONG
ELANINE T. WONG
CALCULATED-DESIGNED BY
CHECKED BY
FUNCTIONAL SUPERVISOR
LAI HONG CHIU

STATE OF CALIFORNIA - DEPARTMENT OF TRANSPORTATION
Caltrans
ELECTRICAL

LAST REVISION 05-06-13
DATE PLOTTED => 20-MAY-2013
TIME PLOTTED => 10:42

Dist	COUNTY	ROUTE	KILOMETER POST TOTAL PROJECT	SHEET No.	TOTAL SHEETS
04	Son	101	33.3	157	158

Elaine Wong 1/14/13
REGISTERED ELECTRICAL ENGINEER DATE

5-13-13
PLANS APPROVAL DATE

REGISTERED PROFESSIONAL ENGINEER Elaine T. Wong No. 13753 Exp. 6-30-13 ELECT STATE OF CALIFORNIA

THE STATE OF CALIFORNIA OR ITS OFFICERS OR AGENTS SHALL NOT BE RESPONSIBLE FOR THE ACCURACY OR COMPLETENESS OF ELECTRONIC COPIES OF THIS PLAN SHEET.

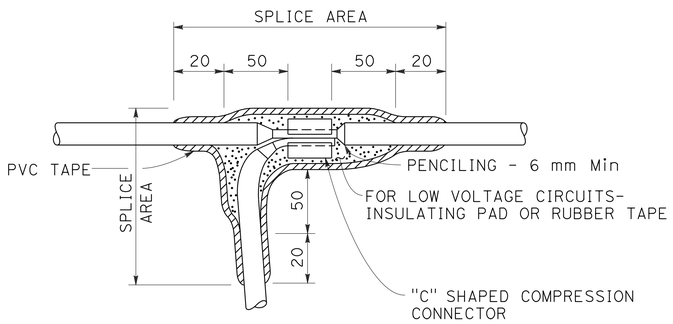

TYPE "C" SPLICE

BETWEEN 1 FREE-END AND 1 THROUGH CONDUCTOR

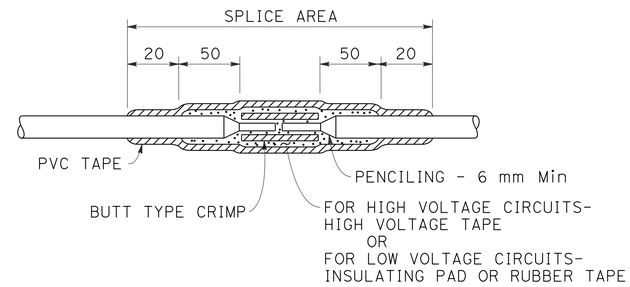

TYPE "S" SPLICE

BETWEEN 2 FREE-ENDS

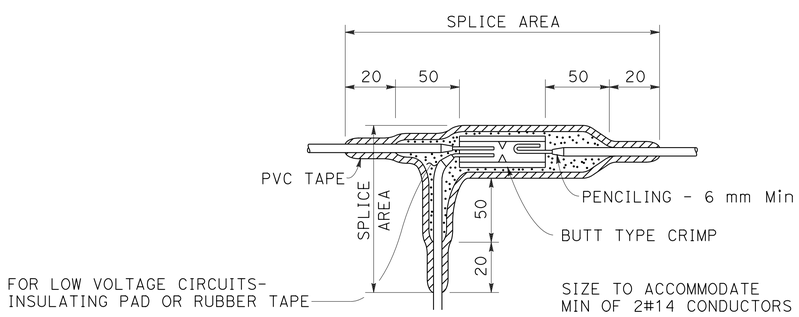

TYPE "ST" SPLICE

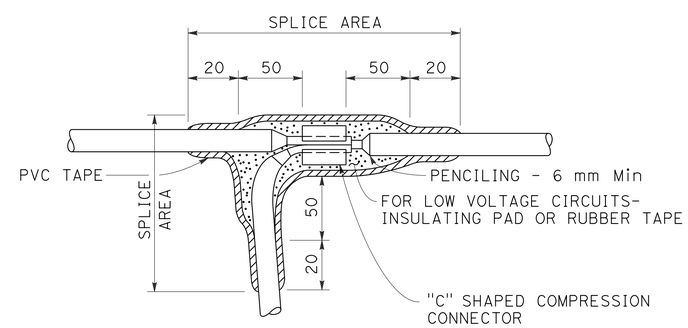

TYPE "T" SPLICE

FOR 3 FREE-ENDS

NOTES:

1. DIMENSIONS ARE MINIMUM.
2. RUBBER TAPES SHALL BE ROLLED AFTER APPLICATION.

INSULATION METHODS

LOW VOLTAGE CIRCUITS (0-600 V)

METHOD "B"

1. COMPLETELY COVER THE SPLICE AREA WITH ELECTRICAL INSULATING COATING AND ALLOW TO DRY.
2. APPLY 2 LAYERS OF ELECTRICAL INSULATING PAD WITH MINIMUM THICKNESS OF 3 mm EACH LAYER OR 2 LAYERS, HALF LAPPED, SYNTHETIC OIL RESISTANT, SELF FUSING RUBBER TAPE.
3. APPLY 3 LAYERS HALF LAPPED POLYVINYL CHLORIDE TAPE.
4. COVER ENTIRE SPLICE WITH ELECTRICAL INSULATING COATING AND ALLOW TO DRY.

HIGH VOLTAGE CIRCUITS (OVER 600 V)

1. COMPLETELY COVER THE SPLICE AREA WITH ELECTRICAL INSULATING COATING AND ALLOW TO DRY.
2. APPLY HIGH VOLTAGE TAPE TO A MINIMUM THICKNESS EQUAL TO ORIGINAL INSULATION.
3. APPLY 3 LAYERS HALF LAPPED POLYVINYL CHLORIDE TAPE.
4. COVER ENTIRE SPLICE WITH ELECTRICAL INSULATING COATING AND ALLOW TO DRY.

ALL DIMENSIONS ARE IN
MILLIMETERS UNLESS OTHERWISE SHOWN

ELECTRICAL SYSTEMS (SPLICING DETAILS)

NO SCALE

E-40

CALCULATED-DESIGNED BY	WILLIAM Y. WONG	REVISED BY	WYW
CHECKED BY	ELAINE T. WONG	DATE REVISED	1/14/13
FUNCTIONAL SUPERVISOR	LAI HONG CHIU		

STATE OF CALIFORNIA - DEPARTMENT OF TRANSPORTATION
Caltrans
ELECTRICAL

LAST REVISION 12-18-12 | DATE PLOTTED => 20-MAY-2013 | TIME PLOTTED => 07:57

Dist	COUNTY	ROUTE	KILOMETER POST TOTAL PROJECT	SHEET No.	TOTAL SHEETS
04	Son	101	33.3	158	158

Elaine Wong 5/7/13
REGISTERED ELECTRICAL ENGINEER DATE

5-13-13
PLANS APPROVAL DATE

REGISTERED PROFESSIONAL ENGINEER Elaine T. Wong No. 13753 Exp. 6-30-13 ELECT STATE OF CALIFORNIA

THE STATE OF CALIFORNIA OR ITS OFFICERS OR AGENTS SHALL NOT BE RESPONSIBLE FOR THE ACCURACY OR COMPLETENESS OF ELECTRONIC COPIES OF THIS PLAN SHEET.

Caltrans Metric

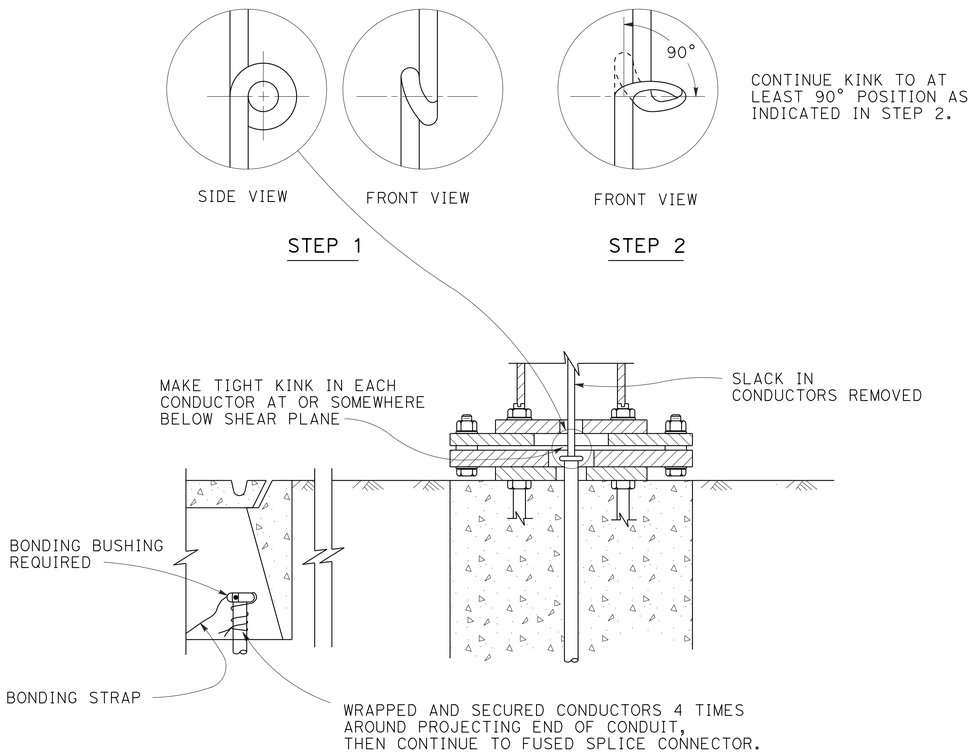

KINKING DETAIL FOR SLIP BASE STANDARDS

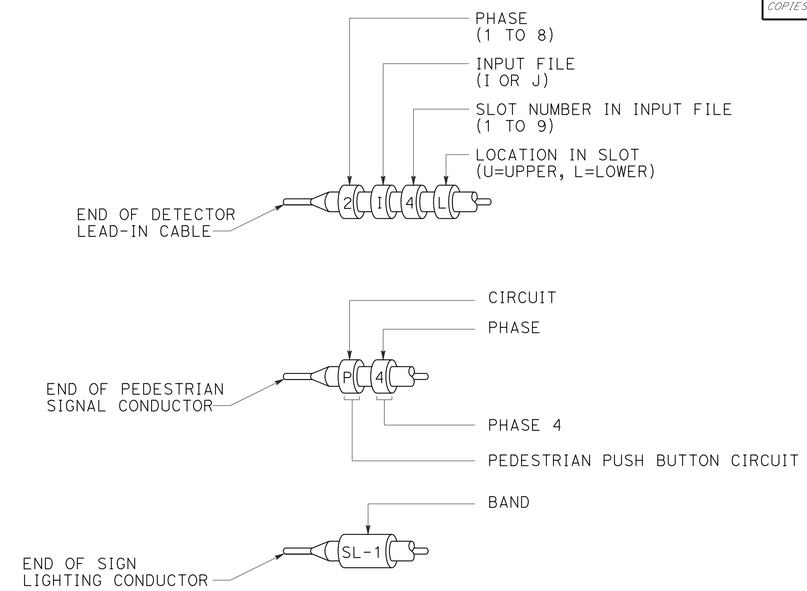

TYPICAL BANDING OF CONDUCTOR ENDS

PRIMARY LINES OF MULTIPLE BALLASTS SHALL BE PROVIDED WITH FUSED CONNECTORS.
FUSE RATINGS SHALL BE AS NOTED BELOW.

CIRCUIT VOLTAGE	FUSE VOLTAGE RATING	FUSE CURRENT RATING																
		HPS LAMP BALLAST								LOW PRESSURE SODIUM BALLAST					INDUCTION SIGN LIGHTING	SINGLE PHASE (TWO WIRE) TRANSFORMERS (PRIMARY SIDE)		
		70 W	100 W	150 W	200 W	250 W	310 W	400 W	1000 W	35 W	55 W	90 W	135 W	180 W	85 W	1 kVA	2 kVA	3 kVA
120 V	250 V	5	5	5	5	5	5	5	-	5	5	5	5	5	5	10	20	30
240 V	250 V	5	5	5	5	5	5	5	5	3	3	3	5	5	5	6	10	20
480 V	500-600 V	5	5	5	5	5	5	5	5	2	2	2	3	3	1*	3	6	10

* SEE REVISED STANDARD PLAN RSP ES-15D, TYPE SC3 CONTROL.

FUSE RATINGS FOR FUSED CONNECTORS

LUMINAIRE BALLAST FUSING

ELECTRICAL SYSTEMS (WIRING DETAILS AND FUSE RATINGS)

SCALE AS SHOWN

ALL DIMENSIONS ARE IN MILLIMETERS UNLESS OTHERWISE SHOWN

E-41

WILLIAM Y. WONG	REVISED BY	WYW	
ELAINE T. WONG	DATE REVISED	1/14/13	
CALCULATED-DESIGNED BY			
CHECKED BY			
FUNCTIONAL SUPERVISOR			
LAI HONG CHIU			

STATE OF CALIFORNIA - DEPARTMENT OF TRANSPORTATION
Caltrans
ELECTRICAL

LAST REVISION 05-06-13 | DATE PLOTTED => 20-MAY-2013 | TIME PLOTTED => 07:57