ACNHP-Q101(236)E

Dist	COUNTY	ROUTE	KILOMETER POST TOTAL PROJECT	SHEET No.	TOTAL SHEETS
04	Son	101	33.3	1	158

STATE OF CALIFORNIA
DEPARTMENT OF TRANSPORTATION

PROJECT PLANS FOR CONSTRUCTION ON
STATE HIGHWAY
IN SONOMA COUNTY
IN SANTA ROSA
AT COLLEGE AVENUE UNDERCROSSING

TO BE SUPPLEMENTED BY STANDARD PLANS DATED JULY 2004

INDEX OF SHEETS

SHEET No.	DESCRIPTION
1	TITLE AND LOCATION MAP
2-3	TYPICAL CROSS SECTIONS
4-5	LAYOUT
6-57	CONSTRUCTION DETAILS
58-66	TEMPORARY WATER POLLUTION CONTROL DETAILS AND QUANTITIES
67-68	EROSION CONTROL DETAILS AND QUANTITIES
69-88	DRAINAGE PLANS, PROFILES, DETAILS AND QUANTITIES
89-90	UTILITY PLAN
91-94	CONSTRUCTION AREA SIGNS
95-96	STAGE CONSTRUCTION AND TRAFFIC HANDLING PLANS AND QUANTITIES
97-101	PAVEMENT DELINEATION PLANS AND QUANTITIES
102-105	SIGN PLANS AND QUANTITIES
106-107	SUMMARY OF QUANTITIES
108-117	HIGHWAY PLANTING PLANS
118-158	ELECTRICAL PLANS

THE STANDARD PLANS LIST APPLICABLE TO THIS CONTRACT IS INCLUDED IN THE NOTICE TO BIDDERS AND SPECIAL PROVISIONS BOOK.

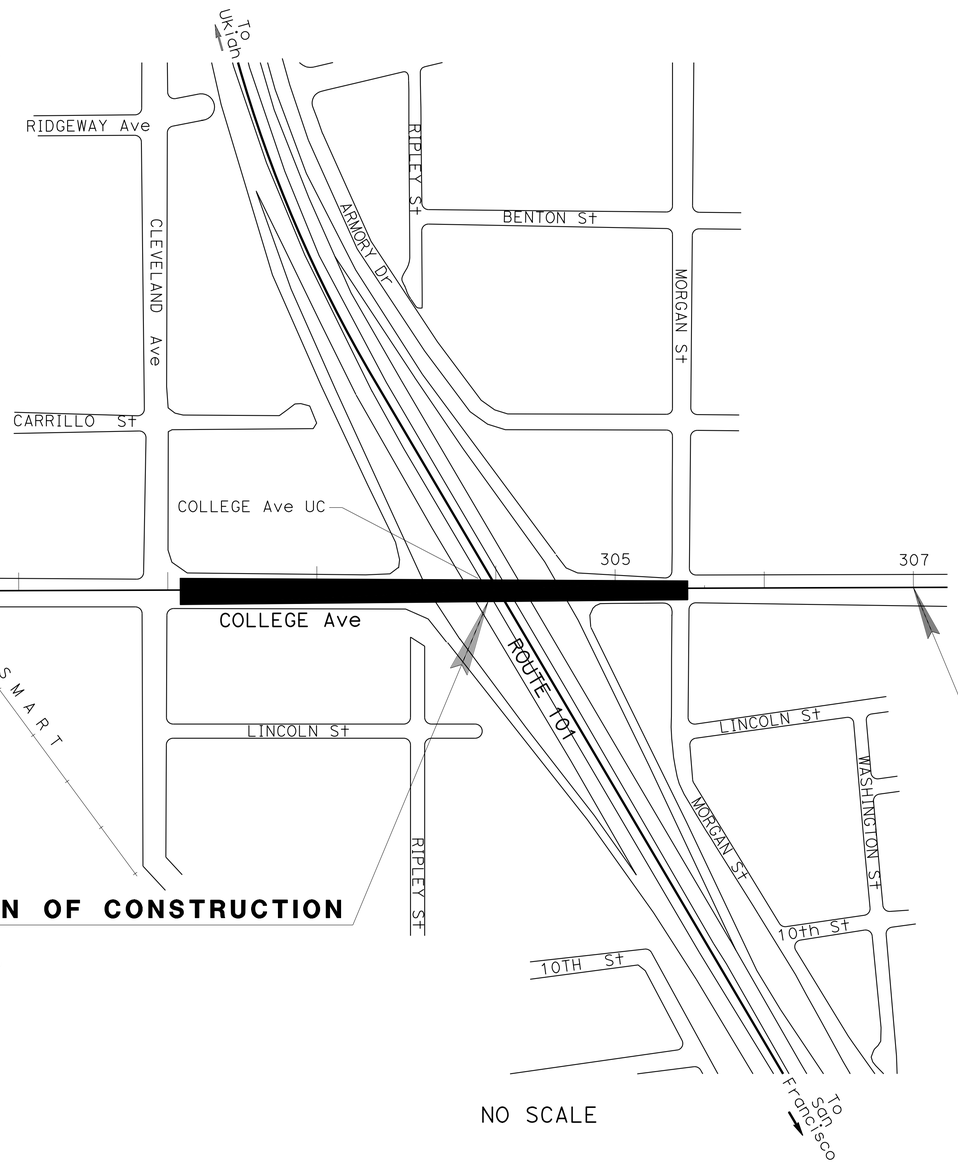

Begin Work
Sta CO 300+00

End Work
Sta CO 307+00

LOCATION OF CONSTRUCTION
KP 33.3
PM 20.7

NO SCALE

LOCATION MAP

Caltrans

Caltrans Metric

PROJECT ENGINEER
REGISTERED CIVIL ENGINEER
2/22/13
DATE

REGISTERED PROFESSIONAL ENGINEER
Fred J. Witteborn
No. 56272
Exp. 12-31-14
CIVIL
STATE OF CALIFORNIA

May 13, 2013
PLANS APPROVAL DATE

THE STATE OF CALIFORNIA OR ITS OFFICERS OR AGENTS SHALL NOT BE RESPONSIBLE FOR THE ACCURACY OR COMPLETENESS OF ELECTRONIC COPIES OF THIS PLAN SHEET.

CONTRACT No.	**04-245444**
PROJECT No.	**0400000693**

LAST REVISION 01-11-13
DATE PLOTTED => 29-OCT-2013
TIME PLOTTED => 1341

PROJECT MANAGER ERIC SCHEN
DESIGN ENGINEER JONATHAN LEE

THE CONTRACTOR SHALL POSSESS THE CLASS (OR CLASSES) OF LICENSE AS SPECIFIED IN THE "NOTICE TO CONTRACTORS."

Dist	COUNTY	ROUTE	KILOMETER POST TOTAL PROJECT	SHEET No.	TOTAL SHEETS
04	Son	101	33.3	2	158

REGISTERED CIVIL ENGINEER 2/22/13 DATE

5-13-13
PLANS APPROVAL DATE

REGISTERED PROFESSIONAL ENGINEER Fred J. Witteborn No. 56272 Exp. 12-31-14 CIVIL STATE OF CALIFORNIA

THE STATE OF CALIFORNIA OR ITS OFFICERS OR AGENTS SHALL NOT BE RESPONSIBLE FOR THE ACCURACY OR COMPLETENESS OF ELECTRONIC COPIES OF THIS PLAN SHEET.

Caltrans Metric

TYPICAL STRUCTURAL SECTIONS

19 — 180 mm HMA (TYPE A)
270 mm CI 3 AB
345 mm CI 4 AS

NOTES:

1. DIMENSIONS OF THE PAVEMENT STRUCTURE (STRUCTURAL SECTIONS) ARE SUBJECT TO TOLERANCES SPECIFIED IN THE STANDARD SPECIFICATIONS.
2. SUPERELEVATION AS SHOWN OR AS DIRECTED BY THE ENGINEER.

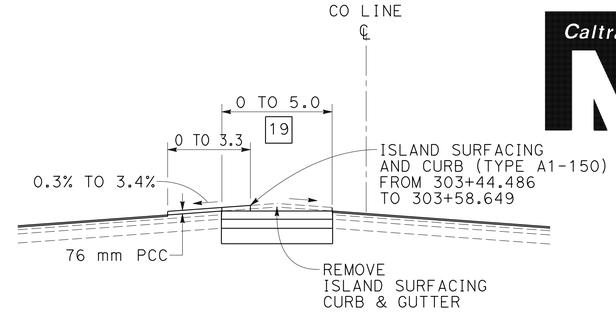

CO 303+15 TO 303+60

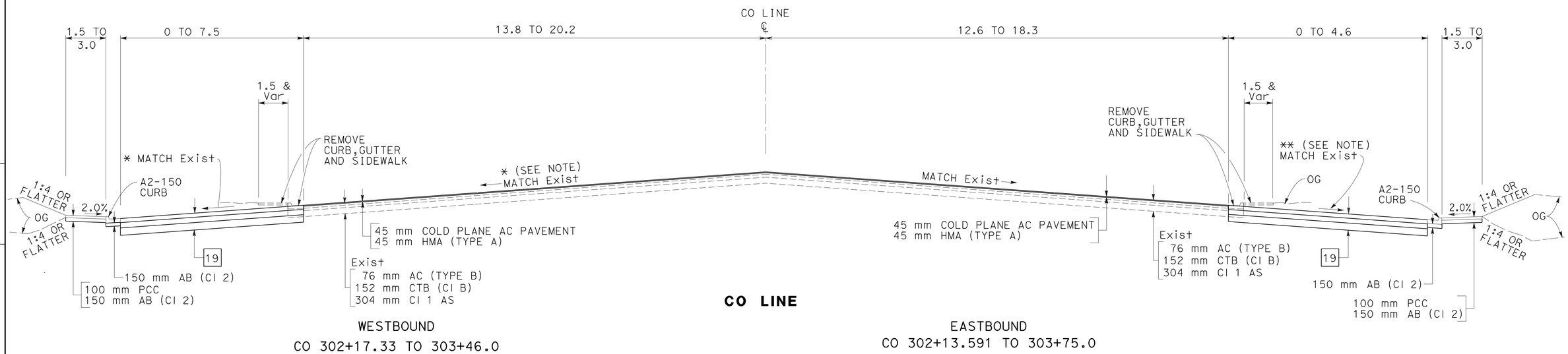

WESTBOUND
CO 302+17.33 TO 303+46.0

EASTBOUND
CO 302+13.591 TO 303+75.0

NOTE:

* EXCEPT FROM 303+45 TO 304+50.5 (FROM 2% TO 1%)
** EXCEPT FROM 304+70 TO 304+71.176 (FROM 1.3% TO 5.8%)

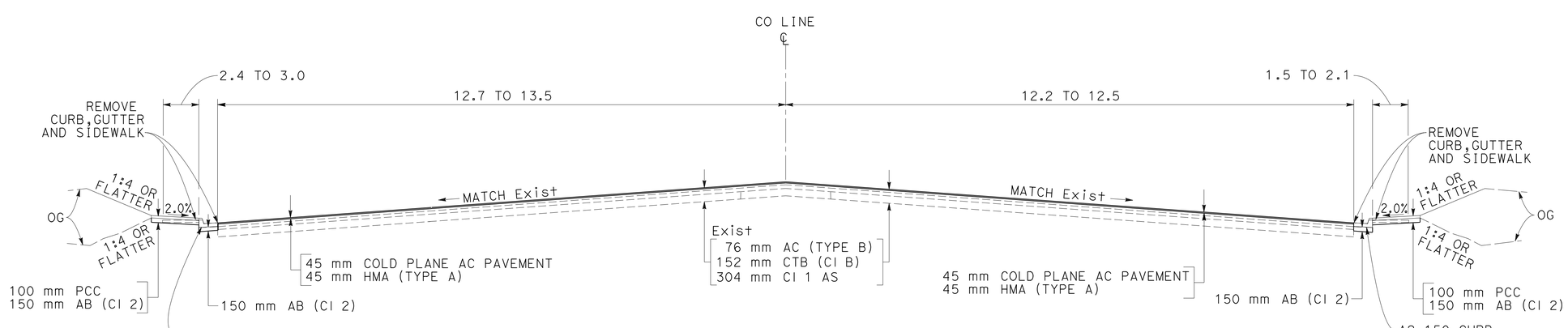

WESTBOUND
CO 302+16.598 TO 302+17.33

EASTBOUND
CO 302+04.126 TO 302+13.591

ALL DIMENSIONS ARE IN METERS UNLESS OTHERWISE SHOWN

TYPICAL CROSS SECTIONS

NO SCALE

X-1

REVISED BY	DATE REVISED
FJW	2/13/13

FRED J. WITTEBORN — CALCULATED-DESIGNED BY
JONATHAN LEE — CHECKED BY
JONATHAN LEE — FUNCTIONAL SUPERVISOR

STATE OF CALIFORNIA - DEPARTMENT OF TRANSPORTATION
Caltrans DESIGN

LAST REVISION 02-13-13 | DATE PLOTTED => 17-MAY-2013 | TIME PLOTTED => 18:07

Dist	COUNTY	ROUTE	KILOMETER POST TOTAL PROJECT	SHEET No.	TOTAL SHEETS
04	Son	101	33.3	3	158

REGISTERED CIVIL ENGINEER 2/22/13 DATE

5-13-13
PLANS APPROVAL DATE

REGISTERED PROFESSIONAL ENGINEER Fred J. Witteborn No. 56272 Exp. 12-31-14 CIVIL STATE OF CALIFORNIA

THE STATE OF CALIFORNIA OR ITS OFFICERS OR AGENTS SHALL NOT BE RESPONSIBLE FOR THE ACCURACY OR COMPLETENESS OF ELECTRONIC COPIES OF THIS PLAN SHEET.

Caltrans Metric

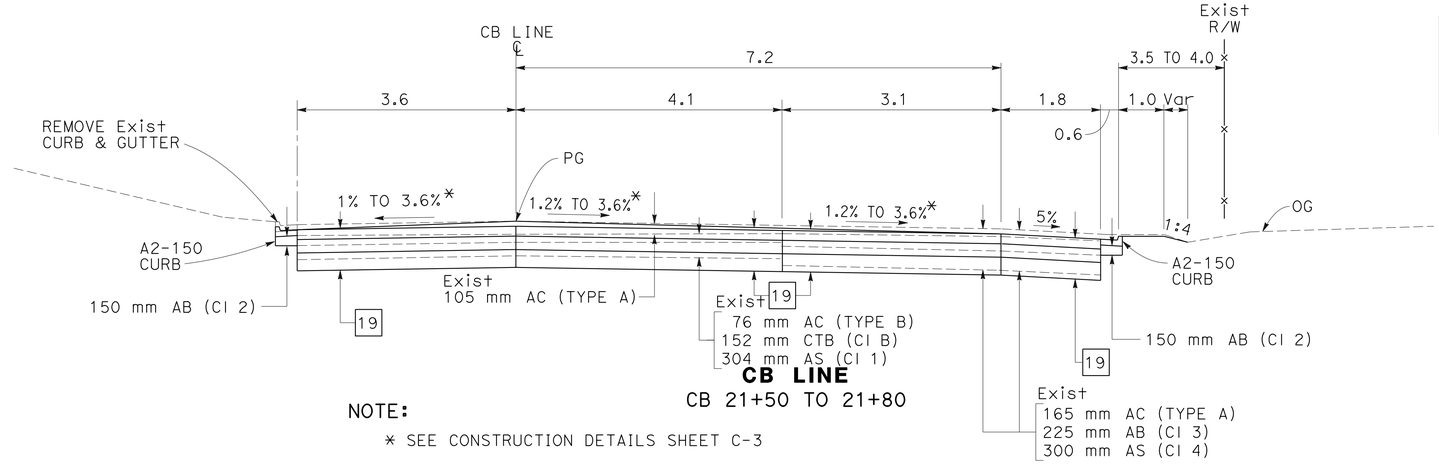

CB LINE

CB 21+50 TO 21+80

NOTE:

* SEE CONSTRUCTION DETAILS SHEET C-3

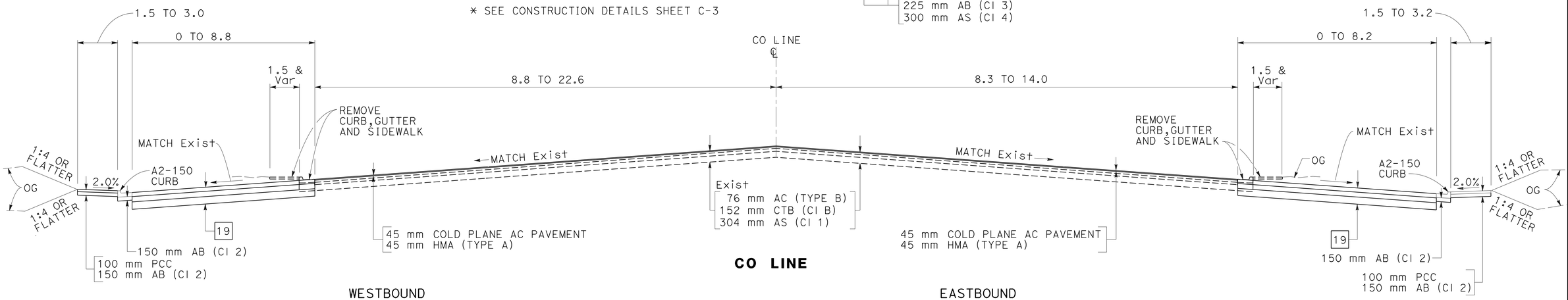

CO LINE

WESTBOUND

CO 304+56.635 TO 305+38.917

EASTBOUND

CO 304+90 TO 305+38.729

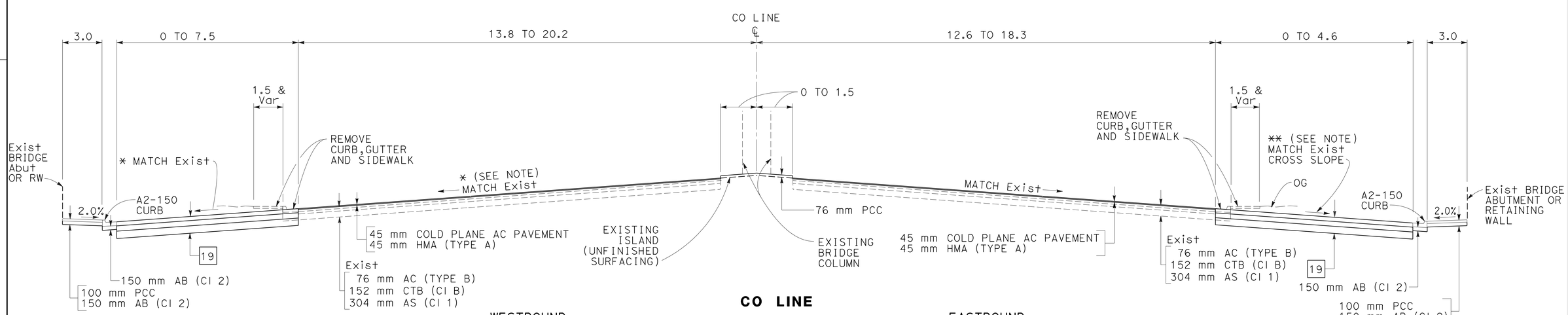

CO LINE

WESTBOUND

CO 303+64.6 TO 304+50.3

EASTBOUND

CO 303+84.689 TO 304+72.1

NOTE:

* EXCEPT FROM 304+45 TO 304+50.5 (FROM 2% TO 1%)
** EXCEPT FROM 304+70 TO 304+71.176 (FROM 1.3% TO 5.8%)

ALL DIMENSIONS ARE IN METERS UNLESS OTHERWISE SHOWN

TYPICAL CROSS SECTIONS

NO SCALE

X-2

FOR NOTES, SEE SHEET X-1

CALCULATED-DESIGNED BY	FRED J. WITTEBORN	REVISED BY	FJW
CHECKED BY	JONATHAN LEE	DATE REVISED	2/13/13
FUNCTIONAL SUPERVISOR	JONATHAN LEE		

STATE OF CALIFORNIA - DEPARTMENT OF TRANSPORTATION

Caltrans DESIGN

LAST REVISION 02-13-13 | DATE PLOTTED => 17-MAY-2013 | TIME PLOTTED => 18:07

Dist	COUNTY	ROUTE	KILOMETER POST TOTAL PROJECT	SHEET No.	TOTAL SHEETS
04	Son	101	33.3	4	158

REGISTERED CIVIL ENGINEER 2/22/13 DATE

5-13-13
PLANS APPROVAL DATE

REGISTERED PROFESSIONAL ENGINEER Fred J. Witteborn No. 56272 Exp. 12-31-14 CIVIL STATE OF CALIFORNIA

THE STATE OF CALIFORNIA OR ITS OFFICERS OR AGENTS SHALL NOT BE RESPONSIBLE FOR THE ACCURACY OR COMPLETENESS OF ELECTRONIC COPIES OF THIS PLAN SHEET.

Caltrans Metric

FOR ACCURATE RIGHT OF WAY AND ACCESS DATA, CONTACT RIGHT OF WAY ENGINEERING AT THE DISTRICT OFFICE.

LEGEND:

(No.) CURVE DATA

[No.] STRUCTURAL SECTION

COLD PLANE AC PAVEMENT

NOTE:

FOR CURBS, GUTTERS, SIDEWALKS, DRIVEWAYS, CURB RAMPS AND IRRIGATION SLEEVES, SEE SHEETS C-4 TO C-6.

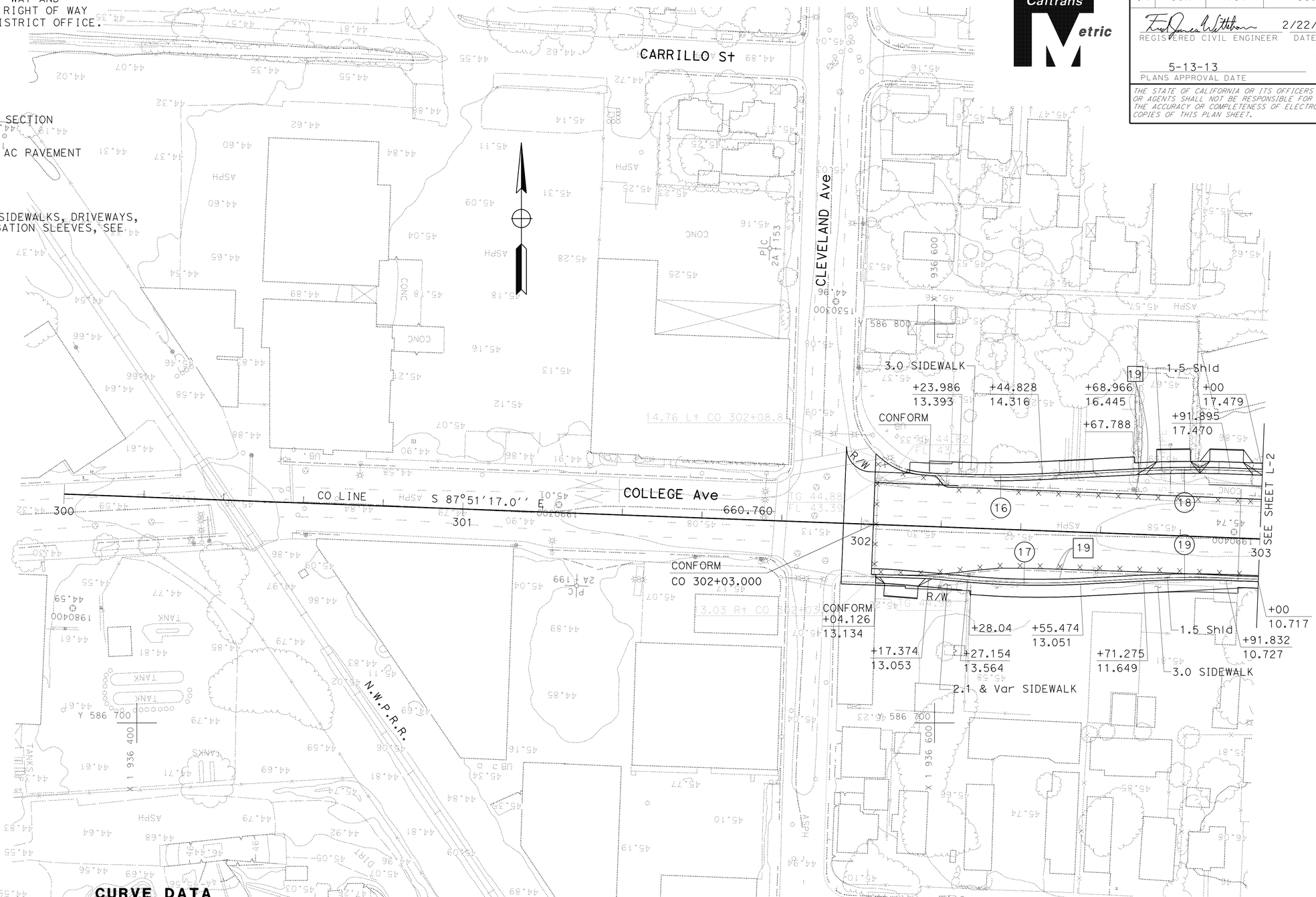

CURVE DATA

No.	R	Δ	T	L	N-COORDINATE	E-COORDINATE
16	235.900	05°04'06.4"	10.441	20.868	586998.1029	1936614.9387
17	201.501	08°03'38.2"	14.198	28.348	586936.0034	1936626.3086
18	264.099	04°58'51.0"	11.487	22.960	586499.9787	1936664.5476
19	235.901	05°00'0.7"	10.297	20.584	586500.0116	1936664.4569

ALL DIMENSIONS ARE IN METERS UNLESS OTHERWISE SHOWN

LAYOUT

SCALE 1:500

L-1

STATE OF CALIFORNIA - DEPARTMENT OF TRANSPORTATION
Caltrans DESIGN

FUNCTIONAL SUPERVISOR: JONATHAN LEE
CALCULATED-DESIGNED BY: FRED J. WITTEBORN
CHECKED BY: JONATHAN LEE
REVISED BY: FJW
DATE REVISED: 2/13/13

LAST REVISION 02-13-13 | DATE PLOTTED => 20-MAY-2013 | TIME PLOTTED => 08:24

Dist	COUNTY	ROUTE	KILOMETER POST TOTAL PROJECT	SHEET No.	TOTAL SHEETS
04	Son	101	33.3	5	158

REGISTERED CIVIL ENGINEER 2/22/13 DATE

5-13-13
PLANS APPROVAL DATE

REGISTERED PROFESSIONAL ENGINEER Fred J. Witteborn No. 56272 Exp. 12-31-14 CIVIL STATE OF CALIFORNIA

THE STATE OF CALIFORNIA OR ITS OFFICERS OR AGENTS SHALL NOT BE RESPONSIBLE FOR THE ACCURACY OR COMPLETENESS OF ELECTRONIC COPIES OF THIS PLAN SHEET.

Caltrans Metric

FOR ACCURATE RIGHT OF WAY AND ACCESS DATA, CONTACT RIGHT OF WAY ENGINEERING AT THE DISTRICT OFFICE.

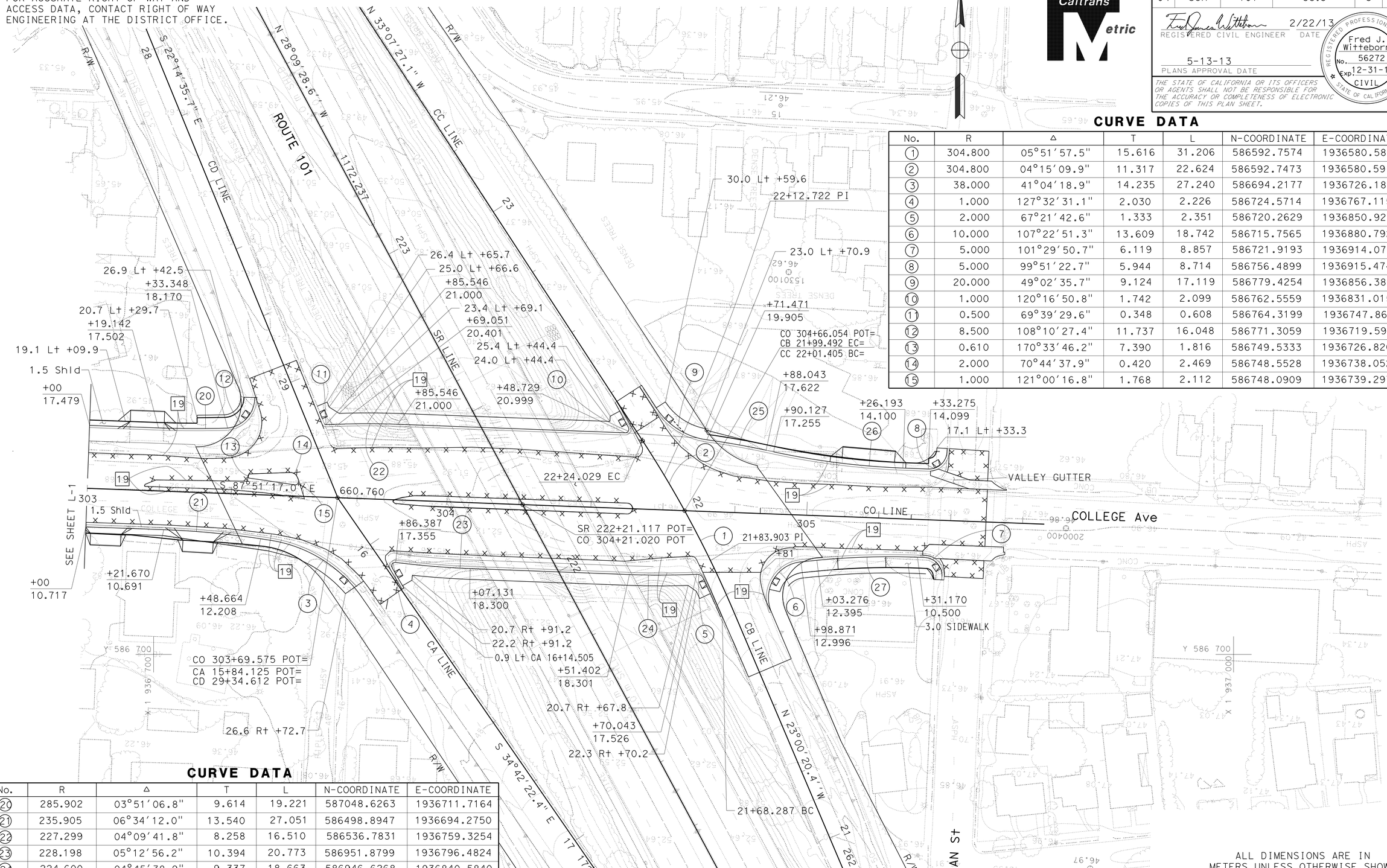

CURVE DATA

No.	R	Δ	T	L	N-COORDINATE	E-COORDINATE
1	304.800	05°51'57.5"	15.616	31.206	586592.7574	1936580.5864
2	304.800	04°15'09.9"	11.317	22.624	586592.7473	1936580.5919
3	38.000	41°04'18.9"	14.235	27.240	586694.2177	1936726.1874
4	1.000	127°32'31.1"	2.030	2.226	586724.5714	1936767.1159
5	2.000	67°21'42.6"	1.333	2.351	586720.2629	1936850.9257
6	10.000	107°22'51.3"	13.609	18.742	586715.7565	1936880.7922
7	5.000	101°29'50.7"	6.119	8.857	586721.9193	1936914.0762
8	5.000	99°51'22.7"	5.944	8.714	586756.4899	1936915.4743
9	20.000	49°02'35.7"	9.124	17.119	586779.4254	1936856.3887
10	1.000	120°16'50.8"	1.742	2.099	586762.5559	1936831.0158
11	0.500	69°39'29.6"	0.348	0.608	586764.3199	1936747.8631
12	8.500	108°10'27.4"	11.737	16.048	586771.3059	1936719.5941
13	0.610	170°33'46.2"	7.390	1.816	586749.5333	1936726.8202
14	2.000	70°44'37.9"	0.420	2.469	586748.5528	1936738.0520
15	1.000	121°00'16.8"	1.768	2.112	586748.0909	1936739.2973

CURVE DATA

No.	R	Δ	T	L	N-COORDINATE	E-COORDINATE
20	285.902	03°51'06.8"	9.614	19.221	587048.6263	1936711.7164
21	235.905	06°34'12.0"	13.540	27.051	586498.8947	1936694.2750
22	227.299	04°09'41.8"	8.258	16.510	586536.7831	1936759.3254
23	228.198	05°12'56.2"	10.394	20.773	586951.8799	1936796.4824
24	224.600	04°45'38.9"	9.337	18.663	586946.6268	1936840.5840
25	222.300	04°18'45.7"	8.370	16.733	586539.3858	1936823.3693
26	207.700	09°59'59.6"	18.171	36.250	586959.3167	1936915.9031
27	412.600	07°46'14.9"	14.011	27.980	586520.8377	1936904.4601

FOR LEGEND, SEE SHEET L-1

ALL DIMENSIONS ARE IN METERS UNLESS OTHERWISE SHOWN

LAYOUT

SCALE 1:500

L-2

FUNCTIONAL SUPERVISOR	JONATHAN LEE
CALCULATED-DESIGNED BY	FRED J. WITTEBORN
CHECKED BY	JONATHAN LEE
REVISED BY	FJW
DATE REVISED	2/13/13

STATE OF CALIFORNIA - DEPARTMENT OF TRANSPORTATION
Caltrans DESIGN

LAST REVISION 02-14-13 | DATE PLOTTED => 17-MAY-2013 | TIME PLOTTED => 18:28

Dist	COUNTY	ROUTE	KILOMETER POST TOTAL PROJECT	SHEET No.	TOTAL SHEETS
04	Son	101	33.3	6	158

REGISTERED CIVIL ENGINEER 2/22/13 DATE

5-13-13
PLANS APPROVAL DATE

REGISTERED PROFESSIONAL ENGINEER Fred J. Witteborn No. 56272 Exp. 12-31-14 CIVIL STATE OF CALIFORNIA

THE STATE OF CALIFORNIA OR ITS OFFICERS OR AGENTS SHALL NOT BE RESPONSIBLE FOR THE ACCURACY OR COMPLETENESS OF ELECTRONIC COPIES OF THIS PLAN SHEET.

Caltrans Metric

NOTE:

FOR TREE WELL DETAILS SEE LD SHEETS.

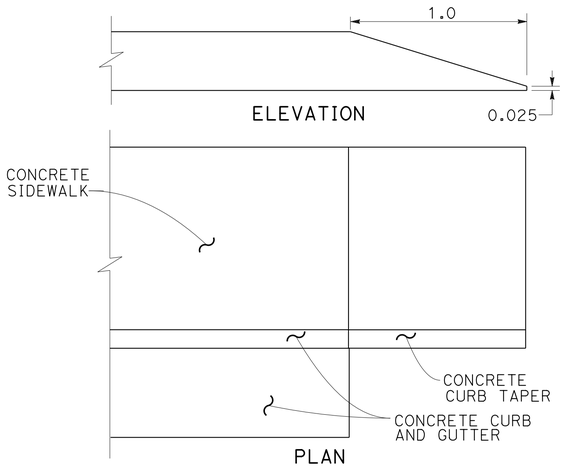

END CURB AND SIDEWALK TAPER

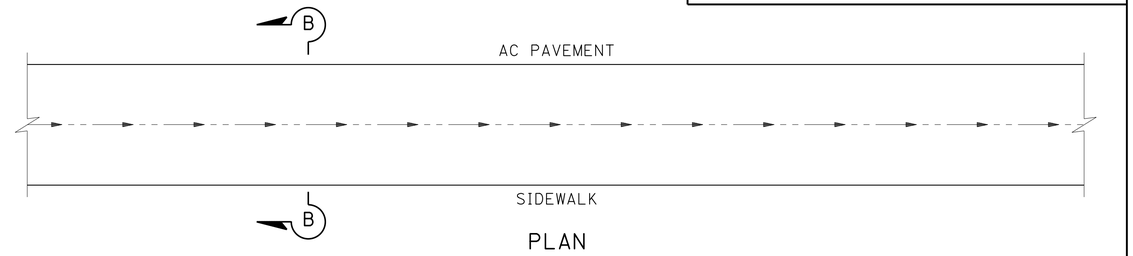

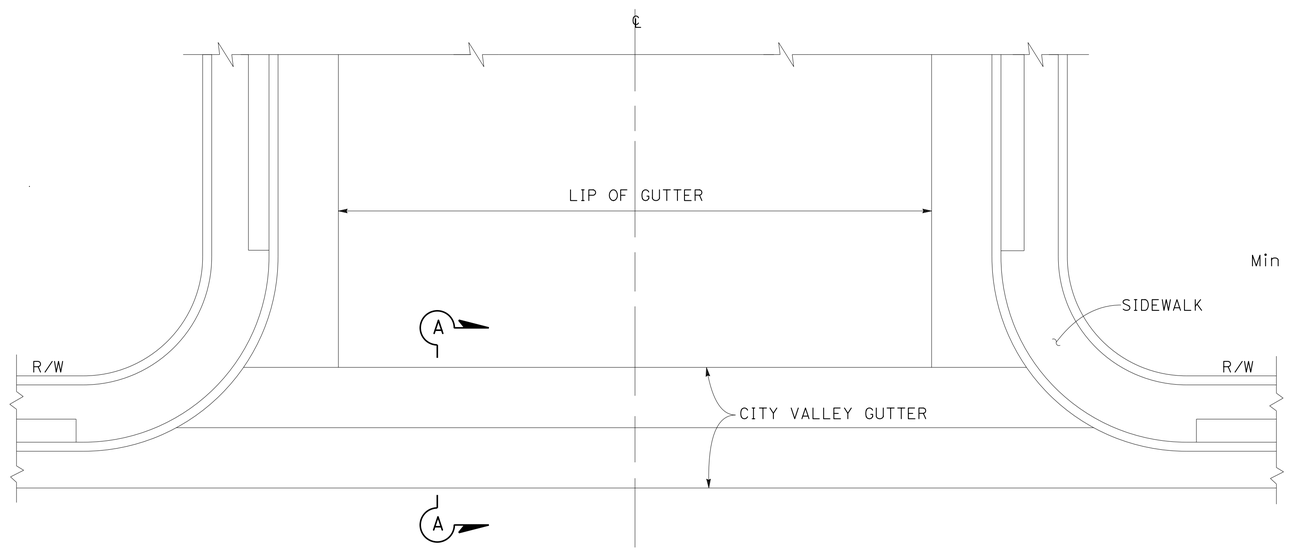

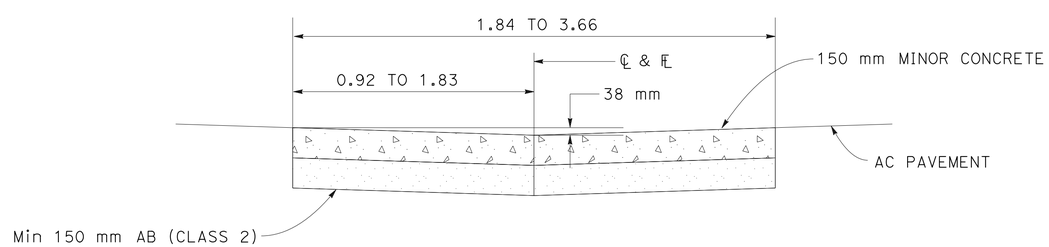

SECTION A-A
CITY VALLEY GUTTER

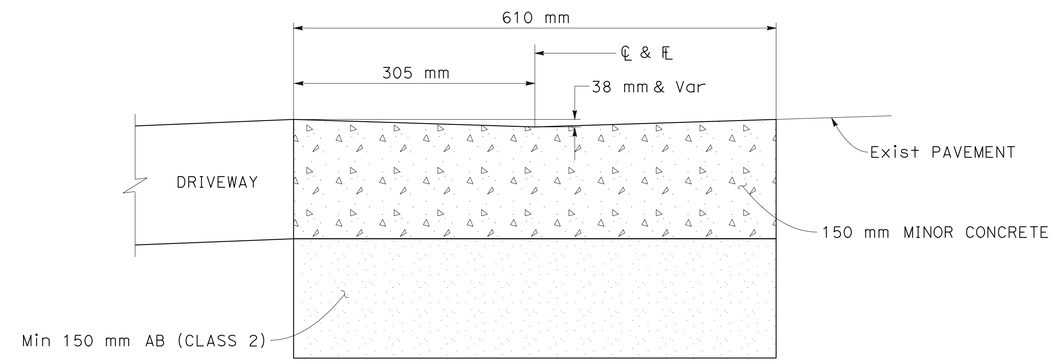

SECTION B-B
CONCRETE GUTTER AT DRIVEWAY

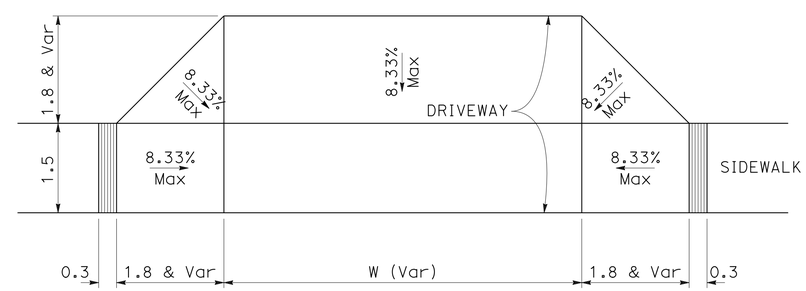

DRIVEWAY IN 1.5 m SIDEWALK
FOR DETAILS NOT SHOWN,
SEE SHEET C-26

ALL DIMENSIONS ARE IN
METERS UNLESS OTHERWISE SHOWN

CONSTRUCTION DETAILS

NO SCALE

C-1

FUNCTIONAL SUPERVISOR	JONATHAN LEE	REVISED BY	FJW
CALCULATED-DESIGNED BY	FRED J. WITTEBORN	DATE REVISED	2/13/13
CHECKED BY	JONATHAN LEE		

STATE OF CALIFORNIA - DEPARTMENT OF TRANSPORTATION
Caltrans **DESIGN**

LAST REVISION 02-13-13 | DATE PLOTTED => 17-MAY-2013 | TIME PLOTTED => 18:07

Dist	COUNTY	ROUTE	KILOMETER POST TOTAL PROJECT	SHEET No.	TOTAL SHEETS
04	Son	101	33.3	7	158

REGISTERED CIVIL ENGINEER 2/22/13 DATE

5-13-13
PLANS APPROVAL DATE

REGISTERED PROFESSIONAL ENGINEER Fred J. Witteborn No. 56272 Exp. 12-31-14 CIVIL STATE OF CALIFORNIA

THE STATE OF CALIFORNIA OR ITS OFFICERS OR AGENTS SHALL NOT BE RESPONSIBLE FOR THE ACCURACY OR COMPLETENESS OF ELECTRONIC COPIES OF THIS PLAN SHEET.

Caltrans Metric

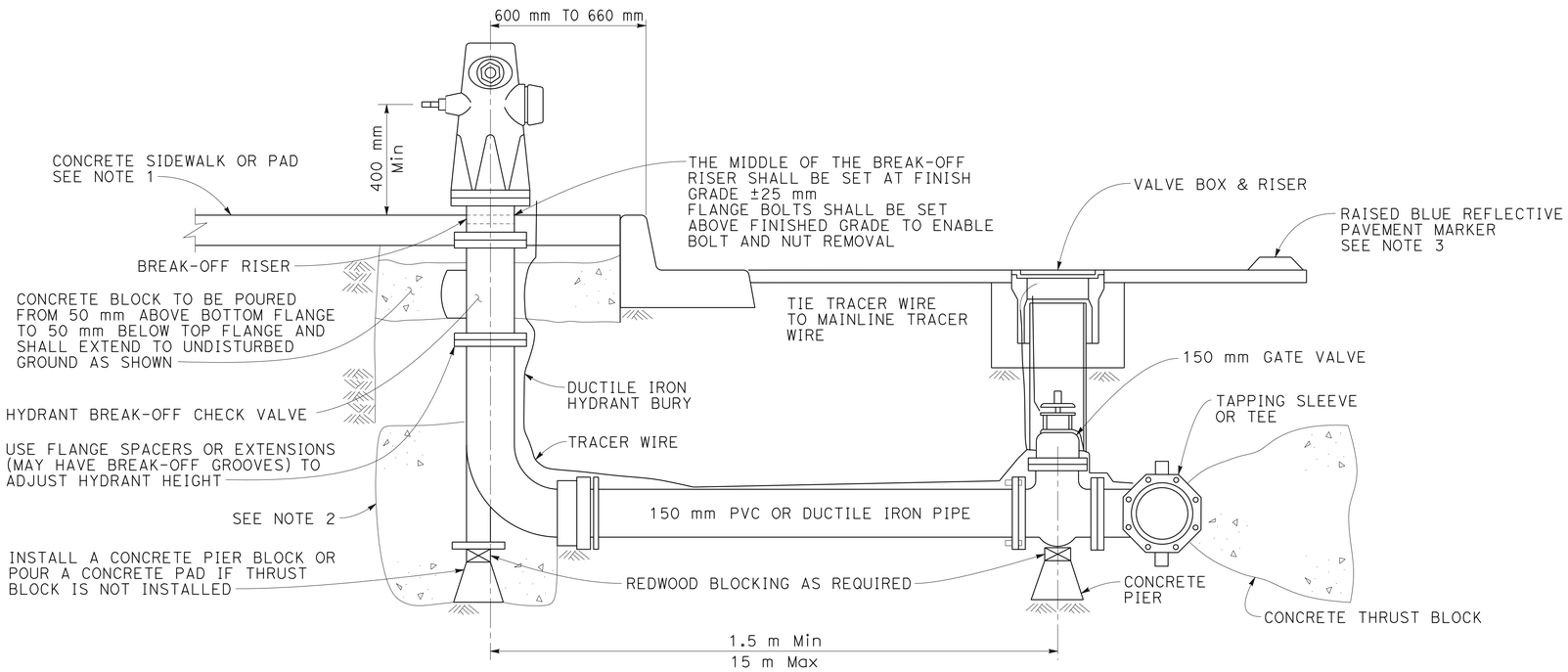

NOTES:

1. WHERE NO SIDEWALK EXISTS, OR WHERE HYDRANT IS INSTALLED IN PLANTER STRIP, A 100 mm THICK 1.2 x 1.2 CONCRETE PAD SHALL BE INSTALLED.
2. RESTRAINED JOINTS ARE REQUIRED FOR ALL NEW CONSTRUCTION FROM GATE VALVE TO HYDRANT BURY. THRUST BLOCKS ARE ONLY REQUIRED WHERE EXISTING SERVICES ARE BEING MODIFIED AND RESTRAINED JOINTS ARE NOT USED.
3. BLUE REFLECTIVE PAVEMENT MARKERS SHOULD BE PLACED 150 mm FROM THE CENTERLINE STRIPE, OR APPROXIMATE CENTER OF THE PAVEMENT WHERE THERE IS NO CENTERLINE STRIPE, ON THE SIDE NEAREST THE FIRE HYDRANT.

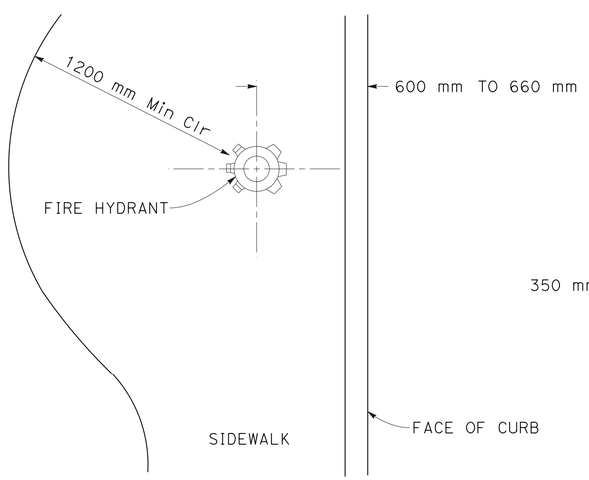

CONTIGUOUS SIDEWALK

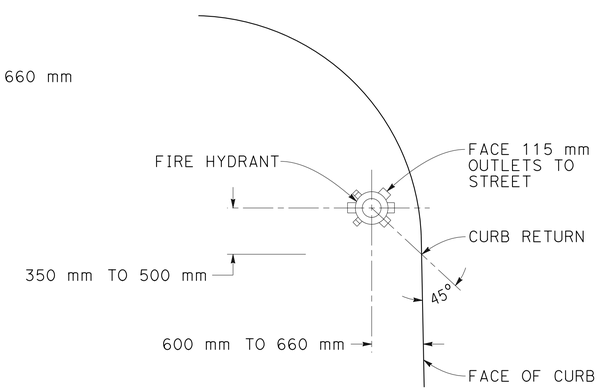

CURB RETURN

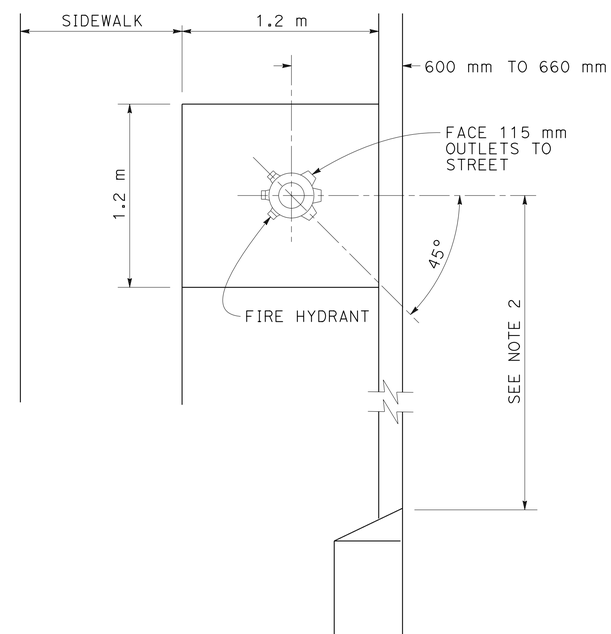

SIDEWALK WITH PLANTER STRIP

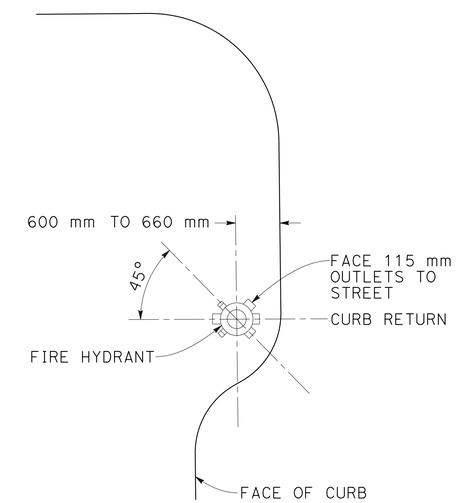

CURB RETURN WITH NECKDOWN

ALL DIMENSIONS ARE IN METERS UNLESS OTHERWISE SHOWN

CONSTRUCTION DETAILS
(FIRE HYDRANT DETAIL)
NO SCALE

C-2

STATE OF CALIFORNIA - DEPARTMENT OF TRANSPORTATION
Caltrans **DESIGN**

FUNCTIONAL SUPERVISOR: JONATHAN LEE
CALCULATED-DESIGNED BY: FRED J. WITTEBORN
CHECKED BY: JONATHAN LEE
REVISED BY: FJW
DATE REVISED: 2/13/13

LAST REVISION 02-13-12 | DATE PLOTTED => 17-MAY-2013 | TIME PLOTTED => 18:07

Dist	COUNTY	ROUTE	KILOMETER POST TOTAL PROJECT	SHEET No.	TOTAL SHEETS
04	Son	101	33.3	8	158

REGISTERED CIVIL ENGINEER 2/22/13 DATE

5-13-13
PLANS APPROVAL DATE

REGISTERED PROFESSIONAL ENGINEER Fred J. Witteborn No. 56272 Exp. 12-31-14 CIVIL STATE OF CALIFORNIA

THE STATE OF CALIFORNIA OR ITS OFFICERS OR AGENTS SHALL NOT BE RESPONSIBLE FOR THE ACCURACY OR COMPLETENESS OF ELECTRONIC COPIES OF THIS PLAN SHEET.

Caltrans Metric

FOR ACCURATE RIGHT OF WAY AND
ACCESS DATA, CONTACT RIGHT OF WAY
ENGINEERING AT THE DISTRICT OFFICE.

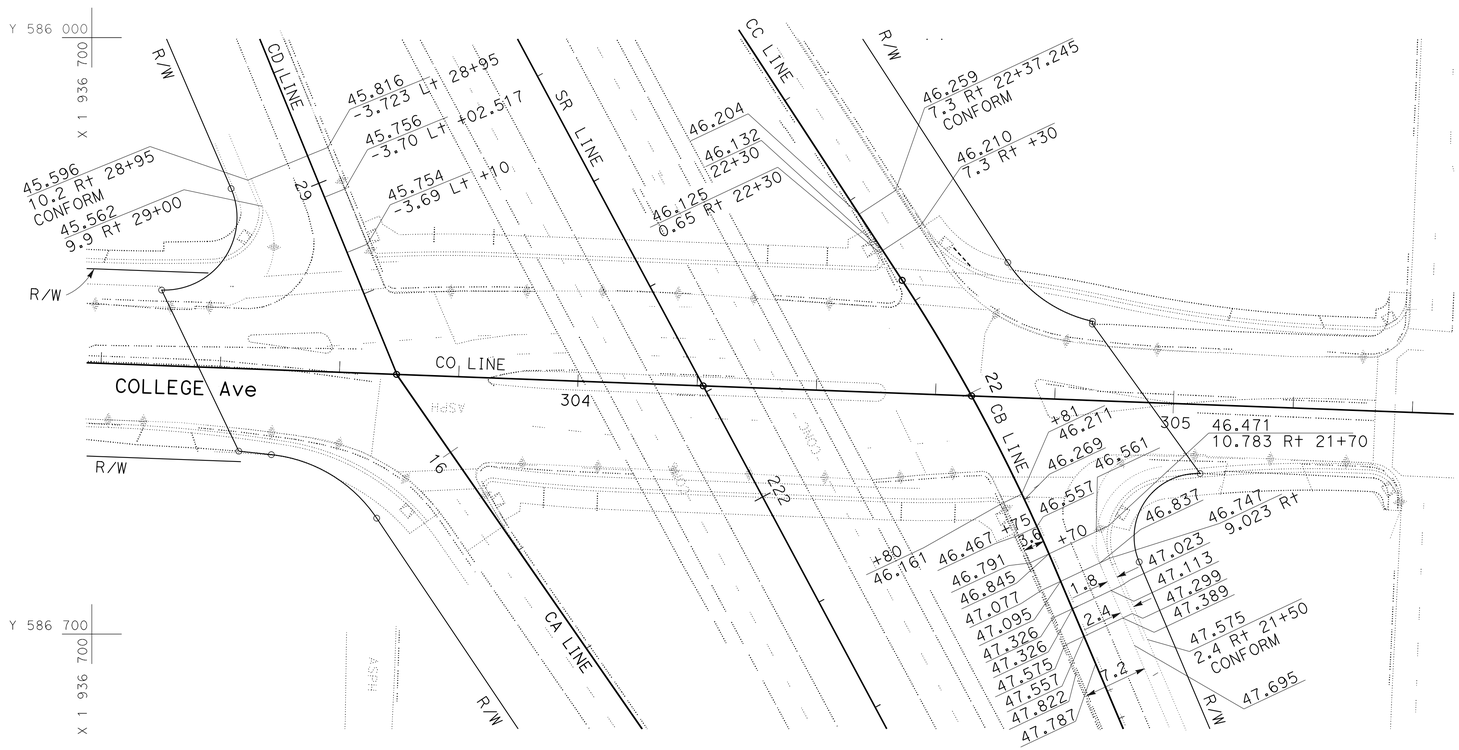

ALL DIMENSIONS ARE IN
METERS UNLESS OTHERWISE SHOWN

CONSTRUCTION DETAILS
PAVEMENT ELEVATION PLAN
SCLAE 1:500

C-3

THIS PLAN ACCURATE FOR PAVEMENT ELEVATION WORK ONLY

FRED J. WITTEBORN	REVISED BY FJW
JONATHAN LEE	DATE REVISED 2/13/13
CALCULATED-DESIGNED BY	
CHECKED BY	
FUNCTIONAL SUPERVISOR	
JONATHAN LEE	

STATE OF CALIFORNIA - DEPARTMENT OF TRANSPORTATION
Caltrans **DESIGN**

LAST REVISION 10-25-10 | DATE PLOTTED => 17-MAY-2013 | TIME PLOTTED => 18:07

Dist	COUNTY	ROUTE	KILOMETER POST TOTAL PROJECT	SHEET No.	TOTAL SHEETS
04	Son	101	33.3	9	158

REGISTERED CIVIL ENGINEER — DATE 2/22/13

5-13-13
PLANS APPROVAL DATE

REGISTERED PROFESSIONAL ENGINEER Fred J. Witteborn No. 56272 Exp. 12-31-14 CIVIL STATE OF CALIFORNIA

THE STATE OF CALIFORNIA OR ITS OFFICERS OR AGENTS SHALL NOT BE RESPONSIBLE FOR THE ACCURACY OR COMPLETENESS OF ELECTRONIC COPIES OF THIS PLAN SHEET.

Caltrans Metric

FOR ACCURATE RIGHT OF WAY AND ACCESS DATA, CONTACT RIGHT OF WAY ENGINEERING AT THE DISTRICT OFFICE.

LEGEND:

S — IRRIGATION SLEEVES w/ TREE WELL (SEE LANDSCAPE DETAILS)

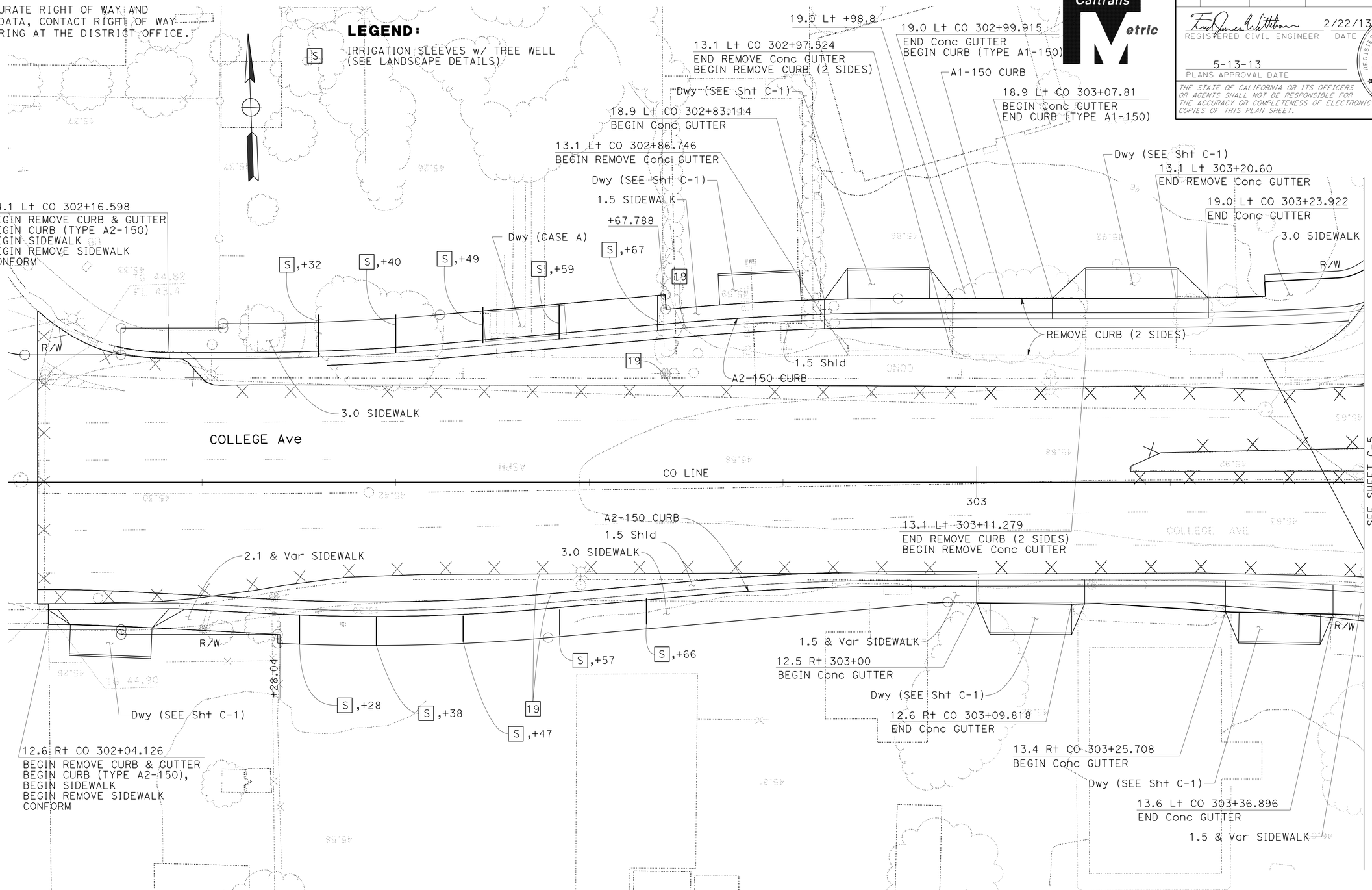

ALL DIMENSIONS ARE IN METERS UNLESS OTHERWISE SHOWN

CONSTRUCTION DETAILS

NO SCALE

C-4

REVISED BY	DATE REVISED
FJW	2/13/13

FRED J. WITTEBORN — CALCULATED-DESIGNED BY
JONATHAN LEE — CHECKED BY
JONATHAN LEE — FUNCTIONAL SUPERVISOR

STATE OF CALIFORNIA - DEPARTMENT OF TRANSPORTATION
Caltrans
DESIGN

LAST REVISION 02-13-13 | DATE PLOTTED => 20-MAY-2013 | TIME PLOTTED => 08:33

Dist	COUNTY	ROUTE	KILOMETER POST TOTAL PROJECT	SHEET No.	TOTAL SHEETS
04	Son	101	33.3	10	158

REGISTERED CIVIL ENGINEER 2/22/13 DATE

5-13-13
PLANS APPROVAL DATE

REGISTERED PROFESSIONAL ENGINEER Fred J. Witteborn No. 56272 Exp. 12-31-14 CIVIL STATE OF CALIFORNIA

THE STATE OF CALIFORNIA OR ITS OFFICERS OR AGENTS SHALL NOT BE RESPONSIBLE FOR THE ACCURACY OR COMPLETENESS OF ELECTRONIC COPIES OF THIS PLAN SHEET.

Caltrans Metric

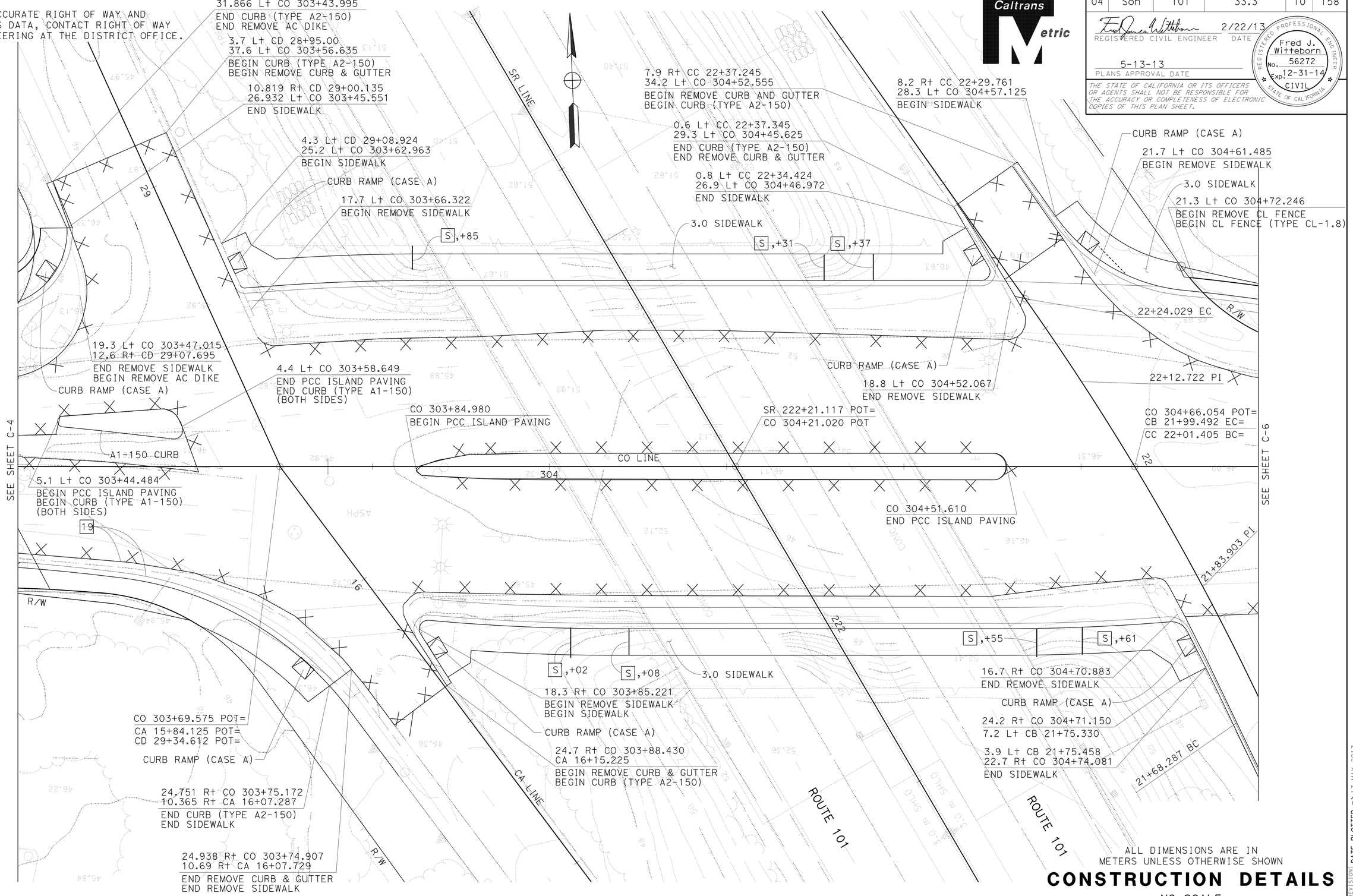

CONSTRUCTION DETAILS

NO SCALE

C-5

STATE OF CALIFORNIA - DEPARTMENT OF TRANSPORTATION	DESIGN	FUNCTIONAL SUPERVISOR JONATHAN LEE	CALCULATED-DESIGNED BY FRED J. WITTEBORN
Caltrans		CHECKED BY JONATHAN LEE	REVISED BY FJW DATE REVISED 2/13/13

LAST REVISION 02-13-13 DATE PLOTTED => 17-MAY-2013 TIME PLOTTED => 18:07

Dist	COUNTY	ROUTE	KILOMETER POST TOTAL PROJECT	SHEET No.	TOTAL SHEETS
04	Son	101	33.3	11	158

REGISTERED CIVIL ENGINEER 2/22/13 DATE

5-13-13
PLANS APPROVAL DATE

REGISTERED PROFESSIONAL ENGINEER Fred J. Witteborn No. 56272 Exp. 12-31-14 CIVIL STATE OF CALIFORNIA

THE STATE OF CALIFORNIA OR ITS OFFICERS OR AGENTS SHALL NOT BE RESPONSIBLE FOR THE ACCURACY OR COMPLETENESS OF ELECTRONIC COPIES OF THIS PLAN SHEET.

Caltrans Metric

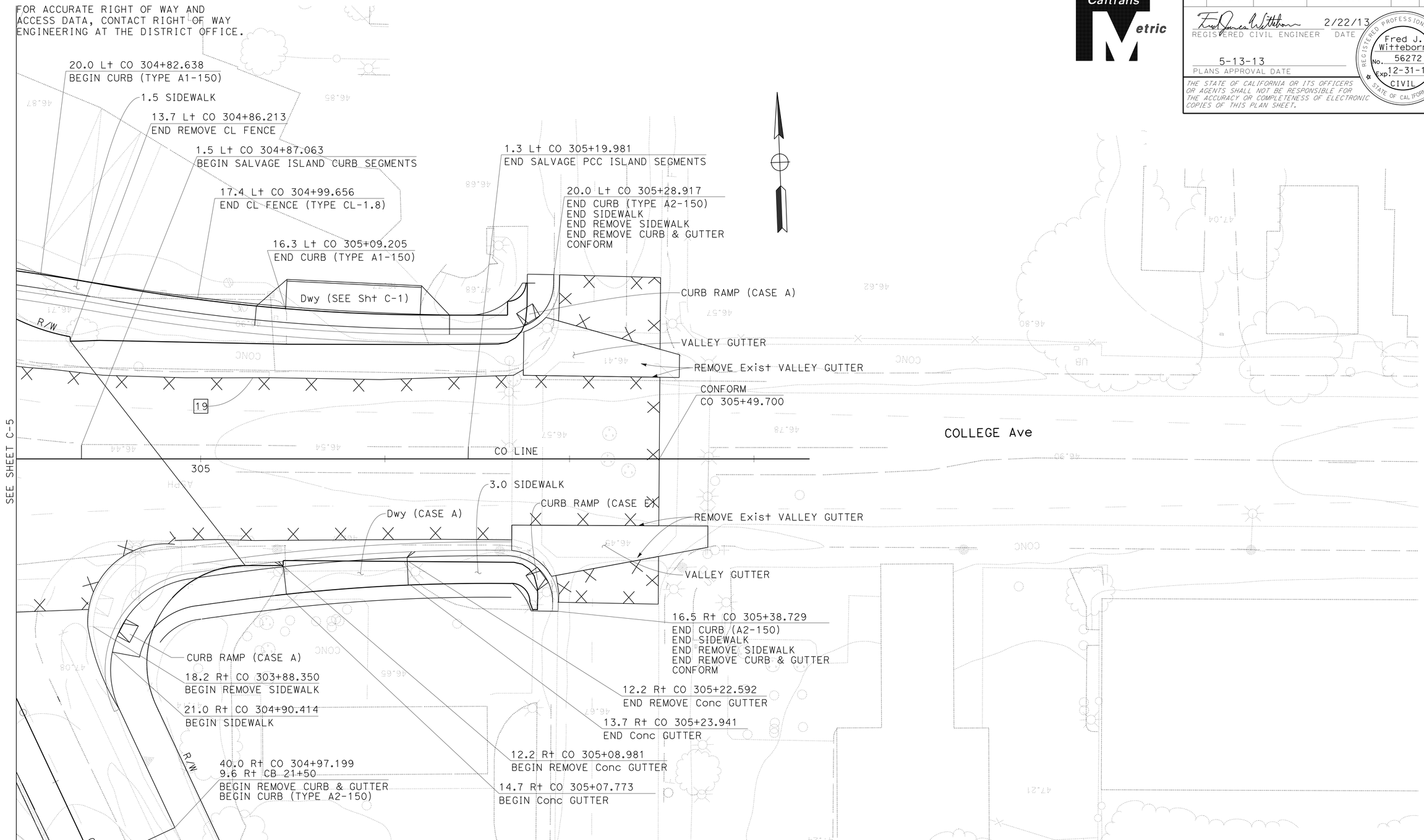

ALL DIMENSIONS ARE IN METERS UNLESS OTHERWISE SHOWN

CONSTRUCTION DETAILS

NO SCALE

C-6

FUNCTIONAL SUPERVISOR: JONATHAN LEE
CALCULATED-DESIGNED BY: FRED J. WITTEBORN
CHECKED BY: JONATHAN LEE
REVISED BY: FJW
DATE REVISED: 2/13/13

STATE OF CALIFORNIA - DEPARTMENT OF TRANSPORTATION
Caltrans DESIGN

LAST REVISION 02-13-13 | DATE PLOTTED => 17-MAY-2013 | TIME PLOTTED => 18:07

Dist	COUNTY	ROUTE	KILOMETER POST TOTAL PROJECT	SHEET No.	TOTAL SHEETS
04	Son	101	33.3	12	158

REGISTERED CIVIL ENGINEER 2/22/13 DATE

5-13-13
PLANS APPROVAL DATE

REGISTERED PROFESSIONAL ENGINEER Fred J. Witteborn No. 56272 Exp. 12-31-14 CIVIL STATE OF CALIFORNIA

THE STATE OF CALIFORNIA OR ITS OFFICERS OR AGENTS SHALL NOT BE RESPONSIBLE FOR THE ACCURACY OR COMPLETENESS OF ELECTRONIC COPIES OF THIS PLAN SHEET.

Caltrans Metric

A

AB	aggregate base
ABBC	asbestos bonded bituminous coated
ABM	air-blown mortar
Abn	abandon
Abut	abutment
AC	asphalt concrete
ACB	asphalt concrete base
ACP	asbestos cement pipe
ADL	added dead load
Adj	adjust
AFES	alternative flared end section
Ahd	ahead
Alt	alternate
AM	time from midnight to noon
AP	alternative pipe
APC	alternative pipe culvert
Approx	approximate
APU	alternative pipe underdrain
ARS	acceleration response spectrum
AS	aggregate subbase
ASRP	aluminum spiral rib pipe
Assy	assembly
ATPB	asphalt treated permeable base
ATPM	asphalt treated permeable material
Ave	avenue
Avg	average
@	at

B

BAGR	bridge approach guard railing
BB	beginning of bridge
B-B	back-to-back
BC	begin horizontal curve
BCR	begin curb return
Beg	begin
Bit Ctd	bituminous coated
Bk	back
Bkf	backfill
Bldg	building
BLM	bridge-log mile
Blvd	boulevard
BM	bench mark
Bot	bottom
Br	bridge
Brg	bearing
BTU	british thermal unit
BVC	begin vertical curve
BW	barbed wire

C

CAA	cable anchor assembly
CAP	corrugated aluminum pipe
CAPA	corrugated aluminum pipe arch
CAS	construction area sign
CB	concrete barrier
CBW	concrete block wall
C-C	center to center

C continued

CG	center of gravity
Chnl	channel
CI	cast iron
CIDH	cast-in-drilled-hole
CIP	cast-in-place, cast iron pipe
CIPCP	cast in place concrete pipe
CISS	cast-in-steel-shell
CJP	complete joint penetration
CL	chain link
CL-6	chain link fence (6 ft)
Cl	class
Clr	clear, clearance
CM	corrugated metal
CMP	corrugated metal pipe
Co	county
Col	column
Conc	concrete
Cond	conduit
Conn	connector
Const	construct, construction
Cont	continuous
Coord	coordinate
CP	candlepower
Cr	creek
CRCP	continuous reinforced concrete pavement
CRSP	concreted rock slope protection
CSP	corrugated steel pipe
CSPA	corrugated steel pipe arch
CTB	cement treated base
CTPB	cement treated permeable base
CTPM	cement treated permeable material
Ctrs	centers
Culv	culvert
℄	centerline

D

D	depth
DD	downdrain
Dbl	double
Deg	degree
Del	delineator
Det	detail, detour
DF	douglas fir
DI	drainage inlet, drop inlet
Dia	diameter
Diaph	diaphragm
Dist	distance, district
DMBB	double metal beam barrier
Dr	drive
DTBB	double thrie beam barrier
Dwy	driveway

E

E	east
Ease	easement
EB	end of bridge, eastbound
EC	end horizontal curve
ECR	end curb return
ED	edge drain
EDC	edge drain cleanout
EDO	edge drain outlet
EDV	edge drain vent
Elec	electrolier
Elect	electric
Elev	elevation
Emb	embankment
Engr	Engineer
EOD	edge of deck
EP	edge of pavement
Eq	equation
ES	edge of shoulder
ETW	edge of traveled way
EVC	end vertical curve
EW	endwall
Exc	excavation
Exist, (E)	existing
Exp	expansion, expressway
Exp Jt	expansion joint
Ext	exterior

F

F & C	frame and cover
F & G	frame and grate
FB	floor beam
Fdn	foundation
FEBT	facing eastbound traffic
FES	flared end section
FF	filter fabric
FG	finished grade
FH	fire hydrant
Fig	figure
FL	flow line
FNBT	facing northbound traffic
FOB	free on board
FOC	face of concrete
Fr Rd	frontage road
FS	far side, finished surface
FSBT	facing southbound traffic
Ftg	footing
FWBT	facing westbound traffic
Fwy	freeway

G

g	acceleration due to gravity
Ga	gage
Galv	galvanized
GP	grading plane
GR	guard railing
GSP	galvanized steel pipe

G continued

Gtr	gutter

H

H	height
h, hr	hour
HD	horizontal drain
hdwl	headwall
Hex Hd	hexagonal head
HMA	hot mixed asphalt
Horiz	horizontal
HP	hinge point, horsepower
HPS	high performance steel
HS	high strength
HW	headwall, high water
HWM	high water mark
Hwy	highway

I

IB	imported borrow
ID	inside diameter
IF	inside face
Int	interior
Inv	invert
Irr	irrigation

J

Jct	junction
JP	joint pole
JPCP	jointed plain concrete pavement
JS	junction structure
Jt	joint

K

KP	kilometer post

L

L	length
Lat	latitude
LCB	lean concrete base
Ln	lane
Loc	location
LOL	layout line
Long	longitude
Longit	longitudinal
LS	lump sum
Lt	left

General Rules:

1. Abbreviations should be upper and lower case letters.
   i.e., Misc = miscellaneous and Bit Ctd = bituminous coated
2. Acronyms should be all upper case letters.
   i.e., BCR = begin curb return

Units of Measurement

(See Tables A, B, C and D on Standard Plan A10B)

ACRONYMS AND ABBREVIATIONS (SHEET 1 OF 2)

C-7

STATE OF CALIFORNIA - DEPARTMENT OF TRANSPORTATION
Caltrans DESIGN

FUNCTIONAL SUPERVISOR: JONATHAN LEE
CALCULATED-DESIGNED BY: FRED J. WITTEBORN
CHECKED BY: JONATHAN LEE
REVISED BY: FJW
DATE REVISED: 2/13/13

LAST REVISION DATE PLOTTED => 17-MAY-2013
12-27-12 TIME PLOTTED => 18:07

Dist	COUNTY	ROUTE	KILOMETER POST TOTAL PROJECT	SHEET No.	TOTAL SHEETS
04	Son	101	33.3	13	158

REGISTERED CIVIL ENGINEER 2/22/13 DATE

5-13-13
PLANS APPROVAL DATE

REGISTERED PROFESSIONAL ENGINEER Fred J. Witteborn No. 56272 Exp. 12-31-14 CIVIL STATE OF CALIFORNIA

THE STATE OF CALIFORNIA OR ITS OFFICERS OR AGENTS SHALL NOT BE RESPONSIBLE FOR THE ACCURACY OR COMPLETENESS OF ELECTRONIC COPIES OF THIS PLAN SHEET.

Caltrans Metric

M

Maint	maintenance
Max	maximum
MB	metal beam
MBB	metal beam barrier
MBGR	metal beam guard railing
Med	median
MH	manhole
Min	minimum
Misc	miscellaneous
Misc I & S	miscellaneous iron and steel
Mkr	marker
Mod	modified, modify
Mon	monument
MP	metal plate
MPGR	metal plate guard railing
MR	movement rating
MSE	mechanically stabilized embankment
Mtl	material

N

N	north
NB	northbound
No.	number (must have period)
Nos.	numbers (must have period)
NPS	nominal pipe size
NS	near side
NTS	not to scale

O

Oblr	obliterate
OC	overcrossing
OD	outside diameter
OF	outside face
OG	original ground
OGAC	open graded asphalt concrete
OH	overhead
O-O	out to out
Opp	opposite

P

P	page
PAP	perforated aluminum pipe
PB	pull box
PC	point of curvature, precast
PCC	point of compound curve, portland cement concrete
PCP	perforated concrete pipe, prestressed concrete pipe
PCVC	point of compound vertical curve
Ped	pedestrian
Ped OC	pedestrian overcrossing
Ped UC	pedestrian undercrossing
Perm Mtl	permeable material
PG	profile grade

P continued

PI	point of intersection
PJP	partial joint penetration
ℙ,PL	plate
P/L	property line
PM	post mile, time from noon to midnight
PN	paving notch
POC	point of horizontal curve
POT	point of tangent
POVC	point of vertical curve
PP	pipe pile, plastic pipe, power pole
PPL	preformed permeable liner
PPP	perforated plastic pipe
PRC	point of reverse curve
PRF	pavement reinforcing fabric
PRVC	point of reverse vertical curve
PS&E	plans, specifications and estimates
PS, P/S	prestressed
PSP	perforated steel pipe
PT	point of tangency
PVC	polyvinyl chloride
Pvmt	pavement

Q

Qty	quantity

R

R	radius
R & D	remove and dispose
R & S	remove and salvage
R/C	rate of change
RCA	reinforced concrete arch
RCB	reinforced concrete box
RCP	reinforced concrete pipe
RCPA	reinforced concrete pipe arch
Rd	road
Reinf	reinforced, reinforcement, reinforcing
Rel	relocate
Repl	replacement
Ret	retaining
Rev	revised
Rdwy	roadway
RM	road-mixed
RP	radius point, reference point
RR	railroad
RSP	rock slope protection
Rt	right
Rte	route
RW	redwood, retaining wall
R/W	right of way
Rwy	railway

S

S	south, supplement
SAE	structure approach embankment
Salv	salvage
SAPP	structural aluminum plate pipe
SB	southbound
SC	sand cushion slotted corrugated steel pipe
SD	storm drain
Sec	second, section
Sep	separation
SG	subgrade
Shld	shoulder
Sht	sheet
Sim	similar
℄	station line
SM	selected material
Spec	special, specifications
SPP	slotted plastic pipe
SS	slope stake
SSBM	strap and saddle bracket method
SSD	structural section drain
SSPA	structural steel plate arch
SSPP	structural steel plate pipe
SSPPA	structural steel plate pipe arch
SSRP	steel spiral rib pipe
St	street
Sta	station
STBB	single thrie beam barrier
Std	standard
Str	structure
Surf	surfacing
SW	sidewalk, sound wall
Swr	sewer
Sym	symmetrical
S4S	surface 4 sides

T

T	semi-tangent
TAB	tablet
Tan	tangent
TBB	thrie beam barrier
Tbr	timber
TC	top of curb
TCB	traffic control box
Tel	telephone
Temp	temporary
TG	top of grade
Tot	total
TP	telephone pole
TPB	treated permeable base
TPM	treated permeable material
Trans	transition

T continued

TS	transverse traffic signal, tubular steel
Typ	typical

U

UC	undercrossing
UD	underdrain
UON	unless otherwise noted
UP	underpass

V

V	valve, design speed
Var	variable
VC	vertical curve
VCP	vitrified clay pipe
Vert	vertical
Via	viaduct
Vol	volume

W

W	west, width
WB	westbound
WH	weep hole
WM	wire mesh
WS	water surface
WSP	welded steel pipe
Wt	weight
WV	water valve
WW	wingwall
WWLOL	wingwall layout line

X

X Sec	cross section
Xing	crossing

Y

Yr	year
Yrs	years

UNITS OF MEASUREMENT

Some of the symbols for Metric units of measurement used in the Project Plans Quantity Summaries and in the Engineer's Estimate are as follows:

TABLE A

Symbol Used	Definitions
EA	each
KG	kilogram
HA	hectare
L	liter
M	meter
M^2	square meter
M^3	cubic meter
TAB	tablet
TONNE	1000 kilograms

Some of the symbols for Metric units of measurement used for physical properties of materials are as follows:

TABLE B

Symbol Used	Definitions
m	meter
g	gram
s	second
A	ampere
°C	degrees Celsius
Hz	hertz
N	newton
Pa	pascal
L	liter
ha	hectare
W	Watt

Other commonly used symbols for Metric units of measurement:

TABLE C

Symbol Used	Definitions
ø	nominal diameter
cal	calorie
kg	kilogram
mm	millimeter

Commonly used prefixes in the Metric system of units are as follows:

TABLE D

Symbol Used	Prefix	Multiplication Factor
m	milli-	10^{-3}
k	kilo-	10^{3}
M	mega-	10^{6}
G	giga-	10^{9}

ACRONYMS AND ABBREVIATIONS (SHEET 2 OF 2)

C-8

STATE OF CALIFORNIA - DEPARTMENT OF TRANSPORTATION
Caltrans DESIGN

FUNCTIONAL SUPERVISOR JONATHAN LEE
CALCULATED-DESIGNED BY FRED J. WITTEBORN
CHECKED BY JONATHAN LEE
REVISED BY FJW
DATE REVISED 2/13/13

LAST REVISION 01-11-13
DATE PLOTTED => 17-MAY-2013
TIME PLOTTED => 18:16

Dist	COUNTY	ROUTE	KILOMETER POST TOTAL PROJECT	SHEET No.	TOTAL SHEETS
04	Son	101	33.3	14	158

REGISTERED CIVIL ENGINEER 2/22/13 DATE

5-13-13
PLANS APPROVAL DATE

REGISTERED PROFESSIONAL ENGINEER Fred J. Witteborn No. 56272 Exp. 12-31-14 CIVIL STATE OF CALIFORNIA

THE STATE OF CALIFORNIA OR ITS OFFICERS OR AGENTS SHALL NOT BE RESPONSIBLE FOR THE ACCURACY OR COMPLETENESS OF ELECTRONIC COPIES OF THIS PLAN SHEET.

Caltrans Metric

SYMBOLOGY FOR CONSTRUCTION FEATURES

Example - "A" Line
259 260 261
Station Line (Centerline)

R/W
Right of Way Line

Toe of Slope
C F
Top of Cut
Slope Line

OG
Original Ground Line

BB 217+93.455
EB 222+06.388
Aerial Easement
Approach Slab (See Structure Plans)
Bridge Name (See Structure Plans)
Structure (Bridge)

AC Dike
AC Overside Drain
Downdrain
Dike, Downdrain and Oversize Drain

Pipe Inlet
Drainage Inlet
Flared End Section
Pipe Culvert - single line (36" or less in diameter) (plus - other drainage features)

Wingwall
Headwall
Endwall
Pipe Culvert - two lines (36" to 6' in diameter) (plus - other drainage features) (Over 6' in diameter, draw to scale)

Face of Wall — Wall
Existing Guard Railing (work to be performed)
New Guard Railing
Concrete (Median) Barrier
Wall on Barrier
Temporary Railing (Type K)
Double Thrie Beam Barrier
Curb — Curb without Gutter
Curb with Gutter (curb-lip, flow line, back-top of curb)
X X — Fence
Ditch Flow Line

Existing Walls or Barriers should be shown as hollow filled (See example of Wall below)

Existing Wall

AERIAL UTILITES

E (OH) E	New Electrical
e (oh) e	Exist Electrical
TC (OH) TC	New Telemeter Cable
tc (oh) tc	Exist Telemeter Cable
T (OH) T	New Telephone
t (oh) t	Exist Telephone
TV (OH) TV	New Television
tv (oh) tv	Exist Television
FO (OH) FO	New Fiber Optic
fo (oh) fo	Exist Fiber Optic

UNDERGROUND UTILITIES

W W W	New Water
w w w	Exist Water
G G G	New Natural Gas
g g g	Exist Natural Gas
S S S	New Sewer
s s s	Exist Sewer
E E E	New Electrical
e e e	Exist Electrical
T T T	New Telephone
t t t	Exist Telephone
GS GS GS	New Gasoline
gs gs gs	Exist Gasoline
O O O	New Oil
o o o	Exist Oil
TV TV TV	New Television
tv tv tv	Exist Televison
ST ST ST	New Steam
st st st	Exist Steam
TC TC TC	New Telemeter Cable
tc tc tc	Exist Telemeter Cable
SD SD SD	New Storm Drain
sd sd sd	Exist Storm Drain
FO FO FO	New Fiber Optic
fo fo fo	Exist Fiber Optic

SYMBOLS (SHEET 1 OF 2)

C-9

STATE OF CALIFORNIA - DEPARTMENT OF TRANSPORTATION
Caltrans DESIGN

FUNCTIONAL SUPERVISOR JONATHAN LEE
CALCULATED-DESIGNED BY FRED J. WITTEBORN
CHECKED BY JONATHAN LEE
REVISED BY FJW
DATE REVISED 2/13/13

LAST REVISION 12-27-12
DATE PLOTTED => 17-MAY-2013
TIME PLOTTED => 18:07

Dist	COUNTY	ROUTE	KILOMETER POST TOTAL PROJECT	SHEET No.	TOTAL SHEETS
04	Son	101	33.3	15	158

REGISTERED CIVIL ENGINEER 2/22/13 DATE

5-13-13
PLANS APPROVAL DATE

REGISTERED PROFESSIONAL ENGINEER Fred J. Witteborn No. 56272 Exp. 12-31-14 CIVIL STATE OF CALIFORNIA

THE STATE OF CALIFORNIA OR ITS OFFICERS OR AGENTS SHALL NOT BE RESPONSIBLE FOR THE ACCURACY OR COMPLETENESS OF ELECTRONIC COPIES OF THIS PLAN SHEET.

Caltrans Metric

SYMBOLS
ENLARGED FOR CLARITY

- Curb
- Lane Stripe
- Edge of Traveled Way (State Highway)
- Edge of Traveled Way (Other)
- Edge of Asphalt (Shoulder)
- Concrete
- Guard Railing
- Median Barrier
- Fence
- Masonry Wall
- Masonry Wall and Fence
- Retaining Wall
- Retaining Wall and Fence
- Retaining Wall and Masonry Wall
- Flowline (Natural and Manmade)
- 73.9 — Edge of Body of Water, Surface Hatched and Spot Elevation on Surface
- DECK — Deck, Building, Covered Porch or Parking
- DP, R — Dirt Pile, Rock
- POOL (P), SPA (S) — Pool, Spa
- Trees, Brush, or Vegetation over ½ contour interval in height
- Vineyard Row
- Cattle Guard
- Overhead Sign - Single Post
- Overhead Sign - Two Post
- Trail
- DIRT — Dirt Road

- Left Turn Lane Arrow
- HOV Lane (High Occupancy Vehicle)
- Drop Inlet, Round Drop Inlet
- Manhole
- Fire Hydrant
- VC, SP, WELL, UB, RS — Valve Cover, Stand Pipe, Well, Utility Box, Railroad Crossing Standard
- Utility Pole, Pole and Wires, Pole with Wires and Anchor
- Transmission Tower
- Electrolier, Electrolier on Pole
- TS, RS — Traffic Signal, Railroad Signal
- Call Box
- Signs - Single Post, Two Posts
- P — Single Tree, Palm
- Marsh or Swamp
- CC — Crash Cushion
- TANK, T — Tank

TOPOGRAPHY

- 324 — Index Contour
- Intermediate Contours
- 322 — Index Contour (Scale 1:500)
- GNV Contour (Ground Not Visible)
- Depression Contour
- GNV Depresion Contour
- 657.22 — Spot Elevation (at decimal point)

RAILROAD

- Scale 1:1000
- Scale 1:500, 1:200

CONTROL POINTS

- Horizontal and Vertial Control Point
- Horizontal Control Point
- Vertial Control Point

BOUNDARY LINE

- State
- County
- City
- Forest
- Subdivision, Section, Grant
- Rancho

WATER WAYS

- Rivers, Streams and Creeks - small (One Line)
- Rivers, Streams and Creeks - large (Two Lines) (which defines the water edge)
- Land / Ocean — Ocean -(Graduated Line Weights)
- Water Edge, Lake, Pond, Swamp

SYMBOLS (SHEET 2 OF 2)

C-10

FUNCTIONAL SUPERVISOR	JONATHAN LEE	REVISED BY	FJW
CALCULATED-DESIGNED BY	FRED J. WITTEBORN	DATE REVISED	2/13/13
CHECKED BY	JONATHAN LEE		

STATE OF CALIFORNIA - DEPARTMENT OF TRANSPORTATION
Caltrans DESIGN

LAST REVISION 02-13-13 | DATE PLOTTED => 17-MAY-2013 | TIME PLOTTED => 18:08

Dist	COUNTY	ROUTE	KILOMETER POST TOTAL PROJECT	SHEET No.	TOTAL SHEETS
04	Son	101	33.3	16	158

REGISTERED CIVIL ENGINEER 2/22/13 DATE

5-13-13
PLANS APPROVAL DATE

REGISTERED PROFESSIONAL ENGINEER Fred J. Witteborn No. 56272 Exp. 12-31-14 CIVIL STATE OF CALIFORNIA

THE STATE OF CALIFORNIA OR ITS OFFICERS OR AGENTS SHALL NOT BE RESPONSIBLE FOR THE ACCURACY OR COMPLETENESS OF ELECTRONIC COPIES OF THIS PLAN SHEET.

Caltrans Metric

CENTERLINES
(2 LANE HIGHWAYS)

DETAIL 1

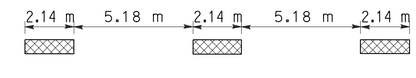

DETAIL 2

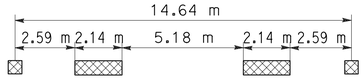

~~DETAIL 3~~ Detail 3 deleted

DETAIL 4

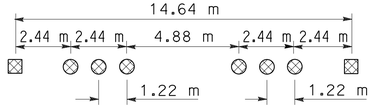

DETAIL 5

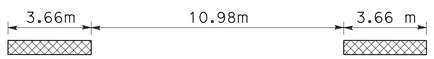

DETAIL 6

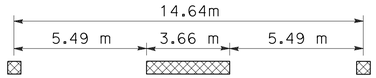

DETAIL 7

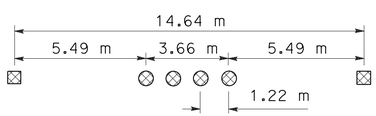

LANELINES
(MULTILANE HIGHWAYS)

DETAIL 8

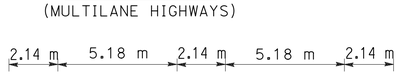

DETAIL 9

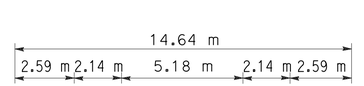

DETAIL 10

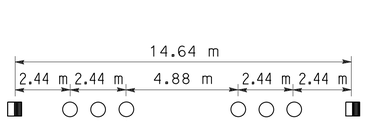

DETAIL 11

LANELINES (CONT)
(MULTILANE HIGHWAYS)

DETAIL 12

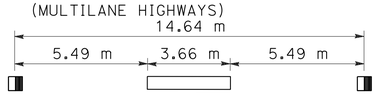

DETAIL 13

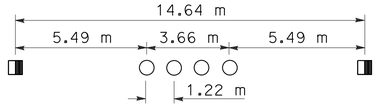

DETAIL 14

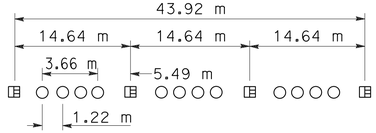

DETAIL 14A

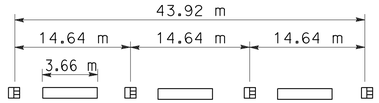

NO PASSING ZONES-ONE DIRECTION

DETAIL 15

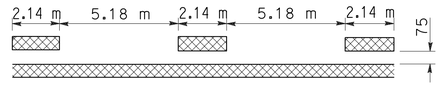

DETAIL 16

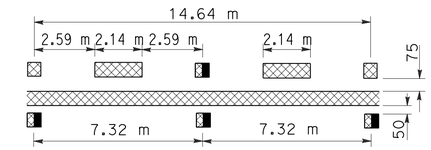

DETAIL 17

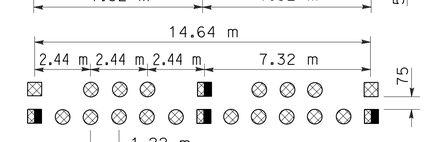

DETAIL 18

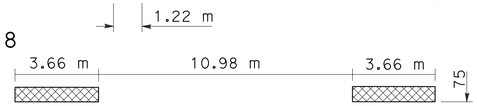

DETAIL 19

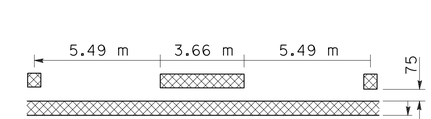

DETAIL 20

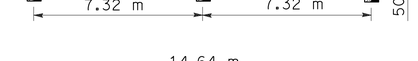

NO PASSING ZONES-TWO DIRECTION

DETAIL 21

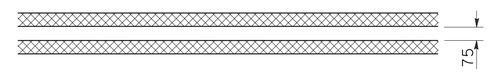

DETAIL 22

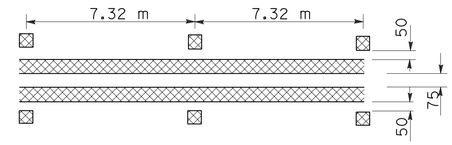

DETAIL 23

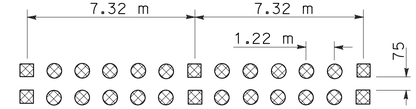

LEGEND

MARKERS

- TYPE A White Non-reflective
- TYPE AY Yellow Non-reflective
- TYPE C Red-clear Retroreflective
- TYPE D Two-way Yellow Retroreflective
- TYPE G One-way Clear Retroreflective
- TYPE H One-way Yellow Retroreflective

LINES

- 100 mm White
- 100 mm Yellow
- Direction of Travel

TYPICAL LANE LINE DELINEATION IN ADVANCE OF EXIT RAMP

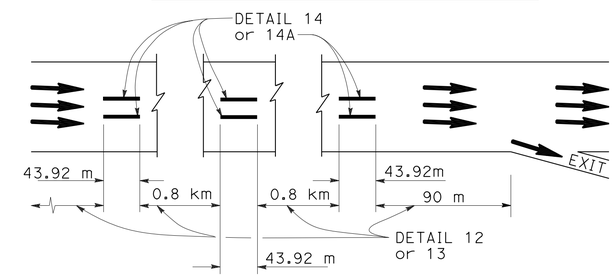

NOTE:
Detail 14 is to be used in combination with Detail 13. Detail 14A is to be used in combination with Detail 12.

MARKER DETAILS

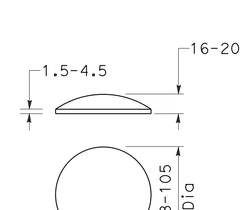

TYPE A & TYPE AY

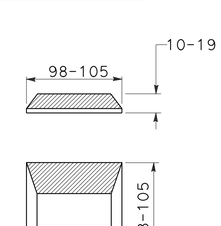

TYPE C & TYPE D

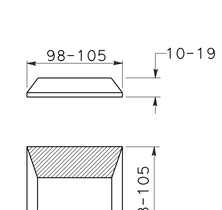

TYPE G & TYPE H

Retroreflective Face

ALL DIMENSIONS ARE IN MILLIMETERS UNLESS OTHERWISE SHOWN

PAVEMENT MARKERS AND TRAFFIC LINES TYPICAL DETAILS

NO SCALE

C-11

REVISED BY	DATE REVISED
FJW	2/13/13

FRED J. WITTEBORN — JONATHAN LEE

CALCULATED-DESIGNED BY — CHECKED BY

FUNCTIONAL SUPERVISOR: JONATHAN LEE

STATE OF CALIFORNIA - DEPARTMENT OF TRANSPORTATION — DESIGN

LAST REVISION 01-11-13 | DATE PLOTTED => 17-MAY-2013 | TIME PLOTTED => 8:08

Dist	COUNTY	ROUTE	KILOMETER POST TOTAL PROJECT	SHEET No.	TOTAL SHEETS
04	Son	101	33.3	17	158

REGISTERED CIVIL ENGINEER 2/22/13 DATE

5-13-13
PLANS APPROVAL DATE

REGISTERED PROFESSIONAL ENGINEER Fred J. Witteborn No. 56272 Exp. 12-31-14 CIVIL STATE OF CALIFORNIA

THE STATE OF CALIFORNIA OR ITS OFFICERS OR AGENTS SHALL NOT BE RESPONSIBLE FOR THE ACCURACY OR COMPLETENESS OF ELECTRONIC COPIES OF THIS PLAN SHEET.

Caltrans Metric

LEGEND

MARKERS

- TYPE AY Yellow Non-reflective
- TYPE D Two-way Yellow Retroreflective
- TYPE H One-way Yellow Retroreflective

LINES

- 100 mm White
- 100 mm Yellow
- Direction of Travel

LEFT EDGELINES

(DIVIDED HIGHWAYS)

DETAIL 24

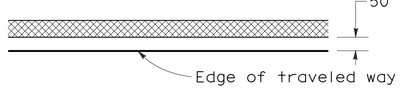

DETAIL 25

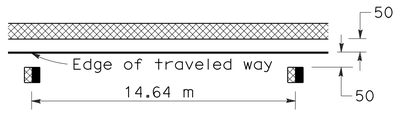

DETAIL 25A

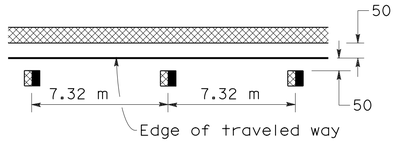

DETAIL 26

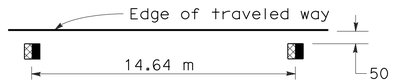

DETAIL 27

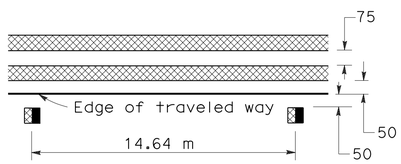

RIGHT EDGELINES

~~DETAIL 27A~~ Detail 27A deleted

DETAIL 27B

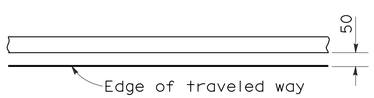

RIGHT EDGELINE EXTENSION THROUGH INTERSECTIONS

DETAIL 27C

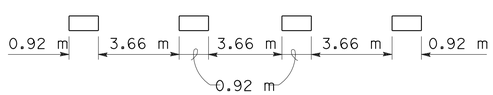

MEDIAN ISLANDS

DETAIL 28

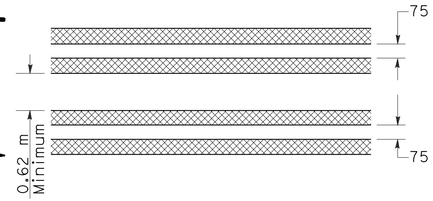

DETAIL 29

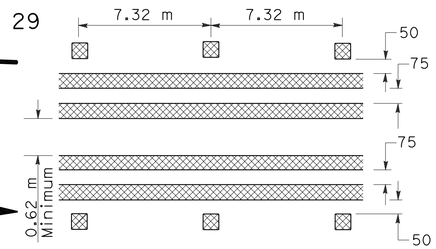

DETAIL 30

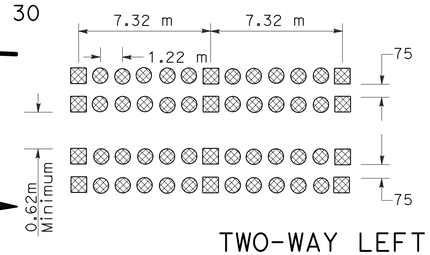

TWO-WAY LEFT TURN LANES

DETAIL 31

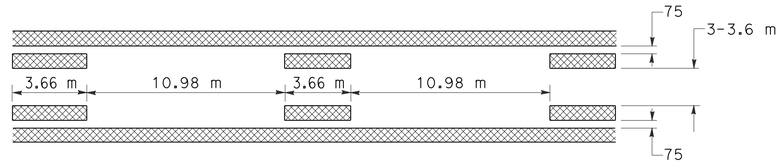

DETAIL 32

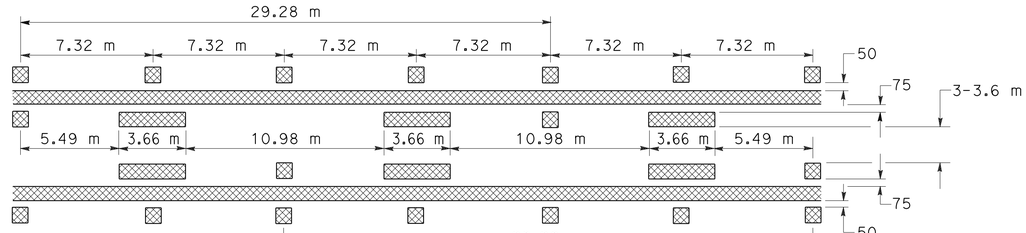

DETAIL 33

INTERSECTION TREATMENTS

DETAIL 34

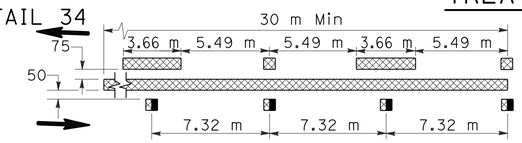

DETAIL 34A

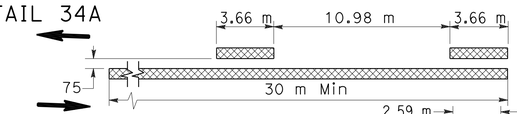

DETAIL 35

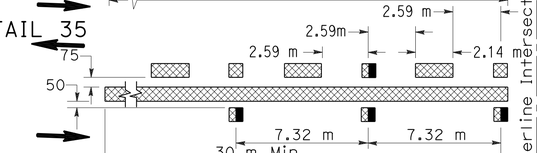

DETAIL 35A

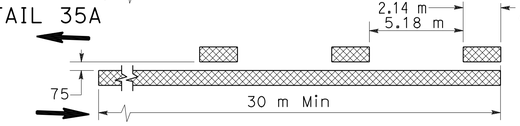

Centerline Intersecting Street

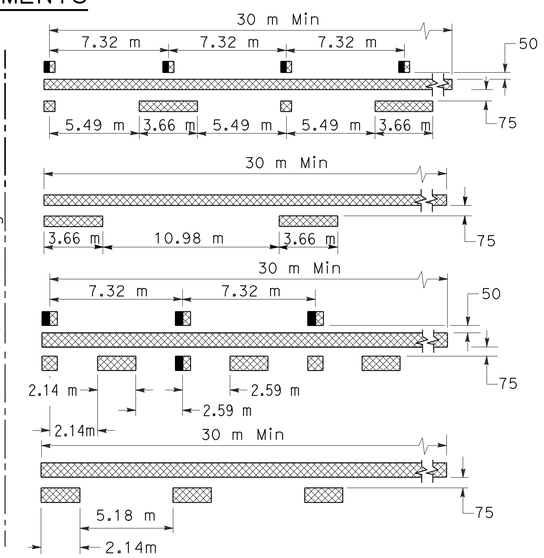

MARKER DETAILS

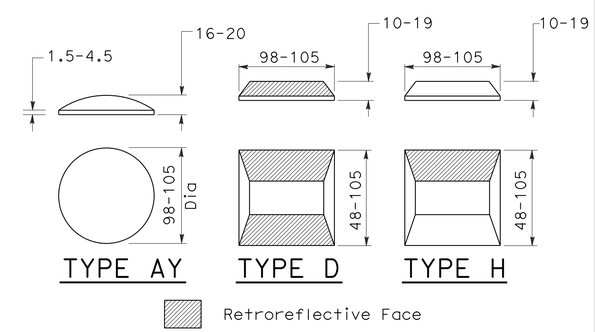

ALL DIMENSIONS ARE IN MILLIMETERS UNLESS OTHERWISE SHOWN

PAVEMENT MARKERS AND TRAFFIC LINES TYPICAL DETAILS

NO SCALE

C-12

REVISED BY	DATE REVISED
FJW	2/13/13

CALCULATED-DESIGNED BY: FRED J. WITTEBORN
CHECKED BY: JONATHAN LEE
FUNCTIONAL SUPERVISOR: JONATHAN LEE

STATE OF CALIFORNIA - DEPARTMENT OF TRANSPORTATION
Caltrans DESIGN

LAST REVISION 01-11-13 | DATE PLOTTED => 17-MAY-2013 | TIME PLOTTED => 18:08

Dist	COUNTY	ROUTE	KILOMETER POST TOTAL PROJECT	SHEET No.	TOTAL SHEETS
04	Son	101	33.3	18	158

REGISTERED CIVIL ENGINEER 2/22/13 DATE

5-13-13
PLANS APPROVAL DATE

REGISTERED PROFESSIONAL ENGINEER Fred J. Witteborn No. 56272 Exp. 12-31-14 CIVIL STATE OF CALIFORNIA

THE STATE OF CALIFORNIA OR ITS OFFICERS OR AGENTS SHALL NOT BE RESPONSIBLE FOR THE ACCURACY OR COMPLETENESS OF ELECTRONIC COPIES OF THIS PLAN SHEET.

Caltrans Metric

EXIT RAMP NEUTRAL AREA (GORE) TREATMENT

DETAIL 36

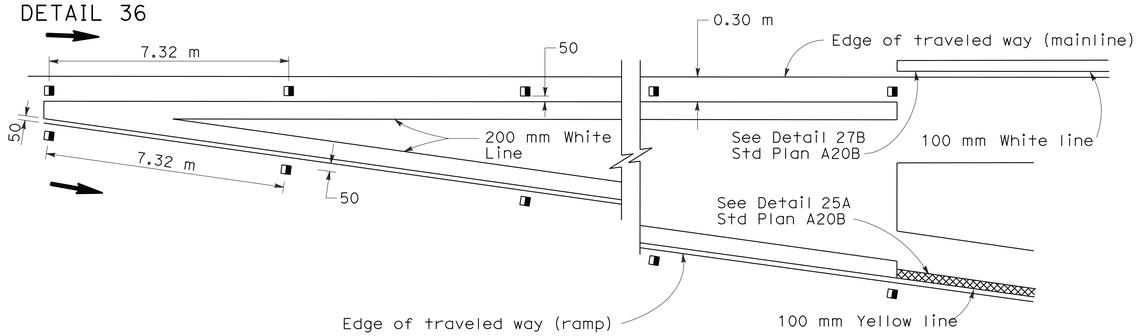

ENTRANCE RAMP NEUTRAL AREA (MERGE) TREATMENT

DETAIL 36A

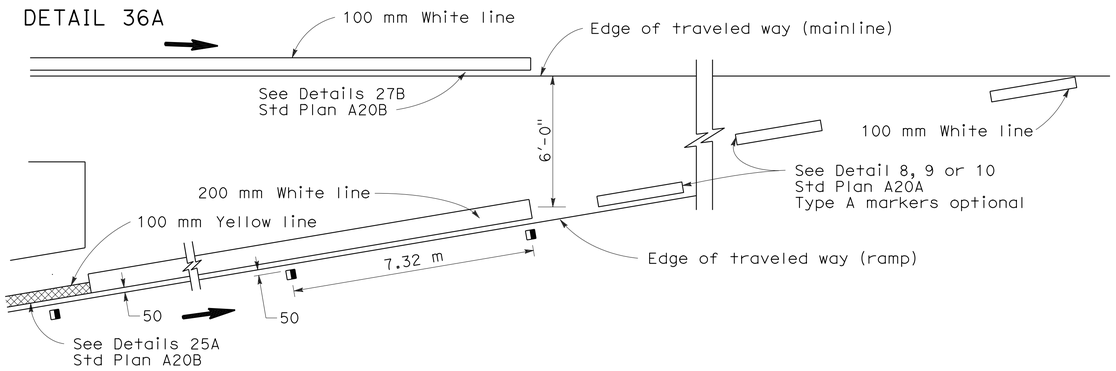

ENTRANCE RAMP NEUTRAL AREA (ACCELERATION LANE) TREATMENT

DETAIL 36B

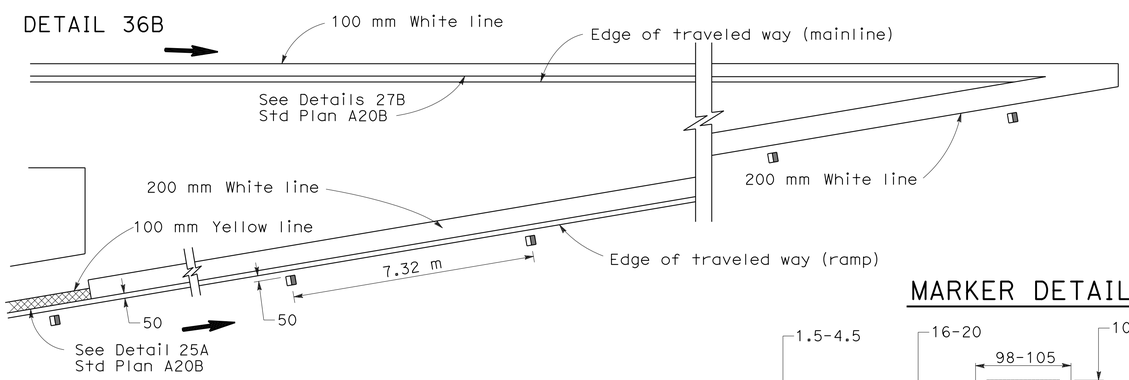

LANE DROP AT EXIT RAMPS

DETAIL 37

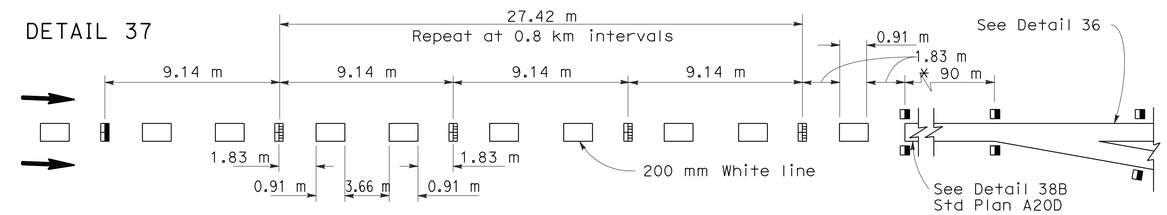

DETAIL 37A

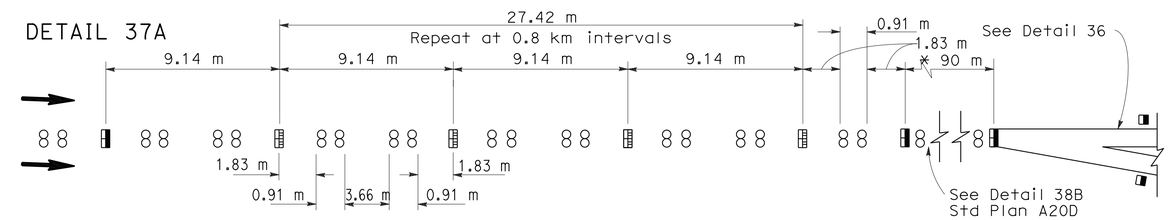

* The solid channelizing line shown may be omitted on short auxiliary lanes where weaving length is critical.

LANE DROP AT INTERSECTIONS

DETAIL 37B

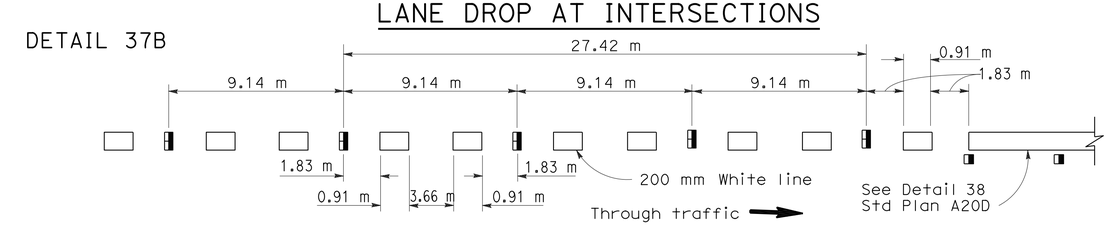

DETAIL 37C

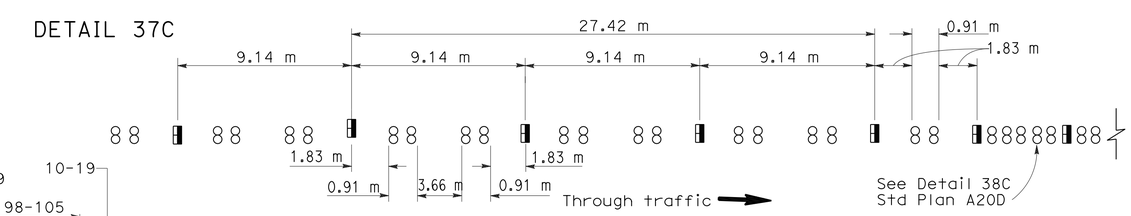

MARKER DETAILS

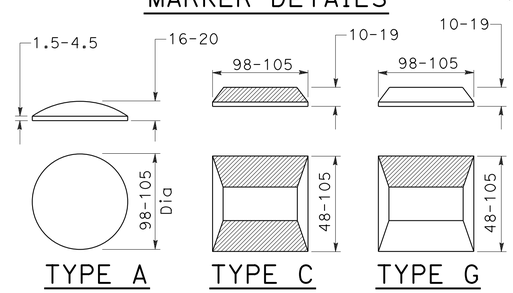

Retroreflective Face

LEGEND

MARKERS

- TYPE A White Non-reflective
- TYPE C Red-clear Retroreflective
- TYPE G One-way Clear Retroreflective
- Direction of Travel

ALL DIMENSIONS ARE IN MILLIMETERS UNLESS OTHERWISE SHOWN

PAVEMENT MARKERS AND TRAFFIC LINES TYPICAL DETAILS

NO SCALE

C-13

REVISED BY	DATE REVISED
FJW	2/13/13

FRED J. WITTEBORN — JONATHAN LEE

CALCULATED-DESIGNED BY — CHECKED BY

FUNCTIONAL SUPERVISOR — JONATHAN LEE

STATE OF CALIFORNIA - DEPARTMENT OF TRANSPORTATION — DESIGN

Caltrans

LAST REVISION 12-20-12 — DATE PLOTTED => 17-MAY-2013 — TIME PLOTTED => 18:08

Dist	COUNTY	ROUTE	KILOMETER POST TOTAL PROJECT	SHEET No.	TOTAL SHEETS
04	Son	101	33.3	19	158

REGISTERED CIVIL ENGINEER 2/22/13 DATE

5-13-13
PLANS APPROVAL DATE

REGISTERED PROFESSIONAL ENGINEER Fred J. Witteborn No. 56272 Exp. 12-31-14 CIVIL STATE OF CALIFORNIA

THE STATE OF CALIFORNIA OR ITS OFFICERS OR AGENTS SHALL NOT BE RESPONSIBLE FOR THE ACCURACY OR COMPLETENESS OF ELECTRONIC COPIES OF THIS PLAN SHEET.

Caltrans Metric

CHANNELIZING LINE

DETAIL 38

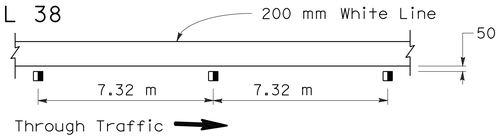

DETAIL 38A

DETAIL 38B

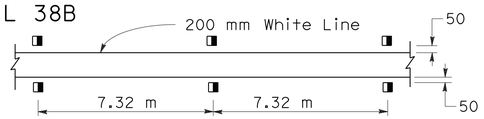

DETAIL 38C

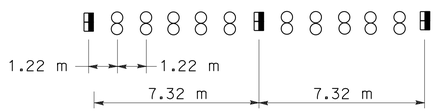

BIKE LANE LINE

DETAIL 39

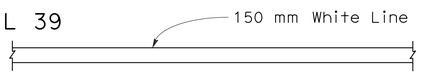

INTERSECTION LINE
BIKE LANE

DETAIL 39A

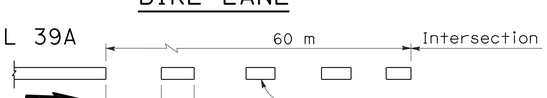

LEGEND

MARKERS

- TYPE A White Non-reflective
- TYPE AY Yellow Non-Reflective
- TYPE G One-way Clear Retroreflective
- 4" Yellow Line
- Direction of Travel

MARKER DETAILS

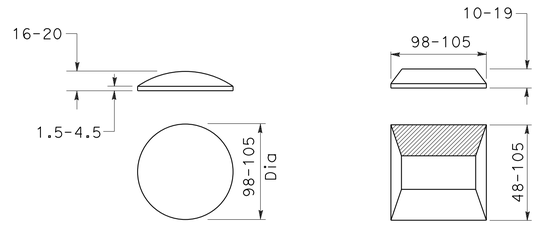

TYPE A & TYPE AY

TYPE G

Retroreflective Face

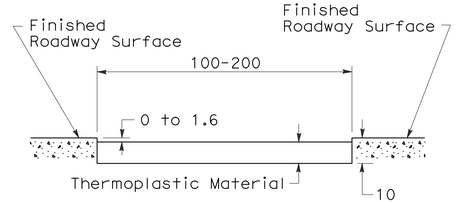

DETAIL FOR RECESSED THERMOPLASTIC TRAFFIC STRIPE

See Notes A and B.

RECESSED THERMOPLASTIC NOTES

A. See typical traffic line details for pavement marking patterns.

B. The top of the thermoplastic installed in recessed pavement shall be 0 to 1.6 mm below the pavement surface.

LANE LINE EXTENSIONS THROUGH INTERSECTIONS

DETAIL 40

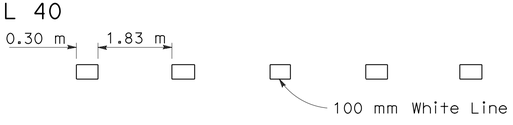

DETAIL 40A

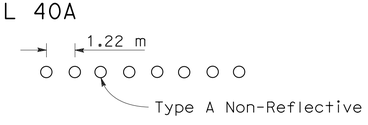

CENTER LINE EXTENSIONS THROUGH INTERSECTIONS

DETAIL 41

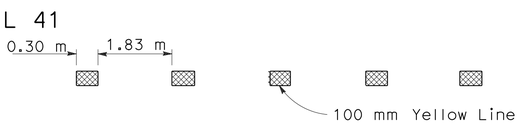

DETAIL 41A

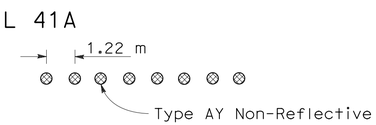

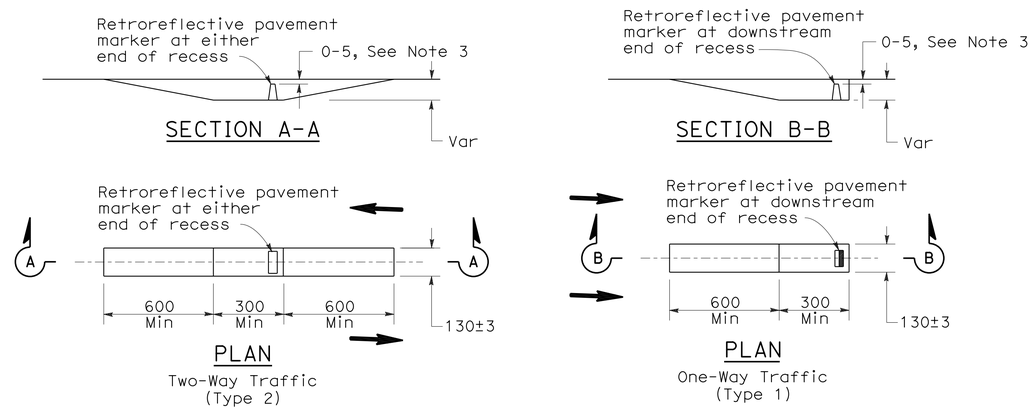

RECESS DETAIL FOR RETROREFLECTIVE PAVEMENT MARKER

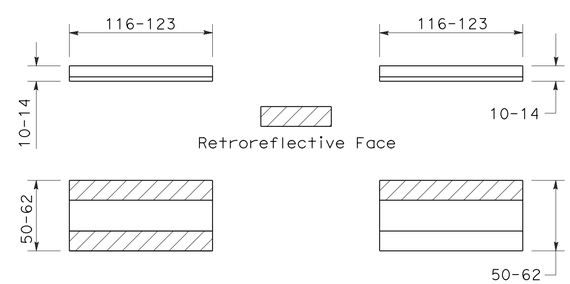

TYPE C & TYPE D

TYPE G & TYPE H

See Notes 1 and 2.

RETROREFLECTIVE PAVEMENT MARKER FOR RECESSED INSTALLATION

RECESSED MARKER NOTES:

1. See typical traffic line details for marker patterns to be used with recessed pavement markers. Detail 14A requires a Type 2 recess.
2. The retroreflective pavement markers shown for recessed installations are not to be used for non-recessed installations.
3. The top of pavement markers installed in recesses shall be 5 mm below the pavement surface.

ALL DIMENSIONS ARE IN MILLIMETERS UNLESS OTHERWISE SHOWN

PAVEMENT MARKERS AND TRAFFIC LINES TYPICAL DETAILS

NO SCALE

C-14

STATE OF CALIFORNIA - DEPARTMENT OF TRANSPORTATION
Caltrans DESIGN

FUNCTIONAL SUPERVISOR JONATHAN LEE
CALCULATED-DESIGNED BY FRED J. WITTEBORN
CHECKED BY JONATHAN LEE
REVISED BY FJW
DATE REVISED 2/13/13

LAST REVISION 01-11-13
DATE PLOTTED => 17-MAY-2013
TIME PLOTTED => 18:08

Dist	COUNTY	ROUTE	KILOMETER POST TOTAL PROJECT	SHEET No.	TOTAL SHEETS
04	Son	101	33.3	20	158

REGISTERED CIVIL ENGINEER 2/22/13 DATE

5-13-13
PLANS APPROVAL DATE

REGISTERED PROFESSIONAL ENGINEER Fred J. Witteborn No. 56272 Exp. 12-31-14 CIVIL STATE OF CALIFORNIA

THE STATE OF CALIFORNIA OR ITS OFFICERS OR AGENTS SHALL NOT BE RESPONSIBLE FOR THE ACCURACY OR COMPLETENESS OF ELECTRONIC COPIES OF THIS PLAN SHEET.

Caltrans Metric

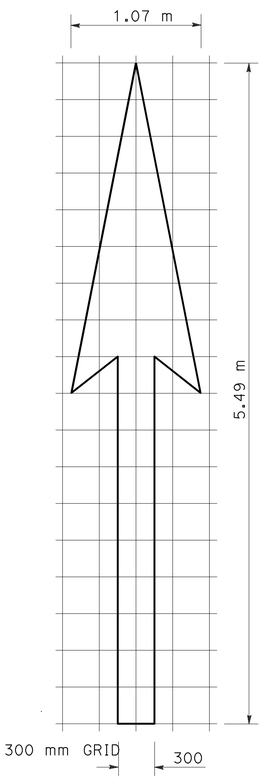

A= 2.32 m^2

TYPE I (5.49m) ARROW

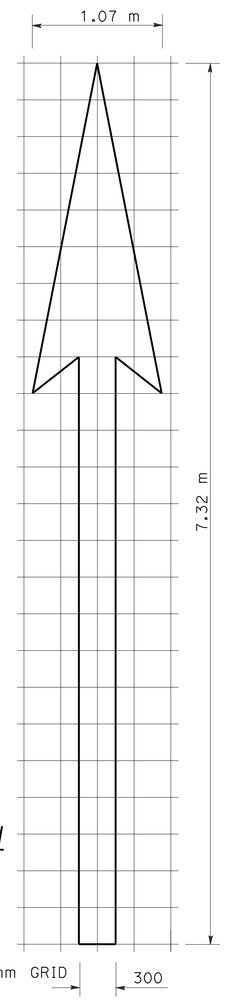

A=2.88 m^2

TYPE I (7.32m) ARROW

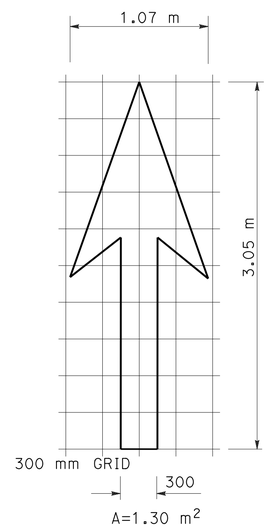

A=1.30 m^2

TYPE I 3.05 m ARROW

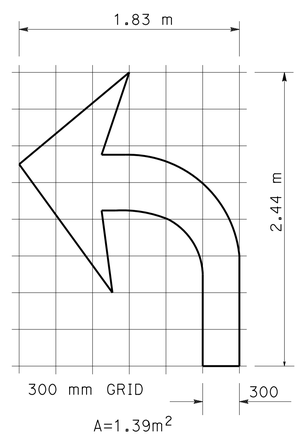

A=1.39m^2

TYPE IV (L) ARROW

(FOR TYPE IV (R) ARROW, USE MIRROR IMAGE)

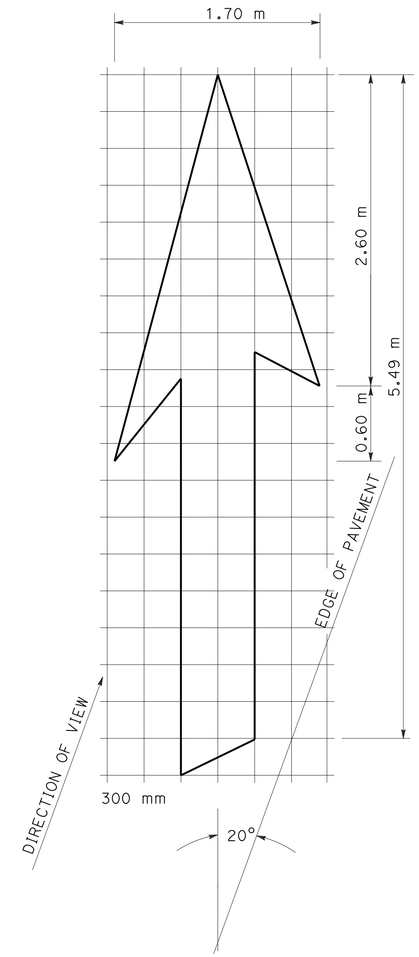

A=3.90 m^2

TYPE VI ARROW

RIGHT LANE DROP ARROW (FOR LEFT LANE, USE MIRROR IMAGE)

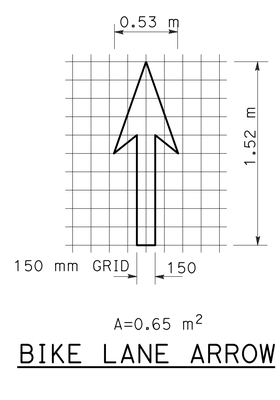

A=0.65 m^2

BIKE LANE ARROW

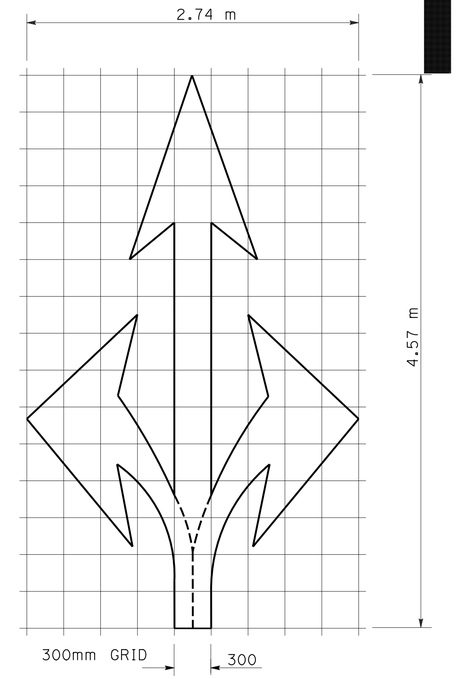

A=3.34 m^2

TYPE VIII ARROW

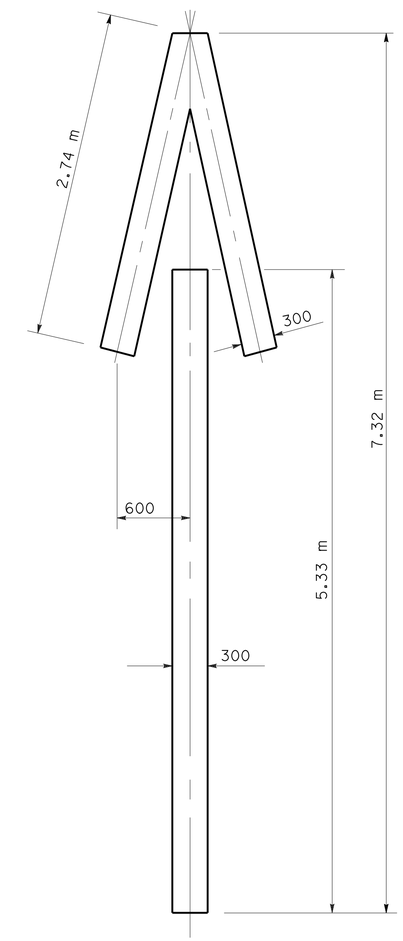

A=3.06 m^2

TYPE V ARROW

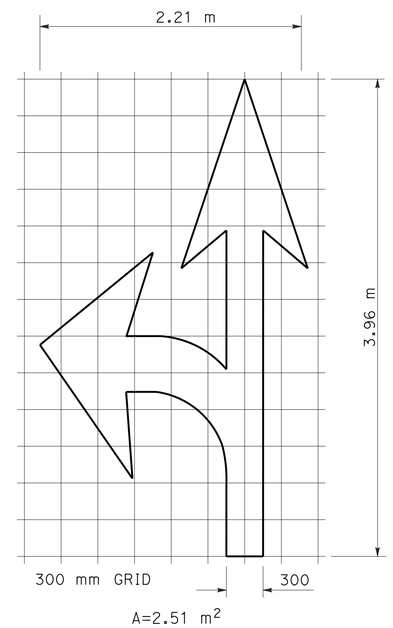

A=2.51 m^2

TYPE VII (L) ARROW

(FOR TYPE VII (R) ARROW, USE MIRROR IMAGE)

NOTE:

MINOR VARIATIONS IN DIMENSIONS MAY BE ACCEPTED BY THE ENGINEER.

ALL DIMENSIONS ARE IN MILLIMETERS UNLESS OTHERWISE SHOWN

PAVEMENT MARKINGS ARROWS

NO SCALE

C-15

FUNCTIONAL SUPERVISOR	JONATHAN LEE	REVISED BY	FJW
CALCULATED-DESIGNED BY	FRED J. WITTEBORN	DATE REVISED	2/13/13
CHECKED BY	JONATHAN LEE		

STATE OF CALIFORNIA - DEPARTMENT OF TRANSPORTATION

Caltrans DESIGN

LAST REVISION 02-13-13 | DATE PLOTTED => 17-MAY-2013 | TIME PLOTTED => 18:08

Dist	COUNTY	ROUTE	KILOMETER POST TOTAL PROJECT	SHEET No.	TOTAL SHEETS
04	Son	101	33.3	21	158

REGISTERED CIVIL ENGINEER 2/22/13 DATE

5-13-13
PLANS APPROVAL DATE

REGISTERED PROFESSIONAL ENGINEER Fred J. Witteborn No. 56272 Exp. 12-31-14 CIVIL STATE OF CALIFORNIA

THE STATE OF CALIFORNIA OR ITS OFFICERS OR AGENTS SHALL NOT BE RESPONSIBLE FOR THE ACCURACY OR COMPLETENESS OF ELECTRONIC COPIES OF THIS PLAN SHEET.

Caltrans Metric

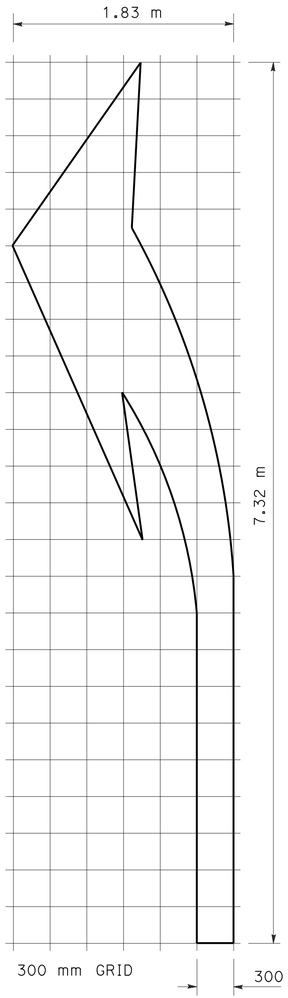

A=3.90 m^2

TYPE III (L) ARROW

(FOR TYPE III (R) USE MIRROR IMAGE)

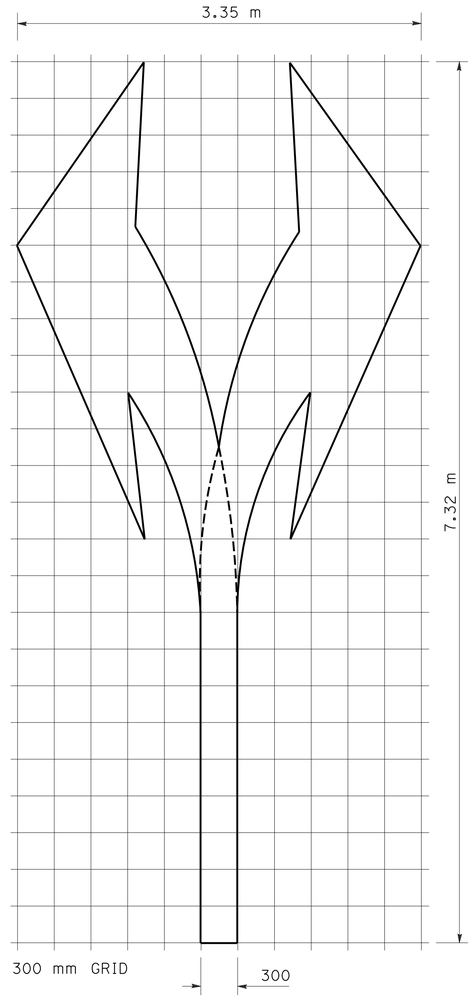

A=6.78 m^2

TYPE III (B) ARROW

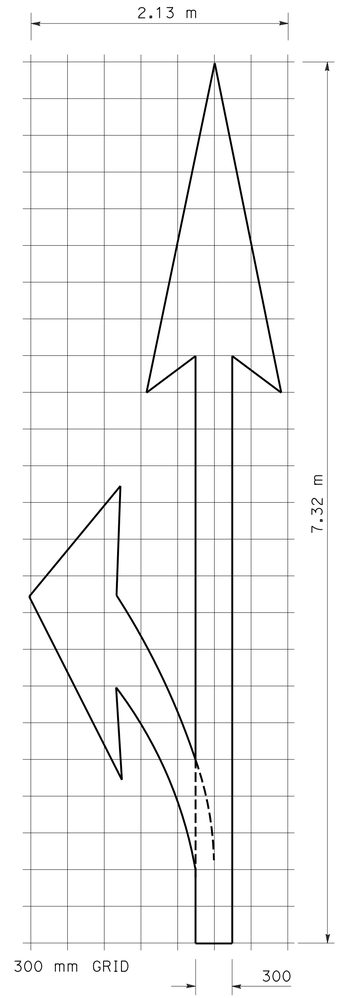

A=4.18 m^2

TYPE II (L) ARROW

(FOR TYPE II (R) USE MIRROR IMAGE)

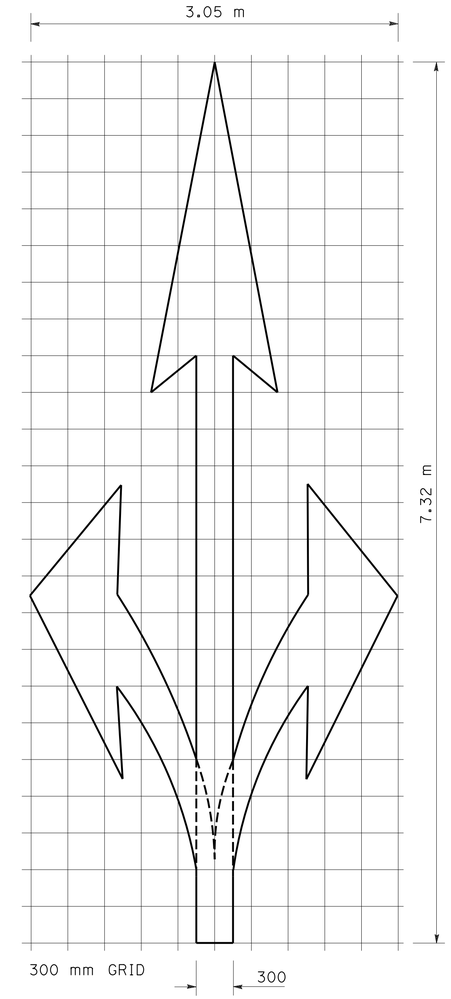

A=5.48 m^2

TYPE II (B) ARROW

NOTE:

MINOR VARIATIONS IN DIMENSIONS MAY BE ACCEPTED BY THE ENGINEER.

ALL DIMENSIONS ARE IN MILLIMETERS UNLESS OTHERWISE SHOWN

PAVEMENT MARKINGS ARROWS

NO SCALE

C-16

STATE OF CALIFORNIA - DEPARTMENT OF TRANSPORTATION
Caltrans DESIGN

FUNCTIONAL SUPERVISOR JONATHAN LEE

CALCULATED-DESIGNED BY FRED J. WITTEBORN
CHECKED BY JONATHAN LEE

REVISED BY FJW
DATE REVISED 2/13/13

LAST REVISION 12-20-12 DATE PLOTTED => 17-MAY-2013 TIME PLOTTED => 18:08

Dist	COUNTY	ROUTE	KILOMETER POST TOTAL PROJECT	SHEET No.	TOTAL SHEETS
04	Son	101	33.3	22	158

REGISTERED CIVIL ENGINEER 2/22/13 DATE

5-13-13
PLANS APPROVAL DATE

REGISTERED PROFESSIONAL ENGINEER Fred J. Witteborn No. 56272 Exp. 12-31-14 CIVIL STATE OF CALIFORNIA

THE STATE OF CALIFORNIA OR ITS OFFICERS OR AGENTS SHALL NOT BE RESPONSIBLE FOR THE ACCURACY OR COMPLETENESS OF ELECTRONIC COPIES OF THIS PLAN SHEET.

Caltrans Metric

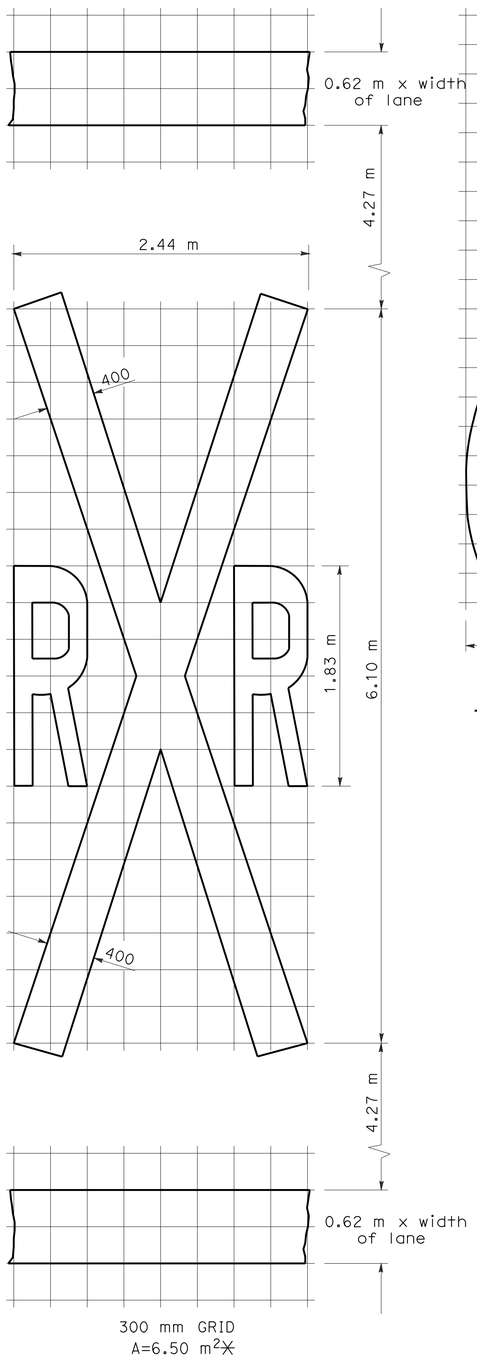

RAILROAD CROSSING SYMBOL

✳6.5 m² DOES NOT INCLUDE THE 0.6 m x VARIABLE WIDTH TRANSVERSE LINES.

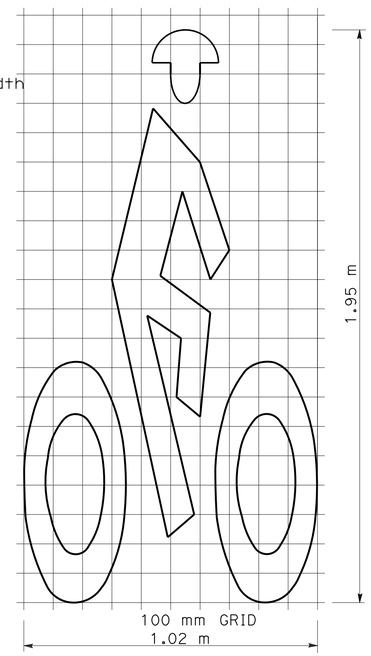

BIKE LANE SYMBOL

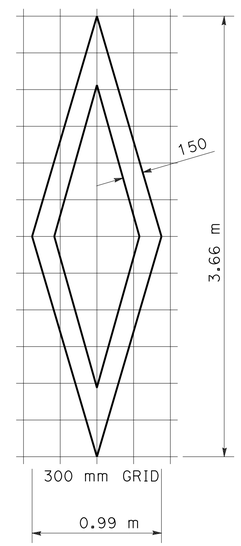

DIAMOND SYMBOL

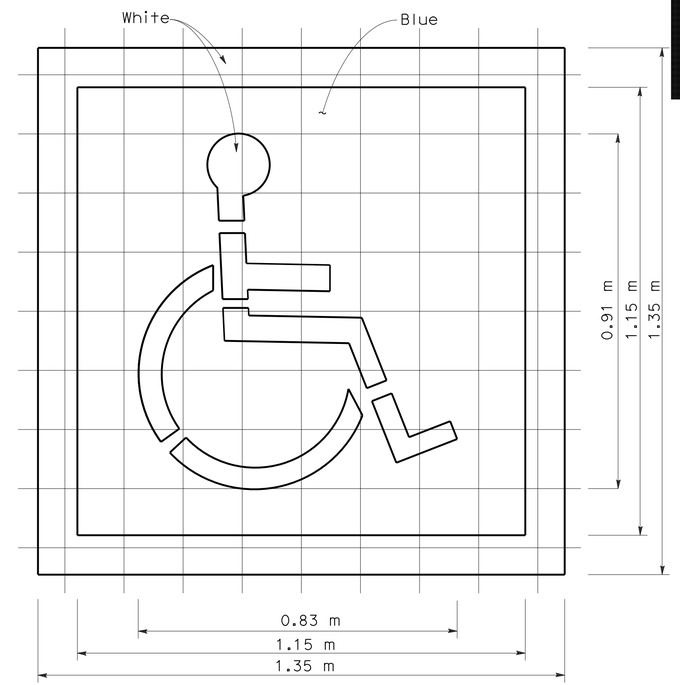

INTERNATIONAL SYMBOL OF ACCESSIBILITY MARKING

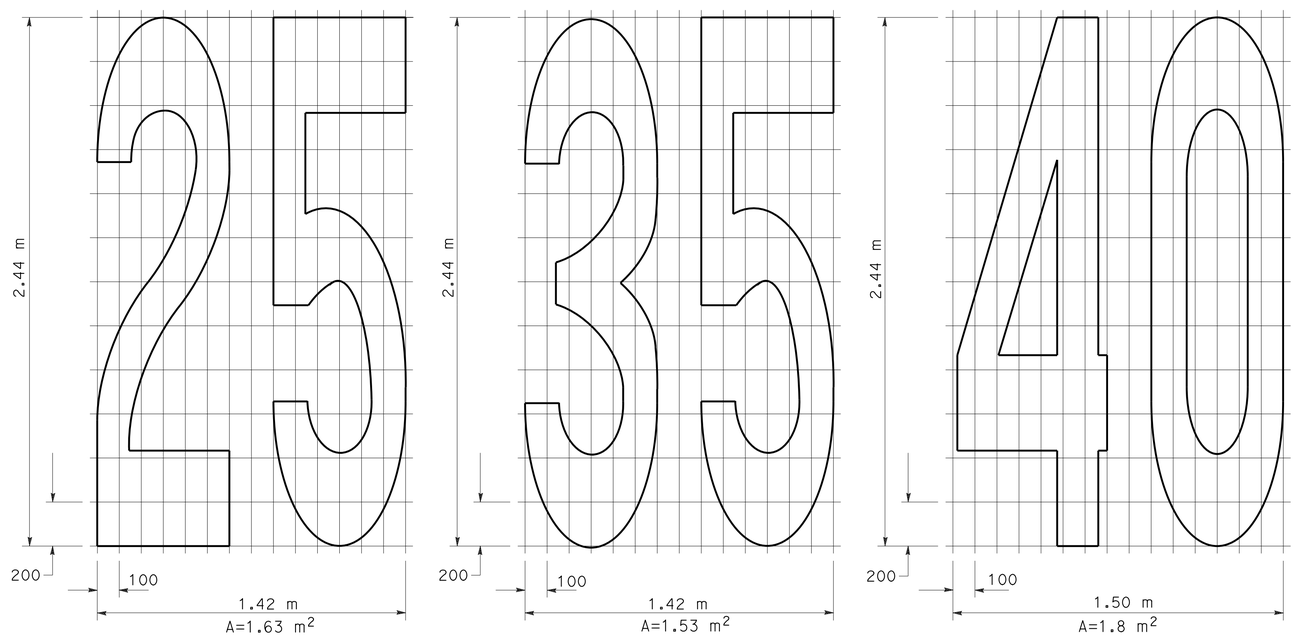

NUMERALS

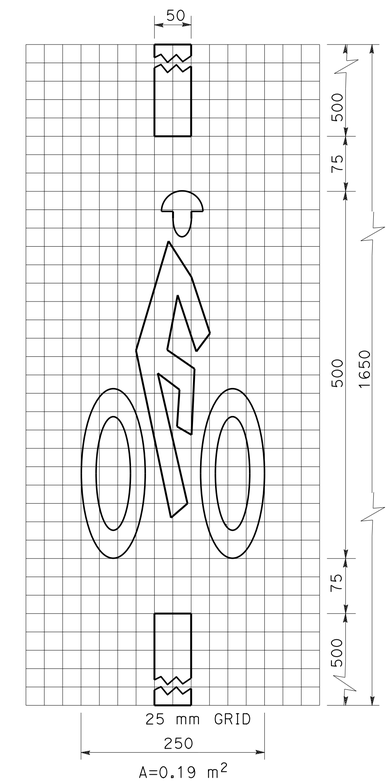

BICYCLE LOOP DETECTOR SYMBOL

NOTE:

1. Minor variations in dimensions may be accepted by the Engineer.

ALL DIMENSIONS ARE IN MILLIMETERS UNLESS OTHERWISE SHOWN

PAVEMENT MARKINGS SYMBOLS AND NUMERALS

NO SCALE

C-17

FRED J. WITTEBORN	REVISED BY	FJW	
JONATHAN LEE	DATE REVISED	2/13/13	
CALCULATED-DESIGNED BY			
CHECKED BY			
FUNCTIONAL SUPERVISOR			
JONATHAN LEE			

STATE OF CALIFORNIA - DEPARTMENT OF TRANSPORTATION
Caltrans DESIGN

LAST REVISION 02-13-13 | DATE PLOTTED => 17-MAY-2013 | TIME PLOTTED => 18:08

Dist	COUNTY	ROUTE	KILOMETER POST TOTAL PROJECT	SHEET No.	TOTAL SHEETS
04	Son	101	33.3	23	158

REGISTERED CIVIL ENGINEER 2/22/13 DATE

5-13-13
PLANS APPROVAL DATE

REGISTERED PROFESSIONAL ENGINEER Fred J. Witteborn No. 56272 Exp. 12-31-14 CIVIL STATE OF CALIFORNIA

THE STATE OF CALIFORNIA OR ITS OFFICERS OR AGENTS SHALL NOT BE RESPONSIBLE FOR THE ACCURACY OR COMPLETENESS OF ELECTRONIC COPIES OF THIS PLAN SHEET.

Caltrans Metric

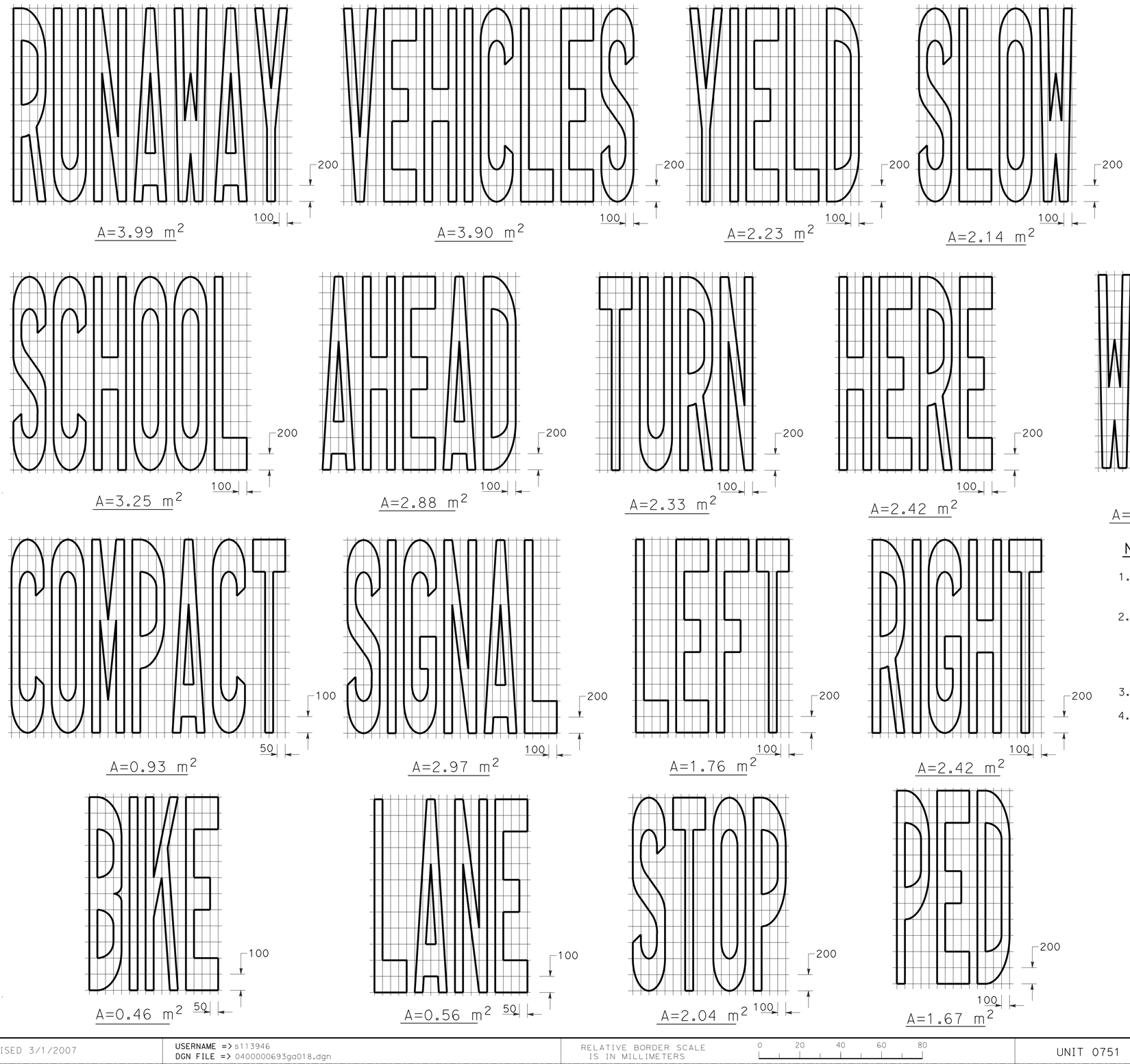

NOTES:

1. If a message consists of more than one word, it should read "UP", i.e., the first word should be nearest the driver.
2. The space between words should be at least four times the height of the characters for low speed roads, but not more than ten times the height of the characters. The space may be reduced appropriately where there is limited space because of local conditions.
3. Minor variations in dimensions may be accepted by the Engineer.
4. Portions of a letter, number or symbol may be separated by connecting segments not to exceed 50 mm in width.

WORD MARKINGS

ITEM	m^2	ITEM	m^2	ITEM	m^2	ITEM	m^2
XING	1.95	YIELD	2.23	BIKE	0.46	PED	1.67
AHEAD	2.88	SCHOOL	3.25	SLOW	2.14	COMPACT	0.93
WAIT	1.76	SIGNAL	2.97	STOP	2.04	RUNAWAY	3.99
LANE	0.56	TURN	2.23	LEFT	1.76	VEHICLES	3.90
RIGHT	2.42	HERE	2.42				

ALL DIMENSIONS ARE IN MILLIMETERS UNLESS OTHERWISE SHOWN

PAVEMENT MARKINGS WORDS

NO SCALE

C-18

STATE OF CALIFORNIA - DEPARTMENT OF TRANSPORTATION
Caltrans DESIGN

FUNCTIONAL SUPERVISOR JONATHAN LEE
CALCULATED-DESIGNED BY FRED J. WITTEBORN
CHECKED BY JONATHAN LEE
REVISED BY FJW
DATE REVISED 2/13/13

LAST REVISION 02-13-13 DATE PLOTTED => 17-MAY-2013 TIME PLOTTED => 18:08

Dist	COUNTY	ROUTE	KILOMETER POST TOTAL PROJECT	SHEET No.	TOTAL SHEETS
04	Son	101	33.3	24	158

REGISTERED CIVIL ENGINEER 2/22/13 DATE

5-13-13
PLANS APPROVAL DATE

REGISTERED PROFESSIONAL ENGINEER Fred J. Witteborn No. 56272 Exp. 12-31-14 CIVIL STATE OF CALIFORNIA

THE STATE OF CALIFORNIA OR ITS OFFICERS OR AGENTS SHALL NOT BE RESPONSIBLE FOR THE ACCURACY OR COMPLETENESS OF ELECTRONIC COPIES OF THIS PLAN SHEET.

Caltrans Metric

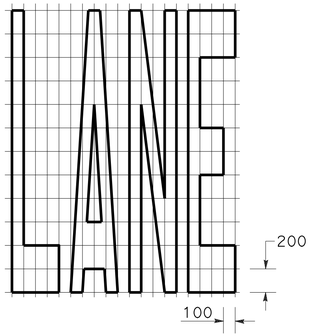

A=2.23 m^2

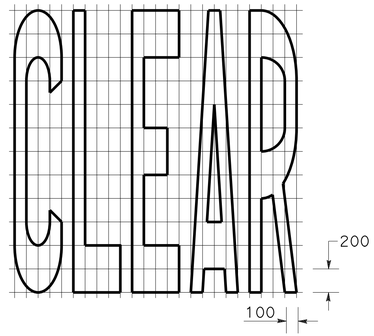

A=2.51 m^2

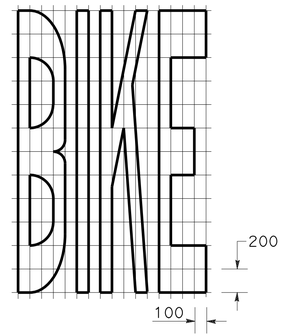

A=1.95 m^2

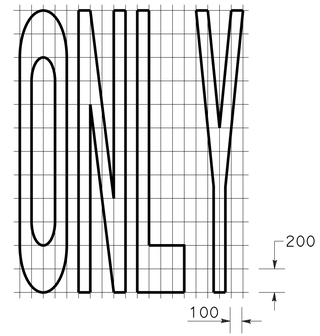

A=2.04 m^2

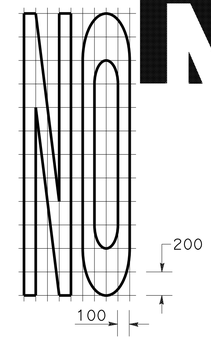

A=1.30 m^2

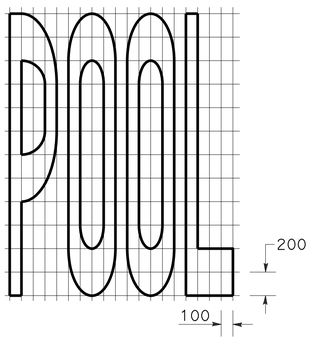

A=2.14 m^2

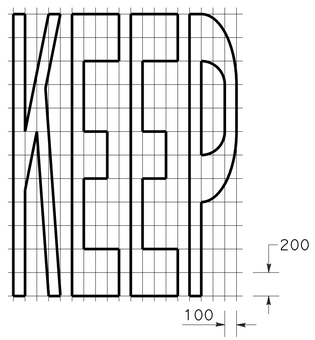

A=2.23 m^2

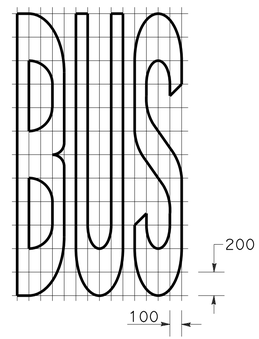

A=1.86 m^2

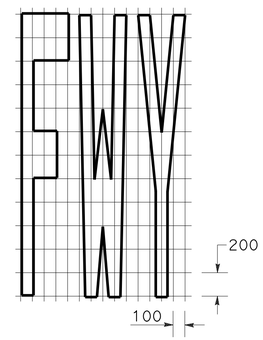

A=1.49 m^2

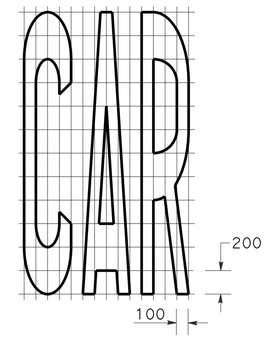

A=1.58 m^2

WORD MARKINGS			
ITEM	m^2	ITEM	m^2
LANE	2.33	NO	1.30
POOL	2.14	BIKE	1.95
CAR	1.58	BUS	1.86
CLEAR	2.51	ONLY	2.04
KEEP	2.23	FWY	1.49

See Notes 5 and 6

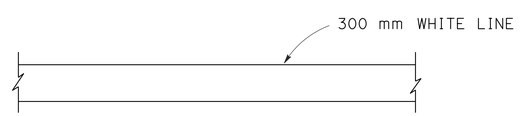

LIMIT LINE (STOP LINE)

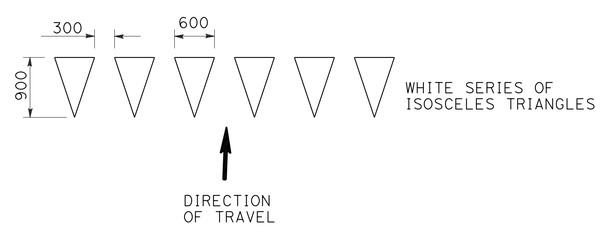

YIELD LINE

NOTES:

1. If a message consists of more than one word, it should read "UP", i.e., the first word should be nearest the driver.
2. The space between words should be at least four times the height of the characters for low speed roads, but not more than ten times the height of the characters. The space may be reduced appropriately where there is limited space because of local conditions.
3. Minor variations in dimensions may be accepted by the Engineer.
4. Portions of a letter, number or symbol may be separated by connecting segments not to exceed 50 mm in width.
5. The words "NO PARKING" pavement marking is to be used for parking facilities. For typical locations of markings, see Standard Plans A90A and A90B.
6. The words "NO PARKING", shall be painted in white letters no less than 300 mm high on a contrasting background and located so that it is visible to traffic enforcement officials.

ALL DIMENSIONS ARE IN MILLIMETERS UNLESS OTHERWISE SHOWN

PAVEMENT MARKINGS WORDS, LIMIT AND YIELD LINES

NO SCALE

C-19

REVISED BY	DATE REVISED
FJW	2/13/13

FRED J. WITTEBORN — CALCULATED-DESIGNED BY
JONATHAN LEE — CHECKED BY
FUNCTIONAL SUPERVISOR: JONATHAN LEE

STATE OF CALIFORNIA - DEPARTMENT OF TRANSPORTATION
Caltrans DESIGN

LAST REVISION 12-20-12 | DATE PLOTTED => 17-MAY-2013 | TIME PLOTTED => 18:08

Dist	COUNTY	ROUTE	KILOMETER POST TOTAL PROJECT	SHEET No.	TOTAL SHEETS
04	Son	101	33.3	25	158

REGISTERED CIVIL ENGINEER 2/22/13 DATE

5-13-13
PLANS APPROVAL DATE

REGISTERED PROFESSIONAL ENGINEER Fred J. Witteborn No. 56272 Exp. 12-31-14 CIVIL STATE OF CALIFORNIA

THE STATE OF CALIFORNIA OR ITS OFFICERS OR AGENTS SHALL NOT BE RESPONSIBLE FOR THE ACCURACY OR COMPLETENESS OF ELECTRONIC COPIES OF THIS PLAN SHEET.

Caltrans Metric

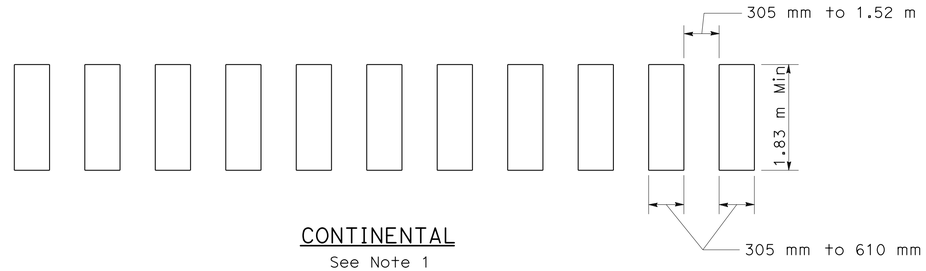

CONTINENTAL
See Note 1

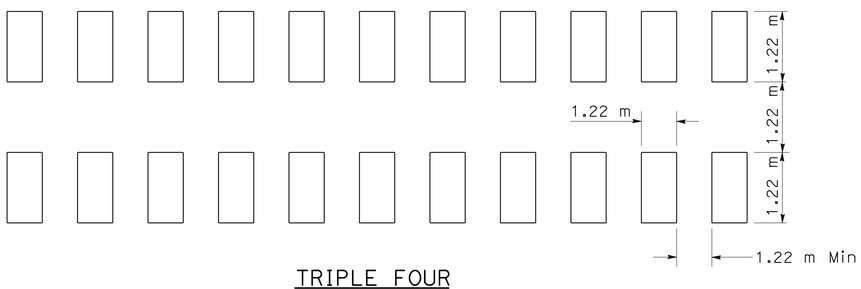

TRIPLE FOUR
See Note 1

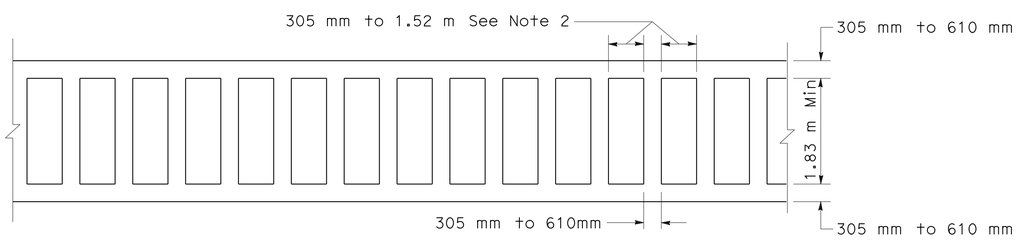

LADDER

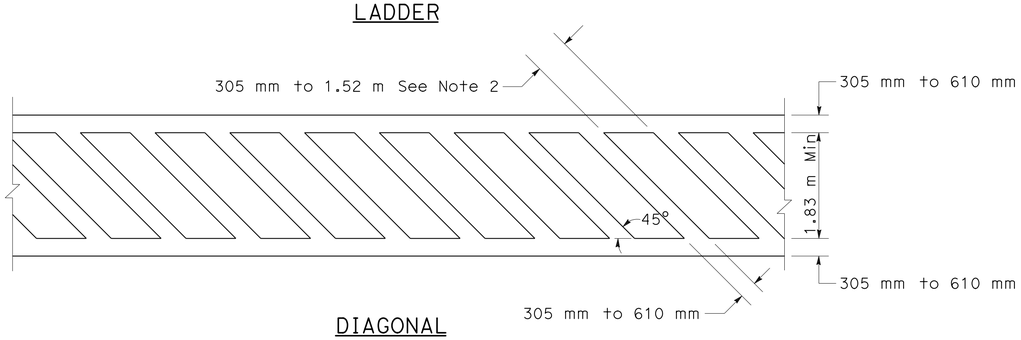

DIAGONAL

HIGHER VISIBILITY CROSSWALKS

NOTES:

1. Spaces between markings should be placed in wheel tracks of each lane.
2. Spacings not to exceed 2.5 times width of longitudinal line.
3. All crosswalk markings must be white except for those near schools must be yellow.

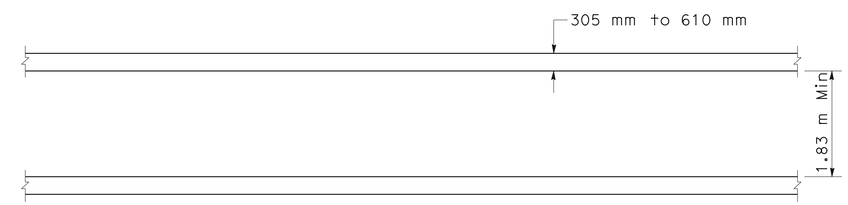

BASIC

ALL DIMENSIONS ARE IN MILLIMETERS UNLESS OTHERWISE SHOWN

PAVEMENT MARKINGS CROSSWALKS

NO SCALE

C-20

STATE OF CALIFORNIA - DEPARTMENT OF TRANSPORTATION
Caltrans DESIGN

FUNCTIONAL SUPERVISOR: JONATHAN LEE
CALCULATED-DESIGNED BY: FRED J. WITTEBORN
CHECKED BY: JONATHAN LEE
REVISED BY: FJW
DATE REVISED: 2/13/13

LAST REVISION 12-20-12
DATE PLOTTED => 17-MAY-2013
TIME PLOTTED => 18:08

Dist	COUNTY	ROUTE	KILOMETER POST TOTAL PROJECT	SHEET No.	TOTAL SHEETS
04	Son	101	33.3	26	158

REGISTERED CIVIL ENGINEER 2/22/13 DATE

5-13-13
PLANS APPROVAL DATE

REGISTERED PROFESSIONAL ENGINEER Fred J. Witteborn No. 56272 Exp. 12-31-14 CIVIL STATE OF CALIFORNIA

THE STATE OF CALIFORNIA OR ITS OFFICERS OR AGENTS SHALL NOT BE RESPONSIBLE FOR THE ACCURACY OR COMPLETENESS OF ELECTRONIC COPIES OF THIS PLAN SHEET.

Caltrans Metric

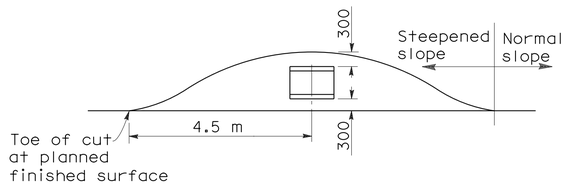

PLAN
See Note 2

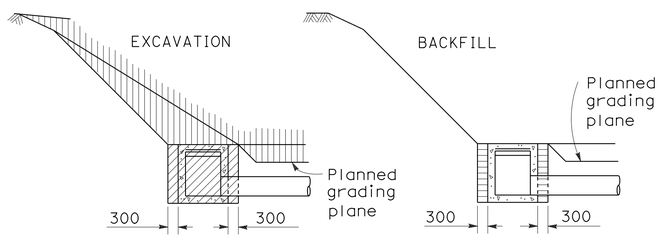

SECTION
RECESSES AT DRAINAGE INLETS

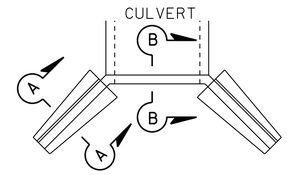

PLAN OF WING WALL

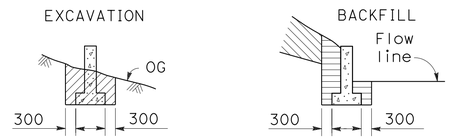

SECTION A-A

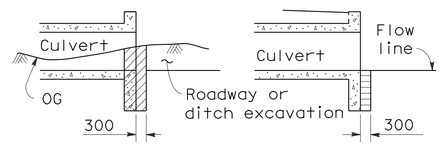

SECTION B-B
WING WALLS

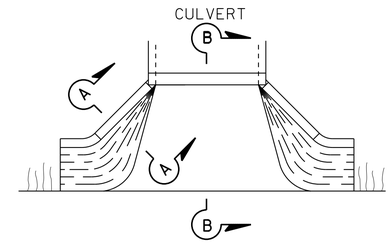

PLAN OF WARPED WING WALL

SECTION A-A

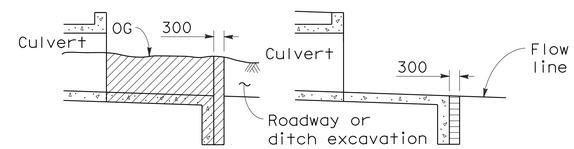

SECTION B-B
WARPED WING WALLS

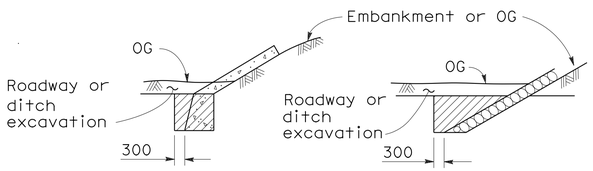

SLOPE PROTECTION
See Note 3

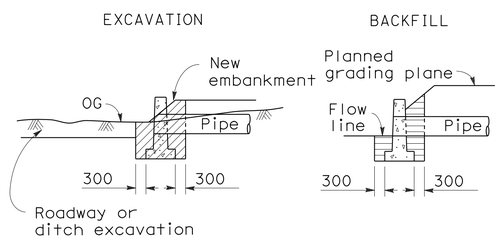

PIPE HEADWALLS

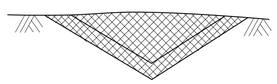

PAVED OR LINED DITCH

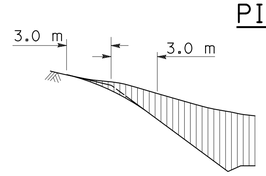

SLOPE ROUNDING

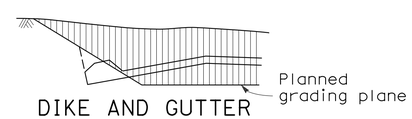

DIKE AND GUTTER

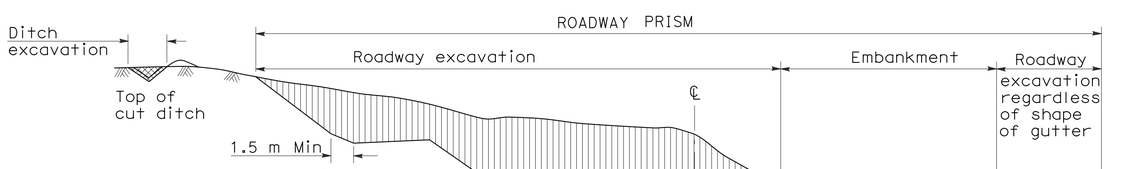

ROADWAY EXCAVATION - DITCH EXCAVATION

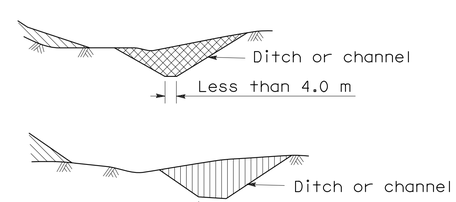

NOTES:

1. This drawing indicates the work to be done and limits of payment for:
   Roadway Excavation
   Ditch Excavation
   Structure Excavation for Slope Protection
2. Slopes and dimensions may vary to fit field conditions.
3. Top limit of structure excavation is original ground if ditch is not excavated.

LEGEND

- Structure Excavation
- Structure Backfill
- Ditch Excavation
- Slope Protection
- Roadway Excavation
- Roadway Embankment
- Original Ground

ALL DIMENSIONS ARE IN MILLIMETERS UNLESS OTHERWISE SHOWN

EXCAVATION AND BACKFILL MISCELLANEOUS DETAILS

NO SCALE

C-21

CALCULATED-DESIGNED BY	FUJW	REVISED BY	2/13/13 DATE REVISED
CHECKED BY	FRED J. WITTEBORN		
FUNCTIONAL SUPERVISOR	JONATHAN LEE		
	JONATHAN LEE		

STATE OF CALIFORNIA - DEPARTMENT OF TRANSPORTATION
Caltrans DESIGN

LAST REVISION 12-27-12 | DATE PLOTTED => 17-MAY-2013 | TIME PLOTTED => 18:08

Dist	COUNTY	ROUTE	KILOMETER POST TOTAL PROJECT	SHEET No.	TOTAL SHEETS
04	Son	101	33.3	27	158

REGISTERED CIVIL ENGINEER 2/22/13 DATE

5-13-13
PLANS APPROVAL DATE

REGISTERED PROFESSIONAL ENGINEER Fred J. Witteborn No. 56272 Exp. 12-31-14 CIVIL STATE OF CALIFORNIA

THE STATE OF CALIFORNIA OR ITS OFFICERS OR AGENTS SHALL NOT BE RESPONSIBLE FOR THE ACCURACY OR COMPLETENESS OF ELECTRONIC COPIES OF THIS PLAN SHEET.

Caltrans Metric

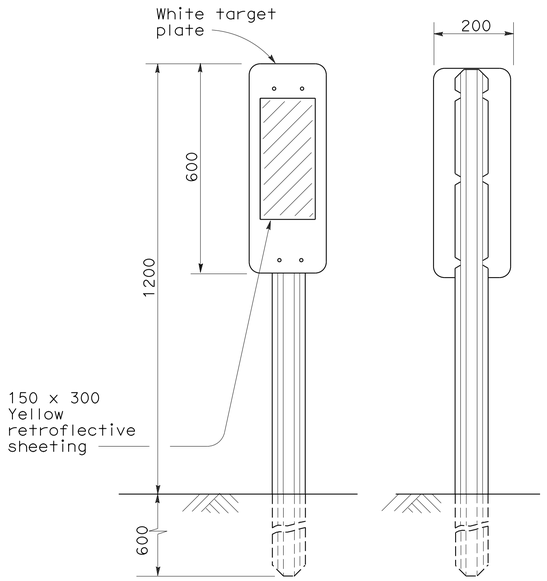

FRONT BACK

TYPE L-1 (CA)

See Note 1

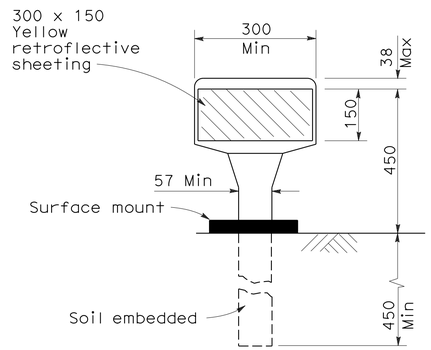

TYPE K-1 (CA)

(Flexible post with horizonal orientation of sheeting)

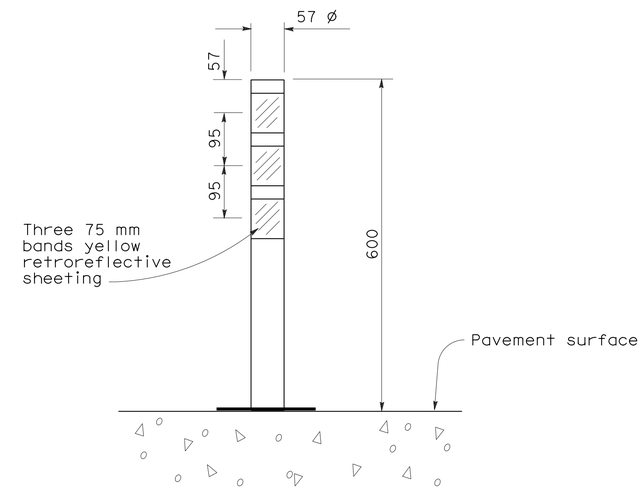

TYPE Q (CA)

(Tubular flexible post surface mount)

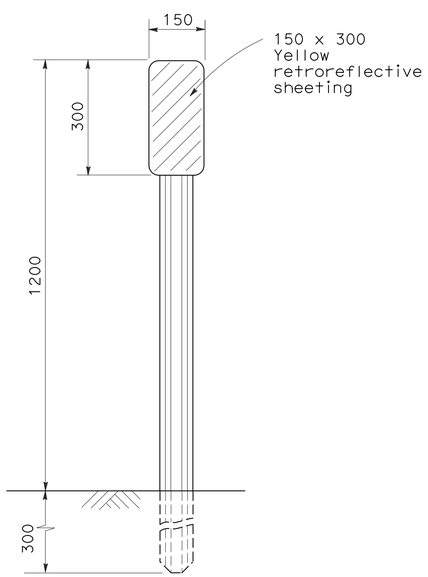

TYPE L-2 (CA)

See Note 1

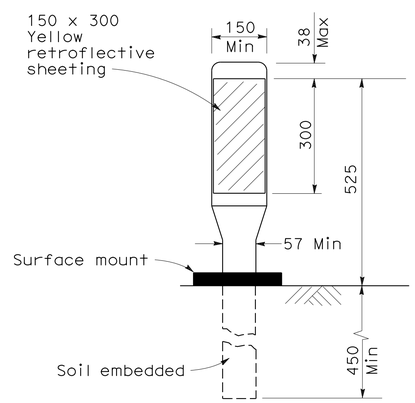

TYPE K-2 (CA)

(Flexible post with vertical orientation of sheeting)

NOTE:

1. See Sheet C-23 for metal post details and additional markers.

ALL DIMENSIONS ARE IN MILLIMETERS UNLESS OTHERWISE SHOWN

OBJECT MARKERS

NO SCALE

C-22

REVISED BY	FJW	CALCULATED-DESIGNED BY	FRED J. WITTEBORN
DATE REVISED	2/13/13	CHECKED BY	JONATHAN LEE
FUNCTIONAL SUPERVISOR	JONATHAN LEE		

STATE OF CALIFORNIA - DEPARTMENT OF TRANSPORTATION
Caltrans DESIGN

LAST REVISION 02-13-13 | DATE PLOTTED => 17-MAY-2013 | TIME PLOTTED => 18:08

Dist	COUNTY	ROUTE	KILOMETER POST TOTAL PROJECT	SHEET No.	TOTAL SHEETS
04	Son	101	33.3	28	158

REGISTERED CIVIL ENGINEER 2/22/13 DATE

5-13-13
PLANS APPROVAL DATE

REGISTERED PROFESSIONAL ENGINEER Fred J. Witteborn No. 56272 Exp. 12-31-14 CIVIL STATE OF CALIFORNIA

THE STATE OF CALIFORNIA OR ITS OFFICERS OR AGENTS SHALL NOT BE RESPONSIBLE FOR THE ACCURACY OR COMPLETENESS OF ELECTRONIC COPIES OF THIS PLAN SHEET.

Caltrans Metric

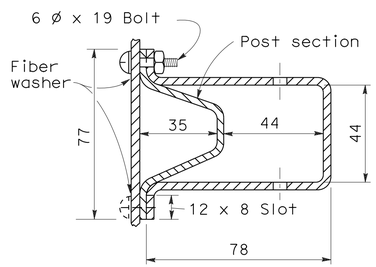

TOP VIEW

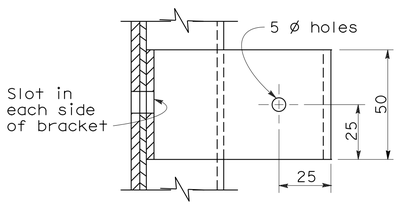

Bracket to be 3.2 x 50 mild steel galvanized after fabrication

SIDE VIEW

SNOW POLE BRACKET

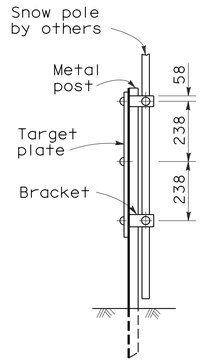

POST SIDE VIEW

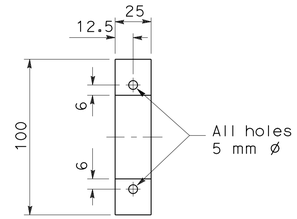

SIDE VIEW

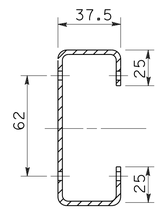

TOP VIEW

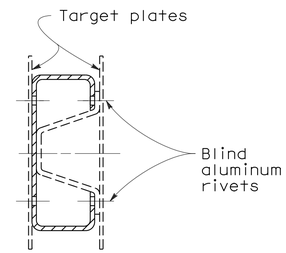

Material:
Aluminum 1.25 mm thick
(3003-H14 Alloy)

TWO PLATE POST MOUNT

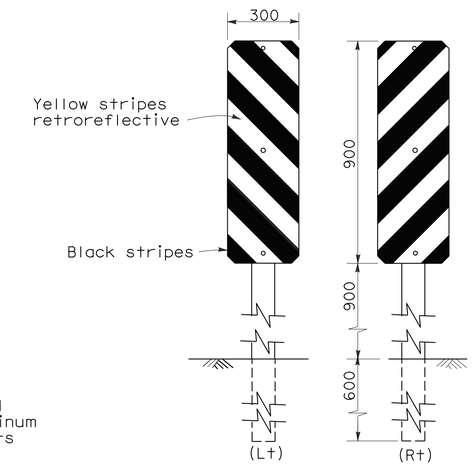

TYPE P (CA)

NOTES:

A. See Sheet C-22 for additional object markers.

B. Type P and R markers shall have orange and white retroreflective stripes in work zones.

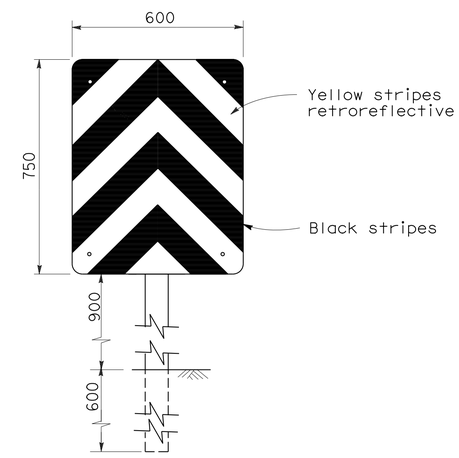

TYPE R (CA)

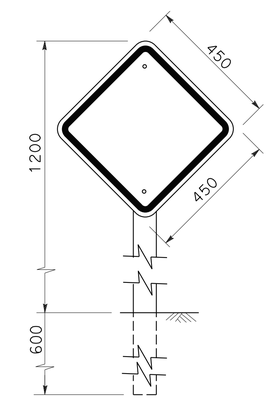

TYPE N-1 (CA), N-2 (CA), N-3 (CA)

N-1. Yellow retroreflective background with black border.
N-2. Red retroreflective background with black border.
N-3. Orange retroreflective background with black border.

OBJECT MARKERS

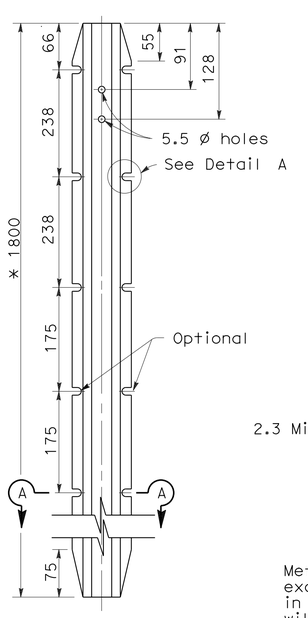

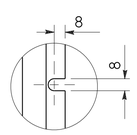

DETAIL A

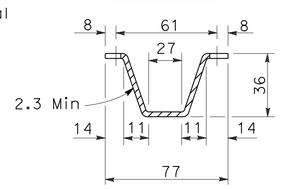

SECTION A-A

Metal post to be as shown except that minor variations in design and dimensions will be permitted to meet manufacturer's standards.

2400 mm for Type P object marker

METAL POST DETAIL

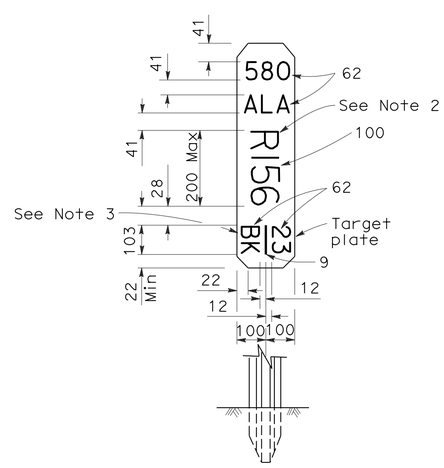

FRONT

BACK

HIGHWAY POST MARKER

HIGHWAY POST MARKER NOTES:

1. The marker shall be white (non-reflective) target plate with black Series D numerals and letters.
2. A post mile prefix, such as "R", shall apply only when directed by the Engineer.
3. "BK"(Back), "AH" (Ahead), or a blank space shall apply as directed by the Engineer.
4. All information shall be in U.S. Customary units (miles).

ALL DIMENSIONS ARE IN MILLIMETERS UNLESS OTHERWISE SHOWN

MARKERS

NO SCALE

C-23

FRED J. WITTEBORN	FJW
JONATHAN LEE	2/13/13
REVISED BY	DATE REVISED
CALCULATED-DESIGNED BY	
CHECKED BY	
FUNCTIONAL SUPERVISOR	
JONATHAN LEE	

STATE OF CALIFORNIA - DEPARTMENT OF TRANSPORTATION
Caltrans DESIGN

LAST REVISION 02-13-13 | DATE PLOTTED => 17-MAY-2013 | TIME PLOTTED => 18:08

Dist	COUNTY	ROUTE	KILOMETER POST TOTAL PROJECT	SHEET No.	TOTAL SHEETS
04	Son	101	33.3	29	158

REGISTERED CIVIL ENGINEER 2/22/13 DATE

5-13-13
PLANS APPROVAL DATE

REGISTERED PROFESSIONAL ENGINEER Fred J. Witteborn No. 56272 Exp. 12-31-14 CIVIL STATE OF CALIFORNIA

THE STATE OF CALIFORNIA OR ITS OFFICERS OR AGENTS SHALL NOT BE RESPONSIBLE FOR THE ACCURACY OR COMPLETENESS OF ELECTRONIC COPIES OF THIS PLAN SHEET.

Caltrans Metric

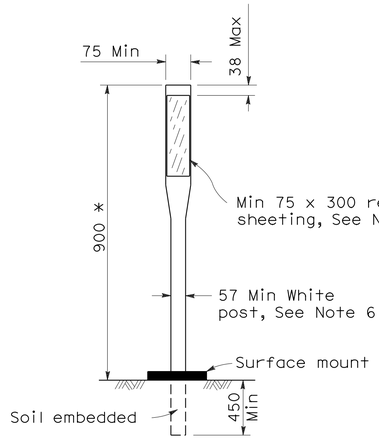

* 36" Min where speeds are 40 miles/h or less.

CHANNELIZERS

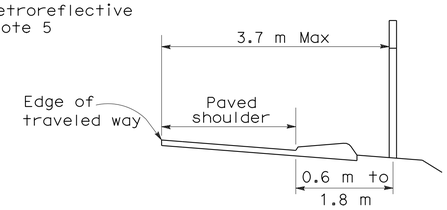

DELINEATOR POSITIONING

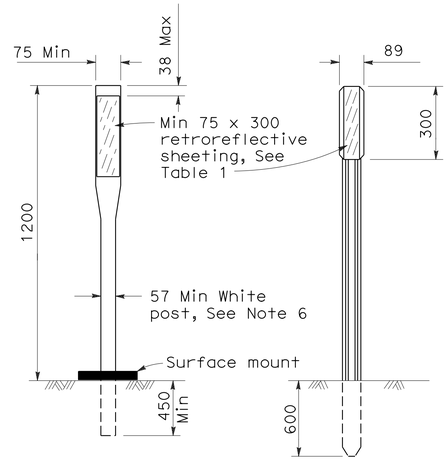

CLASS 1 FLEXIBLE POST

CLASS 2 METAL POST
See Note 4

DELINEATORS

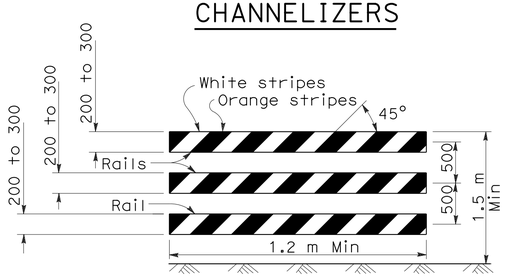

TYPE III BARRICADE

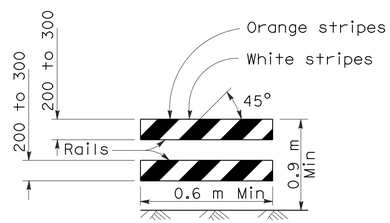

TYPE II BARRICADE

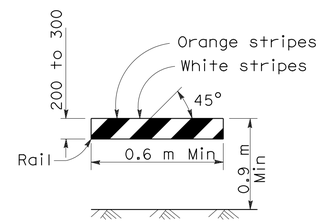

TYPE I BARRICADE
See Note A

BARRICADES (See Note 3)

Only face of rails shown. Barricade construction materials and supports as specified in the specifications.

TABLE 2 - BARRICADES

BARRICADE	TYPE I	TYPE II	TYPE III
Width of Rail	200 Min - 300 Max *	200 Min - 300 Max *	200 Min - 300 Max *
Length of Rail	0.6 m Min	0.6 m Min	1.2 m Min
Width of Stripes * *	150	150	150
Height	0.9 m Min	0.9 m Min	1.5 m Min
Number of Retroreflective Rail Faces	2 (one each direction)	4 (two each direction)	3 if facing traffic in one direction 6 if facing traffic in two direction

* For the wooden option dimensions are nominal lumber dimensions.
* * For rails less than 900 mm long, 100 mm wide stripes shall be used.

NOTE A:

Barricades to have a minimum of 0.17 m^2 of retroreflective area facing traffic when used on freeways, expressways, and other high speed highways.

TABLE I- DELINEATORS

TYPE	RETROREFLECTIVE SHEETING	
	FRONT	BACK
E	White	White (See Note 1)
F	White	None
G	Yellow	None
I	Yellow	Yellow (See Note 1)
J	Red	None

NOTES:

1. The retroreflective sheeting used on the back of delineator shall be a minimum size of 75 mm x 75 mm
2. The type of delineator to be installed will be designated on the plans.
3. All barricade stripes shall be retroreflective.
4. See Sheet C-23 for Metal Post Details.
5. Unless shown otherwise on the plans, or as directed by the Engineer, the color of the retroreflective sheeting for permanent channelizers shall conform to the color of the pavement markings it supplements.
6. Except, Class 1 (Flexible Post) temporary delineators and temporary channelizers in work zones shall be orange post with white retroreflective sheeting.

ALL DIMENSIONS ARE IN MILLIMETERS UNLESS OTHERWISE SHOWN

DELINEATORS, CHANNELIZERS AND BARRICADES

NO SCALE

C-24

CALCULATED-DESIGNED BY	FRED J. WITTEBORN	REVISED BY	FJW
CHECKED BY	JONATHAN LEE	DATE REVISED	2/13/13
FUNCTIONAL SUPERVISOR	JONATHAN LEE		

STATE OF CALIFORNIA - DEPARTMENT OF TRANSPORTATION
Caltrans DESIGN

LAST REVISION 02-13-13 DATE PLOTTED => 17-MAY-2013 TIME PLOTTED => 18:08

Dist	COUNTY	ROUTE	KILOMETER POST TOTAL PROJECT	SHEET No.	TOTAL SHEETS
04	Son	101	33.3	30	158

REGISTERED CIVIL ENGINEER 2/22/13 DATE

5-13-13
PLANS APPROVAL DATE

REGISTERED PROFESSIONAL ENGINEER Fred J. Witteborn No. 56272 Exp. 12-31-14 CIVIL STATE OF CALIFORNIA

THE STATE OF CALIFORNIA OR ITS OFFICERS OR AGENTS SHALL NOT BE RESPONSIBLE FOR THE ACCURACY OR COMPLETENESS OF ELECTRONIC COPIES OF THIS PLAN SHEET.

Caltrans Metric

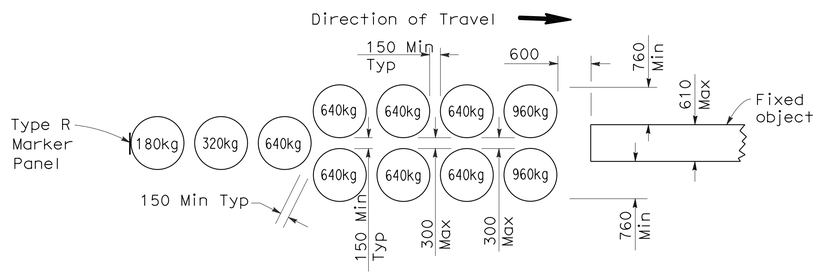

ARRAY 'U11'

Approach speed less than 70km/h

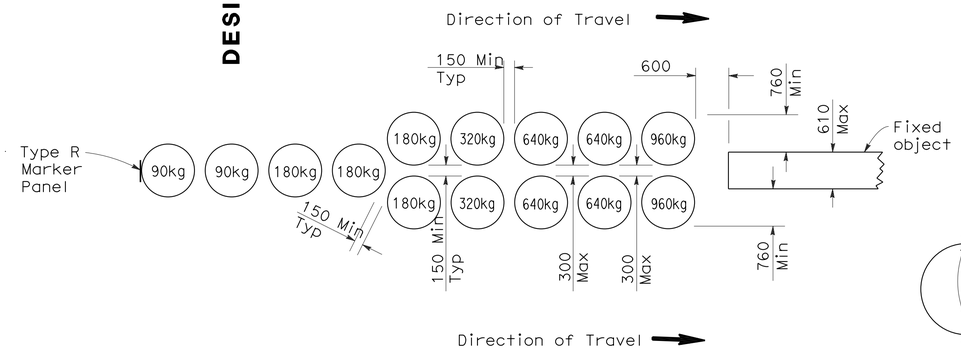

ARRAY 'U14'

Approach speed 70km/h or more

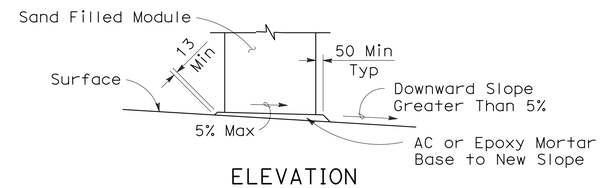

ELEVATION

SLOPED SEAT DETAIL

(See Note 4)

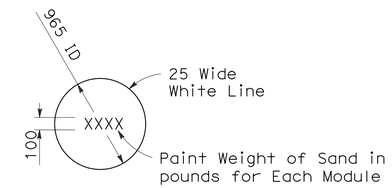

PAINTING DETAIL

(See Note 5)

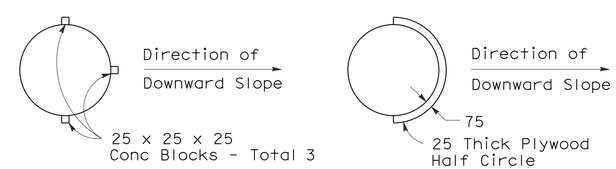

ALTERNATIVE 1 ALTERNATIVE 2

PLAN

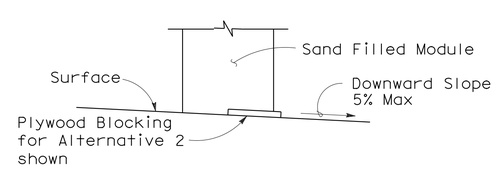

ELEVATION

BRIDGE DECK MODULE BLOCKING DETAILS

(See Note 6)

NOTES:

1. (XXX) Indicates module location and mass of sand in kilograms for each module. Module spacing is based on the greater diameter of the modules.
2. All sand weights are nominal.
3. Each module is to contain amount of sand indicated, supported according to the manufacturer's instructions.
4. Modules shall be placed on asphalt concrete, epoxy mortar or concrete surface. Modules to be placed on surfacing with greater than 5% downward slope shall be seated as shown.
5. Mass of sand and outline of each module shall be painted on the surface at each module location.
6. Module blocking, epoxied to the deck surface, is required for all modules placed on bridge decks. Two acceptable alternatives are shown. Other alternatives recommended by the manufacturer and approved by the Engineer will be accepted.
7. Place the top of the Type R marker panel 25 mm below the module lid.
8. Approach speeds indicated conform to NCHRP Report criteria.

ALL DIMENSIONS ARE IN MILLIMETERS UNLESS OTHERWISE SHOWN

CRASH CUSHION, SAND FILLED (UNIDIRECTIONAL)

NO SCALE

C-25

DESIGN

CALCULATED-DESIGNED BY	FJW	REVISED BY	FRED J. WITTEBORN	FUNCTIONAL SUPERVISOR	JONATHAN LEE
CHECKED BY	JONATHAN LEE	DATE REVISED	2/13/13		

STATE OF CALIFORNIA - DEPARTMENT OF TRANSPORTATION

Caltrans DESIGN

LAST REVISION 12-27-12 DATE PLOTTED => 17-MAY-2013 TIME PLOTTED => 18:08

Dist	COUNTY	ROUTE	KILOMETER POST TOTAL PROJECT	SHEET No.	TOTAL SHEETS
04	Son	101	33.3	31	158

REGISTERED CIVIL ENGINEER 2/22/13 DATE

5-13-13
PLANS APPROVAL DATE

REGISTERED PROFESSIONAL ENGINEER Fred J. Witteborn No. 56272 Exp. 12-31-14 CIVIL STATE OF CALIFORNIA

THE STATE OF CALIFORNIA OR ITS OFFICERS OR AGENTS SHALL NOT BE RESPONSIBLE FOR THE ACCURACY OR COMPLETENESS OF ELECTRONIC COPIES OF THIS PLAN SHEET.

Caltrans Metric

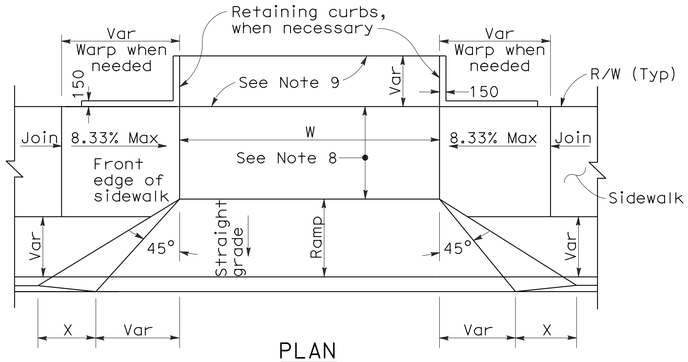

PLAN

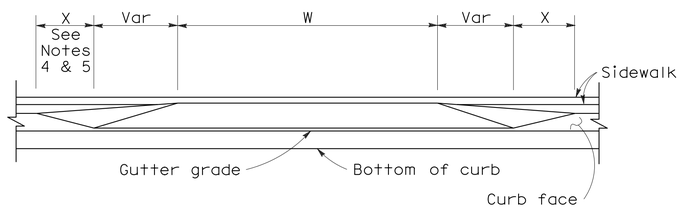

ELEVATION

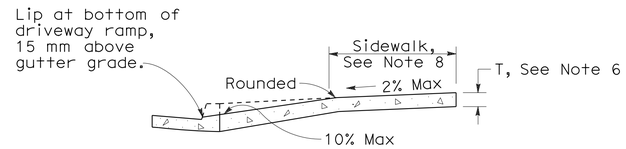

CASE A

Typical driveway, sidewalk not depressed

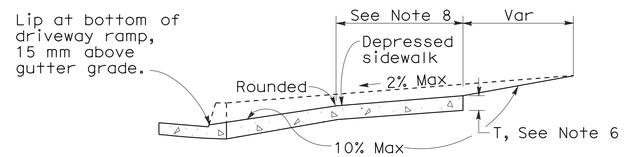

CASE B

Driveway with depressed sidewalk

SECTIONS

CURB QUANTITIES

TYPE	CUBIC METERS PER METER
A1-150	0.064
A1-200	0.075
A2-150	0.144
A2-200	0.155
A3-150	0.025
A3-200	0.035
B1-100	0.056
B1-150	0.073
B2-100	0.137
B2-150	0.152
B3-100	0.017
B3-150	0.027
B4	0.142
D-100	0.100
D-150	0.162
E	0.161

TABLE A

CURB TYPE	DIMENSIONS "H1"	"H2"	"W1"	"W2"
A1-150	350	150	190	40
A1-200	400	200	200	50
A2-150	300	150	790	40
A2-200	350	200	800	50
A3-150	150	130	185	35
A3-200	200	180	198	48
B1-100	300	100	200	70
B1-150	350	150	230	100
B2-100	250	100	800	70
B2-150	300	150	830	100
B3-100	100	80	185	55
B3-150	150	130	217	87
D-100	250	100	452	322
D-150	300	150	652	522

DRIVEWAYS

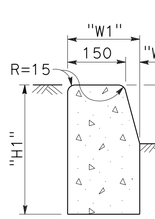

TYPE A1 CURBS

See Table A

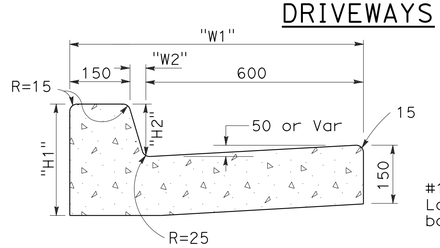

TYPE A2 CURBS

See Table A

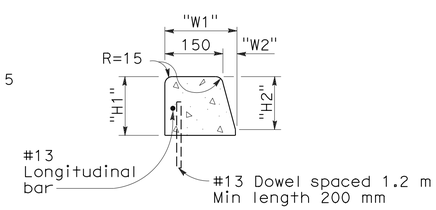

TYPE A3 CURBS

Superimposed on existing pavement
See Table A

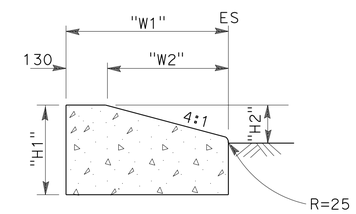

TYPE D CURBS

See Table A

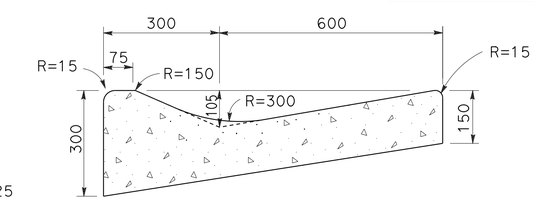

TYPE E CURB

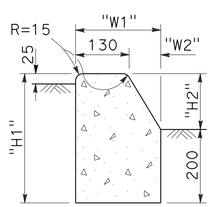

TYPE B1 CURBS

See Table A

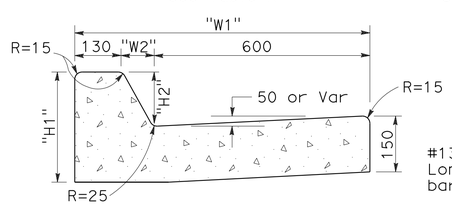

TYPE B2 CURBS

See Table A

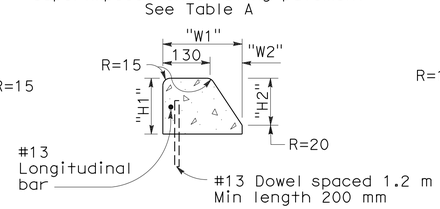

TYPE B3 CURBS

Superimposed on existing pavement
See Table A

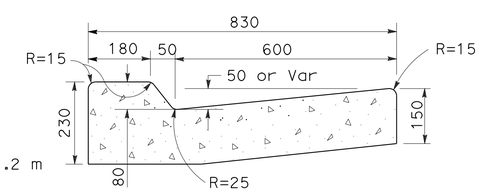

TYPE B4 CURBS

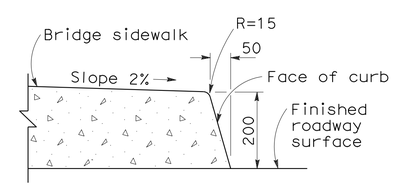

TYPE H CURB

On Bridges

CURBS

NOTES:

1. Case A driveway section typically applies.
2. Use Case B driveway section when ramp slopes would exceed 10% in Case A.
3. Use Case B driveway section when sidewalk cross slope would exceed 2% in Case A.
4. X=900 mm except for curb heights over 250 mm where 1:4 slopes shall be used on curb slope.
5. X is a variable when sidewalk is located where wheelchairs may traverse the surface. Slopes shall not exceed 8.33%.
6. Sidewalk and ramp thickness "T" at driveway shall be 100 mm for residental and 150 mm for commercial.
7. Difference in slope of the driveway ramp and the slope of a line between the gutter and a point on the roadway 1.5 m from gutter line shall not exceed 15%. Reduce driveway ramp slope, not gutter slope, where required.
8. Minimum width of clear passageway for sidewalk shall be 1.22 m.
9. Retaining curbs and acquisition of construction easement may be necessary for narrow sidewalks or curb heights in excess of 150 mm.
10. Across the pedestrian route at curb ramp locations, the gutter pan slope shall not exceed 25 mm of depth for each 600 mm of width.

ALL DIMENSIONS ARE IN MILLIMETERS UNLESS OTHERWISE SHOWN

CURBS AND DRIVEWAYS

NO SCALE

C-26

STATE OF CALIFORNIA - DEPARTMENT OF TRANSPORTATION
Caltrans DESIGN

FUNCTIONAL SUPERVISOR: JONATHAN LEE
CALCULATED-DESIGNED BY: FRED J. WITTEBORN
CHECKED BY: JONATHAN LEE
REVISED BY: FJW
DATE REVISED: 2/13/13

LAST REVISION 02-13-13 | DATE PLOTTED => 17-MAY-2013 | TIME PLOTTED => 18:08

Dist	COUNTY	ROUTE	KILOMETER POST TOTAL PROJECT	SHEET No.	TOTAL SHEETS
04	Son	101	33.3	32	158

REGISTERED CIVIL ENGINEER 2/22/13 DATE

5-13-13
PLANS APPROVAL DATE

REGISTERED PROFESSIONAL ENGINEER Fred J. Witteborn No. 56272 Exp. 12-31-14 CIVIL STATE OF CALIFORNIA

THE STATE OF CALIFORNIA OR ITS OFFICERS OR AGENTS SHALL NOT BE RESPONSIBLE FOR THE ACCURACY OR COMPLETENESS OF ELECTRONIC COPIES OF THIS PLAN SHEET.

Caltrans Metric

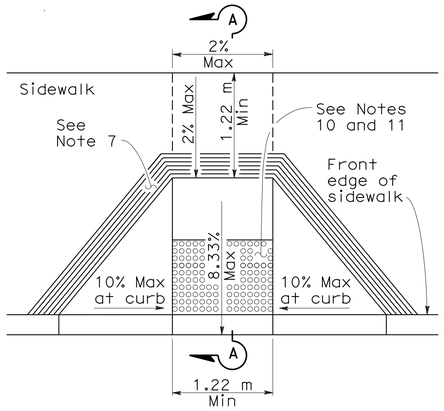

CASE A

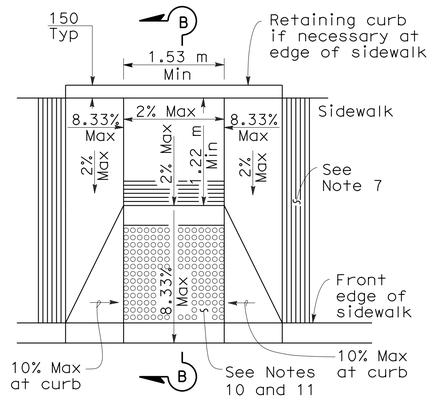

CASE B

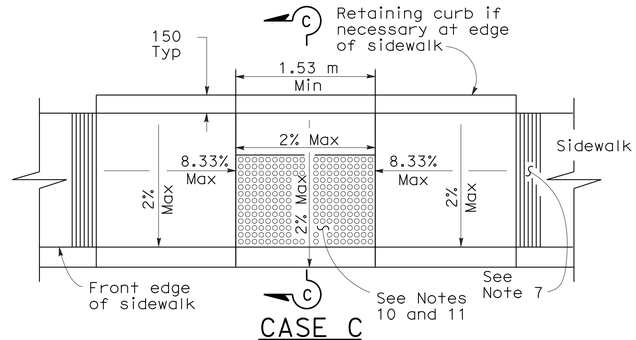

CASE C

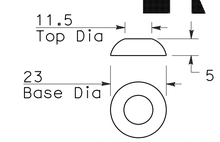

RAISED TRUNCATED DOME

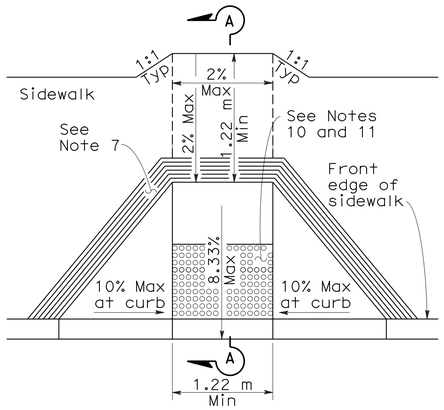

CASE D

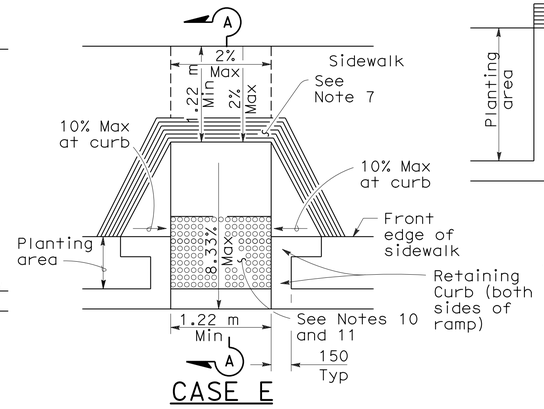

CASE E

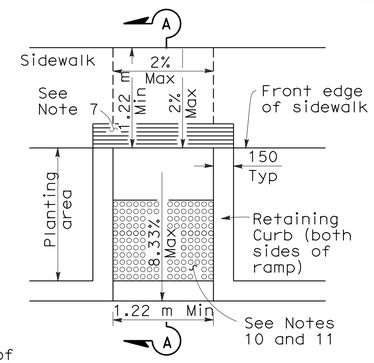

CASE F

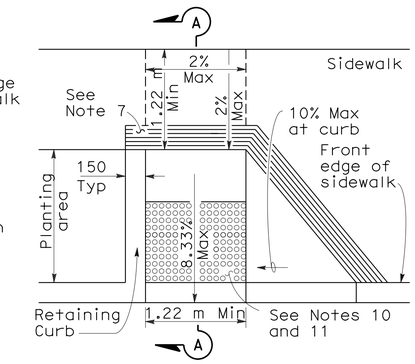

CASE G
See Note 4

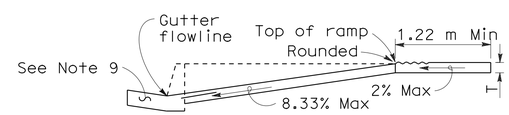

SECTION A-A

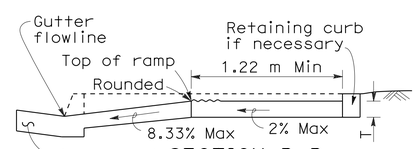

SECTION B-B
Depress entire sidewalk as required

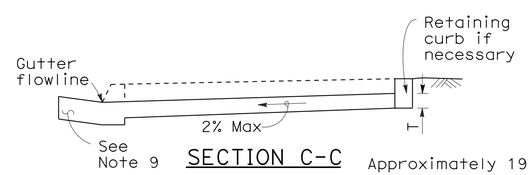

SECTION C-C

NOTES:

1. As site conditions dictate, Case A through Case G curb ramps may be used for corner installations similar to those shown in Detail A and Detail B. The case of curb ramps used in Detail A do not have to be the same. Case A through Case G curb ramps also may be used at mid block locations, as site conditions dictate.
2. If distance from curb to back of sidewalk is too short to accommodate ramp and 1.22 m platform (landing) as shown in Case A, the sidewalk may be depressed longitudinally as in Case B, or C or may be widened as in Case D.
3. When ramp is located in center of curb return, crosswalk configuration must be similar to that shown for Detail B.
4. As site conditions dictate, the retaining curb side and the flared side of the Case G ramp shall be constructed in reversed position.
5. If located on a curve, the sides of the ramp need not be parallel, but the minimum width of the ramp shall be 1.22 m.
6. Side slope of ramp flares vary uniformly from a maximum of 10% at curb to conform with longitudinal sidewalk slope adjacent to top of the ramp, except in Case C and Case F.
7. The curb ramp shall be outlined, as shown, with a 305 mm wide border with 6 mm grooves approximately 19 mm on center. See grooving detail.
8. Transitions from ramps and landing to walks, gutters or streets shall be flush and free of abrupt changes.
9. Maximum slopes of adjoining gutters, the road surface immediately adjacent to the curb ramp or accessible route shall not exceed 5 percent within 1.22 m of the top and bottom of the curb ramp.
10. Curb ramps shall have a detectable warning surface that extends the full width and 914 mm depth of the ramp. Detectable Warning Surfaces shall conform to the details on this plan and the requirements in the Special Provisions.
11. The edge of the detectable warning surface nearest the street shall be between 150 mm and 205 mm from the gutter flowline.
12. Sidewalk and ramp thickness, "T", shall be 90 mm minimum.
13. Utility pull boxes, manholes, vaults and all other utility facilities within the boundaries of the curb ramp will be relocated or adjusted to grade by the owner prior to, or in conjunction with, curb ramp construction.
14. For retrofit conditions, removal and replacement of curb apron will be at the Contractor's option, unless otherwise shown on project plans.

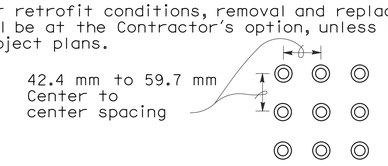

RAISED TRUNCATED DOME PATTERN (IN-LINE)

DETECTABLE WARNING SURFACE
See Note 10

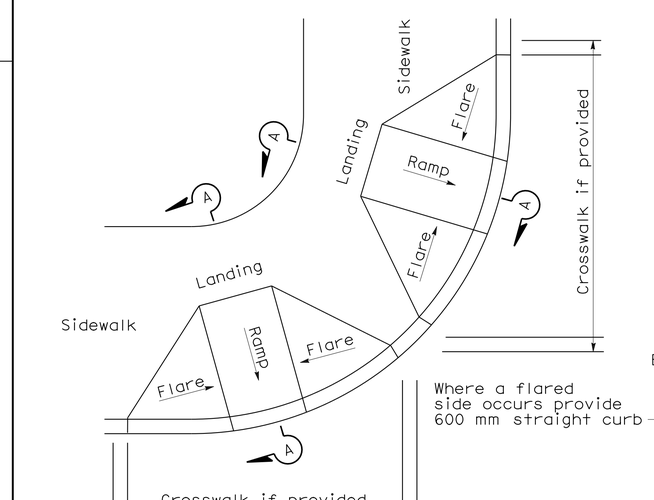

DETAIL A

TYPICAL TWO-RAMP CORNER INSTALLATION
See Note 1

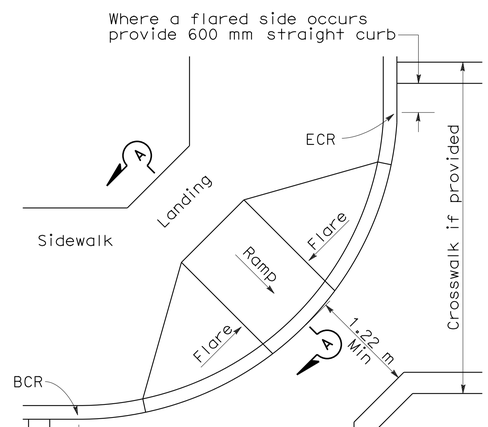

DETAIL B

TYPICAL ONE-RAMP CORNER INSTALLATION
See Notes 1 and 3

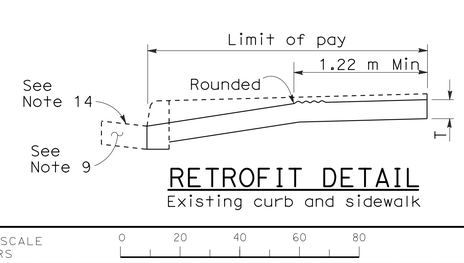

RETROFIT DETAIL
Existing curb and sidewalk

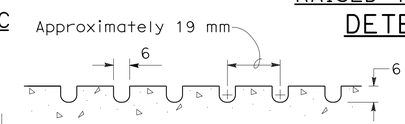

GROOVING DETAIL

ALL DIMENSIONS ARE IN MILLIMETERS UNLESS OTHERWISE SHOWN

CURB RAMP DETAILS

NO SCALE

C-27

STATE OF CALIFORNIA - DEPARTMENT OF TRANSPORTATION
Caltrans DESIGN

FUNCTIONAL SUPERVISOR: JONATHAN LEE
CALCULATED-DESIGNED BY: FRED J. WITTEBORN
CHECKED BY: JONATHAN LEE
REVISED BY: FJW
DATE REVISED: 2/13/13

LAST REVISION 02-13-13
DATE PLOTTED => 18-MAY-2013
TIME PLOTTED => 17:54

Dist	COUNTY	ROUTE	KILOMETER POST TOTAL PROJECT	SHEET No.	TOTAL SHEETS
04	Son	101	33.3	33	158

REGISTERED CIVIL ENGINEER 2/22/13 DATE

5-13-13
PLANS APPROVAL DATE

REGISTERED PROFESSIONAL ENGINEER Fred J. Witteborn No. 56272 Exp. 12-31-14 CIVIL STATE OF CALIFORNIA

THE STATE OF CALIFORNIA OR ITS OFFICERS OR AGENTS SHALL NOT BE RESPONSIBLE FOR THE ACCURACY OR COMPLETENESS OF ELECTRONIC COPIES OF THIS PLAN SHEET.

Caltrans Metric

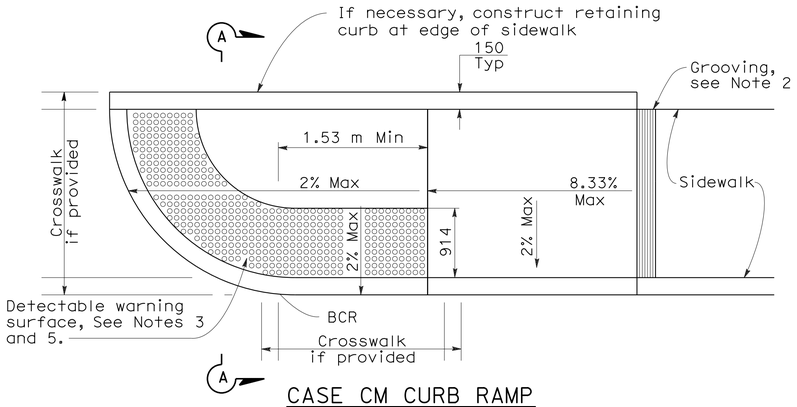

CASE CM CURB RAMP

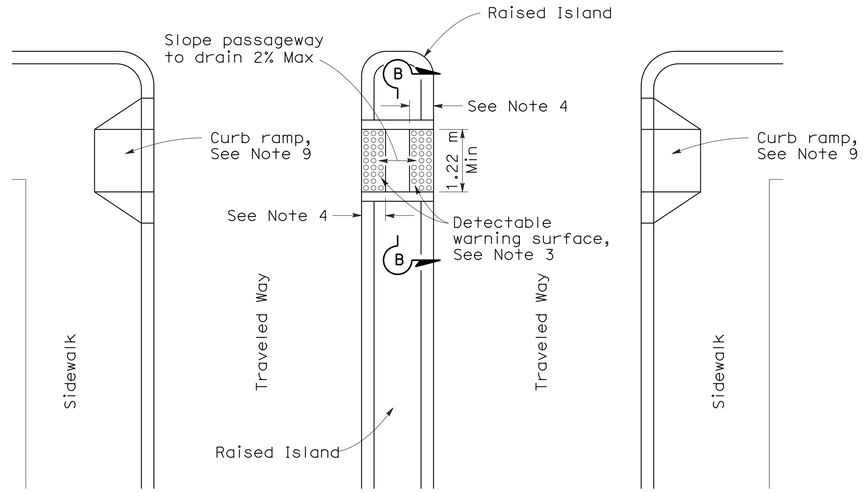

TYPE A PASSAGEWAY

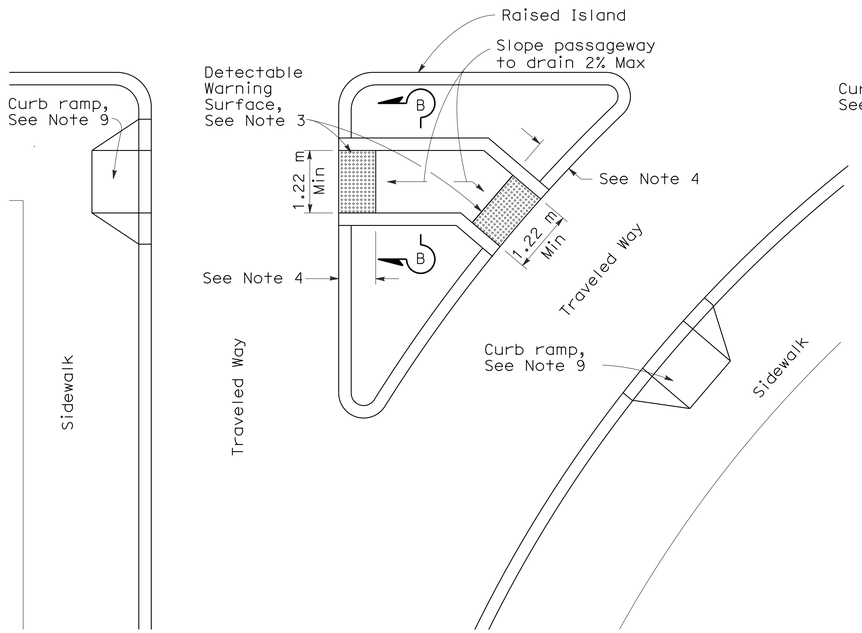

TYPE B PASSAGEWAY

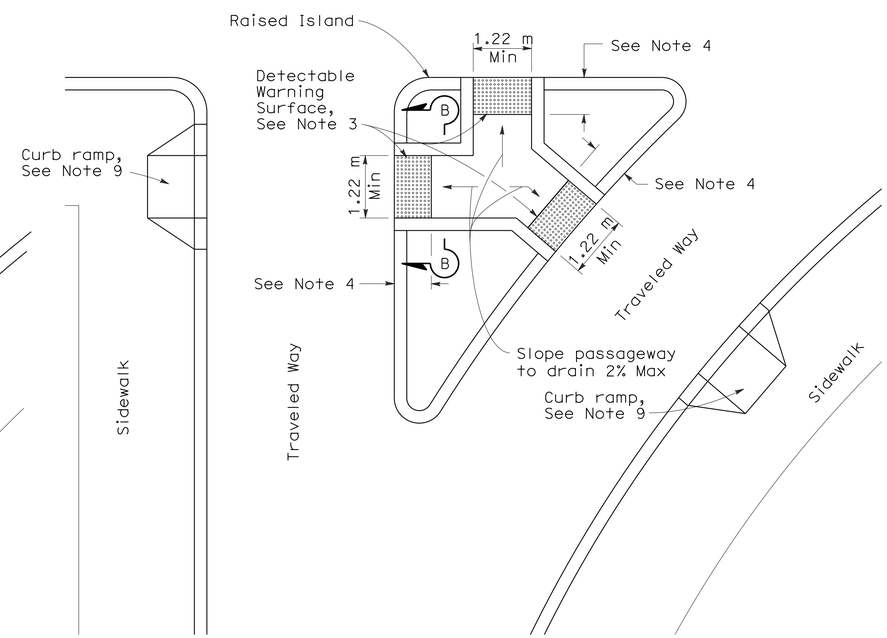

TYPE C PASSAGEWAY

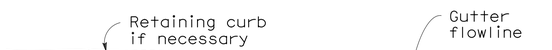

SECTION A-A

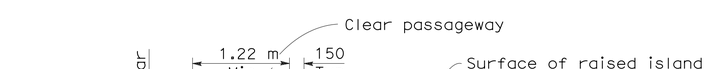

SECTION B-B

NOTES:

1. Sidewalk, ramp and passageway thickness, "T", shall be 90 mm minimum.
2. For details of grooving used with Case CM curb ramp, see Sheet C-27.
3. For details of detectable warning surfaces, see Sheet C-27.
4. Where an island passage way length is less than 1.8 m, the detectable warning surface shall extend the full width and full depth of the passage way length. Where an island passage way length is greater than or equal to 1.8 m, but less than 2.44 m, each detectable warning surface shall extend the full width and 600mm depth of the passage way length. Where an island passage way length is greater than or equal to 2.44 m, each detectable warning surface shall extend the full width and 914 mm depth of the passage way length.
5. For Case CM curb ramp, the edge of the detectable warning surface nearest the street shall be between 150 mm and 205 mm from the gutter flowline.
6. Transitions from ramps to walks, gutters or streets shall be flush and free of abrupt changes.
7. Maximum slopes of adjoining gutters, the road surface immediately adjacent to the curb ramp or accessible route shall not exceed 5 percent within 1.22 m of the top and bottom of the curb ramp.
8. Utility pull boxes, manholes, vaults and all other utility facilities within the boundaries of the curb ramp will be relocated or adjusted to grade by the owner prior to, or in conjunction with, curb ramp construction.
9. For additional curb ramp details, see Sheet C-27.

ALL DIMENSIONS ARE IN MILLIMETERS UNLESS OTHERWISE SHOWN

CURB RAMP AND ISLAND PASSAGEWAY DETAILS

NO SCALE

C-28

STATE OF CALIFORNIA - DEPARTMENT OF TRANSPORTATION
Caltrans DESIGN

FUNCTIONAL SUPERVISOR: JONATHAN LEE
CALCULATED-DESIGNED BY: FRED J. WITTEBORN
CHECKED BY: JONATHAN LEE
REVISED BY: FJW
DATE REVISED: 2/13/13

LAST REVISION 02-13-13 | DATE PLOTTED => 18-MAY-2013 | TIME PLOTTED => 17:54

Dist	COUNTY	ROUTE	KILOMETER POST TOTAL PROJECT	SHEET No.	TOTAL SHEETS
04	Son	101	33.3	34	158

REGISTERED CIVIL ENGINEER 2/22/13 DATE

5-13-13
PLANS APPROVAL DATE

REGISTERED PROFESSIONAL ENGINEER Fred J. Witteborn No. 56272 Exp. 12-31-14 CIVIL STATE OF CALIFORNIA

THE STATE OF CALIFORNIA OR ITS OFFICERS OR AGENTS SHALL NOT BE RESPONSIBLE FOR THE ACCURACY OR COMPLETENESS OF ELECTRONIC COPIES OF THIS PLAN SHEET.

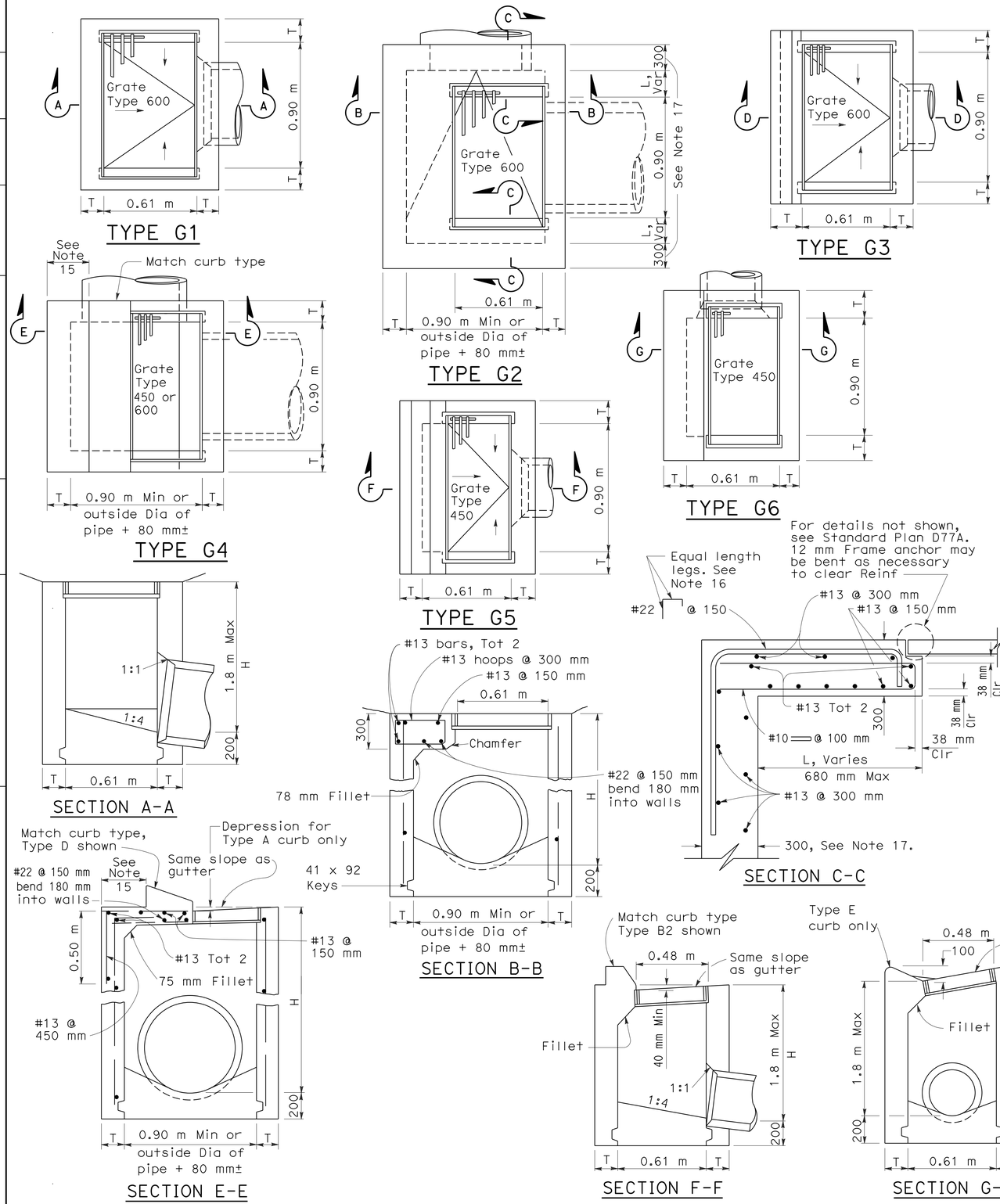

NOTES:

1. "H" is the difference in elevation between the outlet pipe flow line and the normal gutter grade line undepressed.
2. For "T" wall thickness, see Table A below.
3. Wall reinforcing not required when "H" is 2.5 m or less and the unsupported width or length is 2.1 m or less. Walls exceeding these limits shall be reinforced with #13 bars @ 450 mm ± centers placed 40 mm clear to inside of box unless otherwise shown.
4. Inlet bottom reinforcing not required. See Sheet C-31 for alternative reinforced bottom and alternative half round bottom.
5. Steps-None required where "H" is less than 0.75 m. Where "H" is 0.75 m or more, install steps with lowest rung 300 mm above the floor and highest rung not more than 150 mm below top of inlet. The distance between steps shall not exceed 300 mm and shall be uniform throughout the length of the wall. Place steps in the wall without an opening. Steps inserts may be substituted for the bar steps. Step inserts shall comply with State Industrial Safety requirements. See Sheet C-31 for step details.
6. Details shown apply to both metal and concrete pipe.
7. Pipe(s) can be placed in any wall.
8. Curb section shall match adjacent curb.
9. Basin floors shall have wood trowel finish and a minimum slope of 1:4 from all directions toward outlet pipe.
10. Galvanizing-See Standard Specifications or Special Provisions.
11. Cast-in-place or Precast alternative is optional with contractor. See Standard Specifications.
12. Set inlet so that grate bars are parallel to direction of principal surface flow.
13. See Sheets C-32 and C-51 for grate and frame details and weights of miscellaneous iron and steel.
14. See Sheet C-33 for gutter depression details.
15. This dimension will vary with different grates, curbs types, box width and wall thickness.
16. Bar may be rotated as necessary to clear opening. Where "L" is 150 mm or less, bar may be omitted.
17. Where "L" is 150 mm or less, wall thickness shall be as shown in Table A.
18. Cast-in-place inlets to be formed around all pipes/stubs intersecting the inlet, and concrete poured in one continuous operation. Precast inlets shall have mortared connections conforming to details for Type GCP Inlet shown on Sheet C-52. See Standard Specifications for mortar composition.

TABLE A

CONCRETE QUANTITIES				
Type	H=0.90 m to 2.50 m (T=150 mm)		H=2.51 m to 6.00 m (T=200 mm)	
	H=0.90 m m^3	Additional PCC per meter m^3	H=2.51 m m^3	Additional PCC per meter m^3
G-1	0.69	0.55	See Note A	See Note A
G-2*	1.01	0.63	3.32	1.14
G-3	0.75	0.55	See Note A	See Note A
G-4* (Type 24)	0.93	0.63	2.67	0.88
G-4* (Type 18)	0.95	0.63	2.69	0.88
G-5	0.75	0.55	See Note A	See Note A
G-6	0.75	0.55	See Note A	See Note A

Table based on 200 mm floor slab. No deductions are to be made to these quantities because of pipe openings, different floor alternatives or different curb types. * Quantities for type G-2 and G-4 inlets based on the minimum interior dimensions.

NOTE A:

Maximum allowable height 1.8 m.

ALL DIMENSIONS ARE IN MILLIMETERS UNLESS OTHERWISE SHOWN

DRAINAGE INLETS

NO SCALE

C-29

FRED J. WITTEBORN — REVISED BY — DATE REVISED — FJW — 2/13/13
JONATHAN LEE — CALCULATED-DESIGNED BY — CHECKED BY
FUNCTIONAL SUPERVISOR — JONATHAN LEE
STATE OF CALIFORNIA - DEPARTMENT OF TRANSPORTATION — DESIGN

LAST REVISION 02-13-13 | DATE PLOTTED => 18-MAY-2013 | TIME PLOTTED => 17:54

Dist	COUNTY	ROUTE	KILOMETER POST TOTAL PROJECT	SHEET No.	TOTAL SHEETS
04	Son	101	33.3	35	158

REGISTERED CIVIL ENGINEER 2/22/13 DATE

5-13-13
PLANS APPROVAL DATE

REGISTERED PROFESSIONAL ENGINEER Fred J. Witteborn No. 56272 Exp. 12-31-14 CIVIL STATE OF CALIFORNIA

THE STATE OF CALIFORNIA OR ITS OFFICERS OR AGENTS SHALL NOT BE RESPONSIBLE FOR THE ACCURACY OR COMPLETENESS OF ELECTRONIC COPIES OF THIS PLAN SHEET.

Caltrans Metric

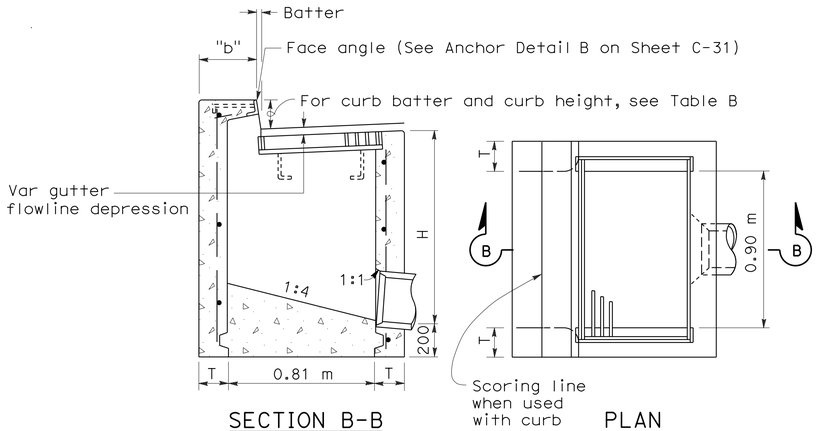

SECTION B-B PLAN

TYPE GO

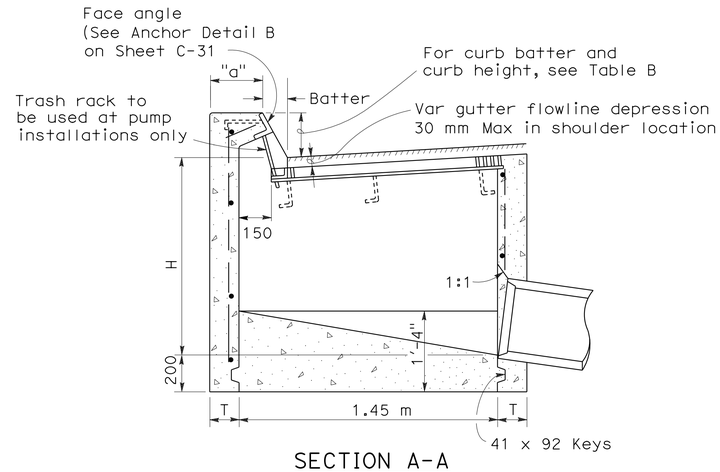

SECTION A-A

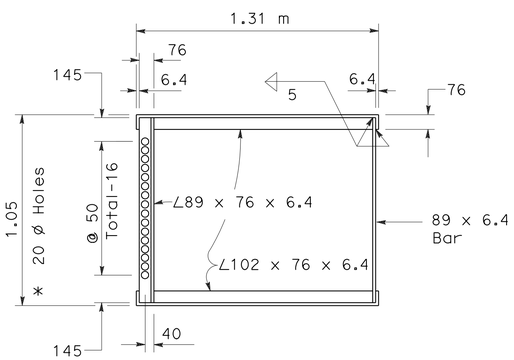

* 20 ø Holes required only with trash rack

GRATE FRAME FOR TYPE GDO INLET

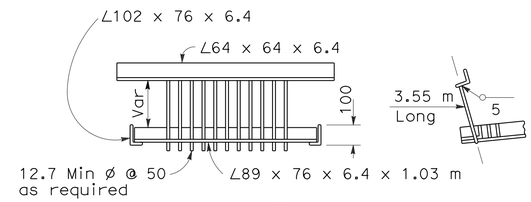

TRASH RACK

(For use with pump installation)

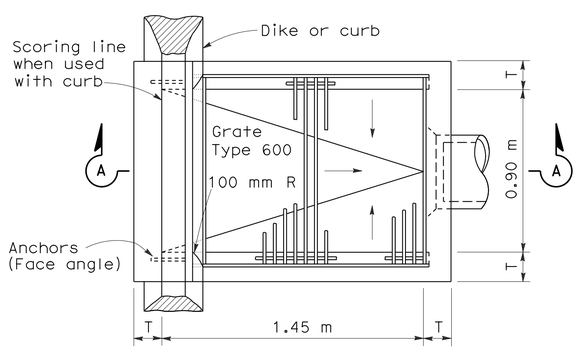

PLAN

TYPE GDO

TABLE A

CONCRETE QUANTITIES				
	H=0.90 m TO 2.50 m (T=150 mm)		H=2.51 m TO 6.00 m (T=200 mm)	
TYPE	H=0.90 m M^3	ADDITIONAL PCC PER METER m^3	H=2.51 m m^3	ADDITIONAL PCC PER METER m^3
GO	0.91	0.61	2.57	0.86
GDO	1.21	0.80	3.33	1.11

Table based on 200 mm floor slab, no deduction for pipe openings, and curb type giving highest quantity of concrete. No deductions or adjustments are to be made to these quantities because of pipe openings, dfferent floor alternatives or different curb type.

TABLE B

CURB TYPE	NORMAL CURB HEIGHT	CURB BATTER	"a" DIMENSION	"b" DIMENSION
A1-150	150	40	T+190	T+160
A1-200	200	50	T+180	T+150
B1-150	150	100	T+130	T+100
Type A Dike	150	75	T+155	T+125

NOTES:

1. "H" is the difference in elevation between the outlet pipe flow line and the normal gutter grade line undepressed.
2. For "T" wall thickness, see Table A below.
3. Wall reinforcing not required when "H" is 2.5 m or less and the unsupported width or length is 2.1 m or less. Walls exceeding these limits shall be reinforced with #13 @ 450 mm centers placed 40 mm clear to inside of box unless otherwise shown.
4. Inlet bottom reinforcing not required. See Sheet C-31 for alternative reinforced bottom.
5. Steps - None required where "H" is less than 0.75 m Where "H" is 0.75 m or more, install steps with lowest rung 300 mm above the floor and highest rung not more than 150 mm below top of inlet. The distance between steps shall not exceed 300 mm and shall be uniform throughout the length of the wall. Place steps in the wall without an opening. Step inserts may be substituted for the bar steps. Step Inserts shall comply with State Industrial Safety requirements. See Sheet C-31 for step details.
6. When shown on the project plans, place a 19 mm plain round protection bar horizontally across the length of the opening and bend back 100 mm into the inlet wall on each side.
7. Pipe(s) can be placed in any wall.
8. Curb section shall match adjacent curb.
9. Basin floors shall have wood trowel finish and shall slope toward the outlet pipe as shown.
10. Galvanizing - See Standard Specifications or Special Provisions.
11. See Sheets C-32 and C-51 for grate and frame details and weights of miscellaneous iron and Steel.
12. See Sheet C-33 for gutter depression details.
13. Full penetration butt welds may be substituted for the fillet welds on all anchors.
14. Standard square, hexagon, round or equivalent headed anchors may be substituted for the right angle hooks on the anchors shown on this plan.
15. Cast-in-place or precast alternative is optional with contractor. See Standard Specifications.
16. Cast-in-place inlets to be formed around all pipes/stubs intersecing the inlet and concrete poured in one continuous operation. Precast inlets shall have mortared pipe connections conforming to details for Type GCP inlets on Sheet C-52. See Standard Specifications for mortar composition.

ALL DIMENSIONS ARE IN MILLIMETERS UNLESS OTHERWISE SHOWN

DRAINAGE INLETS

NO SCALE

C-30

STATE OF CALIFORNIA - DEPARTMENT OF TRANSPORTATION
Caltrans DESIGN

FUNCTIONAL SUPERVISOR JONATHAN LEE
CALCULATED-DESIGNED BY FRED J. WITTEBORN
CHECKED BY JONATHAN LEE
REVISED BY FJW
DATE REVISED 2/13/13

LAST REVISION 02-13-13
DATE PLOTTED => 18-MAY-2013
TIME PLOTTED => 17:54

Dist	COUNTY	ROUTE	KILOMETER POST TOTAL PROJECT	SHEET No.	TOTAL SHEETS
04	Son	101	33.3	36	158

REGISTERED CIVIL ENGINEER 2/22/13 DATE

5-13-13
PLANS APPROVAL DATE

REGISTERED PROFESSIONAL ENGINEER Fred J. Witteborn No. 56272 Exp. 12-31-14 CIVIL STATE OF CALIFORNIA

THE STATE OF CALIFORNIA OR ITS OFFICERS OR AGENTS SHALL NOT BE RESPONSIBLE FOR THE ACCURACY OR COMPLETENESS OF ELECTRONIC COPIES OF THIS PLAN SHEET.

Caltrans Metric

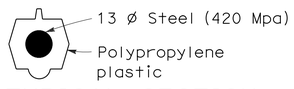

TYPICAL SECTION
(STEP INSERT)

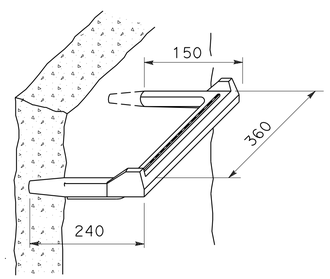

STEP INSERT

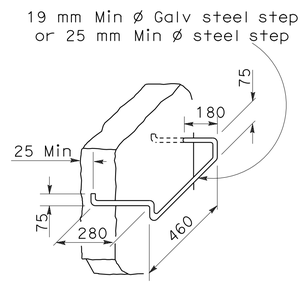

BAR STEP

STEP DETAILS

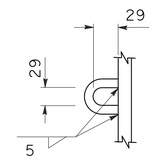

STIRRUP

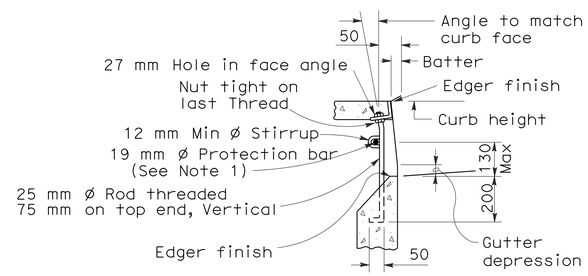

CURB SUPPORT DETAIL
See Note 2

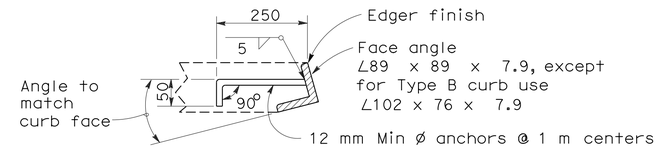

FACE ANGLE ANCHOR DETAIL A

FACE ANGLE DETAIL A	
Length of Curb Opening	No. of Anchors
1.1 m or Less	2
2.1 m	3
3.0 m	4
4.3 m	5
6.4 m	7

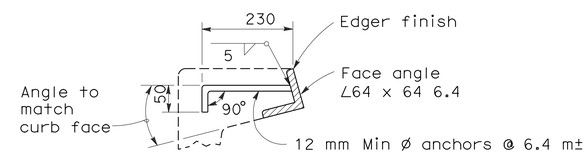

FACE ANGLE ANCHOR DETAIL B

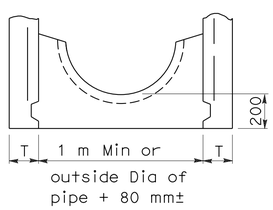

ALTERNATIVE
HALF ROUND BOTTOM

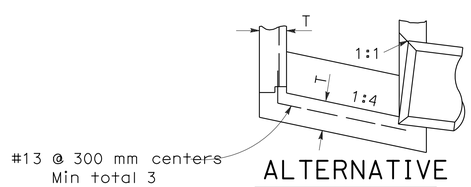

ALTERNATIVE
REINFORCED BOTTOM

NOTES:

1. When shown on the project plans, place a 19 mm ø plain round protection bar horizontally across length of the opening and bend back 100 mm into the inlet wall on each side.

2. Curb supports shall be evenly spaced and minimal in number such that maximum span of unsupported curb is 2.1 m.

ALL DIMENSIONS ARE IN MILLIMETERS UNLESS OTHERWISE SHOWN

DRAINAGE INLET DETAILS

NO SCALE

C-31

FJW	FRED J. WITTEBORN	REVISED BY
2/13/13	JONATHAN LEE	DATE REVISED
	CALCULATED-DESIGNED BY	
	CHECKED BY	
JONATHAN LEE	FUNCTIONAL SUPERVISOR	

STATE OF CALIFORNIA - DEPARTMENT OF TRANSPORTATION
Caltrans DESIGN

LAST REVISION 12-28-12 | DATE PLOTTED => 18-MAY-2013 | TIME PLOTTED => 17:54

Dist	COUNTY	ROUTE	KILOMETER POST TOTAL PROJECT	SHEET No.	TOTAL SHEETS
04	Son	101	33.3	37	158

REGISTERED CIVIL ENGINEER 2/22/13 DATE

5-13-13
PLANS APPROVAL DATE

REGISTERED PROFESSIONAL ENGINEER Fred J. Witteborn No. 56272 Exp. 12-31-14 CIVIL STATE OF CALIFORNIA

THE STATE OF CALIFORNIA OR ITS OFFICERS OR AGENTS SHALL NOT BE RESPONSIBLE FOR THE ACCURACY OR COMPLETENESS OF ELECTRONIC COPIES OF THIS PLAN SHEET.

Caltrans Metric

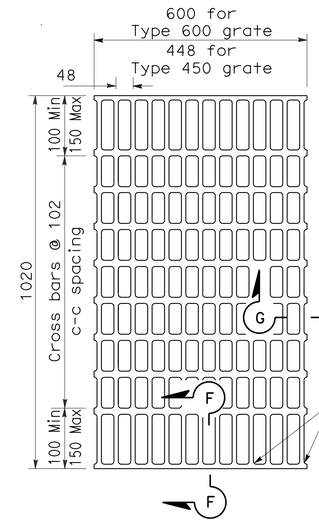

NOTES:

Bearing bars to be 89 mm x 6.4 mm bars on 48 mm centers

10 mm ± ø Cross bars may be fillet welded, resistance welded or electroforged to bearing bars.

Weight of Type 600 grate = 64 kg.
Weight of Type 450 grate = 49 kg.
(Type 600 grate shown).

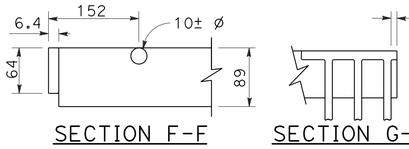

SECTION F-F SECTION G-G

TYPE 450-10 AND 600-13 GRATE

(Welded Steel)

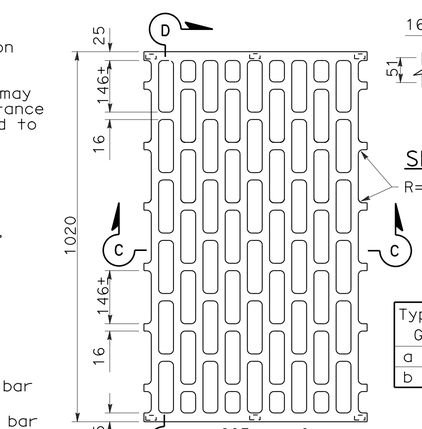

Type 450 Grate	Type 600 Grate
a = 10	a = 22
b = 10	b = 19

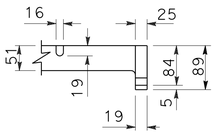

SECTION D-D

NOTES:

Weight of Type 600 grate = 70 kg.

Weight of Type 450 grate = 59 kg.

On Type 450 grate omit center bearing point.

SECTION C-C

TYPE 450-8C AND 600-10C GRATE

(Cast ductile iron)

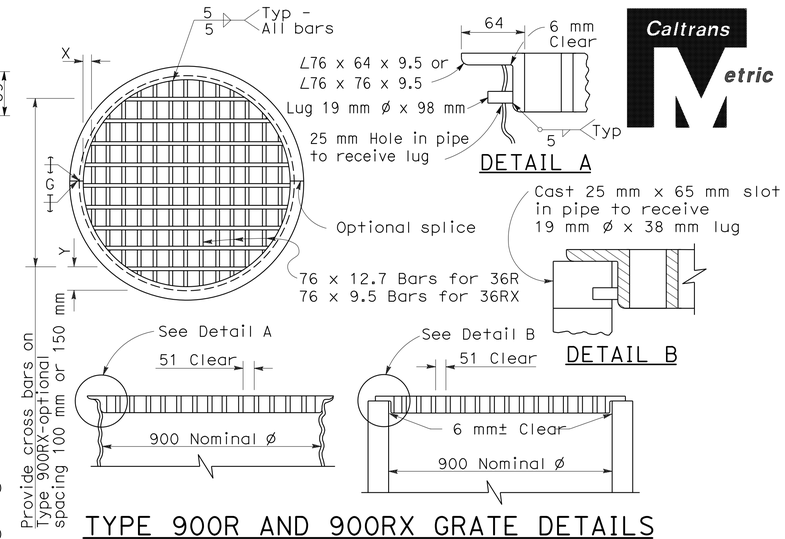

DETAIL A

DETAIL B

TYPE 900R AND 900RX GRATE DETAILS

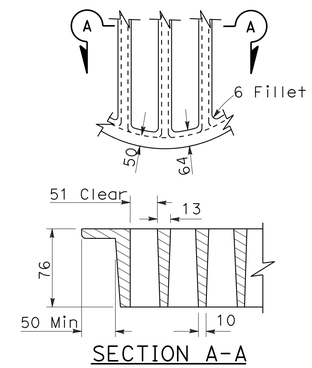

SECTION A-A

ALTERNATIVE CAST DUCTILE IRON GRATE OR CAST CARBON STEEL GRATE TYPE 900R AND 900RX

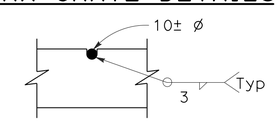

10 mm± ø Cross bars may be fillet welded, resistance welded or electroforged to bearing bars.

CROSS BAR DETAIL TYPE 900RX GRATE (WELDED STEEL)

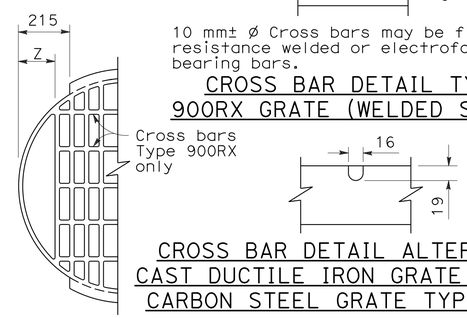

CROSS BAR DETAIL ALTERNATIVE CAST DUCTILE IRON GRATE OR CAST CARBON STEEL GRATE TYPE 900RX

MODIFIED TYPE 900R AND 900RX GRATE FOR ODI INLET

BASIS FOR Misc IRON AND STEEL FINAL PAY WEIGHTS FOR DRAINAGE INLETS

INLET TYPE	GRATE TYPE	No. OF GRATES	MASS (kg)
GDO (SEE NOTE 4)	600-10C	2	117
	600-10S	2	207
	600-12X	2	215
	600-13	2	170
G0,G0L,G1,G2, G3,G4 (TYPE 600)	600-10C	1	92
	600-10S	1	104
	600-12X	1	108
	600-13	1	85
G4 (TYPE 450) G5,G6	450-8S	1	85
	450-9X	1	85
	450-10	1	68
GT1,GT2	450-8S	2	170
	450-9X	2	170
	450-10	2	135
GT3,GT4	600-10C	2	183
	600-10S	2	208
	600-12X	2	217
	600-13	2	171
ODI	900RX (Mod)	1	89
GMP,GCP,GCPI	900RX	1	98
ODI	900R (Mod)	1	100
GMP,GCP,GCPI	900R	1	107
TRASH RACK			10
GRATE CHAIN			1.5

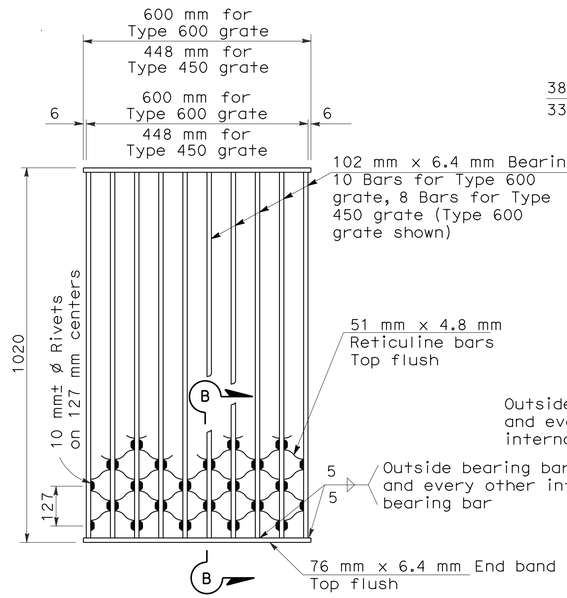

NOTES:

Weight of Type 600 grate = 83 kg.
Weight of Type 450 grate = 66 kg.

SECTION B-B

TYPE 450-8S AND 600-10S GRATE

(Welded Steel) Reticuline type

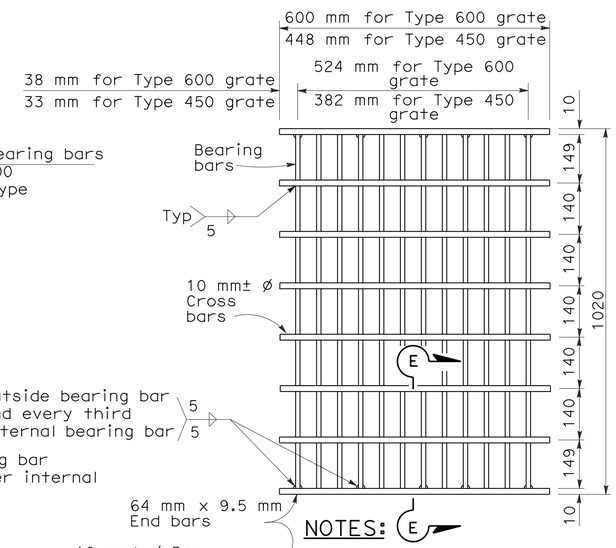

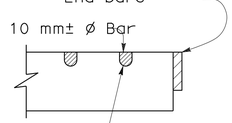

SECTION E-E

NOTES:

Bearing bars to be 89 mm x 9.5 mm bars on 48 mm centers.

12 Bars for Type 600 grate - 9 bars for Type 450 grates. (Type 600 grate shown).

Weight of Type 600 grate = 87 kg.

Weight of Type 450 grate = 66 kg.

10 mm± ø Cross bars may be fillet welded, resistance welded or electroforged to bearing bars.

TYPE 450-9X AND 600-12X GRATE

(Welded Steel)

NOTES:

1. When alternative grates are allowed - Final pay based on alternative with the lesser weight.
2. Use frame shown on Standard Plan D74A, RSP D74B or Sheet C-51 as appropriate.
3. When Type 600-10S, 600-12X or 600-13 grates are used with GDO Inlets, a 6.4 mm x 89 mm x 1.04 m steel bar shall be welded across the center of inlet frame to separate the individual grates.
4. See Sheet C-51 for connecting chain to welded grate and frame. When chain is required, do not use cast ductile iron grate.

GRATE BAR SPACING TABLE

TYPE	No. OF BARS	CLEAR BAR SPACING	X (mm)	Y (mm) 100 mm SPACING	Y (mm) 150 mm SPACING	Z
900R	13	51 mm	54	-	-	-
900RX (Steel)	15	51 mm	14	95	146"	-
900RX (Cast)	13	51 mm	54	95	146	-
900R Mod	12	51 mm	54	-	-	127
900RX Mod (Steel)	13	51 mm	14	95	146	144
900RX Mod (Cast)	12	51 mm	54	95	146	127

ALL DIMENSIONS ARE IN MILLIMETERS UNLESS OTHERWISE SHOWN

BICYCLE TRAVERSABLE GRATE DETAILS

NO SCALE

C-32

STATE OF CALIFORNIA - DEPARTMENT OF TRANSPORTATION
Caltrans DESIGN

FUNCTIONAL SUPERVISOR JONATHAN LEE
CALCULATED-DESIGNED BY FRED J. WITTEBORN
CHECKED BY JONATHAN LEE
REVISED BY FJW
DATE REVISED 2/13/13

LAST REVISION 02-14-13
DATE PLOTTED => 18-MAY-2013
TIME PLOTTED => 17:54

Dist	COUNTY	ROUTE	KILOMETER POST TOTAL PROJECT	SHEET No.	TOTAL SHEETS
04	Son	101	33.3	38	158

REGISTERED CIVIL ENGINEER 2/22/13 DATE

5-13-13
PLANS APPROVAL DATE

REGISTERED PROFESSIONAL ENGINEER Fred J. Witteborn No. 56272 Exp. 12-31-14 CIVIL STATE OF CALIFORNIA

THE STATE OF CALIFORNIA OR ITS OFFICERS OR AGENTS SHALL NOT BE RESPONSIBLE FOR THE ACCURACY OR COMPLETENESS OF ELECTRONIC COPIES OF THIS PLAN SHEET.

Caltrans Metric

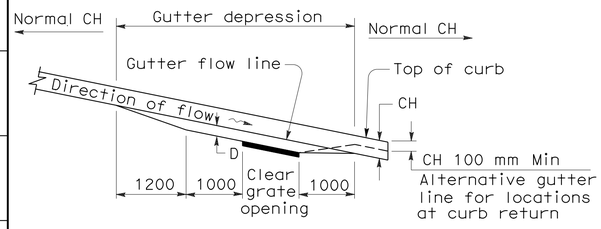

PROFILE

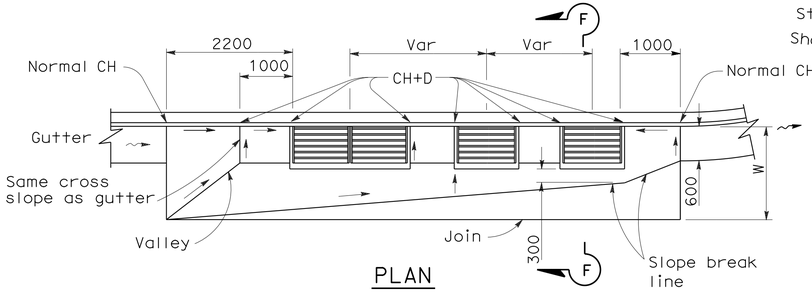

PLAN
GRATE INLET SERIES

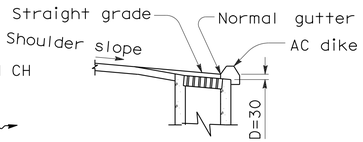

DETAIL OF INLET WITH DIKE
(Single grate shown)

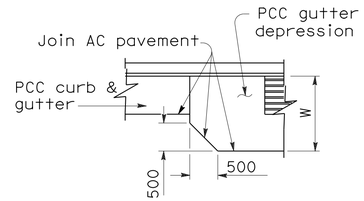

DETAIL OF ASPHALT CONCRETE PAVEMENT
(See Note 4)

NOTES:

1. W= Width of depressed apron. Depressed aprons shall be 1200 mm on shoulder and 1200 mm to 1800 mm in city street gutters unless otherwise shown.

   D= Gutter depression. The gutter depression shall be 30 mm for shoulder and 30 mm to 76 mm in city street gutter or locations outside of shoulder unless otherwise shown.

   CH= Curb Height.

   → = Straight grade, downward slope.

   ⇝ = Gutter or shoulders direction of flow.
2. Gutter depressions shall be 200 mm thick.
3. Establish curb opening height at midpoint of grate.
4. Details shown for portland cement concrete pavement. When asphalt concrete pavement is used corners to be cut off as shown on Detail of Asphalt Concrete Pavement.

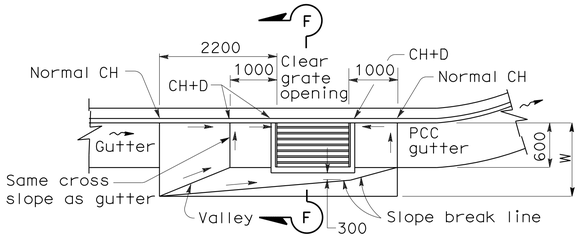

PLAN
TYPE G0 AND G1 THRU G6 INLETS ON GRADE

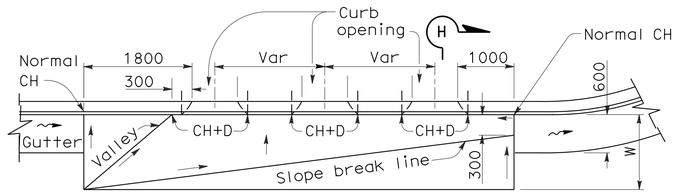

PLAN
TYPE OS AND OL INLETS IN SERIES ON GRADE

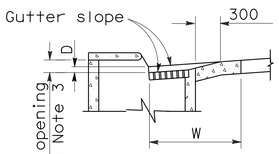

SECTION B-B

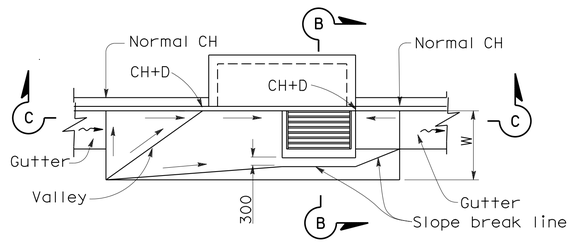

PLAN
TYPE GOL INLET ON GRADE

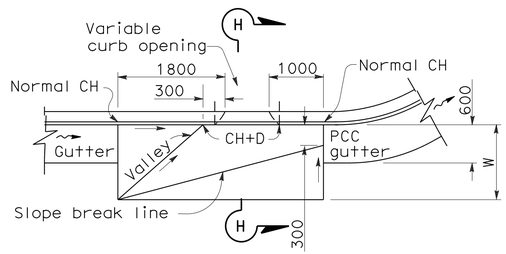

PLAN
TYPE OS AND OL INLETS ON GRADE

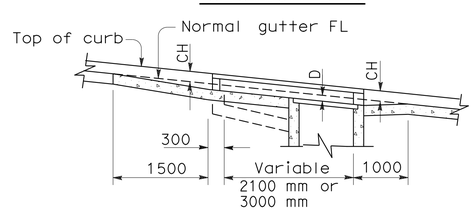

SECTION C-C

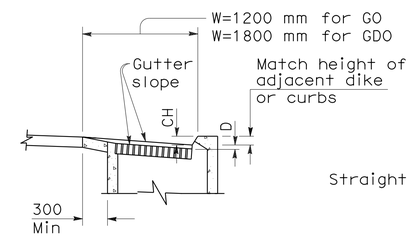

SECTION E-E

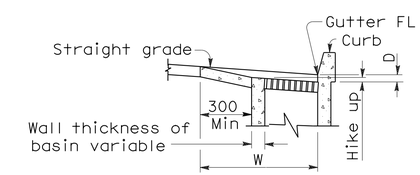

SECTION G-G

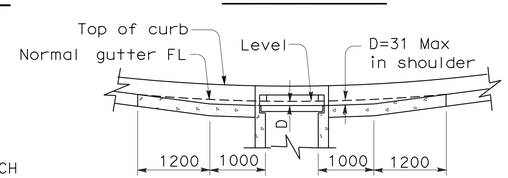

SECTION D-D

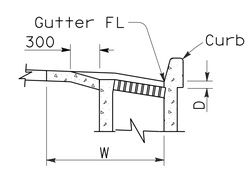

SECTION F-F

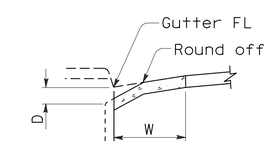

SECTION H-H

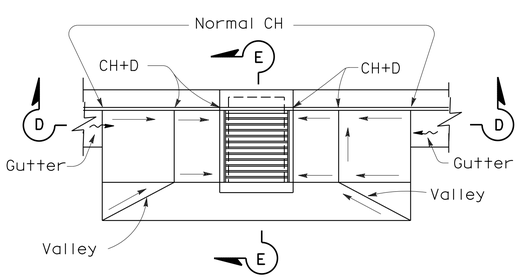

PLAN
TYPE GO AND GDO INLET GRADE SAG
(GDO shown)

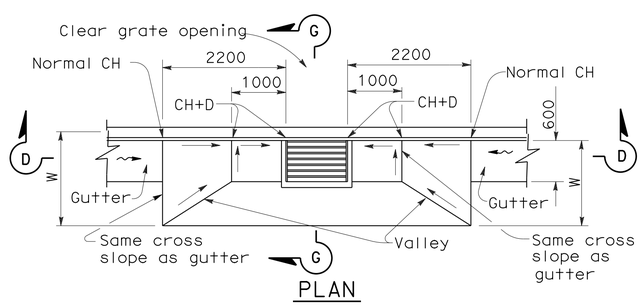

PLAN
TYPE G1 THRU G6 GT3 AND GT4 INLETS IN GRADE SAG

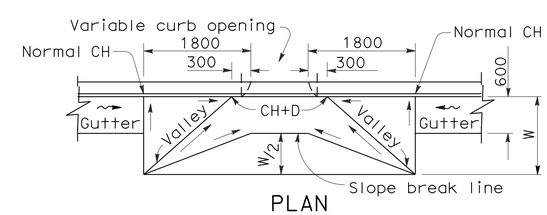

PLAN
TYPE OS AND OL INLETS IN GRADE SAG

ALL DIMENSIONS ARE IN MILLIMETERS UNLESS OTHERWISE SHOWN

GUTTER DEPRESSIONS

NO SCALE

C-33

REVISED BY	DATE REVISED
FJW	2/13/13

FRED J. WITTEBORN — JONATHAN LEE — CALCULATED-DESIGNED BY — CHECKED BY

FUNCTIONAL SUPERVISOR: JONATHAN LEE

STATE OF CALIFORNIA - DEPARTMENT OF TRANSPORTATION — DESIGN — Caltrans

LAST REVISION 02-13-13 — DATE PLOTTED => 18-MAY-2013 — TIME PLOTTED => 17:54

Dist	COUNTY	ROUTE	KILOMETER POST TOTAL PROJECT	SHEET No.	TOTAL SHEETS
04	Son	101	33.3	39	158

REGISTERED CIVIL ENGINEER 2/22/13 DATE

5-13-13
PLANS APPROVAL DATE

REGISTERED PROFESSIONAL ENGINEER Fred J. Witteborn No. 56272 Exp. 12-31-14 CIVIL STATE OF CALIFORNIA

THE STATE OF CALIFORNIA OR ITS OFFICERS OR AGENTS SHALL NOT BE RESPONSIBLE FOR THE ACCURACY OR COMPLETENESS OF ELECTRONIC COPIES OF THIS PLAN SHEET.

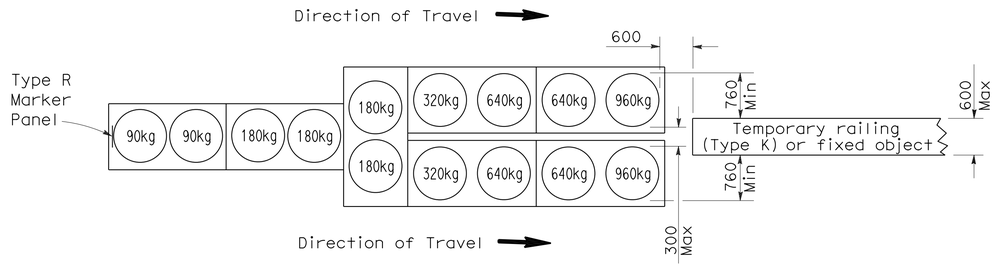

ARRAY 'TU14'

Approach speed 70 km/h or more

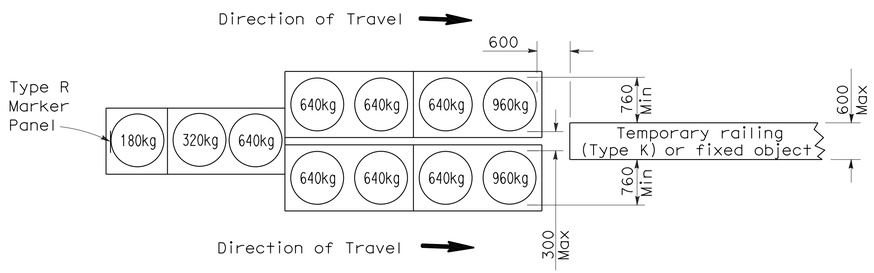

ARRAY 'TU11'

Approach speed less than 70 km/h

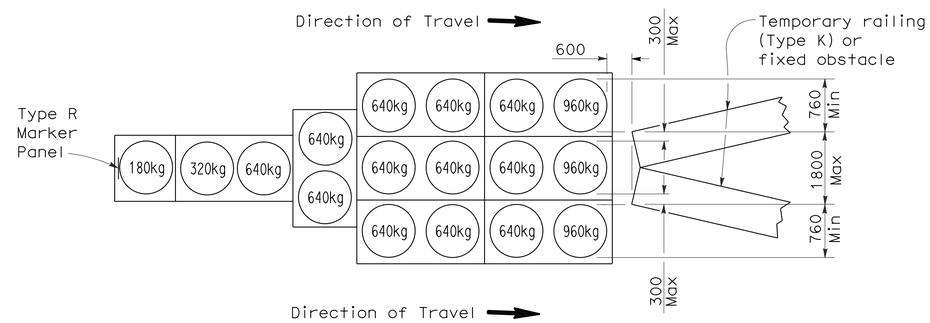

ARRAY 'TU17'

Approach speed less than 70 km/h

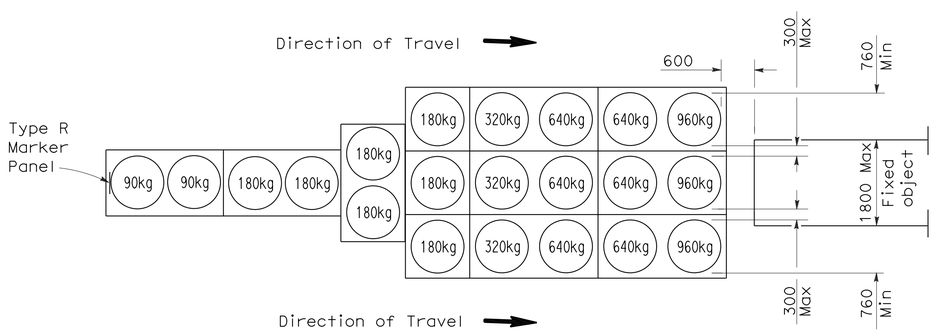

ARRAY 'TU21'

Approach speed 70 km/h or more

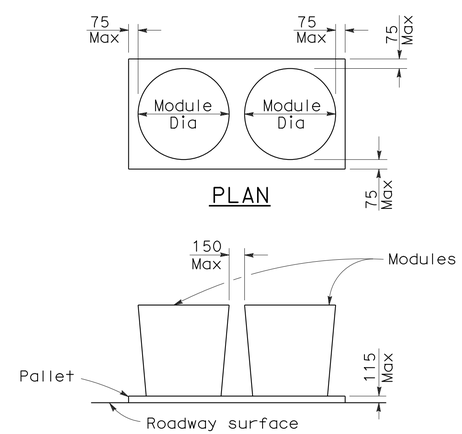

PLAN

ELEVATION

CRASH CUSHION PALLET DETAIL

See Note 7

NOTES:

1. (XXX) Indicates sand filled module location and mass of sand in kilokrams for each module. Module spacing is based on the greater diameter of the module.
2. All sand masses are nominal.
3. Temporary crash cushion arrays shall not encroach on the traveled way.
4. Place the top of Type R marker panel 25 mm below the module lid.
5. Refer to Sheet C-23 for marker details.
6. Approach speeds indicated conform to NCHRP 350 Report criteria.
7. Use of pallets is optional.

ALL DIMENSIONS ARE IN MILLIMETERS UNLESS OTHERWISE SHOWN

TEMPORARY CRASH CUSHION, SAND FILLED (UNIDIRECTIONAL)

NO SCALE

C-34

STATE OF CALIFORNIA - DEPARTMENT OF TRANSPORTATION
Caltrans DESIGN

FUNCTIONAL SUPERVISOR: JONATHAN LEE
CALCULATED-DESIGNED BY: FRED J. WITTEBORN
CHECKED BY: JONATHAN LEE
REVISED BY: FJW
DATE REVISED: 2/13/13

LAST REVISION 02-13-13 | DATE PLOTTED => 18-MAY-2013 | TIME PLOTTED => 17:54

Dist	COUNTY	ROUTE	KILOMETER POST TOTAL PROJECT	SHEET No.	TOTAL SHEETS
04	Son	101	33.3	40	158

REGISTERED CIVIL ENGINEER 2/22/13 DATE

5-13-13
PLANS APPROVAL DATE

REGISTERED PROFESSIONAL ENGINEER Fred J. Witteborn No. 56272 Exp. 12-31-14 CIVIL STATE OF CALIFORNIA

THE STATE OF CALIFORNIA OR ITS OFFICERS OR AGENTS SHALL NOT BE RESPONSIBLE FOR THE ACCURACY OR COMPLETENESS OF ELECTRONIC COPIES OF THIS PLAN SHEET.

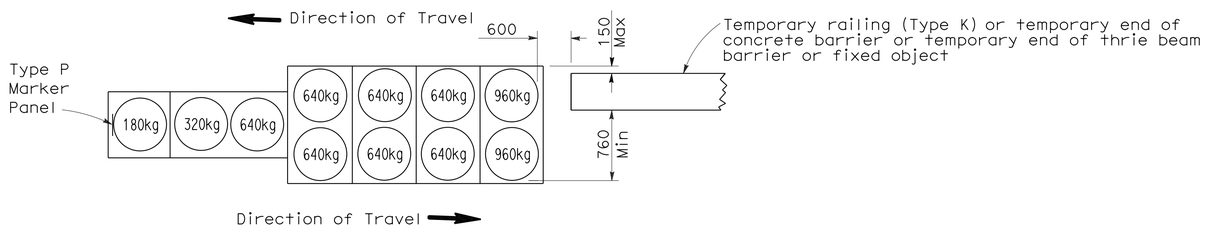

ARRAY 'TB11'

Approach speed less than 70 km/h

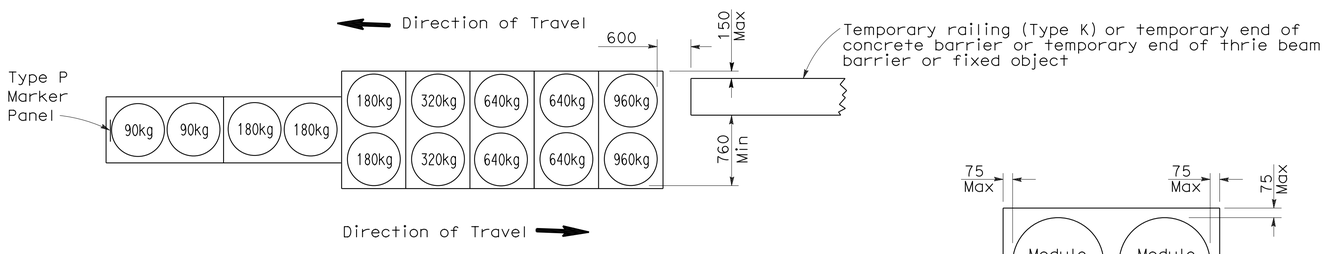

ARRAY 'TB14'

Approach speed 70 km/h or more

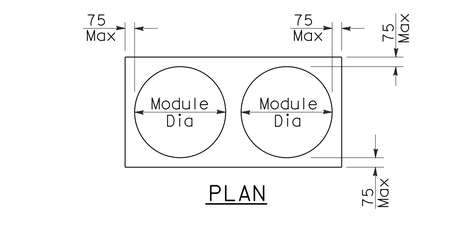

PLAN

ELEVATION

CRASH CUSHION PALLET DETAIL

See Note 7

NOTES:

1. (XXX) Indicates sand filled module location and mass of sand in kilograms for each module. Module spacing is based on the greater diameter of the module.
2. All sand masses are nominal.
3. Temporary crash cushion arrays shall not encroach on the traveled way.
4. Place the Type P marker panel so that the bottom of the panel rests upon the pallet.
5. Refer to Sheet C-23 for marker details.
6. Approach speeds indicated conform to NCHRP 350 Report criteria.
7. Use of pallets is optional.

ALL DIMENSIONS ARE IN MILLIMETERS UNLESS OTHERWISE SHOWN

TEMPORARY CRASH CUSHION, SAND FILLED (BIDIRECTIONAL)

NO SCALE

C-35

STATE OF CALIFORNIA - DEPARTMENT OF TRANSPORTATION
Caltrans DESIGN

FUNCTIONAL SUPERVISOR: JONATHAN LEE
CALCULATED-DESIGNED BY: FRED J. WITTEBORN
CHECKED BY: JONATHAN LEE
REVISED BY: FJW
DATE REVISED: 2/13/13

LAST REVISION 02-13-13
DATE PLOTTED => 18-MAY-2013
TIME PLOTTED => 17:54

Dist	COUNTY	ROUTE	KILOMETER POST TOTAL PROJECT	SHEET No.	TOTAL SHEETS
04	Son	101	33.3	41	158

REGISTERED CIVIL ENGINEER 2/22/13 DATE

5-13-13
PLANS APPROVAL DATE

REGISTERED PROFESSIONAL ENGINEER Fred J. Witteborn No. 56272 Exp. 12-31-14 CIVIL STATE OF CALIFORNIA

THE STATE OF CALIFORNIA OR ITS OFFICERS OR AGENTS SHALL NOT BE RESPONSIBLE FOR THE ACCURACY OR COMPLETENESS OF ELECTRONIC COPIES OF THIS PLAN SHEET.

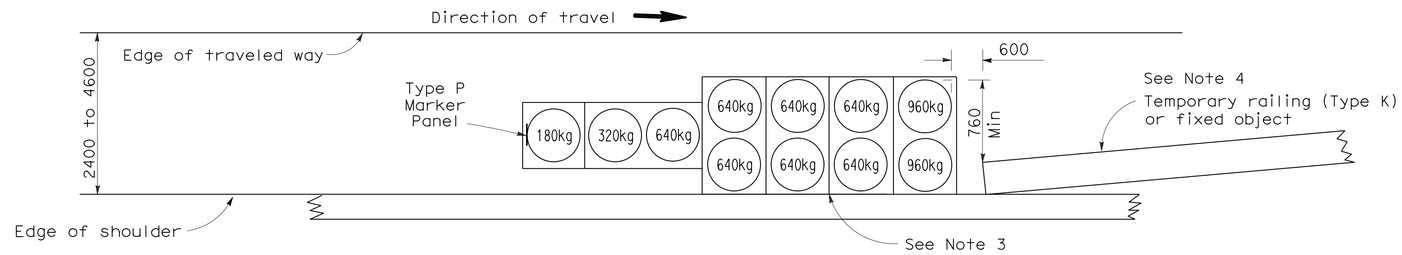

ARRAY 'TS11'

Approach speed less than 70 km/h
See Note 9

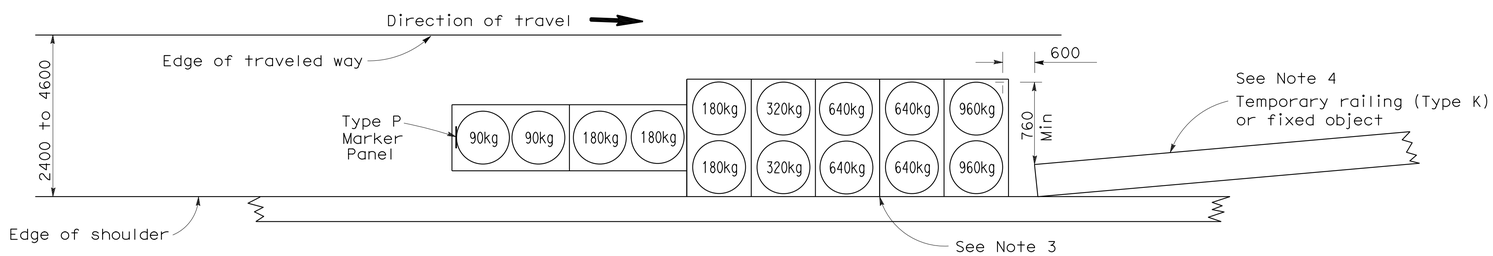

ARRAY 'TS14'

Approach speed 70 km/h or more
See Note 9

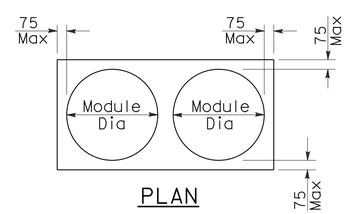

PLAN

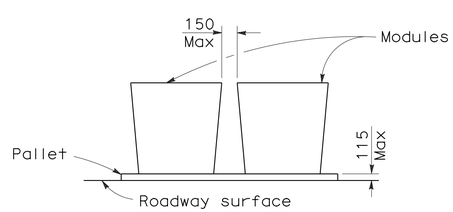

ELEVATION

CRASH CUSHION PALLET DETAIL

See Note 11

NOTES:

1. (XXX) Indicates sand filled module location and mass of sand in kilograms for each module. Module spacing is based on the greater diameter of the module.
2. All sand masses are nominal.
3. The temporary crash cushion arrays shown on this plan shall be used only in locations where there will be traffic on one side of the temporary crash cushion array.
4. If the fixed object or approach end of the temporary railing is less than 4600 mm from the edge of traveled way, a temporary crash cushion is required in a construction or work zone.
5. Temporary crash cushion arrays shall not encroach on the traveled way.
6. Arrays for median shoulders shall conform to details shown on this plan for outside shoulders.
7. Place the Type P marker panel so that the bottom of the panel rests upon the pallet and faces traffic.
8. Refer to Sheet C-23 for marker details.
9. For shoulder widths less than 2400 mm, appropriate approved crash cushion protection, other than sand filled modules, shall be provided at fixed objects and at approach ends of temporary railing. The specific type of crash cushion shall be as shown on the project plans or as specified in the Special Provisions, or if not shown on the project plans or specified in the Special Provisions, shall be as approved by the Engineer.
10. Approach speeds indicated conform to NCHRP 350 Report criteria.
11. Use of pallets is optional.

ALL DIMENSIONS ARE IN MILLIMETERS UNLESS OTHERWISE SHOWN

TEMPORARY CRASH CUSHION, SAND FILLED (SHOULDER INSTALLATIONS)

NO SCALE

C-36

STATE OF CALIFORNIA - DEPARTMENT OF TRANSPORTATION
Caltrans DESIGN

FUNCTIONAL SUPERVISOR: JONATHAN LEE
CALCULATED-DESIGNED BY: FRED J. WITTEBORN
CHECKED BY: JONATHAN LEE
REVISED BY: FJW
DATE REVISED: 2/13/13

LAST REVISION 01-11-13 | DATE PLOTTED => 18-MAY-2013 | TIME PLOTTED => 17:54

Dist	COUNTY	ROUTE	KILOMETER POST TOTAL PROJECT	SHEET No.	TOTAL SHEETS
04	Son	101	33.3	42	158

REGISTERED CIVIL ENGINEER 2/22/13 DATE

5-13-13
PLANS APPROVAL DATE

REGISTERED PROFESSIONAL ENGINEER Fred J. Witteborn No. 56272 Exp. 12-31-14 CIVIL STATE OF CALIFORNIA

THE STATE OF CALIFORNIA OR ITS OFFICERS OR AGENTS SHALL NOT BE RESPONSIBLE FOR THE ACCURACY OR COMPLETENESS OF ELECTRONIC COPIES OF THIS PLAN SHEET.

Caltrans Metric

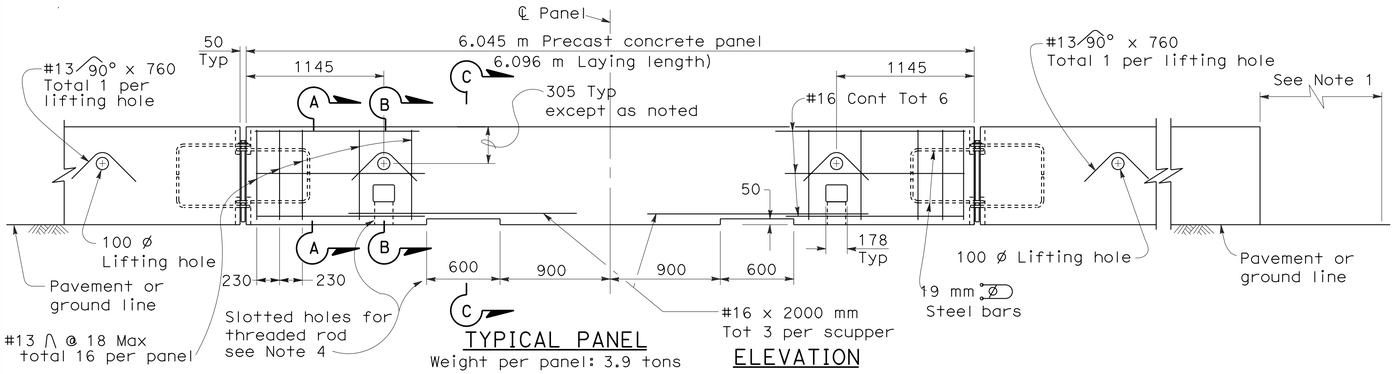

TYPICAL PANEL
Weight per panel: 3.9 tons

ELEVATION

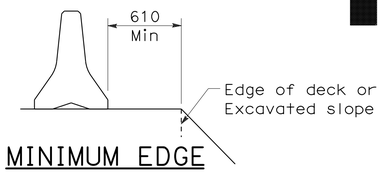

MINIMUM EDGE DISTANCE
See Note 4

NOTES:

1. For end treatment, layout and crash cushions, where needed, see Project Plans or Special Provisions.
2. All 90 mm gaps at removable panels are to be backed at the base with #25 x 260 mm dowel or 25.4 mmø pin each side of joint. See Section G-G.
3. Where Temporary Railing (Type K) is placed on curves and radii that are too severe to connect panels with bolted joints, the railing is to be backed continuously with earth fill. See Section F-F.
4. Where the offset distance from the exposed edge of deck to the closest edge of the temporary railing is less than 610, attach each panel to deck slab with 25 mm diameter threaded rods (total four per panel) inserted through the slotted holes of the panel and bond in drilled holes 150 mm deep in the deck slabs. See "Bridge Memo to Designers" Manual.

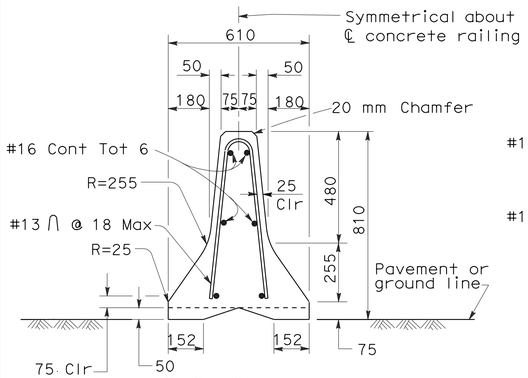

SECTION A-A

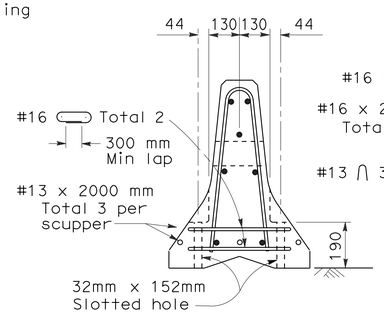

SECTION B-B

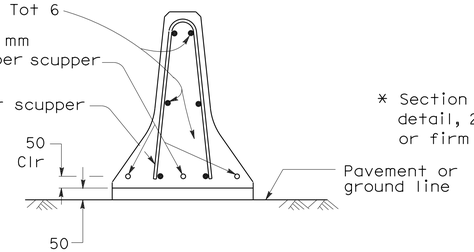

SECTION C-C

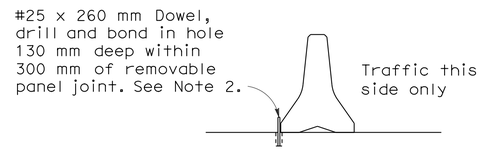

SECTION G-G *

* Section G-G is for concrete pavement. Alternative detail, 25.4 mm ø pins 610 mm long driven in AC or firm soil permitted, minimum 460 mm deep.

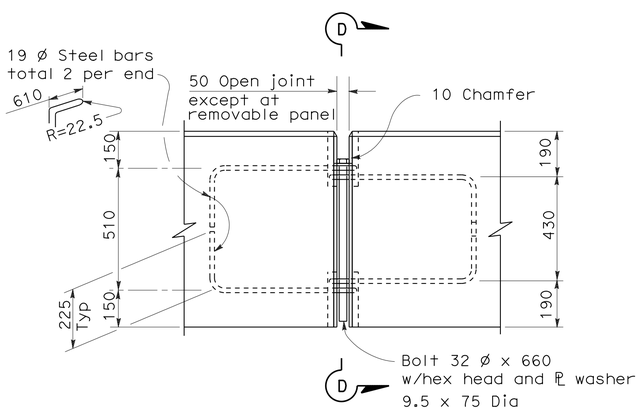

ELEVATION

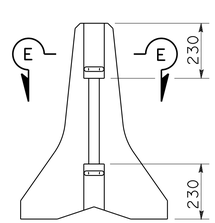

VIEW D-D

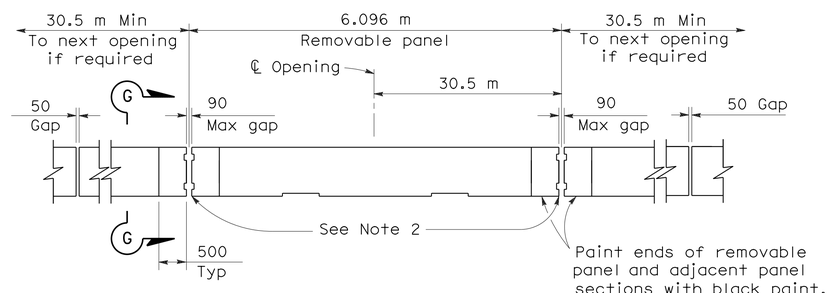

ELEVATION

TYPICAL OPENING DETAIL

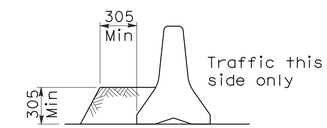

SECTION F-F
See Note 3

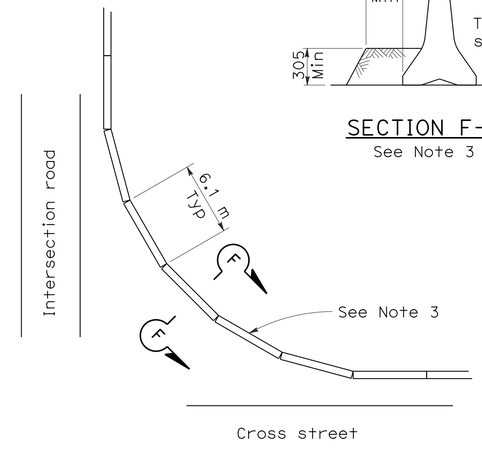

CURVED LAYOUT

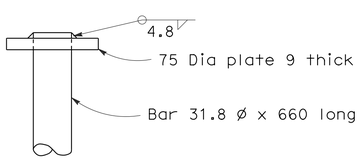

ALTERNATIVE HEAD DETAIL

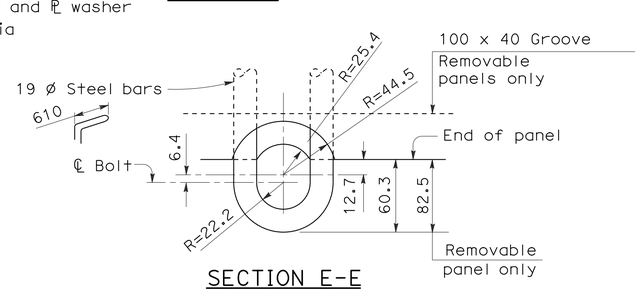

SECTION E-E

BOLT CONNECTION DETAIL

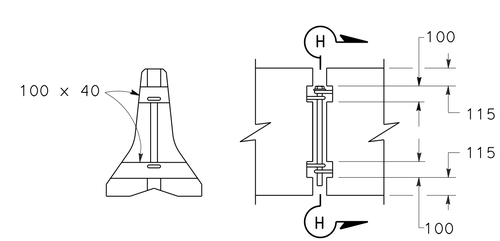

SECTION H-H ELEVATION

REMOVABLE PANEL GROOVE DETAILS

ALL DIMENSIONS ARE IN
MILLIMETERS UNLESS OTHERWISE SHOWN

TEMPORARY RAILING (TYPE K)

NO SCALE

C-37

FJW	2/13/13	FRED J. WITTEBORN
REVISED BY	DATE REVISED	JONATHAN LEE
CALCULATED-DESIGNED BY	CHECKED BY	
FUNCTIONAL SUPERVISOR	JONATHAN LEE	

STATE OF CALIFORNIA - DEPARTMENT OF TRANSPORTATION
Caltrans DESIGN

LAST REVISION 02-13-13 | DATE PLOTTED => 18-MAY-2013 | TIME PLOTTED => 17:54

Dist	COUNTY	ROUTE	KILOMETER POST TOTAL PROJECT	SHEET No.	TOTAL SHEETS
04	Son	101	33.3	43	158

REGISTERED CIVIL ENGINEER 2/22/13 DATE

5-13-13
PLANS APPROVAL DATE

REGISTERED PROFESSIONAL ENGINEER Fred J. Witteborn No. 56272 Exp. 12-31-14 CIVIL STATE OF CALIFORNIA

THE STATE OF CALIFORNIA OR ITS OFFICERS OR AGENTS SHALL NOT BE RESPONSIBLE FOR THE ACCURACY OR COMPLETENESS OF ELECTRONIC COPIES OF THIS PLAN SHEET.

Caltrans Metric

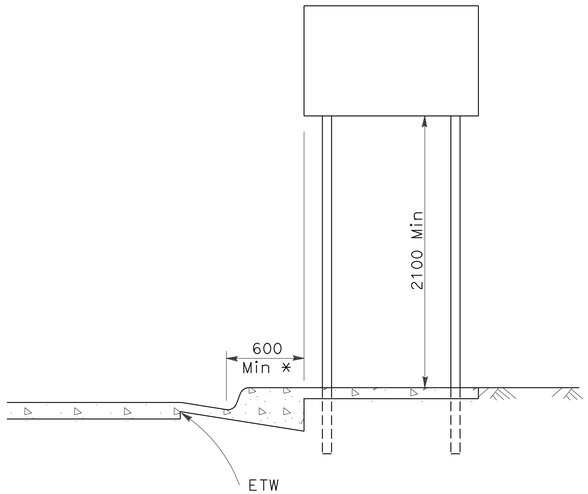

* 300 mm Min where lateral clearance limited

URBAN LOCATIONS

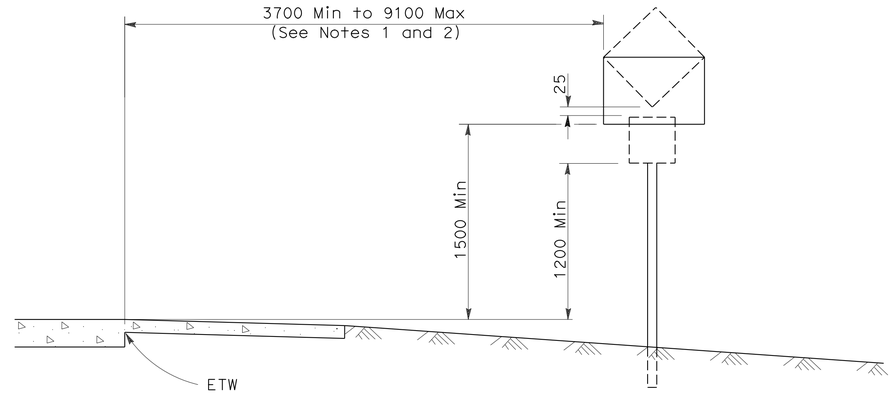

RURAL LOCATIONS

NOTES:

1. When clear roadside recovery areas are provided, signs shall be placed as far from the edge of traveled way as possible, up to a maximum of 9100 mm. When possible, they shall be placed in protected locations.
2. Signs in medians shall be placed at midpoint of median up to a maximum distance of 9100 mm from edge of traveled way. When appropriate, signs for opposing directions shall be placed back to back.
3. Does not apply at locations where minimum horizontal distance is not reasonable due to terrain characteristics, steep slopes, roadway features, or when signs are installed on structures or signal or lighting standards.

EPS = Edge of Paved Shoulder

CONVENTIONAL HIGHWAYS AND INTERCHANGE AREAS

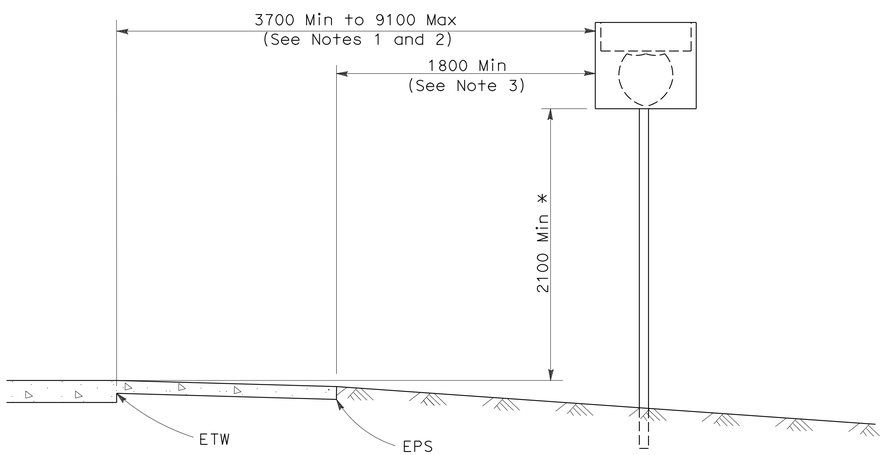

* 1500 mm Min at 9100 mm from ETW

REGULATORY AND WARNING SIGNS AND ROUTE SHIELDS

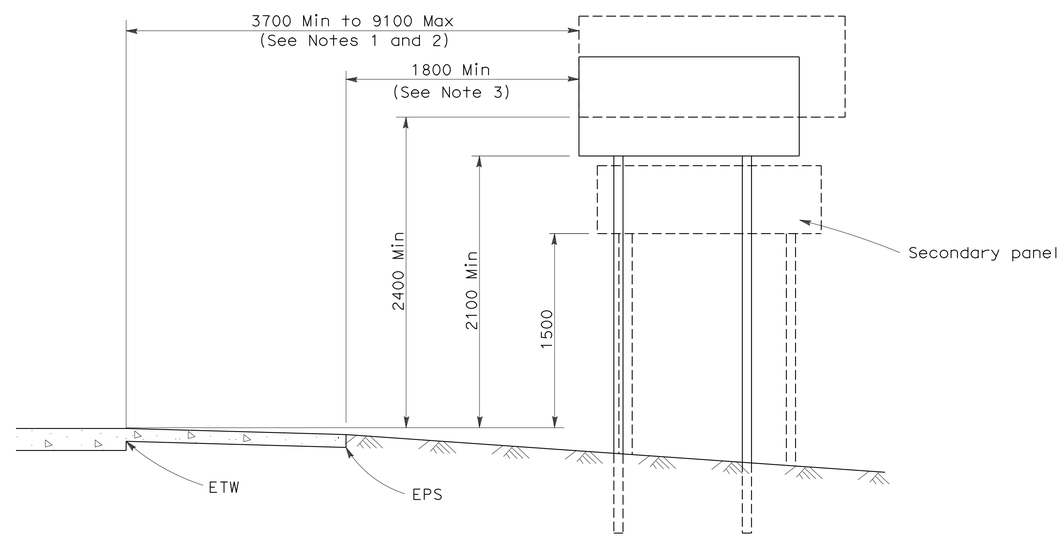

GUIDE SIGNS

FREEWAY AND EXPRESSWAY LOCATIONS

ALL DIMENSIONS ARE IN MILLIMETERS UNLESS OTHERWISE SHOWN

ROADSIDE SIGNS TYPICAL INSTALLATION DETAILS No. 1

NO SCALE

C-38

CALCULATED-DESIGNED BY	FRED J. WITTEBORN	REVISED BY	FJW
CHECKED BY	JONATHAN LEE	DATE REVISED	2/13/13

FUNCTIONAL SUPERVISOR: JONATHAN LEE

STATE OF CALIFORNIA - DEPARTMENT OF TRANSPORTATION
Caltrans DESIGN

LAST REVISION 12-28-12 | DATE PLOTTED => 18-MAY-2013 | TIME PLOTTED => 17:54

Dist	COUNTY	ROUTE	KILOMETER POST TOTAL PROJECT	SHEET No.	TOTAL SHEETS
04	Son	101	33.3	44	158

REGISTERED CIVIL ENGINEER 2/22/13 DATE

5-13-13
PLANS APPROVAL DATE

REGISTERED PROFESSIONAL ENGINEER Fred J. Witteborn No. 56272 Exp. 12-31-14 CIVIL STATE OF CALIFORNIA

THE STATE OF CALIFORNIA OR ITS OFFICERS OR AGENTS SHALL NOT BE RESPONSIBLE FOR THE ACCURACY OR COMPLETENESS OF ELECTRONIC COPIES OF THIS PLAN SHEET.

Caltrans Metric

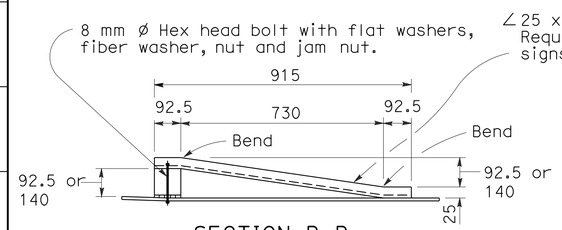

SECTION B-B

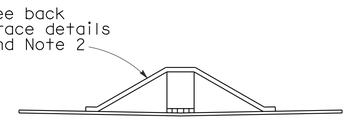

SECTION C-C

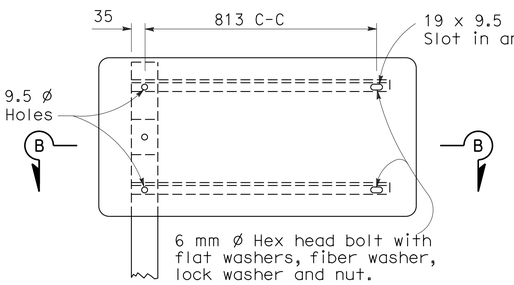

UNBALANCED

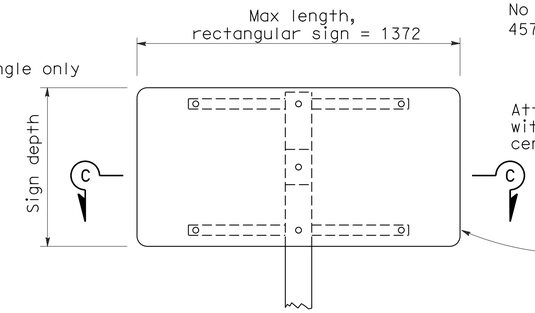

BALANCED

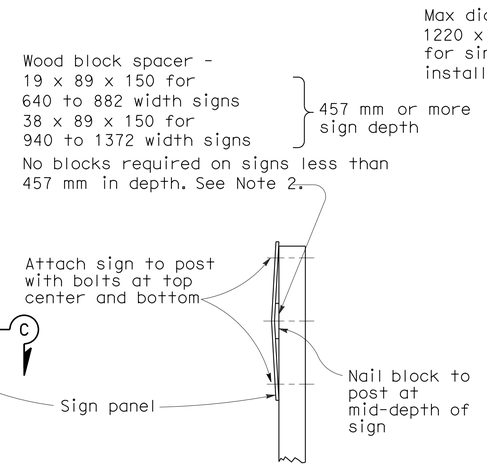

END VIEW

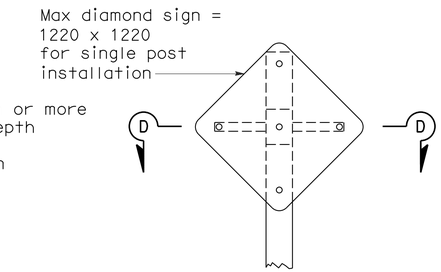

BALANCED

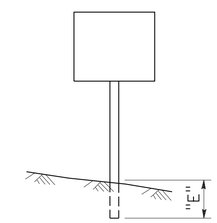

"E" Post Embedment

SINGLE POST INSTALLATION

See Note 5 regarding breakaway feature for single post installations.

POST EMBEDMENT	
POST SIZE	"E"
89 x 89	1100
89 x140	1400
140 x 140	1550
140 x 184	1850

POST SPACING TABLE		
SIGN PANEL LENGTH	SIGN PANEL OVERHANG	POST SPACING
"A"	"B"	"C"
(m)	(mm)	(mm)
1.420 to 1.670	175 to 300	1070
1.830 & 1.980	300 & 375	1230
2.135 & 2.285	375 & 450	1385
2.440	450	1540
2.590	500	1590
2.740	550	1640
2.890	575	1740
2.540	610	1320
3.200	610	1980
3.350, 3.500, 3.660	610, 685, 765	2130
3.810	765	2280
3.960	765	2430
4.110, 4.420	765, 920	2580
4.720, 4.420	840, 915	2590
4.720, 4.870	915, 990	2890
5.030	990	3050
5.180, 5.330	990, 1065	3200
5.490, 5.640	1065, 1140	3360
5.790	1140	3510
5.940, 6.100	1140,1220	3660
6.250, 6.400	1140, 1215	3970
6.550	1215	4120
6.700, 6.850	1215, 1290	4270
7.010	1290	4430
7.160, 7.310	1290, 1365	4580

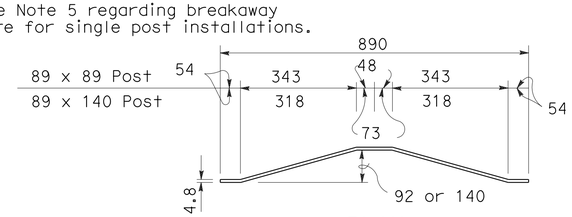

PLAN

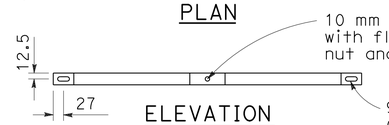

ELEVATION

BACK BRACE DETAILS

See Note 2

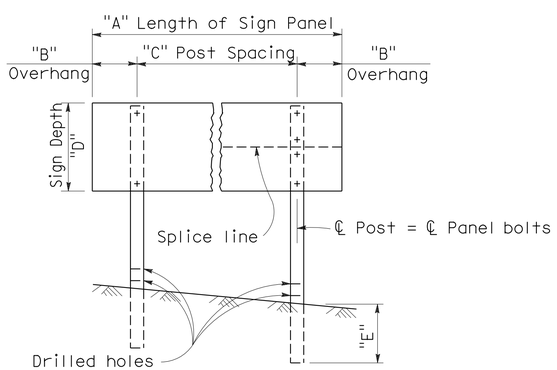

ELEVATION

NOTE:

Bolt hole Layout is dependent on type of panel. Drill holes in post to match panel.

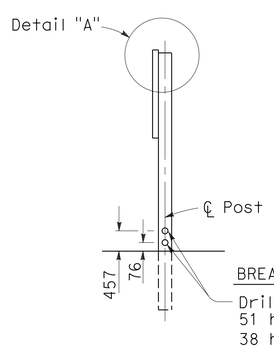

SIDE VIEW

BREAKAWAY FEATURE

Drill 76 holes in 140 x 184post, 51 holes in 140 x 140 post, and 38 holes for 89 x 140 posts.

Orient hole axis parallel to axis of sign. See Note 6 for tolerances of drilled holes.

TWO POST INSTALLATION

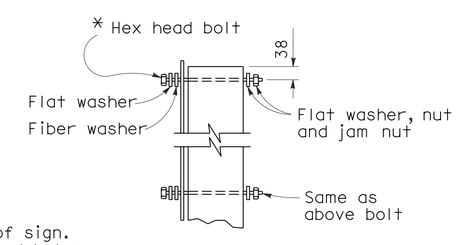

DETAIL A

* 7.9 ø for single sheet aluminum panel signs.

4.5 ø for laminated panel signs or framed single sheet aluminum panel signs

NOTES:

1. Place long dimension of post cross section normal to sign axis. See Section C-C.
2. Balanced single post installations of unframed single sheet aluminum panel signs shall have block spacers if 457 mm or more in depth and a combination of block spacers and back braces if 457 mm or more in depth and 864 mm or more in width. Sign panels less than 457 mm in depth and 864 mm or more in width shall have back braces only.
3. For post size see sign layout, format or quantity sheets.
4. Balanced single post installations of Laminated Panel and Framed single sheet panel signs require back braces when 864 mm or more in length.
5. Breakaway feature for single post installation shall be the same as the breakaway feature shown for the two post installation.
6. Tolerance for diameter of drilled holes in breakaway feature is ± 3 mm.

ALL DIMENSIONS ARE IN MILLIMETERS UNLESS OTHERWISE SHOWN

ROADSIDE SIGNS-WOOD POST TYPICAL INSTALLATION DETAILS No. 2

NO SCALE

C-39

STATE OF CALIFORNIA - DEPARTMENT OF TRANSPORTATION
Caltrans DESIGN

FUNCTIONAL SUPERVISOR: JONATHAN LEE
CALCULATED-DESIGNED BY: FRED J. WITTEBORN
CHECKED BY: JONATHAN LEE
REVISED BY: FJW
DATE REVISED: 2/13/13

LAST REVISION 12-31-12
DATE PLOTTED => 18-MAY-2013
TIME PLOTTED => 17:54

Dist	COUNTY	ROUTE	KILOMETER POST TOTAL PROJECT	SHEET No.	TOTAL SHEETS
04	Son	101	33.3	45	158

REGISTERED CIVIL ENGINEER 2/22/13 DATE

5-13-13
PLANS APPROVAL DATE

REGISTERED PROFESSIONAL ENGINEER Fred J. Witteborn No. 56272 Exp. 12-31-14 CIVIL STATE OF CALIFORNIA

THE STATE OF CALIFORNIA OR ITS OFFICERS OR AGENTS SHALL NOT BE RESPONSIBLE FOR THE ACCURACY OR COMPLETENESS OF ELECTRONIC COPIES OF THIS PLAN SHEET.

Caltrans Metric

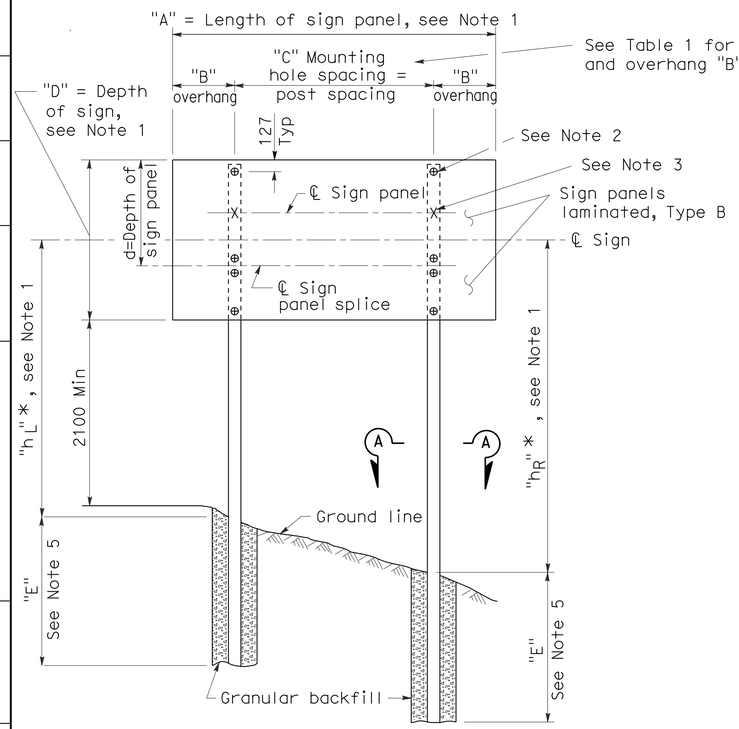

ELEVATION

* Dimensions shown on project plans are for fabrication. At time of installation adjust these dimensions to provide a level sign approximately 7'-0" above roadway shoulder.

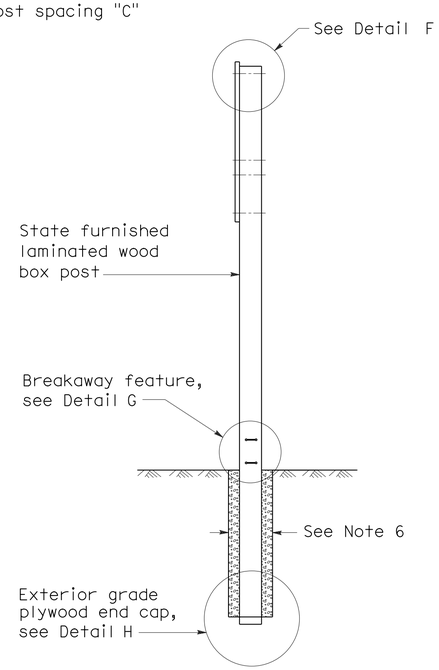

SIDE VIEW

SIGN PANEL LENGTH (m) (See Note 1)	SIGN PANEL OVERHANG (mm)	MOUNTING HOLE SPACING (m)
"A"	"B"	"C"
2.44	457	1.52
2.74	559	1.63
3.05	610	1.83
3.35	610	2.13
3.66	762	2.13
3.96	762	2.44
4.27	762	2.74
4.57	914	2.74
4.88	991	2.90
5.18	991	3.20
5.49	1067	3.35
5.79	1143	3.51
6.10	1219	3.66
6.40	1295	3.81
6.71	1295	4.11
7.01	1372	4.27
7.32	1448	4.42

TABLE 1

"hL" or "hR" (m)	TOTAL SIGN AREA (m^2) 3.7 to 8.4	8.4+ to 13.0	13.0+ to 17.6	17.6+ to 22.3	22.3+ to 26.9
2.7 to 4.0	1.8	2.0	2.3	2.6	2.7
4.0 to 5.2	1.8	2.1	2.4	2.7	3.0
5.2 to 6.4	1.8	2.3	2.7	2.7	
6.4 to 7.9	2.1	2.4	2.7		

TABLE 2

Minimum post embedment "E" for Type L post

NOTES:

1. See Project Plans for:
   Location of each sign.
   Length of sign panel "A".
   Depth of sign "D".
   Height "hL" and "hR" of centerline of sign above ground line at each post.
   Type of post, L and M.
   See Sheet C-38 for other details.
2. "⊕" Indicates location of 12.5 mm lag screws and existing holes in panels. Lag screws are to be embedded at least 1" into post using 8 mm diameter pilot holes.
3. "x" Indicates location of additional 12.5 mm lag screws required when the depth of sign panel (d) and the length of sign panel (A) are as follows:

A	d
5.18 to 7.32	1524
5.78 to 7.32	1372
6.40 to 7.32	1219
7.32	1067

4. Type B laminated sign panels are 29 mm thick for sign lengths of 4.6 m and less. Panel over 4.6 m in length are 67 mm thick.
5. Embedment "E" for Type L post shall conform to the requirements in Table 2. Embedment for Type M posts shall be 1.8 m minimum.
6. Diameter of post holes for Type L posts shall be at least 750 mm. Diameter of post holes for Type M posts shall be at least 600 mm.

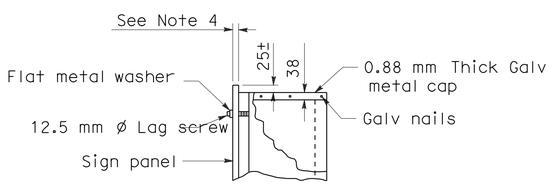

DETAIL F

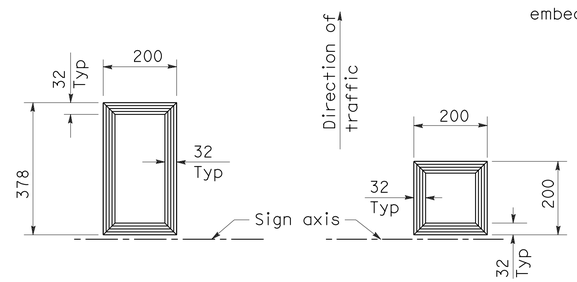

TYPE L POST

TYPE M POST

SECTION A-A

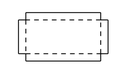

GALV METAL CAP

State furnished

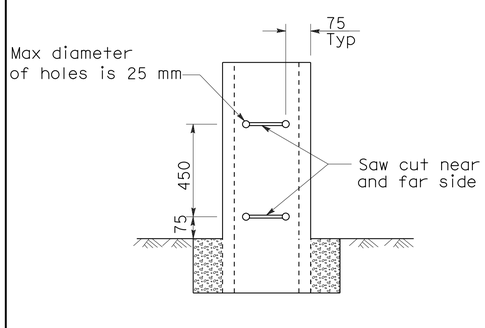

DETAIL G

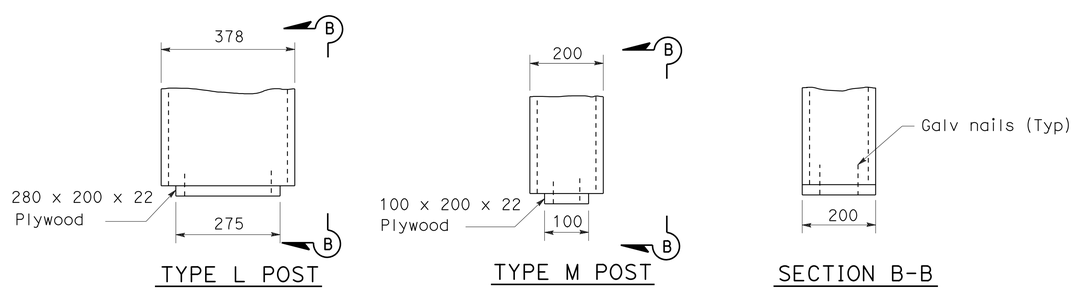

TYPE L POST

TYPE M POST

SECTION B-B

DETAIL H

ALL DIMENSIONS ARE IN MILLIMETERS UNLESS OTHERWISE SHOWN

ROADSIDE SIGNS LAMINATED WOOD BOX POST TYPICAL INSTALLATION DETAILS No. 3

NO SCALE

C-40

FUNCTIONAL SUPERVISOR: JONATHAN LEE | CALCULATED-DESIGNED BY: FRED J. WITTEBORN | CHECKED BY: JONATHAN LEE | REVISED BY: FJW | DATE REVISED: 2/13/13

STATE OF CALIFORNIA - DEPARTMENT OF TRANSPORTATION
Caltrans DESIGN

LAST REVISION 02-13-13 | DATE PLOTTED => 18-MAY-2013 | TIME PLOTTED => 17:54

Dist	COUNTY	ROUTE	KILOMETER POST TOTAL PROJECT	SHEET No.	TOTAL SHEETS
04	Son	101	33.3	46	158

REGISTERED CIVIL ENGINEER 2/22/13 DATE

5-13-13
PLANS APPROVAL DATE

REGISTERED PROFESSIONAL ENGINEER Fred J. Witteborn No. 56272 Exp. 12-31-14 CIVIL STATE OF CALIFORNIA

THE STATE OF CALIFORNIA OR ITS OFFICERS OR AGENTS SHALL NOT BE RESPONSIBLE FOR THE ACCURACY OR COMPLETENESS OF ELECTRONIC COPIES OF THIS PLAN SHEET.

Caltrans Metric

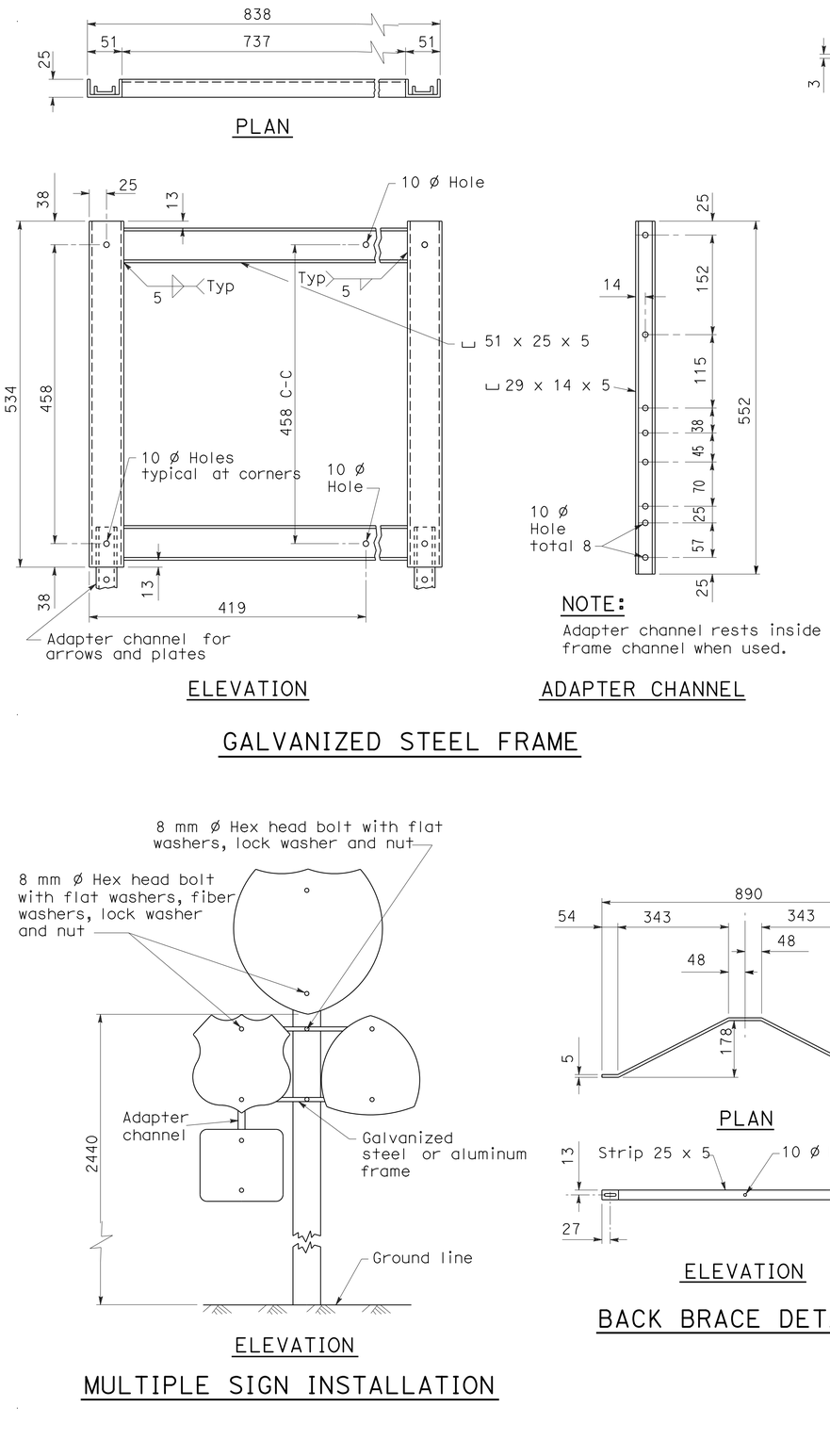

ALL DIMENSIONS ARE IN MILLIMETERS UNLESS OTHERWISE SHOWN

ROADSIDE SIGNS TYPICAL INSTALLATION DETAILS No. 4

NO SCALE

C-41

FRED J. WITTEBORN	FJW		
JONATHAN LEE		REVISED BY	DATE REVISED 2/13/13
CALCULATED-DESIGNED BY			
CHECKED BY			
FUNCTIONAL SUPERVISOR			
JONATHAN LEE			

STATE OF CALIFORNIA - DEPARTMENT OF TRANSPORTATION
Caltrans DESIGN

LAST REVISION 01-11-13 DATE PLOTTED => 16-MAY-2013 TIME PLOTTED => 17:54

Dist	COUNTY	ROUTE	KILOMETER POST TOTAL PROJECT	SHEET No.	TOTAL SHEETS
04	Son	101	33.3	47	158

REGISTERED CIVIL ENGINEER 2/22/13 DATE

5-13-13
PLANS APPROVAL DATE

REGISTERED PROFESSIONAL ENGINEER Fred J. Witteborn No. 56272 Exp. 12-31-14 CIVIL STATE OF CALIFORNIA

THE STATE OF CALIFORNIA OR ITS OFFICERS OR AGENTS SHALL NOT BE RESPONSIBLE FOR THE ACCURACY OR COMPLETENESS OF ELECTRONIC COPIES OF THIS PLAN SHEET.

Caltrans Metric

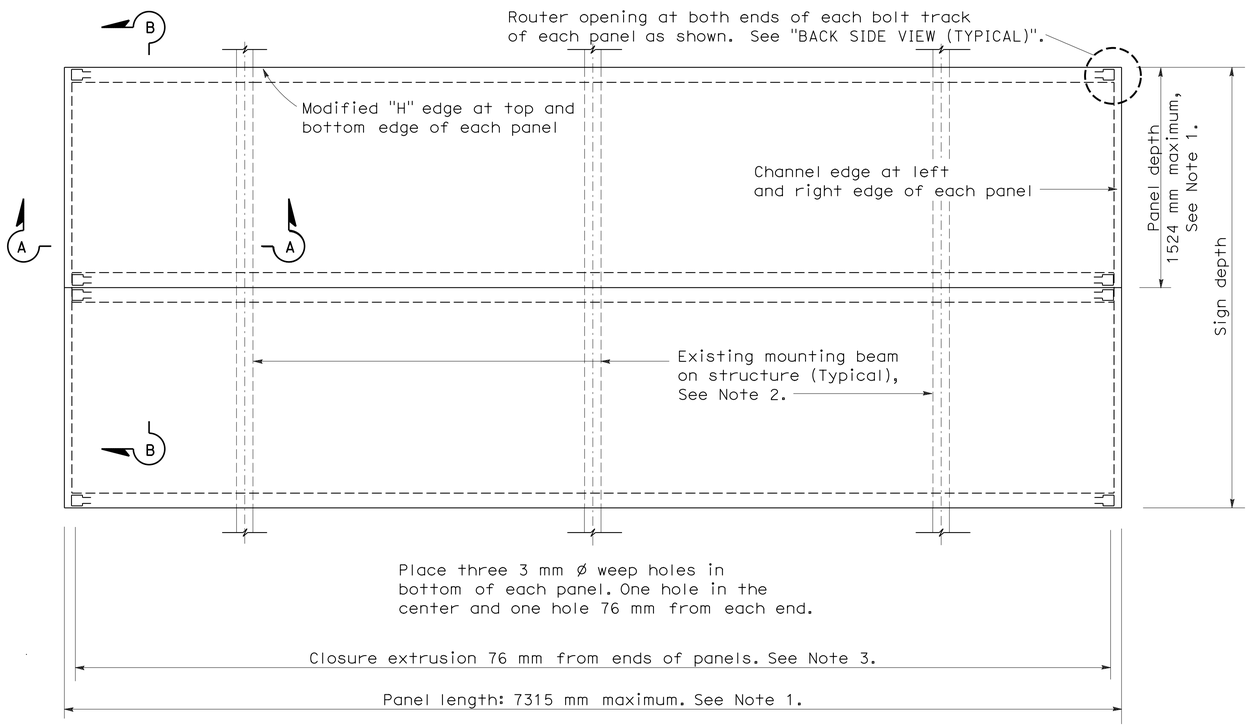

FACE VIEW OF LAMINATED PANEL

Two panels shown

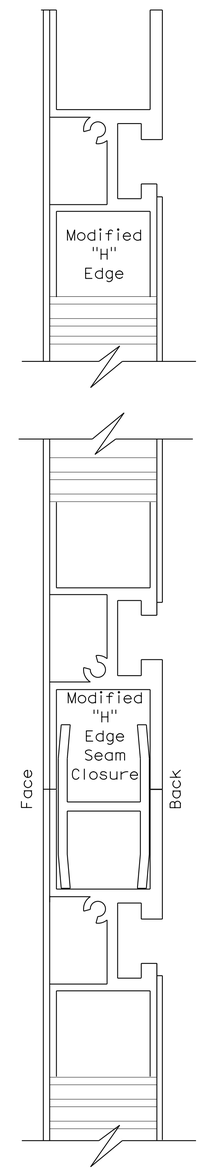

SECTION B-B

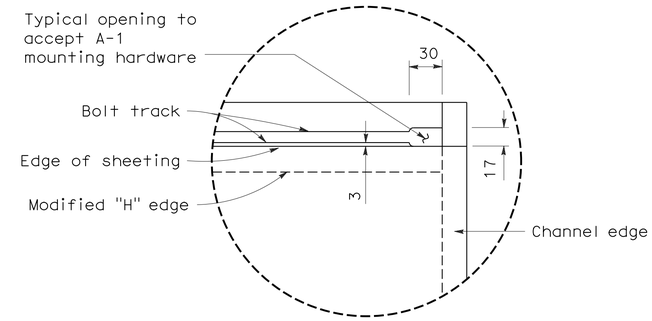

BACK SIDE VIEW (TYPICAL)

NO SCALE

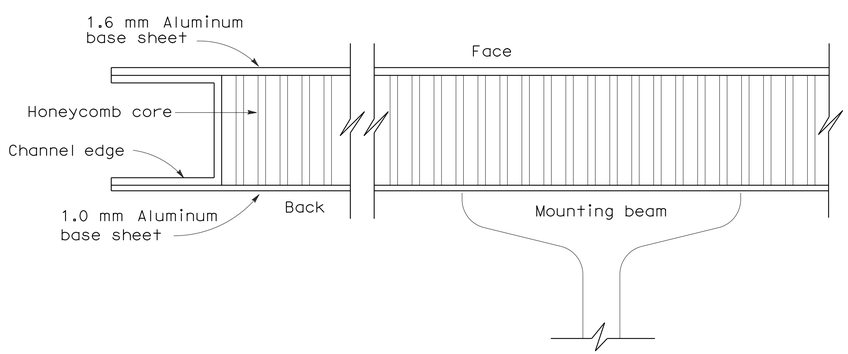

SECTION A-A

NOTES:

1. Panel length shall be graduated in increments of 30.4 mm. Panel depth shall be 50.8 mm to 152.4 mm, graduated in increments of 25.4 mm.
2. Unless otherwise shown on the plans, refer to applicable Standard Plan for location of structure supports and mounting details.
3. For multiple panel signs, see Sheet C-46 for seam closure extrusion quantities.
4. See Standard Plan S86 for extrusion details.
5. See Standard Plan S87 for A-1 and Standard Plan S88 for A-2 mounting hardware.
6. Extrusions shall be joined as specified in the Special Provisions.
7. All horizontal extrusions shall be continuous.

ALL DIMENSIONS ARE IN MILLIMETERS UNLESS OTHERWISE SHOWN

OVERHEAD LAMINATED SIGN SINGLE OR MULTIPLE PANEL TYPE A (25.4 mm THICK)

NO SCALE

C-42

REVISED BY	DATE REVISED
FJW	2/13/13

FRED J. WITTEBORN — FUNCTIONAL SUPERVISOR
JONATHAN LEE — CALCULATED-DESIGNED BY
JONATHAN LEE — CHECKED BY

STATE OF CALIFORNIA - DEPARTMENT OF TRANSPORTATION
Caltrans DESIGN

LAST REVISION 02-13-13 | DATE PLOTTED => 16-MAY-2013 | TIME PLOTTED => 17:54

Dist	COUNTY	ROUTE	KILOMETER POST TOTAL PROJECT	SHEET No.	TOTAL SHEETS
04	Son	101	33.3	48	158

REGISTERED CIVIL ENGINEER 2/22/13 DATE

5-13-13
PLANS APPROVAL DATE

REGISTERED PROFESSIONAL ENGINEER Fred J. Witteborn No. 56272 Exp. 12-31-14 CIVIL STATE OF CALIFORNIA

THE STATE OF CALIFORNIA OR ITS OFFICERS OR AGENTS SHALL NOT BE RESPONSIBLE FOR THE ACCURACY OR COMPLETENESS OF ELECTRONIC COPIES OF THIS PLAN SHEET.

Caltrans Metric

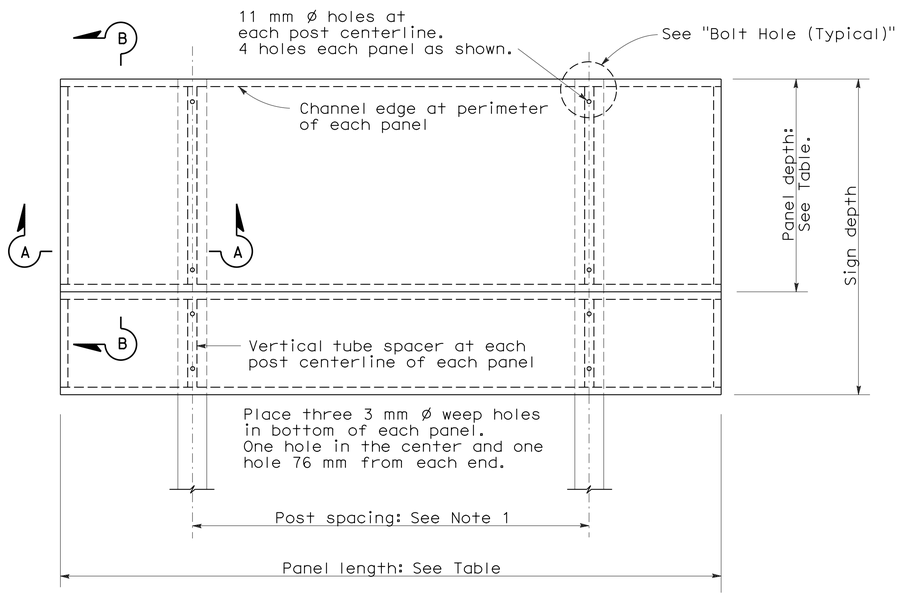

FACE VIEW OF LAMINATED PANEL

Two panels shown

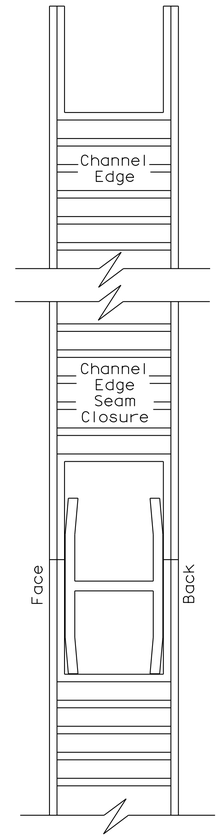

SECTION B-B

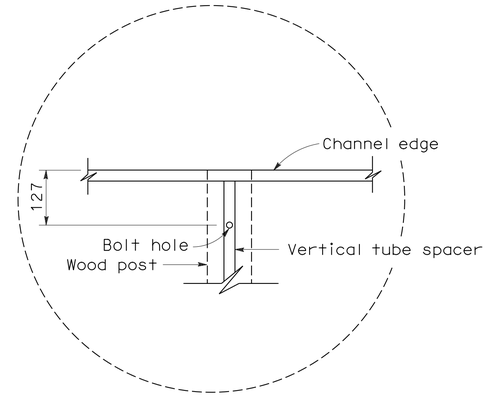

BOLT HOLE (TYPICAL)

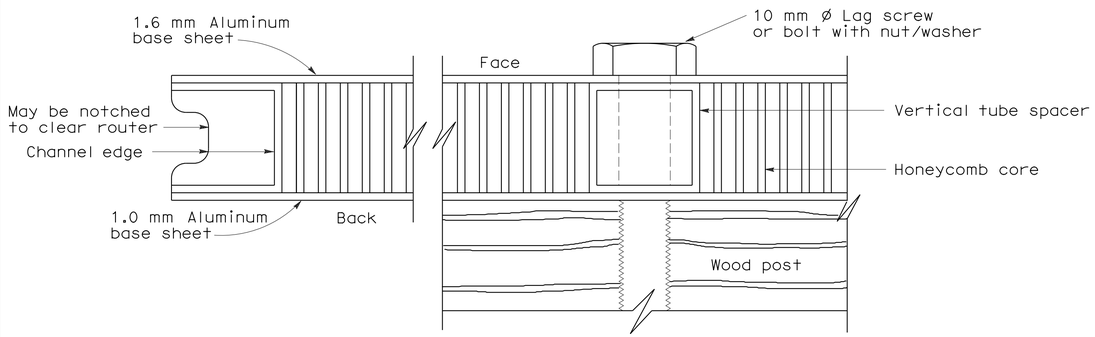

SECTION A-A

TABLE

TYPE B PANEL 25.4 Thick	
Depth (mm)	Length (mm)
1524	1372 to 4572
1372	1372 to 4572
1219	1372 to 4572
1067	1372 to 4572
914	1372 to 4572
762	1372 to 4572
610	1372 to 4572
457	1372 to 4572

See Note 4

NOTES:

1. See Sheet C-46 for post spacing table.
2. See Sheet C-47 for extrusion details.
3. All horizontal extrusions shall be continuous.
4. Depth and length of panel shall be graduated in increments of 152 mm.
5. For multiple panel signs, see Sheet C-46 for seam closure extrusion quantities.
6. Extrusions shall be joined as specified in the Special Provisions.

ALL DIMENSIONS ARE IN MILLIMETERS UNLESS OTHERWISE SHOWN

ROADSIDE LAMINATED SIGN SINGLE OR MULTIPLE PANEL TYPE B (25.4 mm THICK)

NO SCALE

C-43

REVISED BY	FJW
DATE REVISED	2/13/13
FRED J. WITTEBORN	
JONATHAN LEE	
CALCULATED-DESIGNED BY	
CHECKED BY	
FUNCTIONAL SUPERVISOR	JONATHAN LEE

STATE OF CALIFORNIA - DEPARTMENT OF TRANSPORTATION
Caltrans DESIGN

LAST REVISION 02-13-13 DATE PLOTTED => 18-MAY-2013 TIME PLOTTED => 17:54

Dist	COUNTY	ROUTE	KILOMETER POST TOTAL PROJECT	SHEET No.	TOTAL SHEETS
04	Son	101	33.3	49	158

REGISTERED CIVIL ENGINEER 2/22/13 DATE

5-13-13
PLANS APPROVAL DATE

REGISTERED PROFESSIONAL ENGINEER Fred J. Witteborn No. 56272 Exp. 12-31-14 CIVIL STATE OF CALIFORNIA

THE STATE OF CALIFORNIA OR ITS OFFICERS OR AGENTS SHALL NOT BE RESPONSIBLE FOR THE ACCURACY OR COMPLETENESS OF ELECTRONIC COPIES OF THIS PLAN SHEET.

Caltrans Metric

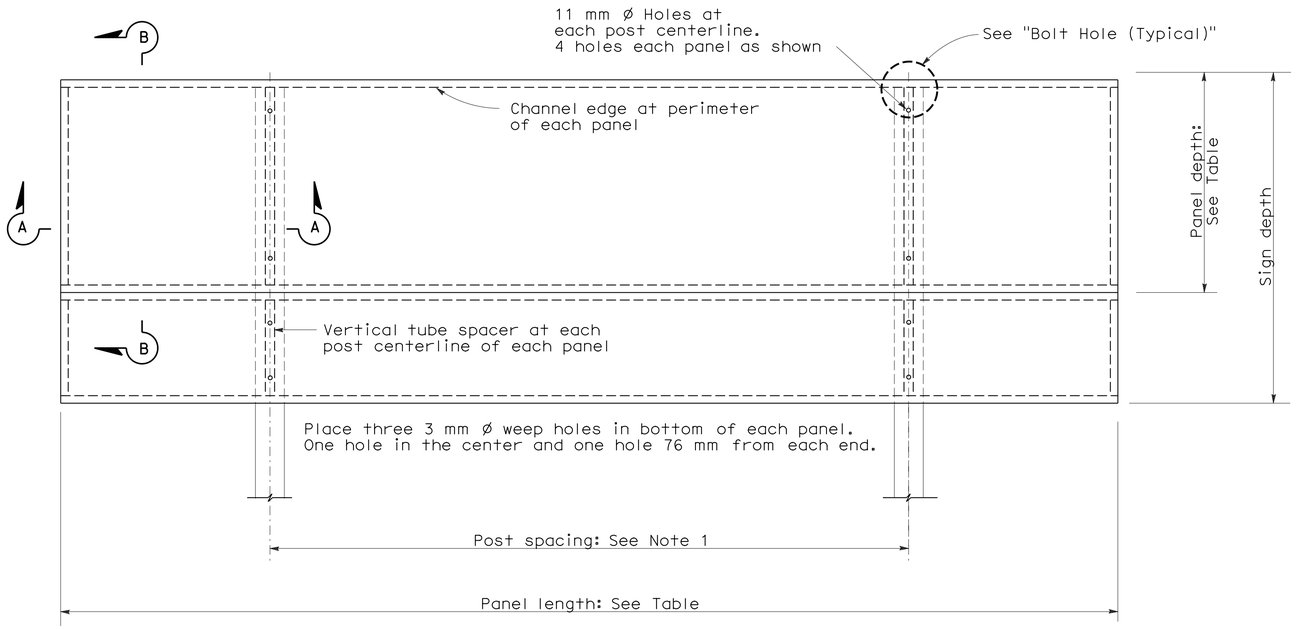

FACE VIEW OF LAMINATED PANEL

Two panels shown

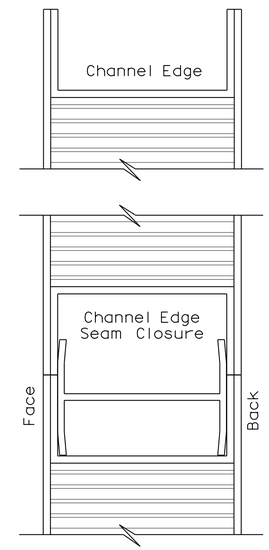

SECTION B-B

TABLE

TYPE B PANEL 63.5 mm Thick	
Depth (mm)	Length (mm)
1524	4724 to 5029
1372	4724 to 5639
1219	4724 to 6249
1067	4724 to 7163
914	4724 to 7315
762	4724 to 7315
610	4724 to 7315
457	4724 to 7315

See Note 4

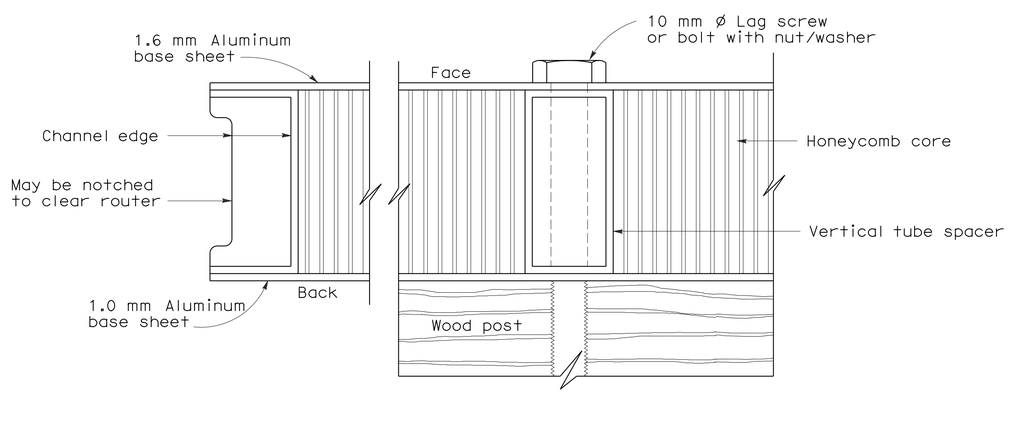

SECTION A-A

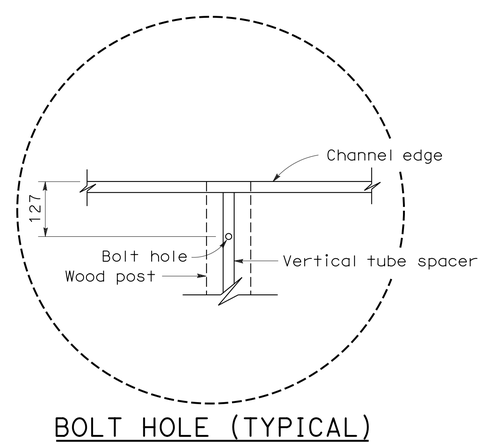

BOLT HOLE (TYPICAL)

NOTES:

1. See Sheet C-46 for post spacing table.
2. See Sheet C-47 for extrusion details.
3. All horizontal extrusions shall be continuous.
4. Depth and length of panel shall be graduated in increments of 6".
5. For multiple panel signs, see Sheet C-46 for seam closure extrusion quantities.
6. Extrusions shall be joined as specified in the Special Provisions.

ALL DIMENSIONS ARE IN
MILLIMETERS UNLESS OTHERWISE SHOWN

ROADSIDE LAMINATED SIGN SINGLE OR MULTIPLE PANEL TYPE B (63.5 mm THICK)

NO SCALE

C-44

REVISED BY	FJW
DATE REVISED	2/13/13
FRED J. WITTEBORN	
JONATHAN LEE	
CALCULATED-DESIGNED BY	
CHECKED BY	
FUNCTIONAL SUPERVISOR	JONATHAN LEE

STATE OF CALIFORNIA - DEPARTMENT OF TRANSPORTATION
Caltrans DESIGN

LAST REVISION 02-13-13 | DATE PLOTTED => 18-MAY-2013 | TIME PLOTTED => 17:54

Dist	COUNTY	ROUTE	KILOMETER POST TOTAL PROJECT	SHEET No.	TOTAL SHEETS
04	Son	101	33.3	50	158

REGISTERED CIVIL ENGINEER 2/22/13 DATE

5-13-13
PLANS APPROVAL DATE

REGISTERED PROFESSIONAL ENGINEER Fred J. Witteborn No. 56272 Exp. 12-31-14 CIVIL STATE OF CALIFORNIA

THE STATE OF CALIFORNIA OR ITS OFFICERS OR AGENTS SHALL NOT BE RESPONSIBLE FOR THE ACCURACY OR COMPLETENESS OF ELECTRONIC COPIES OF THIS PLAN SHEET.

Caltrans Metric

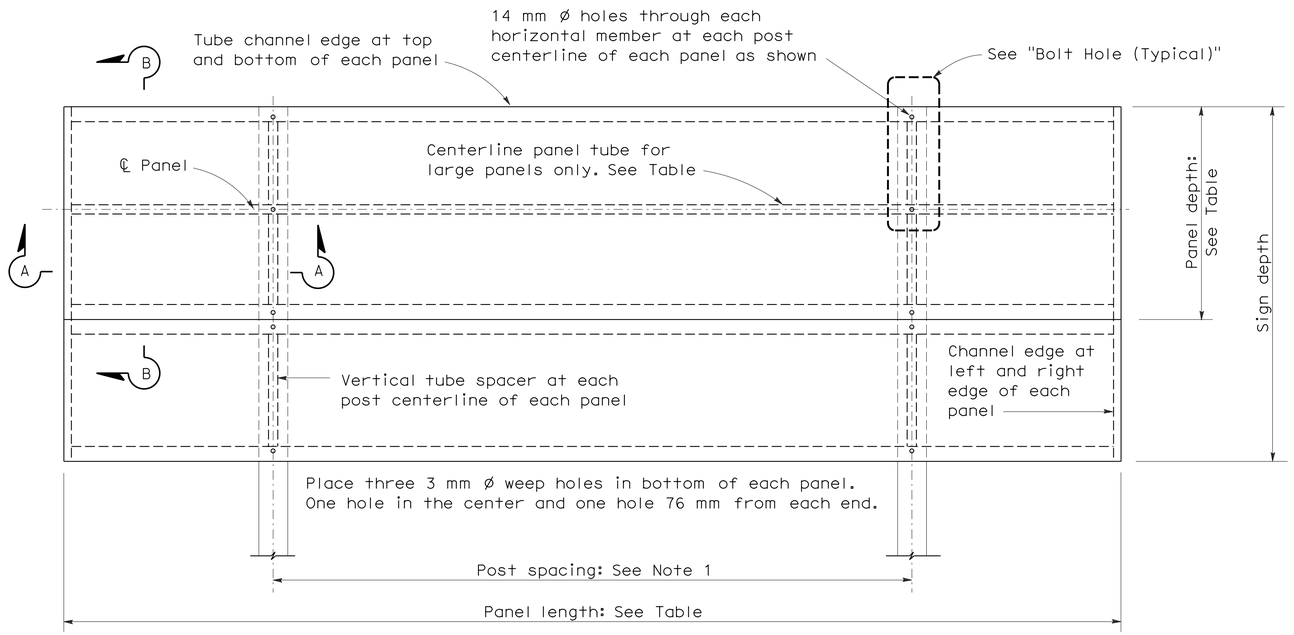

FACE VIEW OF LAMINATED PANEL

Two panels shown

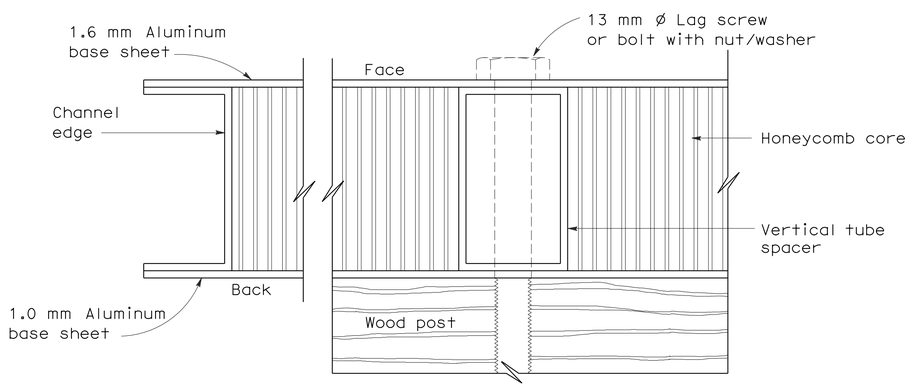

SECTION A-A

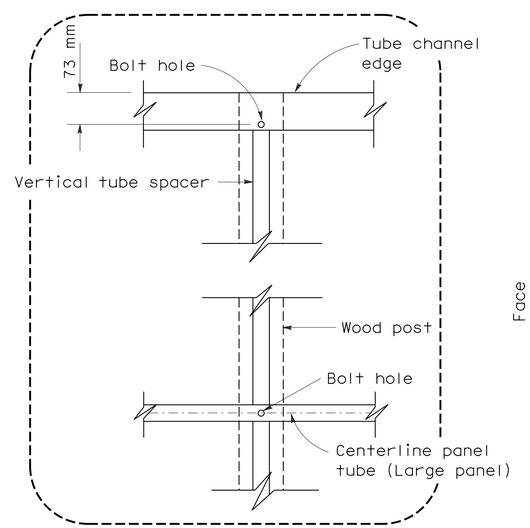

BOLT HOLE (TYPICAL)

Large panel shown

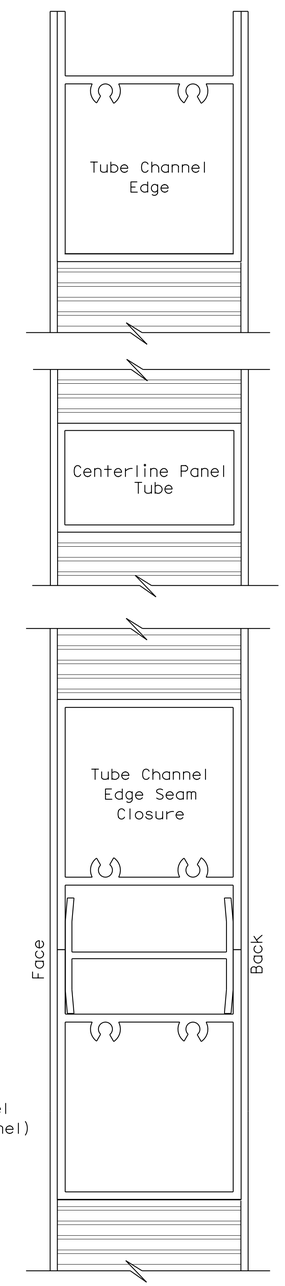

SECTION B-B

TABLE A

Panel Depth (mm)	Panel Length (mm)
1524	5182 to 7315
1372	5791 to 7315
1219	6401 to 7315
1067	7315

See Notes 4 and 7.

NOTES:

1. See Sheet C-46 for post spacing table.
2. See Sheet C-47 for extrusion details.
3. All horizontal extrusions shall be continuous.
4. Depth and length of panel shall be graduated in increments of 152 mm.
5. For multiple panel signs, see Sheet C-46 for seam closure extrusion quantities.
6. Extrusions shall be joined as specified in the Special Provisions.
7. Panels with the dimensions shown in Table A are designated as large panels.

ALL DIMENSIONS ARE IN MILLIMETERS UNLESS OTHERWISE SHOWN

ROADSIDE LAMINATED SIGN SINGLE OR MULTIPLE PANEL TYPE H (63.5 mm THICK)

NO SCALE

C-45

FRED J. WITTEBORN	REVISED BY FJW
JONATHAN LEE	DATE REVISED 2/13/13
CALCULATED-DESIGNED BY	
CHECKED BY	
FUNCTIONAL SUPERVISOR JONATHAN LEE	

STATE OF CALIFORNIA - DEPARTMENT OF TRANSPORTATION
Caltrans DESIGN

LAST REVISION 02-13-13 | DATE PLOTTED => 18-MAY-2013 | TIME PLOTTED => 17:54

Dist	COUNTY	ROUTE	KILOMETER POST TOTAL PROJECT	SHEET No.	TOTAL SHEETS
04	Son	101	33.3	51	158

REGISTERED CIVIL ENGINEER 2/22/13 DATE

5-13-13
PLANS APPROVAL DATE

REGISTERED PROFESSIONAL ENGINEER Fred J. Witteborn No. 56272 Exp. 12-31-14 CIVIL STATE OF CALIFORNIA

THE STATE OF CALIFORNIA OR ITS OFFICERS OR AGENTS SHALL NOT BE RESPONSIBLE FOR THE ACCURACY OR COMPLETENESS OF ELECTRONIC COPIES OF THIS PLAN SHEET.

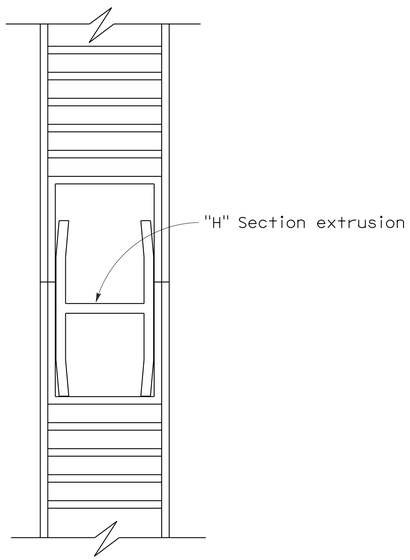

TYPICAL SEAM CLOSURE DETAIL

Panel Length	Closure Length	Number of Pieces & Length Required
1067	914	1-914
1219	1067	1-1067
1372	1219	1-1219
1524	1372	1-1372
1676	1524	1-1524
1829	1676	1-1676
1981	1829	2-914
2134	1981	1-914, 1-1067
2286	2134	2-1067
2438	2286	1-1067, 1-1219
2591	2438	2-1219
2743	2591	1-1219, 1-1372
2896	2743	2-1372
3048	2896	1-1372, 1-1524
3200	3048	2-1524
3353	3200	1-1524, 1-1676
3505	3353	2-1676
3658	3505	2-1219, 1-1067
3810	3658	3-1219
3962	3810	2-1219, 1-1372
4115	3962	2-1372, 1-1219
4267	4115	3-1372
4420	4267	2-1372, 1-1524
4572	4420	2-1524, 1-1372
4724	4572	3-1524
4877	4724	2-1676, 1-1372
5029	4877	2-1676, 1-1524
5182	5029	3-1676
5334	5182	3-1219, 1-1524
5486	5334	3-1372, 1-1219
5693	5486	4-1372
5791	5693	3-1372, 1-1524
5944	5791	3-1524, 1-1219
6096	5944	3-1524, 1-1372
6248	6096	4-1524
6401	6248	3-1676, 1-1219
6553	6401	3-1676, 1-1372
6706	6553	3-1676, 1-1524
6858	6706	4-1676
7010	6858	5-1372
7163	7010	4-1372, 1-1524
7315	7163	3-1372, 2-1524

"H" Sections will be set in 76 mm from edge of panels to allow for rivet clearance in borders. Standard length in stock: 914 mm, 1067 mm, 1219 mm, 1372 mm, 1524 mm and 1676 mm.

SEAM CLOSURE
"H" SECTION EXTRUSION

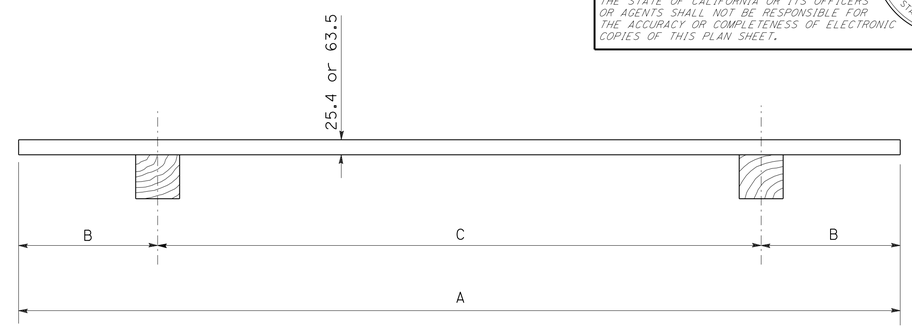

PLAN VIEW

25.4 mm PANEL

Length of Sign A	Number of Posts	Overhang B	Post Spacing C
1372	2	152	1067
1524	2	229	1067
1676	2	305	1067
1829	2	305	1219
1981	2	381	1219
2134	2	381	1372
2286	2	457	1372
2438	2	457	1524
2591	2	508	1575
2743	2	559	1626
2896	2	584	1727
3048	2	610	1829
3200	2	610	1981
3353	2	610	2134
3505	2	686	2134
3658	2	762	2134
3810	2	762	2286
3962	2	762	2438
4115	2	762	2591
4267	2	762	2743
4420	2	914	2591
4572	2	914	2743

63.5 mm PANEL

Length of Sign A	Number of Posts	Overhang B	Post Spacing C
4724	2	914	2896
4877	2	991	2896
5029	2	991	3048
5182	2	991	3200
5334	2	1067	3200
5486	2	1067	3353
5693	2	1143	3353
5791	2	1143	3505
5944	2	1143	3658
6096	2	1229	3658
6248	2	1229	3810
6401	2	1295	3810
6553	2	1295	3962
6706	2	1295	4115
6858	2	1372	4115
7010	2	1372	4267
7163	2	1372	4420
7315	2	1448	4420

STANDARD POST SPACING

ALL DIMENSIONS ARE IN MILLIMETERS UNLESS OTHERWISE SHOWN

SEAM CLOSURE, "H" SECTION EXTRUSION AND POST SPACING TABLES MULTI-HORIZONTAL LAMINATED PANEL ALUMINUM SIGNS

NO SCALE

C-46

STATE OF CALIFORNIA - DEPARTMENT OF TRANSPORTATION
Caltrans DESIGN

FUNCTIONAL SUPERVISOR JONATHAN LEE
CALCULATED-DESIGNED BY FRED J. WITTEBORN
CHECKED BY JONATHAN LEE
REVISED BY FJW
DATE REVISED 2/13/13

LAST REVISION 12-28-12
DATE PLOTTED => 20-MAY-2013
TIME PLOTTED => 06:11

Dist	COUNTY	ROUTE	KILOMETER POST TOTAL PROJECT	SHEET No.	TOTAL SHEETS
04	Son	101	33.3	52	158

REGISTERED CIVIL ENGINEER 2/22/13 DATE

5-13-13
PLANS APPROVAL DATE

REGISTERED PROFESSIONAL ENGINEER Fred J. Witteborn No. 56272 Exp. 12-31-14 CIVIL STATE OF CALIFORNIA

THE STATE OF CALIFORNIA OR ITS OFFICERS OR AGENTS SHALL NOT BE RESPONSIBLE FOR THE ACCURACY OR COMPLETENESS OF ELECTRONIC COPIES OF THIS PLAN SHEET.

Caltrans Metric

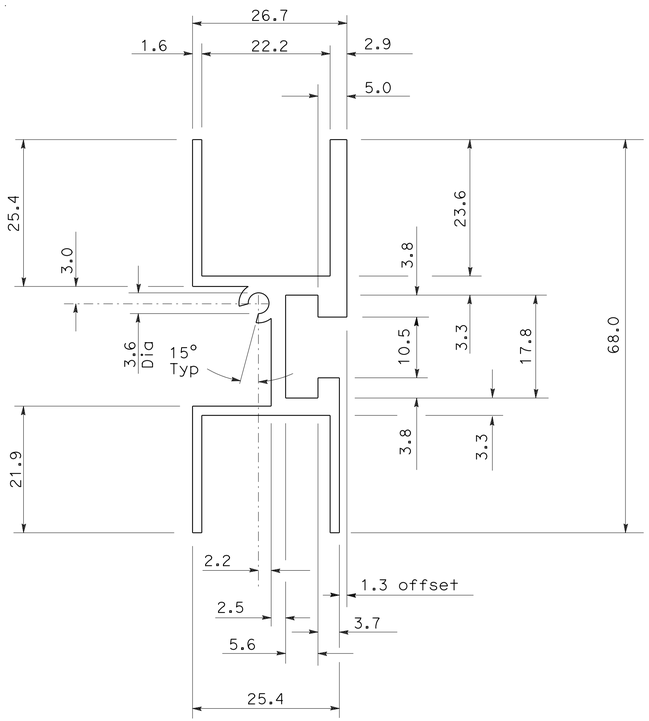

DETAIL No. 1

Unless noted, wall thickness is 0.07".

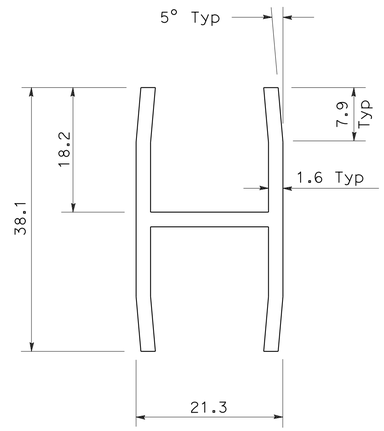

DETAIL No. 2

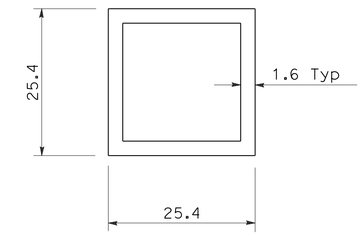

DETAIL No. 3

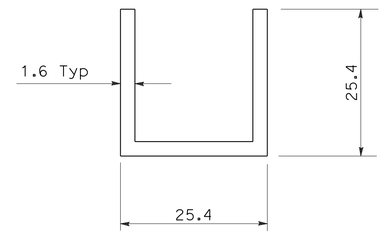

DETAIL No. 4

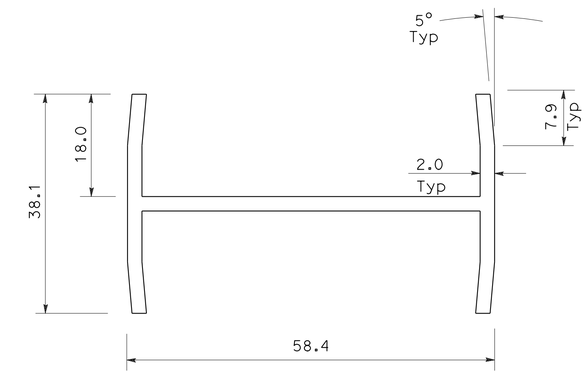

DETAIL No. 5

TABLE

Extrusion Type	25.4 mm Thick Panel		63.5 mm Thick Panel	
	Type A Panel	Type B Panel	Type B Panel	Type H Panel
Channel Edge	Detail No. 4	Detail No. 4	Detail No. 9	Detail No. 9
Tube-Channel Edge	N/A	N/A	N/A	Detail No. 6
Modified "H" Edge	Detail No. 1	N/A	N/A	N/A
Vertical Tube Spacer	N/A	Detail No. 3	Detail No. 8	N/A
Vertical Tube Spacer (Large panel)	N/A	N/A	N/A	Detail No. 7
℄ Panel Tube (Large panel)	N/A	N/A	N/A	Detail No. 7
Seam Closure "H" Section	Detail No. 2	Detail No. 2	Detail No. 5	Detail No. 5

Note: All extrusions shall be aluminum alloy 6063-T6.

℄ = Centerline

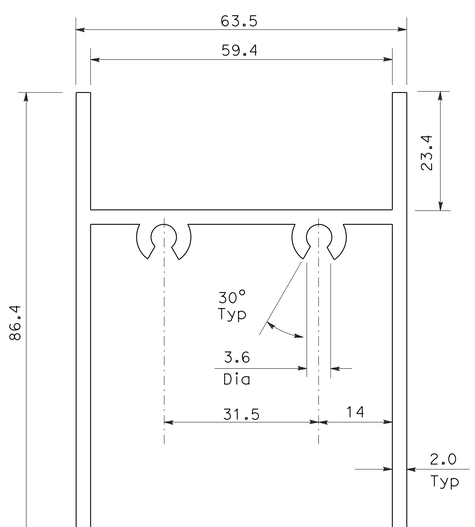

DETAIL No. 6

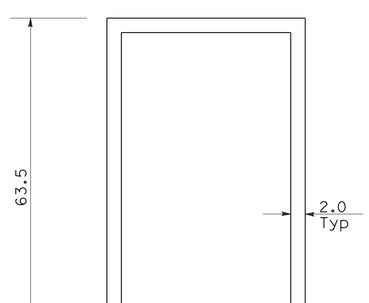

DETAIL No. 7

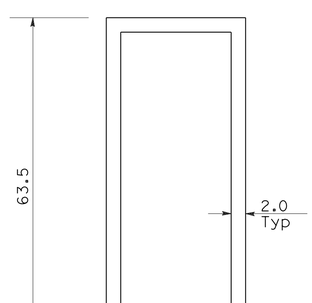

DETAIL No. 8

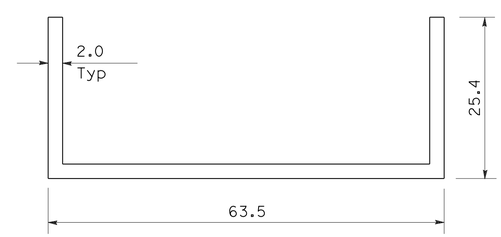

DETAIL No. 9

ALL DIMENSIONS ARE IN MILLIMETERS UNLESS OTHERWISE SHOWN

LAMINATED PANEL DETAILS EXTRUSIONS FOR TYPE A, B AND H PANELS

NO SCALE

C-47

STATE OF CALIFORNIA - DEPARTMENT OF TRANSPORTATION
Caltrans DESIGN

FUNCTIONAL SUPERVISOR: JONATHAN LEE
CALCULATED-DESIGNED BY: FRED J. WITTEBORN
CHECKED BY: JONATHAN LEE
REVISED BY: FJW
DATE REVISED: 2/13/13

LAST REVISION 12-28-12
DATE PLOTTED => 20-MAY-2013
TIME PLOTTED => 06:11

Dist	COUNTY	ROUTE	KILOMETER POST TOTAL PROJECT	SHEET No.	TOTAL SHEETS
04	Son	101	33.3	53	158

REGISTERED CIVIL ENGINEER 2/22/13 DATE

5-13-13
PLANS APPROVAL DATE

REGISTERED PROFESSIONAL ENGINEER Fred J. Witteborn No. 56272 Exp. 12-31-14 CIVIL STATE OF CALIFORNIA

THE STATE OF CALIFORNIA OR ITS OFFICERS OR AGENTS SHALL NOT BE RESPONSIBLE FOR THE ACCURACY OR COMPLETENESS OF ELECTRONIC COPIES OF THIS PLAN SHEET.

Caltrans Metric

CHANNEL SIZES

SIGN LENGTH	SIGN DEPTH	PANEL THICKNESS (mm)	No. OF HORIZONTAL MEMBERS	No. OF VERTICAL MEMBERS	Horz MEMBER TYPE	Vert MEMBER TYPE
Up to 1194		1.6	No frame required			
1219 to 1397		2.0	No frame required			
1422 to 1778	305 to 610	1.6	2	--	A	--
	635 to 914	1.6	2	2	A	A
	940 to 1219	1.6	2	3	A	A
	1245 to 2438	1.6	3	3	B	A
1829 to 1981	305 to 610	1.6	2	--	A	--
	635 to 914	1.6	2	2	A	A
	940 to 1219	1.6	2	3	A	A
	1245 to 1829	1.6	3	3	B	B
	1854 to 2438	1.6	3	3	C	C
2032 to 2286	457 to 1219	2.0	2	3	B	B
	1245 to 1829	2.0	3	3	B	B
	1854 to 2438	2.0	3	3	C	C
2337 to 2591	457 to 1219	2.0	2	3	B	B
	1245 to 2438	2.0	3	3	C	C
2642 to 2896	457 to 1219	2.0	2	3	B	B
	1245 to 2438	2.0	3	3	C	C
2946 to 3353	457 to 1219	2.0	2	3	C	C
	1245 to 2438	2.0	3	3	C	C
	2464 to 3353	2.0	4	3	C	C

NOTE:

Type A - 31.8 mm x 31.8 x 3.2 mm Channel to be aluminum alloy 6063-T5.
* Type B - 60.3 mm x 31.8 mm x 4.8 mm Channel to be aluminum alloy 6063-T6.
* Type C - 50.8 mm x 50.8 mm x 6.4 mm Channel to be aluminum alloy 6063-T6.

* 44.5 mm x 38.1 mm x 3.2 mm Rectangular tubing aluminum alloy 6063-T6 may be substituted for Types B and C, but more than one type of framing material used on one sign is unacceptable.

POST SPACING

SIGN LENGTH (mm)	CENTERLINE SPACING (mm)
1422 to 1727	1067
1778 to 2032	1219
2083 to 2337	1372
2388 to 2489	1524
2540 to 2642	1575
2692 to 2794	1626
2845 to 2946	1727
2997 to 3099	1829
3150 to 3302	1981
3327 to 3353	2134

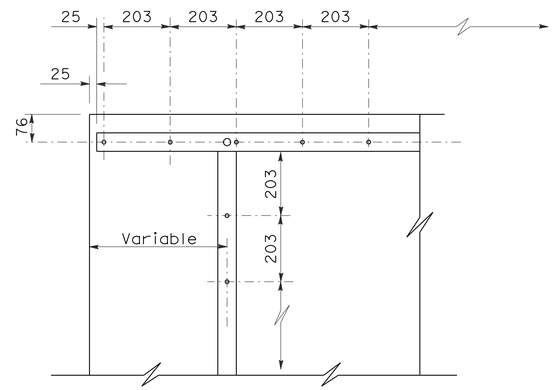

TYPICAL RIVET DETAIL

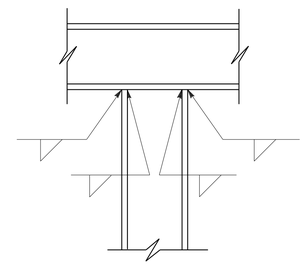

TOP VIEW

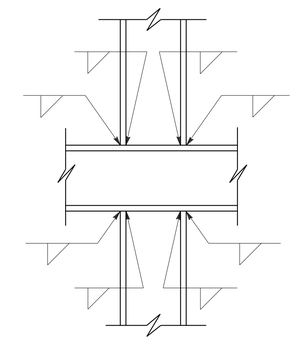

TOP VIEW

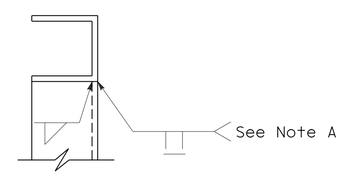

SIDE VIEW
WELD DETAIL No. 1

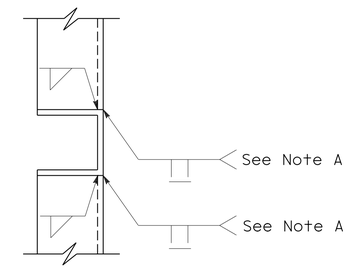

SIDE VIEW
WELD DETAIL No. 2

TYPICAL WELD DETAILS

NOTE A: For rectangular tubing, weld all around and grind beads flush where weld contacts sign panel.

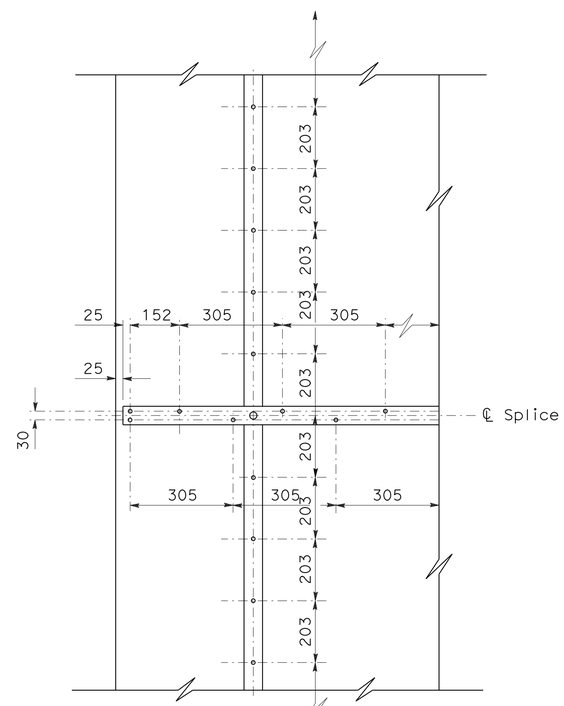

RIVET DETAIL AT SPLICE

ALL DIMENSIONS ARE IN MILLIMETERS UNLESS OTHERWISE SHOWN

FRAMING DETAILS FOR FRAMED SINGLE SHEET ALUMINUM SIGNS RECTANGULAR SHAPE

NO SCALE

C-48

STATE OF CALIFORNIA - DEPARTMENT OF TRANSPORTATION
Caltrans DESIGN
FUNCTIONAL SUPERVISOR JONATHAN LEE
CALCULATED-DESIGNED BY FRED J. WITTEBORN
CHECKED BY JONATHAN LEE
REVISED BY FJW
DATE REVISED 2/13/13

LAST REVISION 02-13-13 DATE PLOTTED => 20-MAY-2013 TIME PLOTTED => 06:11

Dist	COUNTY	ROUTE	KILOMETER POST TOTAL PROJECT	SHEET No.	TOTAL SHEETS
04	Son	101	33.3	54	158

REGISTERED CIVIL ENGINEER 2/22/13 DATE

5-13-13
PLANS APPROVAL DATE

REGISTERED PROFESSIONAL ENGINEER Fred J. Witteborn No. 56272 Exp. 12-31-14 CIVIL STATE OF CALIFORNIA

THE STATE OF CALIFORNIA OR ITS OFFICERS OR AGENTS SHALL NOT BE RESPONSIBLE FOR THE ACCURACY OR COMPLETENESS OF ELECTRONIC COPIES OF THIS PLAN SHEET.

Caltrans Metric

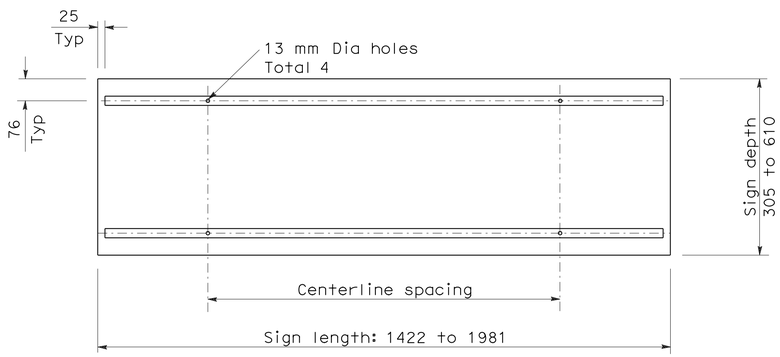

ROADSIDE SIGN No. 1

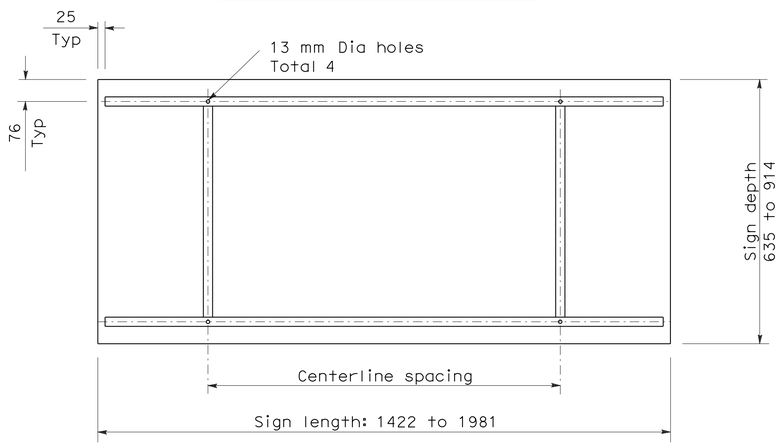

ROADSIDE SIGN No. 2

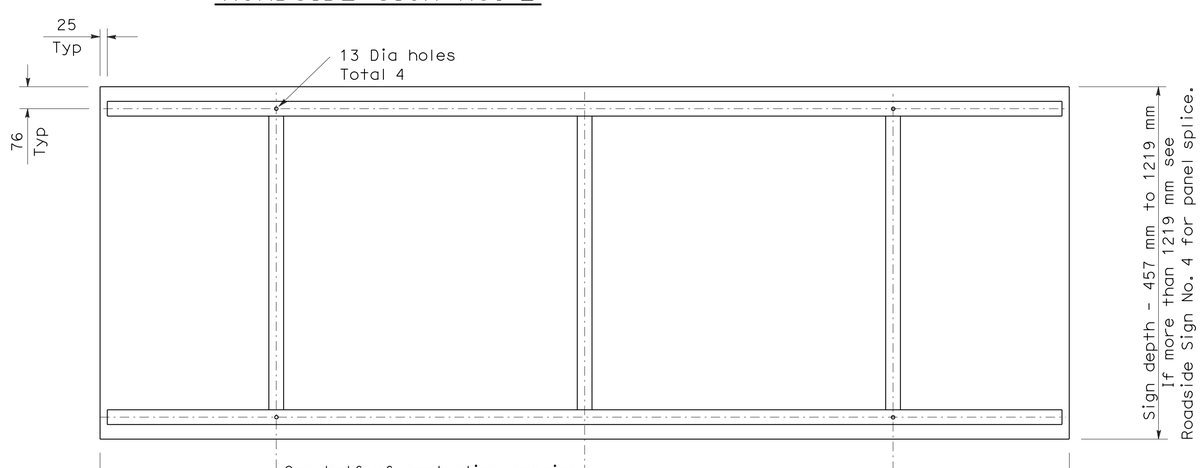

ROADSIDE SIGN No. 3

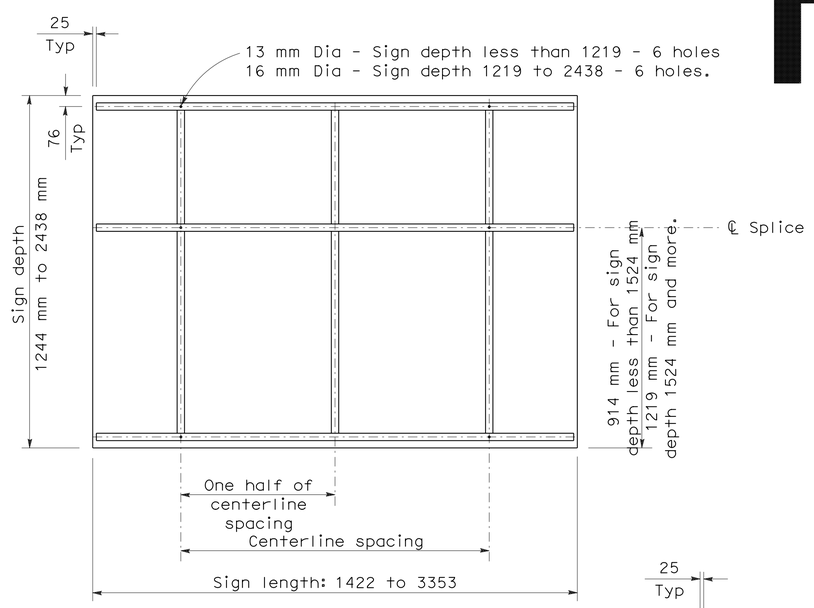

ROADSIDE SIGN No. 4

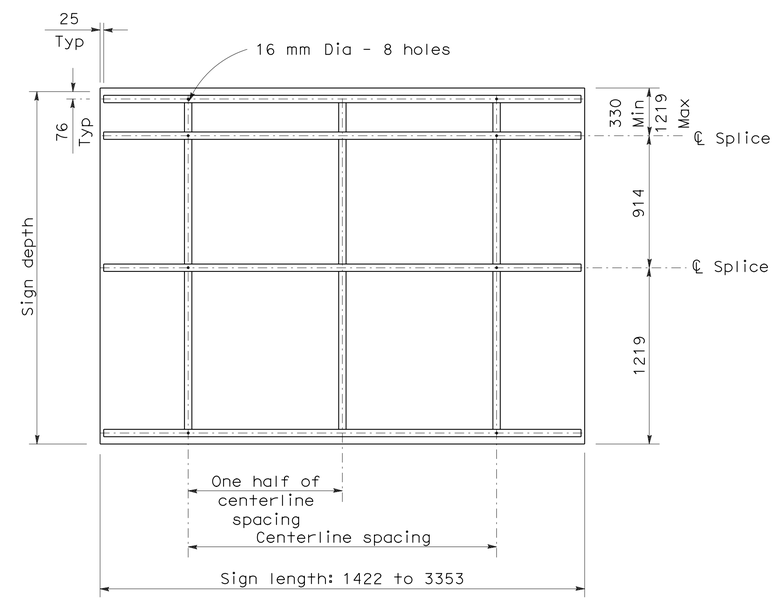

ROADSIDE SIGN No. 5

NOTES:

1. See Sheet C-48 for framing details.
2. All members welded at joints as shown on Sheet C-48.

ALL DIMENSIONS ARE IN MILLIMETERS UNLESS OTHERWISE SHOWN

ROADSIDE FRAMED SINGLE SHEET ALUMINUM SIGNS RECTANGULAR SHAPE

NO SCALE

C-49

FRED J. WITTEBORN	FJW	REVISED BY	
JONATHAN LEE	2/13/13	DATE REVISED	
CALCULATED-DESIGNED BY	FUNCTIONAL SUPERVISOR		
CHECKED BY	JONATHAN LEE		

STATE OF CALIFORNIA - DEPARTMENT OF TRANSPORTATION
Caltrans DESIGN

LAST REVISION 02-13-13 | DATE PLOTTED => 20-MAY-2013 | TIME PLOTTED => 06:11

Dist	COUNTY	ROUTE	KILOMETER POST TOTAL PROJECT	SHEET No.	TOTAL SHEETS
04	Son	101	33.3	55	158

REGISTERED CIVIL ENGINEER 2/22/13 DATE

5-13-13
PLANS APPROVAL DATE

REGISTERED PROFESSIONAL ENGINEER Fred J. Witteborn No. 56272 Exp. 12-31-14 CIVIL STATE OF CALIFORNIA

THE STATE OF CALIFORNIA OR ITS OFFICERS OR AGENTS SHALL NOT BE RESPONSIBLE FOR THE ACCURACY OR COMPLETENESS OF ELECTRONIC COPIES OF THIS PLAN SHEET.

Caltrans Metric

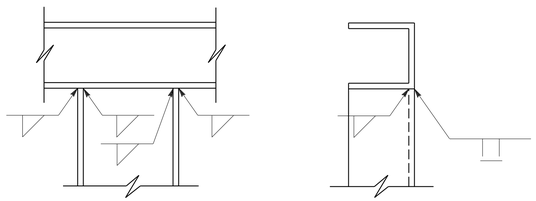

WELD DETAIL No. 3

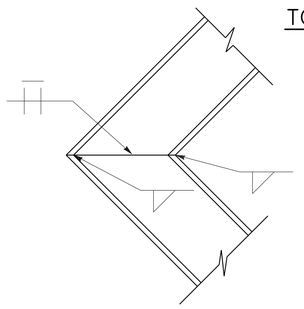

WELD DETAIL No. 4

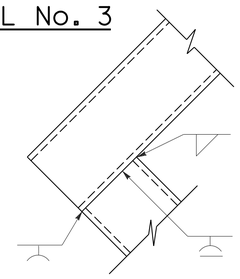

ALTERNATE WELD DETAIL No. 4A

Weld all around outside

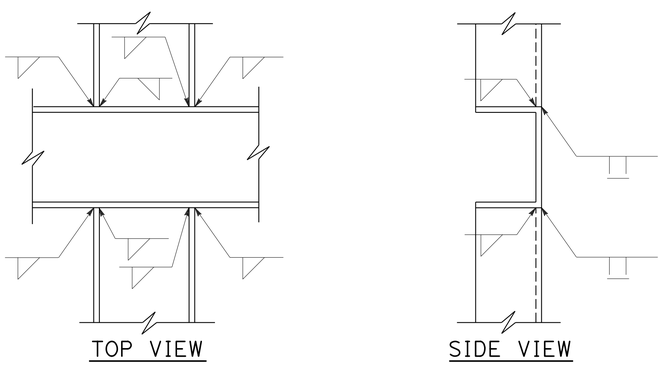

WELD DETAIL No. 5

TYPICAL WELD DETAILS

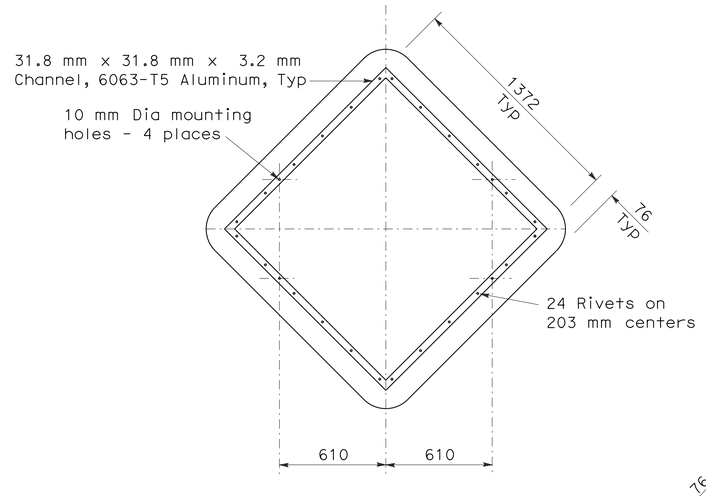

ROADSIDE SIGN No. 6

Framing detail for
1524 mm x 1524 mm diamond

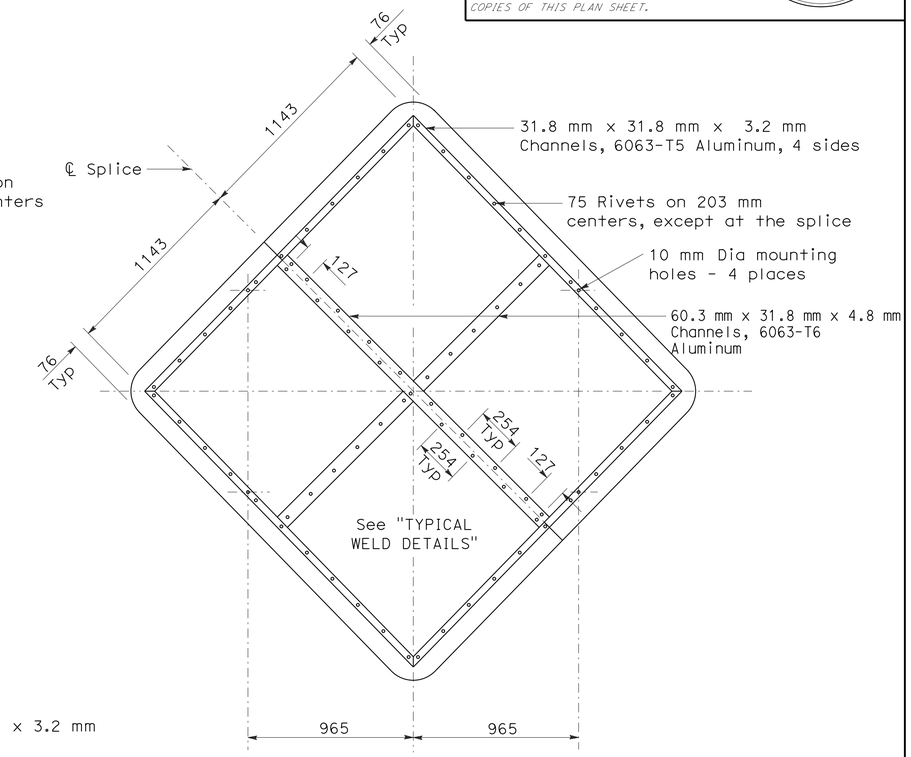

ROADSIDE SIGN No. 8

Framing detail for 2438 mm x 2438 mm diamond.
Made from 2-1219 mm x 2438 mm panels, spliced
and braced by channels as shown.

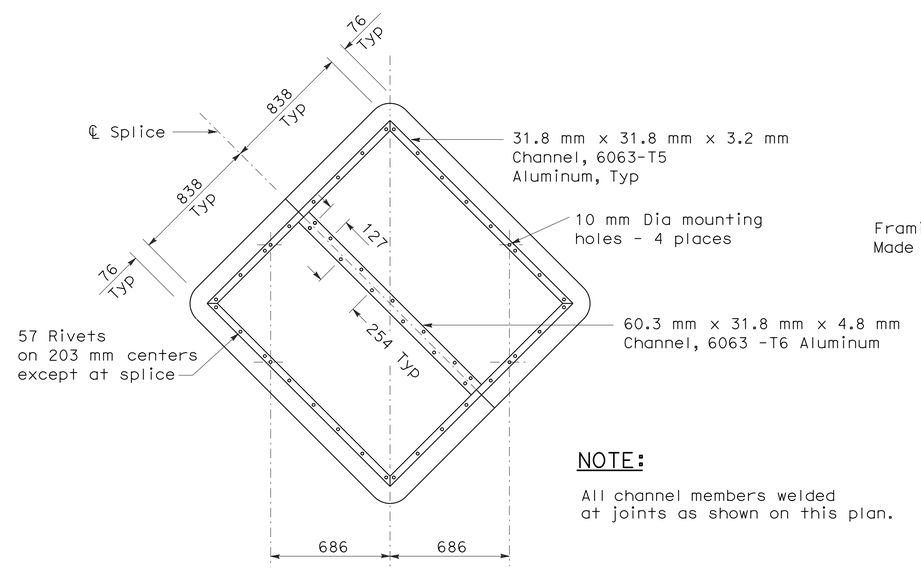

ROADSIDE SIGN No. 7

Framing detail for 2438 mm x 2438 mm diamond.
Made from 2-1219 mm x 1219 mm panels, spliced
and braced by channels as shown.

NOTE:

All channel members welded
at joints as shown on this plan.

CHANNEL SIZES

Sign Size	Panel Thickness (mm)	Frame Type
1219 x 1219	1.6	No frame required
1219 x 1219	2.0	No frame required
1524 x 1524	2.0	See Roadside Sign No. 6
1829 x 1829	2.0	See Roadside Sign No. 7
2438 x 2438	2.0	See Roadside Sign No. 8

ALL DIMENSIONS ARE IN
MILLIMETERS UNLESS OTHERWISE SHOWN

ROADSIDE SINGLE SHEET ALUMINUM SIGNS DIAMOND SHAPE

NO SCALE

C-50

STATE OF CALIFORNIA - DEPARTMENT OF TRANSPORTATION
Caltrans DESIGN

FUNCTIONAL SUPERVISOR JONATHAN LEE
CALCULATED-DESIGNED BY FRED J. WITTEBORN
CHECKED BY JONATHAN LEE
REVISED BY FJW
DATE REVISED 2/13/13

LAST REVISION 02-13-13
DATE PLOTTED => 20-MAY-2013
TIME PLOTTED => 06:11

Dist	COUNTY	ROUTE	KILOMETER POST TOTAL PROJECT	SHEET No.	TOTAL SHEETS
04	Son	101	33.3	56	158

REGISTERED CIVIL ENGINEER 2/22/13 DATE

5-13-13
PLANS APPROVAL DATE

REGISTERED PROFESSIONAL ENGINEER Fred J. Witteborn No. 56272 Exp. 12-31-14 CIVIL STATE OF CALIFORNIA

THE STATE OF CALIFORNIA OR ITS OFFICERS OR AGENTS SHALL NOT BE RESPONSIBLE FOR THE ACCURACY OR COMPLETENESS OF ELECTRONIC COPIES OF THIS PLAN SHEET.

Caltrans Metric

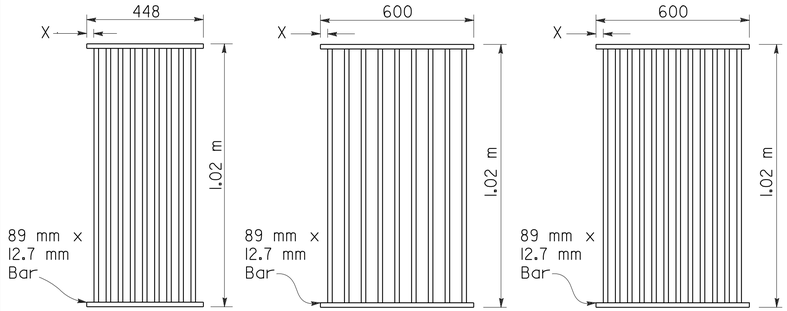

TYPE 450-9

35 mm Clear spacing. Use within the roadbed on highways where bicycles and pedestrians are excluded.

TYPE 600-9

51 mm Clear spacing. Use in locations off the roadbed on all types of highways.

TYPE 600-12

35 mm Clear spacing. Use within the roadbed on highways where bicycles and pedestrians are excluded.

RECTANGULAR GRATE DETAILS

(See table below)

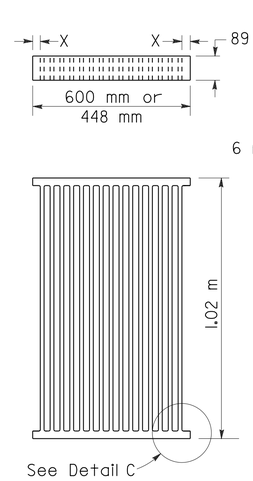

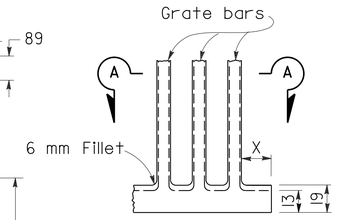

DETAIL C

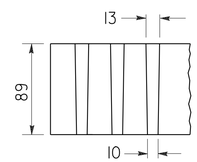

SECTION A-A

ALTERNATIVE CAST NODULAR IRON GRATE OR CAST STEEL GRATE

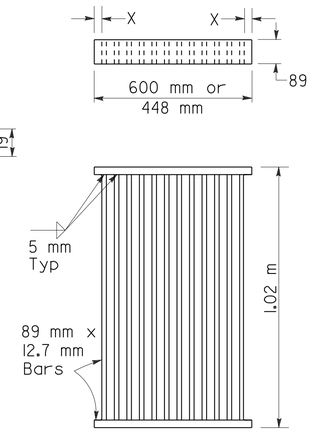

ALTERNATIVE WELDED GRATE

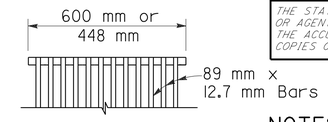

CAST END BLOCK

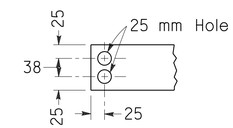

END OF BAR

NOTES

1. Grate type numbers refer to approximate width of grate in millimeters and number of bars, respectively.
2. Contractor has the option of using cast nodular iron, cast steel, welded, bolted, or cast end block grate.
3. See Special Provisions for requirements pertaining to galvanizing or asphalt dipping of grates and frames.
4. Rounded top of bars optional on all grates.
5. Pipe inlets with a grate shall be placed so that bars parallel direction of principle surface flow.
6. Full penetration butt welds may be substituted for the fillet welds on all anchors.
7. Standard square, hexagon, round or equivalent headed anchors may be substituted for the right angle hooks on the anchors shown on this plan.
8. Grate and frame weights are based on welded grates (weights of face angles, steps, protection bars, etc. are not included).
9. Connect chain to grate and frame only at locations shown on the plans. When chain is required, do not use cast ductile iron grates.

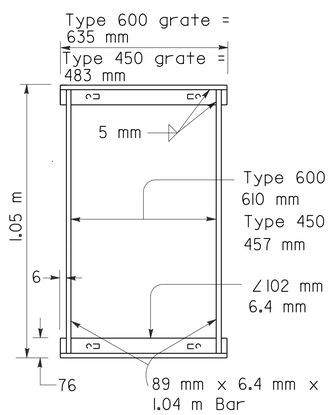

TYPICAL FRAME

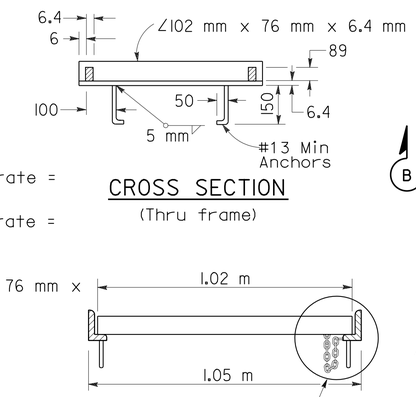

CROSS SECTION

(Thru frame)

LONGITUDINAL SECTION

(Thru frame and grate)

RECTANGULAR FRAME DETAILS

(For all rectangular grates)

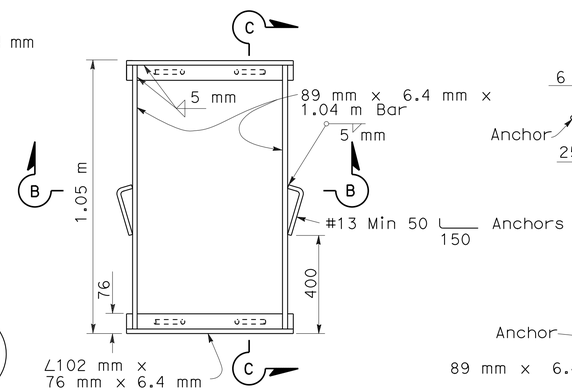

TYPICAL FRAME

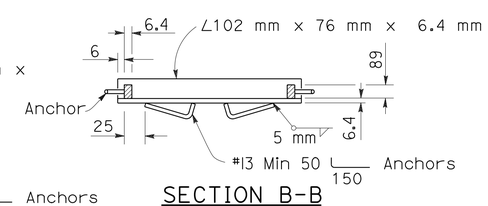

SECTION B-B

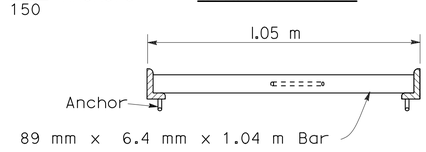

SECTION C-C

ALTERNATIVE ANCHOR FOR RECTANGULAR FRAME

(For details not shown, See Rectangular Frame Details)

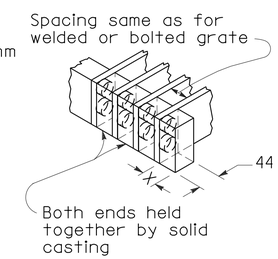

ALTERNATIVE CAST NODULAR IRON OR CAST STEEL END BLOCK GRATE

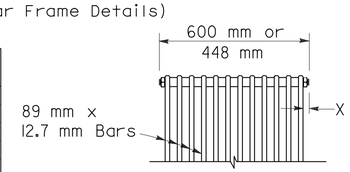

BOLTED END BLOCK

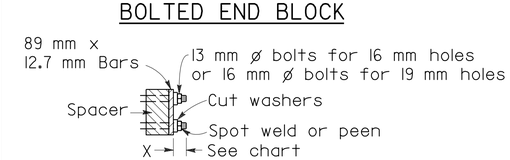

BOLTING DETAIL

ALTERNATIVE BOLTED GRATE

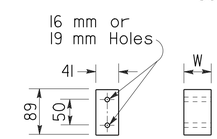

BAR SPACER

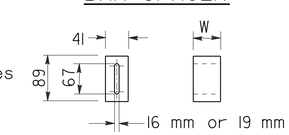

ALTERNATIVE SPACER

35 mm or 50 mm

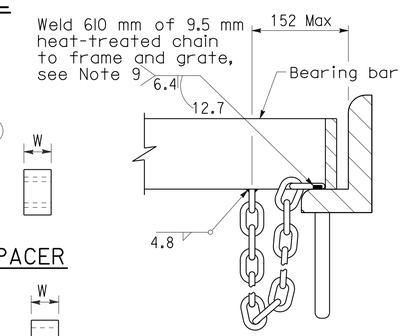

DETAIL D

(Steel grates only)

GRATE BAR SPACING TABLE

TYPE	No. OF BARS	CLEAR BAR SPACING (mm)	X (mm)
450-9	9	35	27
600-9	9	51	40
600-12	12	35	32

INLET TYPE	COVER TYPE	MASS (kg)
OS	PLATE	79
OL-2.1	PLATE	77
OL-3.0	PLATE	77
OL-4.3	PLATE	77
OL-6.4	PLATE	77
OCP	PLATE	51
OCPI	PLATE	51
OCPI	REDWOOD	19
OMP	PLATE	80
OMPI	PLATE	80

INLET TYPE	GRATE TYPE	No. OF GRATES	MASS (kg)
GDO	600-12	2	288
GOL-2.1	600-12	1	148
GOL-3.0	600-12	1	148
GO,G1,G2,G3,G4(TYPE 600)	600-9	1	119
	600-12	1	148
G4(TYPE 450),G5,G6	450-9	1	113
GT-1	450-9	2	226
GT-2	450-9	2	226
GT-3	600-12	2	296
GT-4	600-12	2	296
TRASH RACK			10
GRATE CHAIN			1.4

BASIS FOR MISC IRON & STEEL FINAL PAY MASSES FOR DRAINAGE INLETS

(See General Notes, No. 8)

ALL DIMENSIONS ARE IN MILLIMETERS UNLESS OTHERWISE SHOWN

GRATE DETAILS

NO SCALE

C-51

FUNCTIONAL SUPERVISOR	JONATHAN LEE	REVISED BY	FJW
CALCULATED-DESIGNED BY	FRED J. WITTEBORN	DATE REVISED	2/13/13
CHECKED BY	JONATHAN LEE		

STATE OF CALIFORNIA - DEPARTMENT OF TRANSPORTATION

Caltrans DESIGN

LAST REVISION 02-13-13 | DATE PLOTTED => 20-MAY-2013 | TIME PLOTTED => 06:11

Dist	COUNTY	ROUTE	KILOMETER POST TOTAL PROJECT	SHEET No.	TOTAL SHEETS
04	Son	101	33.3	57	158

REGISTERED CIVIL ENGINEER 2/22/13 DATE

5-13-13
PLANS APPROVAL DATE

REGISTERED PROFESSIONAL ENGINEER Fred J. Witteborn No. 56272 Exp. 12-31-14 CIVIL STATE OF CALIFORNIA

THE STATE OF CALIFORNIA OR ITS OFFICERS OR AGENTS SHALL NOT BE RESPONSIBLE FOR THE ACCURACY OR COMPLETENESS OF ELECTRONIC COPIES OF THIS PLAN SHEET.

Caltrans Metric

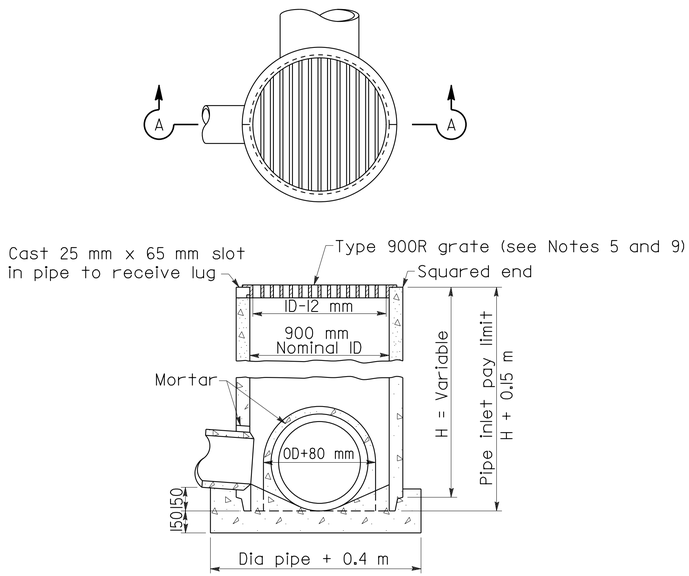

SECTION A-A

TYPE GCP

CONCRETE PIPE INLET WITH GRATE

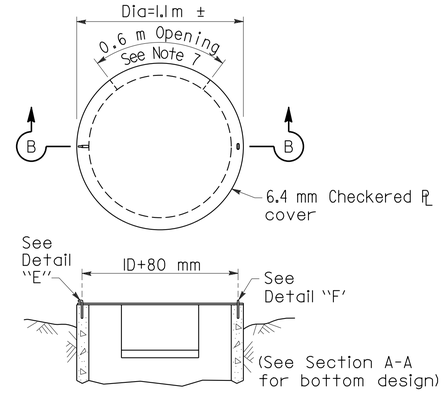

SECTION B-B

TYPE OCP or OCPI

CONCRETE PIPE INLET WITH STEEL COVER
(See Note 6)

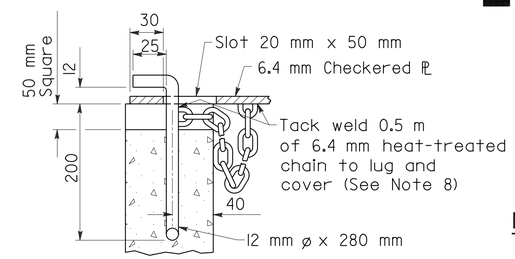

DETAIL "E"

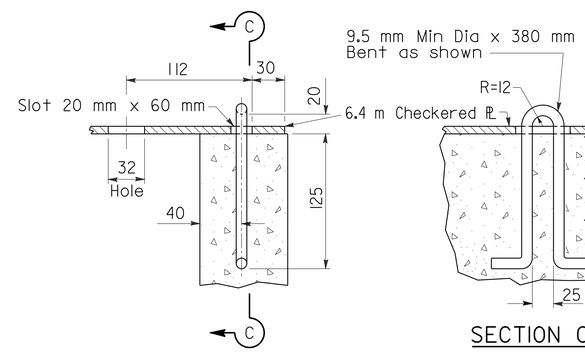

DETAIL "F"

SECTION C-C

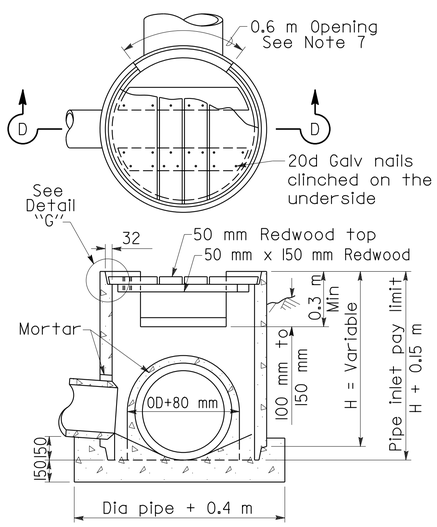

SECTION D-D

TYPE OCP or OCPI

CONCRETE PIPE INLET WITH REDWOOD COVER
(See Notes 6 and 10)

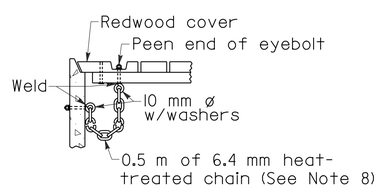

DETAIL "G"

NOTES

1. For details of steel pipe inlets, see Standard Plan D75A.
2. For details of ladder and steps and when ladder or steps are required, see Standard Plan D75C.
3. Inlet pipes shall not protrude into basin.
4. Except for inlets used for junction boxes, basin floors shall have minimum slope of 1:4 from all directions toward outlet pipe, and a wood trowel finish.
5. See Sheets C-32 and C-51 for Grate and Frame Details and Weights of Miscellaneous Iron and Steel.
6. Designation of Type OCPI pipe inlets on plans indicates trash racks are to be furnished and installed on all side openings. See Standard Plan D75C for Trash Rack details.
7. More than one side opening may be required. Location and number as ordered by the Engineer. Opening may be cast in pipe.
8. Chain to be provided when specified.
9. Place pipe so bars of grate will be parallel with main surface flow.
10. Redwood covers shall only be placed at locations designated on the plans.

ALL DIMENSIONS ARE IN MILLIMETERS UNLESS OTHERWISE SHOWN

PIPE INLETS

NO SCALE

C-52

STATE OF CALIFORNIA - DEPARTMENT OF TRANSPORTATION
Caltrans DESIGN

FUNCTIONAL SUPERVISOR: JONATHAN LEE
CALCULATED-DESIGNED BY: FRED J. WITTEBORN
CHECKED BY: JONATHAN LEE
REVISED BY: FJW
DATE REVISED: 2/13/13

LAST REVISION 02-13-13 | DATE PLOTTED => 20-MAY-2013 | TIME PLOTTED => 06:11

Dist	COUNTY	ROUTE	KILOMETER POST TOTAL PROJECT	SHEET No.	TOTAL SHEETS
04	Son	101	33.3	58	158

Trang Hoang 2/26/13
REGISTERED CIVIL ENGINEER DATE

5-13-13
PLANS APPROVAL DATE

REGISTERED PROFESSIONAL ENGINEER Trang T. Hoang No. 59917 Exp. 12-31-13 CIVIL STATE OF CALIFORNIA

THE STATE OF CALIFORNIA OR ITS OFFICERS OR AGENTS SHALL NOT BE RESPONSIBLE FOR THE ACCURACY OR COMPLETENESS OF ELECTRONIC COPIES OF THIS PLAN SHEET.

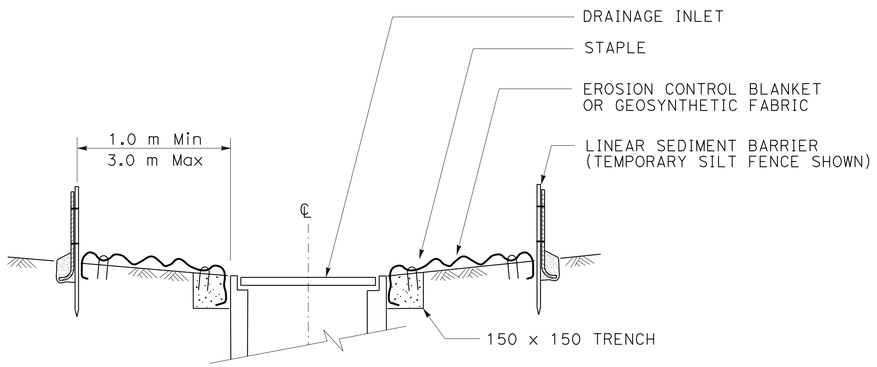

SECTION A-A

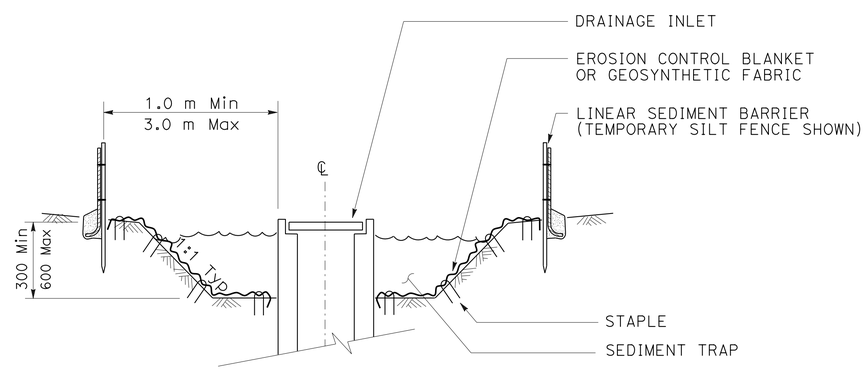

SECTION B-B

NOTES:

1. SEE SHEET WPC-6 FOR TEMPORARY SILT FENCE.
2. DIMENSIONS MAY VARY TO FIT FIELD CONDITIONS.

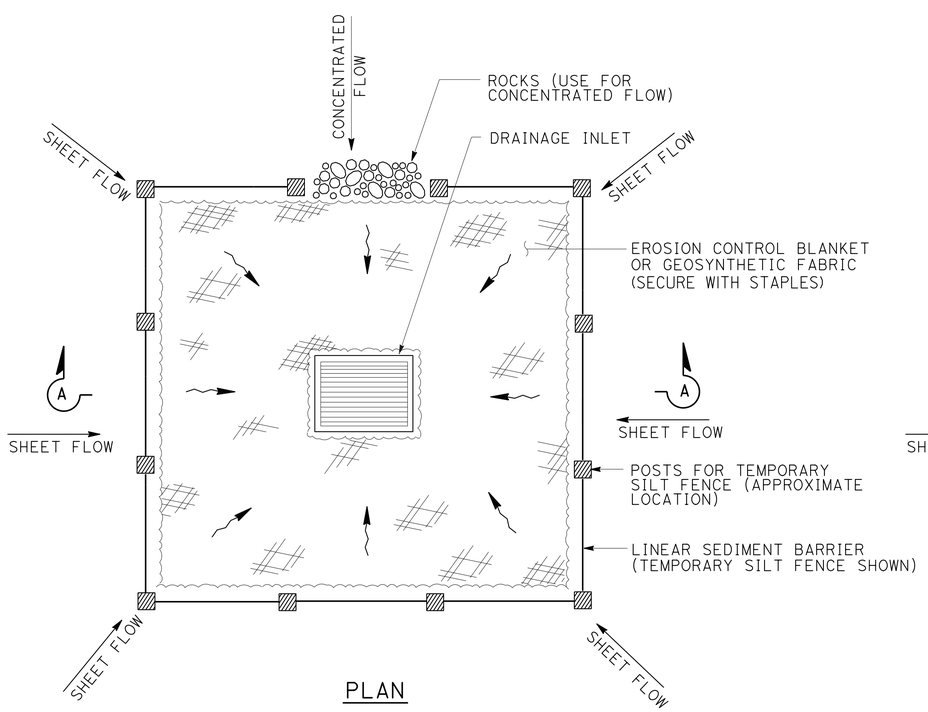

PLAN

TEMPORARY DRAINAGE INLET PROTECTION (TYPE 1)

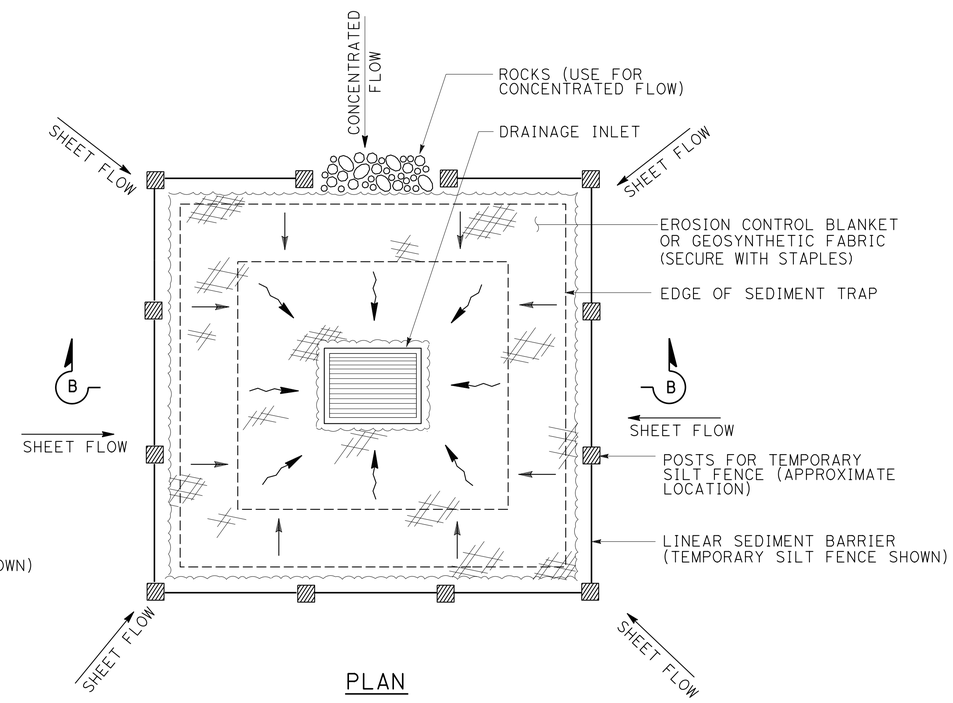

PLAN

TEMPORARY DRAINAGE INLET PROTECTION (TYPE 2) (EXCAVATED SEDIMENT TRAP)

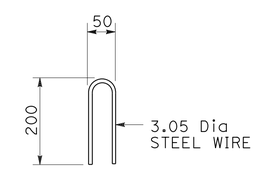

STAPLE DETAIL

ALL DIMENSIONS ARE IN MILLIMETERS UNLESS OTHERWISE SHOWN

TEMPORARY WATER POLLUTION CONTROL DETAILS (TEMPORARY DRAINAGE INLET PROTECTION)

NO SCALE

WPCD-1

STATE OF CALIFORNIA - DEPARTMENT OF TRANSPORTATION
Caltrans WATER QUALITY

FUNCTIONAL SUPERVISOR: KAMRAN NAKHJIRI
CALCULATED-DESIGNED BY: FRED J. WITTEBORN
CHECKED BY: JONATHAN LEE
REVISED BY: FJW
DATE REVISED: 2/13/13

LAST REVISION 02-13-13 | DATE PLOTTED => 20-MAY-2013 | TIME PLOTTED => 06:11

Dist	COUNTY	ROUTE	KILOMETER POST TOTAL PROJECT	SHEET No.	TOTAL SHEETS
04	Son	101	33.3	59	158

Trang Hoang 2/26/13
REGISTERED CIVIL ENGINEER DATE

5-13-13
PLANS APPROVAL DATE

REGISTERED PROFESSIONAL ENGINEER Trang T. Hoang No. 59917 Exp. 12-31-13 CIVIL STATE OF CALIFORNIA

THE STATE OF CALIFORNIA OR ITS OFFICERS OR AGENTS SHALL NOT BE RESPONSIBLE FOR THE ACCURACY OR COMPLETENESS OF ELECTRONIC COPIES OF THIS PLAN SHEET.

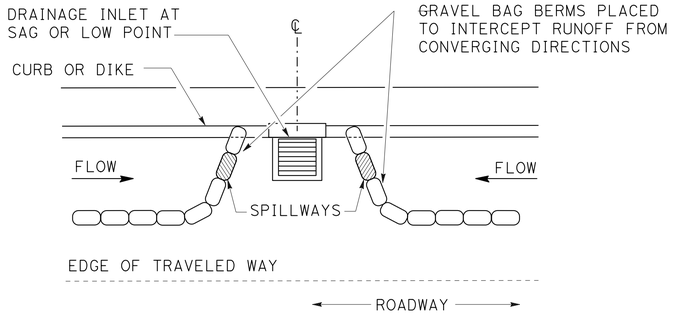

PLAN

CONFIGURATION FOR SAG POINT INLET (GRAVEL BAG BERM)

GRAVEL BAG BERM (TYPE 3A) SPACING TABLE

SLOPE OF ROADWAY (PERCENT)	1 TO 3.9	4 TO 5.9	6 TO 7.9	8 TO 10	10+
INTERVAL BETWEEN BERM (m)	30.0	22.5	15.0	7.5	4.0

For slope of less than 1%, install barriers only if erosion/sediment is prevalent

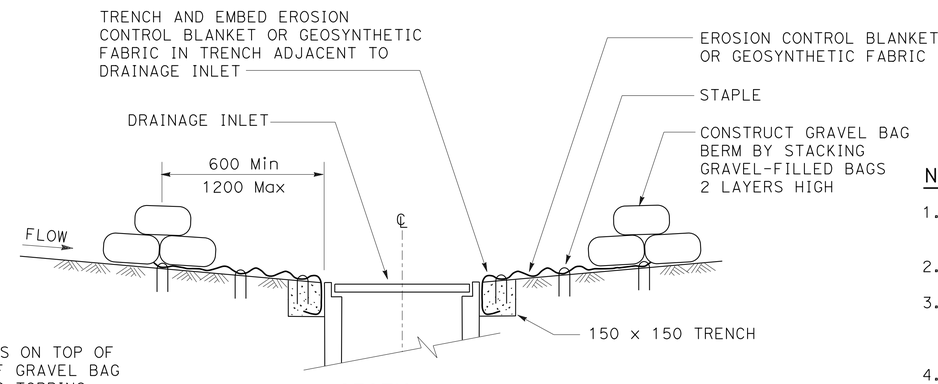

SECTION A-A

NOTES:

1. PLACE SAFETY CONES ADJACENT TO DRAINAGE INLET PROTECTION.
2. DIMENSIONS MAY VARY TO FIT FIELD CONDITIONS.
3. INSTALL A MINIMUM OF 3 GRAVEL BAG BARRIERS UPSTREAM OF EACH DRAINAGE INLET TO BE PROTECTED.
4. POSITION EROSION CONTROL BLANKET OR GEOSYNTHETIC FABRIC AT EDGE OF CONCRETE APRON AND SECURE IN TRENCH.
5. EROSION CONTROL BLANKET OR GEOSYNTHETIC FABRIC IS NOT REQUIRED IF THE AREA ADJACENT TO THE DRAINAGE INLET IS VEGETATED OR PAVED.

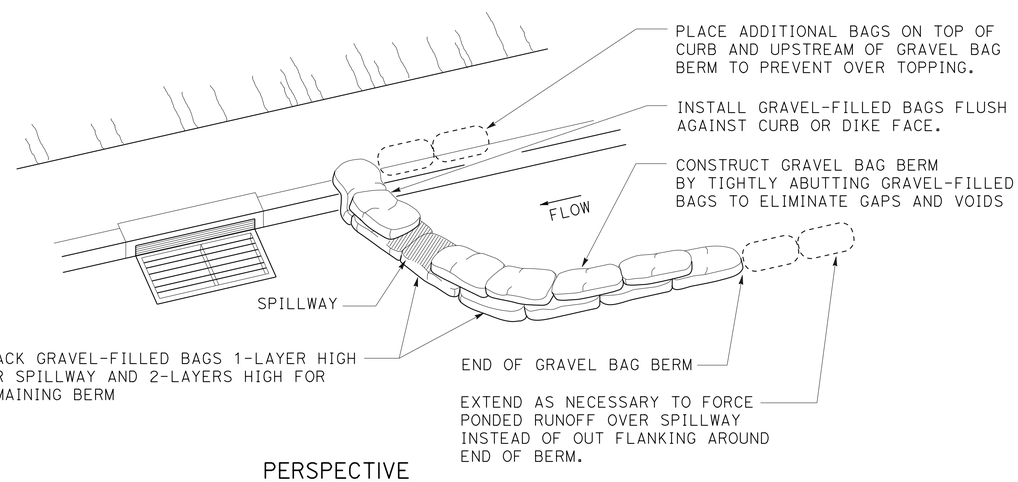

PERSPECTIVE

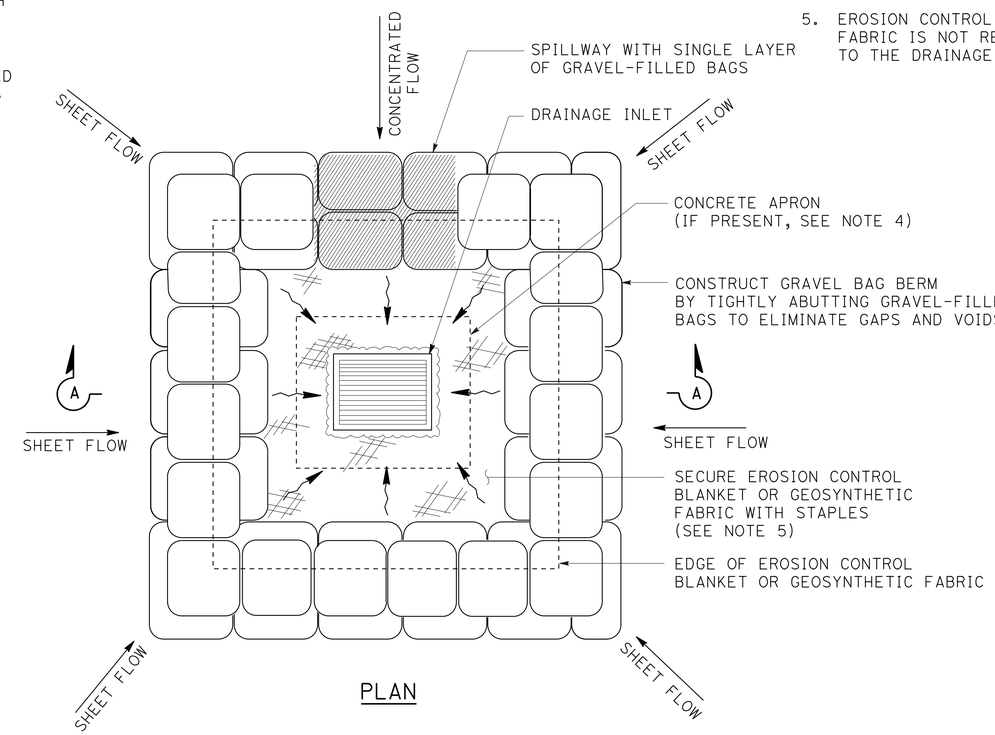

PLAN

TEMPORARY DRAINAGE INLET PROTECTION (TYPE 3B)

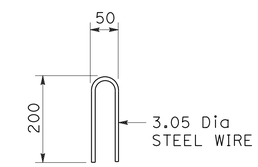

STAPLE DETAIL

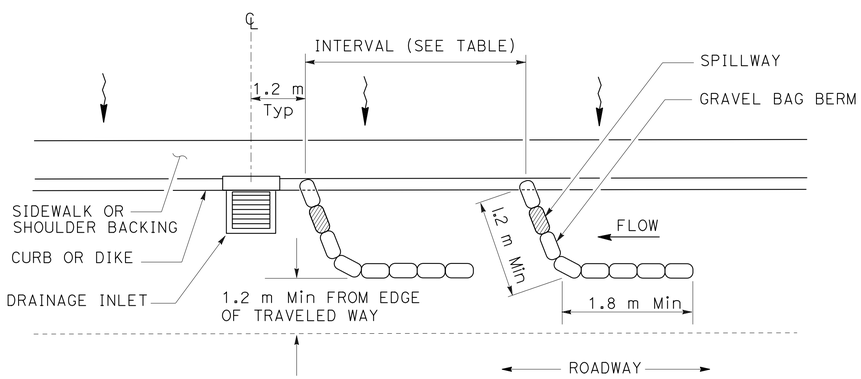

PLAN

TEMPORARY DRAINAGE INLET PROTECTION (TYPE 3A) (GRAVEL BAG BERM)

ALL DIMENSIONS ARE IN MILLIMETERS UNLESS OTHERWISE SHOWN

TEMPORARY WATER POLLUTION CONTROL DETAILS (TEMPORARY DRAINAGE INLET PROTECTION)

NO SCALE

WPCD-2

STATE OF CALIFORNIA - DEPARTMENT OF TRANSPORTATION
Caltrans WATER QUALITY

FUNCTIONAL SUPERVISOR: KAMRAN NAKHJIRI
CALCULATED-DESIGNED BY: FRED J. WITTEBORN
CHECKED BY: JONATHAN LEE
REVISED BY: FJW
DATE REVISED: 2/13/13

LAST REVISION 02-14-13 | DATE PLOTTED => 20-MAY-2013 | TIME PLOTTED => 06:11

Dist	COUNTY	ROUTE	KILOMETER POST TOTAL PROJECT	SHEET No.	TOTAL SHEETS
04	Son	101	33.3	60	158

Trang Hoang 2/26/13
REGISTERED CIVIL ENGINEER DATE

5-13-13
PLANS APPROVAL DATE

REGISTERED PROFESSIONAL ENGINEER Trang T. Hoang No. 59917 Exp. 12-31-13 CIVIL STATE OF CALIFORNIA

THE STATE OF CALIFORNIA OR ITS OFFICERS OR AGENTS SHALL NOT BE RESPONSIBLE FOR THE ACCURACY OR COMPLETENESS OF ELECTRONIC COPIES OF THIS PLAN SHEET.

Caltrans Metric

FLEXIBLE SEDIMENT BARRIER SPACING TABLE

SLOPE OF ROADWAY (PERCENT)	0 TO 0.9	1 TO 1.9	2 TO 2.9	3 TO 4	5+
INTERVAL BETWEEN BARRIERS (m)	15.24	10.67	9.14	7.62	6.10
ANGLE FROM FACE OF CURB	70°	70°	70°	45°	45°
SUGGESTED BARRIER LENGTH (m)	1.82	1.82	1.82	1.82	1.82

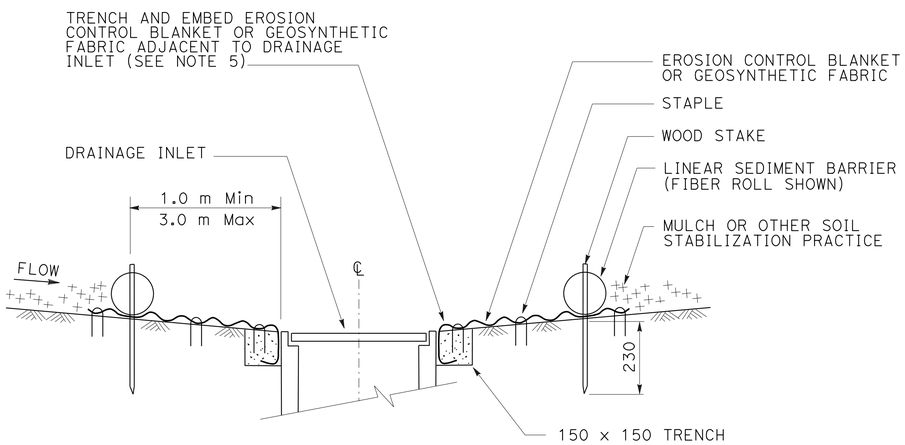

SECTION A-A

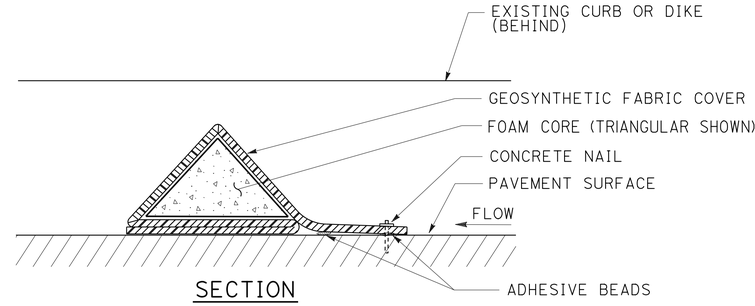

SECTION

FLEXIBLE SEDIMENT BARRIER DETAIL (FOAM BARRIER SHOWN)

NOTES:

1. SEE SHEET WPC-6 FOR TEMPORARY SILT FENCE.
2. DIMENSIONS MAY VARY TO FIT FIELD CONDITIONS.
3. INSTALL A MINIMUM OF 3 FLEXIBLE SEDIMENT BARRIERS UPSTREAM OF EACH DRAINAGE INLET TO BE PROTECTED.
4. POSITION EROSION CONTROL BLANKET OR GEOSYNTHETIC FABRIC AT EDGE OF CONCRETE APRON AND SECURE IN TRENCH.
5. EROSION CONTROL BLANKET/GEOSYNTHETIC FABRIC IS NOT REQUIRED IF THE AREA ADJACENT TO THE DRAINAGE INLET IS VEGETATED.

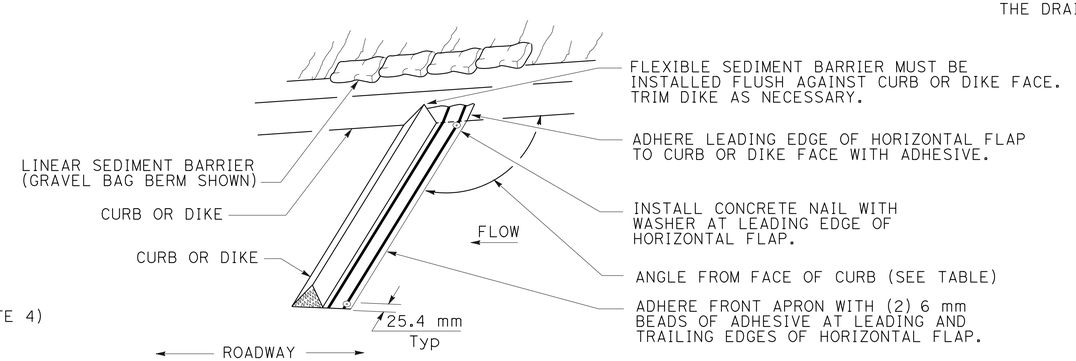

PERSPECTIVE

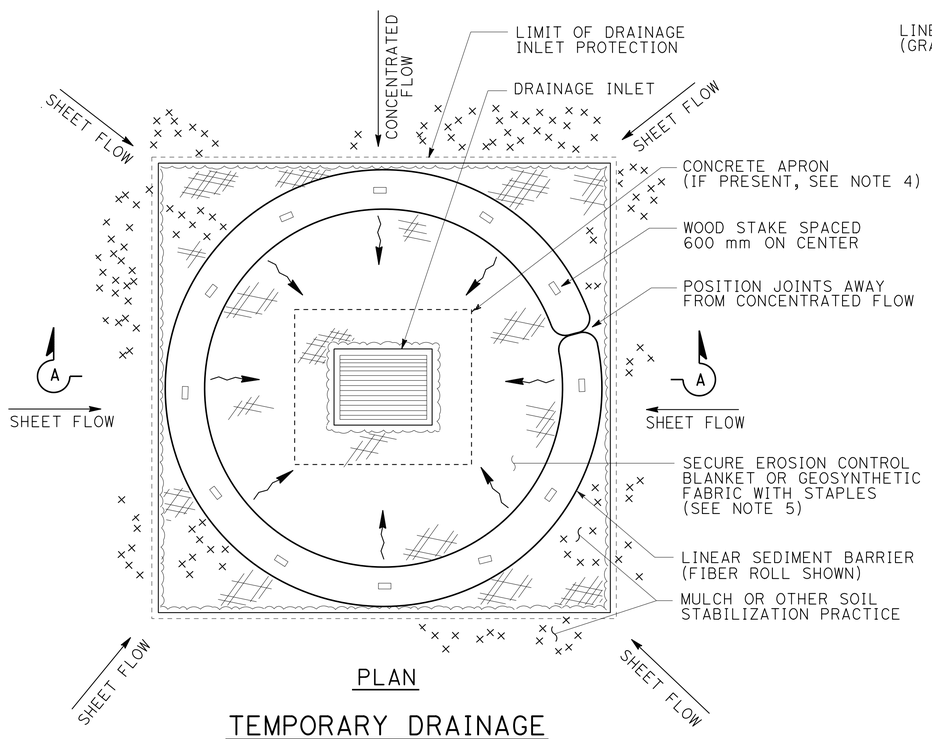

PLAN

TEMPORARY DRAINAGE INLET PROTECTION (TYPE 4A) (FIBER ROLLS)

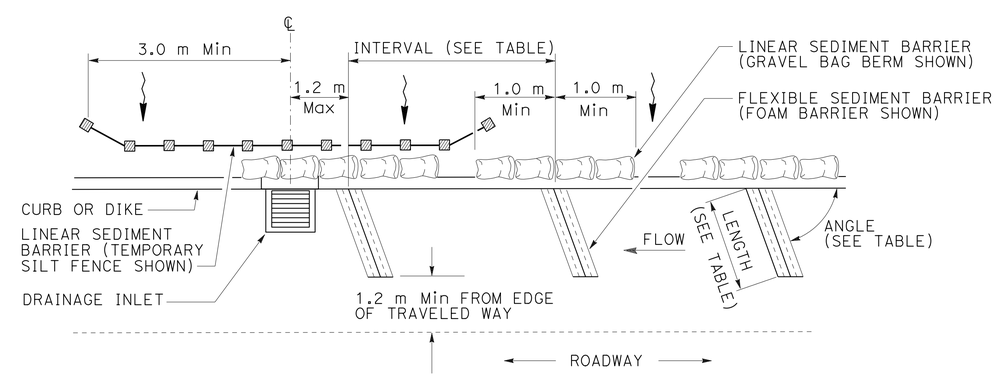

PLAN

TEMPORARY DRAINAGE INLET PROTECTION (TYPE 4B) FLEXIBLE SEDIMENT BARRIER

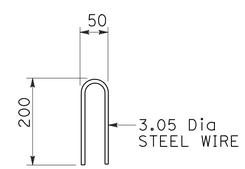

STAPLE DETAIL

ALL DIMENSIONS ARE IN MILLIMETERS UNLESS OTHERWISE SHOWN

TEMPORARY WATER POLLUTION CONTROL DETAILS (TEMPORARY DRAINAGE INLET PROTECTION)

NO SCALE

WPCD-3

STATE OF CALIFORNIA - DEPARTMENT OF TRANSPORTATION
Caltrans WATER QUALITY

FUNCTIONAL SUPERVISOR: KAMRAN NAKHJIRI
CALCULATED-DESIGNED BY: FRED J. WITTEBORN
CHECKED BY: JONATHAN LEE
REVISED BY: FJW
DATE REVISED: 2/13/13

LAST REVISION 02-14-13
DATE PLOTTED => 20-MAY-2013
TIME PLOTTED => 06:11

Dist	COUNTY	ROUTE	KILOMETER POST TOTAL PROJECT	SHEET No.	TOTAL SHEETS
04	Son	101	33.3	61	158

Trang Hoang 2/26/13
REGISTERED CIVIL ENGINEER DATE

5-13-13
PLANS APPROVAL DATE

REGISTERED PROFESSIONAL ENGINEER Trang T. Hoang No. 59917 Exp. 12-31-13 CIVIL STATE OF CALIFORNIA

THE STATE OF CALIFORNIA OR ITS OFFICERS OR AGENTS SHALL NOT BE RESPONSIBLE FOR THE ACCURACY OR COMPLETENESS OF ELECTRONIC COPIES OF THIS PLAN SHEET.

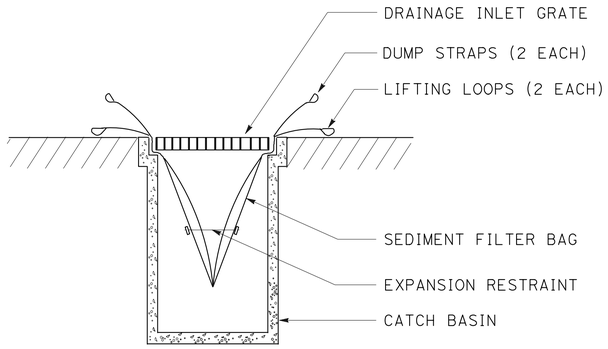

SECTION B-B

SEDIMENT FILTER BAG DETAIL

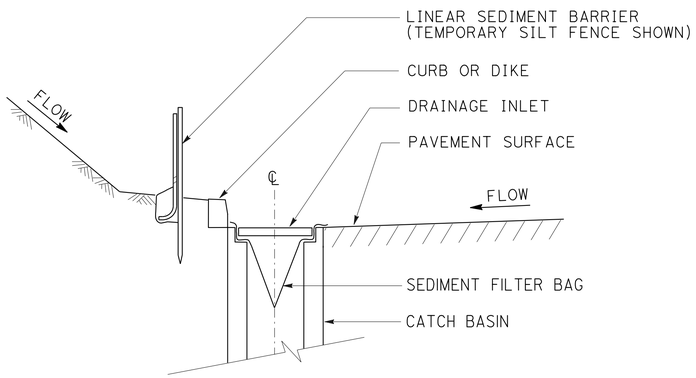

SECTION A-A

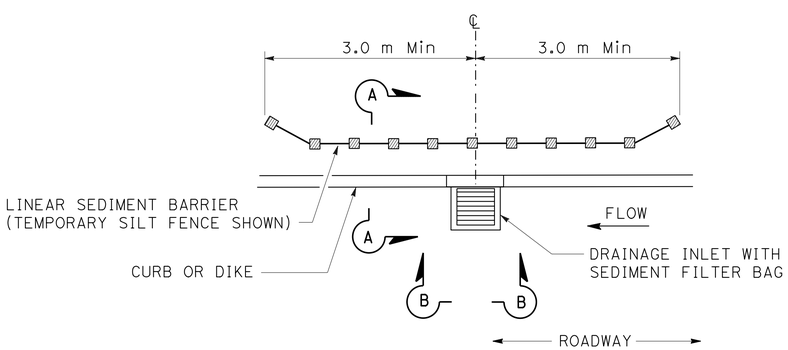

PLAN

TEMPORARY DRAINAGE INLET PROTECTION (TYPE 5) (SEDIMENT FILTER BAG)

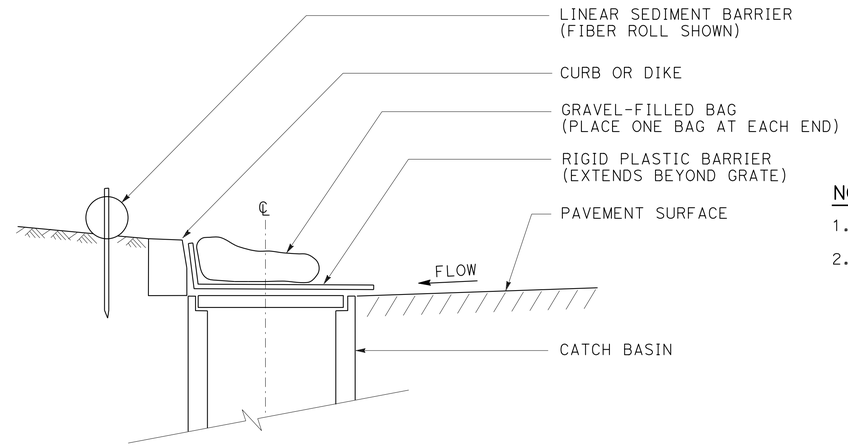

SECTION

TEMPORARY DRAINAGE INLET PROTECTION (TYPE 6A) (CATCH BASIN WITH GRATE)

NOTES:

1. SEE SHEET WPC-6 FOR TEMPORARY SILT FENCE.
2. DIMENSIONS MAY VARY TO FIT FIELD CONDITIONS.

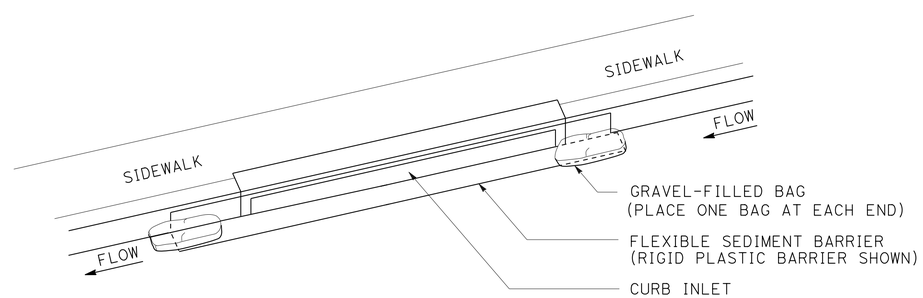

PERSPECTIVE

TEMPORARY DRAINAGE INLET PROTECTION (TYPE 6B) (CURB INLET WITHOUT GRATE)

ALL DIMENSIONS ARE IN MILLIMETERS UNLESS OTHERWISE SHOWN

TEMPORARY WATER POLLUTION CONTROL DETAILS (TEMPORARY DRAINAGE INLET PROTECTION)

NO SCALE

WPCD-4

STATE OF CALIFORNIA - DEPARTMENT OF TRANSPORTATION
Caltrans **WATER QUALITY**

FUNCTIONAL SUPERVISOR: KAMRAN NAKHJIRI
CALCULATED-DESIGNED BY: FRED J. WITTEBORN
CHECKED BY: JONATHAN LEE
REVISED BY: FJW
DATE REVISED: 2/13/13

LAST REVISION 02-14-13 DATE PLOTTED => 20-MAY-2013 TIME PLOTTED => 06:11

Dist	COUNTY	ROUTE	KILOMETER POST TOTAL PROJECT	SHEET No.	TOTAL SHEETS
04	Son	101	33.3	62	158

Trang Hoang 2/26/13
REGISTERED CIVIL ENGINEER DATE

5-13-13
PLANS APPROVAL DATE

REGISTERED PROFESSIONAL ENGINEER Trang T. Hoang No. 59917 Exp. 12-31-13 CIVIL STATE OF CALIFORNIA

THE STATE OF CALIFORNIA OR ITS OFFICERS OR AGENTS SHALL NOT BE RESPONSIBLE FOR THE ACCURACY OR COMPLETENESS OF ELECTRONIC COPIES OF THIS PLAN SHEET.

Caltrans Metric

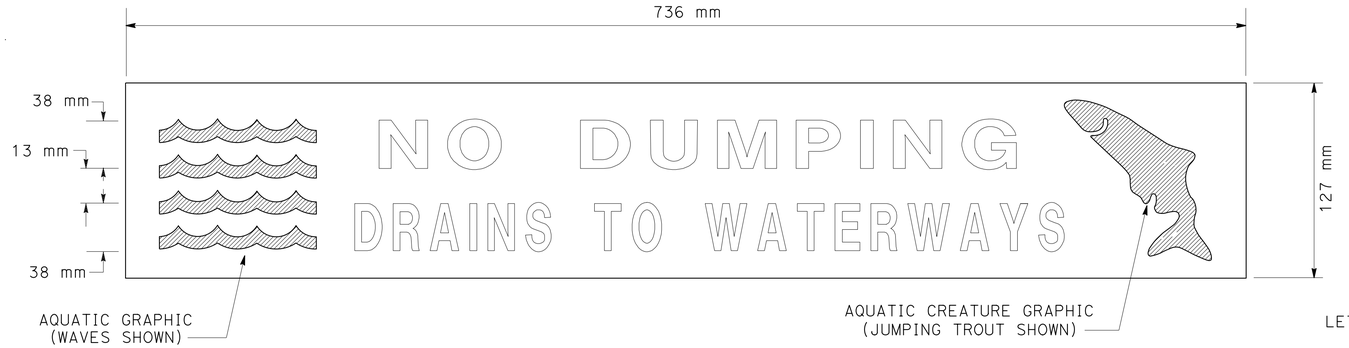

PLAN
DRAINAGE INLET MARKER
(PREFABRICATED THERMOPLASTIC)

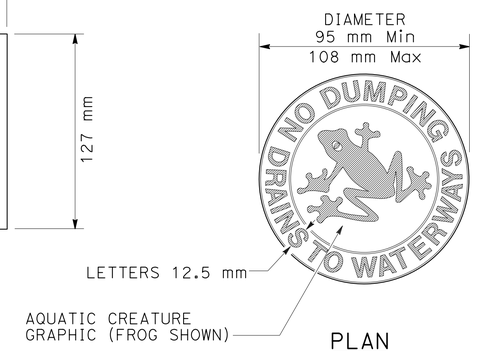

PLAN
DRAINAGE INLET MARKER
(MEDALLION)

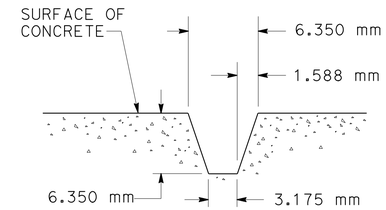

SECTION A-A
STAMPED CONCRETE
IMPRINT DETAIL

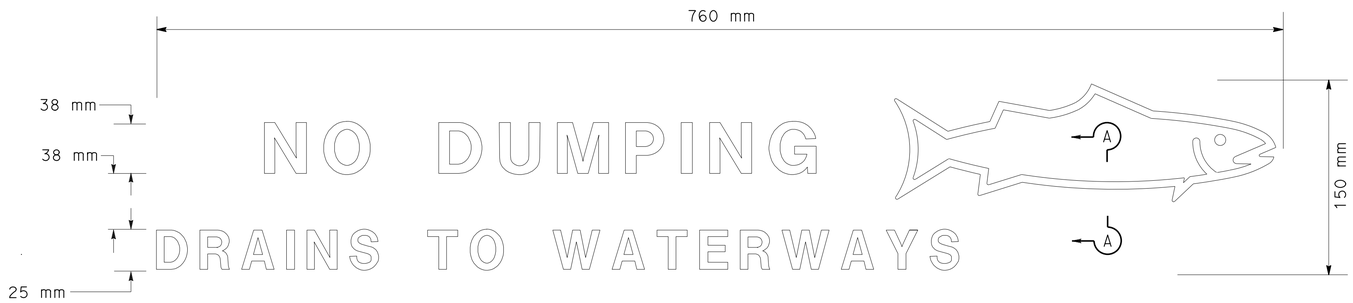

PLAN
DRAINAGE INLET MARKER
(STAMPED CONCRETE IMPRINT)

PLAN
CITY DRAINAGE INLET MARKER
(MEDALLION)

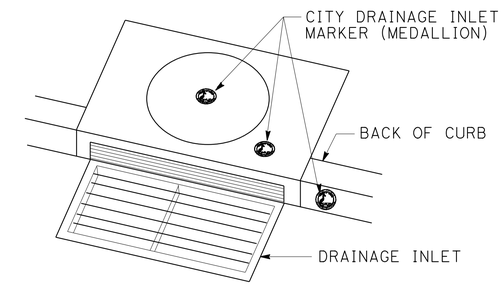

PERSPECTIVE
CITY DRAINAGE INLET MARKER (MEDALLION)
ON DRAINAGE INLET

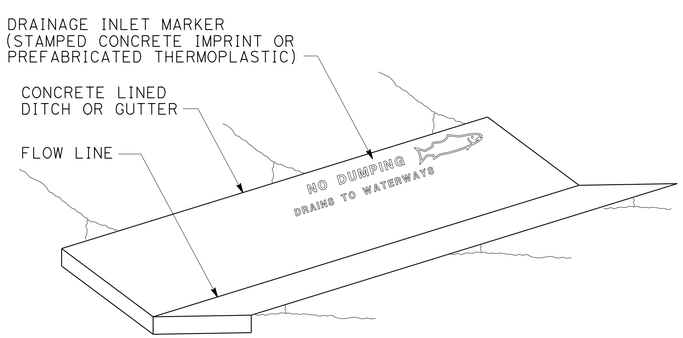

PERSPECTIVE
DRAINAGE INLET MARKER ON
CONCRETE LINED DITCH

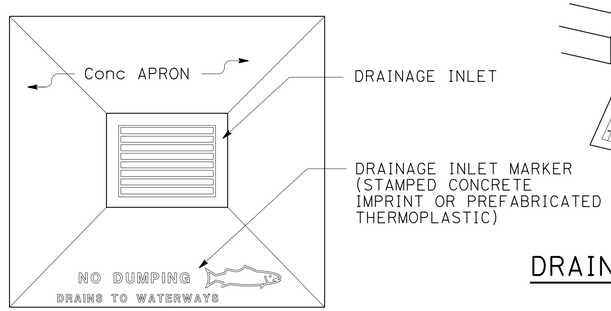

PLAN
DRAINAGE INLET MARKER ON
DRAINAGE INLET APRON

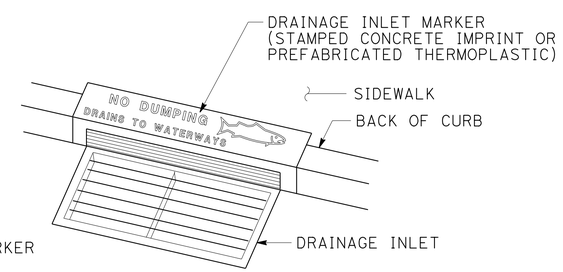

PERSPECTIVE
DRAINAGE INLET MARKER ON
DRAINAGE INLET

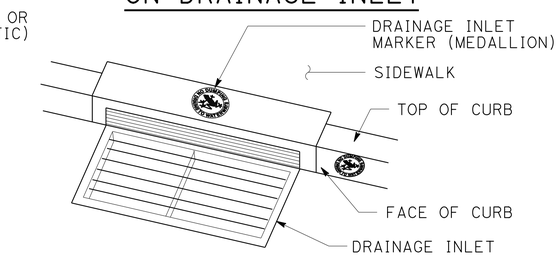

PERSPECTIVE
DRAINAGE INLET MARKER (MEDALLION)
ON DRAINAGE INLET

ALL DIMENSIONS ARE IN
MILLIMETERS UNLESS OTHERWISE SHOWN

WATER POLLUTION CONTROL DETAILS (DRAINAGE INLET MARKER)

NO SCALE

WPCD-5

FUNCTIONAL SUPERVISOR	KAMRAN NAKHJIRI	CALCULATED-DESIGNED BY	FRED J. WITTEBORN
CHECKED BY	JONATHAN LEE	REVISED BY	FJW
DATE REVISED	2/13/13		

STATE OF CALIFORNIA - DEPARTMENT OF TRANSPORTATION
Caltrans WATER QUALITY

LAST REVISION 02-14-13 | DATE PLOTTED => 20-MAY-2013 | TIME PLOTTED => 06:11

Dist	COUNTY	ROUTE	KILOMETER POST TOTAL PROJECT	SHEET No.	TOTAL SHEETS
04	Son	101	33.3	63	158

Trang Hoang 2/26/13
REGISTERED CIVIL ENGINEER DATE

5-13-13
PLANS APPROVAL DATE

REGISTERED PROFESSIONAL ENGINEER Trang T. Hoang No. 59917 Exp. 12-31-13 CIVIL STATE OF CALIFORNIA

THE STATE OF CALIFORNIA OR ITS OFFICERS OR AGENTS SHALL NOT BE RESPONSIBLE FOR THE ACCURACY OR COMPLETENESS OF ELECTRONIC COPIES OF THIS PLAN SHEET.

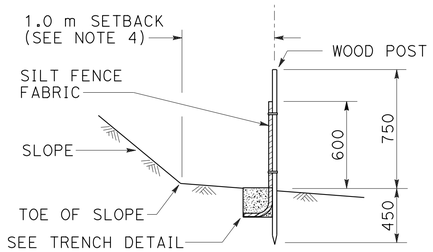

SECTION A-A
TEMPORARY SILT FENCE

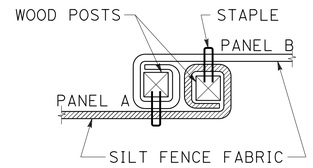

PLAN
POST AT JOINTS

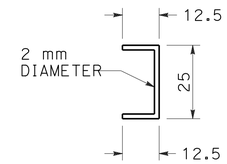

STAPLE DETAIL
(SEE NOTE 8)

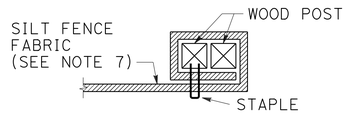

PLAN
END POST DETAIL

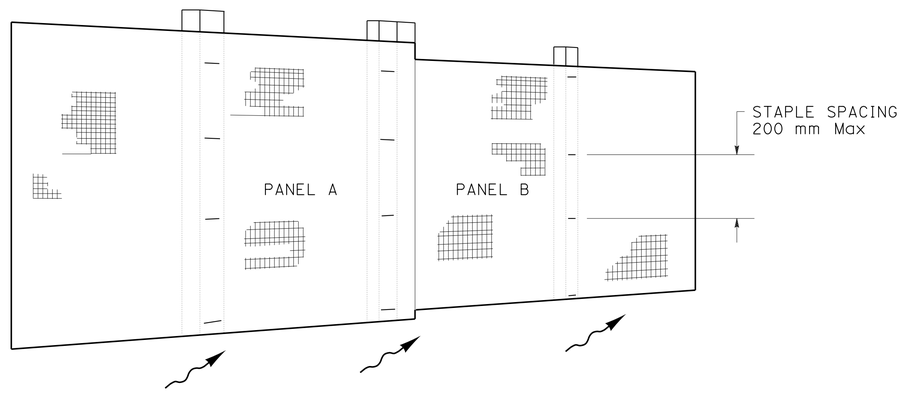

PERSPECTIVE
SILT FENCE PANELS AT JOINTS

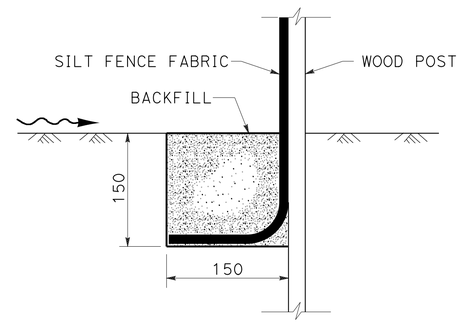

SECTION
TRENCH DETAIL

NOTES

1. INSTALL TEMPORARY SILT FENCE BY FIRST DIGGING TRENCH, DRIVING POSTS, PLACING AND SECURING FABRIC. THEN BACKFILL AND TAMP.
2. REACH LENGTH NOT TO EXCEED 150 METERS.
3. THE DOWN STREAM END OF THE TEMPORARY SILT FENCE SHALL HAVE THE LAST 2.5 METERS ANGLED UP SLOPE.
4. SETBACK DIMENSIONS MAY VARY TO FIT FIELD CONDITIONS.
5. POSTS TO OVERLAP AND FENCE FABRIC TO FOLD AROUND EACH POST ONE FULL TURN. SECURE FABRIC WITH 4 STAPLES FOR EACH POST.
6. POSTS SHALL BE DRIVEN TIGHTLY TOGETHER TO PREVENT POTENTIAL FLOW-THROUGH OF SEDIMENT AT THE JOINT. THE TOPS OF THE POSTS SHALL BE SECURED TO EACH OTHER WITH WIRE.
7. FOR EACH END POST, FENCE FABRIC SHALL BE FOLDED AROUND TWO POSTS ONE FULL TURN AND SECURED WITH 4 STAPLES.
8. MINIMUM OF 4 STAPLES SHALL BE INSTALLED PER POST. DIMENSIONS SHOWN ARE TYPICAL.
9. MAINTENANCE OPENINGS SHALL BE CONSTRUCTED IN A MANNER TO ENSURE THAT SEDIMENT IS RETAINED BY THE TEMPORARY SILT FENCE.
10. JOINT SECTIONS SHALL NOT BE PLACED AT SUMP LOCATIONS.

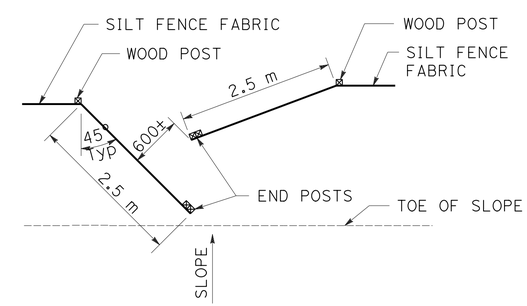

PLAN
OPTIONAL MAINTENANCE OPENING DETAIL

LEGEND

- TAMPED BACKFILL
- SLOPE DIRECTION
- DIRECTION OF FLOW

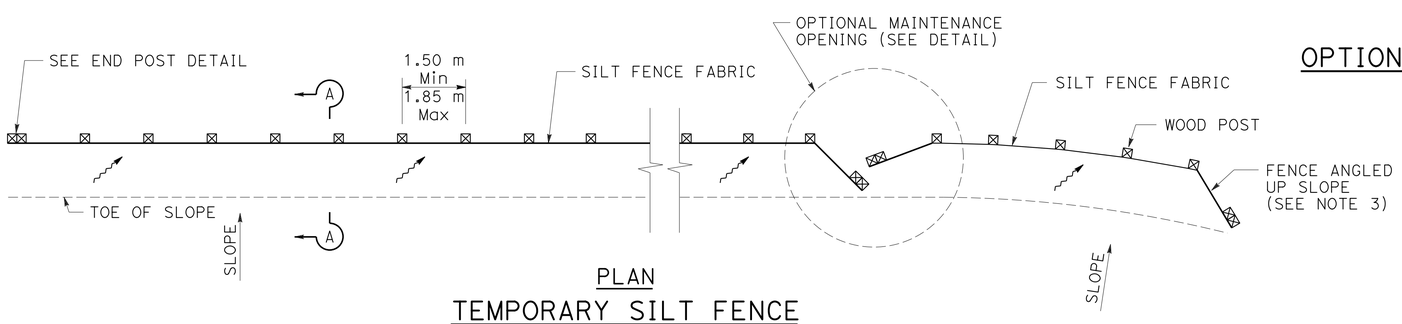

PLAN
TEMPORARY SILT FENCE

ALL DIMENSIONS ARE IN
MILLIMETERS UNLESS OTHERWISE SHOWN

TEMPORARY WATER POLLUTION CONTROL DETAILS (TEMPORARY SILT FENCE)

NO SCALE

WPCD-6

STATE OF CALIFORNIA - DEPARTMENT OF TRANSPORTATION
Caltrans WATER QUALITY

FUNCTIONAL SUPERVISOR: KAMRAN NAKHJIRI
CALCULATED-DESIGNED BY: FRED J. WITTEBORN
CHECKED BY: JONATHAN LEE
REVISED BY: FJW
DATE REVISED: 2/13/13

LAST REVISION 02-13-13
DATE PLOTTED => 20-MAY-2013
TIME PLOTTED => 06:11

Dist	COUNTY	ROUTE	KILOMETER POST TOTAL PROJECT	SHEET No.	TOTAL SHEETS
04	Son	101	33.3	64	158

Trang Hoang 2/26/13
REGISTERED CIVIL ENGINEER DATE

5-13-13
PLANS APPROVAL DATE

REGISTERED PROFESSIONAL ENGINEER Trang T. Hoang No. 59917 Exp. 12-31-13 CIVIL STATE OF CALIFORNIA

THE STATE OF CALIFORNIA OR ITS OFFICERS OR AGENTS SHALL NOT BE RESPONSIBLE FOR THE ACCURACY OR COMPLETENESS OF ELECTRONIC COPIES OF THIS PLAN SHEET.

Caltrans Metric

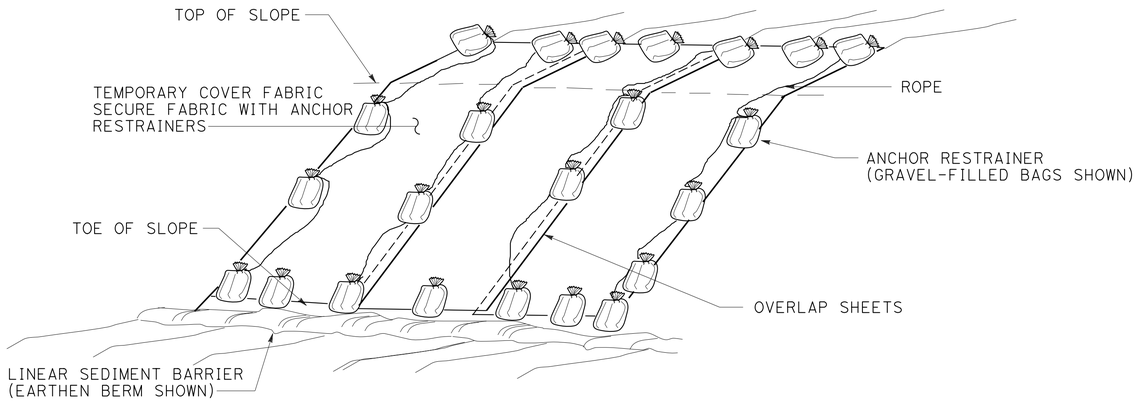

PERSPECTIVE
TEMPORARY COVER ON SLOPE

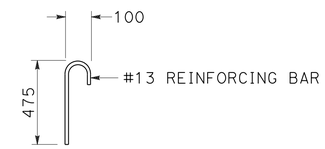

STEEL REINFORCING BAR DETAIL

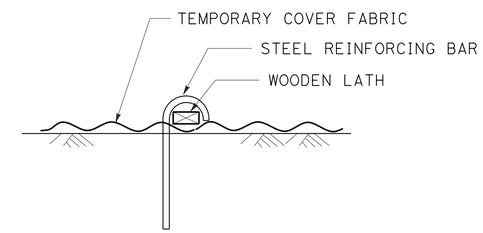

SECTION
ANCHOR RESTRAINER
(STEEL BAR AND WOODEN LATH)

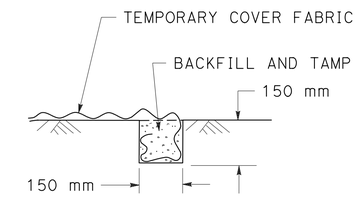

SECTION
KEY TRENCH DETAIL

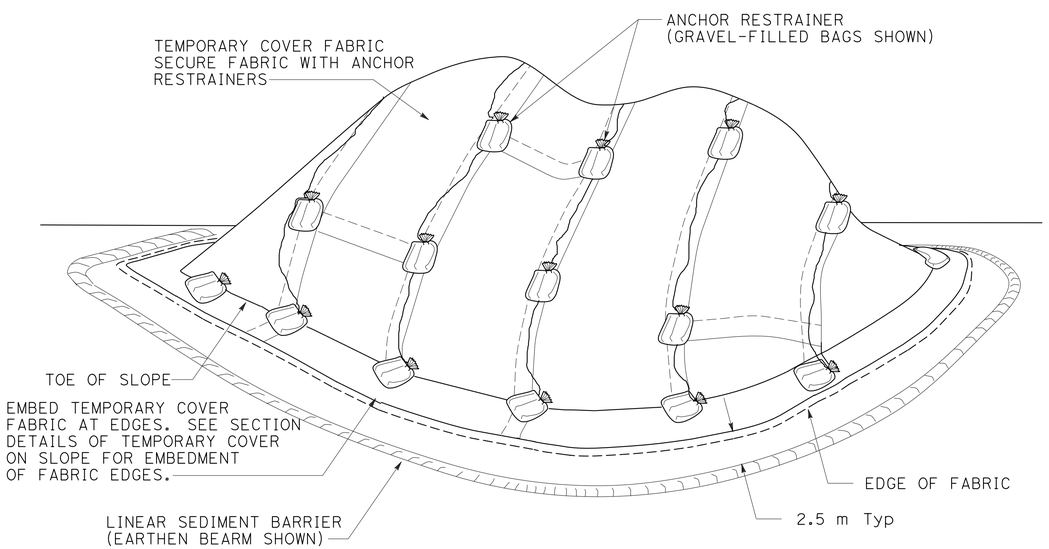

PERSPECTIVE
TEMPORARY COVER ON STOCKPILE

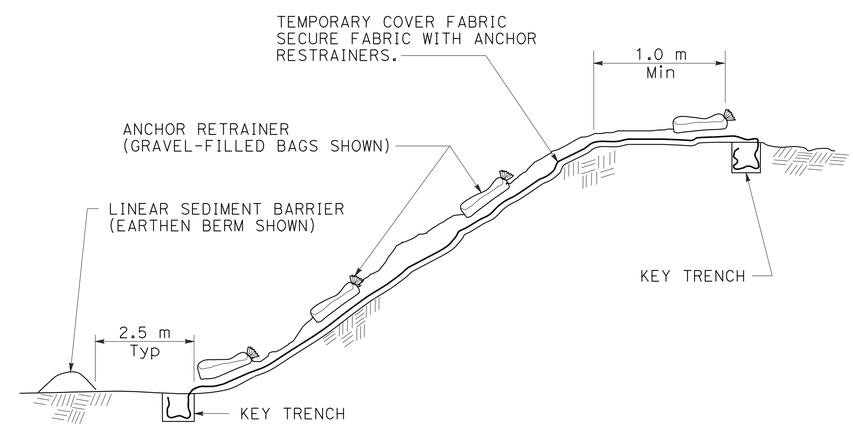

SECTION
TEMPORARY COVER ON SLOPE

ALL DIMENSIONS ARE IN MILLIMETERS UNLESS OTHERWISE SHOWN

TEMPORARY WATER POLLUTION CONTROL DETAILS (TEMPORARY COVER)

NO SCALE

WPCD-7

STATE OF CALIFORNIA - DEPARTMENT OF TRANSPORTATION
Caltrans **WATER QUALITY**

FUNCTIONAL SUPERVISOR: KAMRAN NAKHJIRI
CALCULATED-DESIGNED BY: FRED J. WITTEBORN
CHECKED BY: JONATHAN LEE
REVISED BY: FJW
DATE REVISED: 2/13/13

LAST REVISION 02-14-13
DATE PLOTTED => 20-MAY-2013
TIME PLOTTED => 06:11

Dist	COUNTY	ROUTE	KILOMETER POST TOTAL PROJECT	SHEET No.	TOTAL SHEETS
04	Son	101	33.3	65	158

Trang Hoang 2/26/13
REGISTERED CIVIL ENGINEER DATE

5-13-13
PLANS APPROVAL DATE

REGISTERED PROFESSIONAL ENGINEER Trang T. Hoang No. 59917 Exp. 12-31-13 CIVIL STATE OF CALIFORNIA

THE STATE OF CALIFORNIA OR ITS OFFICERS OR AGENTS SHALL NOT BE RESPONSIBLE FOR THE ACCURACY OR COMPLETENESS OF ELECTRONIC COPIES OF THIS PLAN SHEET.

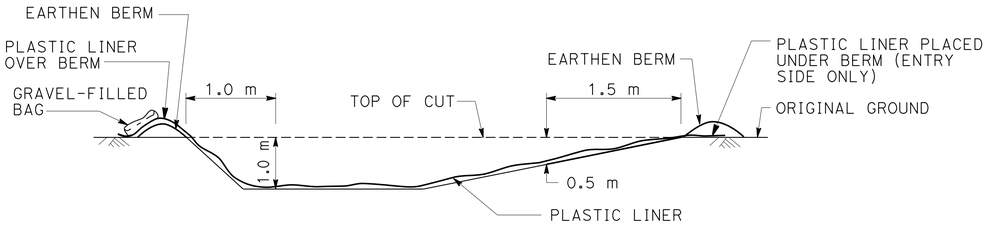

SECTION B-B

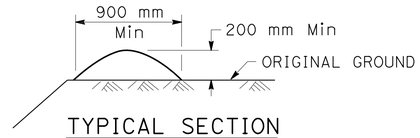

TYPICAL SECTION
EARTHEN BERM

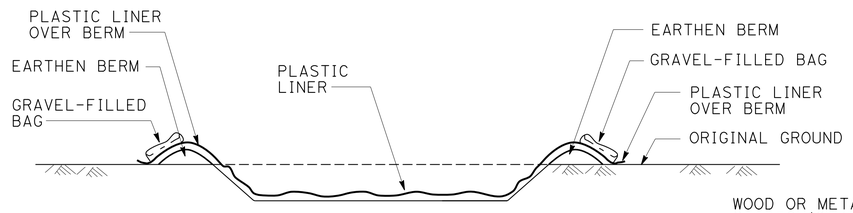

SECTION A-A

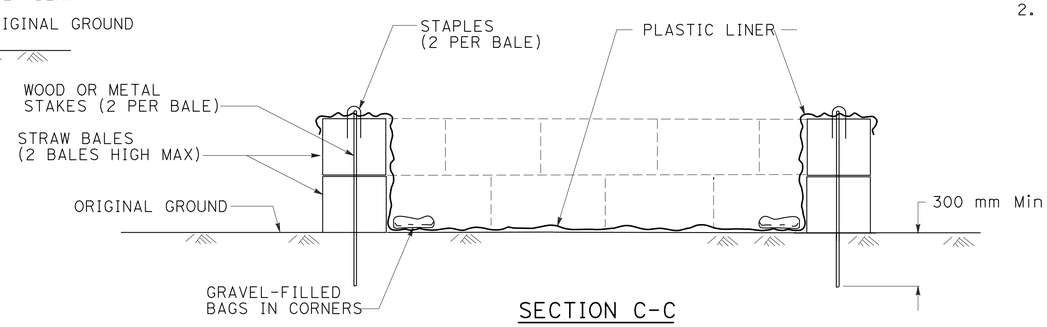

SECTION C-C

NOTES

1. THE CONCRETE WASHOUT SIGN SHALL BE INSTALLED WITHIN 10 METERS OF THE TEMPORARY CONCRETE WASHOUT FACILITY.
2. PLASTIC LINER SHALL BE ANCHORED WITH GRAVEL-FILLED BAGS FOR BELOW GRADE CONCRETE WASHOUT FACILITY.

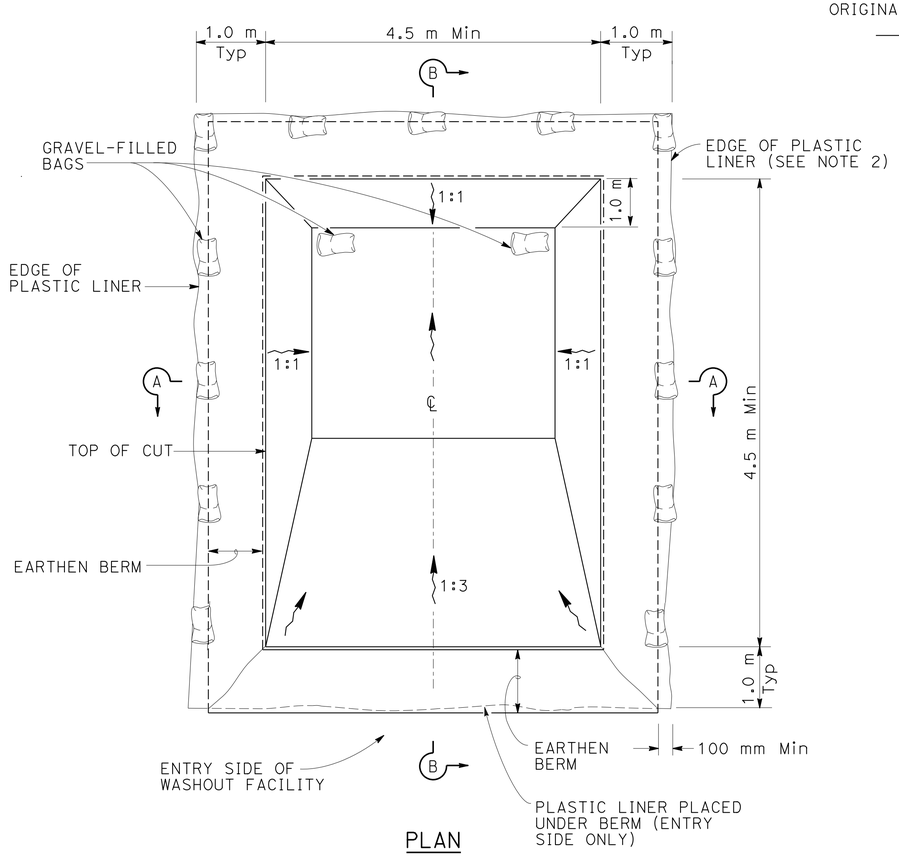

PLAN

TEMPORARY CONCRETE WASHOUT FACILITY
(BELOW GRADE)

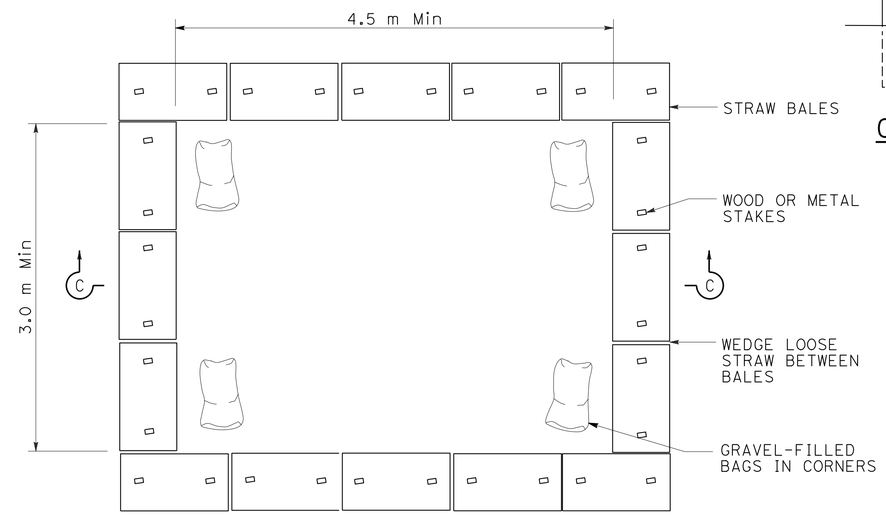

PLAN

TEMPORARY CONCRETE WASHOUT FACILITY
(ON GRADE)

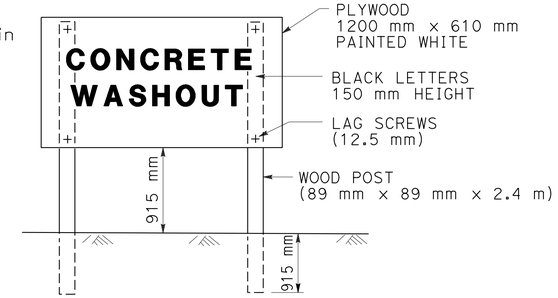

CONCRETE WASHOUT SIGN DETAIL

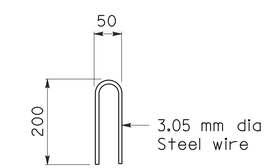

STAPLE DETAIL

ALL DIMENSIONS ARE IN MILLIMETERS UNLESS OTHERWISE SHOWN

TEMPORARY WATER POLLUTION CONTROL DETAILS (TEMPORARY CONCRETE WASHOUT FACILITY)

NO SCALE

WPCD-8

STATE OF CALIFORNIA - DEPARTMENT OF TRANSPORTATION
Caltrans WATER QUALITY

FUNCTIONAL SUPERVISOR: KAMRAN NAKHJIRI
CALCULATED-DESIGNED BY: FRED J. WITTEBORN
CHECKED BY: JONATHAN LEE
REVISED BY: FJW
DATE REVISED: 2/13/13

LAST REVISION 02-14-13 | DATE PLOTTED => 20-MAY-2013 | TIME PLOTTED => 06:11

Dist	COUNTY	ROUTE	KILOMETER POST TOTAL PROJECT	SHEET No.	TOTAL SHEETS
04	Son	101	33.3	66	158

Trang Hoang 4/5/13
REGISTERED CIVIL ENGINEER DATE

5-13-13
PLANS APPROVAL DATE

REGISTERED PROFESSIONAL ENGINEER Trang T. Hoang No. 59917 Exp. 12-31-13 CIVIL STATE OF CALIFORNIA

THE STATE OF CALIFORNIA OR ITS OFFICERS OR AGENTS SHALL NOT BE RESPONSIBLE FOR THE ACCURACY OR COMPLETENESS OF ELECTRONIC COPIES OF THIS PLAN SHEET.

Caltrans Metric

TEMPORARY WATER POLLUTION CONTROL QUANTITY

LOCATIONS	TEMPORARY COVER	TEMPORARY DRAINAGE INLET PROTECTION	TEMPORARY GRAVEL BAG BERM
STATION & DIRECTION	M2	EA	M
LT "CO" 302+16 TO 303+46 WB	200	12	20
LT "CO" 303+64 TO 304+50 WB	100	11	
LT "CO" 304+56 TO 305+39 WB	100	5	100
RT "CO" 302+04 TO 303+75 EB	300	7	30
RT "CO" 303+84 TO 304+72 EB	100	9	
RT "CO" 304+90 TO 305+39 EB	100	5	70
"CB" 21+50 TO 21+80	160		50
TOTAL	1060	49	270

TEMPORARY WATER POLLUTION CONTROL QUANTITES
WPCQ-1

STATE OF CALIFORNIA - DEPARTMENT OF TRANSPORTATION
Caltrans WATER QUALITY

FUNCTIONAL SUPERVISOR: KAMRAN NAKHJIRI
CALCULATED-DESIGNED BY: TRANG HOANG
CHECKED BY: TRANG HOANG
REVISED BY: FJW
DATE REVISED: 4/05/13

LAST REVISION 04-05-13
DATE PLOTTED => 20-MAY-2013
TIME PLOTTED => 06:11

Dist	COUNTY	ROUTE	KILOMETER POST TOTAL PROJECT	SHEET No.	TOTAL SHEETS
04	Son	101	33.3	67	158

Caltrans Metric

LICENSED LANDSCAPE ARCHITECT

5-13-13
PLANS APPROVAL DATE

LICENSED LANDSCAPE ARCHITECT
DAVID WARREN YAM No. 2522
Signed 11-30-13
Renewal Date 2-27-13
Date
STATE OF CALIFORNIA

THE STATE OF CALIFORNIA OR ITS OFFICERS OR AGENTS SHALL NOT BE RESPONSIBLE FOR THE ACCURACY OR COMPLETENESS OF ELECTRONIC COPIES OF THIS PLAN SHEET.

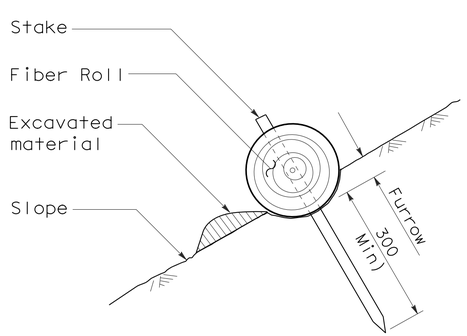

SECTION

FIBER ROLL (TYPE 1)

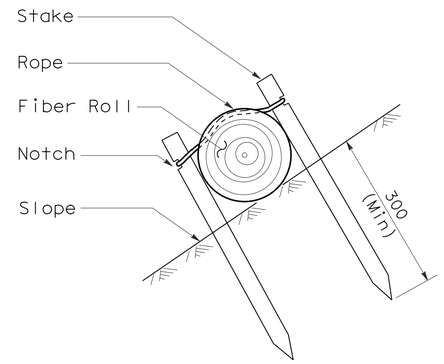

SECTION

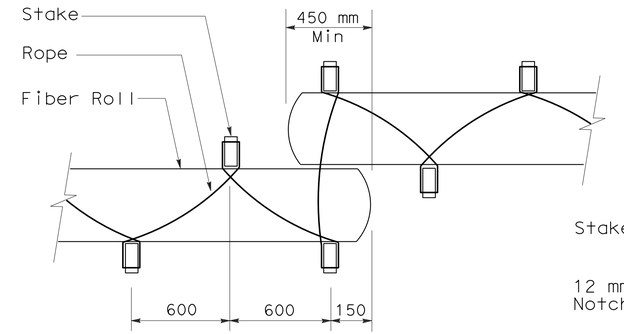

PLAN

FIBER ROLL (TYPE 2)

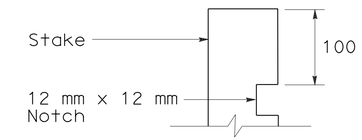

ELEVATION

STAKE NOTCH DETAIL

NOTE

1. Fiber roll spacing varies depending upon slope inclination.
2. Installations shown in the perspectives are for slope inclination of 1:10 and steeper.

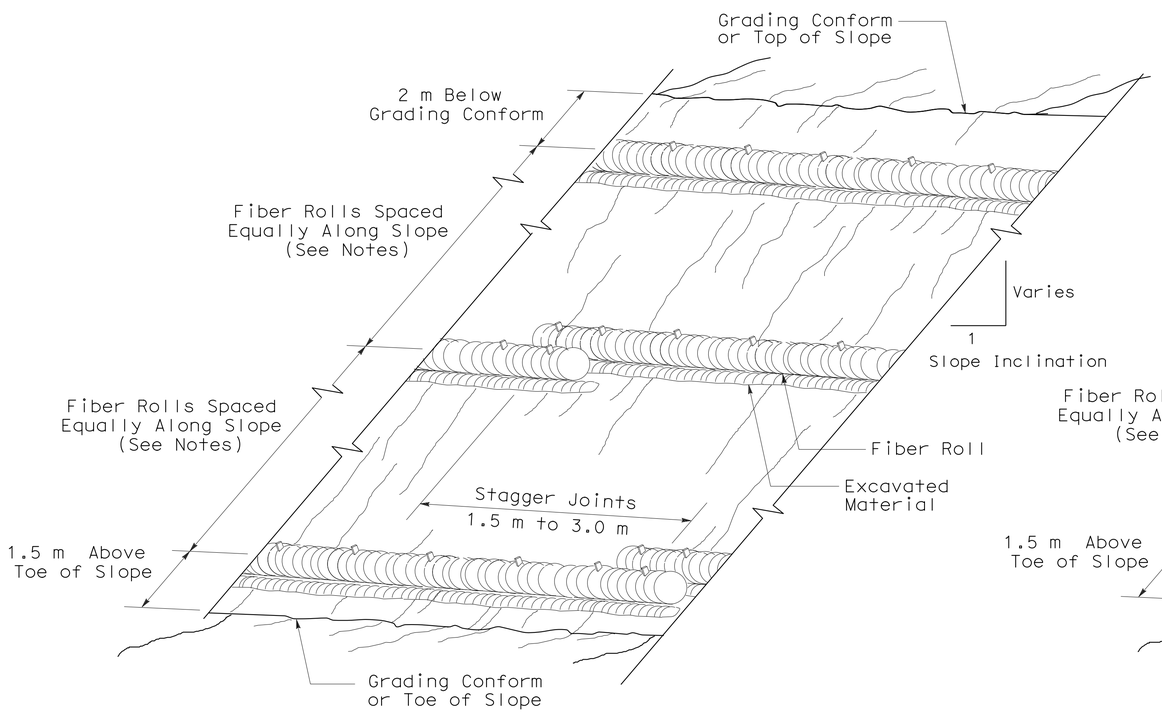

PERSPECTIVE

FIBER ROLL (TYPE 1)

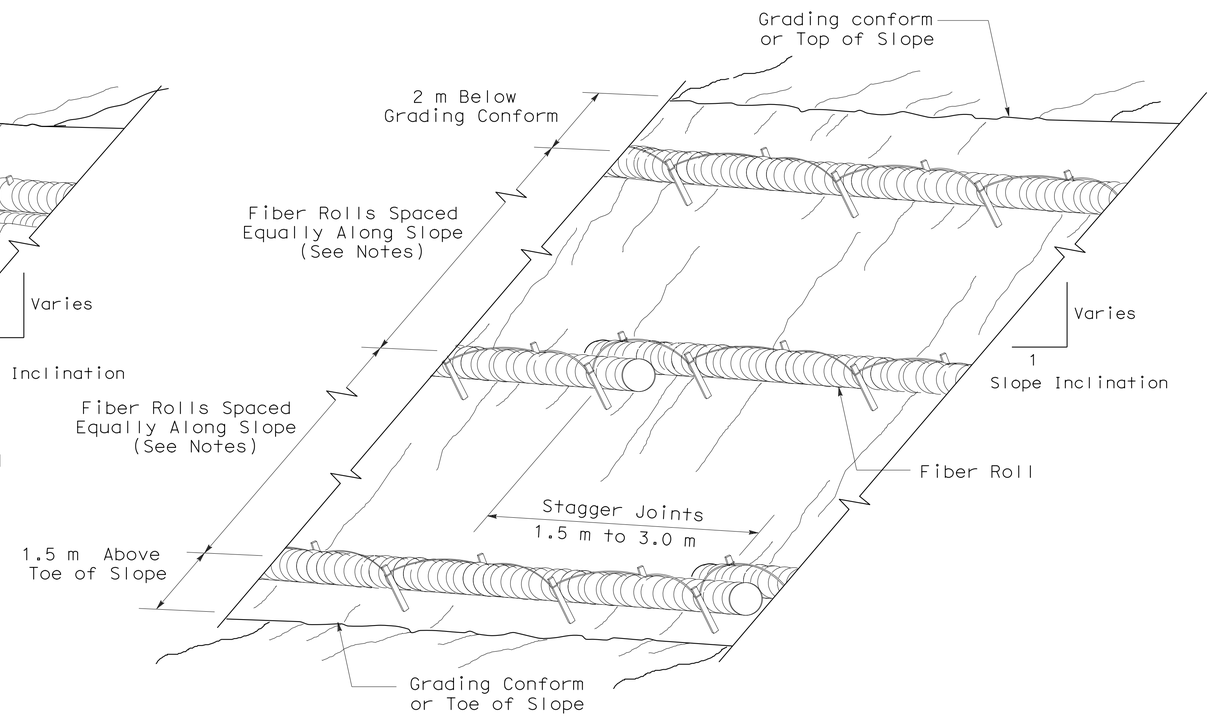

PERSPECTIVE

FIBER ROLL (TYPE 2)

ALL DIMENSIONS ARE IN MILLIMETERS UNLESS OTHERWISE SHOWN

EROSION CONTROL DETAILS (FIBER ROLL)

NO SCALE

ECD-1

STATE OF CALIFORNIA - DEPARTMENT OF TRANSPORTATION
Caltrans **WATER QUALITY**

SENIOR LANDSCAPE ARCHITECT: HARDEEP TAKHAR
CALCULATED-DESIGNED BY: CALIE TSUI
CHECKED BY: DAVID W. YAM
REVISED BY / DATE REVISED

LAST REVISION 2-27-13
DATE PLOTTED => 20-MAY-2013
TIME PLOTTED => 06:11

Dist	COUNTY	ROUTE	KILOMETER POST TOTAL PROJECT	SHEET No.	TOTAL SHEETS
04	Son	101	33.3	68	158

LICENSED LANDSCAPE ARCHITECT

5-13-13
PLANS APPROVAL DATE

LICENSED LANDSCAPE ARCHITECT
DAVID WARREN YAM No. 2343
Signature
11-30-13
Renewal Date
2-27-13
Date
STATE OF CALIFORNIA

THE STATE OF CALIFORNIA OR ITS OFFICERS OR AGENTS SHALL NOT BE RESPONSIBLE FOR THE ACCURACY OR COMPLETENESS OF ELECTRONIC COPIES OF THIS PLAN SHEET.

Caltrans Metric

EROSION CONTROL QUANTITIES

LOCATIONS	FIBER ROLLS
STATION	(m)
WESTBOUND LINE "CO" 302+16.598 TO 302+17.33	1
EASTBOUND LINE "CO" 302+04.126 TO 302+13.591	10
LINE "CB" 21+50 TO 21+80 (R+)	30
WESTBOUND LINE "CO" 304+56.635 TO 305+38.917	82
EASTBOUND LINE "CO" 304+90 TO 305+38.729	50
TOTAL	173

STATE OF CALIFORNIA - DEPARTMENT OF TRANSPORTATION
Caltrans WATER QUALITY

SENIOR LANDSCAPE ARCHITECT: JOSEPH PETERSON
CALCULATED-DESIGNED BY: Calie Tsui
CHECKED BY: David Yam
REVISED BY
DATE REVISED

LAST REVISION 01-15-13
DATE PLOTTED => 20-MAY-2013
TIME PLOTTED => 06:11

EROSION CONTROL QUANTITIES
ECQ-1

Dist	COUNTY	ROUTE	KILOMETER POST TOTAL PROJECT	SHEET No.	TOTAL SHEETS
04	Son	101	33.3	69	158

REGISTERED CIVIL ENGINEER 2/22/13 DATE

5-13-13
PLANS APPROVAL DATE

REGISTERED PROFESSIONAL ENGINEER Fred J. Witteborn No. 56272 Exp. 12-31-14 CIVIL STATE OF CALIFORNIA

THE STATE OF CALIFORNIA OR ITS OFFICERS OR AGENTS SHALL NOT BE RESPONSIBLE FOR THE ACCURACY OR COMPLETENESS OF ELECTRONIC COPIES OF THIS PLAN SHEET.

Caltrans Metric

FOR ACCURATE RIGHT OF WAY AND ACCESS DATA CONTACT RIGHT OF WAY ENGINEERING AT THE DISTRICT OFFICE

NOTES:

1. ALL TIES TO STORM DRAIN MANHOLES ARE TO BE AT CENTER OF THE BASE, UNLESS OTHERWISE NOTED.
2. STATION AND OFFSET TIES TO DRAINAGE INLETS ON SHEET DD-1.
3. LOCATIONS OF EXISTING DRAINAGE FACILITIES ARE APPROXIMATE. VERIFY LOCATION AND ELEVATION OF EXISTING DRAINAGE FACILITIES PRIOR TO MODIFYING.

ABBREVIATIONS:

TC	TOP OF COVER
TG	TOP OF GRATE
GFL	GUTTER FLOWLINE

LEGEND:

(6) DRAINAGE SYSTEM No.

(a) DRAINAGE ITEM No.

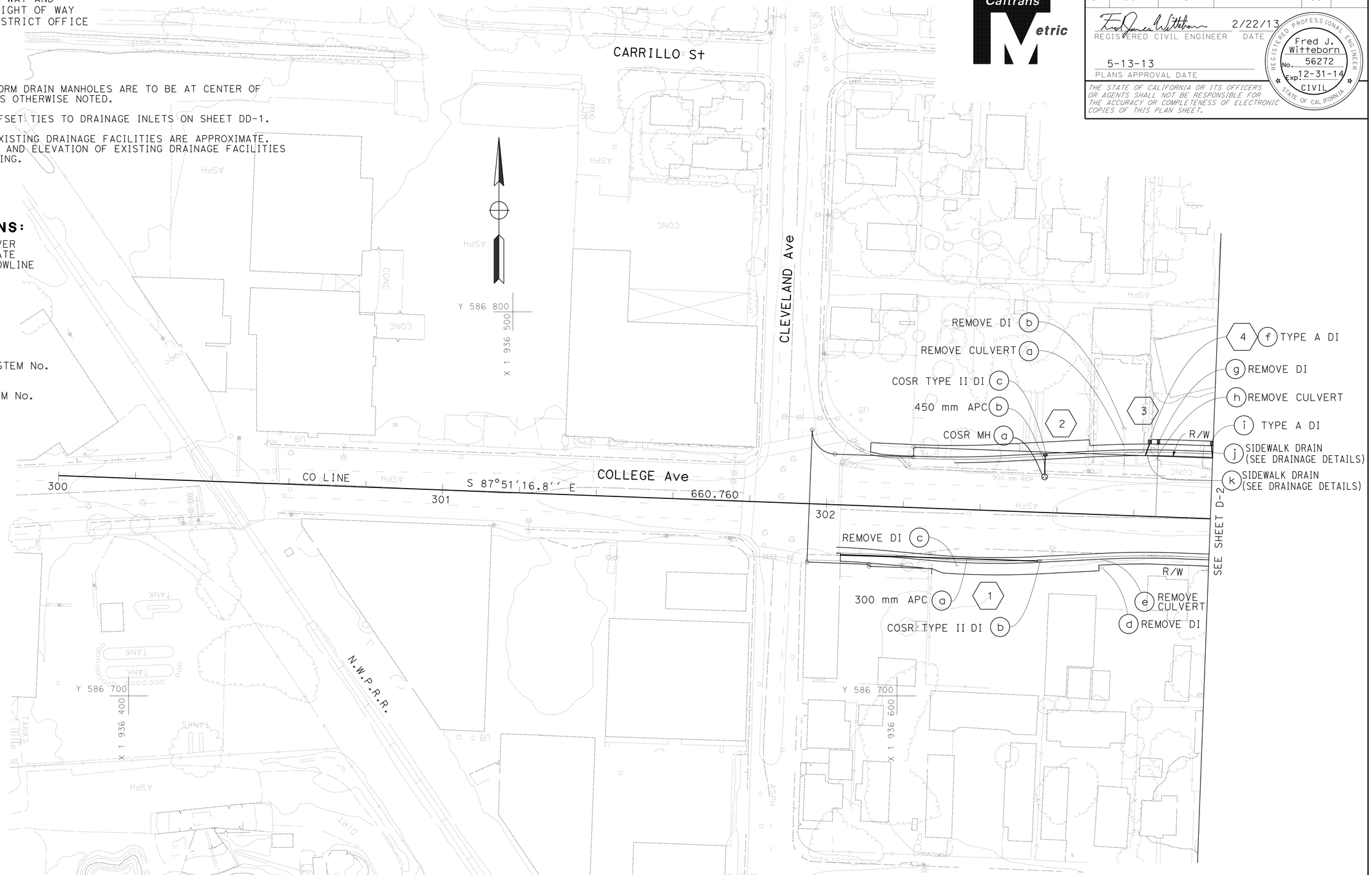

ALL DIMENSIONS ARE IN METERS UNLESS OTHERWISE SHOWN

DRAINAGE PLAN

SCALE 1:500

D-1

THIS PLAN ACCURATE FOR DRAINAGE WORK ONLY

STATE OF CALIFORNIA - DEPARTMENT OF TRANSPORTATION
Caltrans DESIGN

FUNCTIONAL SUPERVISOR: JONATHAN LEE
CALCULATED-DESIGNED BY: FRED J. WITTEBORN
CHECKED BY: JONATHAN LEE
REVISED BY: FJW
DATE REVISED: 2/13/13

LAST REVISION 02-15-13 | DATE PLOTTED => 20-MAY-2013 | TIME PLOTTED => 06:32

Dist	COUNTY	ROUTE	KILOMETER POST TOTAL PROJECT	SHEET No.	TOTAL SHEETS
04	Son	101	33.3	70	158

REGISTERED CIVIL ENGINEER 2/22/13 DATE

5-13-13
PLANS APPROVAL DATE

REGISTERED PROFESSIONAL ENGINEER Fred J. Witteborn No. 56272 Exp. 12-31-14 CIVIL STATE OF CALIFORNIA

THE STATE OF CALIFORNIA OR ITS OFFICERS OR AGENTS SHALL NOT BE RESPONSIBLE FOR THE ACCURACY OR COMPLETENESS OF ELECTRONIC COPIES OF THIS PLAN SHEET.

Caltrans Metric

FOR ACCURATE RIGHT OF WAY AND ACCESS DATA CONTACT RIGHT OF WAY ENGINEERING AT THE DISTRICT OFFICE

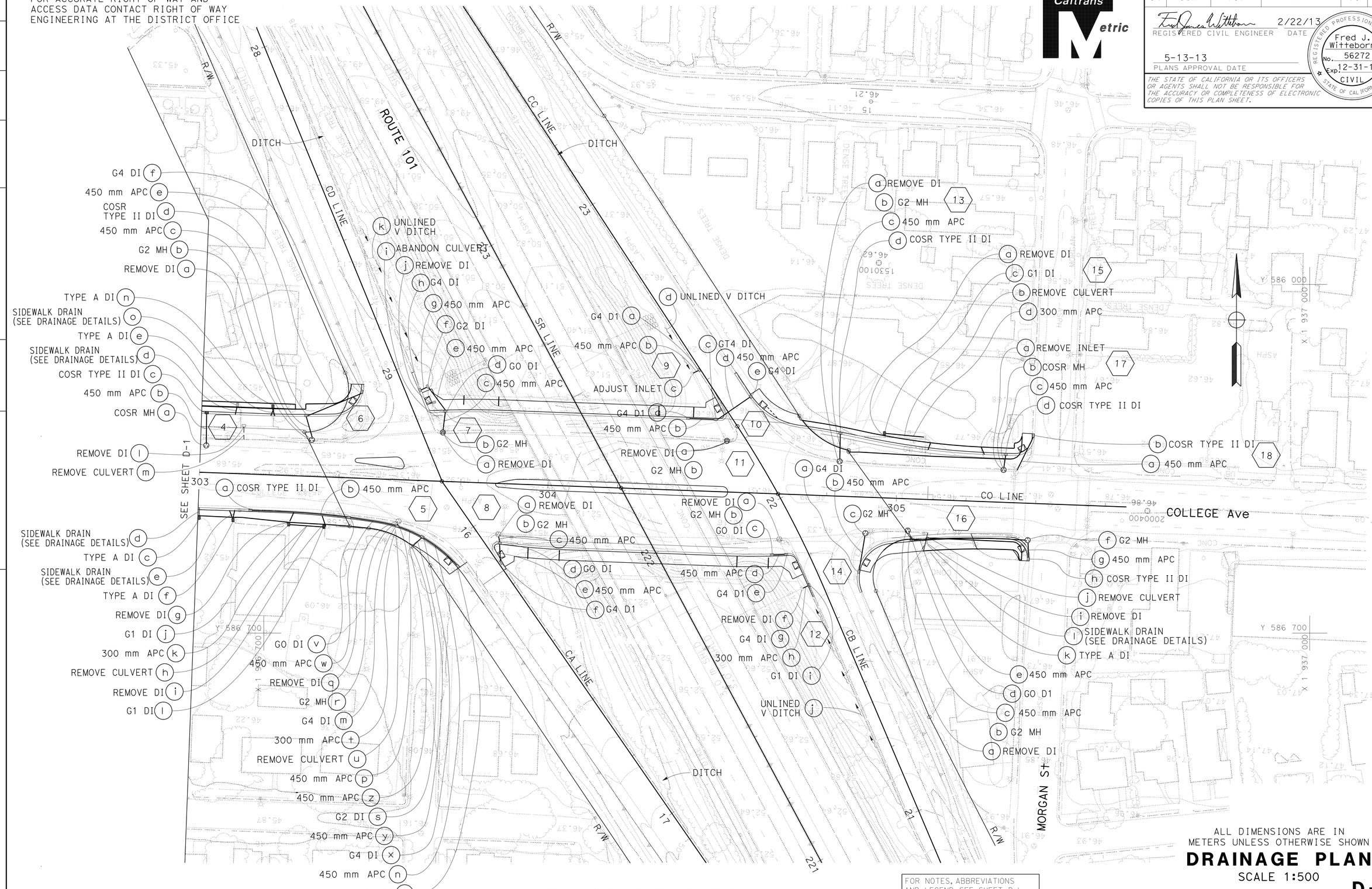

ALL DIMENSIONS ARE IN METERS UNLESS OTHERWISE SHOWN

DRAINAGE PLAN

SCALE 1:500

D-2

THIS PLAN ACCURATE FOR DRAINAGE WORK ONLY

FOR NOTES, ABBREVIATIONS AND LEGEND, SEE SHEET D-1

STATE OF CALIFORNIA - DEPARTMENT OF TRANSPORTATION
Caltrans DESIGN

FUNCTIONAL SUPERVISOR: JONATHAN LEE
CALCULATED-DESIGNED BY: FRED J. WITTEBORN
CHECKED BY: JONATHAN LEE
REVISED BY: FJW
DATE REVISED: 2/13/13

LAST REVISION 02-15-13
DATE PLOTTED => 20-MAY-2013
TIME PLOTTED => 06:13

Dist	COUNTY	ROUTE	KILOMETER POST TOTAL PROJECT	SHEET No.	TOTAL SHEETS
04	Son	101	33.3	71	158

REGISTERED CIVIL ENGINEER 2/22/13 DATE

5-13-13
PLANS APPROVAL DATE

REGISTERED PROFESSIONAL ENGINEER Fred J. Witteborn No. 56272 Exp. 12-31-14 CIVIL STATE OF CALIFORNIA

THE STATE OF CALIFORNIA OR ITS OFFICERS OR AGENTS SHALL NOT BE RESPONSIBLE FOR THE ACCURACY OR COMPLETENESS OF ELECTRONIC COPIES OF THIS PLAN SHEET.

Caltrans Metric

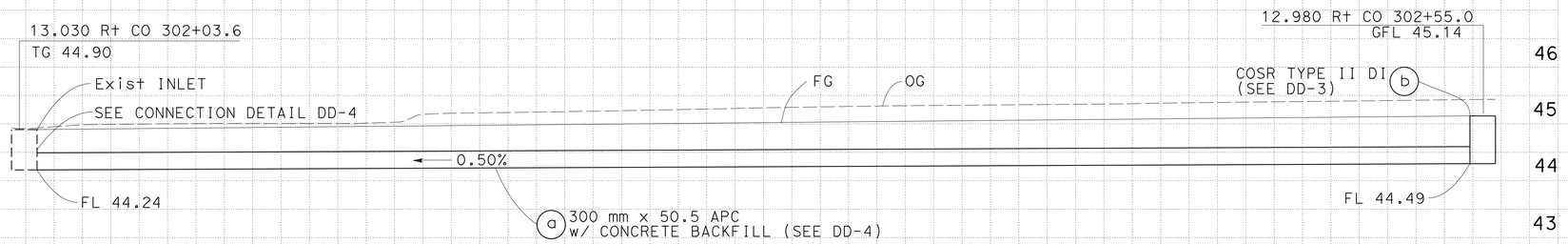

DRAINAGE SYSTEM No. 1

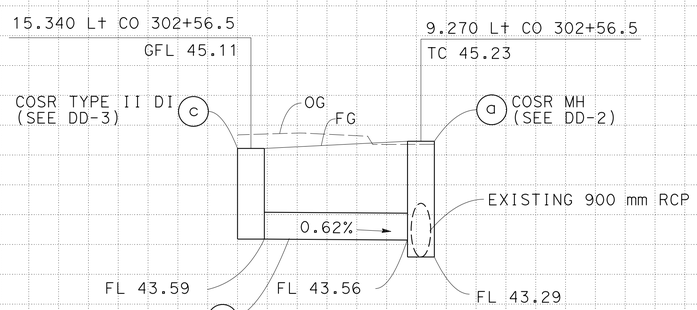

DRAINAGE SYSTEM No. 2

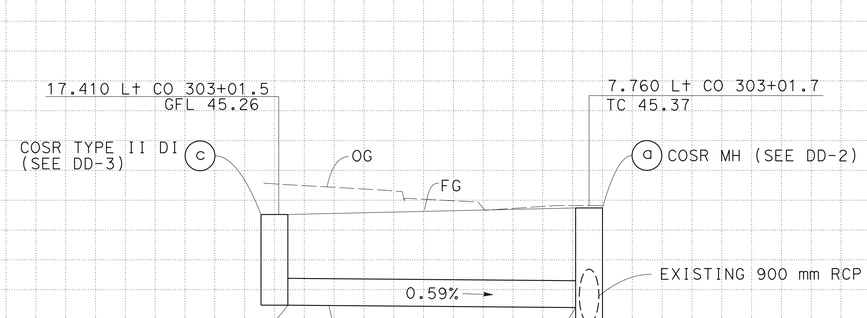

DRAINAGE SYSTEM No. 4

ALL DIMENSIONS ARE IN METERS UNLESS OTHERWISE SHOWN

DRAINAGE PROFILES

SCALE Horiz 1:100
Vert 1:100

DP-1

Station	
m^3 Exc	
m^3 Emb	

FRED J. WITTEBORN — REVISED BY
JONATHAN LEE — DATE REVISED 2/13/13 FJW
CALCULATED-DESIGNED BY
CHECKED BY
FUNCTIONAL SUPERVISOR JONATHAN LEE

STATE OF CALIFORNIA - DEPARTMENT OF TRANSPORTATION
Caltrans DESIGN

LAST REVISION 02-15-13 DATE PLOTTED => 20-MAY-2013 TIME PLOTTED => 08:49

Dist	COUNTY	ROUTE	KILOMETER POST TOTAL PROJECT	SHEET No.	TOTAL SHEETS
04	Son	101	33.3	72	158

REGISTERED CIVIL ENGINEER 2/22/13 DATE

5-13-13
PLANS APPROVAL DATE

REGISTERED PROFESSIONAL ENGINEER Fred J. Witteborn No. 56272 Exp. 12-31-14 CIVIL STATE OF CALIFORNIA

THE STATE OF CALIFORNIA OR ITS OFFICERS OR AGENTS SHALL NOT BE RESPONSIBLE FOR THE ACCURACY OR COMPLETENESS OF ELECTRONIC COPIES OF THIS PLAN SHEET.

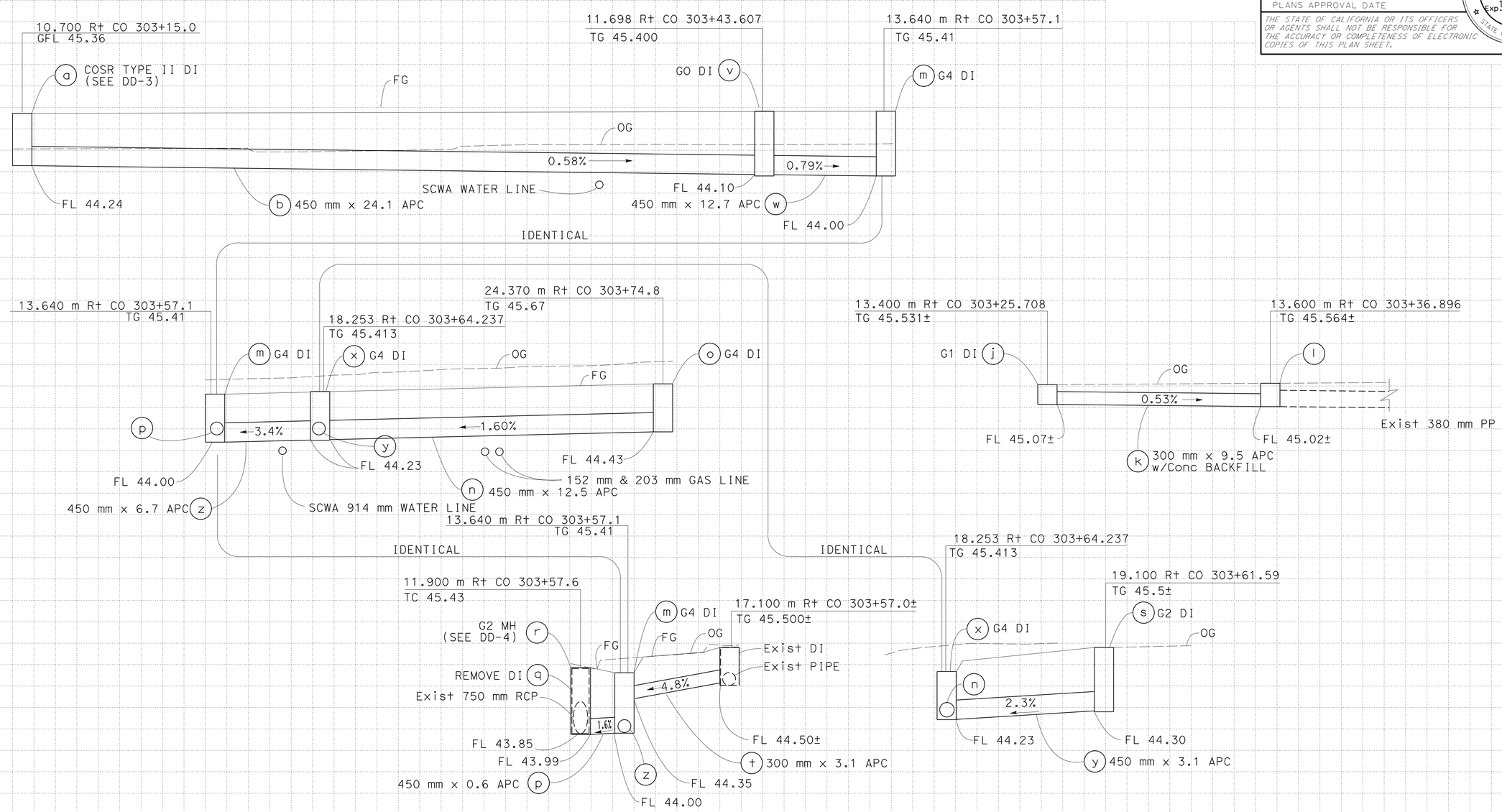

DRAINAGE SYSTEM No. 5

ALL DIMENSIONS ARE IN METERS UNLESS OTHERWISE SHOWN

DRAINAGE PROFILES

SCALE Horiz 1:100
Vert 1:100

DP-2

FJW	2/13/13	REVISED BY / DATE REVISED
FRED J. WITTEBORN	JONATHAN LEE	CALCULATED-DESIGNED BY / CHECKED BY
JONATHAN LEE		FUNCTIONAL SUPERVISOR

STATE OF CALIFORNIA - DEPARTMENT OF TRANSPORTATION
Caltrans DESIGN

Station
m³ Exc
Emb

LAST REVISION 02-15-13 DATE PLOTTED => 20-MAY-2013 TIME PLOTTED => 08:51

Dist	COUNTY	ROUTE	KILOMETER POST TOTAL PROJECT	SHEET No.	TOTAL SHEETS
04	Son	101	33.3	73	158

REGISTERED CIVIL ENGINEER 2/22/13 DATE

5-13-13
PLANS APPROVAL DATE

REGISTERED PROFESSIONAL ENGINEER Fred J. Witteborn No. 56272 Exp. 12-31-14 CIVIL STATE OF CALIFORNIA

THE STATE OF CALIFORNIA OR ITS OFFICERS OR AGENTS SHALL NOT BE RESPONSIBLE FOR THE ACCURACY OR COMPLETENESS OF ELECTRONIC COPIES OF THIS PLAN SHEET.

Caltrans Metric

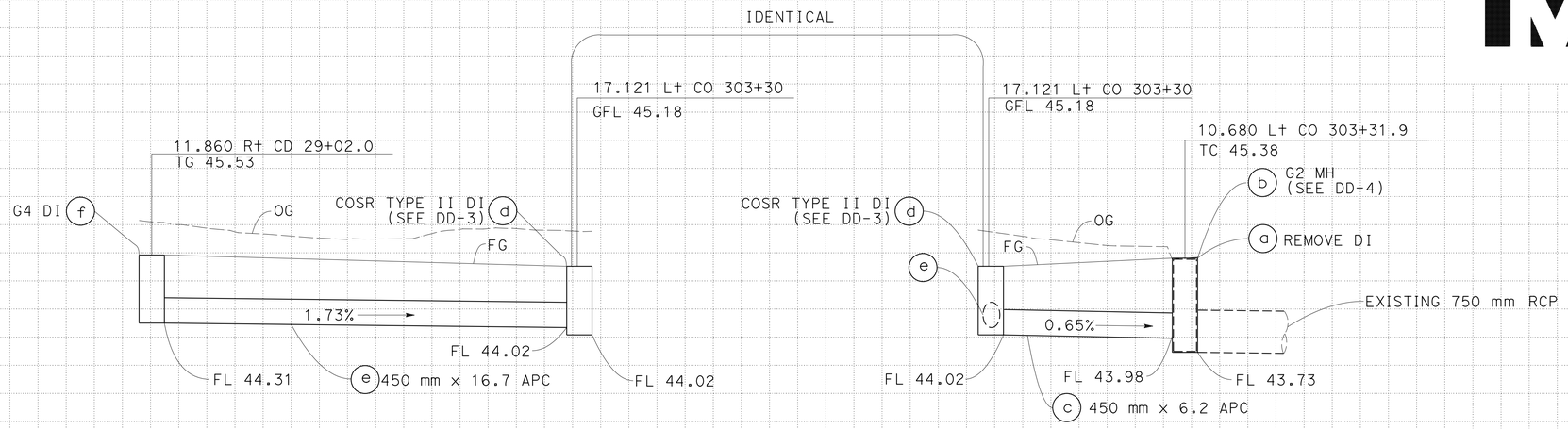

DRAINAGE SYSTEM No. 6

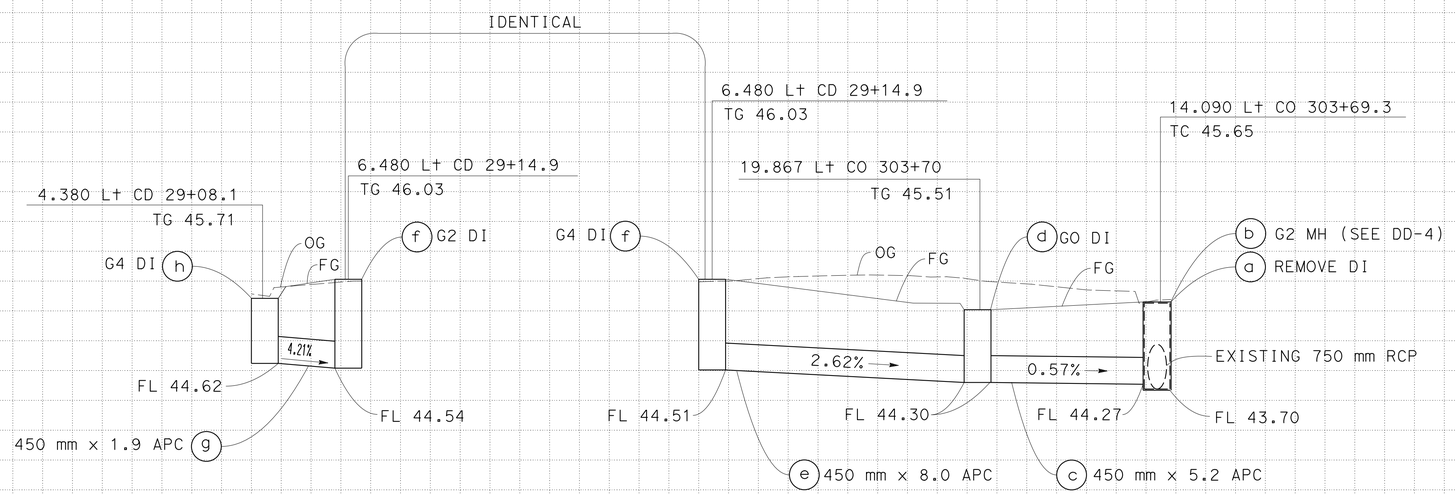

DRAINAGE SYSTEM No. 7

ALL DIMENSIONS ARE IN METERS UNLESS OTHERWISE SHOWN

DRAINAGE PROFILES

SCALE Horiz 1:100
Vert 1:100

DP-3

FRED J. WITTEBORN — REVISED BY — DATE REVISED 2/13/13 — FJW

JONATHAN LEE — CALCULATED-DESIGNED BY — CHECKED BY

FUNCTIONAL SUPERVISOR: JONATHAN LEE

STATE OF CALIFORNIA - DEPARTMENT OF TRANSPORTATION — DESIGN — Caltrans

Station | m³ Exc | Emb

LAST REVISION 02-15-13 — DATE PLOTTED => 20-MAY-2013 — TIME PLOTTED => 06:13

Dist	COUNTY	ROUTE	KILOMETER POST TOTAL PROJECT	SHEET No.	TOTAL SHEETS
04	Son	101	33.3	74	158

REGISTERED CIVIL ENGINEER 2/22/13 DATE

5-13-13
PLANS APPROVAL DATE

REGISTERED PROFESSIONAL ENGINEER Fred J. Witteborn No. 56272 Exp. 12-31-14 CIVIL STATE OF CALIFORNIA

THE STATE OF CALIFORNIA OR ITS OFFICERS OR AGENTS SHALL NOT BE RESPONSIBLE FOR THE ACCURACY OR COMPLETENESS OF ELECTRONIC COPIES OF THIS PLAN SHEET.

Caltrans Metric

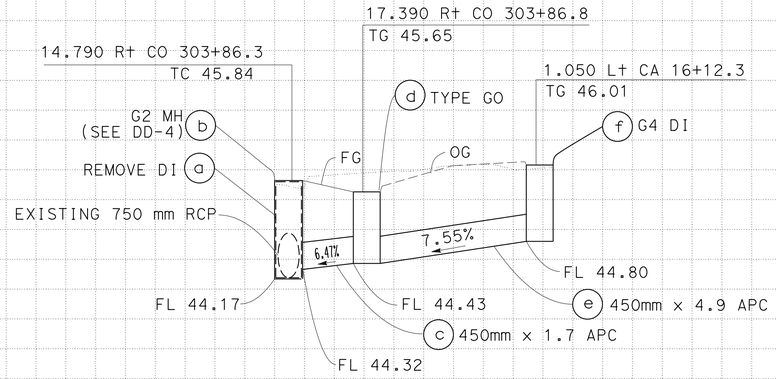

DRAINAGE SYSTEM No. 8

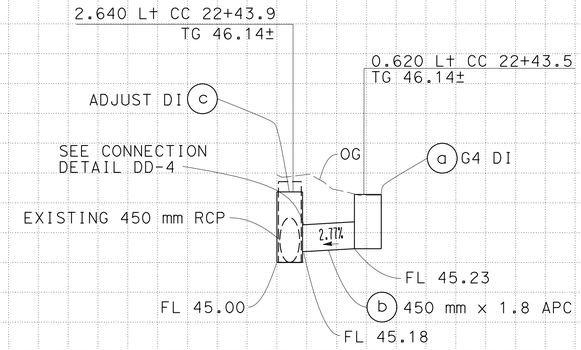

DRAINAGE SYSTEM No. 9

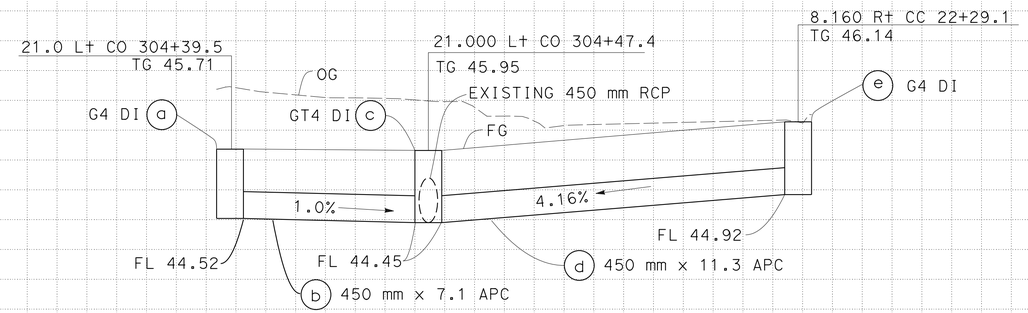

DRAINAGE SYSTEM No. 10

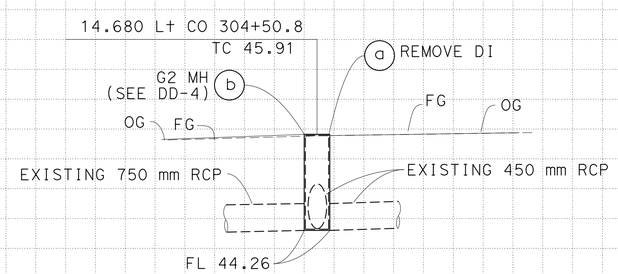

DRAINAGE SYSTEM No. 11

ALL DIMENSIONS ARE IN
METERS UNLESS OTHERWISE SHOWN

DRAINAGE PROFILES

SCALE Horiz 1:100
Vert 1:100

DP-4

Station	
m^3	Exc
	Emb

STATE OF CALIFORNIA - DEPARTMENT OF TRANSPORTATION
Caltrans
DESIGN

FUNCTIONAL SUPERVISOR: JONATHAN LEE
CALCULATED-DESIGNED BY: FRED J. WITTEBORN
CHECKED BY: JONATHAN LEE
REVISED BY: FJW
DATE REVISED: 2/13/13

LAST REVISION 02-15-13 DATE PLOTTED => 20-MAY-2013 TIME PLOTTED => 06:16

Dist	COUNTY	ROUTE	KILOMETER POST TOTAL PROJECT	SHEET No.	TOTAL SHEETS
04	Son	101	33.3	75	158

REGISTERED CIVIL ENGINEER 2/22/13 DATE

5-13-13
PLANS APPROVAL DATE

REGISTERED PROFESSIONAL ENGINEER Fred J. Witteborn No. 56272 Exp. 12-31-14 CIVIL STATE OF CALIFORNIA

THE STATE OF CALIFORNIA OR ITS OFFICERS OR AGENTS SHALL NOT BE RESPONSIBLE FOR THE ACCURACY OR COMPLETENESS OF ELECTRONIC COPIES OF THIS PLAN SHEET.

Caltrans Metric

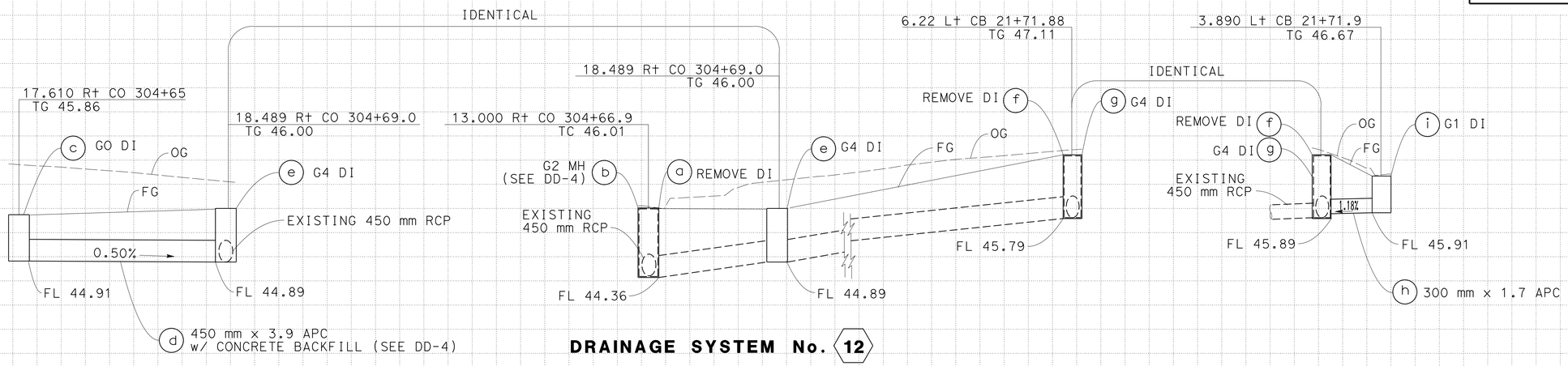

DRAINAGE SYSTEM No. 12

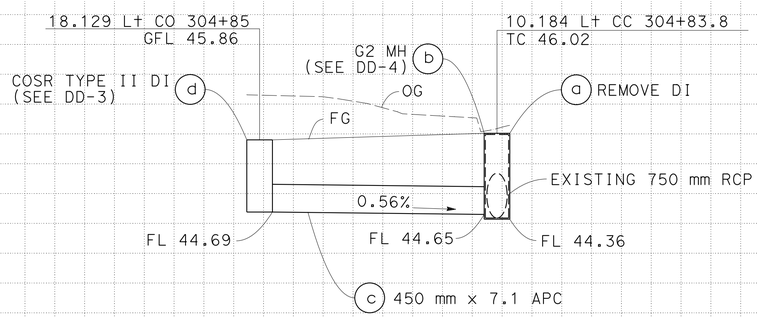

DRAINAGE SYSTEM No. 13

ALL DIMENSIONS ARE IN METERS UNLESS OTHERWISE SHOWN

DRAINAGE PROFILES

SCALE Horiz 1:100
Vert 1:100

DP-5

FJW	2/13/13	FRED J. WITTEBORN
REVISED BY	DATE REVISED	JONATHAN LEE
CALCULATED-DESIGNED BY		
CHECKED BY		
FUNCTIONAL SUPERVISOR		JONATHAN LEE

STATE OF CALIFORNIA - DEPARTMENT OF TRANSPORTATION
Caltrans **DESIGN**

Station
m^3 Exc
Emb

LAST REVISION 02-15-13
DATE PLOTTED => 20-MAY-2013
TIME PLOTTED => 06:13

Dist	COUNTY	ROUTE	KILOMETER POST TOTAL PROJECT	SHEET No.	TOTAL SHEETS
04	Son	101	33.3	76	158

REGISTERED CIVIL ENGINEER 2/22/13 DATE

5-13-13
PLANS APPROVAL DATE

REGISTERED PROFESSIONAL ENGINEER Fred J. Witteborn No. 56272 Exp. 12-31-14 CIVIL STATE OF CALIFORNIA

THE STATE OF CALIFORNIA OR ITS OFFICERS OR AGENTS SHALL NOT BE RESPONSIBLE FOR THE ACCURACY OR COMPLETENESS OF ELECTRONIC COPIES OF THIS PLAN SHEET.

Caltrans Metric

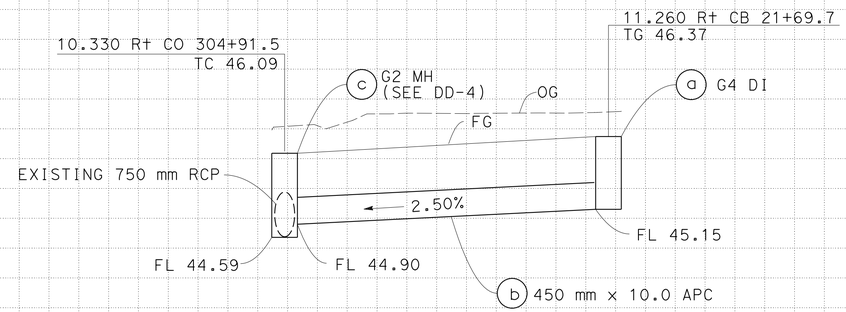

DRAINAGE SYSTEM No. 14

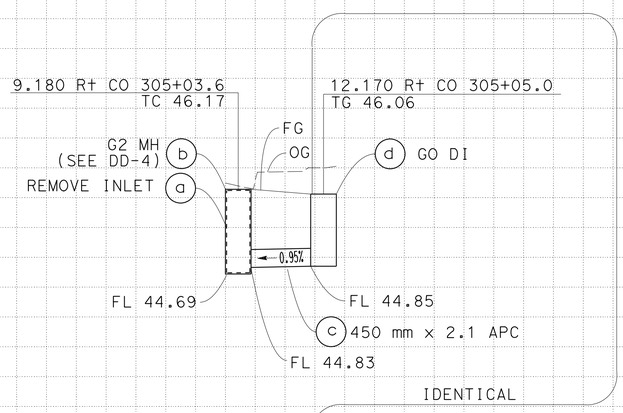

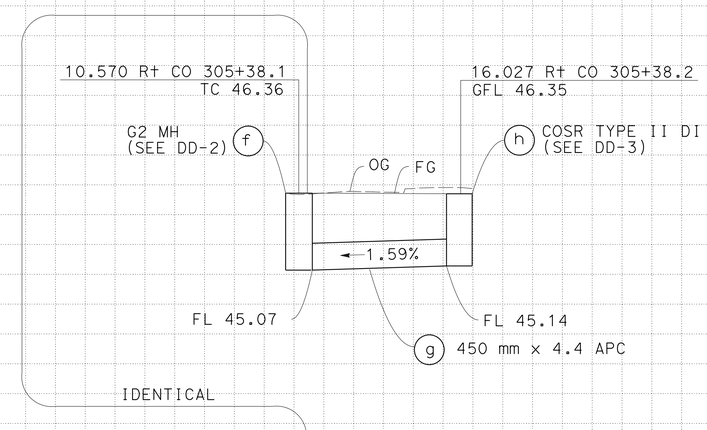

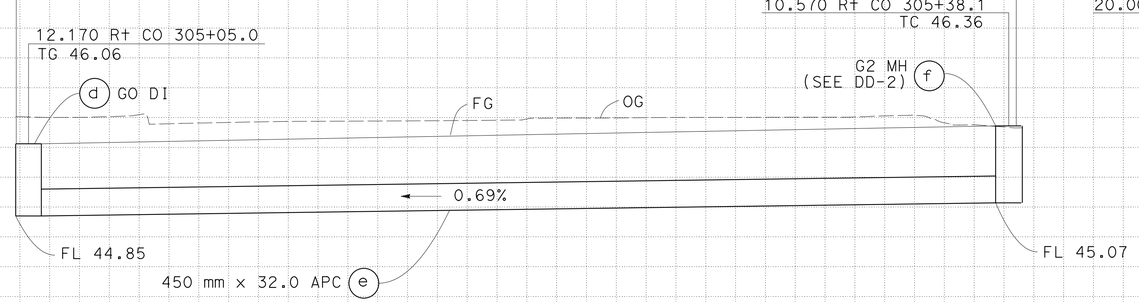

DRAINAGE SYSTEM No. 16

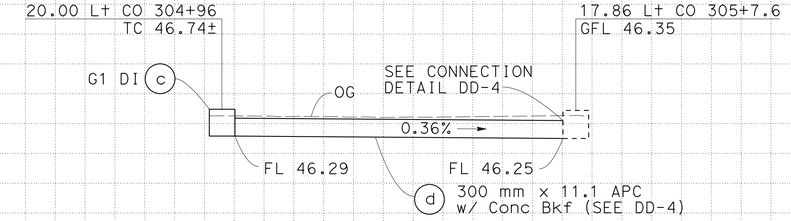

DRAINAGE SYSTEM No. 15

ALL DIMENSIONS ARE IN METERS UNLESS OTHERWISE SHOWN

DRAINAGE PROFILES

SCALE Horiz 1:100
Vert 1:100

DP-6

REVISED BY	DATE REVISED
FJW	2/13/13

FRED J. WITTEBORN — CALCULATED-DESIGNED BY
JONATHAN LEE — CHECKED BY
JONATHAN LEE — FUNCTIONAL SUPERVISOR

STATE OF CALIFORNIA - DEPARTMENT OF TRANSPORTATION
Caltrans DESIGN

Station	
m^3 Exc	
m^3 Emb	

LAST REVISION 02-15-13 DATE PLOTTED => 20-MAY-2013 TIME PLOTTED => 06:32

Dist	COUNTY	ROUTE	KILOMETER POST TOTAL PROJECT	SHEET No.	TOTAL SHEETS
04	Son	101	33.3	77	158

REGISTERED CIVIL ENGINEER 2/22/13 DATE

5-13-13
PLANS APPROVAL DATE

REGISTERED PROFESSIONAL ENGINEER Fred J. Witteborn No. 56272 Exp. 12-31-14 CIVIL STATE OF CALIFORNIA

THE STATE OF CALIFORNIA OR ITS OFFICERS OR AGENTS SHALL NOT BE RESPONSIBLE FOR THE ACCURACY OR COMPLETENESS OF ELECTRONIC COPIES OF THIS PLAN SHEET.

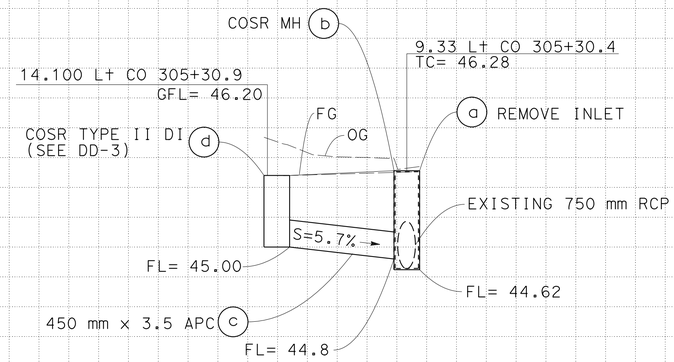

DRAINAGE SYSTEM No. 17

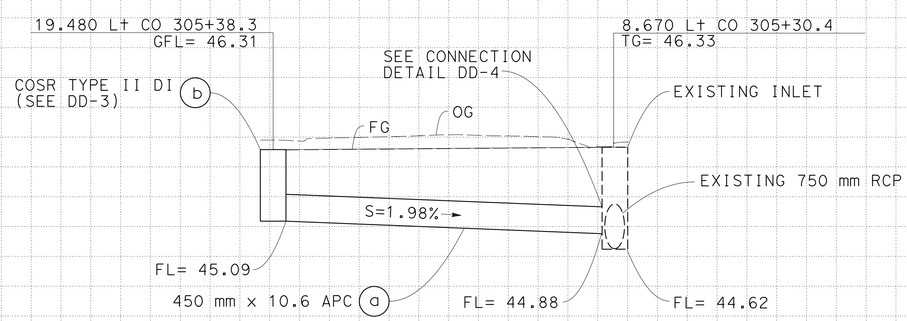

DRAINAGE SYSTEM No. 18

ALL DIMENSIONS ARE IN
METERS UNLESS OTHERWISE SHOWN

DRAINAGE PROFILES

SCALE Horiz 1:100
Vert 1:100

DP-7

Station	
m^3 Exc	
m^3 Emb	

STATE OF CALIFORNIA - DEPARTMENT OF TRANSPORTATION
Caltrans DESIGN

FUNCTIONAL SUPERVISOR: JONATHAN LEE
CALCULATED-DESIGNED BY: FRED J. WITTEBORN
CHECKED BY: JONATHAN LEE
REVISED BY: FJW
DATE REVISED: 2/13/13

LAST REVISION 02-15-13
DATE PLOTTED => 20-MAY-2013
TIME PLOTTED => 06:32

Dist	COUNTY	ROUTE	KILOMETER POST TOTAL PROJECT	SHEET No.	TOTAL SHEETS
04	Son	101	33.3	78	158

Kathleen M. Reilly 2/26/13
REGISTERED CIVIL ENGINEER DATE

5-13-13
PLANS APPROVAL DATE

REGISTERED PROFESSIONAL ENGINEER Kathleen M. Reilly No. 53582 Exp. 6-30-13 CIVIL STATE OF CALIFORNIA

THE STATE OF CALIFORNIA OR ITS OFFICERS OR AGENTS SHALL NOT BE RESPONSIBLE FOR THE ACCURACY OR COMPLETENESS OF ELECTRONIC COPIES OF THIS PLAN SHEET.

Caltrans Metric

NOTE:

1. FOR INFORMATION NOT SHOWN, SEE SHEETS C-29 AND C-30.
2. ORIENTATION OF TYPE G1 INLETS SIMILAR.

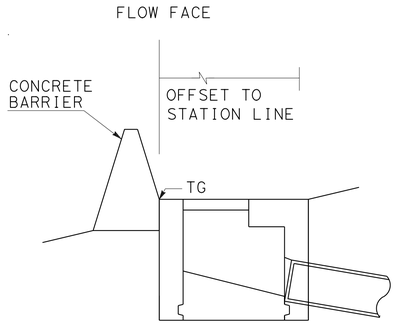

SECTION B-B

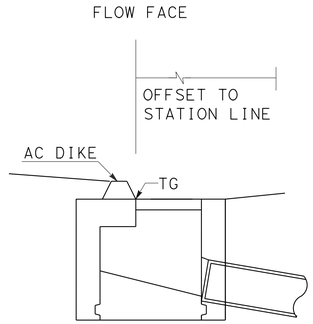

SECTION C-C

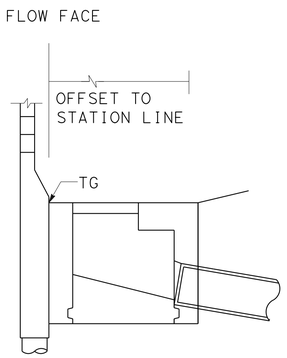

SECTION A-A

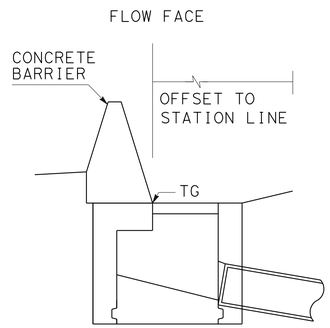

SECTION D-D

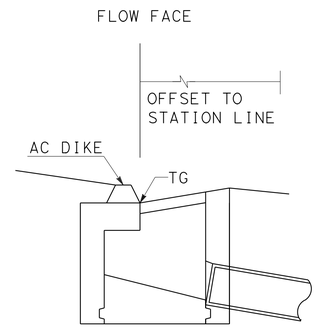

ELEVATION

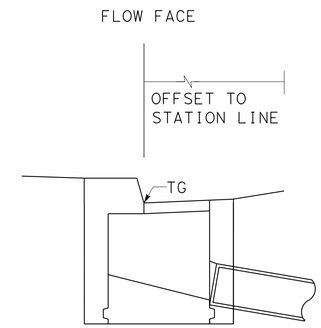

ELEVATION

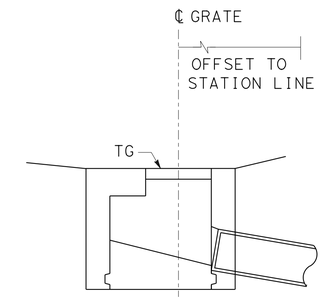

ELEVATION

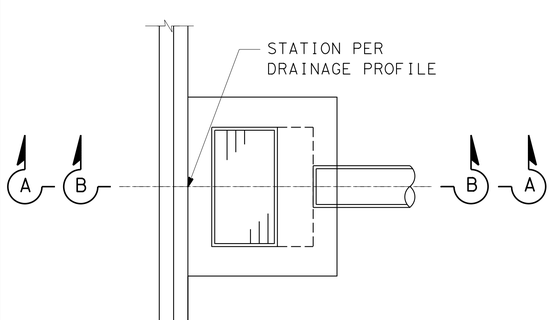

PLAN

INLET ADJACENT TO SOUNDWALL (SECTION A-A)
(TYPES 736 S/SV)
OR CONCRETE BARRIER (SECTION B-B)
(TYPES 60E, 60GE, 60SC, 60SE, OR HIGH SIDE OF TYPES 60C, 60GC)

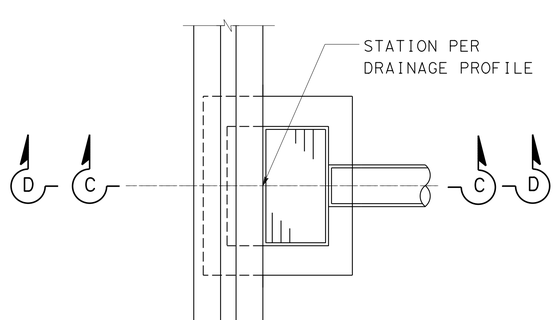

PLAN

INLET ADJACENT TO AC DIKE (SECTION C-C)
OR CONCRETE BARRIER (SECTION D-D)
(TYPE 60C SHOWN, TYPES 60, 60G, 60GC SIMILAR)

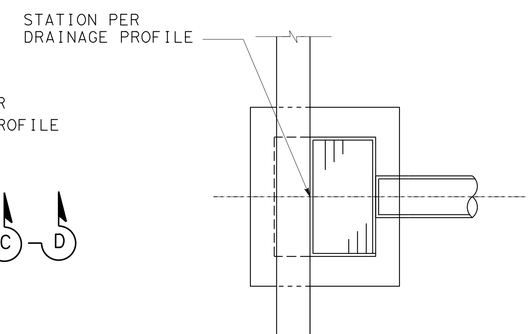

PLAN

INLET WITHIN AC SIDE GUTTER

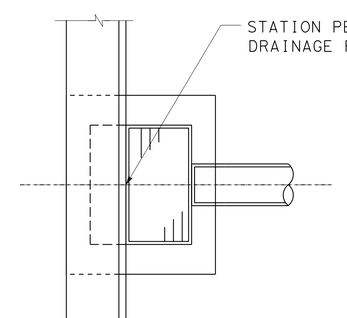

PLAN

INLET ADJACENT TO CURB

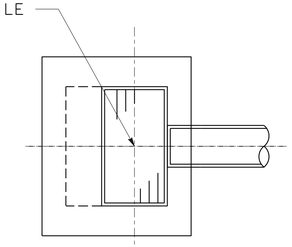

PLAN

FIELD INLET

ALL DIMENSIONS ARE IN MILLIMETERS UNLESS OTHERWISE SHOWN

DRAINAGE PROFILES

NO SCALE

DD-1

STATE OF CALIFORNIA - DEPARTMENT OF TRANSPORTATION
Caltrans
HYDRAULICS

FUNCTIONAL SUPERVISOR: JOSEPH PETERSON
CALCULATED-DESIGNED BY: TOM JIANG
CHECKED BY: KATHLEEN REILLY
REVISED BY / DATE REVISED

LAST REVISION 02-15-13 | DATE PLOTTED => 20-MAY-2013 | TIME PLOTTED => 06:32

Dist	COUNTY	ROUTE	KILOMETER POST TOTAL PROJECT	SHEET No.	TOTAL SHEETS
04	Son	101	33.3	79	158

Kathleen M. Reilly 2/26/13
REGISTERED CIVIL ENGINEER DATE

5-13-13
PLANS APPROVAL DATE

REGISTERED PROFESSIONAL ENGINEER Kathleen M. Reilly No. 53582 Exp. 6-30-13 CIVIL STATE OF CALIFORNIA

THE STATE OF CALIFORNIA OR ITS OFFICERS OR AGENTS SHALL NOT BE RESPONSIBLE FOR THE ACCURACY OR COMPLETENESS OF ELECTRONIC COPIES OF THIS PLAN SHEET.

Caltrans Metric

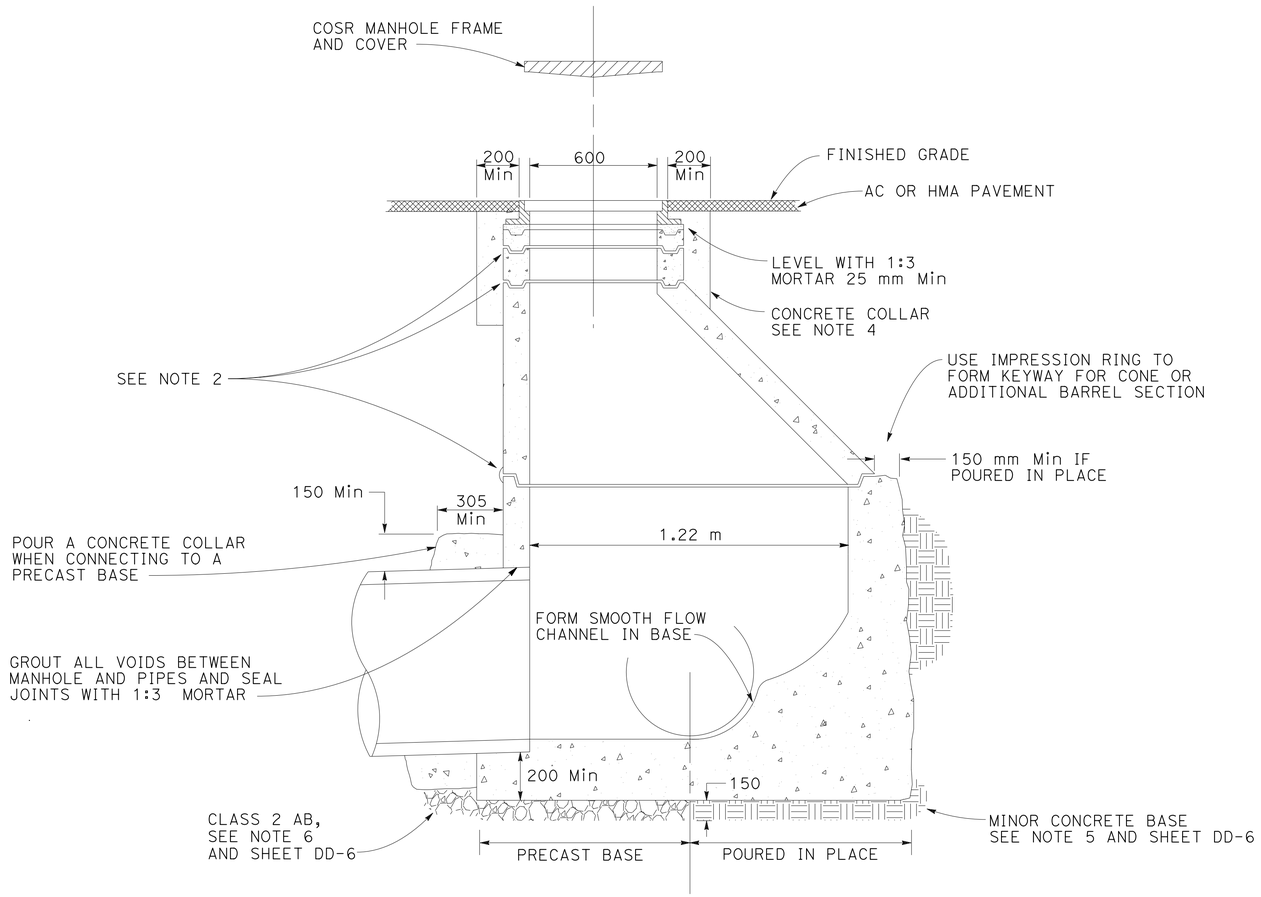

COSR MANHOLE

2 a 4 a

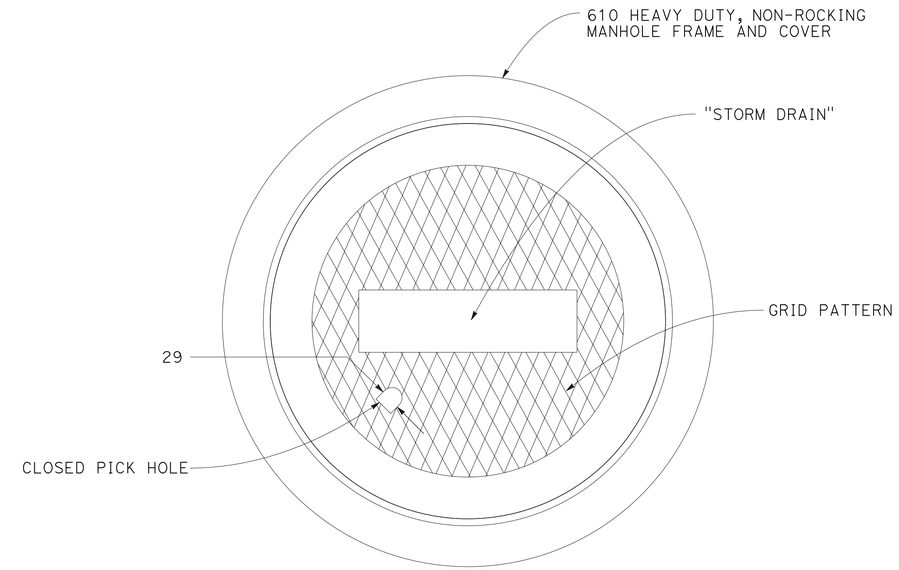

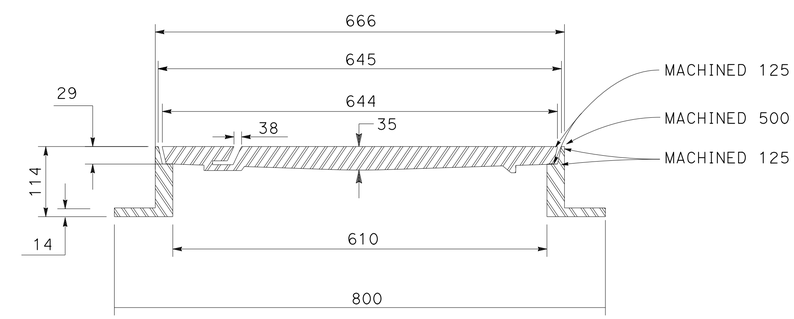

COSR MANHOLE FRAME AND COVER

2 a 4 a

NOTES:

1. Min OF ONE 75 mm GRADE ADJUSTMENT RING. Max HEIGHT OF GRADE ADJUSTMENT RINGS = 508 mm. ALTERNATELY, CONTRACTOR MAY CAST GRADE ADJUSTMENT RINGS IN PLACE.
2. SET GRADE RINGS IN 1:3 MORTAR BED. WET BOTH TONGUE AND GROOVE BEFORE APPLYING MORTAR. WIPE INSIDE OF JOINT SMOOTH. USE PLASTIC GASKET BETWEEN BARREL AND CONE SECTION.
3. CONE SECTION (TAPER) MAY BE CONCENTRIC OR ECCENTRIC UNLESS OTHERWISE SPECIFIED BY THE ENGINEER.
4. CONCRETE COLLAR SHALL BE MINOR CONCRETE AND 50 mm BELOW TOP OF MANHOLE COVER
5. POURED-IN-PLACE BASE SHALL BE POURED FULL THICKNESS TO UNDISTURBED SIDES OF EXCAVATION, SLOPED AT 1:1 OR SHALL BE FORMED. JOINTS BETWEEN ALL BASE AND CONE SECTIONS SHALL BE SEALED WITH PLASTIC GASKET APPROVED BY THE ENGINEER.
6. PRECAST BASE SHALL BE PLACED ON 150 mm OF CLASS 2 AB (19 mm GRADATION) INSTALLED AGAINST UNDISTURBED EARTH.

ALL DIMENSIONS ARE IN MILLIMETERS UNLESS OTHERWISE SHOWN

DRAINAGE PROFILES

NO SCALE

FOR NOTES, ABBREVIATIONS AND LEGEND, SEE SHEET D-1

THIS PLAN ACCURATE FOR DRAINAGE WORK ONLY

DD-2

STATE OF CALIFORNIA - DEPARTMENT OF TRANSPORTATION
Caltrans
HYDRAULICS

FUNCTIONAL SUPERVISOR: JOSEPH PETERSON
CALCULATED-DESIGNED BY: TOM JIANG
CHECKED BY: KATHLEEN REILLY
REVISED BY
DATE REVISED

LAST REVISION 02-15-13
DATE PLOTTED => 20-MAY-2013
TIME PLOTTED => 06:32

Dist	COUNTY	ROUTE	KILOMETER POST TOTAL PROJECT	SHEET No.	TOTAL SHEETS
04	Son	101	33.3	80	158

Kathleen M. Reilly 2/26/13
REGISTERED CIVIL ENGINEER DATE

5-13-13
PLANS APPROVAL DATE

REGISTERED PROFESSIONAL ENGINEER Kathleen M. Reilly No. 53582 Exp. 6-30-13 CIVIL STATE OF CALIFORNIA

THE STATE OF CALIFORNIA OR ITS OFFICERS OR AGENTS SHALL NOT BE RESPONSIBLE FOR THE ACCURACY OR COMPLETENESS OF ELECTRONIC COPIES OF THIS PLAN SHEET.

Caltrans Metric

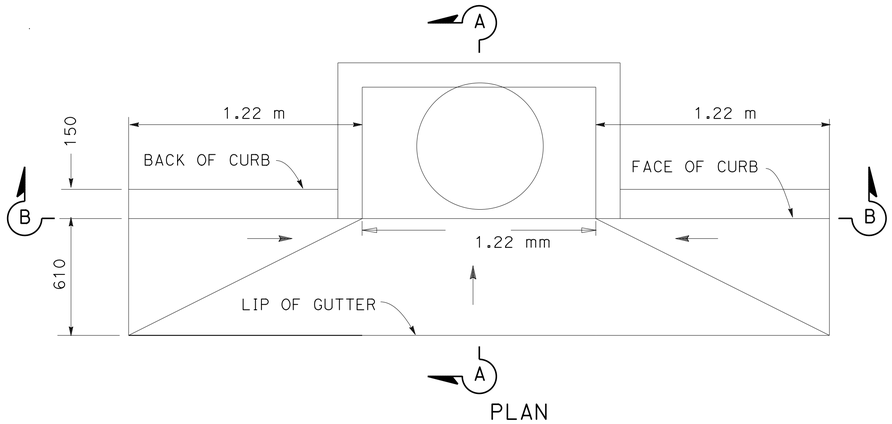

PLAN

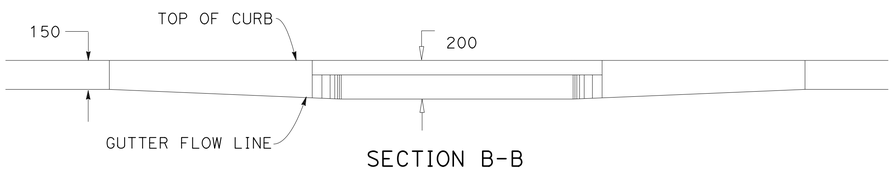

SECTION B-B

COSR DRAINAGE INLET TYPE II NOTES:

1. CONCRETE SHALL HAVE A COMPRESSIVE STRENGTH OF 280 kg/cm^2 IN 28 DAYS.
2. WALL THICKNESS SHALL BE 150 mm UNLESS DEPTH IS GREATER THAN 2.44 m, THEN WALL THICKNESS SHALL BE 203 mm.
3. INSTALL DRAINAGE INLET MARKER PER WATER POLLUTION CONTROL DETAILS. H IS THE DIFFERENCE IN ELEVATION BETWEEN THE OUTLET PIPE FLOWLINE AND THE GUTTER FLOWLINE.

COSR PRECAST DRAINAGE INLET COVER NOTES:

1. CONCRETE SHALL HAVE A COMPRESSIVE STRENGTH OF 280 kg/cm^2 AT 28 DAYS.
2. EXPOSED CONCRETE SURFACE SHALL HAVE BROOM FINISH.
3. APPLY DRAINAGE INLET MARKER. SEE WPC-3.
4. FRAME RING INSIDE DIAMETER TO BE 8 mm TO 9.5 mm OR GREATER THAN LID RING OUTSIDE DIAMETER.

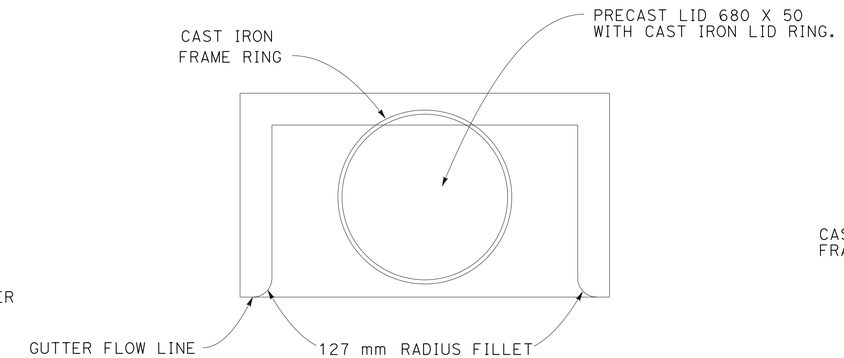

PLAN

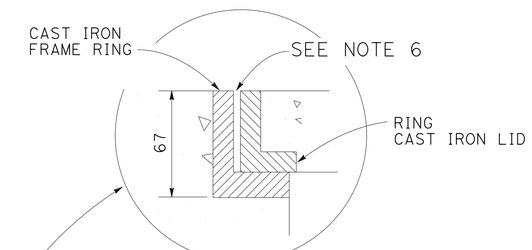

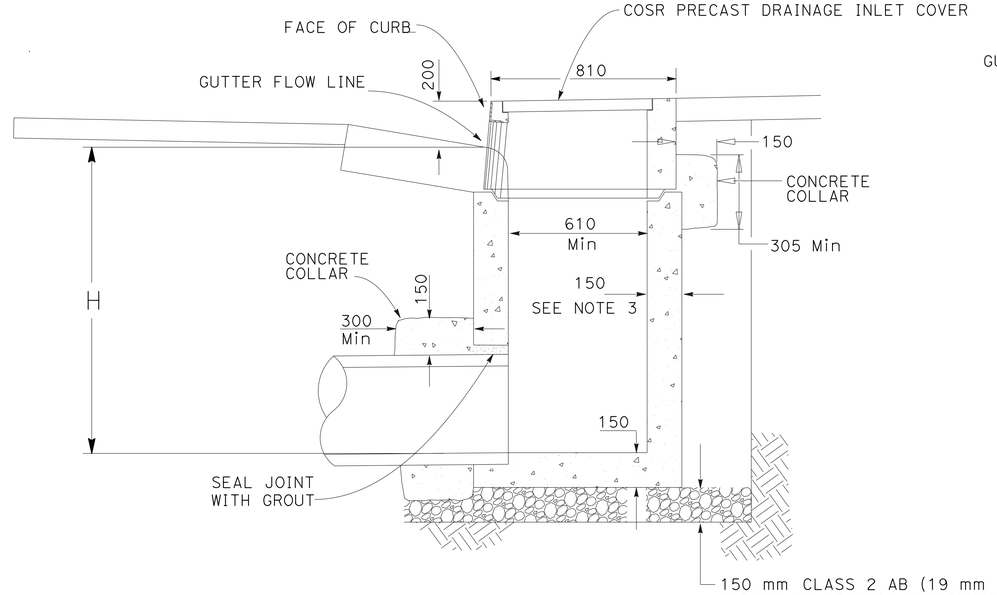

SECTION A-A

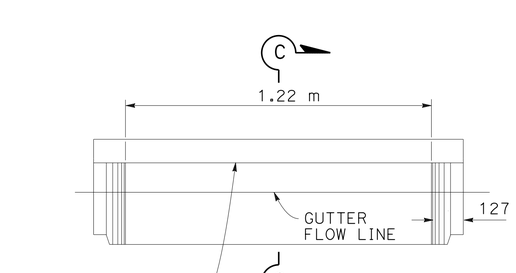

ELEVATION

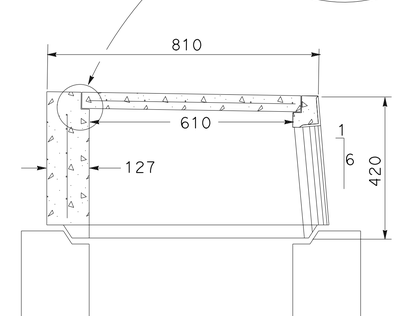

SECTION C-C

COSR PRECAST DRAINAGE INLET COVER

COSR TYPE II DRAINAGE INLET

1 b 2 c 4 c 5 a 6 d

13 d 16 h 17 d 18 b

ALL DIMENSIONS ARE IN MILLIMETERS UNLESS OTHERWISE SHOWN

DRAINAGE PROFILES

NO SCALE

DD-3

THIS PLAN ACCURATE FOR DRAINAGE WORK ONLY

FOR NOTES, ABBREVIATIONS &/OR LEGEND, SEE SHEET D-1

STATE OF CALIFORNIA - DEPARTMENT OF TRANSPORTATION
Caltrans HYDRAULICS

FUNCTIONAL SUPERVISOR: JOSEPH PETERSON
CALCULATED-DESIGNED BY: TOM JIANG
CHECKED BY: KATHLEEN REILLY
REVISED BY / DATE REVISED

LAST REVISION 02-06-13 | DATE PLOTTED => 20-MAY-2013 | TIME PLOTTED => 06:32

Dist	COUNTY	ROUTE	KILOMETER POST TOTAL PROJECT	SHEET No.	TOTAL SHEETS
04	Son	101	33.3	81	158

Kathleen M. Reilly 2/26/13
REGISTERED CIVIL ENGINEER DATE

5-13-13
PLANS APPROVAL DATE

REGISTERED PROFESSIONAL ENGINEER Kathleen M. Reilly No. 53582 Exp. 6-30-13 CIVIL STATE OF CALIFORNIA

THE STATE OF CALIFORNIA OR ITS OFFICERS OR AGENTS SHALL NOT BE RESPONSIBLE FOR THE ACCURACY OR COMPLETENESS OF ELECTRONIC COPIES OF THIS PLAN SHEET.

Caltrans Metric

NOTE:

FOR DETAILS NOT SHOWN,
SEE SHEET C-29- G2 INLET

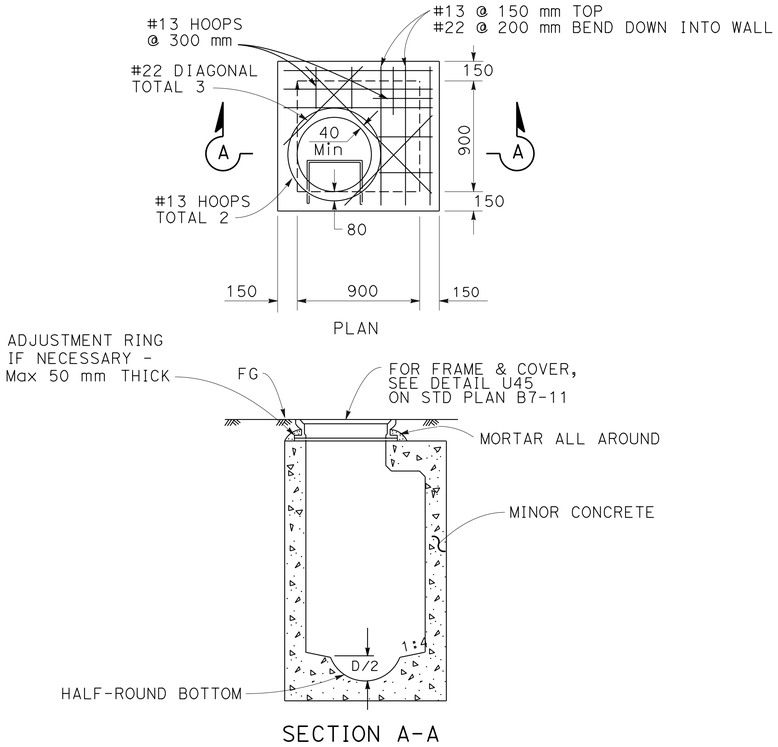

G2 MANHOLE

5 h 6 b 7 b 8 b 11 b 12 b 13 b 14 c 16 b

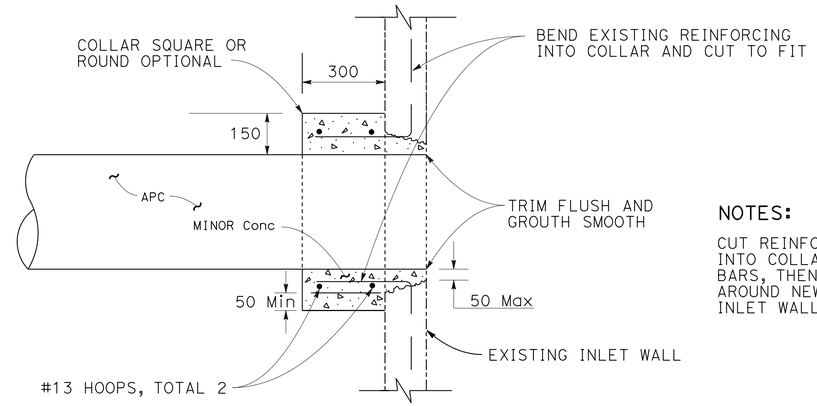

NOTES:

CUT REINFORCEMENT ON ALTERNATE SIDES AND BEND INTO COLLAR. IF THERE ARE NO EXISTING REINFORCING BARS, THEN USE 6 #13 DOWELS, SPACED EVENLY AROUND NEW PIPE, AND DRILL AND GROUT INTO EXISTNG INLET WALLS 150 mm.

PIPE CONNECTION TO EXISTING INLET OR MANHOLE

1 a 5 k 9 b 18 a 15 d

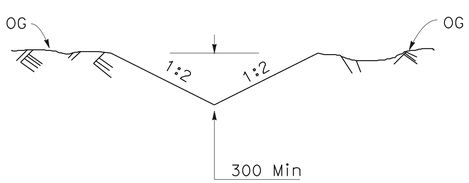

UNLINED V DITCH

7 k 9 d 12 j

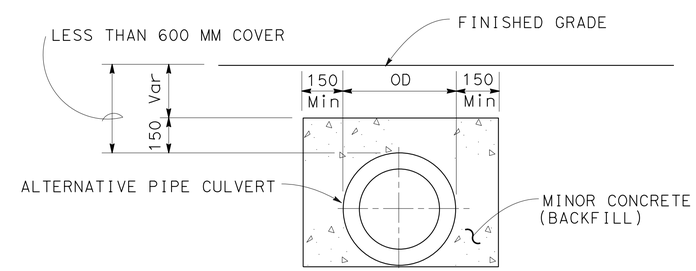

MINOR CONCRETE BACKFILL

PIPES w/ LESS THAN 600 mm COVER

1 a 5 k 12 d 15 d

ALL DIMENSIONS ARE IN MILLIMETERS UNLESS OTHERWISE SHOWN

DRAINAGE PROFILES

NO SCALE

DD-4

FOR NOTES, ABBREVIATIONS AND LEGEND, SEE SHEET D-1

THIS PLAN ACCURATE FOR DRAINAGE WORK ONLY

STATE OF CALIFORNIA - DEPARTMENT OF TRANSPORTATION
Caltrans HYDRAULICS

FUNCTIONAL SUPERVISOR: JOSEPH PETERSON
CALCULATED-DESIGNED BY: TOM JIANG
CHECKED BY: KATHLEEN REILLY
REVISED BY: FJW
DATE REVISED: 2/13/13

LAST REVISION 02-15-13 | DATE PLOTTED => 20-MAY-2013 | TIME PLOTTED => 06:32

Dist	COUNTY	ROUTE	KILOMETER POST TOTAL PROJECT	SHEET No.	TOTAL SHEETS
04	Son	101	33.3	82	158

Kathleen M. Reilly 2/26/13
REGISTERED CIVIL ENGINEER DATE

5-13-13
PLANS APPROVAL DATE

REGISTERED PROFESSIONAL ENGINEER Kathleen M. Reilly No. 53582 Exp. 6-30-13 CIVIL STATE OF CALIFORNIA

THE STATE OF CALIFORNIA OR ITS OFFICERS OR AGENTS SHALL NOT BE RESPONSIBLE FOR THE ACCURACY OR COMPLETENESS OF ELECTRONIC COPIES OF THIS PLAN SHEET.

Caltrans Metric

NOTE:

1. FRAMES AND GRATES SHALL BE SPECIFIED FOR H20 TRAFFIC LOADING.

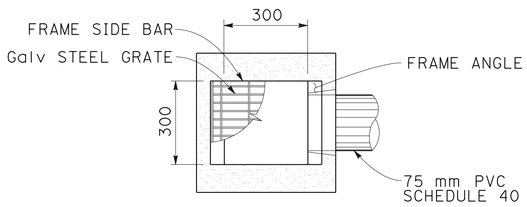

PLAN

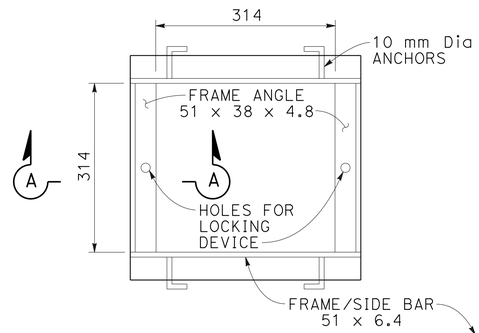

FRAME PLAN

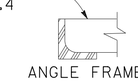

SECTION A-A

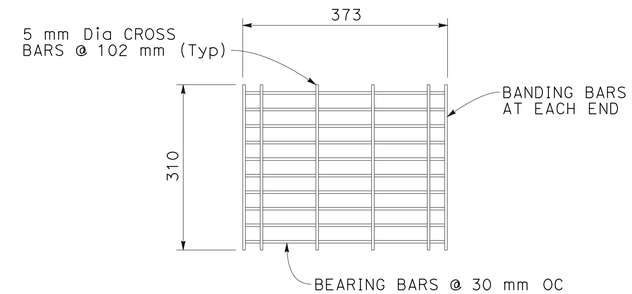

GRATE PLAN

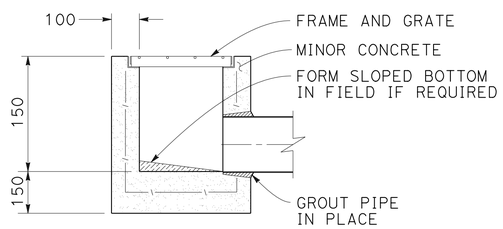

TYPICAL SECTION

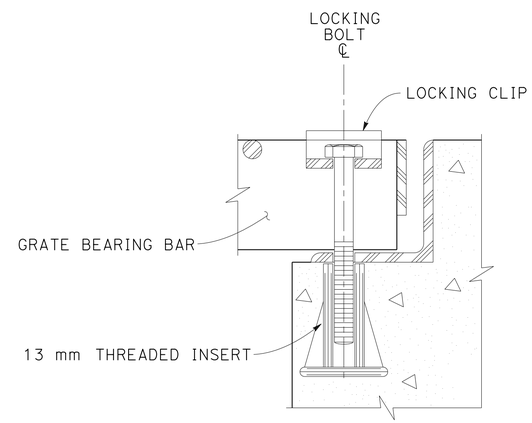

TYPICAL SECTION AT LOCKING DEVICE

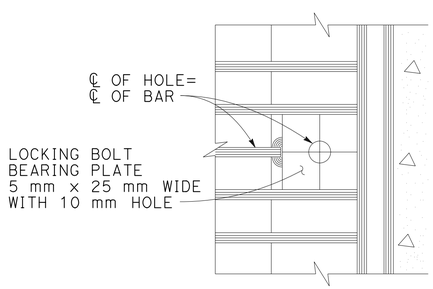

PARTIAL PLAN

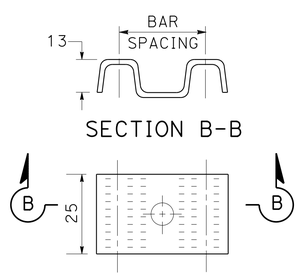

SECTION B-B

PLAN

LOCKING CLIP

TYPE A DRAINAGE INLET

4 e f i n

5 c f 16 k

THIS PLAN ACCURATE FOR DRAINAGE WORK ONLY

FOR NOTES, ABBREVIATIONS AND LEGEND, SEE SHEET D-1

ALL DIMENSIONS ARE IN MILLIMETERS UNLESS OTHERWISE SHOWN

DRAINAGE PROFILES

NO SCALE

DD-5

STATE OF CALIFORNIA - DEPARTMENT OF TRANSPORTATION
Caltrans
HYDRAULICS

FUNCTIONAL SUPERVISOR: JOSEPH PETERSON
CALCULATED-DESIGNED BY: TOM JIANG
CHECKED BY: KATHLEEN REILLY
REVISED BY
DATE REVISED

LAST REVISION 02-06-13
DATE PLOTTED => 20-MAY-2013
TIME PLOTTED => 06:32

Dist	COUNTY	ROUTE	KILOMETER POST TOTAL PROJECT	SHEET No.	TOTAL SHEETS
04	Son	101	33.3	83	158

Kathleen M. Reilly 2/26/13
REGISTERED CIVIL ENGINEER DATE

5-13-13
PLANS APPROVAL DATE

REGISTERED PROFESSIONAL ENGINEER Kathleen M. Reilly No. 53582 Exp. 6-30-13 CIVIL STATE OF CALIFORNIA

THE STATE OF CALIFORNIA OR ITS OFFICERS OR AGENTS SHALL NOT BE RESPONSIBLE FOR THE ACCURACY OR COMPLETENESS OF ELECTRONIC COPIES OF THIS PLAN SHEET.

Caltrans Metric

LEGEND

STRUCTURE EXCAVATION

STRUCTURE BACKFILL

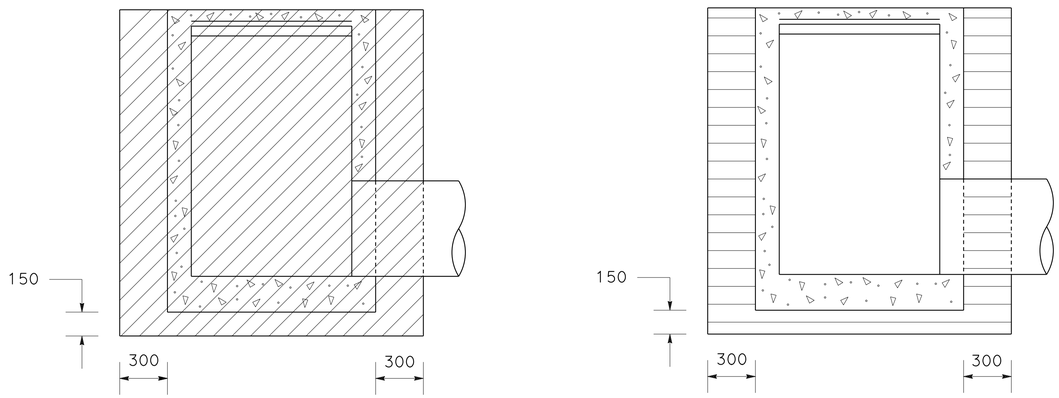

STRUCTURE EXCAVATION/BACKFILL FOR COSR MANHOLE AND COSR TYPE II DI

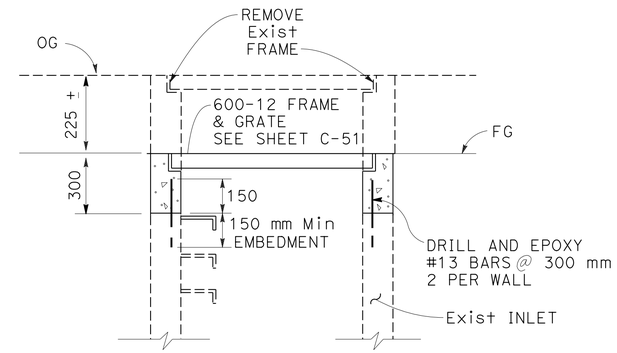

SECTION VIEW

ADJUST INLET TO GRADE

9 c

NOTES:

1. WIRE MESH SHALL BE FULL WIDTH OF SIDEWALK MINUS 50 mm. LENGTH OF WIRE MESH SHALL, AT A MINIMUM, EQUAL THE WIDTH AND BE CENTERED OVER THE PIPE.
2. DRAIN PIPE SHALL BE INSTALLED SO THAT THE TOP OF PIPE IS 63 mm (Min) BELOW FINISHED GRADE AT BACK OF SIDEWALK.
3. SIDEWALK SHALL BE REMOVED TO THE NEAREST SCOREMARK.
4. IF SIDEWALK AND GUTTER ARE NOT CONTIGUOUS, CURB MAY BE CORED OR CURB AND GUTTER REMOVED AND REPLACED A MINIMUM OF 300 mm ON EACH SIDE OF THE DRAIN PIPE. DOWEL NEW GUTTER TO EXISTING CURB AND GUTTER WITH (2) 300 mm #13 REBARS. PLACE ONE DOWEL IN CURB AND ONE IN GUTTER PAN USING EPOXY.
5. IF SIDEWALK AND GUTTER ARE CONTIGUOUS, POUR MONOLITHIC WITH WIRE FABRIC EXTENDING INTO CURB.

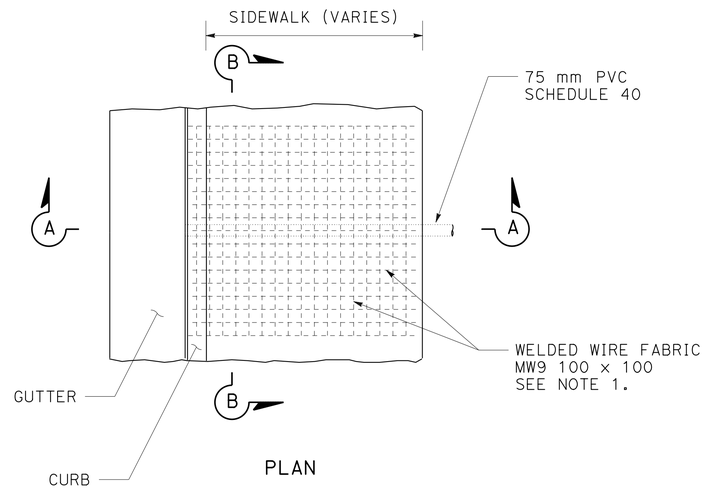

PLAN

75 mm SIDEWALK DRAIN

4 d j k o 5 d e 16 l

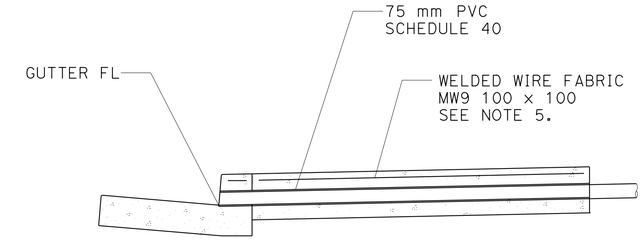

SECTION A - A

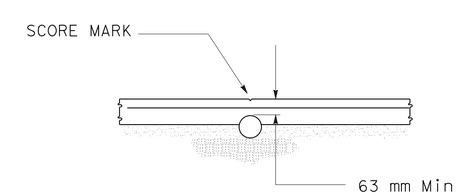

SECTION B - B
(FOR ONE 75 mm PIPE)

ALL DIMENSIONS ARE IN MILLIMETERS UNLESS OTHERWISE SHOWN

DRAINAGE PROFILES

NO SCALE

DD-6

FOR NOTES, ABBREVIATIONS AND LEGEND, SEE SHEET D-1

THIS PLAN ACCURATE FOR DRAINAGE WORK ONLY

STATE OF CALIFORNIA - DEPARTMENT OF TRANSPORTATION
Caltrans HYDRAULICS

FUNCTIONAL SUPERVISOR: JOSEPH PETERSON
CALCULATED-DESIGNED BY: TOM JIANG
CHECKED BY: KATHLEEN REILLY
REVISED BY / DATE REVISED

LAST REVISION 02-15-13 | DATE PLOTTED => 20-MAY-2013 | TIME PLOTTED => 06:32

Dist	COUNTY	ROUTE	KILOMETER POST TOTAL PROJECT	SHEET No.	TOTAL SHEETS
04	Son	101	33.3	84	158

Caltrans Metric

REGISTERED CIVIL ENGINEER 2/22/13 DATE

5-13-13
PLANS APPROVAL DATE

REGISTERED PROFESSIONAL ENGINEER Fred J. Witteborn No. 56272 Exp. 12-31-14 CIVIL STATE OF CALIFORNIA

THE STATE OF CALIFORNIA OR ITS OFFICERS OR AGENTS SHALL NOT BE RESPONSIBLE FOR THE ACCURACY OR COMPLETENESS OF ELECTRONIC COPIES OF THIS PLAN SHEET.

NOTE:
CULVERT PIPE SHOULD BE SECURED SO IT DOES NOT FLOAT DURING CONSTRUCTION.

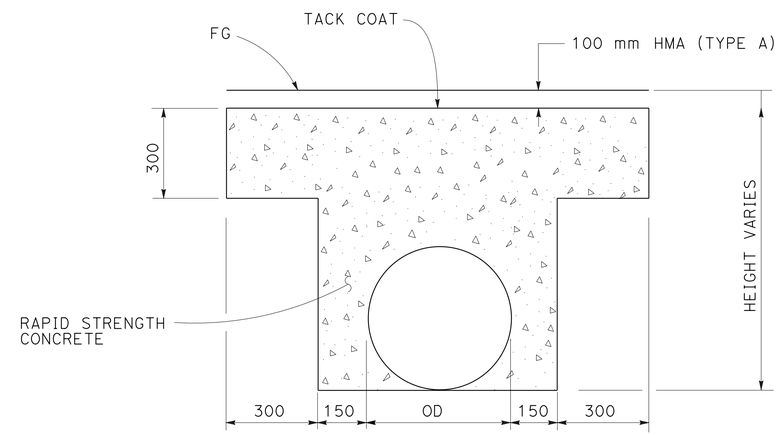

RAPID STRENGTH CONCRETE TRENCH PAVING DETAIL (TRAVELED WAY ONLY)

2 b 4 b

ALL DIMENSIONS ARE IN MILLIMETERS UNLESS OTHERWISE SHOWN

DRAINAGE PROFILES

NO SCALE

DD-7

THIS PLAN ACCURATE FOR DRAINAGE WORK ONLY

FOR NOTES, ABBREVIATIONS AND LEGEND, SEE SHEET D-1

STATE OF CALIFORNIA - DEPARTMENT OF TRANSPORTATION
Caltrans **DESIGN**

FUNCTIONAL SUPERVISOR: JONATHAN LEE
CALCULATED-DESIGNED BY: FRED J. WITTEBORN
CHECKED BY: JONATHAN LEE
REVISED BY: FJW
DATE REVISED: 2/13/13

LAST REVISION 02-06-13 | DATE PLOTTED => 20-MAY-2013 | TIME PLOTTED => 06:32

ALTERNATIVE PIPE CULVERT PIPE MATERIAL AND PROTECTION

CULVERT DESIGNATION	RCP SIZE	HDPE SMOOTH INTERIOR
300 mm APC	300 mm	300 mm
375 mm APC	375 mm	375 mm
450 mm APC	450 mm	450 mm

* BITUMINOUS COATING IS ON SOIL SIDE ONLY
** POLYMERIC SHEET COATING MAY BE SUBSTITUTED FOR BITUMINOUS COATING

ABBREVIATIONS:

S	STANDARD JOINT TYPE
P	POSITIVE JOINT TYPE
(N)	NOT A SEPARATE PAY ITEM FOR INFORMATION ONLY
DIM	DRAINAGE INLET MARKER
CDIM	CITY DRAINAGE INLET MARKER

NOTE:

1. MAXIMUM COVER PROVIDED FOR "REMOVE CULVERT" IS MEASURED FROM THE TOP OF EXISTING CULVERT TO OG.

Caltrans Metric

Dist	COUNTY	ROUTE	KILOMETER POST TOTAL PROJECT	SHEET No.	TOTAL SHEETS
04	Son	101	33.3	85	158

REGISTERED CIVIL ENGINEER 2/22/13 DATE
5-13-13
PLANS APPROVAL DATE

REGISTERED PROFESSIONAL ENGINEER Fred J. Witteborn No. 56272 Exp. 12-31-14 CIVIL STATE OF CALIFORNIA

THE STATE OF CALIFORNIA OR ITS OFFICERS OR AGENTS SHALL NOT BE RESPONSIBLE FOR THE ACCURACY OR COMPLETENESS OF ELECTRONIC COPIES OF THIS PLAN SHEET.

DRAINAGE QUANTITIES

DRAINAGE SYSTEM No.	DRAINAGE UNIT (No.)	ABANDON CULVERT (m)	REMOVE CULVERT (m)	REMOVE INLET (EA)	ADJUST INLET (EA)	MINOR CONCRETE MINOR STRUCTURE (m^3)	MINOR CONCRETE BACKFILL (m^3)	Misc. IRON & STEEL (Kg)	FRAME & GRATE (N) 600-12X (EA)	FRAME & GRATE (N) TYPE A (EA)	FRAME & COVER (N) U-45 (EA)	FRAME & COVER (N) COSR MH (EA)	FRAME & COVER (N) COSR DI (EA)	ALTERNATIVE PIPE CULVERT 300 mm (m)	ALTERNATIVE PIPE CULVERT 375 mm (m)	ALTERNATIVE PIPE CULVERT 450 mm (m)	75 mm PP (SCHEDULE 40) (m)	CONCRETE COLLAR (N) (EA)	HEIGHT OF INLET (N) (m)	MAXIMUM COVER (N) (m)	PIPE JOINT CLASSIFICATION (N)	DITCH EXCAVATION (m^3)	DIM (EA)	DESCRIPTION	STATION	DRAINAGE PLAN SHEET No.	DRAINAGE SYSTEM No.	DRAINAGE UNIT (No.)
1	a						10.3							50.5						0.36	S			300 mm APC W/CONCRETE BACKFILL	13.030 R+ CO 302+03.6 TO 12.980 R+ CO 302+55.0	D-1	1	a
	b					1.07		50					1						0.65				1	COSR TYPE II DI w/CDIM	12.980 R+ CO 302+55.0			b
	c			1																				REMOVE DI	14.71 R+ CO 302+34.57			c
	d			1																				REMOVE DI	13.98 R+ CO 302+72.24			d
	e		4.0																	0.6				REMOVE CULVERT	10.04 TO 13.98 R+ CO 302+72.24			e
2	a					1.99		125				1							1.94					COSR MH	9.270 L+ CO 302+56.5		2	a
	b															4.8				1.22	S			450 mm APC	9.270 TO 15.340 L+ CO 302+56.5			b
	c					1.6		50					1						1.52				1	COSR TYPE II DI w/CDIM	15.340 L+ CO 302+56.5			c
3	a		12.4																	0.6				REMOVE CULVERT	9.980 TO 22.18 L+ CO 302+77.2	D-1	3	a
	b			1																				REMOVE DI	22.070 L+ CO 302+76.75			b
4	a					2.00		125				1							1.95					COSR MH	7.760 L+ CO 303+01.700	D-2	4	a
	b															8.5				1.23	S			450 mm APC	7.760 L+ CO 303+01.700 TO 17.410 L+ CO 303+01.500			b
	c					1.6		50					1						1.52				1	COSR TYPE II DI w/CDIM	17.410 L+ CO 303+01.500			c
	d																2.0							SIDEWALK DRAIN	16.900 L+ CO 303+09.600 TO 18.900 L+ CO 303+07.810			d
	e					1.10		108		1														TYPE A DI	18.900 L+ CO 303+07.810			e
	f					1.10		108		1														TYPE A DI	18.900 L+ CO 302+83.114	D-1		f
	g			1																				REMOVE DI	16.960 L+ CO 302+85.200			g
	h		1																	0.6				REMOVE CULVERT	13.160 L+ CO 302+85.200 TO 16.960 L+ CO 302+85.200			h
	i					1.10		108		1														TYPE A DI	19.000 L+ CO 302+99.900			i
	j																3.2							SIDEWALK DRAIN	15.770 L+ CO 303+00.000 TO 19.000 L+ CO 302+99.900			j
	k																3.2							SIDEWALK DRAIN	15.730 L+ CO 302+82.500 TO 18.900 L+ CO 302+83.114			k
	l			1																				REMOVE DI	13.450 L+ CO 303+12.130	D-2		l
	m		1																	0.6				REMOVE CULVERT	9.920 L+ TO 13.450 L+ CO 303+12.130			m
	n					1.10		108		1														TYPE A DI	19.000 L+ CO 303+12.922			n
	o																2.1							SIDEWALK DRAIN	16.900 L+ CO 303+20.970 TO 19.000 L+ CO 303+12.920			o
5	a					1.36		50					1						1.12				1	COSR TYPE II DI w/CDIM	10.700 R+ CO 303+15.0	D-2	5	a
	b															24.1				1.07	S			450 mm APC	10.700 R+ CO 303+15.0 TO 11.698 R+ CO 303+43.607			b
	c					1.10		108		1														TYPE A DI	13.0 R+ CO 303+00			c
	d																2.3							SIDEWALK DRAIN	13.0 R+ CO 303+00			d
	e																2.5							SIDEWALK DRAIN	13.969 R+ CO 303+26.1			e
	f					1.10		108		1														TYPE A DI	13.321 R+ CO 303+10			f
	g			1																				REMOVE DI	13.4 R+ CO 303+25.708			g
	h		11.2																	0.6				REMOVE CULVERT	13.4 R+ CO 303+25.708 TO 13.6 R+ CO 303+36.896			h
	i			1																				REMOVE DI	13.6 R+ CO 303+36.896			i
	j					1.10		108	1															G1 DI	13.4 R+ CO 303+25.708			j
	k						2.6							9.5										300 mm APC W/CONCRETE BACKFILL	13.4 R+ CO 303+25.708 TO 13.6 R+ CO 303+36.896			k
SHEET TOTAL			29.6	7		17.32	12.9	1206	1	6		2	4	60.0		37.9	15.3						4	SHEET TOTAL				

DRAINAGE QUANTITIES DQ-1

FRED J. WITTEBORN — JONATHAN LEE — REVISED BY FJW — DATE REVISED 2/13/13
CALCULATED-DESIGNED BY — CHECKED BY
FUNCTIONAL SUPERVISOR JONATHAN LEE
STATE OF CALIFORNIA - DEPARTMENT OF TRANSPORTATION
Caltrans DESIGN

LAST REVISION 02-21-13 | DATE PLOTTED => 20-MAY-2013 | TIME PLOTTED => 06:32

Dist	COUNTY	ROUTE	KILOMETER POST TOTAL PROJECT	SHEET No.	TOTAL SHEETS
04	Son	101	33.3	86	158

REGISTERED CIVIL ENGINEER 2/22/13 DATE

5-13-13
PLANS APPROVAL DATE

REGISTERED PROFESSIONAL ENGINEER Fred J. Witteborn No. 56272 Exp. 12-31-14 CIVIL STATE OF CALIFORNIA

THE STATE OF CALIFORNIA OR ITS OFFICERS OR AGENTS SHALL NOT BE RESPONSIBLE FOR THE ACCURACY OR COMPLETENESS OF ELECTRONIC COPIES OF THIS PLAN SHEET.

Caltrans Metric

DRAINAGE QUANTITIES

DRAINAGE SYSTEM No.	DRAINAGE UNIT (No.)	ABANDON CULVERT	REMOVE CULVERT	REMOVE INLET	ADJUST INLET	MINOR CONCRETE: MINOR STRUCTURE	MINOR CONCRETE: BACKFILL	Misc. IRON & STEEL	FRAME & GRATE (N): 600-12X	FRAME & GRATE (N): TYPE A	FRAME & COVER (N): U-45	FRAME & COVER (N): COSR MH	FRAME & COVER (N): COSR DI	ALTERNATIVE PIPE CULVERT: 300 mm	ALTERNATIVE PIPE CULVERT: 375 mm	ALTERNATIVE PIPE CULVERT: 450 mm	75 mm PP (SCHEDULE 40)	CONCRETE COLLAR (N)	HEIGHT OF INLET (N)	MAXIMUM COVER (N)	PIPE JOINT CLASSIFICATION (N)	DITCH EXCAVATION	DIM	DESCRIPTION	STATION	DRAINAGE PLAN SHEET No.	DRAINAGE SYSTEM No.	DRAINAGE UNIT (No.)
		m		EA		m^3		Kg	EA					m				EA	m			m^3	EA					
5	l					1.10		108	1															G1 DI	13.6 R+ CO 303+36.896		5	l
	m					1.25		108	1										1.41				1	G4 DI w/CDIM	13.640 R+ CO 303+57.12			m
	n															12.5				0.78	S			450 mm APC	13.640 R+ CO 303+57.12 TO 24.370 R+ CO 303+74.8			n
	o					1.07		108	1										1.12				1	G4 DI w/CDIM	24.370 R+ CO 303+74.8			o
	p															0.6				1.11	S			450 mm APC	13.640 R+ CO 303+57.1 TO 11.900 R+ CO 303+57.6			p
	q			1																				REMOVE DI	11.900 R+ CO 303+57.6			q
	r					1.43		200			1								1.56					G2 MH	11.900 R+ CO 303+57.6			r
	s					1.19		108	1										1.18				1	G2 DI w/CDIM	19.100 R+ CO 303+61.590			s
	t													3.1						0.60	S			300 mm APC	17.500 R+ CO 303+57.000 TO 18.0 R+ CO 303+58.0			t
	u		4																	0.60				REMOVE CULVERT	11.900 R+ CO 303+57.6 TO 16.9 R+ CO 303+57.000			u
	v					1.18		108	1										1.35				1	GO DI w/DIM	11.698 R+ CO 303+43.607			v
	w															12.7								450 mm APC	13.640 R+ CO 303+57.12 TO 11.698 R+ CO 303+43.607			w
	x					1.11		108	1										1.18				1	G4 DI w/DIM	18.253 R+ CO 303+64.237			x
	y															3.1								450 mm APC	18.253 R+ CO 303+64.237 TO 19.10 R+ CO 303+61.59			y
	z															6.7								450 mm APC	13.640 R+ CO 303+57.12 TO 18.253 R+ CO 303+64.237			z
6	a			1																				REMOVE DI	10.680 L+ CO 303+31.9	D-2	6	a
	b					1.32		200			1								1.40					G2 MH	10.680 L+ CO 303+31.9			b
	c															6.2				1.07	S			450 mm APC	10.680 L+ CO 303+31.9 TO 17.721 L+ CO 303+30			c
	d					1.38		50					1						1.16				1	COSR TYPE II DI w/CDIM	17.721 L+ CO 303+30			d
	e															16.7				0.77	S			450 mm APC	17.721 L+ CO 303+30 TO 11.860 R+ CD 29+02.0			e
	f					1.13		108	1										1.22				1	G4 DI w/CDIM	11.860 R+ CD 29+02.0			f
7	a			1																				REMOVE DI	14.090 L+ CO 303+69.3	D-2	7	a
	b					1.37		200			1								1.48					G2 MH	14.090 L+ CO 303+69.3			b
	c															5.2				0.93	S			450 mm APC	14.090 L+ CO 303+69.3 TO 20.467 L+ CO 303+70			c
	d					1.10		108	1										1.22				1	GO DI w/CDIM	19.867 L+ CO 303+70			d
	e															8.0				1.07	S			450 mm APC	20.450 L+ CO 303+69.8 TO 6.480 L+ CD 29+14.9			e
	f					1.32		108	1										1.52				1	G2 DI w/CDIM	6.480 L+ CD 29+14.9			f
	g															1.9				1.04	S			450 mm APC	6.480 L+ CD 29+14.9 TO 4.380 L+ CD 29+08.1			g
	h					1.05		108	1										1.09				1	G2 DI w/CDIM	4.380 L+ CD 29+08.1			h
	i	3.2																						ABANDON CULVERT	14.090 L+ CO 303+69.3 TO 22.100 L+ CO 303+66.5			i
	j			1																				REMOVE DI	22.200 L+ CO 303+66.5			j
	k																					9		UNLINED V DITCH	6.480 L+ CD 29+14.9 TO 6.480 L+ 28+64.9			k
8	a			1																				REMOVE DI	14.790 R+ CO 303+86.3	D-2	8	a
	b					1.39		200			1								1.52					G2 MH	14.790 R+ CO 303+86.3			b
	c															1.7				1.07	S			450 mm APC	14.790 R+ CO 303+86.3 TO 17.390 R+ CO 303+86.8			c
	d					1.10		108	1										1.22				1	GO DI w/CDIM	17.390 R+ CO 303+86.8			d
	e															4.9				0.77	S			450 mm APC	17.390 R+ CO 303+86.8 TO 1.050 L+ CA 16+12.3			e
	f					1.13		108	1										1.21				1	G4 DI w/DIM	1.050 L+ CA 16+12.3			f
SHEET TOTAL		3.2	4	5		20.62		2146	12		4		1	3.1		80.2						9	12	SHEET TOTAL				

DRAINAGE QUANTITIES DQ-2

STATE OF CALIFORNIA - DEPARTMENT OF TRANSPORTATION
Caltrans DESIGN

FUNCTIONAL SUPERVISOR: JONATHAN LEE
CALCULATED-DESIGNED BY: FRED J. WITTEBORN
CHECKED BY: JONATHAN LEE
REVISED BY: FJW
DATE REVISED: 2/13/13

LAST REVISION 02-21-13
DATE PLOTTED => 20-MAY-2013
TIME PLOTTED => 06:32

Dist	COUNTY	ROUTE	KILOMETER POST TOTAL PROJECT	SHEET No.	TOTAL SHEETS
04	Son	101	33.3	87	158

REGISTERED CIVIL ENGINEER 2/22/13 DATE

5-13-13
PLANS APPROVAL DATE

REGISTERED PROFESSIONAL ENGINEER Fred J. Witteborn No. 56272 Exp. 12-31-14 CIVIL STATE OF CALIFORNIA

THE STATE OF CALIFORNIA OR ITS OFFICERS OR AGENTS SHALL NOT BE RESPONSIBLE FOR THE ACCURACY OR COMPLETENESS OF ELECTRONIC COPIES OF THIS PLAN SHEET.

Caltrans Metric

DRAINAGE QUANTITIES

DRAINAGE SYSTEM No.	DRAINAGE UNIT (No.)	ABANDON CULVERT	REMOVE CULVERT	REMOVE INLET	ADJUST INLET	MINOR CONCRETE: MINOR STRUCTURE	MINOR CONCRETE: BACKFILL	Misc. IRON & STEEL	FRAME & GRATE (N): 600-12X	FRAME & GRATE (N): TYPE A	FRAME & COVER (N): U-45	FRAME & COVER (N): COSR MH	FRAME & COVER (N): COSR DI	ALTERNATIVE PIPE CULVERT: 300 mm	ALTERNATIVE PIPE CULVERT: 375 mm	ALTERNATIVE PIPE CULVERT: 450 mm	75 mm PP (SCHEDULE 40)	CONCRETE COLLAR (N)	HEIGHT OF INLET (N)	MAXIMUM COVER (N)	PIPE JOINT CLASSIFICATION (N)	DITCH EXCAVATION	DIM	DESCRIPTION	STATION	DRAINAGE PLAN SHEET No.	DRAINAGE SYSTEM No.	DRAINAGE UNIT (No.)
		m		EA		m^3		Kg	EA					m				EA	m			m^3	EA					
9	a					0.94		108	1										0.91				1	G4 DI w/DIM	0.620 Lt CC 22+43.5	D-2	9	a
	b															1.8				0.51	S			450 mm APC	0.620 Lt CC 22+43.5 TO 2.640 Lt CC 22+43.9			b
	c				1																			ADJUST INLET	2.640 Lt CC 22+43.9			c
	d																					9		UNLINED V DITCH	2.640 Lt CC 22+43.9 TO 2.640 Lt CC 22+93.9			d
10	a					1.11		108	1										1.19				1	G4 DI w/CDIM	21.0 Lt CO 304+39.5	D-2	10	a
	b															7.1				1.05	S			450 mm APC	21.000 Lt CO 304+39.5 TO 21.000 Lt CO 304+47.4			b
	c					2.18		217	2										1.5				1	GT4 DI w/CDIM	21.000 Lt CO 304+47.4			c
	d															11.3				1.05	S			450 mm APC	21.000 Lt CO 304+47.4 TO 8.160 Rt CC 22+29.1			d
	e					1.13		108	1										1.22				1	G4 DI w/CDIM	8.160 Rt CC 22+29.1			e
11	a			1																				REMOVE DI	14.680 Lt CO 304+50.8	D2	11	a
	b					1.46		200			1								1.59					G2 MH	14.680 Lt CO 304+50.8			b
12	a			1																				REMOVE DI	13.000 Rt CO 304+66.9	D2	12	a
	b					1.35		200			1								1.42					G2 MH	13.000 Rt CO 304+66.9			b
	c					0.94		108	1										0.95				1	GO DI w/CDIM	18.489 Rt CO 304+65			c
	d						2.9									3.9				0.66	S			450 mm APC w/Conc BACKFILL	18.489 Rt CO 304+65 TO 18.489 Rt CO 304+69			d
	e					1.06		108	1										1.11				1	G4 DI w/CDIM	18.489 Rt CO 304+69.0			e
	f			1																				REMOVE DI	6.22 Lt CB 21+71.88			f
	g					1.19		108	1										1.32				1	G4 DI w/DIM	6.22 Lt CB 21+71.88			g
	h													1.7						0.92	S		1	300 mm APC	3.890 to 56.22 Lt CB 21+71.9			h
	i					0.61		108	1										0.76					G1 DI w/DIM	3.890 Lt CB 21+71.9			i
	j																					9		UNLINED V DITCH	6.22 Lt CB 21+21.88 TO 6.22 Lt CB 21+71.88			j
13	a			1																				REMOVE DI	10.184 Lt CC 304+83.8	D2	13	a
	b					1.35		200			1								1.43					G2 MH	10.184 Lt CC 304+83.8			b
	c															7.1				0.92	S			450 mm APC	10.1840 Lt CO 304+83.8 TO 18.129 Lt CO 304+85			c
	d					1.39		50					1						1.17				1	COSR TYPE II DI w/CDIM	18.129 Lt CO 304+85			d
14	a					1.13		108	1										1.22				1	G4 DI w/CDIM	11.260 Rt CB 21+69.7	D2	14	a
	b															10.0				0.77	S			450 mm APC	11.260 Rt CB 21+69.7 TO 10.330 Rt CO 304+91.5			b
	c					1.33		200			1								1.50					G2 MH	10.330 Rt CO 304+91.5			c
15	a			1																				REMOVE DI	17.88 Lt CO 304+96.0	D2	15	a
	b		10.8																	0.60				REMOVE CULVERT	17.88 Lt CO 304+96 TO 17.86 Lt CO 305+07.6			b
	c					0.44		108	1										0.45					G1 DI	20.00 Lt CO 304+96			c
	d						3							11.0						0.15	S			300 mm APC w/Conc BACKFILL	20.00 Lt CO 304+96 TO 17.86 Lt CO 305+07.6			d
SHEET TOTAL			10.8	5	1	17.61	5.9	2039	11		4		1	12.7		41.2						18	10	SHEET TOTAL				

DRAINAGE QUANTITIES DQ-3

STATE OF CALIFORNIA - DEPARTMENT OF TRANSPORTATION
Caltrans DESIGN

FUNCTIONAL SUPERVISOR: JONATHAN LEE
CALCULATED-DESIGNED BY: FRED J. WITTEBORN
CHECKED BY: JONATHAN LEE
REVISED BY: FJW
DATE REVISED: 2/13/13

LAST REVISION 02-21-13
DATE PLOTTED => 20-MAY-2013
TIME PLOTTED => 06:32

Dist	COUNTY	ROUTE	KILOMETER POST TOTAL PROJECT	SHEET No.	TOTAL SHEETS
04	Son	101	33.3	88	158

REGISTERED CIVIL ENGINEER 2/22/13 DATE

5-13-13
PLANS APPROVAL DATE

REGISTERED PROFESSIONAL ENGINEER Fred J. Witteborn No. 56272 Exp. 12-31-14 CIVIL STATE OF CALIFORNIA

THE STATE OF CALIFORNIA OR ITS OFFICERS OR AGENTS SHALL NOT BE RESPONSIBLE FOR THE ACCURACY OR COMPLETENESS OF ELECTRONIC COPIES OF THIS PLAN SHEET.

Caltrans Metric

DRAINAGE QUANTITIES

DRAINAGE SYSTEM No.	DRAINAGE UNIT (No.)	ABANDON CULVERT	REMOVE CULVERT	REMOVE INLET	ADJUST INLET	MINOR CONCRETE: MINOR STRUCTURE	MINOR CONCRETE: BACKFILL	Misc. IRON & STEEL	FRAME & GRATE (N): 600-12X	FRAME & GRATE (N): TYPE A	FRAME & COVER (N): U-45	FRAME & COVER (N): COSR MH	FRAME & COVER (N): COSR DI	ALTERNATIVE PIPE CULVERT: 300 mm	ALTERNATIVE PIPE CULVERT: 375 mm	ALTERNATIVE PIPE CULVERT: 450 mm	75 mm PP (SCHEDULE 40)	CONCRETE COLLAR (N)	HEIGHT OF INLET (N)	MAXIMUM COVER (N)	PIPE JOINT CLASSIFICATION (N)	DITCH EXCAVATION	DIM	DESCRIPTION	STATION	DRAINAGE PLAN SHEET No.	DRAINAGE SYSTEM No.	DRAINAGE UNIT (No.)
		m		EA		m^3		Kg	EA					m				EA	m			m^3	EA					
16	a			1																				REMOVE DI	9.180 R+ CO 305+03.6	D2	16	a
	b					1.34		200			1								1.43					G2 MH	9.180 R+ CO 305+03.6			b
	c															2.1				0.89	S			450 mm APC	9.180 R+ CO 305+03.6 TO 12.170 R+ CO 305+05.0			c
	d					1.10		108	1										1.21				1	GO DI w/CDIM	12.170 R+ CO 305+05.0			d
	e															32.0				0.84	S			450 mm APC	12.170 R+ CO 305+05.0 TO 10.570 CO 305+38.1			e
	f					1.22		200			1								1.29					G2 MH	10.570 CO 305+38.1			f
	g															4.4				0.84	S			450 mm APC	10.570 CO 305+38.1 TO 16.027 R+ CO 305+38.2			g
	h					1.41		50					1						1.21				1	COSR TYPE II DI w/CDIM	16.027 R+ CO 305+38.2			h
	i			1																				REMOVE DI				i
	j		2.5																	0.60				REMOVE CULVERT				j
	k					1.10		108		1														TYPE A DI				k
	l																1.7							SIDEWALK DRAIN				l
17	a			1																				REMOVE DI	9.330 L+ CO 305+30.4	D2	17	a
	b					1.91		125				1		1					1.66					COSR MH	9.330 L+ CO 305+30.4			b
	c															3.5				1.03	S			450 mm APC	9.330 L+ CO 305+30.4 TO 14.100 L+ CO 305+30.9			c
	d					1.41		50					1						1.20				1	COSR TYPE II DI w/CDIM	14.100 L+ CO 305+30.9			d
18	a															10.6				1.0	S			450 mm APC	8.670 L+ CO 305+30.4 TO 19.480 L+ CO 305+38.3	D2	18	a
	b					1.42		50					1						1.22				1	COSR TYPE II DI w/CDIM	19.480 L+ CO 305+38.3			b
SHEET TOTAL			2.5	3		10.91		891	1	1	2	1	3	1.0		52.6	1.7						4					
SHEET 1			29.6	7		17.32	12.9	1206	1	6		2	4	60.0		37.4	15.3						4					
SHEET 2		3.2	4	5		20.62		2146	12		4	0	1	3.1		80.2						9	12					
SHEET 3			10.8	5	1	17.61	5.9	2039	11		4	0	1	12.7		41.2						18	10					
GRAND TOTAL		3.2	46.9	20	1	66.46	18.8	6282	25	7	10	3	9	76.8		211.4	17.0					27	30	SHEET TOTAL				

FRED J. WITTEBORN — JONATHAN LEE — REVISED BY FJW — DATE REVISED 2/13/13

CALCULATED-DESIGNED BY — CHECKED BY

FUNCTIONAL SUPERVISOR JONATHAN LEE

STATE OF CALIFORNIA - DEPARTMENT OF TRANSPORTATION

Caltrans DESIGN

LAST REVISION 02-21-13 | DATE PLOTTED => 20-MAY-2013 | TIME PLOTTED => 08:55

Dist	COUNTY	ROUTE	KILOMETER POST TOTAL PROJECT	SHEET No.	TOTAL SHEETS
04	Son	101	33.3	89	158

REGISTERED CIVIL ENGINEER — DATE 2/22/13

5-13-13
PLANS APPROVAL DATE

REGISTERED PROFESSIONAL ENGINEER — Fred J. Witteborn No. 56272 Exp. 12-31-14 CIVIL — STATE OF CALIFORNIA

THE STATE OF CALIFORNIA OR ITS OFFICERS OR AGENTS SHALL NOT BE RESPONSIBLE FOR THE ACCURACY OR COMPLETENESS OF ELECTRONIC COPIES OF THIS PLAN SHEET.

Caltrans Metric

FOR ACCURATE RIGHT OF WAY AND ACCESS DATA, CONTACT RIGHT OF WAY ENGINEERING AT THE DISTRICT OFFICE.

LEGEND:

- POTHOLE LOCATION
- No. POTHOLE NUMBER
- FIRE HYDRANT

UTILITY	SYMBOL	OWNER
WATER	-——w——	SONOMA COUNTY WATER AGENCY
SEWER	——--s——	CITY OF SANTA ROSA
STORM DRAIN	——--sd——	CITY OF SANTA ROSA
GAS LINE	——-g——	PG&E

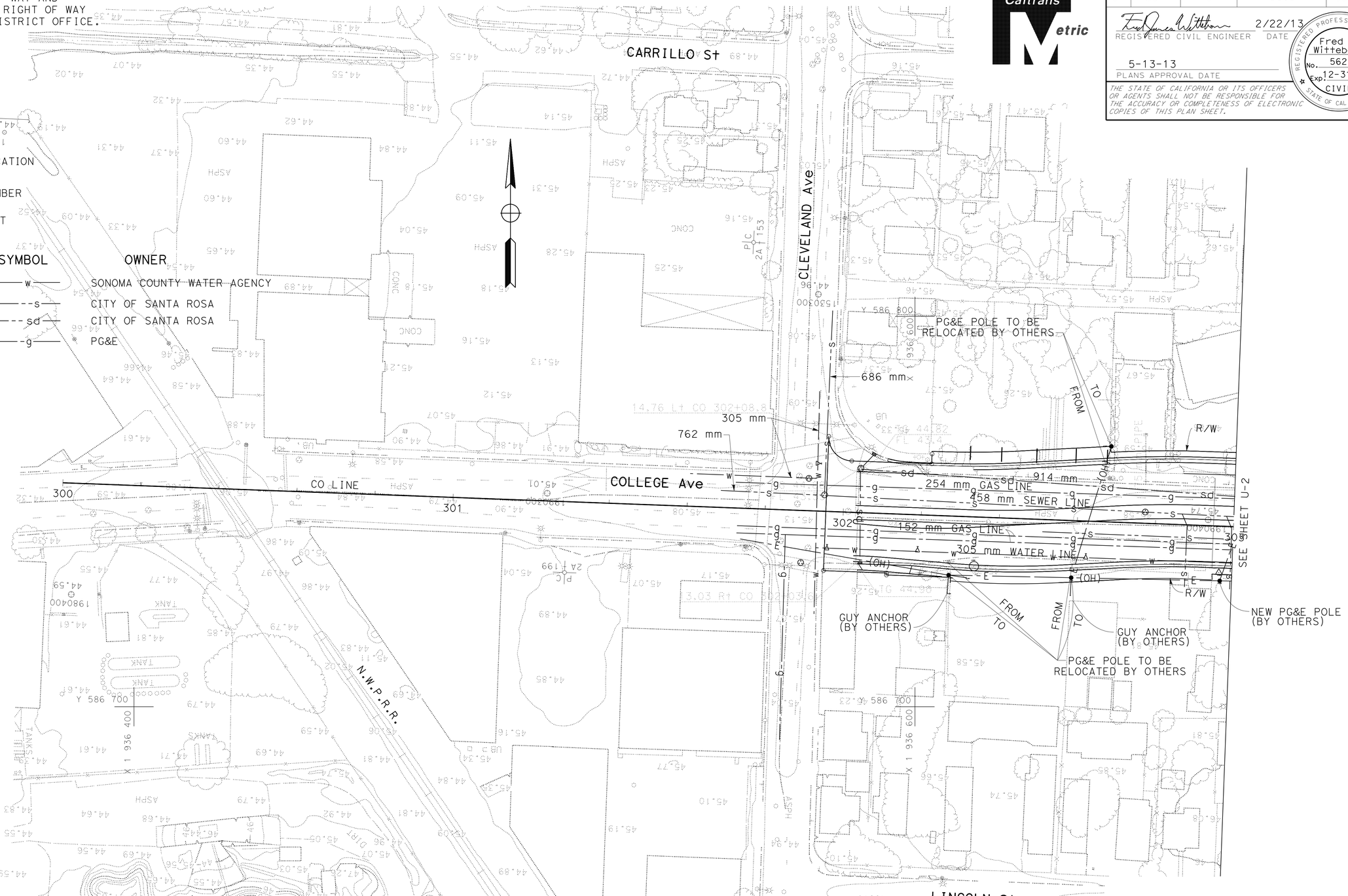

ALL DIMENSIONS ARE IN METERS UNLESS OTHERWISE SHOWN

UTILITY PLAN

SCALE: 1:500

U-1

THIS PLAN ACCURATE FOR UTILITY WORK ONLY

REVISED BY	FJW
DATE REVISED	2/13/13
CALCULATED-DESIGNED BY	FRED J. WITTEBORN
CHECKED BY	JONATHAN LEE
FUNCTIONAL SUPERVISOR	JONATHAN LEE

STATE OF CALIFORNIA - DEPARTMENT OF TRANSPORTATION — Caltrans — DESIGN

LAST REVISION 02-13-13 — DATE PLOTTED => 20-MAY-2013 — TIME PLOTTED => 06:32

Dist	COUNTY	ROUTE	KILOMETER POST TOTAL PROJECT	SHEET No.	TOTAL SHEETS
04	Son	101	33.3	90	158

REGISTERED CIVIL ENGINEER — DATE 2/22/13

5-13-13
PLANS APPROVAL DATE

REGISTERED PROFESSIONAL ENGINEER — Fred J. Witteborn No. 56272 Exp. 12-31-14 CIVIL — STATE OF CALIFORNIA

THE STATE OF CALIFORNIA OR ITS OFFICERS OR AGENTS SHALL NOT BE RESPONSIBLE FOR THE ACCURACY OR COMPLETENESS OF ELECTRONIC COPIES OF THIS PLAN SHEET.

Caltrans Metric

FOR ACCURATE RIGHT OF WAY AND ACCESS DATA, CONTACT RIGHT OF WAY ENGINEERING AT THE DISTRICT OFFICE.

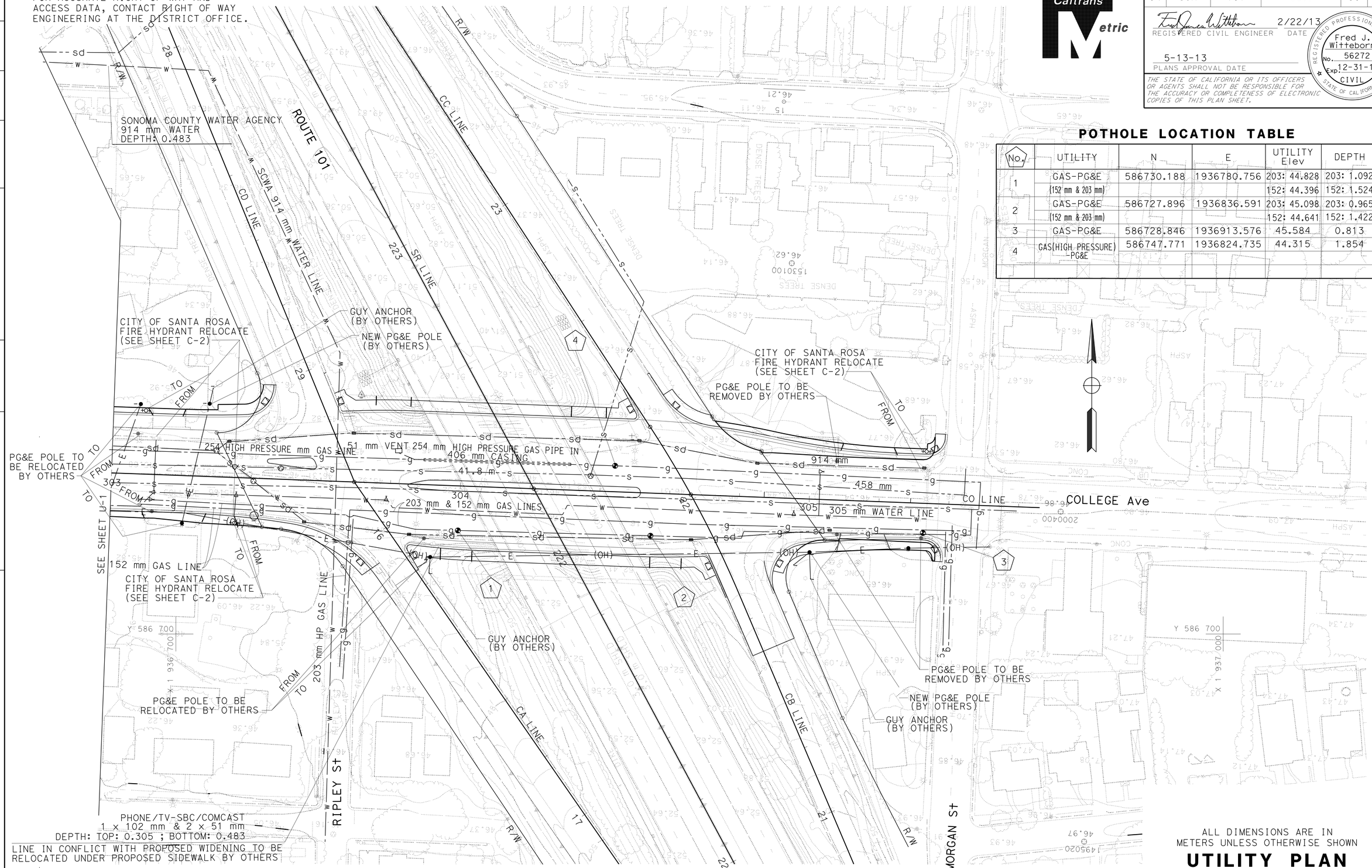

POTHOLE LOCATION TABLE

No.	UTILITY	N	E	UTILITY Elev	DEPTH
1	GAS-PG&E	586730.188	1936780.756	203: 44.828	203: 1.092
	(152 mm & 203 mm)			152: 44.396	152: 1.524
2	GAS-PG&E	586727.896	1936836.591	203: 45.098	203: 0.965
	(152 mm & 203 mm)			152: 44.641	152: 1.422
3	GAS-PG&E	586728.846	1936913.576	45.584	0.813
4	GAS(HIGH PRESSURE) -PG&E	586747.771	1936824.735	44.315	1.854

ALL DIMENSIONS ARE IN METERS UNLESS OTHERWISE SHOWN

UTILITY PLAN

SCALE: 1:500

U-2

THIS PLAN ACCURATE FOR UTILITY WORK ONLY

FOR NOTES, ABBREVIATIONS AND LEGEND, SEE SHEET U-1

CALCULATED-DESIGNED BY	FRED J. WITTEBORN	REVISED BY	FJW
CHECKED BY	JONATHAN LEE	DATE REVISED	2/13/13
FUNCTIONAL SUPERVISOR	JONATHAN LEE		

STATE OF CALIFORNIA - DEPARTMENT OF TRANSPORTATION
Caltrans DESIGN

LAST REVISION 02-13-13 DATE PLOTTED => 20-MAY-2013 TIME PLOTTED => 06:32

Dist	COUNTY	ROUTE	KILOMETER POST TOTAL PROJECT	SHEET No.	TOTAL SHEETS
04	Son	101	33.3	91	158

REGISTERED CIVIL ENGINEER 2/26/13 DATE

5-13-13
PLANS APPROVAL DATE

REGISTERED PROFESSIONAL ENGINEER Jerilyn L. Struven No. 49964 Exp. 12-31-14 CIVIL STATE OF CALIFORNIA

THE STATE OF CALIFORNIA OR ITS OFFICERS OR AGENTS SHALL NOT BE RESPONSIBLE FOR THE ACCURACY OR COMPLETENESS OF ELECTRONIC COPIES OF THIS PLAN SHEET.

Caltrans Metric

CONSTRUCTION AREA SIGNS

SIGN No.	CODE	MESSAGE	PANEL SIZE (mm x mm)	No. OF POSTS & SIZE (EA-mm x mm)	QUANTITY
1	W20-1	ROAD WORK AHEAD	1200 x 1200	1-100 x 150	2
2	G20-2	END ROAD WORK	900 x 450	1-100 x 100	8
3	W20-1	ROAD WORK AHEAD	900 x 900	1-100 x 100	6

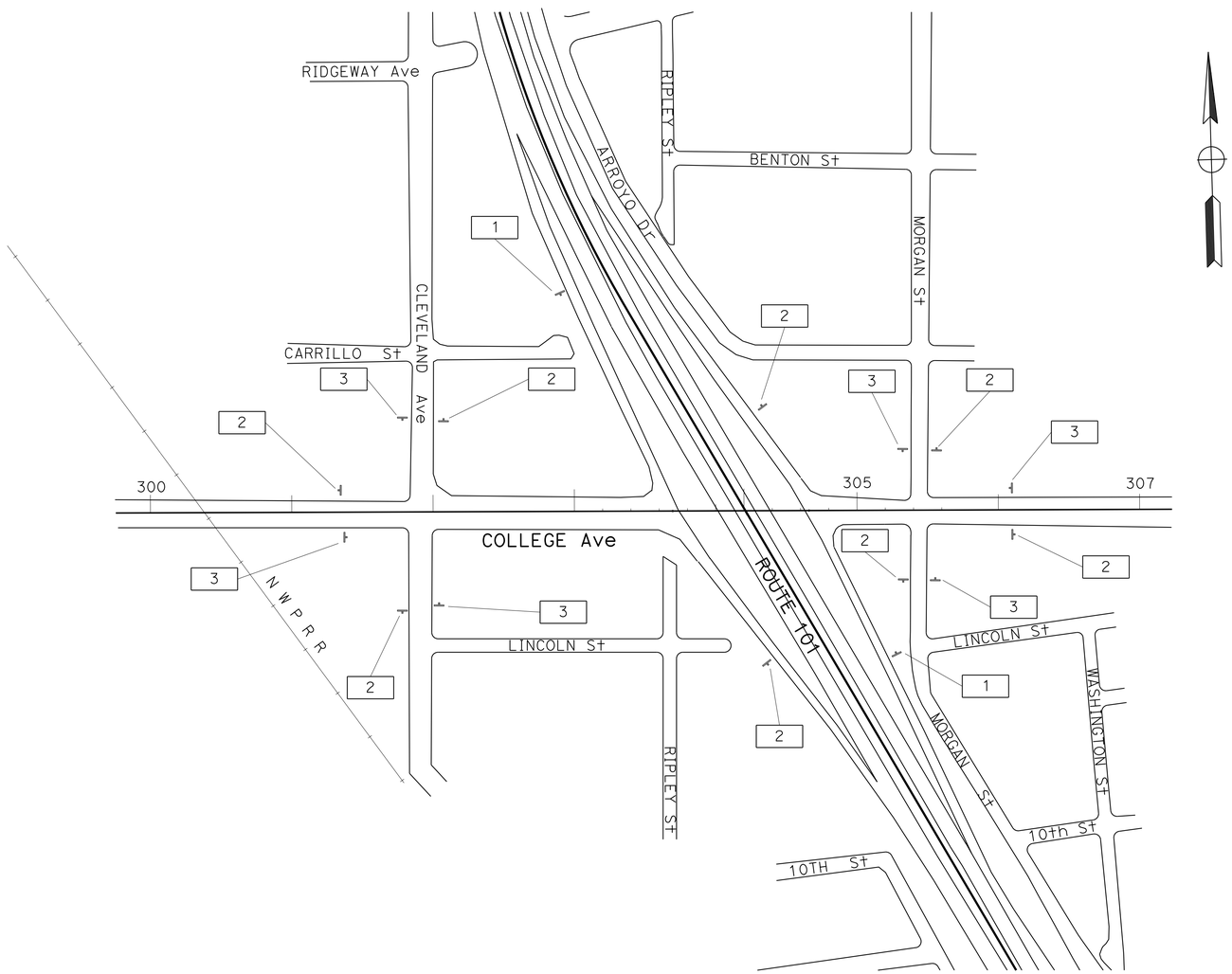

LEGEND:

No.	CONSTRUCTION AREA SIGNS
→	DIRECTION OF TRAFFIC
⊣	SIGN WITH ONE POST
X	ROADWAY CLOSURE

NOTES:

1. EXACT LOCATION AND POSITION OF CONSTRUCTION AREA SIGNS TO BE DETERMINED BY THE ENGINEER.
2. CONSTRUCTION AREA SIGNS TO BE STATIONARY MOUNTED.

THIS PLAN ACCURATE FOR CONSTRUCTION AREA SIGN WORK ONLY

CONSTRUCTION AREA SIGNS

NO SCALE

CS-1

STATE OF CALIFORNIA - DEPARTMENT OF TRANSPORTATION
Caltrans
TRAFFIC

FUNCTIONAL SUPERVISOR: ROLAND AU-YEUNG
CALCULATED-DESIGNED BY: HERMINIO RUIDERA
CHECKED BY: JERILYN L. STRUVEN
REVISED BY
DATE REVISED

LAST REVISION 09-02-09 | DATE PLOTTED => 20-MAY-2013 | TIME PLOTTED => 06:48

Dist	COUNTY	ROUTE	KILOMETER POST TOTAL PROJECT	SHEET No.	TOTAL SHEETS
04	Son	101	33.3	92	158

REGISTERED CIVIL ENGINEER 2/26/13 DATE

5-13-13
PLANS APPROVAL DATE

REGISTERED PROFESSIONAL ENGINEER Jerilyn L. Struven No. 49964 Exp. 12-31-14 CIVIL STATE OF CALIFORNIA

THE STATE OF CALIFORNIA OR ITS OFFICERS OR AGENTS SHALL NOT BE RESPONSIBLE FOR THE ACCURACY OR COMPLETENESS OF ELECTRONIC COPIES OF THIS PLAN SHEET.

Caltrans Metric

SB ON-RAMP FROM COLLEGE Ave CLOSED
DETOUR A
WB COLLEGE Ave
NB CLEVELAND Ave
EB STEELE Ln
SB ON-RAMP FROM STEELE Ln
DETOUR B
EB COLLEGE AvE
NB MENDOCINO Ave
WB STEELE Ln
SB ON-RAMP FROM STEELE Ln

SB OFF-RAMP TO COLLEGE Ave CLOSED
DETOUR
SB ROUTE 101 OFF-RAMP TO 3rd St
EB 3rd St
NB MENDOCINO Ave

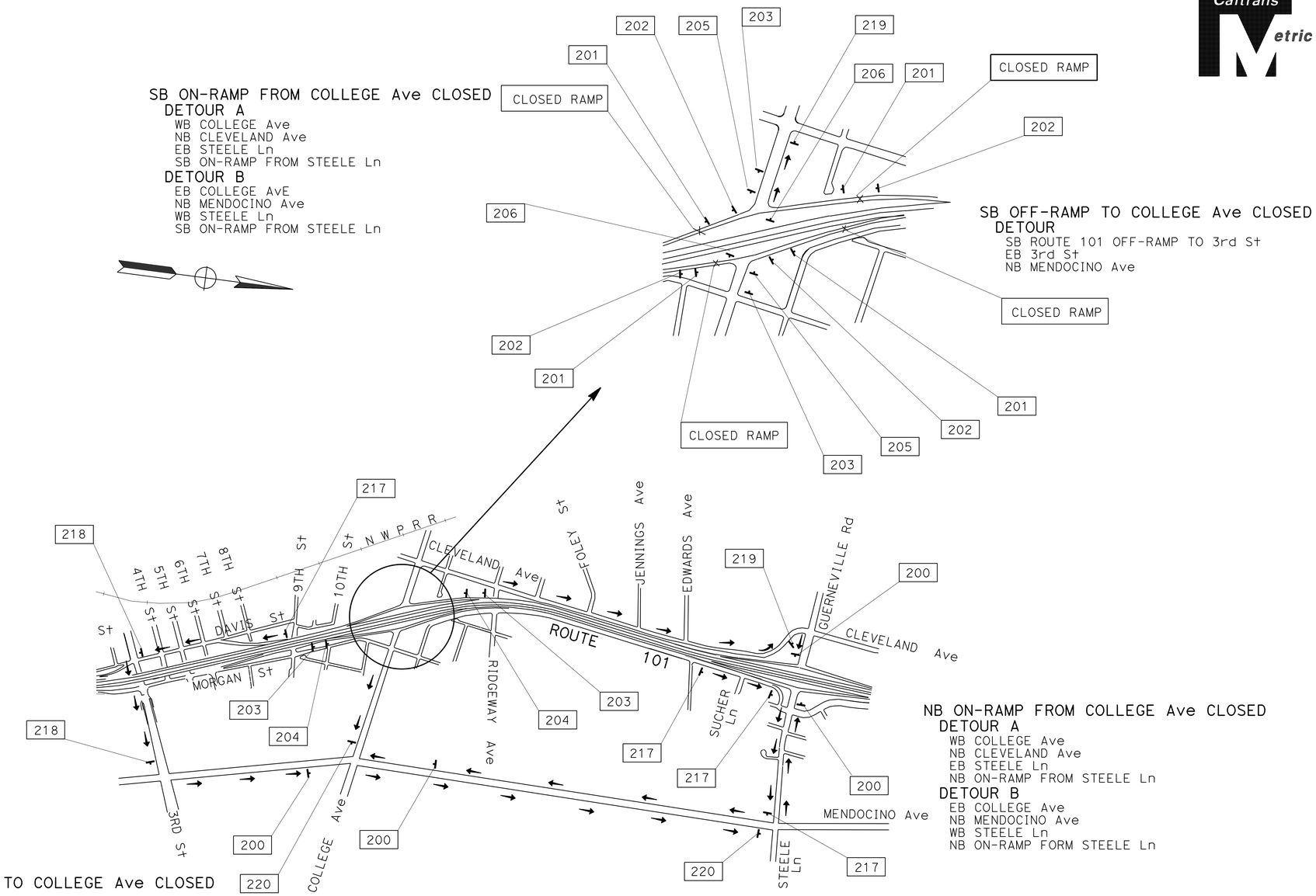

NB ON-RAMP FROM COLLEGE Ave CLOSED
DETOUR A
WB COLLEGE Ave
NB CLEVELAND Ave
EB STEELE Ln
NB ON-RAMP FROM STEELE Ln
DETOUR B
EB COLLEGE Ave
NB MENDOCINO Ave
WB STEELE Ln
NB ON-RAMP FORM STEELE Ln

NB OFF-RAMP TO COLLEGE Ave CLOSED
DETOUR A
NB ROUTE 101 OFF-RAMP TO STEELE Ln
EB STEELE Ln
SB MENDOCINO Ave

CLOSE COLLEGE AVENUE ON-RAMPS AND OFF-RAMPS DETOUR PLAN

ALL DIMENSIONS ARE IN METERS UNLESS OTHERWISE SHOWN

THIS PLAN ACCURATE FOR CONSTRUCTION AREA SIGN WORK ONLY

FOR NOTES, ABBREVIATIONS &/OR LEGEND, SEE SHEET CS-1

CONSTRUCTION AREA SIGNS

NO SCALE

CS-2

STATE OF CALIFORNIA - DEPARTMENT OF TRANSPORTATION
Caltrans **TRAFFIC**

FUNCTIONAL SUPERVISOR: ROLAND AU-YEUNG
CALCULATED-DESIGNED BY: HERMINIO RUIDERA
CHECKED BY: JERILYN L. STRUVEN
REVISED BY / DATE REVISED

LAST REVISION 11-04-09 | DATE PLOTTED => 20-MAY-2013 | TIME PLOTTED => 06:47

BORDER LAST REVISED 3/1/2007 | USERNAME => s121614 | DGN FILE => 0400000693\a002.dgn | RELATIVE BORDER SCALE IS IN MILLIMETERS 0 20 40 60 80 | UNIT 0751 | PROJECT NUMBER & PHASE 0400000693

Dist	COUNTY	ROUTE	KILOMETER POST TOTAL PROJECT	SHEET No.	TOTAL SHEETS
04	Son	101	33.3	93	158

REGISTERED CIVIL ENGINEER 2/22/13 DATE

5-13-13
PLANS APPROVAL DATE

REGISTERED PROFESSIONAL ENGINEER Jerilyn L. Struven No. 49964 Exp. 12-31-14 CIVIL STATE OF CALIFORNIA

THE STATE OF CALIFORNIA OR ITS OFFICERS OR AGENTS SHALL NOT BE RESPONSIBLE FOR THE ACCURACY OR COMPLETENESS OF ELECTRONIC COPIES OF THIS PLAN SHEET.

Caltrans Metric

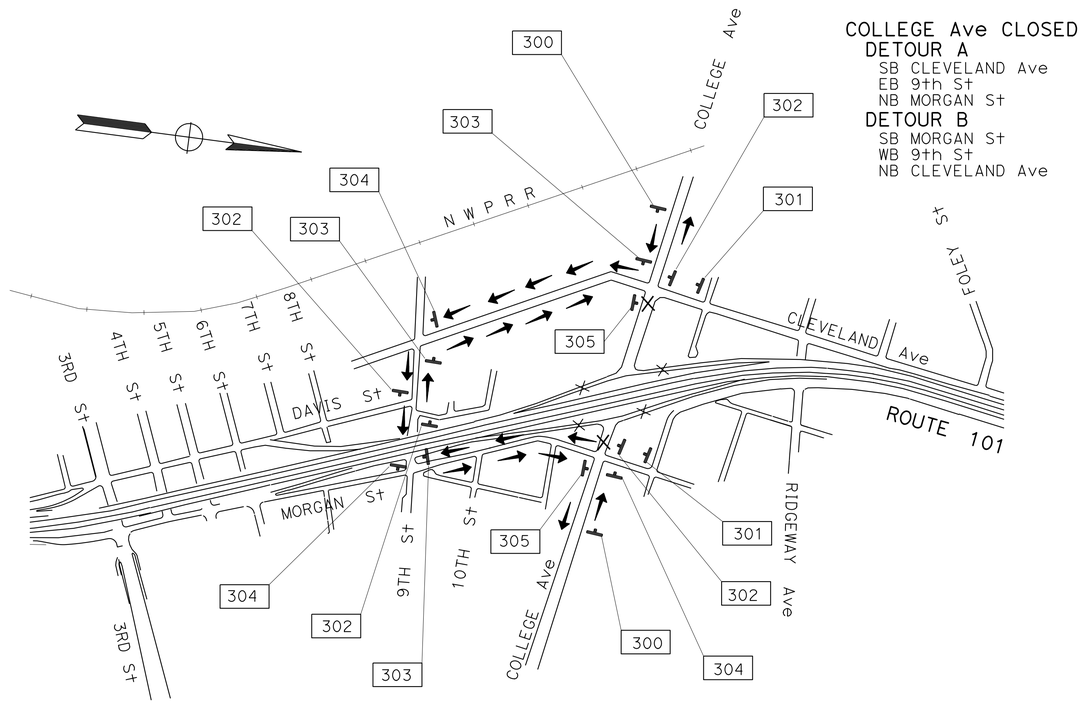

CLOSE COLLEGE AVENUE
DETOUR PLAN

ALL DIMENSIONS ARE IN METERS UNLESS OTHERWISE SHOWN

CONSTRUCTION AREA SIGNS

NO SCALE

CS-3

FOR NOTES, ABBREVIATIONS &/OR LEGEND, SEE SHEET CS-1

THIS PLAN ACCURATE FOR CONSTRUCTION AREA SIGN WORK ONLY

STATE OF CALIFORNIA - DEPARTMENT OF TRANSPORTATION
Caltrans **TRAFFIC**

FUNCTIONAL SUPERVISOR: ROLAND AU-YEUNG
CALCULATED-DESIGNED BY: HERMINIO RUIDERA
CHECKED BY: JERILYN L. STRUVEN
REVISED BY
DATE REVISED

LAST REVISION 01-11-13 | DATE PLOTTED => 20-MAY-2013 | TIME PLOTTED => 06:47

Dist	COUNTY	ROUTE	KILOMETER POST TOTAL PROJECT	SHEET No.	TOTAL SHEETS
04	Son	101	33.3	94	158

Caltrans Metric

REGISTERED CIVIL ENGINEER 2/26/13 DATE

5-13-13
PLANS APPROVAL DATE

REGISTERED PROFESSIONAL ENGINEER Jerilyn L. Struven No. 49964 Exp. 12-31-14 CIVIL STATE OF CALIFORNIA

THE STATE OF CALIFORNIA OR ITS OFFICERS OR AGENTS SHALL NOT BE RESPONSIBLE FOR THE ACCURACY OR COMPLETENESS OF ELECTRONIC COPIES OF THIS PLAN SHEET.

STATIONARY MOUNTED CONSTRUCTION AREA SIGNS

SIGN	CODE	MESSAGE	PANEL SIZE (mm x mm)	NUMBER OF POST AND SIZE	QUANTITY	REMARKS
200	M4-8a	END DETOUR	750 x 450	(ONE) 89 mm x 89 mm	4	
201	SC6-4(CA)	RAMP CLOSED (DATE AND TIME)	1200 x 950	(ONE) 89 mm x 140 mm	4	
202	R11-2 (RAMP)	RAMP CLOSED	1200 x 950		4	BARRICADE MOUNTED
203	W20-3 (RAMP)	RAMP CLOSED AHEAD	900 x 900	(ONE) 89 mm x 89 mm	4	
204	C38 (CA)	USE NEXT EXIT	1200 x 900	(ONE) 89 mm x 140 mm	2	
205	R3-1	NO RIGHT TURN	750 x 900	(ONE) 89 mm x 89 mm	2	
206	R3-2	NO LEFT TURN	750 x 900	(ONE) 89 mm x 89 mm	2	
217	M4-10 (R†)	DETOUR →	1200 x 450	(ONE) 89 mm x 140 mm	4	
	SIGN "F"	COLLEGE AVENUE	1200 x 750			
218	M4-10 (L†)	← DETOUR	1200 x 450	(ONE) 89 mm x 140 mm	2	
	SIGN "F"	COLLEGE AVENUE	1200 x 750			
219	M4-10 (R†)	DETOUR →	1200 x 450	(ONE) 89 mm x 140 mm	2	
	G26-2(CA) (101)	101 SHIELD	700 x 600			
220	M4-10 (L†)	← DETOUR	1200 x 450	(ONE) 89 mm x 140 mm	2	
	G26-2(CA) (101)	101 SHIELD	700 x 600			
300	W20-3 (ROAD)	ROAD CLOSED AHEAD	900 x 900	(ONE) 89 mm x 89 mm	2	
301	W20-2	DETOUR AHEAD	900 x 900	(ONE) 89 mm x 89 mm	2	
302	SC3 (CA)	↑ DETOUR	1200 x 450	(ONE) 89 mm x 89 mm	4	
303	M4-10 (R†)	DETOUR →	1200 x 450	(ONE) 89 mm x 89 mm	3	
304	M4-10 (L†)	← DETOUR	1200 x 450	(ONE) 89 mm x 89 mm	3	
305	M4-8a	END DETOUR	750 x 450	(ONE) 89 mm x 89 mm	2	

COLLEGE AVENUE

150 mm LETTERS
1200 mm x 750 mm
BLACK/ORANGE

SIGN "F"

CONSTRUCTION AREA SIGNS

NO SCALE

CS-4

REVISED BY | DATE REVISED

HERMINIO RUIDERA | JERILYN L. STRUVEN

CALCULATED-DESIGNED BY | CHECKED BY

FUNCTIONAL SUPERVISOR: ROLAND AU-YEUNG

STATE OF CALIFORNIA - DEPARTMENT OF TRANSPORTATION
Caltrans TRAFFIC

LAST REVISION 02-13-13 | DATE PLOTTED => 20-MAY-2013 | TIME PLOTTED => 06:47

Dist	COUNTY	ROUTE	KILOMETER POST TOTAL PROJECT	SHEET No.	TOTAL SHEETS
04	Son	101	33.3	95	158

REGISTERED CIVIL ENGINEER — DATE 2/22/13

5-13-13
PLANS APPROVAL DATE

REGISTERED PROFESSIONAL ENGINEER Fred J. Witteborn No. 56272 Exp. 12-31-14 CIVIL STATE OF CALIFORNIA

THE STATE OF CALIFORNIA OR ITS OFFICERS OR AGENTS SHALL NOT BE RESPONSIBLE FOR THE ACCURACY OR COMPLETENESS OF ELECTRONIC COPIES OF THIS PLAN SHEET.

Caltrans Metric

FOR ACCURATE RIGHT OF WAY AND ACCESS DATA, CONTACT RIGHT OF WAY ENGINEERING AT THE DISTRICT OFFICE.

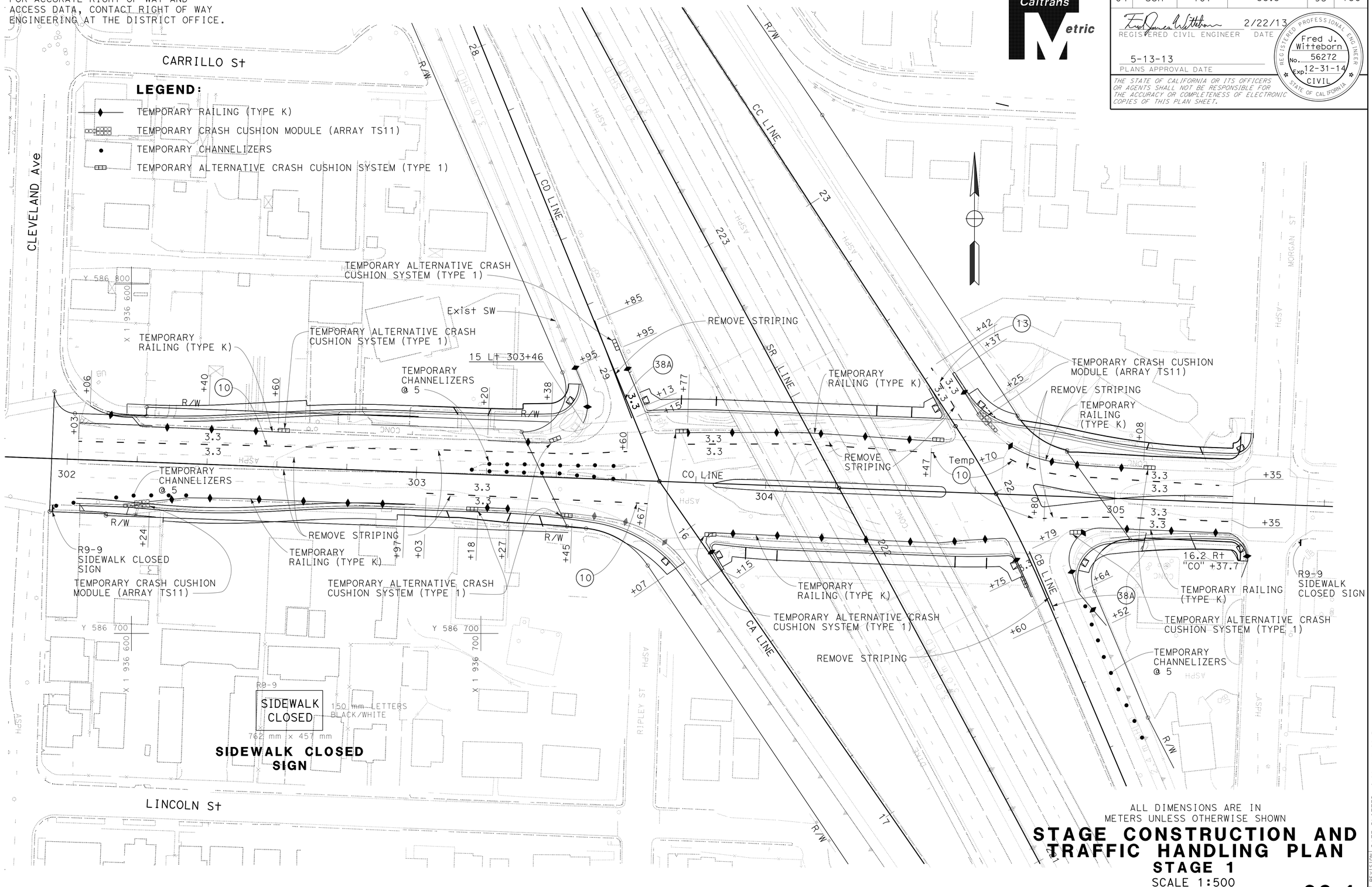

ALL DIMENSIONS ARE IN METERS UNLESS OTHERWISE SHOWN

STAGE CONSTRUCTION AND TRAFFIC HANDLING PLAN

STAGE 1

SCALE 1:500

THIS PLAN ACCURATE FOR STAGE CONSTRUCTION WORK ONLY

SC-1

FRED J. WITTEBORN	REVISED BY	FJW	
JONATHAN LEE	DATE REVISED	2/13/13	
CALCULATED-DESIGNED BY			
CHECKED BY			
FUNCTIONAL SUPERVISOR			
JONATHAN LEE			

STATE OF CALIFORNIA - DEPARTMENT OF TRANSPORTATION

Caltrans DESIGN

LAST REVISION 01-15-13 | DATE PLOTTED => 20-MAY-2013 | TIME PLOTTED => 06:47

Dist	COUNTY	ROUTE	KILOMETER POST TOTAL PROJECT	SHEET No.	TOTAL SHEETS
04	Son	101	33.3	96	158

REGISTERED CIVIL ENGINEER 2/22/13 DATE

5-13-13
PLANS APPROVAL DATE

REGISTERED PROFESSIONAL ENGINEER Fred J. Witteborn No. 56272 Exp. 12-31-14 CIVIL STATE OF CALIFORNIA

THE STATE OF CALIFORNIA OR ITS OFFICERS OR AGENTS SHALL NOT BE RESPONSIBLE FOR THE ACCURACY OR COMPLETENESS OF ELECTRONIC COPIES OF THIS PLAN SHEET.

Caltrans Metric

PAVEMENT DELINEATION QUANTITIES

SHEET No.	STATION	DIRECTION	DETAIL No.	REMOVE PAVEMENT MARKER	REMOVE THERMOPLASTIC TRAFFIC STRIPE	PAINT TRAFFIC STRIPE (2-COATS)	PAVEMENT MARKER	
							NON REFLECTIVE	RETRO-REFLECTIVE
					WHITE	200 mm WHITE	TYPE A	TYPE G
				EA	m		EA	
SC-1	R† CO 303+03 TO 303+67	EB	38A		70	70		
	R† CO 304+80 TO 305+35	EB	10	27			22	5
	L† CO 302+03 TO 303+60	WB	10	75			64	11
	L† CO 303+77 TO 304+47	WB	10	34			28	6
	L† CO 304+70 TO 305+35	WB	10	31			26	5
	L† CB 21+60 TO 21+79	NB OFF	38A	4	19	19		4
	R† CC 22+25 TO 22+42	NB OFF	13	7			5	2
	R† CD 28+85 TO 29+15	SB OFF	38A	4	20	20		4
	R† CO 303+03 TO 303+67	EB	10	42			36	6
	R† CO 302+40 TO 303+60	WB	33	98				
	SUB-TOTAL						181	43
	TOTAL			322	109	109	*	*

*FOR GRAND TOTAL, SEE Sht PDQ-3.

TEMPORARY RAILING (TYPE K)

SHEET No.	STATION	LENGTH
		m
SC-1	R† CO 302+24 TO 302+97	73
	R† CO 303+18 TO 303+27	9
	R† CO 303+45 TO R† CA 16+07	36
	L† CA +15 to L† CB 21+75	96
	R† CB 21+52 TO 16.2 R† 305+37.7	90
	L† CO 302+06 TO 302+60	54
	L† CO 303+20 TO 303+38	18
	15.0 L† 303+46 TO R† CD 28+95	18
	L† CD 28+95 TO L† CD 29+13	18
	L† CO 303+77 TO 304+47	70
	R† CC 22+37 TO CC 22+25	12
	L† CO 304+70 TO 305+08	38
	16.2 R† CO 305+37.7 TO 25.0 R† 305+34	12
	TOTAL	544

TEMPORARY CRASH CUSHION MODULE AND TEMPORARY ALTERNATIVE CRASH CUSHION SYSTEM

SHEET No.	STATION	ARRAY TYPE (N)	TEMPORARY CRASH CUSHION MODULE	TEMPORARY ALTERNATIVE CRASH CUSHION SYSTEM (TYPE 1)
			EA	
SC-1	R† CO 302+24	TS11	11	
	R† CO 303+18			1
	R† CO 303+45			1
	L† CB 21+75			1
	L† CO 302+60			1
	L† CO 303+38			1
	L† CD 28+95			1
	L† CO 303+77			1
	L† CO 304+47			1
	R† CC 22+25	TS11	11	
	L† CO 305+08			1
	R† CO 303+85			1
	R† CO 304+95			1
	TOTAL		22	11

(N)=NOT A SEPARATE PAY ITEM, FOR INFORMATION ONLY

CHANNELIZER (SURFACE MOUNTED)

SHEET No.	STATION	EA
SC-1	CO 303+15 TO 303+60	18
SC-1	R† CO 301+97 TO 302+32	6
SC-1	R† CB 21+20 TO 21+60	9
	TOTAL	33

TEMPORARY SIGN

SHEET No.	STATION	SIDEWALK CLOSED
		EA
SC-1	CO 13 R† 305+30	1
	CO 13 R† 301+94	1
	TOTAL	2

STAGE CONSTRUCTION QUANTITIES
SCQ-1

STATE OF CALIFORNIA - DEPARTMENT OF TRANSPORTATION
Caltrans DESIGN

FUNCTIONAL SUPERVISOR: JONATHAN LEE
CALCULATED-DESIGNED BY: FRED J. WITTEBORN
CHECKED BY: JONATHAN LEE
REVISED BY: FJW
DATE REVISED: 2/13/13

LAST REVISION 02-25-13
DATE PLOTTED => 20-MAY-2013
TIME PLOTTED => 06:47

Dist	COUNTY	ROUTE	KILOMETER POST TOTAL PROJECT	SHEET No.	TOTAL SHEETS
04	Son	101	33.3	97	158

REGISTERED CIVIL ENGINEER 2/22/13 DATE

5-13-13
PLANS APPROVAL DATE

REGISTERED PROFESSIONAL ENGINEER Fred J. Witteborn No. 56272 Exp. 12-31-14 CIVIL STATE OF CALIFORNIA

THE STATE OF CALIFORNIA OR ITS OFFICERS OR AGENTS SHALL NOT BE RESPONSIBLE FOR THE ACCURACY OR COMPLETENESS OF ELECTRONIC COPIES OF THIS PLAN SHEET.

Caltrans Metric

FOR ACCURATE RIGHT OF WAY AND ACCESS DATA, CONTACT RIGHT OF WAY ENGINEERING AT THE DISTRICT OFFICE.

LEGEND:

- (No.) PAVEMENT DELINEATION DETAILS
- CHANGE OF PAVEMENT DELINEATION DETAILS
- PAVEMENT MARKING "BIKE LANE"
- DELINEATOR
- (No.) CURVE DATA

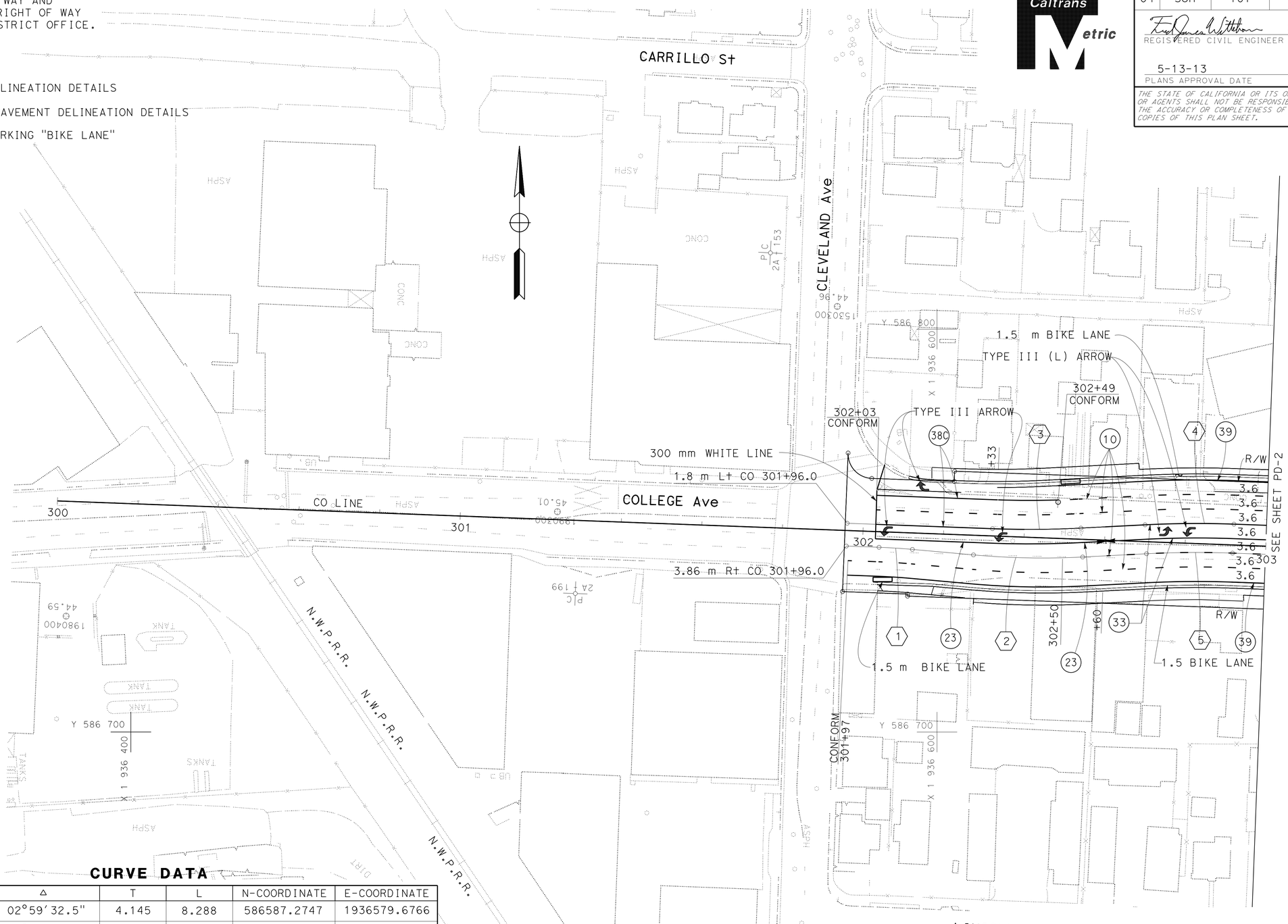

CURVE DATA

No.	R	Δ	T	L	N-COORDINATE	E-COORDINATE
1	244.603	02°59′32.5"	4.145	8.288	586587.2747	1936579.6766
2	192.800	08°03′38.3"	13.584	27.124	586936.0025	1936626.3086
3	248.200	05°01′06.4"	10.985	21.956	586998.5068	1936623.0546
4	251.800	05°01′17.4"	11.041	22.068	586499.9742	1936664.5478
5	244.601	04°59′58.2"	10.678	21.343	586499.9796	1936664.4557

ALL DIMENSIONS ARE IN METERS UNLESS OTHERWISE SHOWN

PAVEMENT DELINEATION PLAN

SCALE 1:500

THIS PLAN ACCURATE FOR PAVEMENT DELINEATION WORK ONLY

PD-1

CALCULATED-DESIGNED BY	FRED J. WITTEBORN
CHECKED BY	JONATHAN LEE
REVISED BY	FJW
DATE REVISED	2/13/13
FUNCTIONAL SUPERVISOR	JONATHAN LEE

STATE OF CALIFORNIA - DEPARTMENT OF TRANSPORTATION
Caltrans DESIGN

LAST REVISION 02-14-13 | DATE PLOTTED => 20-MAY-2013 | TIME PLOTTED => 06:47

Dist	COUNTY	ROUTE	KILOMETER POST TOTAL PROJECT	SHEET No.	TOTAL SHEETS
04	Son	101	33.3	98	158

REGISTERED CIVIL ENGINEER 2/22/13 DATE

5-13-13
PLANS APPROVAL DATE

REGISTERED PROFESSIONAL ENGINEER Fred J. Witteborn No. 56272 Exp. 12-31-14 CIVIL STATE OF CALIFORNIA

THE STATE OF CALIFORNIA OR ITS OFFICERS OR AGENTS SHALL NOT BE RESPONSIBLE FOR THE ACCURACY OR COMPLETENESS OF ELECTRONIC COPIES OF THIS PLAN SHEET.

Caltrans Metric

FOR ACCURATE RIGHT OF WAY AND ACCESS DATA, CONTACT RIGHT OF WAY ENGINEERING AT THE DISTRICT OFFICE.

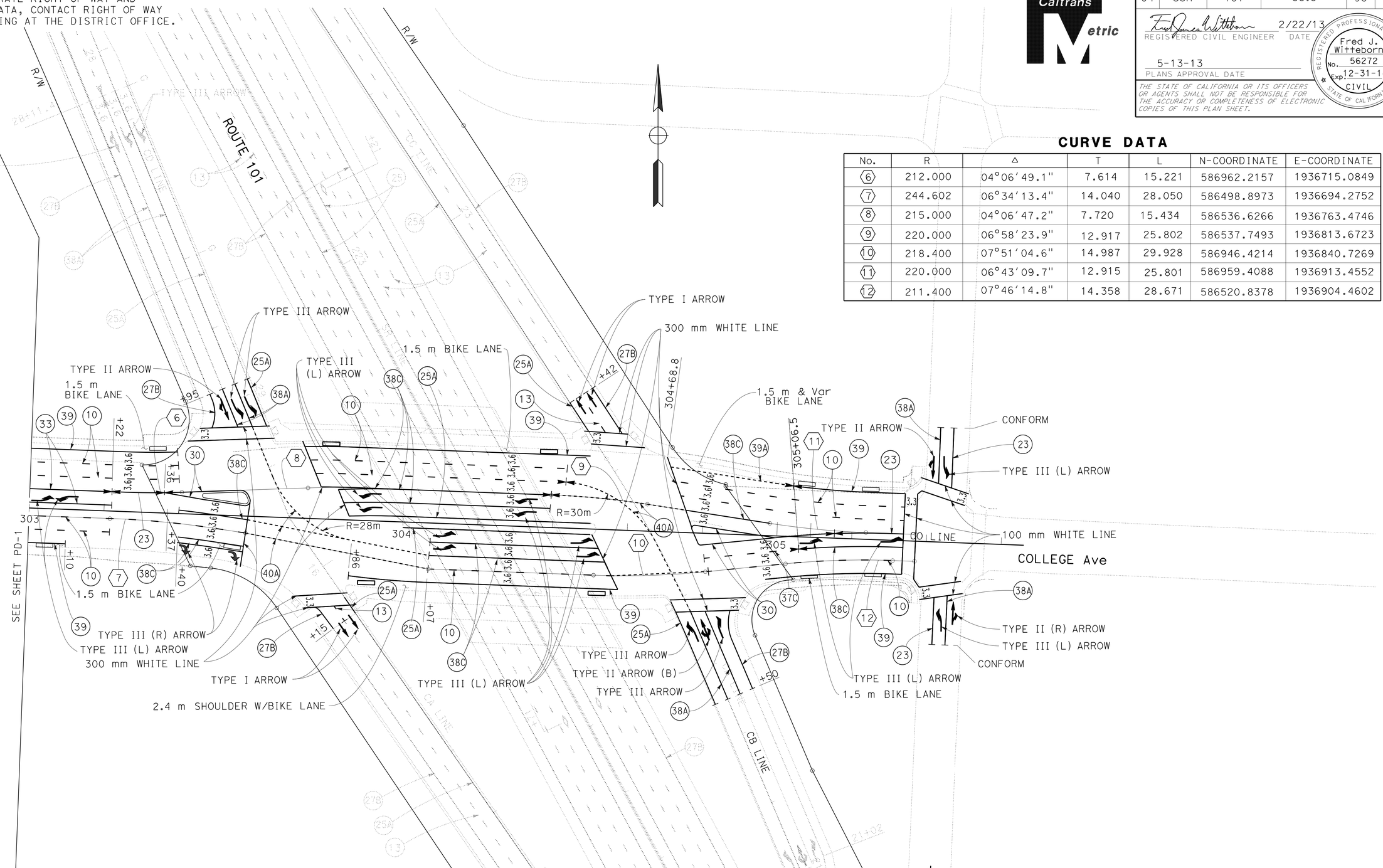

CURVE DATA

No.	R	Δ	T	L	N-COORDINATE	E-COORDINATE
6	212.000	04°06'49.1"	7.614	15.221	586962.2157	1936715.0849
7	244.602	06°34'13.4"	14.040	28.050	586498.8973	1936694.2752
8	215.000	04°06'47.2"	7.720	15.434	586536.6266	1936763.4746
9	220.000	06°58'23.9"	12.917	25.802	586537.7493	1936813.6723
10	218.400	07°51'04.6"	14.987	29.928	586946.4214	1936840.7269
11	220.000	06°43'09.7"	12.915	25.801	586959.4088	1936913.4552
12	211.400	07°46'14.8"	14.358	28.671	586520.8378	1936904.4602

ALL DIMENSIONS ARE IN METERS UNLESS OTHERWISE SHOWN

PAVEMENT DELINEATION PLAN

SCALE 1:500

THIS PLAN ACCURATE FOR PAVEMENT DELINEATION WORK ONLY

FOR NOTES, ABBREVIATIONS AND LEGEND, SEE SHEET PD-1

PD-2

STATE OF CALIFORNIA - DEPARTMENT OF TRANSPORTATION
Caltrans DESIGN

FUNCTIONAL SUPERVISOR: JONATHAN LEE
CALCULATED-DESIGNED BY: FRED J. WITTEBORN
CHECKED BY: JONATHAN LEE
REVISED BY: FJW
DATE REVISED: 2/13/13

LAST REVISION 02-13-13
DATE PLOTTED => 20-MAY-2013
TIME PLOTTED => 06:47

Dist	COUNTY	ROUTE	KILOMETER POST TOTAL PROJECT	SHEET No.	TOTAL SHEETS
04	Son	101	33.3	99	158

REGISTERED CIVIL ENGINEER 2/22/13 DATE

5-13-13
PLANS APPROVAL DATE

REGISTERED PROFESSIONAL ENGINEER Fred J. Witteborn No. 56272 Exp. 12-31-14 CIVIL STATE OF CALIFORNIA

THE STATE OF CALIFORNIA OR ITS OFFICERS OR AGENTS SHALL NOT BE RESPONSIBLE FOR THE ACCURACY OR COMPLETENESS OF ELECTRONIC COPIES OF THIS PLAN SHEET.

Caltrans Metric

TRAFFIC STRIPES, PAVEMENT MARKING AND PAVEMENT MARKERS

SHEET No.	STATION LIMITS	DETAIL No. OR PAVEMENT MARKING	LENGTH	PAVEMENT MARKER					THERMOPLASTIC TRAFFIC STRIPE					THERMOPLASTIC PAVEMENT MARKING				
				NON-REFLECTIVE		RETROREFLECTIVE			100 mm YELLOW	WHITE 100 mm	WHITE 150 mm	150 mm WHITE (BROKEN 2.44-1.22)	WHITE 200 mm	LIMIT LINE DIAGONAL CROSSWALK	ARROW TYPE			BIKE LANE
				TYPE A	TYPE AY	TYPE G	TYPE H	TYPE D							I	II	III	
			m	EA					m					m^2				
PD-1	A† CO 302+03	300 mm WHITE LINE	20											6.0				
	L† CO 302+03 TO 302+49	38C	46	64		8												
	L† CO 302+03 TO 302+60	38C	37	52		7												
	L† CO 302+03 TO 303+00	10	97	40		8												
	L† CO 302+49 TO 303+00	10	51	21		5												
	L† CO 302+49 TO 303+00	39	51								51							
	R† CO 302+03 TO 302+60	23	57		80			18										
	L† CO 302+03 TO 302+40	ARROW TYPE III	3 EA														11.7	
	L† CO 302+60 TO 303+00	33	80		80			18										
	L† CO 302+60 TO 302+90	ARROW TYPE III	2 EA														7.8	
	R† CO 301+97 TO 303+00	10	103	42		8												
	R† CO 302+60 TO 303+00	10	40	18		4												
	R† CO 301+97 TO 303+00	39	103								103							
	A† CO 302+03	BIKE LANE	1 EA															1.02
	A† CO 302+55	BIKE LANE	1 EA															1.02
PD-2	R† CO 303+00 TO 303+10	39	10								10							
	R† CO 303+00 TO 303+22	10	22	5		4												
	R† CO 303+00 TO 303+58	10	58	24		5												
	R† CO 303+40 TO 303+58	38C	36	52		8												
	R† CO 303+58 & 303+40	ARROW TYPE III (R)	2 EA														7.8	
	R† CO 303+05	BIKE LANE	1 EA															1.02
	L† CO 303+35	BIKE LANE	1 EA															1.02
	R† CO 303+58	BIKE LANE	1 EA															1.02
	L† CO 303+00 TO 303+22	33	44		42			10										
	L† CO 303+00 TO 303+15	ARROW TYPE III (L)	2 EA														7.8	
	L† CO 303+00 TO 303+40	10	80	36		8												
	L† CO 303+00 TO 303+40	39	40								40							
	L† & R† CO 303+37 TO 303+58	38C	21	30		4												
	L† CO 303+22 TO 303+36	23	14		20			4										
	L† CO 303+36 TO 303+58	30	56		80			18										
	A† CO 303+58	300 mm WHITE LINE	18											5.4				
	A† CA 16+10	CROSSWALK (300 mm WHITE)	30											9.0				
	R† CA 16+15	ARROW TYPE I	2 EA												4.64			
	R† CA 16+10 TO 16+15	13	5	4		1												
	R† CA 16+08 TO 16+15	27B	7							7								
	CA 16+12 TO 16+15	25A	3				2		3									
		SHEET TOTAL		388	302	70	2	68	3	7	204			20.4	4.64		35.1	5.10

PAVEMENT DELINEATION QUANTITIES

PDQ-1

STATE OF CALIFORNIA - DEPARTMENT OF TRANSPORTATION
Caltrans DESIGN

FUNCTIONAL SUPERVISOR: JONATHAN LEE
CALCULATED-DESIGNED BY: FRED J. WITTEBORN
CHECKED BY: JONATHAN LEE
REVISED BY: FJW
DATE REVISED: 2/13/13

LAST REVISION 02-13-13 | DATE PLOTTED => 20-MAY-2013 | TIME PLOTTED => 06:47

Dist	COUNTY	ROUTE	KILOMETER POST TOTAL PROJECT	SHEET No.	TOTAL SHEETS
04	Son	101	33.3	100	158

REGISTERED CIVIL ENGINEER 2/22/13 DATE

5-13-13
PLANS APPROVAL DATE

REGISTERED PROFESSIONAL ENGINEER Fred J. Witteborn No. 56272 Exp. 12-31-14 CIVIL STATE OF CALIFORNIA

THE STATE OF CALIFORNIA OR ITS OFFICERS OR AGENTS SHALL NOT BE RESPONSIBLE FOR THE ACCURACY OR COMPLETENESS OF ELECTRONIC COPIES OF THIS PLAN SHEET.

Caltrans Metric

TRAFFIC STRIPES, PAVEMENT MARKING AND PAVEMENT MARKERS

SHEET No.	STATION LIMITS	DETAIL No. OR PAVEMENT MARKING	LENGTH	PAVEMENT MARKER					THERMOPLASTIC TRAFFIC STRIPE					THERMOPLASTIC PAVEMENT MARKING				
				NON-REFLECTIVE		RETROREFLECTIVE			100 mm YELLOW	WHITE 100 mm	WHITE 150 mm	150 mm WHITE (BROKEN 2.44-1.22)	WHITE 200 mm	LIMIT LINE DIAGONAL CROSSWALK	ARROW TYPE I	ARROW TYPE II	ARROW TYPE III	BIKE LANE
				TYPE A	TYPE AY	TYPE G	TYPE H	TYPE D										
			m	EA					m					m^2				
PD-2	A† CD 28+95 TO 29+08	38A	13										13					
	R† CD 28+95 TO 29+07	38A	12										12					
	R† CD 28+95 TO 29+06	27B	11							11								
	R† CD 29+00	ARROW TYPE II (R)	1 EA													4.18		
	L† & R† CD 29+00	ARROW TYPE III	2 EA														7.8	
	L† CD 28+95 TO 29+10	25A	15				3		15									
	A† CD 29+10	CROSSWALK (300 mm WHITE LINE)	42											12.6				
PD-2	R† CO 303+58 TO 304+07	40A	98	84														
	A† CD 29+08 TO R† CO 303+86	40A	45	38														
	R† CO 303+86 TO 304+58	39	72								72							
	L† & R† CO 303+86	BIKE LANE	2 EA															2.04
	R† CO 304+07 TO 304+57	10	50	21		4												
	R† CO 304+07 TO 304+55	38C	48	66		8												
	R† CO 304+07 TO 304+53	38C	46	64		8												
	R† CO 304+07	ARROW TYPE III (L)	2 EA														7.8	
	R† CO 304+50	ARROW TYPE III (L)	2 EA														7.8	
	R† CO 304+00 TO 304+50	25A	50				8		50									
	L† & R† CO 304+50	BIKE LANE	2 EA															2.04
	R† CO 304+50	LIMIT LINE (300 mm WHITE)	16											4.8				
	L† CO 303+86	LIMIT LINE (300 mm WHITE)	8											2.4				
	L† CO 303+86 TO 304+50	25A	64				10		64									
	L† CO 303+84 TO 304+40	38C	56	78		8												
	L† CO 303+78 TO 304+44	38C	66	90		10												
	L† CO 303+86	ARROW TYPE III (L)	2 EA														7.8	
	L† CO 304+50	ARROW TYPE III (L)	2 EA														7.8	
	L† CO 303+78	LIMIT LINE (300 mm WHITE)	13											3.9				
	L† CO 303+76 TO 304+44	10	136	96		12												
	L† CO 303+74 TO 304+50	39	76								76							
	L† CO 304+44 TO 304+76.5	40A	32.5	28														
	L† CO 304+44 TO 304+66	40A	26	23														
	L† & R† CO 305+10	BIKE LANE	2 EA															2.04
	L† & R† CO 305+30	BIKE LANE	2 EA															2.04
	R† CO 304+56 TO 304+80	40A	24	18														
		SHEET TOTAL		606		50	21		129	11	148		25	23.7		4.18	39.0	8.16

PAVEMENT DELINEATION QUANTITIES

PDQ-2

STATE OF CALIFORNIA - DEPARTMENT OF TRANSPORTATION
Caltrans DESIGN

FUNCTIONAL SUPERVISOR: JONATHAN LEE
CALCULATED-DESIGNED BY: FRED J. WITTEBORN
CHECKED BY: JONATHAN LEE
REVISED BY: FJW
DATE REVISED: 2/13/13

LAST REVISION 02-13-13 | DATE PLOTTED => 20-MAY-2013 | TIME PLOTTED => 06:47