Dist	COUNTY	ROUTE	POST MILES TOTAL PROJECT	SHEET No.	TOTAL SHEETS
04	Ala	580	R31.7/R31.9	1	86

STATE OF CALIFORNIA

DEPARTMENT OF TRANSPORTATION

ACNHPI-580-1(063)E

PROJECT PLANS FOR CONSTRUCTION ON

STATE HIGHWAY

IN ALAMEDA COUNTY
AT ASHLAND
FROM 0.1 MILE EAST OF 164TH AVENUE UNDERCROSSING
TO 0.2 MILE WEST OF 164TH AVENUE UNDERCROSSING

TO BE SUPPLEMENTED BY STANDARD PLANS DATED 2010

INDEX OF PLANS

SHEET No.	DESCRIPTION
1	TITLE SHEET AND LOCATION MAP
2	TYPICAL CROSS SECTIONS
3 - 4	LAYOUT
5	CONSTRUCTION DETAILS
6 - 7	CONTOUR GRADING
8 - 12	DRAINAGE PLAN, PROFILES, DETAILS & QUANTITIES
13 - 14	SUBSURFACE DRAINS
15 - 16	UTILITY PLAN
17	CONSTRUCTION AREA SIGNS
18 - 23	STAGE CONSTRUCTION AND TRAFFIC HANDLING PLAN AND QUANTITIES
24 - 26	PAVEMENT DELINEATION PLAN AND QUANTITIES
27	SUMMARY OF QUANTITIES
28 - 33	IRRIGATION SPRINKLER SCHEDULE, PLAN, DETAILS AND QUANTITIES
34 - 36	PLANT LIST, PLAN AND QUANTITIES
37 - 39	EROSION CONTROL PLAN AND QUANTITIES
40	ELECTRICAL SERVICE (IRRIGATION)
41 - 77	REVISED STANDARD PLANS
78 - 86	STRUCTURE PLANS

THE STANDARD PLANS LIST APPLICABLE TO THIS CONTRACT IS INCLUDED IN THE NOTICE TO BIDDERS AND SPECIAL PROVISIONS BOOK.

LOCATION MAP

LIMIT OF WORK
242' R+ STA FSC1 20+36.6 (PM R31.8)

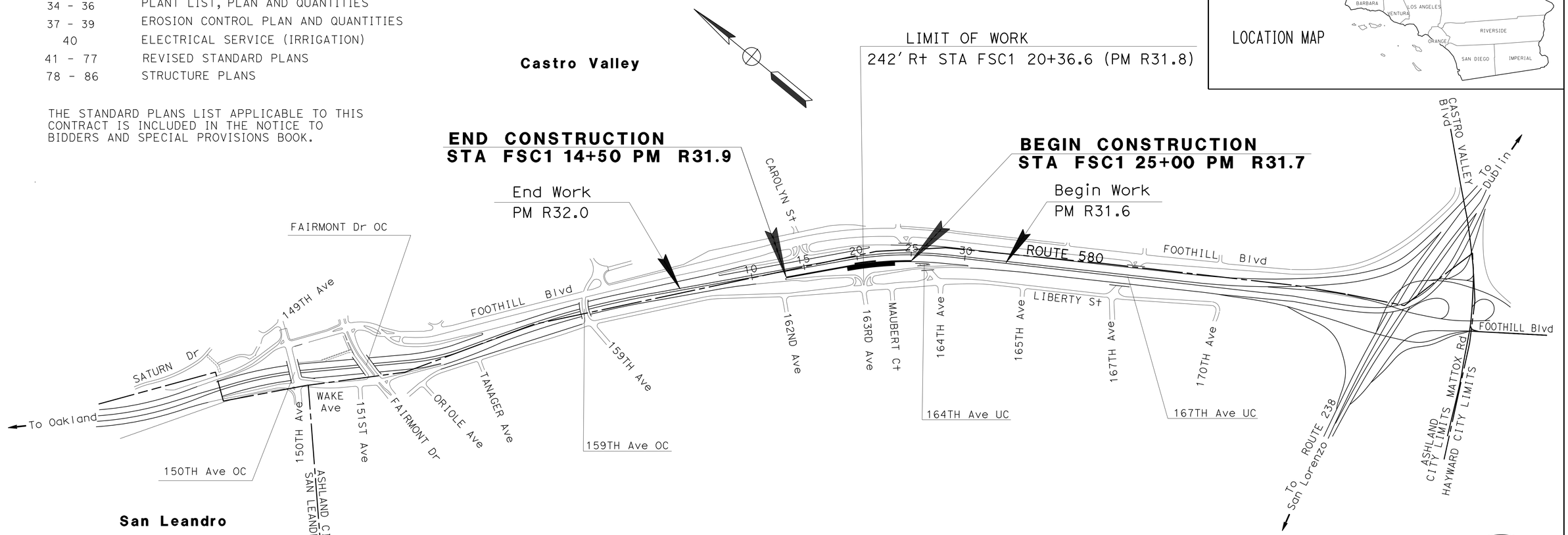

NO SCALE

THE CONTRACTOR SHALL POSSESS THE CLASS (OR CLASSES) OF LICENSE AS SPECIFIED IN THE "NOTICE TO BIDDERS."

PROJECT MANAGER: JAY HAGHPARAST

DESIGN MANAGER: NESTOR P. PEREZ

PROJECT ENGINEER REGISTERED CIVIL ENGINEER — DATE 3/26/14

REGISTERED PROFESSIONAL ENGINEER — V.L. Sibal — No. 49712 — Exp. 9-30-14 — CIVIL — STATE OF CALIFORNIA

April 7, 2014
PLANS APPROVAL DATE

THE STATE OF CALIFORNIA OR ITS OFFICERS OR AGENTS SHALL NOT BE RESPONSIBLE FOR THE ACCURACY OR COMPLETENESS OF SCANNED COPIES OF THIS PLAN SHEET.

CONTRACT No.	04-1SS044
PROJECT ID	0400020870

LAST REVISION 04-04-14 — DATE PLOTTED => 25-JUL-2014 — TIME PLOTTED => 11:50

Dist	COUNTY	ROUTE	POST MILES TOTAL PROJECT	SHEET No.	TOTAL SHEETS
04	Ala	580	R31.7/R31.9	2	86

REGISTERED CIVIL ENGINEER 3/26/14 DATE

4-7-14
PLANS APPROVAL DATE

REGISTERED PROFESSIONAL ENGINEER V.L. Sibal No. 49712 Exp. 9-30-14 CIVIL STATE OF CALIFORNIA

THE STATE OF CALIFORNIA OR ITS OFFICERS OR AGENTS SHALL NOT BE RESPONSIBLE FOR THE ACCURACY OR COMPLETENESS OF SCANNED COPIES OF THIS PLAN SHEET.

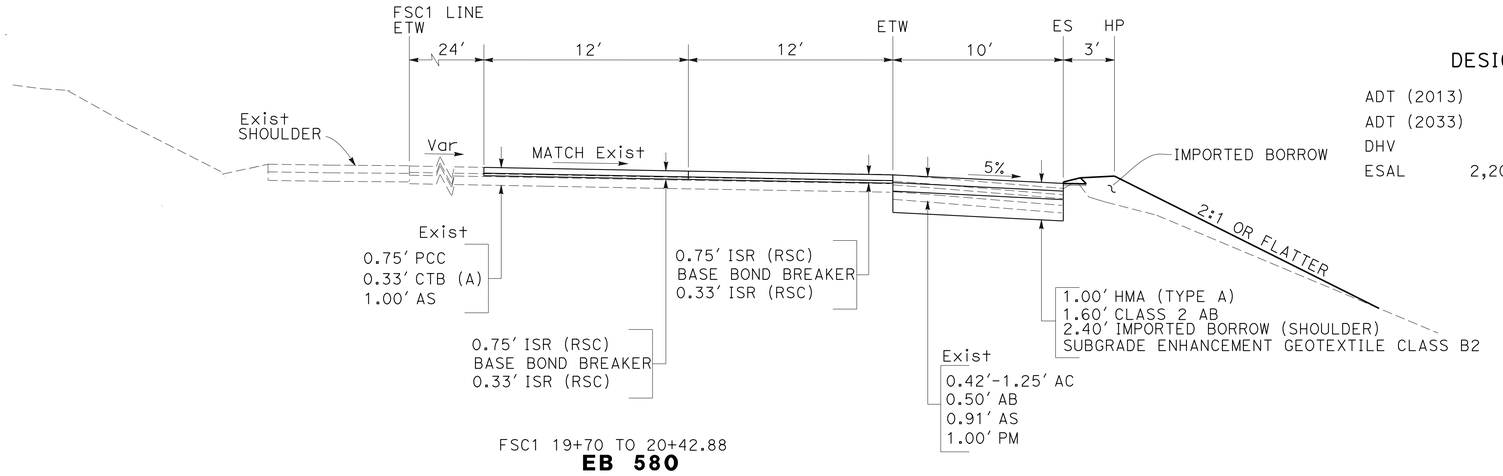

FSC1 19+70 TO 20+42.88
EB 580

DESIGN DESIGNATION

ADT (2013)	77,000	D	56%
ADT (2033)	96,000	T	1.1%
DHV	10,100	V	70 MPH
ESAL	2,206,000	TI_{20}	10

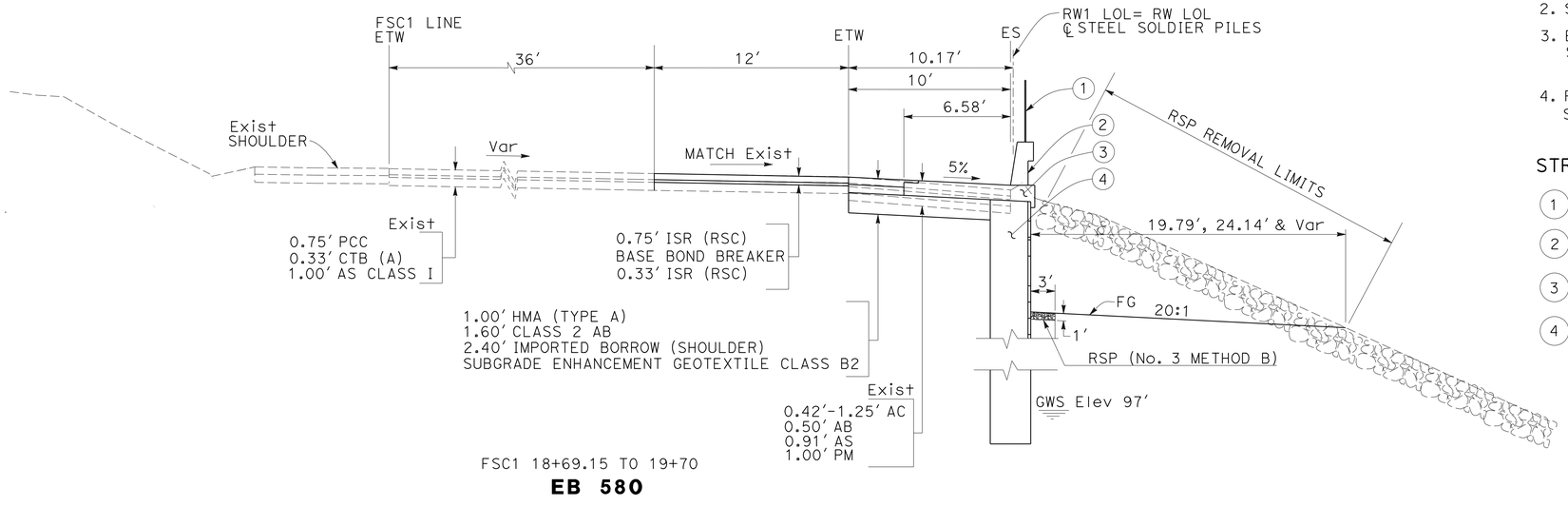

FSC1 18+69.15 TO 19+70
EB 580

ABBREVIATIONS:

GWS GROUND WATER SURFACE
ISR (RSC) INDIVIDUAL SLAB REPLACEMENT (RAPID STRENGTH CONCRETE)

NOTES:

1. DIMENSIONS OF THE PAVEMENT STRUCTURES (STRUCTURAL SECTIONS) ARE SUBJECT TO TOLERANCES SPECIFIED IN THE STANDARD SPECIFICATIONS.
2. SUPERELEVATIONS AS SHOWN.
3. EXACT LOCATIONS AND TYPES OF HMA DIKE AND MGS ARE SHOWN ON THE LAYOUT AND IN THE SUMMARY OF QUANTITIES.
4. FOR CONSTRUCTING FINAL LIFT 0.20′ HMA (TYPE A), SEE STAGE CONSTRUCTION AND TRAFFIC HANDLING PLAN.

STRUCTURAL ITEMS (SEE STRUCTURE PLANS)

1. CHAIN LINK RAILING TYPE 7
2. CONCRETE BARRIER TYPE 732
3. STRUCTURAL CONCRETE BARRIER SLAB
4. STEEL SOLDIER PILE

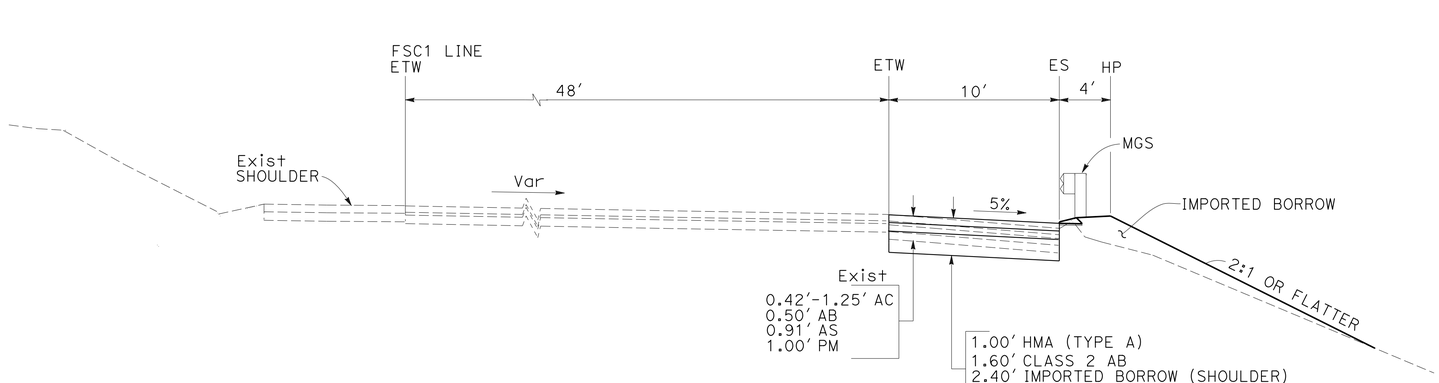

FSC1 14+50 TO 18+69.15
FSC1 20+42.88 TO 24+50
EB 580

TYPICAL CROSS SECTIONS

NO SCALE

X-1

STATE OF CALIFORNIA - DEPARTMENT OF TRANSPORTATION
Caltrans® DESIGN
FUNCTIONAL SUPERVISOR: NESTOR P. PEREZ
CALCULATED-DESIGNED BY: VALENTIN L. SIBAL
CHECKED BY: LIN KYAIN
REVISED BY: VS
DATE REVISED: 3/26/14

LAST REVISION 04-04-14
DATE PLOTTED => 25-JUL-2014
TIME PLOTTED => 11:50

Dist	COUNTY	ROUTE	POST MILES TOTAL PROJECT	SHEET No.	TOTAL SHEETS
04	Ala	580	R31.7/R31.9	3	86

REGISTERED CIVIL ENGINEER 3/26/14 DATE

4-7-14
PLANS APPROVAL DATE

REGISTERED PROFESSIONAL ENGINEER V.L. Sibal No. 49712 Exp. 9-30-14 CIVIL STATE OF CALIFORNIA

THE STATE OF CALIFORNIA OR ITS OFFICERS OR AGENTS SHALL NOT BE RESPONSIBLE FOR THE ACCURACY OR COMPLETENESS OF SCANNED COPIES OF THIS PLAN SHEET.

NOTE:

FOR ACCURATE RIGHT OF WAY DATA, CONTACT RIGHT OF WAY ENGINEERING AT THE DISTRICT OFFICE.

NOTE:

1. COORDINATE VALUES SHOWN ARE CCS83, ZONE 3. VERTICAL DATUM IS NAVD 1988.

LEGEND:

- INDIVIDUAL SLAB REPLACEMENT (RSC)
- REMOVE RSP
- MIDWEST GUARDRAIL SYSTEM (MGS)
- REMOVE TREE
- —ESA—×——×— TEMPORARY FENCE (TYPE ESA)

ABBREVIATION:

RSC RAPID STRENGTH CONCRETE

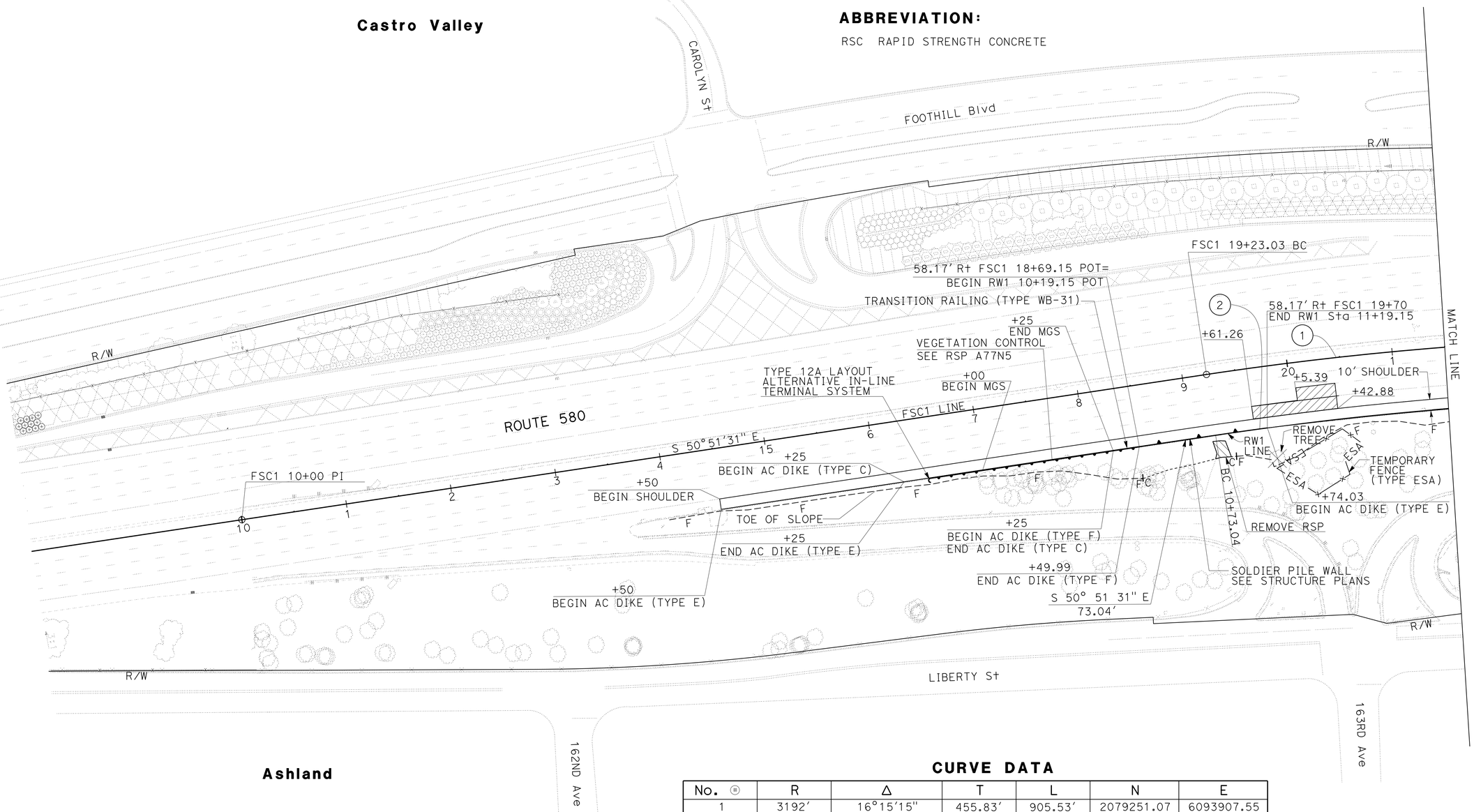

CURVE DATA

No. ⊕	R	Δ	T	L	N	E
1	3192'	16°15'15"	455.83'	905.53'	2079251.07	6093907.55
2	3134'	00°54'16"	24.73'	49.46'	2079251.07	6093907.55

LAYOUT
SCALE: 1" = 50'

L-1

STATE OF CALIFORNIA - DEPARTMENT OF TRANSPORTATION
Caltrans
DESIGN

FUNCTIONAL SUPERVISOR: NESTOR P. PEREZ
CALCULATED-DESIGNED BY: VALENTIN L. SIBAL
CHECKED BY: LIN KYAIN
REVISED BY: VS
DATE REVISED: 3/26/14

LAST REVISION 04-04-14
DATE PLOTTED => 25-JUL-2014
TIME PLOTTED => 11:50

Dist	COUNTY	ROUTE	POST MILES TOTAL PROJECT	SHEET No.	TOTAL SHEETS
04	Ala	580	R31.7/R31.9	4	86

REGISTERED CIVIL ENGINEER 3/26/14 DATE

4-7-14
PLANS APPROVAL DATE

REGISTERED PROFESSIONAL ENGINEER V.L. Sibal No. 49712 Exp. 9-30-14 CIVIL STATE OF CALIFORNIA

THE STATE OF CALIFORNIA OR ITS OFFICERS OR AGENTS SHALL NOT BE RESPONSIBLE FOR THE ACCURACY OR COMPLETENESS OF SCANNED COPIES OF THIS PLAN SHEET.

NOTE:

FOR ACCURATE RIGHT OF WAY DATA, CONTACT RIGHT OF WAY ENGINEERING AT THE DISTRICT OFFICE.

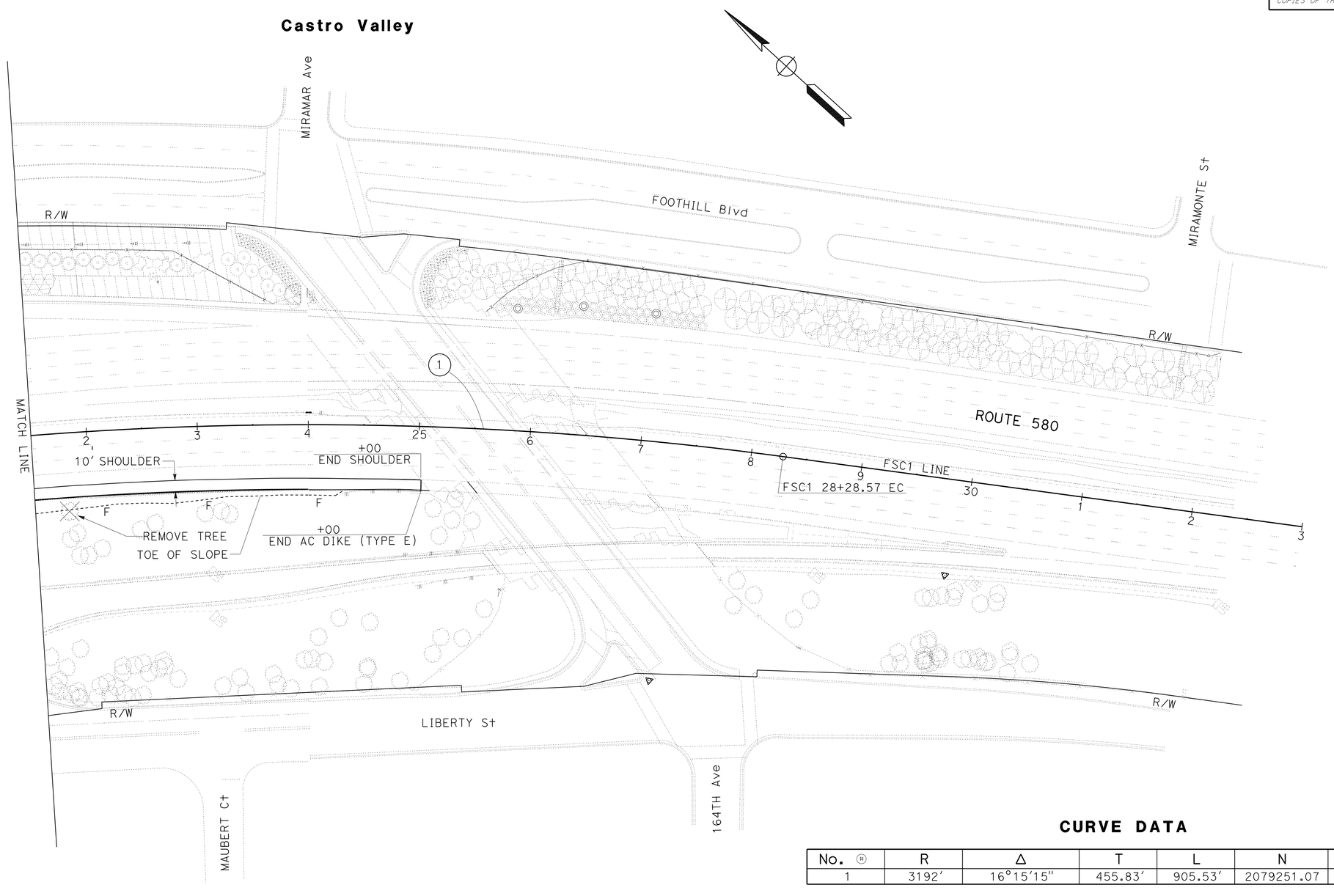

CURVE DATA

No. ⊕	R	Δ	T	L	N	E
1	3192′	16°15′15″	455.83′	905.53′	2079251.07	6093907.55

FOR NOTES, ABBREVIATIONS AND LEGEND, SEE SHEET L-1

LAYOUT

SCALE: 1" = 50′

L-2

STATE OF CALIFORNIA - DEPARTMENT OF TRANSPORTATION

Caltrans

DESIGN

FUNCTIONAL SUPERVISOR: NESTOR PEREZ

CALCULATED-DESIGNED BY: VALENTIN L. SIBAL

CHECKED BY: LIN KYAIN

REVISED BY: VS

DATE REVISED: 3/26/14

LAST REVISION: 04-04-14

DATE PLOTTED => 25-JUL-2014

TIME PLOTTED => 11:50

Dist	COUNTY	ROUTE	POST MILES TOTAL PROJECT	SHEET No.	TOTAL SHEETS
04	Ala	580	R31.7/R31.9	5	86

REGISTERED CIVIL ENGINEER 3/26/14 DATE

4-7-14
PLANS APPROVAL DATE

REGISTERED PROFESSIONAL ENGINEER V.L. Sibal No. 49712 Exp. 9-30-14 CIVIL STATE OF CALIFORNIA

THE STATE OF CALIFORNIA OR ITS OFFICERS OR AGENTS SHALL NOT BE RESPONSIBLE FOR THE ACCURACY OR COMPLETENESS OF SCANNED COPIES OF THIS PLAN SHEET.

NOTE:

1. USE 15'-7½" LENGTH RAIL.

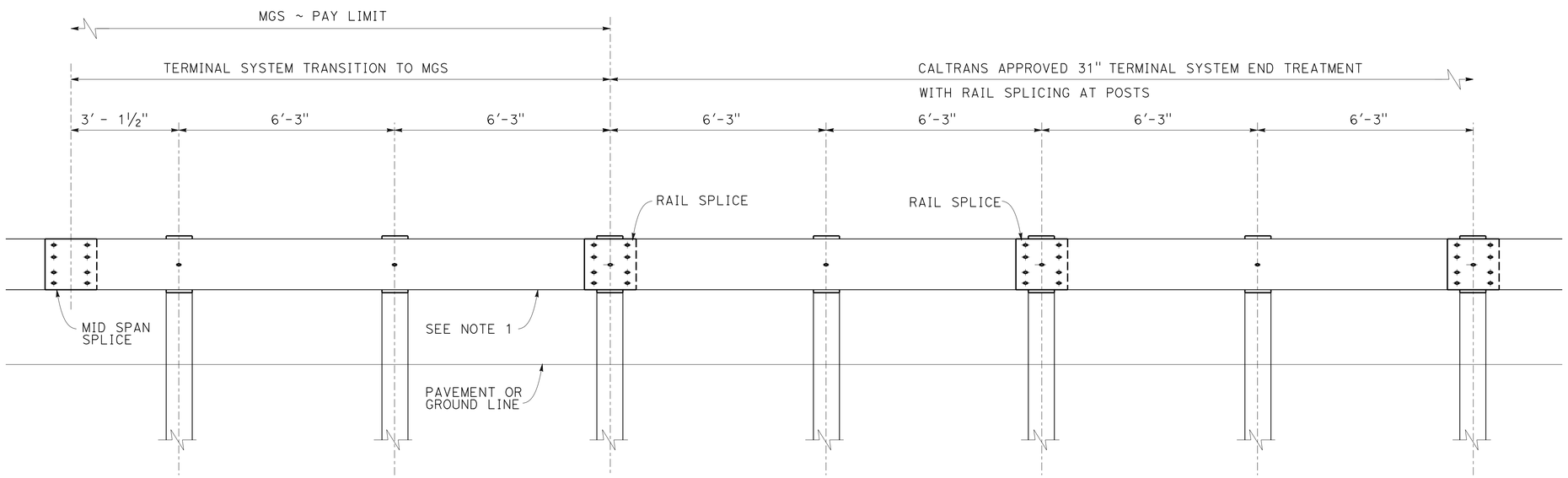

TRANSITION DETAIL FOR 31" TERMINAL SYSTEM END TREATMENT WITH RAIL SPLICING AT POSTS TO MIDWEST GUARDRAIL SYSTEM

CONSTRUCTION DETAILS

NO SCALE

C-1

STATE OF CALIFORNIA - DEPARTMENT OF TRANSPORTATION
Caltrans
DESIGN

FUNCTIONAL SUPERVISOR: NESTOR P. PEREZ
CALCULATED-DESIGNED BY: VALENTIN L. SIBAL
CHECKED BY: LIN KYAIN
REVISED BY: VS
DATE REVISED: 3/26/14

LAST REVISION 04-04-14 | DATE PLOTTED => 25-JUL-2014 | TIME PLOTTED => 11:50

Dist	COUNTY	ROUTE	POST MILES TOTAL PROJECT	SHEET No.	TOTAL SHEETS
04	Ala	580	R31.7/R31.9	6	86

REGISTERED CIVIL ENGINEER 3/26/14 DATE

4-7-14
PLANS APPROVAL DATE

REGISTERED PROFESSIONAL ENGINEER
V.L. Sibal
No. 49712
Exp. 9-30-14
CIVIL
STATE OF CALIFORNIA

THE STATE OF CALIFORNIA OR ITS OFFICERS OR AGENTS SHALL NOT BE RESPONSIBLE FOR THE ACCURACY OR COMPLETENESS OF SCANNED COPIES OF THIS PLAN SHEET.

NOTE:

FOR ACCURATE RIGHT OF WAY DATA, CONTACT RIGHT OF WAY ENGINEERING AT THE DISTRICT OFFICE.

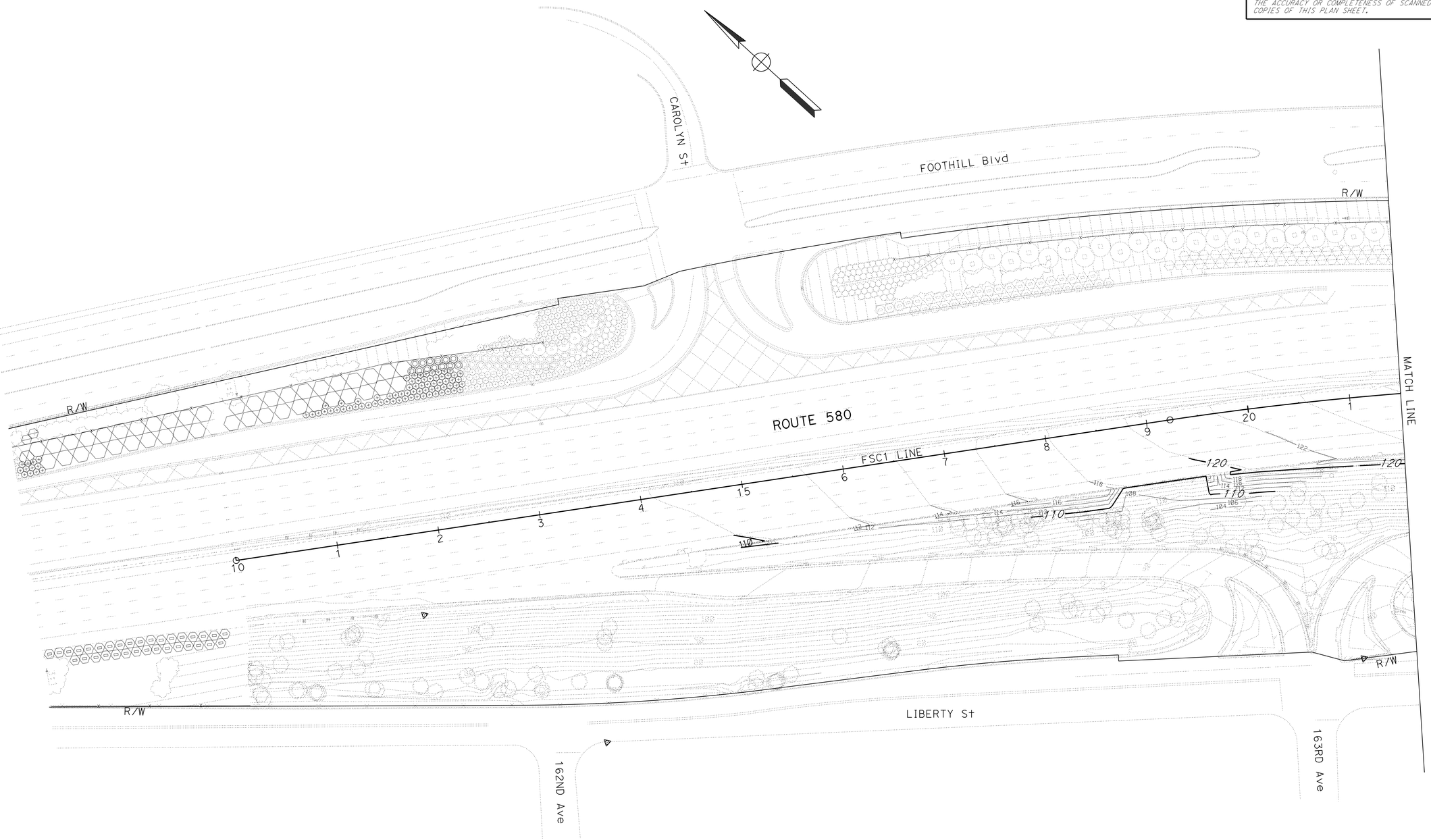

CONTOUR GRADING

SCALE: 1" = 50'

APPROVED FOR CONTOUR GRADING WORK ONLY

G-1

STATE OF CALIFORNIA - DEPARTMENT OF TRANSPORTATION
Caltrans
DESIGN

FUNCTIONAL SUPERVISOR: NESTOR P. PEREZ
CALCULATED-DESIGNED BY: VALENTIN L. SIBAL
CHECKED BY: LIN KYAIN
REVISED BY: VS
DATE REVISED: 3/26/14

LAST REVISION 04-04-14
DATE PLOTTED => 25-JUL-2014
TIME PLOTTED => 11:50

Dist	COUNTY	ROUTE	POST MILES TOTAL PROJECT	SHEET No.	TOTAL SHEETS
04	Ala	580	R31.7/31.9	7	86

REGISTERED CIVIL ENGINEER DATE 3/26/14

4-7-14
PLANS APPROVAL DATE

REGISTERED PROFESSIONAL ENGINEER V.L. Sibal No. 49712 Exp. 9-30-14 CIVIL STATE OF CALIFORNIA

THE STATE OF CALIFORNIA OR ITS OFFICERS OR AGENTS SHALL NOT BE RESPONSIBLE FOR THE ACCURACY OR COMPLETENESS OF SCANNED COPIES OF THIS PLAN SHEET.

NOTE:

FOR ACCURATE RIGHT OF WAY DATA, CONTACT RIGHT OF WAY ENGINEERING AT THE DISTRICT OFFICE.

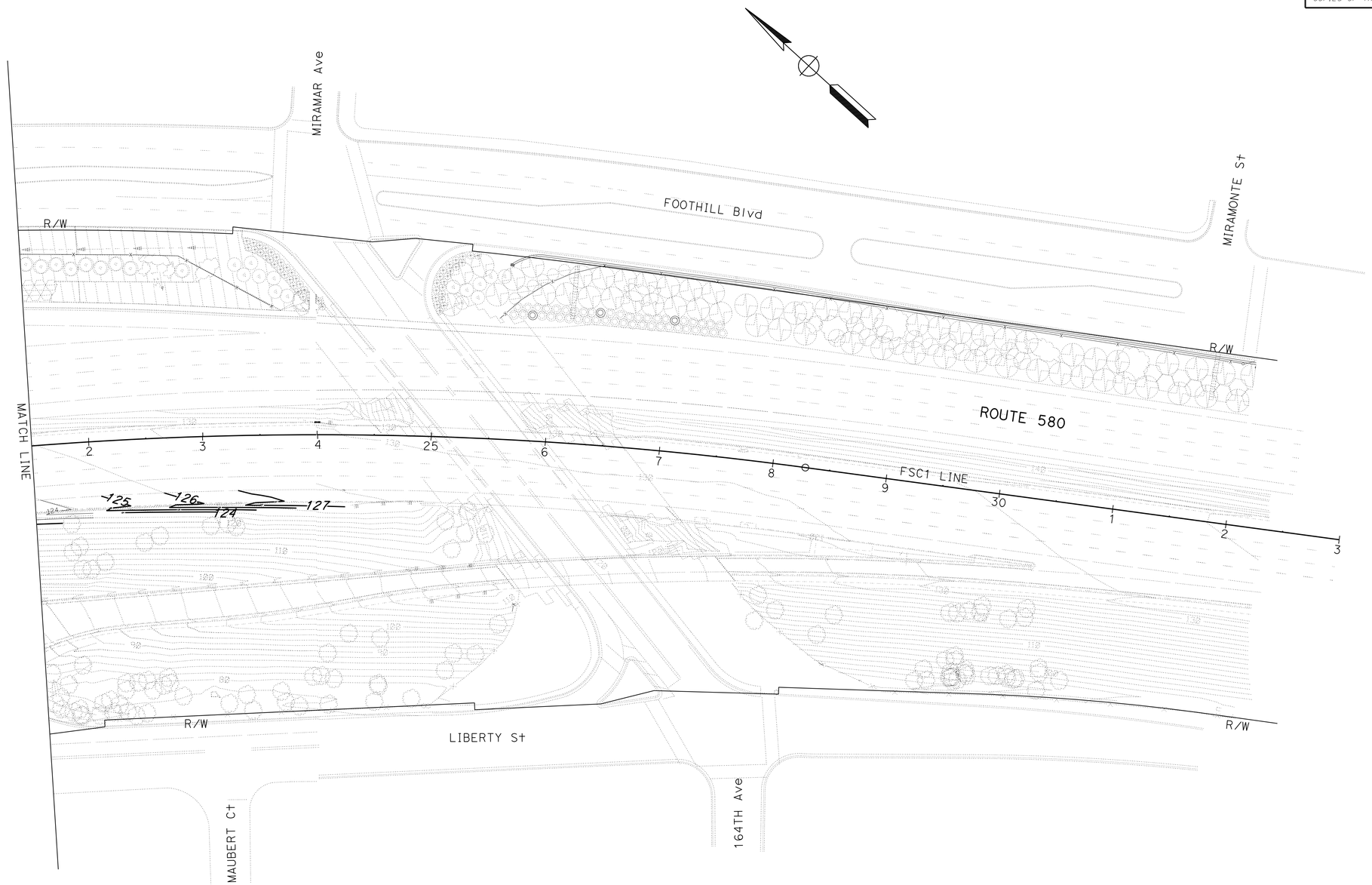

APPROVED FOR CONTOUR GRADING WORK ONLY

FOR NOTES, ABBREVIATIONS AND LEGEND, SEE SHEET G-1

CONTOUR GRADING

SCALE: 1" = 50'

G-2

STATE OF CALIFORNIA - DEPARTMENT OF TRANSPORTATION

Caltrans

DESIGN

FUNCTIONAL SUPERVISOR: NESTOR P. PEREZ

CALCULATED-DESIGNED BY: VALENTIN L. SIBAL

CHECKED BY: LIN KYAIN

REVISED BY: VS

DATE REVISED: 3/26/14

LAST REVISION 04-04-14 | DATE PLOTTED => 25-JUL-2014 | TIME PLOTTED => 11:50

Dist	COUNTY	ROUTE	POST MILES TOTAL PROJECT	SHEET No.	TOTAL SHEETS
04	Ala	580	R31.7/R31.9	8	86

Mark R. Morancy 3/25/14
REGISTERED CIVIL ENGINEER DATE

4-7-14
PLANS APPROVAL DATE

REGISTERED PROFESSIONAL ENGINEER
Mark R. Morancy
No. 55907
Exp. 12-31-14
CIVIL
STATE OF CALIFORNIA

THE STATE OF CALIFORNIA OR ITS OFFICERS OR AGENTS SHALL NOT BE RESPONSIBLE FOR THE ACCURACY OR COMPLETENESS OF SCANNED COPIES OF THIS PLAN SHEET.

NOTE:

FOR ACCURATE RIGHT OF WAY DATA, CONTACT RIGHT OF WAY ENGINEERING AT THE DISTRICT OFFICE.

NOTES:

1. VERTICAL DATUM IS NGVD 1988.
2. LOCATIONS OF EXISTING DRAINAGE FACILITIES ARE APPROXIMATE. VERIFY LOCATION AND ELEVATION OF EXISTING DRAINAGE FACILITIES PRIOR TO MODIFICATION.
3. TOP OF GRATE ELEVATIONS, STATION AND OFFSET TIES TO DRAINAGE STRUCTURES ARE REFERENCED AS SHOWN ON SHEET DD-1.

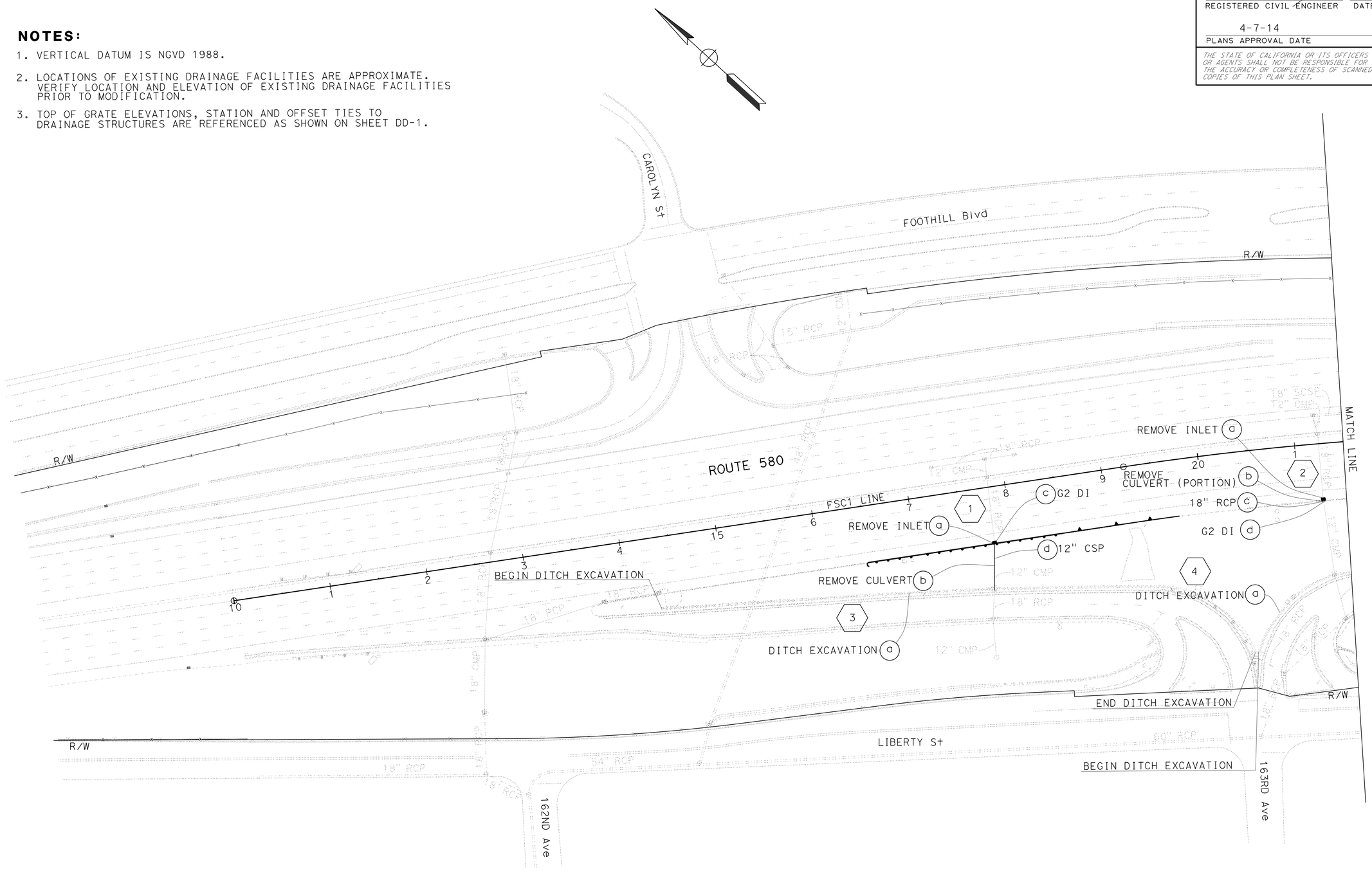

DRAINAGE PLAN

SCALE: 1" = 50'

APPROVED FOR DRAINAGE WORK ONLY

D-1

REVISED BY	DATE REVISED
MM	3/25/14

CALCULATED-DESIGNED BY: VALENTIN L. SIBAL
CHECKED BY: CRAIG TOMIMATSU
FUNCTIONAL SUPERVISOR: CRAIG TOMIMATSU

STATE OF CALIFORNIA - DEPARTMENT OF TRANSPORTATION
Caltrans
HYDRAULICS

LAST REVISION 04-04-14 | DATE PLOTTED => 25-JUL-2014 | TIME PLOTTED => 11:50

Dist	COUNTY	ROUTE	POST MILES TOTAL PROJECT	SHEET No.	TOTAL SHEETS
04	Ala	580	R31.7/R31.9	9	86

Mark R. Morancy 3/25/14
REGISTERED CIVIL ENGINEER DATE

4-7-14
PLANS APPROVAL DATE

REGISTERED PROFESSIONAL ENGINEER
Mark R. Morancy
No. 55907
Exp. 12-31-14
CIVIL
STATE OF CALIFORNIA

THE STATE OF CALIFORNIA OR ITS OFFICERS OR AGENTS SHALL NOT BE RESPONSIBLE FOR THE ACCURACY OR COMPLETENESS OF SCANNED COPIES OF THIS PLAN SHEET.

NOTE:

FOR ACCURATE RIGHT OF WAY DATA, CONTACT
RIGHT OF WAY ENGINEERING AT THE DISTRICT OFFICE.

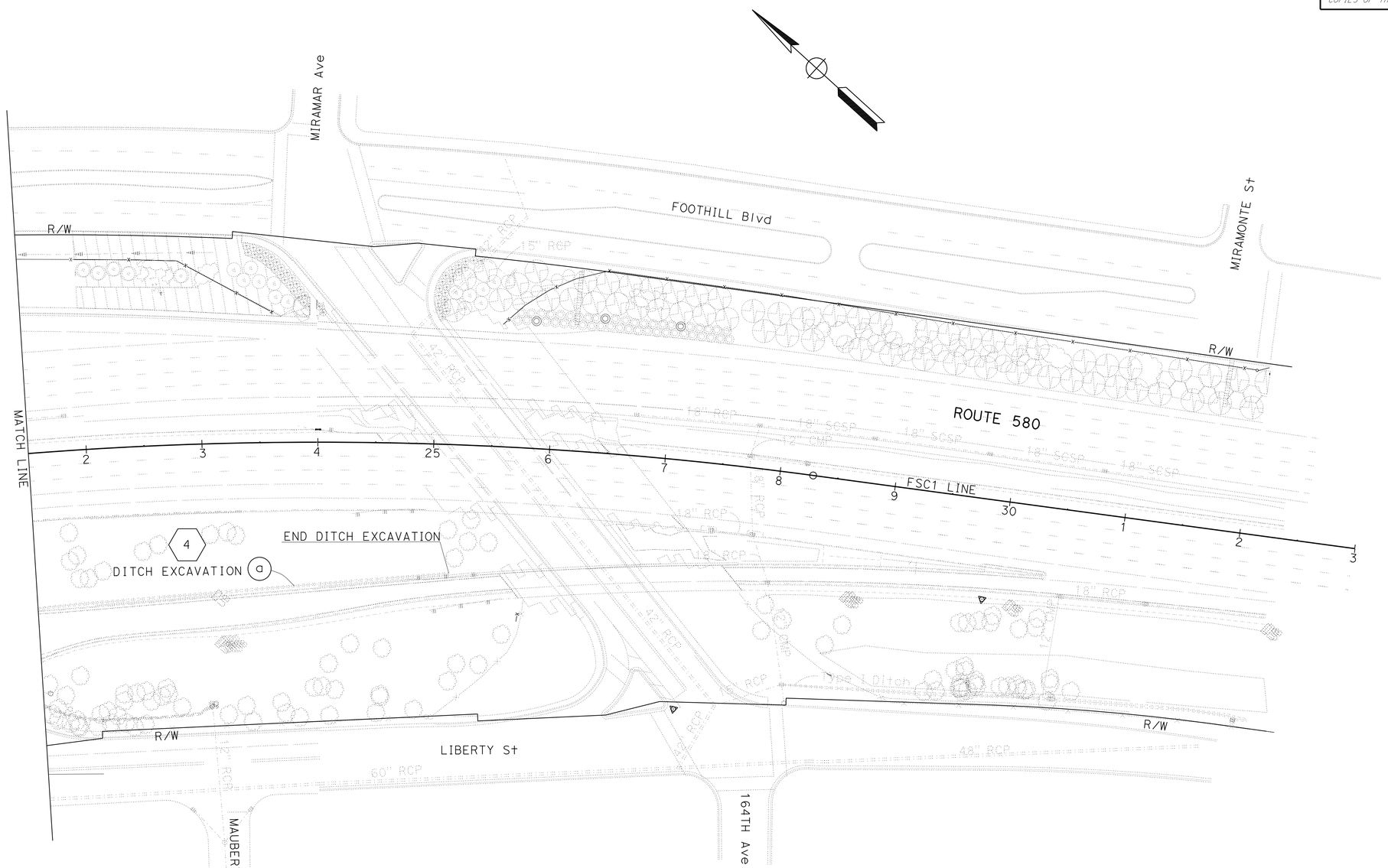

APPROVED FOR DRAINAGE WORK ONLY

FOR NOTES, ABBREVIATIONS AND LEGEND, SEE SHEET D-1

DRAINAGE PLAN

SCALE: 1" = 50'

D-2

REVISED BY	MM
DATE REVISED	3/25/14
CALCULATED-DESIGNED BY	MARK R. MORANCY
CHECKED BY	CRAIG TOMIMATSU
FUNCTIONAL SUPERVISOR	CRAIG TOMIMATSU

STATE OF CALIFORNIA - DEPARTMENT OF TRANSPORTATION
Caltrans
HYDRAULICS

LAST REVISION 04-04-14 | DATE PLOTTED => 25-JUL-2014 | TIME PLOTTED => 11:50

Dist	COUNTY	ROUTE	POST MILES TOTAL PROJECT	SHEET No.	TOTAL SHEETS
04	Ala	580	R31.7/R31.9	10	86

REGISTERED CIVIL ENGINEER 3/26/14 DATE

4-7-14
PLANS APPROVAL DATE

REGISTERED PROFESSIONAL ENGINEER V.L. Sibal No. 49712 Exp. 9-30-14 CIVIL STATE OF CALIFORNIA

THE STATE OF CALIFORNIA OR ITS OFFICERS OR AGENTS SHALL NOT BE RESPONSIBLE FOR THE ACCURACY OR COMPLETENESS OF SCANNED COPIES OF THIS PLAN SHEET.

ABBREVIATION:

TG TOP OF GRATE

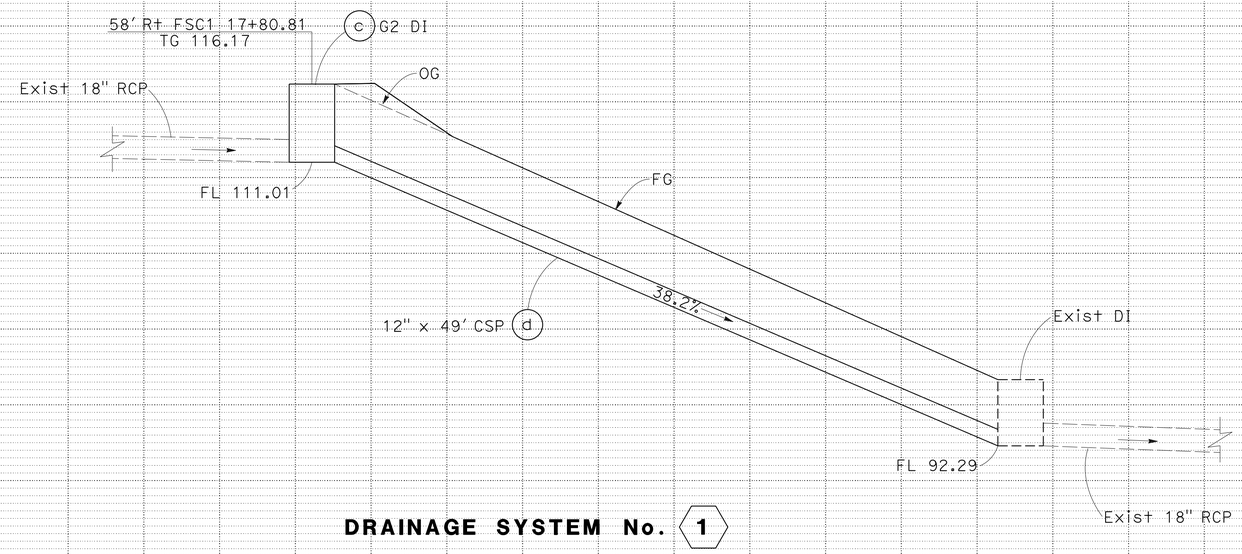

DRAINAGE SYSTEM No. 1

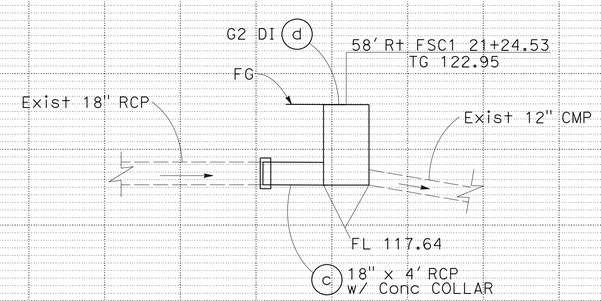

DRAINAGE SYSTEM No. 2

DRAINAGE PROFILES

SCALE: HORIZ 1" = 10'
VERT 1" = 10'

DP-1

STATE OF CALIFORNIA - DEPARTMENT OF TRANSPORTATION
Caltrans® DESIGN

FUNCTIONAL SUPERVISOR: NESTOR P. PEREZ
CALCULATED-DESIGNED BY: VALENTIN L. SIBAL
CHECKED BY: LIN KYAIN
REVISED BY: VS
DATE REVISED: 3/26/14

LAST REVISION 04-04-14
DATE PLOTTED => 25-JUL-2014
TIME PLOTTED => 11:50

Dist	COUNTY	ROUTE	POST MILES TOTAL PROJECT	SHEET No.	TOTAL SHEETS
04	Ala	580	R31.7/R31.9	11	86

REGISTERED CIVIL ENGINEER 3/25/14 DATE

4-7-14
PLANS APPROVAL DATE

REGISTERED PROFESSIONAL ENGINEER Mark R. Morancy No. 55907 Exp. 12-31-14 CIVIL STATE OF CALIFORNIA

THE STATE OF CALIFORNIA OR ITS OFFICERS OR AGENTS SHALL NOT BE RESPONSIBLE FOR THE ACCURACY OR COMPLETENESS OF SCANNED COPIES OF THIS PLAN SHEET.

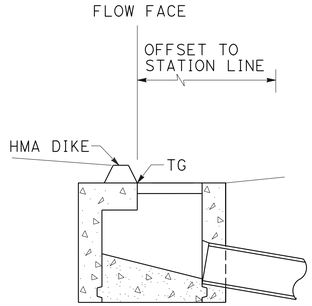

SECTION A-A

NOTES:

1. FOR INFORMATION NOT SHOWN, SEE STANDARD PLAN D73 THRU D74B SHEETS.
2. ORIENTATION OF TYPE G1 INLETS SIMILAR.

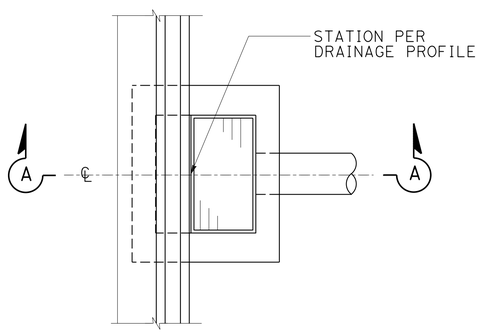

PLAN

INLET ADJACENT TO HMA DIKE

NOTES:

1. W = 1'-6" WHERE D2 ≤ 2'-0"
   W = 2'-6" WHERE 2'-0" < D2
2. SQUARE OR ROUND COLLAR OPTIONAL.

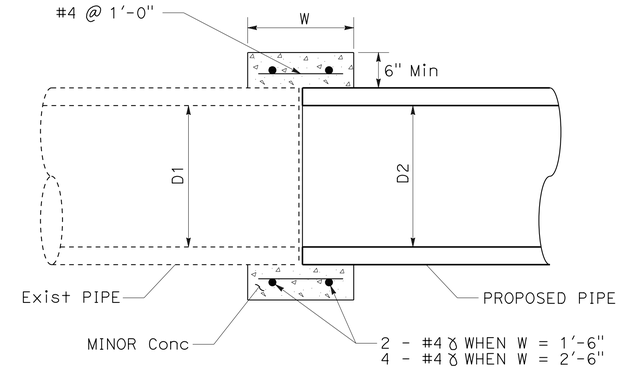

CONCRETE COLLAR

2 c

LEGEND:

DITCH EXCAVATION

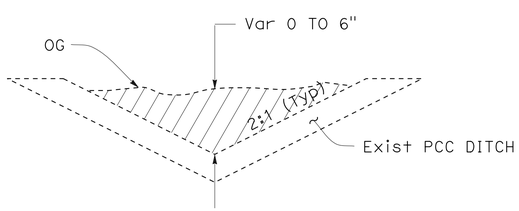

ELEVATION

DITCH EXCAVATION

3 a 4 a

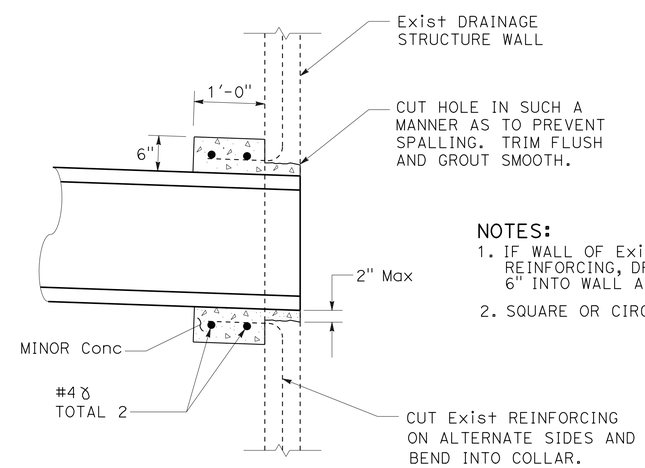

NOTES:

1. IF WALL OF Exist DRAINAGE STRUCTURE HAS NO REINFORCING, DRILL AND BOND DOWELS, 1' ON CENTER, 6" INTO WALL AND BEND INTO COLLAR.
2. SQUARE OR CIRCULAR COLLAR OPTIONAL.

PIPE CONNECTION TO EXISTING DRAINAGE STRUCTURE

1 d

DRAINAGE DETAILS

NO SCALE

DD-1

REVISED BY	MM
DATE REVISED	3/25/14
MARK R. MORANCY	
CRAIG TOMIMATSU	
CALCULATED-DESIGNED BY	
CHECKED BY	
FUNCTIONAL SUPERVISOR	CRAIG TOMIMATSU

STATE OF CALIFORNIA - DEPARTMENT OF TRANSPORTATION
Caltrans
HYDRAULICS

LAST REVISION 04-04-14
DATE PLOTTED => 25-JUL-2014
TIME PLOTTED => 11:50

Dist	COUNTY	ROUTE	POST MILES TOTAL PROJECT	SHEET No.	TOTAL SHEETS
04	Ala	580	R31.7/31.9	12	86

REGISTERED CIVIL ENGINEER 3/26/14 DATE

4-7-14
PLANS APPROVAL DATE

REGISTERED PROFESSIONAL ENGINEER V.L. Sibal No. 49712 Exp. 9-30-14 CIVIL STATE OF CALIFORNIA

THE STATE OF CALIFORNIA OR ITS OFFICERS OR AGENTS SHALL NOT BE RESPONSIBLE FOR THE ACCURACY OR COMPLETENESS OF SCANNED COPIES OF THIS PLAN SHEET.

ABBREVIATIONS:

D DOWNDRAIN TYPE JOINT
S STANDARD TYPE JOINT

DRAINAGE QUANTITIES

DRAINAGE SYSTEM No. ⬡	DRAINAGE UNIT ◯	MINOR CONCRETE (MINOR STRUCTURE)	MISCELLANEOUS IRON AND STEEL	REMOVE CULVERT	REMOVE INLET	18" RCP	12" CSP	24-12 FRAME & GRATE [N]	DITCH EXCAVATION	HEIGHT OF INLET [N]	MAXIMUM COVER [N]	PIPE JOINT CLASSIFICATION [N]	DESCRIPTION	STATION	DRAINAGE PLAN SHEET No.	DRAINAGE SYSTEM No. ⬡	DRAINAGE UNIT ◯
		CY	LB	FT	EA	FT	FT	EA	CY	FT	FT						
1	a				1								REMOVE INLET		D-1	1	a
	b			49									REMOVE CULVERT				b
	c	1.85	326					1		5.16			G2 DI	58' Rt FSC1 17+80.81			c
	d						49				4.7	D	12" CSP (.064" THICK)				d
2	a				1								REMOVE INLET		D-1	2	a
	b			4									REMOVE CULVERT (PORTION)				b
	c					4					3.8	S	18" RCP w/ Conc COLLAR				c
	d	1.90	326					1		5.31			G2 DI	58' Rt FSC1 21+24.53			d
3	a								11.7				DITCH EXCAVATION		D-1	3	a
4	a								9.20				DITCH EXCAVATION		D-1 D-2	4	a
GRAND TOTAL		3.75	652	53	2	4	49	2	20.9								

[N] NOT A SEPARATE PAY ITEM, FOR INFORMATION ONLY.

VALENTIN L. SIBAL — REVISED BY — VS
LIN KYAIN — DATE REVISED — 3/26/14
CALCULATED-DESIGNED BY
CHECKED BY
FUNCTIONAL SUPERVISOR — NESTOR P. PEREZ

STATE OF CALIFORNIA - DEPARTMENT OF TRANSPORTATION
Caltrans DESIGN

LAST REVISION 04-04-14 — DATE PLOTTED => 25-JUL-2014 TIME PLOTTED => 11:50

Dist	COUNTY	ROUTE	POST MILES TOTAL PROJECT	SHEET No.	TOTAL SHEETS
04	Ala	580	R31.7/31.9	13	86

REGISTERED CIVIL ENGINEER 3/26/14 DATE

4-7-14
PLANS APPROVAL DATE

REGISTERED PROFESSIONAL ENGINEER V.L. Sibal No. 49712 Exp. 9-30-14 CIVIL STATE OF CALIFORNIA

THE STATE OF CALIFORNIA OR ITS OFFICERS OR AGENTS SHALL NOT BE RESPONSIBLE FOR THE ACCURACY OR COMPLETENESS OF SCANNED COPIES OF THIS PLAN SHEET.

NOTE:

FOR ACCURATE RIGHT OF WAY DATA, CONTACT RIGHT OF WAY ENGINEERING AT THE DISTRICT OFFICE.

LEGEND:

HORIZONTAL DRAIN

Exist HORIZONTAL DRAIN

NOTE:

1. FOR HORIZONTAL DRAIN DETAILS, SEE STRUCTURAL PLANS.

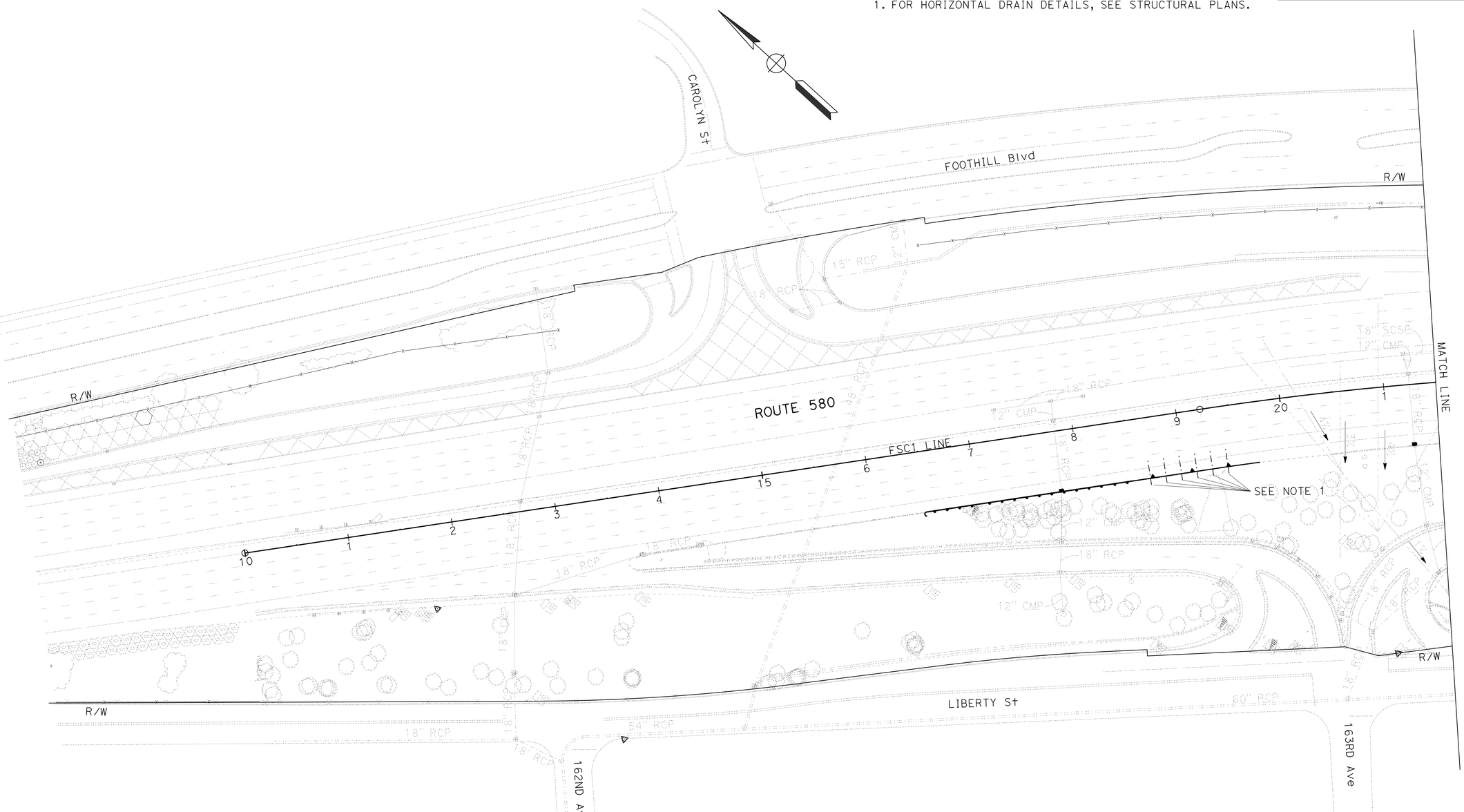

SUBSURFACE DRAINS
HORIZONTAL DRAIN
SCALE: 1" = 50'

APPROVED FOR HORIZONTAL DRAIN WORK ONLY

SB-1

STATE OF CALIFORNIA - DEPARTMENT OF TRANSPORTATION
Caltrans
DESIGN

FUNCTIONAL SUPERVISOR: NESTOR P. PEREZ
CALCULATED-DESIGNED BY: VALENTIN L. SIBAL
CHECKED BY: LIN KYAIN
REVISED BY: VS
DATE REVISED: 3/26/14

LAST REVISION 04-04-14
DATE PLOTTED => 25-JUL-2014
TIME PLOTTED => 11:50

BORDER LAST REVISED 7/2/2010
USERNAME => s123043
DGN FILE => 0400020870ie001.dgn
RELATIVE BORDER SCALE IS IN INCHES 0 1 2 3
UNIT 0733
PROJECT NUMBER & PHASE 04000208701

Dist	COUNTY	ROUTE	POST MILES TOTAL PROJECT	SHEET No.	TOTAL SHEETS
04	Ala	580	R31.7/R31.9	14	86

REGISTERED CIVIL ENGINEER 3/26/14 DATE

4-7-14
PLANS APPROVAL DATE

REGISTERED PROFESSIONAL ENGINEER V.L. Sibal No. 49712 Exp. 9-30-14 CIVIL STATE OF CALIFORNIA

THE STATE OF CALIFORNIA OR ITS OFFICERS OR AGENTS SHALL NOT BE RESPONSIBLE FOR THE ACCURACY OR COMPLETENESS OF SCANNED COPIES OF THIS PLAN SHEET.

NOTE:

FOR ACCURATE RIGHT OF WAY DATA, CONTACT RIGHT OF WAY ENGINEERING AT THE DISTRICT OFFICE.

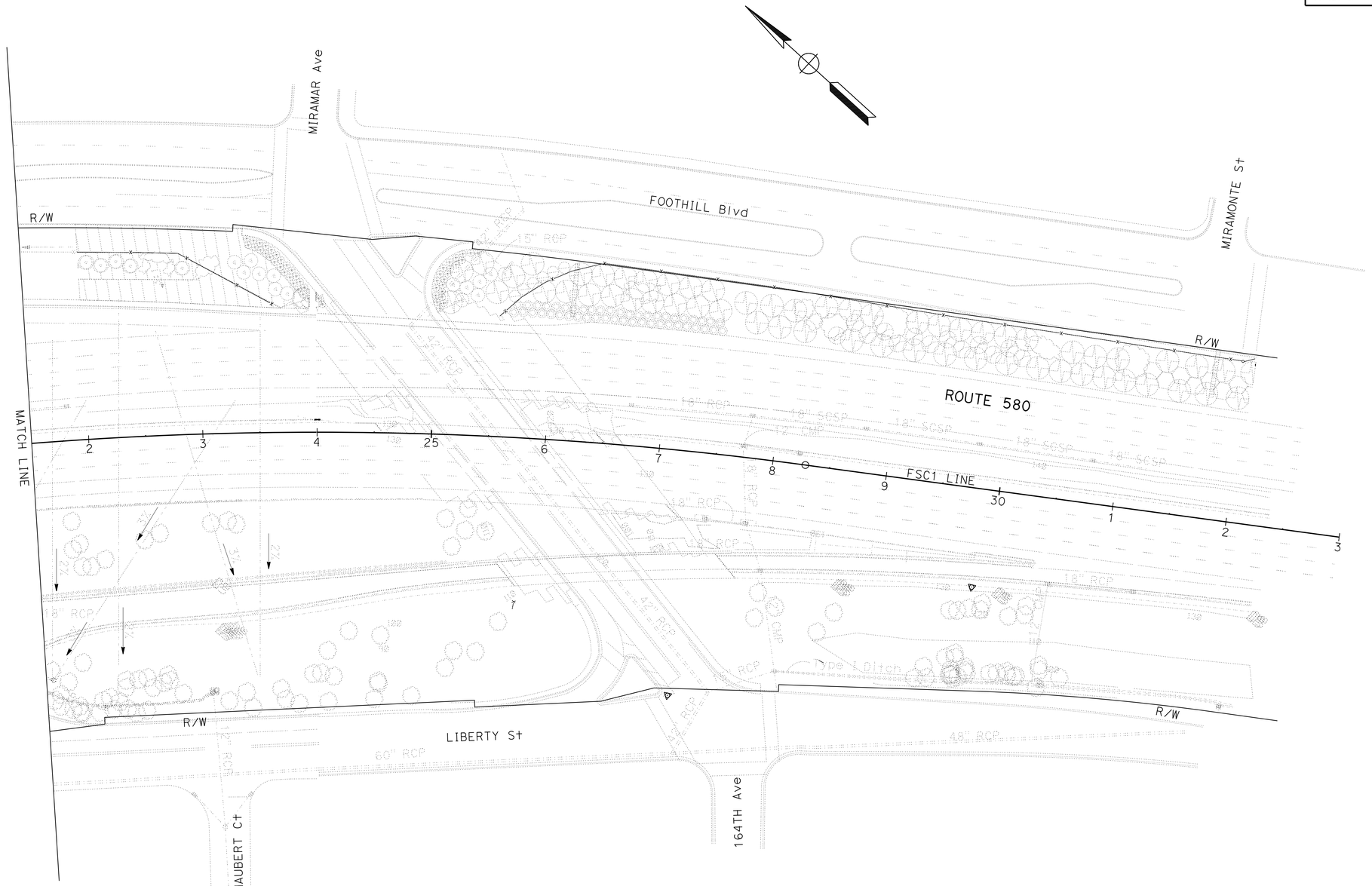

APPROVED FOR HORIZONTAL DRAIN WORK ONLY

FOR NOTES, ABBREVIATIONS AND LEGEND, SEE SHEET SB-1

SUBSURFACE DRAINS
HORIZONTAL DRAIN

SCALE: 1" = 50'

SB-2

STATE OF CALIFORNIA - DEPARTMENT OF TRANSPORTATION
Caltrans
DESIGN

FUNCTIONAL SUPERVISOR: NESTOR P. PEREZ
CALCULATED-DESIGNED BY: VALENTIN L. SIBAL
CHECKED BY: LIN KYAIN
REVISED BY: VS
DATE REVISED: 3/26/14

LAST REVISION 04-04-14 | DATE PLOTTED => 25-JUL-2014 | TIME PLOTTED => 11:50

Dist	COUNTY	ROUTE	POST MILES TOTAL PROJECT	SHEET No.	TOTAL SHEETS
04	Ala	580	R31.7/R31.9	15	86

REGISTERED CIVIL ENGINEER DATE 3/26/14

PLANS APPROVAL DATE 4-7-14

REGISTERED PROFESSIONAL ENGINEER V.L. Sibal No. 49712 Exp. 9-30-14 CIVIL STATE OF CALIFORNIA

THE STATE OF CALIFORNIA OR ITS OFFICERS OR AGENTS SHALL NOT BE RESPONSIBLE FOR THE ACCURACY OR COMPLETENESS OF SCANNED COPIES OF THIS PLAN SHEET.

NOTE:

FOR ACCURATE RIGHT OF WAY DATA, CONTACT RIGHT OF WAY ENGINEERING AT THE DISTRICT OFFICE.

NOTES:

1. ALL UTILITIES SHOWN IN THESE PLANS ARE BASED UPON RECORD INFORMATION OBTAINED FROM UTILITY OWNERS AND/OR FIELD SURVEYS OF EXISTING UTILITY SURFACE FEATURES.
2. ELEVATIONS SHOWN REFER TO THE TOP OF PIPE OR CONDUIT, UNLESS OTHERWISE STATED.

LEGEND:

UTILITIES	EXISTING UTILITIES	OWNERSHIP
WATER	—w——— ———w—	CITY OF HAYWARD
ELECTRICAL	———e——— ———	PG&E (PACIFIC GAS AND ELECTRIC)
TELEPHONE	———tc——— ———-	AT&T (AMERICAN TELEPHONE AND TELEGRAPH)
SANITARY SEWER	———s———	ORO LOMA

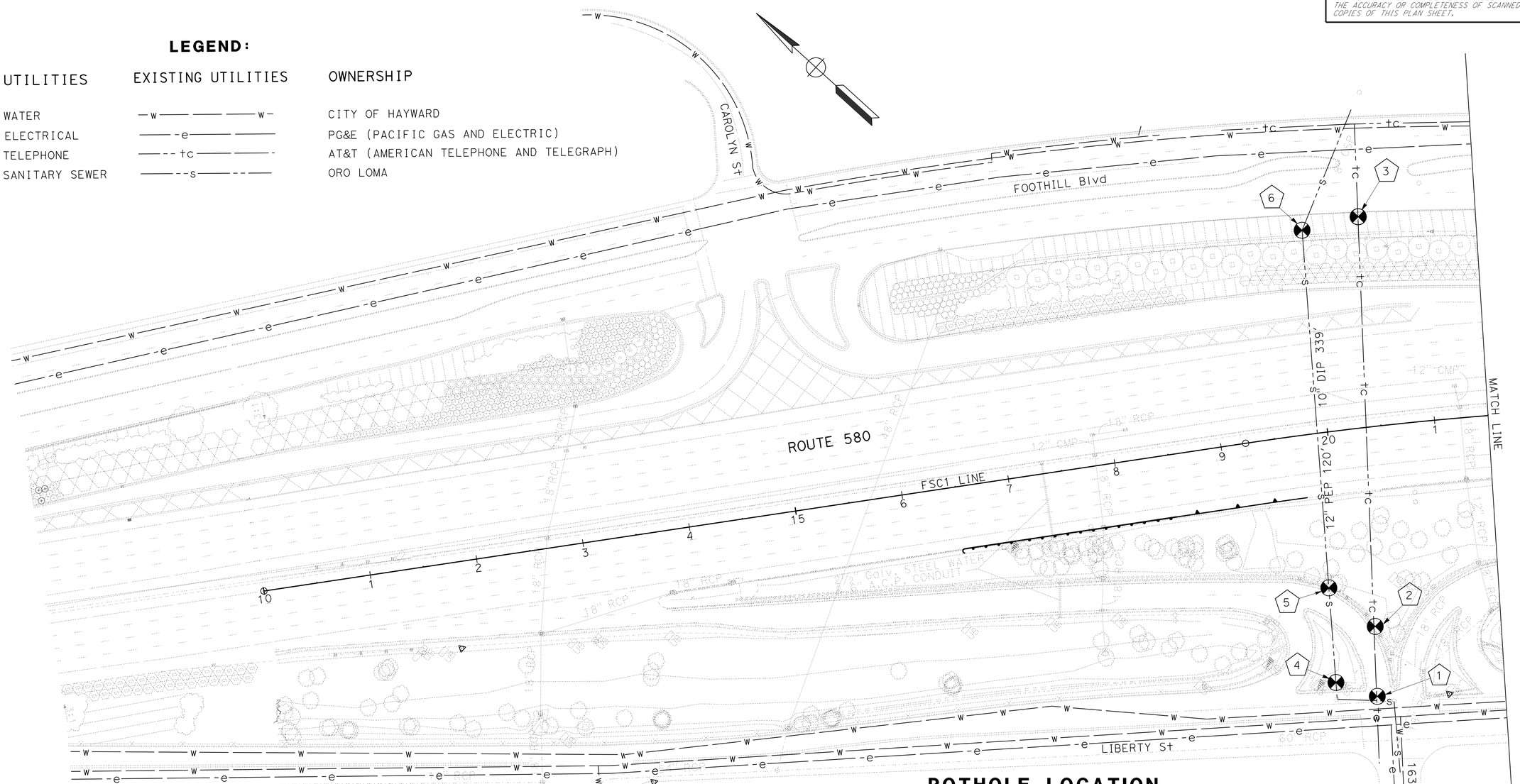

POTHOLE LOCATION

No. (X)	UTILITY	NORTHING	EASTING	DEPTH (FT)	ELEVATION (FT)
1	TELEPHONE - AT&T	2081477.78	6095830.73	3.50	79.33
2	TELEPHONE - AT&T	2081522.99	6095877.56	2.58	81.33
3	TELEPHONE - AT&T	2081791.18	6096148.78	7.00	123.65
4	SANITARY SEWER - ORO LOMA	2081514.87	6095814.38	2.58	80.34
5	SANITARY SEWER - ORO LOMA	2081579.04	6095875.11	3.00	84.62
6	SANITARY SEWER - ORO LOMA	2081821.28	6096104.36	10.42	120.37

APPROVED FOR UTILITY WORK ONLY

UTILITY PLAN

SCALE: 1" = 50'

U-1

STATE OF CALIFORNIA - DEPARTMENT OF TRANSPORTATION

Caltrans DESIGN

FUNCTIONAL SUPERVISOR: NESTOR P. PEREZ

CALCULATED-DESIGNED BY: VALENTIN L. SIBAL

CHECKED BY: LIN KYAIN

REVISED BY: VS

DATE REVISED: 3/26/14

LAST REVISION 04-04-14 | DATE PLOTTED => 25-JUL-2014 | TIME PLOTTED => 11:50

Dist	COUNTY	ROUTE	POST MILES TOTAL PROJECT	SHEET No.	TOTAL SHEETS
04	Ala	580	R31.7/R31.9	16	86

REGISTERED CIVIL ENGINEER 3/26/14 DATE

4-7-14
PLANS APPROVAL DATE

REGISTERED PROFESSIONAL ENGINEER V.L. Sibal No. 49712 Exp. 9-30-14 CIVIL STATE OF CALIFORNIA

THE STATE OF CALIFORNIA OR ITS OFFICERS OR AGENTS SHALL NOT BE RESPONSIBLE FOR THE ACCURACY OR COMPLETENESS OF SCANNED COPIES OF THIS PLAN SHEET.

NOTE:

FOR ACCURATE RIGHT OF WAY DATA, CONTACT RIGHT OF WAY ENGINEERING AT THE DISTRICT OFFICE.

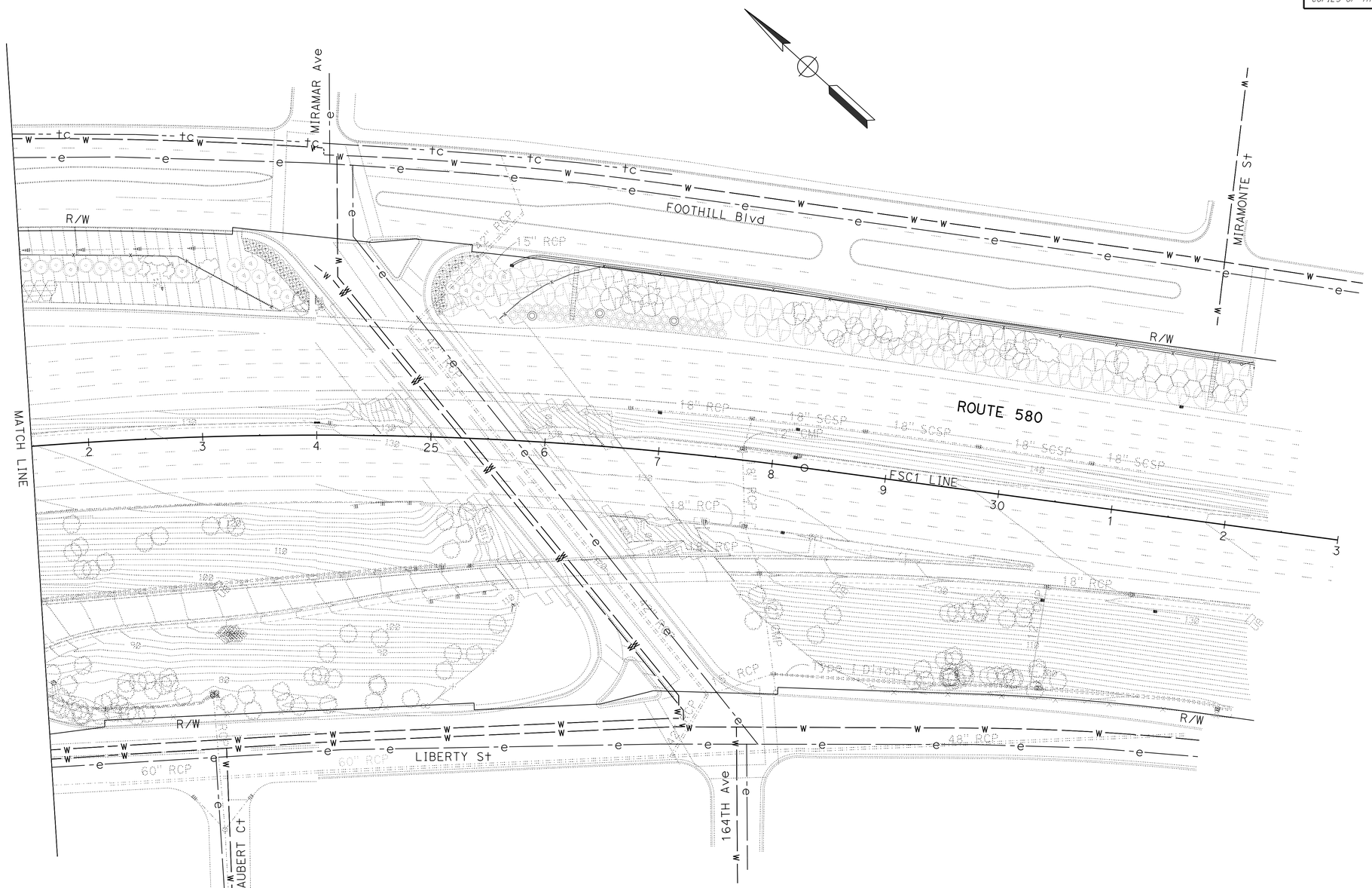

FOR NOTES, ABBREVIATIONS AND LEGEND, SEE SHEET U-1

UTILITY PLAN

SCALE: 1" = 50'

U-2

STATE OF CALIFORNIA - DEPARTMENT OF TRANSPORTATION
Caltrans
DESIGN

FUNCTIONAL SUPERVISOR: NESTOR P. PEREZ
CALCULATED-DESIGNED BY: VALENTIN L. SIBAL
CHECKED BY: LIN KYAIN
REVISED BY: VS
DATE REVISED: 3/26/14

LAST REVISION 04-04-14
DATE PLOTTED => 25-JUL-2014
TIME PLOTTED => 11:50

Dist	COUNTY	ROUTE	POST MILES TOTAL PROJECT	SHEET No.	TOTAL SHEETS
04	Ala	580	R31.7/R31.9	17	86

Jeri-Paul Fabian 3/18/14
REGISTERED CIVIL ENGINEER DATE

4-7-14
PLANS APPROVAL DATE

REGISTERED PROFESSIONAL ENGINEER Jeri-Paul F. Fabian No. 81174 Exp. 9-30-15 CIVIL STATE OF CALIFORNIA

THE STATE OF CALIFORNIA OR ITS OFFICERS OR AGENTS SHALL NOT BE RESPONSIBLE FOR THE ACCURACY OR COMPLETENESS OF SCANNED COPIES OF THIS PLAN SHEET.

NOTE:

EXACT LOCATION AND POSITION OF CONSTRUCTION AREA SIGNS TO BE DETERMINED BY THE ENGINEER.

LEGEND:

CONSTRUCTION AREA SIGN LETTER

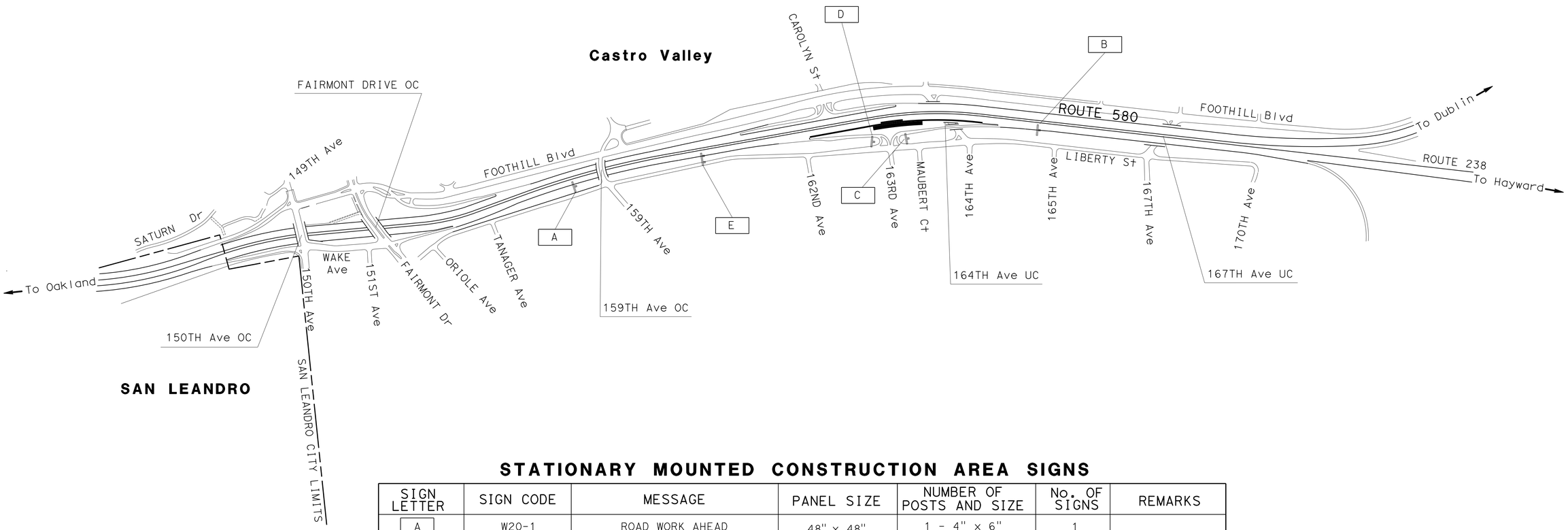

STATIONARY MOUNTED CONSTRUCTION AREA SIGNS

SIGN LETTER	SIGN CODE	MESSAGE	PANEL SIZE	NUMBER OF POSTS AND SIZE	No. OF SIGNS	REMARKS
A	W20-1	ROAD WORK AHEAD	48" x 48"	1 - 4" x 6"	1	
B	G20-2	END ROAD WORK	48" x 24"	1 - 4" x 4"	1	
C	W20-1	ROAD WORK AHEAD	36" x 36"	1 - 4" x 6"	1	
D	G20-2	END ROAD WORK	36" x 18"	1 - 4" x 4"	1	
E	C40(CA)	TRAFFIC FINES DOUBLED IN CONSTRUCTION ZONES	144" x 60"	2 - 6" x 8"	1	
1	W21-5	SHOULDER WORK	48" x 48"	1 - 4" x 6"	1	SEE SHEET SC-1
2	W21-5b	RIGHT SHOULDER CLOSED AHEAD	48" x 48"	1 - 4" x 6"	1	
3	C30A(CA)	SHOULDER CLOSED	48" x 48"	1 - 6" x 6"	1	
	W16-4	NEXT 1400 FT	30" x 24"			

CONSTRUCTION AREA SIGNS

NO SCALE

APPROVED FOR CONSTRUCTION AREA SIGN WORK ONLY

CS-1

STATE OF CALIFORNIA - DEPARTMENT OF TRANSPORTATION
Caltrans
TRAFFIC

FUNCTIONAL SUPERVISOR: LOURDES DAVID
CALCULATED-DESIGNED BY: JERI-PAUL FABIAN
CHECKED BY: CLAUDIA K. FANG
REVISED BY: JF
DATE REVISED: 3/18/14

LAST REVISION 04-04-14
DATE PLOTTED => 25-JUL-2014
TIME PLOTTED => 11:50

Dist	COUNTY	ROUTE	POST MILES TOTAL PROJECT	SHEET No.	TOTAL SHEETS
04	Ala	580	R31.7/R31.9	18	86

REGISTERED CIVIL ENGINEER 3/26/14 DATE

4-7-14
PLANS APPROVAL DATE

REGISTERED PROFESSIONAL ENGINEER No. 49712 Exp. 9-30-14 CIVIL STATE OF CALIFORNIA

THE STATE OF CALIFORNIA OR ITS OFFICERS OR AGENTS SHALL NOT BE RESPONSIBLE FOR THE ACCURACY OR COMPLETENESS OF SCANNED COPIES OF THIS PLAN SHEET.

NOTE:

FOR ACCURATE RIGHT OF WAY DATA, CONTACT RIGHT OF WAY ENGINEERING AT THE DISTRICT OFFICE.

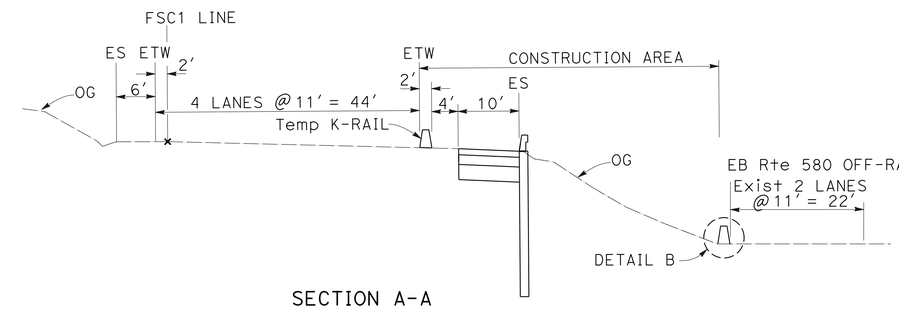

SECTION A-A

STAGE 1
NO SCALE

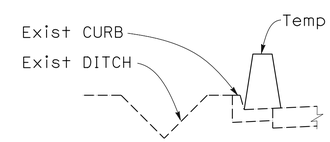

DETAIL B

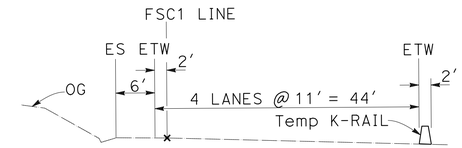

SECTION B-B

STAGE 1
NO SCALE

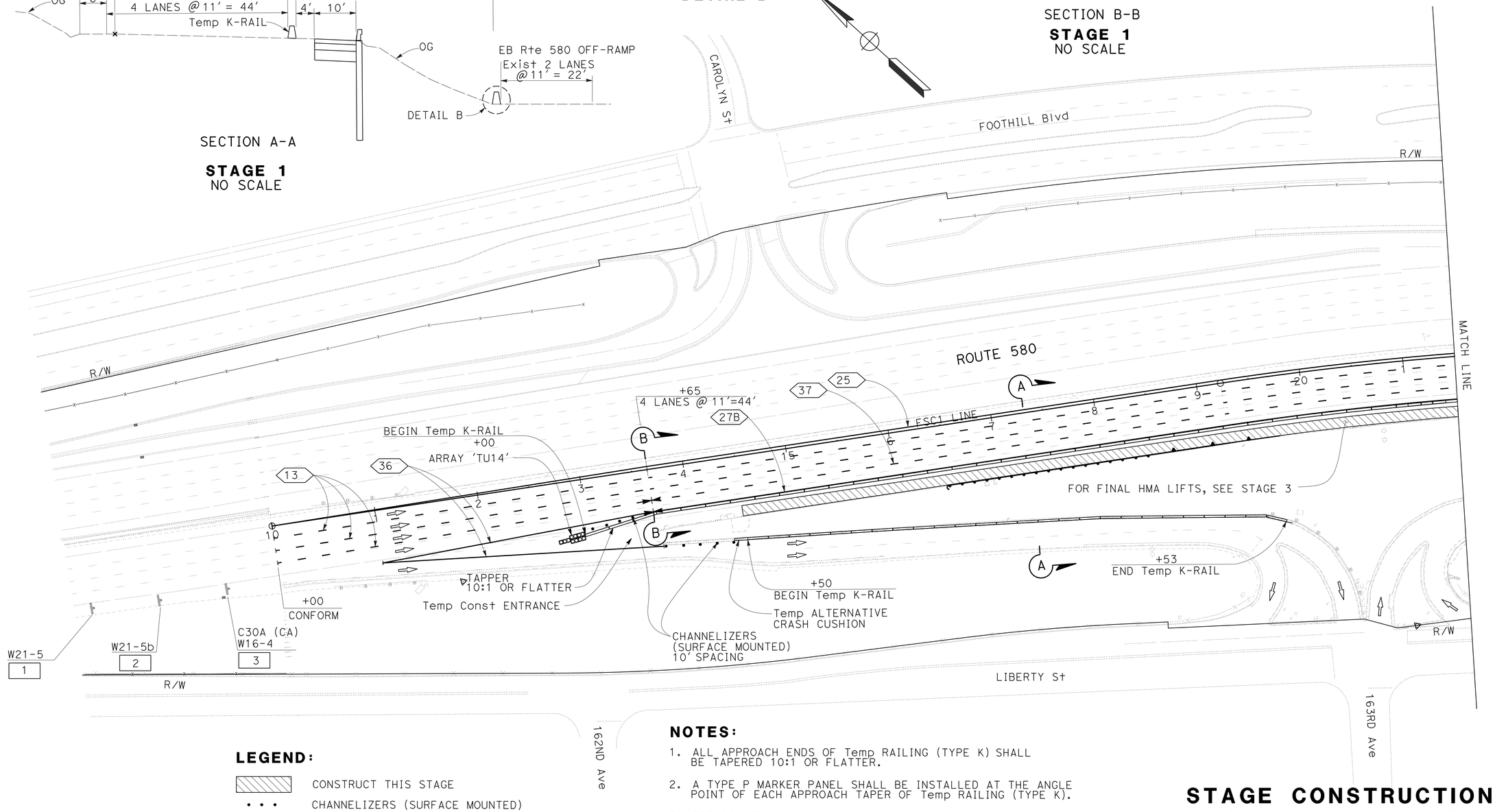

LEGEND:

- CONSTRUCT THIS STAGE
- CHANNELIZERS (SURFACE MOUNTED)
- CHANGE IN PAVEMENT DELINEATION
- TRAFFIC CONE
- No. — CONSTRUCTION AREA SIGN NUMBER

NOTES:

1. ALL APPROACH ENDS OF Temp RAILING (TYPE K) SHALL BE TAPERED 10:1 OR FLATTER.
2. A TYPE P MARKER PANEL SHALL BE INSTALLED AT THE ANGLE POINT OF EACH APPROACH TAPER OF Temp RAILING (TYPE K).
3. FOR CONSTRUCTION AREA SIGN DETAILS, SEE SHEET CS-1.
4. FOR CONSTRUCTION AREA SIGN SPACING, SEE MUTCD FIGURES 6H-5(CA).

STAGE CONSTRUCTION AND TRAFFIC HANDLING PLAN

STAGE 1

SCALE: 1" = 50'

APPROVED FOR STAGE CONSTRUCTION AND TRAFFIC HANDLING WORK ONLY

SC-1

REVISED BY	DATE REVISED
VS	3/26/14

CALCULATED-DESIGNED BY: VALENTIN L. SIBAL
CHECKED BY: LIN KYAIN
FUNCTIONAL SUPERVISOR: NESTOR P. PEREZ

STATE OF CALIFORNIA - DEPARTMENT OF TRANSPORTATION
Caltrans®
DESIGN

LAST REVISION 04-04-14 | DATE PLOTTED => 25-JUL-2014 | TIME PLOTTED => 11:50

Dist	COUNTY	ROUTE	POST MILES TOTAL PROJECT	SHEET No.	TOTAL SHEETS
04	Ala	580	R31.7/R31.9	19	86

REGISTERED CIVIL ENGINEER 3/26/14 DATE

4-7-14
PLANS APPROVAL DATE

REGISTERED PROFESSIONAL ENGINEER V.L. Sibal No. 49712 Exp. 9-30-14 CIVIL STATE OF CALIFORNIA

THE STATE OF CALIFORNIA OR ITS OFFICERS OR AGENTS SHALL NOT BE RESPONSIBLE FOR THE ACCURACY OR COMPLETENESS OF SCANNED COPIES OF THIS PLAN SHEET.

NOTE:

FOR ACCURATE RIGHT OF WAY DATA, CONTACT RIGHT OF WAY ENGINEERING AT THE DISTRICT OFFICE.

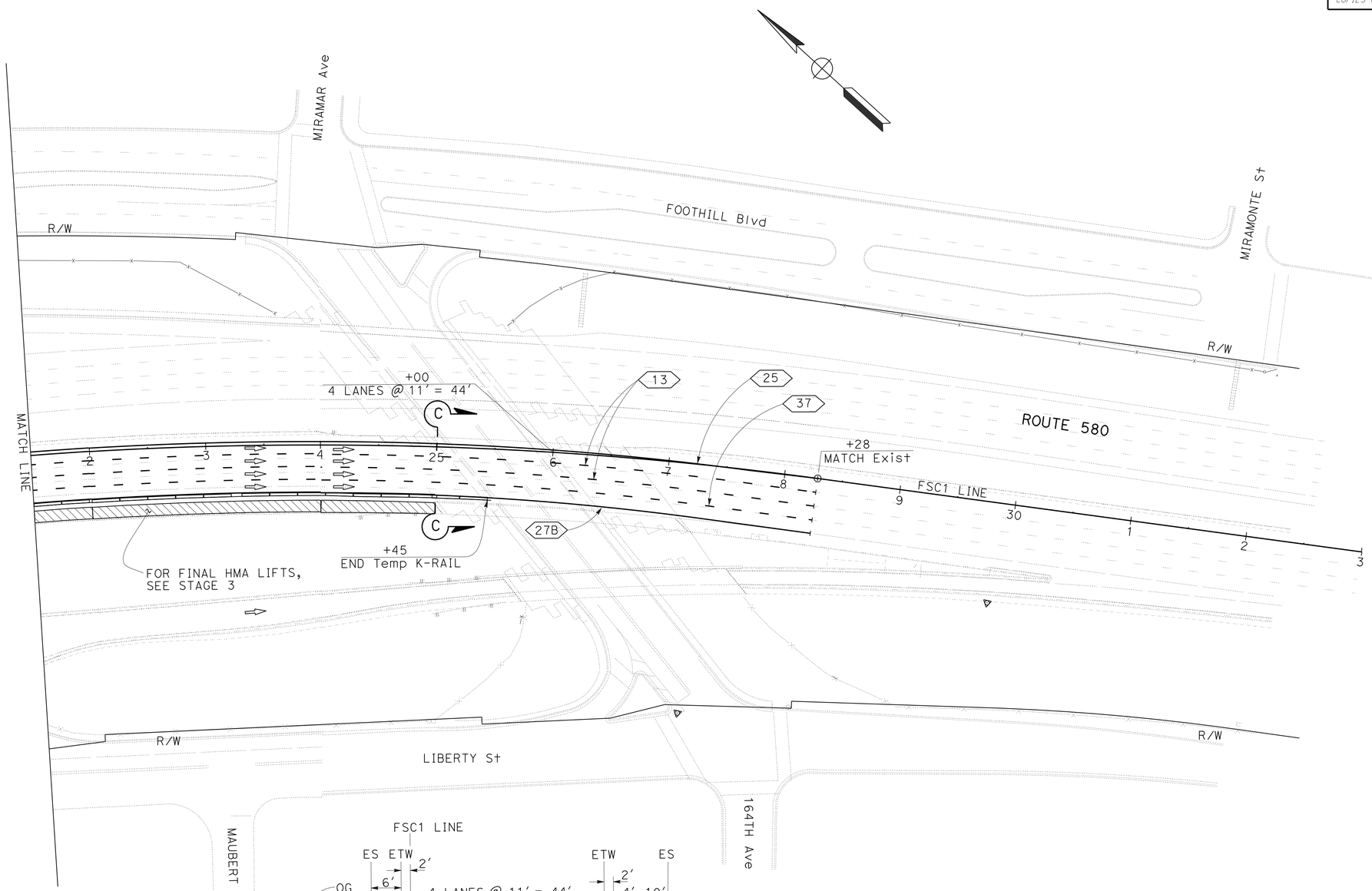

SECTION C-C

STAGE 1
NO SCALE

APPROVED FOR STAGE CONSTRUCTION AND TRAFFIC HANDLING WORK ONLY

FOR NOTES, ABBREVIATIONS AND LEGEND, SEE SHEET SC-1

STAGE CONSTRUCTION AND TRAFFIC HANDLING PLAN

STAGE 1

SCALE: 1" = 50'

SC-2

VALENTIN L. SIBAL	REVISED BY: VS
LIN KYAIN	DATE REVISED: 3/26/14
CALCULATED-DESIGNED BY	
CHECKED BY	
FUNCTIONAL SUPERVISOR: NESTOR P. PEREZ	

STATE OF CALIFORNIA - DEPARTMENT OF TRANSPORTATION
Caltrans
DESIGN

LAST REVISION 04-04-14 | DATE PLOTTED => 25-JUL-2014 | TIME PLOTTED => 11:50

Dist	COUNTY	ROUTE	POST MILES TOTAL PROJECT	SHEET No.	TOTAL SHEETS
04	Ala	580	R31.7/R31.9	20	86

REGISTERED CIVIL ENGINEER 3/26/14 DATE

4-7-14
PLANS APPROVAL DATE

REGISTERED PROFESSIONAL ENGINEER
V.L. Sibal
No. 49712
Exp. 9-30-14
CIVIL
STATE OF CALIFORNIA

THE STATE OF CALIFORNIA OR ITS OFFICERS OR AGENTS SHALL NOT BE RESPONSIBLE FOR THE ACCURACY OR COMPLETENESS OF SCANNED COPIES OF THIS PLAN SHEET.

NOTE:

FOR ACCURATE RIGHT OF WAY DATA, CONTACT RIGHT OF WAY ENGINEERING AT THE DISTRICT OFFICE.

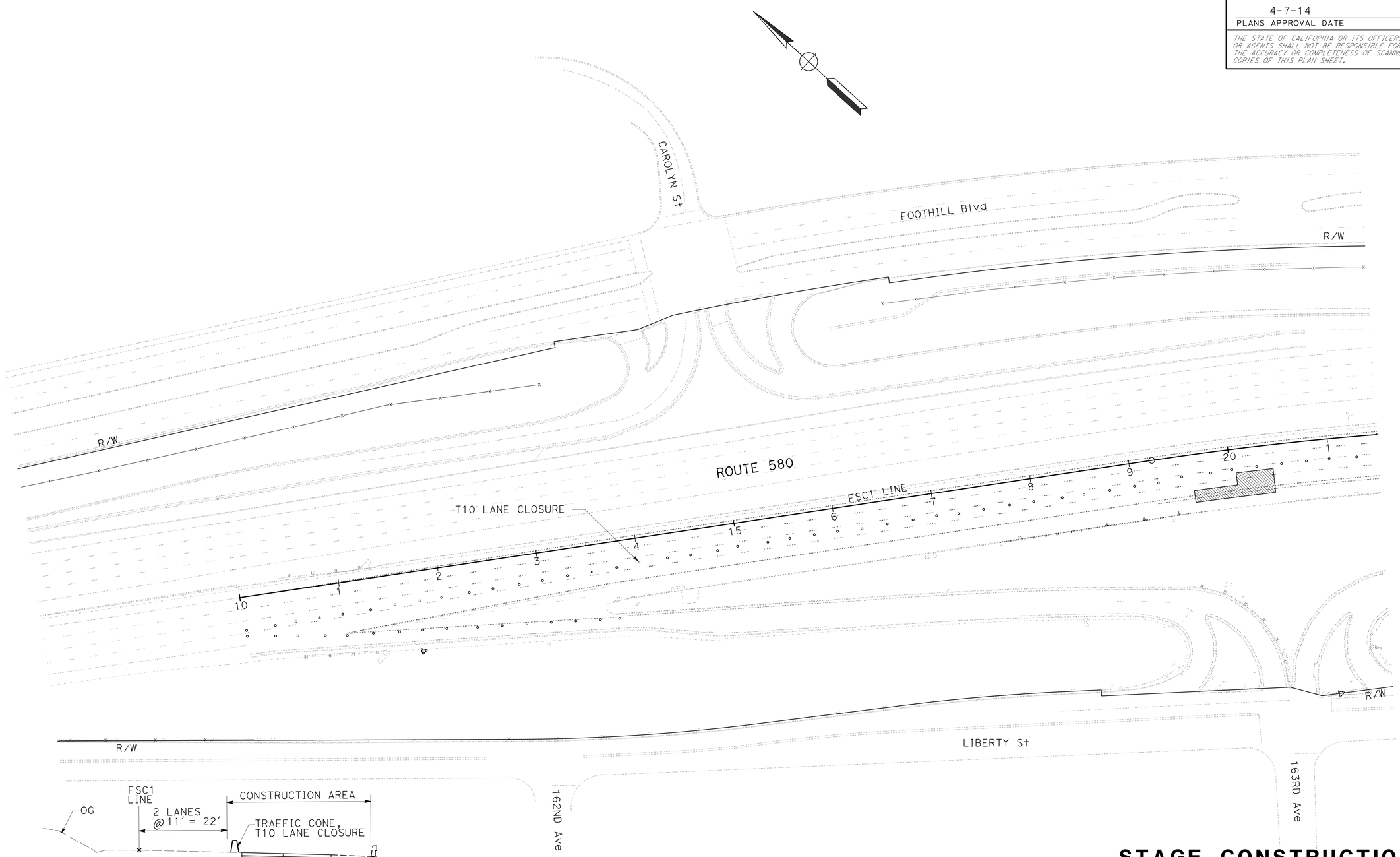

STAGE 2
NO SCALE

STAGE CONSTRUCTION AND TRAFFIC HANDLING PLAN
STAGE 2
SCALE: 1" = 50'

APPROVED FOR STAGE CONSTRUCTION AND TRAFFIC HANDLING WORK ONLY

FOR NOTES, ABBREVIATIONS AND LEGEND, SEE SHEET SC-1

SC-3

STATE OF CALIFORNIA - DEPARTMENT OF TRANSPORTATION
Caltrans

FUNCTIONAL SUPERVISOR: NESTOR P. PEREZ
CALCULATED-DESIGNED BY: VALENTIN L. SIBAL
CHECKED BY: LIN KYAIN
REVISED BY: VS
DATE REVISED: 3/26/14

LAST REVISION 04-04-14
DATE PLOTTED => 25-JUL-2014
TIME PLOTTED => 11:50

Dist	COUNTY	ROUTE	POST MILES TOTAL PROJECT	SHEET No.	TOTAL SHEETS
04	Ala	580	R31.7/R31.9	21	86

REGISTERED CIVIL ENGINEER 3/26/14 DATE

4-7-14
PLANS APPROVAL DATE

REGISTERED PROFESSIONAL ENGINEER V.L. Sibal No. 49712 Exp. 9-30-14 CIVIL STATE OF CALIFORNIA

THE STATE OF CALIFORNIA OR ITS OFFICERS OR AGENTS SHALL NOT BE RESPONSIBLE FOR THE ACCURACY OR COMPLETENESS OF SCANNED COPIES OF THIS PLAN SHEET.

NOTE:

FOR ACCURATE RIGHT OF WAY DATA, CONTACT RIGHT OF WAY ENGINEERING AT THE DISTRICT OFFICE.

LEGEND:

CONSTRUCT FINAL LIFT 0.20' HMA (TYPE A) AFTER THE STAGE 2 COMPLETION

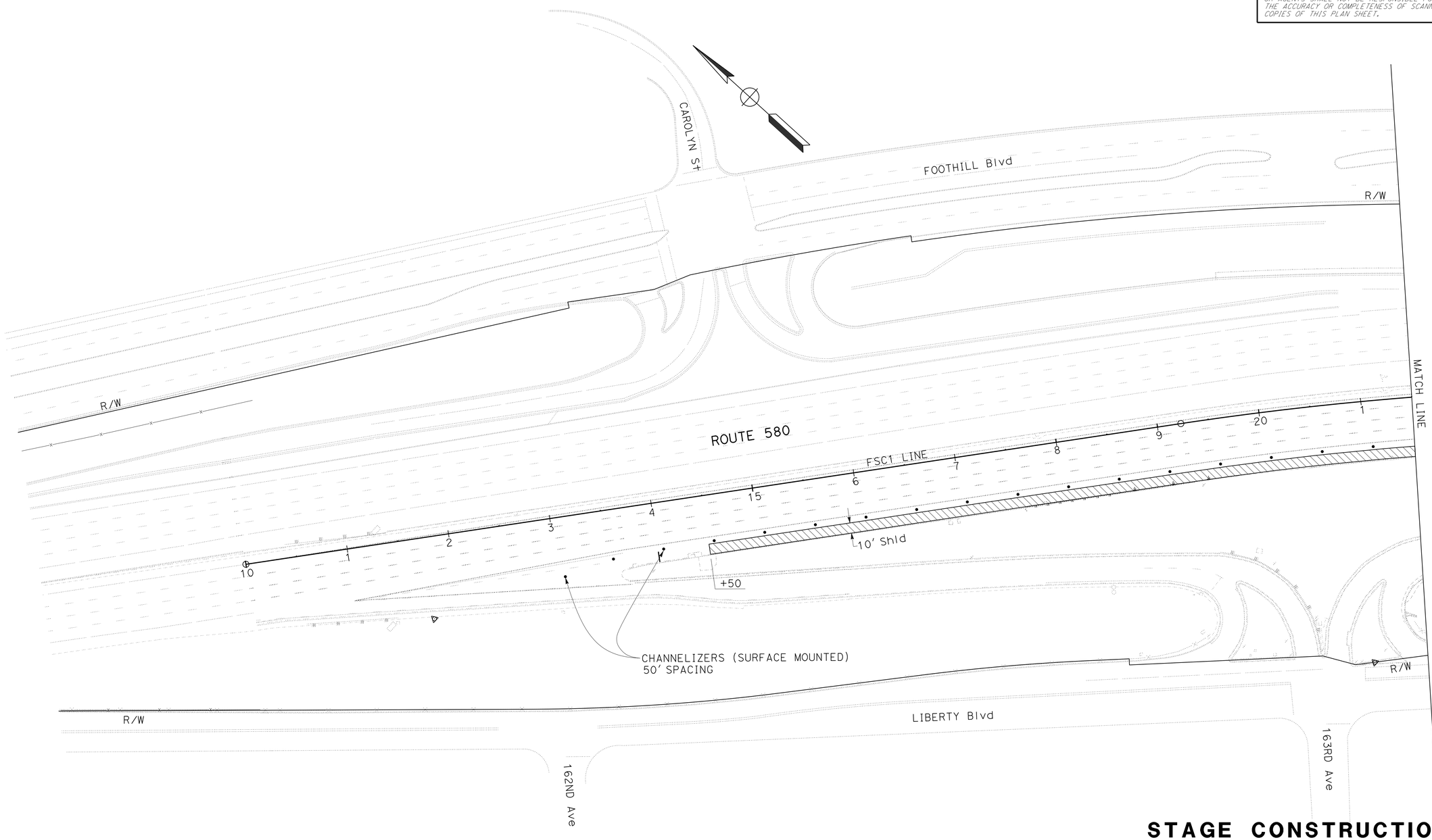

STAGE CONSTRUCTION AND TRAFFIC HANDLING PLAN

STAGE 3

SCALE: 1" = 50'

APPROVED FOR STAGE CONSTRUCTION AND TRAFFIC HANDLING WORK ONLY

FOR NOTES, ABBREVIATIONS AND LEGEND, SEE SHEET SC-1

SC-4

STATE OF CALIFORNIA - DEPARTMENT OF TRANSPORTATION

Caltrans®

DESIGN

FUNCTIONAL SUPERVISOR: NESTOR P. PEREZ

CALCULATED-DESIGNED BY: VALENTIN L. SIBAL

CHECKED BY: LIN KYAIN

REVISED BY: VS

DATE REVISED: 3/26/14

LAST REVISION 04-04-14

DATE PLOTTED => 25-JUL-2014

TIME PLOTTED => 11:50

Dist	COUNTY	ROUTE	POST MILES TOTAL PROJECT	SHEET No.	TOTAL SHEETS
04	Ala	580	R31.7/R31.9	22	86

REGISTERED CIVIL ENGINEER 3/26/14 DATE

4-7-14
PLANS APPROVAL DATE

REGISTERED PROFESSIONAL ENGINEER
V.L. Sibal
No. 49712
Exp. 9-30-14
CIVIL
STATE OF CALIFORNIA

THE STATE OF CALIFORNIA OR ITS OFFICERS OR AGENTS SHALL NOT BE RESPONSIBLE FOR THE ACCURACY OR COMPLETENESS OF SCANNED COPIES OF THIS PLAN SHEET.

NOTE:

FOR ACCURATE RIGHT OF WAY DATA, CONTACT
RIGHT OF WAY ENGINEERING AT THE DISTRICT OFFICE.

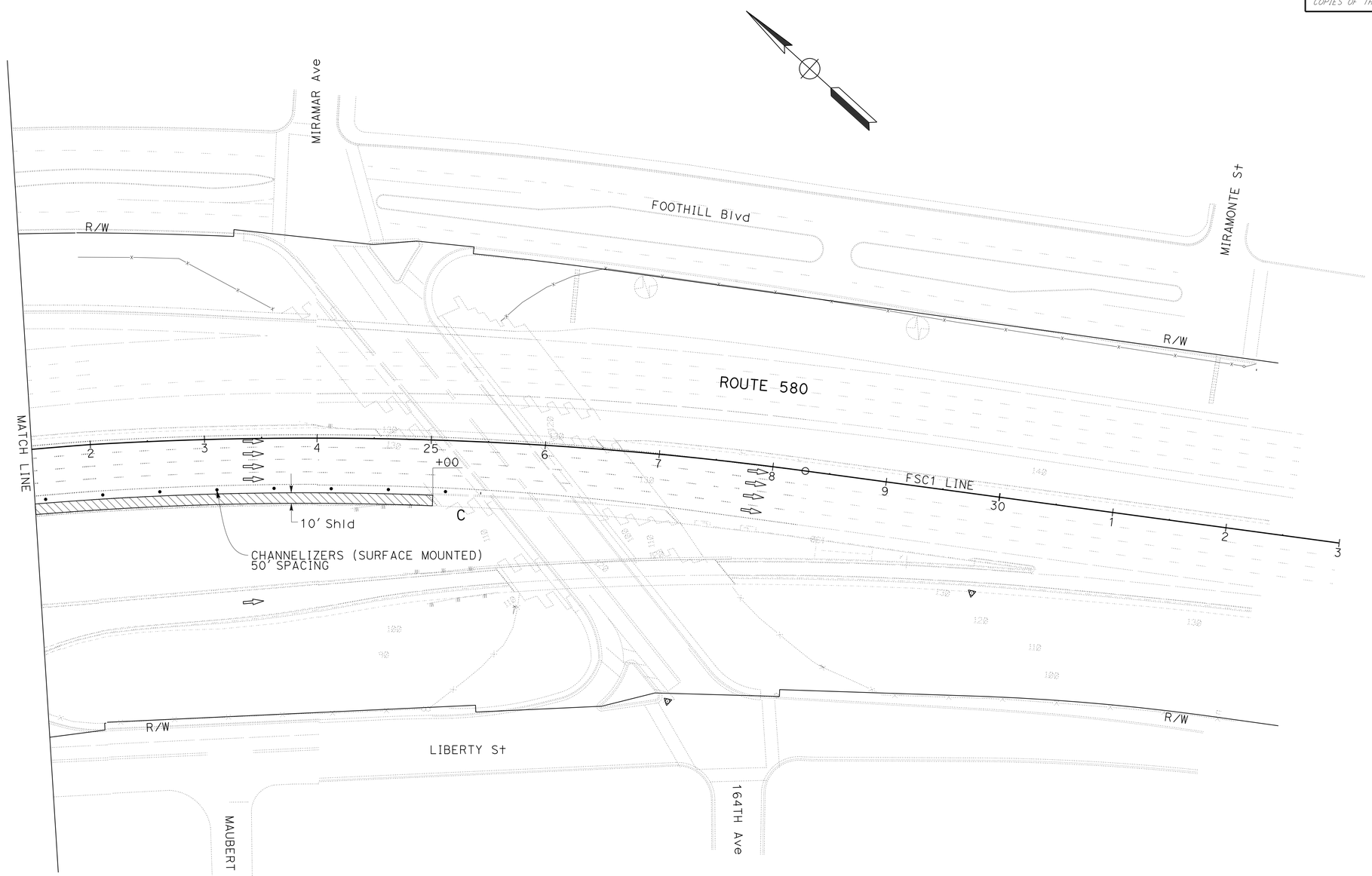

STAGE CONSTRUCTION AND TRAFFIC HANDLING PLAN

STAGE 3

SCALE: 1" = 50'

APPROVED FOR STAGE CONSTRUCTION AND TRAFFIC HANDLING WORK ONLY

FOR NOTES, ABBREVIATIONS AND LEGEND, SEE SHEET SC-1

SC-5

STATE OF CALIFORNIA - DEPARTMENT OF TRANSPORTATION
Caltrans®
DESIGN

FUNCTIONAL SUPERVISOR: NESTOR P. PEREZ
CALCULATED-DESIGNED BY: VALENTIN L. SIBAL
CHECKED BY: LIN KYAIN
REVISED BY: VS
DATE REVISED: 3/26/14

LAST REVISION 04-04-14
DATE PLOTTED => 25-JUL-2014
TIME PLOTTED => 11:50

Dist	COUNTY	ROUTE	POST MILES TOTAL PROJECT	SHEET No.	TOTAL SHEETS
04	Ala	580	R31.7/R31.9	23	86

REGISTERED CIVIL ENGINEER 3/26/14 DATE

4-7-14
PLANS APPROVAL DATE

REGISTERED PROFESSIONAL ENGINEER V.L. Sibal No. 49712 Exp. 9-30-14 CIVIL STATE OF CALIFORNIA

THE STATE OF CALIFORNIA OR ITS OFFICERS OR AGENTS SHALL NOT BE RESPONSIBLE FOR THE ACCURACY OR COMPLETENESS OF SCANNED COPIES OF THIS PLAN SHEET.

PAVEMENT DELINEATION QUANTITIES (STAGE CONSTRUCTION)

SHEET No.	DETAIL No.	TEMPORARY TRAFFIC STRIPE (PAINT)			TEMPORARY PAVEMENT MARKER				TEMPORARY CRASH CUSHION MODULE ARRAY 'TU14'	TEMPORARY ALTERNATIVE CRASH CUSHION	TEMPORARY RAILING (TYPE K)	TEMPORARY TRAFFIC SCREEN	CHANNELIZER (SURFACE MOUNTED)
		4" YELLOW	4" WHITE	8" WHITE	TYPE A	TYPE C	TYPE G	TYPE H					
		FT			EA						FT		EA
SC-1									14	1	1630	1630	35
	13		3165		268		70						
	25	1400						31					
	27B		1025										
	36			537			271						
	37			1029		39							
SC-2											147	147	
	13		853		76		20						
	25	429						10					
	27B		423										
	37			425		18							
SUBTOTAL		1829	5466	1991	344	57	361	41	14	1	1777	1777	35
TOTAL		9286			803				14	1	1777	1777	35

STAGE CONSTRUCTION QUANTITIES

SCQ-1

STATE OF CALIFORNIA - DEPARTMENT OF TRANSPORTATION
Caltrans DESIGN

FUNCTIONAL SUPERVISOR: NESTOR P. PEREZ
CALCULATED-DESIGNED BY: VALENTIN L. SIBAL
CHECKED BY: LIN KYAIN
REVISED BY: VS
DATE REVISED: 3/26/14

LAST REVISION 04-04-14 DATE PLOTTED => 25-JUL-2014 TIME PLOTTED => 11:50

Dist	COUNTY	ROUTE	POST MILES TOTAL PROJECT	SHEET No.	TOTAL SHEETS
04	Ala	580	R31.7/R31.9	24	86

REGISTERED CIVIL ENGINEER 3/26/14 DATE

4-7-14
PLANS APPROVAL DATE

REGISTERED PROFESSIONAL ENGINEER V.L. Sibal No. 49712 Exp. 9-30-14 CIVIL STATE OF CALIFORNIA

THE STATE OF CALIFORNIA OR ITS OFFICERS OR AGENTS SHALL NOT BE RESPONSIBLE FOR THE ACCURACY OR COMPLETENESS OF SCANNED COPIES OF THIS PLAN SHEET.

NOTE:

FOR ACCURATE RIGHT OF WAY DATA, CONTACT RIGHT OF WAY ENGINEERING AT THE DISTRICT OFFICE.

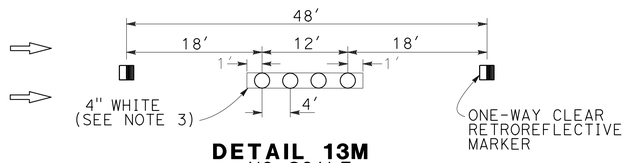

DETAIL 13M
NO SCALE

NOTES:
1. DETAIL 13M IS MODIFIED PAVEMENT DELINEATION DETAIL 13.
2. FOR DETAILS NOT SHOWN, SEE STANDARD PLAN A20A.
3. INSTALL 4" WHITE AFTER INSTALLING PAVEMENT MARKERS.

NOTE:

1. ALL LANES 12' WIDE UNLESS NOTED.

LEGEND:

- CHANGE OF PAVEMENT DELINEATION DETAILS
- BF Conc BARRIER MARKER - TYPE F
- RF GURAD RAILING DELINEATOR - TYPE F
- F DELINEATOR (CLASS 1) - TYPE (F & G)
- R OBJECT MARKER (TYPE R)

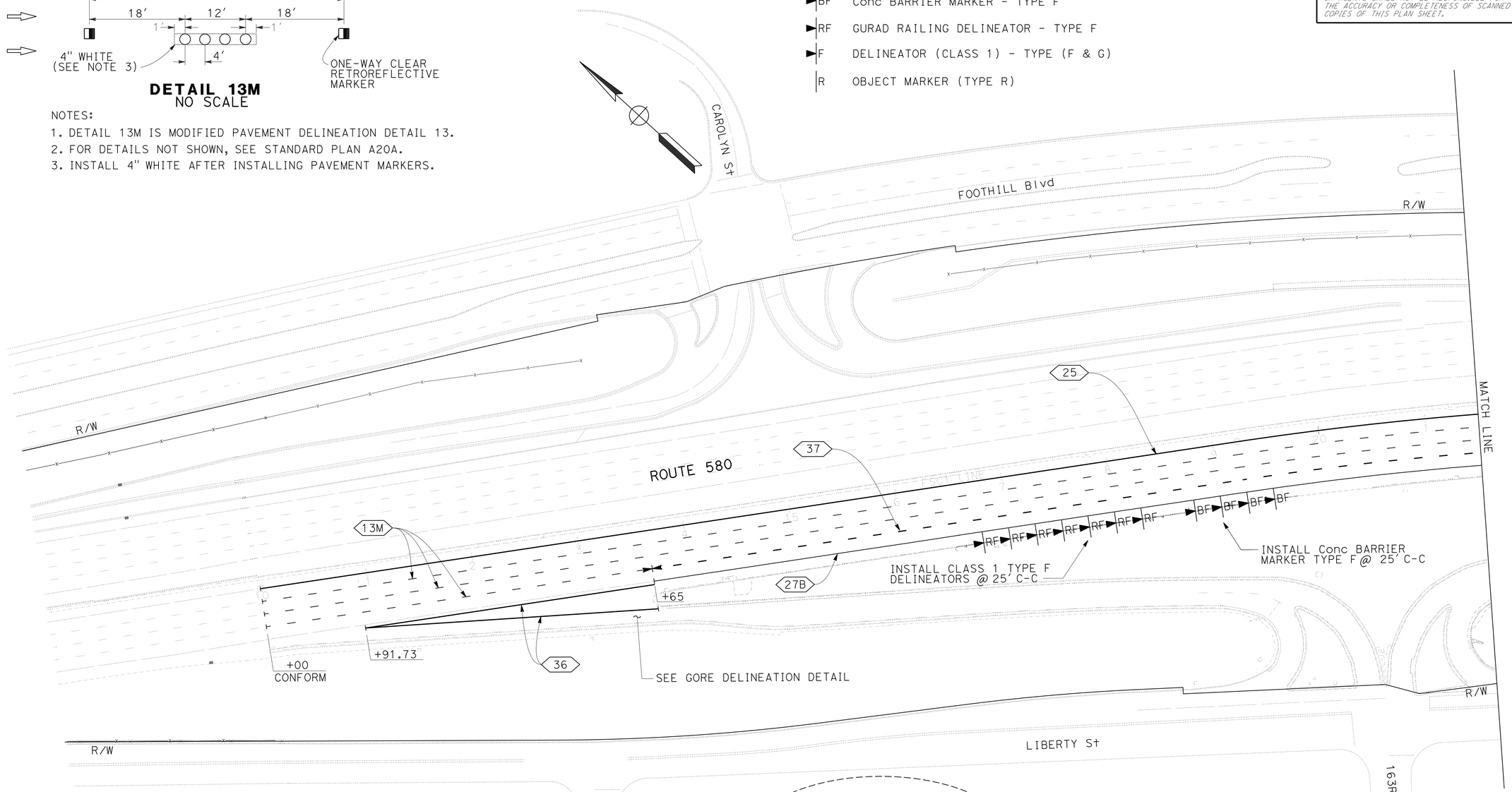

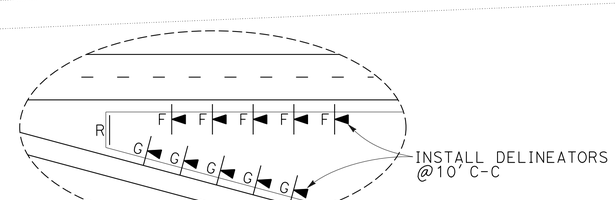

GORE DELINEATION DETAIL
NO SCALE

PAVEMENT DELINEATION PLAN
SCALE: 1" = 50'

APPROVED FOR PAVEMENT DELINEATION WORK ONLY

PD-1

REVISED BY	DATE REVISED
VS	3/26/14

VALENTIN L. SIBAL
LIN KYAIN
CALCULATED-DESIGNED BY
CHECKED BY
FUNCTIONAL SUPERVISOR
NESTOR P. PEREZ

STATE OF CALIFORNIA - DEPARTMENT OF TRANSPORTATION
Caltrans
DESIGN

LAST REVISION 04-04-14 | DATE PLOTTED => 25-JUL-2014 | TIME PLOTTED => 11:50

Dist	COUNTY	ROUTE	POST MILES TOTAL PROJECT	SHEET No.	TOTAL SHEETS
04	Ala	580	R31.7/R31.9	25	86

REGISTERED CIVIL ENGINEER 3/26/14 DATE

4-7-14
PLANS APPROVAL DATE

REGISTERED PROFESSIONAL ENGINEER
V.L. Sibal
No. 49712
Exp. 9-30-14
CIVIL
STATE OF CALIFORNIA

THE STATE OF CALIFORNIA OR ITS OFFICERS OR AGENTS SHALL NOT BE RESPONSIBLE FOR THE ACCURACY OR COMPLETENESS OF SCANNED COPIES OF THIS PLAN SHEET.

NOTE:

FOR ACCURATE RIGHT OF WAY DATA, CONTACT
RIGHT OF WAY ENGINEERING AT THE DISTRICT OFFICE.

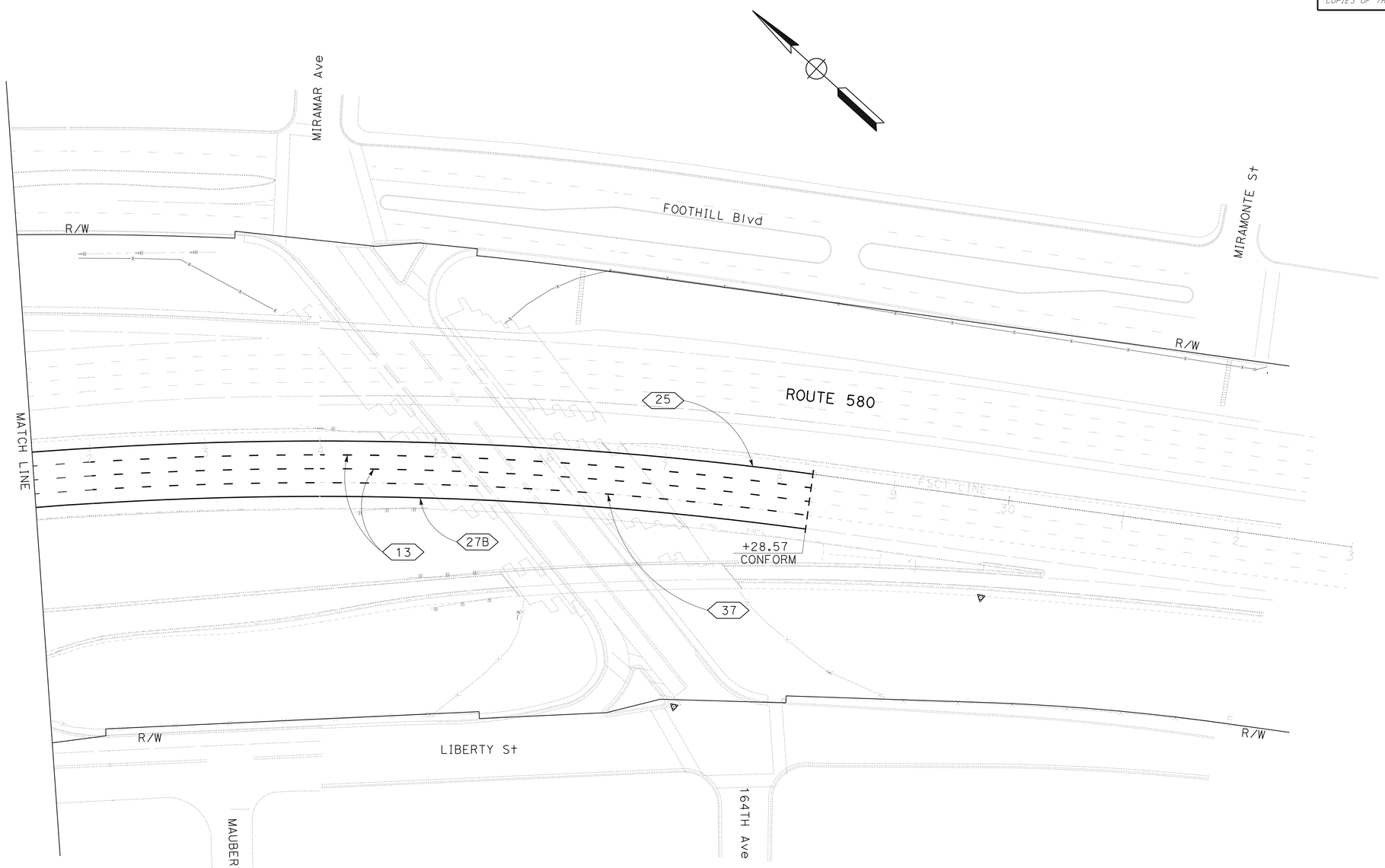

PAVEMENT DELINEATION PLAN

SCALE: 1" = 50'

APPROVED FOR PAVEMENT DELINEATION WORK ONLY

FOR NOTES, ABBREVIATIONS AND LEGEND, SEE SHEET PD-1

PD-2

STATE OF CALIFORNIA - DEPARTMENT OF TRANSPORTATION
Caltrans
DESIGN

FUNCTIONAL SUPERVISOR: NESTOR P. PEREZ
CALCULATED-DESIGNED BY: VALENTIN SIBAL
CHECKED BY: LIN KYAIN
REVISED BY: VS
DATE REVISED: 3/26/14

LAST REVISION 04-04-14
DATE PLOTTED => 25-JUL-2014
TIME PLOTTED => 11:50

Dist	COUNTY	ROUTE	POST MILES TOTAL PROJECT	SHEET No.	TOTAL SHEETS
04	Ala	580	R31.7/R31.9	26	86

REGISTERED CIVIL ENGINEER 3/26/14 DATE

4-7-14
PLANS APPROVAL DATE

REGISTERED PROFESSIONAL ENGINEER V.L. Sibal No. 49712 Exp. 9-30-14 CIVIL STATE OF CALIFORNIA

THE STATE OF CALIFORNIA OR ITS OFFICERS OR AGENTS SHALL NOT BE RESPONSIBLE FOR THE ACCURACY OR COMPLETENESS OF SCANNED COPIES OF THIS PLAN SHEET.

TRAFFIC STRIPES AND PAVEMENT MARKERS

SHEET No.	DETAIL No.	THERMOPLASTIC TRAFFIC STRIPE 4'' WHITE	4'' YELLOW	8'' WHITE (BROKEN 12-3)	8'' WHITE	PAVEMENT MARKER RETROREFLECTIVE TYPE C	TYPE G	TYPE H	PAVEMENT MARKER NON-REFLECTIVE TYPE A
		FT				EA			
PD-1	13M	3158.5					67		264
	25		1200					26	
	27B	1030							
	36				547.5				
	37			1029		35			
PD-2	13M	852.4					19		72
	25		628.6					14	
	27B	419.7							
	37			423.8		15			
SUBTOTAL		5460.6	1828.6	1452.8	547.5	50	86	40	336
TOTAL		7289.2		1452.8	547.5	176			336

DELINEATORS

LOCATION	DELINEATOR (CLASS 1) TYPE F	TYPE G	OBJECT MARKER TYPE R(CA)	CONCRETE BARRIER MARKER (N) TYPE F	GUARD RAILING TYPE F
	EA				
FSC1 11+25 TO 12+25	5	5	1		
FSC1 16+50 TO 18+25					7
FSC1 18+50 TO 19+50				4	
SUBTOTAL	5	5	1	4	7
TOTAL	10		1	4	7

(N) FOR INFORMATION ONLY, NOT A SEPARATE PAY ITEM.

REMOVE TRAFFIC STRIPES AND PAVEMENT MARKERS

SHEET No.	DETAIL No.	THERMOPLASTIC TRAFFIC STRIPE 4'' YELLOW HAZARDOUS WASTE	4'' WHITE	8'' WHITE	PAVEMENT MARKER TYPE C	TYPE G	TYPE A
		FT			EA		
SC-1	13		3158.5			67	264
	25	1400					
	27B		1030				
	37			1029	35		
SC-2	13		852.4			19	72
	25	429					
	27B		419.7				
	37			423.8	15		
SUBTOTAL		1829	5460.6	1452.8	50	86	336
TOTAL		1829	6913.4		472		

PAVEMENT DELINEATION QUANTITIES

PDQ-1

STATE OF CALIFORNIA - DEPARTMENT OF TRANSPORTATION
Caltrans® DESIGN

FUNCTIONAL SUPERVISOR: NESTOR P. PEREZ
CALCULATED-DESIGNED BY: VALENTIN L. SIBAL
CHECKED BY: LIN KYAIN
REVISED BY: VS
DATE REVISED: 3/26/14

LAST REVISION 04-04-14
DATE PLOTTED => 25-JUL-2014
TIME PLOTTED => 11:50

Dist	COUNTY	ROUTE	POST MILES TOTAL PROJECT	SHEET No.	TOTAL SHEETS
04	Ala	580	R31.7/R31.9	27	86

REGISTERED CIVIL ENGINEER 3/26/14 DATE

4-7-14
PLANS APPROVAL DATE

REGISTERED PROFESSIONAL ENGINEER V.L. Sibal No. 49712 Exp. 9-30-14 CIVIL STATE OF CALIFORNIA

THE STATE OF CALIFORNIA OR ITS OFFICERS OR AGENTS SHALL NOT BE RESPONSIBLE FOR THE ACCURACY OR COMPLETENESS OF SCANNED COPIES OF THIS PLAN SHEET.

ROADWAY QUANTITIES

SHEET No.	STATION	HMA (TYPE A)	HMA (TYPE A) DIKE	CLASS 2 AGGREGATE BASE	SUBGRADE ENHANCEMENT GEOTEXTILE (CLASS B2)	INDIVIDUAL SLAB REPLACEMENT (RAPID STRENGTH CONCRETE)	DRILL AND BOND (DOWEL BAR)	REMOVE CONCRETE PAVEMENT (N)
		TON		CY	SQYD	CY	EA	CY
L-1,L-2	FSC1 14+50 TO 25+00	70	6.77	399	1166.67			
L-1	FSC1 19+61.26 TO 20+42.88					80	117	80
SUBTOTAL		70	6.77					
TOTAL		76.77		399	1166.67	80	117	80

(N) FOR INFORMATION ONLY, NOT A SEPARATE PAY ITEM.

MIDWEST GUARDRAIL SYSTEM (WOOD POSTS)

SHEET No.	STATION	ALTERNATIVE IN-LINE TERMINAL SYSTEM	TRANSITION RAILING (TYPE WB)	MGS	END ANCHOR ASSEMBLY (TYPE SFT)	VEGETATION CONTROL (MINOR CONCRETE)
		EA		LF	EA	SQYD
L-1	FSC1 17+00 TO 18+25	1	1	125	1	133
TOTAL		1	1	125	1	133

PLACE HMA DIKE

SHEET No.	STATION	TYPE C	TYPE E	TYPE F
		LF		
L-1	FSC1 14+50 TO 16+25		175	
	FSC1 16+25 TO 18+25	200		
	FSC1 18+25 TO 18+49.99			24.99
L-1,L-2	FSC1 19+74.03 TO 25+00		525.97	
TOTAL		200	700.97	24.99

EARTHWORK QUANTITIES

SHEET No.	STATION	ROADWAY EXCAVATION	EMBANKMENT (N)	IMPORTED BORROW	IMPORTED BORROW (SHOULDER)
		CY			
L-1,L-2	FSC1 14+50 TO 25+00	1991	5175	4241.67	933.33
TOTAL		1991	5175	4241.67	933.33

(N) FOR INFORMATION ONLY, NOT A SEPARATE PAY ITEM.

ROCK SLOPE PROTECTION QUANTITIES

SHEET No.	STATION	ROCK SLOPE PROTECTION (No. 3 METHOD B)	ROCK SLOPE PROTECTION FABRIC (CLASS 8)
		CY	SQYD
X-1	RW1 10+00 TO 11+22.50	195	36.11
TOTAL		195	36.11

TEMPORARY WATER POLLUTION CONTROL

SHEET No.	STATION	TEMPORARY FIBER ROLL	TEMPORARY SILT FENCE	TEMPORARY HYDROSEED MULCH	TEMPORARY DRAINAGE INLET PROTECTION	TEMPORARY CONSTRUCTION ENTRANCE
		LF		SQYD	EA	
L-1,L-2	FSC1 14+50 TO 25+00	2000	800	1500	14	2
TOTAL		2000	800	1500	14	2

SUMMARY OF QUANTITIES

Q-1

STATE OF CALIFORNIA - DEPARTMENT OF TRANSPORTATION
Caltrans DESIGN

FUNCTIONAL SUPERVISOR: NESTOR P. PEREZ
CALCULATED-DESIGNED BY: VALENTIN L. SIBAL
CHECKED BY: LIN KYAIN
REVISED BY: VS
DATE REVISED: 3/26/14

LAST REVISION 04-04-14 | DATE PLOTTED => 25-JUL-2014 | TIME PLOTTED => 11:50

Dist	COUNTY	ROUTE	POST MILES TOTAL PROJECT	SHEET No.	TOTAL SHEETS
04	Ala	580	R31.7/R31.9	28	86

LICENSED LANDSCAPE ARCHITECT

4-7-14

PLANS APPROVAL DATE

LICENSED LANDSCAPE ARCHITECT — Joaquin Pedrin — Signature — 3/30/2015 Renewal Date — 3/14/2014 Date — STATE OF CALIFORNIA

THE STATE OF CALIFORNIA OR ITS OFFICERS OR AGENTS SHALL NOT BE RESPONSIBLE FOR THE ACCURACY OR COMPLETENESS OF SCANNED COPIES OF THIS PLAN SHEET.

SPRINKLER LEGEND

SYMBOL	DESCRIPTION	SPRAY PATTERN	OPERATING PRESSURE (psi)	PRESSURE COMPENSATING	PLUS/MINUS 5% ② DISCHARGE: GALLONS PER MINUTE (GPM)	DISCHARGE: GALLONS PER HOUR (GPH)	RADIUS (ft)	WIDTH x LENGTH (ft)	FLOW SHUTOFF DEVICE	SPRINKLER ASSEMBLY: RISER: TYPE	RISER: MATERIAL: PLASTIC	RISER: MATERIAL: GALVANIZED	RISER: SIZE (IPS INCH)	RISER: HEIGHT (INCH)	RISER: SWING JOINT (TYPE)	POP-UP: TYPE	POP-UP: INLET CONNECTION (NPT INCH)	POP-UP: SPRINKLER PROTECTOR (TYPE)	TREE WELL: HEIGHT (INCH)	REMARKS
○	FLOOD BUBBLER	-	40	X	0.25	-	-	-	-	V	X	-	½	-	-	-	-	-	-	⑥
②	GEAR DRIVEN ROTOR	H	40	-	6.6	-	49	-	X	IV	-	X	1	24	I	-	-	-	-	

APPLICABLE WHEN CIRCLED BELOW:

X IN BOX DENOTES REQUIREMENT

1 - SEE SPECIAL PROVISIONS.
② - IF A PRESSURE COMPENSATING DEVICE IS SPECIFIED, THE DISCHARGE AND RADII SHOWN REFLECT ITS USE.
3 - VINYL-COATED CAST IRON HOUSING.
4 - SWING JOINTS REQUIRED ADJACENT TO SHOULDERS, CURBS, SIDEWALKS, AND DIKES.
5 - UNLESS OTHERWISE SHOWN ON PLANS.
⑥ - INSTALL ON UPHILL SIDE OF PLANT BASIN.

IRRIGATION SPRINKLER SCHEDULE
ISS-1

CALCULATED-DESIGNED BY: MICHAEL OGURO
CHECKED BY: JOAQUIN PEDRIN
REVISED BY: J.PEDRIN
DATE REVISED: 3/14/14
SENIOR LANDSCAPE ARCHITECT: LYDIA MAC

STATE OF CALIFORNIA - DEPARTMENT OF TRANSPORTATION
Caltrans® LANDSCAPE ARCHITECTURE

LAST REVISION 03-14-14 | DATE PLOTTED => 25-JUL-2014 | TIME PLOTTED => 11:50

Dist	COUNTY	ROUTE	POST MILES TOTAL PROJECT	SHEET No.	TOTAL SHEETS
04	Ala	580	R31.7/R31.9	29	86

LICENSED LANDSCAPE ARCHITECT

4-7-14

PLANS APPROVAL DATE

THE STATE OF CALIFORNIA OR ITS OFFICERS OR AGENTS SHALL NOT BE RESPONSIBLE FOR THE ACCURACY OR COMPLETENESS OF SCANNED COPIES OF THIS PLAN SHEET.

LICENSED LANDSCAPE ARCHITECT — Joaquin Pedrin — Signature — 8/30/2015 Renewal Date — 3/14/2014 Date — STATE OF CALIFORNIA

NOTE:

FOR ACCURATE RIGHT OF WAY DATA, CONTACT RIGHT OF WAY ENGINEERING AT THE DISTRICT OFFICE.

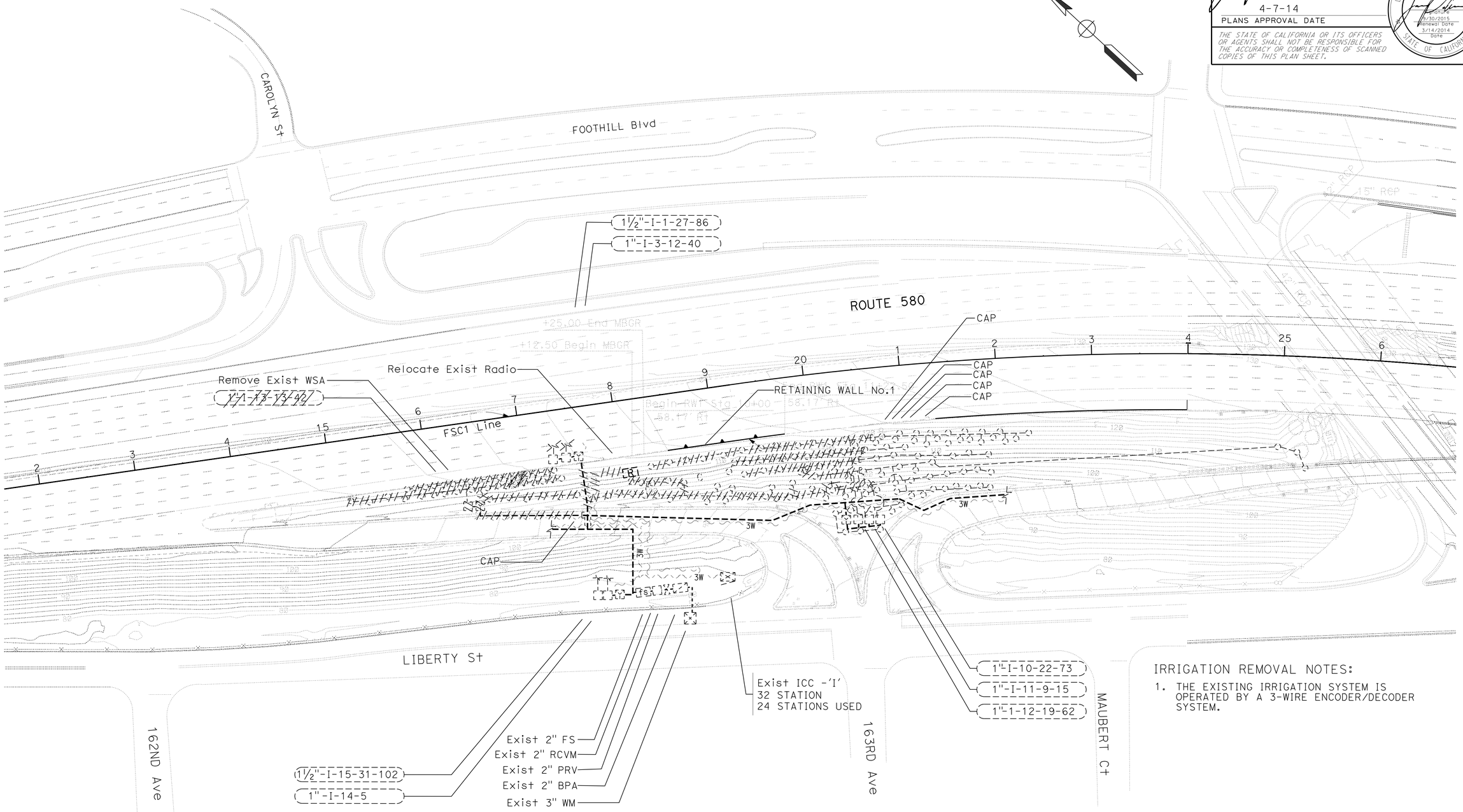

IRRIGATION REMOVAL NOTES:

1. THE EXISTING IRRIGATION SYSTEM IS OPERATED BY A 3-WIRE ENCODER/DECODER SYSTEM.

IRRIGATION REMOVAL PLAN

SCALE: 1" = 50'

IR-1

APPROVED FOR IRRIGATION WORK ONLY

STATE OF CALIFORNIA - DEPARTMENT OF TRANSPORTATION

Caltrans® LANDSCAPE ARCHITECTURE

SENIOR LANDSCAPE ARCHITECT: LYDIA MAC

CALCULATED-DESIGNED BY: MICHAEL OGURO

CHECKED BY: JOAQUIN PEDRIN

REVISED BY: J.PEDRIN

DATE REVISED: 3/14/14

LAST REVISION: 03-14-14

DATE PLOTTED => 25-JUL-2014

TIME PLOTTED => 11:50

Dist	COUNTY	ROUTE	POST MILES TOTAL PROJECT	SHEET No.	TOTAL SHEETS
04	Ala	580	R31.7/R31.9	30	86

LICENSED LANDSCAPE ARCHITECT

4-7-14

PLANS APPROVAL DATE

THE STATE OF CALIFORNIA OR ITS OFFICERS OR AGENTS SHALL NOT BE RESPONSIBLE FOR THE ACCURACY OR COMPLETENESS OF SCANNED COPIES OF THIS PLAN SHEET.

LICENSED LANDSCAPE ARCHITECT — Joaquin Pedrin — Signature — 9/30/2015 Renewal Date — 3/14/2014 Date — STATE OF CALIFORNIA

NOTE:

FOR ACCURATE RIGHT OF WAY DATA, CONTACT RIGHT OF WAY ENGINEERING AT THE DISTRICT OFFICE.

IRRIGATION NOTES:

1. IRRIGATION SUPPLY LINE LATERAL MUST BE 3/4" SCH 40 PLASTIC PIPE SUPPLY LINE. UNLESS OTHERWISE NOTED.
2. INSTALL 2 RISER SPRINKLER ASSEMBLIES (TYPE V) AT EACH PLANT BASIN FOR PLANT (GROUP B).

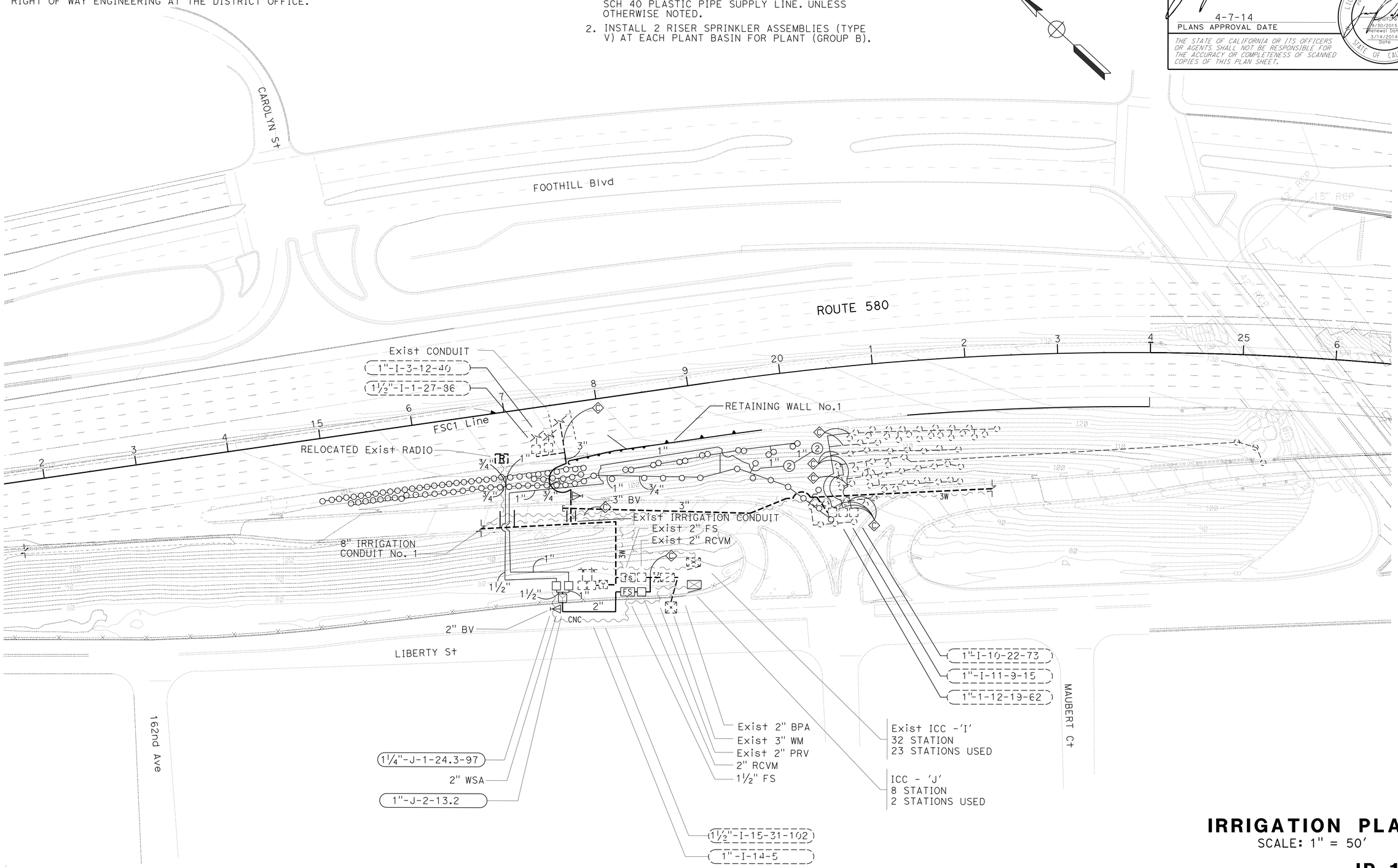

IRRIGATION PLAN

SCALE: 1" = 50'

IP-1

APPROVED FOR IRRIGATION WORK ONLY

STATE OF CALIFORNIA - DEPARTMENT OF TRANSPORTATION

Caltrans® LANDSCAPE ARCHITECTURE

SENIOR LANDSCAPE ARCHITECT: LYDIA MAC

CALCULATED-DESIGNED BY: MICHAEL OGURO

CHECKED BY: JOAQUIN PEDRIN

REVISED BY: J.PEDRIN

DATE REVISED: 3/14/14

LAST REVISION: 03-14-14

DATE PLOTTED => 25-JUL-2014

TIME PLOTTED => 11:50

Dist	COUNTY	ROUTE	POST MILES TOTAL PROJECT	SHEET No.	TOTAL SHEETS
04	Ala	580	R31.7/R31.9	31	86

LICENSED LANDSCAPE ARCHITECT

4-7-14
PLANS APPROVAL DATE

LICENSED LANDSCAPE ARCHITECT
Renewal Date
Signature
3/30/2015
Renewal Date
3/14/2014
Date
STATE OF CALIFORNIA

THE STATE OF CALIFORNIA OR ITS OFFICERS OR AGENTS SHALL NOT BE RESPONSIBLE FOR THE ACCURACY OR COMPLETENESS OF SCANNED COPIES OF THIS PLAN SHEET.

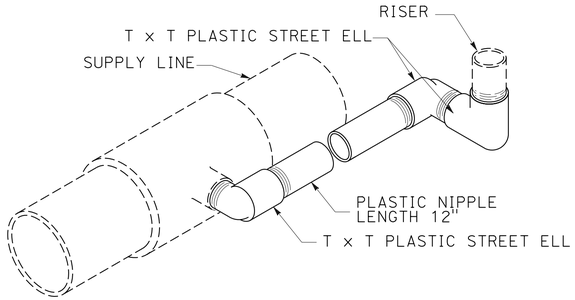

ISOMETRIC

SWING JOINT TYPE I

IRRIGATION DETAILS
ID-1

REVISED BY	J.PEDRIN
DATE REVISED	3/14/14
CALCULATED-DESIGNED BY	MICHAEL OGURO
CHECKED BY	JOAQUIN PEDRIN
SENIOR LANDSCAPE ARCHITECT	LYDIA MAC

STATE OF CALIFORNIA - DEPARTMENT OF TRANSPORTATION
Caltrans® LANDSCAPE ARCHITECTURE

LAST REVISION 03-14-14 | DATE PLOTTED => 25-JUL-2014 | TIME PLOTTED => 11:50

Dist	COUNTY	ROUTE	POST MILES TOTAL PROJECT	SHEET No.	TOTAL SHEETS
04	Ala	580	R31.7/R31.9	32	86

LICENSED LANDSCAPE ARCHITECT

4-7-14

PLANS APPROVAL DATE

THE STATE OF CALIFORNIA OR ITS OFFICERS OR AGENTS SHALL NOT BE RESPONSIBLE FOR THE ACCURACY OR COMPLETENESS OF SCANNED COPIES OF THIS PLAN SHEET.

LICENSED LANDSCAPE ARCHITECT — Joaquin Pedrin — Signature 9/30/2015 — Renewal Date 3/14/2014 — Date — STATE OF CALIFORNIA

SUBTOTALS PER VALVE ON LATERAL SUPPLY SIDE OF CONTROL VALVE

DESCRIPTION		UNIT	VALVE OR ASSEMBLY NUMBER J-1	J-2	SUBTOTALS	UNIT	DESCRIPTION
PLASTIC PIPE SUPPLY LINE SCHEDULE 40	¾ INCH	LF	961	-	961	LF	¾ INCH
	1 INCH	LF	117	544	661	LF	1 INCH
	1½" INCH	LF	169	-	169	LF	1½" INCH
GSP							
DIP							
SPRINKLER ASSEMBLY TYPE	RISER V	EA	97		97	EA	RISER V
	RISER IV GEAR DRIVEN	EA	2		2	EA	RISER IV GEAR DRIVEN

IRRIGATION CONDUIT

SHEET No.	IRRIGATION CONDUIT No.	LOCATION LINE	LOCATION STATION	SIDE L+	SIDE R+	EXTENSION CONNECTION TYPE CB	EXTENSION CONNECTION TYPE OL	(N) WATER SUPPLY LINE SIZE (INCH)	(N) ELECTRICAL CONDUIT SIZE (INCH)	ABS COMPOSITE PIPE XX"	ABS COMPOSITE PIPE XX"	ABS COMPOSITE PIPE XX"	CORRUGATED STEEL PIPE XX"	CORRUGATED STEEL PIPE XX"	CORRUGATED STEEL PIPE XX"	CORRUGATED HIGH DENSITY POLYETHYLENE PIPE XX"	CORRUGATED HIGH DENSITY POLYETHYLENE PIPE XX"	CORRUGATED HIGH DENSITY POLYETHYLENE PIPE XX"	WELDED STEEL PIPE 8"	WELDED STEEL PIPE XX"	WELDED STEEL PIPE XX"	(N) SCHEDULE 40 PVC PIPE XX"	(N) SCHEDULE 40 PVC PIPE XX"	(N) SCHEDULE 40 PVC PIPE XX"
										CONDUIT SIZE (INCH)														
										LENGTH (LF)														
IP-1	1	FSC1	17+7	-	X	-	-	(2X) 2"	2"	-	-	-	-	-	-	-	-	-	36	-	-	-	-	-
									SUBTOTAL															
									TOTAL										36					

(N) - NOT A SEPARATE PAY ITEM, FOR INFORMATION ONLY

X - DENOTES REQUIREMENT

ABBREVIATIONS:

CB - COUPLING BAND

OL - OVERLAP

IRRIGATION QUANTITIES

IQ-1

STATE OF CALIFORNIA - DEPARTMENT OF TRANSPORTATION

Caltrans® LANDSCAPE ARCHITECTURE

SENIOR LANDSCAPE ARCHITECT: LYDIA MAC

CALCULATED-DESIGNED BY: MICHAEL OGURO

CHECKED BY: JOAQUIN PEDRIN

REVISED BY: J.PEDRIN

DATE REVISED: 3/14/14

LAST REVISION 03-14-14

DATE PLOTTED => 25-JUL-2014

TIME PLOTTED => 11:50

Dist	COUNTY	ROUTE	POST MILES TOTAL PROJECT	SHEET No.	TOTAL SHEETS
04	Ala	580	R31.7/R31.9	33	86

LICENSED LANDSCAPE ARCHITECT

4-7-14
PLANS APPROVAL DATE

LICENSED LANDSCAPE ARCHITECT Joaquin Pedrin Signature 8/30/2015 Renewal Date 3/14/2014 Date STATE OF CALIFORNIA

THE STATE OF CALIFORNIA OR ITS OFFICERS OR AGENTS SHALL NOT BE RESPONSIBLE FOR THE ACCURACY OR COMPLETENESS OF SCANNED COPIES OF THIS PLAN SHEET.

SUBTOTALS PER PLAN SHEET ON MAIN SUPPLY SIDE OF CONTROL VALVE

DESCRIPTION			UNIT	SHEET NUMBER IP-1	SUBTOTALS
BPA		ENCLOSURE			
BPA		BOOSTER PUMP			
IRRIGATION CONTROLLER		8 STATION	EA	1	
IRRIGATION CONTROLLER		STATION			
IRRIGATION CONTROLLER		STATION			
IRRIGATION CONTROLLER	CEC	SINGLE	EA	1	
IRRIGATION CONTROLLER	CEC	DOUBLE			
VALVES AND ASSEMBLIES	WSA	2 INCH	EA	1	
VALVES AND ASSEMBLIES	RCV	1" INCH	EA	1	
VALVES AND ASSEMBLIES	RCV	1¼" INCH	EA	1	
VALVES AND ASSEMBLIES	RCV	2 INCH	EA	1	
VALVES AND ASSEMBLIES	BV	2 INCH	EA	1	
VALVES AND ASSEMBLIES	BV	3 INCH	EA	1	
VALVES AND ASSEMBLIES	FS	1½ INCH	EA	1	
CONDUIT	WSP	8 INCH	LF	36	36
PLASTIC PIPE SUPPLY LINE	SCHEDULE 40	¾" INCH	-	-	-
PLASTIC PIPE SUPPLY LINE	SCHEDULE 40	1" INCH	-	-	-
PLASTIC PIPE SUPPLY LINE	SCHEDULE 40	1½" INCH	-	-	-
PLASTIC PIPE SUPPLY LINE	SCHEDULE 40	2" INCH	100	-	100

TOTAL QUANTITIES

TOTALS	UNIT	DESCRIPTION		
		ENCLOSURE		BPA
		BOOSTER PUMP		BPA
1	EA	8 STATION		IRRIGATION CONTROLLER
		STATION		IRRIGATION CONTROLLER
		STATION		IRRIGATION CONTROLLER
1	EA	SINGLE	CEC	IRRIGATION CONTROLLER
		DOUBLE	CEC	IRRIGATION CONTROLLER
1	EA	2 INCH	WSA	VALVES AND ASSEMBLIES
1	EA	1 INCH	RCV	VALVES AND ASSEMBLIES
1	EA	1¼ INCH	RCV	VALVES AND ASSEMBLIES
1	EA	2 INCH	RCV	VALVES AND ASSEMBLIES
1	EA	2 INCH	BV	VALVES AND ASSEMBLIES
1	EA	3 INCH	BV	VALVES AND ASSEMBLIES
1	EA	1½ INCH	FS	VALVES AND ASSEMBLIES
36	LF	8 INCH	WSP	CONDUIT
961	LF	¾" INCH	SCHEDULE 40	PLASTIC PIPE SUPPLY LINE
661	LF	1" INCH	SCHEDULE 40	PLASTIC PIPE SUPPLY LINE
169	LF	1½" INCH	SCHEDULE 40	PLASTIC PIPE SUPPLY LINE
100	LF	2" INCH	SCHEDULE 40	PLASTIC PIPE SUPPLY LINE
97	EA	RISER V		SPRINKLER ASSEMBLY TYPE
2	EA	RISER IV GEAR DRIVEN		SPRINKLER ASSEMBLY TYPE

IRRIGATION QUANTITIES
IQ-2

STATE OF CALIFORNIA - DEPARTMENT OF TRANSPORTATION
Caltrans® LANDSCAPE ARCHITECTURE

SENIOR LANDSCAPE ARCHITECT: LYDIA MAC
CALCULATED-DESIGNED BY: MICHAEL OGURO
CHECKED BY: JOAQUIN PEDRIN
REVISED BY: J.PEDRIN
DATE REVISED: 3/14/14

LAST REVISION 03-14-14
DATE PLOTTED => 25-JUL-2014
TIME PLOTTED => 11:51

Dist	COUNTY	ROUTE	POST MILES TOTAL PROJECT	SHEET No.	TOTAL SHEETS
04	Ala	580	R31.7/R31.9	34	86

LICENSED LANDSCAPE ARCHITECT

4-7-14

PLANS APPROVAL DATE

LICENSED LANDSCAPE ARCHITECT Joaquin Pedrin 5524 Signature 9/30/2015 Renewal Date 3/14/2014 Date STATE OF CALIFORNIA

THE STATE OF CALIFORNIA OR ITS OFFICERS OR AGENTS SHALL NOT BE RESPONSIBLE FOR THE ACCURACY OR COMPLETENESS OF SCANNED COPIES OF THIS PLAN SHEET.

PLANTING LEGEND

PLANT GROUP	PLANT No.	SYMBOL	BOTANICAL NAME	COMMON NAME	SIZE	QUANTITY EACH	HOLE SIZE (INCH) Dia	HOLE SIZE (INCH) DEPTH	BASIN TYPE	SOIL AMENDMENT ① TYPE	SOIL AMENDMENT ① RATE	IRON SULFATE ① RATE	COMMERCIAL FERTILIZER ① PLANTING	COMMERCIAL FERTILIZER ① PLT ESTB	BASIN MULCH ② TYPE	BASIN MULCH ② CY	STAKING	PLANTING LIMITS MINIMUM DISTANCE (ft) FROM ETW	Pvmt	FENCE	WALL	PAVED DITCH	EARTH DITCH	ON CENTER (ft)	REMARKS
A	1		ABELIA X GRANDIFLORA	GLOSSY ABELIA	No.1	33	18"	12"	I	C	0.02 CY	-	2 Pkt(s)	0.2 LB	TB	0.03	-	-	8	6	6	6	8	8	SHRUB
	2		ACACIA REDOLENS	PROSTRATE ACACIA	No.1	15	18"	12"	I	C	0.02 CY	-	2 Pkt(s)	0.2 LB	TB	0.03	-	-	20	20	20	20	22	20	SHRUB
	3		RHAPHIOLEPIS 'MAJESTIC BEAUTY'	NO COMMON NAME	No.1	18	18"	12"	I	C	0.02 CY	-	2 Pkt(s)	0.2 LB	TB	0.03	-	-	12	10	10	12	10	10	SHRUB
	4		PLUMBAGO AURICULATA	CAPE PLUMBAGO	No.1	17	18"	12"	I	C	0.02 CY	-	2 Pkt(s)	0.2 LB	TB	0.03	-	-	15	15	15	15	17	10	SHRUB
B	5		SEQUIOA SEMPERVIRENS	COAST REDWOOD	No.5	7	24"	18"	I	C	0.04 CY	-	5 Pkt(s)	0.3 oz	TB	0.03	④	30	-	20	20	20	22	⑦	TREE

APPLICABLE WHEN CIRCLED:

① - QUANTITIES SHOWN ARE "PER PLANT" UNLESS SHOWN AS SQFT OR SQYD APPLICATION RATES
② - BASIN MULCH IN MULCH AREAS IS INCLUDED WITH MULCH QUANTITIES SHOWN ON PLANTING PLAN
3 - SUFFICIENT TO RECEIVE ROOT BALL AND AMENDMENTS IF REQUIRED
④ - SEE DETAIL
5 - SEE SPECIAL PROVISIONS
6 - SEE STANDARD SPECIFICATIONS
⑦ - AS SHOWN ON PLANS
8 - UNLESS OTHERWISE SHOWN ON PLANS
9 - FOLIAGE PROTECTOR REQUIRED
10 - ROOT PROTECTOR REQUIRED
11 - ROOT BARRIER REQUIRED
12 - DEPARTMENT-FURNISHED

ABBREVIATIONS

S - SPHAGNUM PEAT MOSS
C - COMPOST
N - NITROLIZED FIR BARK
V - VERMICULITE
P - PERLITE
P - COMPOST
TB - TREE BARK
WC - WOOD CHIP
SB - SHREDDED BARK
TT - TREE TRIMMING

NOTE:
UNDERLINED PORTIONS OF BOTANICAL NAME INDICATE ABBREVIATIONS USED ON PLANTING PLANS.

PLANT LIST
PL-1

STATE OF CALIFORNIA - DEPARTMENT OF TRANSPORTATION
Caltrans® LANDSCAPE ARCHITECTURE
SENIOR LANDSCAPE ARCHITECT: LYDIA MAC
CALCULATED-DESIGNED BY: MICHAEL OGURO
CHECKED BY: JOAQUIN PEDRIN
REVISED BY: J.PEDRIN
DATE REVISED: 3/14/14

LAST REVISION 03-14-14
DATE PLOTTED => 25-JUL-2014
TIME PLOTTED => 11:51

Dist	COUNTY	ROUTE	POST MILES TOTAL PROJECT	SHEET No.	TOTAL SHEETS
04	Ala	580	R31.7/R31.9	35	86

LICENSED LANDSCAPE ARCHITECT

4-7-14

PLANS APPROVAL DATE

THE STATE OF CALIFORNIA OR ITS OFFICERS OR AGENTS SHALL NOT BE RESPONSIBLE FOR THE ACCURACY OR COMPLETENESS OF SCANNED COPIES OF THIS PLAN SHEET.

LICENSED LANDSCAPE ARCHITECT
Joaquin Pedrin 5524
Signature
9/30/2015
Renewal Date
3/14/2014
Date
STATE OF CALIFORNIA

NOTE:

FOR ACCURATE RIGHT OF WAY DATA, CONTACT RIGHT OF WAY ENGINEERING AT THE DISTRICT OFFICE.

PLANTING NOTE:

1. EXIST REDWOOD TREES TO BE PROTECTED IN PLACE. INSTALL TEMPORARY FENCE (TYPE ESA) AROUND EXIST REDWOOD TREES. (SEE LAYOUT SHEET)

LEGEND:

- EXISTING TREE TO BE REMOVED. (ROADSIDE CLEARING)
- LIMIT OF SPREAD MULCH AREA (Min 3" Depth)

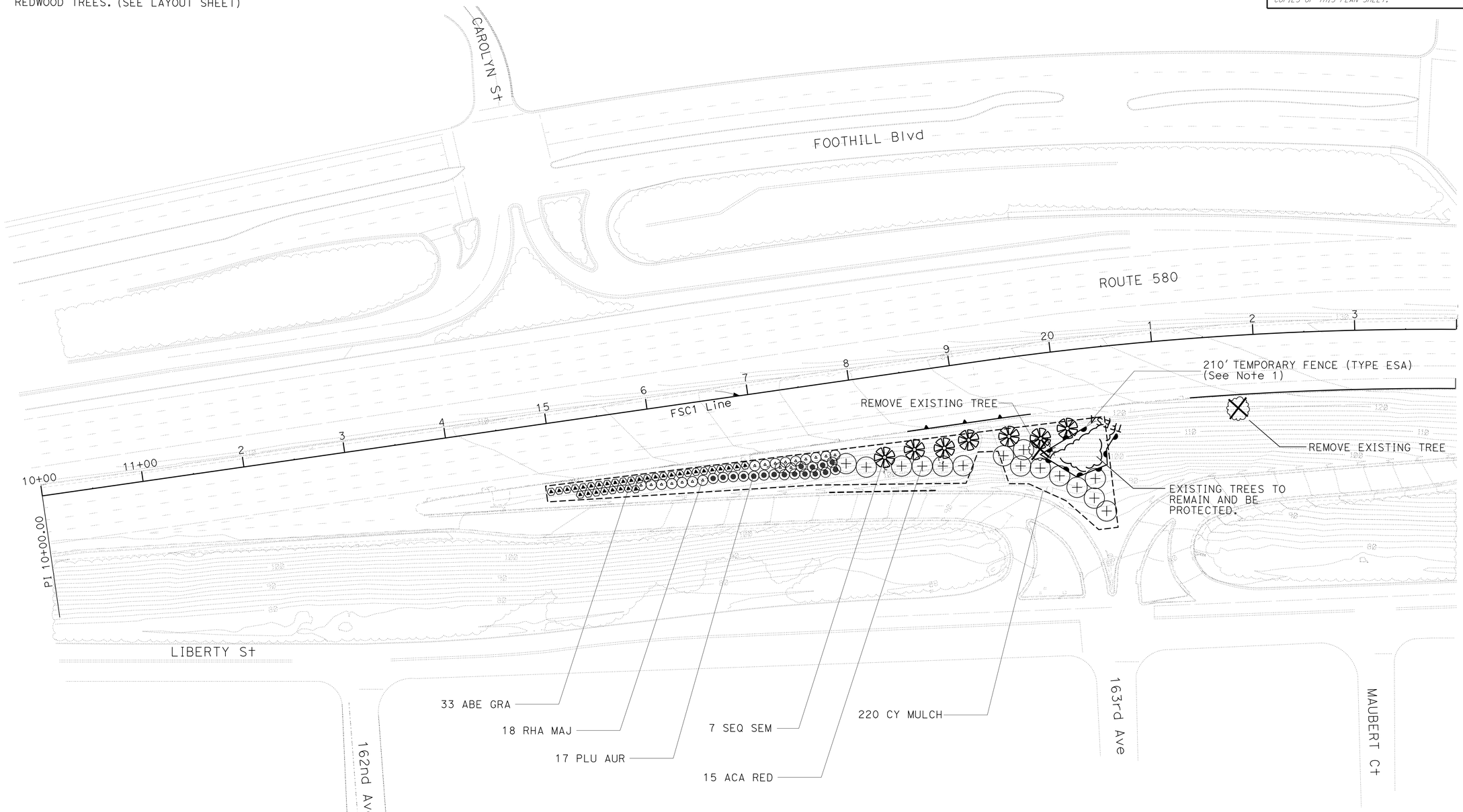

PLANTING PLAN

SCALE: 1" = 50'

PP-1

APPROVED FOR PLANTING WORK ONLY

STATE OF CALIFORNIA - DEPARTMENT OF TRANSPORTATION

Caltrans® LANDSCAPE ARCHITECTURE

SENIOR LANDSCAPE ARCHITECT: LYDIA MAC

CALCULATED-DESIGNED BY: MICHAEL OGURO

CHECKED BY: JOAQUIN PEDRIN

REVISED BY: J.PEDRIN

DATE REVISED: 3/14/14

LAST REVISION: 03-14-14

DATE PLOTTED => 25-JUL-2014

TIME PLOTTED => 11:51

Dist	COUNTY	ROUTE	POST MILES TOTAL PROJECT	SHEET No.	TOTAL SHEETS
04	Ala	580	R31.7/R31.9	36	86

LICENSED LANDSCAPE ARCHITECT

4-7-14
PLANS APPROVAL DATE

LICENSED LANDSCAPE ARCHITECT
Joaquin Pedrin
Signature
8/30/2015
Renewal Date
3/14/2014
Date
STATE OF CALIFORNIA

THE STATE OF CALIFORNIA OR ITS OFFICERS OR AGENTS SHALL NOT BE RESPONSIBLE FOR THE ACCURACY OR COMPLETENESS OF SCANNED COPIES OF THIS PLAN SHEET.

WOOD MULCH

TYPE	LOCATION		QUANTITY (CY)
	BASIN	SPREAD	
TREE BARK	-	-	-
WOOD CHIP	-	-	-
SHREDDED BARK	-	220	220
TREE TRIMMING	-	-	-
		TOTAL	220

SOIL AMENDMENT

TYPE	QUANTITY (CY)
COMPOST	2
TOTAL	2

COMMERCIAL FERTILIZER

TYPE	QUANTITY (EA)
PACKET	201
TOTAL	201

LANDSCAPE QUANTITIES

LQ-1

STATE OF CALIFORNIA - DEPARTMENT OF TRANSPORTATION
Caltrans® LANDSCAPE ARCHITECTURE

SENIOR LANDSCAPE ARCHITECT: LYDIA MAC

CALCULATED-DESIGNED BY: MICHAEL OGURO
CHECKED BY: JOAQUIN PEDRIN

REVISED BY: J.PEDRIN
DATE REVISED: 3/14/14

LAST REVISION: 03-14-14
DATE PLOTTED => 25-JUL-2014
TIME PLOTTED => 11:51

Dist	COUNTY	ROUTE	POST MILES TOTAL PROJECT	SHEET No.	TOTAL SHEETS
04	Ala	580	R31.7/R31.9	37	86

LICENSED LANDSCAPE ARCHITECT

4-7-14

PLANS APPROVAL DATE

THE STATE OF CALIFORNIA OR ITS OFFICERS OR AGENTS SHALL NOT BE RESPONSIBLE FOR THE ACCURACY OR COMPLETENESS OF SCANNED COPIES OF THIS PLAN SHEET.

LICENSED LANDSCAPE ARCHITECT
SALLY BANG No. 5060
Signature
11-30-15
Renewal Date
3-12-14
Date
STATE OF CALIFORNIA

LEGEND:

FR FIBER ROLL

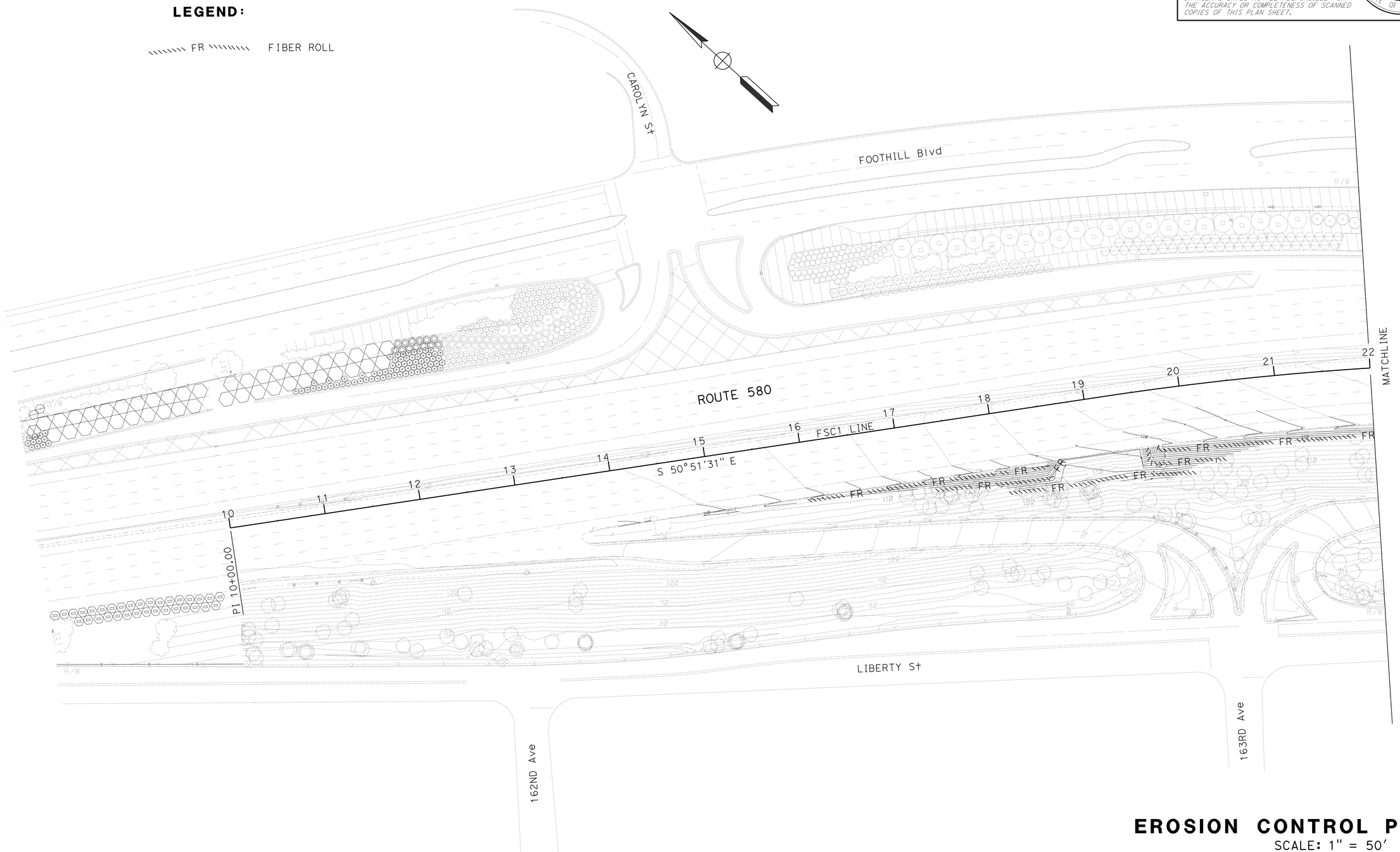

EROSION CONTROL PLAN

SCALE: 1" = 50'

APPROVED FOR EROSION CONTROL WORK ONLY

EC-1

STATE OF CALIFORNIA - DEPARTMENT OF TRANSPORTATION

Caltrans

WATER QUALITY

SENIOR LANDSCAPE ARCHITECT: DAVID YAM

CALCULATED-DESIGNED BY: SALLY BANG

CHECKED BY: ANGELA KWAN

REVISED BY: SB

DATE REVISED: 3/12/14

LAST REVISION 03-12-14

DATE PLOTTED => 25-JUL-2014

TIME PLOTTED => 11:51

Dist	COUNTY	ROUTE	POST MILES TOTAL PROJECT	SHEET No.	TOTAL SHEETS
04	Ala	580	R31.7/R31.9	38	86

LICENSED LANDSCAPE ARCHITECT

4-7-14

PLANS APPROVAL DATE

THE STATE OF CALIFORNIA OR ITS OFFICERS OR AGENTS SHALL NOT BE RESPONSIBLE FOR THE ACCURACY OR COMPLETENESS OF SCANNED COPIES OF THIS PLAN SHEET.

LICENSED LANDSCAPE ARCHITECT
SALLY BANG No. 5066
Signature
11-30-15
Renewal Date
3-12-14
Date
STATE OF CALIFORNIA

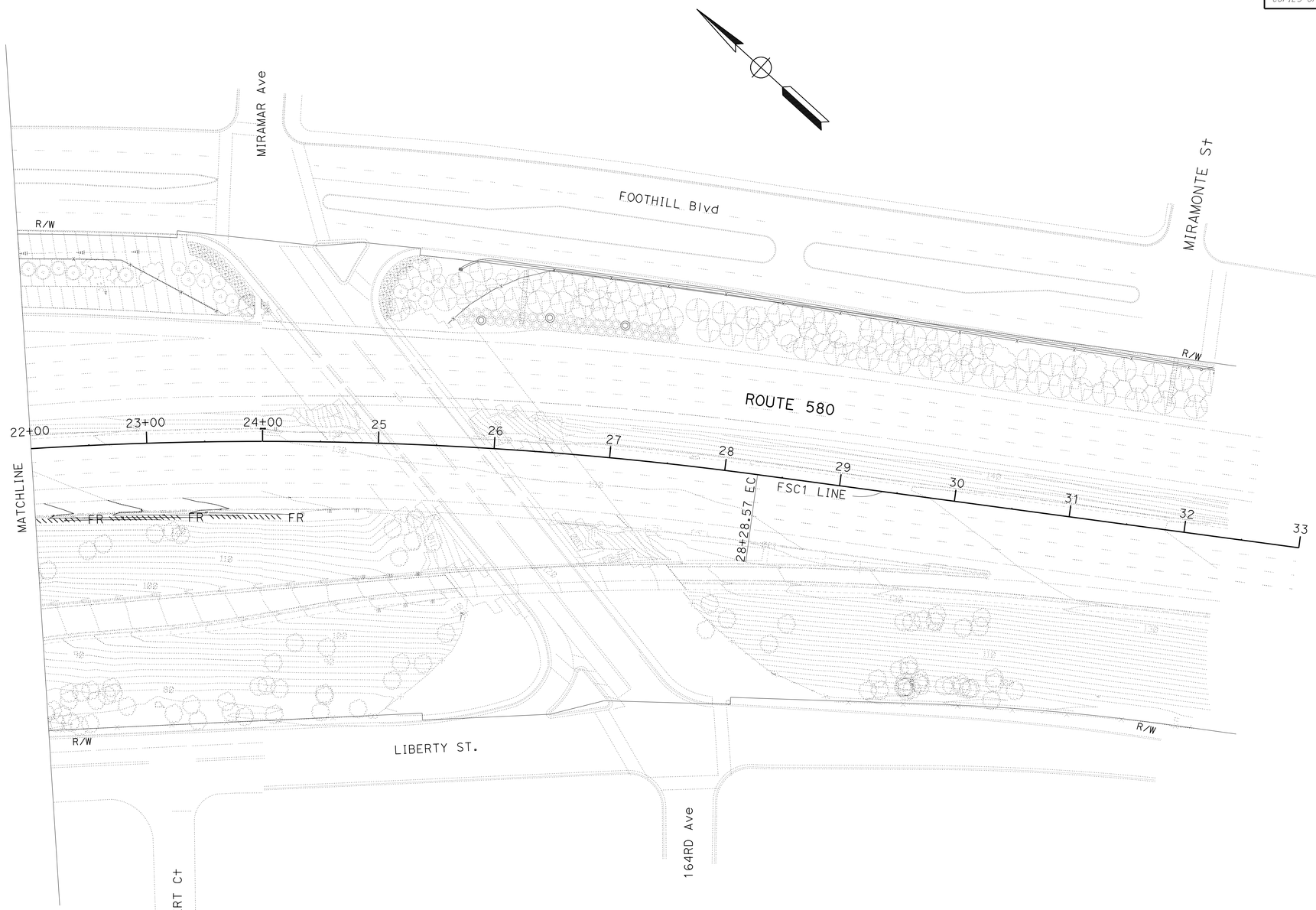

EROSION CONTROL PLAN

SCALE: 1" = 50'

EC-2

APPROVED FOR EROSION CONTROL WORK ONLY

STATE OF CALIFORNIA - DEPARTMENT OF TRANSPORTATION

Caltrans® **WATER QUALITY**

SENIOR LANDSCAPE ARCHITECT: DAVID YAM

CALCULATED-DESIGNED BY: SALLY BANG

CHECKED BY: ANGELA KWAN

REVISED BY: SB

DATE REVISED: 3/12/14

LAST REVISION 03-12-14

DATE PLOTTED => 25-JUL-2014

TIME PLOTTED => 11:51

Dist	COUNTY	ROUTE	POST MILES TOTAL PROJECT	SHEET No.	TOTAL SHEETS
04	Ala	580	R31.7/R31.9	39	86

LICENSED LANDSCAPE ARCHITECT

4-7-14

PLANS APPROVAL DATE

LICENSED LANDSCAPE ARCHITECT SALLY BANG No. 5060 Signature 11-30-15 Renewal Date 3-12-14 Date STATE OF CALIFORNIA

THE STATE OF CALIFORNIA OR ITS OFFICERS OR AGENTS SHALL NOT BE RESPONSIBLE FOR THE ACCURACY OR COMPLETENESS OF SCANNED COPIES OF THIS PLAN SHEET.

FIBER ROLLS

SEQUENCE	ITEM	TYPE	REMARKS
FIBER ROLLS MUST BE INSTALLED BEFORE MULCH.	FIBER ROLLS	TYPE B 8" TO 10" DIA	TYPE 1 FIBER ROLL INSTALLATION

EROSION CONTROL QUANTITIES

SHEET	FIBER ROLLS LF
EC-1	925
EC-2	230
TOTAL	1155

EROSION CONTROL QUANTITIES

NO SCALE

ECQ-1

STATE OF CALIFORNIA - DEPARTMENT OF TRANSPORTATION

Caltrans®

WATER QUALITY

SENIOR LANDSCAPE ARCHITECT: DAVID YAM

CALCULATED-DESIGNED BY: SALLY BANG

CHECKED BY: ANGELA KWAN

REVISED BY: SB

DATE REVISED: 3/12/14

LAST REVISION 03-12-14

DATE PLOTTED => 25-JUL-2014

TIME PLOTTED => 11:51

Dist	COUNTY	ROUTE	POST MILES TOTAL PROJECT	SHEET No.	TOTAL SHEETS
04	Ala	580	R31.7/R31.9	40	86

REGISTERED ELECT ENGINEER 3-19-14 DATE

4-7-14
PLANS APPROVAL DATE

REGISTERED PROFESSIONAL ENGINEER Mahmood Noii No. 13717 Exp. 6-30-15 ELECT STATE OF CALIFORNIA

THE STATE OF CALIFORNIA OR ITS OFFICERS OR AGENTS SHALL NOT BE RESPONSIBLE FOR THE ACCURACY OR COMPLETENESS OF SCANNED COPIES OF THIS PLAN SHEET.

NOTE:

FOR ACCURATE RIGHT OF WAY DATA, CONTACT RIGHT OF WAY ENGINEERING AT THE DISTRICT OFFICE.

ELECTRICAL SERVICE (IRRIGATION)

SHEET No.	No. 5 PB	1½"C TYPE 3	No. 10 CONDUCTORS
	EA	LF	
E-1	2	170	350

ITEMS SHOWN IN THIS TABLE ARE NOT A SEPARATE PAY ITEM, FOR INFORMATION ONLY.

ELECTRICAL QUANTITIES

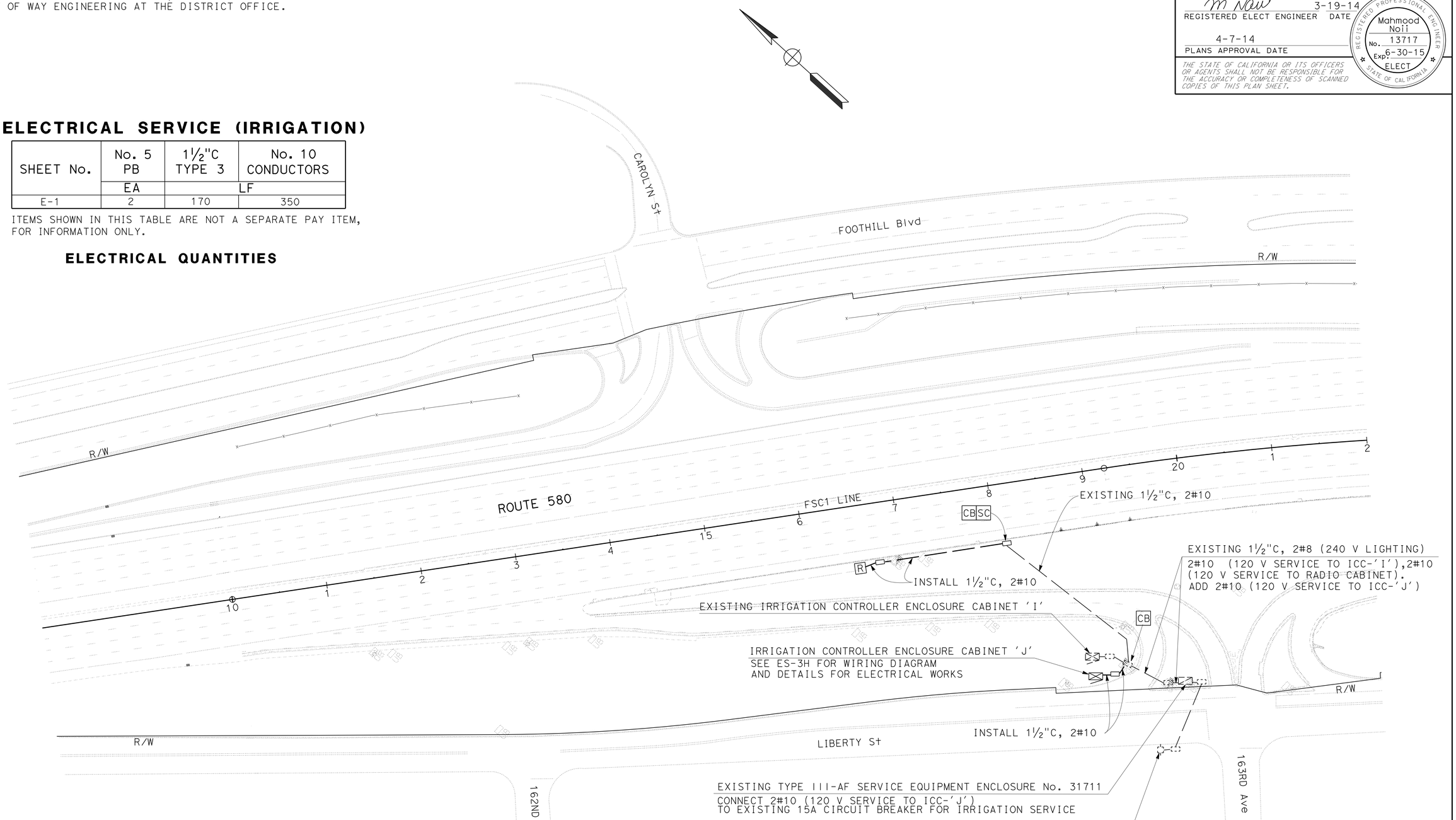

ELECTRICAL SERVICE (IRRIGATION)

SCALE: 1" = 50'

APPROVED FOR ELECTRICAL WORK ONLY

E-1

STATE OF CALIFORNIA - DEPARTMENT OF TRANSPORTATION
Caltrans
ELECTRICAL

FUNCTIONAL SUPERVISOR: BEHZAD GOLEMOHAMMADI
CALCULATED-DESIGNED BY: GUILLERMO BAUTISTA
CHECKED BY: MAHMOOD NOII
REVISED BY: GB
DATE REVISED: 3/19/14

LAST REVISION 04-04-14
DATE PLOTTED => 25-JUL-2014
TIME PLOTTED => 11:51

M

Maint	MAINTENANCE
Max	MAXIMUM
MB	METAL BEAM
MBB	METAL BEAM BARRIER
MBGR	METAL BEAM GUARD RAILING
Med	MEDIAN
MGS	MIDWEST GUARDRAIL SYSTEM
MH	MANHOLE
Min	MINIMUM
Misc	MISCELLANEOUS
Misc I & S	MISCELLANEOUS IRON AND STEEL
Mkr	MARKER
Mod	MODIFIED,
	MODIFY
Mon	MONUMENT
MP	METAL PLATE
MPGR	METAL PLATE GUARD RAILING
MR	MOVEMENT RATING
MSE	MECHANICALLY STABILIZED EMBANKMENT
Mt	MOUNTAIN, MOUNT
Mtl	MATERIAL
MVP	MAINTENANCE VEHICLE PULLOUT

N

N	NORTH
NB	NORTHBOUND
No.	NUMBER (MUST HAVE PERIOD)
Nos.	NUMBERS (MUST HAVE PERIOD)
NPS	NOMINAL PIPE SIZE
NS	NEAR SIDE
NSP	NEW STANDARD PLAN
NTS	NOT TO SCALE

O

Oblr	OBLITERATE
OC	OVERCROSSING
OD	OUTSIDE DIAMETER
OF	OUTSIDE FACE
OG	ORIGINAL GROUND
OGAC	OPEN GRADED ASPHALT CONCRETE
OGFC	OPEN GRADED FRICTION COURSE
OH	OVERHEAD
OHWM	ORDINARY HIGH WATER MARK
O-O	OUT TO OUT
Opp	OPPOSITE
OSD	OVERSIDE DRAIN

P

P	PAGE
PAP	PERFORATED ALUMINUM PIPE
PB	PULL BOX
PC	POINT OF CURVATURE,
	PRECAST
PCC	POINT OF COMPOUND CURVE,
	PORTLAND CEMENT CONCRETE
PCMS	PORTABLE CHANGEABLE MESSAGE SIGN
PCP	PERFORATED CONCRETE PIPE,
	PRESTRESSED CONCRETE PIPE
PCVC	POINT OF COMPOUND VERTICAL CURVE
PEC	PERMIT TO ENTER AND CONSTRUCT
Ped	PEDESTRIAN
Ped OC	PEDESTRIAN OVERCROSSING
Ped UC	PEDESTRIAN UNDERCROSSING
Perm Mtl	PERMEABLE MATERIAL

P continued

PG	PROFILE GRADE
PI	POINT OF INTERSECTION
PJP	PARTIAL JOINT PENETRATION
Pkwy	PARKWAY
₱,PL	PLATE
P/L	PROPERTY LINE
PM	POST MILE,
	TIME FROM NOON TO MIDNIGHT
PN	PAVING NOTCH
POC	POINT OF HORIZONTAL CURVE
POT	POINT OF TANGENT
POVC	POINT OF VERTICAL CURVE
PP	PIPE PILE,
	PLASTIC PIPE,
	POWER POLE
PPL	PREFORMED PERMEABLE LINER
PPP	PERFORATED PLASTIC PIPE
PRC	POINT OF REVERSE CURVE
PRF	PAVEMENT REINFORCING FABRIC
PRVC	POINT OF REVERSE VERTICAL CURVE
PS&E	PLANS, SPECIFICATIONS AND ESTIMATES
PS, P/S	PRESTRESSED
PSP	PERFORATED STEEL PIPE
PT	POINT OF TANGENCY
PVC	POLYVINYL CHLORIDE
Pvmt	PAVEMENT

Q

Qty	QUANTITY

R

R	RADIUS
R & D	REMOVE AND DISPOSE
R & S	REMOVE AND SALVAGE
R/C	RATE OF CHANGE
RCA	REINFORCED CONCRETE ARCH
RCB	REINFORCED CONCRETE BOX
RCP	REINFORCED CONCRETE PIPE
RCPA	REINFORCED CONCRETE PIPE ARCH
Rd	ROAD
Reinf	REINFORCED,
	REINFORCEMENT,
	REINFORCING
Rel	RELOCATE
Repl	REPLACEMENT
Ret	RETAINING
Rev	REVISED, REVISION
Rdwy	ROADWAY
RHMA	RUBBERIZED HOT MIX ASPHALT
Riv	RIVER
RM	ROAD-MIXED
RP	RADIUS POINT,
	REFERENCE POINT
RR	RAILROAD
RSP	ROCK SLOPE PROTECTION,
	REVISED STANDARD PLAN
Rt	RIGHT
Rte	ROUTE
RW	REDWOOD,
	RETAINING WALL
R/W	RIGHT OF WAY
Rwy	RAILWAY

S

S	SOUTH,
	SUPPLEMENT
SAE	STRUCTURE APPROACH EMBANKMENT
Salv	SALVAGE
SAPP	STRUCTURAL ALUMINUM PLATE PIPE
SB	SOUTHBOUND
SC	SAND CUSHION
SCSP	SLOTTED CORRUGATED STEEL PIPE
SD	STORM DRAIN
Sec	SECOND,
	SECTION
Sep	SEPARATION
SG	SUBGRADE
Shld	SHOULDER
Sht	SHEET
Sim	SIMILAR
℄	STATION LINE
SM	SELECTED MATERIAL
Spec	SPECIAL,
	SPECIFICATIONS
SPP	SLOTTED PLASTIC PIPE
SS	SLOPE STAKE
SSBM	STRAP AND SADDLE BRACKET METHOD
SSD	STRUCTURAL SECTION DRAIN
SSPA	STRUCTURAL STEEL PLATE ARCH
SSPP	STRUCTURAL STEEL PLATE PIPE
SSPPA	STRUCTURAL STEEL PLATE PIPE ARCH
SSRP	STEEL SPIRAL RIB PIPE
St	STREET
Sta	STATION
STBB	SINGLE THRIE BEAM BARRIER
Std	STANDARD
Str	STRUCTURE
Surf	SURFACING
SW	SIDEWALK,
	SOUND WALL
Swr	SEWER
Sym	SYMMETRICAL
S4S	SURFACE 4 SIDES

T

T	SEMI-TANGENT
Tan	TANGENT
TBB	THRIE BEAM BARRIER
Tbr	TIMBER
TC	TOP OF CURB
TCB	TRAFFIC CONTROL BOX
TCE	TEMPORARY CONSTRUCTION EASEMENT
Tel	TELEPHONE
Temp	TEMPORARY
TG	TOP OF GRADE
Tot	TOTAL
TP	TELEPHONE POLE
TPB	TREATED PERMEABLE BASE
TPM	TREATED PERMEABLE MATERIAL
Trans	TRANSITION

T continued

TS	TRANSVERSE,
	TRAFFIC SIGNAL,
	TUBULAR STEEL
Typ	TYPICAL

U

UC	UNDERCROSSING
UD	UNDERDRAIN
UG	UNDERGROUND
UON	UNLESS OTHERWISE NOTED
UP	UNDERPASS

V

V	VALVE,
	DESIGN SPEED
Var	VARIABLE,
	VARIES
VC	VERTICAL CURVE
VCP	VITRIFIED CLAY PIPE
Vert	VERTICAL
Via	VIADUCT
Vol	VOLUME

W

W	WEST,
	WIDTH
WB	WESTBOUND
WH	WEEP HOLE
WM	WIRE MESH
WS	WATER SURFACE
WSP	WELDED STEEL PIPE
Wt	WEIGHT
WV	WATER VALVE
WW	WINGWALL
WWLOL	WINGWALL LAYOUT LINE

X

X Sec	CROSS SECTION
Xing	CROSSING

Y

Yr	YEAR
Yrs	YEARS

Dist	COUNTY	ROUTE	POST MILES TOTAL PROJECT	SHEET No.	TOTAL SHEETS
04	Ala	580	R31.7/R31.9	41	86

Grace M. Tsushima
REGISTERED CIVIL ENGINEER

July 19, 2013
PLANS APPROVAL DATE

REGISTERED PROFESSIONAL ENGINEER Grace M. Tsushima No. C49814 Exp. 9-30-14 CIVIL STATE OF CALIFORNIA

THE STATE OF CALIFORNIA OR ITS OFFICERS OR AGENTS SHALL NOT BE RESPONSIBLE FOR THE ACCURACY OR COMPLETENESS OF SCANNED COPIES OF THIS PLAN SHEET.

TO ACCOMPANY PLANS DATED 4-7-14

UNIT OF MEASUREMENT SYMBOLS:

Some of the symbols used in the project plan quantity tables and in the Bid Item List are:

TABLE A

SYMBOL USED	DEFINITIONS
ACRE	ACRE
CF	CUBIC FOOT
CY	CUBIC YARD
EA	EACH
GAL	GALLON
LB	POUND
LF	LINEAR FOOT
SQFT	SQUARE FOOT
SQYD	SQUARE YARD
STA	100 FEET
TAB	TABLET
TON	2,000 POUNDS

Some of the symbols used in the plans other than in the project plan quantity tables are:

TABLE B

SYMBOL USED	DEFINITIONS
ksi	KIPS PER SQUARE INCH
ksf	KIPS PER SQUARE FOOT
psi	POUNDS PER SQUARE INCH
psf	POUNDS PER SQUARE FOOT
lb/ft^3, pcf	POUNDS PER CUBIC FOOT
tsf	TONS PER SQUARE FOOT
mph, MPH *	MILES PER HOUR
ø	NOMINAL DIAMETER
oz	OUNCE
lb	POUND
kip	1,000 POUNDS
cal	CALORIE
ft	FOOT OR FEET
gal	GALLON

* For use on a sign panel only

STATE OF CALIFORNIA
DEPARTMENT OF TRANSPORTATION

ABBREVIATIONS (SHEET 2 OF 2)

NO SCALE

RSP A10B DATED JULY 19, 2013 SUPERSEDES STANDARD PLAN A10B DATED MAY 20, 2011 - PAGE 2 OF THE STANDARD PLANS BOOK DATED 2010.

REVISED STANDARD PLAN RSP A10B

2010 REVISED STANDARD PLAN RSP A10B

6-7-13

Dist	COUNTY	ROUTE	POST MILES TOTAL PROJECT	SHEET No.	TOTAL SHEETS
04	Ala	580	R31.7/R31.9	42	86

REGISTERED CIVIL ENGINEER

July 19, 2013
PLANS APPROVAL DATE

Roberta L. McLaughlin No. C40375 Exp. 3-31-15 CIVIL STATE OF CALIFORNIA REGISTERED PROFESSIONAL ENGINEER

THE STATE OF CALIFORNIA OR ITS OFFICERS OR AGENTS SHALL NOT BE RESPONSIBLE FOR THE ACCURACY OR COMPLETENESS OF SCANNED COPIES OF THIS PLAN SHEET.

TO ACCOMPANY PLANS DATED 4-7-14

EXIT RAMP NEUTRAL AREA (GORE) TREATMENT

DETAIL 36

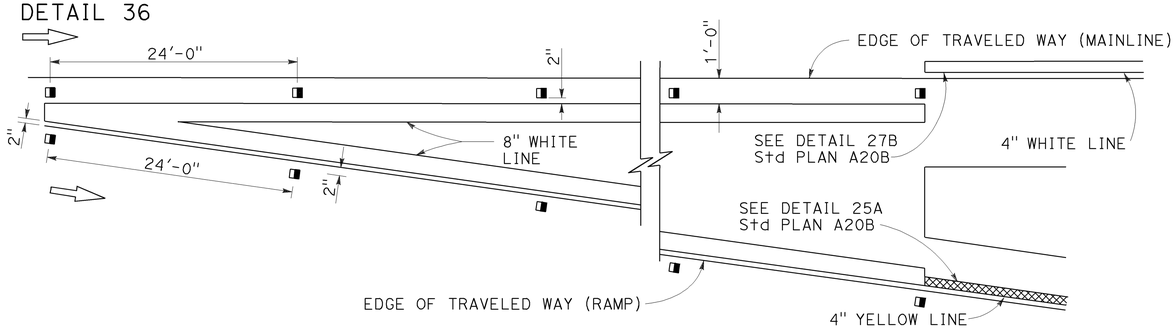

ENTRANCE RAMP NEUTRAL AREA (MERGE) TREATMENT

DETAIL 36A

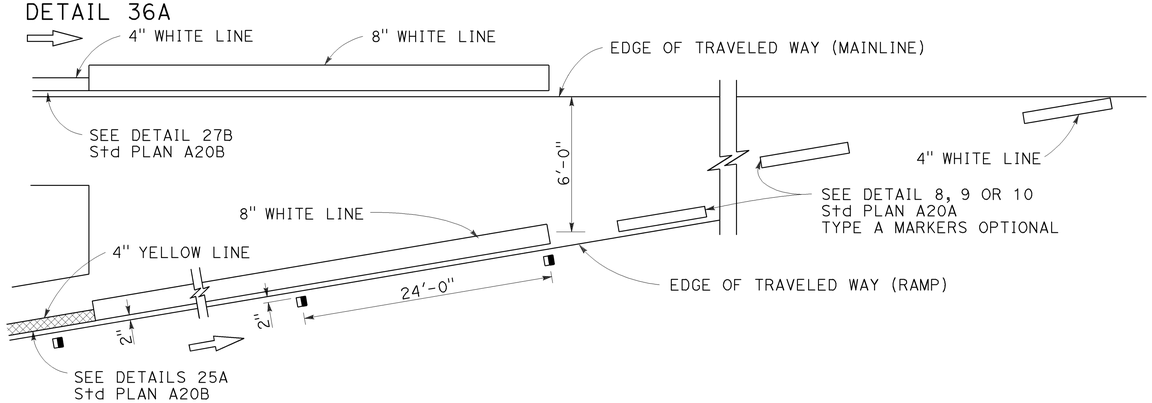

ENTRANCE RAMP NEUTRAL AREA (ACCELERATION LANE) TREATMENT

DETAIL 36B

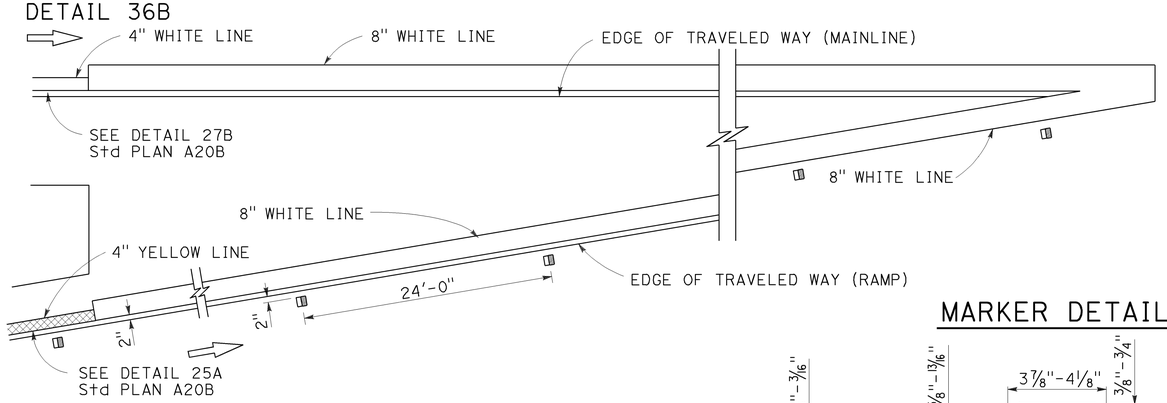

LANE DROP AT EXIT RAMPS

DETAIL 37

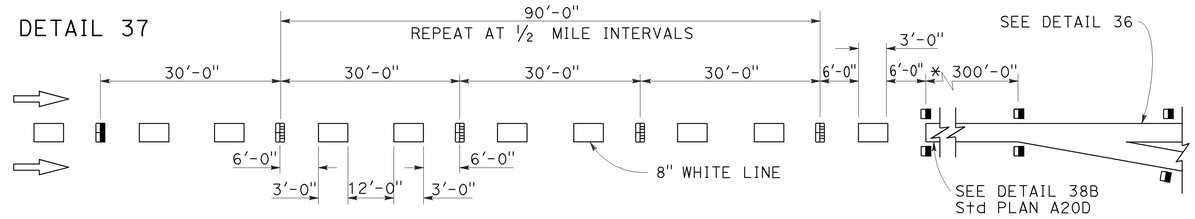

DETAIL 37A

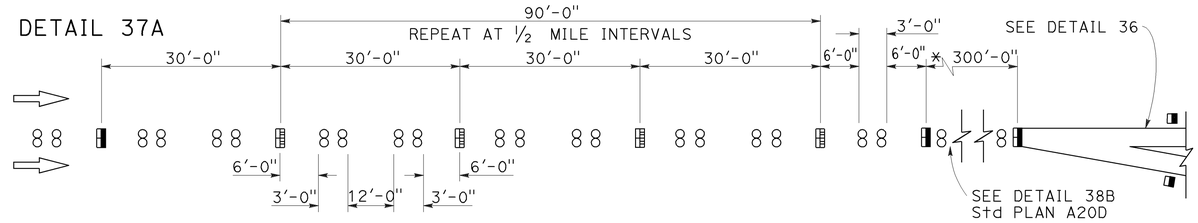

* The solid channelizing line shown may be omitted on short auxiliary lanes where weaving length is critical.

LANE DROP AT INTERSECTIONS

DETAIL 37B

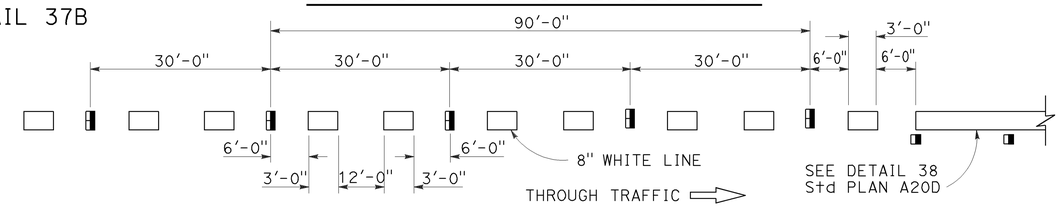

DETAIL 37C

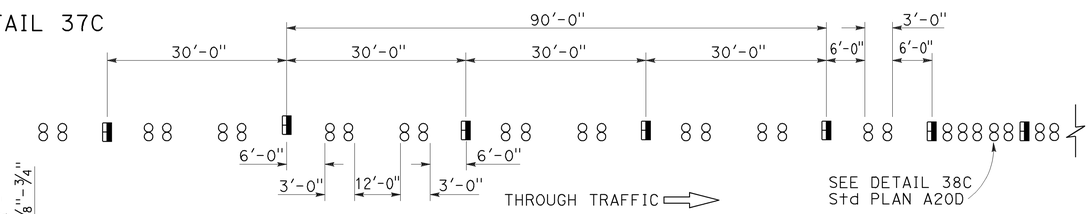

MARKER DETAILS

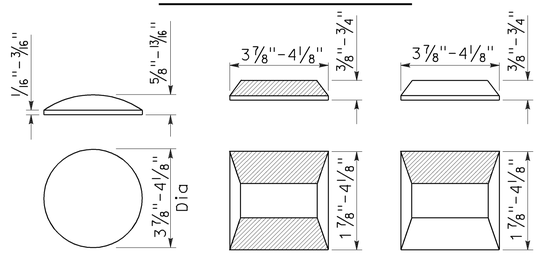

RETROREFLECTIVE FACE

LEGEND:

MARKERS

- ○ TYPE A WHITE NON-REFLECTIVE
- ⊟ TYPE C RED-CLEAR RETROREFLECTIVE
- ◨ TYPE G ONE-WAY CLEAR RETROREFLECTIVE

STATE OF CALIFORNIA
DEPARTMENT OF TRANSPORTATION

PAVEMENT MARKERS AND TRAFFIC LINE TYPICAL DETAILS

NO SCALE

RSP A20C DATED JULY 19, 2013 SUPERSEDES STANDARD PLAN A20C DATED MAY 20, 2011 - PAGE 11 OF THE STANDARD PLANS BOOK DATED 2010.

REVISED STANDARD PLAN RSP A20C

2010 REVISED STANDARD PLAN RSP A20C

4-29-13

Dist	COUNTY	ROUTE	POST MILES TOTAL PROJECT	SHEET No.	TOTAL SHEETS
04	Ala	580	R31.7/R31.9	43	86

Randell D. Hiatt
REGISTERED CIVIL ENGINEER

July 19, 2013
PLANS APPROVAL DATE

REGISTERED PROFESSIONAL ENGINEER
Randell D. Hiatt
No. C50200
Exp. 6-30-15
CIVIL
STATE OF CALIFORNIA

THE STATE OF CALIFORNIA OR ITS OFFICERS OR AGENTS SHALL NOT BE RESPONSIBLE FOR THE ACCURACY OR COMPLETENESS OF SCANNED COPIES OF THIS PLAN SHEET.

TO ACCOMPANY PLANS DATED 4-7-14

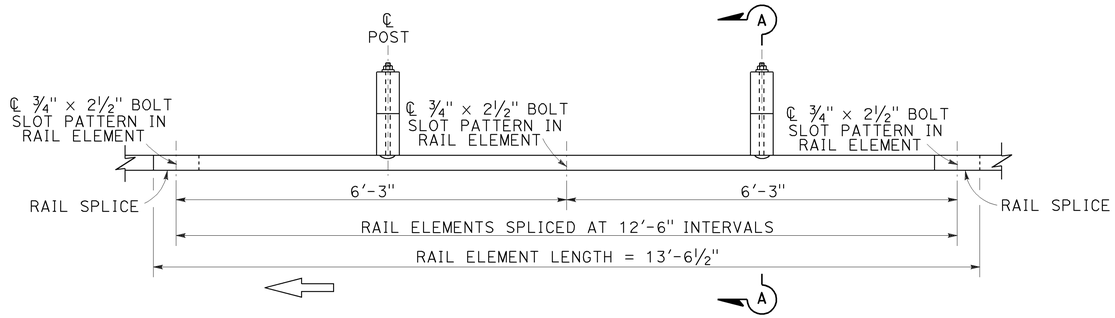

PLAN

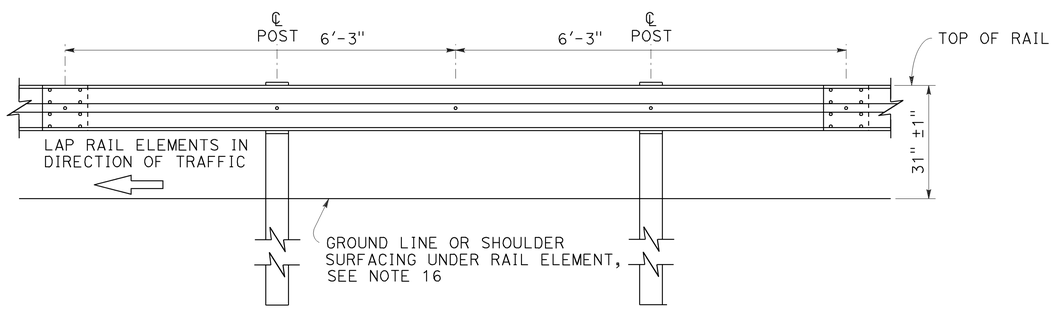

ELEVATION

MIDWEST GUARDRAIL SYSTEM WITH WOOD POST AND BLOCKS

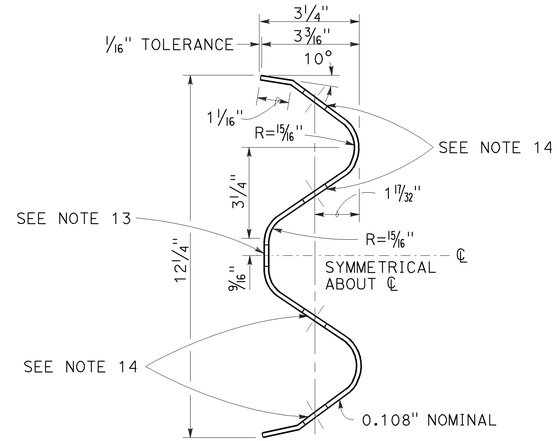

SECTION THRU RAIL ELEMENT

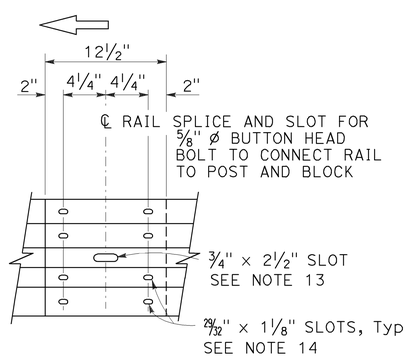

ELEVATION

RAIL ELEMENT SPLICE DETAIL

a) Connect the over lapped end of the rail elements with ⅝" ø × 1⅜" button head oval shoulder splice bolts inserted into the 29⁄32" × 1⅛" slots and bolted together with ⅝" ø recessed hex nuts. Recess of hex nut points toward rail element. A total of 8 bolts and nuts are to be used at each rail splice connection.

b) The ends of the rail elements are to be overlapped in the direction of traffic (see details).

c) Where end cap is to be attached to the end of a rail element, a total of 4 of the above described splice bolts and nuts are to be used.

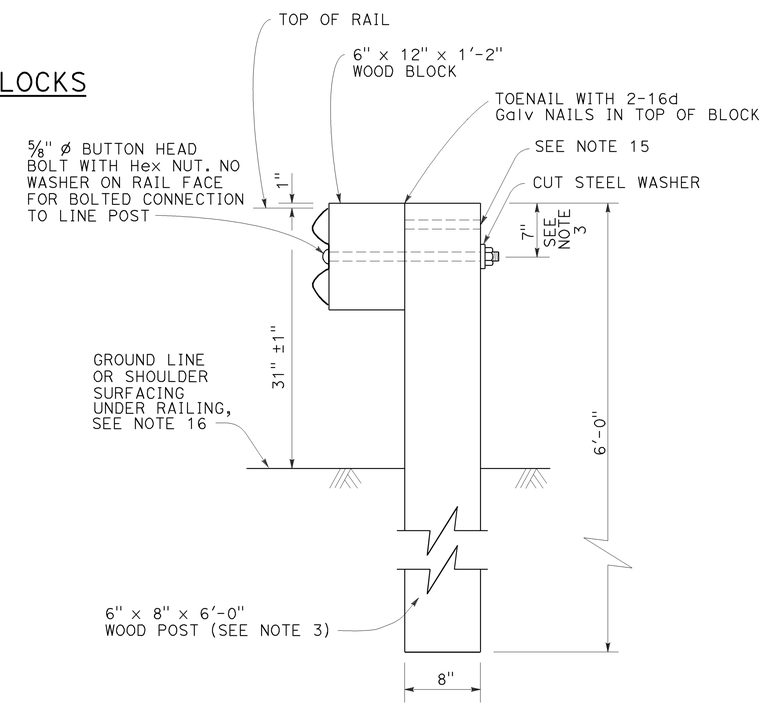

SECTION A-A

TYPICAL WOOD LINE POST INSTALLATION

See Note 4

NOTES:

1. For details of steel post installations, see Revised Standard Plan RSP A77L2.
2. For details of standard hardware used to construct MGS, see Revised Standard Plan RSP A77M1.
3. For details of wood posts and wood blocks used to construct MGS, see Revised Standard Plan RSP A77N1.
4. For additional installation details, see Revised Standard Plan RSP A77N3.
5. MGS post spacing to be 6'-3" center to center, except as otherwise noted.
6. For MGS typical layouts, see the A77P, A77Q and A77R Series of Standard Plans.
7. If railing is connected to terminal system end treatment, use 31" height terminal system end treatment.
8. For MGS end anchor details, see Revised Standard Plans RSP A77S1 and RSP A77T2.
9. For details of MGS transition to bridge railing, see Revised Standard Plan RSP A77U4.
10. For additional details of MSG connection to bridge railing, see Revised Standard Plans RSP A77U1, RSP A77U2 and RSP A77V1.
11. For MGS connection details to abutments and walls, see Revised Standard Plan RSP A77U3.
12. For typical MGS delineation and dike positioning details, see Revised Standard Plan RSP A77N4.
13. Slotted hole for bolted connection of rail element to block and post. See "Section Thru Rail Element".
14. Slotted holes for splice bolts to overlap ends of rail element. See "Section Thru Rail Element".
15. Additional hole in uppermost portion of line post is for potential future adjustments of railing height. See Revised Standard Plan RSP A77N1.
16. Install posts in soil.

STATE OF CALIFORNIA
DEPARTMENT OF TRANSPORTATION

MIDWEST GUARDRAIL SYSTEM STANDARD RAILING SECTION (WOOD POST WITH WOOD BLOCK)

NO SCALE

RSP A77L1 DATED JULY 19, 2013 SUPPLEMENTS STANDARD PLANS BOOK DATED 2010.

REVISED STANDARD PLAN RSP A77L1

2010 REVISED STANDARD PLAN RSP A77L1

Dist	COUNTY	ROUTE	POST MILES TOTAL PROJECT	SHEET No.	TOTAL SHEETS
04	Ala	580	R31.7/R31.9	44	86

Randell D. Hiatt
REGISTERED CIVIL ENGINEER

July 19, 2013
PLANS APPROVAL DATE

REGISTERED PROFESSIONAL ENGINEER
Randell D. Hiatt
No. C50200
Exp. 6-30-15
CIVIL
STATE OF CALIFORNIA

THE STATE OF CALIFORNIA OR ITS OFFICERS OR AGENTS SHALL NOT BE RESPONSIBLE FOR THE ACCURACY OR COMPLETENESS OF SCANNED COPIES OF THIS PLAN SHEET.

TO ACCOMPANY PLANS DATED 4-7-14

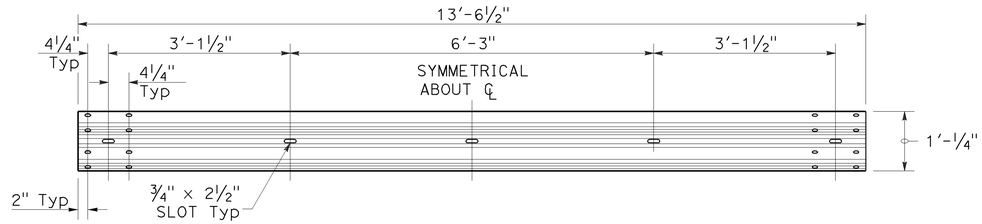

TYPICAL RAIL ELEMENT

NOTE:

1. Slotted holes for splice bolts to overlap ends of rail element.

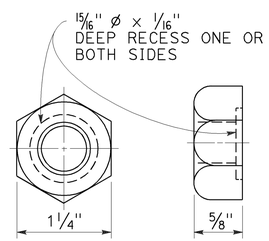

⅝" ø RECESS NUT

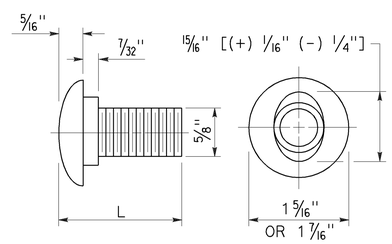

⅝" ø BUTTON HEAD BOLT

BUTTON HEAD BOLT

L	THREAD LENGTH
1⅜"	FULL THREAD LENGTH
2"	FULL THREAD LENGTH
10"	4" Min THREAD LENGTH
18"	4" Min THREAD LENGTH
20"	4" Min THREAD LENGTH
22"	4" Min THREAD LENGTH
26"	4" Min THREAD LENGTH
36"	4" Min THREAD LENGTH
** 2¾"	2" Min THREAD LENGTH
** 19"	4" Min THREAD LENGTH

** For nested rail applications.

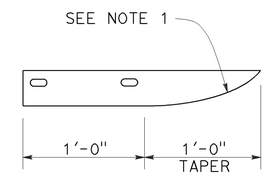

PLAN

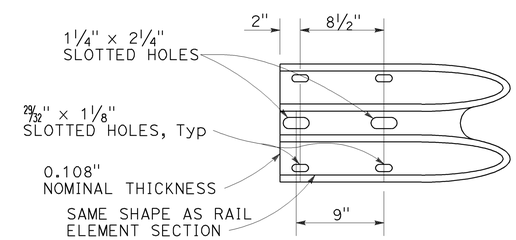

ELEVATION

END CAP
(TYPE A)

STATE OF CALIFORNIA
DEPARTMENT OF TRANSPORTATION

MIDWEST GUARDRAIL SYSTEM STANDARD HARDWARE

NO SCALE

RSP A77M1 DATED JULY 19, 2013 SUPPLEMENTS THE STANDARD PLANS BOOK DATED 2010.

REVISED STANDARD PLAN RSP A77M1

2010 REVISED STANDARD PLAN RSP A77M1

7-3-13

Dist	COUNTY	ROUTE	POST MILES TOTAL PROJECT	SHEET No.	TOTAL SHEETS
04	Ala	580	R31.7/R31.9	45	86

Randell D. Hiatt
REGISTERED CIVIL ENGINEER

July 19, 2013
PLANS APPROVAL DATE

REGISTERED PROFESSIONAL ENGINEER
Randell D. Hiatt
No. C50200
Exp. 6-30-15
CIVIL
STATE OF CALIFORNIA

THE STATE OF CALIFORNIA OR ITS OFFICERS OR AGENTS SHALL NOT BE RESPONSIBLE FOR THE ACCURACY OR COMPLETENESS OF SCANNED COPIES OF THIS PLAN SHEET.

TO ACCOMPANY PLANS DATED 4-7-14

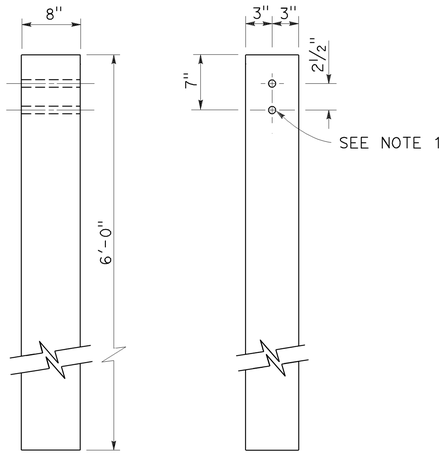

SIDE FRONT

6" x 8" WOOD POST
See Note 3

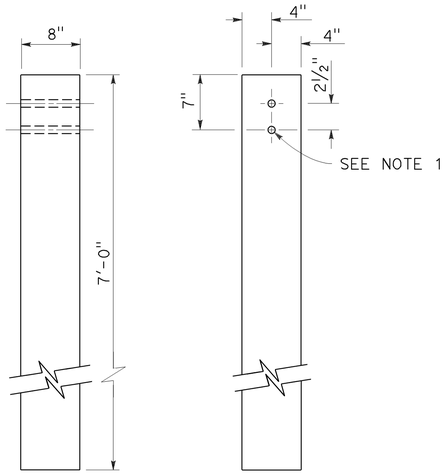

SIDE FRONT

8" x 8" WOOD POST
See Note 4

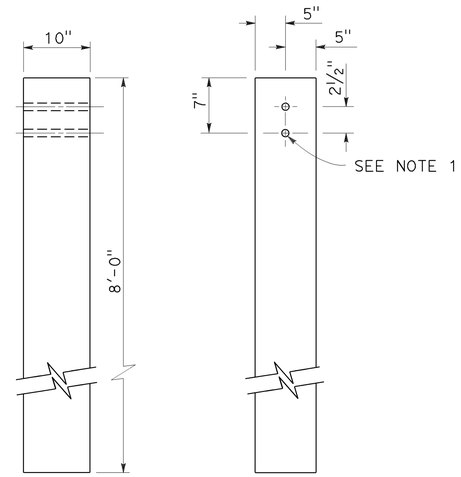

SIDE FRONT

10" x 10" WOOD POST
See Note 5

NOTES:

1. All holes in wood posts and blocks shall be ¾" Dia ± 1/16".
2. Dimensions shown for wood post are nominal.
3. This post and block combination used for standard line post sections of MGS.
4. This post and 8" x 12" block combination used for line post sections of MGS on narrow roadways.
5. This post and 8" x 12" block combination is typically used where strengthened line post sections of MGS are warranted to shield fixed objects.
6. See Revised Standard Plan RSP A77L3 for use of 6" x 8" and 8" x 8" wood blocks.

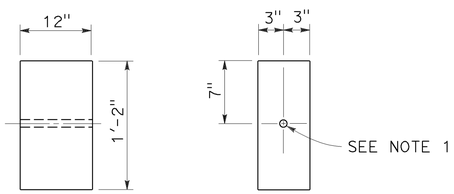

SIDE FRONT

6" x 12" WOOD BLOCK
See Note 3

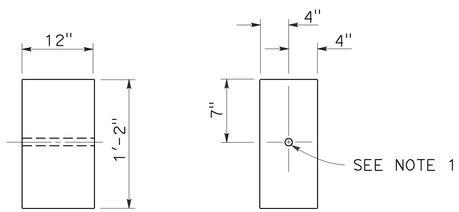

SIDE FRONT

8" x 12" WOOD BLOCK

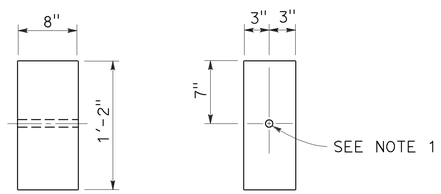

SIDE FRONT

6" x 8" WOOD BLOCK
Only for use with metal beam guard rail see Note 6

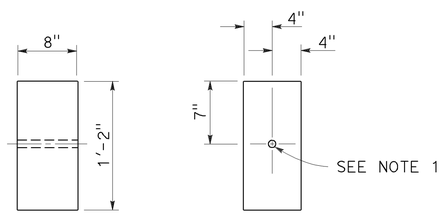

SIDE FRONT

8" x 8" WOOD BLOCK
Only for use with metal beam guard rail see Note 6

STATE OF CALIFORNIA
DEPARTMENT OF TRANSPORTATION

MIDWEST GUARDRAIL SYSTEM WOOD POST AND WOOD BLOCK DETAILS

NO SCALE

RSP A77N1 DATED JULY 19, 2013 SUPPLEMENTS THE STANDARD PLANS BOOK DATED 2010.

REVISED STANDARD PLAN RSP A77N1

2010 REVISED STANDARD PLAN RSP A77N1

7-3-13

Dist	COUNTY	ROUTE	POST MILES TOTAL PROJECT	SHEET No.	TOTAL SHEETS
04	Ala	580	R31.7/R31.9	46	86

Randell D. Hiatt
REGISTERED CIVIL ENGINEER

November 15, 2013
PLANS APPROVAL DATE

REGISTERED PROFESSIONAL ENGINEER
Randell D. Hiatt
No. C50200
Exp. 6-30-15
CIVIL
STATE OF CALIFORNIA

THE STATE OF CALIFORNIA OR ITS OFFICERS OR AGENTS SHALL NOT BE RESPONSIBLE FOR THE ACCURACY OR COMPLETENESS OF SCANNED COPIES OF THIS PLAN SHEET.

TO ACCOMPANY PLANS DATED 4-7-14

2010 REVISED STANDARD PLAN RSP A77N3

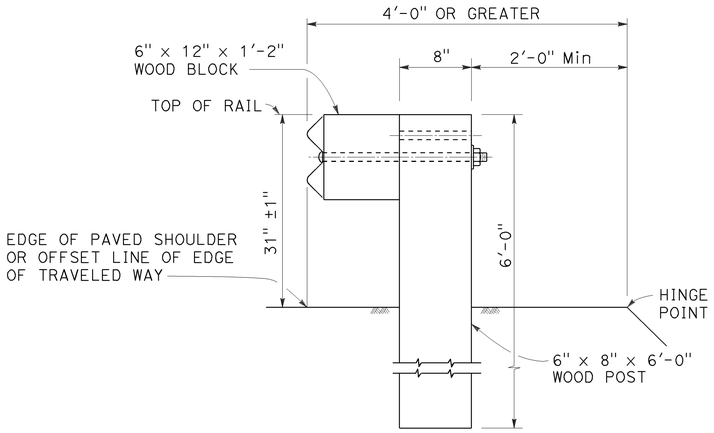

DETAIL A

TYPICAL ROADWAY INSTALLATION

See Note 1

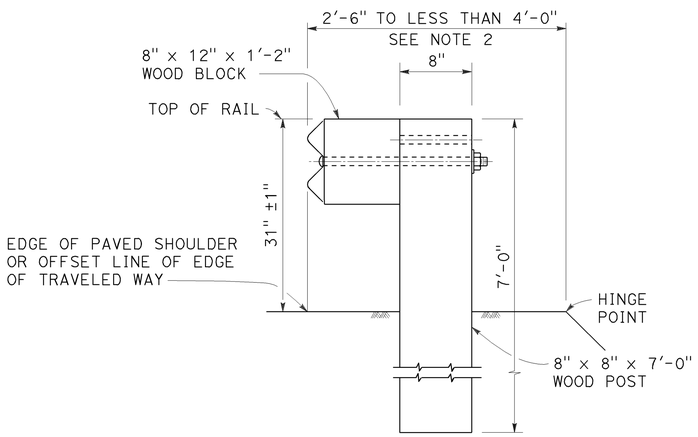

DETAIL B

NARROW ROADWAY INSTALLATION

See Note 1

POST EMBEDMENT

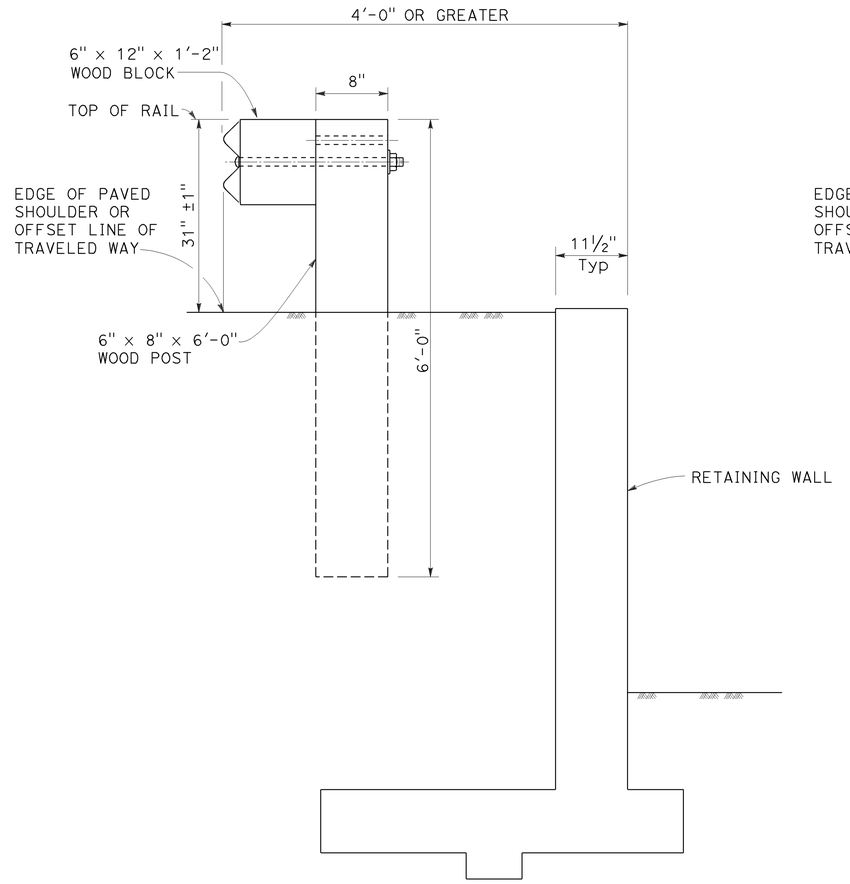

DETAIL C

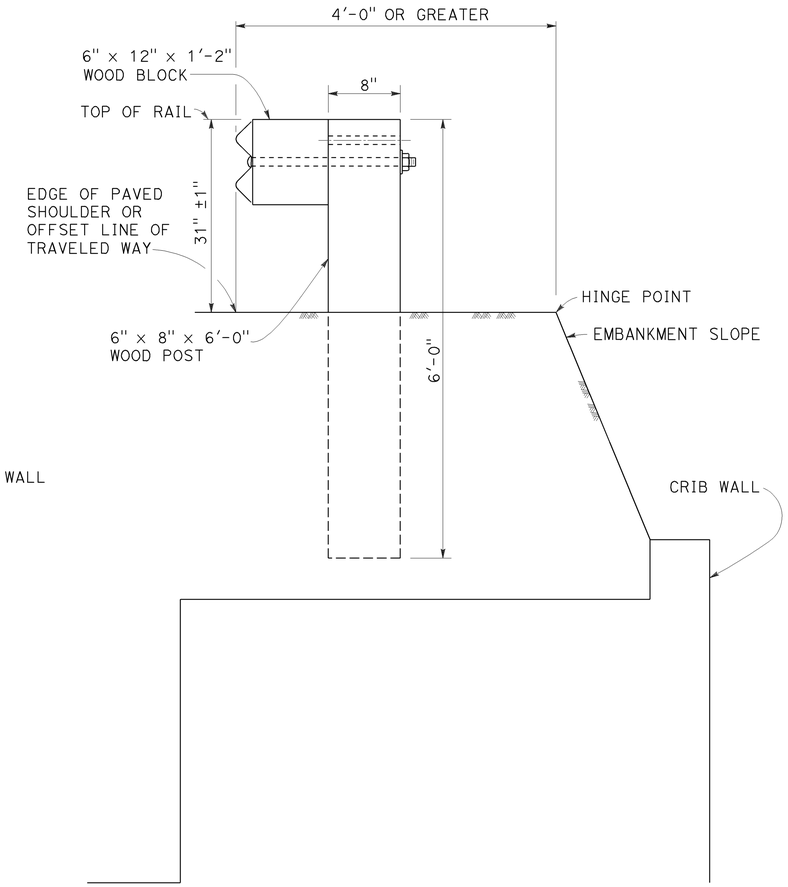

DETAIL D

INSTALLATION AT EARTH RETAINING WALLS

NOTES:

1. These installation details also applicable to steel line post installations. For Detail A, C, and D, where steel line post installations are constructed, W6 x 8.5 or W6 x 9 steel post, 6'-0" in length, with 6" x 12" x 1'-2" notched wood blocks or notched recycled plastic blocks are to be used in place of the size of wood post and wood block shown. For Detail B, where steel line post installations are constructed, W6 x 15 steel post, 8'-0" in length, with 8" x 12" x 1'-2" notched wood blocks or notched recycled plastic blocks are to be used in place of the size of wood post and wood block shown. For additional installation details, see Revised Standard Plan RSP A77L1 and RSP A77L2.
2. Where the distance between the face of the rail and the hinge point is less than 2'-6", see the Project Plans for special details.
3. For dike positioning with MGS installations, see Revised Standard Plan RSP A77N4.

STATE OF CALIFORNIA
DEPARTMENT OF TRANSPORTATION

MIDWEST GUARDRAIL SYSTEM TYPICAL LINE POST EMBEDMENT AND HINGE POINT OFFSET DETAILS

NO SCALE

RSP A77N3 DATED NOVEMBER 15, 2013 SUPERSEDES RSP A77N3
DATED JULY 19, 2013 THAT SUPPLEMENTS THE STANDARD PLANS BOOK DATED 2010.

REVISED STANDARD PLAN RSP A77N3

Dist	COUNTY	ROUTE	POST MILES TOTAL PROJECT	SHEET No.	TOTAL SHEETS
04	Ala	580	R31.7/R31.9	47	86

Randell D. Hiatt
REGISTERED CIVIL ENGINEER

July 19, 2013
PLANS APPROVAL DATE

REGISTERED PROFESSIONAL ENGINEER
Randell D. Hiatt
No. C50200
Exp. 6-30-15
CIVIL
STATE OF CALIFORNIA

THE STATE OF CALIFORNIA OR ITS OFFICERS OR AGENTS SHALL NOT BE RESPONSIBLE FOR THE ACCURACY OR COMPLETENESS OF SCANNED COPIES OF THIS PLAN SHEET.

TO ACCOMPANY PLANS DATED 4-7-14

NOTES:

1. When necessary to place dike more than 7" in front of face of MGS, only Type C dike may be used. For dike details, see Revised Standard Plan RSP A87B.
2. For standard railing post embedment, see Revised Standard Plan RSP A77N3.
3. MGS delineation to be used where shown on the Project Plans.
4. When dike or curb is placed under MGS, the maximum height of the dike or curb shall be 6". Mountable dike should not be used. For dike and curb details, see Revised Standard Plans RSP A87A and RSP A87B.
5. For details of typical distance between the face of rail and hinge point, see Revised Standard Plan RSP A77N3.
6. For steel line posts, use 1/4 - 20 self-tapping screws in 0.22" diameter holes or 1/4" bolts in 9/32" diameter holes.

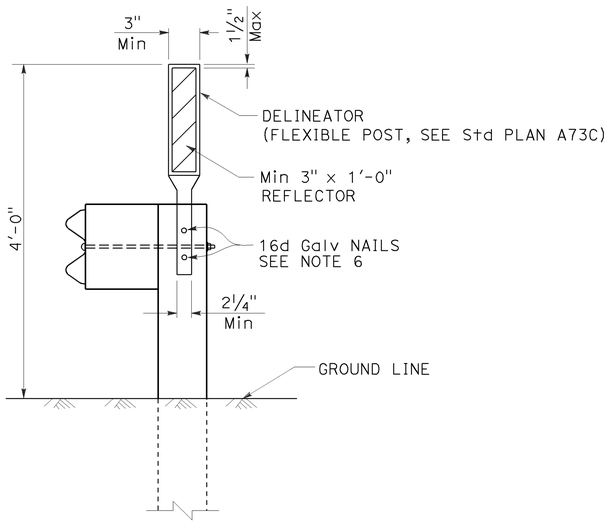

MGS DELINEATION

See Note 3

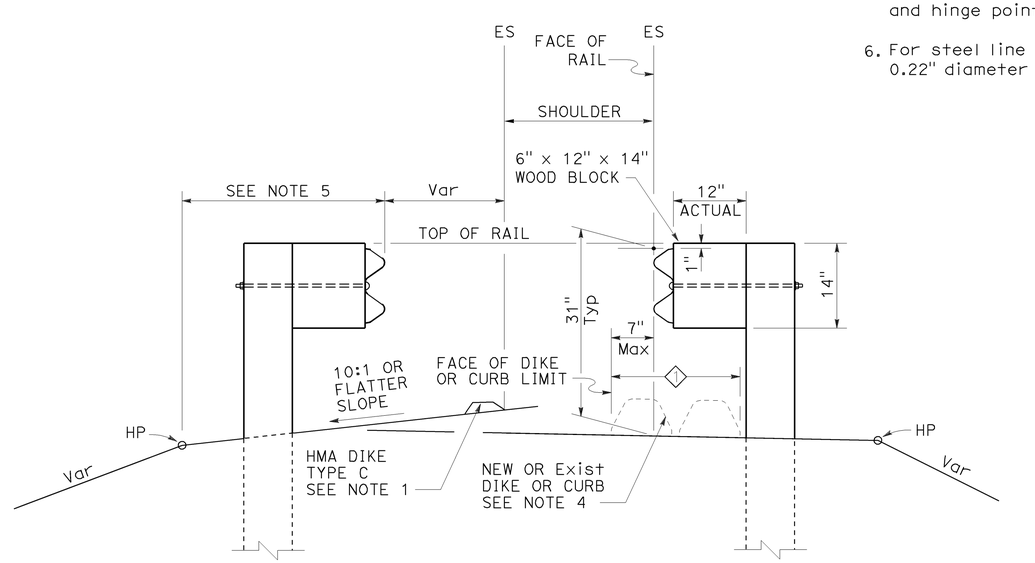

DIKE POSITIONING

See Note 1

1 PERMISSIBLE DIKE OR CURB PLACEMENT AREA

STATE OF CALIFORNIA
DEPARTMENT OF TRANSPORTATION

MIDWEST GUARDRAIL SYSTEM TYPICAL RAILING DELINEATION AND DIKE POSITIONING DETAILS

NO SCALE

RSP A77N4 DATED JULY 19, 2013 SUPPLEMENTS THE STANDARD PLANS BOOK DATED 2010.

REVISED STANDARD PLAN RSP A77N4

2010 REVISED STANDARD PLAN RSP A77N4

7-10-13

Dist	COUNTY	ROUTE	POST MILES TOTAL PROJECT	SHEET No.	TOTAL SHEETS
04	Ala	580	R31.7/R31.9	48	86

Randell D. Hiatt
REGISTERED CIVIL ENGINEER

July 19, 2013
PLANS APPROVAL DATE

REGISTERED PROFESSIONAL ENGINEER
Randell D. Hiatt
No. C50200
Exp. 6-30-15
CIVIL
STATE OF CALIFORNIA

THE STATE OF CALIFORNIA OR ITS OFFICERS OR AGENTS SHALL NOT BE RESPONSIBLE FOR THE ACCURACY OR COMPLETENESS OF SCANNED COPIES OF THIS PLAN SHEET.

TO ACCOMPANY PLANS DATED 4-7-14

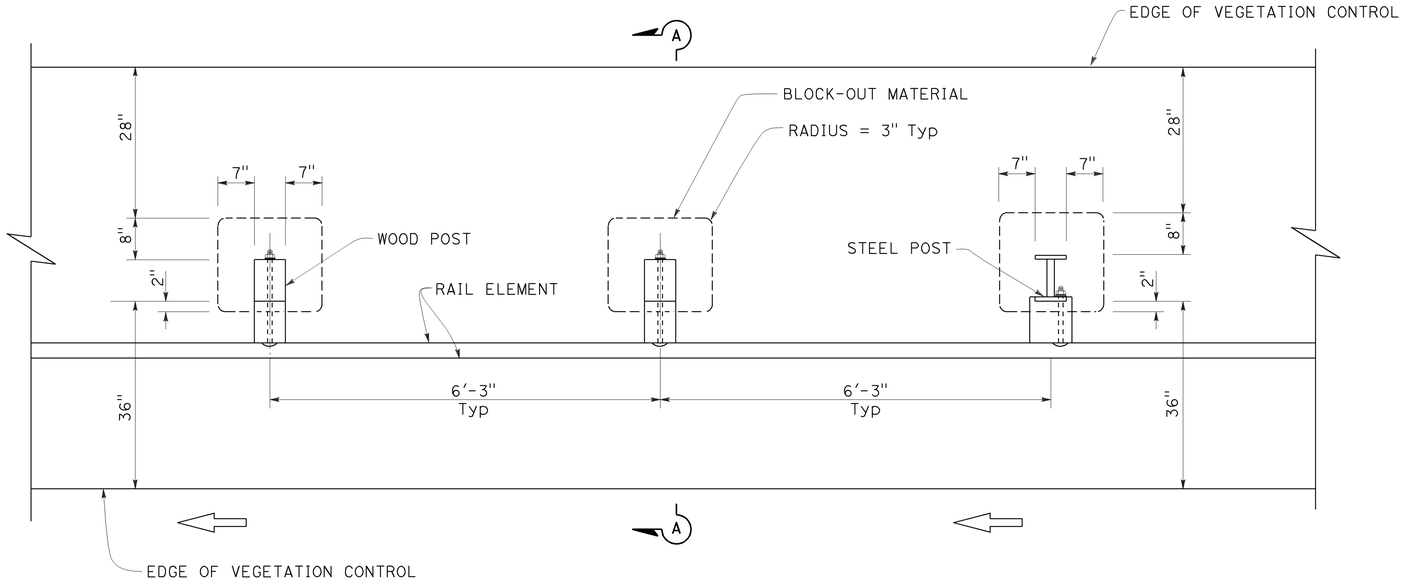

PLAN

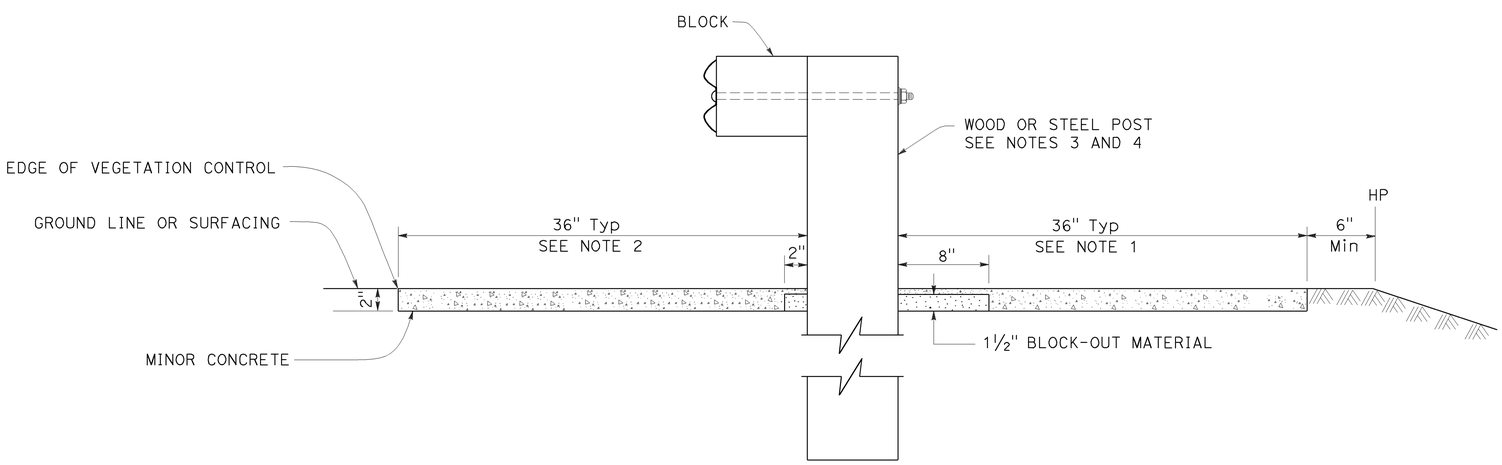

SECTION A-A

NOTES:

1. Where the distance between back of post and hinge point is less than 42", construct vegetation control to 6" from hinge point while maintaining the 8" block-out at back of post. If the 8" block-out at back of post can not be maintained, construct vegetation control flush with the back edge of post.
2. Where dike is constructed under railing, construct vegetation control to back edge of dike. Where paved shoulder is constructed within 36" in front of the post, construct vegetation control to the edge of paved shoulder.
3. For wood post sizes, see Revised Standard Plan RSP A77N1.
4. For steel post sizes, see Revised Standard Plan RSP A77N2.
5. For details not shown, see Revised Standard Plans RSP A77L1 and RSP A77L2.

STATE OF CALIFORNIA
DEPARTMENT OF TRANSPORTATION

MIDWEST GUARDRAIL SYSTEM TYPICAL VEGETATION CONTROL STANDARD RAILING SECTION

NO SCALE

RSP A77N5 DATED JULY 19, 2013 SUPPLEMENTS THE STANDARD PLANS BOOK DATED 2010.

REVISED STANDARD PLAN RSP A77N5

2010 REVISED STANDARD PLAN RSP A77N5

7-3-13

Dist	COUNTY	ROUTE	POST MILES TOTAL PROJECT	SHEET No.	TOTAL SHEETS
04	Ala	580	R31.7/R31.9	49	86

Randell D. Hiatt
REGISTERED CIVIL ENGINEER

July 19, 2013
PLANS APPROVAL DATE

REGISTERED PROFESSIONAL ENGINEER
Randell D. Hiatt
No. C50200
Exp. 6-30-15
CIVIL
STATE OF CALIFORNIA

THE STATE OF CALIFORNIA OR ITS OFFICERS OR AGENTS SHALL NOT BE RESPONSIBLE FOR THE ACCURACY OR COMPLETENESS OF SCANNED COPIES OF THIS PLAN SHEET.

TO ACCOMPANY PLANS DATED 4-7-14

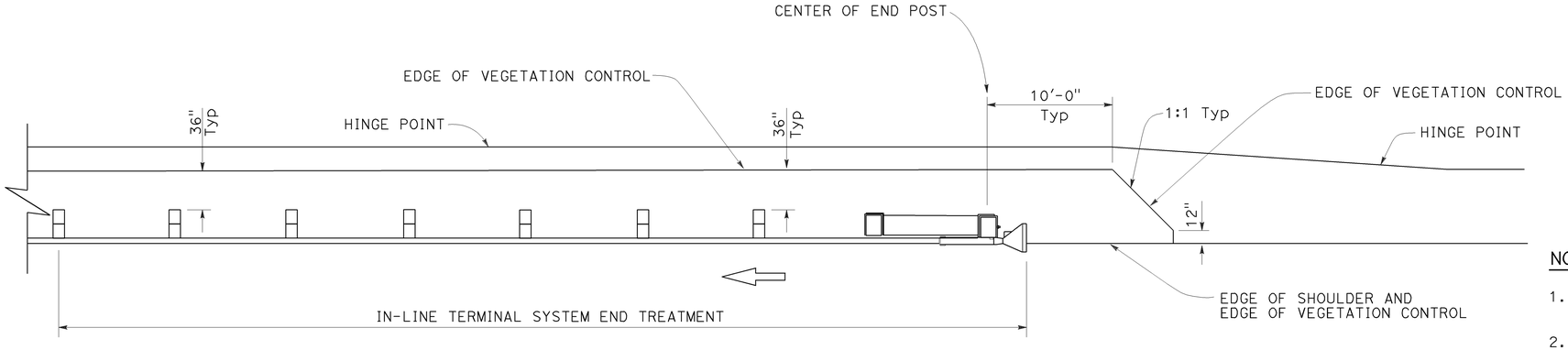

PLAN

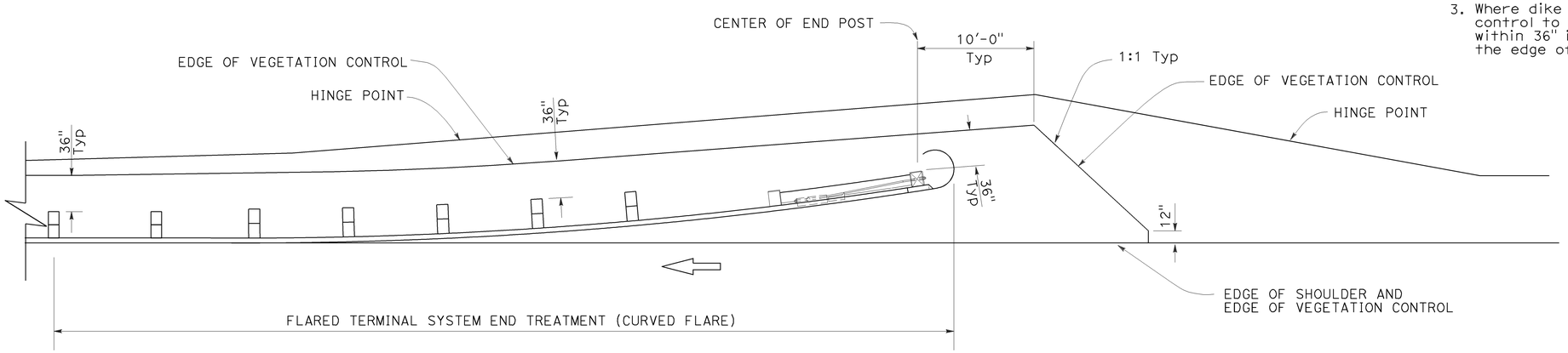

PLAN

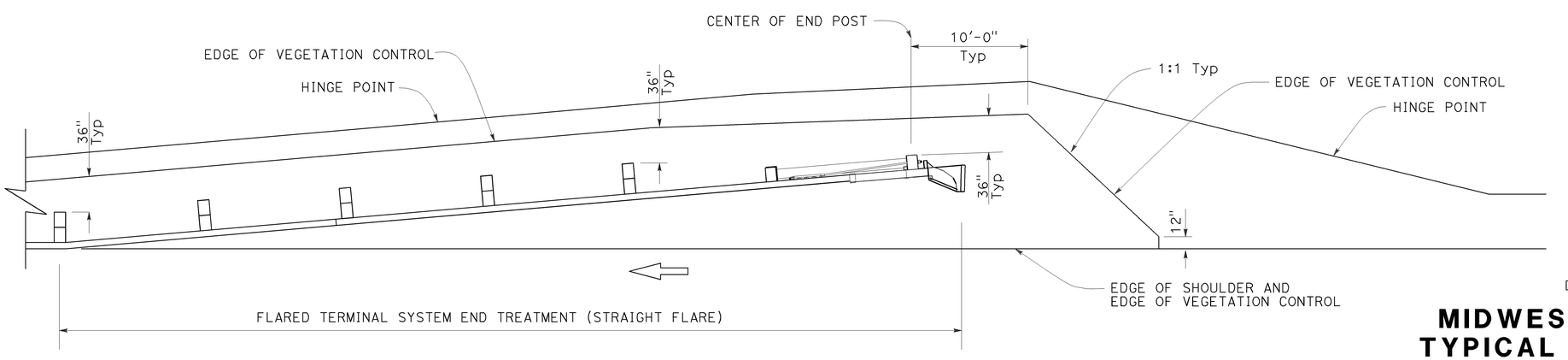

PLAN

NOTES:

1. See Revised Standard Plan RSP A77N5 for additional vegetation control details.
2. Where the distance between back of post and hinge point is less than 42", construct vegetation control to 6" from hinge point while maintaining the 8" block-out at back of post. If the 8" block-out at back of post can not be maintained, construct vegetation control flush with the back edge of post.
3. Where dike is constructed under railing, construct vegetation control to back edge of dike. Where paved shoulder is constructed within 36" in front of the post, construct vegetation control to the edge of paved shoulder.

STATE OF CALIFORNIA
DEPARTMENT OF TRANSPORTATION

MIDWEST GUARDRAIL SYSTEM TYPICAL VEGETATION CONTROL FOR TERMINAL SYSTEM END TREATMENTS

NO SCALE

RSP A77N6 DATED JULY 19, 2013 SUPPLEMENTS THE STANDARD PLANS BOOK DATED 2010.

REVISED STANDARD PLAN RSP A77N6

2010 REVISED STANDARD PLAN RSP A77N6

6-12-13

Dist	COUNTY	ROUTE	POST MILES TOTAL PROJECT	SHEET No.	TOTAL SHEETS
04	Ala	580	R31.7/R31.9	50	86

Randell D. Hiatt
REGISTERED CIVIL ENGINEER

July 19, 2013
PLANS APPROVAL DATE

REGISTERED PROFESSIONAL ENGINEER
Randell D. Hiatt
No. C50200
Exp. 6-30-15
CIVIL
STATE OF CALIFORNIA

THE STATE OF CALIFORNIA OR ITS OFFICERS OR AGENTS SHALL NOT BE RESPONSIBLE FOR THE ACCURACY OR COMPLETENESS OF SCANNED COPIES OF THIS PLAN SHEET.

TO ACCOMPANY PLANS DATED 4-7-14

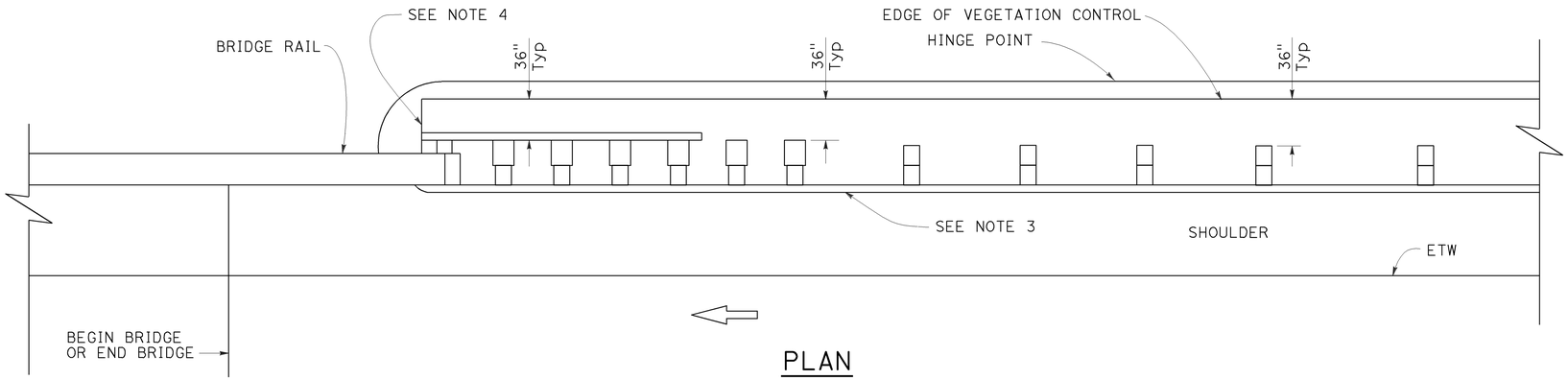

PLAN

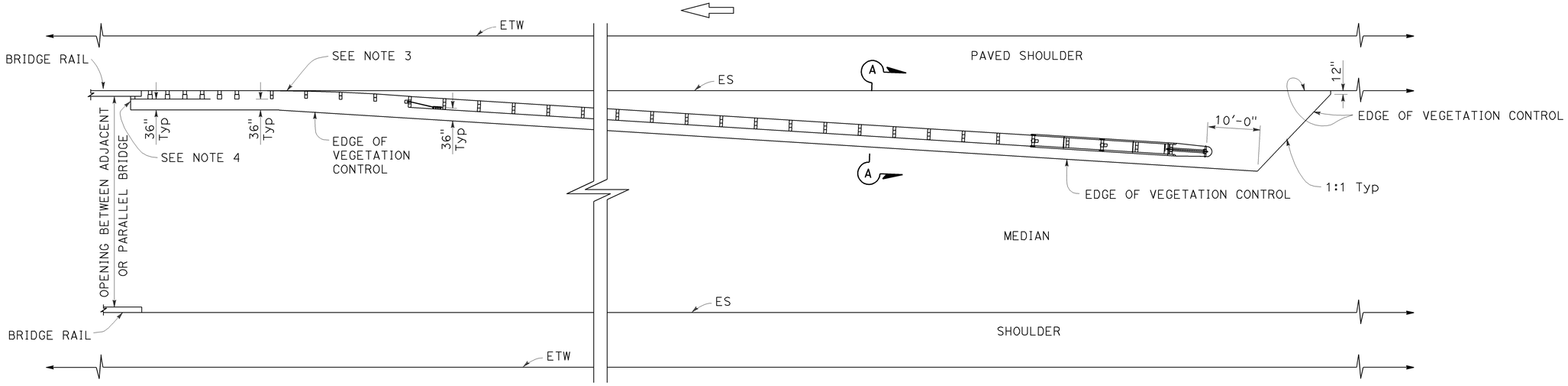

PLAN

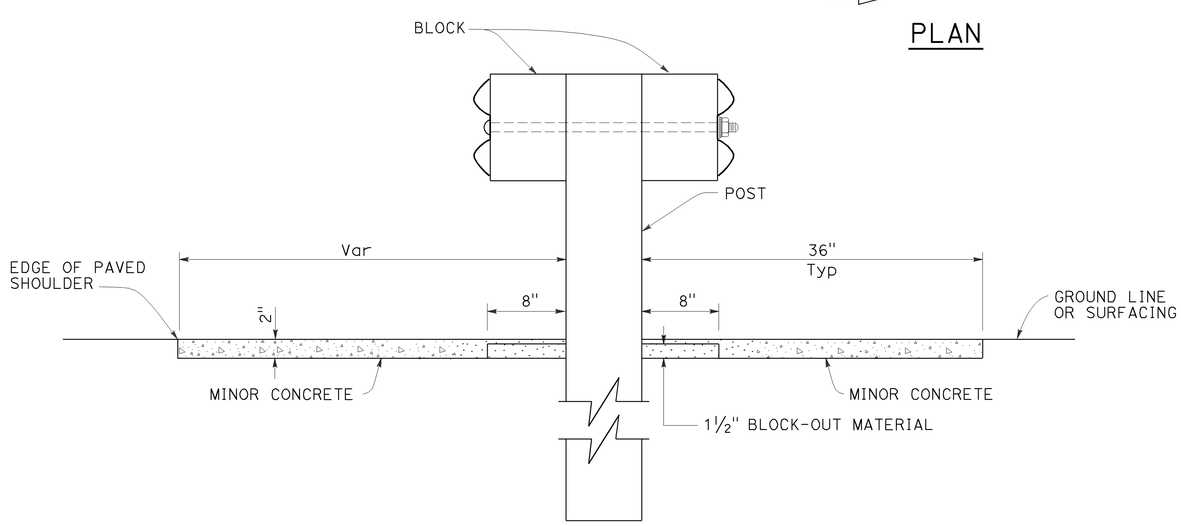

SECTION A-A

NOTES:

1. See Revised Standard Plan RSP A77N5 for additional vegetation control details.
2. Where the distance between back of post and hinge point is less than 42", construct vegetation control to 6" from hinge point while maintaining the 8" block-out at back of post. If the 8" block-out at back of post can not be maintained, construct vegetation control flush with the back edge of post.
3. Where dike is constructed under railing, construct vegetation control to back edge of dike. Where paved shoulder is constructed within 36" in front of the post, construct vegetation control to the edge of paved shoulder.
4. End vegetation control at end of backside rail element.

STATE OF CALIFORNIA
DEPARTMENT OF TRANSPORTATION

MIDWEST GUARDRAIL SYSTEM TYPICAL VEGETATION CONTROL AT STRUCTURE APPROACH

NO SCALE

RSP A77N7 DATED JULY 19, 2013 SUPPLEMENTS THE STANDARD PLANS BOOK DATED 2010.

REVISED STANDARD PLAN RSP A77N7

2010 REVISED STANDARD PLAN RSP A77N7

6-12-13

Dist	COUNTY	ROUTE	POST MILES TOTAL PROJECT	SHEET No.	TOTAL SHEETS
04	Ala	580	R31.7/R31.9	51	86

Randell D. Hiatt
REGISTERED CIVIL ENGINEER

July 19, 2013
PLANS APPROVAL DATE

REGISTERED PROFESSIONAL ENGINEER
Randell D. Hiatt
No. C50200
Exp. 6-30-15
CIVIL
STATE OF CALIFORNIA

THE STATE OF CALIFORNIA OR ITS OFFICERS OR AGENTS SHALL NOT BE RESPONSIBLE FOR THE ACCURACY OR COMPLETENESS OF SCANNED COPIES OF THIS PLAN SHEET.

TO ACCOMPANY PLANS DATED 4-7-14

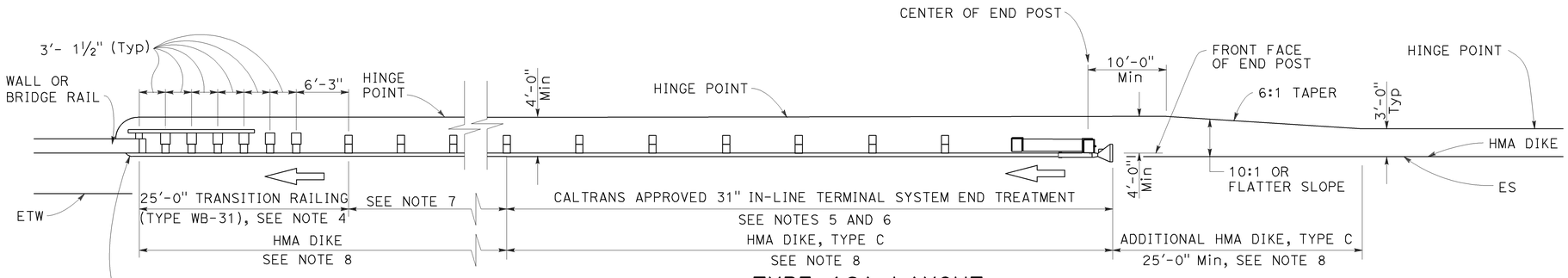

TYPE 12A LAYOUT

(MGS installation at structure approach with
31" In-line end treatment at traffic approach end of railing)
See Notes 9

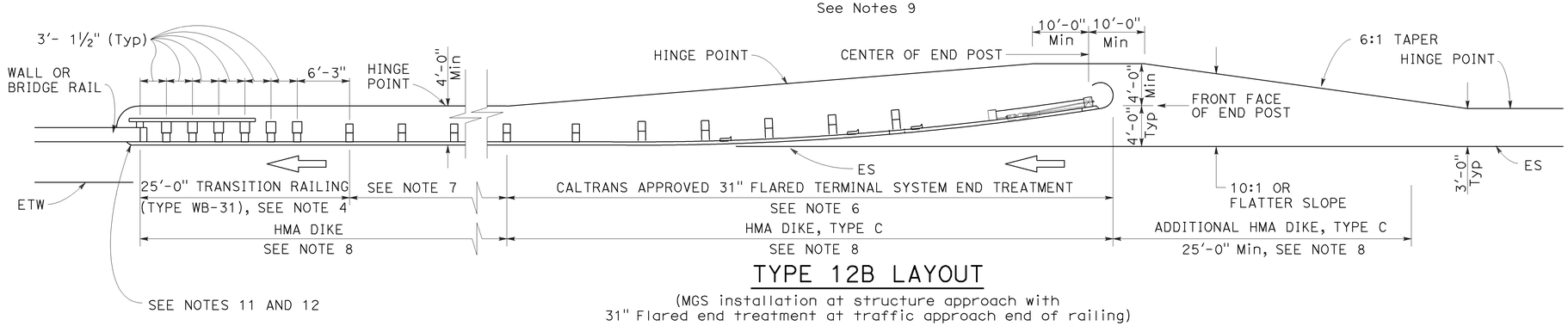

TYPE 12B LAYOUT

(MGS installation at structure approach with
31" Flared end treatment at traffic approach end of railing)
See Notes 9

NOTES:

1. Line post, blocks and hardware to be used are shown on Revised Standard Plans RSP A77L1, RSP A77L2, RSP A77M1, RSP A77N1 and RSP A77N2.
2. MGS post spacing to be 6'-3" center to center, except as otherwise noted.
3. Except as noted, line posts are 6" x 8" x 6'-0" wood with 6" x 12" x 1'-2" wood blocks. W6 x 8.5 or W6 x 9 steel posts, 6'-0" in length, with 6" x 12" x 1'-2" notched wood blocks or plastic blocks may be used for 6" x 8" x 6'-0" wood posts with 6" x 12" x 1'-2" wood blocks where applicable and when specified.
4. For Transition Railing (Type WB-31) details for Types 12A and 12B Layouts, see Revised Standard Plan RSP A77U4.
5. 31" in-line terminal system end treatments are used where site conditions will not accommodate a 31" flared end treatment.
6. The type 31" of terminal system end treatment to be used will be shown on the Project Plans.
7. Dependent on site conditions (embankment height, side slopes, or other fixed objects), it may be advisable to construct additional guard railing (a length equal to multiples of 12'-6" with 6'-3" post spacing) between the transition railing and end treatment. A 12.5 degree angle of departure can be drawn on the Project Plans from the edge of traveled way through the outer most point of the fixed object to determine the additional length of railing needed.
8. Where placement of dike is required with guard railing installations, see Revised Standard Plan RSP A77N4 for dike positioning details.
9. Type 12A or Type 12B Layouts are typically used:
   a. To the right of approaching traffic, at the end of a structure, on two-lane conventional highway where the roadbed width across the structure is less than 40 feet.
   b. To the left of approaching traffic, at the end of a structure, on two-lane conventional highway where the roadbed width across the structure is less than 40 feet.
   c. To the right of approaching traffic at the end of each structure on multilane freeways or expressways with separate adjacent or parallel bridges.
   d. To the right of approaching traffic at the end of the structure on multilane freeways or expressways with decked median on the bridge.
10. See Revised Standard Plan RSP A77Q3 for typical layout used left of approaching traffic at the ends of each structure on multilane freeways or expressways with separate adjacent or parallel bridges.
11. For additional details of typical connections to bridge rail, see Connection Detail AA on Revised Standard Plans RSP A77U1 and RSP A77U2 and Connection Detail FF on Revised Standard Plans RSP A77V1 and RSP A77V2.
12. For additional details of a typical connection to walls or abutments, see Revised Standard Plan RSP A77U3.

STATE OF CALIFORNIA
DEPARTMENT OF TRANSPORTATION

MIDWEST GUARDRAIL SYSTEM TYPICAL LAYOUTS FOR STRUCTURE APPROACH

NO SCALE

RSP A77Q1 DATED JULY 19, 2013 SUPPLEMENTS THE STANDARD PLANS BOOK DATED 2010.

REVISED STANDARD PLAN RSP A77Q1

2010 REVISED STANDARD PLAN RSP A77Q1

Dist	COUNTY	ROUTE	POST MILES TOTAL PROJECT	SHEET No.	TOTAL SHEETS
04	Ala	580	R31.7/R31.9	52	86

Randell D. Hiatt
REGISTERED CIVIL ENGINEER

November 15, 2013
PLANS APPROVAL DATE

REGISTERED PROFESSIONAL ENGINEER
Randell D. Hiatt
No. C50200
Exp. 6-30-15
CIVIL
STATE OF CALIFORNIA

THE STATE OF CALIFORNIA OR ITS OFFICERS OR AGENTS SHALL NOT BE RESPONSIBLE FOR THE ACCURACY OR COMPLETENESS OF SCANNED COPIES OF THIS PLAN SHEET.

TO ACCOMPANY PLANS DATED 4-7-14

2010 REVISED STANDARD PLAN RSP A77S1

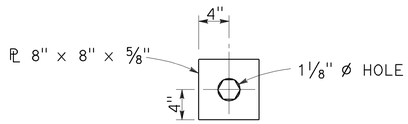

DETAIL "A"
CABLE CONNECTION END PLATE

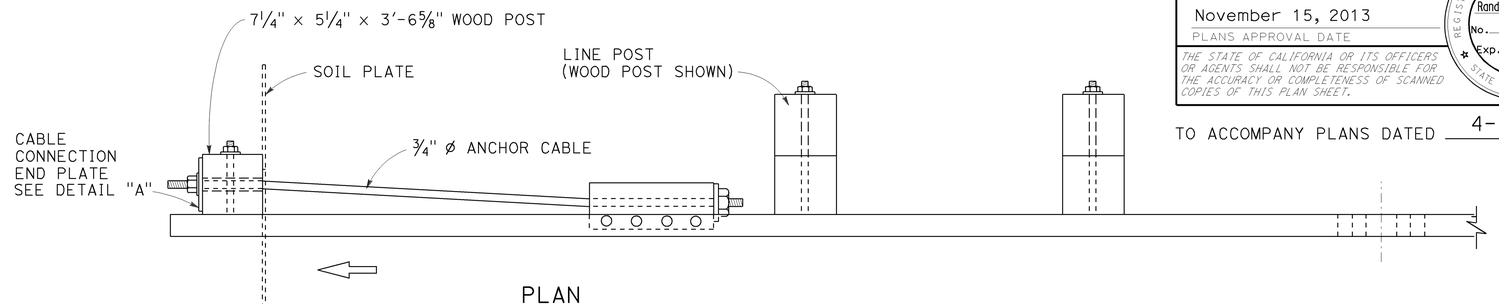

PLAN

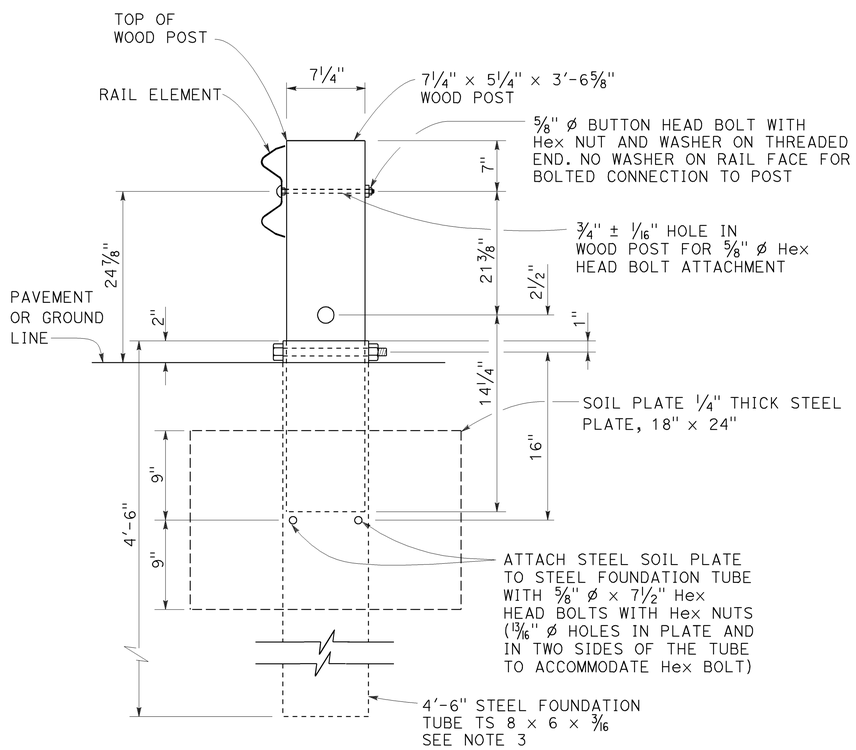

SECTION A-A

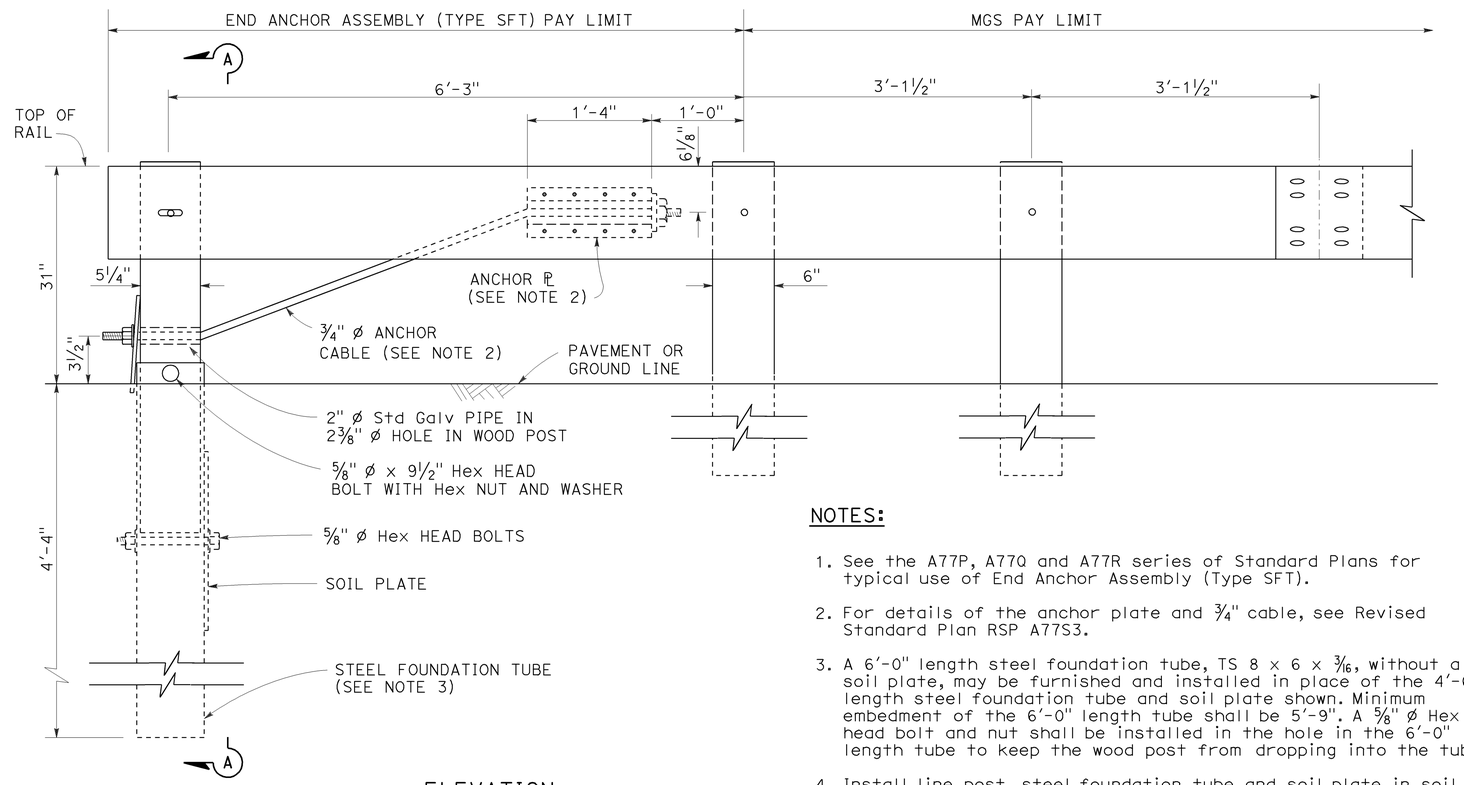

ELEVATION

END ANCHOR ASSEMBLY (TYPE SFT)
See Note 1

NOTES:

1. See the A77P, A77Q and A77R series of Standard Plans for typical use of End Anchor Assembly (Type SFT).
2. For details of the anchor plate and 3/4" cable, see Revised Standard Plan RSP A77S3.
3. A 6'-0" length steel foundation tube, TS 8 x 6 x 3/16, without a soil plate, may be furnished and installed in place of the 4'-6" length steel foundation tube and soil plate shown. Minimum embedment of the 6'-0" length tube shall be 5'-9". A 5/8" Ø Hex head bolt and nut shall be installed in the hole in the 6'-0" length tube to keep the wood post from dropping into the tube.
4. Install line post, steel foundation tube and soil plate in soil.

STATE OF CALIFORNIA
DEPARTMENT OF TRANSPORTATION

MIDWEST GUARDRAIL SYSTEM END ANCHOR ASSEMBLY (TYPE SFT)

NO SCALE

RSP A77S1 DATED NOVEMBER 15, 2013 SUPERSEDES RSP A77S1 DATED JULY 19, 2013 THAT SUPPLEMENTS THE STANDARD PLANS BOOK DATED 2010.

REVISED STANDARD PLAN RSP A77S1

10-4-13

Dist	COUNTY	ROUTE	POST MILES TOTAL PROJECT	SHEET No.	TOTAL SHEETS
04	Ala	580	R31.7/R31.9	53	86

Randell D. Hiatt
REGISTERED CIVIL ENGINEER

November 15, 2013
PLANS APPROVAL DATE

REGISTERED PROFESSIONAL ENGINEER
Randell D. Hiatt
No. C50200
Exp. 6-30-15
CIVIL
STATE OF CALIFORNIA

THE STATE OF CALIFORNIA OR ITS OFFICERS OR AGENTS SHALL NOT BE RESPONSIBLE FOR THE ACCURACY OR COMPLETENESS OF SCANNED COPIES OF THIS PLAN SHEET.

TO ACCOMPANY PLANS DATED 4-7-14

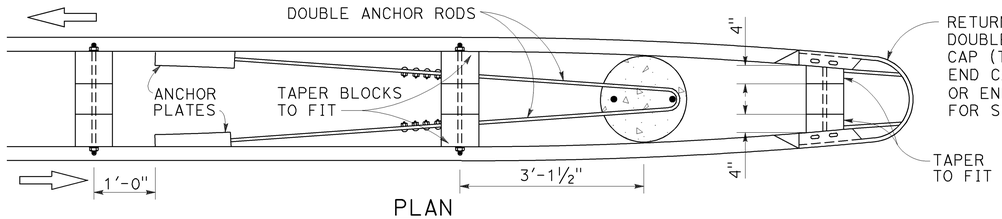

PLAN
See Note 4

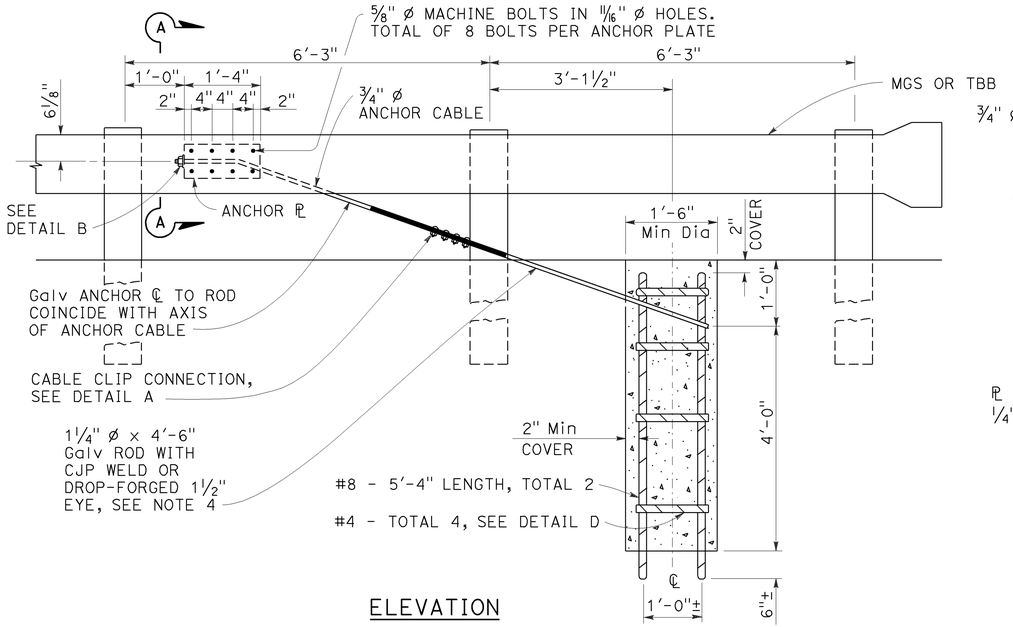

ELEVATION
END ANCHOR ASSEMBLY
(TYPE CA)
(Wood post, MGS shown, details similar for Thrie Beam Barrier.)

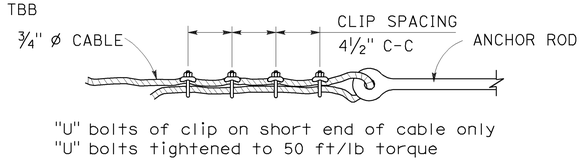

DETAIL A
CABLE CLIP CONNECTION

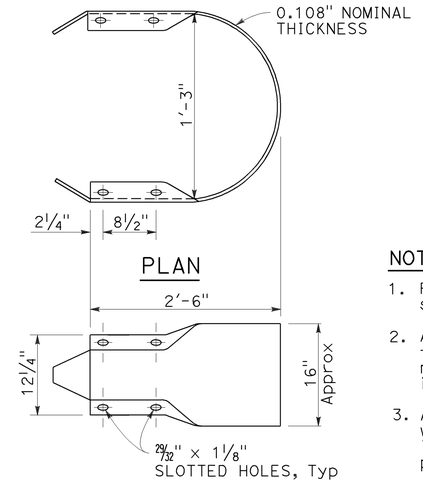

PLAN
ELEVATION
RETURN CAP
(TYPE A)

TO ACCOMPANY PLANS DATED 4-7-14

NOTES:

1. For typical use of this type of end anchor, see Revised Standard Plan RSP A78E2.
2. Anchor cable to be parallel to railing for straight runs of rail. Anchor cable may have angle point at anchor plate if railing is curved.
3. Anchor rod hooks to be in contact with anchor reinforcement when concrete is placed. Wire ties may be used to position anchor rods.
4. Single sided railing installations require only one anchor plate, anchor rod and anchor cable. Single sided railing will not have a rail element or blockouts on backside of line posts as shown in the plan view.

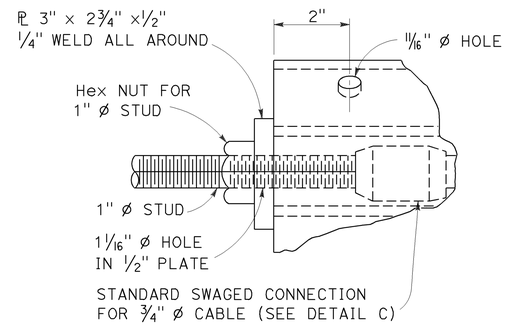

DETAIL B

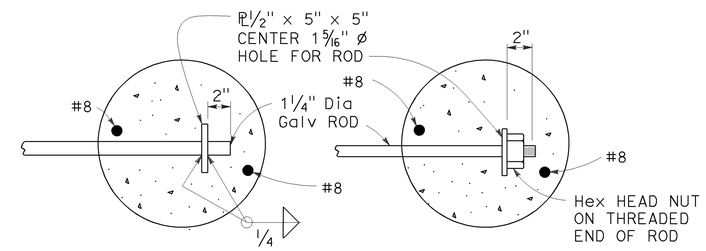

OPTIONAL ENDS ON SINGLE ANCHOR ROD
(Not to be used for double anchors)

NOTE:
Use two 1¼" Ø Galv rods with hook and eye for double MGS anchor.

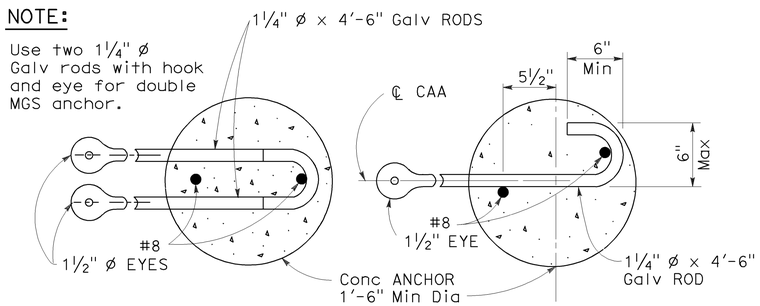

DOUBLE ANCHOR
SINGLE ANCHOR
ANCHOR RODS

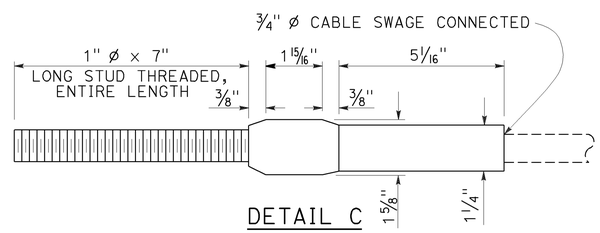

DETAIL C

ANCHOR CABLE WITH
SWAGED FITTING AND STUD

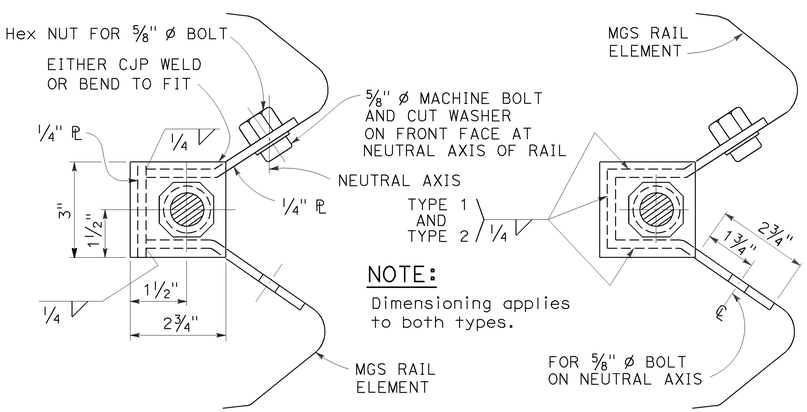

SECTION A-A
(Alternative Type 1)

SECTION A-A
(Alternative Type 2)

ANCHOR PLATE DETAILS

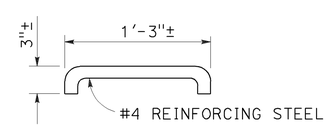

DETAIL D

STATE OF CALIFORNIA
DEPARTMENT OF TRANSPORTATION

METAL RAILING END ANCHOR ASSEMBLY (TYPE CA)

NO SCALE

RSP A77T1 DATED NOVEMBER 15, 2013 SUPERSEDES RSP A77T1 DATED JULY 19, 2013 THAT SUPPLEMENTS THE STANDARD PLANS BOOK DATED 2010.

REVISED STANDARD PLAN RSP A77T1

2010 REVISED STANDARD PLAN RSP A77T1

10-22-13

Dist	COUNTY	ROUTE	POST MILES TOTAL PROJECT	SHEET No.	TOTAL SHEETS
04	Ala	580	R31.7/R31.9	54	86

Randell D. Hiatt
REGISTERED CIVIL ENGINEER

July 19, 2013
PLANS APPROVAL DATE

REGISTERED PROFESSIONAL ENGINEER
Randell D. Hiatt
No. C50200
Exp. 6-30-15
CIVIL
STATE OF CALIFORNIA

THE STATE OF CALIFORNIA OR ITS OFFICERS OR AGENTS SHALL NOT BE RESPONSIBLE FOR THE ACCURACY OR COMPLETENESS OF SCANNED COPIES OF THIS PLAN SHEET.

TO ACCOMPANY PLANS DATED 4-7-14

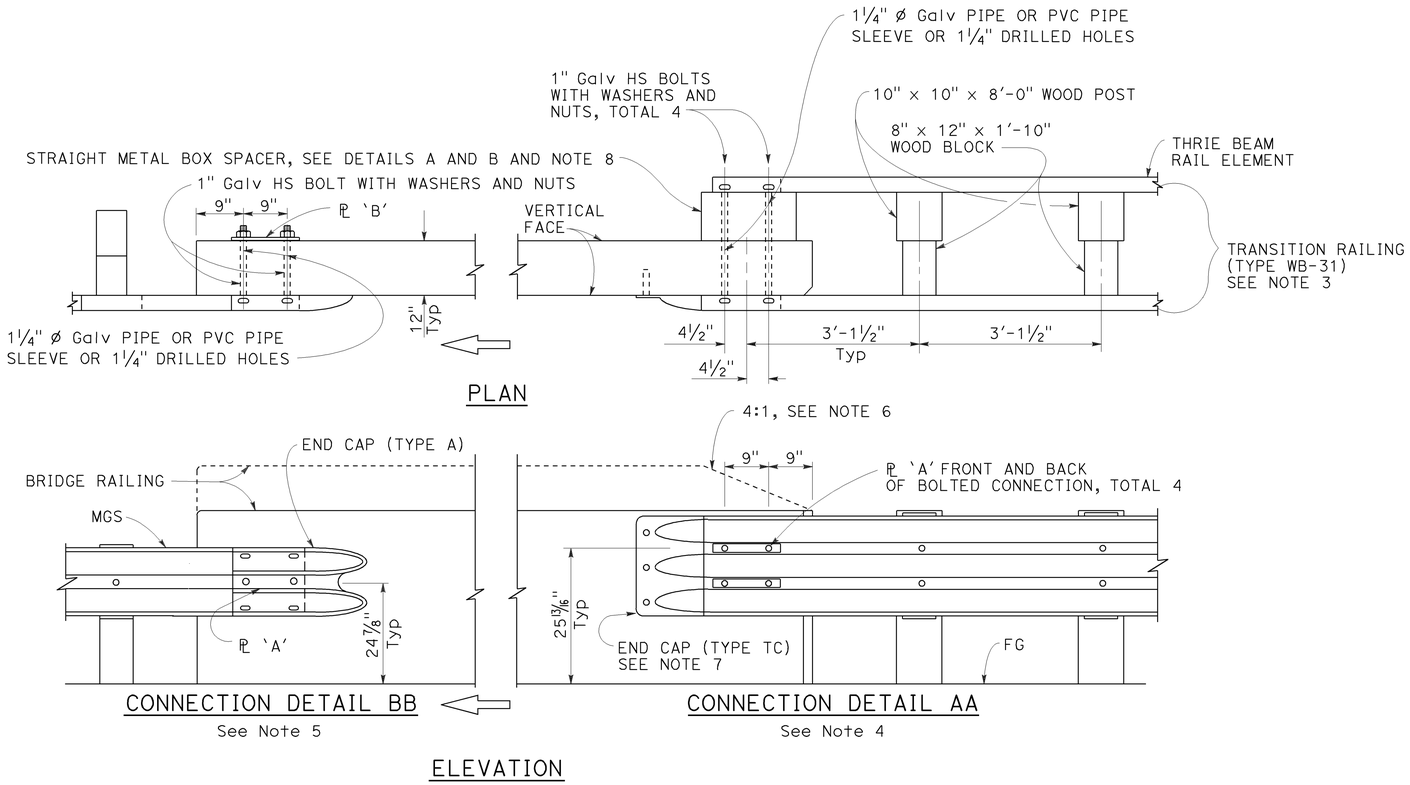

MIDWEST GUARDRAIL SYSTEM CONNECTION TO BRIDGE RAILING WITHOUT SIDEWALK

NOTES:

1. See Revised Standard Plan RSP A77U2 for additional connection details to bridges without sidewalks.
2. Additional details of posts, blocks and hardware are shown on Revised Standard Plans RSP A77M1, RSP A77N1 and RSP A77N2.
3. For additional details of Transition Railing (Type WB-31), see Revised Standard Plan RSP A77U4. Transition Railing (Type WB-31) transitions the 12 gauge MGS railing section to a heavier gage nested thrie beam railing section which is connected to the concrete bridge railing.
4. For typical use of Connection Detail AA, see Layout Types 12A and 12B on Revised Standard Plan RSP A77Q1, Layout Types 12C and 12D on Revised Standard Plan RSP A77Q2, and Layout Type 12E on Revised Standard Plan RSP A77Q3.
5. For typical use of Connection Detail BB, see Layout Type 12D (structure departure railing connection) on Revised Standard Plan RSP A77Q2 and Layout Type 12DD on Revised Standard Plan RSP A77Q5.
6. Where the height of the bridge railing exceeds the height of the thrie beam railing by more than 1" at Connection Detail AA, taper the top of the end of the bridge railing at 4:1 to match the top elevation of the thrie beam rail.
7. For details of End Cap (Type TC), see Revised Standard Plan RSP A77U4.
8. See Revised Standard Plan RSP A77U4 for additional details regarding depth dimension for straight metal box spacer.

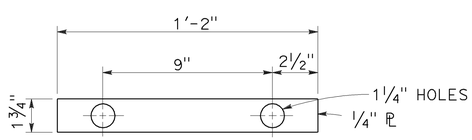

PLATE 'A'

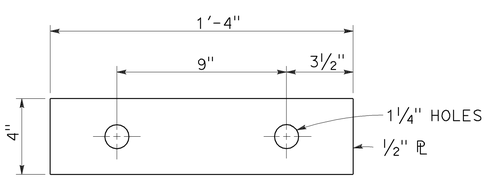

PLATE 'B'
(For backside of connection BB)

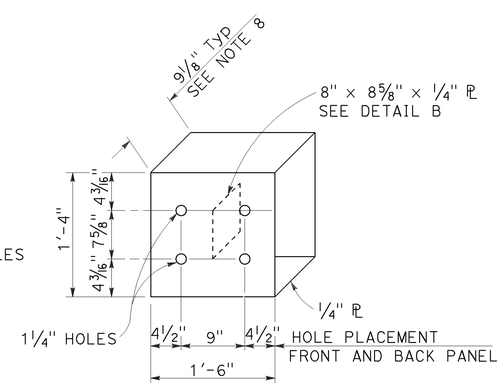

DETAIL A

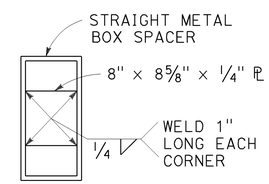

DETAIL B

STRAIGHT METAL BOX SPACER

STATE OF CALIFORNIA
DEPARTMENT OF TRANSPORTATION

MIDWEST GUARDRAIL SYSTEM CONNECTIONS TO BRIDGE RAILINGS WITHOUT SIDEWALKS DETAILS No. 1

NO SCALE

RSP A77U1 DATED JULY 19, 2013 SUPPLEMENTS THE STANDARD PLANS BOOK DATED 2010.

REVISED STANDARD PLAN RSP A77U1

2010 REVISED STANDARD PLAN RSP A77U1

7-8-13

Dist	COUNTY	ROUTE	POST MILES TOTAL PROJECT	SHEET No.	TOTAL SHEETS
04	Ala	580	R31.7/R31.9	55	86

Randell D. Hiatt
REGISTERED CIVIL ENGINEER

July 19, 2013
PLANS APPROVAL DATE

REGISTERED PROFESSIONAL ENGINEER
Randell D. Hiatt
No. C50200
Exp. 6-30-15
CIVIL
STATE OF CALIFORNIA

THE STATE OF CALIFORNIA OR ITS OFFICERS OR AGENTS SHALL NOT BE RESPONSIBLE FOR THE ACCURACY OR COMPLETENESS OF SCANNED COPIES OF THIS PLAN SHEET.

TO ACCOMPANY PLANS DATED 4-7-14

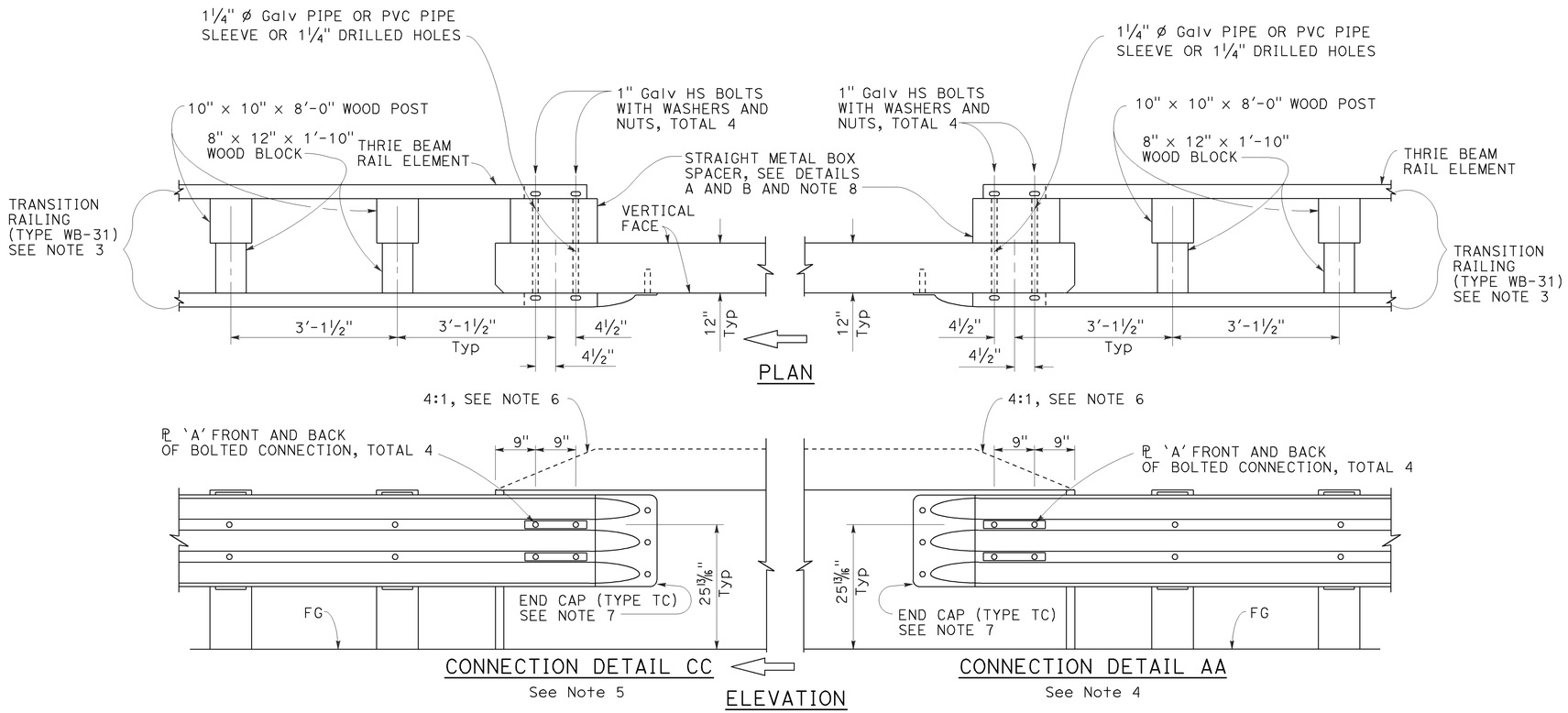

MIDWEST GUARDRAIL SYSTEM CONNECTION TO BRIDGE RAILING WITHOUT SIDEWALK

NOTES:

1. See Revised Standard Plan RSP A77U1 for additional connection details to bridges without sidewalks.
2. Additional details of posts, blocks and hardware are shown on Revised Standard Plans RSP A77M1, RSP A77N1 and RSP A77N2.
3. For additional details of Transition Railing (Type WB-31), see Revised Standard Plan RSP A77U4. Transition Railing (Type WB-31) transitions the 12 gauge MGS railing section to a heavier gage nested thrie beam railing section which is connected to the concrete bridge railing.
4. For typical use of Connection Detail AA, see Layout Types 12A and 12B on Revised Standard Plan RSP A77Q1, Layout Types 12C and 12D on Revised Standard Plan RSP A77Q2, and Layout Type 12E on Revised Standard Plan RSP A77Q3.
5. For typical use of Connection Detail CC, see Layout Types 12AA and 12BB on Revised Standard Plan RSP A77Q4 and Layout Type 12CC on Revised Standard Plan RSP A77Q5.
6. Where the height of the bridge railing exceeds the height of the thrie beam railing by more than 1" at Connection Detail AA and connection Detail CC, taper the top of the end of the bridge railing at 4:1 to match the top elevation of the thrie beam railing.
7. For details of End Cap (Type TC), see Revised Standard Plan RSP A77U4.
8. See Revised Standard Plan RSP A77U4 for additional details regarding depth dimension for straight metal box spacer.

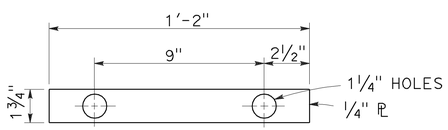

PLATE 'A'

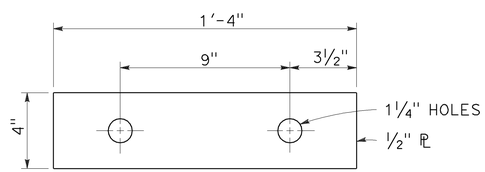

PLATE 'B'
(For backside of connection BB)

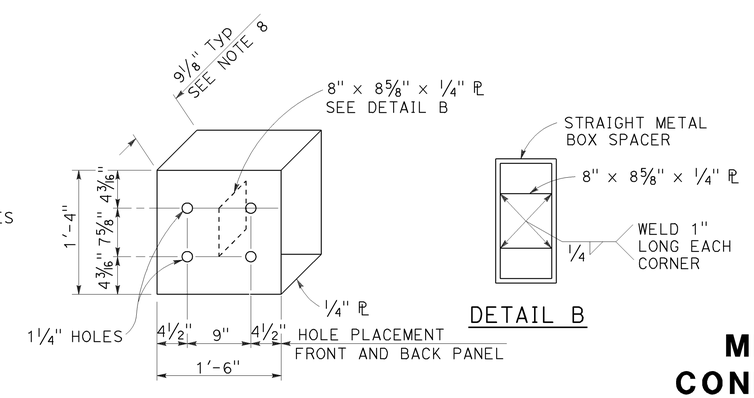

STATE OF CALIFORNIA
DEPARTMENT OF TRANSPORTATION

MIDWEST GUARDRAIL SYSTEM CONNECTIONS TO BRIDGE RAILINGS WITHOUT SIDEWALKS DETAILS No. 2

NO SCALE

RSP A77U2 DATED JULY 19, 2013 SUPPLEMENTS THE STANDARD PLANS BOOK DATED 2010.

REVISED STANDARD PLAN RSP A77U2

2010 REVISED STANDARD PLAN RSP A77U2

6-20-13

Dist	COUNTY	ROUTE	POST MILES TOTAL PROJECT	SHEET No.	TOTAL SHEETS
04	Ala	580	R31.7/R31.9	56	86

Randell D. Hiatt
REGISTERED CIVIL ENGINEER

November 15, 2013
PLANS APPROVAL DATE

REGISTERED PROFESSIONAL ENGINEER
Randell D. Hiatt
No. C50200
Exp. 6-30-15
CIVIL
STATE OF CALIFORNIA

THE STATE OF CALIFORNIA OR ITS OFFICERS OR AGENTS SHALL NOT BE RESPONSIBLE FOR THE ACCURACY OR COMPLETENESS OF SCANNED COPIES OF THIS PLAN SHEET.

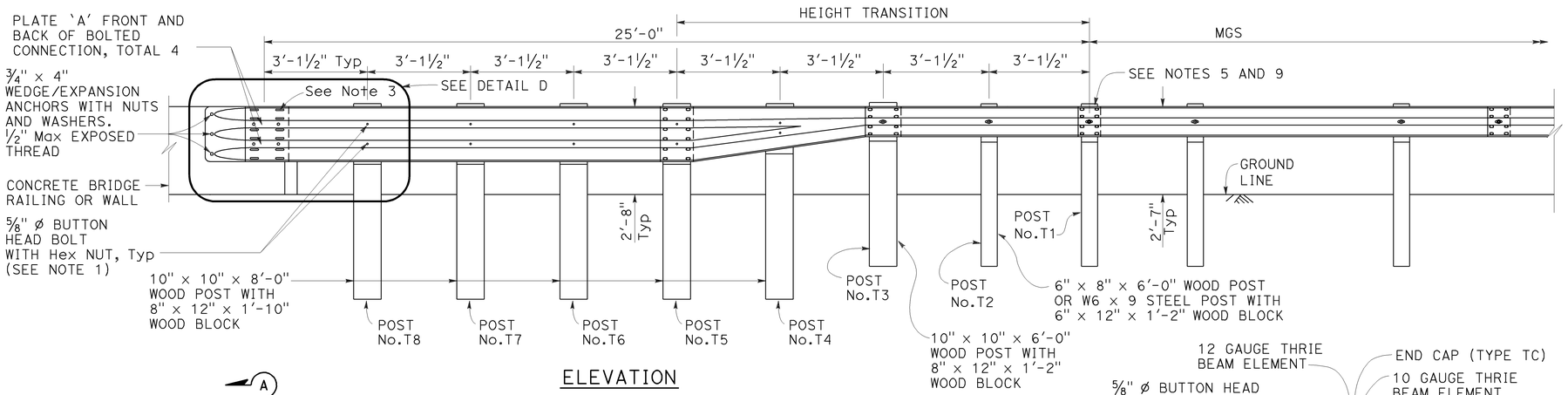

ELEVATION

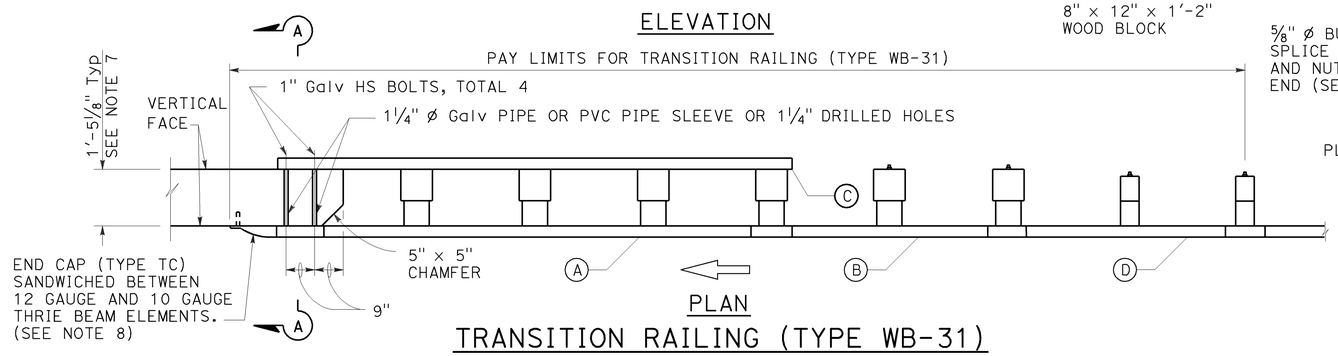

PLAN

TRANSITION RAILING (TYPE WB-31)

(No Blockout Attachment)

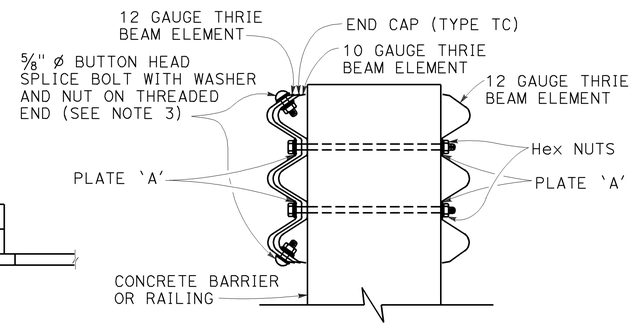

SECTION A-A

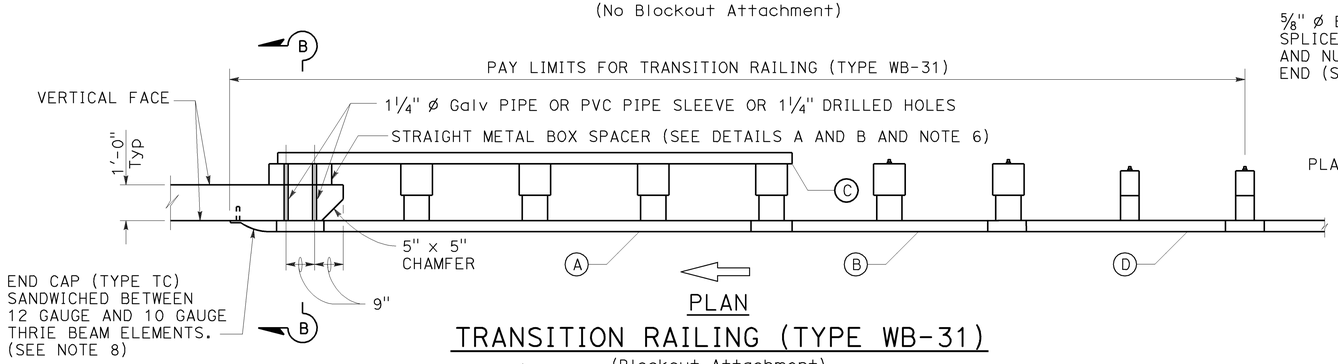

PLAN

TRANSITION RAILING (TYPE WB-31)

(Blockout Attachment)

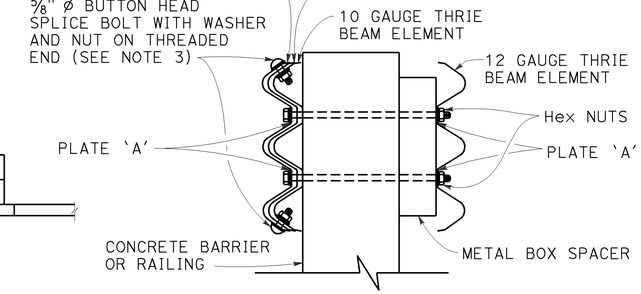

SECTION B-B

NOTES:

TO ACCOMPANY PLANS DATED 4-7-14

1. Use 5/8" ø Button head bolts and hex nuts for connections to posts. No washer on rail face for bolted connections to post.
2. The nested rail elements, end cap, and 'W' beam to thrie beam element may be spliced together prior to bolting the elements to the wood post and concrete barrier or railing.
3. Exterior splice bolt holes for rail element splices at Post No. T5 and the connection to the concrete barrier or railing shall be the standard 29/32" × 1 1/8" slot size. Interior splice bolt holes at these locations may be increased up to 1 1/4" ø. Only the top 4 and the bottom 4 splice bolts with washers and nuts are required for rail splices at Post No. T5 and the connection to the concrete barrier or railing.
4. The top elevation of Posts No. T2 through No. T7 shall not project more than 1" above the top elevation of the rail element.
5. Typically, the railing connected to Transition Railing (Type WB-31) will be either standard railing section of MGS with height transition ratio of 150:1 or a Caltrans approved 31" end treatment attached to Post No. T1.
6. The depth of the metal box spacer varies from the 9 1/8" to 1 1/2" and is dependent on the width of the concrete railing or wall. The combined dimension for the depth of the metal box spacer plus the width of railing or wall is typically 21 1/8". Where the space between the backside of the concrete railing or wall and the rear thrie beam element is less than 1 1/2", metal plates similar to Plate 'A' are to be used as spacers.
7. Where the width of the concrete railing or wall is greater than 17 1/8", wood blocks are to be used to fill the space created between the backside of Posts No. T5 through No. T8 and the rear thrie beam element. These wood blocks shall be 8" in width and 1'-2" in length. The dimension between the front thrie beam element and the rear thrie beam element is to match the width of the concrete railing or wall.
8. End cap may be installed over 12 gauge and 10 gauge thrie beam elements where transition railing is installed on the departure end of bridge railing.
9. Conform standard railing section height to 31" at Post No. T1 using height transition ratio of 150:1.

LEGEND:

(A) NESTED THRIE BEAM ELEMENTS (ONE 12 GAUGE ELEMENT NESTED OVER ONE 10 GAUGE ELEMENT).

(B) ONE ASYMMETRICAL 10 GAUGE "W" BEAM TO THRIE BEAM ELEMENT.

(C) ONE 12 GAUGE THRIE BEAM ELEMENT.

(D) ONE 10 GAUGE "W" BEAM RAIL ELEMENT (7'-3 1/2" LENGTH)

10 GAUGE = 0.138" THICK
12 GAUGE = 0.108" THICK

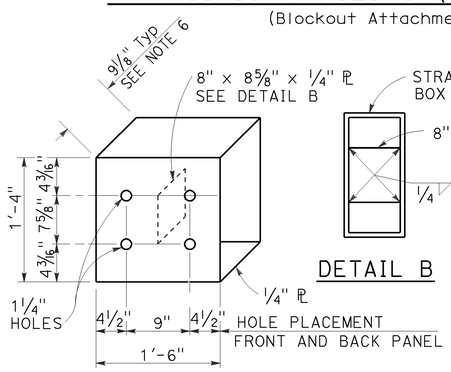

DETAIL A

STRAIGHT METAL BOX SPACER

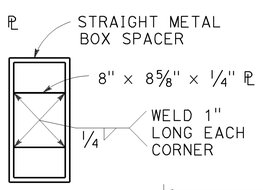

DETAIL B

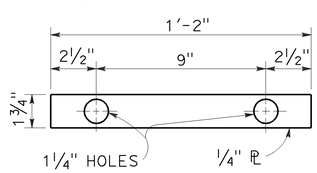

DETAIL C

PLATE 'A'

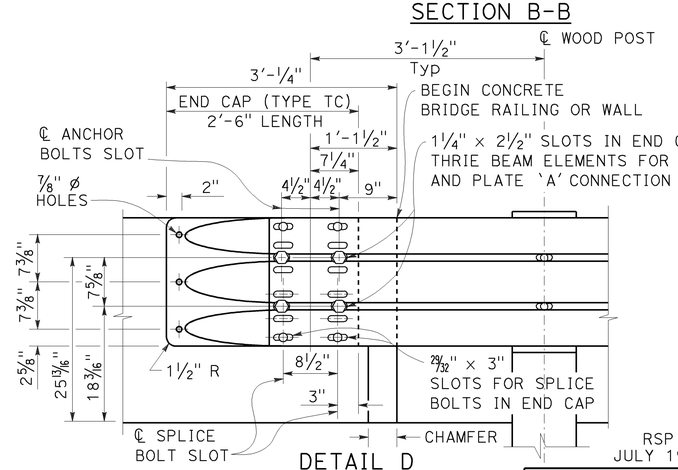

DETAIL D

STATE OF CALIFORNIA
DEPARTMENT OF TRANSPORTATION

MIDWEST GUARDRAIL SYSTEM TRANSITION RAILING (TYPE WB-31)

NO SCALE

RSP A77U4 DATED NOVEMBER 15, 2013 SUPERSEDES RSP A77U4 DATED JULY 19, 2013 THAT SUPPLEMENTS THE STANDARD PLANS BOOK DATED 2010.

REVISED STANDARD PLAN RSP A77U4

2010 REVISED STANDARD PLAN RSP A77U4

10-4-13

Dist	COUNTY	ROUTE	POST MILES TOTAL PROJECT	SHEET No.	TOTAL SHEETS
04	Ala	580	R31.7/R31.9	57	86

REGISTERED CIVIL ENGINEER

July 19, 2013
PLANS APPROVAL DATE

REGISTERED PROFESSIONAL ENGINEER
Michael Janzen
No. 44788
Exp. 03-31-14
CIVIL
STATE OF CALIFORNIA

THE STATE OF CALIFORNIA OR ITS OFFICERS OR AGENTS SHALL NOT BE RESPONSIBLE FOR THE ACCURACY OR COMPLETENESS OF SCANNED COPIES OF THIS PLAN SHEET.

TO ACCOMPANY PLANS DATED 4-7-14

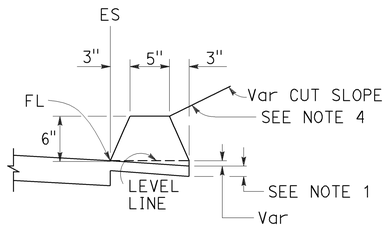

TYPE A
See Note 3

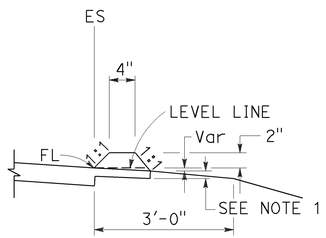

TYPE C

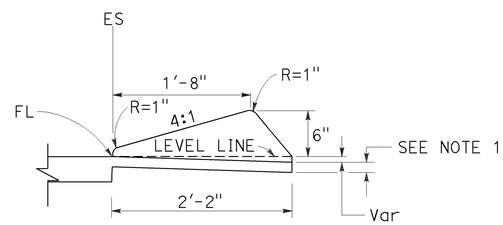

TYPE D

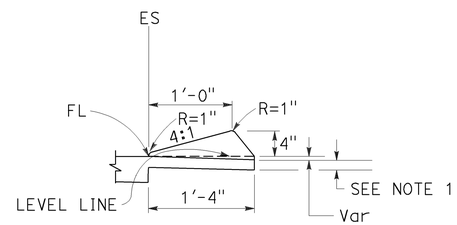

TYPE E

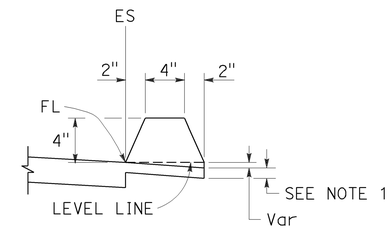

TYPE F
See Note 5

DIKES

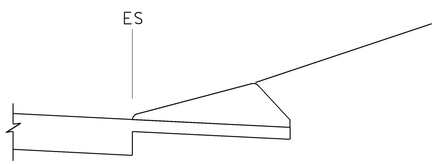

CASE C-1
Cut Slope

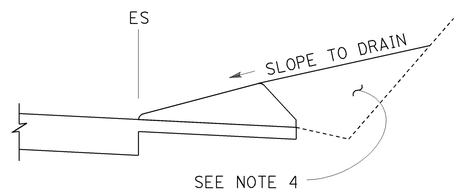

CASE C-2
Cut Slope

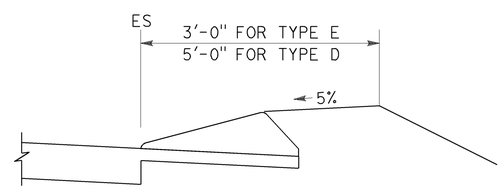

CASE F

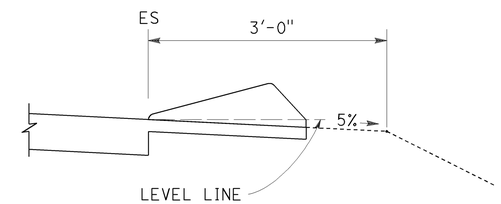

CASE R
See Note 2

TYPE D AND E BACKFILL DETAILS

NOTES:

1. For HMA shoulders only, extend top layer of HMA placed on the shoulder under dike with no joint at the ES. For projects with OGFC shoulders, do not extend OGFC under dike. See project plans for modified dike detail.
2. Case R applies to retrofit only projects where restrictive conditions do not provide enough width for Case F backfill.
3. Type A dike only to be used where restrictive slope conditions do not provide enough width to use Type D or Type E dike.
4. Fill and compact with excavated material to top of dike.
5. Use Type F dike, where dike is required with guard railing installations. See Revised Standard Plan RSP A77N4 for dike positioning details.

DIKE QUANTITIES

TYPE	CUBIC YARDS PER LINEAR FOOT
A	0.0135
C	0.0038
D	0.0293
E	0.0130
F	0.0066

Quantities based on 5% cross slope.

STATE OF CALIFORNIA
DEPARTMENT OF TRANSPORTATION

HOT MIX ASPHALT DIKES

NO SCALE

RSP A87B DATED JULY 19, 2013 SUPERSEDES STANDARD PLAN A87B DATED MAY 20, 2011 - PAGE 120 OF THE STANDARD PLANS BOOK DATED 2010.

REVISED STANDARD PLAN RSP A87B

2010 REVISED STANDARD PLAN RSP A87B

6-27-13

Dist	COUNTY	ROUTE	POST MILES TOTAL PROJECT	SHEET No.	TOTAL SHEETS
04	Ala	580	R31.7/R31.9	58	86

William K. Farnbach
REGISTERED CIVIL ENGINEER

July 19, 2013
PLANS APPROVAL DATE

REGISTERED PROFESSIONAL ENGINEER William K. Farnbach No. C49042 Exp. 9-30-14 CIVIL STATE OF CALIFORNIA

THE STATE OF CALIFORNIA OR ITS OFFICERS OR AGENTS SHALL NOT BE RESPONSIBLE FOR THE ACCURACY OR COMPLETENESS OF SCANNED COPIES OF THIS PLAN SHEET.

TO ACCOMPANY PLANS DATED 4-7-14

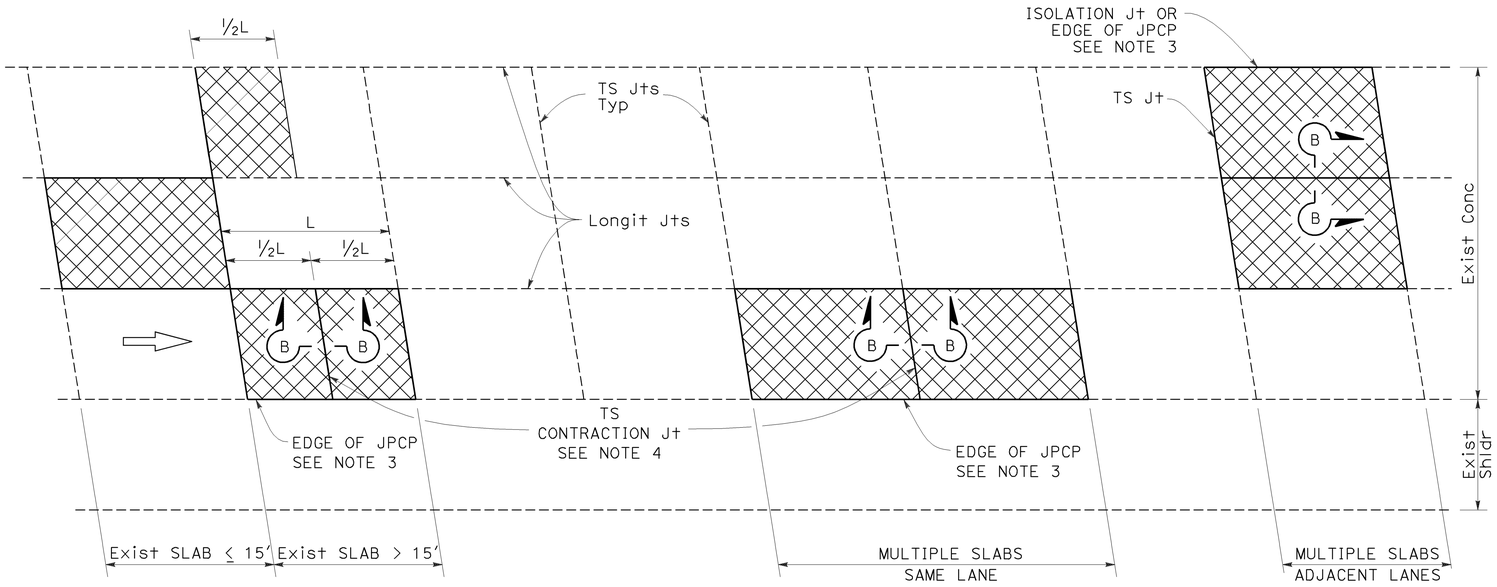

PLAN

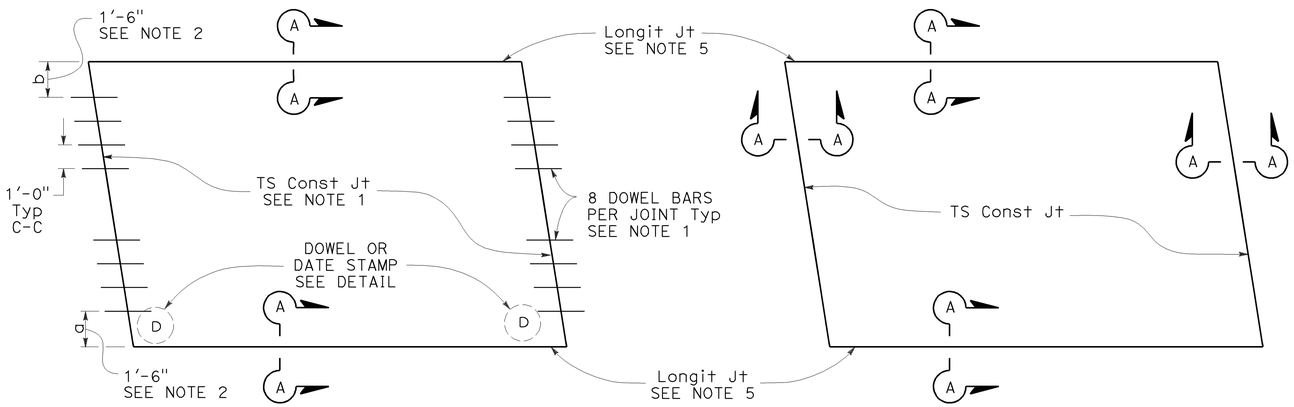

TYPE I
See Design Note 1

TYPE II
See Design Note 2

SLAB LAYOUT

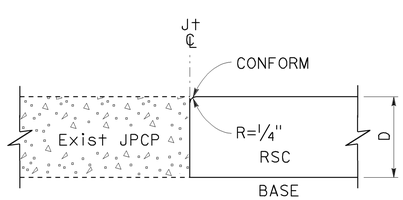

SECTION A-A

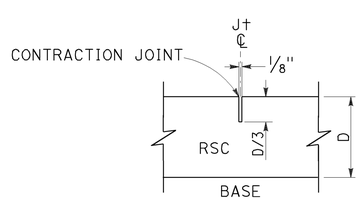

SECTION B-B

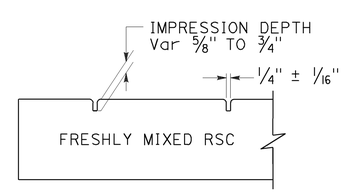

SECTION C-C

LEGEND:

RSC RAPID STRENGTH CONCRETE

INDIVIDUAL SLAB REPLACEMENT WITH RSC

NOTES:

1. For details not shown, see Revised Standard Plan RSP P10.
2. Where the existing outside shoulder is asphalt concrete pavement, "a" = 1'-0" and "b" = 2'-0".
3. Use side forms where edge of RSC pavement is adjacent to asphalt concrete.
4. Transverse contraction joint to match skew of existing joint. Omit dowel bars.
5. Do not place tie bars at longitudinal joints.

DESIGN NOTES:

1. For concrete slab repair with at least 5 years design life.
2. For short term repairs < 5 yrs design life or for slab replacements with cracking and seating.

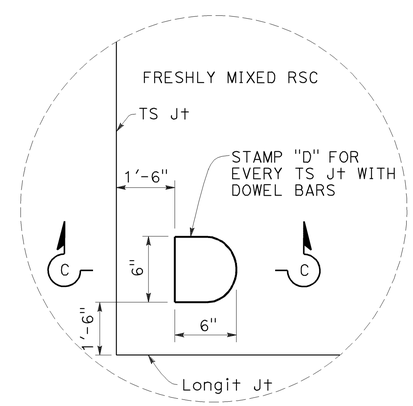

DOWEL STAMP DETAIL

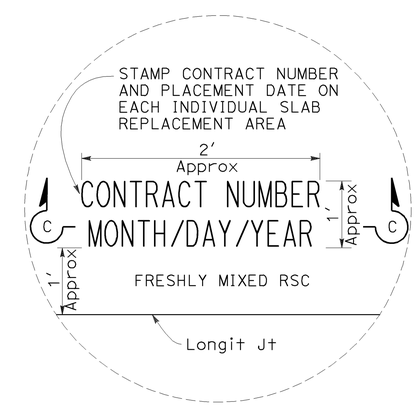

DATE STAMP DETAIL

STATE OF CALIFORNIA
DEPARTMENT OF TRANSPORTATION

INDIVIDUAL SLAB REPLACEMENT WITH RAPID STRENGTH CONCRETE

NO SCALE

RSP P8 DATED JULY 19, 2013 SUPERSEDES RSP P8 DATED APRIL 20, 2012 AND STANDARD PLAN P8 DATED MAY 20, 2011 - PAGE 130 OF THE STANDARD PLANS BOOK DATED 2010.

REVISED STANDARD PLAN RSP P8

2010 REVISED STANDARD PLAN RSP P8

5-31-13

TO ACCOMPANY PLANS DATED 4-7-14

Dist	COUNTY	ROUTE	POST MILES TOTAL PROJECT	SHEET No.	TOTAL SHEETS
04	Ala	580	R31.7/R31.9	59	86

Glenn DeCou
REGISTERED CIVIL ENGINEER

October 19, 2012
PLANS APPROVAL DATE

REGISTERED PROFESSIONAL ENGINEER Glenn DeCou No. C34547 Exp. 9-30-13 CIVIL STATE OF CALIFORNIA

THE STATE OF CALIFORNIA OR ITS OFFICERS OR AGENTS SHALL NOT BE RESPONSIBLE FOR THE ACCURACY OR COMPLETENESS OF SCANNED COPIES OF THIS PLAN SHEET.

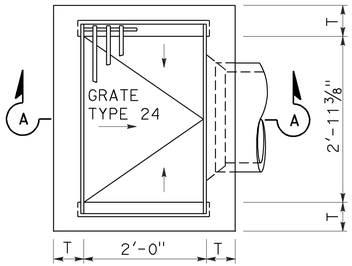

TYPE G1

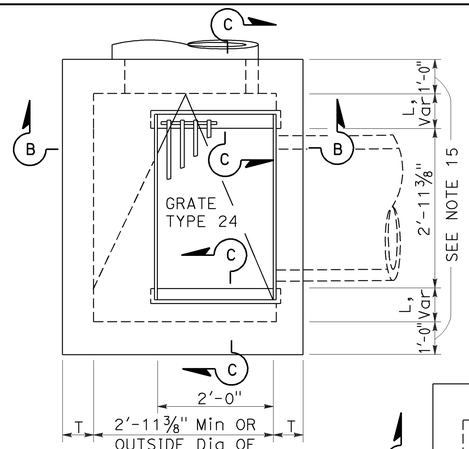

TYPE G2

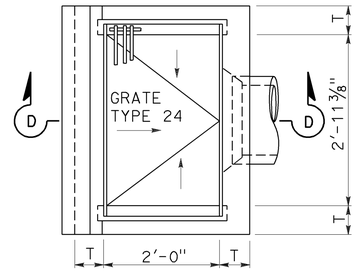

TYPE G3

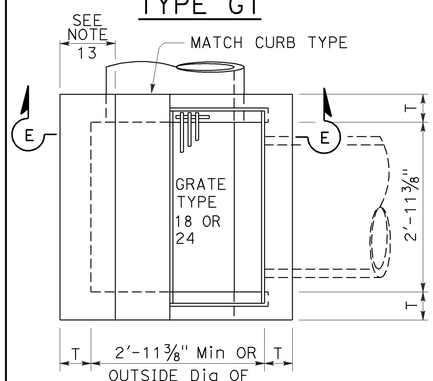

TYPE G4

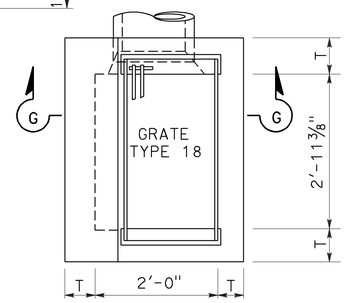

TYPE G6

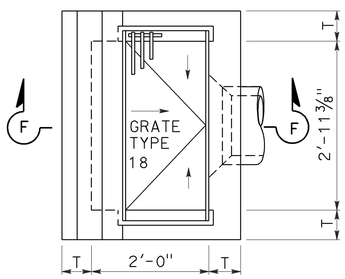

TYPE G5

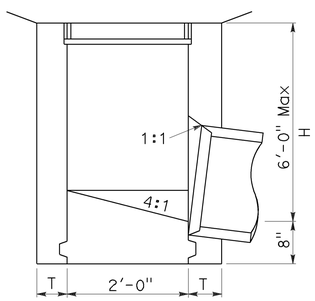

SECTION A-A

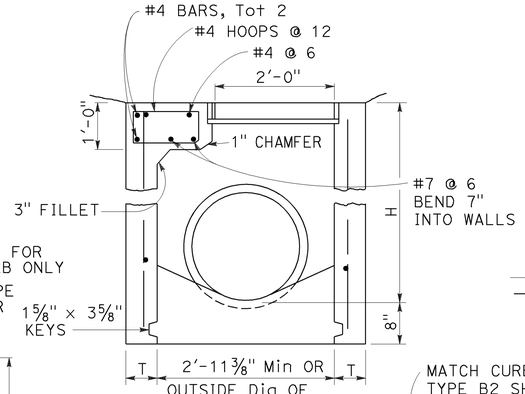

SECTION B-B

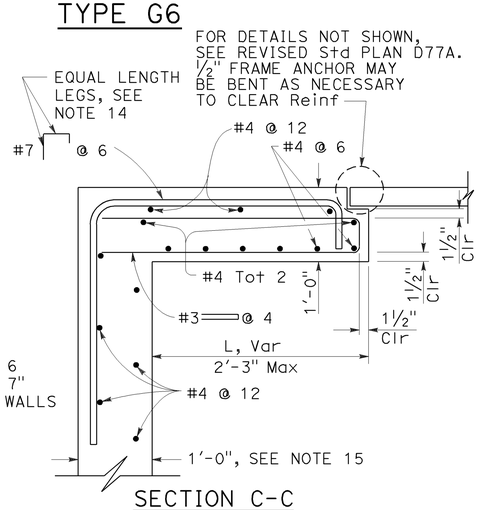

SECTION C-C

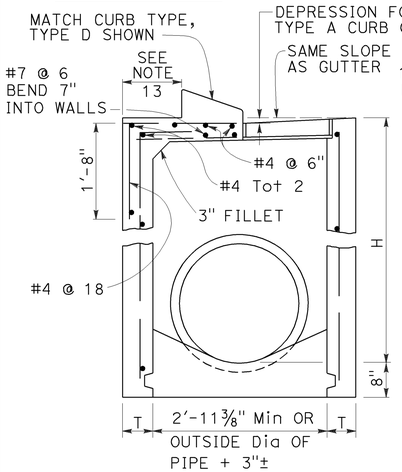

SECTION E-E

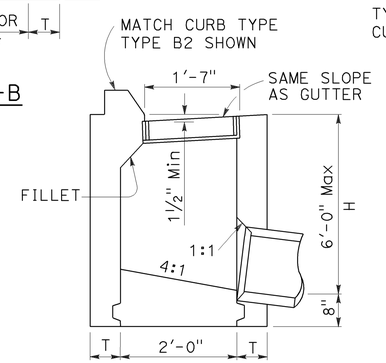

SECTION F-F

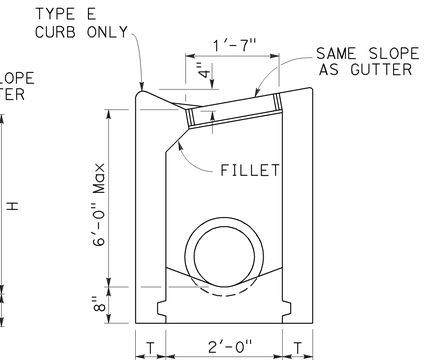

SECTION G-G

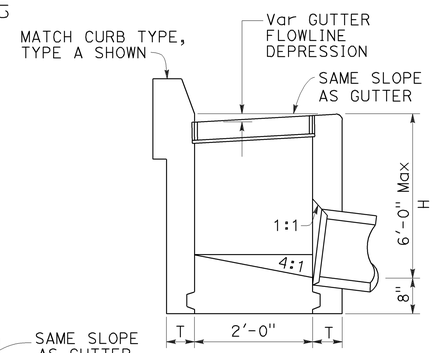

SECTION D-D

NOTES:

1. "H" is the difference in elevation between the outlet pipe flow line and the normal gutter grade line undepressed.
2. For "T" wall thickness, see Table A below.
3. Wall reinforcing not required when "H" is 8'-0" or less and the unsupported width or length is 7'-0" or less. Walls exceeding these limits shall be reinforced with #4 bars @ 1'-6" ± centers placed 1½" clear to inside of box unless otherwise shown.
4. Inlet bottom reinforcing not required. See Standard Plan D74C for alternative reinforced bottom and alternative half round bottom.
5. Steps-None required where "H" is less than 2'-6". Where "H" is 2'-6" or more, install steps with lowest rung 1'-0" above the floor and highest rung not more than 6" below top of inlet. The distance between steps shall not exceed 1'-0" and shall be uniform throughout the length of the wall. Place steps in the wall without an opening. Steps inserts may be substituted for the bar steps. Step inserts shall comply with State Industrial Safety requirements. See Standard Plan D74C for step details.
6. Details shown apply to both metal and concrete pipe.
7. Pipe(s) can be placed in any wall.
8. Curb section shall match adjacent curb.
9. Basin floors shall have wood trowel finish and a minimum slope of 12:3 from all directions toward outlet pipe.
10. Set inlet so that grate bars are parallel to direction of principal surface flow.
11. See Revised Standard Plans D77A and D77B for grate and frame details and weights of miscellaneous iron and steel.
12. See Standard Plan D78A for gutter depression details.
13. This dimenison will vary with different grates, curbs types, box width and wall thickness.
14. Bar may be rotated as necessary to clear opening. Where "L" is 6" or less, bar may be omitted.
15. Where "L" is 6" or less, wall thickness shall be as shown in Table A.
16. Cast-in-place inlets to be formed around all pipes/stubs intersecting the inlet, and concrete poured in one continuous operation. Precast inlets shall have mortared connections conforming to details for Type GCP Inlet shown on Standard Plan D75B. See Standard Specifications for mortar composition.

TABLE A

CONCRETE QUANTITIES				
TYPE	H=3'-0" TO 8'-0" (T=6")		H=8'-1" TO 20'-0" (T=8")	
	H=3'-0" (CY)	ADDITIONAL PCC PER FOOT (CY)	H=8'-1" (CY)	ADDITIONAL PCC PER FOOT (CY)
G-1	0.95	0.220	See Note A	SEE NOTE A
G-2*	1.31	0.255	3.50	0.357
G-3	1.03	0.220	See Note A	SEE NOTE A
G-4* (TYPE 24)	1.27	0.255	3.48	0.357
G-4* (TYPE 18)	1.30	0.255	3.50	0.357
G-5	1.02	0.220	SEE NOTE A	SEE NOTE A
G-6	1.04	0.220	SEE NOTE A	SEE NOTE A

TABLE BASED ON 8" FLOOR SLAB. NO DEDUCTIONS ARE TO BE MADE TO THESE QUANTITIES BECAUSE OF PIPE OPENINGS, DIFFERENT FLOOR ALTERNATIVES OR DIFFERENT CURB TYPES. * QUANTITIES FOR TYPE G-2 AND G-4 INLETS BASED ON THE MINIMUM INTERIOR DIMENSIONS.

NOTE A:

Maximum allowable height 6'-0".

STATE OF CALIFORNIA
DEPARTMENT OF TRANSPORTATION

DRAINAGE INLETS

NO SCALE

RSP D73 DATED OCTOBER 19, 2012 SUPERSEDES STANDARD PLAN D73 DATED MAY 20, 2011 - PAGE 156 OF THE STANDARD PLANS BOOK DATED 2010.

REVISED STANDARD PLAN RSP D73

2010 REVISED STANDARD PLAN RSP D73

Dist	COUNTY	ROUTE	POST MILES TOTAL PROJECT	SHEET No.	TOTAL SHEETS
04	Ala	580	R31.7/R31.9	60	86

REGISTERED CIVIL ENGINEER

April 19, 2013
PLANS APPROVAL DATE

Raymond Don Tsztoo No. C37332 Exp. 6-30-14 CIVIL STATE OF CALIFORNIA REGISTERED PROFESSIONAL ENGINEER

THE STATE OF CALIFORNIA OR ITS OFFICERS OR AGENTS SHALL NOT BE RESPONSIBLE FOR THE ACCURACY OR COMPLETENESS OF SCANNED COPIES OF THIS PLAN SHEET.

TO ACCOMPANY PLANS DATED 4-7-14

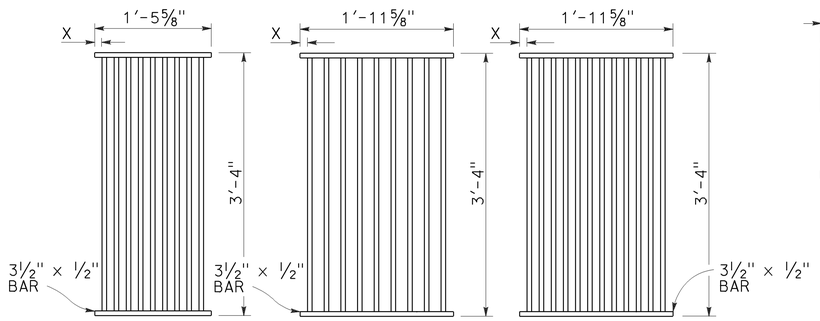

TYPE 18-9

1⅜" Clear spacing. Use within the roadbed on highways where bicycles and pedestrians are excluded.

TYPE 24-9

2" Clear spacing. Use in locations off the roadbed on all types of highways.

TYPE 24-12

1⅜" Clear spacing. Use within the roadbed on highways where bicycles and pedestrians are excluded.

RECTANGULAR GRATE DETAILS

(See table below)

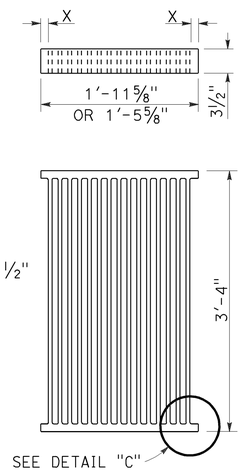

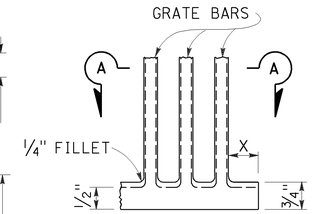

DETAIL "C"

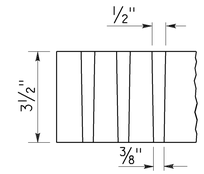

SECTION A-A

ALTERNATIVE CAST DUCTILE IRON GRATE OR CAST CARBON STEEL GRATE

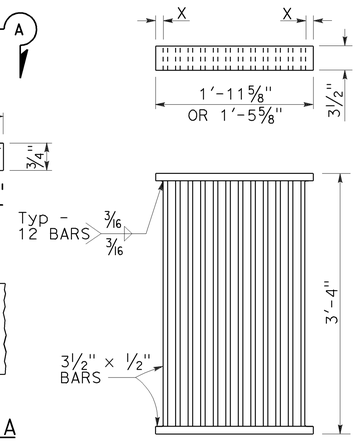

ALTERNATIVE WELDED GRATE

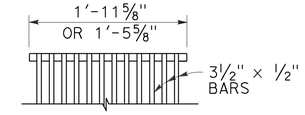

CAST END BLOCK

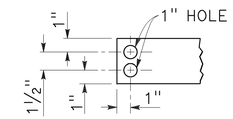

END OF BAR

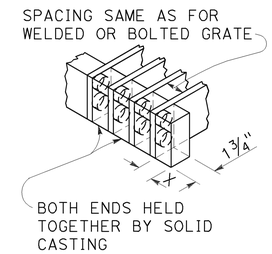

ALTERNATIVE CAST DUCTILE IRON OR CAST CARBON STEEL END BLOCK GRATE

NOTES:

1. Grate type numbers refer to approximate width of grate in inches and number of bars, respectively.
2. Contractor has the option of using cast ductile iron, cast carbon steel, welded, bolted, or cast end block grate.
3. Rounded top of bars optional on all grates.
4. Pipe inlets with a grate shall be placed so that bars parallel direction of principle surface flow.
5. Complete joint penetration butt welds may be substituted for the fillet welds on all anchors.
6. Standard square, hexagon, round or equivalent headed anchors may be substituted for the right angle hooks on the anchors shown on this plan.
7. Grate and frame weights are based on welded grates (weights of face angles, steps, protection bars, etc. are not included).
8. Connect chain to grate and frame only at locations shown on the plans. When chain is required, do not use cast ductile iron grates.

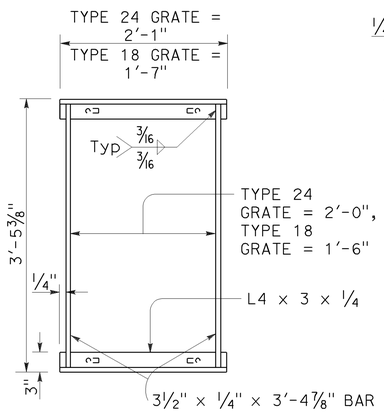

TYPICAL FRAME

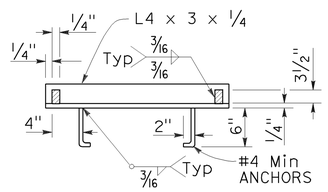

CROSS SECTION

(Thru frame)

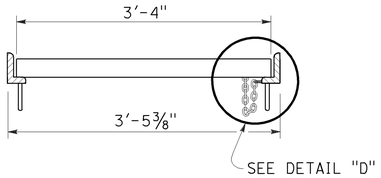

LONGITUDINAL SECTION

(Thru frame and grate)

RECTANGULAR FRAME DETAILS

(For all rectangular grates)

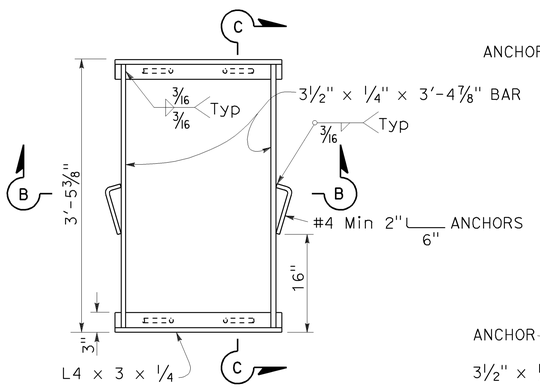

TYPICAL FRAME

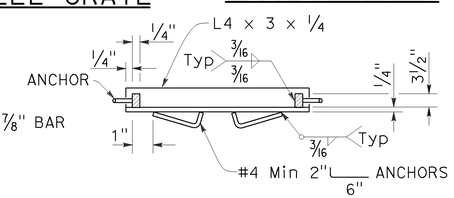

SECTION B-B

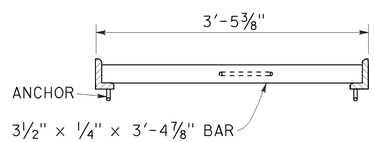

SECTION C-C

ALTERNATIVE ANCHOR FOR RECTANGULAR FRAME

(For details not shown, See Rectangular Frame Details)

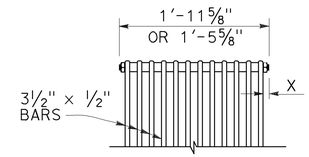

BOLTED END BLOCK

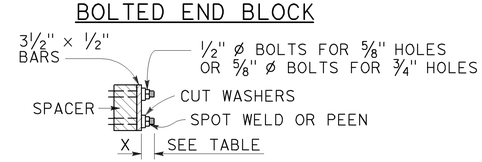

BOLTING DETAIL

ALTERNATIVE BOLTED GRATE

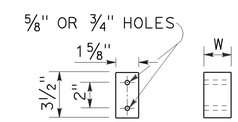

BAR SPACER

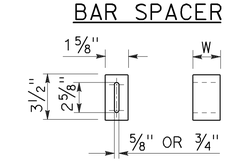

ALTERNATIVE SPACER

W = 1⅜" or 2"

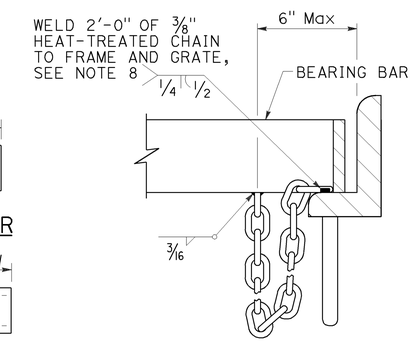

DETAIL "D"

(Steel grates only)

GRATE BAR SPACING TABLE

TYPE	No. OF BARS	CLEAR BAR SPACING	X
18-9	9	1⅜"	1 1/16"
24-9	9	2"	1 9/16"
24-12	12	1⅜"	1¼"

INLET TYPE	COVER TYPE	WEIGHT LB
OS	PLATE	174
OL-7	PLATE	170
OL-10	PLATE	170
OL-14	PLATE	170
OL-21	PLATE	170
OCP	PLATE	112
OCPI	PLATE	112
OCPI	REDWOOD	42
OMP	PLATE	177
OMPI	PLATE	177

INLET TYPE	GRATE TYPE	No. OF GRATES	WEIGHT LB
GDO	24-12	2	634
GOL-7	24-12	1	326
GOL-10	24-12	1	326
GO,G1,G2,G3,G4 (TYPE 24)	24-9	1	263
	24-12	1	326
G4 (TYPE 18),G5,G6	18-9	1	249
GT1	18-9	2	498
GT2	18-9	2	498
GT3	24-12	2	652
GT4	24-12	2	652
TRASH RACK			22
GRATE CHAIN			3

BASIS FOR Misc IRON & STEEL FINAL PAY WEIGHTS FOR DRAINAGE INLETS

(See Note 7)

STATE OF CALIFORNIA
DEPARTMENT OF TRANSPORTATION

GRATE DETAILS No. 1

NO SCALE

RSP D77A DATED APRIL 19, 2013 SUPERSEDES RSP D77A DATED JULY 20, 2012 AND STANDARD PLAN D77A DATED MAY 20, 2011 - PAGE 164 OF THE STANDARD PLANS BOOK DATED 2010.

REVISED STANDARD PLAN RSP D77A

2010 REVISED STANDARD PLAN RSP D77A

4-4-13

Dist	COUNTY	ROUTE	POST MILES TOTAL PROJECT	SHEET No.	TOTAL SHEETS
04	Ala	580	R31.7/R31.9	61	86

LICENSED LANDSCAPE ARCHITECT

July 19, 2013
PLANS APPROVAL DATE

THE STATE OF CALIFORNIA OR ITS OFFICERS OR AGENTS SHALL NOT BE RESPONSIBLE FOR THE ACCURACY OR COMPLETENESS OF SCANNED COPIES OF THIS PLAN SHEET.

LICENSED LANDSCAPE ARCHITECT — Gregory A. Balzer — 2516 — 02-28-15 Renewal Date — 7-19-13 Date — STATE OF CALIFORNIA

TO ACCOMPANY PLANS DATED 4-7-14

A

AB	AGGREGATE BASE
ABS	ACRYLONITRILE-BUTADIENE-STYRENE
AC	ASPHALT CONCRETE
ACC	ARMOR-CLAD CONDUCTORS
Adj	ADJACENT/ADJUSTABLE
AIC	AUXILIARY IRRIGATION CONTROLLER
Alt	ALTERNATIVE
AMEND	AMENDMENT
ARV	AIR RELEASE VALVE
AUTO	AUTOMATIC
AUX	AUXILIARY
AVB	ATMOSPHERIC VACUUM BREAKER

B

B&B	BALLED AND BURLAPPED
B/B	BRASS/BRONZE
B/B/PL	BRASS/BRONZE/PLASTIC
B/PL	BRASS/PLASTIC
BFM	BONDED FIBER MATRIX
Bit Ctd	BITUMINOUS COATED
BP	BOOSTER PUMP
BPA	BACKFLOW PREVENTER ASSEMBLY
BPE	BACKFLOW PREVENTER ENCLOSURE
BV	BALL VALVE

C

C	CONDUIT
CAP	CORRUGATED ALUMINUM PIPE
CARV	COMBINATION AIR RELEASE VALVE
CB	COUPLING BAND
CCA	CAM COUPLER ASSEMBLY
CEC	CONTROLLER ENCLOSURE CABINET
CHDPE	CORRUGATED HIGH DENSITY POLYETHYLENE
CL	CHAIN LINK
CNC	CONTROL AND NEUTRAL CONDUCTORS
Conc	CONCRETE
CP	COPPER PIPE
CS	COMPOST SOCK
CSP	CORRUGATED STEEL PIPE
CST	CENTER STRIP
CV	CHECK VALVE

D

Dia	DIAMETER
DIP	DUCTILE IRON PIPE
DIT	DRIP IRRIGATION TUBING
DG	DECOMPOSED GRANITE
DN	DIAMETER NOMINAL
DVA	DRIP VALVE ASSEMBLY

E

EC	EROSION CONTROL
ECTC	EROSION CONTROL TECHNOLOGY COUNCIL
Elect	ELECTRIC/ELECTRICAL
Elev	ELEVATION
ELL	ELBOW
ENCL	ENCLOSURE
EP	EDGE OF PAVEMENT
ES	EDGE OF SHOULDER
EST	END STRIP
ESTB	ESTABLISHMENT
ETW	EDGE OF TRAVELED WAY

F

F	FULL CIRCLE
F/P	FULL/PART CIRCLE
FCV	FLOW CONTROL VALVE
FERT	FERTILIZER
FG	FINISHED GRADE
FH	FLEXIBLE HOSE
FIPT	FEMALE IRON PIPE THREAD
FIS	FERTILIZER INJECTOR SYSTEM
FL	FLOW LINE
FR	FIBER ROLL
FS	FLOW SENSOR
FSC	FLOW SENSOR CABLE
FV	FLUSH VALVE

G

Galv	GALVANIZED
GARV	GARDEN VALVE
GARVA	GARDEN VALVE ASSEMBLY
GM	GRAVEL MULCH
GPH	GALLONS PER HOUR
GPM	GALLONS PER MINUTE
GSP	GALVANIZED STEEL PIPE
GV	GATE VALVE

H

H	HALF CIRCLE
HDPE	HIGH DENSITY POLYETHYLENE
HP	HORSEPOWER/HINGE POINT
HPL	HIGH PRESSURE LINE
Hwy	HIGHWAY

I

IC	IRRIGATION CONTROLLER
ICC	IRRIGATION CONTROLLER(S) IN CONTROLLER ENCLOSURE CABINET
ID	INSIDE DIAMETER
IFS	IRRIGATION FILTRATION SYSTEM
IPS	IRON PIPE SIZE
IPT	IRON PIPE THREAD
Irr	IRRIGATION

L

L	LENGTH

M

Max	MAXIMUM
MBGR	METAL BEAM GUARD RAILING
MCV	MANUAL CONTROL VALVE
MIC	MASTER IRRIGATION CONTROLLER
Min	MINIMUM
MIPT	MALE IRON PIPE THREAD
Misc	MISCELLANEOUS
Mtl	MATERIAL
MVP	MAINTENANCE VEHICLE PULLOUT

N

NCN	NO COMMON NAME
NL	NOZZLE LINE
No.	NUMBER
NPT	NATIONAL PIPE THREAD

O

O/C	ON CENTER
OD	OUTSIDE DIAMETER
OL	OVERLAP

P

P	PART CIRCLE
PB	PULL BOX
PCC	PORTLAND CEMENT CONCRETE
PE	POLYETHYLENE
Pkt	PACKET
PL	PLASTIC
PLS	PURE LIVE SEED
PLT	PLANT/PLANTING
PLT ESTB	PLANT ESTABLISHMENT
PM	POST MILE
PR	PRESSURE RATED
PRLV	PRESSURE RELIEF VALVE
PRV	PRESSURE REGULATING VALVE
PVC	POLYVINYL CHLORIDE
Pvmt	PAVEMENT

Q

Q	QUARTER CIRCLE
QCV	QUICK COUPLING VALVE

R

R	RADIUS
RCP	REINFORCED CONCRETE PIPE
RCV	REMOTE CONTROL VALVE
RCVM	REMOTE CONTROL VALVE (MASTER)
RCVMF	REMOTE CONTROL VALVE (MASTER) W/FLOW SENSOR
RCVP	REMOTE CONTROL VALVE W/PRESSURE REGULATOR
RCW	RECYCLED WATER
RECP	ROLLED EROSION CONTROL PRODUCT
REQ	REQUIRED
RICS	REMOTE IRRIGATION CONTROL SYSTEM
R/W	RIGHT OF WAY

S

S	SLIP
SCH	SCHEDULE
SF	STATE-FURNISHED
Shld	SHOULDER
Sq	SQUARE
SST	SIDE STRIP
Sta	STATION
Std	STANDARD
SW	SIDEWALK/SOUND WALL

T

T	THIRD CIRCLE/THREAD
TLS	TRUCK LOADING STANDPIPE
TQ	THREE QUARTER CIRCLE
TRM	TURF REINFORCEMENT MAT
TT	TWO-THIRDS CIRCLE
TWSA	TREE WELL SPRINKLER ASSEMBLY
Typ	TYPICAL

U

UG	UNDERGROUND

W

W	WIDTH
W/	WITH
WM	WATER METER
WS	WYE STRAINER
WSA	WYE STRAINER ASSEMBLY
WSP	WELDED STEEL PIPE
WWM	WELDED WIRE MESH

NOTE:
For additional abbreviations, see Standard Plans A10A and A10B.

STATE OF CALIFORNIA
DEPARTMENT OF TRANSPORTATION

LANDSCAPE AND EROSION CONTROL ABBREVIATIONS

NO SCALE

RSP H1 DATED JULY 19, 2013 SUPERSEDES STANDARD PLAN H1 DATED MAY 20, 2011 - PAGE 218 OF THE STANDARD PLANS BOOK DATED 2010.

REVISED STANDARD PLAN RSP H1

2010 REVISED STANDARD PLAN RSP H1

6-28-13

Dist	COUNTY	ROUTE	POST MILES TOTAL PROJECT	SHEET No.	TOTAL SHEETS
04	Ala	580	R31.7/R31.9	62	86

Gregory A. Balzer
LICENSED LANDSCAPE ARCHITECT

November 15, 2013
PLANS APPROVAL DATE

LICENSED LANDSCAPE ARCHITECT
Gregory A. Balzer 2576
Signature
2-28-15
Renewal Date
11-15-13
Date
STATE OF CALIFORNIA

THE STATE OF CALIFORNIA OR ITS OFFICERS OR AGENTS SHALL NOT BE RESPONSIBLE FOR THE ACCURACY OR COMPLETENESS OF SCANNED COPIES OF THIS PLAN SHEET.

TO ACCOMPANY PLANS DATED 4-7-14

EXISTING	NEW	ITEM DESCRIPTION
		WATER METER (WM)
		BACKFLOW PREVENTER ASSEMBLY (BPA)
		BACKFLOW PREVENTER ENCLOSURE (BPE)
		BOOSTER PUMP (BP)
		TRUCK LOADING STANDPIPE (TLS)
FS	FS	FLOW SENSOR (FS)
X		MASTER IRRIGATION CONTROLLER (MIC)
		AUXILIARY IRRIGATION CONTROLLER (AIC)
		IRRIGATION CONTROLLER (IC) IRRIGATION CONTROLLER (IC) (BATTERY) IRRIGATION CONTROLLER (IC) (SOLAR) IRRIGATION CONTROLLER (IC) (TWO WIRE) IRRIGATION CONTROLLER(S) IN CONTROLLER ENCLOSURE CABINET (ICC)
acc	ACC	ARMOR-CLAD CONDUCTORS (ACC)
cnc	CNC	CONTROL AND NEUTRAL CONDUCTORS (CNC)
		IRRIGATION CONDUIT
		EXTEND IRRIGATION CONDUIT
dip	DIP	DUCTILE IRON PIPE (SUPPLY LINE) (MAIN) (DIP)
		GALVANIZED STEEL PIPE (SUPPLY LINE) (MAIN) (GSP)
		GALVANIZED STEEL PIPE (SUPPLY LINE) (LATERAL) (GSP)
		PLASTIC PIPE (SUPPLY LINE) (MAIN)
		PLASTIC PIPE (SUPPLY LINE) (LATERAL)
cp	CP	COPPER PIPE (SUPPLY LINE)
dit	DIT	DRIP IRRIGATION TUBING
		REMOTE CONTROL VALVE (RCV) REMOTE CONTROL VALVE (MASTER) (RCVM) REMOTE CONTROL VALVE (MASTER) W/FLOW METER (RCVMF)
P	P	REMOTE CONTROL VALVE W/PRESSURE REGULATOR (RCVP)
		EXISTING MANUAL CONTROL VALVE (MCV)
		DRIP VALVE ASSEMBLY (DVA)
		WYE STRAINER ASSEMBLY (WSA)

EXISTING	NEW	ITEM DESCRIPTION
		GATE VALVE (GV)
		BALL VALVE (BV)
		QUICK COUPLING VALVE (QCV)
		CAM COUPLER ASSEMBLY (CCA)
		GARDEN VALVE ASSEMBLY (GARVA)
		PRESSURE REGULATING VALVE (PRV)
		PRESSURE RELIEF VALVE (PRLV)
		FLOW CONTROL VALVE (FCV)
		COMBINATION AIR RELEASE VALVE (CARV)
		CHECK VALVE (CV)
		FLUSH VALVE (FV)
		EXISTING NOZZLE LINE W/TURNING UNION
		EXISTING IRRIGATION SYSTEM
		EXISTING IRRIGATION SYSTEM TO BE REMOVED
		CHAIN LINK GATE
		QUICK COUPLING VALVE W/SPRINKLER PROTECTOR
3	3	SPRINKLER W/SPRINKLER PROTECTOR
	C	CONNECT TO EXISTING SYSTEM
		CAP
		CAP EXISTING
	\\\FR\\\	FIBER ROLL
	\\\CS\\\	COMPOST SOCK

RCV SIZE
IRRIGATION CONTROLLER
CONTROLLER STATION
VALVE IN PARALLEL (IF APPLICABLE)
GPM
QUANTITY OF SPRINKLERS (WHEN SHOWN)

* 2½"-A-2b-40-60

VALVE CODE

* VALVE CODES FOR EXISTING VALVES ARE SHOWN IN A DASHED ENCLOSURE.

STATE OF CALIFORNIA
DEPARTMENT OF TRANSPORTATION

LANDSCAPE AND EROSION CONTROL SYMBOLS

NO SCALE

RSP H2 DATED NOVEMBER 15, 2013 SUPERSEDES RSP H2 DATED JULY 19, 2013 AND STANDARD PLAN H2 DATED MAY 20, 2011 - PAGE 219 OF THE STANDARD PLANS BOOK DATED 2010.

REVISED STANDARD PLAN RSP H2

2010 REVISED STANDARD PLAN RSP H2

10-9-13

Dist	COUNTY	ROUTE	POST MILES TOTAL PROJECT	SHEET No.	TOTAL SHEETS
04	Ala	580	R31.7/R31.9	63	86

Gregory A. Balzer
LICENSED LANDSCAPE ARCHITECT

July 19, 2013
PLANS APPROVAL DATE

LICENSED LANDSCAPE ARCHITECT
Gregory A. Balzer 2576
Signature
2-28-15
Renewal Date
7-19-13
Date
STATE OF CALIFORNIA

THE STATE OF CALIFORNIA OR ITS OFFICERS OR AGENTS SHALL NOT BE RESPONSIBLE FOR THE ACCURACY OR COMPLETENESS OF SCANNED COPIES OF THIS PLAN SHEET.

TO ACCOMPANY PLANS DATED 4-7-14

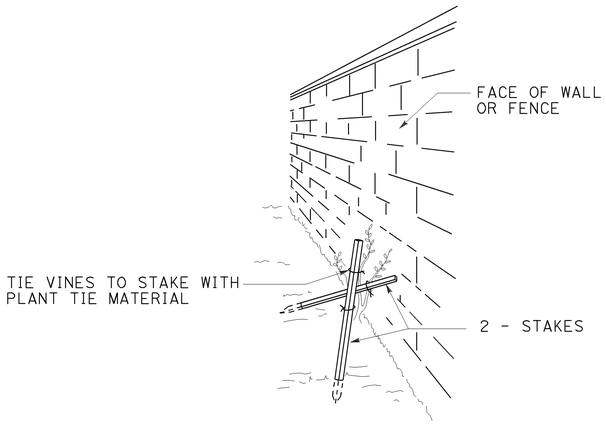

PERSPECTIVE
VINE STAKING

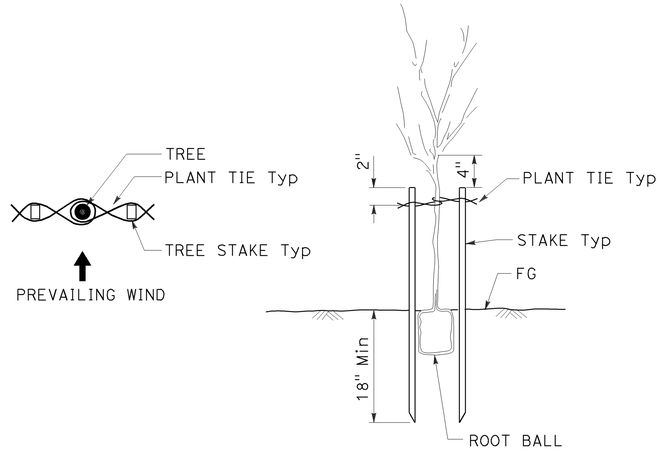

TREE STAKING

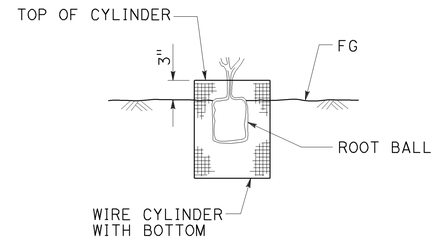

SECTION
ROOT PROTECTOR

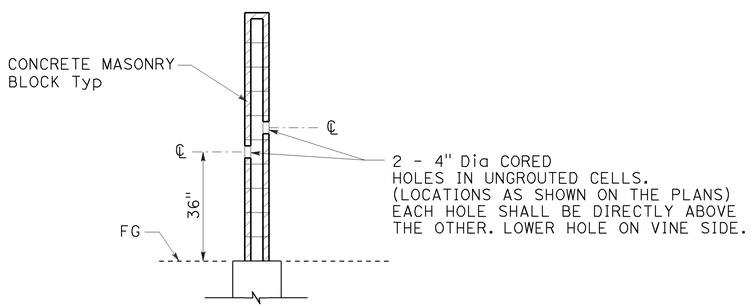

SECTION
CORE HOLE (VINE)

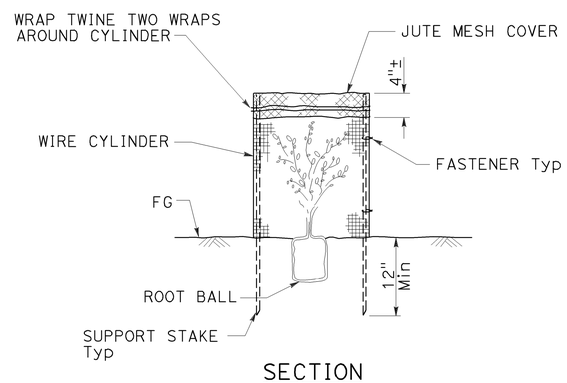

SECTION
FOLIAGE PROTECTOR

STATE OF CALIFORNIA
DEPARTMENT OF TRANSPORTATION

LANDSCAPE DETAILS

NO SCALE

RSP H4 DATED JULY 19, 2013 SUPERSEDES STANDARD PLAN H4
DATED MAY 20, 2011 - PAGE 221 OF THE STANDARD PLANS BOOK DATED 2010.

REVISED STANDARD PLAN RSP H4

2010 REVISED STANDARD PLAN RSP H4

6-28-13

Dist	COUNTY	ROUTE	POST MILES TOTAL PROJECT	SHEET No.	TOTAL SHEETS
04	Ala	580	R31.7/R31.9	64	86

Gregory A Balzer
LICENSED LANDSCAPE ARCHITECT

July 19, 2013
PLANS APPROVAL DATE

LICENSED LANDSCAPE ARCHITECT
Gregory A. Balzer 2576
Signature
2-28-15
Renewal Date
7-19-13
Date
STATE OF CALIFORNIA

THE STATE OF CALIFORNIA OR ITS OFFICERS OR AGENTS SHALL NOT BE RESPONSIBLE FOR THE ACCURACY OR COMPLETENESS OF SCANNED COPIES OF THIS PLAN SHEET.

TO ACCOMPANY PLANS DATED 4-7-14

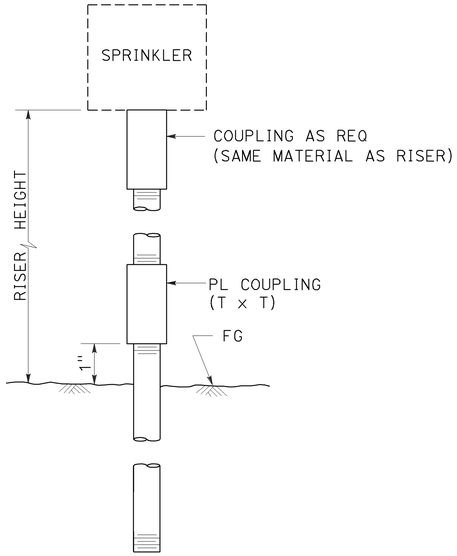

ELEVATION

RISER SPRINKLER ASSEMBLY TYPE I

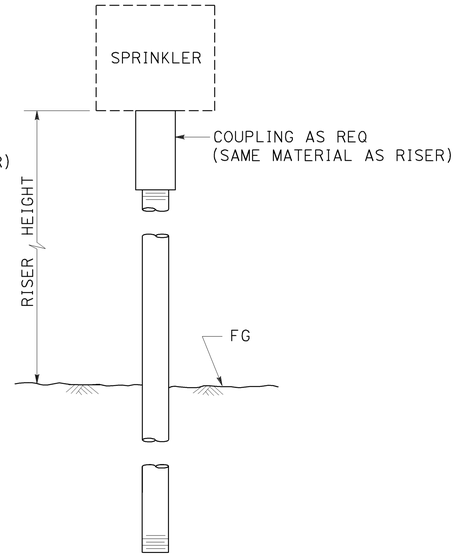

ELEVATION

RISER SPRINKLER ASSEMBLY TYPE II

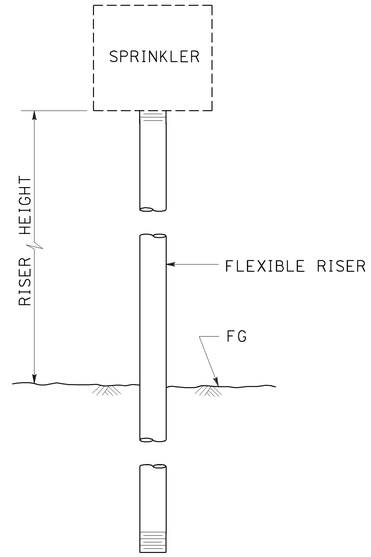

ELEVATION

RISER SPRINKLER ASSEMBLY TYPE III

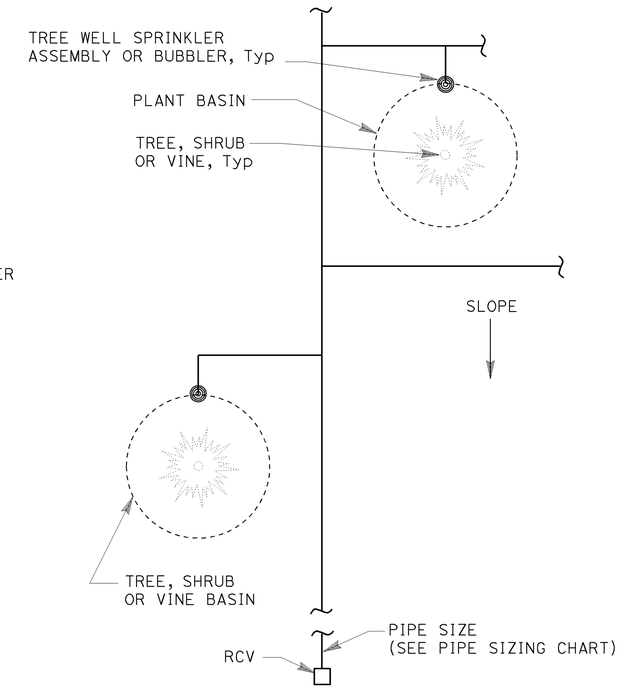

PLAN

NOTES:

1. Install tree well sprinkler assembly on up-hill side of plant when on slope.
2. Install bubbler within basin.

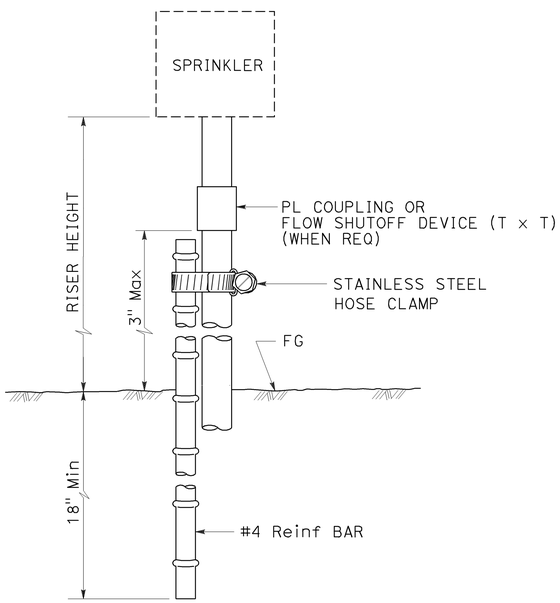

ELEVATION

RISER SPRINKLER ASSEMBLY TYPE IV

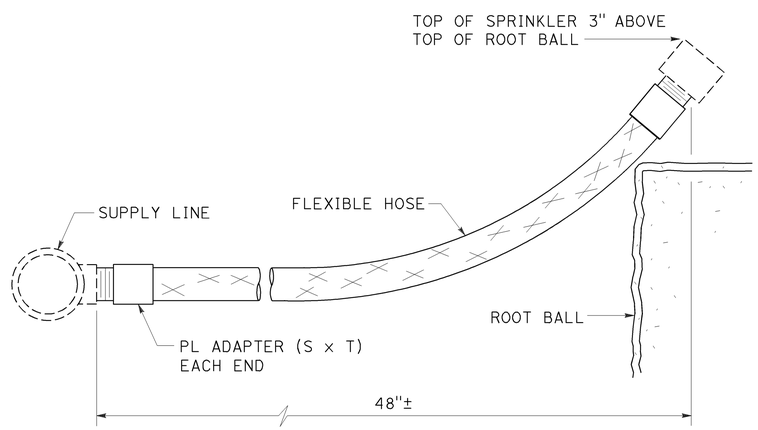

ELEVATION

RISER SPRINKLER ASSEMBLY TYPE V

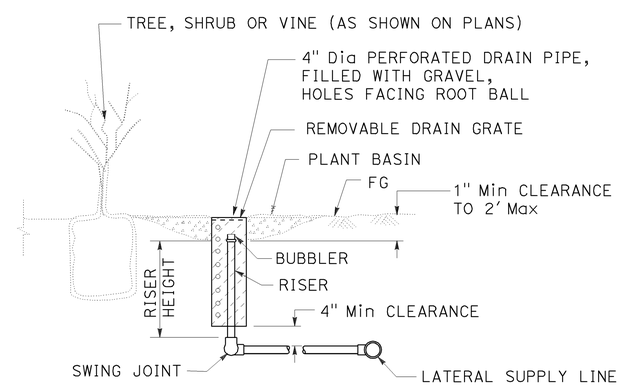

SECTION

TREE WELL SPRINKLER ASSEMBLY

STATE OF CALIFORNIA
DEPARTMENT OF TRANSPORTATION

LANDSCAPE DETAILS

NO SCALE

RSP H5 DATED JULY 19, 2013 SUPERSEDES STANDARD PLAN H5
DATED MAY 20, 2011 - PAGE 222 OF THE STANDARD PLANS BOOK DATED 2010.

REVISED STANDARD PLAN RSP H5

2010 REVISED STANDARD PLAN RSP H5

6-28-13

Dist	COUNTY	ROUTE	POST MILES TOTAL PROJECT	SHEET No.	TOTAL SHEETS
04	Ala	580	R31.7/R31.9	65	86

Gregory A. Balzer
LICENSED LANDSCAPE ARCHITECT

July 19, 2013
PLANS APPROVAL DATE

LICENSED LANDSCAPE ARCHITECT
Gregory A. Balzer 2576
Signature
2-28-15
Renewal Date
7-19-13
Date
STATE OF CALIFORNIA

THE STATE OF CALIFORNIA OR ITS OFFICERS OR AGENTS SHALL NOT BE RESPONSIBLE FOR THE ACCURACY OR COMPLETENESS OF SCANNED COPIES OF THIS PLAN SHEET.

TO ACCOMPANY PLANS DATED 4-7-14

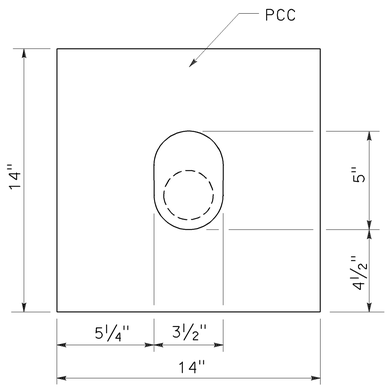

PLAN

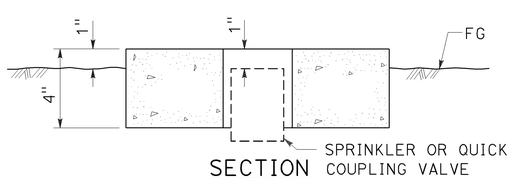

SECTION
SPRINKLER PROTECTOR TYPE I

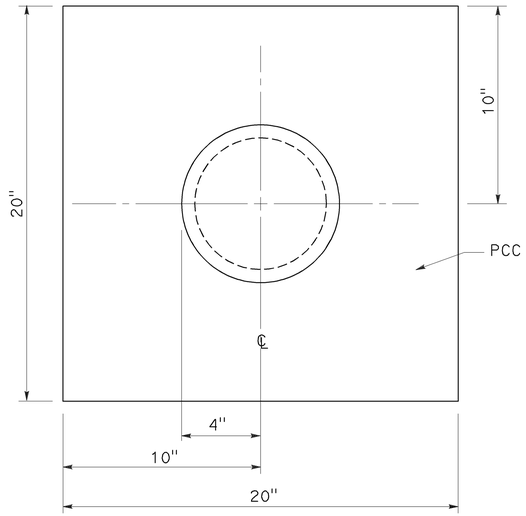

PLAN

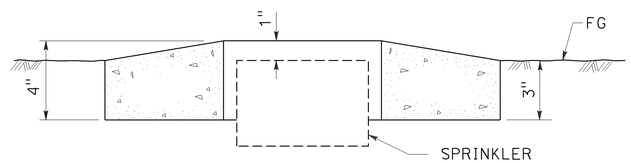

SECTION
SPRINKLER PROTECTOR TYPE II

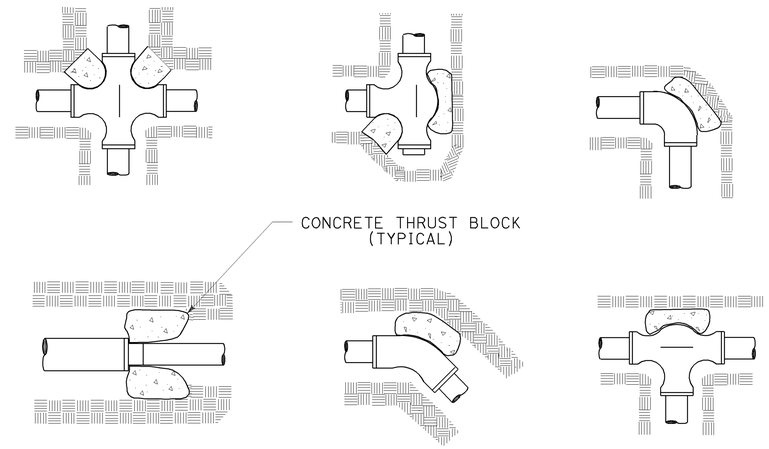

TYPICAL THRUST BLOCKS

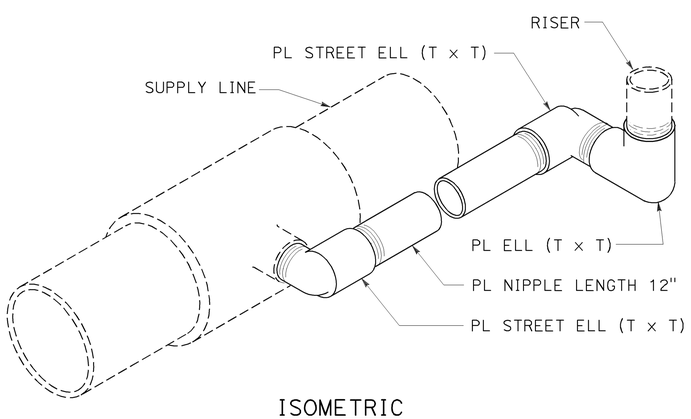

ISOMETRIC
POP-UP SPRINKLER ASSEMBLY TYPE I

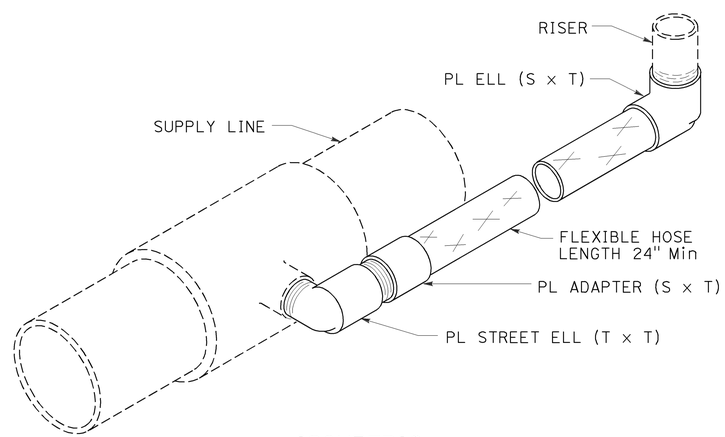

ISOMETRIC
POP-UP SPRINKLER ASSEMBLY TYPE II

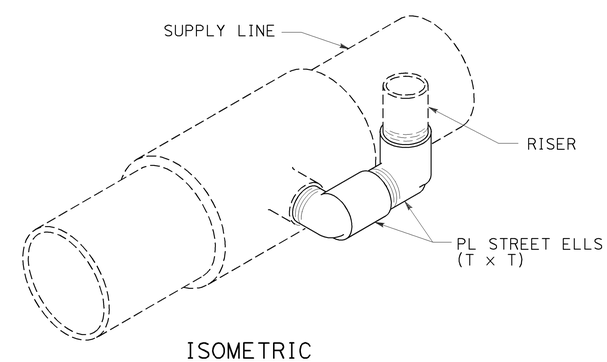

ISOMETRIC
POP-UP SPRINKLER ASSEMBLY TYPE III

STATE OF CALIFORNIA
DEPARTMENT OF TRANSPORTATION

LANDSCAPE DETAILS

NO SCALE

RSP H6 DATED JULY 19, 2013 SUPERSEDES STANDARD PLAN H6
DATED MAY 20, 2011 - PAGE 223 OF THE STANDARD PLANS BOOK DATED 2010.

REVISED STANDARD PLAN RSP H6

2010 REVISED STANDARD PLAN RSP H6

6-28-13

Dist	COUNTY	ROUTE	POST MILES TOTAL PROJECT	SHEET No.	TOTAL SHEETS
04	Ala	580	R31.7/R31.9	66	86

Gregory A. Balzer
LICENSED LANDSCAPE ARCHITECT

July 19, 2013
PLANS APPROVAL DATE

LICENSED LANDSCAPE ARCHITECT Gregory A. Balzer 2576 Expiration Date 2-28-15 Renewal Date 7-19-13 Date STATE OF CALIFORNIA

THE STATE OF CALIFORNIA OR ITS OFFICERS OR AGENTS SHALL NOT BE RESPONSIBLE FOR THE ACCURACY OR COMPLETENESS OF SCANNED COPIES OF THIS PLAN SHEET.

TO ACCOMPANY PLANS DATED 4-7-14

2010 REVISED STANDARD PLAN RSP H7

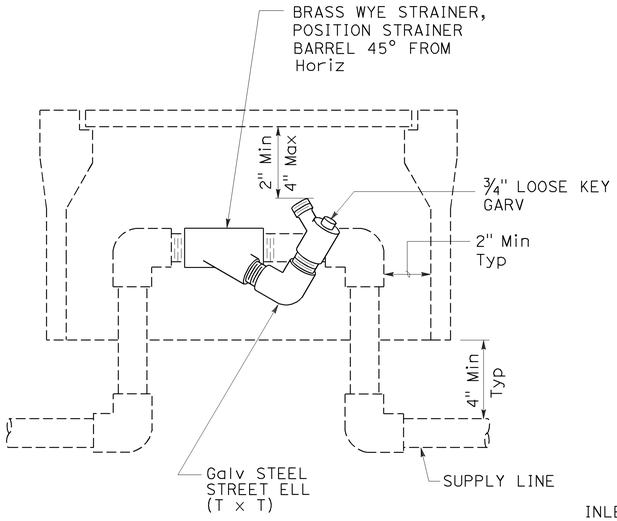

ELEVATION
WYE STRAINER ASSEMBLY

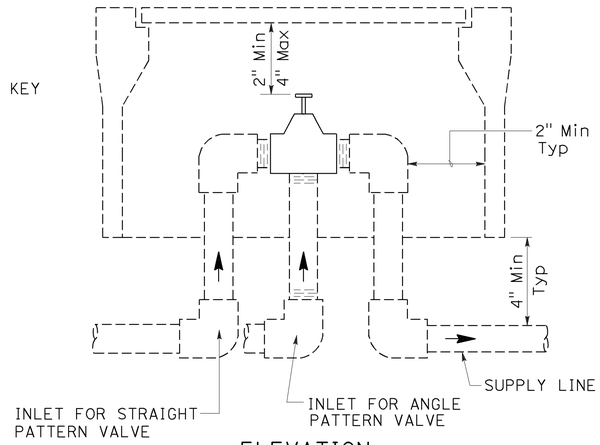

ELEVATION
VALVE

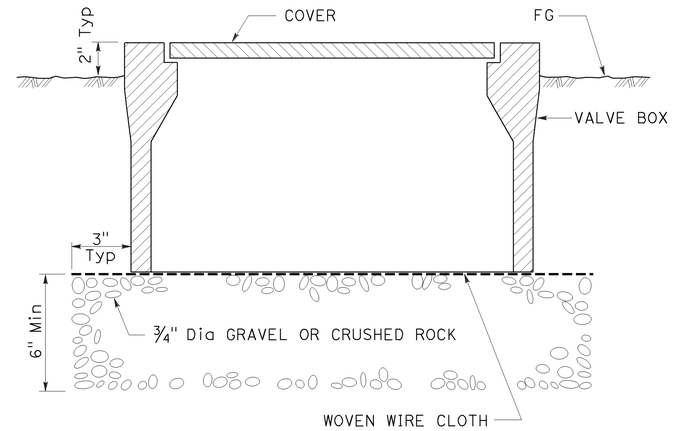

SECTION
VALVE BOX

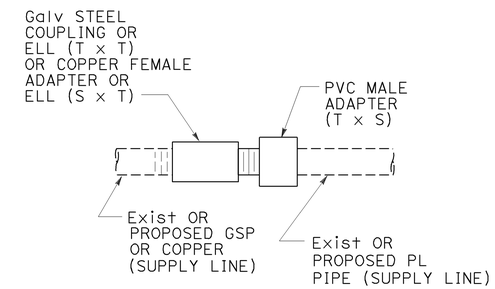

GALVANIZED OR COPPER PIPE CONNECTION TO PLASTIC PIPE

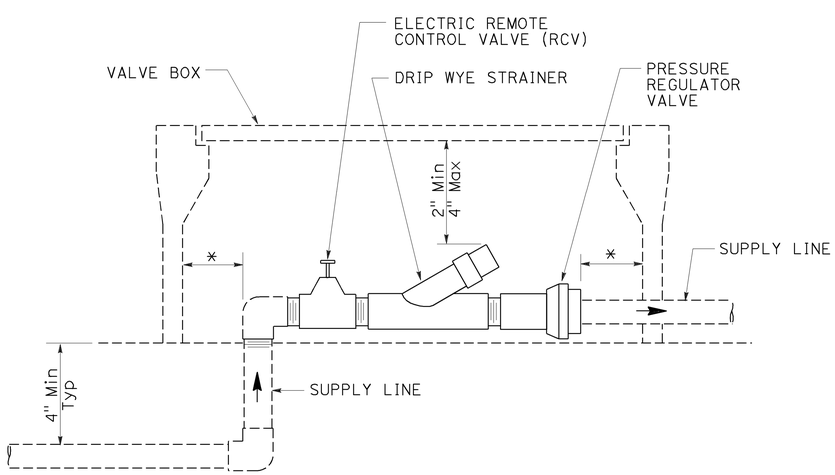

ELEVATION
DRIP VALVE ASSEMBLY

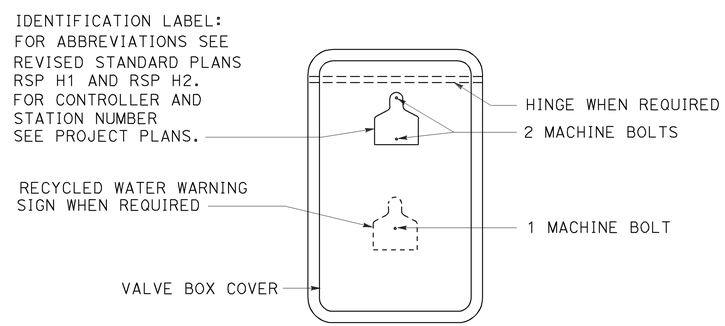

PLAN

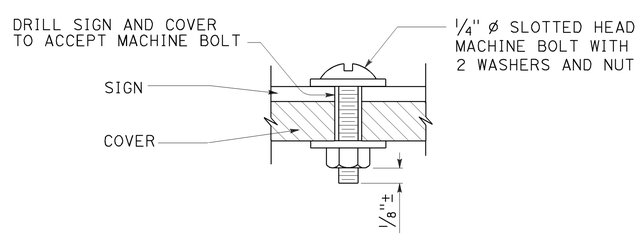

SECTION
VALVE BOX IDENTIFICATION

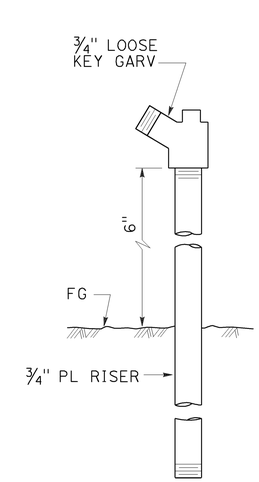

ELEVATION
GARDEN VALVE ASSEMBLY

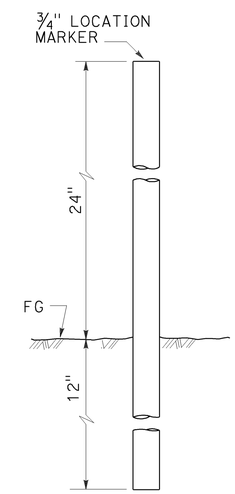

ELEVATION
LOCATION MARKER

GARDEN VALVE ASSEMBLY

STATE OF CALIFORNIA
DEPARTMENT OF TRANSPORTATION

LANDSCAPE DETAILS

NO SCALE

RSP H7 DATED JULY 19, 2013 SUPERSEDES STANDARD PLAN H7 DATED MAY 20, 2011 - PAGE 224 OF THE STANDARD PLANS BOOK DATED 2010.

REVISED STANDARD PLAN RSP H7

6-20-13

Dist	COUNTY	ROUTE	POST MILES TOTAL PROJECT	SHEET No.	TOTAL SHEETS
04	Ala	580	R31.7/R31.9	67	86

LICENSED LANDSCAPE ARCHITECT

July 19, 2013
PLANS APPROVAL DATE

THE STATE OF CALIFORNIA OR ITS OFFICERS OR AGENTS SHALL NOT BE RESPONSIBLE FOR THE ACCURACY OR COMPLETENESS OF SCANNED COPIES OF THIS PLAN SHEET.

LICENSED LANDSCAPE ARCHITECT — Gregory A. Balzer — 2516 — 2-28-15 Renewal Date — 7-19-13 Date — STATE OF CALIFORNIA

TO ACCOMPANY PLANS DATED 4-7-14

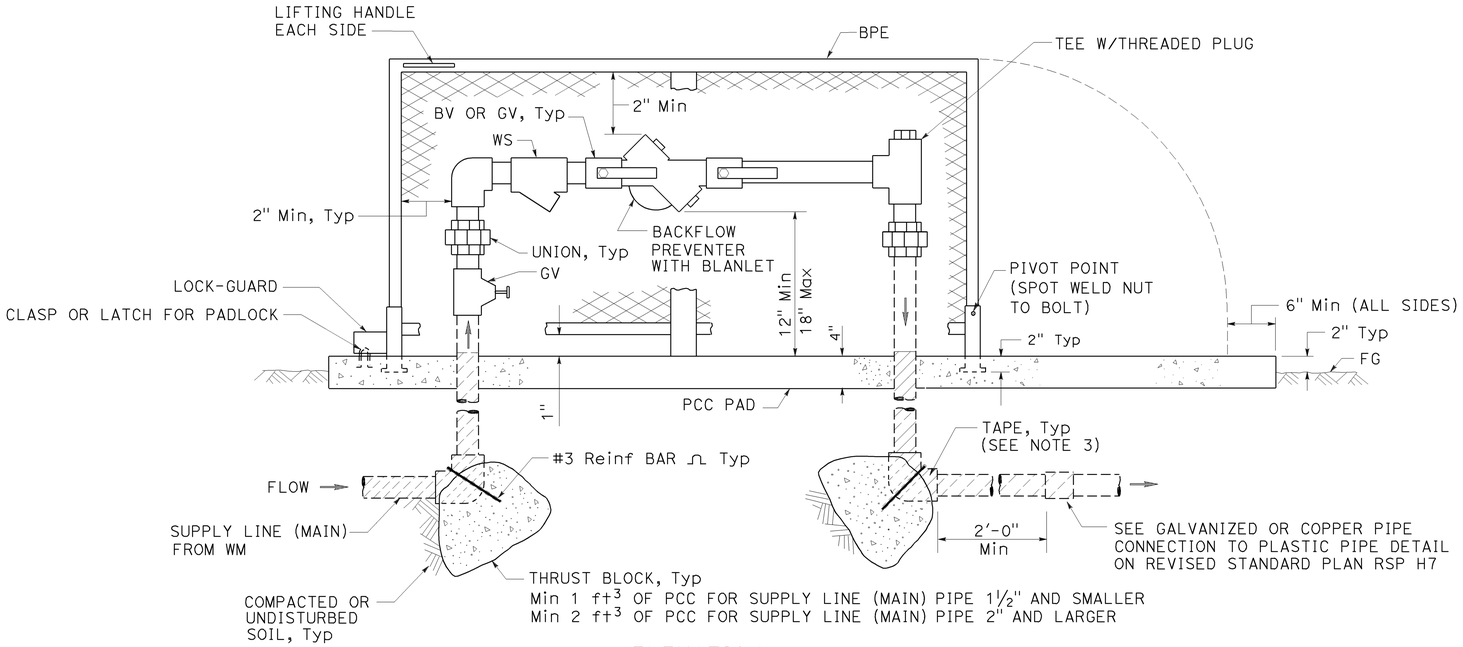

ELEVATION

BACKFLOW PREVENTER ASSEMBLY

IN ONE PIECE ENCLOSURE

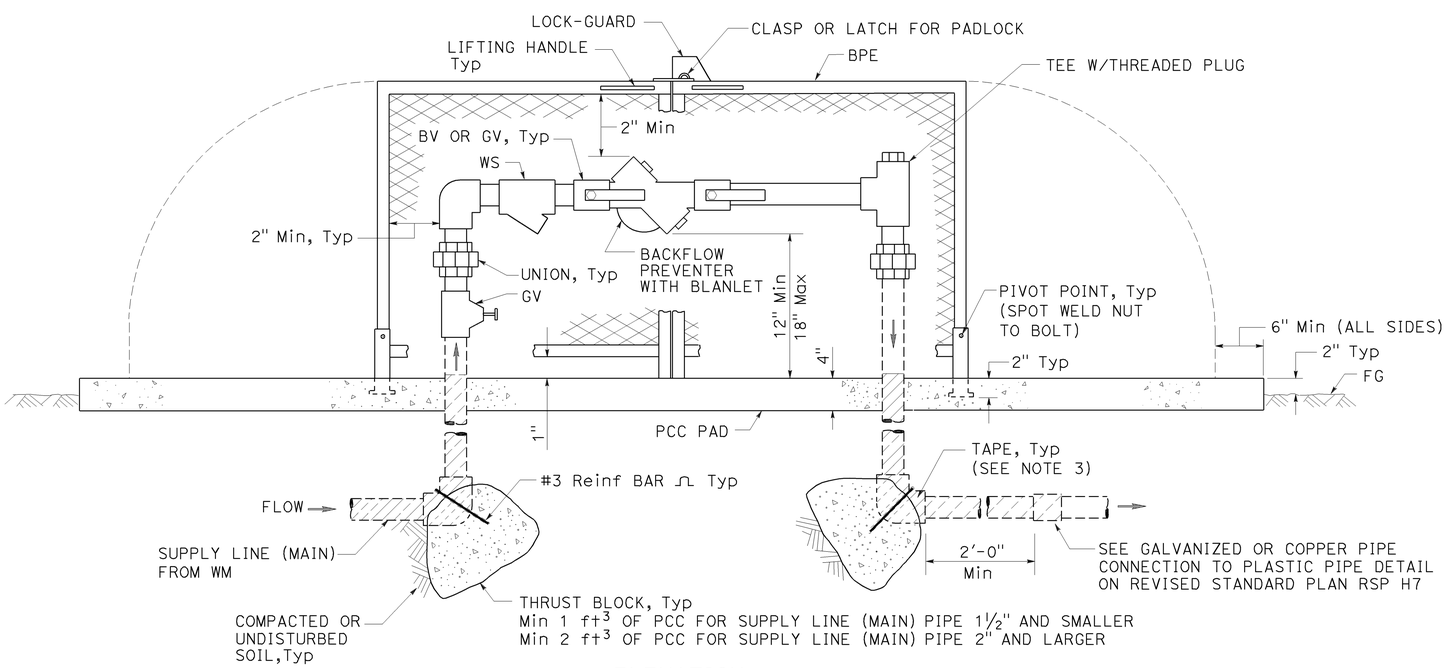

ELEVATION

BACKFLOW PREVENTER ASSEMBLY

IN TWO PIECE ENCLOSURE

NOTES:

1. Wye strainer and fittings must be the same size as the backflow preventer shown on the plans.
2. Backflow preventer assembly manifold pipe must be the same pipe as the supply line (main) pipe to be installed from the water meter to the backflow preventer assembly.
3. All metal in contact with soil and Portland Cement Concrete must be wrapped with 2" wide plastic backed adhesive polyethylene tape 20 mil thick with ½" overlap.

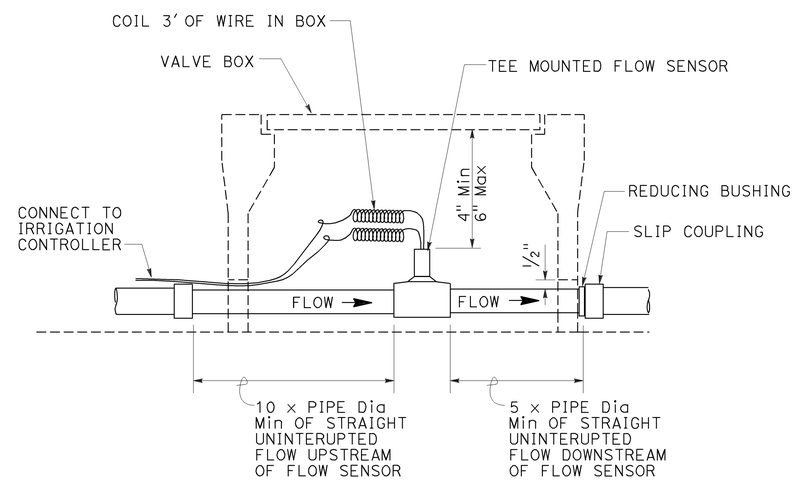

SECTION

FLOW SENSOR

STATE OF CALIFORNIA
DEPARTMENT OF TRANSPORTATION

LANDSCAPE DETAILS

NO SCALE

RSP H8 DATED JULY 19, 2013 SUPERSEDES STANDARD PLAN H8 DATED MAY 20, 2011 - PAGE 225 OF THE STANDARD PLANS BOOK DATED 2010.

REVISED STANDARD PLAN RSP H8

2010 REVISED STANDARD PLAN RSP H8

6-28-13

Dist	COUNTY	ROUTE	POST MILES TOTAL PROJECT	SHEET No.	TOTAL SHEETS
04	Ala	580	R31.7/R31.9	68	86

Gregory A. Balzer
LICENSED LANDSCAPE ARCHITECT

July 19, 2013
PLANS APPROVAL DATE

LICENSED LANDSCAPE ARCHITECT
Gregory A. Balzer 2576
Signature
2-28-15
Renewal Date
7-19-13
Date
STATE OF CALIFORNIA

THE STATE OF CALIFORNIA OR ITS OFFICERS OR AGENTS SHALL NOT BE RESPONSIBLE FOR THE ACCURACY OR COMPLETENESS OF SCANNED COPIES OF THIS PLAN SHEET.

TO ACCOMPANY PLANS DATED 4-7-14

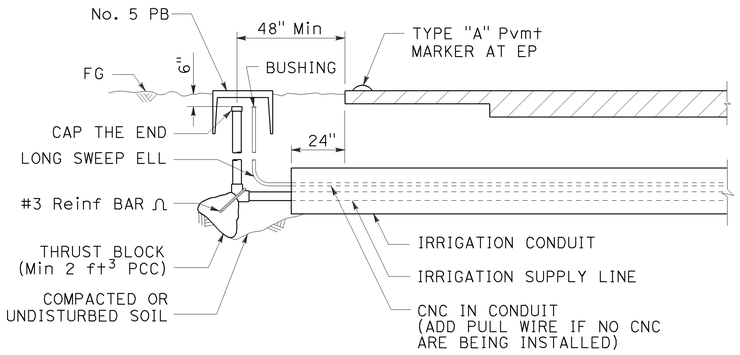

SECTION

IRRIGATION CONDUIT

UNDER TRAVELED WAY

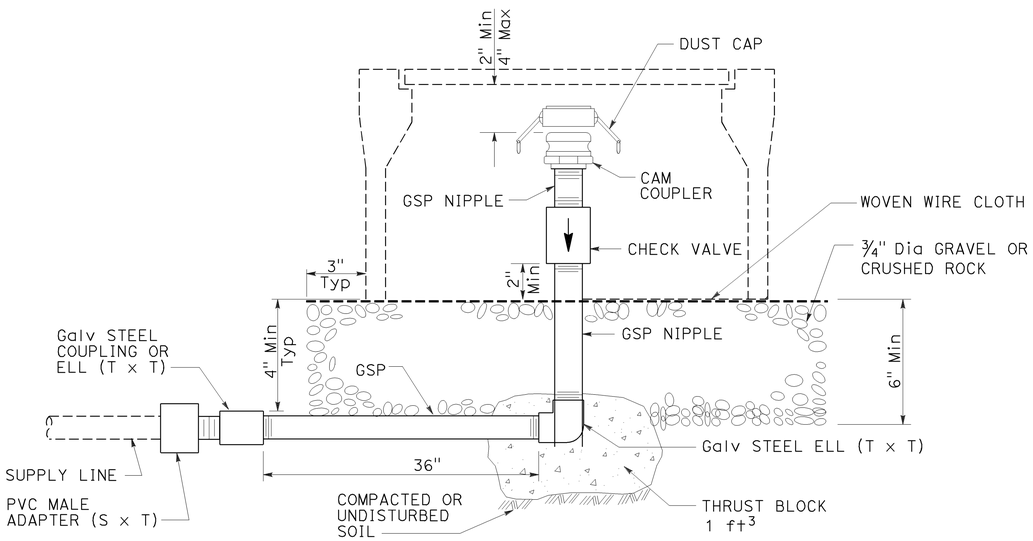

ELEVATION

CAM COUPLER ASSEMBLY

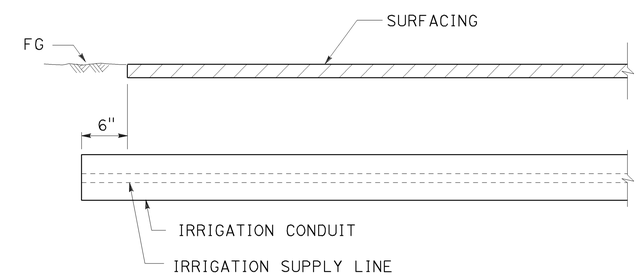

SECTION

IRRIGATION CONDUIT

UNDER SIDEWALKS, DRIVEWAYS AND PATHS

STATE OF CALIFORNIA
DEPARTMENT OF TRANSPORTATION

LANDSCAPE DETAILS

NO SCALE

RSP H9 DATED JULY 19, 2013 SUPERSEDES STANDARD PLAN H9
DATED MAY 20, 2011 - PAGE 226 OF THE STANDARD PLANS BOOK DATED 2010.

REVISED STANDARD PLAN RSP H9

2010 REVISED STANDARD PLAN RSP H9

6-28-13

Dist	COUNTY	ROUTE	POST MILES TOTAL PROJECT	SHEET No.	TOTAL SHEETS
04	Ala	580	R31.7/R31.9	69	86

Gregory A. Balzer
LICENSED LANDSCAPE ARCHITECT

July 19, 2013
PLANS APPROVAL DATE

LICENSED LANDSCAPE ARCHITECT
Gregory A. Balzer 2576
Expiration Date
2-28-15
Renewal Date
7-19-13
Date
STATE OF CALIFORNIA

THE STATE OF CALIFORNIA OR ITS OFFICERS OR AGENTS SHALL NOT BE RESPONSIBLE FOR THE ACCURACY OR COMPLETENESS OF SCANNED COPIES OF THIS PLAN SHEET.

TO ACCOMPANY PLANS DATED 4-7-14

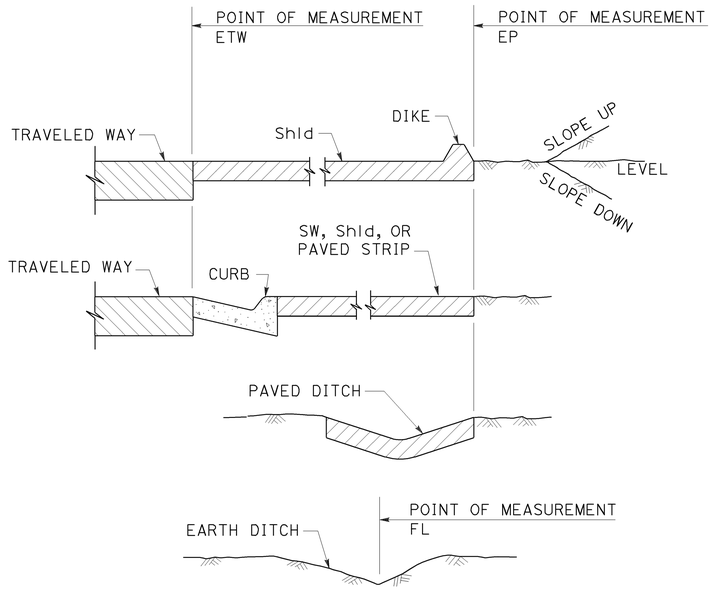

SECTION
POINTS OF MEASUREMENT

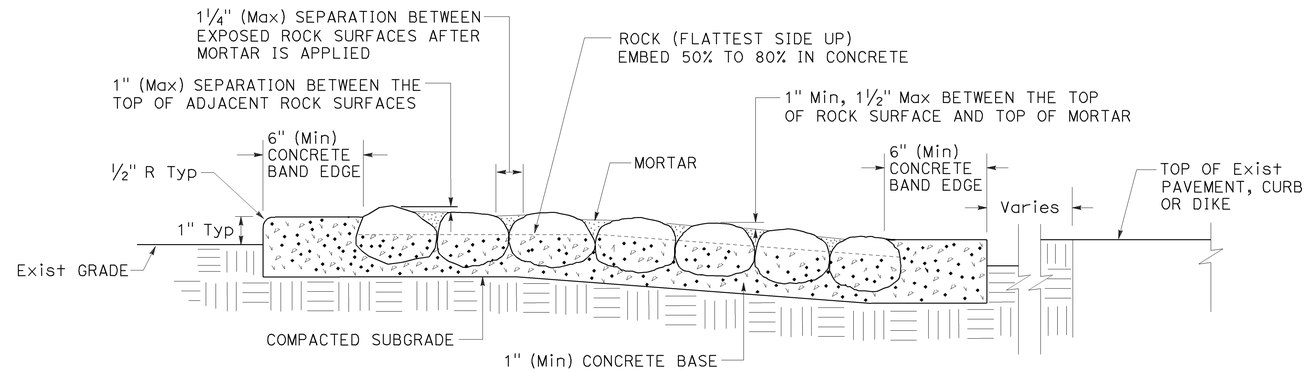

SECTION
ROCK BLANKET

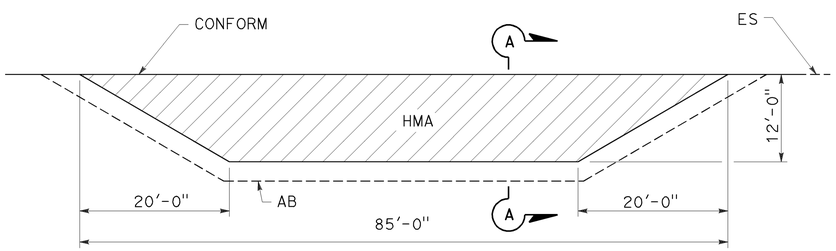

PLAN

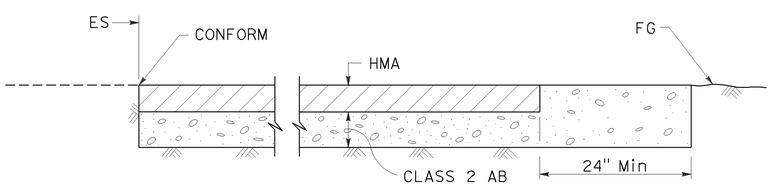

SECTION A-A
MAINTENANCE VEHICLE PULLOUT

STATE OF CALIFORNIA
DEPARTMENT OF TRANSPORTATION

LANDSCAPE DETAILS

NO SCALE

RSP H9A DATED JULY 19, 2013 SUPPLEMENTS THE STANDARD PLANS BOOK DATED 2010.

REVISED STANDARD PLAN RSP H9A

2010 REVISED STANDARD PLAN RSP H9A

6-21-13

Dist	COUNTY	ROUTE	POST MILES TOTAL PROJECT	SHEET No.	TOTAL SHEETS
04	Ala	580	R31.7/R31.9	70	86

REGISTERED CIVIL ENGINEER

July 19, 2013
PLANS APPROVAL DATE

REGISTERED PROFESSIONAL ENGINEER
Gurinderpal Bhullar
No. C48815
Exp. 9-30-14
CIVIL
STATE OF CALIFORNIA

THE STATE OF CALIFORNIA OR ITS OFFICERS OR AGENTS SHALL NOT BE RESPONSIBLE FOR THE ACCURACY OR COMPLETENESS OF SCANNED COPIES OF THIS PLAN SHEET.

TO ACCOMPANY PLANS DATED 4-7-14

2010 REVISED STANDARD PLAN RSP T9

TABLE 1

TAPER LENGTH CRITERIA AND CHANNELIZING DEVICE SPACING

SPEED (S)	MINIMUM TAPER LENGTH * FOR WIDTH OF OFFSET 12 FEET (W)				MAXIMUM CHANNELIZING DEVICE SPACING		
					X	Y	Z **
	TANGENT 2L	MERGING L	SHIFTING L/2	SHOULDER L/3	TAPER	TANGENT	CONFLICT
mph	ft	ft	ft	ft	ft	ft	ft
20	160	80	40	27	20	40	10
25	250	125	63	42	25	50	12
30	360	180	90	60	30	60	15
35	490	245	123	82	35	70	17
40	640	320	160	107	40	80	20
45	1080	540	270	180	45	90	22
50	1200	600	300	200	50	100	25
55	1320	660	330	220	55	110	27
60	1440	720	360	240	60	120	30
65	1560	780	390	260	65	130	32
70	1680	840	420	280	70	140	35

* - For other offsets, use the following merging taper length formula for L:
For speed of 40 mph or less, $L = WS^2/60$
For speed of 45 mph or more, $L = WS$

Where: L = Taper length in feet
W = Width of offset in feet
S = Posted speed limit, off-peak 85th-percentile speed prior to work starting, or the anticipated operating speed in mph

** - Use for taper and tangent sections where there are no pavement markings or where there is a conflict between existing pavement markings and channelizers (CA).

TABLE 2

LONGITUDINAL BUFFER SPACE AND FLAGGER STATION SPACING

SPEED *	Min D **	DOWNGRADE Min D ***		
		-3%	-6%	-9%
mph	ft	ft	ft	ft
20	115	116	120	126
25	155	158	165	173
30	200	205	215	227
35	250	257	271	287
40	305	315	333	354
45	360	378	400	427
50	425	446	474	507
55	495	520	553	593
60	570	598	638	686
65	645	682	728	785
70	730	771	825	891

* - Speed is posted speed limit, off-peak 85th-percentile speed prior to work starting, or the anticipated operating speed in mph

** - Longitudinal buffer space or flagger station spacing

*** - Use on sustained downgrade steeper than -3 percent and longer than 1 mile.

TABLE 3

ADVANCE WARNING SIGN SPACING

ROAD TYPE	DISTANCE BETWEEN SIGNS *		
	A	B	C
	ft	ft	ft
URBAN - 25 mph OR LESS	100	100	100
URBAN - MORE THAN 25 mph TO 40 mph	250	250	250
URBAN - MORE THAN 40 mph	350	350	350
RURAL	500	500	500
EXPRESSWAY / FREEWAY	1000	1500	2640

* - The distances are approximate, are intended for guidance purposes only, and should be applied with engineering judgment. These distances should be adjusted by the Engineer for field conditions, if necessary, by increasing or decreasing the recommmended distances.

STATE OF CALIFORNIA
DEPARTMENT OF TRANSPORTATION

TRAFFIC CONTROL SYSTEM TABLES FOR LANE AND RAMP CLOSURES

NO SCALE

RSP T9 DATED JULY 19, 2013 SUPERSEDES RSP T9 DATED APRIL 19, 2013 THAT SUPPLEMENTS THE STANDARD PLANS BOOK DATED 2010.

REVISED STANDARD PLAN RSP T9

TO ACCOMPANY PLANS DATED 4-7-14

Dist	COUNTY	ROUTE	POST MILES TOTAL PROJECT	SHEET No.	TOTAL SHEETS
04	Ala	580	R31.7/R31.9	71	86

REGISTERED CIVIL ENGINEER

April 19, 2013
PLANS APPROVAL DATE

REGISTERED PROFESSIONAL ENGINEER Gurinderpal Bhullar No. C48815 Exp. 9-30-14 CIVIL STATE OF CALIFORNIA

THE STATE OF CALIFORNIA OR ITS OFFICERS OR AGENTS SHALL NOT BE RESPONSIBLE FOR THE ACCURACY OR COMPLETENESS OF SCANNED COPIES OF THIS PLAN SHEET.

NOTES:

See Revised Standard Plan RSP T9 for tables.

Use cone spacing X for taper segment, Y for tangent segment or Z for conflict situations, as approriate, per Table 1, unless X, Y, or Z cone spacing is shown on this sheet.

Unless otherwise specified in the special provisions, all temporary warning signs shall have black legend on fluorescent orange background.

California codes are designated by (CA). Otherwise, Federal (MUTCD) codes are shown.

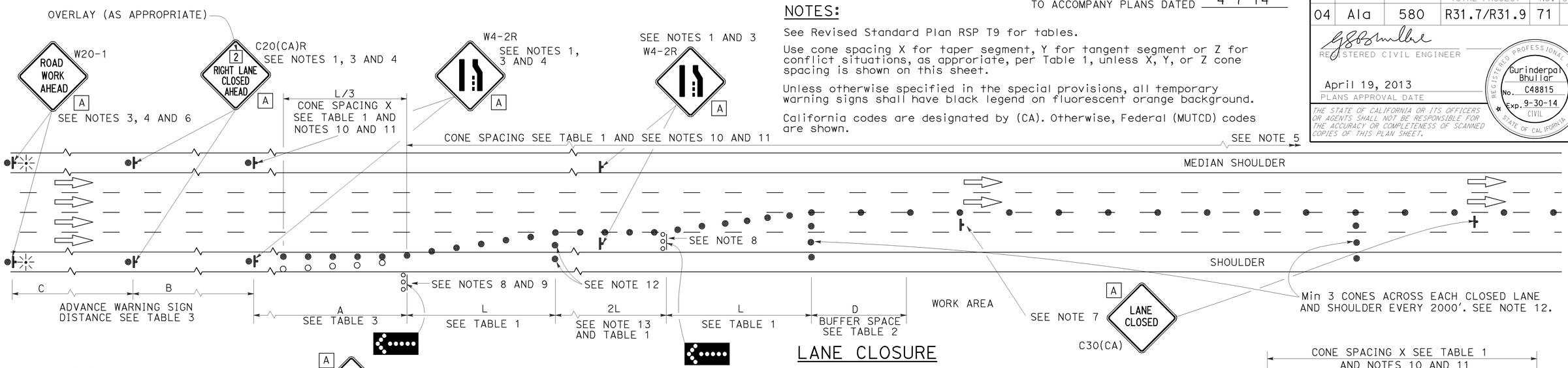

LANE CLOSURE

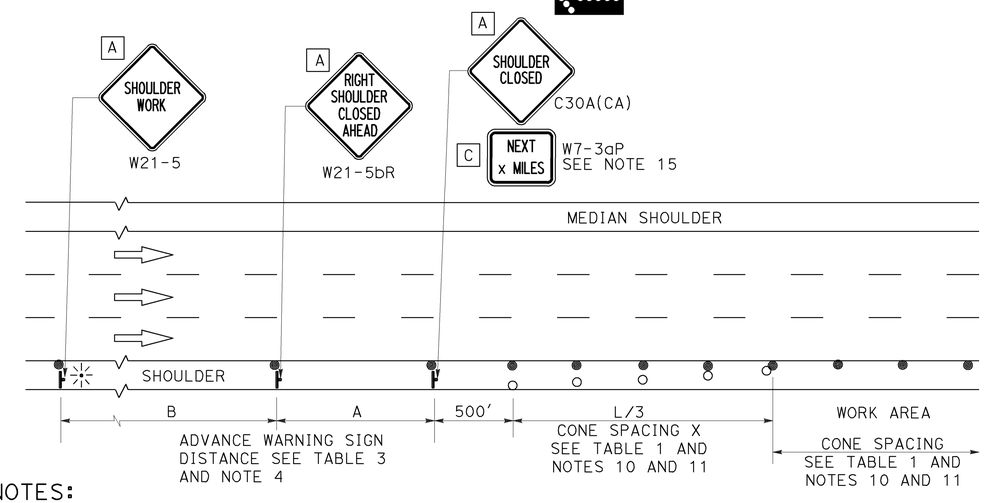

SHOULDER CLOSURE

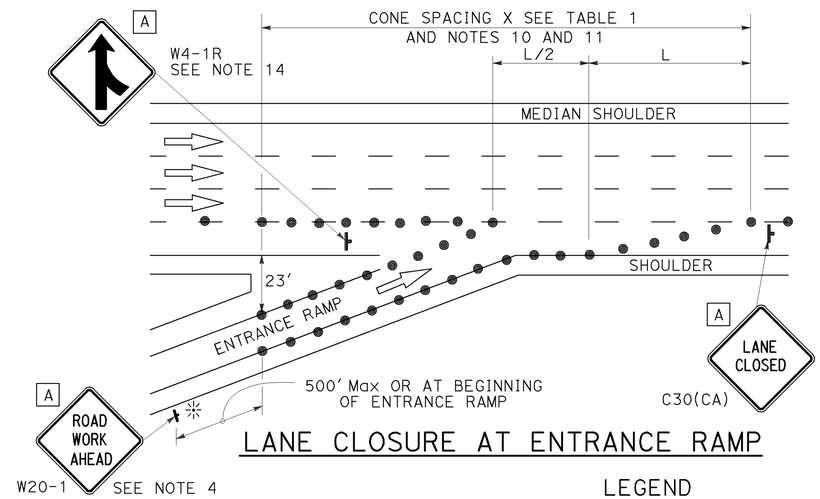

LANE CLOSURE AT ENTRANCE RAMP

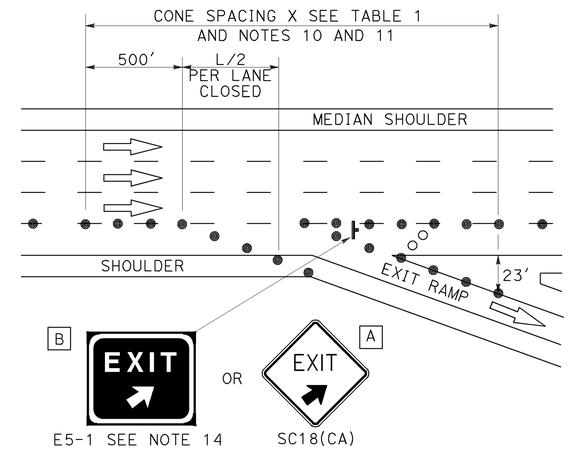

LANE CLOSURE AT EXIT RAMP

NOTES:

1. Median lane closures shall conform to the details as shown except that C20(CA)L and W4-2L signs shall be used.
2. At least one person shall be assigned to provide full time maintenance of traffic control devices for lane closures.
3. Duplicate sign installations are not required:
   a) On opposite shoulder if at least one-half of the available lanes remain open to traffic.
   b) In the median if the width of the median shoulder is less than 8' and the outside lanes are to be closed.
4. Each advance warning sign on each side of the roadway shall be equipped with at least two flags for daytime closure. Each flag shall be at least 16" x 16" in size and shall be orange or fluorescent red-orange in color. Flashing beacons shall be placed at the locations indicated for lane closure during hours of darkness.
5. A G20-2 "END ROAD WORK" sign, with minimum size of 48" x 24" as appropriate, shall be placed at the end of the lane closure unless the end of work area is obvious or ends within a larger project's limits.
6. If the W20-1 sign would follow within 2000' of a stationary W20-1 or G20-1 "ROAD WORK NEXT _____ MILES", use a C20(CA) sign for the first advance warning sign.
7. Place a C30(CA) sign every 2000' throughout length of lane closure.
8. One flashing arrow sign for each lane closed. The flashing arrow signs shall be Type I.
9. A minimum 1500' of sight distance shall be provided where possible for vehicles approaching the first flashing arrow sign. Lane closures shall not begin at top of crest vertical curve or on a horizontal curve.
10. All cones used for lane closures during the hours of darkness shall be fitted with retroreflective bands (or sleeves) as specified in the specifications.
11. Portable delineators, placed at one-half the spacing indicated for traffic cones may be used instead of cones for daytime closures only.
12. Unless otherwise specified in the special provisions, a minimum of 3 cones shall be placed transversely across each closed lane and shoulder at each location where a taper across a traffic lane ends and every 2000' as shown on the "Lane Closure" detail. Two Type II barricades may be used instead of the 3 cones. The transverse alignment of the cones or barricades on the closed shoulder may be shifted from the transverse alignment to provide access to the work.
13. Unless otherwise specified in the special provisions, the 2L tangent shown along lane lines shall be used between the L tapers required for each closed traffic lane.
14. Unless otherwise specified in the special provisions, the E5-1 or SC18(CA) and W4-1 signs shall be used as shown.
15. A W7-3aP "NEXT____ MILES" plaque must be used if theshoulder closure extends beyond the distance that can be perceived by road users.

LEGEND

- TRAFFIC CONE
- TRAFFIC CONE (OPTIONAL TAPER)
- TEMPORARY TRAFFIC CONTROL SIGN
- FLASHING ARROW SIGN (FAS)
- FAS SUPPORT OR TRAILER
- PORTABLE FLASHING BEACON

SIGN PANEL SIZE (Min)

A	48" x 48"
B	72" x 60"
C	36" x 30"

STATE OF CALIFORNIA
DEPARTMENT OF TRANSPORTATION

TRAFFIC CONTROL SYSTEM FOR LANE CLOSURE ON FREEWAYS AND EXPRESSWAYS

NO SCALE

RSP T10 DATED APRIL 19, 2013 SUPERSEDES STANDARD PLAN T10 DATED MAY 20, 2011 - PAGE 237 OF THE STANDARD PLANS BOOK DATED 2010.

REVISED STANDARD PLAN RSP T10

2010 REVISED STANDARD PLAN RSP T10

12-18-12

Dist	COUNTY	ROUTE	POST MILES TOTAL PROJECT	SHEET No.	TOTAL SHEETS
04	Ala	580	R31.7/R31.9	72	86

REGISTERED CIVIL ENGINEER

April 19, 2013
PLANS APPROVAL DATE

REGISTERED PROFESSIONAL ENGINEER Gurinderpal Bhullar No. C48815 Exp. 9-30-14 CIVIL STATE OF CALIFORNIA

THE STATE OF CALIFORNIA OR ITS OFFICERS OR AGENTS SHALL NOT BE RESPONSIBLE FOR THE ACCURACY OR COMPLETENESS OF SCANNED COPIES OF THIS PLAN SHEET.

TO ACCOMPANY PLANS DATED 4-7-14

TYPICAL RAMP CLOSURES

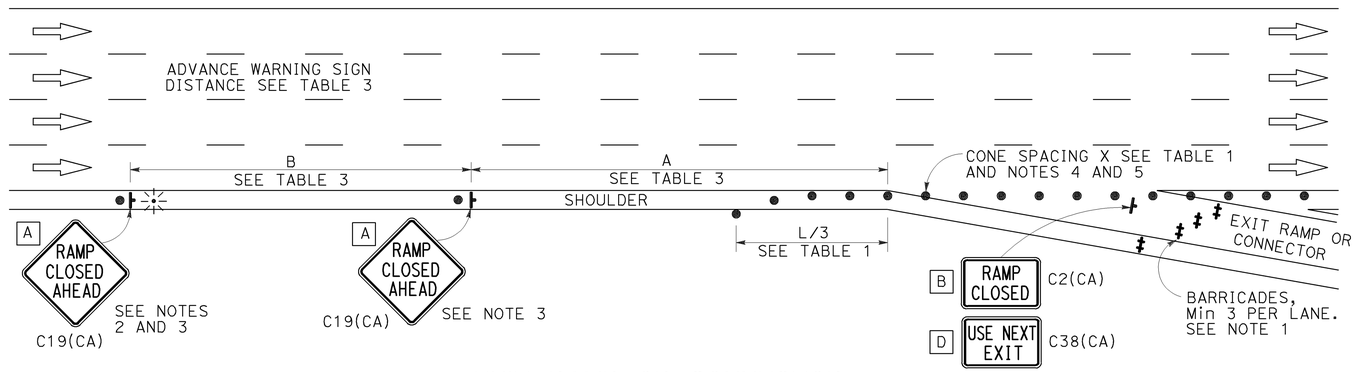

EXIT RAMP OR CONNECTOR

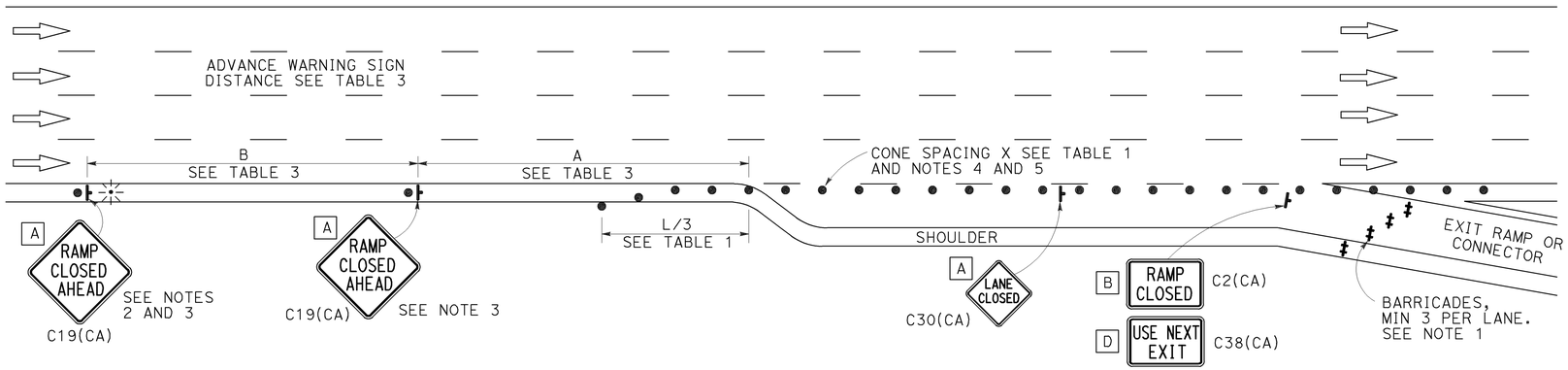

EXIT RAMP OR CONNECTOR WITH ADDITIONAL LANE

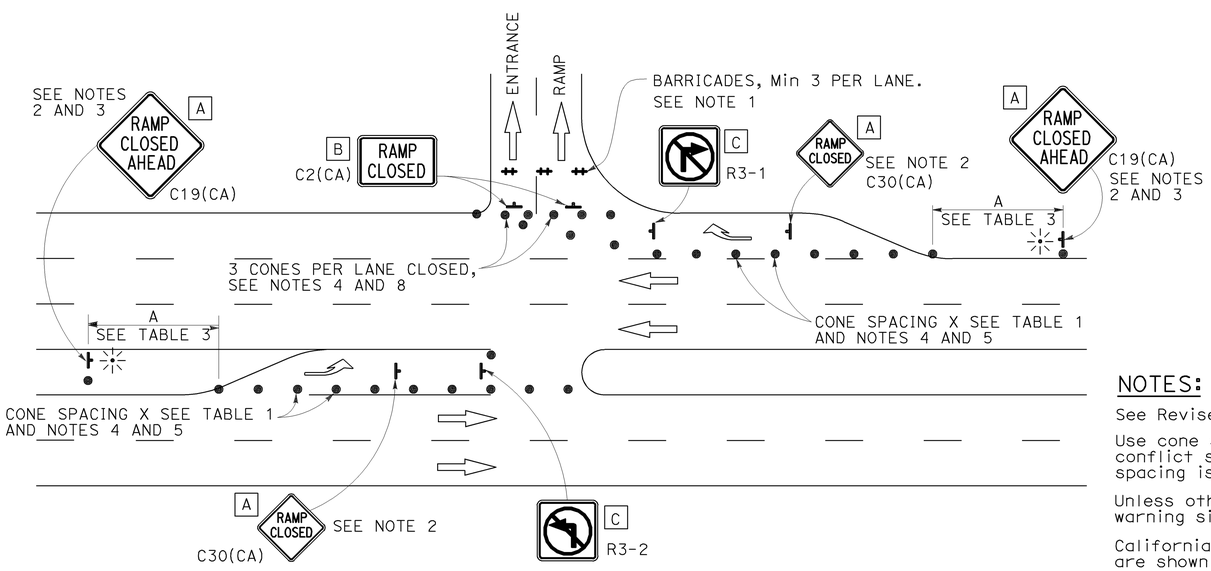

ENTRANCE RAMP WITH TURNING POCKETS

SIGN PANEL SIZE (Min)

- A 48" × 48"
- B 48" × 30"
- C 36" × 36"
- D 48" × 36"

LEGEND

- TRAFFIC CONE
- TEMPORARY TRAFFIC CONTROL SIGN
- BARRICADES
- PORTABLE FLASHING BEACON

NOTES:

1. Barricades shall be Type I, II, or III for closures lasting one week or less and Type III for closures lasting longer than one week.
2. In addition to placing the C19(CA) "RAMP CLOSED AHEAD" and C30(CA) "RAMP CLOSED" signs, black on orange overlay plates with the word "CLOSED" may be mounted, as directed by the Engineer, on all guide signs that refer to the closed ramp. The letter size on the overlay shall be the same as the guide sign.
3. Each advance C19(CA) "RAMP CLOSED AHEAD" sign shall be equipped with at least two flags for daytime closure. Each flag shall be at least 16" × 16" in size and shall be orange or fluorescent red-orange in color. A flashing beacon shall be placed on top of the first C19(CA) sign during hours of darkness.
4. All cones used for ramp closures during the hours of darkness shall be fitted with retroreflective bands (or sleeves) as specified in the specifications.
5. Portable delineators, placed at one-half the spacing indicated for traffic cones, may be used instead of cones for daytime ramp closures only.
6. At least one person shall be assigned to provide full time maintenance of traffic control devices, unless otherwise directed by the Engineer.
7. The existing "EXIT" signs shall be covered during ramp closures.
8. A minimum of 3 cones shall be placed transversely across each closed lane and shoulder.

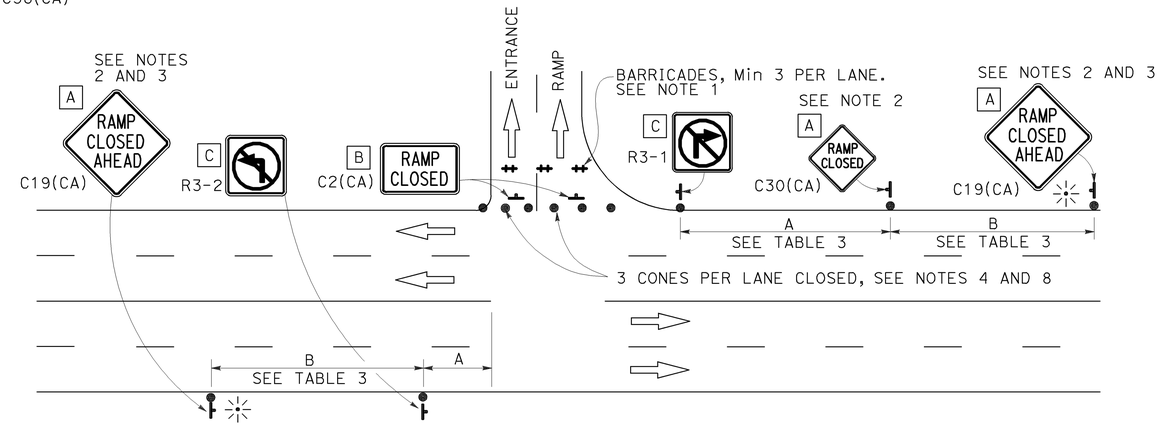

ENTRANCE RAMP WITHOUT TURNING POCKETS

NOTES:

See Revised Standard Plan RSP T9 for tables.

Use cone spacing X for taper segment, Y for tangent segment or Z for conflict situations, as approriate, per Table 1, unless X, Y, or Z cone spacing is shown on this sheet.

Unless otherwise specified in the special provisions, all temporary warning signs shall have black legend on fluorescent orange background.

California codes are designated by (CA). Otherwise, Federal (MUTCD) codes are shown.

STATE OF CALIFORNIA
DEPARTMENT OF TRANSPORTATION

TRAFFIC CONTROL SYSTEM FOR RAMP CLOSURE

NO SCALE

RSP T14 DATED APRIL 19, 2013 SUPERSEDES STANDARD PLAN T14
DATED MAY 20, 2011 - PAGE 242 OF THE STANDARD PLANS BOOK DATED 2010.

REVISED STANDARD PLAN RSP T14

2010 REVISED STANDARD PLAN RSP T14

12-18-12

Dist	COUNTY	ROUTE	POST MILES TOTAL PROJECT	SHEET No.	TOTAL SHEETS
04	Ala	580	R31.7/R31.9	73	86

REGISTERED CIVIL ENGINEER

November 15, 2013
PLANS APPROVAL DATE

REGISTERED PROFESSIONAL ENGINEER
Tillat Satter
No. C42892
Exp. 3-31-14
CIVIL
STATE OF CALIFORNIA

THE STATE OF CALIFORNIA OR ITS OFFICERS OR AGENTS SHALL NOT BE RESPONSIBLE FOR THE ACCURACY OR COMPLETENESS OF SCANNED COPIES OF THIS PLAN SHEET.

TO ACCOMPANY PLANS DATED 4-7-14

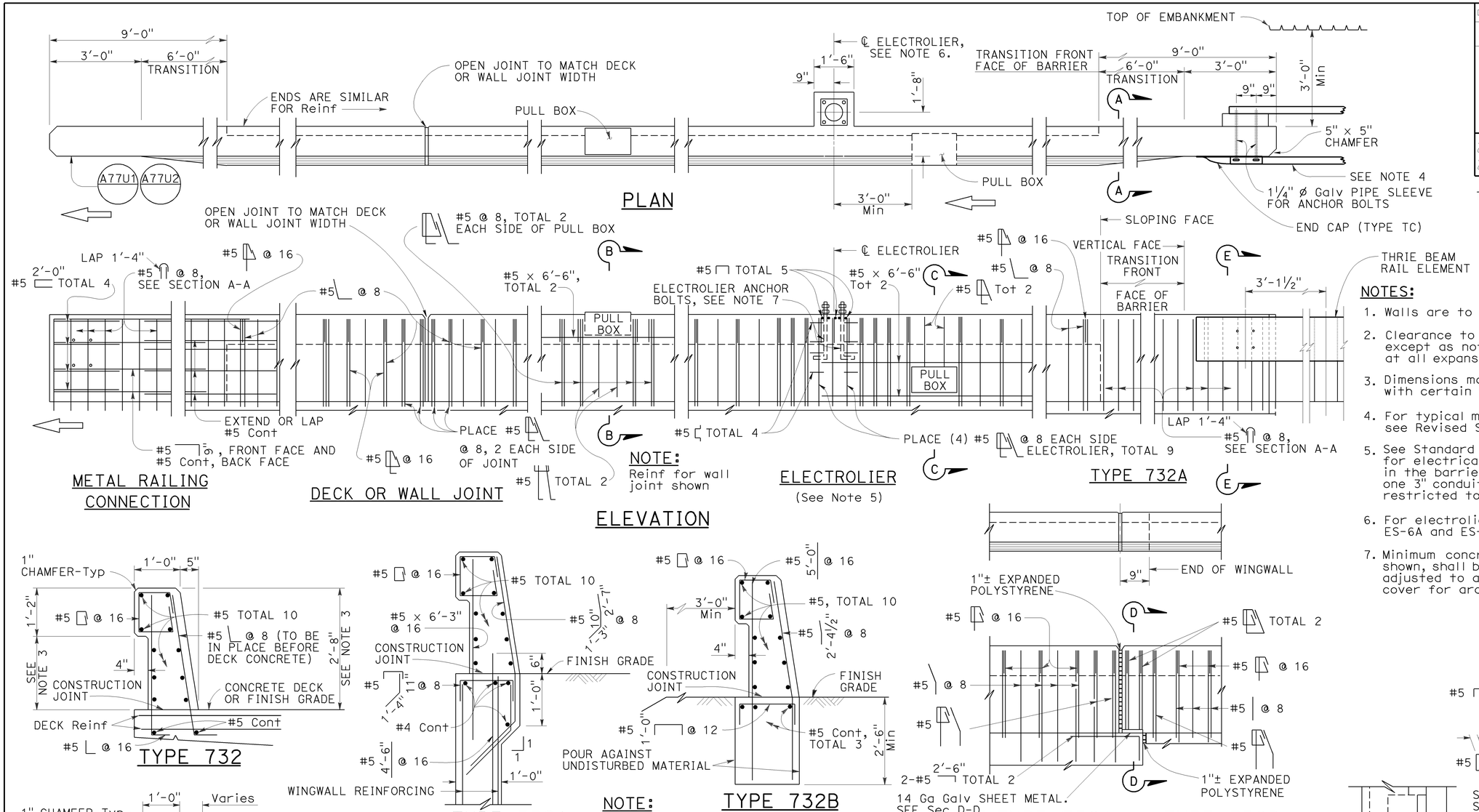

NOTES:

1. Walls are to be backfilled before barrier is placed.
2. Clearance to reinforcing steel in barrier to be 1", except as noted. Longitudinal reinforcement to stop at all expansion joints.
3. Dimensions may vary with roadway cross slope and with certain thickness of surfacing. See Project Plans.
4. For typical metal railing connection details not shown, see Revised Standard Plans RSP A77U1 and RSP A77U2.
5. See Standard Plans ES-9A, ES-9B, ES-9C, ES-9D and ES-9E for electrical details. The maximum number of conduits in the barrier is limited to two 2" conduits along with one 3" conduit. When a 3" conduit is used, it is restricted to the base of the barrier.
6. For electrolier mounting details, See Standard Plans ES-6A and ES-6B.
7. Minimum concrete edge distance, to the reinforcing shown, shall be maintained. Edge distance may be adjusted to accommodate increase in concrete cover for architectual treatment.

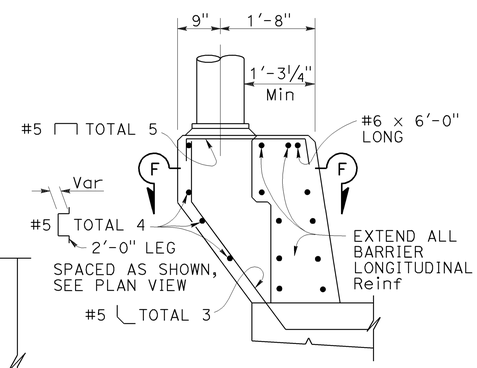

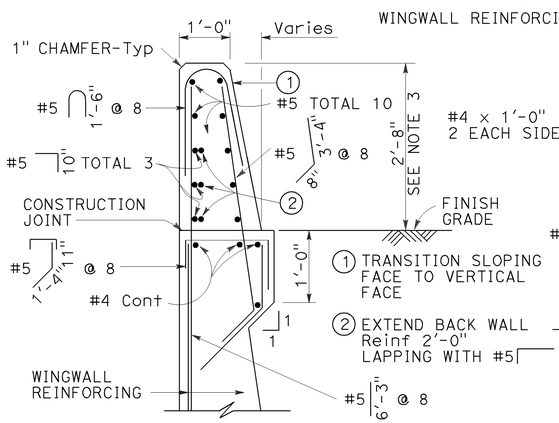

Details shown for barrier anchorage to Type 732A. Anchorage for barrier Types 732 and 732A are similar to their respective details.

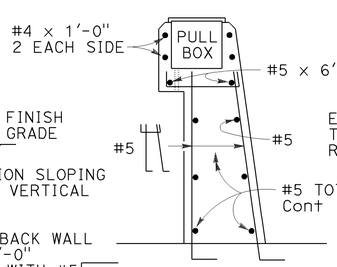

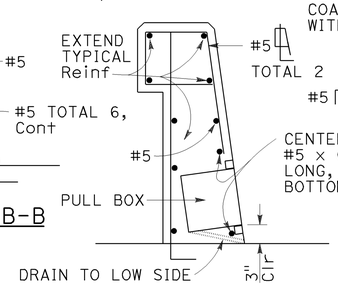

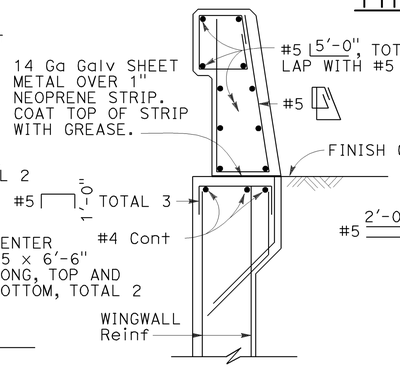

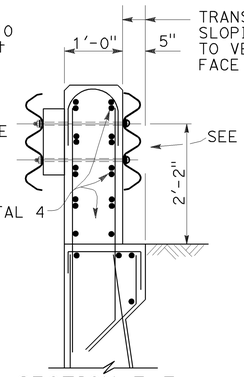

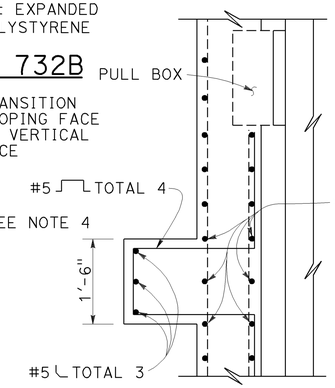

STATE OF CALIFORNIA
DEPARTMENT OF TRANSPORTATION

CONCRETE BARRIER TYPE 732

NO SCALE

RSP B11-55 DATED NOVEMBER 15, 2013 SUPERSEDES
RSP B11-55 DATED JULY 19, 2013 AND STANDARD PLAN B11-55
DATED MAY 20, 2011 - PAGE 297 OF THE STANDARD PLANS BOOK DATED 2010.

REVISED STANDARD PLAN RSP B11-55

2010 REVISED STANDARD PLAN RSP B11-55

10-4-13

Dist	COUNTY	ROUTE	POST MILES TOTAL PROJECT	SHEET No.	TOTAL SHEETS
04	Ala	580	R31.7/R31.9	74	86

Theresa Gabriel
REGISTERED ELECTRICAL ENGINEER

July 19, 2013
PLANS APPROVAL DATE

REGISTERED PROFESSIONAL ENGINEER Theresa Aziz Gabriel No. E15129 Exp. 6-30-14 ELECTRICAL STATE OF CALIFORNIA

THE STATE OF CALIFORNIA OR ITS OFFICERS OR AGENTS SHALL NOT BE RESPONSIBLE FOR THE ACCURACY OR COMPLETENESS OF SCANNED COPIES OF THIS PLAN SHEET.

TO ACCOMPANY PLANS DATED 4-7-14

LEGEND:

AB	ABANDON. IF APPLIED TO CONDUIT, REMOVE CONDUCTORS
BC	INSTALL PULL BOX IN EXISTING CONDUIT RUN
BP	PEDESTRIAN BARRICADE, TYPE AS INDICATED ON PLAN
CB	INSTALL CONDUIT INTO EXISTING PULL BOX
CC	CONNECT NEW AND EXISTING CONDUIT. REMOVE EXISTING CONDUCTORS AND INSTALL CONDUCTORS AS INDICATED
CF	CONDUIT TO REMAIN FOR FUTURE USE. REMOVE CONDUCTORS. INSTALL PULL TAPE
DH	DETECTOR HANDHOLE
FA	FOUNDATION TO BE ABANDONED
IS	INSTALL SIGN ON SIGNAL MAST ARM
NS	NO SLIP BASE ON STANDARD
PEC	PHOTOELECTRIC CONTROL
PEU	PHOTOELECTRIC UNIT
RC	EQUIPMENT OR MATERIAL TO BE REMOVED AND BECOME THE PROPERTY OF THE CONTRACTOR
RE	REMOVE ELECTROLIER, FUSES AND BALLAST. TAPE ENDS OF CONDUCTORS
RL	RELOCATE EQUIPMENT
RR	REMOVE AND REUSE EQUIPMENT
RS	REMOVE AND SALVAGE EQUIPMENT
SC	SPLICE NEW TO EXISTING CONDUCTORS
SD	SERVICE DISCONNECT
TSP	TELEPHONE SERVICE POINT

ABBREVIATIONS

APS	ACCESSIBLE PEDESTRIAN SIGNAL
BBS	BATTERY BACKUP SYSTEM
BC	BOLT CIRCLE
BPB	BICYCLE PUSH BUTTON
C	CONDUIT
CB	CIRCUIT BREAKER
CCTV	CLOSED CIRCUIT TELEVISION
Ckt	CIRCUIT
CMS	CHANGEABLE MESSAGE SIGN
Ctid	CALTRANS IDENTIFICATION
Comm	COMMUNICATION
DLC	LOOP DETECTOR LEAD-IN CABLE
EMS	EXTINGUISHABLE MESSAGE SIGN
EVUC	EMERGENCY VEHICLE UNIT CABLE
EVUD	EMERGENCY VEHICLE UNIT DETECTOR
FB	FLASHING BEACON
FBCA	FLASHING BEACON CONTROL ASSEMBLY
FBS	FLASHING BEACON WITH SLIP BASE
FO	FIBER OPTIC
G	EQUIPMENT GROUNDING CONDUCTOR
GB	GROUND BUS
GFCI	GROUND FAULT CIRCUIT INTERRUPTER
HAR	HIGHWAY ADVISORY RADIO
Hex	HEXAGONAL
HPS	HIGH PRESSURE SODIUM
IISNS	INTERNALLY ILLUMINATED STREET NAME SIGN
ISL	INDUCTION SIGN LIGHTING
LED	LIGHT EMITTING DIODE
LMA	LUMINAIRE MAST ARM
LPS	LOW PRESSURE SODIUM
Ltg	LIGHTING
Lum	LUMINAIRE
M	METERED
MAT	MAST ARM MOUNTING TOP ATTACHMENT
MAS	MAST ARM MOUNTING SIDE ATTACHMENT
M/M	MULTIPLE TO MULTIPLE TRANSFORMER
Mtg	MOUNTING
MV	MERCURY VAPOR LIGHTING FIXTURE
MVDS	MICROWAVE VEHICLE DETECTION SYSTEM
N	NEUTRAL (GROUNDED CONDUCTOR)
NB	NEUTRAL BUS
NC	NORMALLY CLOSE
NO	NORMALLY OPEN
P	CIRCUIT BREAKER'S POLE
PB	PULL BOX
PBA	PUSH BUTTON ASSEMBLY
PEC	PHOTOELECTRIC CONTROL
Ped	PEDESTRIAN
PEU	PHOTOELECTRIC UNIT
PT	CONDUIT WITH PULL TAPE
RE	RELOCATED EQUIPMENT
RM	RAMP METERING
RWIS	ROADSIDE WEATHER INFORMATION SYSTEM
SB	SLIP BASE
SIC	SIGNAL INTERCONNECT CABLE
Sig	SIGNAL
SMA	SIGNAL MAST ARM
SNS	STREET NAME SIGN
SP	SERVICE POINT
TDC	TELEPHONE DEMARCATION CABINET
TMS	TRAFFIC MONITORING STATION
TOS	TRAFFIC OPERATIONS SYSTEM
Veh	VEHICLE
VIVDS	VIDEO IMAGE VEHICLE DETECTION SYSTEM
WIM	WEIGH-IN-MOTION
Xfmr	TRANSFORMER

SOFFIT AND WALL MOUNTED LUMINAIRES

PENDANT, 70 W HPS UNLESS OTHERWISE SPECIFIED

FLUSH, 70 W HPS UNLESS OTHERWISE SPECIFIED

WALL SURFACE, 70 W HPS UNLESS OTHERWISE SPECIFIED

EXISTING SOFFIT OR WALL LUMINAIRE TO REMAIN UNMODIFIED

EXISTING SOFFIT OR WALL LUMINAIRE TO BE MODIFIED AS SPECIFIED

NOTE:

Arrow indicates "street side" of luminaire.

COMMONLY USED SYMBOLS FOR UNITED STATES CUSTOMARY UNITS OF MEASUREMENT:

SYMBOL USED	DEFINITIONS
Ω	OHMS
min	MINUTE
s	SECOND
bps	BITS PER SECOND
Bps	BYTES PER SECOND
A	AMPERE
V	VOLT
V(dc)	VOLT (DIRECT CURRENT)
V(ac)	VOLT (ALTERNATING CURRENT)
FC	FOOT - CANDLE
W	WATTS
VA	VOLT-AMPERE
M	MEGA
k	KILO
m	MILLI
μ	MICRO
P	PICO
Hz	HERTZ

MISCELLANEOUS ELECTROLIERS

NEW	EXISTING	
		LUMINAIRE ON WOOD POLE
		NON-STANDARD ELECTROLIER (SEE PROJECT NOTES OR PROJECT PLANS)
		CITY ELECTROLIER
		ELECTROLIER FOUNDATION (FUTURE INSTALLATION)

NOTES:

1. HPS luminaires shall be 310 W HPS when installed on Type 21, 21D, 30, 31 and 32 Standards, unless otherwise specified. HPS luminaires shall be 200 W when installed on other type standards or poles, unless otherwise specified.
2. LED luminaires shall be 235 W when installed on Type 21, 21D, 30, 31 and 32 Standards, unless otherwise specified. LED luminaires shall be 165 W when installed on other type standards or poles, unless otherwise specified.
3. Luminaires shall be the cutoff type, ANSI Type III medium cutoff lighting distribution, unless otherwise specified.

STANDARD ELECTROLIER

NEW	EXISTING	STANDARD TYPE
		15
		15D
		15 STRUCTURE
		15D STRUCTURE
		21
		21D
		21 STRUCTURE
		21D STRUCTURE
		30
		31
		32

STATE OF CALIFORNIA
DEPARTMENT OF TRANSPORTATION

ELECTRICAL SYSTEMS (LEGEND AND ABBREVIATIONS)

NO SCALE

RSP ES-1A DATED JULY 19, 2013 SUPERSEDES STANDARD PLAN ES-1A DATED MAY 20, 2011 - PAGE 425 OF THE STANDARD PLANS BOOK DATED 2010.

REVISED STANDARD PLAN RSP ES-1A

2010 REVISED STANDARD PLAN RSP ES-1A

Dist	COUNTY	ROUTE	POST MILES TOTAL PROJECT	SHEET No.	TOTAL SHEETS
04	Ala	580	R31.7/R31.9	75	86

Theresa Gabriel
REGISTERED ELECTRICAL ENGINEER

July 19, 2013
PLANS APPROVAL DATE

REGISTERED PROFESSIONAL ENGINEER
Theresa Aziz Gabriel
No. E15129
Exp. 6-30-14
ELECTRICAL
STATE OF CALIFORNIA

THE STATE OF CALIFORNIA OR ITS OFFICERS OR AGENTS SHALL NOT BE RESPONSIBLE FOR THE ACCURACY OR COMPLETENESS OF SCANNED COPIES OF THIS PLAN SHEET.

TO ACCOMPANY PLANS DATED 4-7-14

CONDUIT

NEW	EXISTING	
		LIGHTING CONDUIT, UNLESS OTHERWISE INDICATED OR NOTED
		TRAFFIC SIGNAL CONDUIT
C	c	COMMUNICATION CONDUIT
T	t	TELEPHONE CONDUIT
F	f	FIRE ALARM CONDUIT
FO	fo	FIBER OPTIC CONDUIT
		CONDUIT TERMINATION
R	r	CONDUIT RISER ATTACHED TO THE STRUCTURE OR SERVICE POLE

SERVICE EQUIPMENT

NEW	EXISTING	
OH	oh	OVERHEAD LINES
U	U	WOOD POLE, "U" INDICATES UTILITY OWNED
		POLE GUY WITH ANCHOR
		UTILITY TRANSFORMER - GROUND MOUNTED
III	III	SERVICE EQUIPMENT ENCLOSURE TYPE. DOOR INDICATES FRONT OF ENCLOSURE
T	t	TELEPHONE DEMARCATION CABINET

POLE-MOUNTED SERVICE DESIGNATION

TYPE H SERVICE, 28'-10" — TYPE OF INSTALLATION AND POLE HEIGHT ABOVE GRADE

FLASHING BEACON

NEW	EXISTING	
R	R	FLASHING BEACON (ONE VEHICLE SIGNAL HEAD WITH BACKPLATE AND VISOR) "R" INDICATES RED INDICATION, "Y" INDICATES YELLOW INDICATION
Y Y	Y Y	FLASHING BEACON WITH TYPE 15-FBS STANDARD AND A SIGN.
R R	R R	FLASHING BEACON WITH TYPES 9, 9A OR 9B SIGN UNLESS OTHERWISE SPECIFIED OR INDICATED

SIGNAL EQUIPMENT

NEW	EXISTING	
C	C	PEDESTRIAN SIGNAL HEAD "C" INDICATES COUNTDOWN PEDESTRIAN HEAD
		PUSH BUTTON ASSEMBLY POST
		PEDESTRIAN BARRICADE
		VEHICLE SIGNAL HEAD (WITH BACKPLATE AND 3-SECTIONS: RED, YELLOW AND GREEN)
		VEHICLE SIGNAL HEAD WITH ANGLE VISOR
PV	PV	MODIFICATIONS OF BASIC SYMBOL: "L" INDICATES ALL NON-ARROW SECTIONS LOUVERED "LG" INDICATES LOUVERED GREEN SECTION ONLY "PV" INDICATES ALL 12" SECTIONS PROGRAMMED VISIBILITY "8" INDICATES ALL 8" SECTIONS (ONLY WHEN SPECIFIED)
		VEHICLE SIGNAL HEAD CONSISTING OF RED, YELLOW AND GREEN LEFT ARROW SECTIONS
		VEHICLE SIGNAL HEAD CONSISTING OF RED AND YELLOW SECTIONS WITH AN UP GREEN ARROW SECTION
		VEHICLE SIGNAL HEAD (5 SECTION) CONSISTING OF RED, YELLOW AND GREEN SECTIONS WITH YELLOW AND GREEN RIGHT ARROW SECTIONS
		TYPE 15TS STANDARD WITH VEHICLE SIGNAL HEAD AND LUMINAIRE
		TYPE 21TS STANDARD WITH VEHICLE SIGNAL HEAD AND LUMINAIRE
		STANDARD WITH LUMINAIRE AND SIGNAL MAST ARMS AND ATTACHED VEHICLE SIGNAL HEADS
		TYPE 1 STANDARD WITH ATTACHED VEHICLE SIGNAL HEADS
		STANDARD WITH A SIGNAL MAST ARM, ATTACHED VEHICLE SIGNAL HEADS AND INTERNALLY ILLUMINATED STREET NAME SIGN
		CONTROLLER ASSEMBLY. DOOR INDICATES FRONT OF CABINET

SIGNAL EQUIPMENT Cont

NEW	EXISTING	
		GUARD POST
		TYPE 1 STANDARD WITH RAMP METERING SIGN
		OPTICAL DETECTOR FOR THE EMERGENCY VEHICLE DETECTION SYSTEM

NOTES:

1. All signal sections shall be 12" unless shown otherwise.
2. Signal heads shall be provided with backplates unless shown otherwise.

ILLUMINATED OVERHEAD SIGN

NEW	EXISTING	
		SINGLE POST, SINGLE ILLUMINATED SIGN, BALANCED BUTTERFLY
		SINGLE POST, DOUBLE ILLUMINATED SIGN, BALANCED BUTTERFLY
		SINGLE POST, SINGLE ILLUMINATED SIGN, FULL CANTILEVER
		DOUBLE POST, SINGLE ILLUMINATED SIGN
		SINGLE ILLUMINATED SIGN MOUNTED ON STRUCTURE
		DOUBLE POST, SINGLE ILLUMINATED SIGN WITH ELECTROLIER

STATE OF CALIFORNIA
DEPARTMENT OF TRANSPORTATION

ELECTRICAL SYSTEMS (LEGEND AND ABBREVIATIONS)

NO SCALE

RSP ES-1B DATED JULY 19, 2013 SUPERSEDES STANDARD PLAN ES-1B DATED MAY 20, 2011 - PAGE 426 OF THE STANDARD PLANS BOOK DATED 2010.

REVISED STANDARD PLAN RSP ES-1B

2010 REVISED STANDARD PLAN RSP ES-1B

7-15-13

Dist	COUNTY	ROUTE	POST MILES TOTAL PROJECT	SHEET No.	TOTAL SHEETS
04	Ala	580	R31.7/R31.9	76	86

Theresa Gabriel
REGISTERED ELECTRICAL ENGINEER

July 19, 2013
PLANS APPROVAL DATE

REGISTERED PROFESSIONAL ENGINEER
Theresa Aziz Gabriel
No. E15129
Exp. 6-30-14
ELECTRICAL
STATE OF CALIFORNIA

THE STATE OF CALIFORNIA OR ITS OFFICERS OR AGENTS SHALL NOT BE RESPONSIBLE FOR THE ACCURACY OR COMPLETENESS OF SCANNED COPIES OF THIS PLAN SHEET.

TO ACCOMPANY PLANS DATED 4-7-14

EQUIPMENT IDENTIFICATION

ILLUMINATED SIGN IDENTIFICATION NUMBER:

SIGN No. 12345
10 ISL SCI 1.0

- SIGN NUMBER - PLACE ON POST OR STRUCTURE
- TRANSFORMER RATING (kVA)
- LIGHTING CONTROL TYPE
- NUMBER AND TYPE OF FIXTURES

DO NOT PLACE ON STANDARD OR STRUCTURE

ELECTROLIER OR EQUIPMENT IDENTIFICATION NUMBER:

12345 - 15'-0"

- MAST ARM LENGTH, IF SHOWN. DO NOT PLACE ON STANDARD OR STRUCTURE
- EQUIPMENT NUMBER - PLACE ON STANDARD OR STRUCTURE. EXISTING EQUIPMENT NUMBERS ARE SHOWN IN PARENTHESIS

CONDUIT AND CONDUCTOR IDENTIFICATION:

1½"C, 2#10, 15#14, 2 DLC, 12P#18

- PAIR
- NUMBER AND SIZE OF CONDUCTORS AND CABLES
- SIZE OF CONDUIT IN INCHES

ø1, ø2, ø2P, etc.	TRAFFIC PHASE IDENTIFICATION FOR SIGNAL FACES, DETECTORS AND PHASE DIAGRAMS
1 2 3	LEGEND NUMBERS
A B C	EQUIPMENT, SIGNAL POLES, INSTALLATION OR ITEMS
1 2 3	CONDUIT RUN NUMBERS

SIGNAL AND LIGHTING STANDARD (TYPICAL DESIGNATION):

19A - 3 - 100

- WIND VELOCITY = 100 mph
- CASE 3 ARM LOADING
- STANDARD TYPE
- STANDARD PLAN SHEET NUMBER
- DETAIL, NUMBER, SECTION, TYPE OR ELEVATION

MISCELLANEOUS EQUIPMENT

NEW	EXISTING	
CMS	cms	CHANGEABLE MESSAGE SIGN
		CLOSED CIRCUIT TELEVISION CAMERA
		HIGHWAY ADVISORY RADIO POLE AND ANTENNA
EMS	ems	EXTINGUISHABLE MESSAGE SIGN
M V	m v	DETECTION DEVICE M = MICROWAVE SENSOR V = VIDEO IMAGE SENSOR

WIRING DIAGRAM LEGEND

----	EXTERNAL CONDUCTOR
	CONDUCTOR OR BUS
	TIE POINT
	CONTACTOR COIL
	CONTACTOR, NO CONTACT
	TERMINAL BLOCKS
	CONTACTOR, NC CONTACT
	ENCLOSURE BOND
	GROUNDING ELECTRODE
	CIRCUIT BREAKER
	RECEPTACLE

PULL BOXES

NEW	EXISTING	
		PULL BOX, No. 5 UNLESS OTHERWISE INDICATED OR NOTED
3	9A(21)	PULL BOX, ADDITIONAL DESIGNATIONS OR DESCRIPTIONS

3 No. 3½ PULL BOX
5 No. 5 PULL BOX
6 No. 6 PULL BOX
7 No. 7 (CEILING PULL BOX)
8 No. 8 (PENDANT SOFFIT PULL BOX)
9 No. 9 PULL BOX
9A No. 9A PULL BOX

(C) COMMUNICATIONS PULL BOX
(E) PULL BOX WITH EXTENSION
(S) SPRINKLER CONTROL PULL BOX
(21) ANCHOR BOLTS AND CONDUIT FOR FUTURE INSTALLATION OF TYPE 21 STANDARD
(T) TRAFFIC PULL BOX

VEHICLE DETECTORS

5 J 9 U

- VEHICLE DETECTOR DESIGNATION
- U = UPPER
  L = LOWER
- SLOT NUMBER IN INPUT FILE
- INPUT FILE (I OR J)
- PHASE

NEW	EXISTING	
		TYPE A DETECTOR LOOP. OUTLINE OF SAWCUT SHOWN
		TYPE B DETECTOR LOOP. OUTLINE OF SAWCUT SHOWN
		TYPE C DETECTOR LOOP. OUTLINE OF SAWCUT SHOWN
		TYPE D DETECTOR LOOP. OUTLINE OF SAWCUT SHOWN
		TYPE E DETECTOR LOOP. OUTLINE OF SAWCUT SHOWN
		TYPE Q DETECTOR LOOP. OUTLINE OF SAWCUT SHOWN
		MAGNETIC DETECTOR
DH	dh	DETECTOR HANDHOLE
		MICROWAVE OR VIDEO DETECTION ZONE

STATE OF CALIFORNIA
DEPARTMENT OF TRANSPORTATION

ELECTRICAL SYSTEMS (LEGEND AND ABBREVIATIONS)

NO SCALE

RSP ES-1C DATED JULY 19, 2013 SUPERSEDES STANDARD PLAN ES-1C DATED MAY 20, 2011 - PAGE 427 OF THE STANDARD PLANS BOOK DATED 2010.

REVISED STANDARD PLAN RSP ES-1C

2010 REVISED STANDARD PLAN RSP ES-1C

7-11-13

DIST	COUNTY	ROUTE	POST MILES TOTAL PROJECT	SHEET NO.	TOTAL SHEETS
04	Ala	580	R31.7/R31.9	77	86

Theresa Gabriel
REGISTERED ELECTRICAL ENGINEER

July 19, 2013
PLANS APPROVAL DATE

REGISTERED PROFESSIONAL ENGINEER Theresa Aziz Gabriel No. E15129 Exp. 6-30-14 ELECTRICAL STATE OF CALIFORNIA

THE STATE OF CALIFORNIA OR ITS OFFICERS OR AGENTS SHALL NOT BE RESPONSIBLE FOR THE ACCURACY OR COMPLETENESS OF SCANNED COPIES OF THIS PLAN SHEET.

TO ACCOMPANY PLANS DATED 4-7-14

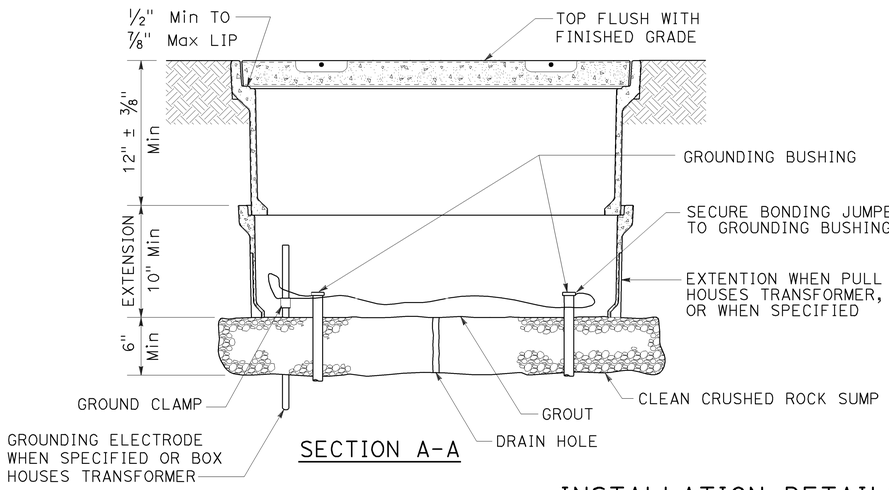

SECTION A-A

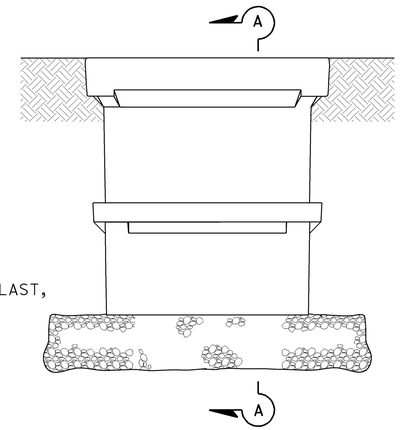

SIDE VIEW

INSTALLATION DETAILS

DETAIL A

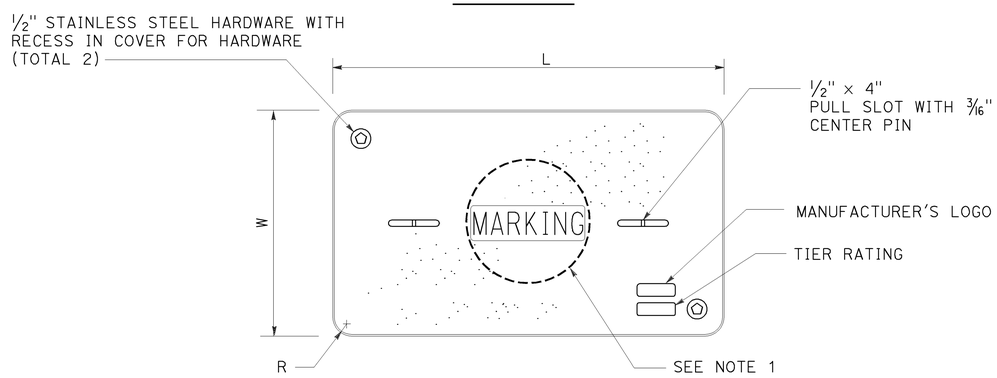

COVER TOP VIEW

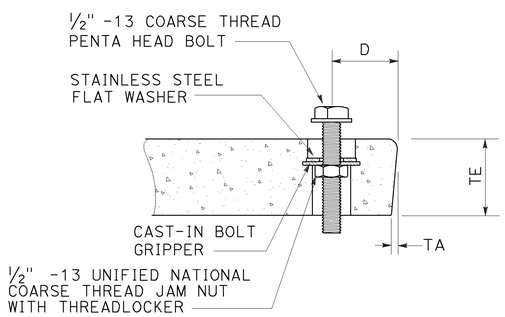

TYPICAL COVER CAPTIVE BOLT

OR SIMILAR

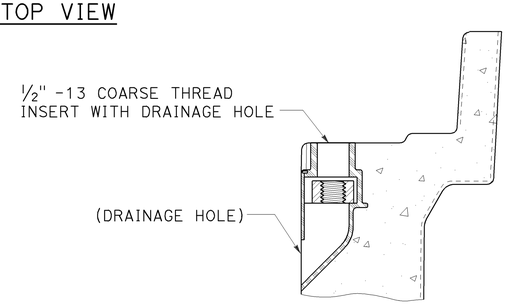

TYPICAL THREADED INSERT

OR SIMILAR

DIMENSION TABLE										
PULL BOX	PULL BOX			COVER						
	MINIMUM DEPTH BOX	MINIMUM DEPTH EXTENSION	MAXIMUM WEIGHT	L	W	R	TE	TA	D	MAXIMUM WEIGHT
No. 3½	12"	N/A	40 lb	1′ - 3⅜"	10⅛"	1⅜"	2"	⅛"	1¾"	30 lb
No. 5	12"	10"	55 lb	1′ - 11¼"	1′ - 1¾"	1⅜"	2"	⅛"	1¾"	60 lb
No. 6	12"	10"	70 lb	2′ - 6½"	1′ - 5½"	1⅜"	2"	⅛"	2"	85 lb

NOTES:

1. Pull box covers shall be marked as follows: "SERVICE" Service circuits between service point and service disconnect; "SPRINKLER-CONTROL" sprinkler control circuits, 50 V or less; "CALTRANS" on all pull boxes, except pull boxes marked "SPRINKLER-CONTROL"; and "TELEPHONE" Telephone service;

   A) No. 3½ pull box.
      1) "SIGNAL" - Traffic signal circuits with or without lighting or sign lighting circuits.
      2) "LIGHTING" - Lighting or sign lighting circuits where voltage is under 600 V.

   B) No. 5, 6, 9 or 9A pull box.
      1) "TRAFFIC SIGNAL" - Traffic signal circuits with or without lighting or sign lighting circuits.
      2) "LIGHTING" - Lighting or sign lighting circuits where voltage is under 600 V.
      3) "LIGHTING-HIGH VOLTAGE" - Lighting or sign lighting circuits where voltage is above 600 V.
      4) "IRRIGATION" - Circuits to irrigation controller 120 V or more.
      5) "RAMP METER" - Ramp meter circuits.
      6) "COUNT STATION" - Count or speed monitor circuits.
      7) "COMMUNICATIONS" - Communication circuits.
      8) "TOS COMMUNICATIONS" - TOS communication line.
      9) "TOS POWER" - TOS power.
      10) "TDC POWER" - Telephone demarcation cabinet power.
      11) "CCTV" - Closed circuit television circuits.
      12) "TMS" - Traffic monitoring station circuits.
      13) "CMS" - Changeable message sign circuits.
      14) "HAR" - Highway advisory radio circuits.
      15) "BOOSTER PUMP" - Booster pump circuit.

2. The nominal dimensions of the opening in which the cover sets shall be the same as the cover dimensions except the length and width dimensions shall be ⅛" greater.

3. Covers and boxes shall be interchangeable with California standard male and female gages. When interchanged with a standard male or female gage, the top surfaces shall be flush within ⅛". Top outside radius of covers and pull boxes shall have a ⅛" radius.

4. Pull box extension may be another pull box as long as the bottom edge of the pull box can fit into the cover opening.

5. All dimensions for the cover for non-traffic pull box are nominal values.

STATE OF CALIFORNIA
DEPARTMENT OF TRANSPORTATION

ELECTRICAL SYSTEMS (NON-TRAFFIC PULL BOX)

NO SCALE

RSP ES-8A DATED JULY 19, 2013 SUPERSEDES RSP ES-8A DATED JANUARY 20, 2012 THAT SUPPLEMENTS THE STANDARD PLANS BOOK DATED 2010.

REVISED STANDARD PLAN RSP ES-8A

2010 REVISED STANDARD PLAN RSP ES-8A

7-15-13

Dist	COUNTY	ROUTE	POST MILES TOTAL PROJECT	SHEET No.	TOTAL SHEETS
04	Ala	580	R31.7/R31.9	78	86

REGISTERED CIVIL ENGINEER 4-4-14 DATE

4-7-14
PLANS APPROVAL DATE

REGISTERED PROFESSIONAL ENGINEER ISAIAS D. YALAN No. 68269 Exp. 9-30-2015 CIVIL STATE OF CALIFORNIA

The State of California or its officers or agents shall not be responsible for the accuracy or completeness of scanned copies of this plan sheet.

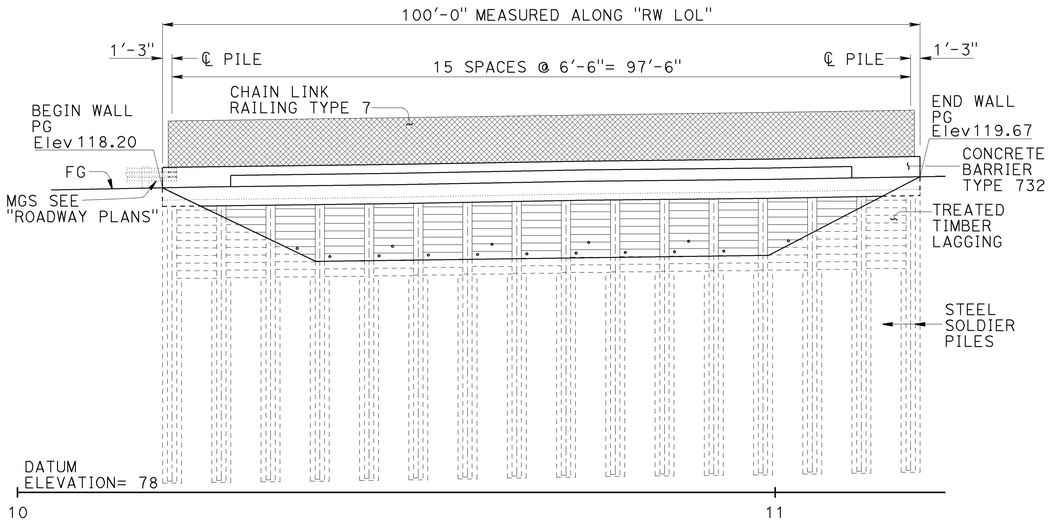

DEVELOPED ELEVATION

1" = 10'

NOTE:
Fluted rib sine wave texture not shown, for details see "FLUTED SINE WAVE TEXTURE DETAILS" sheet

QUANTITIES

STRUCTURE EXCAVATION (SOLDIER PILE WALL)	115	CY
STRUCTURE BACKFILL (SOLDIER PILE WALL)	15	CY
CONCRETE BACKFILL (SOLDIER PILE WALL)	79	CY
LEAN CONCRETE BACKFILL	30	CY
STEEL SOLDIER PILE (W 14 X 211)	592	LF
30" DRILLED HOLE	597	LF
STRUCTURAL CONCRETE, RETAINING WALL	26	CY
STRUCTURAL CONCRETE, BARRIER SLAB	54	CY
FLUTED RIB SINE WAVE TEXTURE	350	SQFT
BAR REINFORCING STEEL (RETAINING WALL)	5,320	LB
TIMBER LAGGING	6	MFBM
CLEAN AND PAINT STEEL SOLDIER PILING	LUMP	SUM
FURNISH AND INSTALL DRAIN PIPE (HORIZONTAL DRAIN)	160	LF
DRILL HOLE (HORIZONTAL DRAIN)	160	LF
CHAIN LINK RAILING (TYPE 7)	100	LF
CONCRETE BARRIER (TYPE 732)	100	LF

INDEX TO PLANS

SHEET No.	TITLE
1	GENERAL PLAN
2	STRUCTURE PLAN
3	FOUNDATION PLAN
4	TYPICAL SECTION
5	SOLDIER PILE WALL DETAILS
6	WALL DRAIN DETAILS
7	FLUTED RIB SINE WAVE TEXTURE DETAILS
8	LOG OF TEST BORINGS 1 OF 2
9	LOG OF TEST BORINGS 2 OF 2

CURVE DATA

No.	R	Δ	T	L
Ⓐ	3192.00	16°15'15"	455.83	905.53
Ⓑ	3133.83	00°54'16"	24.73	49.46

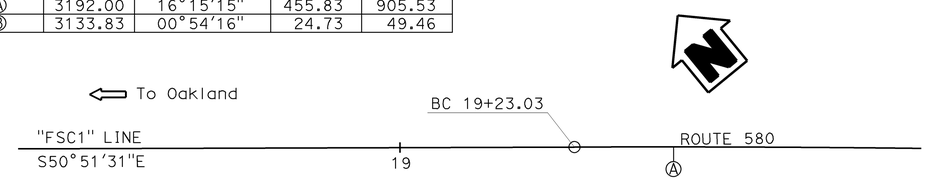

STANDARD PLANS 2010

A10A	ABBREVIATIONS (SHEET 1 OF 2)
RSP A10B	ABBREVIATIONS (SHEET 2 OF 2)
A10C	LINES AND SYMBOLS (SHEET 1 OF 3)
A10D	LINES AND SYMBOLS (SHEET 2 OF 3)
A10E	LINES AND SYMBOLS (SHEET 3 OF 3)
A10F	LEGEND - SOIL (SHEET 1 OF 2)
A10G	LEGEND - SOIL (SHEET 2 OF 2)
A10H	LEGEND - ROCK
B11-52	CHAIN LINK RAILING TYPE 7
RSP B11-55	CONCRETE BARRIER TYPE 732

STANDARD PLAN SHEET No.
DETAIL No.

NOTE:
For "GENERAL NOTES" see "SOLDIER PILE WALL DETAILS No. 1" sheet

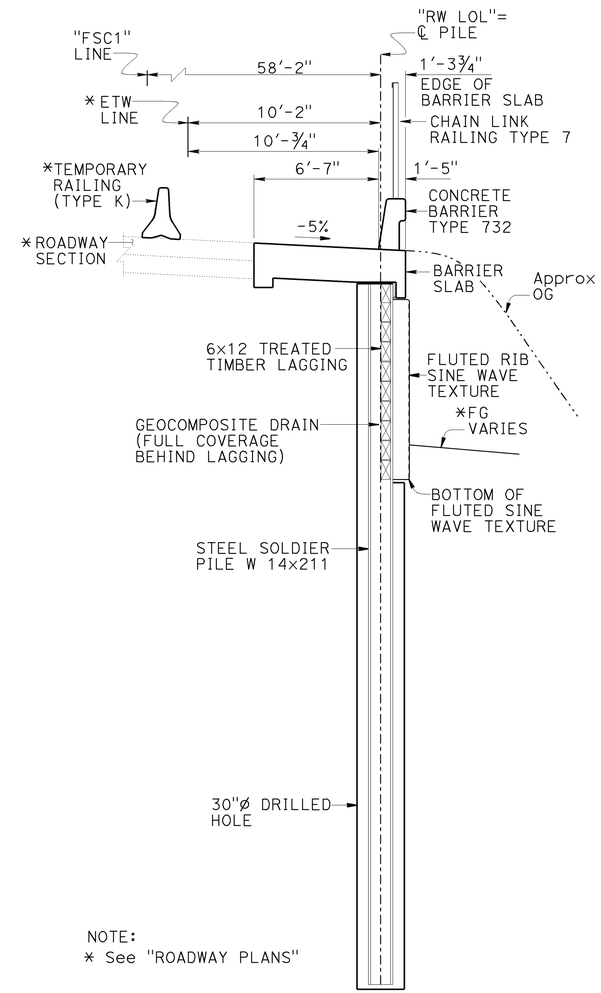

NOTE:
* See "ROADWAY PLANS"

TYPICAL SECTION

¼" = 1'-0"

To Dublin

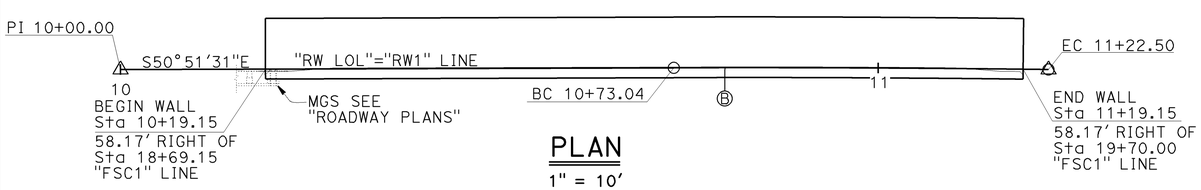

PLAN

1" = 10'

DESIGN	BY Isaias Yalan	CHECKED John Railey	LOAD & RESISTANCE FACTOR DESIGN	LIVE LOADING: LIVE LOAD SURCHARGE	
DETAILS	BY Tim Fairall	CHECKED John Railey	LAYOUT	BY Tim Fairall	CHECKED Isaias Yalan
QUANTITIES	BY Isaias Yalan	CHECKED John Railey	SPECIFICATIONS	BY Jennifer Ramirez	PLANS AND SPECS COMPARED Jennifer Ramirez

Gordon Danke
DESIGN ENGINEER

ORIGINAL SCALE IN INCHES FOR REDUCED PLANS 0 1 2 3

STATE OF CALIFORNIA
DEPARTMENT OF TRANSPORTATION

DIVISION OF ENGINEERING SERVICES
STRUCTURE DESIGN
DESIGN BRANCH 9

BRIDGE No. 33E0223
POST MILE 31.80

164TH AVENUE SOLDIER PILE WALL
GENERAL PLAN

UNIT: 3694
PROJECT NUMBER & PHASE: 04000208701
CONTRACT No.: 04-1SS044

DISREGARD PRINTS BEARING EARLIER REVISION DATES

REVISION DATES 5-03-13 11-22-13 1-24-14 4-4-14

SHEET 1 OF 9

STRUCTURES DESIGN GENERAL PLAN SHEET (ENGLISH) (REV.09-01-10)

FILE => 33e0223-a-gp01.dgn

USERNAME => s123982 DATE PLOTTED => 04-APR-2014 TIME PLOTTED => 14:50

DIST	COUNTY	ROUTE	POST MILES TOTAL PROJECT	SHEET No.	TOTAL SHEETS
04	Ala	580	R31.7/R31.9	79	86

REGISTERED CIVIL ENGINEER — DATE: 1-10-14

4-7-14
PLANS APPROVAL DATE

REGISTERED PROFESSIONAL ENGINEER — ISAIAS D. YALAN — No. 68269 — Exp. 9-30-2015 — CIVIL — STATE OF CALIFORNIA

The State of California or its officers or agents shall not be responsible for the accuracy or completeness of scanned copies of this plan sheet.

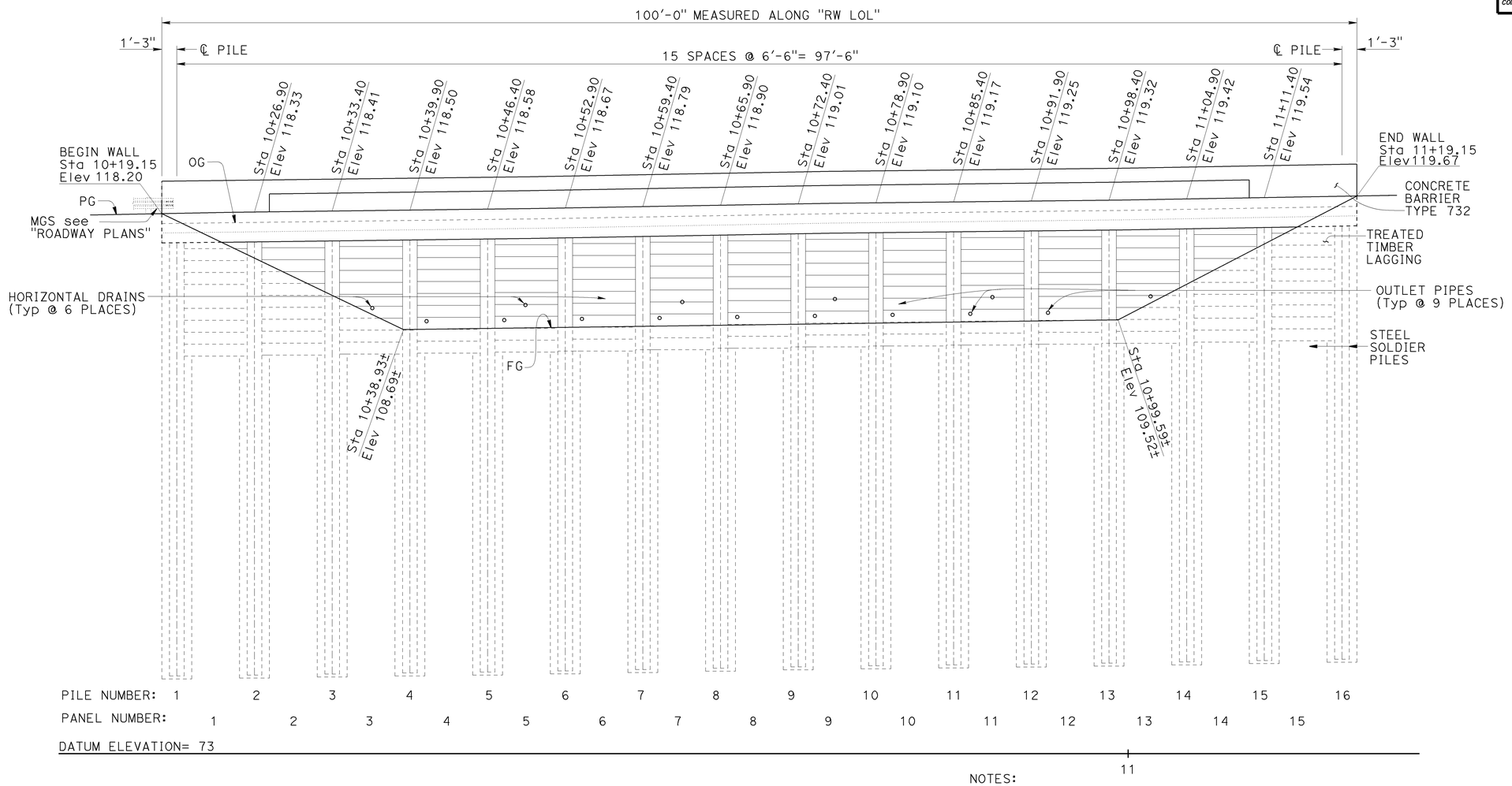

DEVELOPED ELEVATION

1" = 5'

NOTES:

1. Station/elevation called out at PI centerline of drilled hole and "RW LOL" at top of concrete cap beam
2. Chain link railing not shown
3. Fluted rib sine wave texture not shown. For details, see "FLUTED SINE WAVE TEXTURE DETAILS" sheet

PILE No.	TOP OF PILE ELEVATION
1	116.39
2	116.51
3	116.59
4	116.67
5	116.75
6	116.84
7	116.96
8	117.07
9	117.19
10	117.28
11	117.35
12	117.42
13	117.50
14	117.60
15	117.71
16	117.82

PANEL No.	BOTTOM OF LAGGING ELEVATION
1	106.51
2	106.59
3	106.67
4	106.75
5	106.84
6	106.96
7	107.07
8	107.19
9	107.28
10	107.35
11	107.42
12	107.50
13	107.60
14	107.71
15	107.82

	BY	CHECKED
DESIGN	Isaias Yalan	John Railey
DETAILS	Tim Fairall	John Railey
QUANTITIES	Isaias Yalan	John Railey

STATE OF CALIFORNIA
DEPARTMENT OF TRANSPORTATION

DIVISION OF ENGINEERING SERVICES
STRUCTURE DESIGN
DESIGN BRANCH 9

BRIDGE No. 33E0223
POST MILE 31.80

164TH AVENUE SOLDIER PILE WALL
STRUCTURE PLAN

STRUCTURES DESIGN DETAIL SHEET (ENGLISH) (REV. 09-01-10)

ORIGINAL SCALE IN INCHES FOR REDUCED PLANS 0 1 2 3

UNIT: 3694
PROJECT NUMBER & PHASE: 04000208701
CONTRACT No.: 04-1SS044

DISREGARD PRINTS BEARING EARLIER REVISION DATES

REVISION DATES: 5-06-13 11-22-13 1-7-14

SHEET 2 OF 9

FILE => 33e0223-c-sp01.dgn

USERNAME => s114701 DATE PLOTTED => 01-APR-2014 TIME PLOTTED => 13:49

DIST	COUNTY	ROUTE	POST MILES TOTAL PROJECT	SHEET No.	TOTAL SHEETS
04	Ala	580	R31.7/R31.9	80	86

REGISTERED CIVIL ENGINEER 1-10-14 DATE

4-7-14
PLANS APPROVAL DATE

REGISTERED PROFESSIONAL ENGINEER ISAIAS D. YALAN No. 68269 Exp. 9-30-15 CIVIL STATE OF CALIFORNIA

The State of California or its officers or agents shall not be responsible for the accuracy or completeness of electronic copies of this plan sheet.

CURVE DATA

No.	R	Δ	T	L
Ⓐ	3192.00	16°15'15"	455.83	905.53
Ⓑ	3133.83	00°54'16"	24.73	49.46

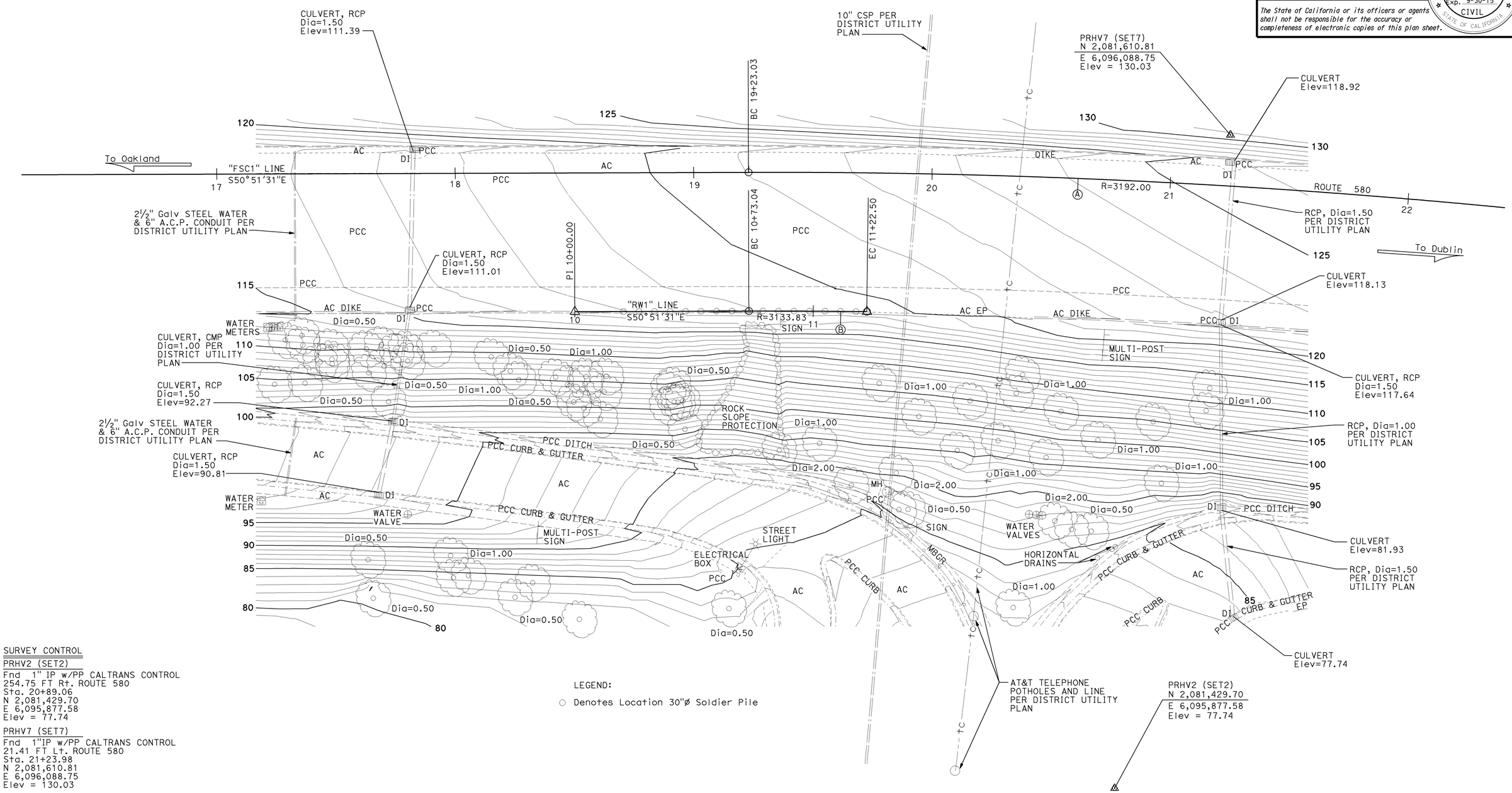

SURVEY CONTROL

PRHV2 (SET2)
Fnd 1" IP w/PP CALTRANS CONTROL
254.75 FT Rt. ROUTE 580
Sta. 20+89.06
N 2,081,429.70
E 6,095,877.58
Elev = 77.74

PRHV7 (SET7)
Fnd 1"IP w/PP CALTRANS CONTROL
21.41 FT Lt. ROUTE 580
Sta. 21+23.98
N 2,081,610.81
E 6,096,088.75
Elev = 130.03

LEGEND:

○ Denotes Location 30"ø Soldier Pile

PRELIMINARY INVESTIGATION SECTION

SCALE	VERT.DATUM NAVD88	PHOTOGRAMMETRY AS OF: X				
1"=20'	HORZ.DATUM NAD83 (1991.35)	SURVEYED	BY DISTRICT	CHECKED	BY D. IVY	04/2013
ALIGNMENT TIES Dist TRAVERSE SHEET		DRAFTED	BY T. ZOLNIKOV 04/2013	CHECKED	BY L. LEW	04/2013

DESIGN	BY Isaias Yalan	CHECKED John Railey
DETAILS	BY Tim Fairall	CHECKED John Railey
QUANTITIES	BY Isaias Yalan	CHECKED John Railey

STATE OF CALIFORNIA
DEPARTMENT OF TRANSPORTATION

DIVISION OF ENGINEERING SERVICES
STRUCTURE DESIGN
DESIGN BRANCH 9

BRIDGE No. 33E0223
POST MILE 31.80

164TH AVENUE SOLDIER PILE WALL
FOUNDATION PLAN

STRUCTURES FOUNDATION PLAN SHEET (ENGLISH) (REV. 09-01-10)

ORIGINAL SCALE IN INCHES FOR REDUCED PLANS 0 1 2 3

UNIT: 3646
PROJECT NUMBER & PHASE: 04000208701
CONTRACT No.: 04-1SS044

DISREGARD PRINTS BEARING EARLIER REVISION DATES

REVISION DATES 04/24/13 06/28/13 11/27/13

SHEET 3 OF 9

FILE => 33e0223-e-fpl01.dgn

USERNAME => s114701 DATE PLOTTED => 01-APR-2014 TIME PLOTTED => 13:49

DIST	COUNTY	ROUTE	POST MILES TOTAL PROJECT	SHEET No.	TOTAL SHEETS
04	Ala	580	R31.7/R31.9	81	86

REGISTERED CIVIL ENGINEER 1-10-14 DATE

4-7-14
PLANS APPROVAL DATE

REGISTERED PROFESSIONAL ENGINEER ISAIAS D. YALAN No. 68269 Exp. 9-30-2015 CIVIL STATE OF CALIFORNIA

The State of California or its officers or agents shall not be responsible for the accuracy or completeness of scanned copies of this plan sheet.

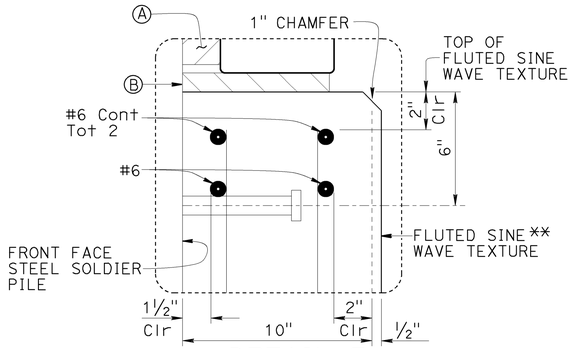

DETAIL F
3" = 1'-0"

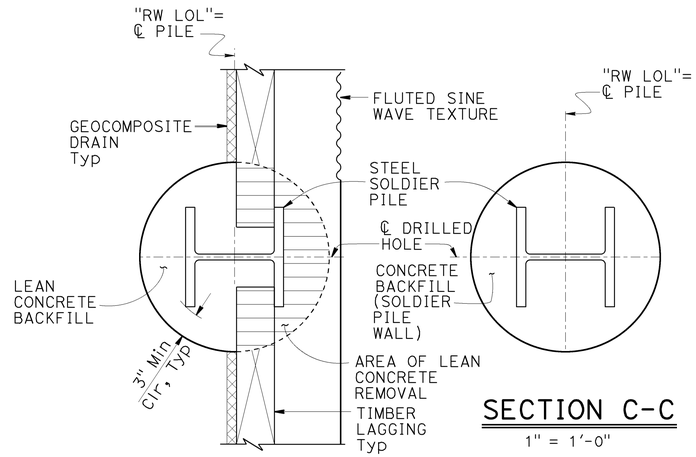

SECTION B-B
1" = 1'-0"

SECTION C-C
1" = 1'-0"

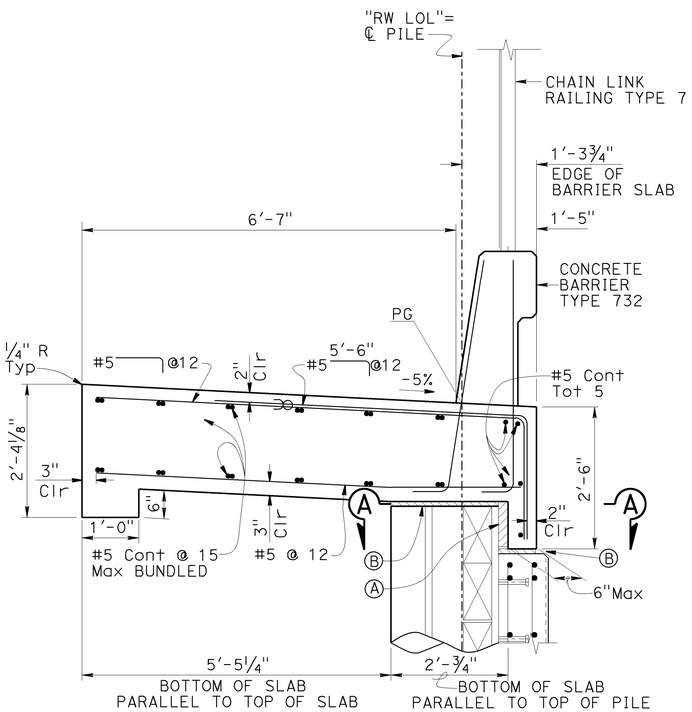

CONCRETE BARRIER SLAB
¾" = 1'-0"

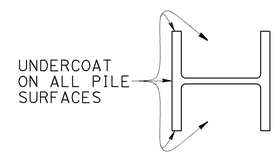

LIMITS OF CLEAN & PAINT STEEL SOLDIER PILING
1" = 1'-0"

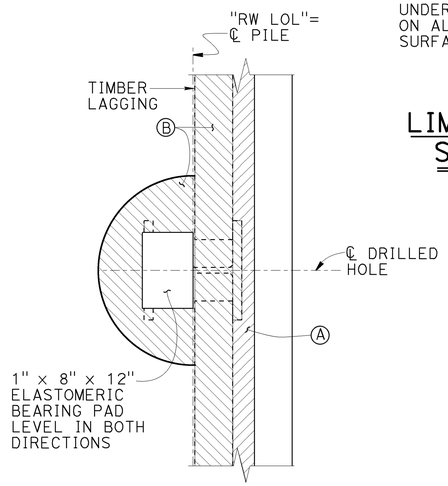

SECTION A-A
1" = 1'-0"

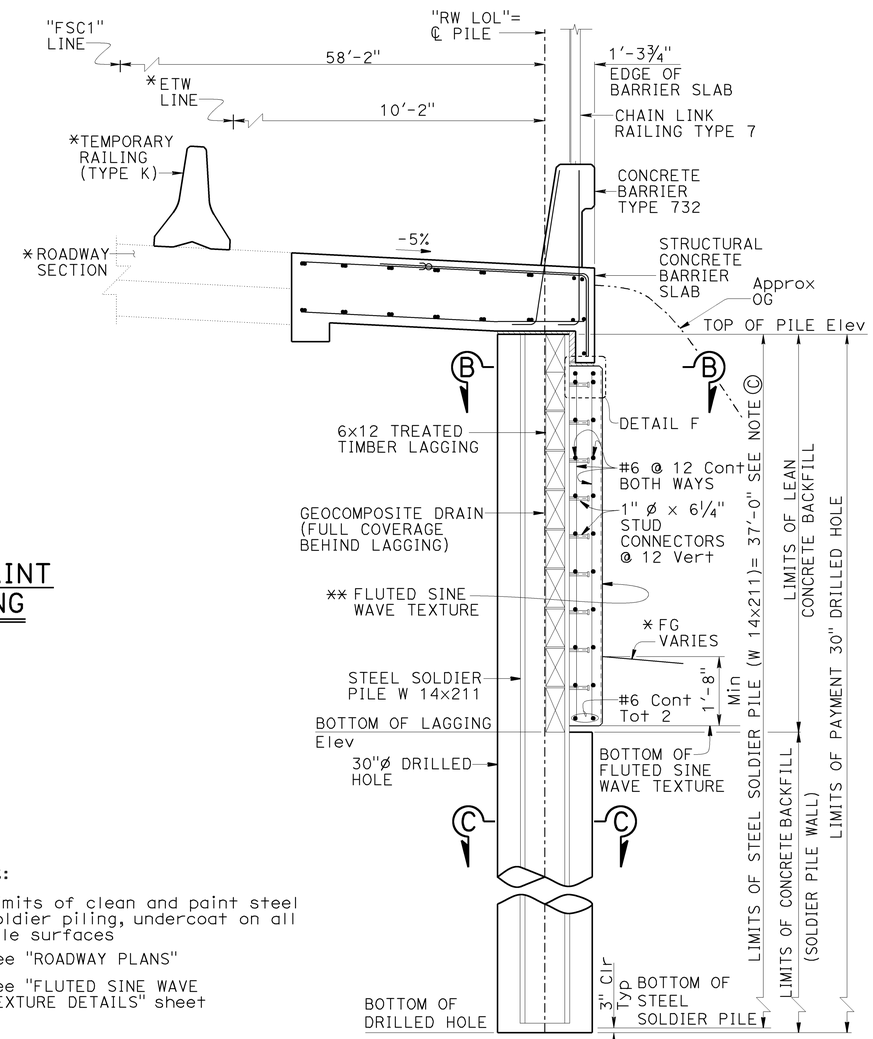

TYPICAL SECTION
½" = 1'-0"

NOTES:

Ⓒ Limits of clean and paint steel soldier piling, undercoat on all pile surfaces

* See "ROADWAY PLANS"

** See "FLUTED SINE WAVE TEXTURE DETAILS" sheet

NOTES:

Ⓐ 2" Min Expanded polystyrene

Ⓑ 1" Expanded polystyrene

∝ Indicates bundled bars

1. No expansion joints in concrete barrier or barrier slab within wall limits.
2. Not all barrier reinforcement shown, see "STANDARD PLANS"

	BY	CHECKED
DESIGN	Isaias Yalan	John Railey
DETAILS	Tim Fairall	John Railey
QUANTITIES	Isaias Yalan	John Railey

STATE OF CALIFORNIA
DEPARTMENT OF TRANSPORTATION

DIVISION OF ENGINEERING SERVICES
STRUCTURE DESIGN
DESIGN BRANCH 9

BRIDGE No. 33E0223
POST MILE 31.80

164TH AVENUE SOLDIER PILE WALL
TYPICAL SECTION

STRUCTURES DESIGN DETAIL SHEET (ENGLISH) (REV. 09-01-10)

ORIGINAL SCALE IN INCHES FOR REDUCED PLANS 0 1 2 3

UNIT: 3694
PROJECT NUMBER & PHASE: 04000208701
CONTRACT No.: 04-1SS044

DISREGARD PRINTS BEARING EARLIER REVISION DATES

REVISION DATES: 5-24-13 11-22-13 1-7-14

SHEET 4 OF 9

FILE => 33e0223-k-ts01.dgn

USERNAME => s114701 DATE PLOTTED => 01-APR-2014 TIME PLOTTED => 13:49

DIST	COUNTY	ROUTE	POST MILES TOTAL PROJECT	SHEET No.	TOTAL SHEETS
04	Ala	580	R31.7/R31.9	82	86

REGISTERED CIVIL ENGINEER — DATE 1-10-14

4-7-14
PLANS APPROVAL DATE

REGISTERED PROFESSIONAL ENGINEER — ISAIAS D. YALAN — No. 68269 — Exp. 9-30-2015 — CIVIL — STATE OF CALIFORNIA

The State of California or its officers or agents shall not be responsible for the accuracy or completeness of scanned copies of this plan sheet.

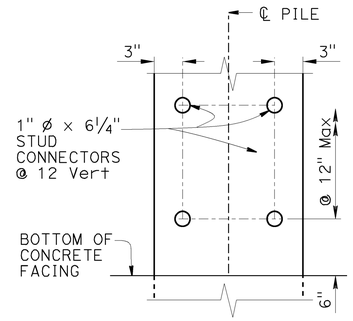

STUD CONNECTOR PLACEMENT

1½" = 1'-0"

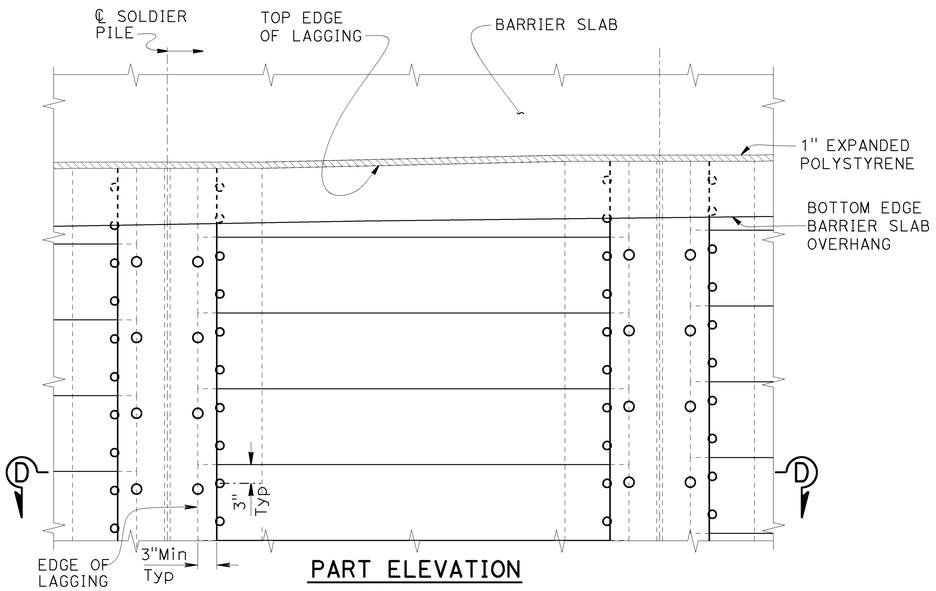

PART ELEVATION LAGGING DETAILS

1" = 1'-0"

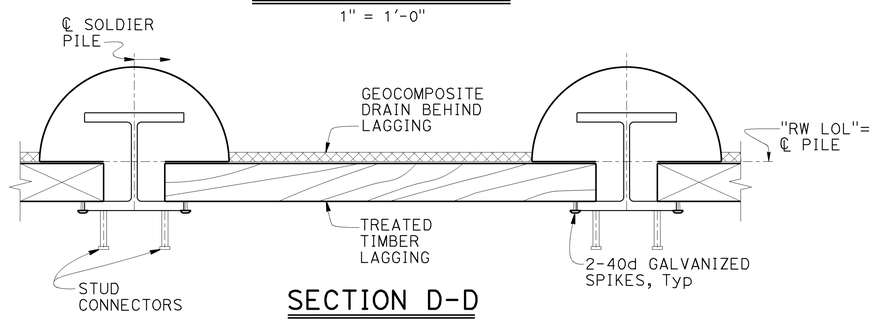

SECTION D-D

1" = 1'-0"

NOTES:

1. No clipping of timber lagging corners allowed
2. Spikes shall not be bent
3. Fluted rib sine wave texture reinforcement not shown

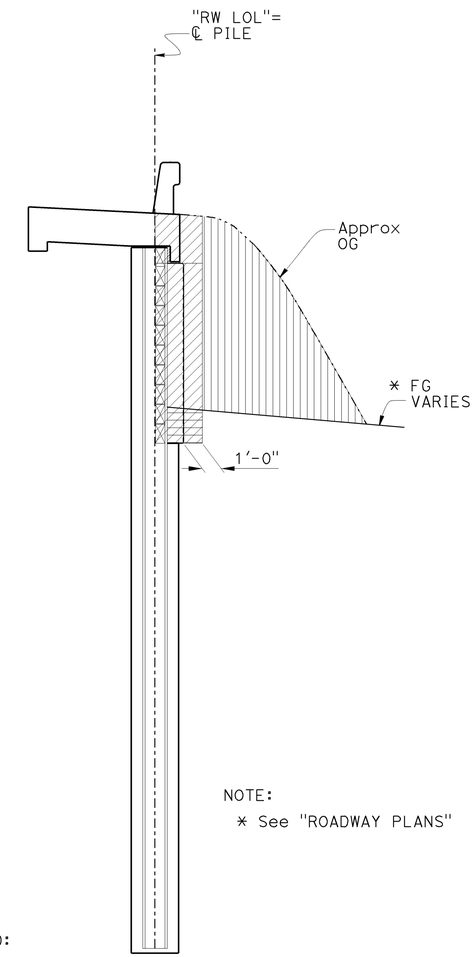

NOTE:

* See "ROADWAY PLANS"

LEGEND:

- STRUCTURE EXCAVATION (SOLDIER PILE WALL)
- ROADWAY EXCAVATION, SEE ROADWAY PLANS
- STRUCTURE BACKFILL (SOLDIER PILE WALL)

LIMITS OF EXCAVATION AND BACKFILL

NO SCALE

GENERAL NOTES

DESIGN:
AASHTO LRFD Bridge Design Specifications, 4th Edition with California Amendments.

LIVE LOAD:
240 psf equivalent to 2 feet soil weight

SOIL PARAMETERS:

ACTIVE PRESSURE:

Unit Weight (γ) = 130 pcf
Cohesion (C) = 1000 psf
Friction angle (ø) = 0 degree
Friction angle between
Soil and material (δ) = 20 degree

PASSIVE PRESSURE:

Unit Weight (γ) = 130 pcf
Cohesion (C) = 2000 psf
Friction angle (ø) = 0 degree
Friction angle between
Soil and material (δ) = 20 degree

SEISMIC LOADING:
Triangular stress distribution = 38 H psf as maximum

STRUCTURAL STEEL:
ASTM A709/A709M Grade 50
fy = 50 ksi

STRUCTURAL TIMBER:
Treated Douglas Fir, Grade No. 1 or better.
Timber to be full sawn

Reinforced Concrete
fy = 60 ksi
f'c = 3.6 ksi
n = 8

	BY	CHECKED
DESIGN	Isaias Yalan	John Railey
DETAILS	Tim Fairall	John Railey
QUANTITIES	Isaias Yalan	John Railey

STATE OF CALIFORNIA
DEPARTMENT OF TRANSPORTATION

DIVISION OF ENGINEERING SERVICES
STRUCTURE DESIGN
DESIGN BRANCH 9

BRIDGE No. 30E0223
POST MILE 31.80

164TH AVENUE SOLDIER PILE WALL
SOLDIER PILE WALL DETAILS

STRUCTURES DESIGN DETAIL SHEET (ENGLISH) (REV. 09-01-10)

ORIGINAL SCALE IN INCHES FOR REDUCED PLANS 0 1 2 3

UNIT: 3694
PROJECT NUMBER & PHASE: 04000208701
CONTRACT No.: 04-1SS044

DISREGARD PRINTS BEARING EARLIER REVISION DATES

REVISION DATES: 5-21-13 11-22-13 1-7-14

SHEET 5 OF 9

FILE => 33e0223-1-walldet01.dgn

USERNAME => s114701 DATE PLOTTED => 01-APR-2014 TIME PLOTTED => 13:49

DIST	COUNTY	ROUTE	POST MILES TOTAL PROJECT	SHEET No.	TOTAL SHEETS
04	Ala	580	R31.7/R31.9	83	86

REGISTERED CIVIL ENGINEER 1-10-14 DATE

4-7-14
PLANS APPROVAL DATE

REGISTERED PROFESSIONAL ENGINEER ISAIAS D. YALAN No. 68269 Exp. 9-30-2015 CIVIL STATE OF CALIFORNIA

The State of California or its officers or agents shall not be responsible for the accuracy or completeness of scanned copies of this plan sheet.

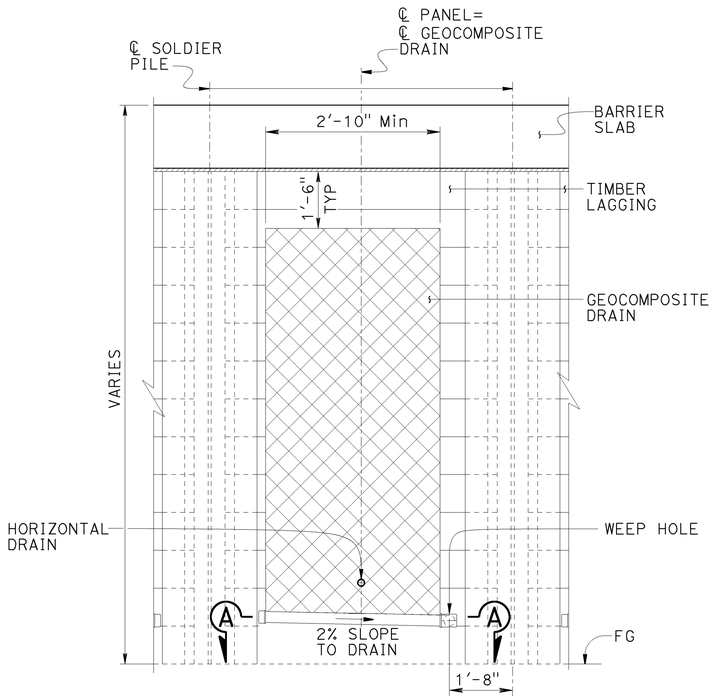

PART ELEVATION WALL DRAIN

½" = 1'-0"

NOTE:

1. Place horizontal drain on ℄ panel
2. Place weep hole at panels: 4, 5, 6, 7, 8, 9, 10, 11, 12

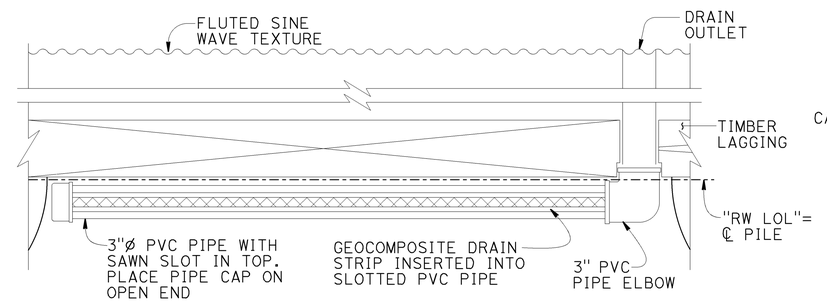

SECTION A-A

1½" = 1'-0"

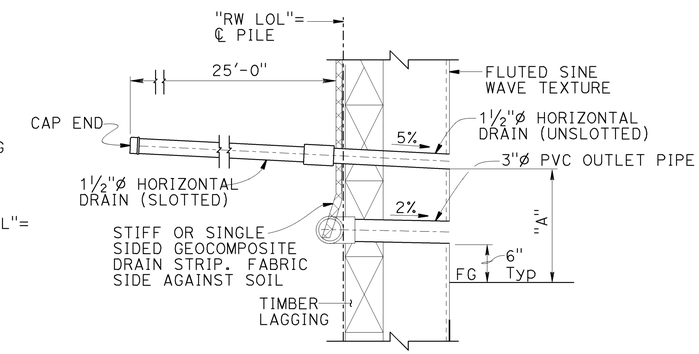

HORIZONTAL DRAIN LOCATION

AT PANEL #	DIMENSION "A"
3, 13	6"
5, 7, 9, 11	1'-6"

WALL DRAIN DETAIL AT WEEPHOLE

1" = 1'-0"

NOTES:

1. Center Geocomposite vertical drain between Soldier Piles.
2. Geocomposite drain not required for wall height less than 6'-6".
3. 1'-0" Minimum splice length required for Geocomposite drain.

	BY	CHECKED
DESIGN	Isaias Yalan	John Railey
DETAILS	Tim Fairall	John Railey
QUANTITIES	Isaias Yalan	John Railey

STATE OF CALIFORNIA DEPARTMENT OF TRANSPORTATION

DIVISION OF ENGINEERING SERVICES STRUCTURE DESIGN DESIGN BRANCH 9

BRIDGE No. 30E0223
POST MILE 31.80

164TH AVENUE SOLDIER PILE WALL
WALL DRAIN DETAILS

STRUCTURES DESIGN DETAIL SHEET (ENGLISH) (REV. 09-01-10)

ORIGINAL SCALE IN INCHES FOR REDUCED PLANS 0 1 2 3

UNIT: 3694
PROJECT NUMBER & PHASE: 04000208701
CONTRACT No.: 04-1SS044

DISREGARD PRINTS BEARING EARLIER REVISION DATES

REVISION DATES 5-24-13 7-16-13 11-27-13

SHEET 6 OF 9

FILE => 33e0223-1-walldet02.dgn

USERNAME => s114701 DATE PLOTTED => 01-APR-2014 TIME PLOTTED => 13:49

DIST	COUNTY	ROUTE	POST MILES TOTAL PROJECT	SHEET No.	TOTAL SHEETS
04	Ala	580	R31.7/R31.9	84	86

REGISTERED CIVIL ENGINEER 1-10-14 DATE

4-7-14
PLANS APPROVAL DATE

REGISTERED PROFESSIONAL ENGINEER
ISAIAS D. YALAN
No. 68269
Exp. 9-30-2015
CIVIL
STATE OF CALIFORNIA

The State of California or its officers or agents shall not be responsible for the accuracy or completeness of scanned copies of this plan sheet.

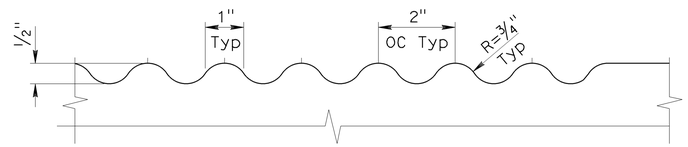

FLUTED RIB SINE WAVE TEXTURE DETAIL

6" = 1'-0"

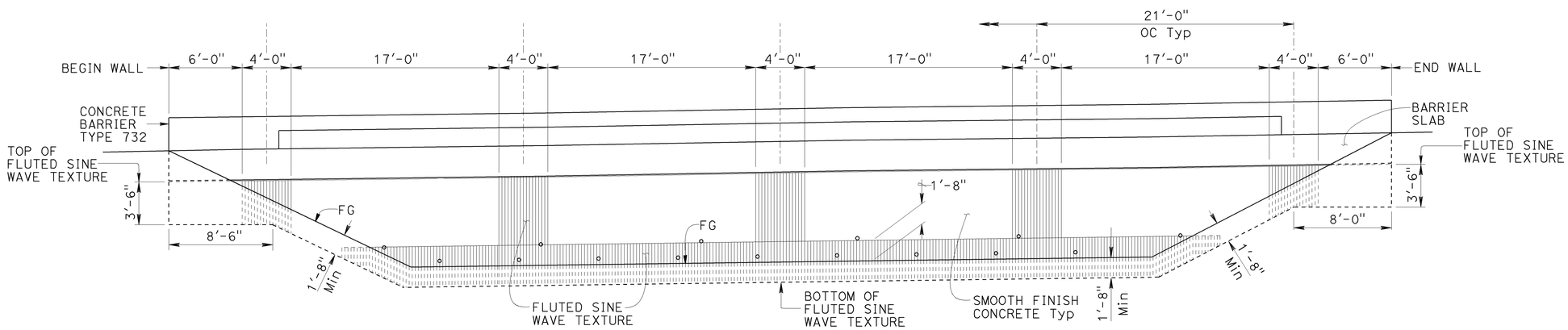

AESTHETIC ELEVATION

1" = 5'-0"

NOTES:

1. Chain link railing and MGS not shown
2. "FLUTED SINE WAVE TEXTURE" must be oriented vertically

Denotes limits of payment for "FLUTED SINE WAVE TEXTURE"

DESIGN	BY Isaias Yalan	CHECKED John Railey
DETAILS	BY Tim Fairall	CHECKED John Railey
QUANTITIES	BY Isaias Yalan	CHECKED John Railey

STATE OF CALIFORNIA
DEPARTMENT OF TRANSPORTATION

DIVISION OF ENGINEERING SERVICES
STRUCTURE DESIGN
DESIGN BRANCH 9

BRIDGE No. 30E0223
POST MILE 31.80

164TH AVENUE SOLDIER PILE WALL
FLUTED SINE WAVE TEXTURE DETAILS

STRUCTURES DESIGN DETAIL SHEET (ENGLISH) (REV. 09-01-10)

ORIGINAL SCALE IN INCHES FOR REDUCED PLANS 0 1 2 3

UNIT: 3694
PROJECT NUMBER & PHASE: 04000208701
CONTRACT No.: 04-1SS044

DISREGARD PRINTS BEARING EARLIER REVISION DATES

REVISION DATES: 9-24-13 11-22-13 1-7-14

SHEET 7 OF 9

FILE => 33e0223-1-walldet03.dgn

USERNAME => s114701 DATE PLOTTED => 01-APR-2014 TIME PLOTTED => 13:49

DIST	COUNTY	ROUTE	POST MILES TOTAL PROJECT	SHEET No	TOTAL SHEETS
04	Ala	580	R31.7/R31.9	85	86

GEOTECHNICAL PROFESSIONAL — DATE 7-1-13

4-7-14
PLANS APPROVAL DATE

The State of California or its officers or agents shall not be responsible for the accuracy or completeness of scanned copies of this plan sheet.

REGISTERED PROFESSIONAL ENGINEER — Ward Andrew Herlache — No. 2149 — Exp. 3/31/15 — GEOTECHNICAL — STATE OF CALIFORNIA

Fugro Consultants, Inc.
1000 Broadway, Suite 440
Oakland, CA 94607

Caltrans, Geotechnical Design - West
111 Grand Avenue
Oakland, CA 94623

BENCHMARK DATA
WP-3041
PM at pullbox rim, E/B
164th offramp shoulder

Northing: 2,082,063
Easting: 6,095,358
Elevation: 108.329 ft

This LOTB sheet was prepared in accordance with the Caltrans Soil & Rock Logging, Classification, & Presentation Manual (2010 Edition).

See 2010 Standard Plans A10F and A10G for Soil Legend, and A10H for Rock Legend.

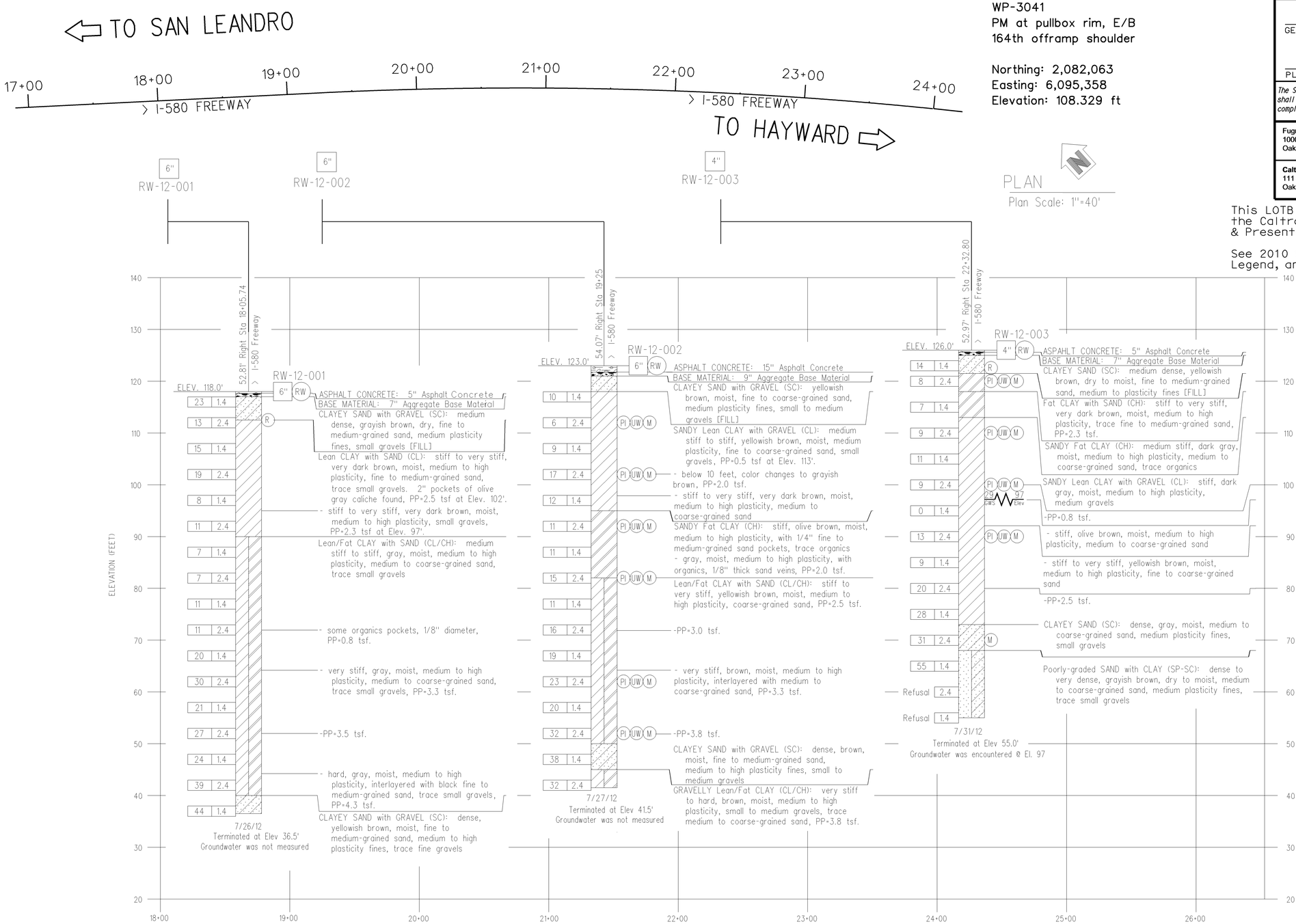

NOTES:

1. Borings excavated using a rotary wash drill rig equipped with an automatic trip hammer weighing 140 pounds falling 30 inches.
2. Standard Penetration Test Samples I.D.=1-3/8 in., O.D.=2 in., without liners.
3. "2.4" sampler has a 2-3/8 in. inside diameter and a 3 in. outside diameter (Modified Calif. Sampler) with brass liners.
4. This LOTB was prepared in accordance with the Caltrans Soil & Rock Logging, Classification and Presentation Manual (2010).
5. PP=unconfined compressive strength (tsf) as measured by pocket penetrometer.
6. N_{60} values reported.

PROFILE
Profile Scale: Horizontal 1"=40'
Vertical 1"=10'

B. Lee — DESIGN OVERSIGHT	DRAWN BY	B. Egan	M. Bajuniemi — FIELD INVESTIGATION BY:	PREPARED FOR THE STATE OF CALIFORNIA DEPARTMENT OF TRANSPORTATION	Isaias Yalan — PROJECT ENGINEER	BRIDGE NO. 30E0223
7-1-13 — SIGN OFF DATE	CHECKED BY	M. Bajuniemi	DATE: 7-1-13			POST MILES 31.8

164TH AVENUE SOLDIER PILE WALL
LOG OF TEST BORINGS 1 OF 2

GS GEOTECHNICAL LOG OF TEST BORINGS SHEET (ENGLISH) (REV. 03/14/12)

ORIGINAL SCALE IN INCHES FOR REDUCED PLANS 0 1 2 3

UNIT:
PROJECT NUMBER & PHASE: 04000208701 CONTRACT NO.: 04-1SS044

DISREGARD PRINTS BEARING EARLIER REVISION DATES → 7-01-13

REVISION DATES				SHEET	OF
7-01-13				8	9

FILE = 33e0223-z-lotb01.dgn

USERNAME => s114701 DATE PLOTTED => 01-APR-2014 TIME PLOTTED => 13:49

DIST	COUNTY	ROUTE	POST MILES TOTAL PROJECT	SHEET No	TOTAL SHEETS
04	Ala	580	R31.7/R31.9	86	86

GEOTECHNICAL PROFESSIONAL — DATE 7-1-13

4-7-14
PLANS APPROVAL DATE

The State of California or its officers or agents shall not be responsible for the accuracy or completeness of scanned copies of this plan sheet.

REGISTERED PROFESSIONAL ENGINEER — Ward Andrew Herlache No. 2149 Exp. 3/31/15 GEOTECHNICAL — STATE OF CALIFORNIA

Fugro Consultants, Inc.
1000 Broadway, Suite 440
Oakland, CA 94607

Caltrans, Geotechnical Design - West
111 Grand Avenue
Oakland, CA 94623

BENCHMARK DATA
WP-3041
PM at pullbox rim, E/B
164th offramp shoulder

Northing: 2,082,063
Easting: 6,095,358
Elevation: 108.329 ft

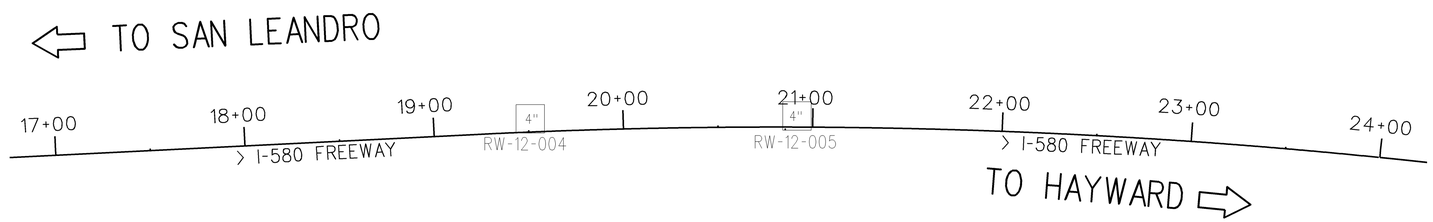

PLAN
Plan Scale: 1"=40'

This LOTB sheet was prepared in accordance with the Caltrans Soil & Rock Logging, Classification, & Presentation Manual (2010 Edition).

See 2010 Standard Plans A10F and A10G for Soil Legend, and A10H for Rock Legend.

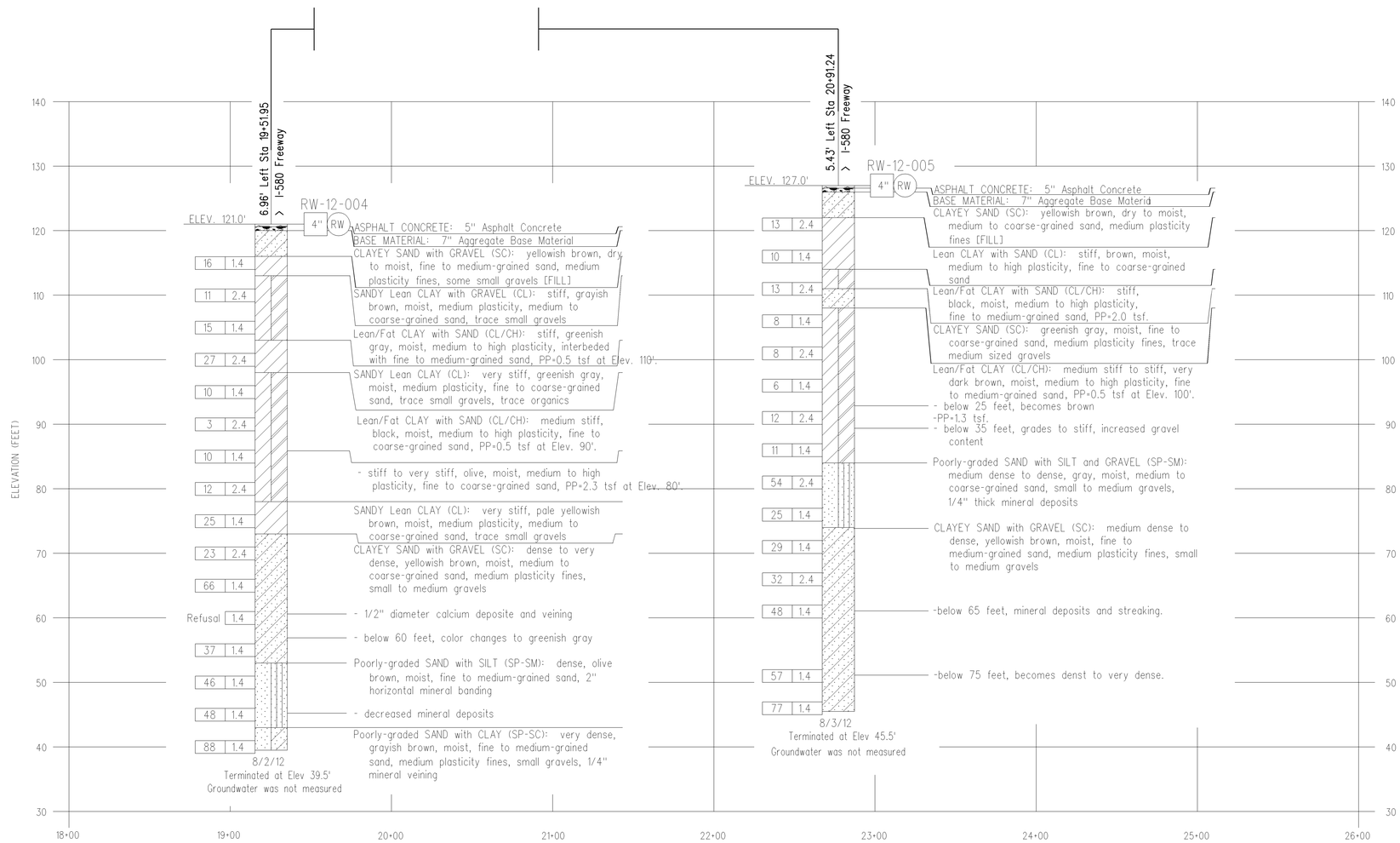

NOTES:

1. Borings excavated using a rotary wash drill rig equipped with an automatic trip hammer weighing 140 pounds falling 30 inches.
2. Standard Penetration Test Samples I.D.=1-3/8 in., O.D.=2 in., without liners.
3. "2.4" sampler has a 2-3/8 in. inside diameter and a 3 in. outside diameter (Modified Calif. Sampler) with brass liners.
4. This LOTB was prepared in accordance with the Caltrans Soil & Rock Logging, Classification and Presentation Manual (2010).
5. PP=unconfined compressive strength (tsf) as measured by pocket penetrometer.
6. N_{60} values reported.

PROFILE
Profile Scale: Horizontal 1"=40'
Vertical 1"=10'

B. Lee DESIGN OVERSIGHT 7-1-13 SIGN OFF DATE	DRAWN BY CHECKED BY	B. Egan M. Bajuniemi	M. Bajuniemi FIELD INVESTIGATION BY: DATE: 7-1-13	PREPARED FOR THE STATE OF CALIFORNIA DEPARTMENT OF TRANSPORTATION	Isaias Yalan PROJECT ENGINEER	BRIDGE NO. 30E0223 POST MILES 31.8

164TH AVENUE SOLDIER PILE WALL
LOG OF TEST BORINGS 2 OF 2

GS GEOTECHNICAL LOG OF TEST BORINGS SHEET (ENGLISH) (REV. 03/14/12)

ORIGINAL SCALE IN INCHES FOR REDUCED PLANS 0 1 2 3

UNIT:
PROJECT NUMBER & PHASE: 04000208701 CONTRACT NO.: 04-1SS044

DISREGARD PRINTS BEARING EARLIER REVISION DATES → 7-01-13

REVISION DATES | SHEET 9 | OF 9

FILE = 33e0223-z-lotb02.dgn

USERNAME => s114701 DATE PLOTTED => 01-APR-2014 TIME PLOTTED => 13:49