Dist	COUNTY	ROUTE	POST MILES TOTAL PROJECT	SHEET No.	TOTAL SHEETS
04	Ala	580	R4.9/R5.6	1	80

ACNHPI-580-1(064)E

STATE OF CALIFORNIA
DEPARTMENT OF TRANSPORTATION

PROJECT PLANS FOR CONSTRUCTION ON
STATE HIGHWAY
IN ALAMEDA COUNTY
NEAR LIVERMORE
FROM 1.1 MILE TO 0.4 MILE EAST
OF NORTH FLYNN ROAD OVERCROSSING

TO BE SUPPLEMENTED BY STANDARD PLANS DATED 2010

INDEX OF PLANS

SHEET No.	DESCRIPTION
1	TITLE SHEET AND LOCATION MAP
2 - 3	TYPICAL CROSS SECTIONS
4 - 5	LAYOUT
6 - 14	CONSTRUCTION DETAILS
15 - 17	TEMPORARY WATER POLLUTION CONTROL PLAN
18 - 21	DRAINAGE PLAN, PROFILES, DETAILS AND QUANTITIES
22	CONSTRUCTION AREA SIGNS
23 - 25	TRAFFIC HANDLING PLAN
26 - 29	PAVEMENT DELINEATION PLAN AND QUANTITIES
30	SUMMARY OF QUANTITIES
31 - 34	EROSION CONTROL LEGEND, PLAN AND QUANTITIES
35 - 37	LIGHTING
38 - 55	REVISED STANDARD PLANS
	STRUCTURE PLANS
56 - 80	NORTH FLYNN Rd SOLDIER PILE WALL WITH GROUND ANCHORS

THE STANDARD PLANS LIST APPLICABLE TO THIS CONTRACT IS INCLUDED IN THE NOTICE TO BIDDERS AND SPECIAL PROVISIONS BOOK.

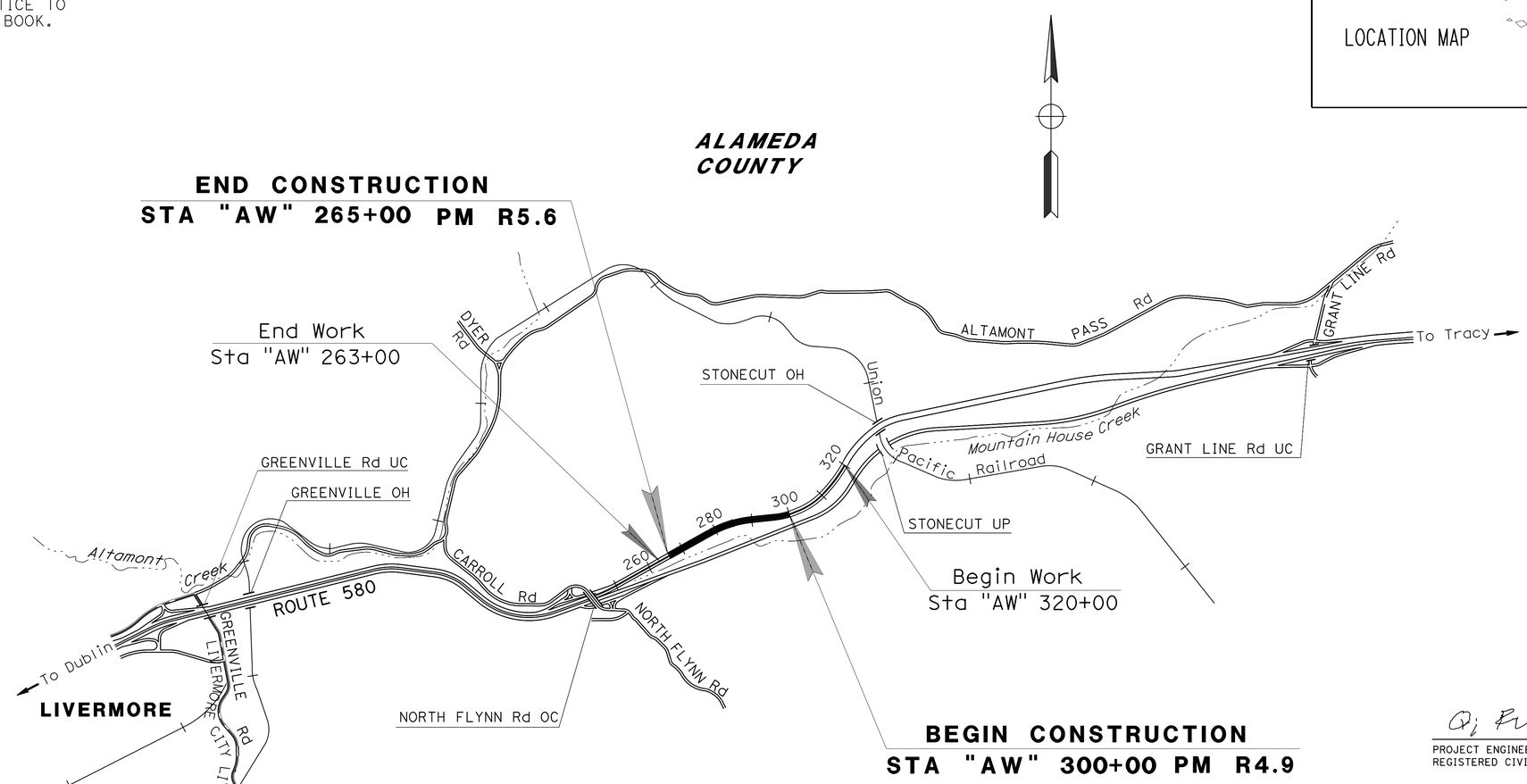

NO SCALE

THE CONTRACTOR SHALL POSSESS THE CLASS (OR CLASSES) OF LICENSE AS SPECIFIED IN THE "NOTICE TO BIDDERS."

PROJECT MANAGER: JAY HAGHPARAST
DESIGN MANAGER: KENDALL KITAMURA

Qi Fu 3/16/15
PROJECT ENGINEER REGISTERED CIVIL ENGINEER — DATE

May 4, 2015
PLANS APPROVAL DATE

REGISTERED PROFESSIONAL ENGINEER — Qi Fu — No. 73343 — Exp. 12-31-16 — CIVIL — STATE OF CALIFORNIA

THE STATE OF CALIFORNIA OR ITS OFFICERS OR AGENTS SHALL NOT BE RESPONSIBLE FOR THE ACCURACY OR COMPLETENESS OF SCANNED COPIES OF THIS PLAN SHEET.

CONTRACT No.	04-1SS034
PROJECT ID	0400020869

LAST REVISION 03-16-15 — DATE PLOTTED => 02-JUN-2015 — TIME PLOTTED => 10:30

Dist	COUNTY	ROUTE	POST MILES TOTAL PROJECT	SHEET No.	TOTAL SHEETS
04	Ala	580	R4.9/R5.6	2	80

Qi Fu 3/16/15
REGISTERED CIVIL ENGINEER DATE

5-4-15
PLANS APPROVAL DATE

REGISTERED PROFESSIONAL ENGINEER Qi Fu No. 73343 Exp. 12-31-16 CIVIL STATE OF CALIFORNIA

THE STATE OF CALIFORNIA OR ITS OFFICERS OR AGENTS SHALL NOT BE RESPONSIBLE FOR THE ACCURACY OR COMPLETENESS OF SCANNED COPIES OF THIS PLAN SHEET.

NOTES:

1. DIMENSIONS OF THE PAVEMENT STRUCTURES (STRUCTURAL SECTIONS) ARE SUBJECT TO TOLERANCES SPECIFIED IN THE STANDARD SPECIFICATIONS.
2. PLACE HMA-O ONLY WHEN PERMANENT PAVEMENT DELINEATION CAN BE PLACED.
3. SEE LAYOUT SHEETS FOR LOCATIONS OF MGS, CONCRETE BARRIER AND HMA DIKE.
4. SEE AS-BUILT FOR Exist GEOGRID PROPERTIES.

ABBREVIATIONS:

&	AND
DGAC	DENSE GRADE ASPHALT CONCRETE
HMA-O	HOT MIX ASPHALT-OPEN GRADED (OPEN GRADED FRICTION COURSE)

TYPICAL PAVEMENT STRUCTURE SECTIONS:

1
- 0.10' HMA-O
- 1.40' HMA (TYPE A)
- 2.50' CI 2 AB

2
- 0.10' OGFC
- 0.20' Min HMA (TYPE A)
- COLD PLANE 0.10' OGAC/AC

3
- 0.10' SHOULDER BACKING
- 1.00' CI 2 AB
- REMOVE AC PAVEMENT

LEGEND:

No. — STRUCTURAL SECTION NUMBER

REPLACE AC SURFACING

ROUTE 580 WB DESIGN DESIGNATION

(2015) AADT = 179,000 V = 70 MPH
(2035) AADT = 287,000 T = 9.33%
ESAL = 120,078,000 TI_{20} = 16.0

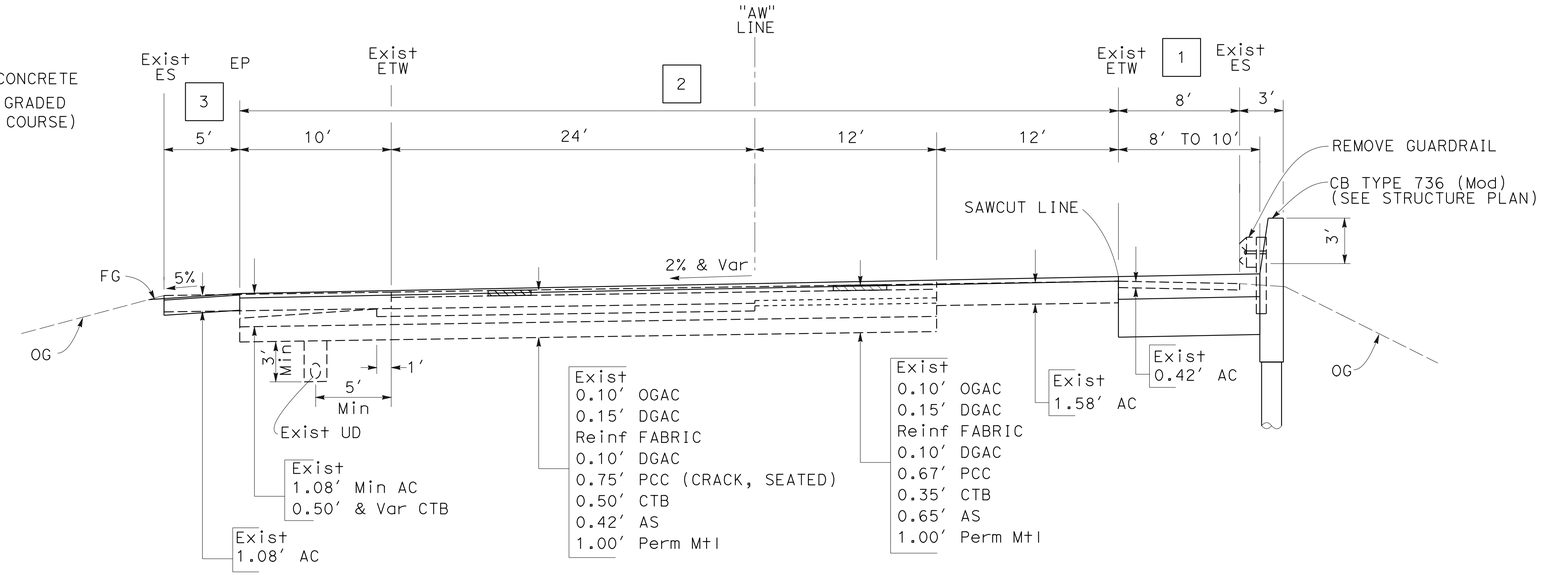

ROUTE 580
"AW" 271+50 TO 272+00
"AW" 284+01.50 TO 284+51.50

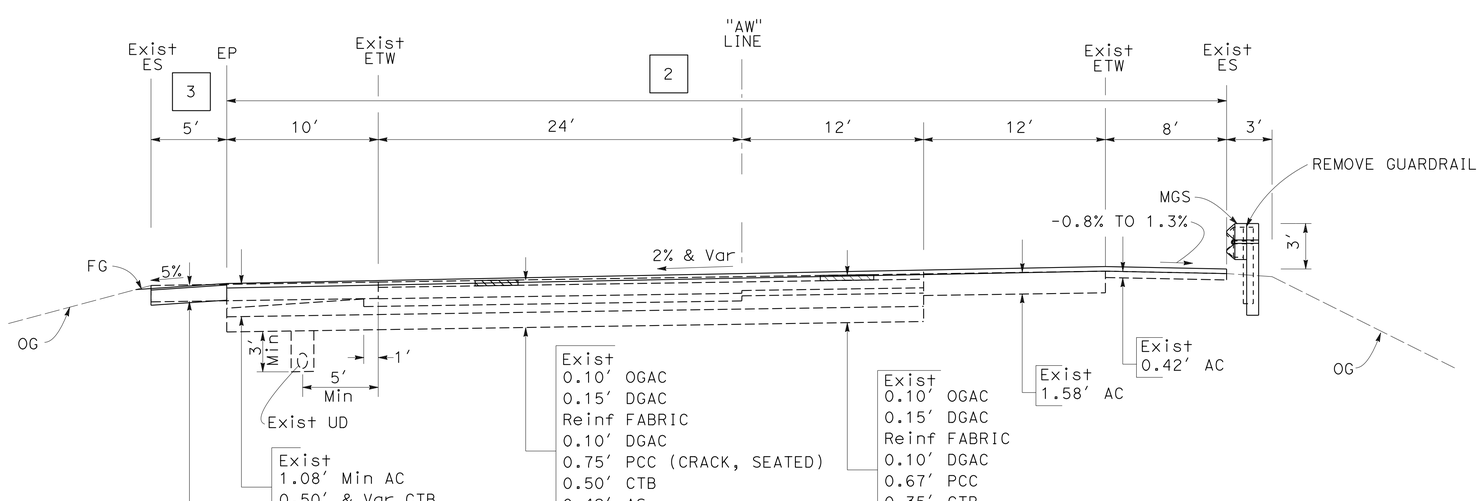

ROUTE 580
"AW" 270+50 TO 271+50
"AW" 284+51.50 TO 285+50

TYPICAL CROSS SECTIONS
NO SCALE

X-1

REVISED BY	DATE REVISED
QF	3/15/15

CALCULATED-DESIGNED BY: QI FU
CHECKED BY: KIRT MORET
FUNCTIONAL SUPERVISOR: KENDALL KITAMURA

STATE OF CALIFORNIA - DEPARTMENT OF TRANSPORTATION
Caltrans® DESIGN

LAST REVISION 03-16-15 | DATE PLOTTED => 02-JUN-2015 | TIME PLOTTED => 10:30

Dist	COUNTY	ROUTE	POST MILES TOTAL PROJECT	SHEET No.	TOTAL SHEETS
04	Ala	580	R4.9/R5.6	3	80

Qi Fu 3/16/15
REGISTERED CIVIL ENGINEER DATE

5-4-15
PLANS APPROVAL DATE

REGISTERED PROFESSIONAL ENGINEER
Qi Fu
No. 73343
Exp. 12-31-16
CIVIL
STATE OF CALIFORNIA

THE STATE OF CALIFORNIA OR ITS OFFICERS OR AGENTS SHALL NOT BE RESPONSIBLE FOR THE ACCURACY OR COMPLETENESS OF SCANNED COPIES OF THIS PLAN SHEET.

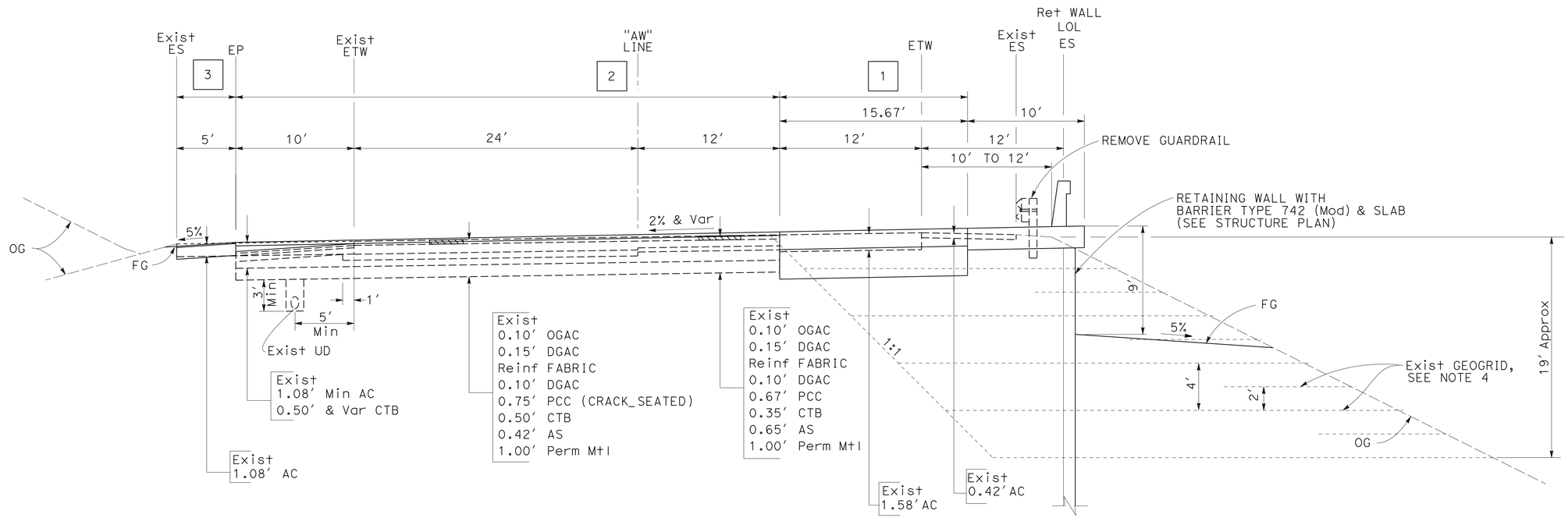

ROUTE 580
"AW" 272+00 TO 284+1.50

TYPICAL CROSS SECTIONS
NO SCALE

FOR NOTES, ABBREVIATIONS AND LEGEND, SEE SHEET X-1

X-2

STATE OF CALIFORNIA - DEPARTMENT OF TRANSPORTATION
Caltrans® **DESIGN**

FUNCTIONAL SUPERVISOR: KENDALL KITAMURA
CALCULATED-DESIGNED BY: QI FU
CHECKED BY: KIRT MORET
REVISED BY: QF
DATE REVISED: 3/15/15

LAST REVISION 03-16-15
DATE PLOTTED => 02-JUN-2015
TIME PLOTTED => 10:30

Dist	COUNTY	ROUTE	POST MILES TOTAL PROJECT	SHEET No.	TOTAL SHEETS
04	Ala	580	R4.9/R5.6	4	80

REGISTERED CIVIL ENGINEER 3/16/15 DATE

5-4-15
PLANS APPROVAL DATE

REGISTERED PROFESSIONAL ENGINEER Qi Fu No. 73343 Exp. 12-31-16 CIVIL STATE OF CALIFORNIA

THE STATE OF CALIFORNIA OR ITS OFFICERS OR AGENTS SHALL NOT BE RESPONSIBLE FOR THE ACCURACY OR COMPLETENESS OF SCANNED COPIES OF THIS PLAN SHEET.

NOTE:

FOR ACCURATE RIGHT OF WAY DATA, CONTACT RIGHT OF WAY ENGINEERING AT THE DISTRICT OFFICE.

NOTE:

1. SEE LOTB OF STRUCTURE PLANS FOR ADDITIONAL Exist WELL INFORMATION.

LEGEND:

- No. — STRUCTURAL SECTION NUMBER
- REPLACE AC SURFACING
- DESTROY WELL

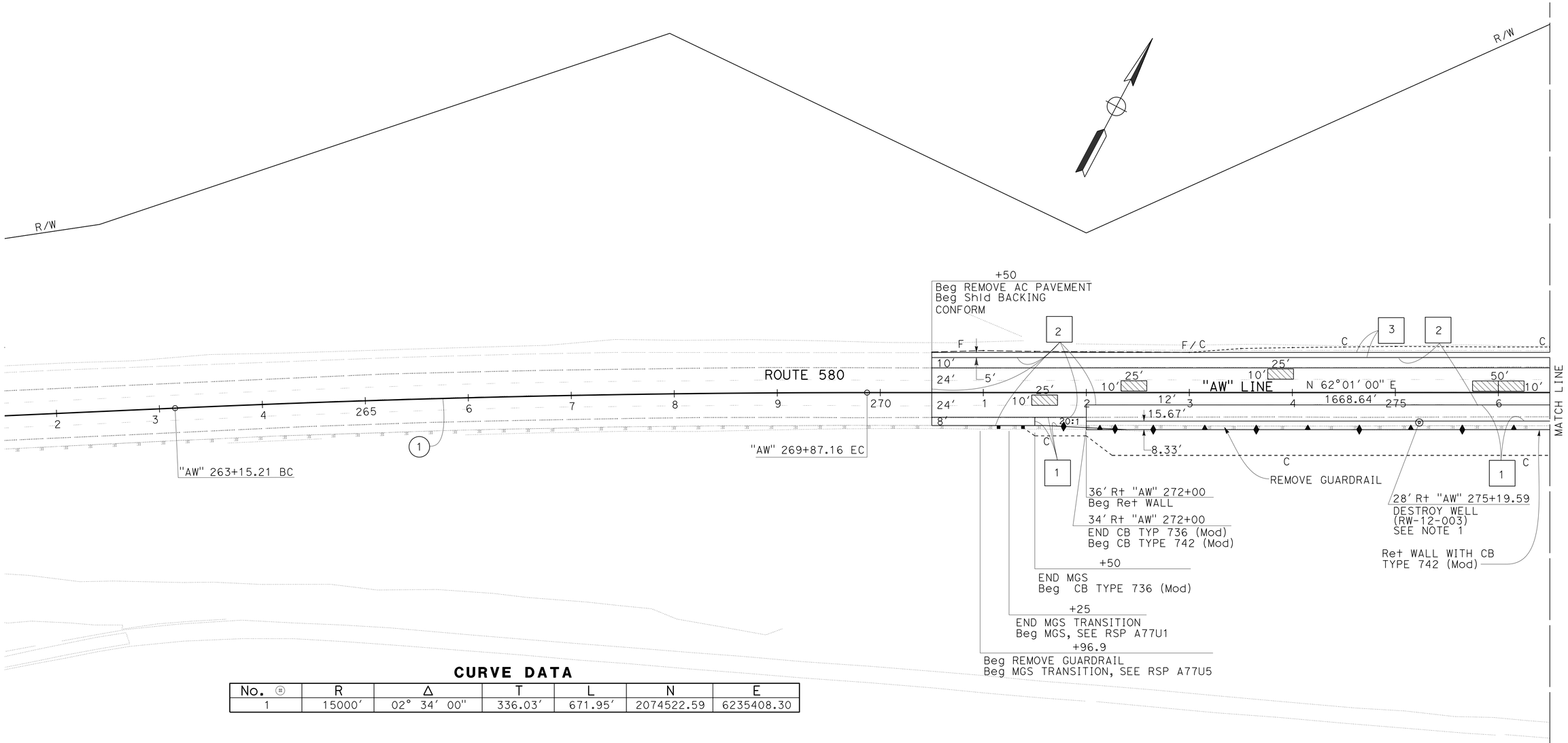

CURVE DATA

No. ⊕	R	Δ	T	L	N	E
1	15000′	02° 34′ 00″	336.03′	671.95′	2074522.59	6235408.30

LAYOUT

SCALE: 1″ = 50′

L-1

REVISED BY	DATE REVISED
QF	3/15/15

CALCULATED-DESIGNED BY	CHECKED BY
QI FU	KIRT MORET

FUNCTIONAL SUPERVISOR: KENDALL KITAMURA

STATE OF CALIFORNIA - DEPARTMENT OF TRANSPORTATION

Caltrans® **DESIGN**

LAST REVISION 03-16-15 | DATE PLOTTED => 02-JUN-2015 | TIME PLOTTED => 10:31

Dist	COUNTY	ROUTE	POST MILES TOTAL PROJECT	SHEET No.	TOTAL SHEETS
04	Ala	580	R4.9/R5.6	5	80

Qi Fu 3/16/15
REGISTERED CIVIL ENGINEER DATE

5-4-15
PLANS APPROVAL DATE

REGISTERED PROFESSIONAL ENGINEER Qi Fu No. 73343 Exp. 12-31-16 CIVIL STATE OF CALIFORNIA

THE STATE OF CALIFORNIA OR ITS OFFICERS OR AGENTS SHALL NOT BE RESPONSIBLE FOR THE ACCURACY OR COMPLETENESS OF SCANNED COPIES OF THIS PLAN SHEET.

NOTE:

FOR ACCURATE RIGHT OF WAY DATA, CONTACT RIGHT OF WAY ENGINEERING AT THE DISTRICT OFFICE.

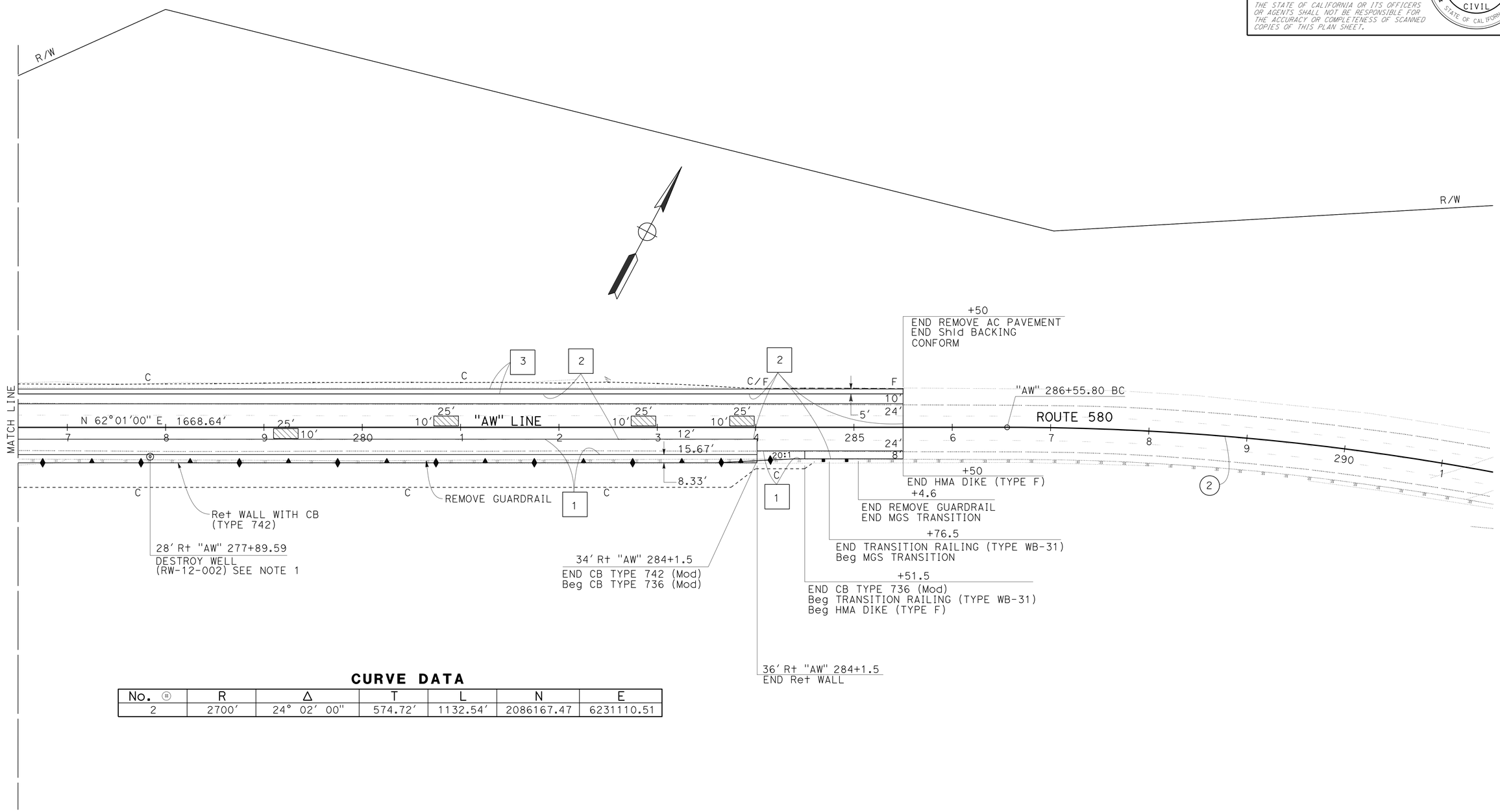

CURVE DATA

No. ⊕	R	Δ	T	L	N	E
2	2700'	24° 02' 00"	574.72'	1132.54'	2086167.47	6231110.51

FOR NOTES, ABBREVIATIONS AND LEGEND, SEE SHEET L-1

LAYOUT

SCALE: 1" = 50'

L-2

STATE OF CALIFORNIA - DEPARTMENT OF TRANSPORTATION
Caltrans DESIGN

FUNCTIONAL SUPERVISOR: KENDALL KITAMURA
CALCULATED-DESIGNED BY: QI FU
CHECKED BY: KIRT MORET
REVISED BY: QF
DATE REVISED: 3/15/15

LAST REVISION 03-16-15 | DATE PLOTTED => 02-JUN-2015 | TIME PLOTTED => 10:31

Dist	COUNTY	ROUTE	POST MILES TOTAL PROJECT	SHEET No.	TOTAL SHEETS
04	Ala	580	R4.9/R5.6	6	80

Qi Fu 3/16/15
REGISTERED CIVIL ENGINEER DATE

5-4-15
PLANS APPROVAL DATE

REGISTERED PROFESSIONAL ENGINEER Qi Fu No. 73343 Exp. 12-31-16 CIVIL STATE OF CALIFORNIA

THE STATE OF CALIFORNIA OR ITS OFFICERS OR AGENTS SHALL NOT BE RESPONSIBLE FOR THE ACCURACY OR COMPLETENESS OF SCANNED COPIES OF THIS PLAN SHEET.

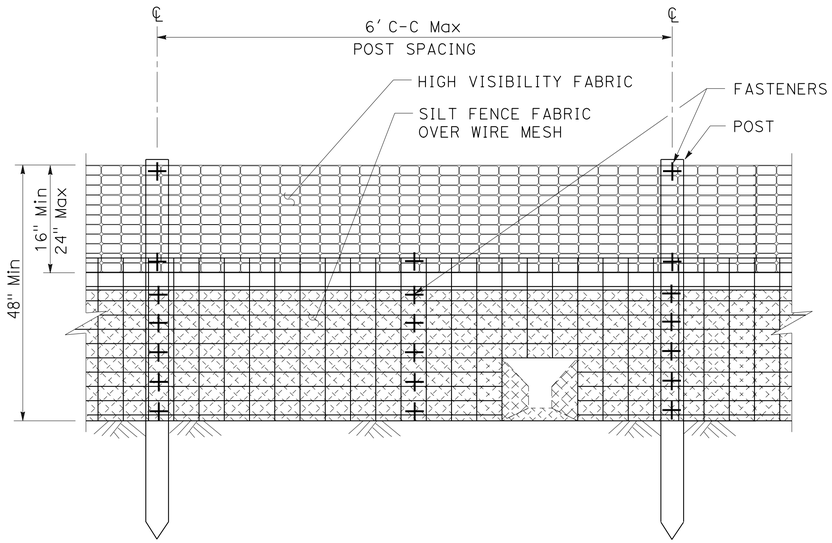

ELEVATION

AMPHIBIAN ONE-WAY FUNNEL
SPACED 150' ALONG FENCE

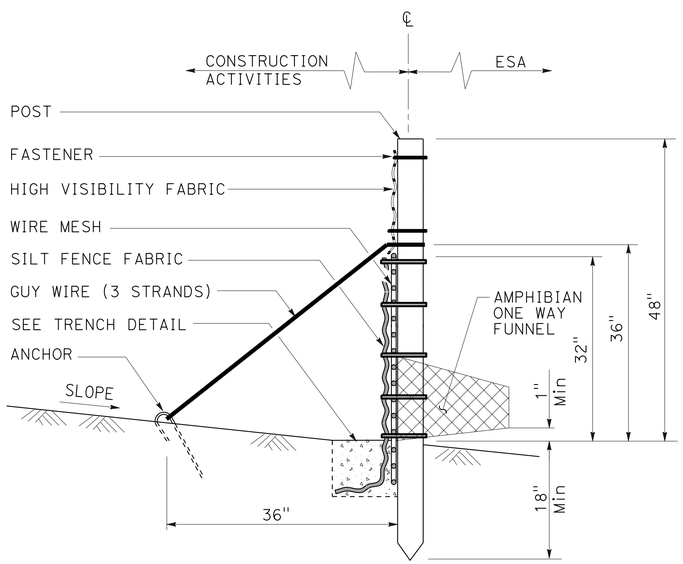

SECTION

TEMPORARY REINFORCED SILT FENCE

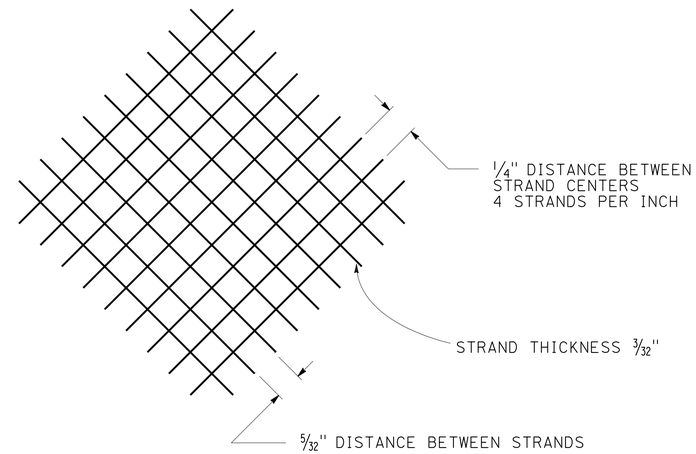

TYPICAL POLYMER MATRIX FABRIC DETAIL

(NOMINAL DIMENSIONS)

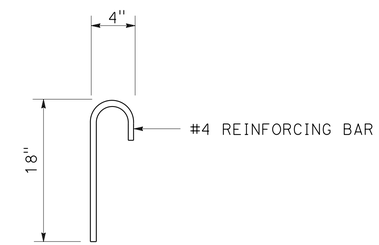

ANCHOR

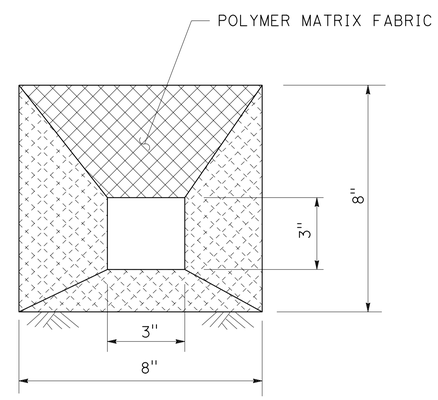

AMPHIBIAN ONE-WAY FUNNEL DETAIL

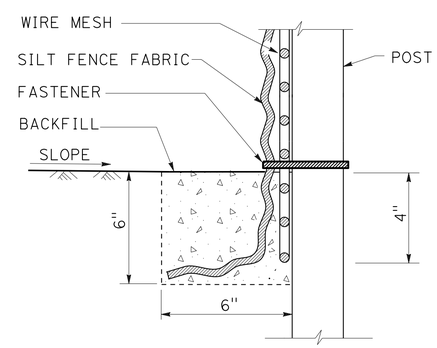

SECTION

TRENCH DETAIL

CONSTRUCTION DETAILS
TEMPORARY REINFORCED SILT FENCE
NO SCALE

C-1

QF	3/15/15	REVISED BY	DATE REVISED
QI FU	KIRT MORET	CALCULATED-DESIGNED BY	CHECKED BY
FUNCTIONAL SUPERVISOR	KENDALL KITAMURA		

STATE OF CALIFORNIA - DEPARTMENT OF TRANSPORTATION
Caltrans
DESIGN

LAST REVISION 06-23-14
DATE PLOTTED => 02-JUN-2015
TIME PLOTTED => 10:31

Dist	COUNTY	ROUTE	POST MILES TOTAL PROJECT	SHEET No.	TOTAL SHEETS
04	Ala	580	R4.9/R5.6	7	80

Qi Fu 3/16/15
REGISTERED CIVIL ENGINEER DATE

5-4-15
PLANS APPROVAL DATE

REGISTERED PROFESSIONAL ENGINEER
Qi Fu
No. 73343
Exp. 12-31-16
CIVIL
STATE OF CALIFORNIA

THE STATE OF CALIFORNIA OR ITS OFFICERS OR AGENTS SHALL NOT BE RESPONSIBLE FOR THE ACCURACY OR COMPLETENESS OF SCANNED COPIES OF THIS PLAN SHEET.

NOTE:

FOR ACCURATE RIGHT OF WAY DATA, CONTACT
RIGHT OF WAY ENGINEERING AT THE DISTRICT OFFICE.

LEGEND:

AREA FOR CONTRACTOR'S USE

ENVIRONMENTALLY SENSITIVE AREA (ESA) LIMIT LINE

TEMPORARY REINFORCED SILT FENCE

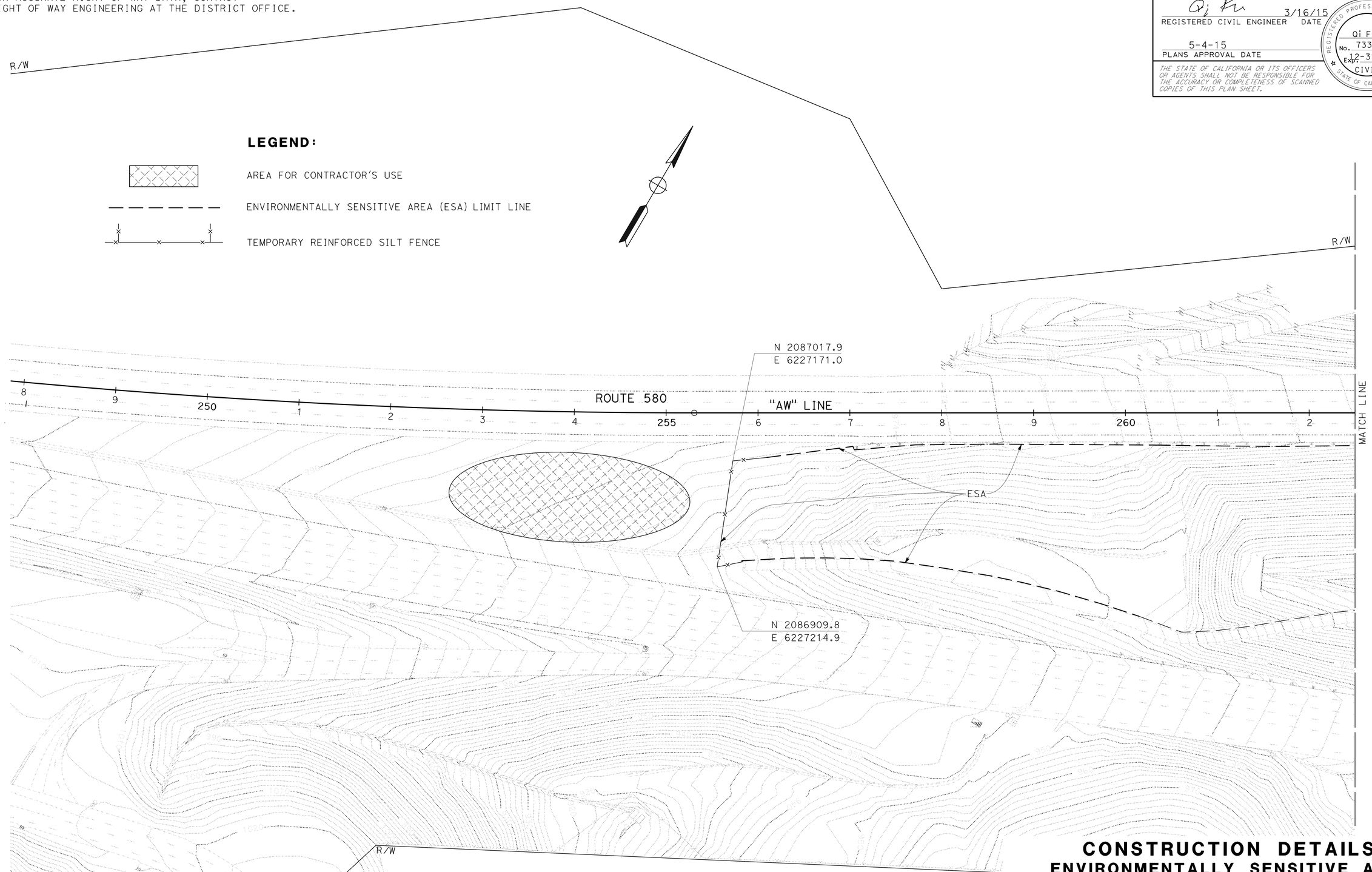

CONSTRUCTION DETAILS
ENVIRONMENTALLY SENSITIVE AREA

SCALE: 1" = 50'

C-2

REVISED BY: QF
DATE REVISED: 3/15/15
CALCULATED-DESIGNED BY: QI FU
CHECKED BY: KIRT MORET
FUNCTIONAL SUPERVISOR: KENDALL KITAMURA

STATE OF CALIFORNIA - DEPARTMENT OF TRANSPORTATION
Caltrans
DESIGN

LAST REVISION 02-11-15
DATE PLOTTED => 02-JUN-2015
TIME PLOTTED => 10:31

Dist	COUNTY	ROUTE	POST MILES TOTAL PROJECT	SHEET No.	TOTAL SHEETS
04	Ala	580	R4.9/R5.6	8	80

Qi Fu 3/16/15
REGISTERED CIVIL ENGINEER DATE

5-4-15
PLANS APPROVAL DATE

REGISTERED PROFESSIONAL ENGINEER
Qi Fu
No. 73343
Exp. 12-31-16
CIVIL
STATE OF CALIFORNIA

THE STATE OF CALIFORNIA OR ITS OFFICERS OR AGENTS SHALL NOT BE RESPONSIBLE FOR THE ACCURACY OR COMPLETENESS OF SCANNED COPIES OF THIS PLAN SHEET.

NOTE:

FOR ACCURATE RIGHT OF WAY DATA, CONTACT RIGHT OF WAY ENGINEERING AT THE DISTRICT OFFICE.

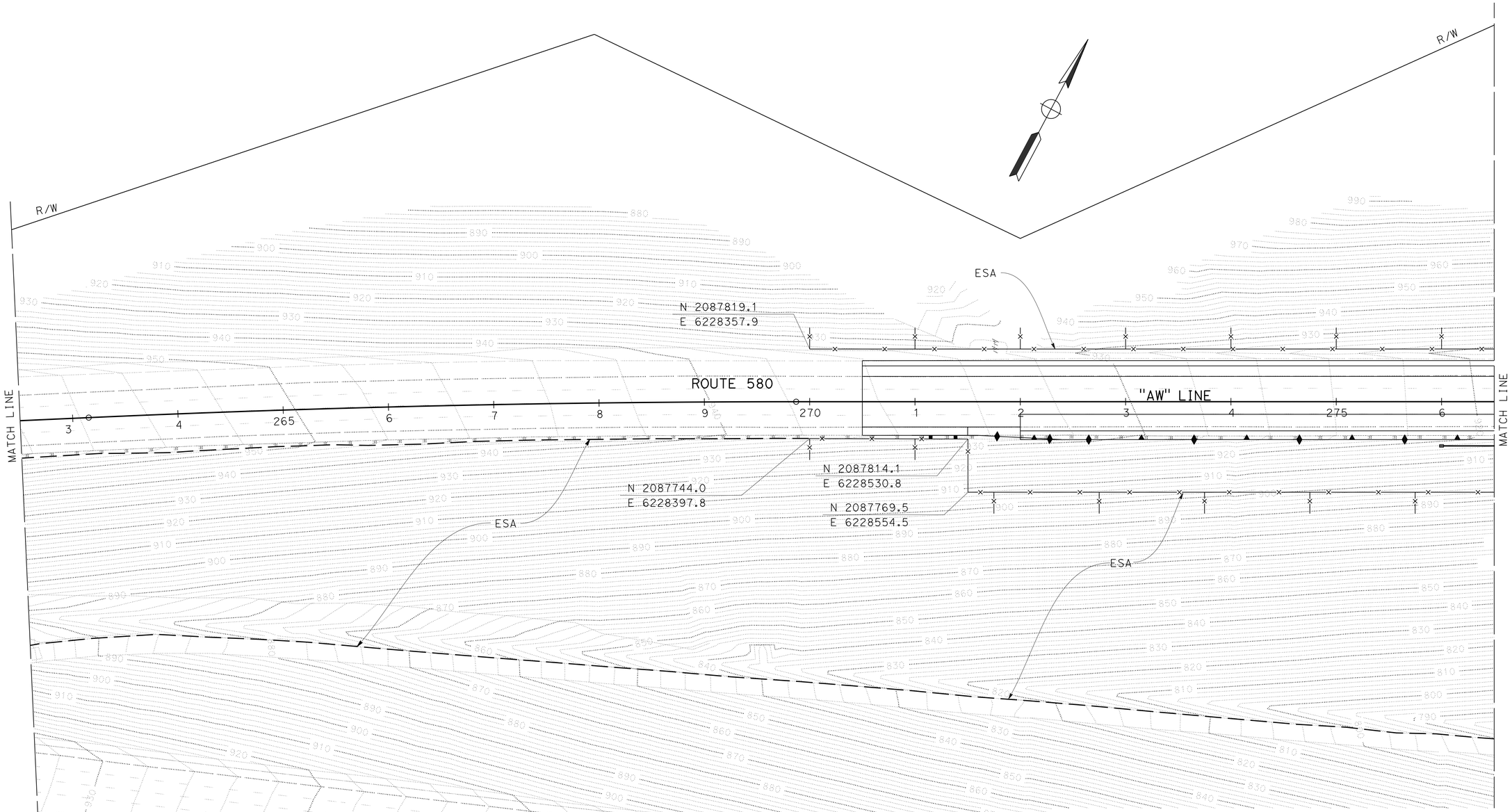

FOR NOTES, ABBREVIATIONS AND LEGEND, SEE SHEET C-2

CONSTRUCTION DETAILS
ENVIRONMENTALLY SENSITIVE AREA

SCALE: 1" = 50'

C-3

REVISED BY	DATE REVISED
QF	3/15/15

CALCULATED-DESIGNED BY: QI FU
CHECKED BY: KIRT MORET
FUNCTIONAL SUPERVISOR: KENDALL KITAMURA

STATE OF CALIFORNIA - DEPARTMENT OF TRANSPORTATION
Caltrans
DESIGN

LAST REVISION 07-08-14
DATE PLOTTED => 02-JUN-2015
TIME PLOTTED => 10:31

Dist	COUNTY	ROUTE	POST MILES TOTAL PROJECT	SHEET No.	TOTAL SHEETS
04	Ala	580	R4.9/R5.6	9	80

Qi Fu 3/16/15
REGISTERED CIVIL ENGINEER DATE

5-4-15
PLANS APPROVAL DATE

REGISTERED PROFESSIONAL ENGINEER Qi Fu No. 73343 Exp. 12-31-16 CIVIL STATE OF CALIFORNIA

THE STATE OF CALIFORNIA OR ITS OFFICERS OR AGENTS SHALL NOT BE RESPONSIBLE FOR THE ACCURACY OR COMPLETENESS OF SCANNED COPIES OF THIS PLAN SHEET.

NOTE:

FOR ACCURATE RIGHT OF WAY DATA, CONTACT RIGHT OF WAY ENGINEERING AT THE DISTRICT OFFICE.

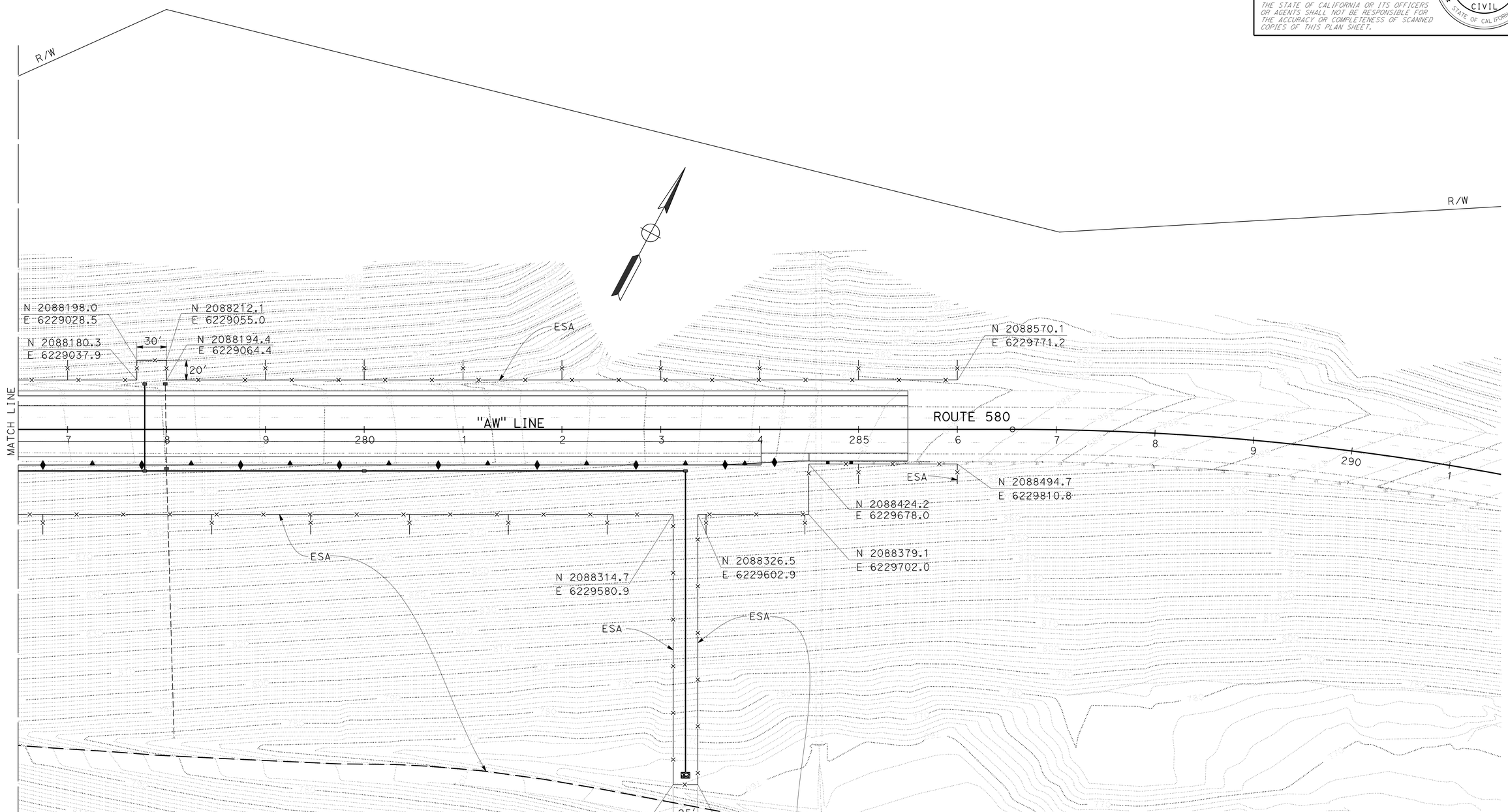

FOR NOTES, ABBREVIATIONS AND LEGEND, SEE SHEET C-2

CONSTRUCTION DETAILS
ENVIRONMENTALLY SENSITIVE AREA

SCALE: 1" = 50'

C-4

STATE OF CALIFORNIA - DEPARTMENT OF TRANSPORTATION
Caltrans®
DESIGN

FUNCTIONAL SUPERVISOR: KENDALL KITAMURA
CALCULATED-DESIGNED BY: QI FU
CHECKED BY: KIRT MORET
REVISED BY: QF
DATE REVISED: 3/15/15

LAST REVISION 12-16-14
DATE PLOTTED => 02-JUN-2015
TIME PLOTTED => 10:31

BORDER LAST REVISED 7/2/2010
USERNAME => s129144
DGN FILE => 0400020869ga004.dgn
RELATIVE BORDER SCALE IS IN INCHES 0 1 2 3
UNIT 0736
PROJECT NUMBER & PHASE 04000208691

Dist	COUNTY	ROUTE	POST MILES TOTAL PROJECT	SHEET No.	TOTAL SHEETS
04	Ala	580	R4.9/R5.6	10	80

Qi Fu 3/16/15
REGISTERED CIVIL ENGINEER DATE

5-4-15
PLANS APPROVAL DATE

REGISTERED PROFESSIONAL ENGINEER Qi Fu No. 73343 Exp. 12-31-16 CIVIL STATE OF CALIFORNIA

THE STATE OF CALIFORNIA OR ITS OFFICERS OR AGENTS SHALL NOT BE RESPONSIBLE FOR THE ACCURACY OR COMPLETENESS OF SCANNED COPIES OF THIS PLAN SHEET.

NOTE:

FOR ACCURATE RIGHT OF WAY DATA, CONTACT RIGHT OF WAY ENGINEERING AT THE DISTRICT OFFICE.

NOTE:

1. ALL ELEVATIONS ARE 50' APART UNLESS OTHERWISE NOTED.

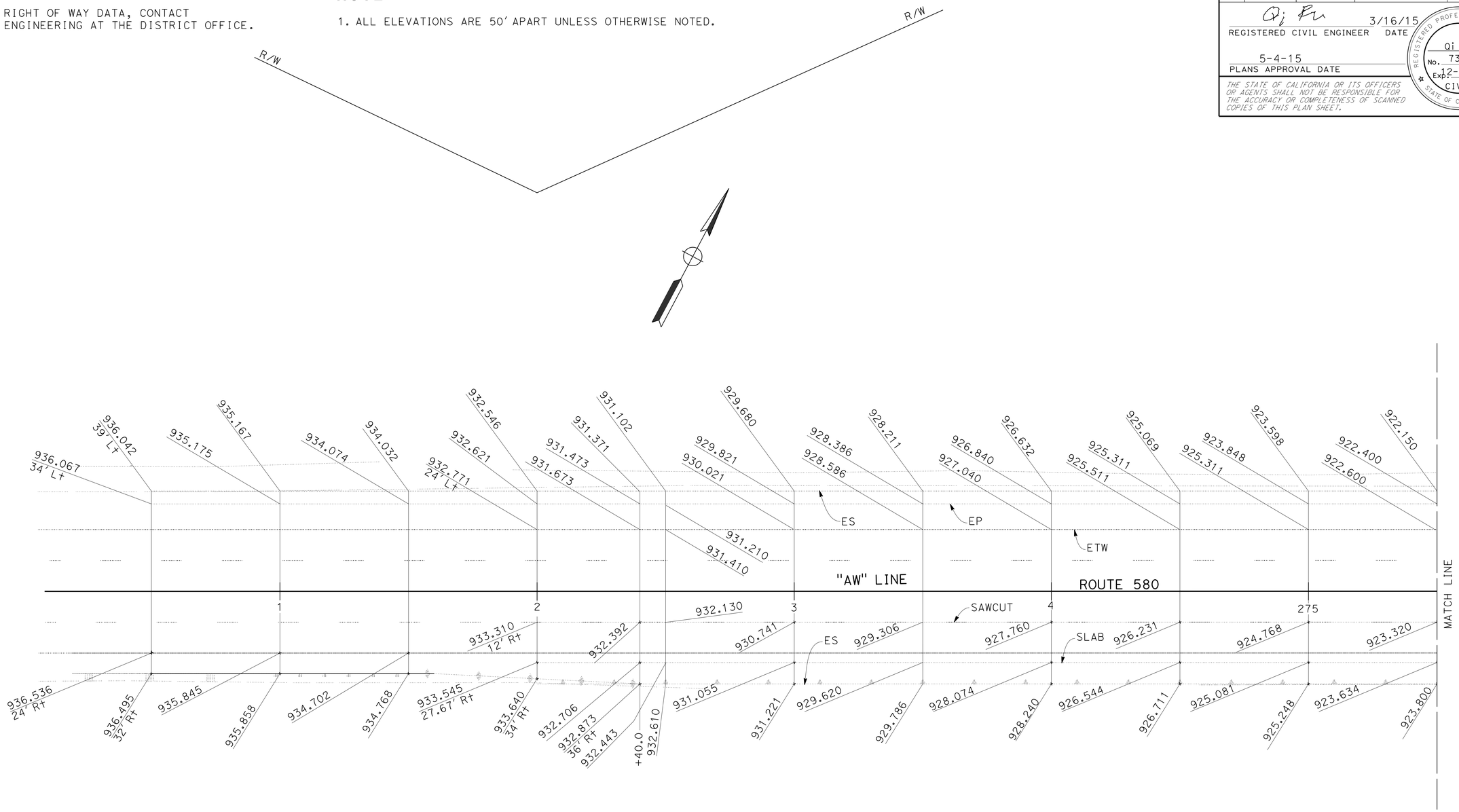

CONSTRUCTION DETAILS
PAVEMENT ELEVATION PLAN
SCALE: 1" = 20'

APPROVED FOR PAVEMENT ELEVATION WORK ONLY

C-5

REVISED BY	QF
DATE REVISED	3/15/15
CALCULATED-DESIGNED BY	QI FU
CHECKED BY	KIRT MORET
FUNCTIONAL SUPERVISOR	KENDALL KITAMURA

STATE OF CALIFORNIA - DEPARTMENT OF TRANSPORTATION
Caltrans
DESIGN

LAST REVISION 12-18-14 | DATE PLOTTED => 02-JUN-2015 | TIME PLOTTED => 10:31

Dist	COUNTY	ROUTE	POST MILES TOTAL PROJECT	SHEET No.	TOTAL SHEETS
04	Ala	580	R4.9/R5.6	11	80

Qi Fu 3/16/15
REGISTERED CIVIL ENGINEER DATE

5-4-15
PLANS APPROVAL DATE

REGISTERED PROFESSIONAL ENGINEER
Qi Fu
No. 73343
Exp. 12-31-16
CIVIL
STATE OF CALIFORNIA

THE STATE OF CALIFORNIA OR ITS OFFICERS OR AGENTS SHALL NOT BE RESPONSIBLE FOR THE ACCURACY OR COMPLETENESS OF SCANNED COPIES OF THIS PLAN SHEET.

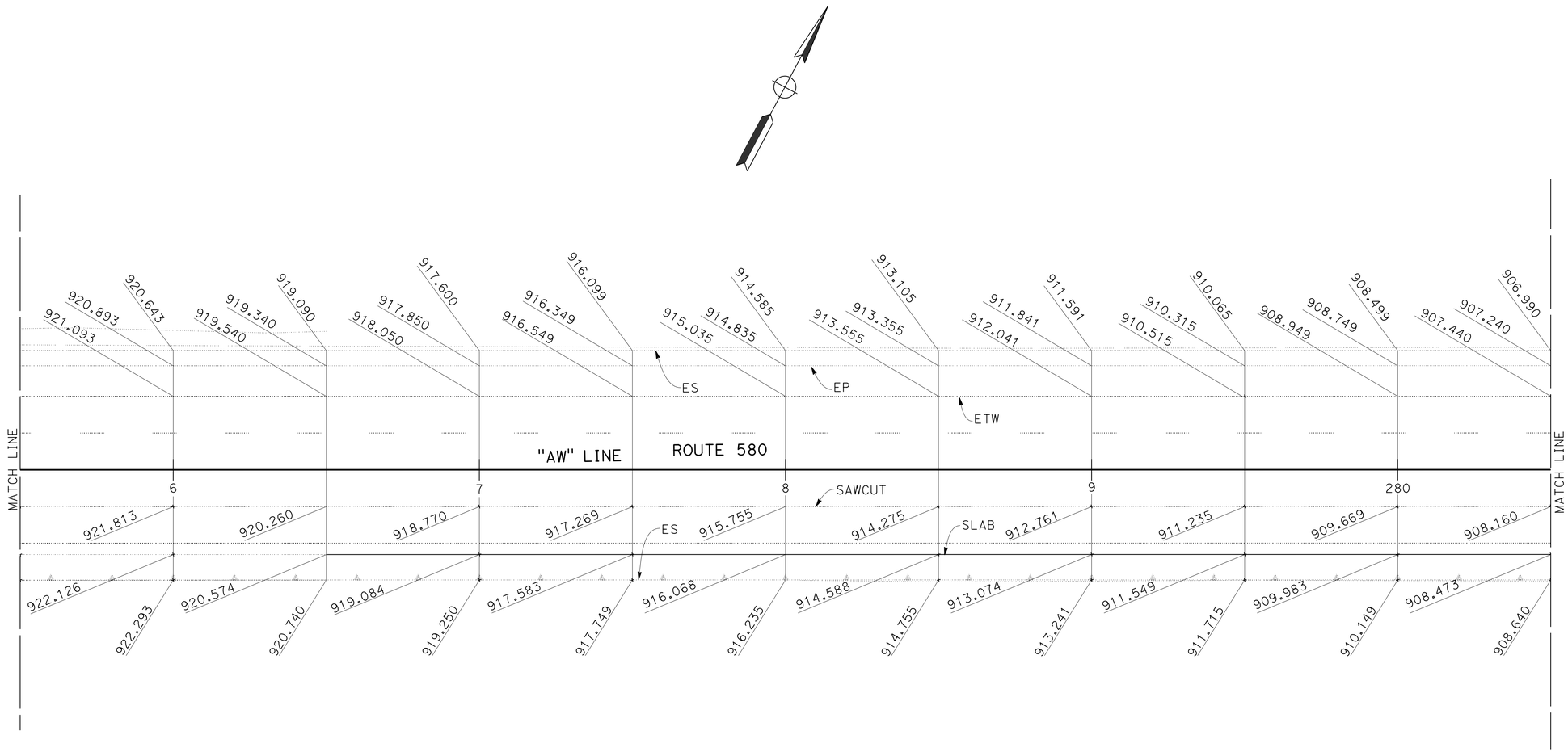

APPROVED FOR PAVEMENT ELEVATION WORK ONLY

FOR NOTES, SEE SHEET C-5

CONSTRUCTION DETAILS
PAVEMENT ELEVATION PLAN
SCALE: 1" = 20'

C-6

CALCULATED-DESIGNED BY	QI FU	REVISED BY	QF
CHECKED BY	KIRT MORET	DATE REVISED	3/15/15

FUNCTIONAL SUPERVISOR: KENDALL KITAMURA

STATE OF CALIFORNIA - DEPARTMENT OF TRANSPORTATION
Caltrans
DESIGN

LAST REVISION 11-03-14
DATE PLOTTED => 02-JUN-2015
TIME PLOTTED => 10:31

Dist	COUNTY	ROUTE	POST MILES TOTAL PROJECT	SHEET No.	TOTAL SHEETS
04	Ala	580	R4.9/R5.6	12	80

Qi Fu 3/16/15
REGISTERED CIVIL ENGINEER DATE

5-4-15
PLANS APPROVAL DATE

REGISTERED PROFESSIONAL ENGINEER
Qi Fu
No. 73343
Exp. 12-31-16
CIVIL
STATE OF CALIFORNIA

THE STATE OF CALIFORNIA OR ITS OFFICERS OR AGENTS SHALL NOT BE RESPONSIBLE FOR THE ACCURACY OR COMPLETENESS OF SCANNED COPIES OF THIS PLAN SHEET.

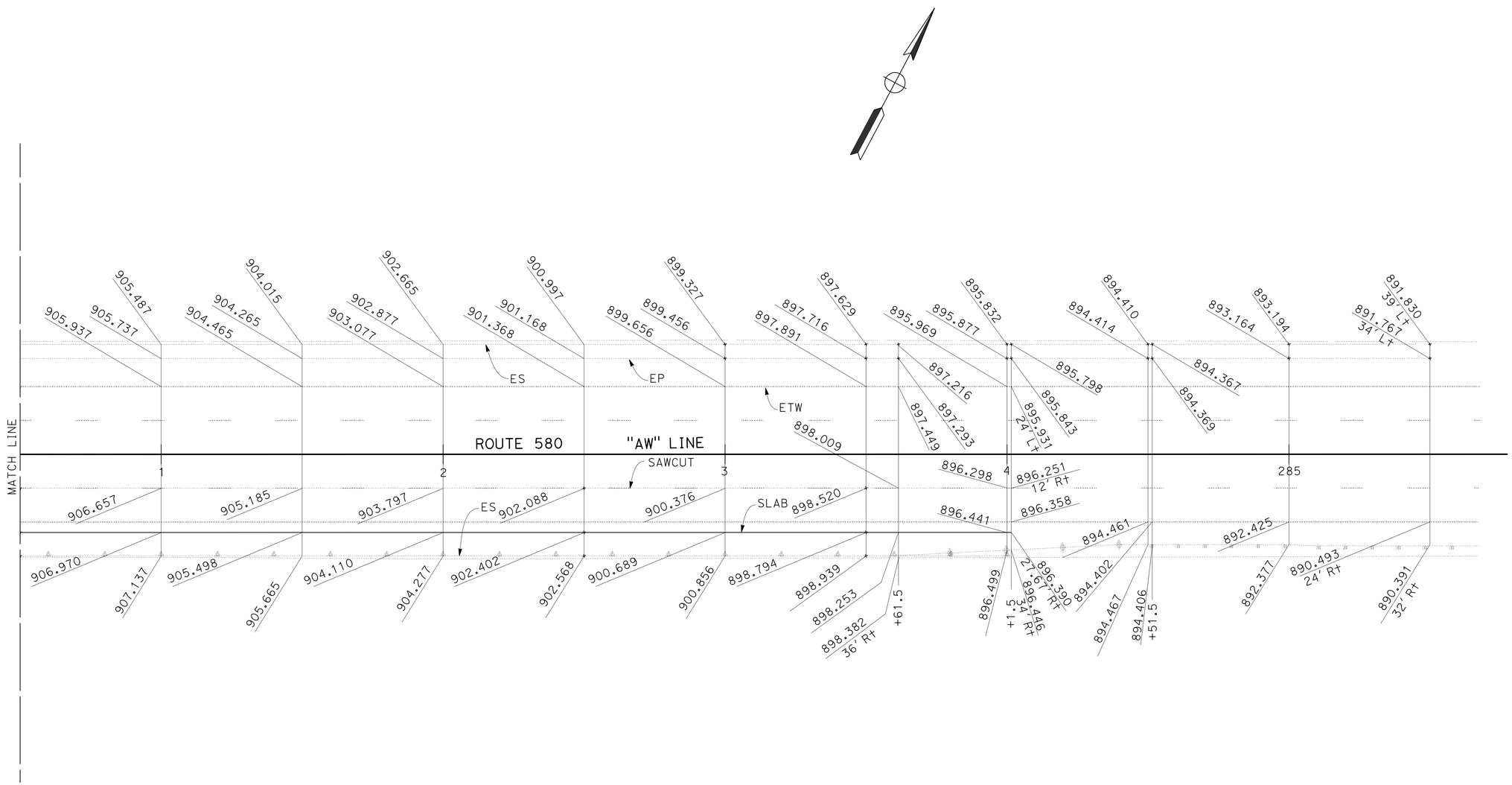

CONSTRUCTION DETAILS
PAVEMENT ELEVATION PLAN
SCALE: 1" = 20'

APPROVED FOR PAVEMENT ELEVATION WORK ONLY

FOR NOTES, SEE SHEET C-5

C-7

STATE OF CALIFORNIA - DEPARTMENT OF TRANSPORTATION
Caltrans
DESIGN

FUNCTIONAL SUPERVISOR: KENDALL KITAMURA
CALCULATED-DESIGNED BY: QI FU
CHECKED BY: KIRT MORET
REVISED BY: QF
DATE REVISED: 3/15/15

LAST REVISION 12-18-14
DATE PLOTTED => 02-JUN-2015
TIME PLOTTED => 10:31

Dist	COUNTY	ROUTE	POST MILES TOTAL PROJECT	SHEET No.	TOTAL SHEETS
04	Ala	580	R4.9/R5.6	13	80

Qi Fu 3/16/15
REGISTERED CIVIL ENGINEER DATE

5-4-15
PLANS APPROVAL DATE

REGISTERED PROFESSIONAL ENGINEER
Qi Fu
No. 73343
Exp. 12-31-16
CIVIL
STATE OF CALIFORNIA

THE STATE OF CALIFORNIA OR ITS OFFICERS OR AGENTS SHALL NOT BE RESPONSIBLE FOR THE ACCURACY OR COMPLETENESS OF SCANNED COPIES OF THIS PLAN SHEET.

LEGEND:

COLD PLANE ASPHALT CONCRETE PAVEMENT

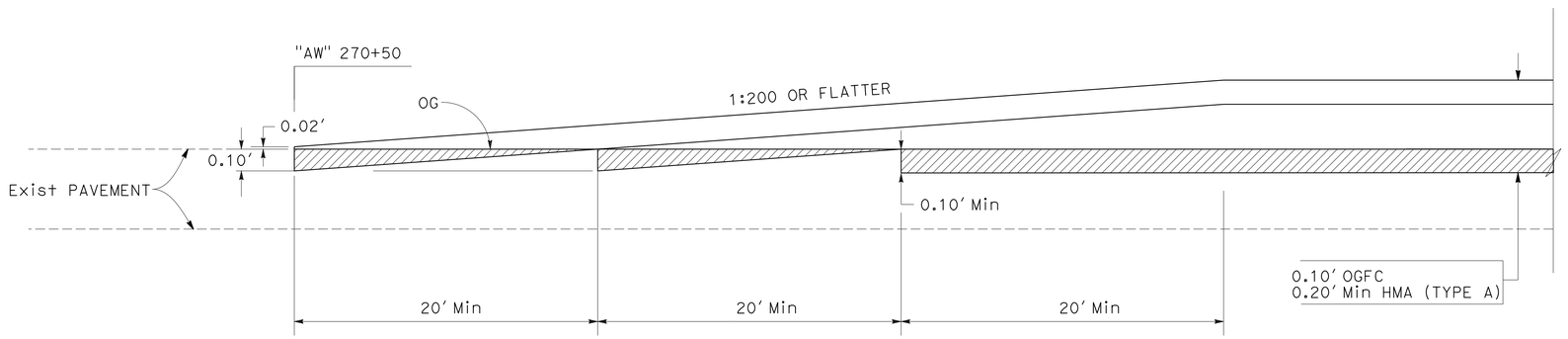

PAVEMENT TRANSITION TAPER AT "AW" 270+50

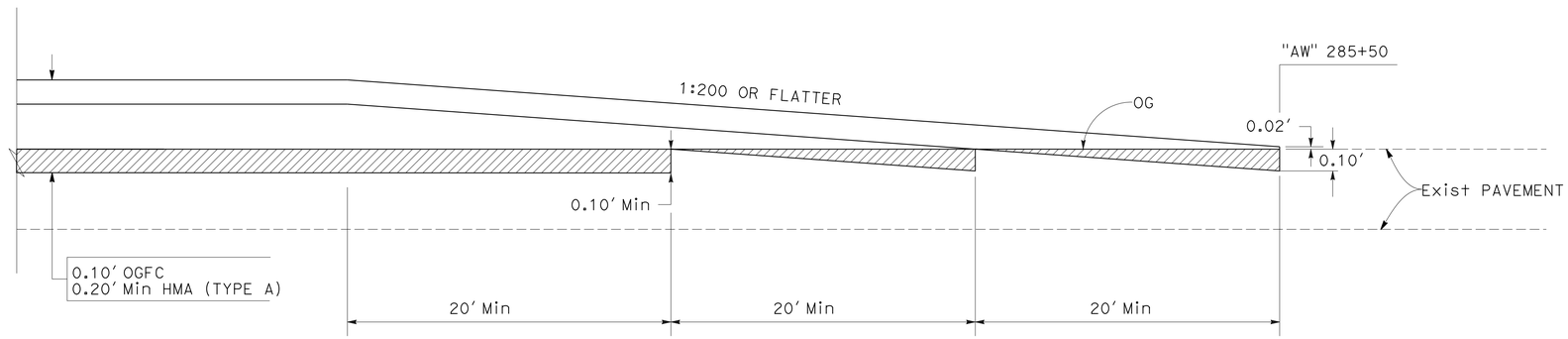

PAVEMENT TRANSITION TAPER AT "AW" 285+50

CONSTRUCTION DETAILS

NO SCALE

C-8

STATE OF CALIFORNIA - DEPARTMENT OF TRANSPORTATION
Caltrans® DESIGN

FUNCTIONAL SUPERVISOR: KENDALL KITAMURA
CALCULATED-DESIGNED BY: QI FU
CHECKED BY: KIRT MORET
REVISED BY: QF
DATE REVISED: 3/15/15

LAST REVISION 03-16-15
DATE PLOTTED => 02-JUN-2015
TIME PLOTTED => 10:31

Dist	COUNTY	ROUTE	POST MILES TOTAL PROJECT	SHEET No.	TOTAL SHEETS
04	Ala	580	R4.9/R5.6	14	80

Qi Fu 3/16/15
REGISTERED CIVIL ENGINEER DATE

5-4-15
PLANS APPROVAL DATE

REGISTERED PROFESSIONAL ENGINEER
Qi Fu
No. 73343
Exp. 12-31-16
CIVIL
STATE OF CALIFORNIA

THE STATE OF CALIFORNIA OR ITS OFFICERS OR AGENTS SHALL NOT BE RESPONSIBLE FOR THE ACCURACY OR COMPLETENESS OF SCANNED COPIES OF THIS PLAN SHEET.

LEGEND:

- ROADWAY EXCAVATION
- ROADWAY EMBANKMENT
- STRUCTURE EXCAVATION (SOLDIER PILE WALL), SEE STRUCTURE PLAN
- STRUCTURE BACKFILL (SOLDIER PILE WALL), SEE STRUCTURE PLAN

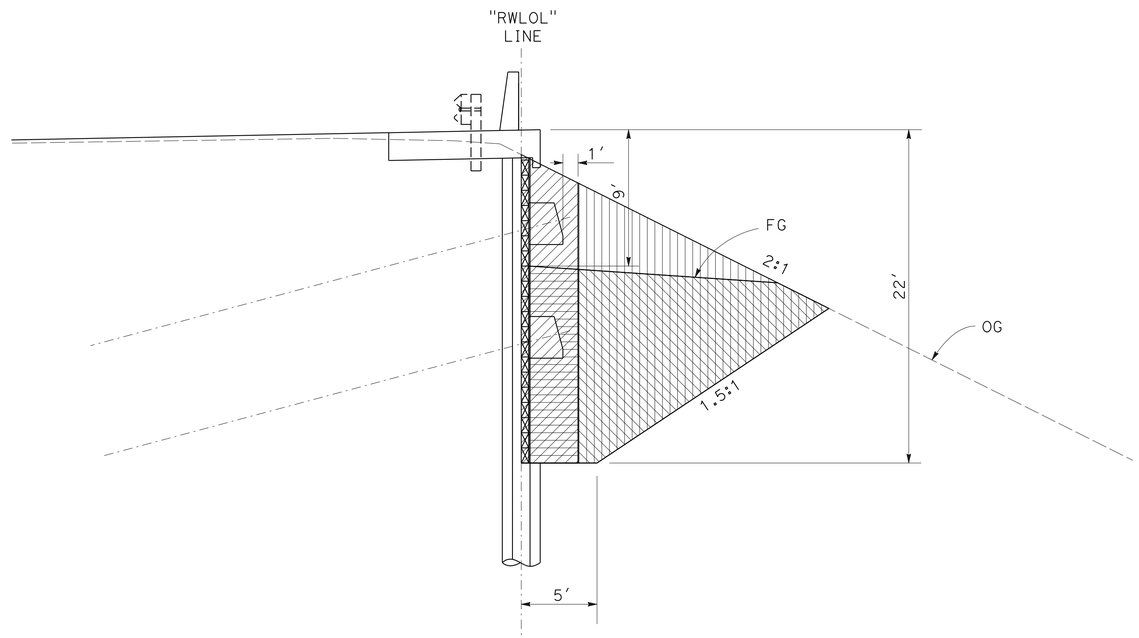

CONSTRUCTION DETAILS
RETAINING WALL EARTHWORK LIMITS
NO SCALE

C-9

STATE OF CALIFORNIA - DEPARTMENT OF TRANSPORTATION
Caltrans®
DESIGN

FUNCTIONAL SUPERVISOR: KENDALL KITAMURA
CALCULATED-DESIGNED BY: QI FU
CHECKED BY: KIRT MORET
REVISED BY: QF
DATE REVISED: 3/15/15

LAST REVISION 03-16-15
DATE PLOTTED => 02-JUN-2015
TIME PLOTTED => 10:31

Dist	COUNTY	ROUTE	POST MILES TOTAL PROJECT	SHEET No.	TOTAL SHEETS
04	Ala	580	R4.9/R5.6	15	80

RESIGNED CIVIL ENGINEER 3/20/15 DATE

5-4-15
PLANS APPROVAL DATE

REGISTERED PROFESSIONAL ENGINEER Sharon X. Yuan No. 58701 Exp. 12-31-16 CIVIL STATE OF CALIFORNIA

THE STATE OF CALIFORNIA OR ITS OFFICERS OR AGENTS SHALL NOT BE RESPONSIBLE FOR THE ACCURACY OR COMPLETENESS OF SCANNED COPIES OF THIS PLAN SHEET.

NOTE:

FOR ACCURATE RIGHT OF WAY DATA, CONTACT RIGHT OF WAY ENGINEERING AT THE DISTRICT OFFICE.

LEGEND:

ENVIRONMENTALLY SENSITIVE AREA (ESA) LIMIT LINE

TEMPORARY HYDRAULIC MULCH

TEMPORARY REINFORCED SILT FENCE

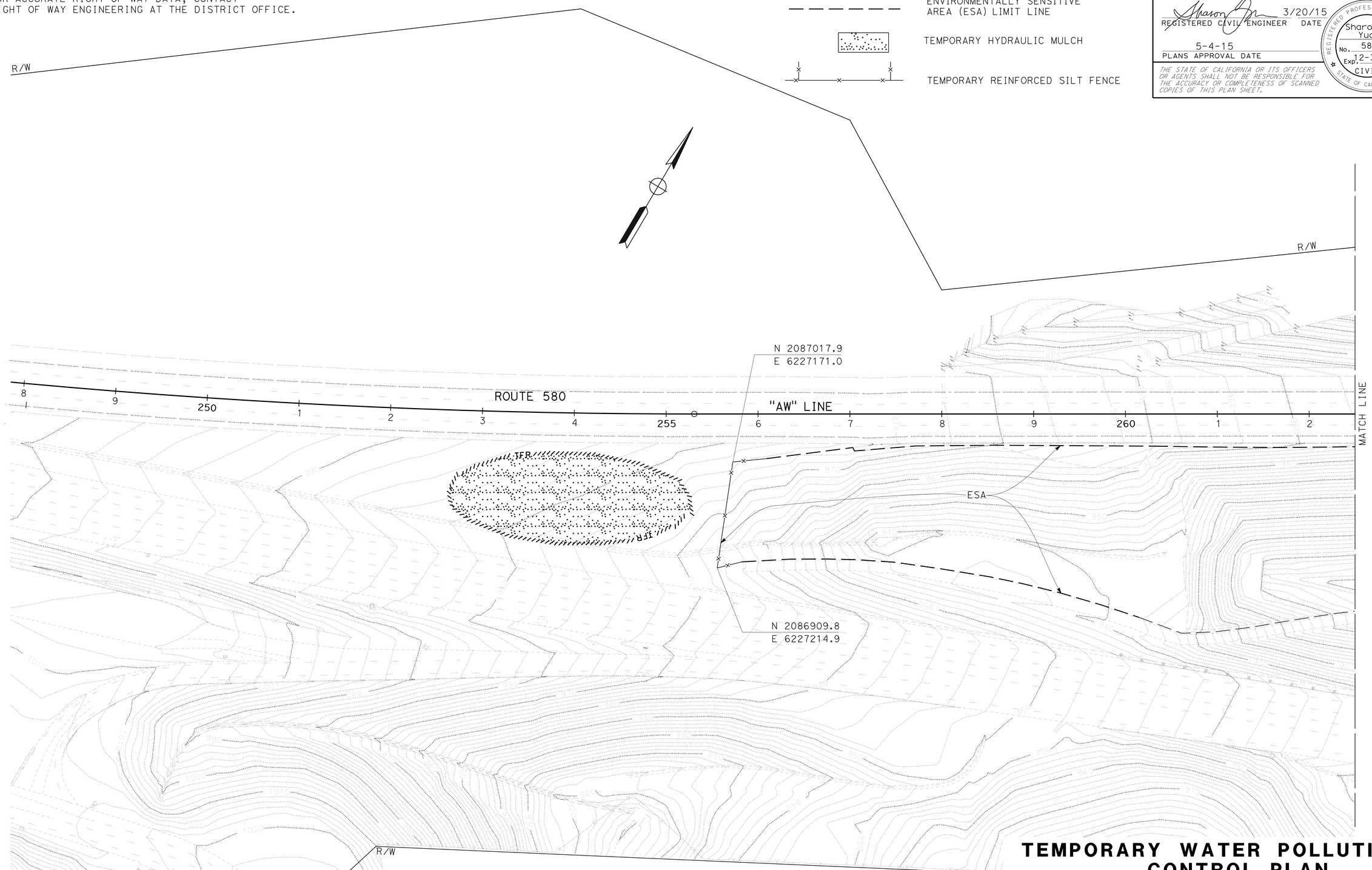

TEMPORARY WATER POLLUTION CONTROL PLAN

SCALE: 1" = 50'

WPC-1

STATE OF CALIFORNIA - DEPARTMENT OF TRANSPORTATION

Caltrans® **WATER QUALITY**

FUNCTIONAL SUPERVISOR: KAMRAN NAKHJIRI

CALCULATED-DESIGNED BY: SHARON YUAN

CHECKED BY: QI FU

REVISED BY: SY

DATE REVISED: 3/20/15

LAST REVISION 12-19-14

DATE PLOTTED => 02-JUN-2015

TIME PLOTTED => 10:31

Dist	COUNTY	ROUTE	POST MILES TOTAL PROJECT	SHEET No.	TOTAL SHEETS
04	Ala	580	R4.9/R5.6	16	80

REGISTERED CIVIL ENGINEER 3/20/15 DATE

5-4-15
PLANS APPROVAL DATE

REGISTERED PROFESSIONAL ENGINEER Sharon X. Yuan No. 58701 Exp.2-31-16 CIVIL STATE OF CALIFORNIA

THE STATE OF CALIFORNIA OR ITS OFFICERS OR AGENTS SHALL NOT BE RESPONSIBLE FOR THE ACCURACY OR COMPLETENESS OF SCANNED COPIES OF THIS PLAN SHEET.

NOTE:

FOR ACCURATE RIGHT OF WAY DATA, CONTACT RIGHT OF WAY ENGINEERING AT THE DISTRICT OFFICE.

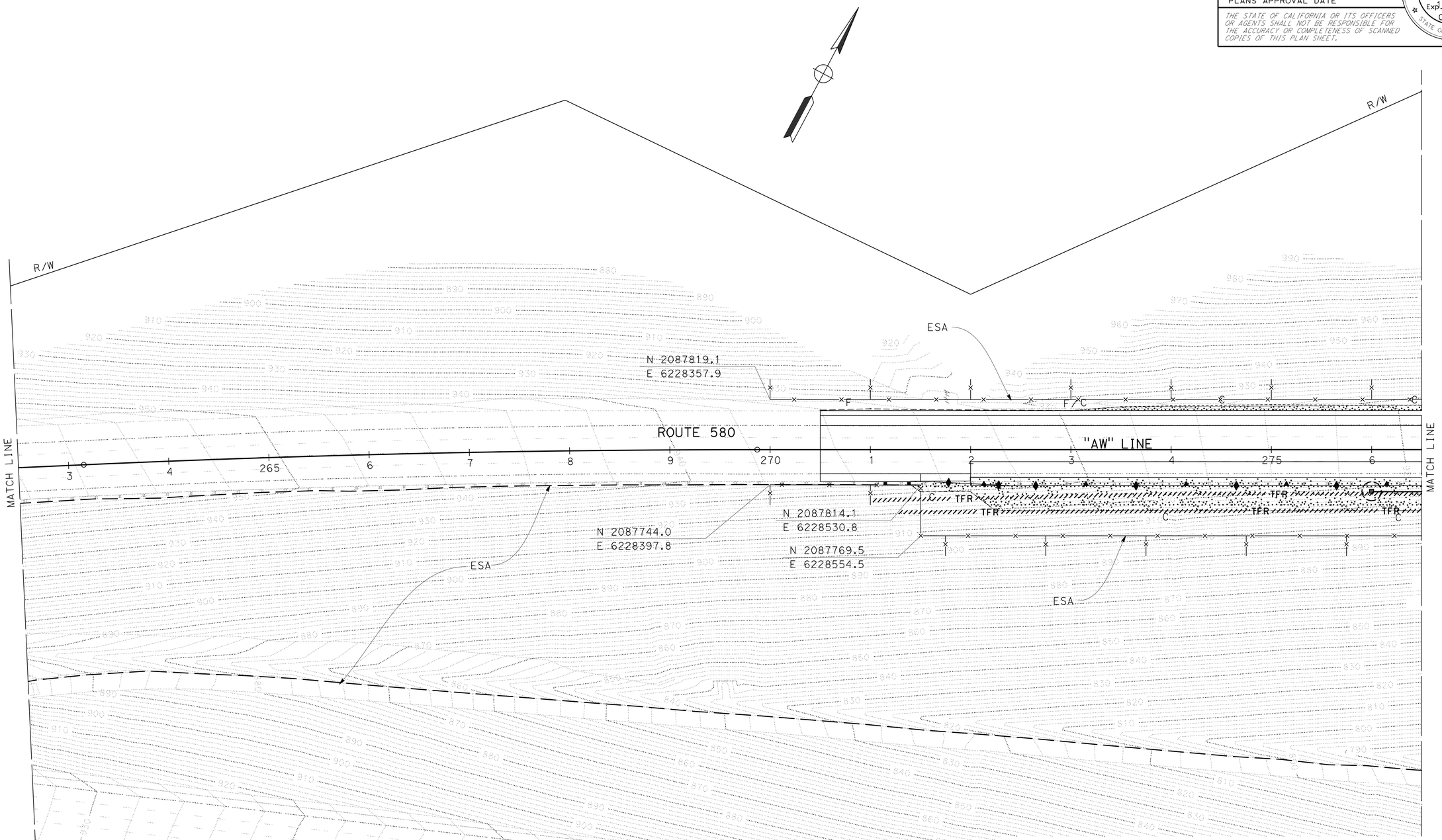

TEMPORARY WATER POLLUTION CONTROL PLAN

SCALE: 1" = 50'

WPC-2

FOR LEGEND, SEE SHEET WPC-1

STATE OF CALIFORNIA - DEPARTMENT OF TRANSPORTATION

Caltrans®

WATER QUALITY

FUNCTIONAL SUPERVISOR: KAMRAN NAKHJIRI

CALCULATED-DESIGNED BY: SHARON YUAN

CHECKED BY: QI FU

REVISED BY: SY

DATE REVISED: 3/20/15

LAST REVISION: 02-02-15

DATE PLOTTED => 02-JUN-2015

TIME PLOTTED => 10:31

Dist	COUNTY	ROUTE	POST MILES TOTAL PROJECT	SHEET No.	TOTAL SHEETS
04	Ala	580	R4.9/R5.6	17	80

REGISTERED CIVIL ENGINEER 3/20/15 DATE

5-4-15
PLANS APPROVAL DATE

REGISTERED PROFESSIONAL ENGINEER Sharon X. Yuan No. 58701 Exp 12-31-16 CIVIL STATE OF CALIFORNIA

THE STATE OF CALIFORNIA OR ITS OFFICERS OR AGENTS SHALL NOT BE RESPONSIBLE FOR THE ACCURACY OR COMPLETENESS OF SCANNED COPIES OF THIS PLAN SHEET.

NOTE:

FOR ACCURATE RIGHT OF WAY DATA, CONTACT RIGHT OF WAY ENGINEERING AT THE DISTRICT OFFICE.

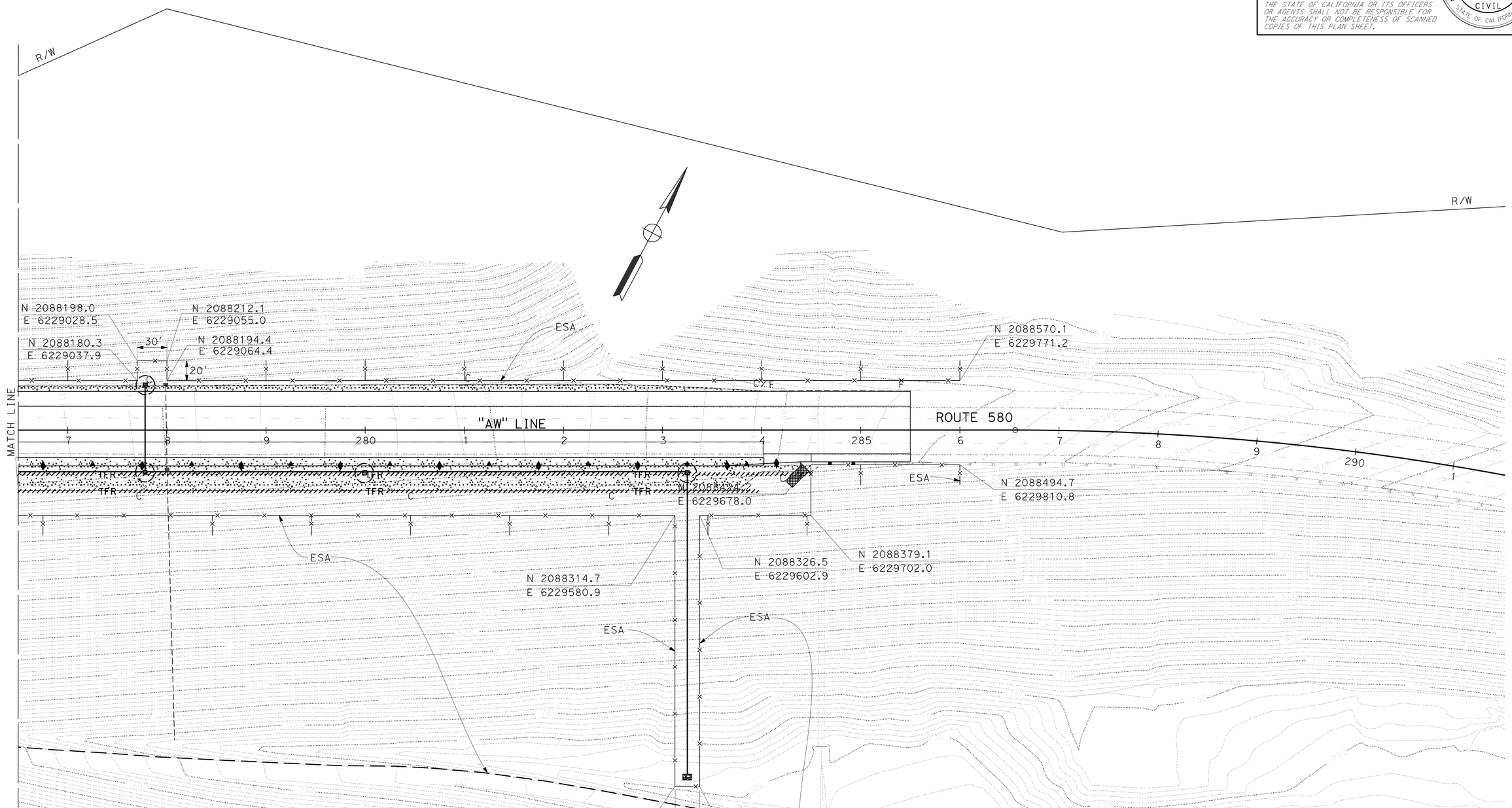

FOR LEGEND, SEE SHEET WPC-1

TEMPORARY WATER POLLUTION CONTROL PLAN

SCALE: 1" = 50'

WPC-3

STATE OF CALIFORNIA - DEPARTMENT OF TRANSPORTATION

Caltrans® **WATER QUALITY**

FUNCTIONAL SUPERVISOR: KAMRAN NAKHJIRI

CALCULATED-DESIGNED BY: SHARON YUAN

CHECKED BY: QI FU

REVISED BY: SY

DATE REVISED: 3/20/15

LAST REVISION 02-02-15

DATE PLOTTED => 02-JUN-2015

TIME PLOTTED => 10:31

Dist	COUNTY	ROUTE	POST MILES TOTAL PROJECT	SHEET No.	TOTAL SHEETS
04	Ala	580	R4.9/R5.6	18	80

REGISTERED CIVIL ENGINEER 3/17/15 DATE

5-4-15
PLANS APPROVAL DATE

REGISTERED PROFESSIONAL ENGINEER Carlos M. Mora No. 61224 Exp. 6-30-15 CIVIL STATE OF CALIFORNIA

THE STATE OF CALIFORNIA OR ITS OFFICERS OR AGENTS SHALL NOT BE RESPONSIBLE FOR THE ACCURACY OR COMPLETENESS OF SCANNED COPIES OF THIS PLAN SHEET.

NOTE:

FOR ACCURATE RIGHT OF WAY DATA, CONTACT RIGHT OF WAY ENGINEERING AT THE DISTRICT OFFICE.

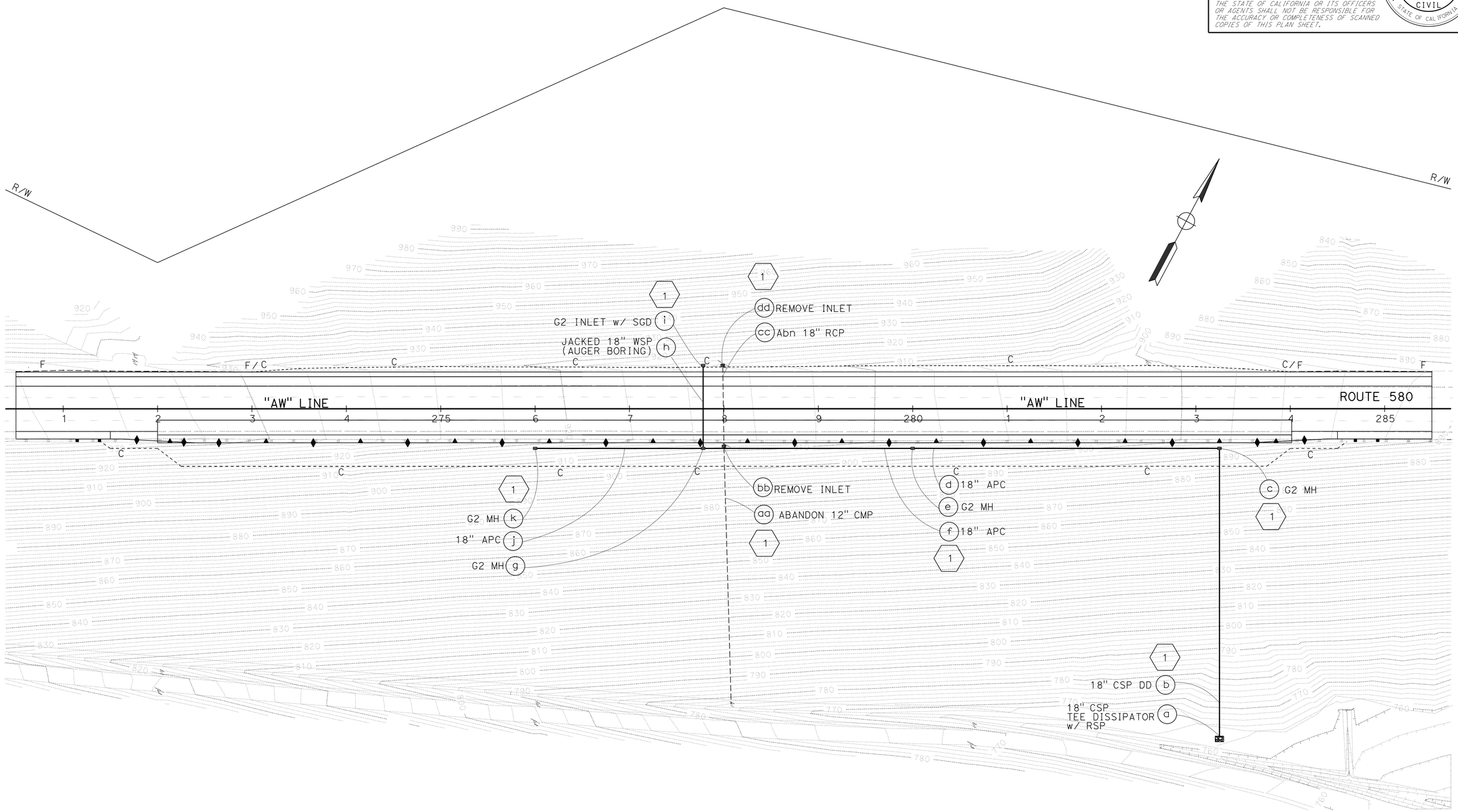

DRAINAGE PLAN

SCALE: 1" = 50'

APPROVED FOR DRAINAGE WORK ONLY

D-1

CARLOS M MORA	CMM
REVISED BY	3/16/15
DATE REVISED	
CALCULATED-DESIGNED BY	CRAIG TOMIMATSU
CHECKED BY	
FUNCTIONAL SUPERVISOR	CRAIG TOMIMATSU

STATE OF CALIFORNIA - DEPARTMENT OF TRANSPORTATION

Caltrans

HYDRAULICS

LAST REVISION 03-16-14 DATE PLOTTED => 02-JUN-2015 TIME PLOTTED => 10:31

Dist	COUNTY	ROUTE	POST MILES TOTAL PROJECT	SHEET No.	TOTAL SHEETS
04	Ala	580	R4.9/R5.6	19	80

REGISTERED CIVIL ENGINEER 3/16/15 DATE

5-4-15
PLANS APPROVAL DATE

REGISTERED PROFESSIONAL ENGINEER Qi Fu No. 73343 Exp. 12-31-16 CIVIL STATE OF CALIFORNIA

THE STATE OF CALIFORNIA OR ITS OFFICERS OR AGENTS SHALL NOT BE RESPONSIBLE FOR THE ACCURACY OR COMPLETENESS OF SCANNED COPIES OF THIS PLAN SHEET.

ABBREVIATION:

TC TOP OF COVER

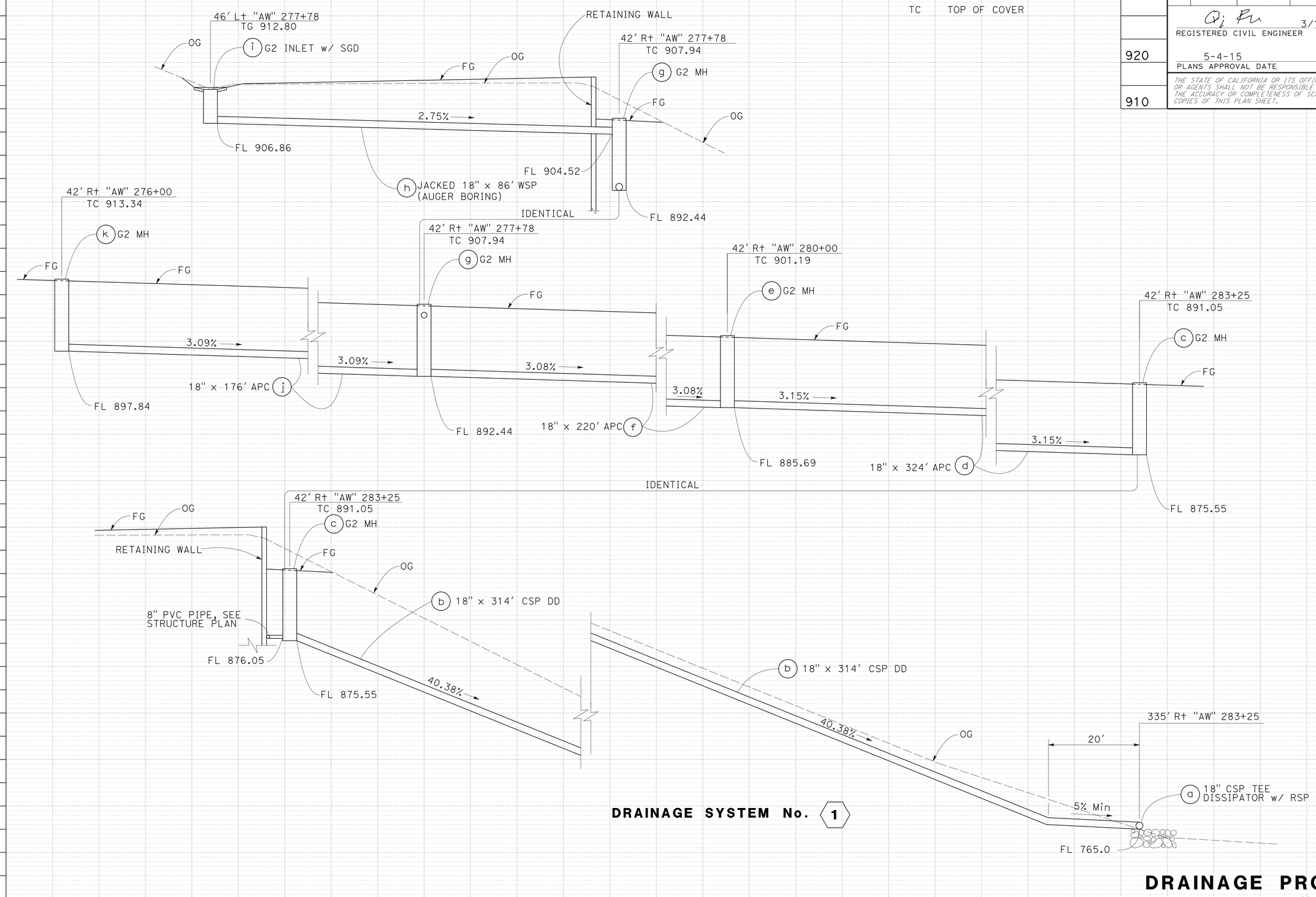

DRAINAGE SYSTEM No. 1

DRAINAGE PROFILES

SCALE: Horiz 1" = 10'
Vert 1" = 10'

DP-1

QF	3/15/15
REVISED BY	DATE REVISED
QI FU	KIRT MORET
CALCULATED-DESIGNED BY	CHECKED BY
FUNCTIONAL SUPERVISOR	KENDALL KITAMURA

STATE OF CALIFORNIA - DEPARTMENT OF TRANSPORTATION

Caltrans® **DESIGN**

LAST REVISION 03-16-15 | DATE PLOTTED => 02-JUN-2015 | TIME PLOTTED => 10:31

Dist	COUNTY	ROUTE	POST MILES TOTAL PROJECT	SHEET No.	TOTAL SHEETS
04	Ala	580	R4.9/R5.6	20	80

REGISTERED CIVIL ENGINEER 3/17/15 DATE

5-4-15
PLANS APPROVAL DATE

REGISTERED PROFESSIONAL ENGINEER Carlos M. Mora No. 61224 Exp. 6-30-15 CIVIL STATE OF CALIFORNIA

THE STATE OF CALIFORNIA OR ITS OFFICERS OR AGENTS SHALL NOT BE RESPONSIBLE FOR THE ACCURACY OR COMPLETENESS OF SCANNED COPIES OF THIS PLAN SHEET.

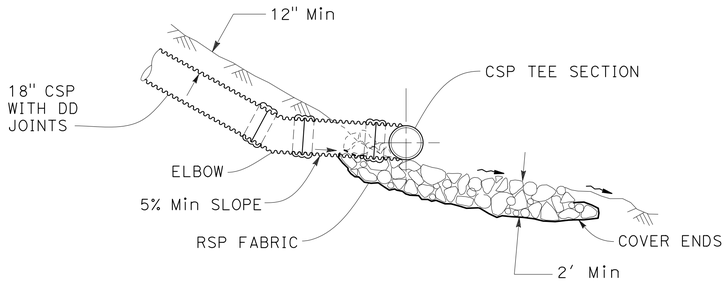

SECTION A-A

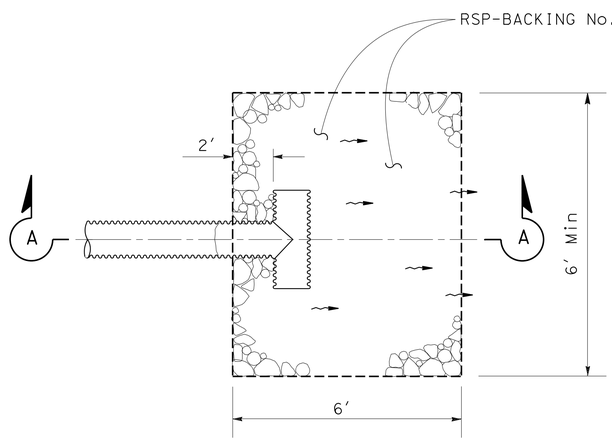

PLAN

CSP TEE DISSIPATOR WITH RSP

1 a

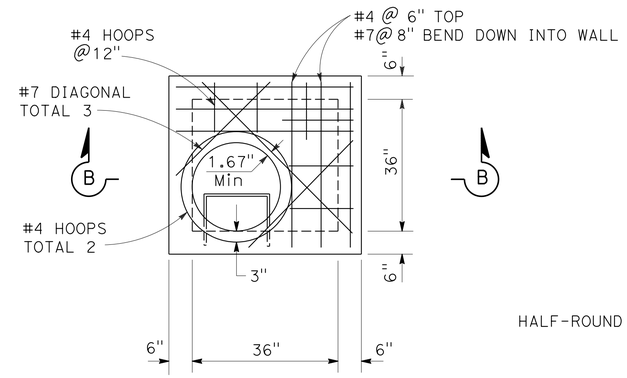

PLAN

NOTE:
FOR DETAILS NOT SHOWN, SEE REVISED Std PLAN D73 - G2 INLET.

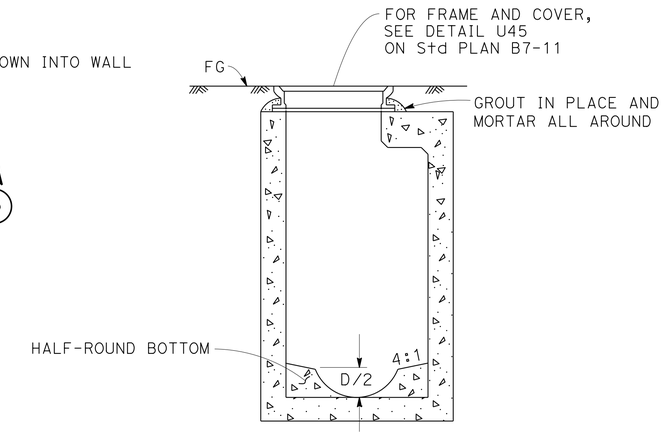

SECTION B-B

G2 MANHOLE

1 c e g k

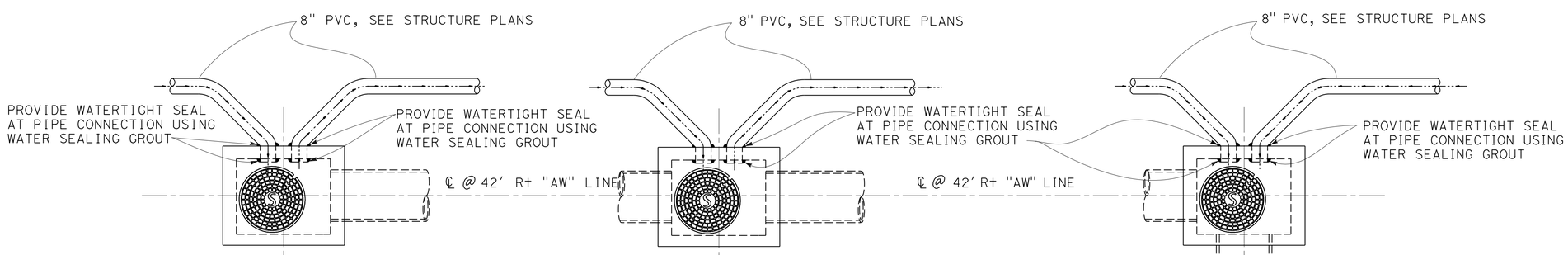

1 k 1 e 1 c

HORIZONTAL DRAIN COLLECTOR TO G2 MANHOLE

DRAINAGE DETAILS

NO SCALE

DD-1

STATE OF CALIFORNIA - DEPARTMENT OF TRANSPORTATION
Caltrans
HYDRAULICS

FUNCTIONAL SUPERVISOR: CRAIG TOMIMATSU
CALCULATED-DESIGNED BY: CARLOS M MORA
CHECKED BY: CRAIG TOMIMATSU
REVISED BY: CMM
DATE REVISED: 3/16/15

LAST REVISION 03-16-15 | DATE PLOTTED => 02-JUN-2015 | TIME PLOTTED => 10:31

Dist	COUNTY	ROUTE	POST MILES TOTAL PROJECT	SHEET No.	TOTAL SHEETS
04	Ala	580	R4.9/R5.6	21	80

Qi Fu 3/16/15
REGISTERED CIVIL ENGINEER DATE

5-4-15
PLANS APPROVAL DATE

REGISTERED PROFESSIONAL ENGINEER Qi Fu No. 73343 Exp. 12-31-16 CIVIL STATE OF CALIFORNIA

THE STATE OF CALIFORNIA OR ITS OFFICERS OR AGENTS SHALL NOT BE RESPONSIBLE FOR THE ACCURACY OR COMPLETENESS OF SCANNED COPIES OF THIS PLAN SHEET.

DRAINAGE QUANTITIES

DRAINAGE SYSTEM No.	DRAINAGE UNIT	TYPE 24-12 FRAME AND GRATE (N)	MISCELLANEOUS IRON AND STEEL	MINOR CONCRETE (MISCELLANEOUS CONSTRUCTION)	MINOR CONCRETE, MINOR STRUCTURE	PIPE JOINT CLASSIFICATION (N)	MAXIMUM COVER (N)	HEIGHT OF INLET	18" APC	18" CORRUGATED STEEL PIPE (.064" THICK)	JACKED 18" WELDED STEEL PIPE (AUGER BORING)	REMOVE INLET	ABANDON CULVERT	DESCRIPTION	STATION	DRAINAGE SYSTEM No.	DRAINAGE UNIT
		EA	LB	CY		TYPE	FT		LF			EA					
1	a									2				18" CSP TEE DISSIPATOR WITH RSP	335' Rt "AW" 283+25	1	a
	b					DD	16.2			314				18" CSP DD			b
	c	1	326		6.2			15.5						G2 MH	42' Rt "AW" 283+25		c
	d					S	13.7		324					18" APC			d
	e	1	326		6.2			15.5						G2 MH	42' Rt "AW" 280+00		e
	f					S	13.7		220					18" APC			f
	g	1	326		6.2			15.5						G2 MH	42' Rt "AW" 277+78		g
	h					S	10.7				86			JACKED 18" WSP (AUGER BORING)			h
	i	1	326	0.75	2.4			7.3						G2 INLET WITH SGD	46' Lt "AW" 277+78		i
	j					S	13.7		176					18" APC			j
	k	1	326		6.2			15.5						G2 MH	42' Rt "AW" 276+00		k
	aa												1	ABANDON 12" CMP			aa
	bb											1		REMOVE INLET			bb
	cc												1	ABANDON 18" RCP			cc
	dd											1		REMOVE INLET			dd
TOTAL			1630	0.75	27.2				720	316	86	2	2				

(N) NOT A SEPARATE PAY ITEM, FOR INFORMATION ONLY

CALCULATED-DESIGNED BY: QI FU
CHECKED BY: KIRT MORET
REVISED BY: QF
DATE REVISED: 3/15/15
FUNCTIONAL SUPERVISOR: KENDALL KITAMURA

STATE OF CALIFORNIA - DEPARTMENT OF TRANSPORTATION
Caltrans
DESIGN

DRAINAGE QUANTITIES
DQ-1

LAST REVISION 03-16-15 | DATE PLOTTED => 02-JUN-2015 | TIME PLOTTED => 10:31

Dist	COUNTY	ROUTE	POST MILES TOTAL PROJECT	SHEET No.	TOTAL SHEETS
04	Ala	580	R4.9/R5.6	22	80

Jeri-Paul Fabian 3/17/15
REGISTERED CIVIL ENGINEER DATE

5-4-15
PLANS APPROVAL DATE

REGISTERED PROFESSIONAL ENGINEER Jeri-Paul F. Fabian No. 81174 Exp. 9-30-15 CIVIL STATE OF CALIFORNIA

THE STATE OF CALIFORNIA OR ITS OFFICERS OR AGENTS SHALL NOT BE RESPONSIBLE FOR THE ACCURACY OR COMPLETENESS OF SCANNED COPIES OF THIS PLAN SHEET.

NOTE:

1. EXACT LOCATION AND POSITION OF CONSTRUCTION AREA SIGNS TO BE DETERMINED BY THE ENGINEER.

LEGEND:

[No.] CONSTRUCTION AREA SIGN NUMBER

STATIONARY MOUNTED CONSTRUCTION AREA SIGNS

SIGN No.	MUTCD CODE	MESSAGE	PANEL SIZE	NUMBER OF POST AND SIZE	No. OF SIGNS	REMARKS
1	W20-1	ROAD WORK AHEAD	48" x 48"	(ONE) 4" x 6"	1	
2	G20-2	END ROAD WORK	48" x 24"	(ONE) 4" x 6"	1	
3	W21-5	SHOULDER WORK	48" x 48"	(ONE) 4" x 6"	1	SEE SHEET TH-3
4	W21-5BL	LEFT SHOULDER CLOSED AHEAD	48" x 48"	(ONE) 4" x 6"	1	SEE SHEET TH-3
5	C30A(CA)	SHOULDER CLOSED	48" x 48"	(ONE) 4" x 6"	2	SEE SHEET TH-3
	W16-4	NEXT 1500 FT	30" x 24"	(ONE) 6" x 6"		
6	W21-5BR	RIGHT SHOULDER CLOSED AHEAD	48" x 48"	(ONE) 4" x 6"	1	SEE SHEET TH-3

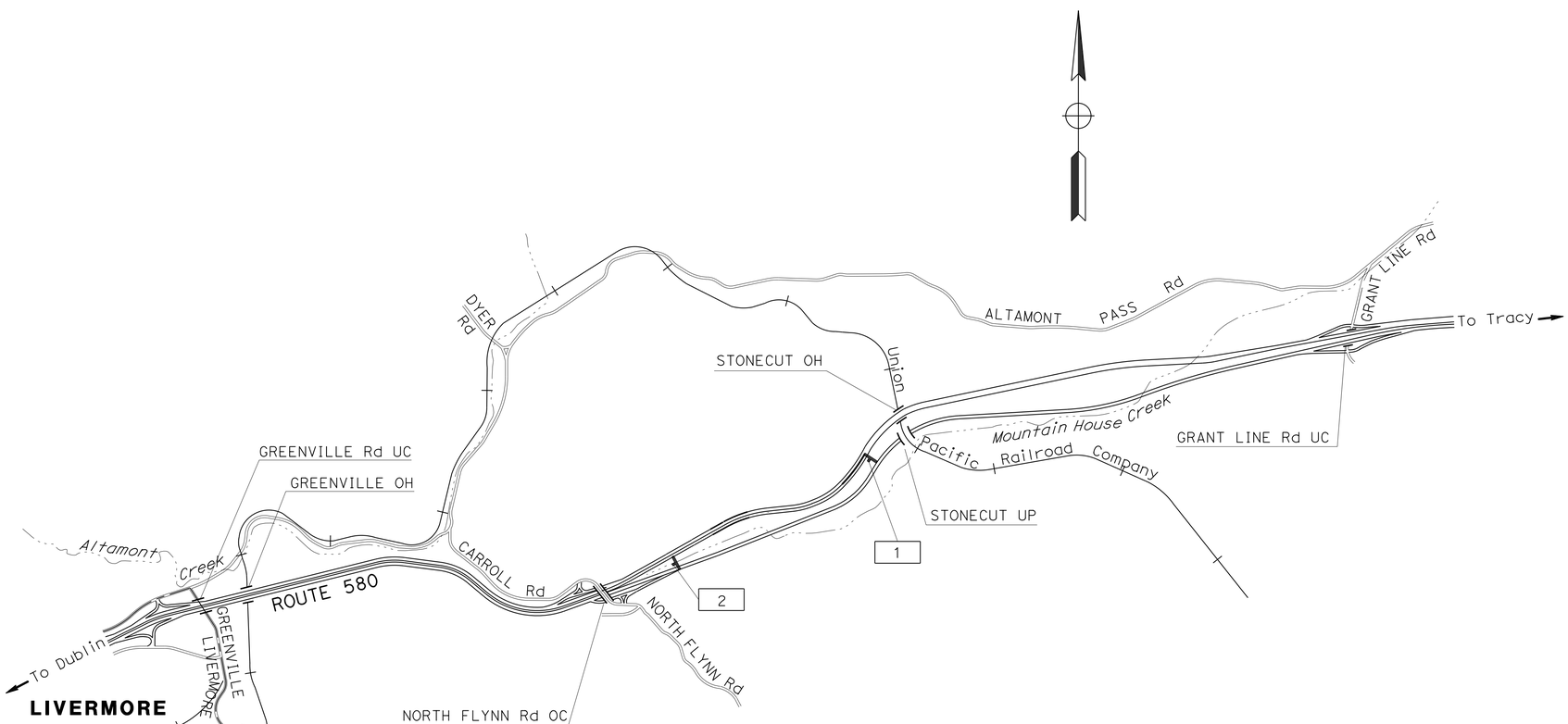

CONSTRUCTION AREA SIGNS

NO SCALE

APPROVED FOR CONSTRUCTION AREA SIGN WORK ONLY

CS-1

STATE OF CALIFORNIA - DEPARTMENT OF TRANSPORTATION
Caltrans
TRAFFIC

FUNCTIONAL SUPERVISOR	CALCULATED-DESIGNED BY	CHECKED BY	REVISED BY	DATE REVISED
LOURDES DAVID	JERI-PAUL FABIAN	CLAUDIA FANG	JF	3/17/15

LAST REVISION 02-11-15 | DATE PLOTTED => 02-JUN-2015 | TIME PLOTTED => 10:31

Dist	COUNTY	ROUTE	POST MILES TOTAL PROJECT	SHEET No.	TOTAL SHEETS
04	Ala	580	R4.9/R5.6	23	80

REGISTERED CIVIL ENGINEER 3/16/15 DATE

5-4-15
PLANS APPROVAL DATE

REGISTERED PROFESSIONAL ENGINEER Qi Fu No. 73343 Exp. 12-31-16 CIVIL STATE OF CALIFORNIA

THE STATE OF CALIFORNIA OR ITS OFFICERS OR AGENTS SHALL NOT BE RESPONSIBLE FOR THE ACCURACY OR COMPLETENESS OF SCANNED COPIES OF THIS PLAN SHEET.

NOTE:

FOR ACCURATE RIGHT OF WAY DATA, CONTACT RIGHT OF WAY ENGINEERING AT THE DISTRICT OFFICE.

NOTES:

1. SEE CONSTRUCTION AREA SIGNS (SHEET CS-1) FOR Temp SIGNS.
2. EXACT LOCATION AND POSITION OF CONSTRUCTION AREA SIGNS TO BE DETERMINED BY THE ENGINEER.
3. INSTALL TEMPORARY ANCHOR ASSEMBLY (TYPE SFT) UPON REMOVAL OF EXISTING GUARDRAIL.
4. TEMPORARY ANCHOR ASSEMBLY (TYPE SFT) SHALL BE REMOVED WHEN INSTALLING NEW MGS.

LEGEND:

- TEMPORARY CRASH CUSHION ARRAY
- CONSTRUCTION AREA
- CHANNELIZER
- No. CONSTRUCTION AREA SIGN NUMBER
- TRAFFIC CONTROL SIGN
- OBJECT MARKER (TYPE P)
- PORTABLE FLASHING BEACON
- TF Temp DELINEATOR (CLASS 1)-TYPE F

CURVE DATA

No. ⑪	R	Δ	T	L
1	2300′	02° 34′ 00″	51.53′	103.03′

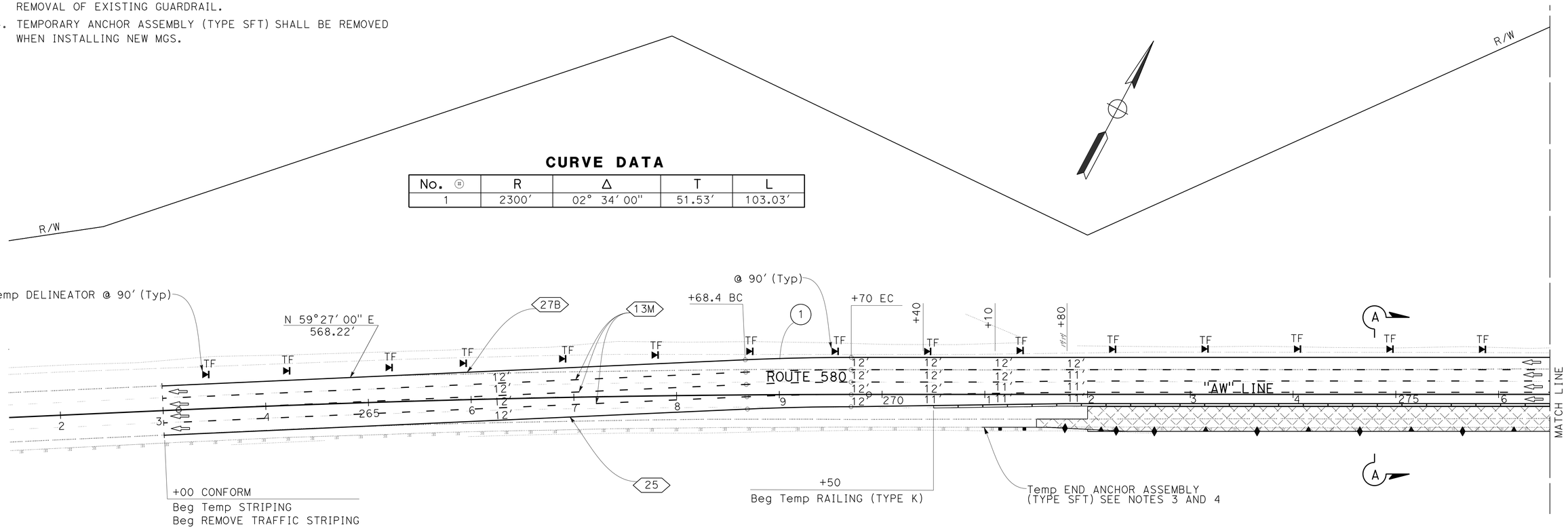

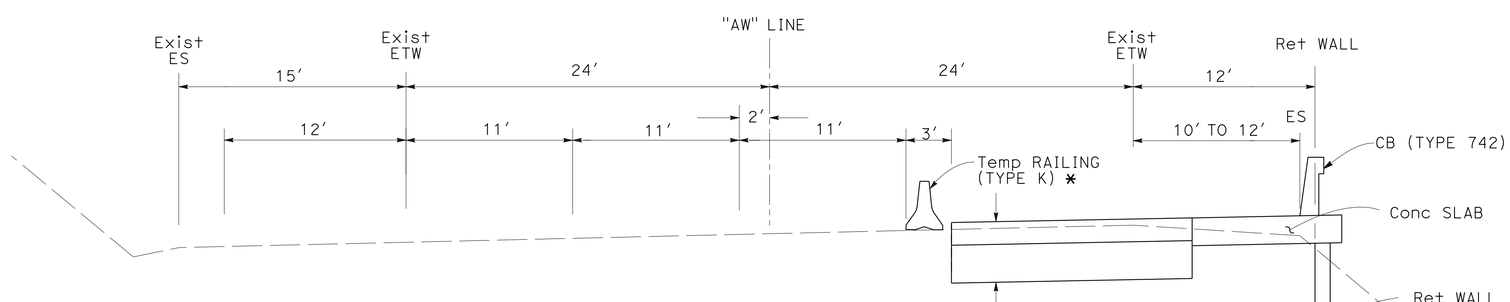

TYPICAL SECTION A-A
"AW" 272+00 TO 284+01.50
NO SCALE

* SEE Std PLAN T3B FOR ADDITIONAL DETAILS

TRAFFIC HANDLING PLAN

SCALE: 1" = 50′

APPROVED FOR TRAFFIC HANDLING WORK ONLY

TH-1

CALCULATED-DESIGNED BY	CHECKED BY	REVISED BY	DATE REVISED
QI FU	KIRT MORET	QF	3/15/15

FUNCTIONAL SUPERVISOR: KENDALL KITAMURA

STATE OF CALIFORNIA - DEPARTMENT OF TRANSPORTATION
Caltrans® DESIGN

LAST REVISION 03-16-15 | DATE PLOTTED => 02-JUN-2015 | TIME PLOTTED => 10:31

Dist	COUNTY	ROUTE	POST MILES TOTAL PROJECT	SHEET No.	TOTAL SHEETS
04	Ala	580	R4.9/R5.6	24	80

REGISTERED CIVIL ENGINEER 3/16/15 DATE

5-4-15
PLANS APPROVAL DATE

REGISTERED PROFESSIONAL ENGINEER Qi Fu No. 73343 Exp. 12-31-16 CIVIL STATE OF CALIFORNIA

THE STATE OF CALIFORNIA OR ITS OFFICERS OR AGENTS SHALL NOT BE RESPONSIBLE FOR THE ACCURACY OR COMPLETENESS OF SCANNED COPIES OF THIS PLAN SHEET.

NOTE:

FOR ACCURATE RIGHT OF WAY DATA, CONTACT RIGHT OF WAY ENGINEERING AT THE DISTRICT OFFICE.

CURVE DATA

No. ⊕	R	Δ	T	L
2	2400′	24° 02′ 00″	510.87′	1006.71′

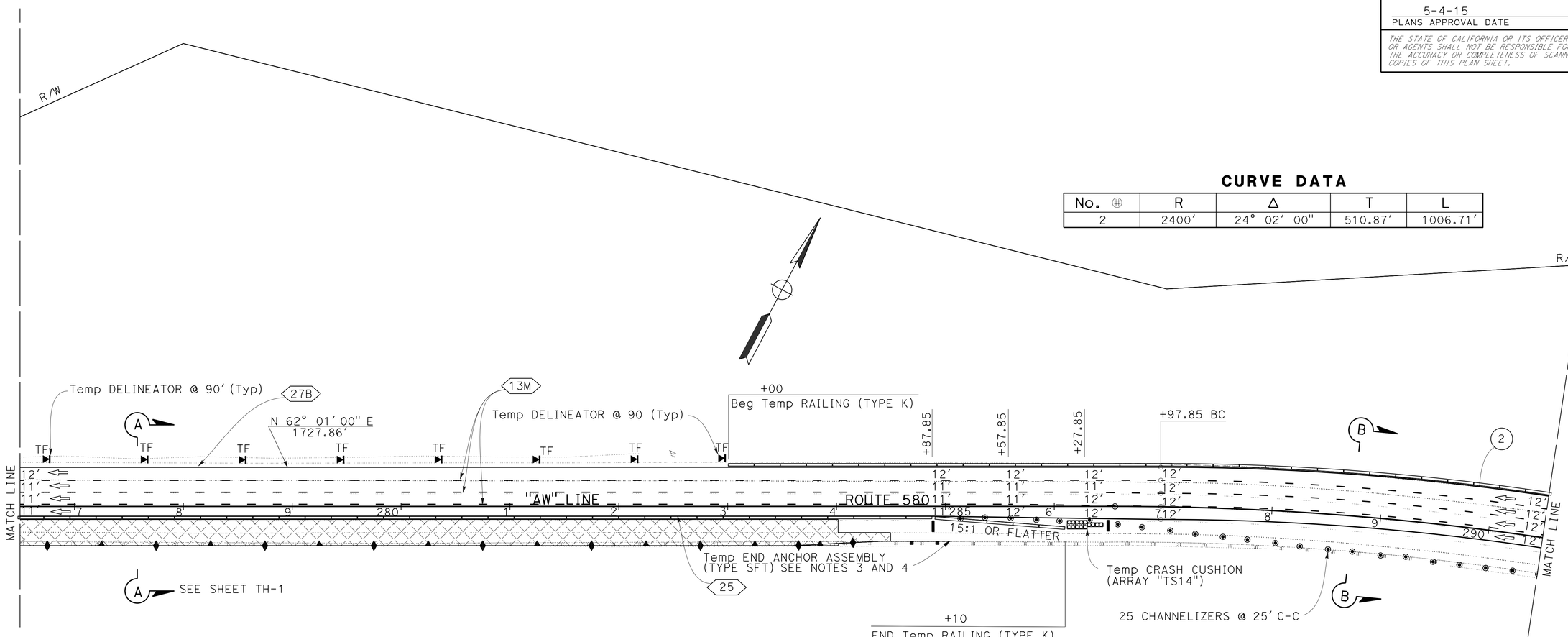

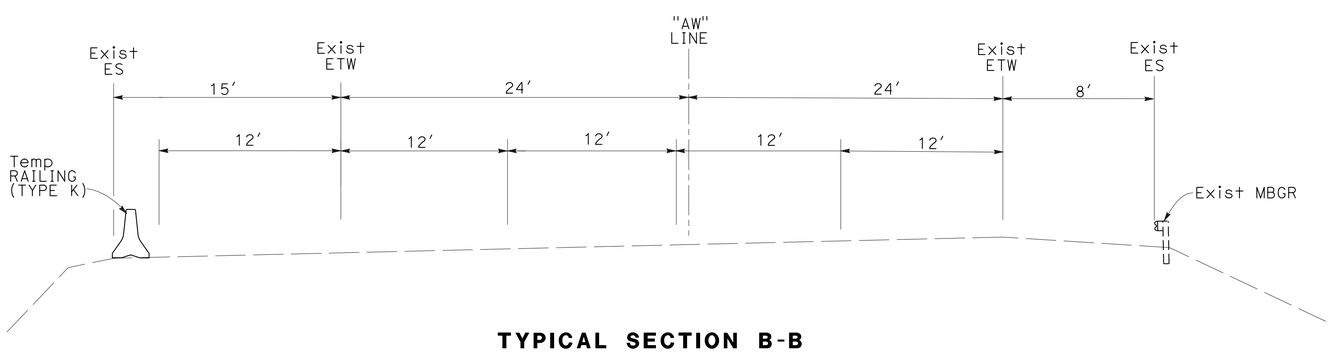

TYPICAL SECTION B-B
"AW" 284+01.50 TO 298+00
NO SCALE

TRAFFIC HANDLING PLAN

SCALE: 1" = 50′

APPROVED FOR TRAFFIC HANDLING WORK ONLY

FOR NOTES, ABBREVIATIONS AND LEGEND, SEE SHEET TH-1

TH-2

STATE OF CALIFORNIA - DEPARTMENT OF TRANSPORTATION
Caltrans® DESIGN

FUNCTIONAL SUPERVISOR: KENDALL KITAMURA

CALCULATED-DESIGNED BY: QI FU
CHECKED BY: KIRT MORET

REVISED BY: QF
DATE REVISED: 3/15/15

LAST REVISION 03-16-15
DATE PLOTTED => 02-JUN-2015
TIME PLOTTED => 10:31

Dist	COUNTY	ROUTE	POST MILES TOTAL PROJECT	SHEET No.	TOTAL SHEETS
04	Ala	580	R4.9/R5.6	25	80

Qi Fu 3/16/15
REGISTERED CIVIL ENGINEER DATE

5-4-15
PLANS APPROVAL DATE

REGISTERED PROFESSIONAL ENGINEER
Qi Fu
No. 73343
Exp. 12-31-16
CIVIL
STATE OF CALIFORNIA

THE STATE OF CALIFORNIA OR ITS OFFICERS OR AGENTS SHALL NOT BE RESPONSIBLE FOR THE ACCURACY OR COMPLETENESS OF SCANNED COPIES OF THIS PLAN SHEET.

NOTE:

FOR ACCURATE RIGHT OF WAY DATA, CONTACT RIGHT OF WAY ENGINEERING AT THE DISTRICT OFFICE.

CURVE DATA

No. ⊕	R	Δ	T	L
2	2400′	24° 02′ 00″	510.87′	1006.71′

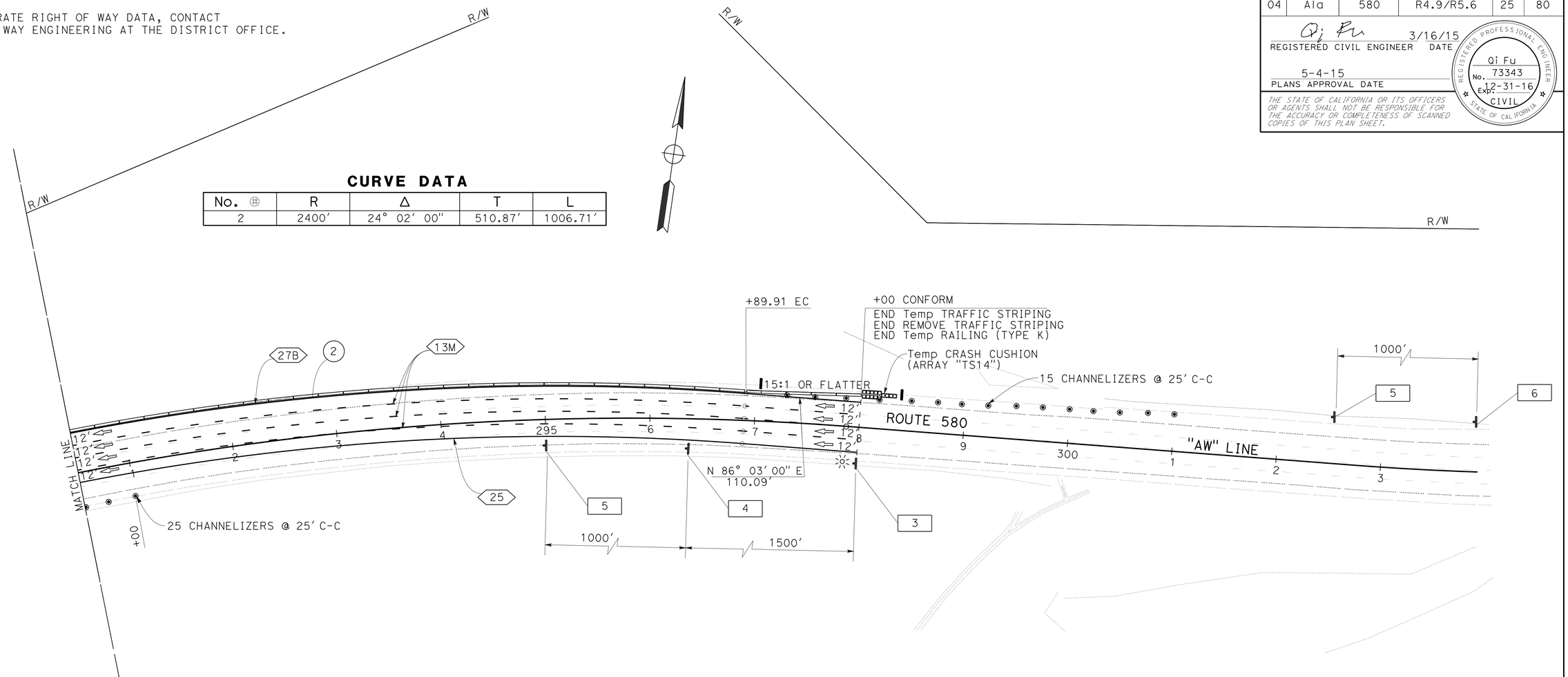

TRAFFIC HANDLING PLAN

SCALE: 1" = 50′

FOR NOTES, ABBREVIATIONS AND LEGEND, SEE SHEET TH-1

APPROVED FOR TRAFFIC HANDLING WORK ONLY

TH-3

STATE OF CALIFORNIA - DEPARTMENT OF TRANSPORTATION
Caltrans® DESIGN

FUNCTIONAL SUPERVISOR: KENDALL KITAMURA
CALCULATED-DESIGNED BY: QI FU
CHECKED BY: KIRT MORET
REVISED BY: QF
DATE REVISED: 3/15/15

LAST REVISION 02-12-15
DATE PLOTTED => 02-JUN-2015
TIME PLOTTED => 10:31

Dist	COUNTY	ROUTE	POST MILES TOTAL PROJECT	SHEET No.	TOTAL SHEETS
04	Ala	580	R4.9/R5.6	26	80

REGISTERED CIVIL ENGINEER 3/17/15 DATE

5-4-15
PLANS APPROVAL DATE

REGISTERED PROFESSIONAL ENGINEER Shi F. Lam No. 50970 Exp. 9-30-15 CIVIL STATE OF CALIFORNIA

THE STATE OF CALIFORNIA OR ITS OFFICERS OR AGENTS SHALL NOT BE RESPONSIBLE FOR THE ACCURACY OR COMPLETENESS OF SCANNED COPIES OF THIS PLAN SHEET.

NOTE:

FOR ACCURATE RIGHT OF WAY DATA, CONTACT RIGHT OF WAY ENGINEERING AT THE DISTRICT OFFICE.

NOTES:

1. DETAIL 13M IS MODIFIED PAVEMENT DELINEATION DETAIL 13.
2. DETAIL 14M IS MODIFIED PAVEMENT DELINEATION DETAIL 14.
3. FOR DETAILS NOT SHOWN, SEE STANDARD PLAN A20A.
4. APPLY 4" WHITE THERMOPLASTIC STRIPE AFTER INSTALLING PAVEMENT MARKERS.

LEGEND:

BG CONCRETE BARRIER OBJECT MARKER-TYPE G

RG GUARD RAILING DELINEATOR-TYPE G

F DELINEATOR (CLASS 1)-TYPE F

OBJECT MARKER (TYPE P)

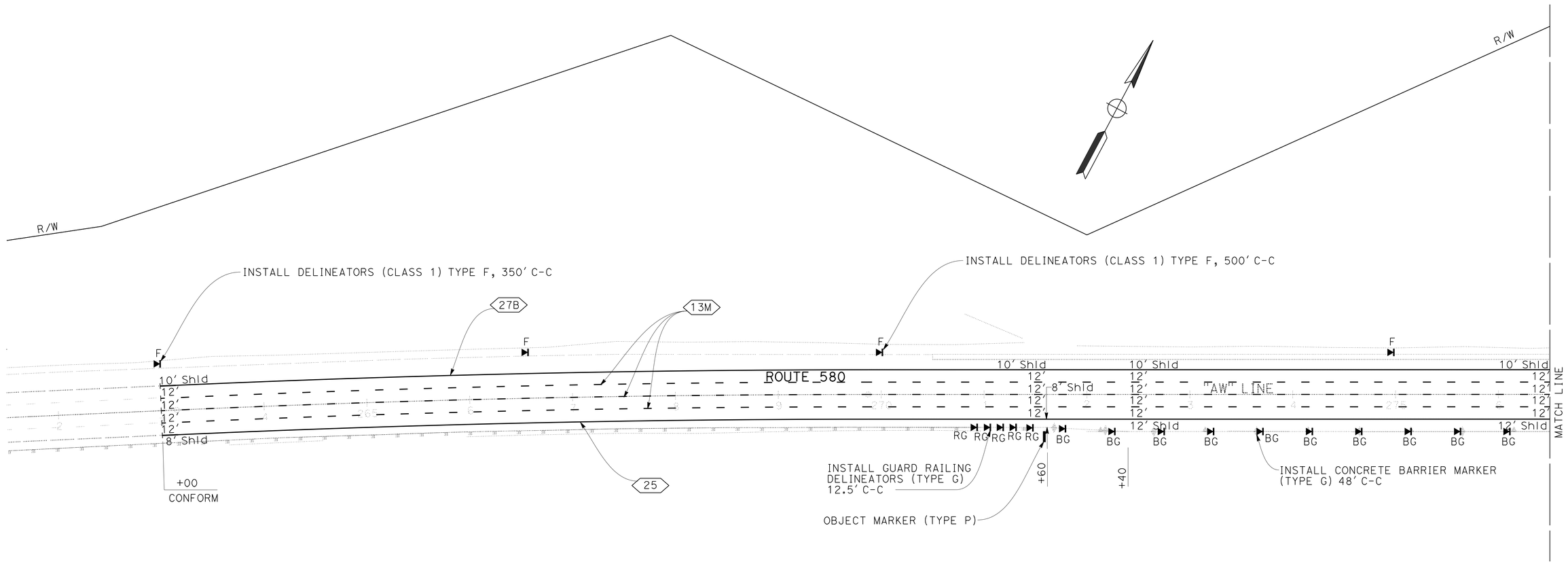

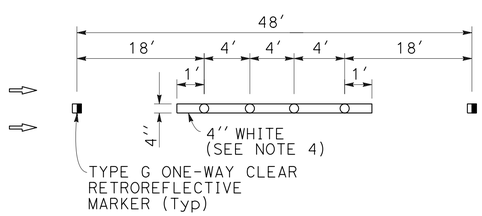

DETAIL 13M

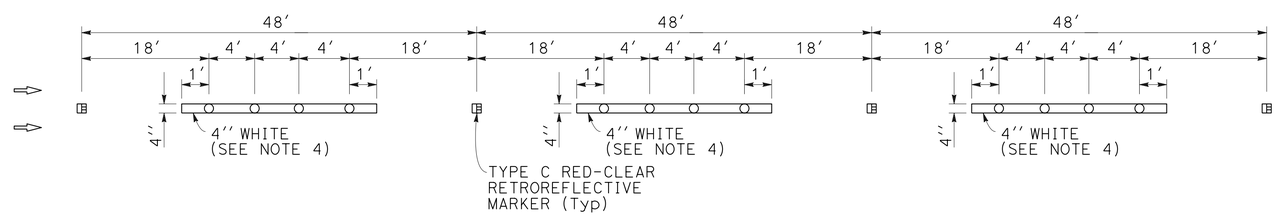

DETAIL 14M

PAVEMENT DELINEATION PLAN

SCALE: 1" = 50'

APPROVED FOR PAVEMENT DELINEATION WORK ONLY

PD-1

REVISED BY	DATE REVISED
QF	3/15/15

CALCULATED-DESIGNED BY: SHI LAM
CHECKED BY: QI FU
FUNCTIONAL SUPERVISOR: EMILY TANG

STATE OF CALIFORNIA - DEPARTMENT OF TRANSPORTATION
Caltrans
TRAFFIC

LAST REVISION 02-12-15 | DATE PLOTTED => 02-JUN-2015 | TIME PLOTTED => 10:31

Dist	COUNTY	ROUTE	POST MILES TOTAL PROJECT	SHEET No.	TOTAL SHEETS
04	Ala	580	R4.9/R5.6	27	80

REGISTERED CIVIL ENGINEER 3/17/15 DATE

5-4-15
PLANS APPROVAL DATE

REGISTERED PROFESSIONAL ENGINEER
Shi F. Lam
No. 50970
Exp. 9-30-15
CIVIL
STATE OF CALIFORNIA

THE STATE OF CALIFORNIA OR ITS OFFICERS OR AGENTS SHALL NOT BE RESPONSIBLE FOR THE ACCURACY OR COMPLETENESS OF SCANNED COPIES OF THIS PLAN SHEET.

NOTE:

FOR ACCURATE RIGHT OF WAY DATA, CONTACT RIGHT OF WAY ENGINEERING AT THE DISTRICT OFFICE.

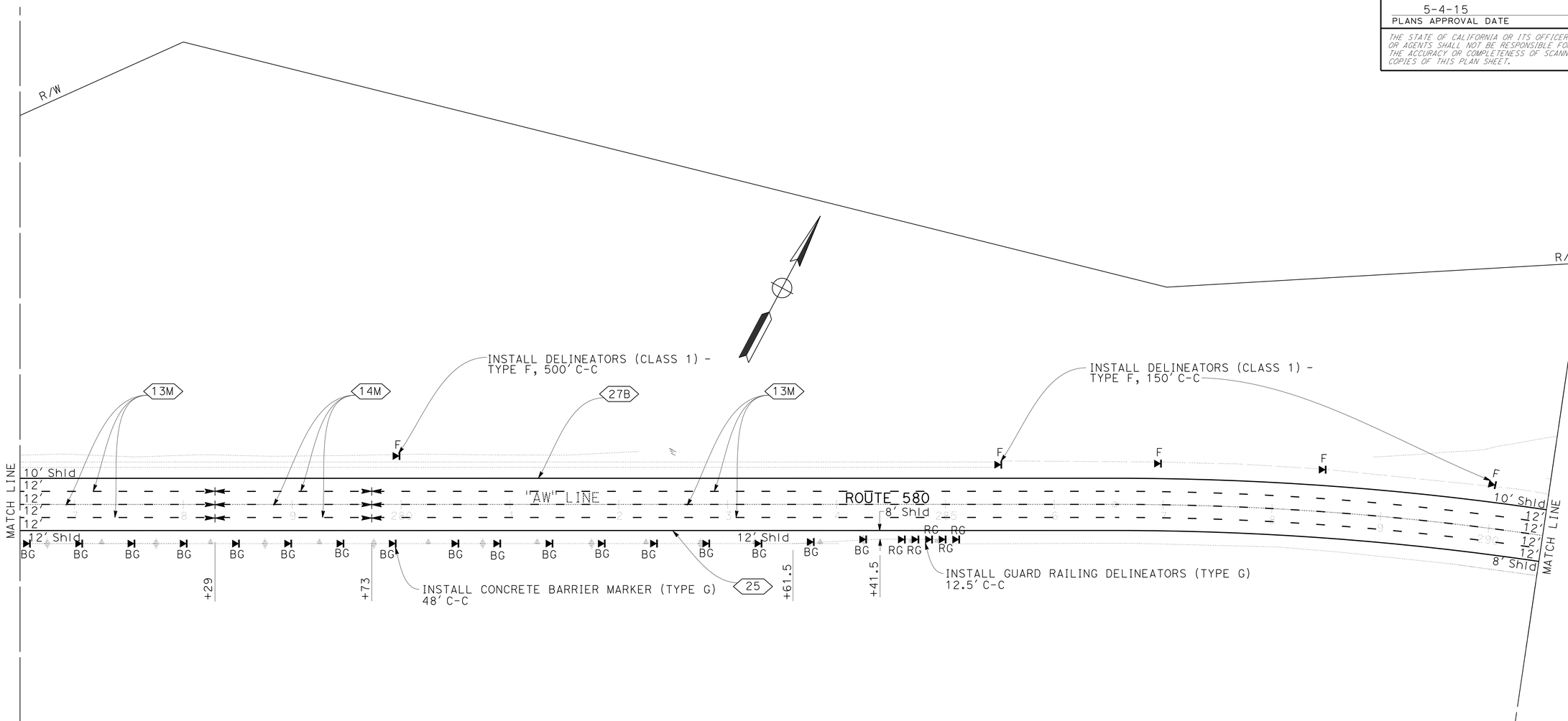

PAVEMENT DELINEATION PLAN

SCALE: 1" = 50'

APPROVED FOR PAVEMENT DELINEATION WORK ONLY

FOR NOTES AND LEGEND, SEE SHEET PD-1

PD-2

STATE OF CALIFORNIA - DEPARTMENT OF TRANSPORTATION
Caltrans
TRAFFIC

FUNCTIONAL SUPERVISOR: EMILY TANG

CALCULATED-DESIGNED BY: SHI LAM
CHECKED BY: QI FU
REVISED BY: QF
DATE REVISED: 3/15/15

LAST REVISION 02-17-15
DATE PLOTTED => 02-JUN-2015
TIME PLOTTED => 10:31

Dist	COUNTY	ROUTE	POST MILES TOTAL PROJECT	SHEET No.	TOTAL SHEETS
04	Ala	580	R4.9/R5.6	28	80

REGISTERED CIVIL ENGINEER 3/17/15 DATE

5-4-15
PLANS APPROVAL DATE

REGISTERED PROFESSIONAL ENGINEER
Shi F. Lam
No. 50970
Exp. 9-30-15
CIVIL
STATE OF CALIFORNIA

THE STATE OF CALIFORNIA OR ITS OFFICERS OR AGENTS SHALL NOT BE RESPONSIBLE FOR THE ACCURACY OR COMPLETENESS OF SCANNED COPIES OF THIS PLAN SHEET.

NOTE:

FOR ACCURATE RIGHT OF WAY DATA, CONTACT RIGHT OF WAY ENGINEERING AT THE DISTRICT OFFICE.

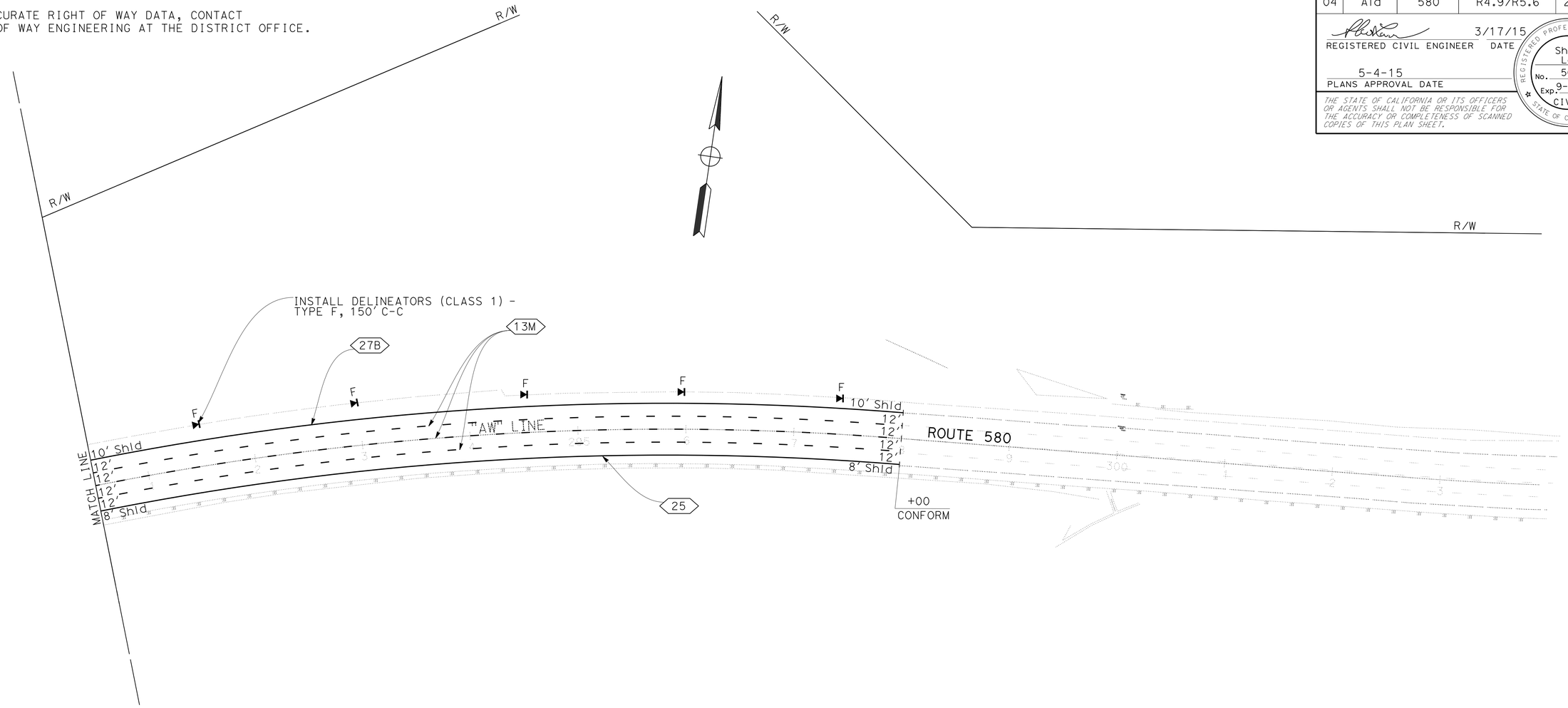

APPROVED FOR PAVEMENT DELINEATION WORK ONLY

FOR NOTES AND LEGEND, SEE SHEET PD-1

PAVEMENT DELINEATION PLAN

SCALE: 1" = 50'

PD-3

QF	3/15/15
REVISED BY	DATE REVISED
SHI LAM	QI FU
CALCULATED-DESIGNED BY	CHECKED BY
FUNCTIONAL SUPERVISOR	EMILY TANG

STATE OF CALIFORNIA - DEPARTMENT OF TRANSPORTATION
Caltrans
TRAFFIC

LAST REVISION 03-17-15 | DATE PLOTTED => 02-JUN-2015 | TIME PLOTTED => 10:31

Dist	COUNTY	ROUTE	POST MILES TOTAL PROJECT	SHEET No.	TOTAL SHEETS
04	Ala	580	R4.9/R5.6	29	80

Qi Fu 3/16/15
REGISTERED CIVIL ENGINEER DATE

5-4-15
PLANS APPROVAL DATE

REGISTERED PROFESSIONAL ENGINEER
Qi Fu
No. 73343
Exp. 12-31-16
CIVIL
STATE OF CALIFORNIA

THE STATE OF CALIFORNIA OR ITS OFFICERS OR AGENTS SHALL NOT BE RESPONSIBLE FOR THE ACCURACY OR COMPLETENESS OF SCANNED COPIES OF THIS PLAN SHEET.

TRAFFIC STRIPES AND PAVEMENT MARKERS

STATION	DETAIL No. OR LOCATION	4" THERMOPLASTIC TRAFFIC STRIPE (ENHANCED WET NIGHT VISIBILITY			PAVEMENT MARKER				GUARD RAILING DELINEATOR	OBJECT MARKER	DELINEATOR (CLASS 1)	OBJECT MARKER
					RETROFLECTIVE			NON-REFLECTIVE				
		4" YELLOW	4" WHITE	4" WHITE (BROKEN 34-14)	TYPE C	TYPE G	TYPE H	TYPE A	TYPE G	TYPE G	TYPE F	TYPE P
		LF			EA							
"AW" 263+00 TO 298+00	25	3500					74				14	
"AW" 263+00 TO 298+00	27B		3500									
"AW" 263+00 TO 298+00	13M			10068		213		840				
"AW" 278+29 TO 279+73	14M			432	12			36				
"AW" 271+60 TO 284+41.5	Conc BARRIER									27		1
"AW" 271+00 TO 271+50	MGS								5			
"AW" 284+51.5 TO 285+01.5	MGS								5			
SUBTOTAL		3500	3500	10500	12	213	74	876	10	27	14	1
TOTAL		17500			299			876	10	27	14	1

PAVEMENT DELINEATION QUANTITIES

PDQ-1

STATE OF CALIFORNIA - DEPARTMENT OF TRANSPORTATION
Caltrans® DESIGN

FUNCTIONAL SUPERVISOR: KENDALL KITAMURA
CALCULATED-DESIGNED BY: QI FU
CHECKED BY: KIRT MORET
REVISED BY: QF
DATE REVISED: 3/15/15

LAST REVISION 03-13-15
DATE PLOTTED => 02-JUN-2015
TIME PLOTTED => 10:31

Dist	COUNTY	ROUTE	POST MILES TOTAL PROJECT	SHEET No.	TOTAL SHEETS
04	Ala	580	R4.9/R5.6	30	80

REGISTERED CIVIL ENGINEER 3/16/15 DATE

5-4-15
PLANS APPROVAL DATE

REGISTERED PROFESSIONAL ENGINEER Qi Fu No. 73343 Exp. 12-31-16 CIVIL STATE OF CALIFORNIA

THE STATE OF CALIFORNIA OR ITS OFFICERS OR AGENTS SHALL NOT BE RESPONSIBLE FOR THE ACCURACY OR COMPLETENESS OF SCANNED COPIES OF THIS PLAN SHEET.

PAVEMENT QUANTITIES

SHEET No.	STATION	REPLACE ASPHALT CONCRETE SURFACING	CLASS 2 AGGREGATE BASE	SHOULDER BACKING	HOT MIX ASPHALT	HMA-O (OGFC)	COLD PLANE AC PAVEMENT	PAVEMENT TRANSITION TAPER	TACK COAT	CRACK TREATMENT
		CY		TON			SQYD		TON	LNMI
L-1, L-2	"AE" 270+50 TO 285+50	93	2105	47	3517	672	7667	907	1	1
	HOT MIX ASPHALT DIKE				4					
TOTAL		93	2105	47	3521	672	7667	907	1	1

ABBREVIATIONS:

HMA-O HOT MIX ASPHALT-OPEN GRADED (OPEN GRADED FRICTION COURSE)

LNMI LANE MILE

ROADWAY EARTHWORK QUANTITIES

SHEET No.	STATION	REMOVE ASPHALT CONCRETE PAVEMENT	ROADWAY EXCAVATION	ROADWAY EMBANKMENT (N)
		CY		
L-1, L-2	"AE" 270+50 TO 285+50	300	6031	5152

(N) NOT A SEPARATE PAY ITEM, FOR INFORMATION ONLY

HOT MIX ASPHALT DIKE

STATION	HOT MIX ASPHALT DIKE (TYPE F)		
	LF	SQYD	HMA TON
"AW" 284+51.5 TO 285+50	99	8	4

GUARDRAIL QUANTITIES

SHEET No.	STATION	REMOVE GUARDRAIL	TREATED WOOD WASTE	MIDWEST GUARDRAIL SYSTEM (WOOD POST)	TRANSITION RAILING (TYPE WB-31)	END ANCHOR ASSEMBLY (TYPE SFT)	VEGETATION CONTROL (MINOR CONCRETE)
		LF	LB	LF	EA		SQYD
L-1, L-2	"AW" 270+96.9 TO 285+04.6	1408	11300	82	1		24
TH-1, TH-2	"AW" 271+00, "AW" 285+00					2	
TOTAL		1408	11300	82	1	2	24

TEMPORARY DELINEATION QUANTITIES

SHEET No.	STATION	DETAIL No.	TEMPORARY TRAFFIC STRIPE (PAINT) 4" YELLOW	4" WHITE	4" WHITE (BROKEN 34-14)	PAVEMENT MARKER NON-REFLECTIVE TYPE A	RETROREFLECTIVE TYPE G	RETROREFLECTIVE TYPE H
			LF			EA		
TH-1 TO TH-3	"AW" 263+00 TO 298+00	13M,25,27B	3500	3500	10500	222	222	74
TOTAL			17500			518		

MISCELLANEOUS QUANTITIES

SHEET No.	DESTROY WELL
	EA
L-1, L-2	2

TRAFFIC HANDLING QUANTITIES

SHEET No.	STATION	REMOVE THERMOPLASTIC TRAFFIC STRIPE	TEMPORARY RAILING (TYPE K)	TEMPORARY CRASH CUSHION MODULE	CHANNELIZER (SURFACE MOUNTED)	FLASHING BEACON (PORTABLE)	PORTABLE CHANGEABLE MESSAGE SIGN	OBJECT MARKER (TYPE P) (N)	END ANCHOR ASSEMBLY (TYPE SFT)	TEMPORARY DELINEATOR (CLASS 1)
		LF		EA						
TH-1 TO TH-3	"AW" 263+00 TO 298+00	10066	3060	28	40	1	1	4	2	23
TOTAL		10066	3060	28	40	1	1	4	2	23

(N) NOT A SEPARATE PAY ITEM, FOR INFORMATION ONLY

TEMPORARY WATER POLLUTION CONTROL AND ESA FENCE QUATITIES

STATION	TEMPORARY HYDRAULIC MULCH (BONDED FIBER MATRIX)	TEMPORARY COVER	TEMPORARY DRAINAGE INLET PROTECTION	TEMPORARY FIBER ROLL	TEMPORARY CONSTRUCTION ENTRANCE	TEMPORARY REINFORCED SILT FENCE
	SQYD		EA	LF	EA	LF
"AW" 270+50 TO 285+50	8000	800	5	3500	1	3990

SUMMARY OF QUANTITIES

Q-1

QF	3/15/15	REVISED BY	DATE REVISED
QI FU	KIRT MORET	CALCULATED-DESIGNED BY	CHECKED BY
FUNCTIONAL SUPERVISOR	KENDALL KITAMURA		

STATE OF CALIFORNIA - DEPARTMENT OF TRANSPORTATION
Caltrans DESIGN

LAST REVISION 02-02-15 | DATE PLOTTED => 02-JUN-2015 | TIME PLOTTED => 10:31

Dist	COUNTY	ROUTE	POST MILES TOTAL PROJECT	SHEET No.	TOTAL SHEETS
04	Ala	580	R4.9/R5.6	31	80

LICENSED LANDSCAPE ARCHITECT

5-4-15
PLANS APPROVAL DATE

LICENSED LANDSCAPE ARCHITECT
CHRIS PADICK No. 4255
Signature
11-30-16
Renewal date
2-2-15
Date
STATE OF CALIFORNIA

THE STATE OF CALIFORNIA OR ITS OFFICERS OR AGENTS SHALL NOT BE RESPONSIBLE FOR THE ACCURACY OR COMPLETENESS OF SCANNED COPIES OF THIS PLAN SHEET.

EROSION CONTROL TYPE 1

SEQUENCE	ITEM	MATERIAL		APPLICATION RATE
		DESCRIPTION	TYPE	
STEP 1	COMPOST	COMPOST	MEDIUM	62 CY/ACRE
STEP 2	ROLLED EROSION CONTROL PRODUCT (NETTING)		A	
STEP 3	HYDROSEED	SEED	MIX 1	49 LB/ACRE
		FIBER	WOOD	2000 LB/ACRE
STEP 4	HYDROMULCH	FIBER	WOOD	2000 LB/ACRE
		TACKIFIER	PSYLLIUM	200 LB/ACRE

EROSION CONTROL TYPE 2

SEQUENCE	ITEM	MATERIAL		APPLICATION RATE
		DESCRIPTION	TYPE	
STEP 1	COMPOST	COMPOST	MEDIUM	62 CY/ACRE
STEP 2	HYDROSEED	SEED	MIX 1	49 LB/ACRE
		FIBER	WOOD	2000 LB/ACRE
STEP 3	HYDROMULCH	FIBER	WOOD	2000 LB/ACRE
		TACKIFIER	PSYLLIUM	200 LB/ACRE

FIBER ROLLS

SEQUENCE	ITEM	MATERIAL		REMARKS
		DESCRIPTION	TYPE	
FIBER ROLLS MUST BE INSTALLED AFTER COMPOST AND BEFORE HYDROSEEDING	FIBER ROLLS	FIBER ROLL	TYPE B 8" TO 10" Dia	TYPE 2 FIBER ROLL INSTALLATION

SEED MIX TYPE 1

SEED	BOTANICAL NAME (COMMON NAME)	PERCENT GERMINATION (MINIMUM)	POUNDS PURE LIVE SEED PER ACRE (SLOPE MEASUREMENT)
MIX 1	ACHILLEA MILLEFOLIUM[1] (WESTERN YARROW)	56	3
	BROMUS CARINATUS[1] (CALIFORNIA BROME)	75	8
	ESCHSCHOLZIA CALIFORNICA[1] (CALIFORNIA POPPY)	35	2
	ERIOGONUM FASCICULATUM[1] (CALIFORNAI BUCKWHEAT)	13	2
	LUPINUS ARBOREUS (YELLOW BUSH LUPINE)	53	8
	STIPA CERNUA (NODDING NEEDLEGRASS)	46	8
	STIPA PULCHRA (PURPLE NEEDLEGRASS)	53	10
	SALVIA MELLIFERA[1] (BLACK SAGE)	33	3
	VULPIA MICROSTACHYS (THREE WEEKS FESCUE)	50	5
TOTAL			49

[1]SEED PRODUCED IN CALIFORNIA ONLY

EROSION CONTROL LEGEND
ECL-1

REVISED BY	DATE REVISED
CP	2/2/15

CALCULATED-DESIGNED BY: CHRIS PADICK
CHECKED BY: SALLY BANG
SENIOR LANDSCAPE ARCHITECT: DAVID YAM

STATE OF CALIFORNIA - DEPARTMENT OF TRANSPORTATION
Caltrans®
WATER QUALITY

LAST REVISION 03-16-15
DATE PLOTTED => 02-JUN-2015
TIME PLOTTED => 10:31

Dist	COUNTY	ROUTE	POST MILES TOTAL PROJECT	SHEET No.	TOTAL SHEETS
04	Ala	580	R4.9/R5.6	32	80

LICENSED LANDSCAPE ARCHITECT

5-4-15
PLANS APPROVAL DATE

LICENSED LANDSCAPE ARCHITECT
CHRIS PADICK No. 4255
Expiration Date
11-30-16
Renewal Date
2-2-15
Date
STATE OF CALIFORNIA

THE STATE OF CALIFORNIA OR ITS OFFICERS OR AGENTS SHALL NOT BE RESPONSIBLE FOR THE ACCURACY OR COMPLETENESS OF SCANNED COPIES OF THIS PLAN SHEET.

NOTE:

FOR ACCURATE RIGHT OF WAY DATA, CONTACT
RIGHT OF WAY ENGINEERING AT THE DISTRICT OFFICE.

LEGEND:

EROSION CONTROL TYPE 1

COMPOST
ROLLED EROSION CONTROL PRODUCT (NETTING)
HYDROSEED (SEED MIX 1)
HYDROMULCH

EROSION CONTROL TYPE 2

COMPOST
HYDROSEED (SEED MIX 1)
HYDROMULCH

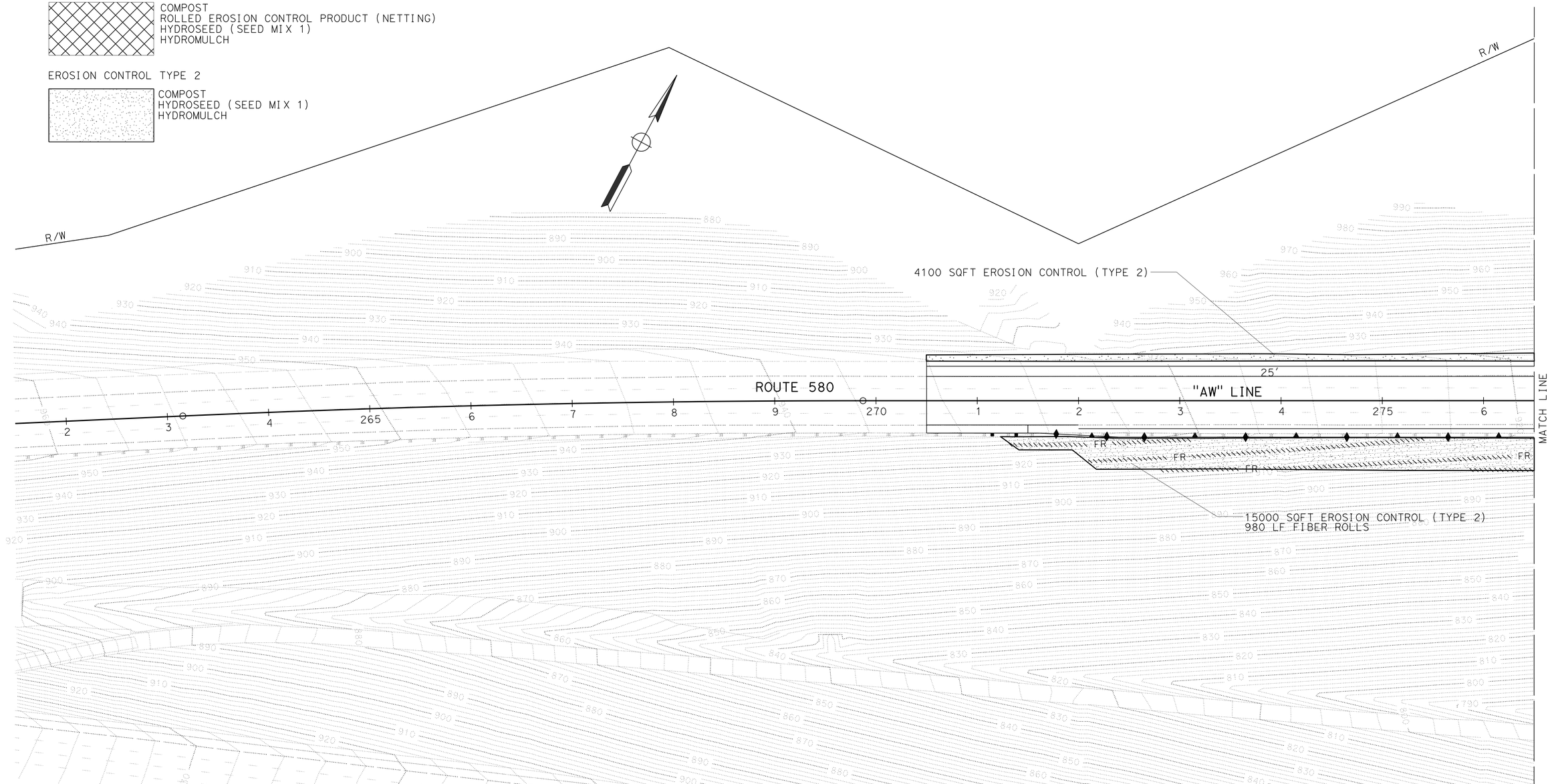

EROSION CONTROL PLAN

SCALE: 1" = 50'

EC-1

APPROVED FOR EROSION CONTROL WORK ONLY

REVISED BY	DATE REVISED
CP	12/9/14

CALCULATED-DESIGNED BY: CHRIS PADICK
CHECKED BY: SALLY BANG
SENIOR LANDSCAPE ARCHITECT: DAVID YAM

STATE OF CALIFORNIA - DEPARTMENT OF TRANSPORTATION
Caltrans
WATER QUALITY

LAST REVISION 12-09-14
DATE PLOTTED => 02-JUN-2015
TIME PLOTTED => 10:31

Dist	COUNTY	ROUTE	POST MILES TOTAL PROJECT	SHEET No.	TOTAL SHEETS
04	Ala	580	R4.9/R5.6	33	80

LICENSED LANDSCAPE ARCHITECT

5-4-15
PLANS APPROVAL DATE

LICENSED LANDSCAPE ARCHITECT
CHRIS PADICK No. 4255
Expiration Date
11-30-16
Renewal Date
2-2-15
Date
STATE OF CALIFORNIA

THE STATE OF CALIFORNIA OR ITS OFFICERS OR AGENTS SHALL NOT BE RESPONSIBLE FOR THE ACCURACY OR COMPLETENESS OF SCANNED COPIES OF THIS PLAN SHEET.

NOTE:

FOR ACCURATE RIGHT OF WAY DATA, CONTACT
RIGHT OF WAY ENGINEERING AT THE DISTRICT OFFICE.

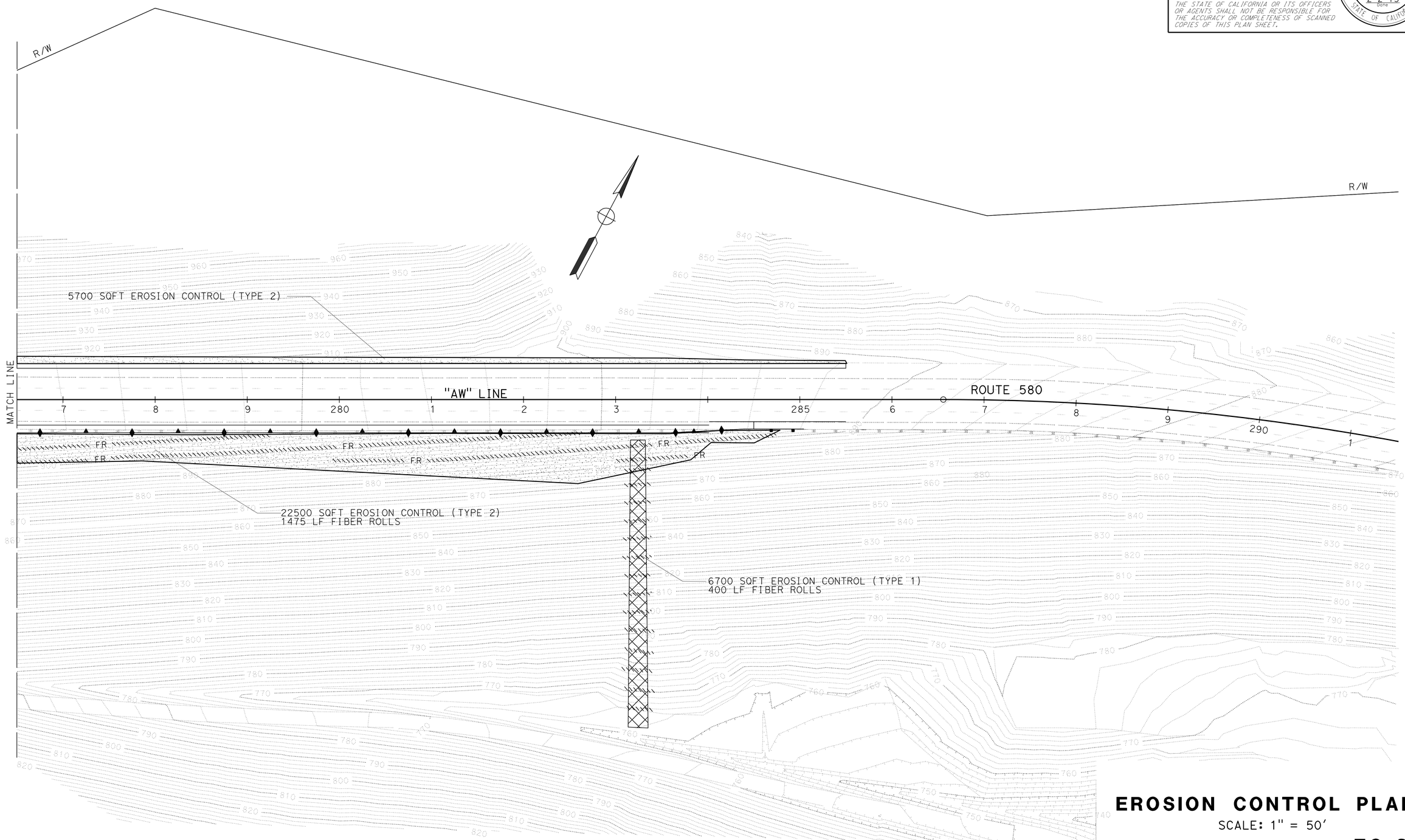

EROSION CONTROL PLAN

SCALE: 1" = 50'

EC-2

APPROVED FOR EROSION CONTROL WORK ONLY

REVISED BY	DATE REVISED
CP	2/2/15

CALCULATED-DESIGNED BY: CHRIS PADICK
CHECKED BY: SALLY BANG

SENIOR LANDSCAPE ARCHITECT: KENNY ADLY KANTAMURA

STATE OF CALIFORNIA - DEPARTMENT OF TRANSPORTATION
Caltrans® WATER QUALITY

LAST REVISION 2-2-15
DATE PLOTTED => 02-JUN-2015
TIME PLOTTED => 10:31

Dist	COUNTY	ROUTE	POST MILES TOTAL PROJECT	SHEET No.	TOTAL SHEETS
04	Ala	580	R4.9/R5.6	34	80

LICENSED LANDSCAPE ARCHITECT

5-4-15
PLANS APPROVAL DATE

LICENSED LANDSCAPE ARCHITECT
CHRIS PADICK No. 4255
Signature
11-30-16
Renewal Date
2-2-15
Date
STATE OF CALIFORNIA

THE STATE OF CALIFORNIA OR ITS OFFICERS OR AGENTS SHALL NOT BE RESPONSIBLE FOR THE ACCURACY OR COMPLETENESS OF SCANNED COPIES OF THIS PLAN SHEET.

EROSION CONTROL QUANTITIES

SHEET No.	LOCATION	SIDE	HYDROSEED	HYDROMULCH	COMPOST	ROLLED EROSION CONTROL PRODUCT (NETTING)	FIBER ROLL
			SQFT				LF
EC-1	"AW" 271+10 TO 276+60	R†	15000	15000	15000		980
EC-1	"AW" 271+10 TO 276+60	L†	4100	4100	4100		
EC-2	"AW" 276+60 TO 284+80	R†	29200	29200	29200	6700	1875
EC-2	"AW" 276+60 TO 284+80	L†	5700	5700	5700		
TOTAL			54000	54000	54000	6700	2855

STATE OF CALIFORNIA - DEPARTMENT OF TRANSPORTATION
Caltrans® WATER QUALITY

SENIOR LANDSCAPE ARCHITECT: DAVID YAM
CALCULATED-DESIGNED BY: CHRIS PADICK
CHECKED BY: SALLY BANG
REVISED BY: CP
DATE REVISED: 2/2/15

EROSION CONTROL QUANTITIES
ECQ-1

LAST REVISION 2-2-15
DATE PLOTTED => 02-JUN-2015
TIME PLOTTED => 10:31

Dist	COUNTY	ROUTE	POST MILES TOTAL PROJECT	SHEET No.	TOTAL SHEETS
04	Ala	580	R4.9/R5.6	35	80

REGISTERED ELECTRICAL ENGINEER 3/17/15 DATE

PLANS APPROVAL DATE 5-4-15

REGISTERED PROFESSIONAL ENGINEER Mahmood Noii No. 13717 Exp. 6-30-15 ELECT STATE OF CALIFORNIA

THE STATE OF CALIFORNIA OR ITS OFFICERS OR AGENTS SHALL NOT BE RESPONSIBLE FOR THE ACCURACY OR COMPLETENESS OF SCANNED COPIES OF THIS PLAN SHEET.

NOTE:

FOR ACCURATE RIGHT OF WAY DATA, CONTACT RIGHT OF WAY ENGINEERING AT THE DISTRICT OFFICE.

PROJECT NOTES:

1. INSTALL 2"C, PT INSIDE Conc BARRIER.
2. INSTALL TYPE 9A PULL BOX INSIDE Conc BARRIER.
3. INSTALL 3"C, PT.
4. REMOVE Exist 2#8 CONDUCTORS FROM Exist 1½"C, LEAVE CONDUIT EMPTY FOR FUTURE USE.

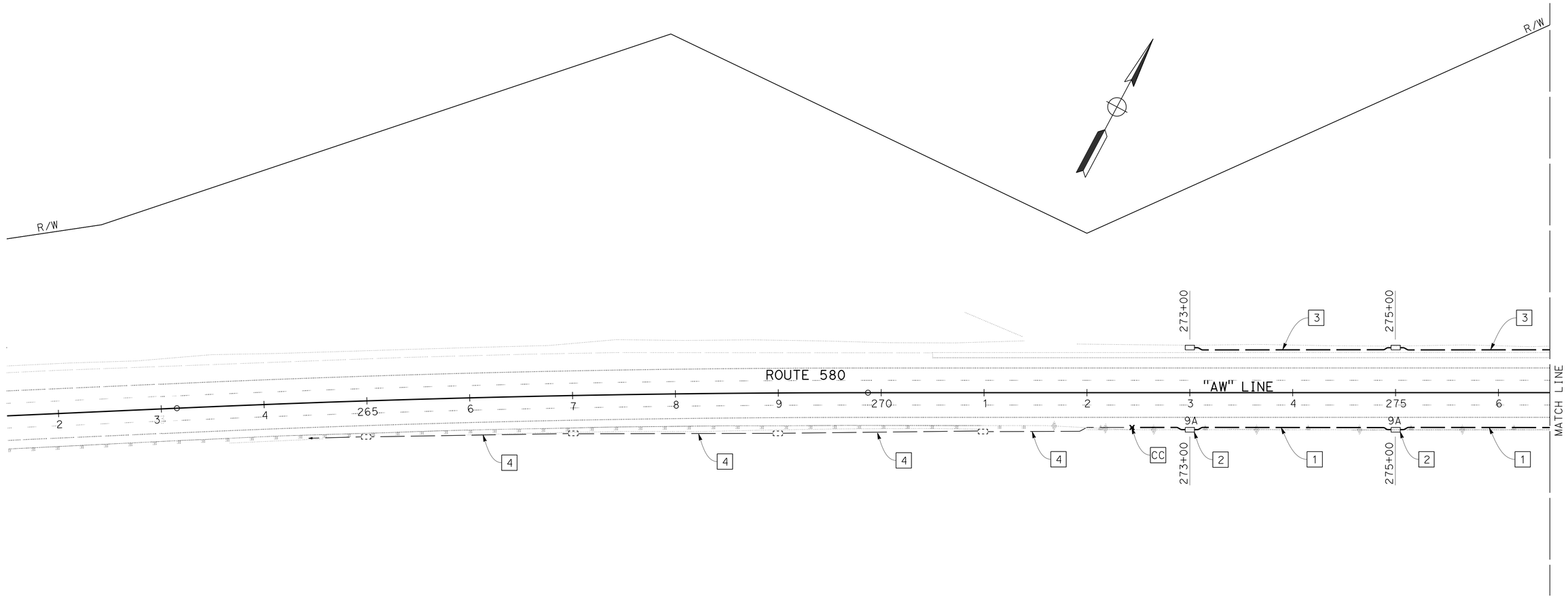

LIGHTING

SCALE: 1'' = 50'

E-1

APPROVED FOR ELECTRICAL WORK ONLY

STATE OF CALIFORNIA - DEPARTMENT OF TRANSPORTATION

Caltrans®

ELECTRICAL

FUNCTIONAL SUPERVISOR: BEHZAD GOLEMOHAMMADI

CALCULATED-DESIGNED BY / CHECKED BY: MAHMOOD NOII

REVISED BY: GB — DATE REVISED: 02-02-15

GUILLERMO BAUTISTA

LAST REVISION 08-28-14 | DATE PLOTTED => 02-JUN-2015 | TIME PLOTTED => 10:31

BORDER LAST REVISED 7/2/2010 | USERNAME => s129144 | DGN FILE => 0400020869ua001.dgn | RELATIVE BORDER SCALE IS IN INCHES 0 1 2 3 | UNIT 0736 | PROJECT NUMBER & PHASE 04000208691

Dist	COUNTY	ROUTE	POST MILES TOTAL PROJECT	SHEET No.	TOTAL SHEETS
04	Ala	580	R4.9/R5.6	36	80

REGISTERED ELECTRICAL ENGINEER 3/17/15 DATE

5-4-15
PLANS APPROVAL DATE

REGISTERED PROFESSIONAL ENGINEER
Mahmood Noii
No. 13717
Exp. 6-30-15
ELECT
STATE OF CALIFORNIA

THE STATE OF CALIFORNIA OR ITS OFFICERS OR AGENTS SHALL NOT BE RESPONSIBLE FOR THE ACCURACY OR COMPLETENESS OF SCANNED COPIES OF THIS PLAN SHEET.

NOTE:

FOR ACCURATE RIGHT OF WAY DATA, CONTACT RIGHT OF WAY ENGINEERING AT THE DISTRICT OFFICE.

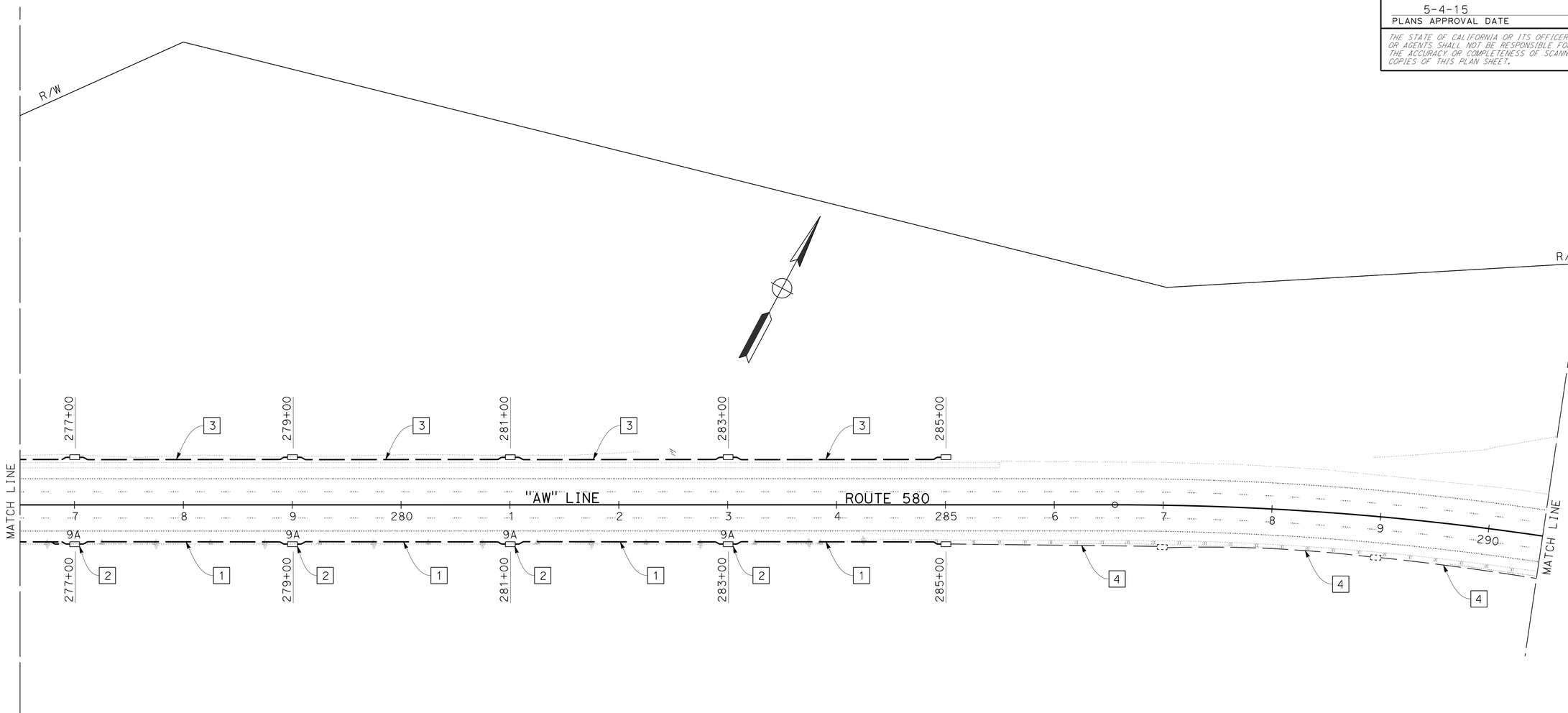

LIGHTING

SCALE: 1'' = 50'

E-2

APPROVED FOR ELECTRICAL WORK ONLY

FOR NOTES, SEE SHEET E-1

STATE OF CALIFORNIA - DEPARTMENT OF TRANSPORTATION
Caltrans
ELECTRICAL

FUNCTIONAL SUPERVISOR: BEHZAD GOLEMOHAMMADI

CALCULATED-DESIGNED BY: GUILLERMO BAUTISTA
CHECKED BY: MAHMOOD NOII

REVISED BY: GB
DATE REVISED: 02-02-15

LAST REVISION 07-29-14
DATE PLOTTED => 02-JUN-2015
TIME PLOTTED => 10:31

Dist	COUNTY	ROUTE	POST MILES TOTAL PROJECT	SHEET No.	TOTAL SHEETS
04	Ala	580	R4.9/R5.6	37	80

REGISTERED ELECTRICAL ENGINEER 3/17/15 DATE

5-4-15
PLANS APPROVAL DATE

REGISTERED PROFESSIONAL ENGINEER Mahmood Noii No. 13717 Exp. 6-30-15 ELECT STATE OF CALIFORNIA

THE STATE OF CALIFORNIA OR ITS OFFICERS OR AGENTS SHALL NOT BE RESPONSIBLE FOR THE ACCURACY OR COMPLETENESS OF SCANNED COPIES OF THIS PLAN SHEET.

NOTE:

FOR ACCURATE RIGHT OF WAY DATA, CONTACT RIGHT OF WAY ENGINEERING AT THE DISTRICT OFFICE.

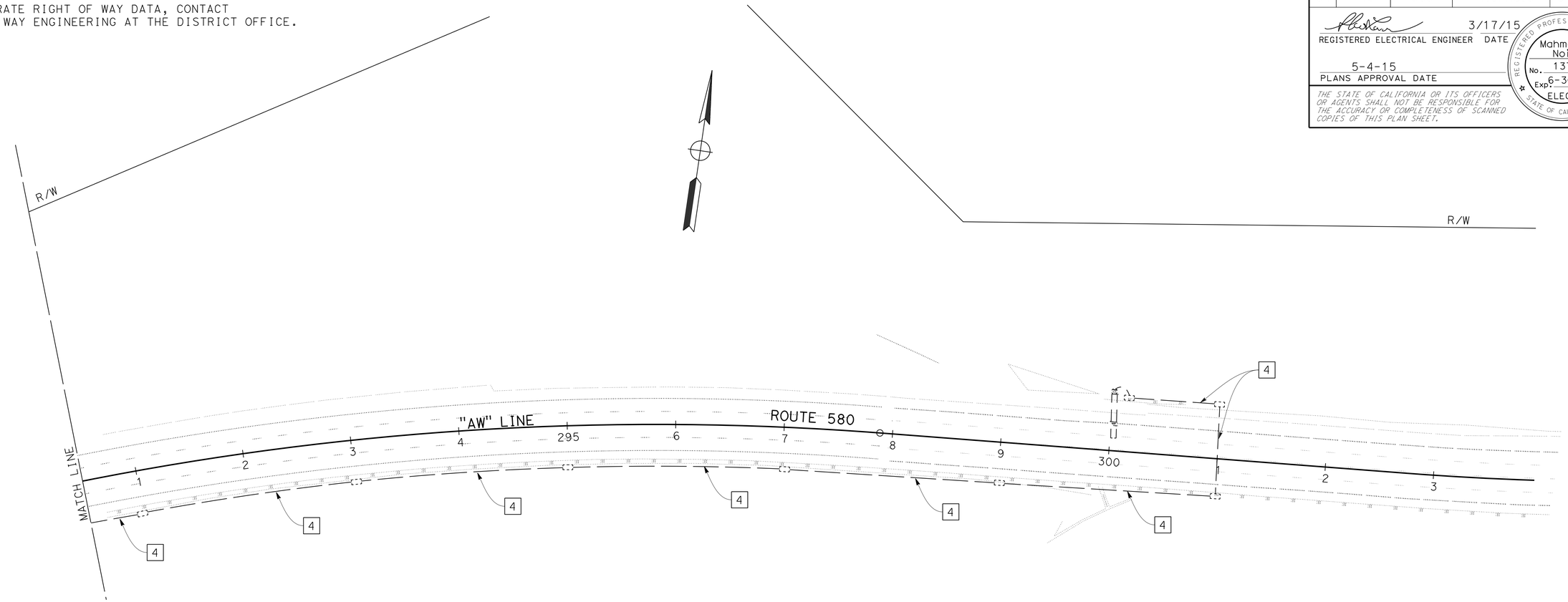

APPROVED FOR ELECTRICAL WORK ONLY

FOR NOTES, SEE SHEET E-1

LIGHTING

SCALE: 1'' = 50'

E-3

STATE OF CALIFORNIA - DEPARTMENT OF TRANSPORTATION

Caltrans

ELECTRICAL

FUNCTIONAL SUPERVISOR: BEHZAD GOLEMOHAMMADI

CALCULATED-DESIGNED BY: GUILLERMO BAUTISTA

CHECKED BY: MAHMOOD NOII

REVISED BY: GB

DATE REVISED: 02-02-15

LAST REVISION: 08-28-14

DATE PLOTTED => 02-JUN-2015

TIME PLOTTED => 10:31

BORDER LAST REVISED 7/2/2010

USERNAME => s129144

DGN FILE => 0400020869ua003.dgn

RELATIVE BORDER SCALE IS IN INCHES 0 1 2 3

UNIT 0736

PROJECT NUMBER & PHASE 04000208691

M

Maint	MAINTENANCE
Max	MAXIMUM
MB	METAL BEAM
MBB	METAL BEAM BARRIER
MBGR	METAL BEAM GUARD RAILING
Med	MEDIAN
MGS	MIDWEST GUARDRAIL SYSTEM
MH	MANHOLE
Min	MINIMUM
Misc	MISCELLANEOUS
Misc I & S	MISCELLANEOUS IRON AND STEEL
Mkr	MARKER
Mod	MODIFIED,
	MODIFY
Mon	MONUMENT
MP	METAL PLATE
MPGR	METAL PLATE GUARD RAILING
MR	MOVEMENT RATING
MSE	MECHANICALLY STABILIZED EMBANKMENT
Mt	MOUNTAIN, MOUNT
Mtl	MATERIAL
MVP	MAINTENANCE VEHICLE PULLOUT

N

N	NORTH
NB	NORTHBOUND
No.	NUMBER (MUST HAVE PERIOD)
Nos.	NUMBERS (MUST HAVE PERIOD)
NPS	NOMINAL PIPE SIZE
NS	NEAR SIDE
NSP	NEW STANDARD PLAN
NTS	NOT TO SCALE

O

Oblr	OBLITERATE
OC	OVERCROSSING
OD	OUTSIDE DIAMETER
OF	OUTSIDE FACE
OG	ORIGINAL GROUND
OGAC	OPEN GRADED ASPHALT CONCRETE
OGFC	OPEN GRADED FRICTION COURSE
OH	OVERHEAD
OHWM	ORDINARY HIGH WATER MARK
O-O	OUT TO OUT
Opp	OPPOSITE
OSD	OVERSIDE DRAIN

P

P	PAGE
PAP	PERFORATED ALUMINUM PIPE
PB	PULL BOX
PC	POINT OF CURVATURE,
	PRECAST
PCC	POINT OF COMPOUND CURVE,
	PORTLAND CEMENT CONCRETE
PCMS	PORTABLE CHANGEABLE MESSAGE SIGN
PCP	PERFORATED CONCRETE PIPE,
	PRESTRESSED CONCRETE PIPE
PCVC	POINT OF COMPOUND VERTICAL CURVE
PEC	PERMIT TO ENTER AND CONSTRUCT
Ped	PEDESTRIAN
Ped OC	PEDESTRIAN OVERCROSSING
Ped UC	PEDESTRIAN UNDERCROSSING
Perm Mtl	PERMEABLE MATERIAL

P continued

PG	PROFILE GRADE
PI	POINT OF INTERSECTION
PJP	PARTIAL JOINT PENETRATION
Pkwy	PARKWAY
ℙ,PL	PLATE
P/L	PROPERTY LINE
PM	POST MILE,
	TIME FROM NOON TO MIDNIGHT
PN	PAVING NOTCH
POC	POINT OF HORIZONTAL CURVE
POT	POINT OF TANGENT
POVC	POINT OF VERTICAL CURVE
PP	PIPE PILE,
	PLASTIC PIPE,
	POWER POLE
PPL	PREFORMED PERMEABLE LINER
PPP	PERFORATED PLASTIC PIPE
PRC	POINT OF REVERSE CURVE
PRF	PAVEMENT REINFORCING FABRIC
PRVC	POINT OF REVERSE VERTICAL CURVE
PS&E	PLANS, SPECIFICATIONS AND ESTIMATES
PS, P/S	PRESTRESSED
PSP	PERFORATED STEEL PIPE
PT	POINT OF TANGENCY
PVC	POLYVINYL CHLORIDE
Pvmt	PAVEMENT

Q

Qty	QUANTITY

R

R	RADIUS
R & D	REMOVE AND DISPOSE
R & S	REMOVE AND SALVAGE
R/C	RATE OF CHANGE
RCA	REINFORCED CONCRETE ARCH
RCB	REINFORCED CONCRETE BOX
RCP	REINFORCED CONCRETE PIPE
RCPA	REINFORCED CONCRETE PIPE ARCH
Rd	ROAD
Reinf	REINFORCED,
	REINFORCEMENT,
	REINFORCING
Rel	RELOCATE
Repl	REPLACEMENT
Ret	RETAINING
Rev	REVISED, REVISION
Rdwy	ROADWAY
RHMA	RUBBERIZED HOT MIX ASPHALT
Riv	RIVER
RM	ROAD-MIXED
RP	RADIUS POINT,
	REFERENCE POINT
RR	RAILROAD
RSP	ROCK SLOPE PROTECTION,
	REVISED STANDARD PLAN
Rt	RIGHT
Rte	ROUTE
RW	REDWOOD,
	RETAINING WALL
R/W	RIGHT OF WAY
Rwy	RAILWAY

S

S	SOUTH,
	SUPPLEMENT
SAE	STRUCTURE APPROACH EMBANKMENT
Salv	SALVAGE
SAPP	STRUCTURAL ALUMINUM PLATE PIPE
SB	SOUTHBOUND
SC	SAND CUSHION
SCSP	SLOTTED CORRUGATED STEEL PIPE
SD	STORM DRAIN
Sec	SECOND,
	SECTION
Sep	SEPARATION
SG	SUBGRADE
Shld	SHOULDER
Sht	SHEET
Sim	SIMILAR
℄	STATION LINE
SM	SELECTED MATERIAL
Spec	SPECIAL,
	SPECIFICATIONS
SPP	SLOTTED PLASTIC PIPE
SS	SLOPE STAKE
SSBM	STRAP AND SADDLE BRACKET METHOD
SSD	STRUCTURAL SECTION DRAIN
SSPA	STRUCTURAL STEEL PLATE ARCH
SSPP	STRUCTURAL STEEL PLATE PIPE
SSPPA	STRUCTURAL STEEL PLATE PIPE ARCH
SSRP	STEEL SPIRAL RIB PIPE
St	STREET
Sta	STATION
STBB	SINGLE THRIE BEAM BARRIER
Std	STANDARD
Str	STRUCTURE
Surf	SURFACING
SW	SIDEWALK,
	SOUND WALL
Swr	SEWER
Sym	SYMMETRICAL
S4S	SURFACE 4 SIDES

T

T	SEMI-TANGENT
Tan	TANGENT
TBB	THRIE BEAM BARRIER
Tbr	TIMBER
TC	TOP OF CURB
TCB	TRAFFIC CONTROL BOX
TCE	TEMPORARY CONSTRUCTION EASEMENT
Tel	TELEPHONE
Temp	TEMPORARY
TG	TOP OF GRADE
Tot	TOTAL
TP	TELEPHONE POLE
TPB	TREATED PERMEABLE BASE
TPM	TREATED PERMEABLE MATERIAL
Trans	TRANSITION

T continued

TS	TRANSVERSE,
	TRAFFIC SIGNAL,
	TUBULAR STEEL
Typ	TYPICAL

U

UC	UNDERCROSSING
UD	UNDERDRAIN
UG	UNDERGROUND
UON	UNLESS OTHERWISE NOTED
UP	UNDERPASS

V

V	VALVE,
	DESIGN SPEED
Var	VARIABLE,
	VARIES
VC	VERTICAL CURVE
VCP	VITRIFIED CLAY PIPE
Vert	VERTICAL
Via	VIADUCT
Vol	VOLUME

W

W	WEST,
	WIDTH
WB	WESTBOUND
WH	WEEP HOLE
WM	WIRE MESH
WS	WATER SURFACE
WSP	WELDED STEEL PIPE
Wt	WEIGHT
WV	WATER VALVE
WW	WINGWALL
WWLOL	WINGWALL LAYOUT LINE

X

X Sec	CROSS SECTION
Xing	CROSSING

Y

Yr	YEAR
Yrs	YEARS

Dist	COUNTY	ROUTE	POST MILES TOTAL PROJECT	SHEET No.	TOTAL SHEETS
04	Ala	580	R4.9/R5.6	38	80

Grace M. Tsushima
REGISTERED CIVIL ENGINEER

July 19, 2013
PLANS APPROVAL DATE

REGISTERED PROFESSIONAL ENGINEER
Grace M. Tsushima
No. C49814
Exp. 9-30-14
CIVIL
STATE OF CALIFORNIA

THE STATE OF CALIFORNIA OR ITS OFFICERS OR AGENTS SHALL NOT BE RESPONSIBLE FOR THE ACCURACY OR COMPLETENESS OF SCANNED COPIES OF THIS PLAN SHEET.

TO ACCOMPANY PLANS DATED 5-4-15

UNIT OF MEASUREMENT SYMBOLS:

Some of the symbols used in the project plan quantity tables and in the Bid Item List are:

TABLE A

SYMBOL USED	DEFINITIONS
ACRE	ACRE
CF	CUBIC FOOT
CY	CUBIC YARD
EA	EACH
GAL	GALLON
LB	POUND
LF	LINEAR FOOT
SQFT	SQUARE FOOT
SQYD	SQUARE YARD
STA	100 FEET
TAB	TABLET
TON	2,000 POUNDS

Some of the symbols used in the plans other than in the project plan quantity tables are:

TABLE B

SYMBOL USED	DEFINITIONS
ksi	KIPS PER SQUARE INCH
ksf	KIPS PER SQUARE FOOT
psi	POUNDS PER SQUARE INCH
psf	POUNDS PER SQUARE FOOT
lb/ft^3, pcf	POUNDS PER CUBIC FOOT
tsf	TONS PER SQUARE FOOT
mph, MPH *	MILES PER HOUR
ø	NOMINAL DIAMETER
oz	OUNCE
lb	POUND
kip	1,000 POUNDS
cal	CALORIE
ft	FOOT OR FEET
gal	GALLON

* For use on a sign panel only

STATE OF CALIFORNIA
DEPARTMENT OF TRANSPORTATION

ABBREVIATIONS (SHEET 2 OF 2)

NO SCALE

RSP A10B DATED JULY 19, 2013 SUPERSEDES STANDARD PLAN A10B DATED MAY 20, 2011 - PAGE 2 OF THE STANDARD PLANS BOOK DATED 2010.

REVISED STANDARD PLAN RSP A10B

2010 REVISED STANDARD PLAN RSP A10B

6-7-13

Dist	COUNTY	ROUTE	POST MILES TOTAL PROJECT	SHEET No.	TOTAL SHEETS
04	Ala	580	R4.9/R5.6	39	80

Randell D. Hiatt
REGISTERED CIVIL ENGINEER

July 19, 2013
PLANS APPROVAL DATE

REGISTERED PROFESSIONAL ENGINEER
Randell D. Hiatt
No. C50200
Exp. 6-30-15
CIVIL
STATE OF CALIFORNIA

THE STATE OF CALIFORNIA OR ITS OFFICERS OR AGENTS SHALL NOT BE RESPONSIBLE FOR THE ACCURACY OR COMPLETENESS OF SCANNED COPIES OF THIS PLAN SHEET.

TO ACCOMPANY PLANS DATED 5-4-15

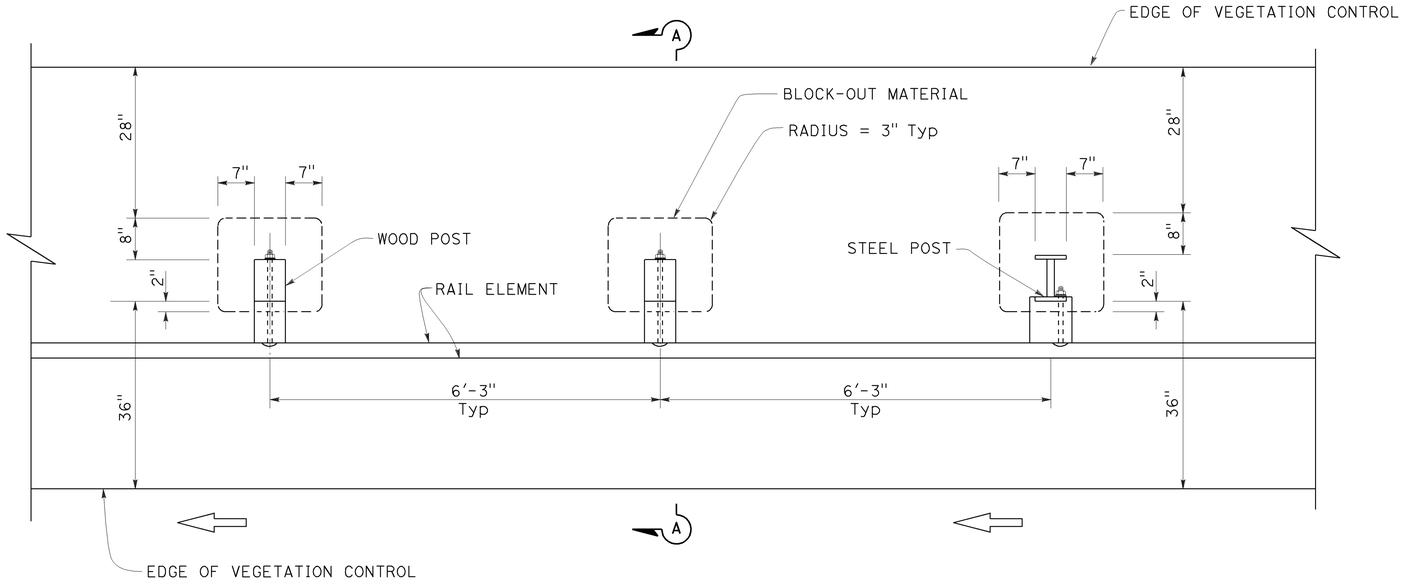

PLAN

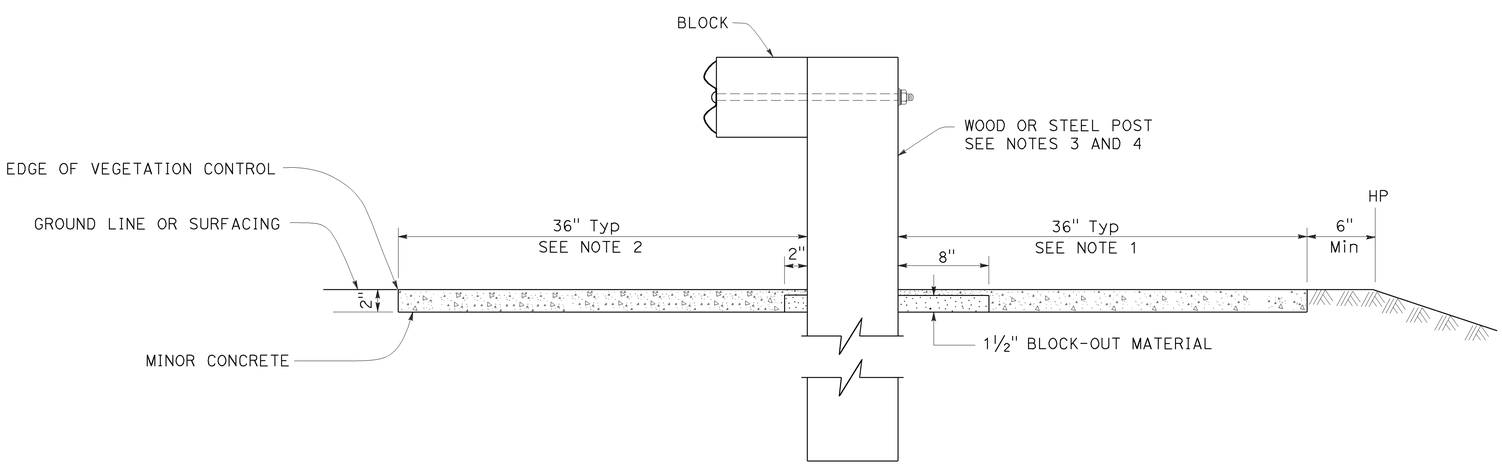

SECTION A-A

NOTES:

1. Where the distance between back of post and hinge point is less than 42", construct vegetation control to 6" from hinge point while maintaining the 8" block-out at back of post. If the 8" block-out at back of post can not be maintained, construct vegetation control flush with the back edge of post.
2. Where dike is constructed under railing, construct vegetation control to back edge of dike. Where paved shoulder is constructed within 36" in front of the post, construct vegetation control to the edge of paved shoulder.
3. For wood post sizes, see Revised Standard Plan RSP A77N1.
4. For steel post sizes, see Revised Standard Plan RSP A77N2.
5. For details not shown, see Revised Standard Plans RSP A77L1 and RSP A77L2.

STATE OF CALIFORNIA
DEPARTMENT OF TRANSPORTATION

MIDWEST GUARDRAIL SYSTEM TYPICAL VEGETATION CONTROL STANDARD RAILING SECTION

NO SCALE

RSP A77N5 DATED JULY 19, 2013 SUPPLEMENTS THE STANDARD PLANS BOOK DATED 2010.

REVISED STANDARD PLAN RSP A77N5

2010 REVISED STANDARD PLAN RSP A77N5

7-3-13

Dist	COUNTY	ROUTE	POST MILES TOTAL PROJECT	SHEET No.	TOTAL SHEETS
04	Ala	580	R4.9/R5.6	40	80

Randell D. Hiatt
REGISTERED CIVIL ENGINEER

November 15, 2013
PLANS APPROVAL DATE

REGISTERED PROFESSIONAL ENGINEER
Randell D. Hiatt
No. C50200
Exp. 6-30-15
CIVIL
STATE OF CALIFORNIA

THE STATE OF CALIFORNIA OR ITS OFFICERS OR AGENTS SHALL NOT BE RESPONSIBLE FOR THE ACCURACY OR COMPLETENESS OF SCANNED COPIES OF THIS PLAN SHEET.

TO ACCOMPANY PLANS DATED 5-4-15

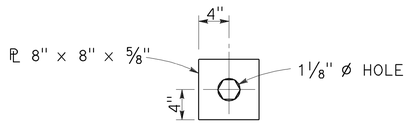

DETAIL "A"
CABLE CONNECTION
END PLATE

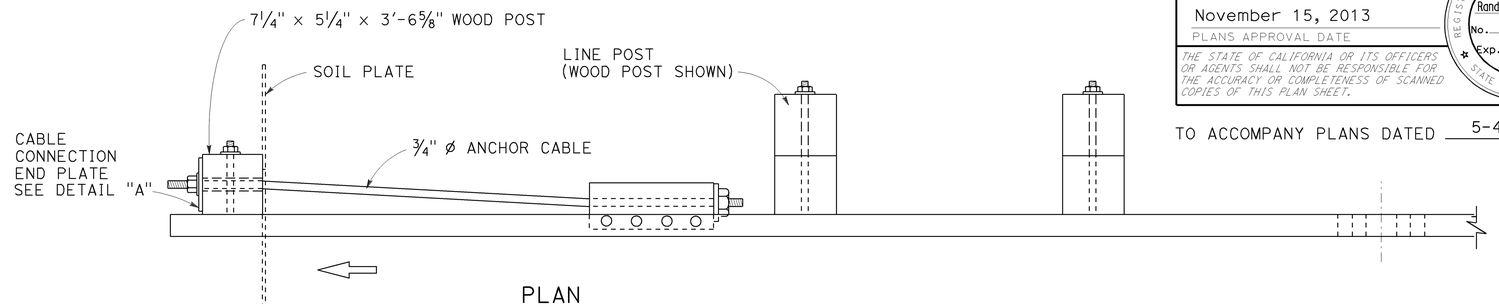

PLAN

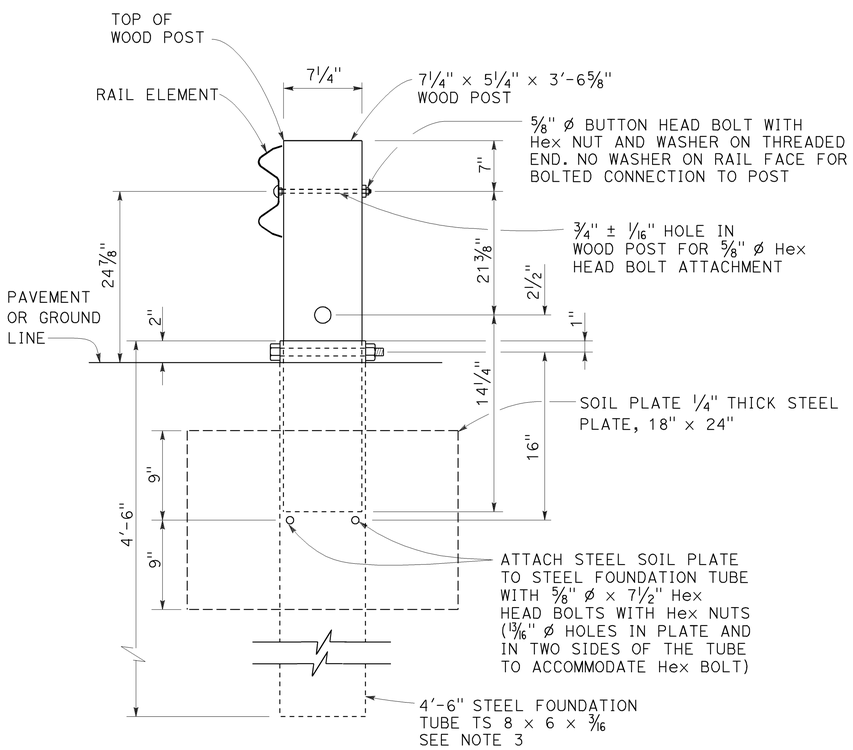

SECTION A-A

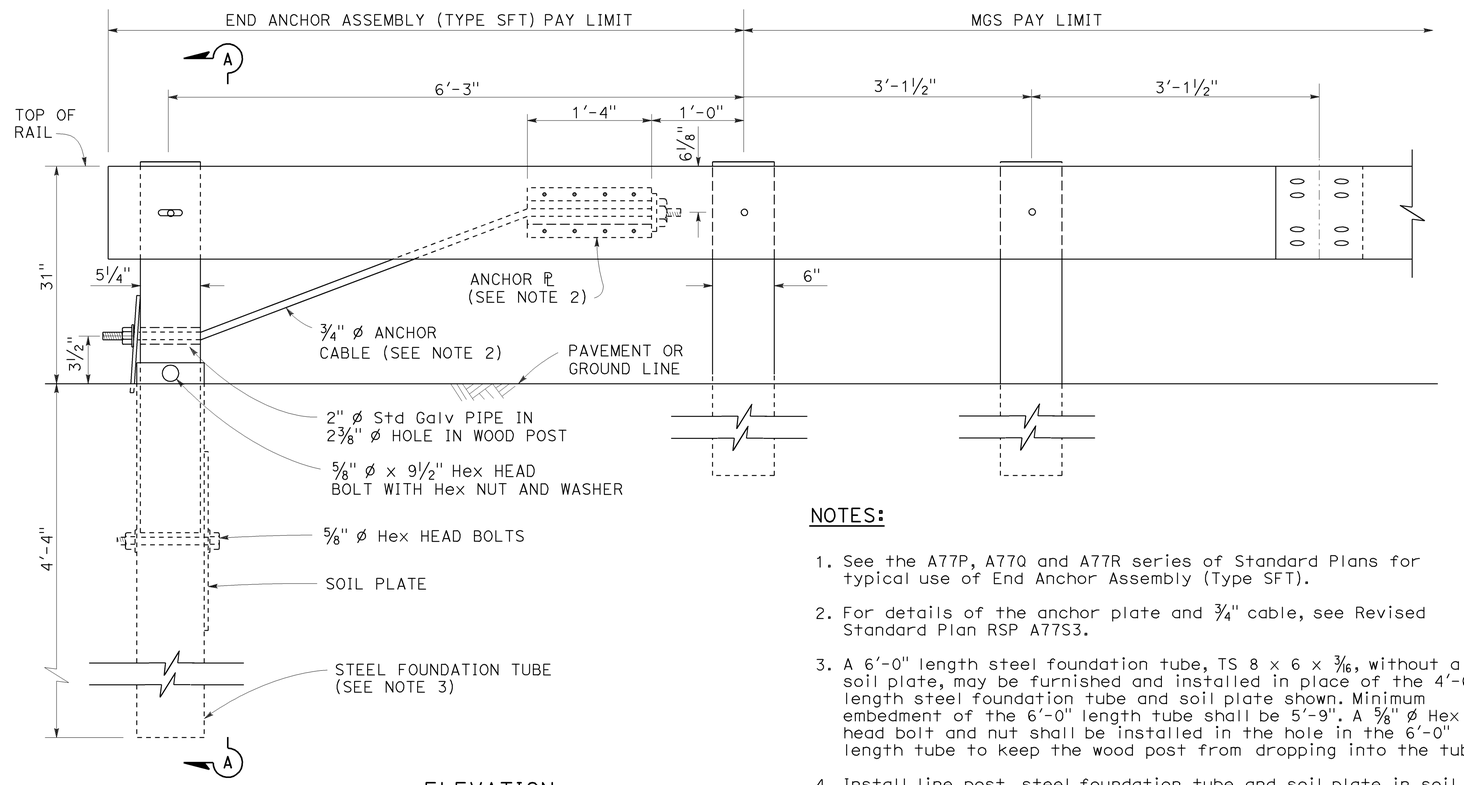

ELEVATION

END ANCHOR
ASSEMBLY (TYPE SFT)
See Note 1

NOTES:

1. See the A77P, A77Q and A77R series of Standard Plans for typical use of End Anchor Assembly (Type SFT).
2. For details of the anchor plate and 3/4" cable, see Revised Standard Plan RSP A77S3.
3. A 6'-0" length steel foundation tube, TS 8 x 6 x 3/16, without a soil plate, may be furnished and installed in place of the 4'-6" length steel foundation tube and soil plate shown. Minimum embedment of the 6'-0" length tube shall be 5'-9". A 5/8" ø Hex head bolt and nut shall be installed in the hole in the 6'-0" length tube to keep the wood post from dropping into the tube.
4. Install line post, steel foundation tube and soil plate in soil.

STATE OF CALIFORNIA
DEPARTMENT OF TRANSPORTATION

MIDWEST GUARDRAIL SYSTEM END ANCHOR ASSEMBLY (TYPE SFT)

NO SCALE

RSP A77S1 DATED NOVEMBER 15, 2013 SUPERSEDES RSP A77S1
DATED JULY 19, 2013 THAT SUPPLEMENTS THE STANDARD PLANS BOOK DATED 2010.

REVISED STANDARD PLAN RSP A77S1

2010 REVISED STANDARD PLAN RSP A77S1

10-4-13

Dist	COUNTY	ROUTE	POST MILES TOTAL PROJECT	SHEET No.	TOTAL SHEETS
04	Ala	580	R4.9/R5.6	41	80

Randell D. Hiatt
REGISTERED CIVIL ENGINEER

July 19, 2013
PLANS APPROVAL DATE

REGISTERED PROFESSIONAL ENGINEER
Randell D. Hiatt
No. C50200
Exp. 6-30-15
CIVIL
STATE OF CALIFORNIA

THE STATE OF CALIFORNIA OR ITS OFFICERS OR AGENTS SHALL NOT BE RESPONSIBLE FOR THE ACCURACY OR COMPLETENESS OF SCANNED COPIES OF THIS PLAN SHEET.

TO ACCOMPANY PLANS DATED 5-4-15

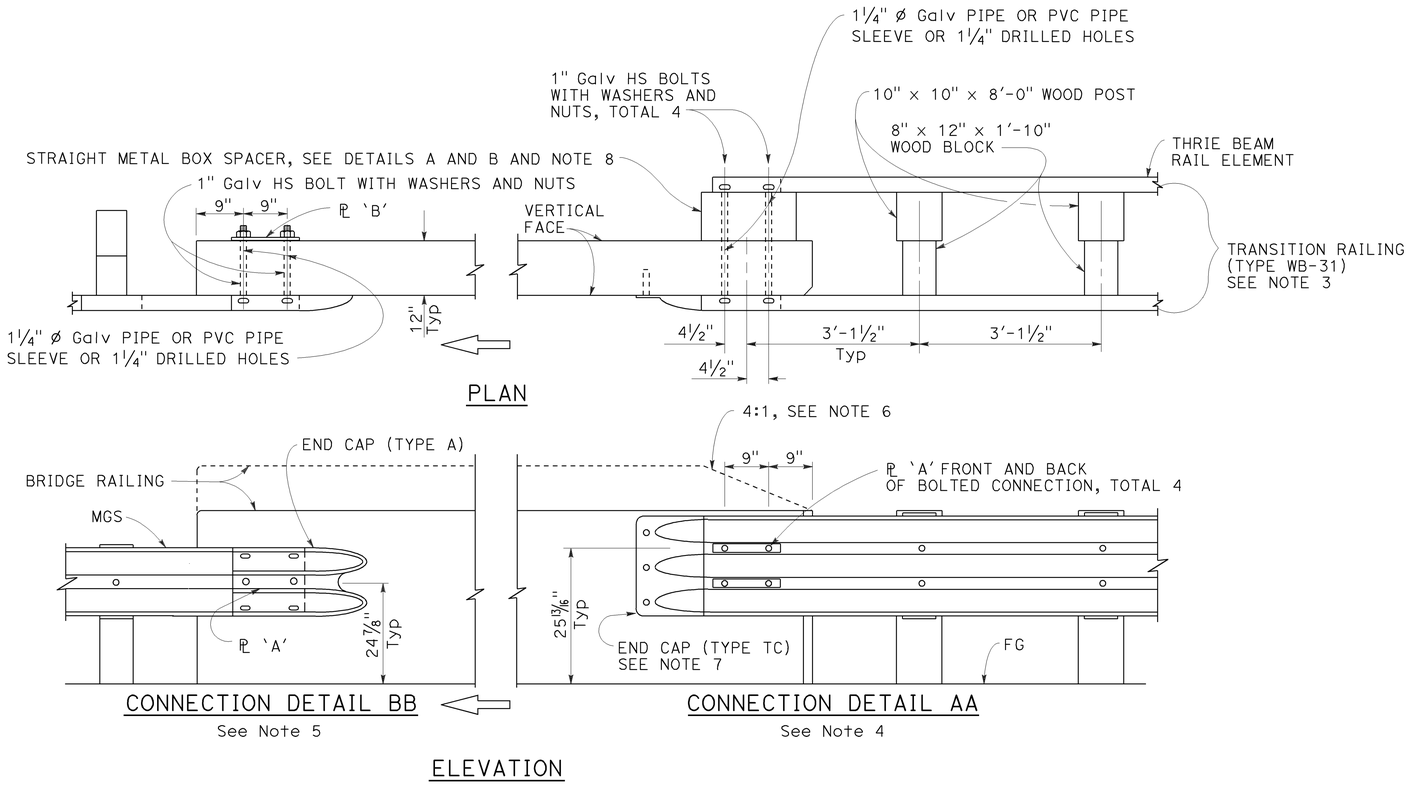

MIDWEST GUARDRAIL SYSTEM CONNECTION TO BRIDGE RAILING WITHOUT SIDEWALK

NOTES:

1. See Revised Standard Plan RSP A77U2 for additional connection details to bridges without sidewalks.
2. Additional details of posts, blocks and hardware are shown on Revised Standard Plans RSP A77M1, RSP A77N1 and RSP A77N2.
3. For additional details of Transition Railing (Type WB-31), see Revised Standard Plan RSP A77U4. Transition Railing (Type WB-31) transitions the 12 gauge MGS railing section to a heavier gage nested thrie beam railing section which is connected to the concrete bridge railing.
4. For typical use of Connection Detail AA, see Layout Types 12A and 12B on Revised Standard Plan RSP A77Q1, Layout Types 12C and 12D on Revised Standard Plan RSP A77Q2, and Layout Type 12E on Revised Standard Plan RSP A77Q3.
5. For typical use of Connection Detail BB, see Layout Type 12D (structure departure railing connection) on Revised Standard Plan RSP A77Q2 and Layout Type 12DD on Revised Standard Plan RSP A77Q5.
6. Where the height of the bridge railing exceeds the height of the thrie beam railing by more than 1" at Connection Detail AA, taper the top of the end of the bridge railing at 4:1 to match the top elevation of the thrie beam rail.
7. For details of End Cap (Type TC), see Revised Standard Plan RSP A77U4.
8. See Revised Standard Plan RSP A77U4 for additional details regarding depth dimension for straight metal box spacer.

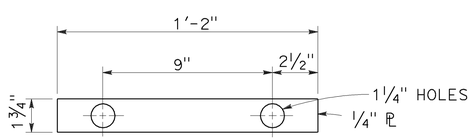

PLATE 'A'

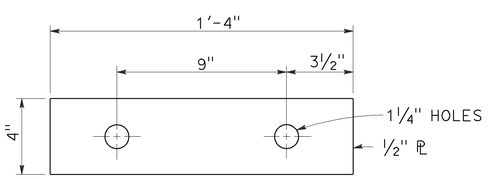

PLATE 'B'
(For backside of connection BB)

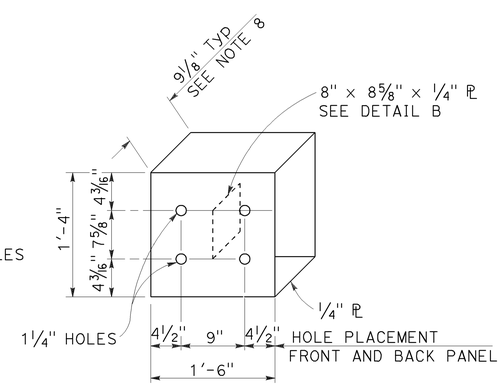

DETAIL A

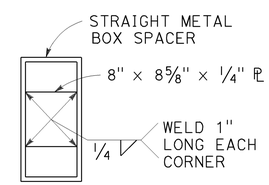

DETAIL B

STRAIGHT METAL BOX SPACER

STATE OF CALIFORNIA
DEPARTMENT OF TRANSPORTATION

MIDWEST GUARDRAIL SYSTEM CONNECTIONS TO BRIDGE RAILINGS WITHOUT SIDEWALKS DETAILS No. 1

NO SCALE

RSP A77U1 DATED JULY 19, 2013 SUPPLEMENTS THE STANDARD PLANS BOOK DATED 2010.

REVISED STANDARD PLAN RSP A77U1

2010 REVISED STANDARD PLAN RSP A77U1

7-8-13

Dist	COUNTY	ROUTE	POST MILES TOTAL PROJECT	SHEET No.	TOTAL SHEETS
04	Ala	580	R4.9/R5.6	42	80

Randell D. Hiatt
REGISTERED CIVIL ENGINEER

November 15, 2013
PLANS APPROVAL DATE

REGISTERED PROFESSIONAL ENGINEER
Randell D. Hiatt
No. C50200
Exp. 6-30-15
CIVIL
STATE OF CALIFORNIA

THE STATE OF CALIFORNIA OR ITS OFFICERS OR AGENTS SHALL NOT BE RESPONSIBLE FOR THE ACCURACY OR COMPLETENESS OF SCANNED COPIES OF THIS PLAN SHEET.

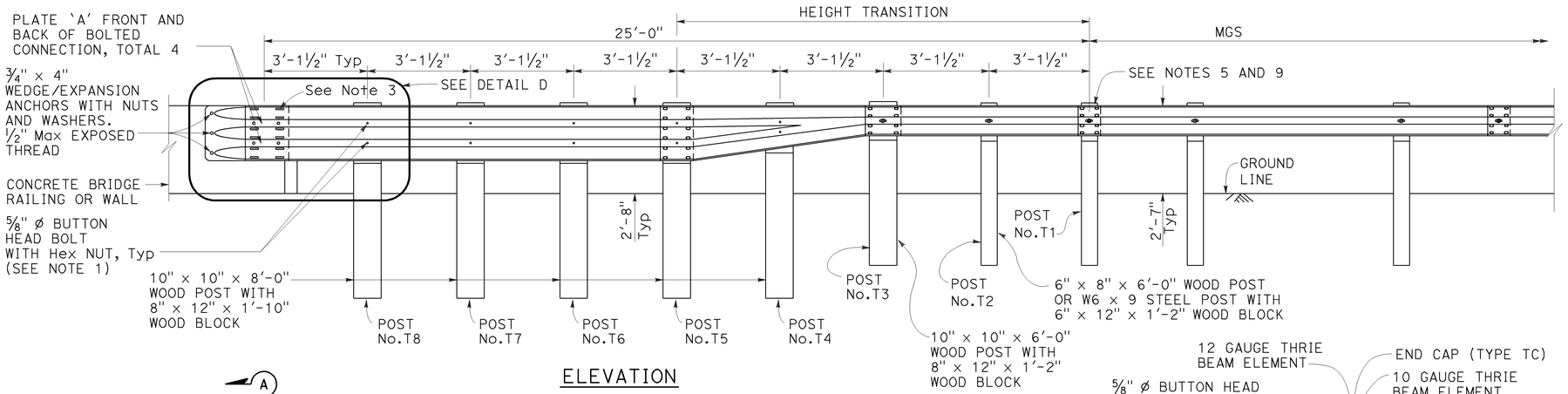

ELEVATION

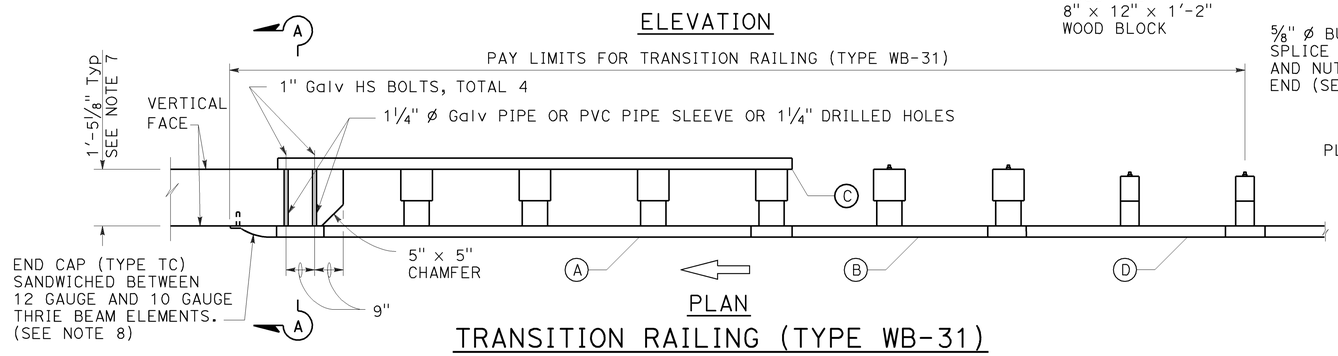

PLAN

TRANSITION RAILING (TYPE WB-31)

(No Blockout Attachment)

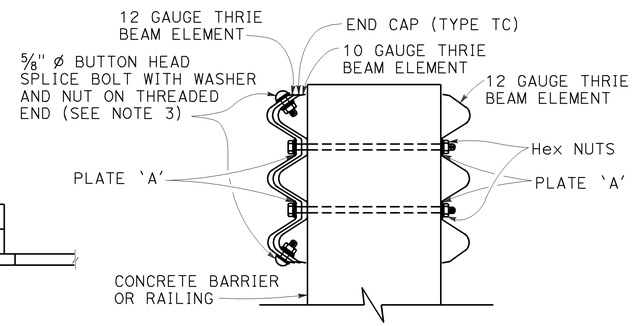

SECTION A-A

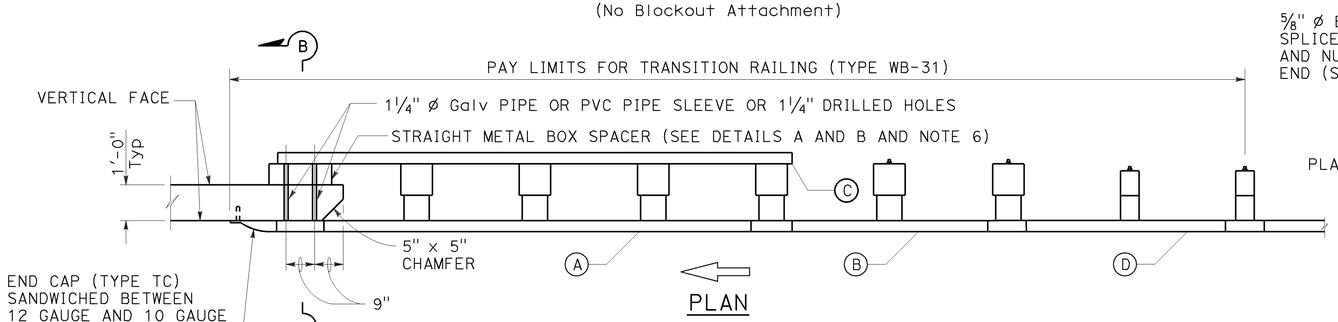

PLAN

TRANSITION RAILING (TYPE WB-31)

(Blockout Attachment)

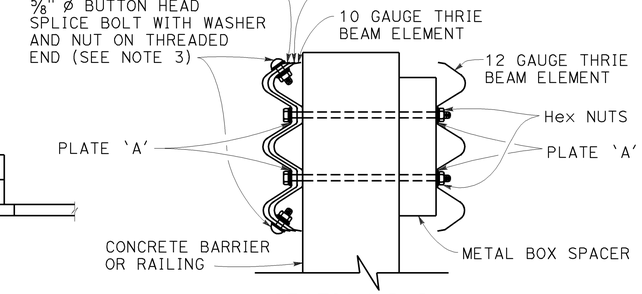

SECTION B-B

NOTES:

TO ACCOMPANY PLANS DATED 5-4-15

1. Use 5/8" ø Button head bolts and hex nuts for connections to posts. No washer on rail face for bolted connections to post.
2. The nested rail elements, end cap, and 'W' beam to thrie beam element may be spliced together prior to bolting the elements to the wood post and concrete barrier or railing.
3. Exterior splice bolt holes for rail element splices at Post No. T5 and the connection to the concrete barrier or railing shall be the standard 29/32" × 1 1/8" slot size. Interior splice bolt holes at these locations may be increased up to 1 1/4" ø. Only the top 4 and the bottom 4 splice bolts with washers and nuts are required for rail splices at Post No. T5 and the connection to the concrete barrier or railing.
4. The top elevation of Posts No. T2 through No. T7 shall not project more than 1" above the top elevation of the rail element.
5. Typically, the railing connected to Transition Railing (Type WB-31) will be either standard railing section of MGS with height transition ratio of 150:1 or a Caltrans approved 31" end treatment attached to Post No. T1.
6. The depth of the metal box spacer varies from the 9 1/8" to 1 1/2" and is dependent on the width of the concrete railing or wall. The combined dimension for the depth of the metal box spacer plus the width of railing or wall is typically 21 1/8". Where the space between the backside of the concrete railing or wall and the rear thrie beam element is less than 1 1/2", metal plates similar to Plate 'A' are to be used as spacers.
7. Where the width of the concrete railing or wall is greater than 17 1/8", wood blocks are to be used to fill the space created between the backside of Posts No. T5 through No. T8 and the rear thrie beam element. These wood blocks shall be 8" in width and 1'-2" in length. The dimension between the front thrie beam element and the rear thrie beam element is to match the width of the concrete railing or wall.
8. End cap may be installed over 12 gauge and 10 gauge thrie beam elements where transition railing is installed on the departure end of bridge railing.
9. Conform standard railing section height to 31" at Post No. T1 using height transition ratio of 150:1.

LEGEND:

(A) NESTED THRIE BEAM ELEMENTS (ONE 12 GAUGE ELEMENT NESTED OVER ONE 10 GAUGE ELEMENT).

(B) ONE ASYMMETRICAL 10 GAUGE "W" BEAM TO THRIE BEAM ELEMENT.

(C) ONE 12 GAUGE THRIE BEAM ELEMENT.

(D) ONE 10 GAUGE "W" BEAM RAIL ELEMENT (7'-3 1/2" LENGTH)

10 GAUGE = 0.138" THICK
12 GAUGE = 0.108" THICK

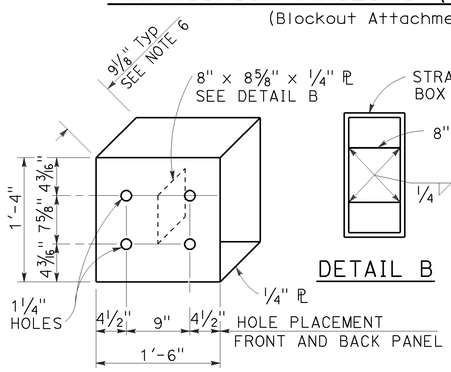

DETAIL A

STRAIGHT METAL BOX SPACER

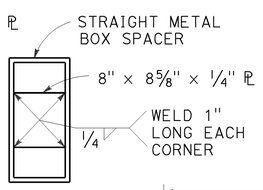

DETAIL B

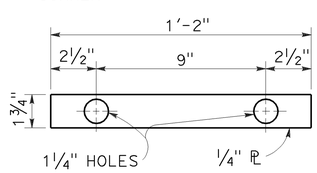

DETAIL C

PLATE 'A'

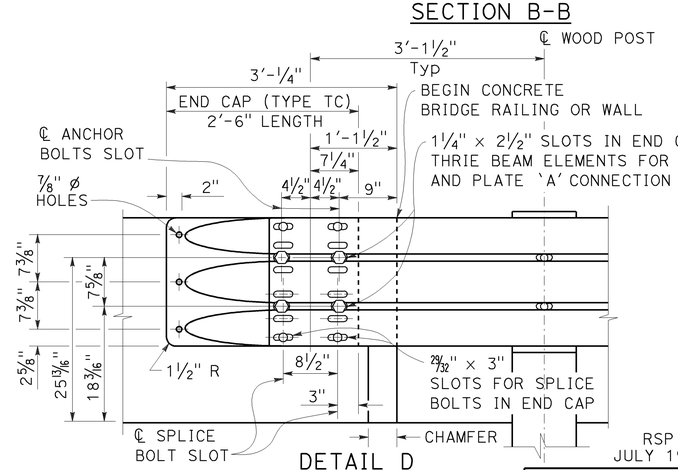

DETAIL D

STATE OF CALIFORNIA
DEPARTMENT OF TRANSPORTATION

MIDWEST GUARDRAIL SYSTEM TRANSITION RAILING (TYPE WB-31)

NO SCALE

RSP A77U4 DATED NOVEMBER 15, 2013 SUPERSEDES RSP A77U4 DATED JULY 19, 2013 THAT SUPPLEMENTS THE STANDARD PLANS BOOK DATED 2010.

REVISED STANDARD PLAN RSP A77U4

2010 REVISED STANDARD PLAN RSP A77U4

10-4-13

Dist	COUNTY	ROUTE	POST MILES TOTAL PROJECT	SHEET No.	TOTAL SHEETS
04	Ala	580	R4.9/R5.6	43	80

Randell D. Hiatt
REGISTERED CIVIL ENGINEER

July 19, 2013
PLANS APPROVAL DATE

REGISTERED PROFESSIONAL ENGINEER
Randell D. Hiatt
No. C50200
Exp. 6-30-15
CIVIL
STATE OF CALIFORNIA

THE STATE OF CALIFORNIA OR ITS OFFICERS OR AGENTS SHALL NOT BE RESPONSIBLE FOR THE ACCURACY OR COMPLETENESS OF SCANNED COPIES OF THIS PLAN SHEET.

TO ACCOMPANY PLANS DATED 5-4-15

NOTES:

1. Refer to Revised Standard Plans RSP A77L1 and RSP A77L2 for component details for MGS not shown on this plan.
2. All posts for any standard barrier run shall be of the same type: Wood or Steel.
3. Install posts in soil.

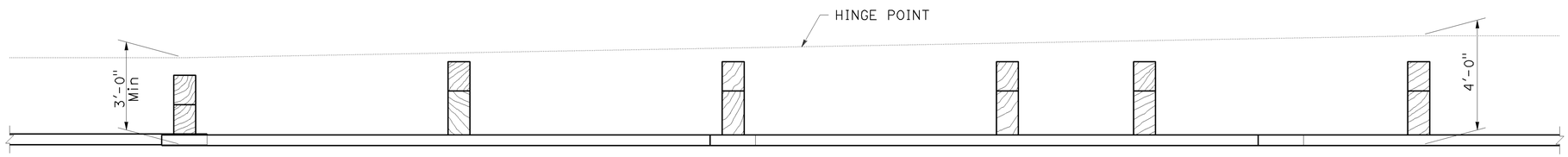

PLAN

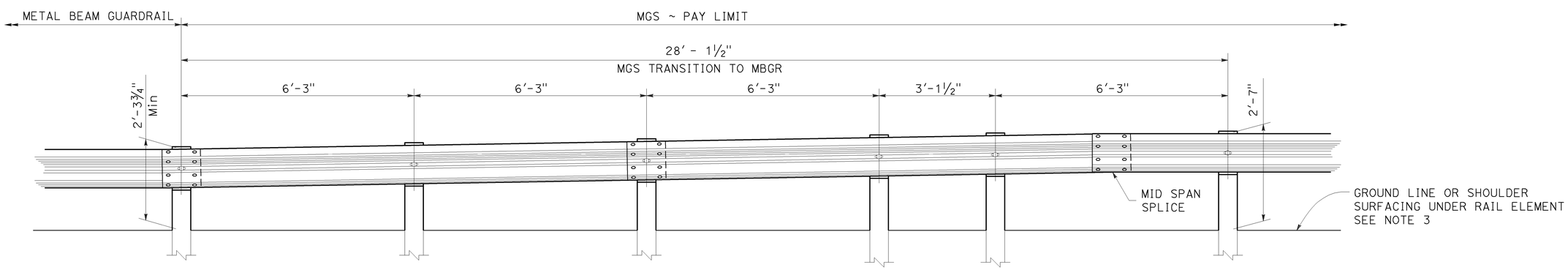

ELEVATION

STATE OF CALIFORNIA
DEPARTMENT OF TRANSPORTATION

MIDWEST GUARDRAIL SYSTEM TRANSITION TO METAL BEAM GUARDRAIL

NO SCALE

RSP A77U5 DATED JULY 19, 2013 SUPPLEMENTS THE STANDARD PLANS BOOK DATED 2010.

REVISED STANDARD PLAN RSP A77U5

2010 REVISED STANDARD PLAN RSP A77U5

TO ACCOMPANY PLANS DATED 5-4-15

Dist	COUNTY	ROUTE	POST MILES TOTAL PROJECT	SHEET No.	TOTAL SHEETS
04	Ala	580	R4.9/R5.6	44	80

Glenn DeCou
REGISTERED CIVIL ENGINEER

October 19, 2012
PLANS APPROVAL DATE

REGISTERED PROFESSIONAL ENGINEER Glenn DeCou No. C34547 Exp. 9-30-13 CIVIL STATE OF CALIFORNIA

THE STATE OF CALIFORNIA OR ITS OFFICERS OR AGENTS SHALL NOT BE RESPONSIBLE FOR THE ACCURACY OR COMPLETENESS OF SCANNED COPIES OF THIS PLAN SHEET.

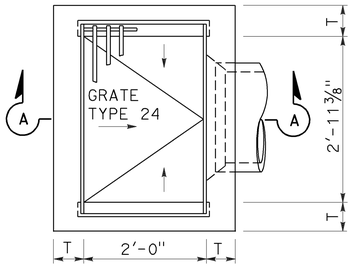

TYPE G1

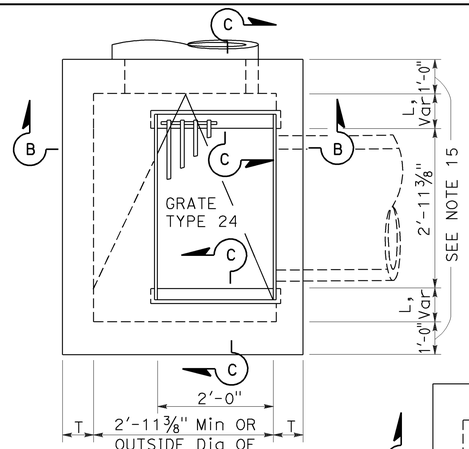

TYPE G2

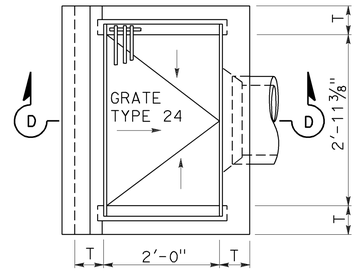

TYPE G3

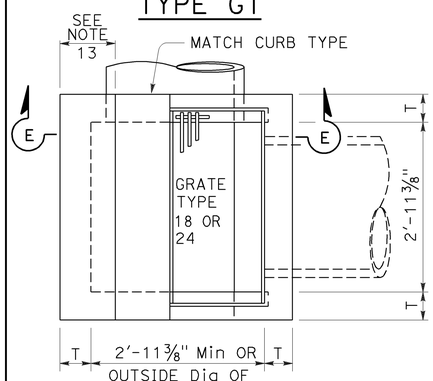

TYPE G4

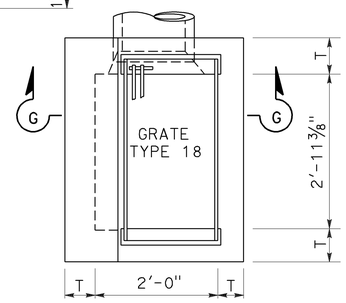

TYPE G6

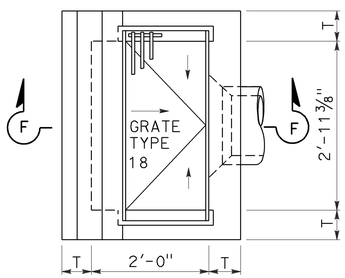

TYPE G5

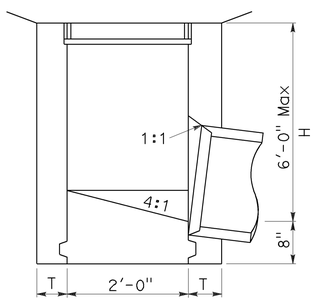

SECTION A-A

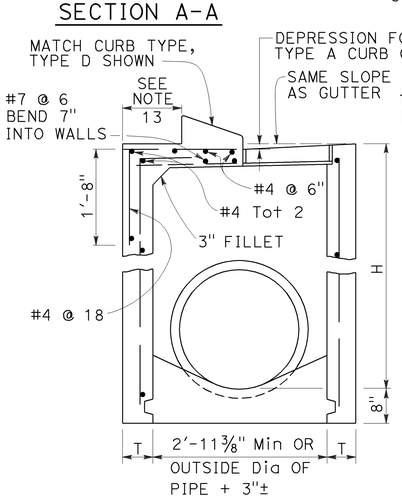

SECTION E-E

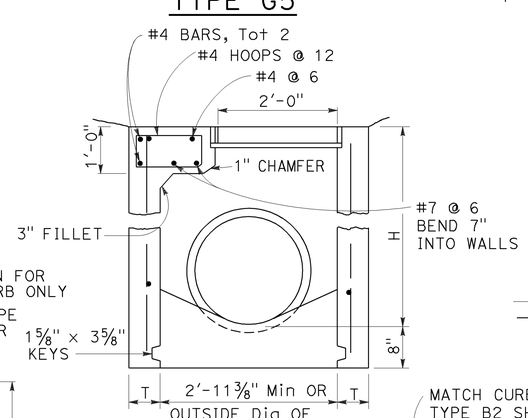

SECTION B-B

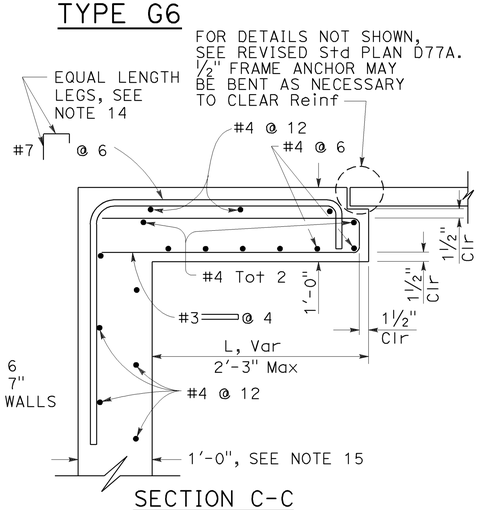

SECTION C-C

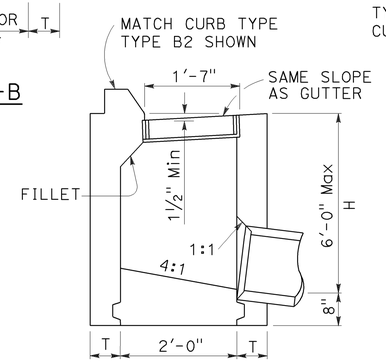

SECTION F-F

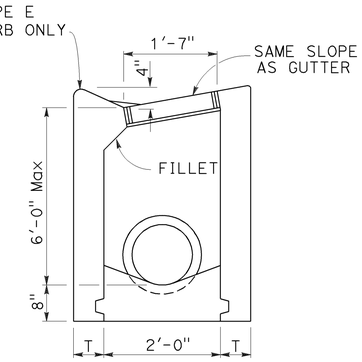

SECTION G-G

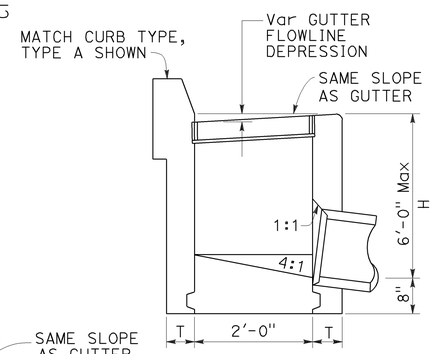

SECTION D-D

NOTES:

1. "H" is the difference in elevation between the outlet pipe flow line and the normal gutter grade line undepressed.
2. For "T" wall thickness, see Table A below.
3. Wall reinforcing not required when "H" is 8'-0" or less and the unsupported width or length is 7'-0" or less. Walls exceeding these limits shall be reinforced with #4 bars @ 1'-6" ± centers placed 1½" clear to inside of box unless otherwise shown.
4. Inlet bottom reinforcing not required. See Standard Plan D74C for alternative reinforced bottom and alternative half round bottom.
5. Steps-None required where "H" is less than 2'-6". Where "H" is 2'-6" or more, install steps with lowest rung 1'-0" above the floor and highest rung not more than 6" below top of inlet. The distance between steps shall not exceed 1'-0" and shall be uniform throughout the length of the wall. Place steps in the wall without an opening. Steps inserts may be substituted for the bar steps. Step inserts shall comply with State Industrial Safety requirements. See Standard Plan D74C for step details.
6. Details shown apply to both metal and concrete pipe.
7. Pipe(s) can be placed in any wall.
8. Curb section shall match adjacent curb.
9. Basin floors shall have wood trowel finish and a minimum slope of 12:3 from all directions toward outlet pipe.
10. Set inlet so that grate bars are parallel to direction of principal surface flow.
11. See Revised Standard Plans D77A and D77B for grate and frame details and weights of miscellaneous iron and steel.
12. See Standard Plan D78A for gutter depression details.
13. This dimenison will vary with different grates, curbs types, box width and wall thickness.
14. Bar may be rotated as necessary to clear opening. Where "L" is 6" or less, bar may be omitted.
15. Where "L" is 6" or less, wall thickness shall be as shown in Table A.
16. Cast-in-place inlets to be formed around all pipes/stubs intersecting the inlet, and concrete poured in one continuous operation. Precast inlets shall have mortared connections conforming to details for Type GCP Inlet shown on Standard Plan D75B. See Standard Specifications for mortar composition.

TABLE A

CONCRETE QUANTITIES				
TYPE	H=3'-0" TO 8'-0" (T=6")		H=8'-1" TO 20'-0" (T=8")	
	H=3'-0" (CY)	ADDITIONAL PCC PER FOOT (CY)	H=8'-1" (CY)	ADDITIONAL PCC PER FOOT (CY)
G-1	0.95	0.220	See Note A	SEE NOTE A
G-2*	1.31	0.255	3.50	0.357
G-3	1.03	0.220	See Note A	SEE NOTE A
G-4* (TYPE 24)	1.27	0.255	3.48	0.357
G-4* (TYPE 18)	1.30	0.255	3.50	0.357
G-5	1.02	0.220	SEE NOTE A	SEE NOTE A
G-6	1.04	0.220	SEE NOTE A	SEE NOTE A

TABLE BASED ON 8" FLOOR SLAB. NO DEDUCTIONS ARE TO BE MADE TO THESE QUANTITIES BECAUSE OF PIPE OPENINGS, DIFFERENT FLOOR ALTERNATIVES OR DIFFERENT CURB TYPES. * QUANTITIES FOR TYPE G-2 AND G-4 INLETS BASED ON THE MINIMUM INTERIOR DIMENSIONS.

NOTE A:

Maximum allowable height 6'-0".

STATE OF CALIFORNIA
DEPARTMENT OF TRANSPORTATION

DRAINAGE INLETS

NO SCALE

RSP D73 DATED OCTOBER 19, 2012 SUPERSEDES STANDARD PLAN D73 DATED MAY 20, 2011 - PAGE 156 OF THE STANDARD PLANS BOOK DATED 2010.

REVISED STANDARD PLAN RSP D73

2010 REVISED STANDARD PLAN RSP D73

Dist	COUNTY	ROUTE	POST MILES TOTAL PROJECT	SHEET No.	TOTAL SHEETS
04	Ala	580	R4.9/R5.6	45	80

REGISTERED CIVIL ENGINEER

July 19, 2013
PLANS APPROVAL DATE

REGISTERED PROFESSIONAL ENGINEER
Gurinderpal Bhullar
No. C48815
Exp. 9-30-14
CIVIL
STATE OF CALIFORNIA

THE STATE OF CALIFORNIA OR ITS OFFICERS OR AGENTS SHALL NOT BE RESPONSIBLE FOR THE ACCURACY OR COMPLETENESS OF SCANNED COPIES OF THIS PLAN SHEET.

TO ACCOMPANY PLANS DATED 5-4-15

2010 REVISED STANDARD PLAN RSP T9

TABLE 1

TAPER LENGTH CRITERIA AND CHANNELIZING DEVICE SPACING

SPEED (S)	MINIMUM TAPER LENGTH * FOR WIDTH OF OFFSET 12 FEET (W)				MAXIMUM CHANNELIZING DEVICE SPACING		
					X	Y	Z **
	TANGENT 2L	MERGING L	SHIFTING L/2	SHOULDER L/3	TAPER	TANGENT	CONFLICT
mph	ft	ft	ft	ft	ft	ft	ft
20	160	80	40	27	20	40	10
25	250	125	63	42	25	50	12
30	360	180	90	60	30	60	15
35	490	245	123	82	35	70	17
40	640	320	160	107	40	80	20
45	1080	540	270	180	45	90	22
50	1200	600	300	200	50	100	25
55	1320	660	330	220	55	110	27
60	1440	720	360	240	60	120	30
65	1560	780	390	260	65	130	32
70	1680	840	420	280	70	140	35

* - For other offsets, use the following merging taper length formula for L:
For speed of 40 mph or less, $L = WS^2/60$
For speed of 45 mph or more, $L = WS$

Where: L = Taper length in feet
W = Width of offset in feet
S = Posted speed limit, off-peak 85th-percentile speed prior to work starting, or the anticipated operating speed in mph

** - Use for taper and tangent sections where there are no pavement markings or where there is a conflict between existing pavement markings and channelizers (CA).

TABLE 2

LONGITUDINAL BUFFER SPACE AND FLAGGER STATION SPACING

SPEED *	Min D **	DOWNGRADE Min D ***		
		-3%	-6%	-9%
mph	ft	ft	ft	ft
20	115	116	120	126
25	155	158	165	173
30	200	205	215	227
35	250	257	271	287
40	305	315	333	354
45	360	378	400	427
50	425	446	474	507
55	495	520	553	593
60	570	598	638	686
65	645	682	728	785
70	730	771	825	891

* - Speed is posted speed limit, off-peak 85th-percentile speed prior to work starting, or the anticipated operating speed in mph

** - Longitudinal buffer space or flagger station spacing

*** - Use on sustained downgrade steeper than -3 percent and longer than 1 mile.

TABLE 3

ADVANCE WARNING SIGN SPACING

ROAD TYPE	DISTANCE BETWEEN SIGNS *		
	A	B	C
	ft	ft	ft
URBAN - 25 mph OR LESS	100	100	100
URBAN - MORE THAN 25 mph TO 40 mph	250	250	250
URBAN - MORE THAN 40 mph	350	350	350
RURAL	500	500	500
EXPRESSWAY / FREEWAY	1000	1500	2640

* - The distances are approximate, are intended for guidance purposes only, and should be applied with engineering judgment. These distances should be adjusted by the Engineer for field conditions, if necessary, by increasing or decreasing the recommmended distances.

STATE OF CALIFORNIA
DEPARTMENT OF TRANSPORTATION

TRAFFIC CONTROL SYSTEM TABLES FOR LANE AND RAMP CLOSURES

NO SCALE

RSP T9 DATED JULY 19, 2013 SUPERSEDES RSP T9 DATED APRIL 19, 2013 THAT SUPPLEMENTS THE STANDARD PLANS BOOK DATED 2010.

REVISED STANDARD PLAN RSP T9

4-30-13

Dist	COUNTY	ROUTE	POST MILES TOTAL PROJECT	SHEET No.	TOTAL SHEETS
04	Ala	580	R4.9/R5.6	46	80

REGISTERED CIVIL ENGINEER

April 19, 2013
PLANS APPROVAL DATE

REGISTERED PROFESSIONAL ENGINEER Gurinderpal Bhullar No. C48815 Exp. 9-30-14 CIVIL STATE OF CALIFORNIA

THE STATE OF CALIFORNIA OR ITS OFFICERS OR AGENTS SHALL NOT BE RESPONSIBLE FOR THE ACCURACY OR COMPLETENESS OF SCANNED COPIES OF THIS PLAN SHEET.

TO ACCOMPANY PLANS DATED 5-4-15

NOTES:

See Revised Standard Plan RSP T9 for tables.

Use cone spacing X for taper segment, Y for tangent segment or Z for conflict situations, as approriate, per Table 1, unless X, Y, or Z cone spacing is shown on this sheet.

Unless otherwise specified in the special provisions, all temporary warning signs shall have black legend on fluorescent orange background.

California codes are designated by (CA). Otherwise, Federal (MUTCD) codes are shown.

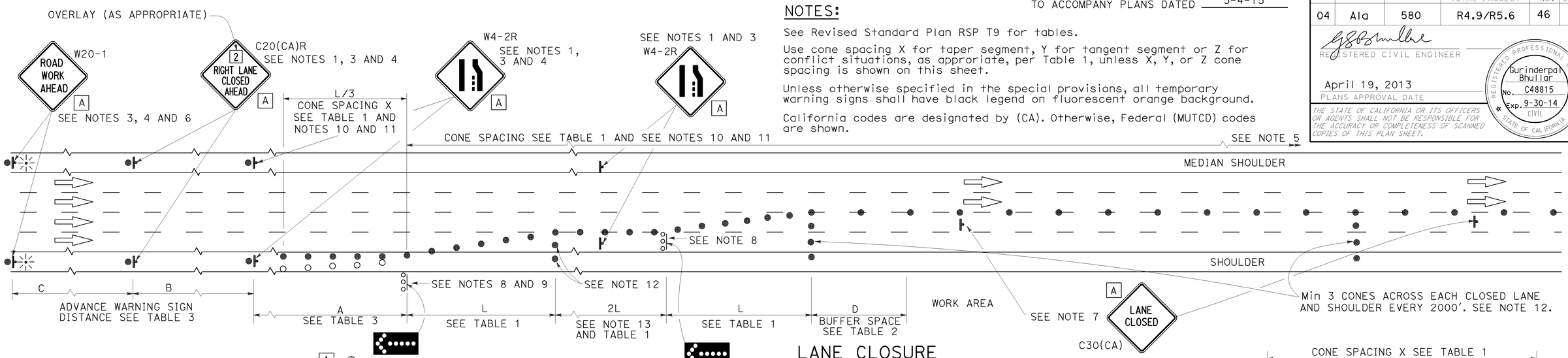

LANE CLOSURE

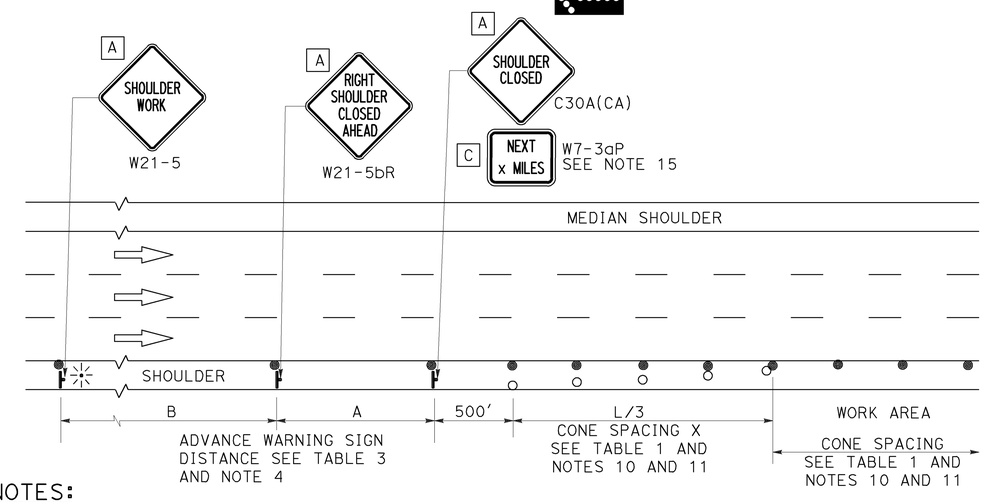

SHOULDER CLOSURE

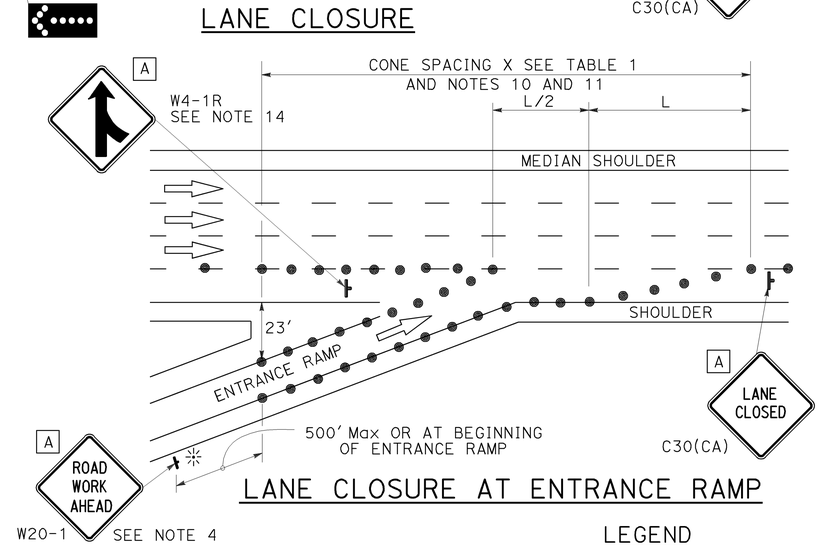

LANE CLOSURE AT ENTRANCE RAMP

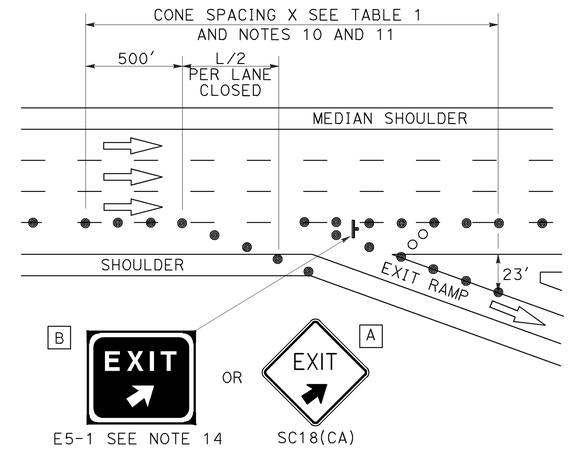

LANE CLOSURE AT EXIT RAMP

NOTES:

1. Median lane closures shall conform to the details as shown except that C20(CA)L and W4-2L signs shall be used.
2. At least one person shall be assigned to provide full time maintenance of traffic control devices for lane closures.
3. Duplicate sign installations are not required:
   a) On opposite shoulder if at least one-half of the available lanes remain open to traffic.
   b) In the median if the width of the median shoulder is less than 8' and the outside lanes are to be closed.
4. Each advance warning sign on each side of the roadway shall be equipped with at least two flags for daytime closure. Each flag shall be at least 16" x 16" in size and shall be orange or fluorescent red-orange in color. Flashing beacons shall be placed at the locations indicated for lane closure during hours of darkness.
5. A G20-2 "END ROAD WORK" sign, with minimum size of 48" x 24" as appropriate, shall be placed at the end of the lane closure unless the end of work area is obvious or ends within a larger project's limits.
6. If the W20-1 sign would follow within 2000' of a stationary W20-1 or G20-1 "ROAD WORK NEXT _____ MILES", use a C20(CA) sign for the first advance warning sign.
7. Place a C30(CA) sign every 2000' throughout length of lane closure.
8. One flashing arrow sign for each lane closed. The flashing arrow signs shall be Type I.
9. A minimum 1500' of sight distance shall be provided where possible for vehicles approaching the first flashing arrow sign. Lane closures shall not begin at top of crest vertical curve or on a horizontal curve.
10. All cones used for lane closures during the hours of darkness shall be fitted with retroreflective bands (or sleeves) as specified in the specifications.
11. Portable delineators, placed at one-half the spacing indicated for traffic cones may be used instead of cones for daytime closures only.
12. Unless otherwise specified in the special provisions, a minimum of 3 cones shall be placed transversely across each closed lane and shoulder at each location where a taper across a traffic lane ends and every 2000' as shown on the "Lane Closure" detail. Two Type II barricades may be used instead of the 3 cones. The transverse alignment of the cones or barricades on the closed shoulder may be shifted from the transverse alignment to provide access to the work.
13. Unless otherwise specified in the special provisions, the 2L tangent shown along lane lines shall be used between the L tapers required for each closed traffic lane.
14. Unless otherwise specified in the special provisions, the E5-1 or SC18(CA) and W4-1 signs shall be used as shown.
15. A W7-3aP "NEXT____ MILES" plaque must be used if theshoulder closure extends beyond the distance that can be perceived by road users.

LEGEND

- TRAFFIC CONE
- TRAFFIC CONE (OPTIONAL TAPER)
- TEMPORARY TRAFFIC CONTROL SIGN
- FLASHING ARROW SIGN (FAS)
- FAS SUPPORT OR TRAILER
- PORTABLE FLASHING BEACON

SIGN PANEL SIZE (Min)

A	48" x 48"
B	72" x 60"
C	36" x 30"

STATE OF CALIFORNIA
DEPARTMENT OF TRANSPORTATION

TRAFFIC CONTROL SYSTEM FOR LANE CLOSURE ON FREEWAYS AND EXPRESSWAYS

NO SCALE

RSP T10 DATED APRIL 19, 2013 SUPERSEDES STANDARD PLAN T10 DATED MAY 20, 2011 - PAGE 237 OF THE STANDARD PLANS BOOK DATED 2010.

REVISED STANDARD PLAN RSP T10

2010 REVISED STANDARD PLAN RSP T10

12-18-12

TO ACCOMPANY PLANS DATED 5-4-15

Dist	COUNTY	ROUTE	POST MILES TOTAL PROJECT	SHEET No.	TOTAL SHEETS
04	Ala	580	R4.9/R5.6	47	80

REGISTERED CIVIL ENGINEER

April 19, 2013
PLANS APPROVAL DATE

REGISTERED PROFESSIONAL ENGINEER Gurinderpal Bhullar No. C48815 Exp. 9-30-14 CIVIL STATE OF CALIFORNIA

THE STATE OF CALIFORNIA OR ITS OFFICERS OR AGENTS SHALL NOT BE RESPONSIBLE FOR THE ACCURACY OR COMPLETENESS OF SCANNED COPIES OF THIS PLAN SHEET.

NOTES: See Revised Standard Plan RSP T9 for tables.

Use cone spacing X for taper segment, Y for tangent segment or Z for conflict situations, as approriate, per Table 1, unless X, Y, or Z cone spacing is shown on this sheet.

Unless otherwise specified in the special provisions, all temporary warning signs shall have black legend on fluorescent orange background.

California codes are designated by (CA). Otherwise, Federal (MUTCD) codes are shown.

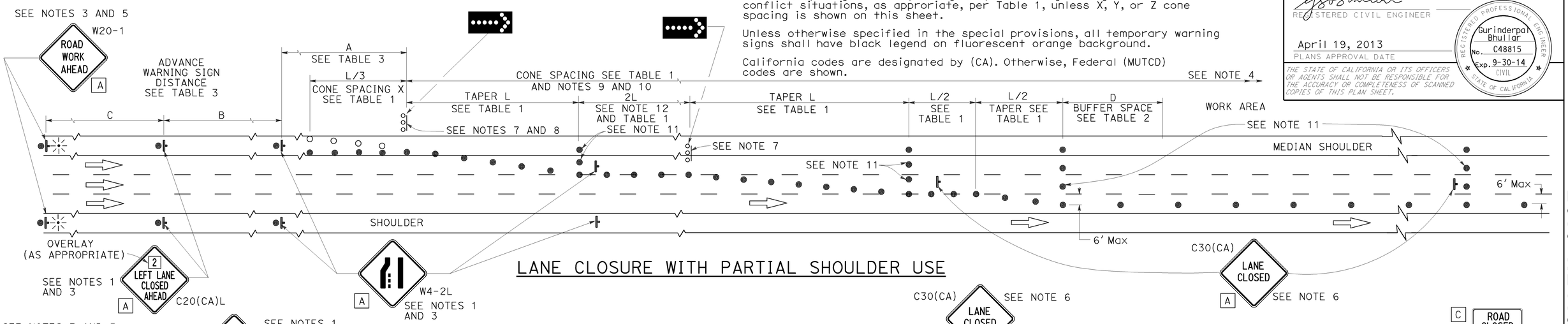

LANE CLOSURE WITH PARTIAL SHOULDER USE

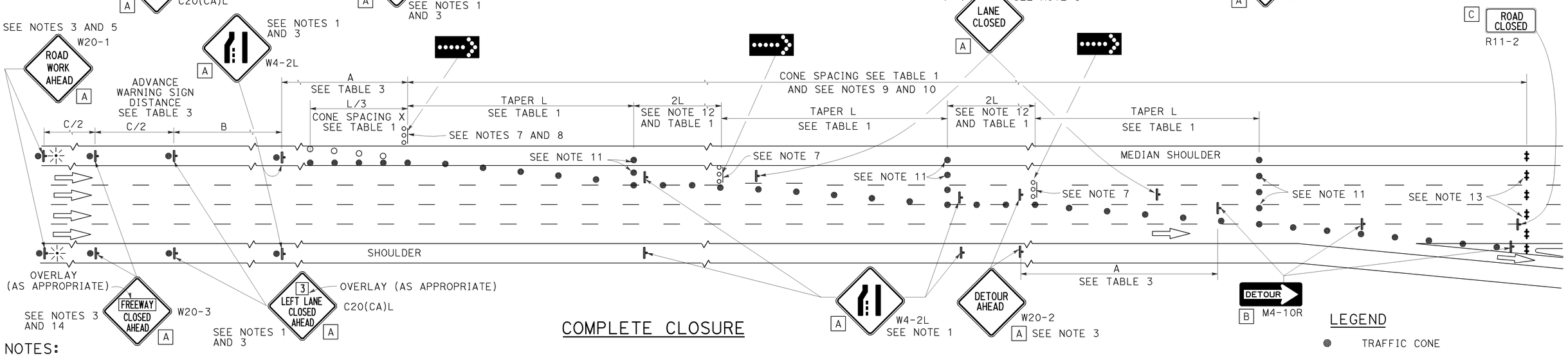

COMPLETE CLOSURE

NOTES:

1. Lane closures on the right side using partial median shoulder as a traffic lane shall conform to the details as shown except that C20(CA)R and W4-2R signs shall be used.
2. At least one person shall be assigned to provide full time maintenance of traffic control devices for lane closures.
3. Each advance warning sign on each side of the roadway shall be equipped with at least two flags for daytime closure. Each flag shall be at least 16" X 16" in size and shall be orange or fluorescent red-orange in color. Flashing beacons shall be placed at the locations indicated for lane closure during hours of darkness.
4. A G20-2 "END ROAD WORK" sign, with minimum size of 48" x 24" as appropriate, shall be placed at the end of the lane closure unless the end of work area is obvious or ends within a larger project's limits.
5. If the W20-1 sign would follow within 2000' of a stationary W20-1 or G20-1 "ROAD WORK NEXT ___ MILES", use a C20(CA) sign for the first advance warning sign.
6. Place a C30(CA) sign every 2000' throughout length of lane closure.
7. One flashing arrow sign for each lane closed. The flashing arrow signs shall be Type I.
8. A minimum 1500' of sight distance shall be provided where possible for vehicles approaching the first flashing arrow sign. Lane closures shall not begin at the top of crest vertical curve or on a horizontal curve.
9. All cones used for lane closures during the hours of darkness shall be fitted with retroreflective bands (or sleeves) as specified in the specifications.
10. Portable delineators, placed at one-half the spacing indicated for traffic cones, may be used instead of cones for daytime closures only.
11. Unless otherwise specified in the special provisions, a minimum of 3 cones shall be placed transversely across each closed lane and shoulder at each location where a taper across a traffic lane ends and every 2000' as shown on the "Lane Closure With Partial Shoulder Use" detail. Two Type II barricades may be used instead of the 3 cones. The transverse alignment of the cones or barricades on the closed shoulder may be shifted from the transverse alignment to provide access to the work.
12. Unless otherwise specified in the special provisions, the 2L tangent shown along lane lines shall be used between the L tapers required for each closed traffic lane.
13. A minimum of Two Type II or III barricades shall be placed across each closed lane and shoulder at the location shown and every 2000' within the complete closure area. Within the complete closure area, the transverse alignment of the barricades on the closed shoulder may be shifted from the transverse alignment to provide access to the work.
14. When specified in the special provisions, a W20-2 "DETOUR AHEAD" sign is to be used in place of the W20-3 "FREEWAY CLOSED AHEAD" sign.

SIGN PANEL SIZE (Min)

A	48" x 48"
B	48" x 18"
C	48" x 30"

LEGEND

- TRAFFIC CONE
- TRAFFIC CONE (OPTIONAL TAPER)
- TEMPORARY TRAFFIC CONTROL SIGN
- FLASHING ARROW SIGN (FAS)
- FAS SUPPORT OR TRAILER
- PORTABLE FLASHING BEACON

STATE OF CALIFORNIA
DEPARTMENT OF TRANSPORTATION

TRAFFIC CONTROL SYSTEM FOR LANE CLOSURES ON FREEWAYS AND EXPRESSWAYS

NO SCALE

RSP T10A DATED APRIL 19, 2013 SUPERSEDES STANDARD PLAN T10A DATED MAY 20, 2011 - PAGE 238 OF THE STANDARD PLANS BOOK DATED 2010.

REVISED STANDARD PLAN RSP T10A

2010 REVISED STANDARD PLAN RSP T10A

12-18-12

Dist	COUNTY	ROUTE	POST MILES TOTAL PROJECT	SHEET No.	TOTAL SHEETS
04	Ala	580	R4.9/R5.6	48	80

REGISTERED CIVIL ENGINEER

April 19, 2013
PLANS APPROVAL DATE

REGISTERED PROFESSIONAL ENGINEER
Gurinderpal Bhullar
No. C48815
Exp. 9-30-14
CIVIL
STATE OF CALIFORNIA

THE STATE OF CALIFORNIA OR ITS OFFICERS OR AGENTS SHALL NOT BE RESPONSIBLE FOR THE ACCURACY OR COMPLETENESS OF SCANNED COPIES OF THIS PLAN SHEET.

TO ACCOMPANY PLANS DATED 5-4-15

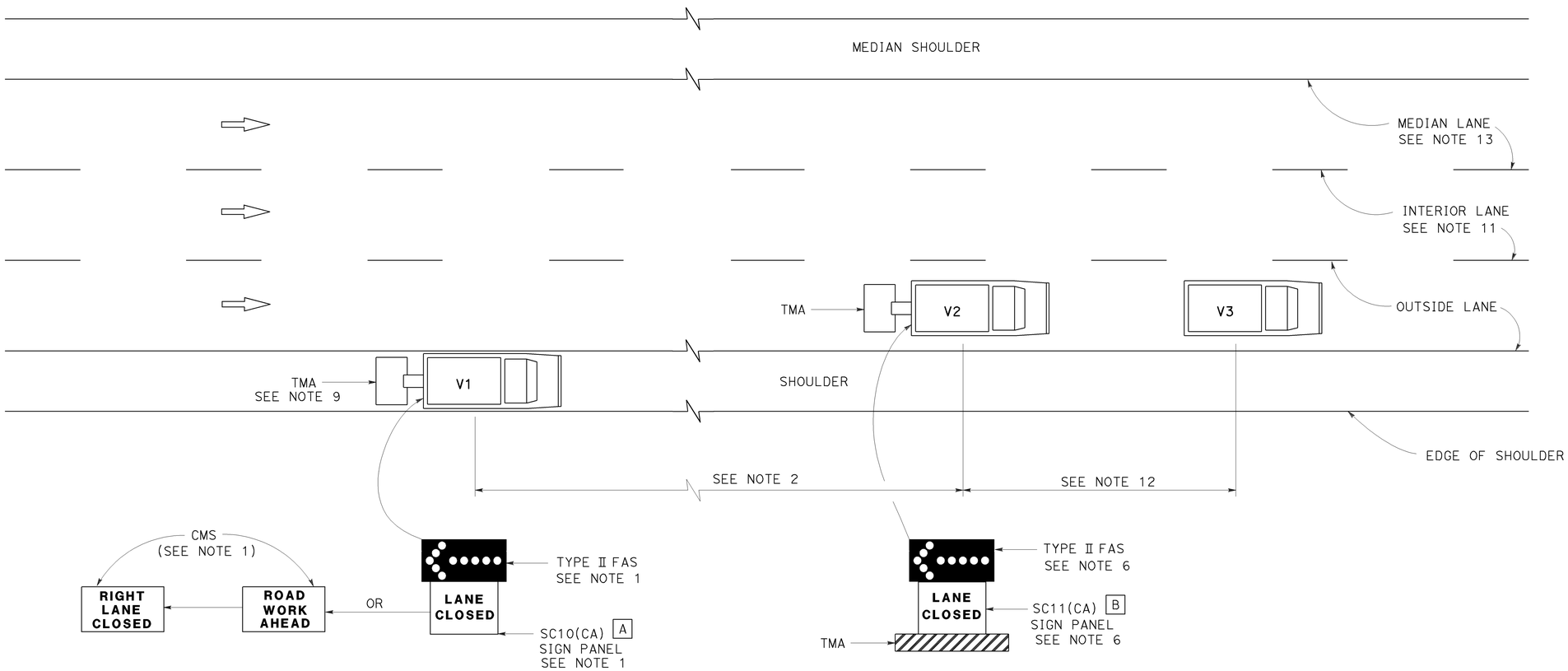

MOVING LANE CLOSURE ON MEDIAN LANE OR OUTSIDE LANE OF MULTILANE HIGHWAYS

SIGN PANEL SIZE (Min)

A 66" x 36"

B 54" x 42"

LEGEND

V1	SIGN VEHICLE
V2	SHADOW VEHICLE
V3	WORK/APPLICATION VEHICLE
	FLASHING ARROW SIGN (FAS)
CMS	CHANGEABLE MESSAGE SIGN
TMA	TRUCK-MOUNTED ATTENUATOR

NOTES:

1. Either a changeable message sign or a SC10(CA) sign panel and a Type II flashing arrow sign shall be mounted on the rear of sign vehicle V1. The changeable message sign shall be sequenced to show the "ROAD WORK AHEAD" message first, followed by the "RIGHT LANE CLOSED" message. For median lane closure, the flashing arrow symbol shall be reversed with the arrowhead on the right and the changeable message sign shall show "LEFT LANE CLOSED".
2. If traffic queues develop, sign vehicle V1 should be positioned upstream from the end of queue. Sign vehicle V1 shall be positioned where highly visible when shoulders are not available.
3. A minimum sight distance of 1500′ should be provided in advance of sign vehicle V1.
4. Sign vehicle V1 should remain at the beginning of horizontal or vertical curves until the other vehicles (V2 and V3) are far enough beyond the curve to resume the minimum sight distance of 1500′.
5. Vehicle-mounted sign panels shall have Type III or above retroreflective sheeting, black on white, or black on fluorescent orange, with 6" minimum series D letters per Caltrans sign specifications.
6. Shadow vehicle V2 shall be equipped with a truck-mounted attenuator. The sign panel shown and a Type II flashing arrow sign shall be mounted on the rear of shadow vehicle V2. For median lane closure the flashing arrow sign symbol shall be displayed with the arrowhead on the right.
7. All vehicles used for lane closures shall be equipped with two-way radios, and the vehicle operators shall maintain communication during the work or application operation.
8. All vehicles shall be equipped with flashing or rotating amber lights.
9. If sign vehicle V1 encroaches into the traffic lane due to insufficient shoulder width, sign vehicle V1 shall be equipped with a truck-mounted attenuator. Sign vehicle V1 shall stay as close to the edge of shoulder as practicable.
10. Where workers would be on foot in the work area, a stationary type lane closure (Revised Standard Plan T10, T11, etc., as applicable) shall be used instead of this plan.
11. For moving lane closure on interior lane of multilane highways, use Revised Standard Plan T16.
12. The spacing between work vehicle(s) and the shadow vehicles, and between each shadow vehicle should be minimized to deter road users from driving in between.
13. When the work/application vehicle V3 occupies the median lane, sign vehicle V1 should drive in the median shoulder and indicate left lane closed ahead.

STATE OF CALIFORNIA
DEPARTMENT OF TRANSPORTATION

TRAFFIC CONTROL SYSTEM FOR MOVING LANE CLOSURE ON MULTILANE HIGHWAYS

NO SCALE

RSP T15 DATED APRIL 19, 2013 SUPERSEDES STANDARD PLAN T15
DATED MAY 20, 2011 - PAGE 243 OF THE STANDARD PLANS BOOK DATED 2010.

REVISED STANDARD PLAN RSP T15

2010 REVISED STANDARD PLAN RSP T15

12-18-12

Dist	COUNTY	ROUTE	POST MILES TOTAL PROJECT	SHEET No.	TOTAL SHEETS
04	Ala	580	R4.9/R5.6	49	80

REGISTERED CIVIL ENGINEER

April 19, 2013
PLANS APPROVAL DATE

REGISTERED PROFESSIONAL ENGINEER
Gurinderpal Bhullar
No. C48815
Exp. 9-30-14
CIVIL
STATE OF CALIFORNIA

THE STATE OF CALIFORNIA OR ITS OFFICERS OR AGENTS SHALL NOT BE RESPONSIBLE FOR THE ACCURACY OR COMPLETENESS OF SCANNED COPIES OF THIS PLAN SHEET.

TO ACCOMPANY PLANS DATED 5-4-15

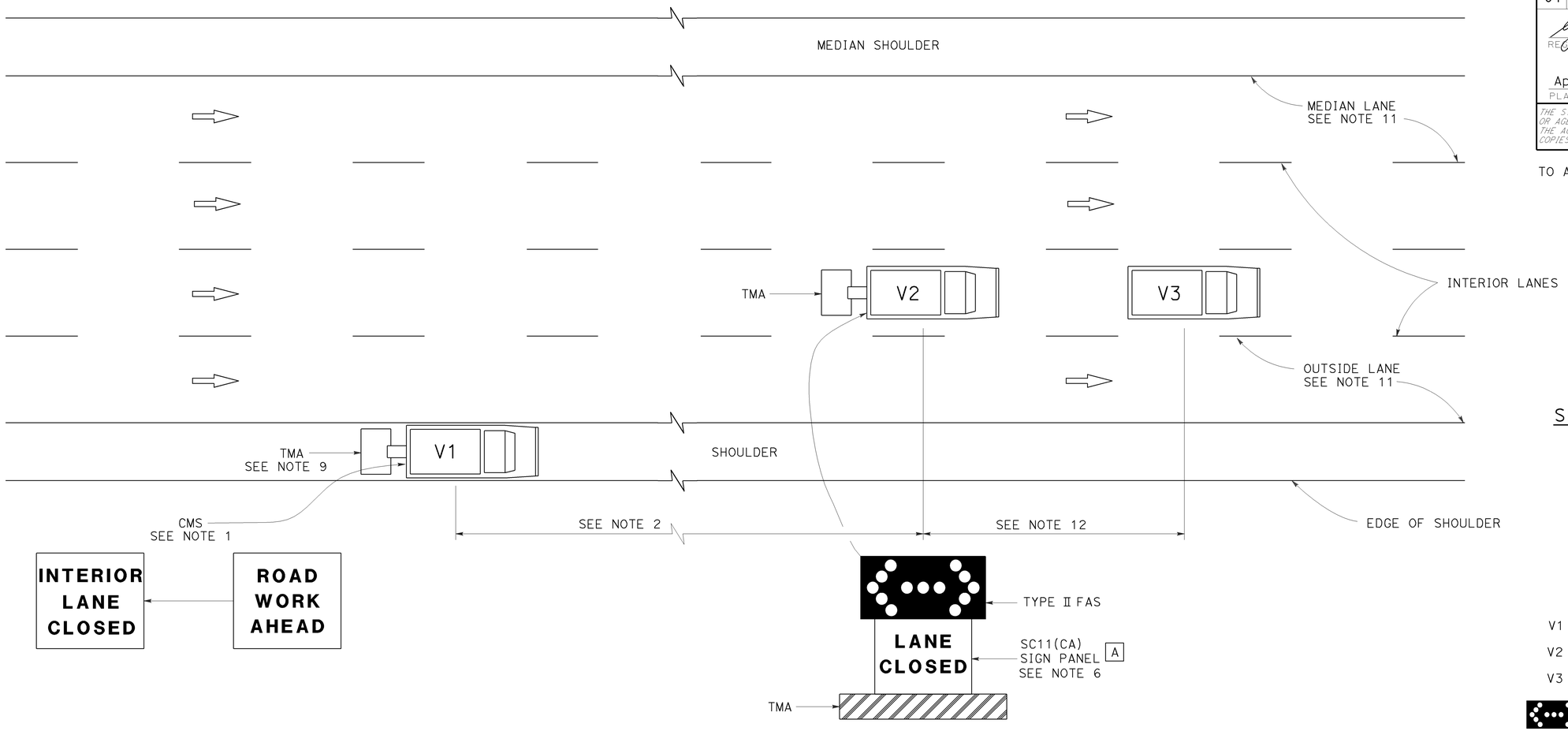

SIGN PANEL SIZE (Min)

A 54" x 42"

LEGEND

V1	SIGN VEHICLE
V2	SHADOW VEHICLE
V3	WORK/APPLICATION VEHICLE
	FLASHING ARROW SIGN (FAS) IN FLASHING DOUBLE ARROW MODE
CMS	CHANGEABLE MESSAGE SIGN
TMA	TRUCK-MOUNTED ATTENUATOR

MOVING LANE CLOSURE ON INTERIOR LANE OF MULTILANE HIGHWAYS

NOTES:

1. A changeable message sign shall be mounted on the rear of sign vehicle V1. The changeable message sign shall be sequenced to show the "ROAD WORK AHEAD" message first, followed by the "INTERIOR LANE CLOSED" message. The message "CENTER LANE CLOSED" may be used in place of the "INTERIOR LANE CLOSED" message.
2. If traffic queues develop, sign vehicle V1 should be positioned upstream from the end of queue. Sign vehicle V1 shall be positioned where highly visible when shoulders are not available.
3. A minimum sight distance of 1500′ should be provided in advance of sign vehicle V1.
4. Sign vehicle V1 should remain at the beginning of horizontal or vertical curves until the other vehicles (V2 and V3) are far enough beyond the curve to resume the minimum sight distance of 1500′.
5. Vehicle-mounted sign panels shall have Type III or above retroreflective sheeting, black on white, or black on fluorescent orange, with 6" minimum series D letters per Caltrans sign specifications.
6. Shadow vehicle V2 shall be equipped with a truck-mounted attenuator. The sign panel shown and a Type II flashing arrow sign shall be mounted on the rear of shadow vehicle V2.
7. All vehicles used for lane closures shall be equipped with two-way radios, and the vehicle operators shall maintain communication during the work or application operation.
8. All vehicles shall be equipped with flashing or rotating amber lights.
9. If sign vehicle V1 encroaches into the traffic lane due to insufficient shoulder width, sign vehicle V1 shall be equipped with a truck-mounted attenuator. Sign vehicle V1 shall stay as close to the edge of shoulder as practicable.
10. Where workers would be on foot in the work area, a stationary type lane closure (Revised Standard Plan T10, T11 etc., as applicable) shall be used instead of this plan.
11. For moving lane closure on median lane or outside lane of multilane highways, use Revised Standard Plan T15.
12. The spacing between work vehicle(s) and the shadow vehicles, and between each shadow vehicle should be minimized to deter road users from driving in between.

STATE OF CALIFORNIA
DEPARTMENT OF TRANSPORTATION

TRAFFIC CONTROL SYSTEM FOR MOVING LANE CLOSURE ON MULTILANE HIGHWAYS

NO SCALE

RSP T16 DATED APRIL 19, 2013 SUPERSEDES STANDARD PLAN T16
DATED MAY 20, 2011 - PAGE 244 OF THE STANDARD PLANS BOOK DATED 2010.

REVISED STANDARD PLAN RSP T16

2010 REVISED STANDARD PLAN RSP T16

12-18-12

Dist	COUNTY	ROUTE	POST MILES TOTAL PROJECT	SHEET No.	TOTAL SHEETS
04	Ala	580	R4.9/R5.6	50	80

REGISTERED CIVIL ENGINEER

November 15, 2013
PLANS APPROVAL DATE

REGISTERED PROFESSIONAL ENGINEER
Tillat Satter
No. C42892
Exp. 3-31-14
CIVIL
STATE OF CALIFORNIA

THE STATE OF CALIFORNIA OR ITS OFFICERS OR AGENTS SHALL NOT BE RESPONSIBLE FOR THE ACCURACY OR COMPLETENESS OF SCANNED COPIES OF THIS PLAN SHEET.

TO ACCOMPANY PLANS DATED 5-4-15

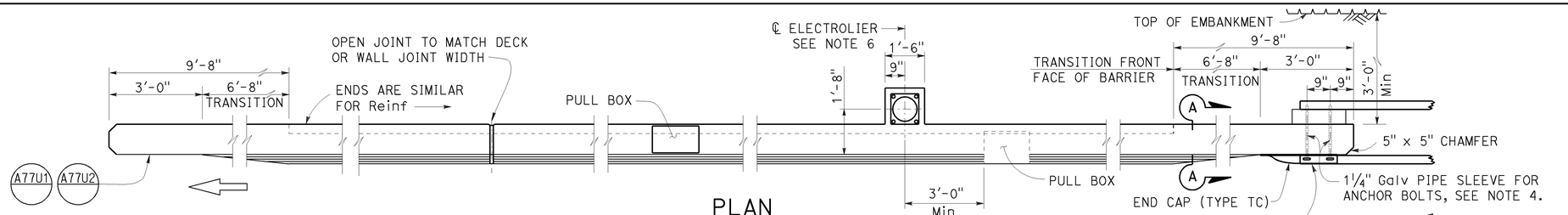

PLAN

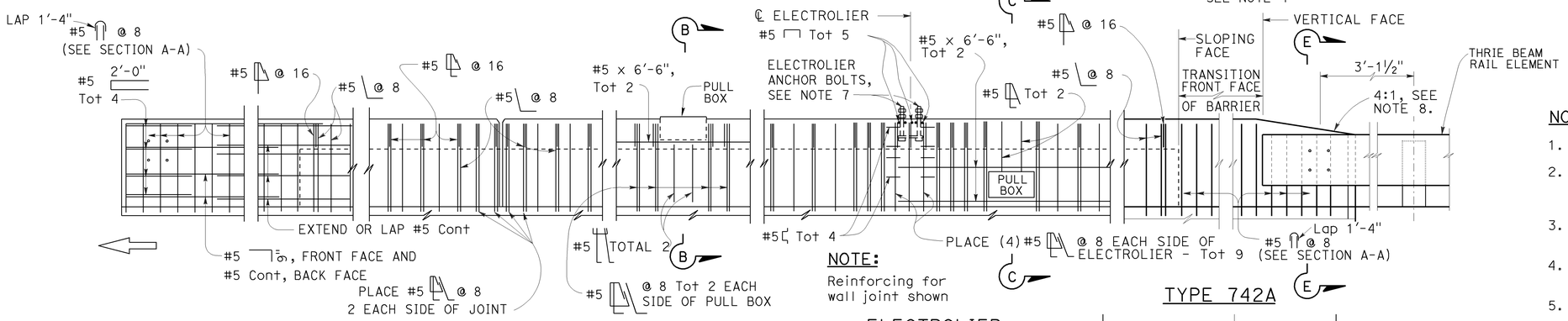

METAL RAILING CONNECTION

DECK OR WALL JOINT

ELEVATION

NOTE:
Reinforcing for wall joint shown

ELECTROLIER
(See Note 5)

TYPE 742A

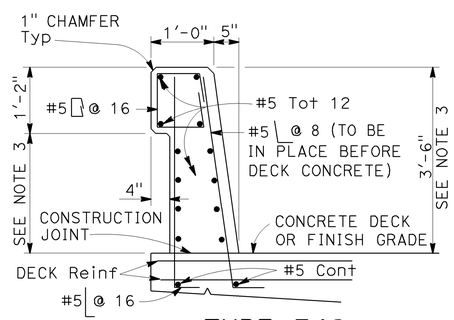

TYPE 742

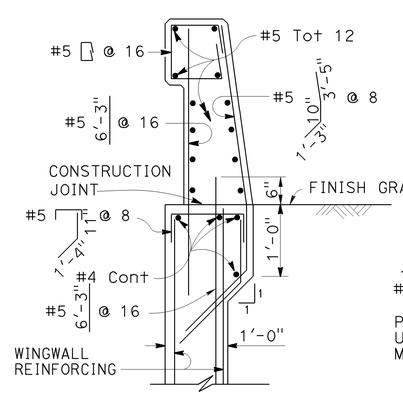

TYPE 742A

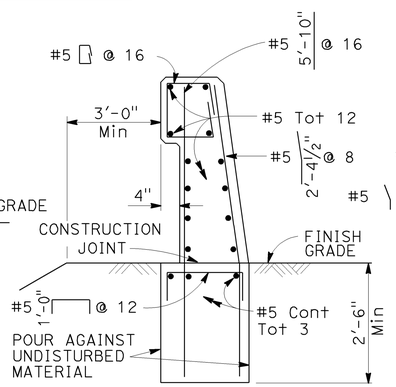

TYPE 742B

NOTE:
Types 742A & 742B are similar to Type 742 except as noted

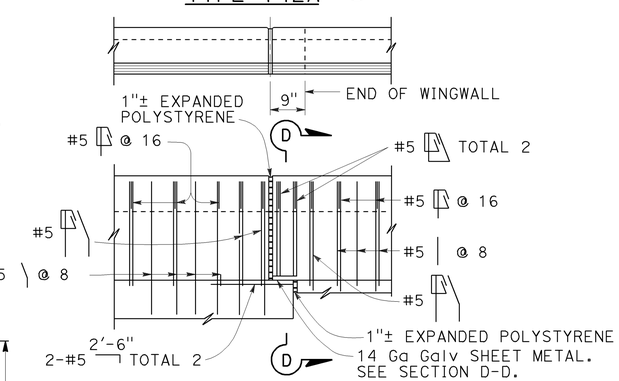

TYPE 742A TYPE 742B

NOTES:

1. Walls are to be backfilled before barrier is placed.
2. Clearance to reinforcing steel in barrier to be 1", except as noted. Longitudinal reinforcement to stop at all expansion joints.
3. Dimensions may vary with roadway cross slope and with certain thickness of surfacing. See Project Plans.
4. For typical metal railing connection details not shown, see Revised Standard Plans RSP A77U1 and RSP A77U2.
5. See Standard Plans ES-9A, ES-9B, ES-9C, ES-9D and ES-9E for electrical details. The maximum number of conduits in the barrier is limited to two 2" conduits along with one 3" conduit. When a 3" conduit is used, it is restricted to the base of the barrier.
6. For electrolier mounting details, See Standard Plans ES-6A and ES-6B.
7. Minimum concrete edge distance, to the reinforcing shown, shall be maintained. Edge distance may be adjusted to accommodate increase in concrete cover for architectual treatment.
8. Taper the top of the end of the bridge railing at 4:1 to match the top elevation of the thrie beam rail element.

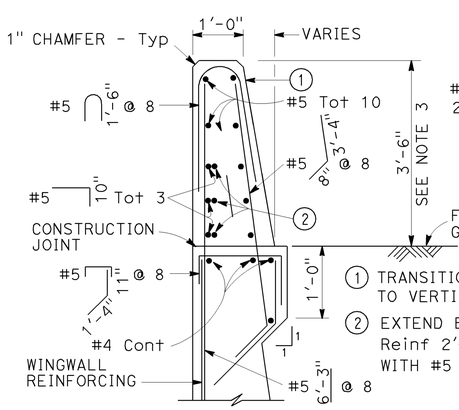

SECTION A-A

Details shown for barrier anchorage to Type 742A. Anchorage for barrier Types 742 and 742A are similar to their respective details.

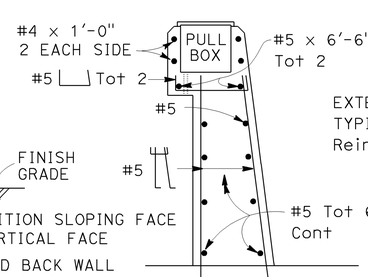

SECTION B-B

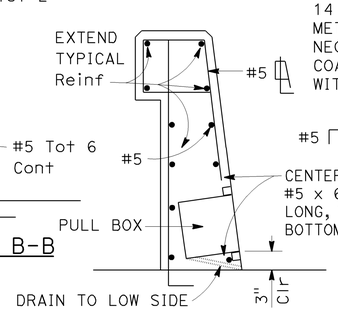

SECTION C-C
See Notes

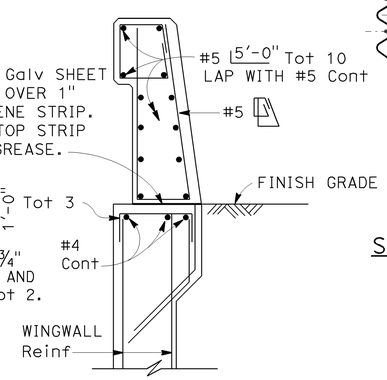

SECTION D-D

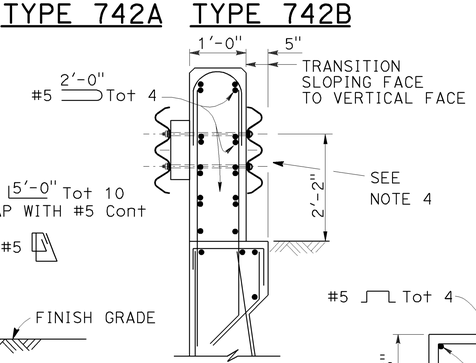

SECTION E-E
See Note 4

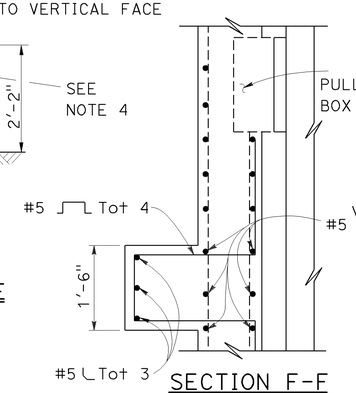

SECTION F-F

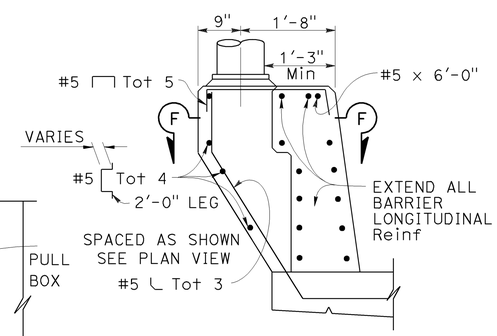

PEDESTAL ELEVATION

STATE OF CALIFORNIA
DEPARTMENT OF TRANSPORTATION

CONCRETE BARRIER TYPE 742

NO SCALE

RSP B11-57 DATED NOVEMBER 15, 2013 SUPERSEDES RSP B11-57 DATED JULY 19, 2013 AND STANDARD PLAN B11-57 DATED MAY 20, 2011 - PAGE 299 OF THE STANDARD PLANS BOOK DATED 2010.

REVISED STANDARD PLAN RSP B11-57

2010 REVISED STANDARD PLAN RSP B11-57

10-4-13

Dist	COUNTY	ROUTE	POST MILES TOTAL PROJECT	SHEET No.	TOTAL SHEETS
04	Ala	580	R4.9/R5.6	51	80

Theresa Gabriel
REGISTERED ELECTRICAL ENGINEER

July 19, 2013
PLANS APPROVAL DATE

REGISTERED PROFESSIONAL ENGINEER Theresa Aziz Gabriel No. E15129 Exp. 6-30-14 ELECTRICAL STATE OF CALIFORNIA

THE STATE OF CALIFORNIA OR ITS OFFICERS OR AGENTS SHALL NOT BE RESPONSIBLE FOR THE ACCURACY OR COMPLETENESS OF SCANNED COPIES OF THIS PLAN SHEET.

TO ACCOMPANY PLANS DATED 5-4-15

LEGEND:

AB	ABANDON. IF APPLIED TO CONDUIT, REMOVE CONDUCTORS
BC	INSTALL PULL BOX IN EXISTING CONDUIT RUN
BP	PEDESTRIAN BARRICADE, TYPE AS INDICATED ON PLAN
CB	INSTALL CONDUIT INTO EXISTING PULL BOX
CC	CONNECT NEW AND EXISTING CONDUIT. REMOVE EXISTING CONDUCTORS AND INSTALL CONDUCTORS AS INDICATED
CF	CONDUIT TO REMAIN FOR FUTURE USE. REMOVE CONDUCTORS. INSTALL PULL TAPE
DH	DETECTOR HANDHOLE
FA	FOUNDATION TO BE ABANDONED
IS	INSTALL SIGN ON SIGNAL MAST ARM
NS	NO SLIP BASE ON STANDARD
PEC	PHOTOELECTRIC CONTROL
PEU	PHOTOELECTRIC UNIT
RC	EQUIPMENT OR MATERIAL TO BE REMOVED AND BECOME THE PROPERTY OF THE CONTRACTOR
RE	REMOVE ELECTROLIER, FUSES AND BALLAST. TAPE ENDS OF CONDUCTORS
RL	RELOCATE EQUIPMENT
RR	REMOVE AND REUSE EQUIPMENT
RS	REMOVE AND SALVAGE EQUIPMENT
SC	SPLICE NEW TO EXISTING CONDUCTORS
SD	SERVICE DISCONNECT
TSP	TELEPHONE SERVICE POINT

ABBREVIATIONS

APS	ACCESSIBLE PEDESTRIAN SIGNAL
BBS	BATTERY BACKUP SYSTEM
BC	BOLT CIRCLE
BPB	BICYCLE PUSH BUTTON
C	CONDUIT
CB	CIRCUIT BREAKER
CCTV	CLOSED CIRCUIT TELEVISION
Ckt	CIRCUIT
CMS	CHANGEABLE MESSAGE SIGN
Ctid	CALTRANS IDENTIFICATION
Comm	COMMUNICATION
DLC	LOOP DETECTOR LEAD-IN CABLE
EMS	EXTINGUISHABLE MESSAGE SIGN
EVUC	EMERGENCY VEHICLE UNIT CABLE
EVUD	EMERGENCY VEHICLE UNIT DETECTOR
FB	FLASHING BEACON
FBCA	FLASHING BEACON CONTROL ASSEMBLY
FBS	FLASHING BEACON WITH SLIP BASE
FO	FIBER OPTIC
G	EQUIPMENT GROUNDING CONDUCTOR
GB	GROUND BUS
GFCI	GROUND FAULT CIRCUIT INTERRUPTER
HAR	HIGHWAY ADVISORY RADIO
Hex	HEXAGONAL
HPS	HIGH PRESSURE SODIUM
IISNS	INTERNALLY ILLUMINATED STREET NAME SIGN
ISL	INDUCTION SIGN LIGHTING
LED	LIGHT EMITTING DIODE
LMA	LUMINAIRE MAST ARM
LPS	LOW PRESSURE SODIUM
Ltg	LIGHTING
Lum	LUMINAIRE
M	METERED
MAT	MAST ARM MOUNTING TOP ATTACHMENT
MAS	MAST ARM MOUNTING SIDE ATTACHMENT
M/M	MULTIPLE TO MULTIPLE TRANSFORMER
Mtg	MOUNTING
MV	MERCURY VAPOR LIGHTING FIXTURE
MVDS	MICROWAVE VEHICLE DETECTION SYSTEM
N	NEUTRAL (GROUNDED CONDUCTOR)
NB	NEUTRAL BUS
NC	NORMALLY CLOSE
NO	NORMALLY OPEN
P	CIRCUIT BREAKER'S POLE
PB	PULL BOX
PBA	PUSH BUTTON ASSEMBLY
PEC	PHOTOELECTRIC CONTROL
Ped	PEDESTRIAN
PEU	PHOTOELECTRIC UNIT
PT	CONDUIT WITH PULL TAPE
RE	RELOCATED EQUIPMENT
RM	RAMP METERING
RWIS	ROADSIDE WEATHER INFORMATION SYSTEM
SB	SLIP BASE
SIC	SIGNAL INTERCONNECT CABLE
Sig	SIGNAL
SMA	SIGNAL MAST ARM
SNS	STREET NAME SIGN
SP	SERVICE POINT
TDC	TELEPHONE DEMARCATION CABINET
TMS	TRAFFIC MONITORING STATION
TOS	TRAFFIC OPERATIONS SYSTEM
Veh	VEHICLE
VIVDS	VIDEO IMAGE VEHICLE DETECTION SYSTEM
WIM	WEIGH-IN-MOTION
Xfmr	TRANSFORMER

SOFFIT AND WALL MOUNTED LUMINAIRES

PENDANT, 70 W HPS UNLESS OTHERWISE SPECIFIED

FLUSH, 70 W HPS UNLESS OTHERWISE SPECIFIED

WALL SURFACE, 70 W HPS UNLESS OTHERWISE SPECIFIED

EXISTING SOFFIT OR WALL LUMINAIRE TO REMAIN UNMODIFIED

EXISTING SOFFIT OR WALL LUMINAIRE TO BE MODIFIED AS SPECIFIED

NOTE:

Arrow indicates "street side" of luminaire.

COMMONLY USED SYMBOLS FOR UNITED STATES CUSTOMARY UNITS OF MEASUREMENT:

SYMBOL USED	DEFINITIONS
Ω	OHMS
min	MINUTE
s	SECOND
bps	BITS PER SECOND
Bps	BYTES PER SECOND
A	AMPERE
V	VOLT
V(dc)	VOLT (DIRECT CURRENT)
V(ac)	VOLT (ALTERNATING CURRENT)
FC	FOOT - CANDLE
W	WATTS
VA	VOLT-AMPERE
M	MEGA
k	KILO
m	MILLI
μ	MICRO
P	PICO
Hz	HERTZ

MISCELLANEOUS ELECTROLIERS

NEW	EXISTING	
		LUMINAIRE ON WOOD POLE
		NON-STANDARD ELECTROLIER (SEE PROJECT NOTES OR PROJECT PLANS)
		CITY ELECTROLIER
		ELECTROLIER FOUNDATION (FUTURE INSTALLATION)

NOTES:

1. HPS luminaires shall be 310 W HPS when installed on Type 21, 21D, 30, 31 and 32 Standards, unless otherwise specified. HPS luminaires shall be 200 W when installed on other type standards or poles, unless otherwise specified.
2. LED luminaires shall be 235 W when installed on Type 21, 21D, 30, 31 and 32 Standards, unless otherwise specified. LED luminaires shall be 165 W when installed on other type standards or poles, unless otherwise specified.
3. Luminaires shall be the cutoff type, ANSI Type III medium cutoff lighting distribution, unless otherwise specified.

STANDARD ELECTROLIER

NEW	EXISTING	STANDARD TYPE
		15
		15D
		15 STRUCTURE
		15D STRUCTURE
		21
		21D
		21 STRUCTURE
		21D STRUCTURE
		30
		31
		32

STATE OF CALIFORNIA
DEPARTMENT OF TRANSPORTATION

ELECTRICAL SYSTEMS (LEGEND AND ABBREVIATIONS)

NO SCALE

RSP ES-1A DATED JULY 19, 2013 SUPERSEDES STANDARD PLAN ES-1A DATED MAY 20, 2011 - PAGE 425 OF THE STANDARD PLANS BOOK DATED 2010.

REVISED STANDARD PLAN RSP ES-1A

2010 REVISED STANDARD PLAN RSP ES-1A

Dist	COUNTY	ROUTE	POST MILES TOTAL PROJECT	SHEET No.	TOTAL SHEETS
04	Ala	580	R4.9/R5.6	52	80

Theresa Gabriel
REGISTERED ELECTRICAL ENGINEER

July 19, 2013
PLANS APPROVAL DATE

REGISTERED PROFESSIONAL ENGINEER
Theresa Aziz Gabriel
No. E15129
Exp. 6-30-14
ELECTRICAL
STATE OF CALIFORNIA

THE STATE OF CALIFORNIA OR ITS OFFICERS OR AGENTS SHALL NOT BE RESPONSIBLE FOR THE ACCURACY OR COMPLETENESS OF SCANNED COPIES OF THIS PLAN SHEET.

TO ACCOMPANY PLANS DATED 5-4-15

CONDUIT

NEW	EXISTING	
		LIGHTING CONDUIT, UNLESS OTHERWISE INDICATED OR NOTED
		TRAFFIC SIGNAL CONDUIT
C	c	COMMUNICATION CONDUIT
T	t	TELEPHONE CONDUIT
F	f	FIRE ALARM CONDUIT
FO	fo	FIBER OPTIC CONDUIT
		CONDUIT TERMINATION
R	r	CONDUIT RISER ATTACHED TO THE STRUCTURE OR SERVICE POLE

SERVICE EQUIPMENT

NEW	EXISTING	
OH	oh	OVERHEAD LINES
U	U	WOOD POLE, "U" INDICATES UTILITY OWNED
		POLE GUY WITH ANCHOR
		UTILITY TRANSFORMER - GROUND MOUNTED
III	III	SERVICE EQUIPMENT ENCLOSURE TYPE. DOOR INDICATES FRONT OF ENCLOSURE
T	t	TELEPHONE DEMARCATION CABINET

POLE-MOUNTED SERVICE DESIGNATION

TYPE H SERVICE, 28'-10" — TYPE OF INSTALLATION AND POLE HEIGHT ABOVE GRADE

FLASHING BEACON

NEW	EXISTING	
R	R	FLASHING BEACON (ONE VEHICLE SIGNAL HEAD WITH BACKPLATE AND VISOR) "R" INDICATES RED INDICATION, "Y" INDICATES YELLOW INDICATION
Y Y	Y Y	FLASHING BEACON WITH TYPE 15-FBS STANDARD AND A SIGN.
R R	R R	FLASHING BEACON WITH TYPES 9, 9A OR 9B SIGN UNLESS OTHERWISE SPECIFIED OR INDICATED

SIGNAL EQUIPMENT

NEW	EXISTING	
C	C	PEDESTRIAN SIGNAL HEAD "C" INDICATES COUNTDOWN PEDESTRIAN HEAD
		PUSH BUTTON ASSEMBLY POST
		PEDESTRIAN BARRICADE
		VEHICLE SIGNAL HEAD (WITH BACKPLATE AND 3-SECTIONS: RED, YELLOW AND GREEN)
		VEHICLE SIGNAL HEAD WITH ANGLE VISOR
PV	PV	MODIFICATIONS OF BASIC SYMBOL: "L" INDICATES ALL NON-ARROW SECTIONS LOUVERED "LG" INDICATES LOUVERED GREEN SECTION ONLY "PV" INDICATES ALL 12" SECTIONS PROGRAMMED VISIBILITY "8" INDICATES ALL 8" SECTIONS (ONLY WHEN SPECIFIED)
		VEHICLE SIGNAL HEAD CONSISTING OF RED, YELLOW AND GREEN LEFT ARROW SECTIONS
		VEHICLE SIGNAL HEAD CONSISTING OF RED AND YELLOW SECTIONS WITH AN UP GREEN ARROW SECTION
		VEHICLE SIGNAL HEAD (5 SECTION) CONSISTING OF RED, YELLOW AND GREEN SECTIONS WITH YELLOW AND GREEN RIGHT ARROW SECTIONS
		TYPE 15TS STANDARD WITH VEHICLE SIGNAL HEAD AND LUMINAIRE
		TYPE 21TS STANDARD WITH VEHICLE SIGNAL HEAD AND LUMINAIRE
		STANDARD WITH LUMINAIRE AND SIGNAL MAST ARMS AND ATTACHED VEHICLE SIGNAL HEADS
		TYPE 1 STANDARD WITH ATTACHED VEHICLE SIGNAL HEADS
		STANDARD WITH A SIGNAL MAST ARM, ATTACHED VEHICLE SIGNAL HEADS AND INTERNALLY ILLUMINATED STREET NAME SIGN
		CONTROLLER ASSEMBLY. DOOR INDICATES FRONT OF CABINET

SIGNAL EQUIPMENT Cont

NEW	EXISTING	
		GUARD POST
		TYPE 1 STANDARD WITH RAMP METERING SIGN
		OPTICAL DETECTOR FOR THE EMERGENCY VEHICLE DETECTION SYSTEM

NOTES:

1. All signal sections shall be 12" unless shown otherwise.
2. Signal heads shall be provided with backplates unless shown otherwise.

ILLUMINATED OVERHEAD SIGN

NEW	EXISTING	
		SINGLE POST, SINGLE ILLUMINATED SIGN, BALANCED BUTTERFLY
		SINGLE POST, DOUBLE ILLUMINATED SIGN, BALANCED BUTTERFLY
		SINGLE POST, SINGLE ILLUMINATED SIGN, FULL CANTILEVER
		DOUBLE POST, SINGLE ILLUMINATED SIGN
		SINGLE ILLUMINATED SIGN MOUNTED ON STRUCTURE
		DOUBLE POST, SINGLE ILLUMINATED SIGN WITH ELECTROLIER

STATE OF CALIFORNIA
DEPARTMENT OF TRANSPORTATION

ELECTRICAL SYSTEMS (LEGEND AND ABBREVIATIONS)

NO SCALE

RSP ES-1B DATED JULY 19, 2013 SUPERSEDES STANDARD PLAN ES-1B DATED MAY 20, 2011 - PAGE 426 OF THE STANDARD PLANS BOOK DATED 2010.

REVISED STANDARD PLAN RSP ES-1B

2010 REVISED STANDARD PLAN RSP ES-1B

7-15-13

Dist	COUNTY	ROUTE	POST MILES TOTAL PROJECT	SHEET No.	TOTAL SHEETS
04	Ala	580	R4.9/R5.6	53	80

Theresa Gabriel
REGISTERED ELECTRICAL ENGINEER

July 19, 2013
PLANS APPROVAL DATE

REGISTERED PROFESSIONAL ENGINEER
Theresa Aziz Gabriel
No. E15129
Exp. 6-30-14
ELECTRICAL
STATE OF CALIFORNIA

THE STATE OF CALIFORNIA OR ITS OFFICERS OR AGENTS SHALL NOT BE RESPONSIBLE FOR THE ACCURACY OR COMPLETENESS OF SCANNED COPIES OF THIS PLAN SHEET.

TO ACCOMPANY PLANS DATED 5-4-15

EQUIPMENT IDENTIFICATION

ILLUMINATED SIGN IDENTIFICATION NUMBER:

SIGN No. 12345

10 ISL SCI 1.0

- SIGN NUMBER - PLACE ON POST OR STRUCTURE
- TRANSFORMER RATING (kVA)
- LIGHTING CONTROL TYPE
- NUMBER AND TYPE OF FIXTURES

DO NOT PLACE ON STANDARD OR STRUCTURE

ELECTROLIER OR EQUIPMENT IDENTIFICATION NUMBER:

12345 - 15'-0"

- MAST ARM LENGTH, IF SHOWN. DO NOT PLACE ON STANDARD OR STRUCTURE
- EQUIPMENT NUMBER - PLACE ON STANDARD OR STRUCTURE. EXISTING EQUIPMENT NUMBERS ARE SHOWN IN PARENTHESIS

CONDUIT AND CONDUCTOR IDENTIFICATION:

1½"C, 2#10, 15#14, 2 DLC, 12P#18 (PAIR)

- NUMBER AND SIZE OF CONDUCTORS AND CABLES
- SIZE OF CONDUIT IN INCHES

ø1, ø2, ø2P, etc.	TRAFFIC PHASE IDENTIFICATION FOR SIGNAL FACES, DETECTORS AND PHASE DIAGRAMS
1 2 3	LEGEND NUMBERS
A B C	EQUIPMENT, SIGNAL POLES, INSTALLATION OR ITEMS
1 2 3	CONDUIT RUN NUMBERS

SIGNAL AND LIGHTING STANDARD (TYPICAL DESIGNATION):

19A - 3 - 100

- WIND VELOCITY = 100 mph
- CASE 3 ARM LOADING
- STANDARD TYPE
- STANDARD PLAN SHEET NUMBER
- DETAIL, NUMBER, SECTION, TYPE OR ELEVATION

MISCELLANEOUS EQUIPMENT

NEW	EXISTING	
CMS	cms	CHANGEABLE MESSAGE SIGN
		CLOSED CIRCUIT TELEVISION CAMERA
		HIGHWAY ADVISORY RADIO POLE AND ANTENNA
EMS	ems	EXTINGUISHABLE MESSAGE SIGN
M V	m v	DETECTION DEVICE M = MICROWAVE SENSOR V = VIDEO IMAGE SENSOR

WIRING DIAGRAM LEGEND

----	EXTERNAL CONDUCTOR
	CONDUCTOR OR BUS
	TIE POINT
	CONTACTOR COIL
	CONTACTOR, NO CONTACT
	TERMINAL BLOCKS
	CONTACTOR, NC CONTACT
	ENCLOSURE BOND
	GROUNDING ELECTRODE
	CIRCUIT BREAKER
	RECEPTACLE

PULL BOXES

NEW	EXISTING	
		PULL BOX, No. 5 UNLESS OTHERWISE INDICATED OR NOTED
3	9A(21)	PULL BOX, ADDITIONAL DESIGNATIONS OR DESCRIPTIONS

3 No. 3½ PULL BOX
5 No. 5 PULL BOX
6 No. 6 PULL BOX
7 No. 7 (CEILING PULL BOX)
8 No. 8 (PENDANT SOFFIT PULL BOX)
9 No. 9 PULL BOX
9A No. 9A PULL BOX

(C) COMMUNICATIONS PULL BOX
(E) PULL BOX WITH EXTENSION
(S) SPRINKLER CONTROL PULL BOX
(21) ANCHOR BOLTS AND CONDUIT FOR FUTURE INSTALLATION OF TYPE 21 STANDARD
(T) TRAFFIC PULL BOX

VEHICLE DETECTORS

5 J 9 U

- VEHICLE DETECTOR DESIGNATION
- U = UPPER
  L = LOWER
- SLOT NUMBER IN INPUT FILE
- INPUT FILE (I OR J)
- PHASE

NEW	EXISTING	
		TYPE A DETECTOR LOOP. OUTLINE OF SAWCUT SHOWN
		TYPE B DETECTOR LOOP. OUTLINE OF SAWCUT SHOWN
		TYPE C DETECTOR LOOP. OUTLINE OF SAWCUT SHOWN
		TYPE D DETECTOR LOOP. OUTLINE OF SAWCUT SHOWN
		TYPE E DETECTOR LOOP. OUTLINE OF SAWCUT SHOWN
		TYPE Q DETECTOR LOOP. OUTLINE OF SAWCUT SHOWN
		MAGNETIC DETECTOR
DH	dh	DETECTOR HANDHOLE
		MICROWAVE OR VIDEO DETECTION ZONE

STATE OF CALIFORNIA
DEPARTMENT OF TRANSPORTATION

ELECTRICAL SYSTEMS (LEGEND AND ABBREVIATIONS)

NO SCALE

RSP ES-1C DATED JULY 19, 2013 SUPERSEDES STANDARD PLAN ES-1C DATED MAY 20, 2011 - PAGE 427 OF THE STANDARD PLANS BOOK DATED 2010.

REVISED STANDARD PLAN RSP ES-1C

2010 REVISED STANDARD PLAN RSP ES-1C

7-11-13

DIST	COUNTY	ROUTE	POST MILES TOTAL PROJECT	SHEET NO.	TOTAL SHEETS
04	Ala	580	R4.9/R5.6	54	80

Theresa Gabriel
REGISTERED ELECTRICAL ENGINEER

July 19, 2013
PLANS APPROVAL DATE

REGISTERED PROFESSIONAL ENGINEER Theresa Aziz Gabriel No. E15129 Exp. 6-30-14 ELECTRICAL STATE OF CALIFORNIA

THE STATE OF CALIFORNIA OR ITS OFFICERS OR AGENTS SHALL NOT BE RESPONSIBLE FOR THE ACCURACY OR COMPLETENESS OF SCANNED COPIES OF THIS PLAN SHEET.

TO ACCOMPANY PLANS DATED 5-4-15

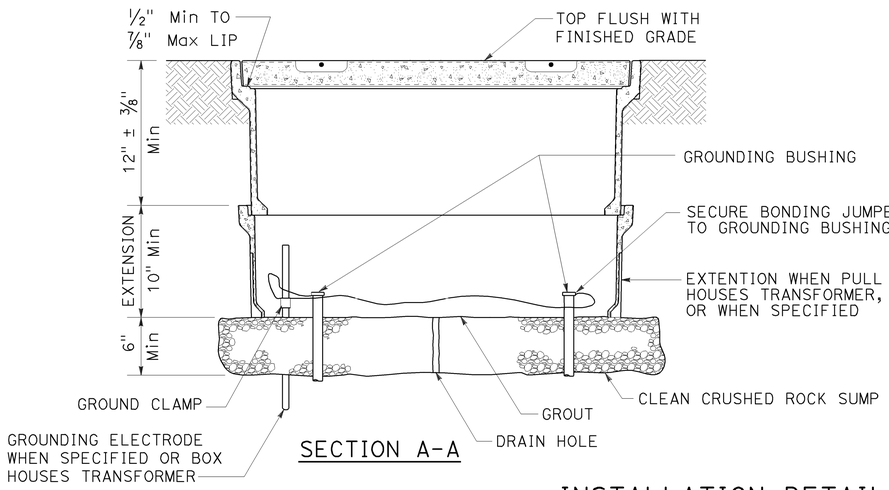

SECTION A-A

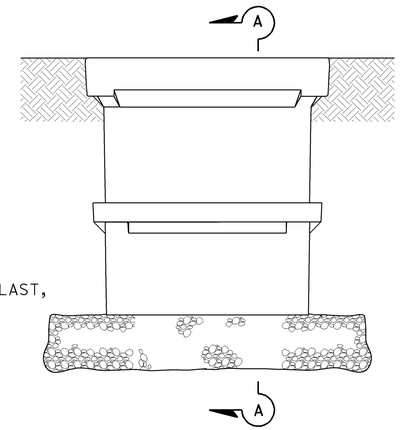

SIDE VIEW

INSTALLATION DETAILS

DETAIL A

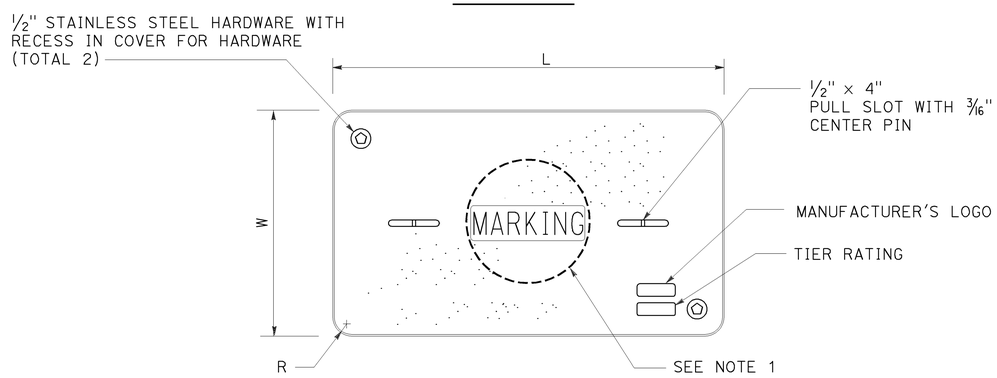

COVER TOP VIEW

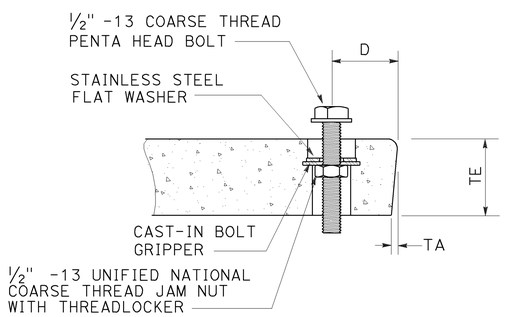

TYPICAL COVER CAPTIVE BOLT

OR SIMILAR

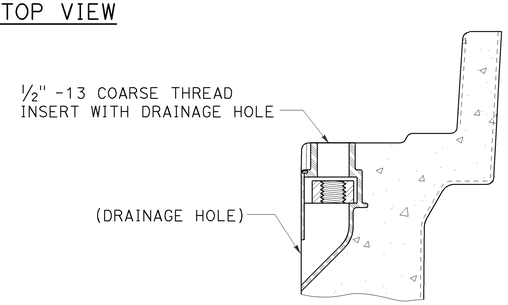

TYPICAL THREADED INSERT

OR SIMILAR

DIMENSION TABLE										
PULL BOX	PULL BOX			COVER						
	MINIMUM DEPTH BOX	MINIMUM DEPTH EXTENSION	MAXIMUM WEIGHT	L	W	R	TE	TA	D	MAXIMUM WEIGHT
No. 3½	12"	N/A	40 lb	1′ - 3⅜"	10⅛"	1⅜"	2"	⅛"	1¾"	30 lb
No. 5	12"	10"	55 lb	1′ - 11¼"	1′ - 1¾"	1⅜"	2"	⅛"	1¾"	60 lb
No. 6	12"	10"	70 lb	2′ - 6½"	1′ - 5½"	1⅜"	2"	⅛"	2"	85 lb

NOTES:

1. Pull box covers shall be marked as follows: "SERVICE" Service circuits between service point and service disconnect; "SPRINKLER-CONTROL" sprinkler control circuits, 50 V or less; "CALTRANS" on all pull boxes, except pull boxes marked "SPRINKLER-CONTROL"; and "TELEPHONE" Telephone service;
   - A) No. 3½ pull box.
     - 1) "SIGNAL" - Traffic signal circuits with or without lighting or sign lighting circuits.
     - 2) "LIGHTING" - Lighting or sign lighting circuits where voltage is under 600 V.
   - B) No. 5, 6, 9 or 9A pull box.
     - 1) "TRAFFIC SIGNAL" - Traffic signal circuits with or without lighting or sign lighting circuits.
     - 2) "LIGHTING" - Lighting or sign lighting circuits where voltage is under 600 V.
     - 3) "LIGHTING-HIGH VOLTAGE" - Lighting or sign lighting circuits where voltage is above 600 V.
     - 4) "IRRIGATION" - Circuits to irrigation controller 120 V or more.
     - 5) "RAMP METER" - Ramp meter circuits.
     - 6) "COUNT STATION" - Count or speed monitor circuits.
     - 7) "COMMUNICATIONS" - Communication circuits.
     - 8) "TOS COMMUNICATIONS" - TOS communication line.
     - 9) "TOS POWER" - TOS power.
     - 10) "TDC POWER" - Telephone demarcation cabinet power.
     - 11) "CCTV" - Closed circuit television circuits.
     - 12) "TMS" - Traffic monitoring station circuits.
     - 13) "CMS" - Changeable message sign circuits.
     - 14) "HAR" - Highway advisory radio circuits.
     - 15) "BOOSTER PUMP" - Booster pump circuit.
2. The nominal dimensions of the opening in which the cover sets shall be the same as the cover dimensions except the length and width dimensions shall be ⅛" greater.
3. Covers and boxes shall be interchangeable with California standard male and female gages. When interchanged with a standard male or female gage, the top surfaces shall be flush within ⅛". Top outside radius of covers and pull boxes shall have a ⅛" radius.
4. Pull box extension may be another pull box as long as the bottom edge of the pull box can fit into the cover opening.
5. All dimensions for the cover for non-traffic pull box are nominal values.

STATE OF CALIFORNIA
DEPARTMENT OF TRANSPORTATION

ELECTRICAL SYSTEMS (NON-TRAFFIC PULL BOX)

NO SCALE

RSP ES-8A DATED JULY 19, 2013 SUPERSEDES RSP ES-8A DATED JANUARY 20, 2012 THAT SUPPLEMENTS THE STANDARD PLANS BOOK DATED 2010.

REVISED STANDARD PLAN RSP ES-8A

2010 REVISED STANDARD PLAN RSP ES-8A

7-15-13

DIST	COUNTY	ROUTE	POST MILES TOTAL PROJECT	SHEET NO.	TOTAL SHEETS
04	Ala	580	R4.9/R5.6	55	80

Theresa Gabriel
REGISTERED ELECTRICAL ENGINEER

July 19, 2013
PLANS APPROVAL DATE

REGISTERED PROFESSIONAL ENGINEER
Theresa Aziz Gabriel
No. E15129
Exp. 6-30-14
ELECTRICAL
STATE OF CALIFORNIA

THE STATE OF CALIFORNIA OR ITS OFFICERS OR AGENTS SHALL NOT BE RESPONSIBLE FOR THE ACCURACY OR COMPLETENESS OF SCANNED COPIES OF THIS PLAN SHEET.

TO ACCOMPANY PLANS DATED 5-4-15

2010 REVISED STANDARD PLAN RSP ES-8B

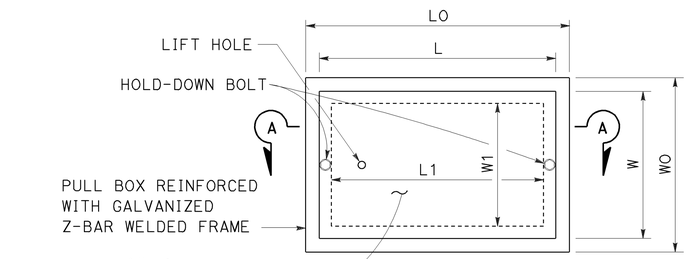

TOP VIEW

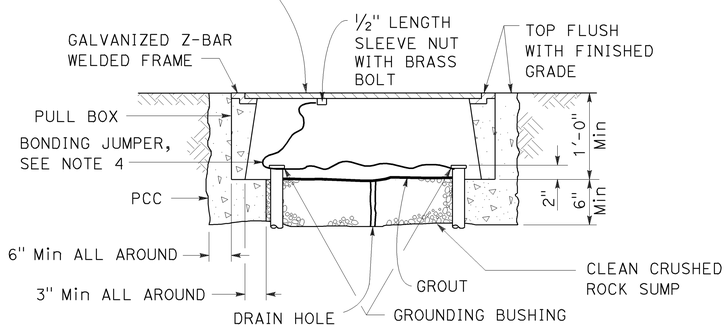

SECTION A-A

No. 3½(T), No. 5(T) AND No. 6(T) TRAFFIC PULL BOX

NOTES:

1. Traffic pull box shall be provided with steel cover and special concrete footing. Steel cover shall have embossed non-skid pattern.
2. Steel reinforcing shall be as regularly used in the standard products of the respective manufacturer.
3. Pull box covers shall be marked as follows: "SERVICE" Service circuits between service point and service disconnect; "SPRINKLER-CONTROL" Sprinkler control circuits, 50 V or less; "CALTRANS" On all pull boxes, except pull boxes marked "SPRINKLER-CONTROL"; and "TELEPHONE" Telephone service.
   - A) No. 3½(T) pull box.
     - 1) "SIGNAL" - Traffic signal circuits with or without lighting or sign lighting circuits.
     - 2) "LIGHTING" - Lighting or sign lighting circuits where voltage is under 600 V.
   - B) No. 5(T) or 6(T) pull box.
     - 1) "TRAFFIC SIGNAL" - Traffic signal circuits with or without lighting or sign lighting circuits.
     - 2) "LIGHTING" - Lighting or sign lighting circuits where voltage is under 600 V.
     - 3) "LIGHTING-HIGH VOLTAGE" - Lighting or sign lighting circuits where voltage is above 600 V.
     - 4) "IRRIGATION" - Circuits to irrigation controller 120 V or more.
     - 5) "RAMP METER" - Ramp meter circuits.
     - 6) "COUNT STATION" - Count or speed monitor circuits.
     - 7) "COMMUNICATION" - Communication circuits.
     - 8) "TOS COMMUNICATIONS" - TOS communications line.
     - 9) "TOS POWER" - TOS power.
     - 10) "TDC POWER" - Telephone demarcation cabinet power.
     - 11) "CCTV" - Closed circuit television circuits.
     - 12) "TMS" - Traffic monitoring station circuits.
     - 13) "CMS" - Changeable message sign circuits.
     - 14) "HAR" - Highway advisory radio circuits.
     - 15) "BOOSTER PUMP" - Booster pump circuit.
4. Bonding jumper for metal covers shall be 3' long, minimum.
5. The nominal dimensions of the opening in which the cover sets shall be the same as the cover dimensions except the length and width dimensions shall be ⅛" greater.
6. Covers and boxes shall be interchangeable with California standard male and female gages. When interchanged with a standard male or female gage, the top surfaces shall be flush within ⅛".

DIMENSION TABLE

PULL BOX	PULL BOX						COVER				
	MINIMUM * THICKNESS	MINIMUM DEPTH BOX AND EXTENSION	WO	LO	L1	W1	L **	W **	R	EDGE THICKNESS	EDGE TAPER
No. 3½(T)	1½"	1'-0"	1'-5"± 1"	1'-8⅞"±	1'-2½"±	10⅝"± 1"	1'-8"±	1'-1¾"±	0"	½"	NONE
No. 5(T)	1¾"	1'-0"	1'-11½"± 1"	2'-5½"±	1'-7"±	1'-1"± 1"	2'-3"±	1'-4"±	0"	½"	NONE
No. 6(T)	2"	1'-0"	2'-6"± 1"	2'-11½"±	1'-11½"±	1'-5"± 1"	2'-9"±	1'-8"±	0"	½"	NONE

* EXCLUDING CONDUIT WEB ** TOP DIMENSION

STATE OF CALIFORNIA
DEPARTMENT OF TRANSPORTATION

ELECTRICAL SYSTEMS (TRAFFIC PULL BOX)

NO SCALE

RSP ES-8B DATED JULY 19, 2013 SUPERSEDES RSP ES-8B DATED JANUARY 20, 2012 THAT SUPPLEMENTS THE STANDARD PLANS BOOK DATED 2010.

REVISED STANDARD PLAN RSP ES-8B

7-15-13

Dist	COUNTY	ROUTE	POST MILES TOTAL PROJECT	SHEET No.	TOTAL SHEETS
04	Ala	580	R4.9/R5.6	56	80

REGISTERED CIVIL ENGINEER — DATE 3-3-15

5-4-15
PLANS APPROVAL DATE

REGISTERED PROFESSIONAL ENGINEER — ISAIAS D. YALAN — No. 68269 — Exp. 9-30-15 — CIVIL — STATE OF CALIFORNIA

The State of California or its officers or agents shall not be responsible for the accuracy or completeness of scanned copies of this plan sheet.

QUANTITIES

STRUCTURE EXCAVATION (SOLDIER PILE WALL)	4,146	CY
STRUCTURE BACKFILL (SOLDIER PILE WALL)	2,386	CY
CONCRETE BACKFILL (SOLDIER PILE WALL)	781	CY
LEAN CONCRETE BACKFILL	747	CY
GROUND ANCHOR (SUBHORIZONTAL)	363	EA
STEEL SOLDIER PILE (W 14 X 145)	8,265	LF
30" DRILLED HOLE	8,327	LF
16" CAST-IN-DRILLED-HOLE CONCRETE PILING	325	LF
STRUCTURAL CONCRETE, BARRIER SLAB	716	CY
STRUCTURAL CONCRETE, WALER	505	CY
BAR REINFORCING STEEL (WALER)	294,468	LB
TIMBER LAGGING	149	MFBM
CLEAN AND PAINT STEEL SOLDIER PILING	LUMP	SUM
GEOCOMPOSITE DRAIN	2,593	SQFT
FURNISH AND INSTALL DRAIN PIPE (HORIZONTAL DRAIN)	1,840	LF
DRILL HOLE (HORIZONTAL DRAIN)	1,840	LF
8" COLLECTOR SYSTEM (HORIZONTAL DRAIN)	1,209	LF
CONCRETE BARRIER (TYPE 736 MODIFIED)	100	LF
CONCRETE BARRIER (TYPE 742 MODIFIED)	1,202	LF

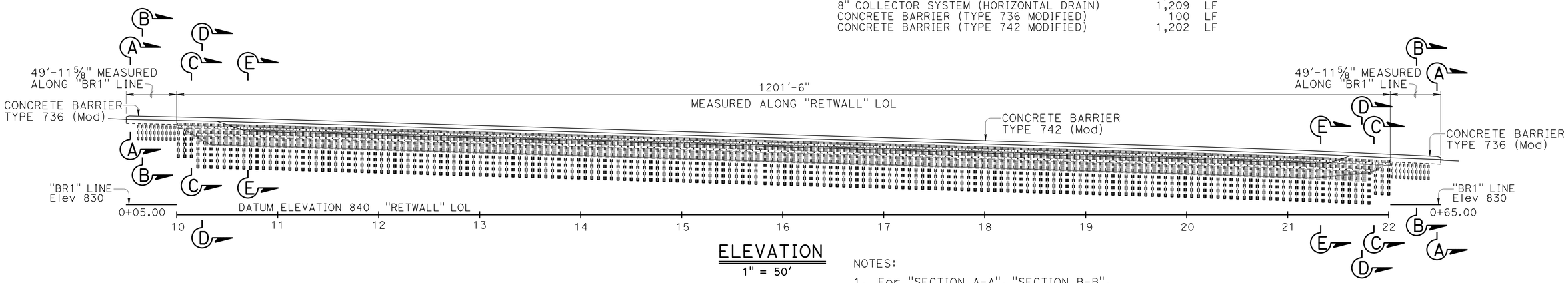

ELEVATION
1" = 50'

NOTES:

1. For "SECTION A-A", "SECTION B-B", "SECTION C-C", "SECTION D-D" and "SECTION E-E" see "GENERAL PLAN No. 2" sheet

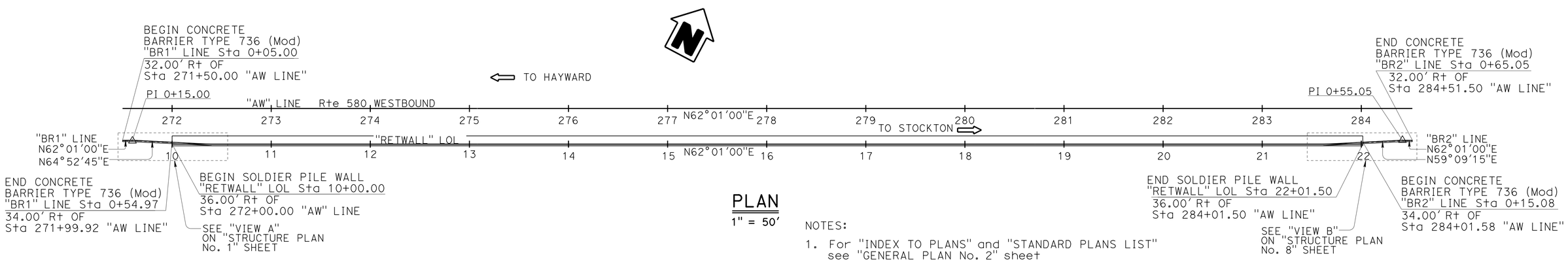

PLAN
1" = 50'

NOTES:

1. For "INDEX TO PLANS" and "STANDARD PLANS LIST" see "GENERAL PLAN No. 2" sheet
2. For "GENERAL NOTES" see "WALER DETAILS" sheet

Gordon Danke
DESIGN ENGINEER

	BY	CHECKED
DESIGN	Isaias Yalan	Evan Franciliso
DETAILS	Isaias Yalan/Tim Fairall	Evan Franciliso
QUANTITIES	Isaias Yalan	Evan Franciliso

LOAD & RESISTANCE FACTOR DESIGN — LIVE LOADING: HL93 W/"LOW-BOY": PERMIT DESIGN VEHICLE

	BY	CHECKED
LAYOUT	Isaias Yalan	Evan Franciliso
SPECIFICATIONS	Jennifer Ramirez	PLANS AND SPECS COMPARED Jennifer Ramirez

ORIGINAL SCALE IN INCHES FOR REDUCED PLANS 0 1 2 3

STATE OF CALIFORNIA
DEPARTMENT OF TRANSPORTATION

DIVISION OF ENGINEERING SERVICES
STRUCTURE DESIGN
DESIGN BRANCH 9

BRIDGE NO. 33E0233
POST MILE 5.0

NORTH FLYNN RD SOLDIER PILE WALL WITH GROUND ANCHORS
GENERAL PLAN No. 1

UNIT: 3594
PROJECT NUMBER & PHASE: 04000208691
CONTRACT No.: 04-1SS034

DISREGARD PRINTS BEARING EARLIER REVISION DATES
REVISION DATES: 11-18-14 1-18-15 2-17-15
SHEET 1 OF 25

USERNAME => s129144 DATE PLOTTED => 02-JUN-2015 TIME PLOTTED => 10:32

STRUCTURES DESIGN GENERAL PLAN SHEET (ENGLISH) (REV.09-01-10)

FILE => 33e0233-a-gp01.dgn

Dist	COUNTY	ROUTE	POST MILES TOTAL PROJECT	SHEET No.	TOTAL SHEETS
04	Ala	580	R4.9/R5.6	57	80

REGISTERED CIVIL ENGINEER 3-3-15 DATE

5-4-15
PLANS APPROVAL DATE

REGISTERED PROFESSIONAL ENGINEER ISAIAS D. YALAN No. 68269 Exp. 9-30-15 CIVIL STATE OF CALIFORNIA

The State of California or its officers or agents shall not be responsible for the accuracy or completeness of scanned copies of this plan sheet.

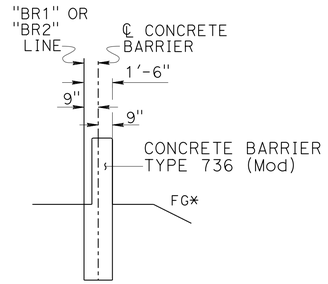

SECTION A-A

1/4" = 1'-0"

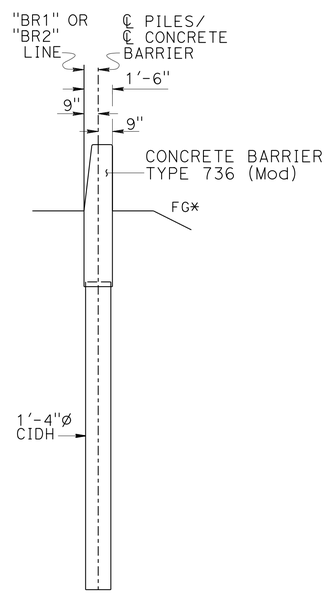

SECTION B-B

1/4" = 1'-0"

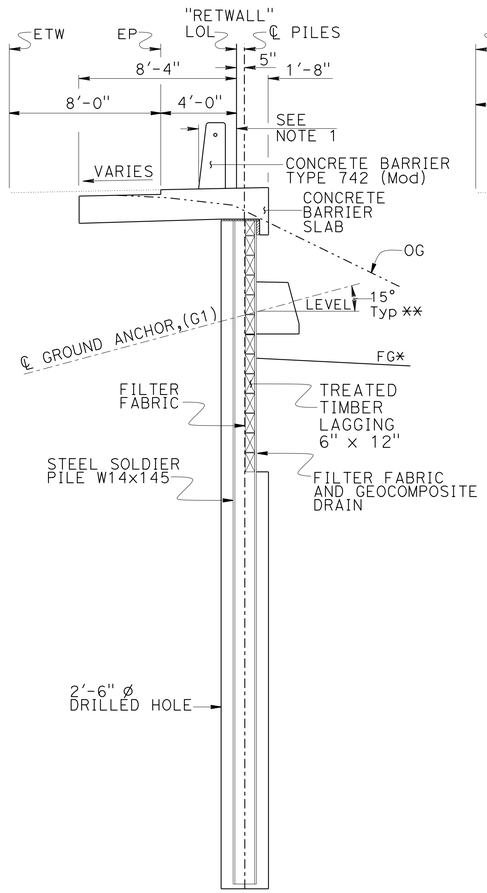

SECTION C-C

1/4" = 1'-0"

NOTES:

1. Varies from 2'-0" at Station 10+00.00 to 1'-0 1/4" at Station 10+19.50
2. Varies from 1'-0 1/4" at Station 10+19.50 to 0'-0" at Station 10+40.00

* See "ROADWAY PLANS"

** See Note 4 on "PILE DATA TABLE No. 2" sheet for Ground Anchor angles on Panels 88, 89 and 90

° Denotes Location 2" Electrical Conduit top of Concrete Barrier Type 742 (Mod)

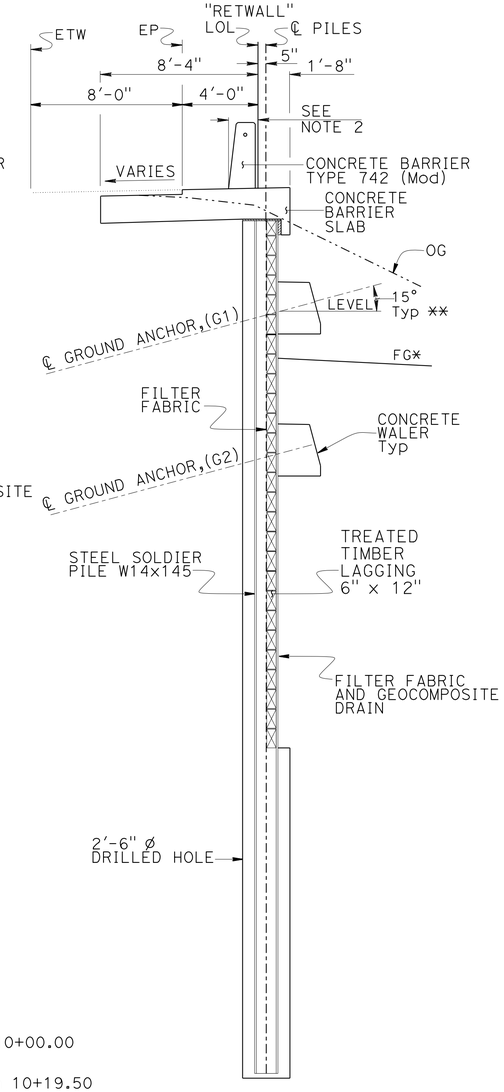

SECTION D-D

1/4" = 1'-0"

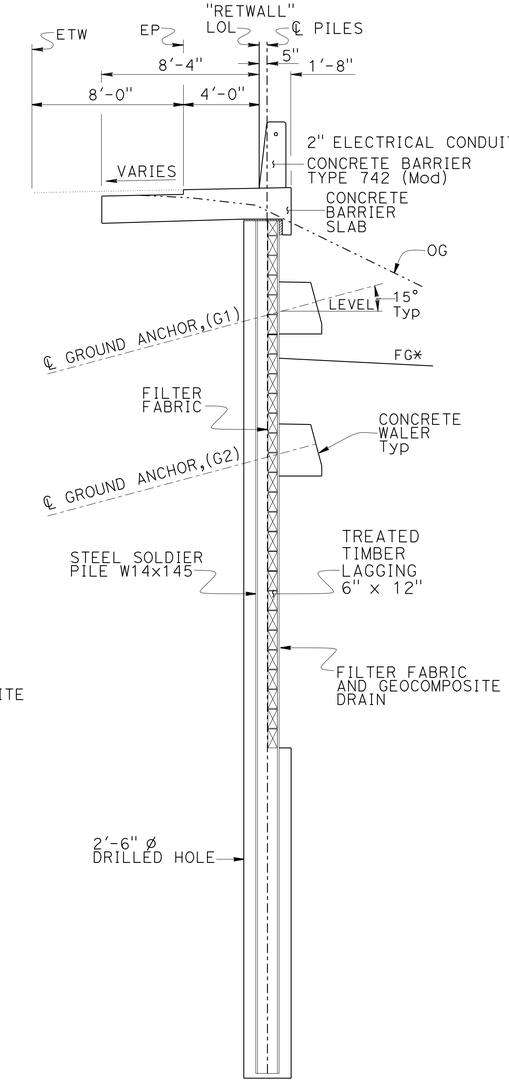

SECTION E-E

1/4" = 1'-0"

INDEX TO PLANS

SHEET No.	TITLE
1	GENERAL PLAN No. 1
2	GENERAL PLAN No. 2
3	PILE DATA TABLE No. 1
4	PILE DATA TABLE No. 2
5	PILE DATA TABLE No. 3
6	STRUCTURE PLAN No. 1
7	STRUCTURE PLAN No. 2
8	STRUCTURE PLAN No. 3
9	STRUCTURE PLAN No. 4
10	STRUCTURE PLAN No. 5
11	STRUCTURE PLAN No. 6
12	STRUCTURE PLAN No. 7
13	STRUCTURE PLAN No. 8
14	FOUNDATION PLAN No. 1
15	FOUNDATION PLAN No. 2
16	FOUNDATION PLAN No. 3
17	TYPICAL SECTION No. 1
18	TYPICAL SECTION No. 2
19	WALER DETAILS
20	LAGGING DETAILS
21	SUB HORIZONTAL GROUND ANCHOR DETAILS
22	CONCRETE BARRIER SLAB DETAILS
23	DRAINAGE DETAILS
24	LOG OF TEST BORINGS 1 OF 2
25	LOG OF TEST BORINGS 2 OF 2

STANDARD PLANS 2010

A10A	ABBREVIATIONS (SHEET 1 OF 2)
RSP A10B	ABBREVIATIONS (SHEET 2 OF 2)
A10C	LINES AND SYMBOLS (SHEET 1 OF 3)
A10D	LINES AND SYMBOLS (SHEET 2 OF 3)
A10E	LINES AND SYMBOLS (SHEET 3 OF 3)
A10F	LEGEND - SOIL (SHEET 1 OF 2)
A10G	LEGEND - SOIL (SHEET 2 OF 2)
A10H	LEGEND - ROCK
RSP A77U1	MIDWEST GUARDRAIL SYSTEM CONNECTIONS TO BRIDGE RAILINGS WITHOUT SIDEWALKS DETAILS No. 1
RSP A77U2	MIDWEST GUARDRAIL SYSTEM CONNECTIONS TO BRIDGE RAILINGS WITHOUT SIDEWALKS DETAILS No. 2
RSP B11-57	CONCRETE BARRIER TYPE 742

STANDARD PLAN SHEET No.

DETAIL No.

	BY	CHECKED			
DESIGN	Isaias Yalan	Evan Franciliso	LOAD & RESISTANCE FACTOR DESIGN	LIVE LOADING: HL93 W/"LOW-BOY"; PERMIT DESIGN VEHICLE	
DETAILS	Isaias Yalan/Tim Fairall	Evan Franciliso	LAYOUT	Isaias Yalan	Evan Franciliso
QUANTITIES	Isaias Yalan	Evan Franciliso	SPECIFICATIONS	Jennifer Ramirez	PLANS AND SPECS COMPARED Jennifer Ramirez

ORIGINAL SCALE IN INCHES FOR REDUCED PLANS 0 1 2 3

STATE OF CALIFORNIA DEPARTMENT OF TRANSPORTATION

DIVISION OF ENGINEERING SERVICES STRUCTURE DESIGN DESIGN BRANCH 9

BRIDGE NO. 33E0233
POST MILE 5.0

NORTH FLYNN RD SOLDIER PILE WALL WITH GROUND ANCHORS

GENERAL PLAN No. 2

UNIT: 3594
PROJECT NUMBER & PHASE: 04000208691
CONTRACT No.: 04-1SS034

DISREGARD PRINTS BEARING EARLIER REVISION DATES

REVISION DATES: 06-17-14 11-18-14 2-17-15

SHEET 2 OF 25

USERNAME => s129144 DATE PLOTTED => 02-JUN-2015 TIME PLOTTED => 10:32

STRUCTURES DESIGN GENERAL PLAN SHEET (ENGLISH) (REV.09-01-10)

FILE => 33e0233-a-gp02.dgn

Dist	COUNTY	ROUTE	POST MILES TOTAL PROJECT	SHEET No.	TOTAL SHEETS
04	Ala	580	R4.9/R5.6	58	80

REGISTERED CIVIL ENGINEER 3-3-15 DATE

5-4-15
PLANS APPROVAL DATE

REGISTERED PROFESSIONAL ENGINEER
ISAIAS D. YALAN
No. 68269
Exp. 9-30-15
CIVIL
STATE OF CALIFORNIA

The State of California or its officers or agents shall not be responsible for the accuracy or completeness of scanned copies of this plan sheet.

PILE DATA TABLE

PILE NUMBER	"BR1" LINE STATION SEE NOTE 1	TOP OF PILE ELEVATION	PILE LENGTH (ft)	PILE TYPE
1	0+17.05	930.72	16'-3"	1'-4" Dia CIDH
2	0+21.05	930.63	16'-3"	1'-4" Dia CIDH
3	0+25.05	930.55	16'-3"	1'-4" Dia CIDH
4	0+29.05	930.46	16'-3"	1'-4" Dia CIDH
5	0+33.05	930.38	16'-3"	1'-4" Dia CIDH
6	0+37.05	930.29	16'-3"	1'-4" Dia CIDH
7	0+41.05	930.20	16'-3"	1'-4" Dia CIDH
8	0+45.05	930.12	16'-3"	1'-4" Dia CIDH
9	0+49.05	930.03	16'-3"	1'-4" Dia CIDH
10	0+53.05	929.95	16'-3"	1'-4" Dia CIDH

PILE DATA TABLE

PILE NUMBER	"RETWALL" LOL STATION SEE NOTE 2	TOP OF PILE ELEVATION	STEEL PILE LENGTH (ft)	PILE TYPE
11	10+01.50	931.84	35.00	W14x145
12	10+08.00	931.72	35.00	W14x145
13	10+14.50	931.58	35.00	W14x145
14	10+21.00	931.44	45.00	W14x145
15	10+27.50	931.30	45.00	W14x145
16	10+34.00	931.20	45.00	W14x145
17	10+40.50	931.06	45.00	W14x145
18	10+47.00	930.88	45.00	W14x145
19	10+53.50	930.71	45.00	W14x145
20	10+60.00	930.54	45.00	W14x145
21	10+66.50	930.35	45.00	W14x145
22	10+73.00	930.17	45.00	W14x145
23	10+79.50	929.99	45.00	W14x145
24	10+86.00	929.81	45.00	W14x145
25	10+92.50	929.62	45.00	W14x145
26	10+99.00	929.44	45.00	W14x145
27	11+05.50	929.26	45.00	W14x145
28	11+12.00	929.07	45.00	W14x145
29	11+18.50	928.88	45.00	W14x145
30	11+25.00	928.70	45.00	W14x145
31	11+31.50	928.51	45.00	W14x145
32	11+38.00	928.32	45.00	W14x145
33	11+44.50	928.14	45.00	W14x145
34	11+51.00	927.95	45.00	W14x145
35	11+57.50	927.75	45.00	W14x145
36	11+64.00	927.54	45.00	W14x145
37	11+70.50	927.34	45.00	W14x145
38	11+77.00	927.14	45.00	W14x145
39	11+83.50	926.94	45.00	W14x145
40	11+90.00	926.74	45.00	W14x145
41	11+96.50	926.54	45.00	W14x145
42	12+03.00	926.34	45.00	W14x145
43	12+09.50	926.14	45.00	W14x145
44	12+16.00	925.94	45.00	W14x145
45	12+22.50	925.74	45.00	W14x145
46	12+29.00	925.55	45.00	W14x145
47	12+35.50	925.35	45.00	W14x145
48	12+42.00	925.15	45.00	W14x145
49	12+48.50	924.95	45.00	W14x145
50	12+55.00	924.74	45.00	W14x145

PANEL NUMBER	BOTTOM OF LAGGING ELEVATION	GROUND * ANCHORS	
		G1 kips	G2 kips
1	925.74	127	---
2	920.43	127	---
3	916.08	127	---
4	912.94	169	146
5	908.63	169	146
6	908.49	169	146
7	908.35	169	146
8	908.21	169	146
9	908.04	169	146
10	907.86	169	146
11	907.69	169	146
12	907.51	169	146
13	907.34	169	146
14	907.16	169	146
15	906.99	169	146
16	906.81	169	146
17	906.62	169	146
18	906.43	169	146
19	906.24	169	146
20	906.04	169	146
21	905.85	169	146
22	905.66	169	146
23	905.47	169	146
24	905.27	169	146
25	905.07	169	146
26	904.87	169	146
27	904.67	169	146
28	904.47	169	146
29	904.27	169	146
30	904.07	169	146
31	903.87	169	146
32	903.67	169	146
33	903.47	169	146
34	903.27	169	146
35	903.07	169	146
36	902.87	169	146
37	902.67	169	146
38	902.48	169	146
39	902.28	169	146
40	902.07	169	146

NOTES:

1. The centerline of the piles is offset 9" Rt of "BR1" line.
2. The centerline of the piles is offset 5" Rt of "RETWALL" LOL.
3. Unbonded length for all ground anchors = 40.00 ft

* For FDL, FTL, and LL loads, see "GENERAL NOTES" on sheet 19

USERNAME => s129144 DATE PLOTTED => 02-JUN-2015 TIME PLOTTED => 10:32

	BY	CHECKED
DESIGN	Isaias Yalan	Evan Franciliso
DETAILS	Tim Fairall	Evan Franciliso
QUANTITIES	Isaias Yalan	Evan Franciliso

STATE OF CALIFORNIA
DEPARTMENT OF TRANSPORTATION

DIVISION OF ENGINEERING SERVICES
STRUCTURE DESIGN
DESIGN BRANCH 9

BRIDGE NO. 33E0233
POST MILE 5.0

NORTH FLYNN RD SOLDIER PILE WALL WITH GROUND ANCHORS
PILE DATA TABLE No. 1

STRUCTURES DESIGN DETAIL SHEET (ENGLISH) (REV. 09-01-10)

ORIGINAL SCALE IN INCHES FOR REDUCED PLANS 0 1 2 3

UNIT: 3594
PROJECT NUMBER & PHASE: 04000208691
CONTRACT No.: 04-1SS034

DISREGARD PRINTS BEARING EARLIER REVISION DATES

REVISION DATES: 06-25-14 12-01-14 2-23-15

SHEET 3 OF 25

FILE => 33e0233-b-pile_dat_01.dgn

Dist	COUNTY	ROUTE	POST MILES TOTAL PROJECT	SHEET No.	TOTAL SHEETS
04	Ala	580	R4.9/R5.6	59	80

REGISTERED CIVIL ENGINEER 3-3-15 DATE

5-4-15
PLANS APPROVAL DATE

REGISTERED PROFESSIONAL ENGINEER
ISAIAS D. YALAN
No. 68269
Exp. 9-30-15
CIVIL
STATE OF CALIFORNIA

The State of California or its officers or agents shall not be responsible for the accuracy or completeness of scanned copies of this plan sheet.

PILE DATA TABLE

PILE NUMBER	"RETWALL" LOL STATION SEE NOTE 2	TOP OF PILE ELEVATION	STEEL PILE LENGTH (ft)	PILE TYPE
51	12+61.50	924.57	45.00	W14x145
52	12+68.00	924.38	45.00	W14x145
53	12+74.50	924.19	45.00	W14x145
54	12+81.00	924.00	45.00	W14x145
55	12+87.50	923.81	45.00	W14x145
56	12+94.00	923.62	45.00	W14x145
57	13+00.50	923.43	45.00	W14x145
58	13+07.00	923.24	45.00	W14x145
59	13+13.50	923.05	45.00	W14x145
60	13+20.00	922.86	45.00	W14x145
61	13+26.50	922.67	45.00	W14x145
62	13+33.00	922.49	45.00	W14x145
63	13+39.50	922.29	45.00	W14x145
64	13+46.00	922.11	45.00	W14x145
65	13+52.50	921.92	45.00	W14x145
66	13+59.00	921.72	45.00	W14x145
67	13+65.50	921.53	45.00	W14x145
68	13+72.00	921.33	45.00	W14x145
69	13+78.50	921.13	45.00	W14x145
70	13+85.00	920.94	45.00	W14x145
71	13+91.50	920.74	45.00	W14x145
72	13+98.00	920.55	45.00	W14x145
73	14+04.50	920.34	45.00	W14x145
74	14+11.00	920.14	45.00	W14x145
75	14+17.50	919.94	45.00	W14x145
76	14+24.00	919.74	45.00	W14x145
77	14+30.50	919.54	45.00	W14x145
78	14+37.00	919.34	45.00	W14x145
79	14+43.50	919.13	45.00	W14x145
80	14+50.00	918.93	45.00	W14x145
81	14+56.50	918.74	45.00	W14x145
82	14+63.00	918.55	45.00	W14x145
83	14+69.50	918.35	45.00	W14x145
84	14+76.00	918.16	45.00	W14x145
85	14+82.50	917.96	45.00	W14x145
86	14+89.00	917.77	45.00	W14x145
87	14+95.50	917.58	45.00	W14x145
88	15+02.00	917.38	45.00	W14x145
89	15+08.50	917.19	45.00	W14x145
90	15+15.00	916.99	45.00	W14x145

PANEL NUMBER	BOTTOM OF LAGGING ELEVATION	GROUND * ANCHORS	
		G1 kips	G2 kips
41	901.87	169	148
42	901.68	169	148
43	901.49	169	148
44	901.29	169	148
45	901.10	169	148
46	900.91	169	148
47	900.72	169	148
48	900.54	169	148
49	900.35	169	148
50	900.17	169	148
51	899.99	169	148
52	899.80	169	148
53	899.62	169	148
54	899.44	169	148
55	899.25	169	148
56	899.05	169	148
57	898.85	169	148
58	898.66	169	148
59	898.46	169	148
60	898.27	169	148
61	898.07	169	148
62	897.87	169	148
63	897.67	169	148
64	897.47	169	148
65	897.27	169	148
66	897.07	169	148
67	896.86	169	148
68	896.66	169	148
69	896.46	169	148
70	896.26	169	148
71	896.07	169	148
72	895.87	169	148
73	895.68	169	148
74	895.49	169	148
75	895.29	169	148
76	895.10	169	148
77	894.90	169	148
78	894.71	169	148
79	894.52	169	148
80	894.32	169	148

PILE DATA TABLE

PILE NUMBER	"RETWALL" LOL STATION SEE NOTE 2	TOP OF PILE ELEVATION	STEEL PILE LENGTH (ft)	PILE TYPE
91	15+21.50	916.80	45.00	W14x145
92	15+28.00	916.60	45.00	W14x145
93	15+34.50	916.41	45.00	W14x145
94	15+41.00	916.21	45.00	W14x145
95	15+47.50	916.02	45.00	W14x145
96	15+54.00	915.82	45.00	W14x145
97	15+60.50	915.62	45.00	W14x145
98	15+67.00	915.43	45.00	W14x145
99	15+73.50	915.23	45.00	W14x145
100	15+82.50	914.96	45.00	W14x145
101	15+89.00	914.76	45.00	W14x145
102	15+95.50	914.56	45.00	W14x145
103	16+02.00	914.37	45.00	W14x145
104	16+08.50	914.18	45.00	W14x145
105	16+15.00	913.98	45.00	W14x145
106	16+21.50	913.79	45.00	W14x145
107	16+28.00	913.60	45.00	W14x145
108	16+34.50	913.41	45.00	W14x145
109	16+41.00	913.21	45.00	W14x145
110	16+47.50	913.02	45.00	W14x145
111	16+54.00	912.82	45.00	W14x145
112	16+60.50	912.62	45.00	W14x145
113	16+67.00	912.42	45.00	W14x145
114	16+73.50	912.22	45.00	W14x145
115	16+80.00	912.02	45.00	W14x145
116	16+86.50	911.82	45.00	W14x145
117	16+93.00	911.62	45.00	W14x145
118	16+99.50	911.42	45.00	W14x145
119	17+06.00	911.23	45.00	W14x145
120	17+12.50	911.03	45.00	W14x145
121	17+19.00	910.84	45.00	W14x145
122	17+25.50	910.64	45.00	W14x145
123	17+32.00	910.45	45.00	W14x145
124	17+38.50	910.25	45.00	W14x145
125	17+45.00	910.06	45.00	W14x145
126	17+51.50	909.86	45.00	W14x145
127	17+58.00	909.66	45.00	W14x145
128	17+64.50	909.45	45.00	W14x145
129	17+71.00	909.25	45.00	W14x145
130	17+77.50	909.05	45.00	W14x145
131	17+84.00	908.85	45.00	W14x145
132	17+90.50	908.64	45.00	W14x145
133	17+97.00	908.44	45.00	W14x145
134	18+03.50	908.24	45.00	W14x145
135	18+10.00	908.04	45.00	W14x145
136	18+16.50	907.83	45.00	W14x145
137	18+23.00	907.63	45.00	W14x145
138	18+29.50	907.45	45.00	W14x145
139	18+36.00	907.25	45.00	W14x145
140	18+42.50	907.06	45.00	W14x145
141	18+49.00	906.86	45.00	W14x145
142	18+55.50	906.67	45.00	W14x145
143	18+62.00	906.47	45.00	W14x145

PANEL NUMBER	BOTTOM OF LAGGING ELEVATION	GROUND * ANCHORS	
		G1 kips	G2 kips
81	894.13	127	---
82	893.93	127	---
83	893.73	127	---
84	893.54	169	146
85	893.34	169	146
86	893.15	169	146
87	892.95	169	146
88	892.75	169	146
89	892.56	85 Lt 85 Rt	146
90	892.28	169	146
91	892.09	169	146
92	891.89	169	146
93	891.70	169	146
94	891.50	169	146
95	891.31	169	146
96	891.12	169	146
97	890.93	169	146
98	890.73	169	146
99	890.54	169	146
100	890.35	169	146
101	890.15	169	146
102	889.95	169	146
103	889.75	169	146
104	889.55	169	146
105	889.35	169	146
106	889.15	169	146
107	888.95	169	146
108	888.75	169	146
109	888.55	169	146
110	888.36	169	146
111	888.16	169	146
112	887.97	169	146
113	887.78	169	146
114	887.58	169	146
115	887.39	169	146
116	887.19	169	146
117	886.99	169	146
118	886.78	169	146
119	886.58	169	146
120	886.38	169	146
121	886.17	169	146
122	885.97	169	146
123	885.77	169	146
124	885.57	169	146
125	885.36	169	146
126	885.16	169	146
127	884.96	169	146
128	884.76	169	146
129	884.56	169	146
130	884.36	169	146
131	884.15	169	146
132	883.96	169	146
133	883.77	169	146

NOTES:

2 The centerline of the piles is offset 5" Rt of "RETWALL" LOL.

3 Unbonded length for all ground anchors = 40.00 ft

4 All ground anchors to be installed perpendicular to "RETWALL" LOL at an angle of 15° below horizontal with the exception of the following ground anchors:

G 1:
At Panel #88 (Sta 277+70.25): 20° down, perpendicular to "RETWALL" LOL

At Panel #89 (Sta 277+77.75) Lt: 15° down, 4° Left

At Panel #89 (Sta 277+80.25) Rt: 15° down, 4° Right

At Panel #90 (Sta 277+85.75) : 20° down, perpendicular to "RETWALL" LOL

G 2:
At Panel #88 (Sta 277+70.25): 20° down, perpendicular to "RETWALL" LOL

At Panel #89 (Sta 277+78.00): 20° down, perpendicular to "RETWALL" LOL

At Panel #90 (Sta 277+85.75): 20° down, perpendicular to "RETWALL" LOL

* For FDL, FTL, and LL loads, see "GENERAL NOTES" on sheet 19

	BY	CHECKED
DESIGN	Isaias Yalan	Evan Franciliso
DETAILS	Tim Fairall	Evan Franciliso
QUANTITIES	Isaias Yalan	Evan Franciliso

STATE OF CALIFORNIA
DEPARTMENT OF TRANSPORTATION

DIVISION OF ENGINEERING SERVICES
STRUCTURE DESIGN
DESIGN BRANCH 9

BRIDGE NO. 33E0233
POST MILE 5.0

NORTH FLYNN RD SOLDIER PILE WALL WITH GROUND ANCHORS

PILE DATA TABLE No. 2

STRUCTURES DESIGN DETAIL SHEET (ENGLISH) (REV. 09-01-10)

ORIGINAL SCALE IN INCHES FOR REDUCED PLANS 0 1 2 3

UNIT: 3594
PROJECT NUMBER & PHASE: 04000208691
CONTRACT No.: 04-1SS034

DISREGARD PRINTS BEARING EARLIER REVISION DATES

REVISION DATES: 06-25-14 12-01-14 2-23-15

SHEET 4 OF 25

FILE => 33e0233-b-pile_dat_02.dgn

USERNAME => s129144 DATE PLOTTED => 02-JUN-2015 TIME PLOTTED => 10:32

Dist	COUNTY	ROUTE	POST MILES TOTAL PROJECT	SHEET No.	TOTAL SHEETS
04	Ala	580	R4.9/R5.6	60	80

REGISTERED CIVIL ENGINEER 3-3-15 DATE

5-4-15
PLANS APPROVAL DATE

REGISTERED PROFESSIONAL ENGINEER
ISAIAS D. YALAN
No. 68269
Exp. 9-30-15
CIVIL
STATE OF CALIFORNIA

The State of California or its officers or agents shall not be responsible for the accuracy or completeness of scanned copies of this plan sheet.

PILE DATA TABLE

PILE NUMBER	"RETWALL" LOL STATION SEE NOTE 2	TOP OF PILE ELEVATION	STEEL PILE LENGTH (ft)	PILE TYPE
144	18+68.50	906.28	45.00	W14x145
145	18+75.00	906.08	45.00	W14x145
146	18+81.50	905.89	45.00	W14x145
147	18+88.00	905.69	45.00	W14x145
148	18+94.50	905.48	45.00	W14x145
149	19+01.00	905.29	45.00	W14x145
150	19+07.50	905.10	45.00	W14x145
151	19+14.00	904.90	45.00	W14x145
152	19+20.50	904.71	45.00	W14x145
153	19+27.00	904.52	45.00	W14x145
154	19+33.50	904.32	45.00	W14x145
155	19+40.00	904.13	45.00	W14x145
156	19+46.50	903.94	45.00	W14x145
157	19+53.00	903.75	45.00	W14x145
158	19+59.50	903.58	45.00	W14x145
159	19+66.00	903.40	45.00	W14x145
160	19+72.50	903.22	45.00	W14x145
161	19+79.00	903.04	45.00	W14x145
162	19+85.50	902.86	45.00	W14x145
163	19+92.00	902.68	45.00	W14x145
164	19+98.50	902.50	45.00	W14x145
165	20+05.00	902.29	45.00	W14x145
166	20+11.50	902.07	45.00	W14x145
167	20+18.00	901.85	45.00	W14x145
168	20+24.50	901.63	45.00	W14x145
169	20+31.00	901.41	45.00	W14x145
170	20+37.50	901.18	45.00	W14x145
171	20+44.00	900.96	45.00	W14x145
172	20+50.50	900.74	45.00	W14x145
173	20+57.00	900.52	45.00	W14x145
174	20+63.50	900.29	45.00	W14x145
175	20+70.00	900.08	45.00	W14x145
176	20+76.50	899.86	45.00	W14x145
177	20+83.00	899.63	45.00	W14x145
178	20+89.50	899.41	45.00	W14x145
179	20+96.00	899.18	45.00	W14x145
180	21+02.50	898.94	45.00	W14x145
181	21+09.00	898.69	45.00	W14x145
182	21+15.50	898.44	45.00	W14x145
183	21+22.00	898.19	45.00	W14x145
184	21+28.50	897.95	45.00	W14x145
185	21+35.00	897.70	45.00	W14x145
186	21+41.50	897.45	45.00	W14x145
187	21+48.00	897.20	45.00	W14x145
188	21+54.50	896.89	45.00	W14x145
189	21+61.00	896.58	45.00	W14x145
190	21+67.50	896.26	45.00	W14x145
191	21+74.00	895.95	45.00	W14x145
192	21+80.50	895.63	45.00	W14x145
193	21+87.00	895.32	35.00	W14x145
194	21+93.50	895.00	35.00	W14x145
195	22+00.00	894.70	35.00	W14x145

PANEL NUMBER	BOTTOM OF LAGGING ELEVATION	GROUND * ANCHORS	
		G1 kips	G2 kips
134	883.58	169	146
135	883.39	169	146
136	883.20	169	146
137	883.01	169	146
138	882.81	169	146
139	882.62	169	146
140	882.42	169	146
141	882.23	169	146
142	882.04	169	146
143	881.85	169	146
144	881.65	169	146
145	881.46	169	146
146	881.27	169	146
147	881.08	169	146
148	880.90	169	146
149	880.73	169	146
150	880.55	169	146
151	880.37	169	146
152	880.19	169	146
153	880.01	169	146
154	879.83	169	146
155	879.62	169	146
156	879.40	169	146
157	879.18	169	146
158	878.96	169	146
159	878.74	169	146
160	878.52	169	146
161	878.30	169	146
162	878.08	169	146
163	877.86	169	146
164	877.63	169	146
165	877.41	169	146
166	877.18	169	146
167	876.96	169	146
168	876.73	169	146
169	876.51	169	146
170	876.31	169	146
171	876.03	169	146
172	875.75	169	146
173	875.47	169	146
174	875.19	169	146
175	874.91	169	146
176	874.63	169	146
177	874.35	169	146
178	874.06	169	146
179	873.76	169	146
180	873.46	169	146
181	877.33	169	146
182	881.07	127	---
183	883.90	127	---
184	888.81	127	---

NOTES:

2 The centerline of the piles is offset 5" Rt of "RETWALL" LOL.

3 Unbonded length for all ground anchors = 40.00 ft

5 The centerline of the piles is offset 9" Rt of "BR2" LINE.

* For FDL, FTL, and LL loads, see "GENERAL NOTES" on sheet 19

PILE DATA TABLE

PILE NUMBER	"BR2" LINE STATION SEE NOTE 5	TOP OF PILE ELEVATION	PILE LENGTH (ft)	PILE TYPE
196	0+17.00	892.65	16'-3"	1'-4" Dia CIDH
197	0+21.00	892.48	16'-3"	1'-4" Dia CIDH
198	0+25.00	892.32	16'-3"	1'-4" Dia CIDH
199	0+29.00	892.16	16'-3"	1'-4" Dia CIDH
200	0+33.00	892.00	16'-3"	1'-4" Dia CIDH
201	0+37.00	891.84	16'-3"	1'-4" Dia CIDH
202	0+41.00	891.68	16'-3"	1'-4" Dia CIDH
203	0+45.00	891.51	16'-3"	1'-4" Dia CIDH
204	0+49.00	891.35	16'-3"	1'-4" Dia CIDH
205	0+53.00	891.19	16'-3"	1'-4" Dia CIDH

Dist	COUNTY	ROUTE	POST MILES TOTAL PROJECT	SHEET No.	TOTAL SHEETS
04	Ala	580	R4.9/R5.6	61	80

REGISTERED CIVIL ENGINEER — DATE 3-3-15

5-4-15
PLANS APPROVAL DATE

REGISTERED PROFESSIONAL ENGINEER — ISAIAS D. YALAN No. 68269 Exp. 9-30-15 CIVIL — STATE OF CALIFORNIA

The State of California or its officers or agents shall not be responsible for the accuracy or completeness of scanned copies of this plan sheet.

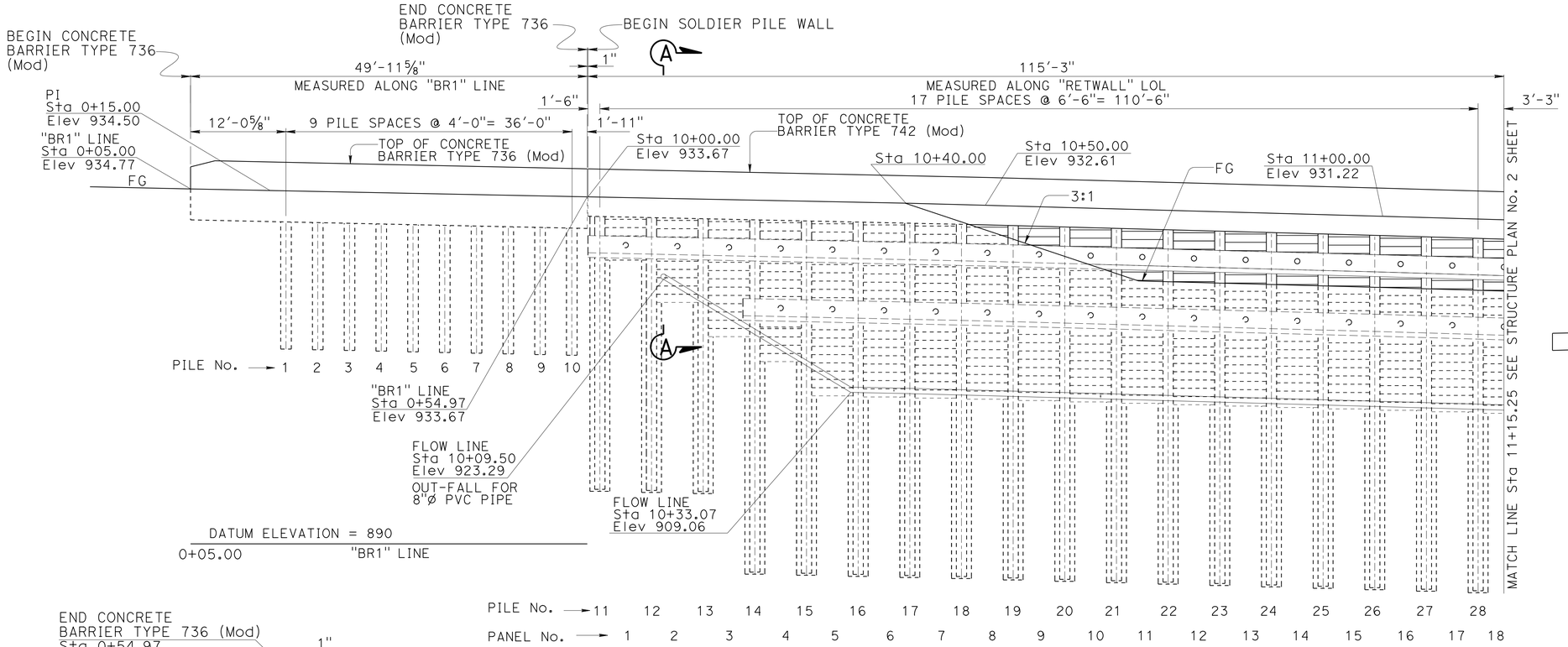

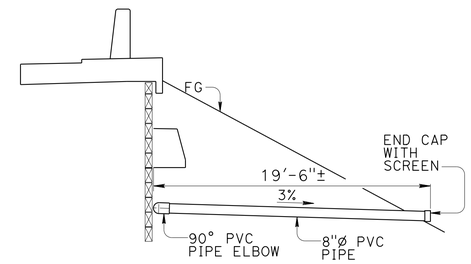

SECTION A-A
3/16" = 1'-0"

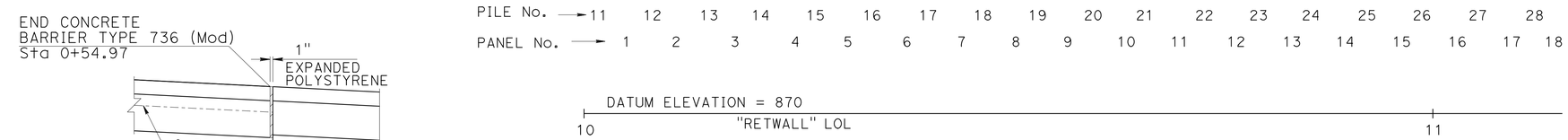

ELEVATION
1/8" = 1'-0"

NOTE:
For drainage details see "DRAINAGE DETAILS" sheet

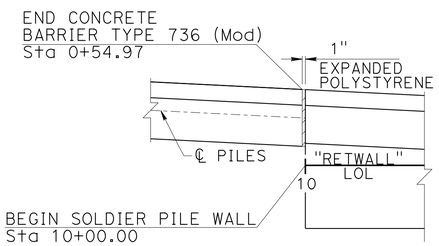

DETAIL X
1/2" = 1'-0"

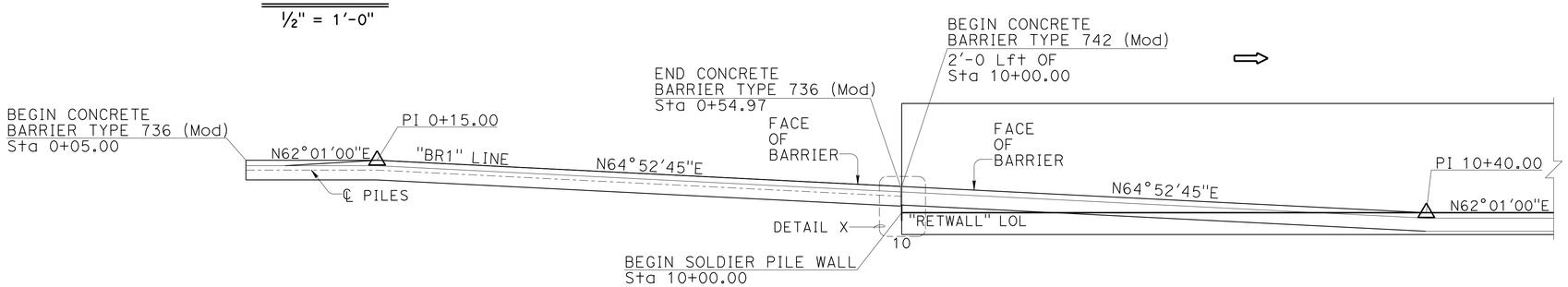

VIEW A
3/16" = 1'-0"

	BY	CHECKED
DESIGN	Isaias Yalan	Evan Franciliso
DETAILS	Isaias Yalan/Tim Fairall	Evan Franciliso
QUANTITIES	Isaias Yalan	Evan Franciliso

STATE OF CALIFORNIA
DEPARTMENT OF TRANSPORTATION

DIVISION OF ENGINEERING SERVICES
STRUCTURE DESIGN
DESIGN BRANCH 9

BRIDGE NO. 33E0233
POST MILE 5.0

NORTH FLYNN RD SOLDIER PILE WALL WITH GROUND ANCHORS
STRUCTURE PLAN No. 1

STRUCTURES DESIGN DETAIL SHEET (ENGLISH) (REV. 09-01-10)

ORIGINAL SCALE IN INCHES FOR REDUCED PLANS 0 1 2 3

UNIT: 3594
PROJECT NUMBER & PHASE: 04000208691
CONTRACT No.: 04-1SS034

DISREGARD PRINTS BEARING EARLIER REVISION DATES
REVISION DATES: 06-25-14 11-06-14 2-26-15

SHEET 6 OF 25

FILE => 33e0233-c-sp01.dgn

USERNAME => s129144 DATE PLOTTED => 02-JUN-2015 TIME PLOTTED => 10:32

Dist	COUNTY	ROUTE	POST MILES TOTAL PROJECT	SHEET No.	TOTAL SHEETS
04	Ala	580	R4.9/R5.6	62	80

REGISTERED CIVIL ENGINEER — DATE 3-3-15

5-4-15
PLANS APPROVAL DATE

REGISTERED PROFESSIONAL ENGINEER — ISAIAS D. YALAN — No. 68269 — Exp. 9-30-15 — CIVIL — STATE OF CALIFORNIA

The State of California or its officers or agents shall not be responsible for the accuracy or completeness of scanned copies of this plan sheet.

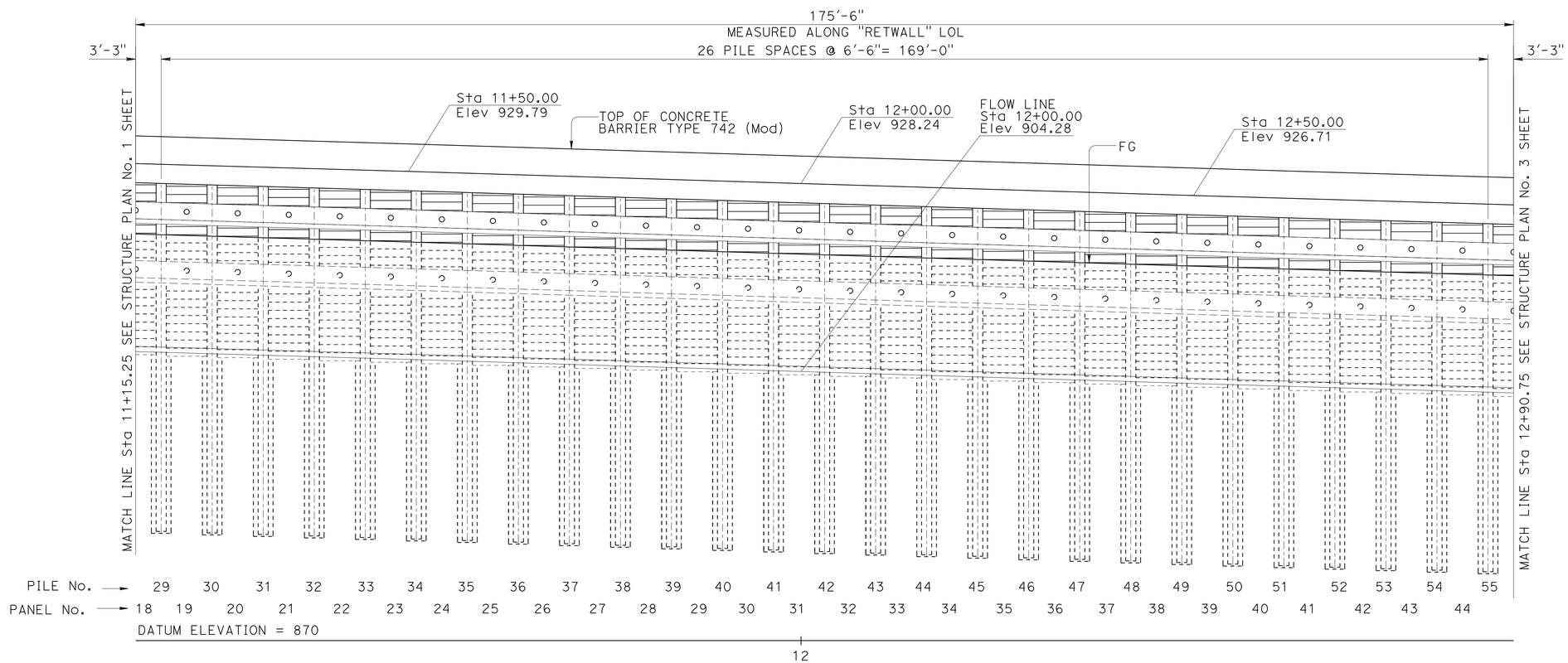

ELEVATION

1/8" = 1'-0"

NOTE:
For drainage details see "DRAINAGE DETAILS" sheet

DESIGN	BY Isaias Yalan	CHECKED Evan Franciliso	
DETAILS	BY Isaias Yalan/Tim Fairall	CHECKED Evan Franciliso	
QUANTITIES	BY Isaias Yalan	CHECKED Evan Franciliso	

STATE OF CALIFORNIA
DEPARTMENT OF TRANSPORTATION

DIVISION OF ENGINEERING SERVICES
STRUCTURE DESIGN
DESIGN BRANCH 9

BRIDGE NO. 33E0233
POST MILE 5.0

NORTH FLYNN RD SOLDIER PILE WALL WITH GROUND ANCHORS

STRUCTURE PLAN No. 2

STRUCTURES DESIGN DETAIL SHEET (ENGLISH) (REV. 09-01-10)

ORIGINAL SCALE IN INCHES FOR REDUCED PLANS 0 1 2 3

UNIT: 3594
PROJECT NUMBER & PHASE: 04000208691
CONTRACT No.: 04-1SS034

DISREGARD PRINTS BEARING EARLIER REVISION DATES

REVISION DATES: 01-25-14 11-06-14

SHEET 7 OF 25

FILE => 33e0233-c-sp02.dgn

USERNAME => s129144 DATE PLOTTED => 02-JUN-2015 TIME PLOTTED => 10:32

Dist	COUNTY	ROUTE	POST MILES TOTAL PROJECT	SHEET No.	TOTAL SHEETS
04	Ala	580	R4.9/R5.6	63	80

REGISTERED CIVIL ENGINEER — DATE: 3-3-15

PLANS APPROVAL DATE: 5-4-15

REGISTERED PROFESSIONAL ENGINEER — ISAIAS D. YALAN — No. 68269 — Exp. 9-30-15 — CIVIL — STATE OF CALIFORNIA

The State of California or its officers or agents shall not be responsible for the accuracy or completeness of scanned copies of this plan sheet.

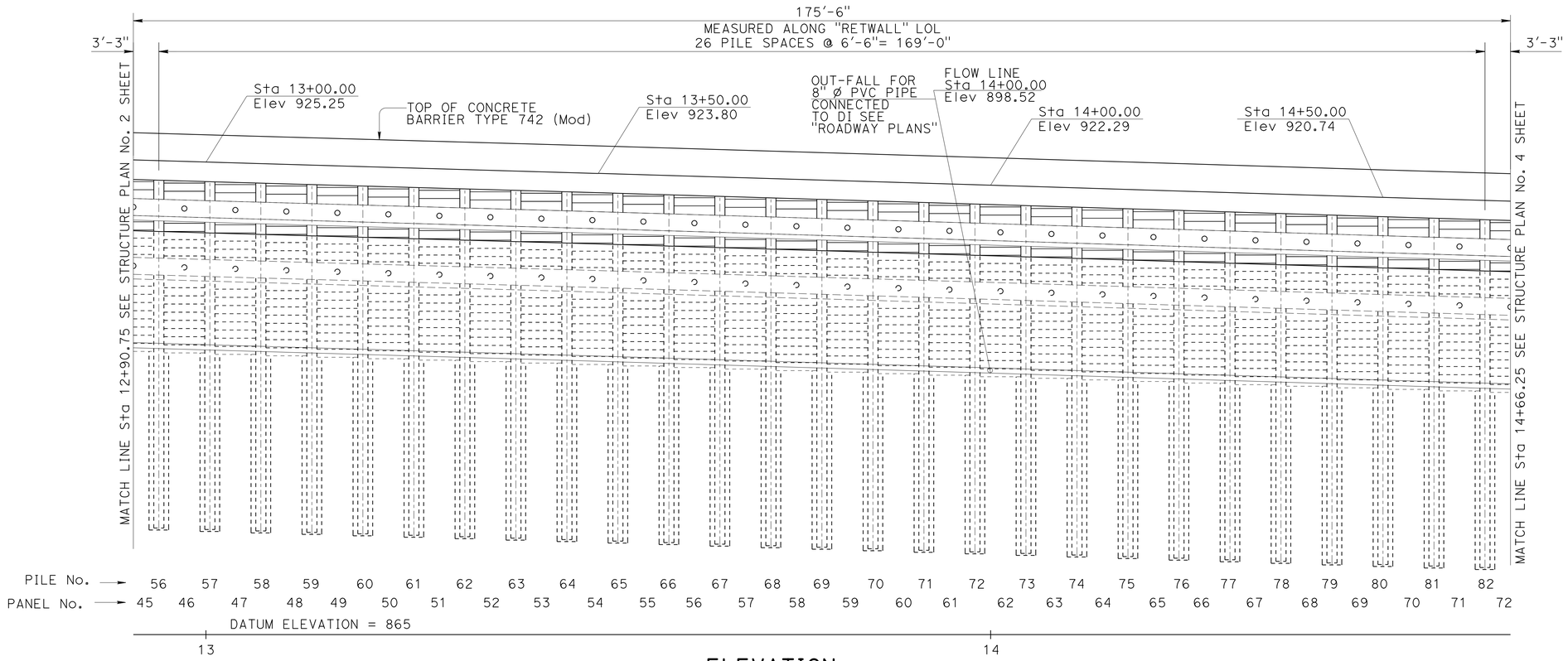

ELEVATION

1/8" = 1'-0"

NOTE:
For drainage details see "DRAINAGE DETAILS" sheet

	BY	CHECKED
DESIGN	Isaias Yalan	Evan Franciliso
DETAILS	Isaias Yalan/Tim Fairall	Evan Franciliso
QUANTITIES	Isaias Yalan	Evan Franciliso

STATE OF CALIFORNIA
DEPARTMENT OF TRANSPORTATION

DIVISION OF ENGINEERING SERVICES
STRUCTURE DESIGN
DESIGN BRANCH 9

BRIDGE NO. 33E0233
POST MILE 5.0

NORTH FLYNN RD SOLDIER PILE WALL WITH GROUND ANCHORS

STRUCTURE PLAN No. 3

STRUCTURES DESIGN DETAIL SHEET (ENGLISH) (REV. 09-01-10)

ORIGINAL SCALE IN INCHES FOR REDUCED PLANS 0 1 2 3

UNIT: 3594
PROJECT NUMBER & PHASE: 04000208691
CONTRACT No.: 04-1SS034

DISREGARD PRINTS BEARING EARLIER REVISION DATES

REVISION DATES: 07-25-14 11-06-14 1-09-15

SHEET 8 OF 25

FILE => 33e0233-c-sp03.dgn

USERNAME => s129144 DATE PLOTTED => 02-JUN-2015 TIME PLOTTED => 10:32

Dist	COUNTY	ROUTE	POST MILES TOTAL PROJECT	SHEET No.	TOTAL SHEETS
04	Ala	580	R4.9/R5.6	64	80

REGISTERED CIVIL ENGINEER — DATE 3-3-15

5-4-15
PLANS APPROVAL DATE

REGISTERED PROFESSIONAL ENGINEER — ISAIAS D. YALAN — No. 68269 — Exp. 9-30-15 — CIVIL — STATE OF CALIFORNIA

The State of California or its officers or agents shall not be responsible for the accuracy or completeness of scanned copies of this plan sheet.

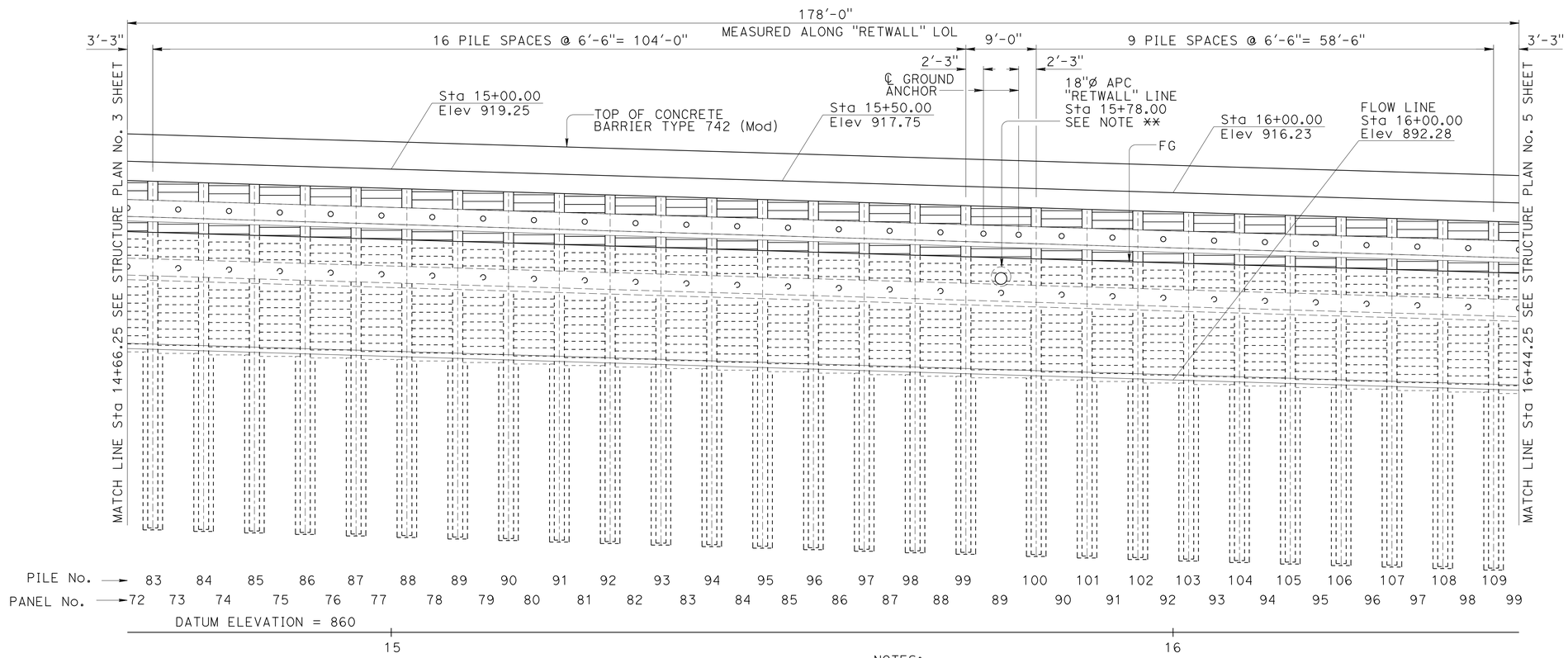

ELEVATION

1/8" = 1'-0"

NOTES:

1. For drainage details see "DRAINAGE DETAILS" sheet

** For details see "LAGGING DETAILS" sheet

DESIGN	BY Isaias Yalan	CHECKED Evan Franciliso	
DETAILS	BY Isaias Yalan/Tim Fairall	CHECKED Evan Franciliso	
QUANTITIES	BY Isaias Yalan	CHECKED Evan Franciliso	

STATE OF CALIFORNIA
DEPARTMENT OF TRANSPORTATION

DIVISION OF ENGINEERING SERVICES
STRUCTURE DESIGN
DESIGN BRANCH 9

BRIDGE NO. 33E0233
POST MILE 5.0

NORTH FLYNN RD SOLDIER PILE WALL WITH GROUND ANCHORS

STRUCTURE PLAN No. 4

STRUCTURES DESIGN DETAIL SHEET (ENGLISH) (REV. 09-01-10)

ORIGINAL SCALE IN INCHES FOR REDUCED PLANS 0 1 2 3

UNIT: 3594
PROJECT NUMBER & PHASE: 04000208691
CONTRACT No.: 04-1SS034

DISREGARD PRINTS BEARING EARLIER REVISION DATES

REVISION DATES: 07-25-14 11-06-14 1-09-15

SHEET 9 OF 25

FILE => 33e0233-c-sp04.dgn

USERNAME => s129144 DATE PLOTTED => 02-JUN-2015 TIME PLOTTED => 10:33

Dist	COUNTY	ROUTE	POST MILES TOTAL PROJECT	SHEET No.	TOTAL SHEETS
04	Ala	580	R4.9/R5.6	65	80

REGISTERED CIVIL ENGINEER — DATE 3-3-15

5-4-15
PLANS APPROVAL DATE

REGISTERED PROFESSIONAL ENGINEER — ISAIAS D. YALAN No. 68269 Exp. 9-30-15 CIVIL — STATE OF CALIFORNIA

The State of California or its officers or agents shall not be responsible for the accuracy or completeness of scanned copies of this plan sheet.

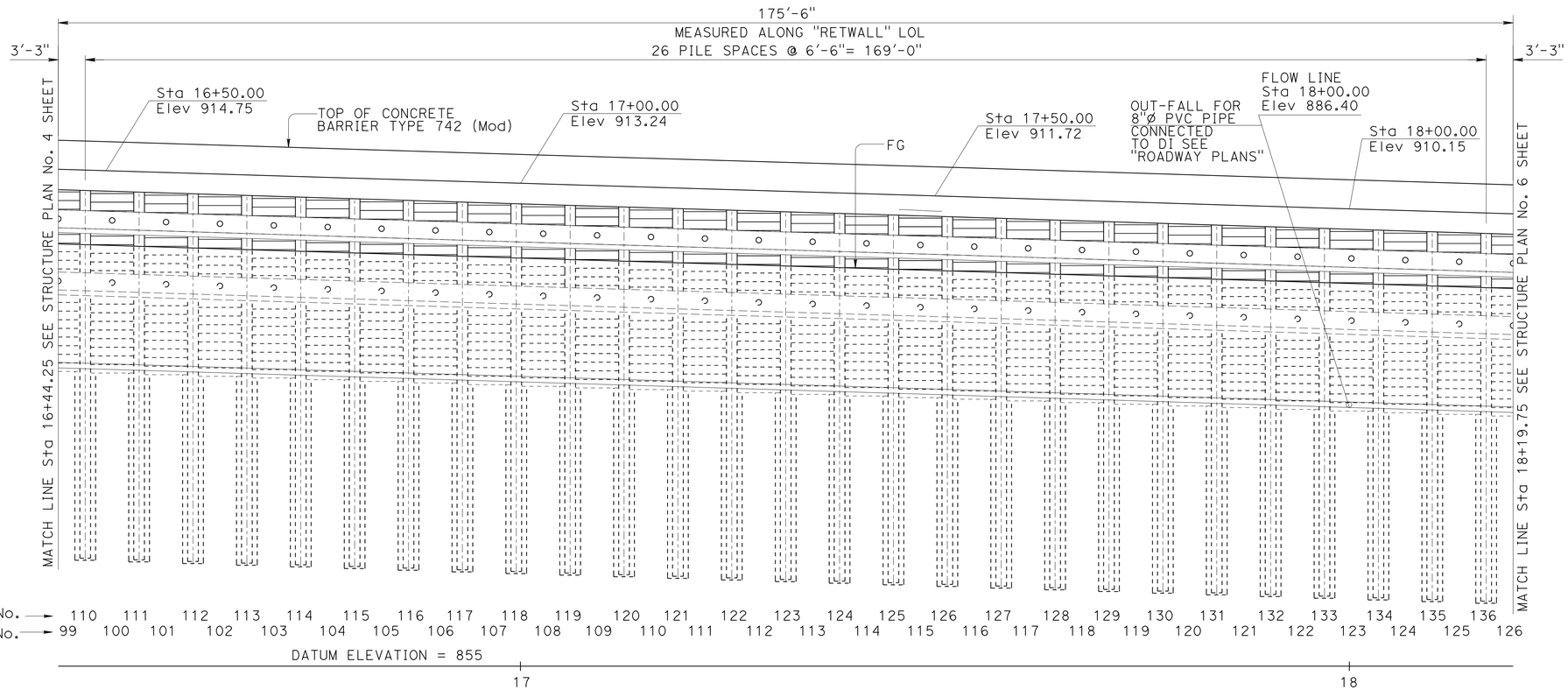

ELEVATION

1/8" = 1'-0"

NOTE:
For drainage details see
"DRAINAGE DETAILS" sheet

DESIGN	BY Isaias Yalan	CHECKED Evan Franciliso
DETAILS	BY Isaias Yalan/Tim Fairall	CHECKED Evan Franciliso
QUANTITIES	BY Isaias Yalan	CHECKED Evan Franciliso

STATE OF CALIFORNIA
DEPARTMENT OF TRANSPORTATION

DIVISION OF ENGINEERING SERVICES
STRUCTURE DESIGN
DESIGN BRANCH 9

BRIDGE NO. 33E0233
POST MILE 5.0

NORTH FLYNN RD SOLDIER PILE WALL WITH GROUND ANCHORS

STRUCTURE PLAN No. 5

STRUCTURES DESIGN DETAIL SHEET (ENGLISH) (REV. 09-01-10)

ORIGINAL SCALE IN INCHES FOR REDUCED PLANS 0 1 2 3

UNIT: 3594
PROJECT NUMBER & PHASE: 04000208691
CONTRACT No.: 04-1SS034

DISREGARD PRINTS BEARING EARLIER REVISION DATES

REVISION DATES: 07-25-14 11-06-14

SHEET 10 OF 25

FILE => 33e0233-c-sp05.dgn

USERNAME => s129144 DATE PLOTTED => 02-JUN-2015 TIME PLOTTED => 10:33

Dist	COUNTY	ROUTE	POST MILES TOTAL PROJECT	SHEET No.	TOTAL SHEETS
04	Ala	580	R4.9/R5.6	66	80

REGISTERED CIVIL ENGINEER — DATE: 3-3-15

PLANS APPROVAL DATE: 5-4-15

REGISTERED PROFESSIONAL ENGINEER — ISAIAS D. YALAN — No. 68269 — Exp. 9-30-15 — CIVIL — STATE OF CALIFORNIA

The State of California or its officers or agents shall not be responsible for the accuracy or completeness of scanned copies of this plan sheet.

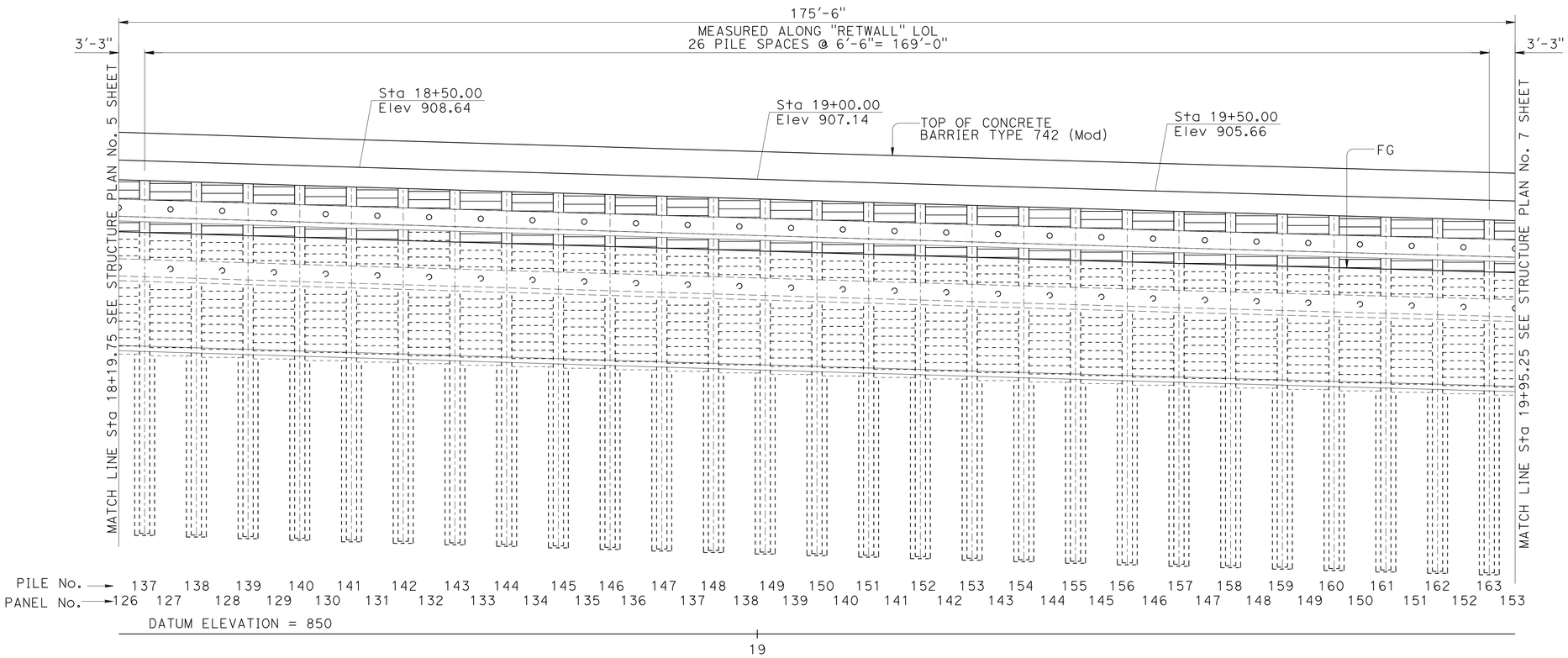

ELEVATION

1/8" = 1'-0"

NOTE:
For drainage details see "DRAINAGE DETAILS" sheet

	BY	CHECKED
DESIGN	Isaias Yalan	Evan Franciliso
DETAILS	Isaias Yalan/Tim Fairall	Evan Franciliso
QUANTITIES	Isaias Yalan	Evan Franciliso

STATE OF CALIFORNIA
DEPARTMENT OF TRANSPORTATION

DIVISION OF ENGINEERING SERVICES
STRUCTURE DESIGN
DESIGN BRANCH 9

BRIDGE NO. 33E0233
POST MILE 5.0

NORTH FLYNN RD SOLDIER PILE WALL WITH GROUND ANCHORS

STRUCTURE PLAN No. 6

STRUCTURES DESIGN DETAIL SHEET (ENGLISH) (REV. 09-01-10)

ORIGINAL SCALE IN INCHES FOR REDUCED PLANS 0 1 2 3

UNIT: 3594
PROJECT NUMBER & PHASE: 04000208691
CONTRACT No.: 04-1SS034

DISREGARD PRINTS BEARING EARLIER REVISION DATES → 07-25-14 11-06-14

SHEET 11 OF 25

FILE => 33e0233-c-sp06.dgn

USERNAME => s129144 DATE PLOTTED => 02-JUN-2015 TIME PLOTTED => 10:33

Dist	COUNTY	ROUTE	POST MILES TOTAL PROJECT	SHEET No.	TOTAL SHEETS
04	Ala	580	R4.9/R5.6	67	80

REGISTERED CIVIL ENGINEER — DATE 3-3-15

5-4-15
PLANS APPROVAL DATE

REGISTERED PROFESSIONAL ENGINEER — ISAIAS D. YALAN No. 68269 Exp. 9-30-15 CIVIL — STATE OF CALIFORNIA

The State of California or its officers or agents shall not be responsible for the accuracy or completeness of scanned copies of this plan sheet.

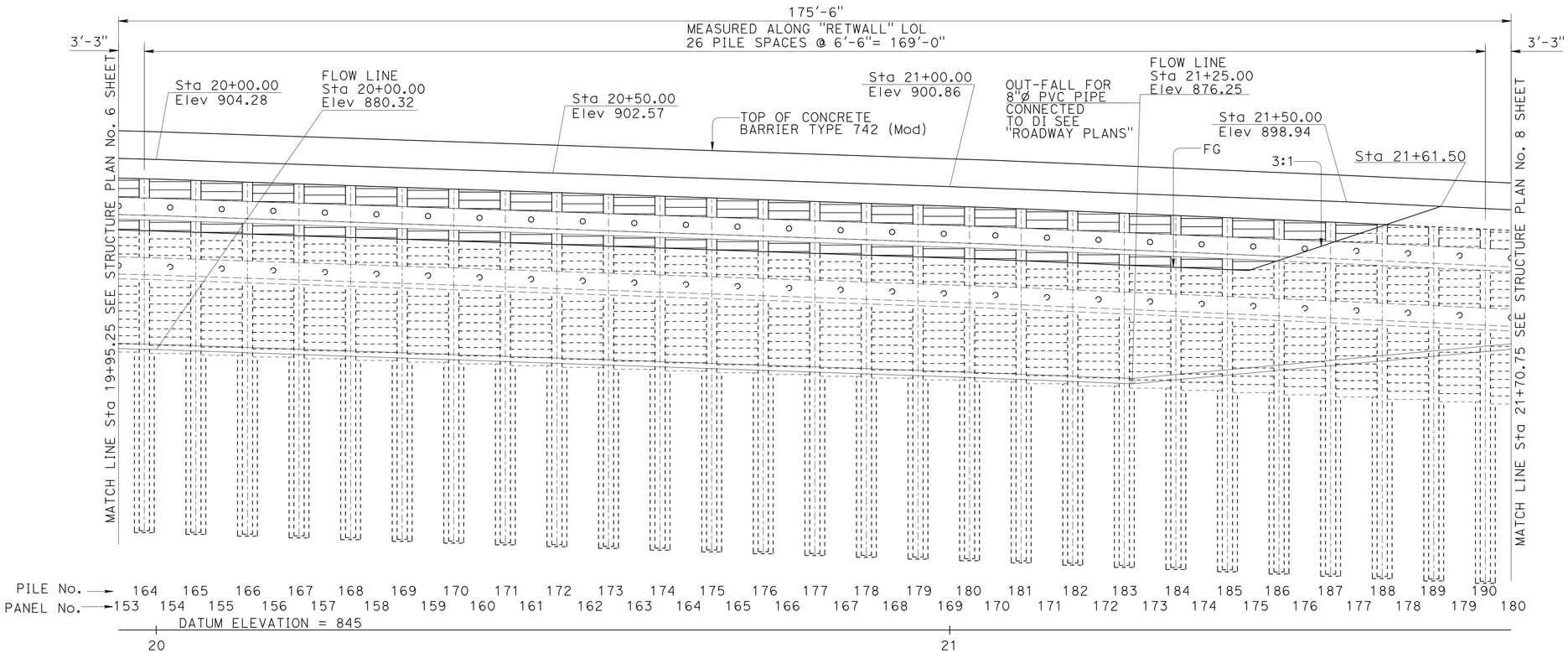

ELEVATION

1/8" = 1'-0"

NOTE:
For drainage details see "DRAINAGE DETAILS" sheet

DESIGN	BY Isaias Yalan	CHECKED Evan Franciliso	
DETAILS	BY Isaias Yalan/Tim Fairall	CHECKED Evan Franciliso	
QUANTITIES	BY Isaias Yalan	CHECKED Evan Franciliso	

STATE OF CALIFORNIA
DEPARTMENT OF TRANSPORTATION

DIVISION OF ENGINEERING SERVICES
STRUCTURE DESIGN
DESIGN BRANCH 9

BRIDGE NO. 33E0233
POST MILE 5.0

NORTH FLYNN RD SOLDIER PILE WALL WITH GROUND ANCHORS
STRUCTURE PLAN No. 7

STRUCTURES DESIGN DETAIL SHEET (ENGLISH) (REV. 09-01-10)

ORIGINAL SCALE IN INCHES FOR REDUCED PLANS 0 1 2 3

UNIT: 3594
PROJECT NUMBER & PHASE: 04000208691
CONTRACT No.: 04-1SS034

DISREGARD PRINTS BEARING EARLIER REVISION DATES

REVISION DATES: 07-25-14 11-06-14 2-11-15

SHEET 12 OF 25

FILE => 33e0233-c-sp07.dgn

USERNAME => s129144 DATE PLOTTED => 02-JUN-2015 TIME PLOTTED => 10:33

Dist	COUNTY	ROUTE	POST MILES TOTAL PROJECT	SHEET No.	TOTAL SHEETS
04	Ala	580	R4.9/R5.6	68	80

REGISTERED CIVIL ENGINEER 3-3-15 DATE

5-4-15
PLANS APPROVAL DATE

REGISTERED PROFESSIONAL ENGINEER ISAIAS D. YALAN No. 68269 Exp. 9-30-15 CIVIL STATE OF CALIFORNIA

The State of California or its officers or agents shall not be responsible for the accuracy or completeness of scanned copies of this plan sheet.

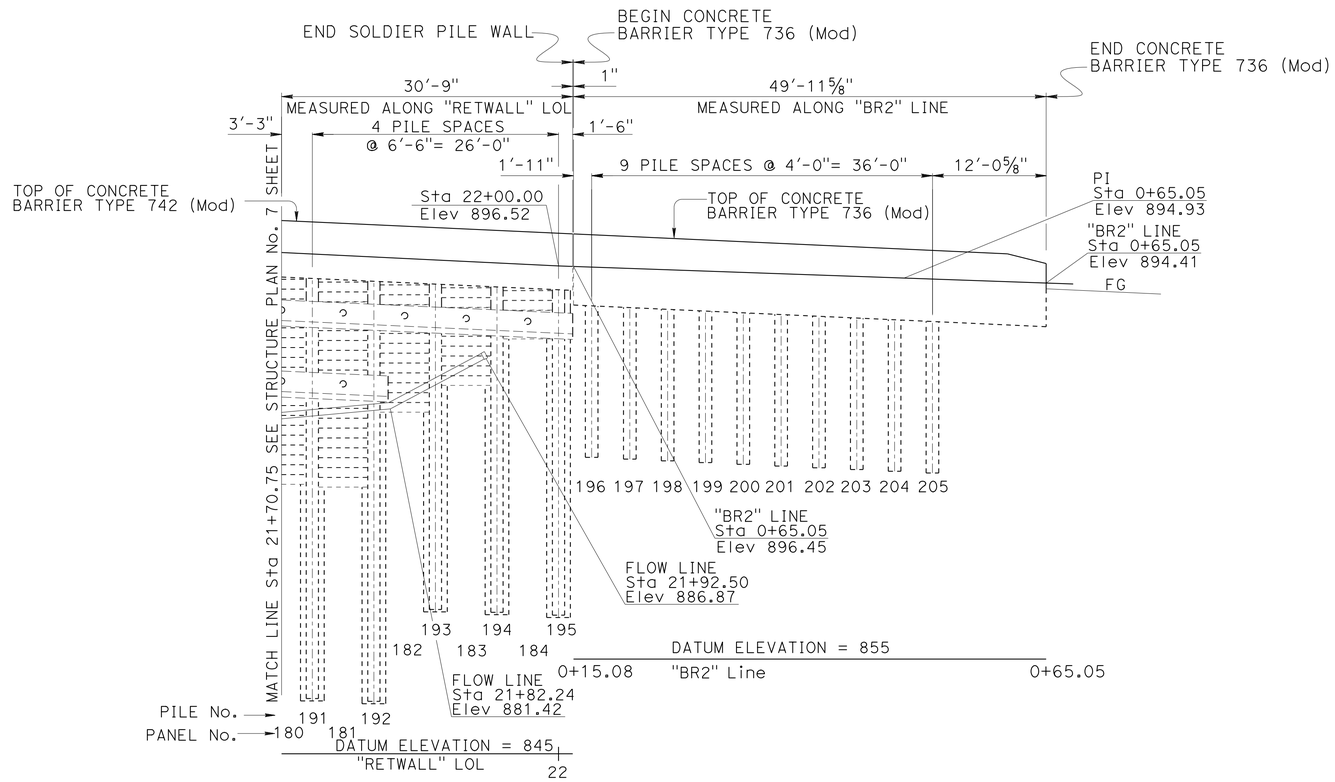

ELEVATION

⅛" = 1'-0"

NOTE:
For drainage details see "DRAINAGE DETAILS" sheet

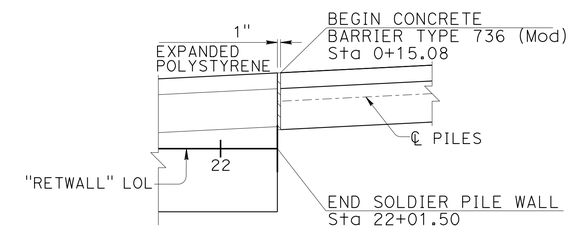

DETAIL Y

½" = 1'-0"

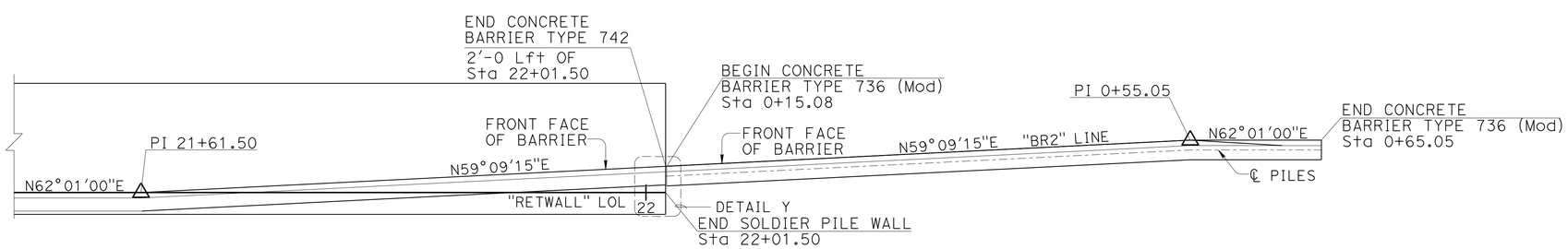

VIEW B

3/16" = 1'-0"

	BY	CHECKED
DESIGN	Isaias Yalan	Evan Franciliso
DETAILS	Isaias Yalan/Tim Fairall	Evan Franciliso
QUANTITIES	Isaias Yalan	Evan Franciliso

STATE OF CALIFORNIA
DEPARTMENT OF TRANSPORTATION

DIVISION OF ENGINEERING SERVICES
STRUCTURE DESIGN
DESIGN BRANCH 9

BRIDGE NO. 33E0233
POST MILE 5.0

NORTH FLYNN RD SOLDIER PILE WALL WITH GROUND ANCHORS

STRUCTURE PLAN No. 8

STRUCTURES DESIGN DETAIL SHEET (ENGLISH) (REV. 09-01-10)

ORIGINAL SCALE IN INCHES FOR REDUCED PLANS 0 1 2 3

UNIT: 3594
PROJECT NUMBER & PHASE: 04000208691
CONTRACT No.: 04-1SS034

DISREGARD PRINTS BEARING EARLIER REVISION DATES

REVISION DATES: 07-25-14 11-06-14 2-11-15

SHEET 13 OF 25

FILE => 33e0233-c-sp08.dgn

USERNAME => s129144 DATE PLOTTED => 02-JUN-2015 TIME PLOTTED => 10:33

DIST	COUNTY	ROUTE	POST MILES TOTAL PROJECT	SHEET No.	TOTAL SHEETS
04	Ala	580	R4.9/R5.6	69	80

REGISTERED CIVIL ENGINEER 3-3-15 DATE

5-4-15
PLANS APPROVAL DATE

REGISTERED PROFESSIONAL ENGINEER
Isaias D. Yalan
No. 68269
Exp. 9-30-15
CIVIL
STATE OF CALIFORNIA

The State of California or its officers or agents shall not be responsible for the accuracy or completeness of electronic copies of this plan sheet.

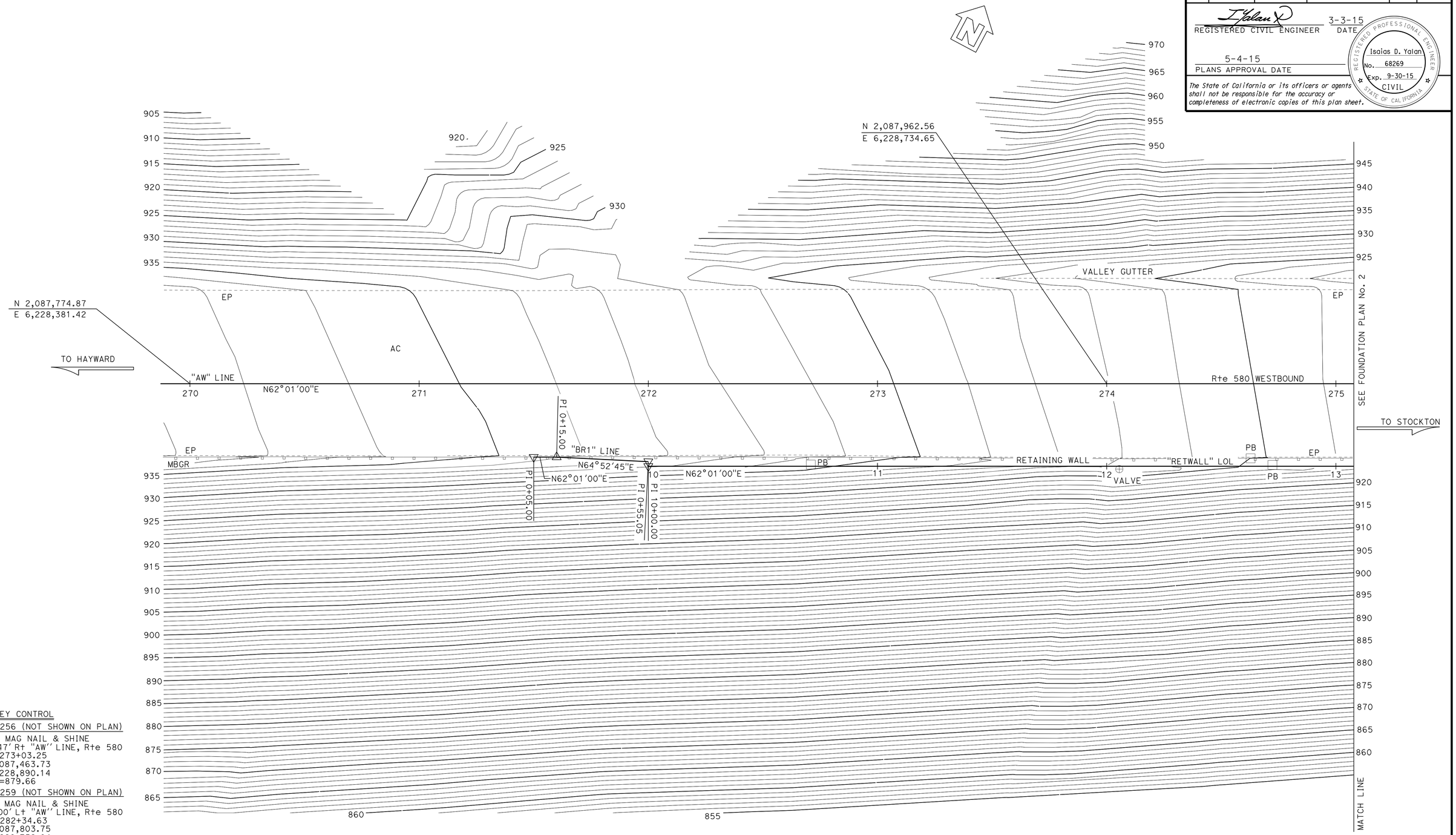

SURVEY CONTROL

SUHV256 (NOT SHOWN ON PLAN)
Fnd MAG NAIL & SHINE
513.47' Rt "AW" LINE, Rte 580
Sta 273+03.25
N 2,087,463.73
E 6,228,890.14
Elev=879.66

SUHV259 (NOT SHOWN ON PLAN)
Fnd MAG NAIL & SHINE
618.00' Lt "AW" LINE, Rte 580
Sta 282+34.63
N 2,087,803.75
E 6,229,752.84
Elev=833.55

PRELIMINARY INVESTIGATION SECTION

SCALE	VERT.DATUM NAVD88	PHOTOGRAMMETRY AS OF: X			
1"=20'	HORZ.DATUM NAD83 (1991)	SURVEYED	BY DISTRICT	CHECKED	BY John Borden 07/2013
ALIGNMENT TIES Dist. Traverse Sheet		DRAFTED	BY Sharon Zheng 07/2013	CHECKED	BY Sang Sou 07/2013

DESIGN	BY Isaias Yalan	CHECKED Evan Franciliso
DETAILS	BY Tim Fairall	CHECKED Evan Franciliso
QUANTITIES	BY Isaias Yalan	CHECKED Evan Franciliso

STATE OF CALIFORNIA
DEPARTMENT OF TRANSPORTATION

DIVISION OF ENGINEERING SERVICES
STRUCTURE DESIGN
DESIGN BRANCH 9

BRIDGE NO. 33E0223
POST MILE 5.00

NORTH FLYNN RD SOLDIER PILE WALL WITH GROUND ANCHORS
FOUNDATION PLAN No. 1

STRUCTURES FOUNDATION PLAN SHEET (ENGLISH) (REV. 09-01-10)

ORIGINAL SCALE IN INCHES FOR REDUCED PLANS 0 1 2 3

UNIT: 3646
PROJECT NUMBER & PHASE: 04000208691
CONTRACT NO.: 04-1SS034

DISREGARD PRINTS BEARING EARLIER REVISION DATES

REVISION DATES 11/15/13 9/30/14

SHEET 14 OF 25

FILE => 33e0233-e-fp101.dgn

USERNAME => s129144 DATE PLOTTED => 02-JUN-2015 TIME PLOTTED => 10:33

DIST	COUNTY	ROUTE	POST MILES TOTAL PROJECT	SHEET No.	TOTAL SHEETS
04	Ala	580	R4.9/R5.6	70	80

REGISTERED CIVIL ENGINEER — DATE 3-3-15

5-4-15
PLANS APPROVAL DATE

REGISTERED PROFESSIONAL ENGINEER — Isaias D. Yalan — No. 68269 — Exp. 9-30-15 — CIVIL — STATE OF CALIFORNIA

The State of California or its officers or agents shall not be responsible for the accuracy or completeness of electronic copies of this plan sheet.

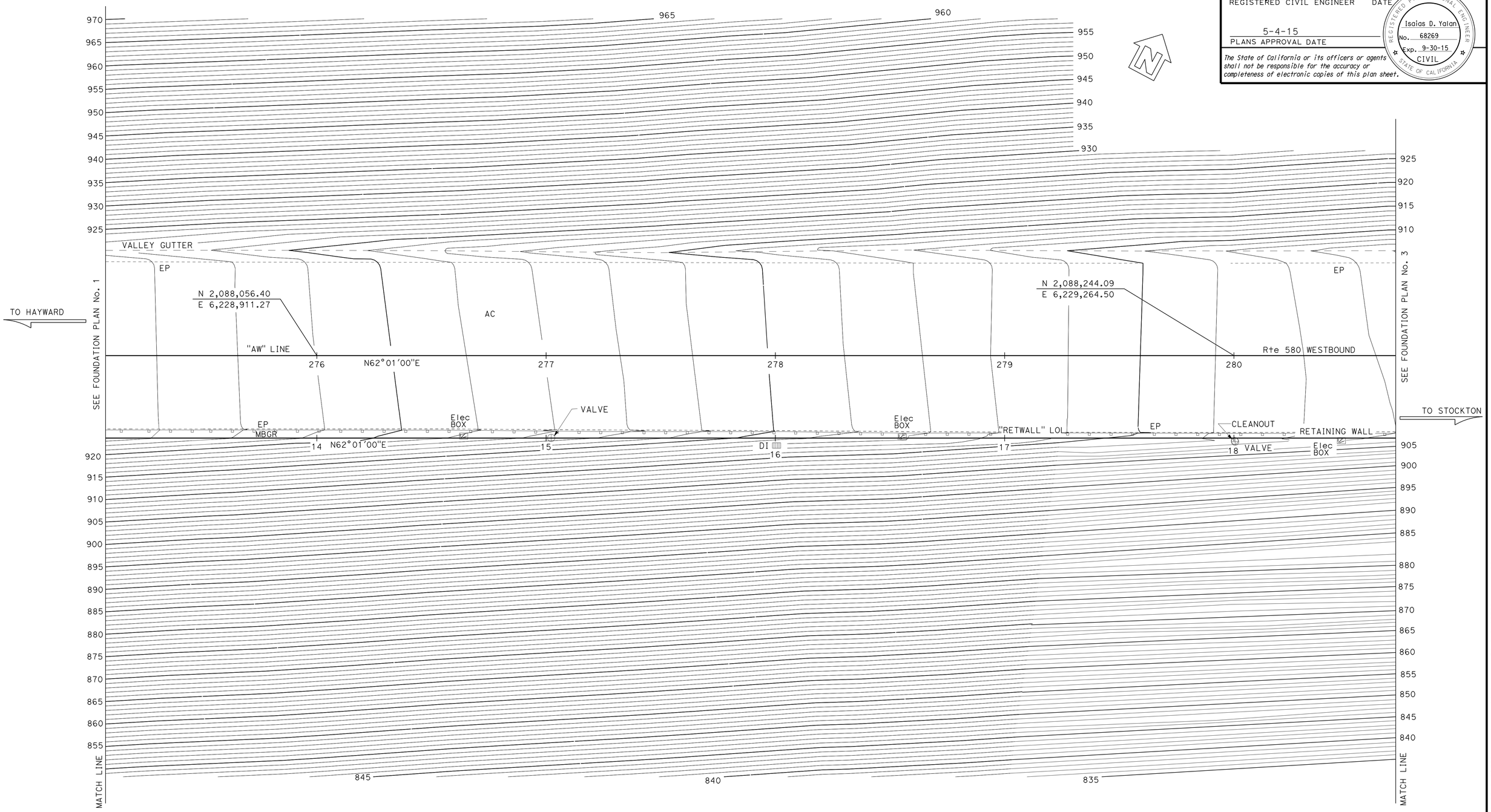

PRELIMINARY INVESTIGATION SECTION					
SCALE 1"=20'	VERT.DATUM NAVD88	PHOTOGRAMMETRY AS OF: X			
	HORZ.DATUM NAD83 (1991)	SURVEYED	BY DISTRICT	CHECKED	BY John Borden 07/2013
ALIGNMENT TIES Dist. Traverse Sheet		DRAFTED	BY Sharon Zheng 07/2013	CHECKED	BY Sang Sou 07/2013

DESIGN	BY Isaias Yalan	CHECKED Evan Franciliso
DETAILS	BY Tim Fairall	CHECKED Evan Franciliso
QUANTITIES	BY Isaias Yalan	CHECKED Evan Franciliso

STATE OF CALIFORNIA
DEPARTMENT OF TRANSPORTATION

DIVISION OF ENGINEERING SERVICES
STRUCTURE DESIGN
DESIGN BRANCH 9

BRIDGE NO. 33E0223
POST MILE 5.00

NORTH FLYNN RD SOLDIER PILE WALL WITH GROUND ANCHORS
FOUNDATION PLAN No. 2

STRUCTURES FOUNDATION PLAN SHEET (ENGLISH) (REV. 09-01-10)

ORIGINAL SCALE IN INCHES FOR REDUCED PLANS 0 1 2 3

UNIT: 3646
PROJECT NUMBER & PHASE: 04000208691
CONTRACT NO.: 04-1SS034

DISREGARD PRINTS BEARING EARLIER REVISION DATES

REVISION DATES: 7/16/13 9/30/14

SHEET 15 OF 25

FILE => 33e0233-e-fp102.dgn

USERNAME => s129144 DATE PLOTTED => 02-JUN-2015 TIME PLOTTED => 10:33

DIST	COUNTY	ROUTE	POST MILES TOTAL PROJECT	SHEET No.	TOTAL SHEETS
04	Ala	580	R4.9/R5.6	71	80

REGISTERED CIVIL ENGINEER — DATE 3-3-15

5-4-15
PLANS APPROVAL DATE

REGISTERED PROFESSIONAL ENGINEER — Isaias D. Yalan — No. 68269 — Exp. 9-30-15 — CIVIL — STATE OF CALIFORNIA

The State of California or its officers or agents shall not be responsible for the accuracy or completeness of electronic copies of this plan sheet.

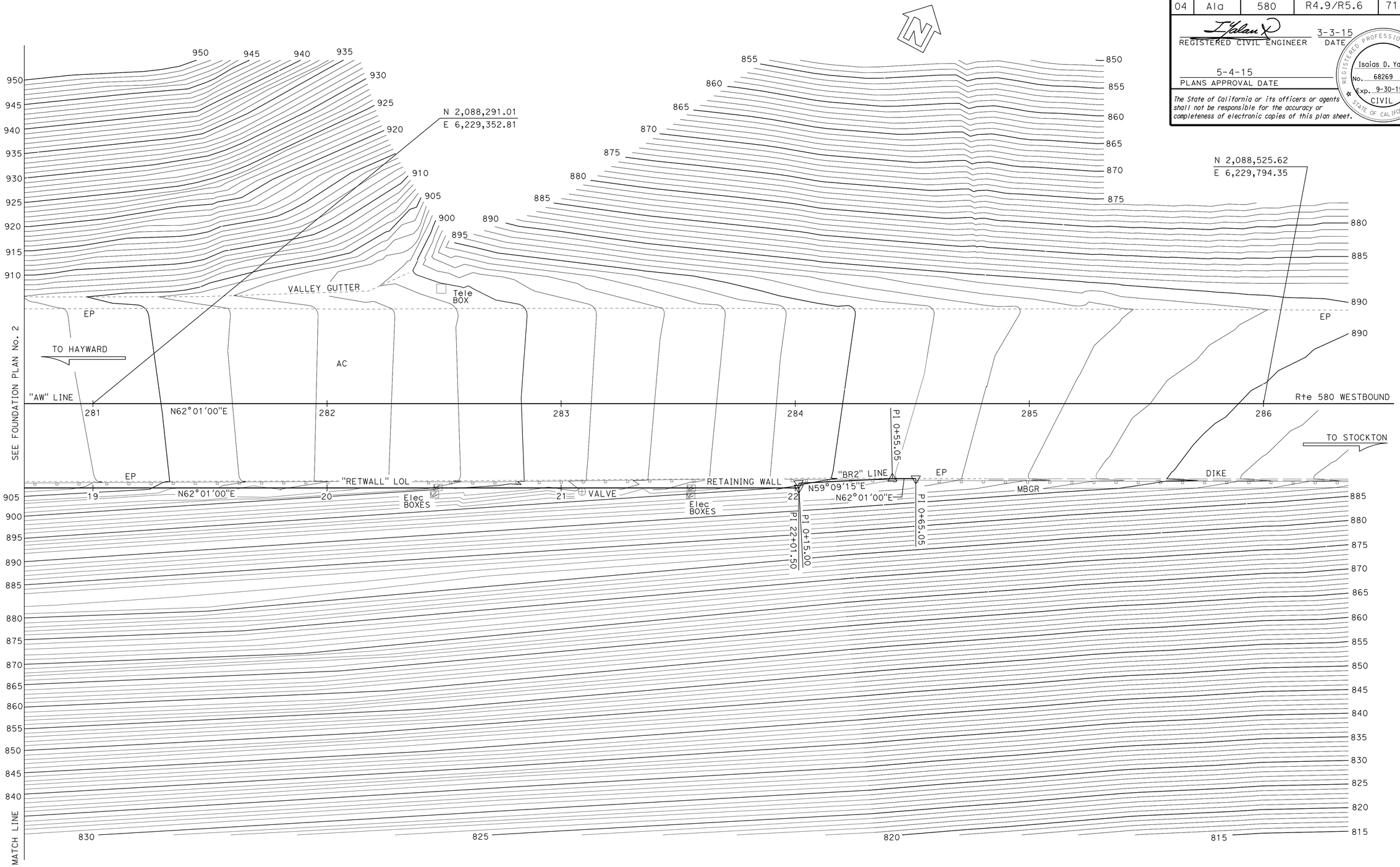

PRELIMINARY INVESTIGATION SECTION					
SCALE 1"=20'	VERT.DATUM NAVD88	PHOTOGRAMMETRY AS OF: X			
	HORZ.DATUM NAD83 (1991)	SURVEYED	BY DISTRICT	CHECKED	BY John Borden 07/2013
ALIGNMENT TIES Dist. Traverse Sheet		DRAFTED	BY Sharon Zheng 07/2013	CHECKED	BY Sang Sou 07/2013

	BY	CHECKED
DESIGN	Isaias Yalan	Evan Franciliso
DETAILS	Tim Fairall	Evan Franciliso
QUANTITIES	Isaias Yalan	Evan Franciliso

STATE OF CALIFORNIA
DEPARTMENT OF TRANSPORTATION

DIVISION OF ENGINEERING SERVICES
STRUCTURE DESIGN
DESIGN BRANCH 9

BRIDGE NO. 33E0223
POST MILE 5.00

NORTH FLYNN RD SOLDIER PILE WALL WITH GROUND ANCHORS

FOUNDATION PLAN No. 3

STRUCTURES FOUNDATION PLAN SHEET (ENGLISH) (REV. 09-01-10)

ORIGINAL SCALE IN INCHES FOR REDUCED PLANS 0 1 2 3

UNIT: 3646
PROJECT NUMBER & PHASE: 04000208691
CONTRACT NO.: 04-1SS034

DISREGARD PRINTS BEARING EARLIER REVISION DATES

REVISION DATES: 7/24/03 9/30/14

SHEET 16 OF 25

FILE => 33e0233-e-fp103.dgn

USERNAME => s129144 DATE PLOTTED => 02-JUN-2015 TIME PLOTTED => 10:33

Dist	COUNTY	ROUTE	POST MILES TOTAL PROJECT	SHEET No.	TOTAL SHEETS
04	Ala	580	R4.9/R5.6	72	80

REGISTERED CIVIL ENGINEER 3-3-15 DATE

5-4-15
PLANS APPROVAL DATE

REGISTERED PROFESSIONAL ENGINEER ISAIAS D. YALAN No. 68269 Exp. 9-30-15 CIVIL STATE OF CALIFORNIA

The State of California or its officers or agents shall not be responsible for the accuracy or completeness of scanned copies of this plan sheet.

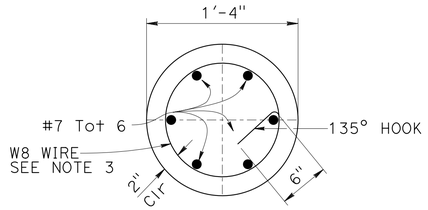

SECTION F-F
1½" = 1'-0"

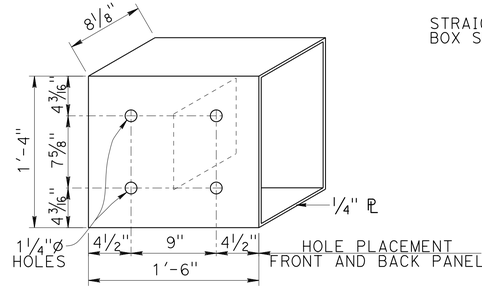

STRAIGHT METAL BOX SPACER
1½" = 1'-0"

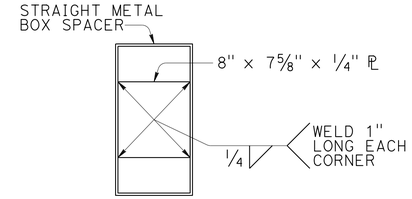

SIDE VIEW
1½" = 1'-0"

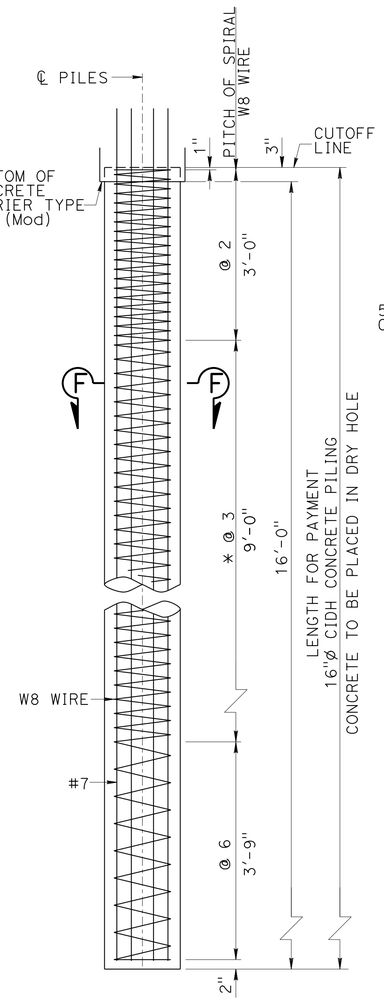

TYPICAL SECTION
¾" = 1'-0"
* @ 2 at option of Contractor

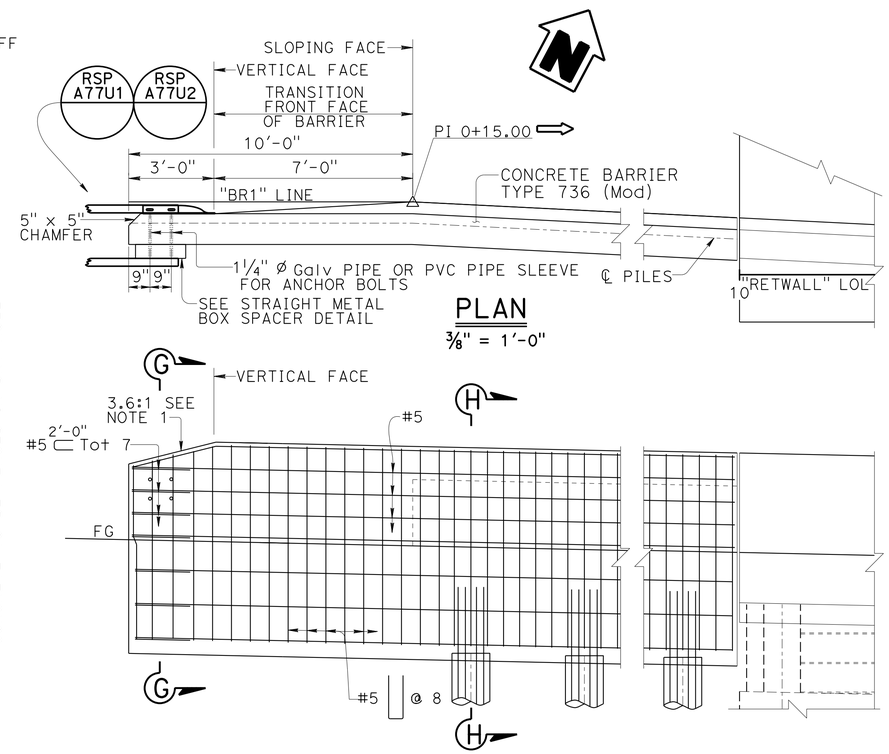

PLAN
⅜" = 1'-0"

ELEVATION
⅜" = 1'-0"

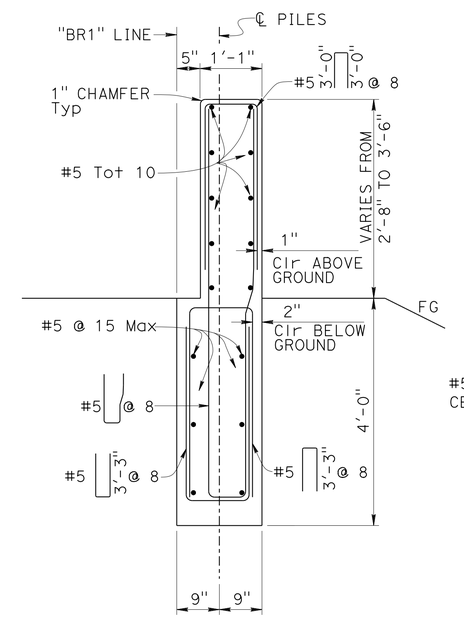

SECTION G-G
¾" = 1'-0"

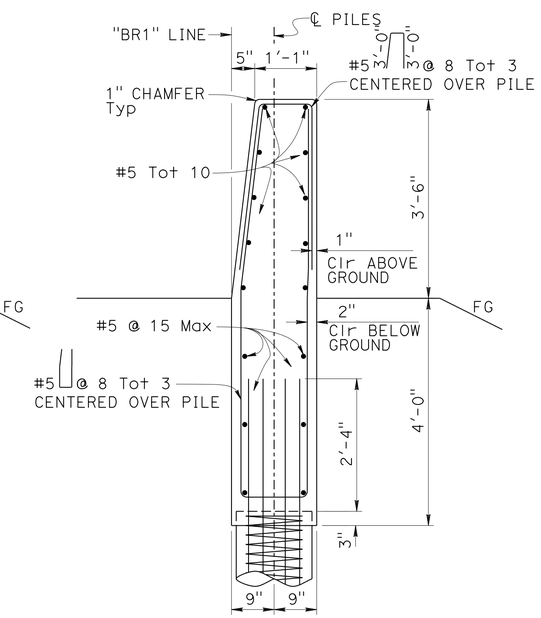

SECTION H-H
¾" = 1'-0"

NOTES:
1. Taper top of barrier to match top elevation of the thrie beam rail element.
2. Beginning of wall shown, end of wall similar by opposite hand
3. Lapped splices in spiral reinforcement shall be lapped at least 80 wire diameters. Spiral reinforcement at splices and at ends shall be teminated with a 135° hook with a 6" tail hooked around a longitudinal bar.

	BY	CHECKED
DESIGN	Isaias Yalan	Evan Franciliso
DETAILS	Evan Franciliso	Evan Franciliso
QUANTITIES	Isaias Yalan	Evan Franciliso

STATE OF CALIFORNIA
DEPARTMENT OF TRANSPORTATION

DIVISION OF ENGINEERING SERVICES
STRUCTURE DESIGN
DESIGN BRANCH 9

BRIDGE NO. 33E0233
POST MILE 5.0

NORTH FLYNN RD SOLDIER PILE WALL WITH GROUND ANCHORS
TYPICAL SECTION No. 1

STRUCTURES DESIGN DETAIL SHEET (ENGLISH) (REV. 09-01-10)

ORIGINAL SCALE IN INCHES FOR REDUCED PLANS 0 1 2 3

UNIT: 3594
PROJECT NUMBER & PHASE: 04000208691
CONTRACT No.: 04-1SS034

DISREGARD PRINTS BEARING EARLIER REVISION DATES

REVISION DATES 08-25-14 11-18-14 2-11-15

SHEET 17 OF 25

FILE => 33e0233-f-ts01.dgn

USERNAME => s129144 DATE PLOTTED => 02-JUN-2015 TIME PLOTTED => 10:33

Dist	COUNTY	ROUTE	POST MILES TOTAL PROJECT	SHEET No.	TOTAL SHEETS
04	Ala	580	R4.9/R5.6	73	80

REGISTERED CIVIL ENGINEER — DATE 3-3-15

5-4-15
PLANS APPROVAL DATE

REGISTERED PROFESSIONAL ENGINEER — ISAIAS D. YALAN — No. 68269 — Exp. 9-30-15 — CIVIL — STATE OF CALIFORNIA

The State of California or its officers or agents shall not be responsible for the accuracy or completeness of scanned copies of this plan sheet.

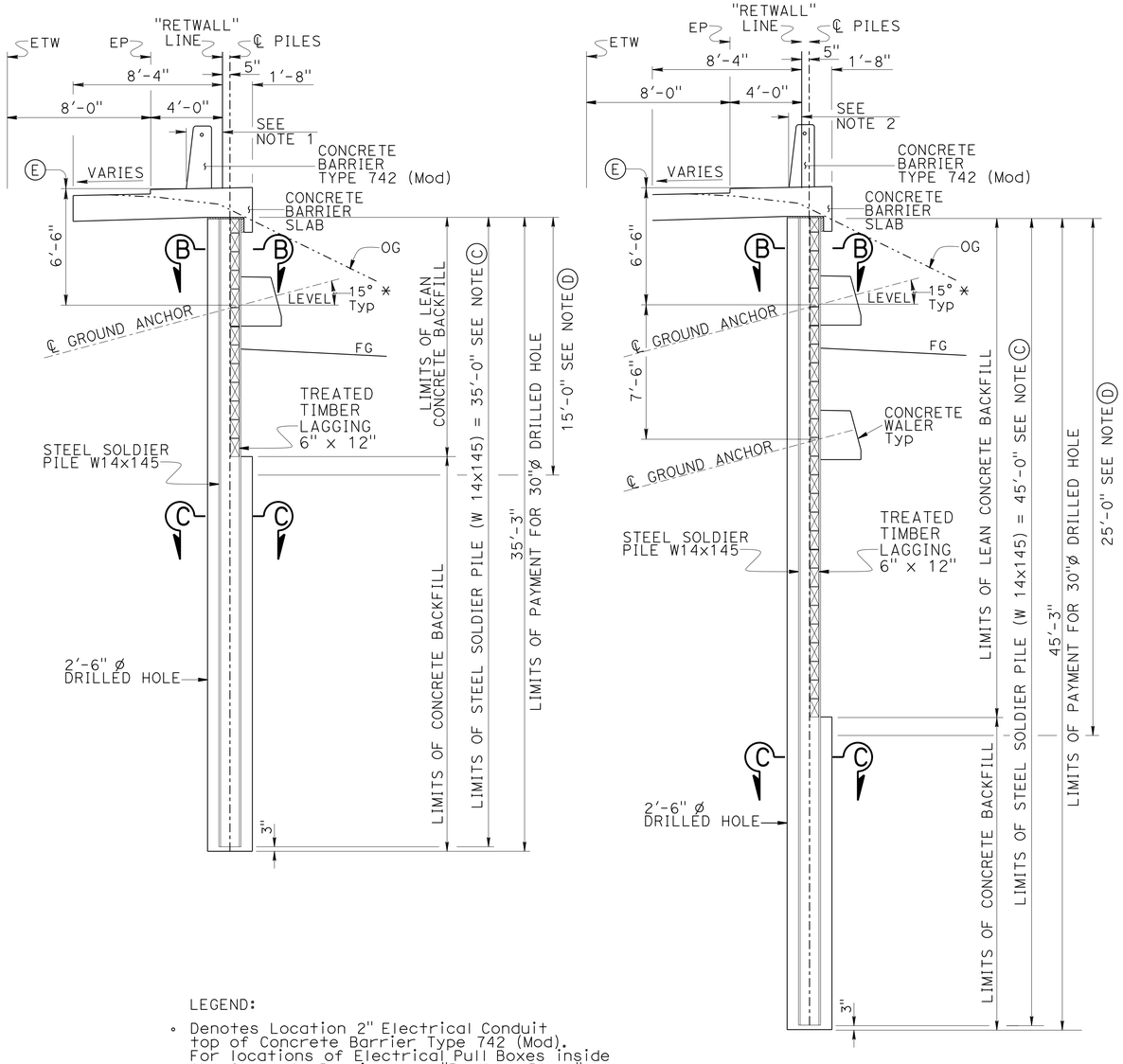

TYPICAL SECTIONS

1/4" = 1'-0"

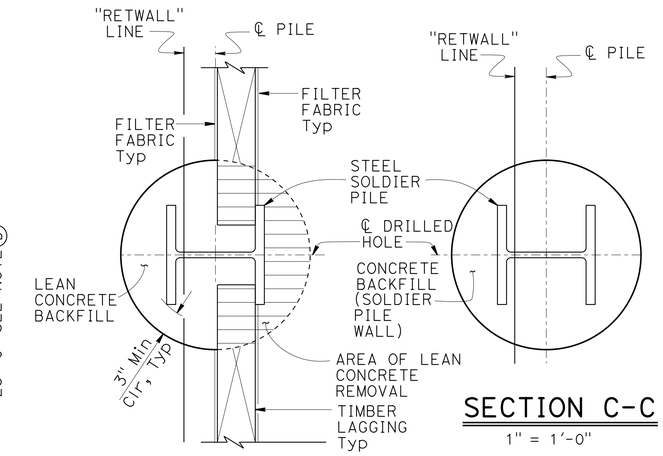

SECTION B-B

1" = 1'-0"

SECTION C-C

1" = 1'-0"

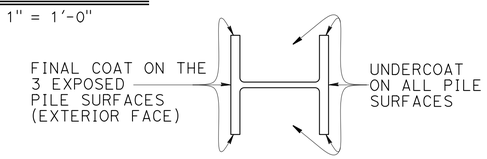

LIMITS OF CLEAN & PAINT STEEL SOLDIER PILING

1" = 1'-0"

LEGEND:

- ◦ Denotes Location 2" Electrical Conduit top of Concrete Barrier Type 742 (Mod). For locations of Electrical Pull Boxes inside the Concrete Barrier, see "Roadway Plans"
- * See Note 4 on "PILE DATA TABLE No. 2" sheet , for Ground Anchor angles on Panels 88, 89 and 90
- (C) Limits of clean and paint steel soldier piling, undercoat on all pile surfaces
- (D) Limits of final coat on the 3 exposed pile surfaces (exterior face)
- (E) Top of wall at "RETWALL" Line

NOTES:

1. Varies from 2'-0" at Station 10+00.00 to 1'-0 1/4" at Station 10+19.50
2. Varies from 1'-0 1/4" at Station 10+19.50 to 0'-0" at Station 10+40.00
3. Filter Fabric in the back and front of the wall not shown
4. Geocomposite Drain in the front of the wall not shown

	BY	CHECKED
DESIGN	Isaias Yalan	Evan Franciliso
DETAILS	Isaias Yalan/Tim Fairall	Evan Franciliso
QUANTITIES	Isaias Yalan	Evan Franciliso

STATE OF CALIFORNIA
DEPARTMENT OF TRANSPORTATION

DIVISION OF ENGINEERING SERVICES
STRUCTURE DESIGN
DESIGN BRANCH 9

BRIDGE NO. 33E0233
POST MILE 5.0

NORTH FLYNN RD SOLDIER PILE WALL WITH GROUND ANCHORS

TYPICAL SECTION No. 2

STRUCTURES DESIGN DETAIL SHEET (ENGLISH) (REV. 09-01-10)

ORIGINAL SCALE IN INCHES FOR REDUCED PLANS 0 1 2 3

UNIT: 3594
PROJECT NUMBER & PHASE: 04000208691
CONTRACT No.: 04-1SS034

DISREGARD PRINTS BEARING EARLIER REVISION DATES

REVISION DATES: 06-23-14

SHEET 18 OF 25

FILE => 33e0233-f-ts02.dgn

USERNAME => s129144 DATE PLOTTED => 02-JUN-2015 TIME PLOTTED => 10:33

Dist	COUNTY	ROUTE	POST MILES TOTAL PROJECT	SHEET No.	TOTAL SHEETS
04	Ala	580	R4.9/R5.6	74	80

REGISTERED CIVIL ENGINEER 5-29-15 DATE

5-4-15
PLANS APPROVAL DATE

REGISTERED PROFESSIONAL ENGINEER ISAIAS D. YALAN No. 68269 Exp. 9-30-15 CIVIL STATE OF CALIFORNIA

The State of California or its officers or agents shall not be responsible for the accuracy or completeness of scanned copies of this plan sheet.

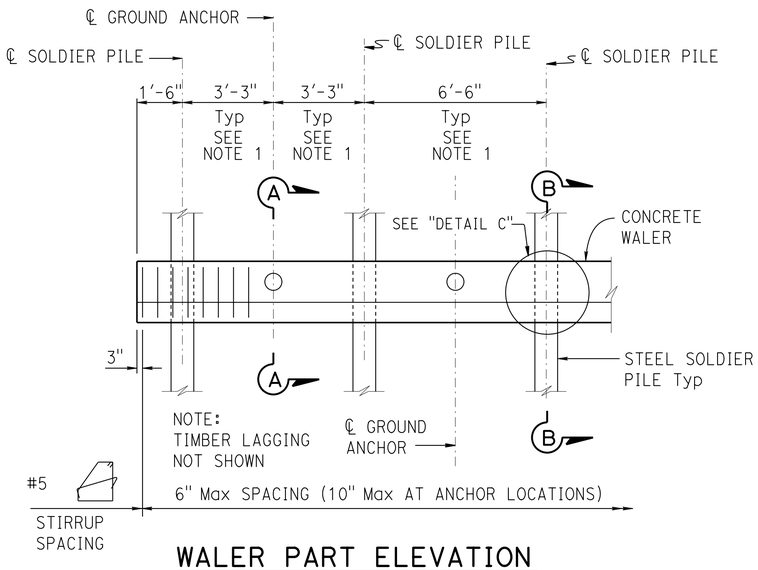

WALER PART ELEVATION

NO SCALE

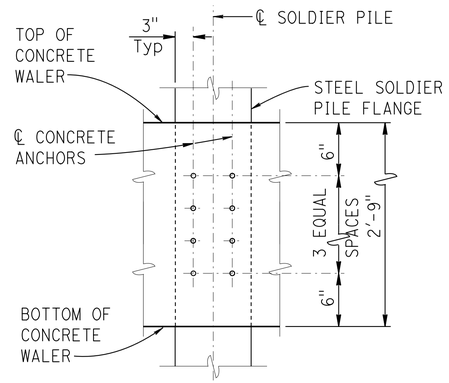

DETAIL C

NO SCALE

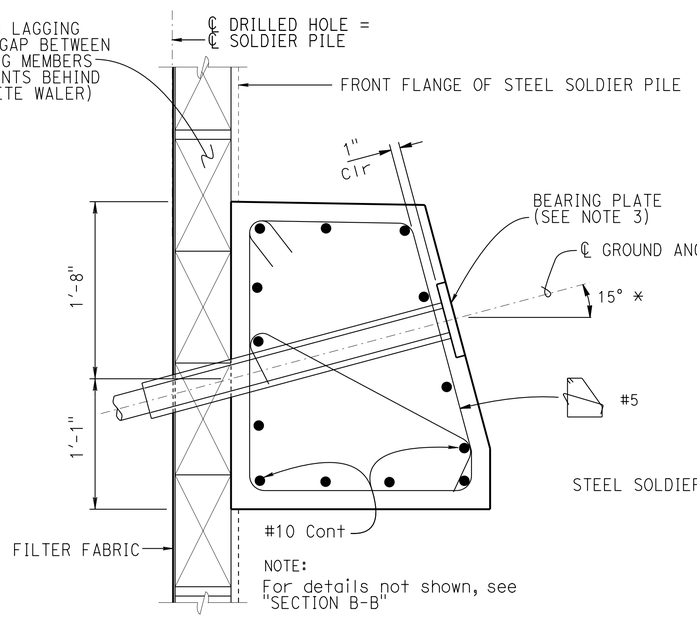

SECTION A-A

1½" = 1'-0"

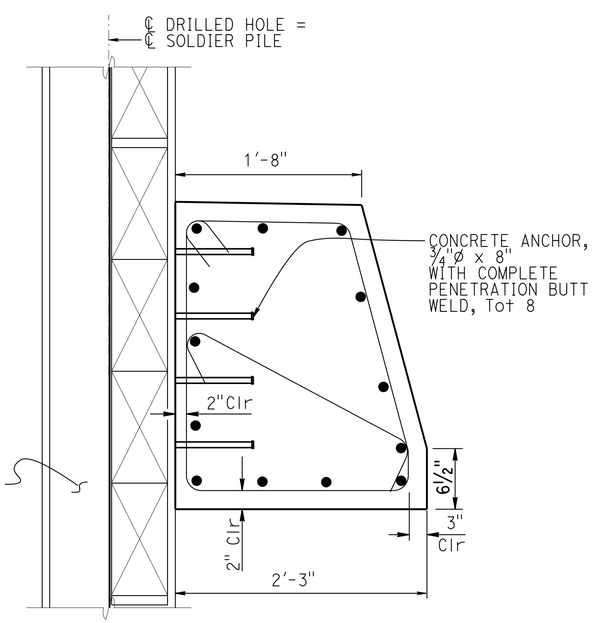

SECTION B-B

1½" = 1'-0"

NOTES:

1. Except Panel No. 89, see "STRUCTURE PLAN No. 4" for spacing
2. For location of left and right Ground Anchors on upper Waler on Panel 89, see "STRUCTURE PLAN No. 4" sheet
3. Concrete walers may be poured to face of lagging
4. Bearing plates may be recessed or on face of concrete waler

* See Note 4 on "PILE DATA TABLE No. 2" sheet , for Ground Anchor angles on Panels 88, 89 and 90

GENERAL NOTES

DESIGN: AASHTO LRFD Bridge Design Specifications, 2012 with California Amendments.

LIVE LOAD: 2 feet Level Surcharge

SOIL PARAMETERS: (For determination of Design Lateral Earth Pressures)

ACTIVE EARTH PRESSURE:

Soil unit weight = 130 lb/ft³
Friction Angle = 14° , C = 0 psf
Active Pressure coefficent, Ka = 0.61
Friction Factor = ⅔ Friction Angle

PASSIVE EARTH PRESSURE:

Soil unit weight = 130 lb/ft³
Friction Angle = 30° , C = 0 psf
Friction Factor = ⅔ Friction Angle

STEEL SOLDIER PILES: ASTM A572/A, ASTM 572M Grade 50 Min, or ASTM A36/A36M

REINFORCED CONCRETE (WALERS): f'c = 4000 psi
fy = 60 ksi

STRUCTURAL TIMBER: Treated Douglas Fir, Grade No.1 or better. Timber to be full sawn.

SEISMIC LOADING: Uniform Earth Pressure = 17 H psf
Applied at 0.6 H above the base

PRESTRESSING STEEL (GROUND ANCHORS): FDL= Factored Design Load on ground anchor (kips)
FTL=Factored Test Load (kips)
LL=Lock-Off Load (kips)

fpu = Minimum ultimate tensile strength of ground anchor steel (ksi)

As (Min) = Minimum cross sectional area of steel in ground anchor. (square inch)

Steel = ASTM designation: A416 (HS Strands)

$$As\ (Min) = \frac{1.0\ FTL}{0.75\ fpu}$$

Steel= ASTM designation: A722 (HS Bars)

$$As\ (Min) = \frac{1.0\ FTL}{0.80\ fpu}$$

FOR:	FDL= 169.0 Kips		FOR:	FDL= 127.0 Kips	
	FTL= 219.0 Kips			FTL= 165.0 Kips	
	LL= 114.0 Kips			LL= 86.0 Kips	
FOR:	FDL= 146.0 Kips		FOR:	FDL= 85.0 Kips	
	FTL= 190.0 Kips			FTL= 111.0 Kips	
	LL= 98.0 Kips			LL= 57.0 Kips	

	BY	CHECKED
DESIGN	Isaias Yalan	Evan Franciliso
DETAILS	Isaias Yalan	Evan Franciliso
QUANTITIES	Isaias Yalan	Evan Franciliso

STATE OF CALIFORNIA
DEPARTMENT OF TRANSPORTATION

DIVISION OF ENGINEERING SERVICES
STRUCTURE DESIGN
DESIGN BRANCH 9

BRIDGE NO. 33E0233
POST MILE 5.0

NORTH FLYNN RD SOLDIER PILE WALL WITH GROUND ANCHORS

WALER DETAILS

STRUCTURES DESIGN DETAIL SHEET (ENGLISH) (REV. 09-01-10)

ORIGINAL SCALE IN INCHES FOR REDUCED PLANS 0 1 2 3

UNIT: 3594
PROJECT NUMBER & PHASE: 04000208691
CONTRACT No.: 04-1SS034

DISREGARD PRINTS BEARING EARLIER REVISION DATES

REVISION DATES: 06-25-14 2-23-15 5-29-15

SHEET 19 OF 25

FILE => 33e0233-g-det01.dgn

USERNAME => s123144 DATE PLOTTED => 02-JUN-2015 TIME PLOTTED => 10:33

Dist	COUNTY	ROUTE	POST MILES TOTAL PROJECT	SHEET No.	TOTAL SHEETS
04	Ala	580	R4.9/R5.6	75	80

REGISTERED CIVIL ENGINEER — DATE 3-3-15

5-4-15
PLANS APPROVAL DATE

REGISTERED PROFESSIONAL ENGINEER — ISAIAS D. YALAN — No. 68269 — Exp. 9-30-15 — CIVIL — STATE OF CALIFORNIA

The State of California or its officers or agents shall not be responsible for the accuracy or completeness of scanned copies of this plan sheet.

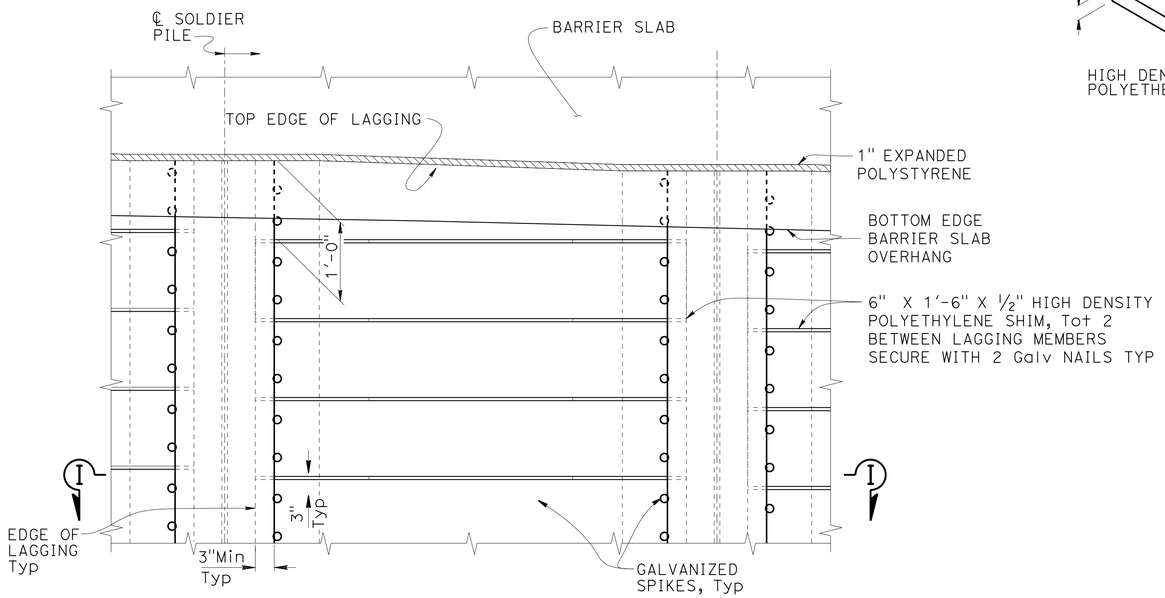

PART ELEVATION
LAGGING DETAILS
NO SCALE

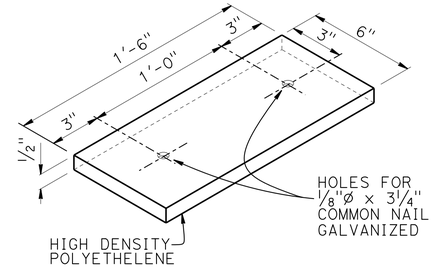

SHIM DETAIL
NO SCALE

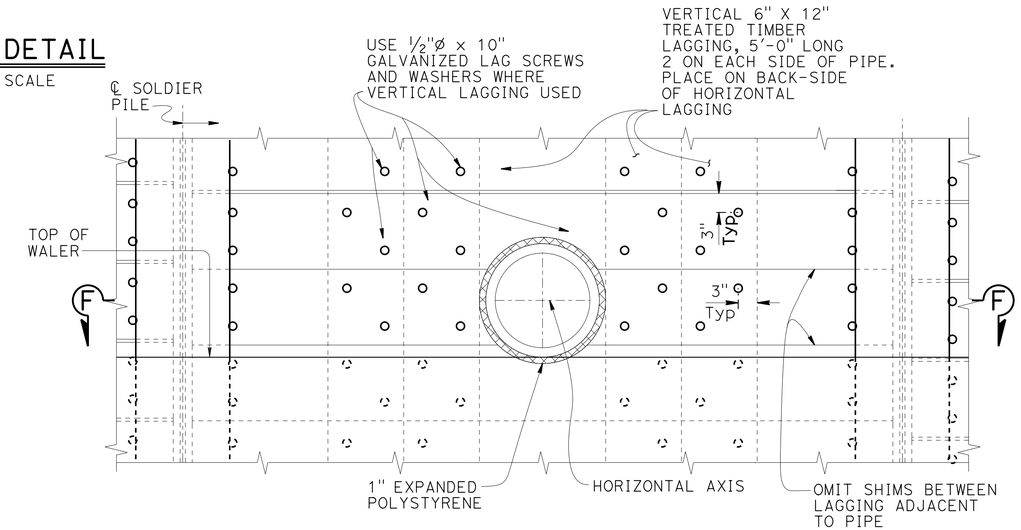

OPENING FOR 18"Ø OD APC PIPE
UTILITY THROUGH LAGGING DETAIL
1" = 1'-0"

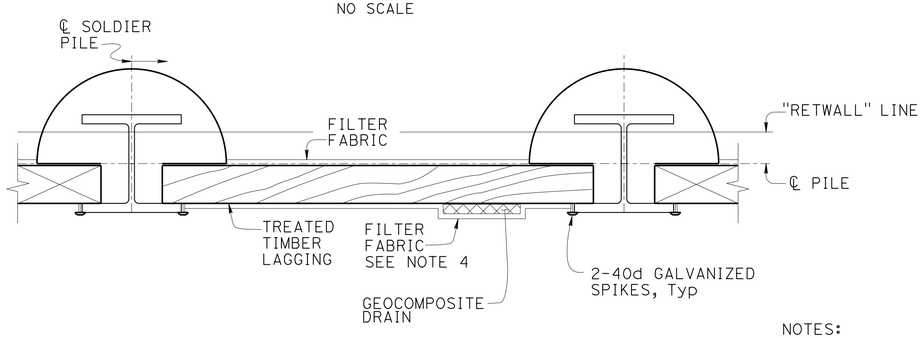

SECTION I-I
NO SCALE

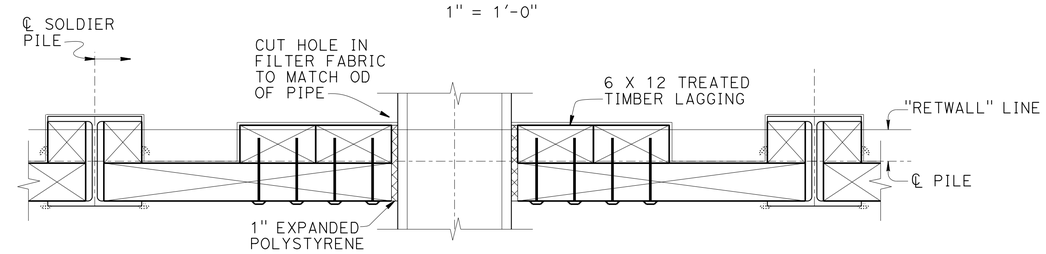

SECTION F-F
1" = 1'-0"

NOTES:
1. No clipping of timber lagging corners allowed
2. Spikes shall not be bent
3. For details not shown see "WALER DETAILS" sheet
4. Place filter fabric from the top of the geocomposite drain to the bottom of the lagging. Do not place filter fabric behind the waler.

	BY	CHECKED
DESIGN	Isaias Yalan	Evan Franciliso
DETAILS	Isaias Yalan/Tim Fairall	Evan Franciliso
QUANTITIES	Isaias Yalan	Evan Franciliso

STATE OF CALIFORNIA
DEPARTMENT OF TRANSPORTATION

DIVISION OF ENGINEERING SERVICES
STRUCTURE DESIGN
DESIGN BRANCH 9

BRIDGE NO. 33E0233
POST MILE 5.0

NORTH FLYNN RD SOLDIER PILE WALL WITH GROUND ANCHORS
LAGGING DETAILS

STRUCTURES DESIGN DETAIL SHEET (ENGLISH) (REV. 09-01-10)

ORIGINAL SCALE IN INCHES FOR REDUCED PLANS 0 1 2 3

UNIT: 3594
PROJECT NUMBER & PHASE: 04000208691
CONTRACT No.: 04-1SS034

DISREGARD PRINTS BEARING EARLIER REVISION DATES

REVISION DATES: 06-25-14 02-17-15

SHEET 20 OF 25

FILE => 33e0233-g-det02.dgn

USERNAME => s129144 DATE PLOTTED => 02-JUN-2015 TIME PLOTTED => 10:33

DIST	COUNTY	ROUTE	POST MILES TOTAL PROJECT	SHEET No.	TOTAL SHEETS
04	Ala	580	R4.9/R5.6	76	80

REGISTERED CIVIL ENGINEER 3-3-15 DATE

5-4-15
PLANS APPROVAL DATE

REGISTERED PROFESSIONAL ENGINEER ISAIAS D. YALAN No. 68269 Exp. 9-30-15 CIVIL STATE OF CALIFORNIA

The State of California or its officers or agents shall not be responsible for the accuracy or completeness of electronic copies of this plan sheet.

GENERAL NOTES

DESIGN:

AASHTO LRFD Bridge Design Specifications, 4th Edition with California Amendments.

PRESTRESSING STEEL:

Bars - ASTM Designation: A722 Type II (150 ksi)

Strand Tendons-ASTM Designation: A416 (270 Ksi Low Relaxation steel)

FTL = Factored Test Load per anchor (Kips)

fpu = Minimum tensile strength of prestressing steel

As = Minimum cross sectional area of prestressing steel in ground anchor (square inch)

$As(Min) = \frac{1.0\ FTL}{0.75\ fpu}$ (Strands)

$As(Min) = \frac{1.0\ FTL}{0.80\ fpu}$ (Bars)

NOTES:

(A) Level of initial grouting for drilled hole 6" in diameter or smaller

(B) Level of secondary grouting

(C) Level of initial grouting inside corrugated sheathing

(D) Bonded length shall be determined by the contractor

(E) For unbonded length, see PROJECT PLANS

(F) For inclination, see PROJECT PLANS

(G) Face of Wall Excavation

NOTES:

1. Anchorage enclosure shall only be used when anchor head assembly is not enclosed in concrete.
2. Anchorage enclosure shall have provisions to allow injecting grout at low end and venting at high end. Galvanize after fabrication.
3. Silicone sealant to cover full width of flange.
4. Steel tube (Min thickness = 1/4") welded to bearing plate. Galvanize assembly after fabrication
5. Steel tube welded to bearing plate. Inside diameter of steel tube (Min thickness = 1/4") to be 1" greater than outside diameter of smooth sheathing.
6. Galvanize assembly after fabrication.
7. For other wall details, see PROJECT PLANS.

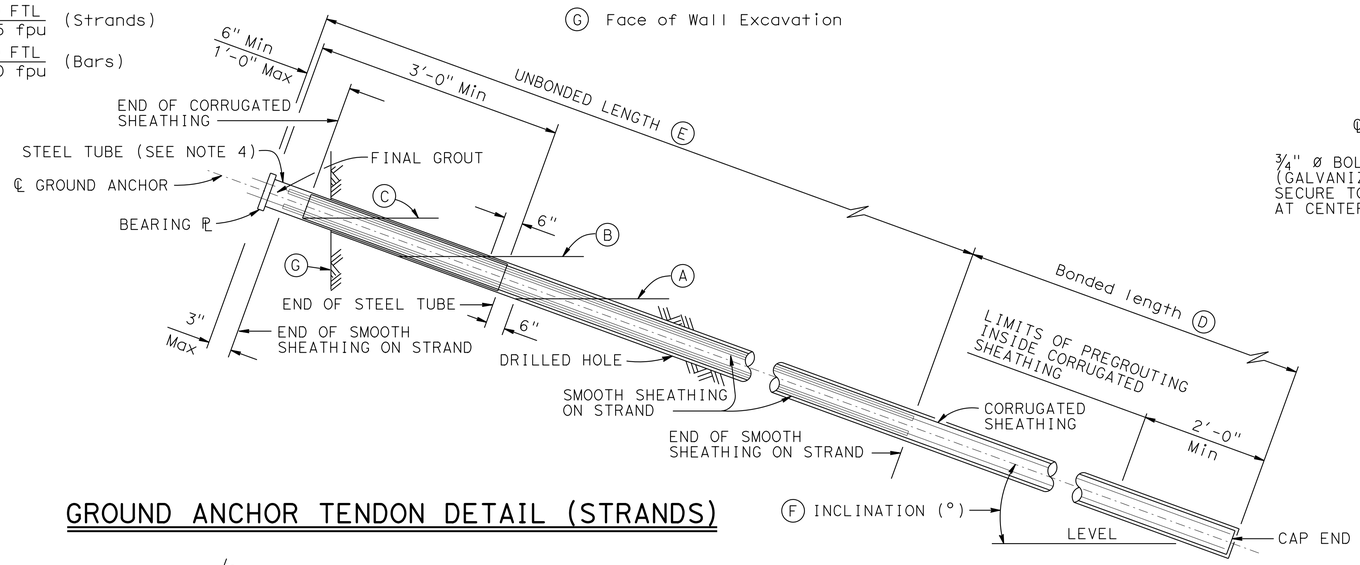

GROUND ANCHOR TENDON DETAIL (STRANDS)

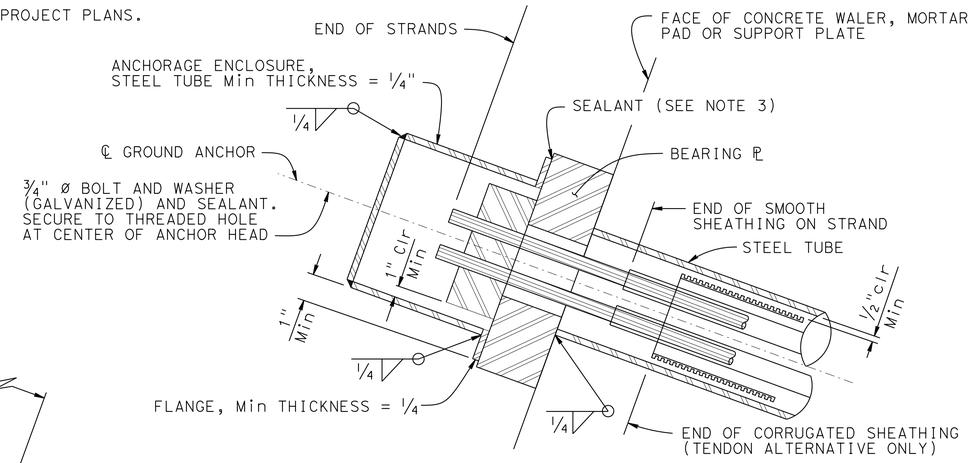

ALTERNATIVE X

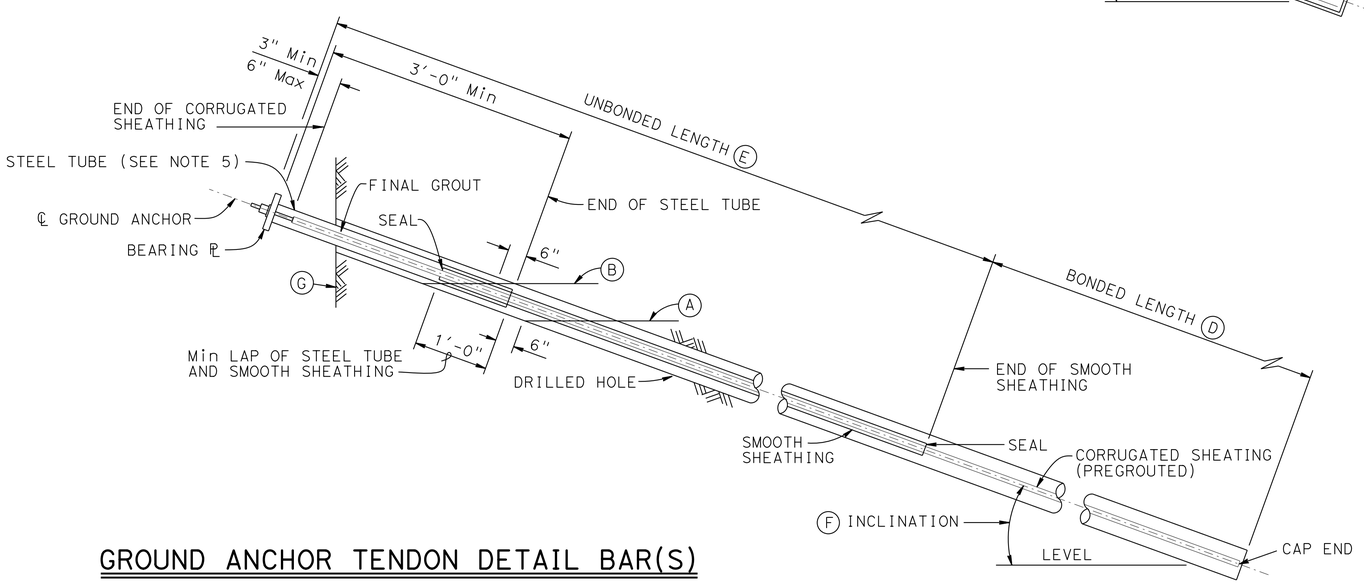

GROUND ANCHOR TENDON DETAIL BAR(S)

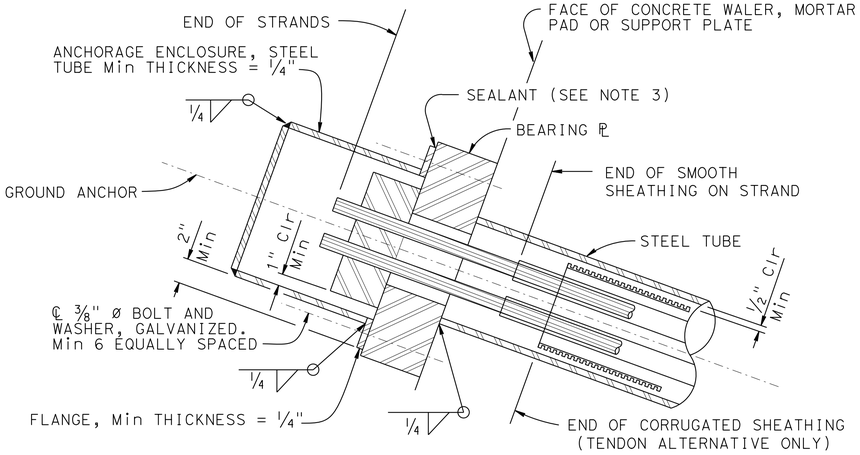

ALTERNATIVE Y

ANCHORAGE ENCLOSURE DETAILS

NO SCALE

STANDARD DRAWING

FILE NO. xs12-040

APPROVAL DATE July 2014

STATE OF CALIFORNIA DEPARTMENT OF TRANSPORTATION

DIVISION OF ENGINEERING SERVICES

BRIDGE NO. 33E0233

POST MILE 5.0

NORTH FLYNN RD SOLDIER PILE WALL WITH GROUND ANCHORS

SUB HORIZONTAL GROUND ANCHOR DETAILS

DS OSD 2147A (ENGLISH STANDARD DRAWING "XS" BORDER REV. (02-02-11)

ORIGINAL SCALE IN INCHES FOR REDUCED PLANS 0 1 2 3

UNIT: 3594
PROJECT NUMBER & PHASE: 04000208691
CONTRACT NO.: 04-1SS034

DISREGARD PRINTS BEARING EARLIER REVISION DATES

REVISION DATES 6-24-14

SHEET 21 OF 25

FILE => 33e0233-g-det03.dgn

USERNAME => s129144 DATE PLOTTED => 02-JUN-2015 TIME PLOTTED => 10:33

Dist	COUNTY	ROUTE	POST MILES TOTAL PROJECT	SHEET No.	TOTAL SHEETS
04	Ala	580	R4.9/R5.6	77	80

REGISTERED CIVIL ENGINEER — DATE 3-3-15

5-4-15
PLANS APPROVAL DATE

REGISTERED PROFESSIONAL ENGINEER — ISAIAS D. YALAN — No. 68269 — Exp. 9-30-15 — CIVIL — STATE OF CALIFORNIA

The State of California or its officers or agents shall not be responsible for the accuracy or completeness of scanned copies of this plan sheet.

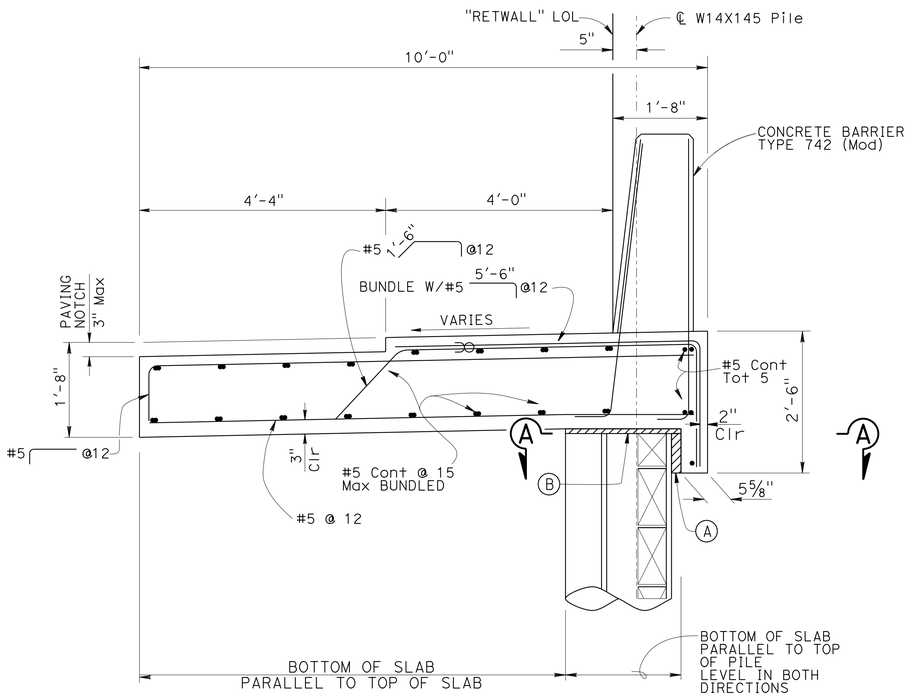

CONCRETE BARRIER SLAB WITH PAVING NOTCH

RSP B11-57

¾" = 1'-0"

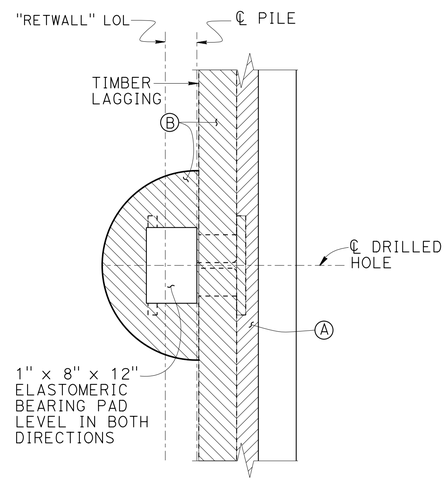

SECTION A-A

1" = 1'-0"

NOTES:

(A) 2" Min Expanded polystyrene

(B) 1" Expanded polystyrene

ᴄᴄ Indicates bundled bars

✳ See "ROADWAY PLANS"

1. No expansion joints in concrete barrier or barrier slab.
2. Not all barrier reinforcement shown.

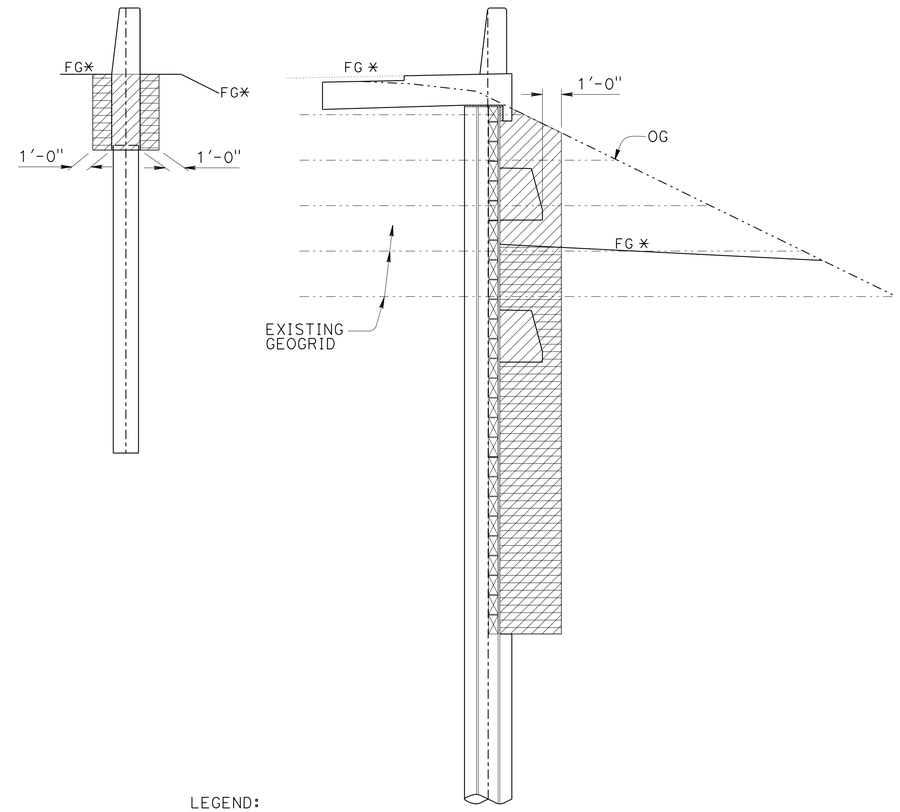

LEGEND:

STRUCTURE EXCAVATION (SOLDIER PILE WALL)

STRUCTURE BACKFILL (SOLDIER PILE WALL)

LIMITS OF EXCAVATION AND BACKFILL

NO SCALE

	BY	CHECKED
DESIGN	Isaias Yalan	Evan Franciliso
DETAILS	Isaias Yalan/Tim Fairall	Evan Franciliso
QUANTITIES	Isaias Yalan	Evan Franciliso

STATE OF CALIFORNIA
DEPARTMENT OF TRANSPORTATION

DIVISION OF ENGINEERING SERVICES
STRUCTURE DESIGN
DESIGN BRANCH 9

BRIDGE NO. 33E0233
POST MILE 5.0

NORTH FLYNN RD SOLDIER PILE WALL WITH GROUND ANCHORS
CONCRETE BARRIER SLAB DETAILS

STRUCTURES DESIGN DETAIL SHEET (ENGLISH) (REV. 09-01-10)

ORIGINAL SCALE IN INCHES FOR REDUCED PLANS 0 1 2 3

UNIT: 3594
PROJECT NUMBER & PHASE: 04000208691
CONTRACT No.: 04-1SS034

DISREGARD PRINTS BEARING EARLIER REVISION DATES

REVISION DATES: ~~06-23-14~~ ~~11-24-14~~ 1-09-15

SHEET 22 OF 25

FILE => 33e0233-g-det04.dgn

USERNAME => s129144 DATE PLOTTED => 02-JUN-2015 TIME PLOTTED => 10:33

Dist	COUNTY	ROUTE	POST MILES TOTAL PROJECT	SHEET No.	TOTAL SHEETS
04	Ala	580	R4.9/R5.6	78	80

REGISTERED CIVIL ENGINEER — DATE 3-3-15

5-4-15
PLANS APPROVAL DATE

REGISTERED PROFESSIONAL ENGINEER — ISAIAS D. YALAN No. 68269 Exp. 9-30-15 CIVIL — STATE OF CALIFORNIA

The State of California or its officers or agents shall not be responsible for the accuracy or completeness of scanned copies of this plan sheet.

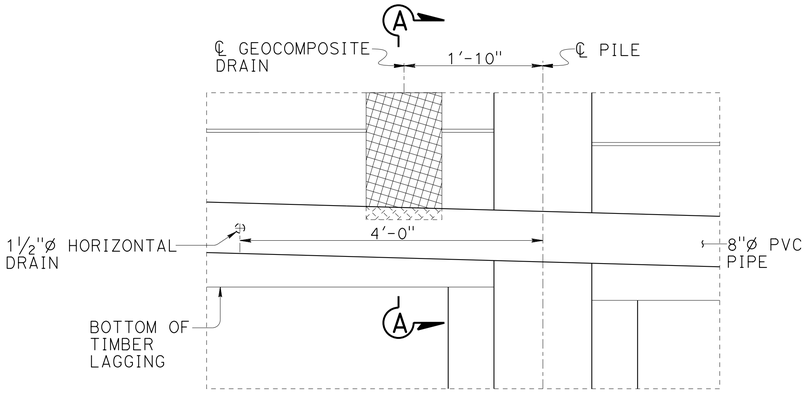

DETAIL G

1" = 1'-0"

** SLOTTED PIPE CONFIGURATION:
23 SLOTS (± 1) PER LINEAR FOOT
SLOT WIDTH = 0.02 INCHES

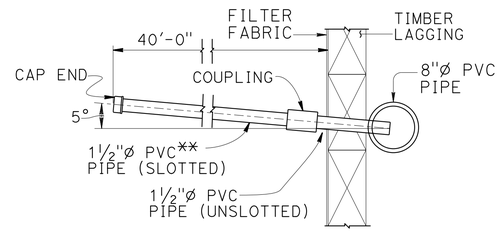

NOTE: Cut hole in filter fabric for passage of 1½"ø PVC PIPE

HORIZONTAL DRAIN DETAIL

1" = 1'-0"

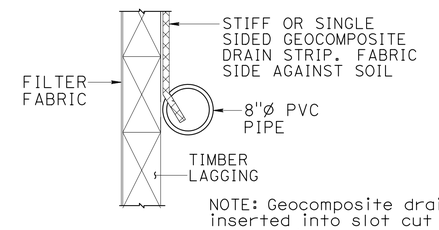

NOTE: Geocomposite drain strip inserted into slot cut in PVC pipe. Notch bottom edge of geocomposite drain strip.

SECTION A-A

1" =

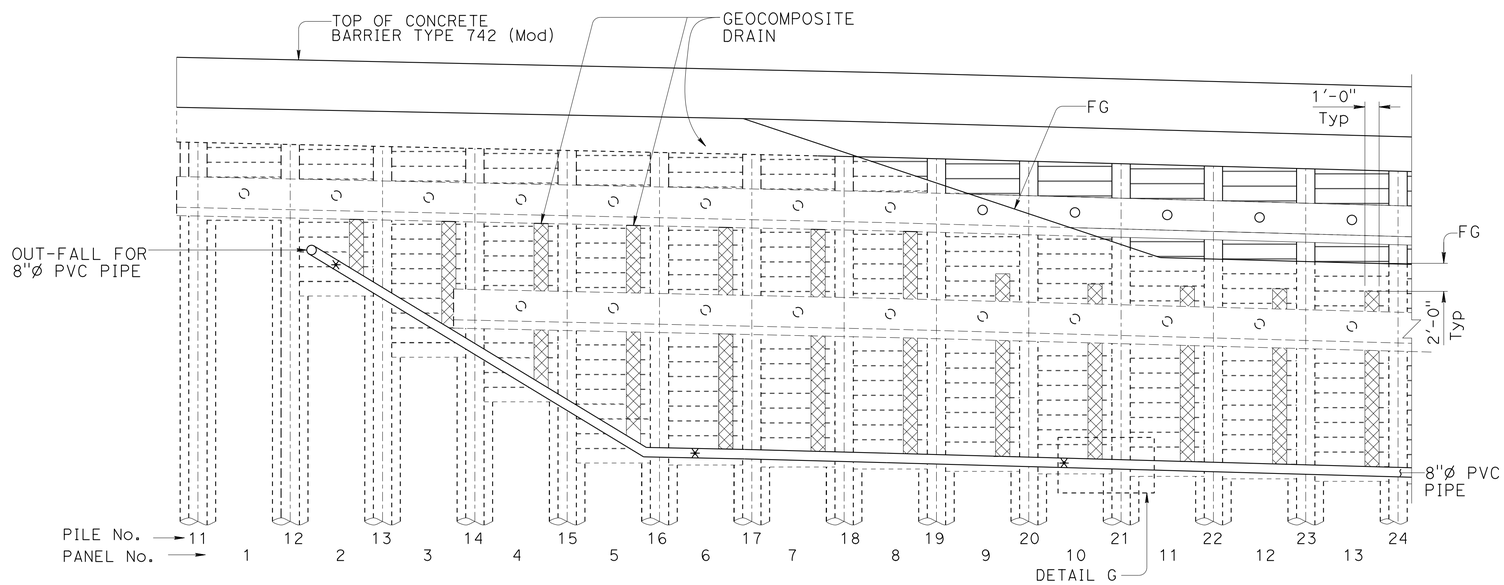

PART ELEVATION

3/16" = 1'-0"

HORIZONTAL DRAIN LOCATIONS PLACE AT PANELS:

2	50	98	146
6	54	102	150
10	58	106	154
14	62	110	158
18	66	114	162
22	70	118	166
26	74	122	170
30	78	126	174
34	82	130	178
38	86	134	182
42	90	138	
46	94	142	

NOTES:

1. Drainage details shown at begining of Soldier Pile wall. End of Soldier Pile wall is similar by opposite hand, except for 8"ø PVC pipe.
2. Attach geocomposite drain with hot dip galvanized nails, minimum 8d.
3. 8"ø PVC pipe to be anchored to the face of the wall with galvanized brackets and lag screws. Brackets spaced at 50 ft
4. Geocomposite drain is continuous behind bottom concrete waler
5. Filter fabric in front of the wall not shown

* Denotes location 1½"ø horizontal drain

	BY	CHECKED
DESIGN	Isaias Yalan	Evan Franciliso
DETAILS	Tim Fairall	Evan Franciliso
QUANTITIES	Isaias Yalan	Evan Franciliso

STATE OF CALIFORNIA
DEPARTMENT OF TRANSPORTATION

DIVISION OF ENGINEERING SERVICES
STRUCTURE DESIGN
DESIGN BRANCH 9

BRIDGE NO. 33E0233
POST MILE 5.0

NORTH FLYNN RD SOLDIER PILE WALL WITH GROUND ANCHORS

DRAINAGE DETAILS

STRUCTURES DESIGN DETAIL SHEET (ENGLISH) (REV. 09-01-10)

ORIGINAL SCALE IN INCHES FOR REDUCED PLANS 0 1 2 3

UNIT: 3594
PROJECT NUMBER & PHASE: 04000208691
CONTRACT No.: 04-1SS034

DISREGARD PRINTS BEARING EARLIER REVISION DATES

REVISION DATES: 12-03-14 1-13-15 2-17-15

SHEET 23 OF 25

FILE => 33e0233-g-det05.dgn

USERNAME => s129144 DATE PLOTTED => 02-JUN-2015 TIME PLOTTED => 10:33

DIST	COUNTY	ROUTE	POST MILES TOTAL PROJECT	SHEET No	TOTAL SHEETS
04	Ala	580	R4.9/R5.6	79	80

REGISTERED CIVIL ENGINEER 05-16-13

PLANS APPROVAL DATE 5-4-15

REGISTERED PROFESSIONAL ENGINEER John C. Moore No. C61792 Exp. 6-30-13 CIVIL STATE OF CALIFORNIA

The State of California or its officers or agents shall not be responsible for the accuracy or completeness of electronic copies of this plan sheet.

This LOTB sheet was prepared in accordance with the Caltrans Soil & Rock Logging, Classification, & Presentation Manual (2010 Edition).

NOTE:
1. Groundwater was not measured for boring RW-12-004 due to the rotary wash drilling method and the inability for the hole pressure to equalize during the alloted drilling time.
2. PP=unconfined compressive strength (tsf) as measured by pocket penetrometer.

(For Boring Location See Plan, LOTB Sheet 2 of 2)

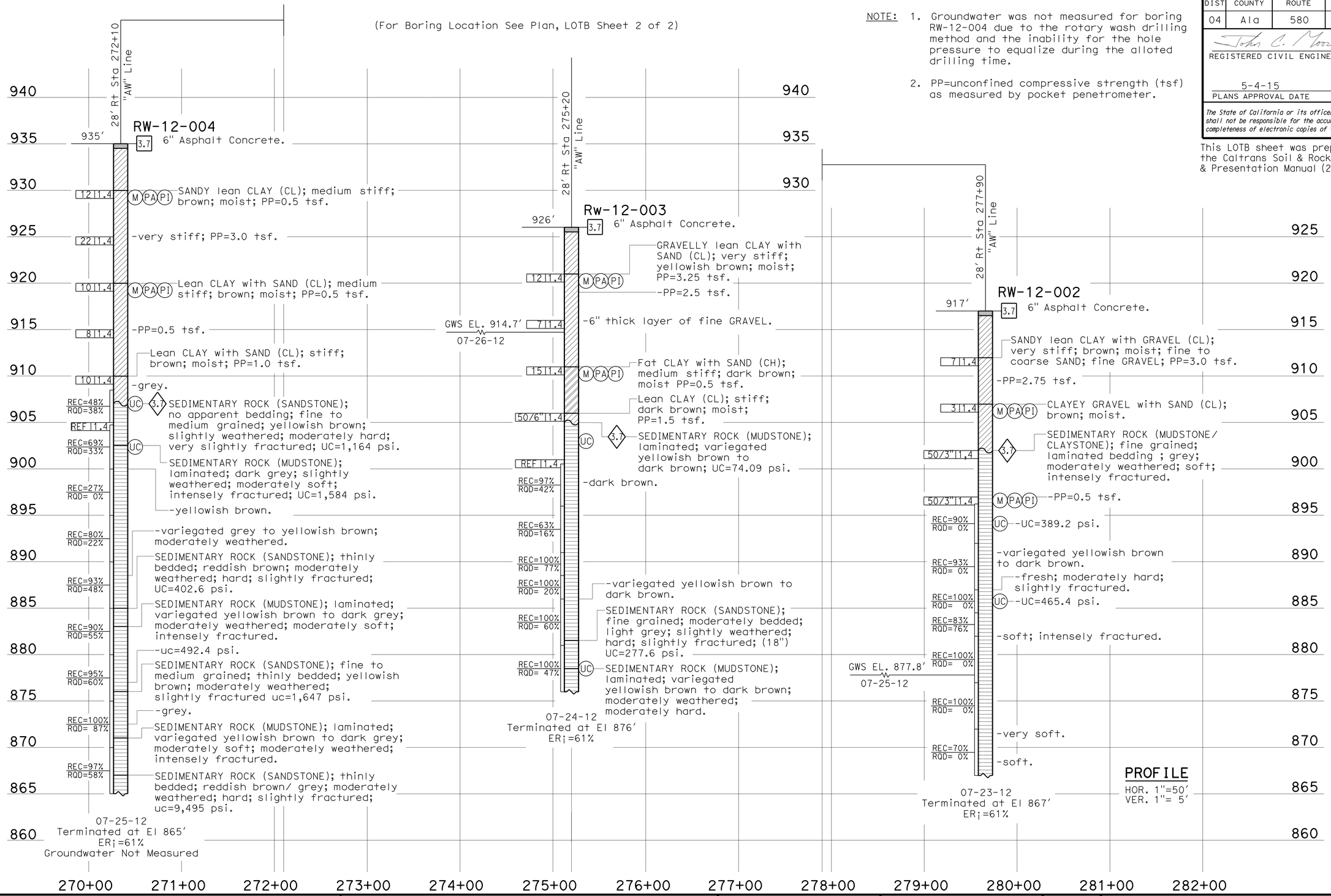

ENGINEERING SERVICES		GEOTECHNICAL SERVICES	STATE OF CALIFORNIA DEPARTMENT OF TRANSPORTATION	DIVISION OF ENGINEERING SERVICES OFFICE OF GEOTECHNICAL DESIGN BRANCH	BRIDGE NO. 33E0223 POST MILES 5.0	NORTH FLYNN RD SOLDIER PILE WALL WITH GROUND ANCHORS
FUNCTIONAL SUPERVISOR	DRAWN BY: M. Reynolds 01/13	FIELD INVESTIGATION BY:				LOG OF TEST BORINGS 1 OF 2
NAME: M. Momenzadeh	CHECKED BY: D. Nesbitt	J. Moore				

OGS CIVIL LOG OF TEST BORINGS SHEET

ORIGINAL SCALE IN INCHES FOR REDUCED PLANS 0 1 2 3

UNIT: 3660
PROJECT NUMBER & PHASE: 04000208691 CONTRACT NO.: 04-1SS034

DISREGARD PRINTS BEARING EARLIER REVISION DATES

REVISION DATES | SHEET 24 | OF 25

FILE => 33e0233-z-1tb01.dgn

USERNAME => s129144 DATE PLOTTED => 02-JUN-2015 TIME PLOTTED => 10:33

BENCH MARK

Name: ALA67 Elev. 931.95′
Northing: 2,087,902.241 510
Easting: 6,228,492.037 741
NAVD: 88 3 cm Brass Disk
59′ Lt. Sta. 271+80, "AW" Line

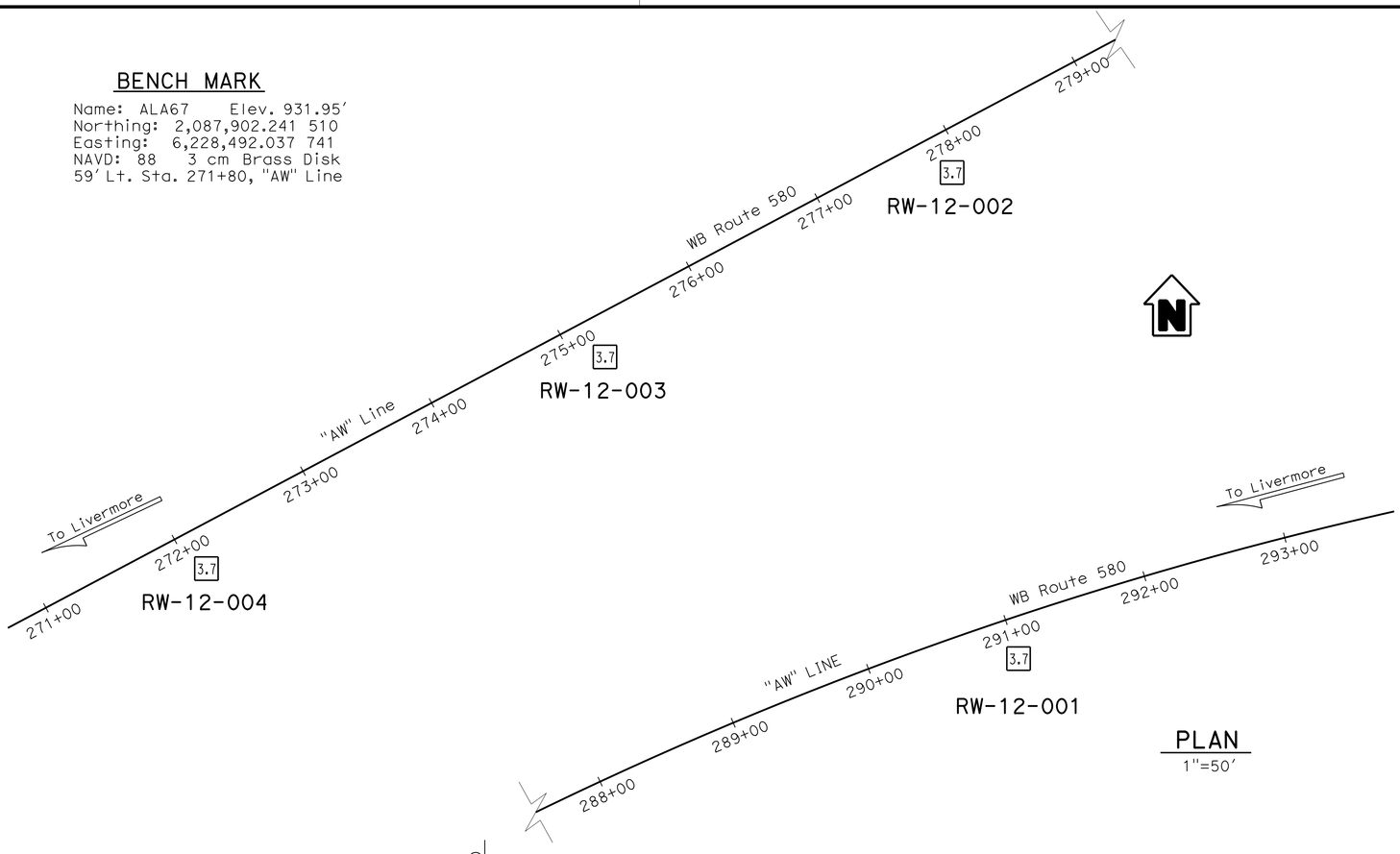

PLAN
1"=50′

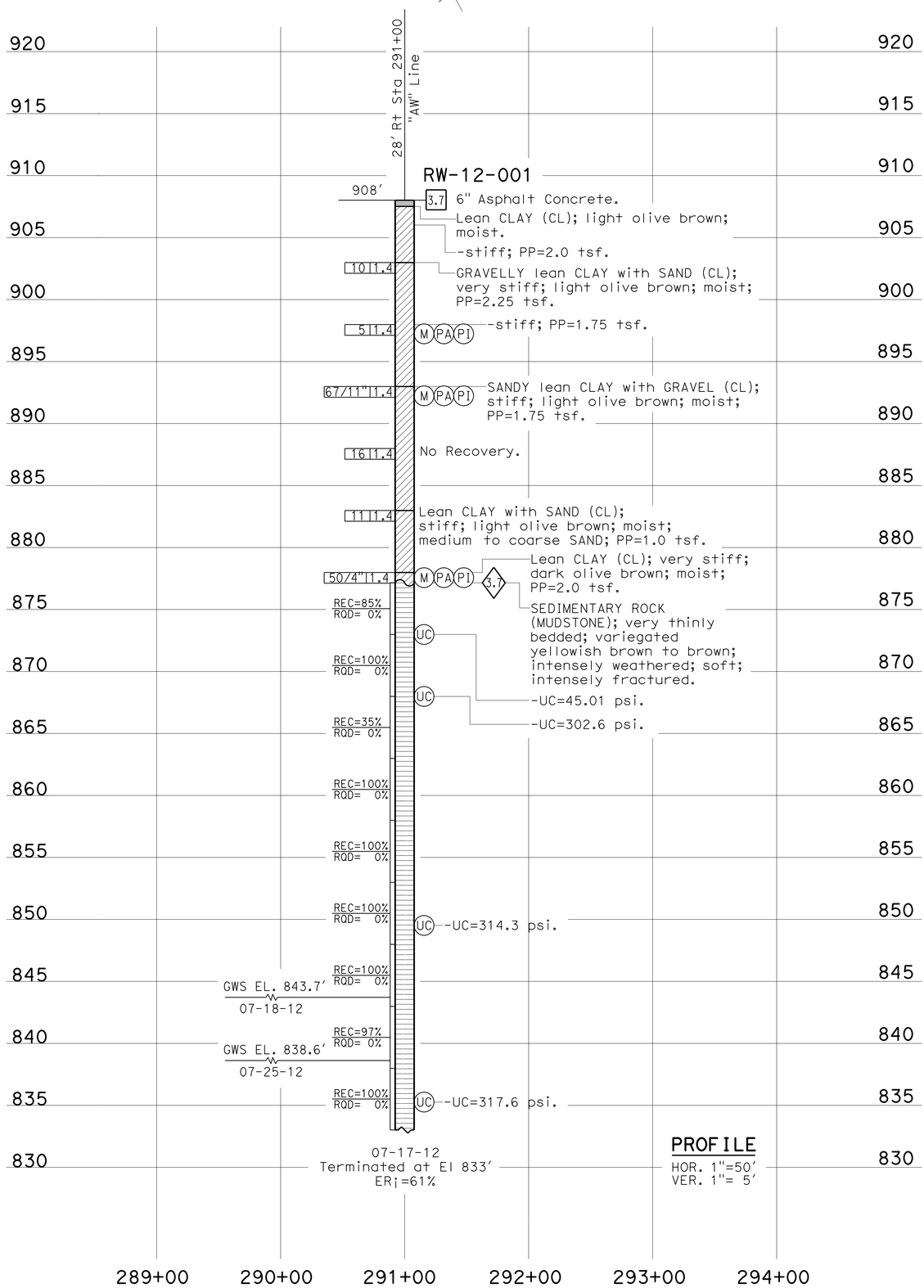

PROFILE
HOR. 1"=50′
VER. 1"= 5′

NOTE: PP=unconfined compressive strength (tsf) as measured by pocket penetrometer.

This LOTB sheet was prepared in accordance with the Caltrans Soil & Rock Logging, Classification, & Presentation Manual (2010 Edition).

REGISTERED CIVIL ENGINEER 05-16-13
PLANS APPROVAL DATE 5-4-15
REGISTERED PROFESSIONAL ENGINEER John C. Moore No. C61792 Exp. 6-30-13 CIVIL STATE OF CALIFORNIA

The state of California or its officers or agents shall not be responsible for the accuracy or completeness of electronic copies of this plan sheet.

DIST	COUNTY	ROUTE	POST MILES TOTAL PROJECT	SHEET NO	TOTAL SHEETS
04	Ala	580	R4.9/R5.6	80	80

ENGINEERING SERVICES — GEOTECHNICAL SERVICES

FUNCTIONAL SUPERVISOR
NAME: M. Momenzadeh

DRAWN BY: M. Reynolds 01/13
CHECKED BY: D. Nesbitt

FIELD INVESTIGATION BY: J. Moore

STATE OF CALIFORNIA
DEPARTMENT OF TRANSPORTATION

DIVISION OF ENGINEERING SERVICES
OFFICE OF GEOTECHNICAL
DESIGN BRANCH

BRIDGE NO. 33E0223
POST MILES 5.0

NORTH FLYNN RD SOLDIER PILE WALL WITH GROUND ANCHORS
LOG OF TEST BORINGS 2 OF 2

ORIGINAL SCALE IN INCHES FOR REDUCED PLANS 0 1 2 3

DISREGARD PRINTS BEARING EARLIER REVISION DATES

REVISION DATES

SHEET 25 OF 25

UNIT: 3660
PROJECT NUMBER & PHASE: 0400020869 0
CONTRACT NO.: 04-1SS034

ODS CIVIL LOG OF TEST BORINGS SHEET

FILE => 3360235-2-1t002.dgn

USERNAME => s129144 DATE PLOTTED => 02-JUN-2015 TIME PLOTTED => 10:33