Dist	COUNTY	ROUTE	POST MILES TOTAL PROJECT	SHEET No.	TOTAL SHEETS
04	CC	4	27.3/R29.0	501	950

REGISTERED CIVIL ENGINEER 10/31/11 DATE

1-17-12
PLANS APPROVAL DATE

REGISTERED PROFESSIONAL ENGINEER
Keith D. Rhodes
No. C53587
Exp. 6/30/13
CIVIL
STATE OF CALIFORNIA

THE STATE OF CALIFORNIA OR ITS OFFICERS OR AGENTS SHALL NOT BE RESPONSIBLE FOR THE ACCURACY OR COMPLETENESS OF SCANNED COPIES OF THIS PLAN SHEET.

T Y LIN INTERNATIONAL
2010 CROW CANYON PLACE, SUITE 350
SAN RAMON, CA 94583

CCTA
2999 OAK ROAD, SUITE 100
WALNUT CREEK, CA 94597

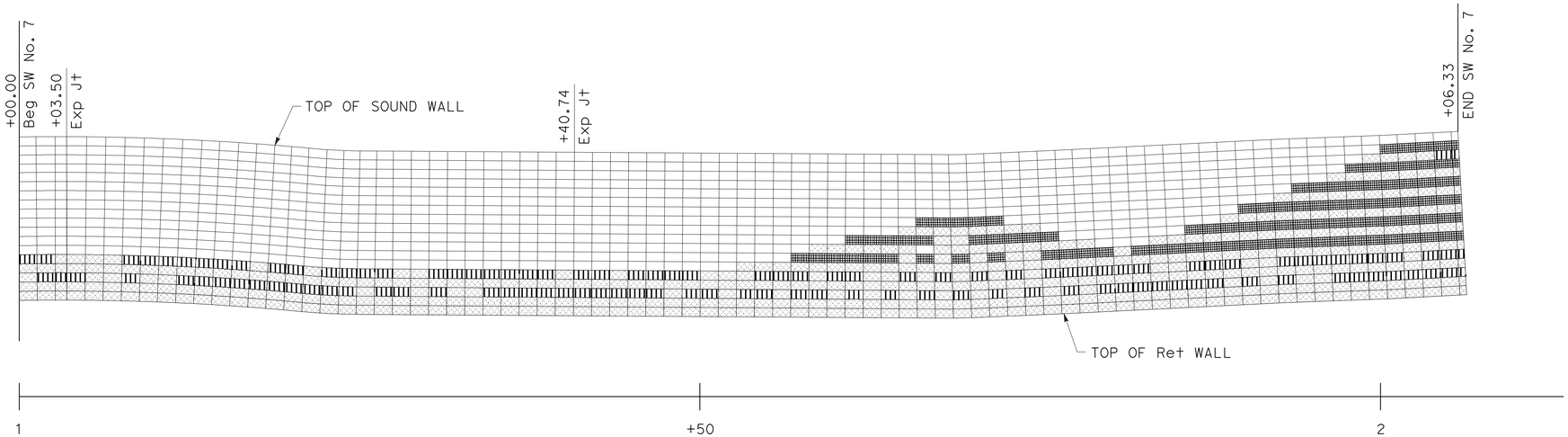

SOUND WALL No. 7

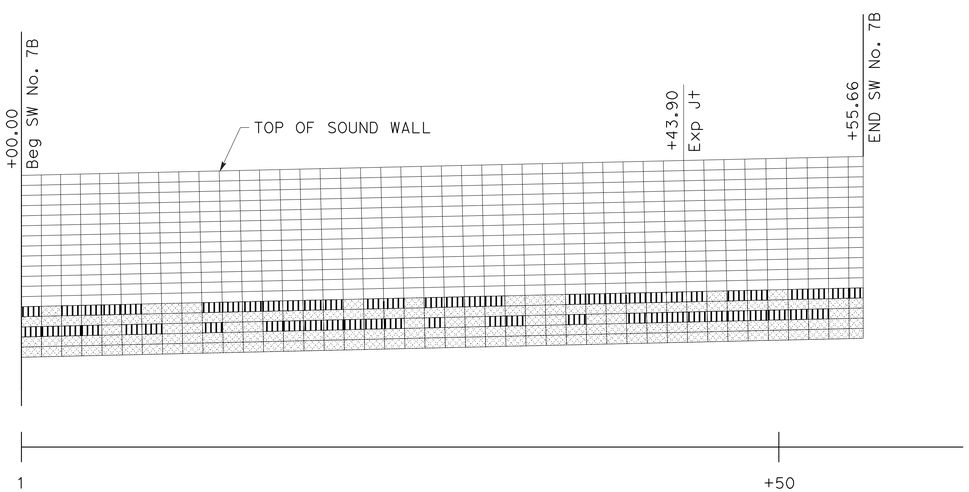

SOUND WALL No. 7B

FOR NOTES, ABBREVIATIONS AND LEGEND, SEE SHEET SW-1

SOUND WALL DETAILS
AESTHETIC FEATURES
SOUND WALL No. 7 & No. 7B
SCALE: 1" = 5'

SW-66

REVISED BY	DATE REVISED
DS	10/31/11

DIPAN SHAH
VENTATA KANNEKANTI

CALCULATED-DESIGNED BY
CHECKED BY

CONSULTANT FUNCTIONAL SUPERVISOR
KEITH RHODES

STATE OF CALIFORNIA - DEPARTMENT OF TRANSPORTATION
Caltrans

LAST REVISION 10-31-11
DATE PLOTTED => 19-JAN-2012
TIME PLOTTED => 08:37

Dist	COUNTY	ROUTE	POST MILES TOTAL PROJECT	SHEET No.	TOTAL SHEETS
04	CC	4	27.3/R29.0	502	950

REGISTERED CIVIL ENGINEER 10/31/11 DATE

1-17-12
PLANS APPROVAL DATE

REGISTERED PROFESSIONAL ENGINEER Keith D. Rhodes No. C53587 Exp. 6/30/13 CIVIL STATE OF CALIFORNIA

THE STATE OF CALIFORNIA OR ITS OFFICERS OR AGENTS SHALL NOT BE RESPONSIBLE FOR THE ACCURACY OR COMPLETENESS OF SCANNED COPIES OF THIS PLAN SHEET.

T Y LIN INTERNATIONAL
2010 CROW CANYON PLACE, SUITE 350
SAN RAMON, CA 94583

CCTA
2999 OAK ROAD, SUITE 100
WALNUT CREEK, CA 94597

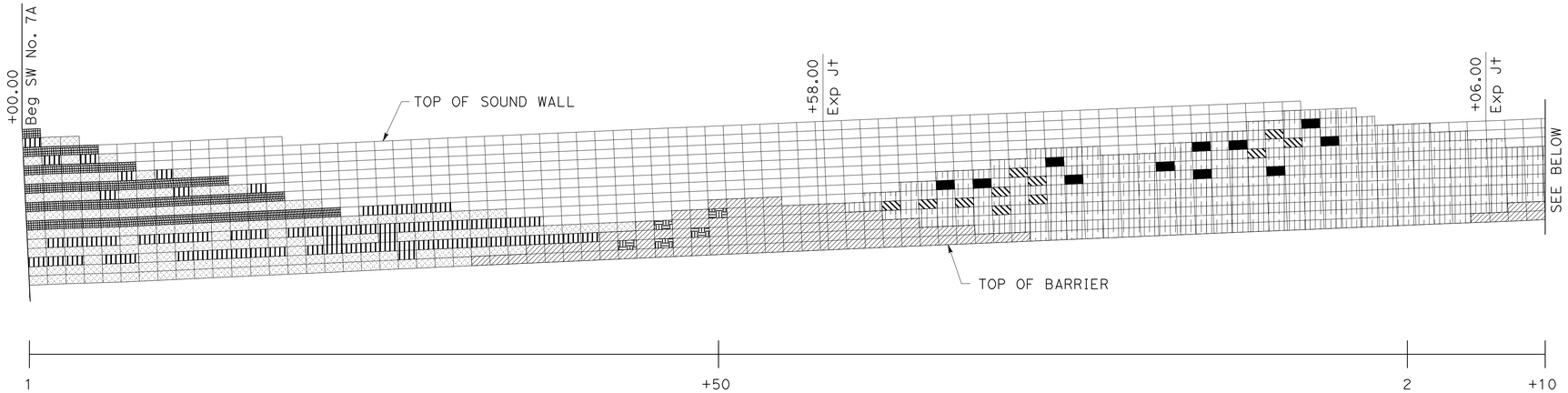

SOUND WALL No. 7A

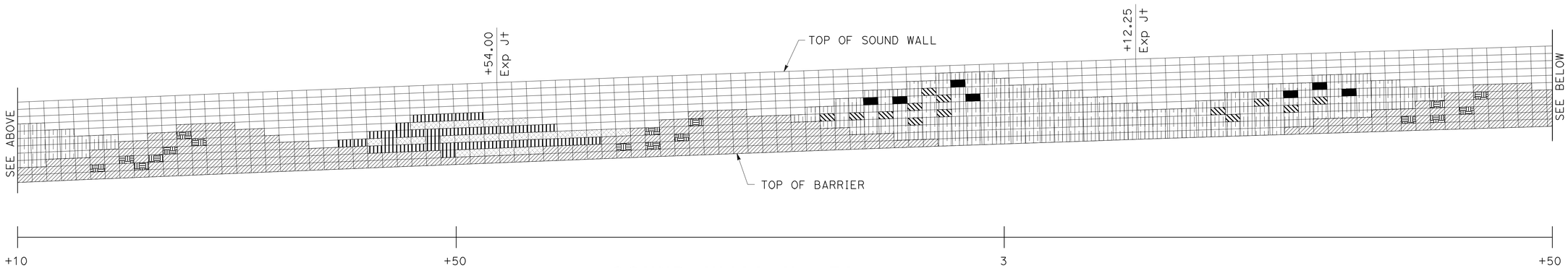

SOUND WALL No. 7A

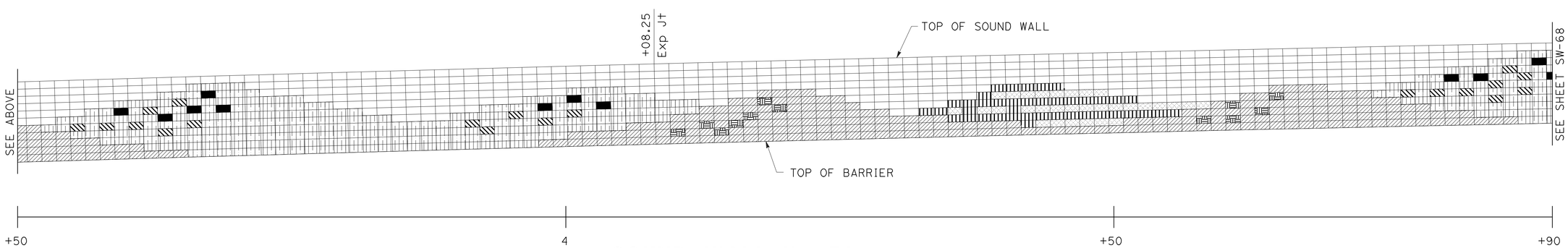

SOUND WALL No. 7A

SOUND WALL DETAILS
AESTHETIC FEATURES
SOUND WALL No. 7A
SCALE: 1" = 5'

FOR NOTES, ABBREVIATIONS AND LEGEND, SEE SHEET SW-1

SW-67

REVISED BY	DS
DATE REVISED	10/31/11
DIPAN SHAH	
VENTATA KANNEKANTI	
CALCULATED-DESIGNED BY	
CHECKED BY	
CONSULTANT FUNCTIONAL SUPERVISOR	KEITH RHODES

STATE OF CALIFORNIA - DEPARTMENT OF TRANSPORTATION
Caltrans

LAST REVISION 10-31-11 | DATE PLOTTED => 19-JAN-2012 | TIME PLOTTED => 08:37

Dist	COUNTY	ROUTE	POST MILES TOTAL PROJECT	SHEET No.	TOTAL SHEETS
04	CC	4	27.3/R29.0	503	950

REGISTERED CIVIL ENGINEER 10/31/11 DATE

1-17-12
PLANS APPROVAL DATE

REGISTERED PROFESSIONAL ENGINEER Keith D. Rhodes No. C53587 Exp. 6/30/13 CIVIL STATE OF CALIFORNIA

THE STATE OF CALIFORNIA OR ITS OFFICERS OR AGENTS SHALL NOT BE RESPONSIBLE FOR THE ACCURACY OR COMPLETENESS OF SCANNED COPIES OF THIS PLAN SHEET.

T Y LIN INTERNATIONAL
2010 CROW CANYON PLACE, SUITE 350
SAN RAMON, CA 94583

CCTA
2999 OAK ROAD, SUITE 100
WALNUT CREEK, CA 94597

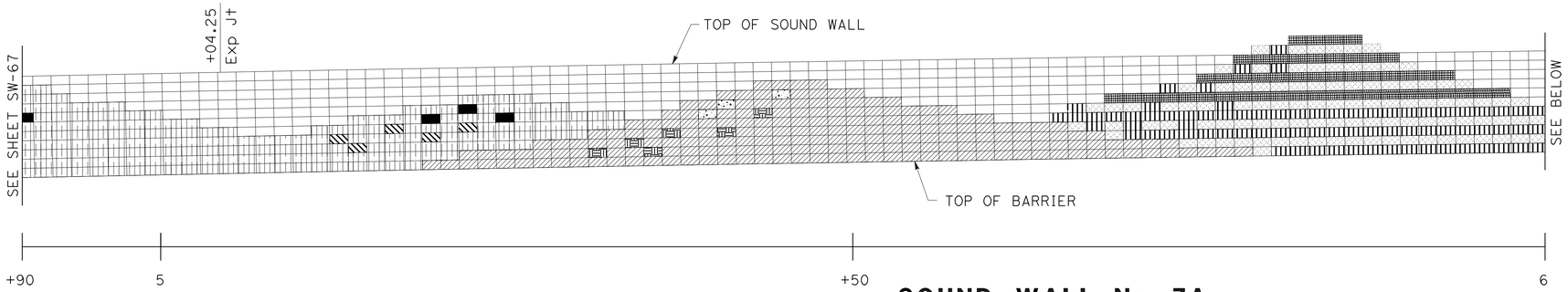

SOUND WALL No. 7A

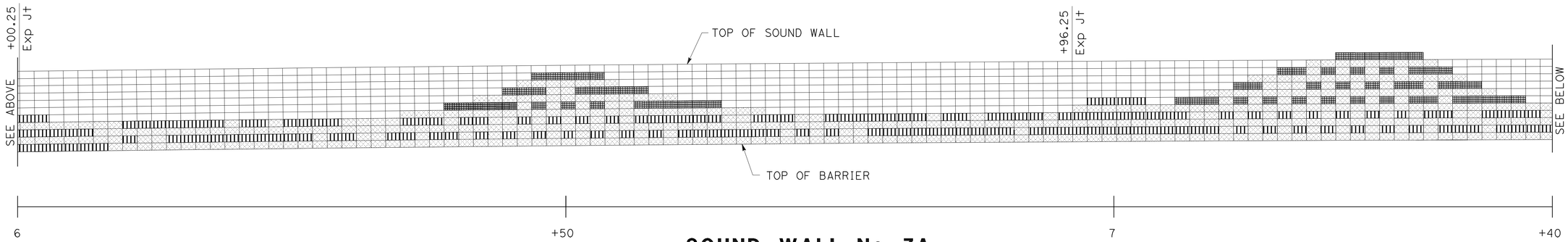

SOUND WALL No. 7A

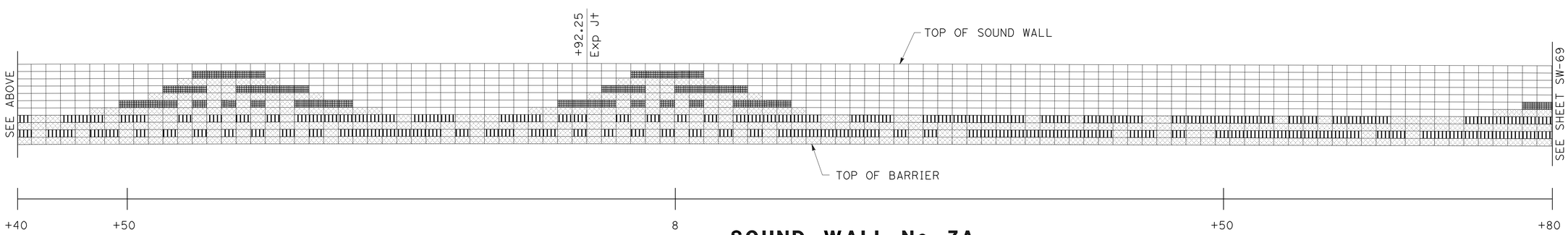

SOUND WALL No. 7A

SOUND WALL DETAILS
AESTHETIC FEATURES
SOUND WALL No. 7A
SCALE: 1" = 5'

FOR NOTES, ABBREVIATIONS AND LEGEND, SEE SHEET SW-1

SW-68

REVISED BY	DS
DATE REVISED	10/31/11
DIPAN SHAH	
VENTATA KANNEKANTI	
CALCULATED-DESIGNED BY	
CHECKED BY	
CONSULTANT FUNCTIONAL SUPERVISOR	
KEITH RHODES	

STATE OF CALIFORNIA - DEPARTMENT OF TRANSPORTATION
Caltrans

LAST REVISION 10-31-11
DATE PLOTTED => 19-JAN-2012
TIME PLOTTED => 08:37

Dist	COUNTY	ROUTE	POST MILES TOTAL PROJECT	SHEET No.	TOTAL SHEETS
04	CC	4	27.3/R29.0	504	950

REGISTERED CIVIL ENGINEER 10/31/11 DATE

1-17-12
PLANS APPROVAL DATE

REGISTERED PROFESSIONAL ENGINEER Keith D. Rhodes No. C53587 Exp. 6/30/13 CIVIL STATE OF CALIFORNIA

THE STATE OF CALIFORNIA OR ITS OFFICERS OR AGENTS SHALL NOT BE RESPONSIBLE FOR THE ACCURACY OR COMPLETENESS OF SCANNED COPIES OF THIS PLAN SHEET.

T Y LIN INTERNATIONAL
2010 CROW CANYON PLACE, SUITE 350
SAN RAMON, CA 94583

CCTA
2999 OAK ROAD, SUITE 100
WALNUT CREEK, CA 94597

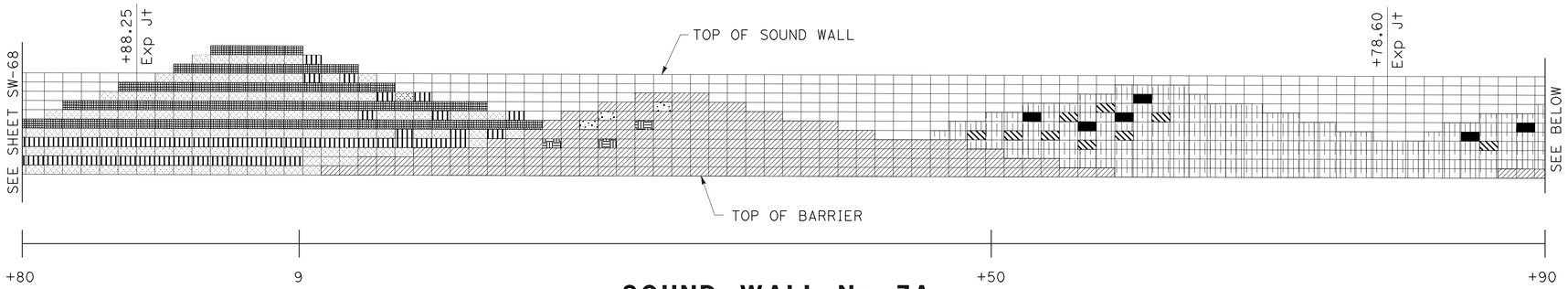

SOUND WALL No. 7A

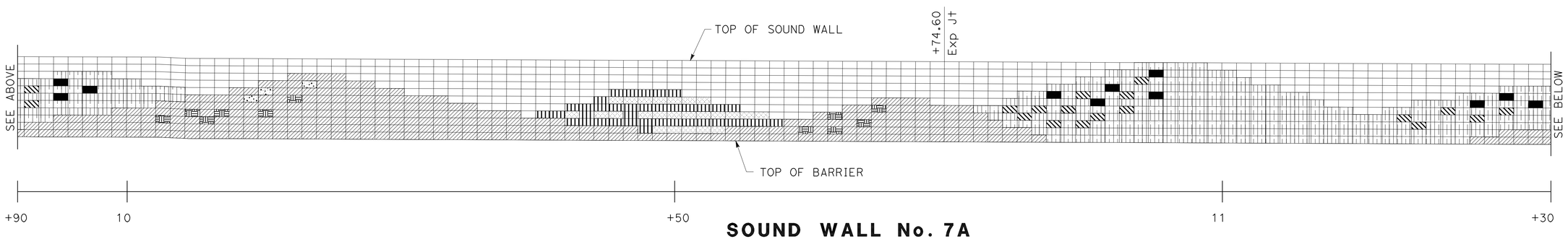

SOUND WALL No. 7A

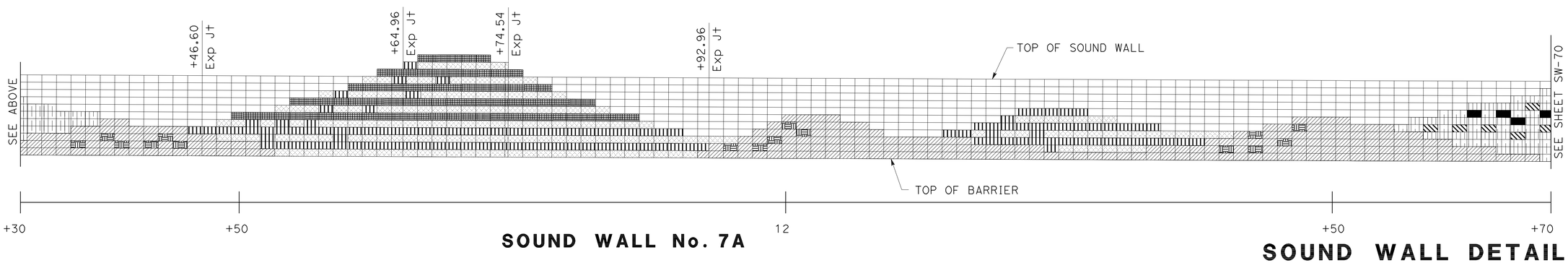

SOUND WALL No. 7A

SOUND WALL DETAILS
AESTHETIC FEATURES

SOUND WALL No. 7A
SCALE: 1" = 5'

FOR NOTES, ABBREVIATIONS AND LEGEND, SEE SHEET SW-1

SW-69

STATE OF CALIFORNIA - DEPARTMENT OF TRANSPORTATION
Caltrans

CONSULTANT FUNCTIONAL SUPERVISOR: KEITH RHODES
CALCULATED-DESIGNED BY: DIPAN SHAH
CHECKED BY: VENTATA KANNEKANTI
REVISED BY: DS
DATE REVISED: 10/31/11

LAST REVISION DATE PLOTTED => 19-JAN-2012
TIME PLOTTED => 08:38

Dist	COUNTY	ROUTE	POST MILES TOTAL PROJECT	SHEET No.	TOTAL SHEETS
04	CC	4	27.3/R29.0	505	950

REGISTERED CIVIL ENGINEER 10/31/11 DATE

1-17-12
PLANS APPROVAL DATE

REGISTERED PROFESSIONAL ENGINEER Keith D. Rhodes No. C53587 Exp. 6/30/13 CIVIL STATE OF CALIFORNIA

THE STATE OF CALIFORNIA OR ITS OFFICERS OR AGENTS SHALL NOT BE RESPONSIBLE FOR THE ACCURACY OR COMPLETENESS OF SCANNED COPIES OF THIS PLAN SHEET.

T Y LIN INTERNATIONAL
2010 CROW CANYON PLACE, SUITE 350
SAN RAMON, CA 94583

CCTA
2999 OAK ROAD, SUITE 100
WALNUT CREEK, CA 94597

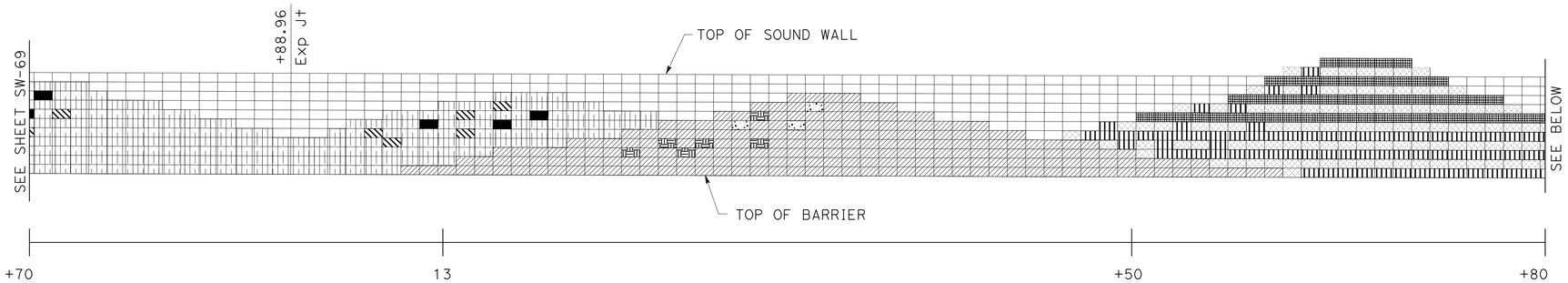

SOUND WALL No. 7A

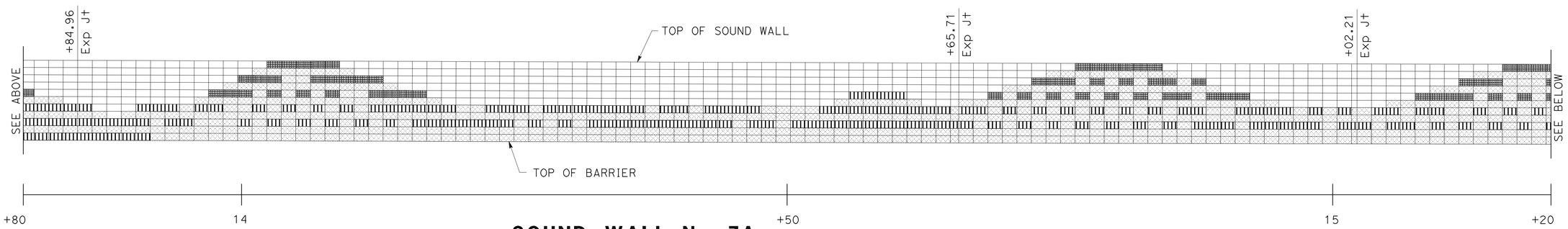

SOUND WALL No. 7A

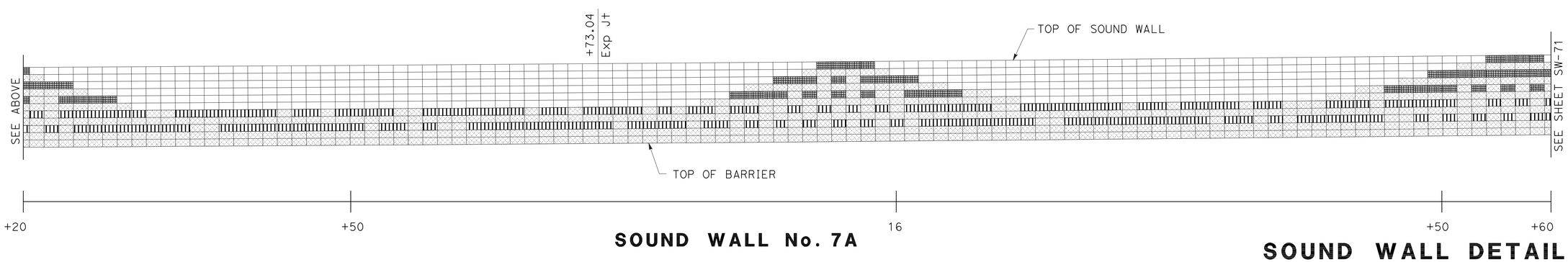

SOUND WALL No. 7A

SOUND WALL DETAILS
AESTHETIC FEATURES

SOUND WALL No. 7A
SCALE: 1" = 5'

FOR NOTES, ABBREVIATIONS AND LEGEND, SEE SHEET SW-1

SW-70

DS	DIPAN SHAH	KEITH RHODES	
REVISED BY	CALCULATED-DESIGNED BY	CONSULTANT FUNCTIONAL SUPERVISOR	
10/31/11	VENTATA KANNEKANTI		
DATE REVISED	CHECKED BY		

STATE OF CALIFORNIA - DEPARTMENT OF TRANSPORTATION
Caltrans

LAST REVISION 10-31-11 | DATE PLOTTED => 19-JAN-2012 | TIME PLOTTED => 08:38

Dist	COUNTY	ROUTE	POST MILES TOTAL PROJECT	SHEET No.	TOTAL SHEETS
04	CC	4	27.3/R29.0	506	950

REGISTERED CIVIL ENGINEER 10/31/11 DATE

1-17-12
PLANS APPROVAL DATE

REGISTERED PROFESSIONAL ENGINEER Keith D. Rhodes No. C53587 Exp. 6/30/13 CIVIL STATE OF CALIFORNIA

THE STATE OF CALIFORNIA OR ITS OFFICERS OR AGENTS SHALL NOT BE RESPONSIBLE FOR THE ACCURACY OR COMPLETENESS OF SCANNED COPIES OF THIS PLAN SHEET.

T Y LIN INTERNATIONAL
2010 CROW CANYON PLACE, SUITE 350
SAN RAMON, CA 94583

CCTA
2999 OAK ROAD, SUITE 100
WALNUT CREEK, CA 94597

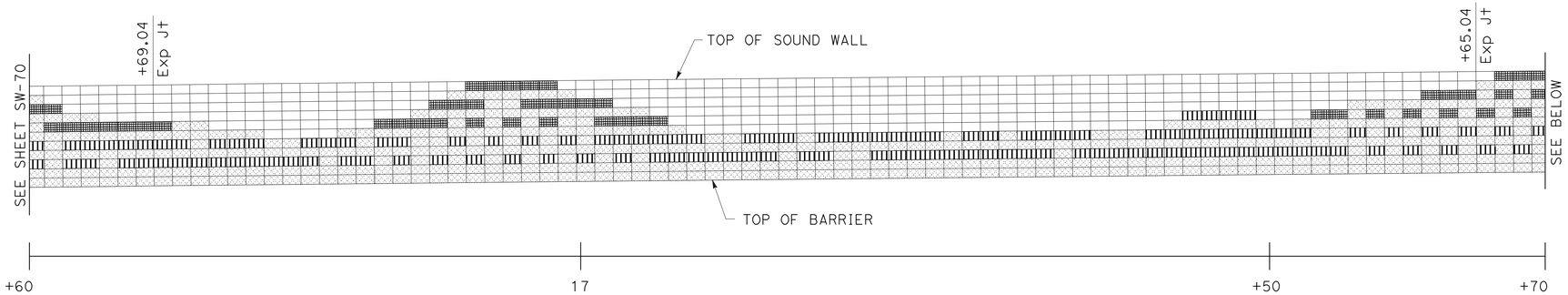

SOUND WALL No. 7A

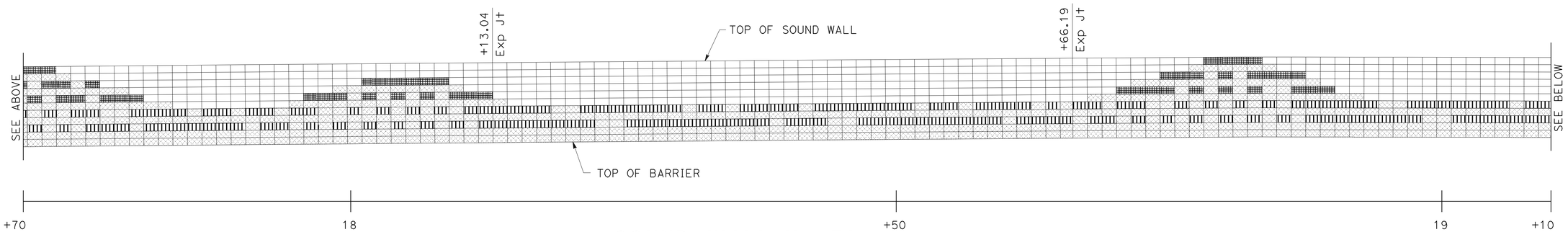

SOUND WALL No. 7A

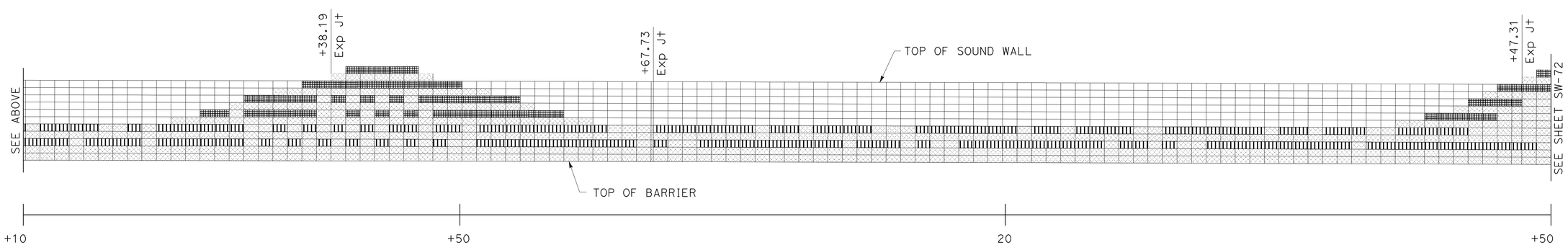

SOUND WALL No. 7A

SOUND WALL DETAILS
AESTHETIC FEATURES
SOUND WALL No. 7A
SCALE: 1" = 5'

FOR NOTES, ABBREVIATIONS AND LEGEND, SEE SHEET SW-1

SW-71

REVISED BY	DS
DATE REVISED	10/31/11
DIPAN SHAH	
VENTATA KANNEKANTI	
CALCULATED-DESIGNED BY	
CHECKED BY	
CONSULTANT FUNCTIONAL SUPERVISOR	KEITH RHODES

STATE OF CALIFORNIA - DEPARTMENT OF TRANSPORTATION
Caltrans

LAST REVISION 10-31-11 | DATE PLOTTED => 19-JAN-2012 | TIME PLOTTED => 08:38

Dist	COUNTY	ROUTE	POST MILES TOTAL PROJECT	SHEET No.	TOTAL SHEETS
04	CC	4	27.3/R29.0	507	950

REGISTERED CIVIL ENGINEER 10/31/11 DATE

1-17-12
PLANS APPROVAL DATE

REGISTERED PROFESSIONAL ENGINEER Keith D. Rhodes No. C53587 Exp. 6/30/13 CIVIL STATE OF CALIFORNIA

THE STATE OF CALIFORNIA OR ITS OFFICERS OR AGENTS SHALL NOT BE RESPONSIBLE FOR THE ACCURACY OR COMPLETENESS OF SCANNED COPIES OF THIS PLAN SHEET.

T Y LIN INTERNATIONAL
2010 CROW CANYON PLACE, SUITE 350
SAN RAMON, CA 94583

CCTA
2999 OAK ROAD, SUITE 100
WALNUT CREEK, CA 94597

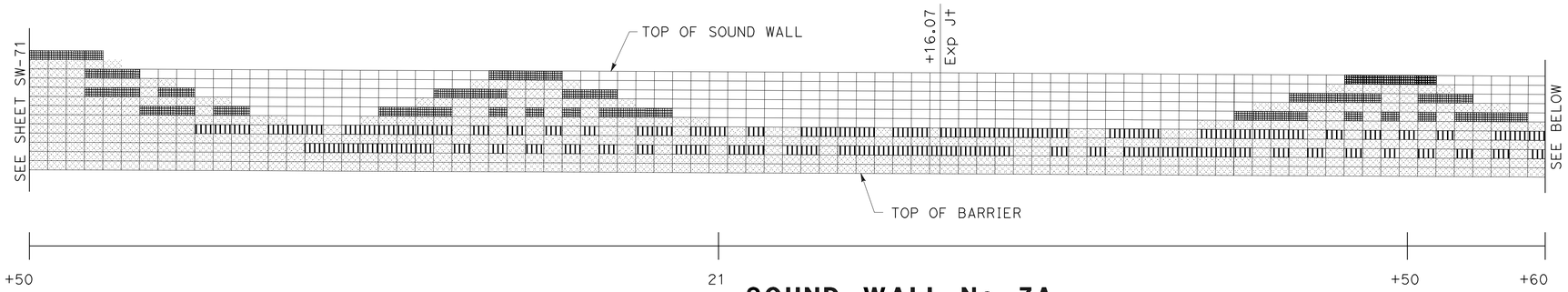

SOUND WALL No. 7A

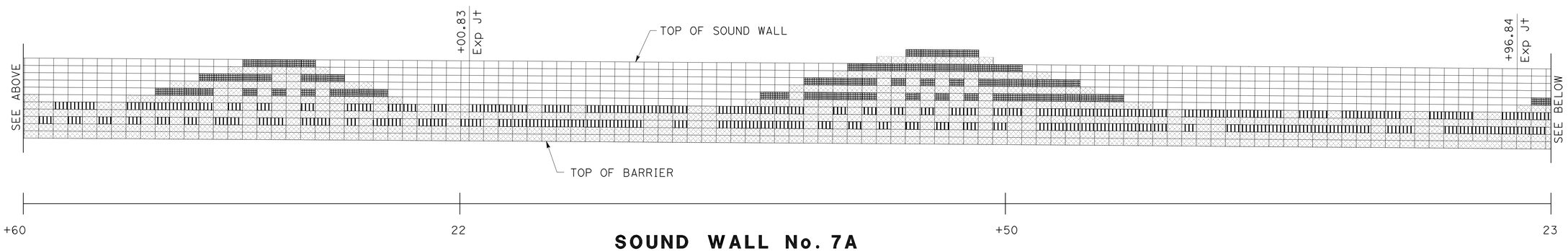

SOUND WALL No. 7A

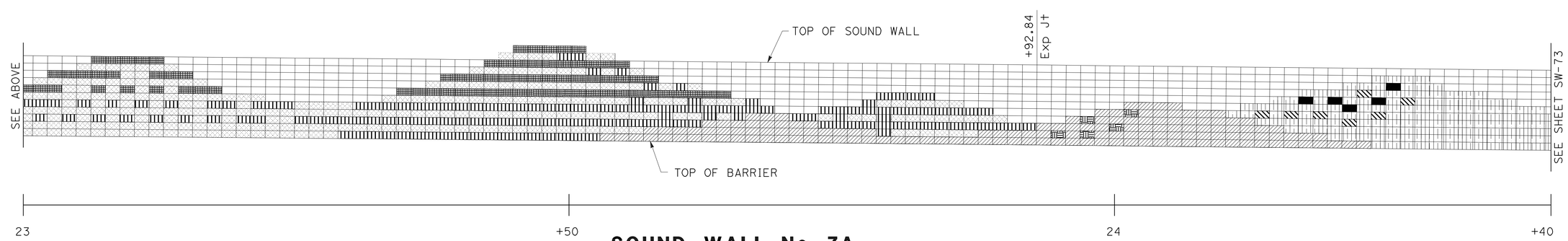

SOUND WALL No. 7A

SOUND WALL DETAILS
AESTHETIC FEATURES
SOUND WALL No. 7A
SCALE: 1" = 5'

FOR NOTES, ABBREVIATIONS AND LEGEND, SEE SHEET SW-1

SW-72

REVISED BY	DATE REVISED
DS	10/31/11

DIPAN SHAH — CALCULATED-DESIGNED BY
VENTATA KANNEKANTI — CHECKED BY
KEITH RHODES — CONSULTANT FUNCTIONAL SUPERVISOR

STATE OF CALIFORNIA - DEPARTMENT OF TRANSPORTATION
Caltrans

LAST REVISION 10-31-11 | DATE PLOTTED => 19-JAN-2012 | TIME PLOTTED => 08:38

Dist	COUNTY	ROUTE	POST MILES TOTAL PROJECT	SHEET No.	TOTAL SHEETS
04	CC	4	27.3/R29.0	508	950

REGISTERED CIVIL ENGINEER 10/31/11 DATE

1-17-12
PLANS APPROVAL DATE

REGISTERED PROFESSIONAL ENGINEER
Keith D. Rhodes
No. C53587
Exp. 6/30/13
CIVIL
STATE OF CALIFORNIA

THE STATE OF CALIFORNIA OR ITS OFFICERS OR AGENTS SHALL NOT BE RESPONSIBLE FOR THE ACCURACY OR COMPLETENESS OF SCANNED COPIES OF THIS PLAN SHEET.

T Y LIN INTERNATIONAL
2010 CROW CANYON PLACE, SUITE 350
SAN RAMON, CA 94583

CCTA
2999 OAK ROAD, SUITE 100
WALNUT CREEK, CA 94597

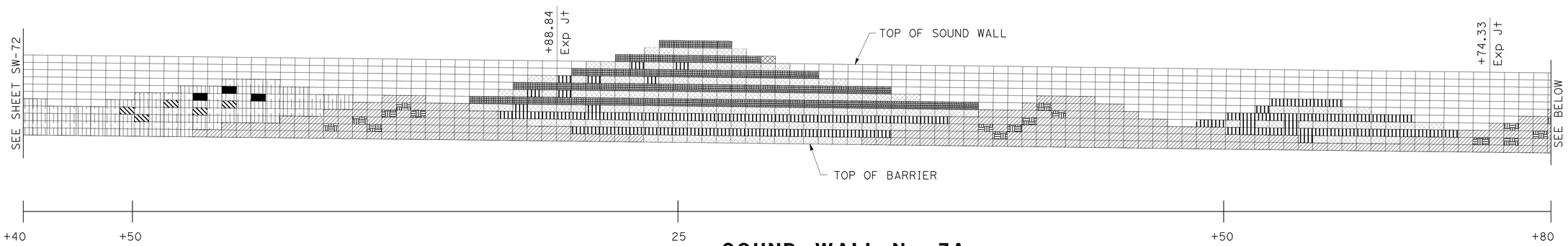

SOUND WALL No. 7A

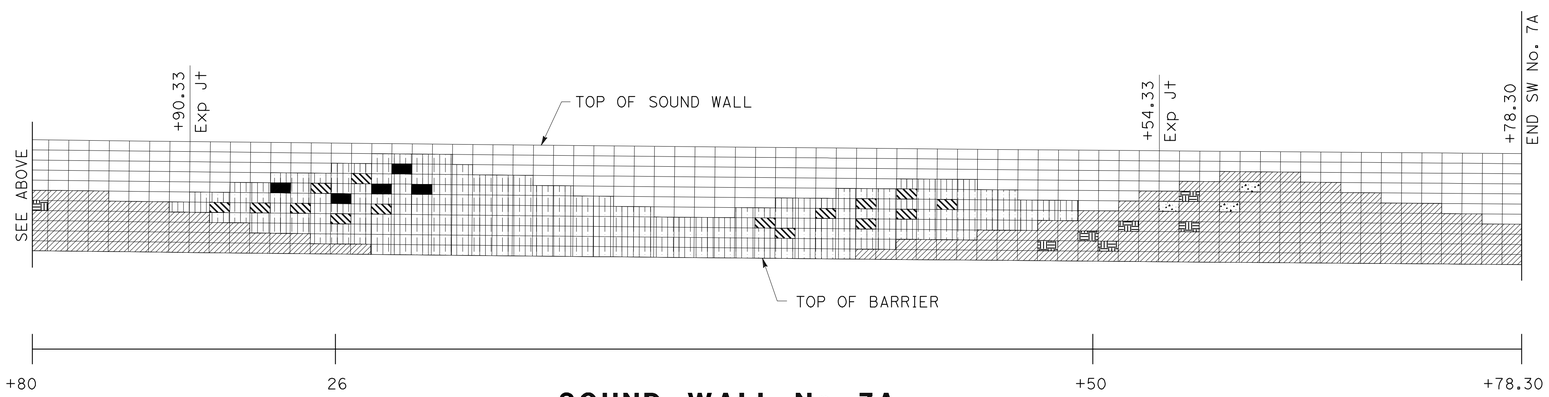

SOUND WALL No. 7A

FOR NOTES, ABBREVIATIONS AND LEGEND, SEE SHEET SW-1

SOUND WALL DETAILS
AESTHETIC FEATURES
SOUND WALL No. 7A
SCALE: 1" = 5'

SW-73

REVISED BY	DATE REVISED
DS	10/31/11

DIPAN SHAH
VENTATA KANNEKANTI

CALCULATED-DESIGNED BY
CHECKED BY

CONSULTANT FUNCTIONAL SUPERVISOR
KEITH RHODES

STATE OF CALIFORNIA - DEPARTMENT OF TRANSPORTATION
Caltrans

LAST REVISION 10-31-11
DATE PLOTTED => 19-JAN-2012
TIME PLOTTED => 08:38

DIST	COUNTY	ROUTE	POST MILES TOTAL PROJECT	SHEET No	TOTAL SHEETS
04	CC	4	27.3/R29.0	509	950

GEOTECHNICAL PROFESSIONAL — DATE 8/9/11

1-17-12
PLANS APPROVAL DATE

REGISTERED PROFESSIONAL ENGINEER — GARY PARIKH — No. G.E. 666 — Exp. 12/31/11 — GEOTECHNICAL — STATE OF CALIFORNIA

CONTRA COSTA
TRANSPORTATION AUTHORITY
2999 OAK ROAD, SUITE 100
WALNUT CREEK, CA 94597

PARIKH CONSULTANTS, INC.
2360 QUME DRIVE, SUITE A
SAN JOSE CA 95131

The State of California or its officers or agents shall not be responsible for the accuracy or completeness of electronic copies of this plan sheet.

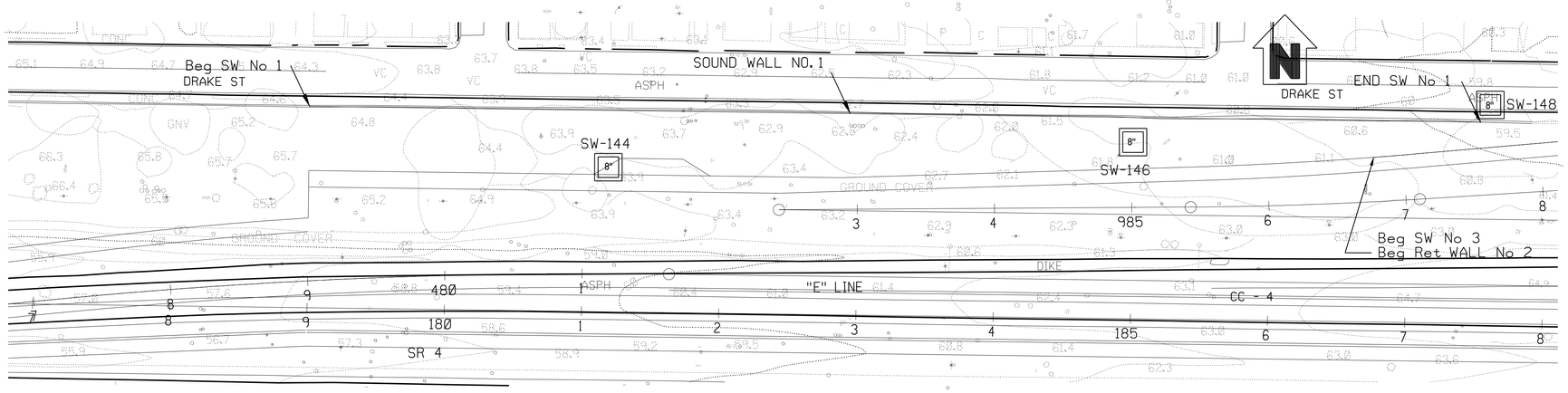

PLAN
1"=50'

Note:
Standard Penetration Test Sampler: I.D. = 1.4"; O.D. = 2"
Modified California Sampler: I.D. = 2.5"; O.D. = 3"
Hammer Assembly: A 140 lb hammer with a 30" drop
(Automatic Hammer)

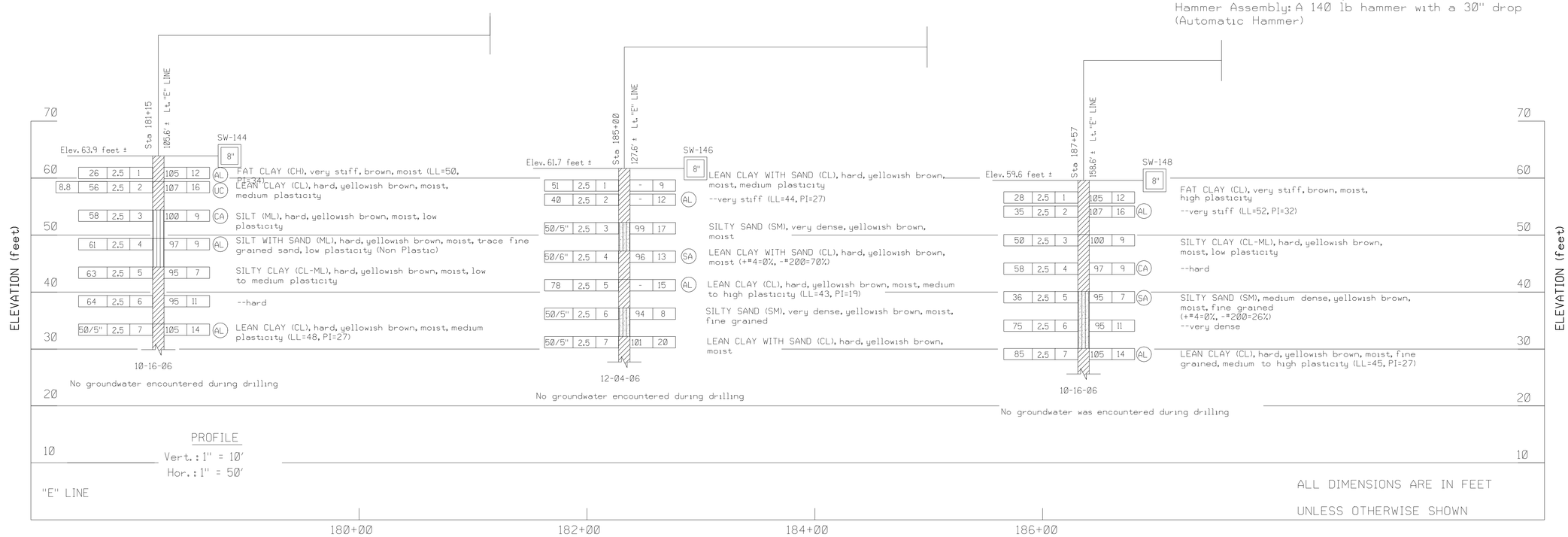

LEGEND OF BORING OPERATIONS

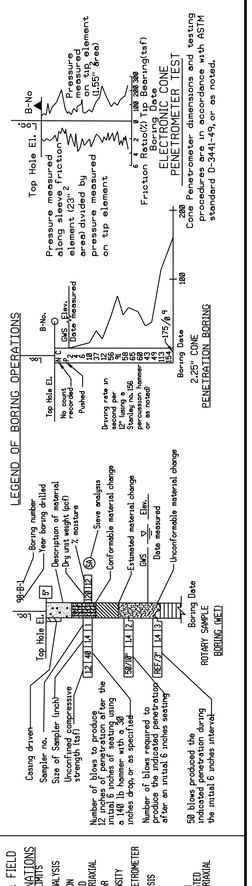

IN-SITU, LAB & FIELD TEST DESIGNATIONS

ATTERBERG LIMITS	(A)
CHEMICAL ANALYSIS	(C)
CONSOLIDATION	(D)
CONSOLIDATED UNDRAINED TRIAXIAL	(E)
DIRECT SHEAR	(F)
MAXIMUM DENSITY	(G)
POCKET PENETROMETER	(H)
SIEVE ANALYSIS	(I)
TORVANE	(J)
UNCONFINED COMPRESSION	(K)
UNCONSOLIDATED UNDRAINED TRIAXIAL	(L)
VANE SHEAR	(M)

TYPES OF BORINGS

2.25" CONE PENETRATION	
ROTARY WASH	SWC
ELECTRONIC CONE PENETROMETER	
AUGER BORING (DRY)	
TEST PIT	TP
DIAMOND CORE BORING	32715
SOIL TUBE	32715

LEGEND OF EARTH MATERIALS (USCS) BASED ON ASTM D2487, D2488

FILL MATERIAL	POORLY-GRADED GRAVEL (GP)
CLAY (CL or CH)	WELL-GRADED SAND (SW)
SILT (ML or MH)	SILTY SAND (SM) SILTY GRAVEL (GM)
PEAT and/or ORGANIC MATTER	CLAYEY SAND (SC) or SANDY CLAY
WELL-GRADED GRAVEL (GW)	COBBLES/BOULDERS
POORLY-GRADED GRAVEL (GP)	IGNEOUS ROCK
SILTY GRAVEL (GM)	SEDIMENTARY ROCK
CLAYEY GRAVEL (GC)	METAMORPHIC ROCK

CONSISTENCY CLASSIFICATION FOR SOILS

According to the Standard Penetration Test (ASTM D-1586)

SPT N-Value (Blows/2FT)	Granular	SPT N-Value (Blows/2FT)	Cohesive
0-4	Very loose	<2	Very soft
5-10	Loose	2-4	Soft
11-30	Medium Dense	5-8	Firm
31-50	Dense	9-15	Stiff
>50	Very Dense	16-30	Very Stiff
		>30	Hard

NOTE: Visual classifications of earth materials are based on field inspection and or a confirmed or revised with laboratory test results as necessary.

DESIGN OVERSIGHT	DRAWN BY: OKSAN GOUTHIER	GANGA TRIPATHI	PREPARED FOR THE STATE OF CALIFORNIA DEPARTMENT OF TRANSPORTATION
SIGN OFF DATE	CHECKED BY: PARTHA SIRCAR	FIELD INVESTIGATION BY: DATE: 09/2006 - 10/2006	PARTHA SIRCAR, PROJECT ENGINEER

BRIDGE NO.
POST MILE

SOUNDWALL NO. 1

LOG OF TEST BORINGS 1 OF 2

OSF GEOTECHNICAL LOG OF TEST BORINGS SHEET (ENGLISH) (REV. 2/25/05)

ORIGINAL SCALE IN INCHES FOR REDUCED PLANS 0 1 2 3

PROJECT NUMBER & PHASE: 04000210801
CONTRACT NO: 04-1G9404 UNIT: 0750

DISREGARD PRINTS BEARING EARLIER REVISION DATES → 8/16/09 3/1/10 8/9/11

REVISION DATES (PRELIMINARY STAGE ONLY) — SHEET — OF

FILE => 040002108 0ra074.dgn

USERNAME => s117606 DATE PLOTTED => 19-JAN-2012 TIME PLOTTED => 08:39

DIST	COUNTY	ROUTE	POST MILES TOTAL PROJECT	SHEET No	TOTAL SHEETS
04	CC	4	27.3/R29.0	510	950

GEOTECHNICAL PROFESSIONAL — DATE 8/9/11

1-17-12
PLANS APPROVAL DATE

REGISTERED PROFESSIONAL ENGINEER — GARY PARIKH — No. G.E. 666 — Exp. 12/31/11 — GEOTECHNICAL — STATE OF CALIFORNIA

CONTRA COSTA
TRANSPORTATION AUTHORITY
2999 OAK ROAD, SUITE 100
WALNUT CREEK, CA 94597

PARIKH CONSULTANTS, INC.
2360 QUME DRIVE, SUITE A
SAN JOSE CA 95131

The State of California or its officers or agents shall not be responsible for the accuracy or completeness of electronic copies of this plan sheet.

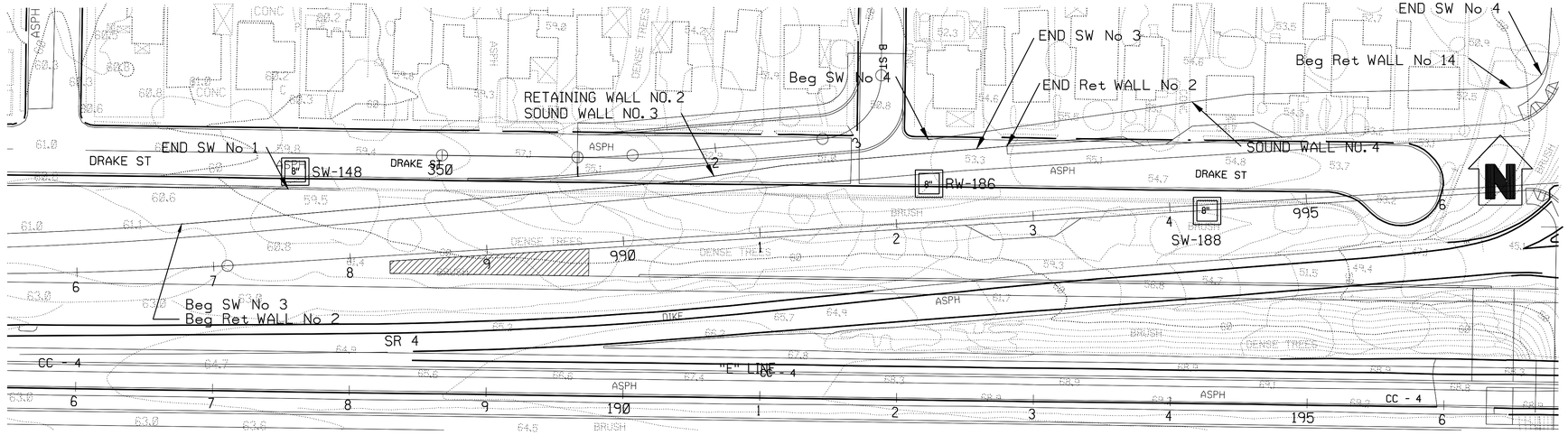

PLAN
1"=50'

Note:
Standard Penetration Test Sampler: I.D. = 1.4"; O.D. = 2"
Modified California Sampler: I.D. = 2.5"; O.D. = 3"
Hammer Assembly: A 140 lb hammer with a 30" drop (Automatic Hammer)

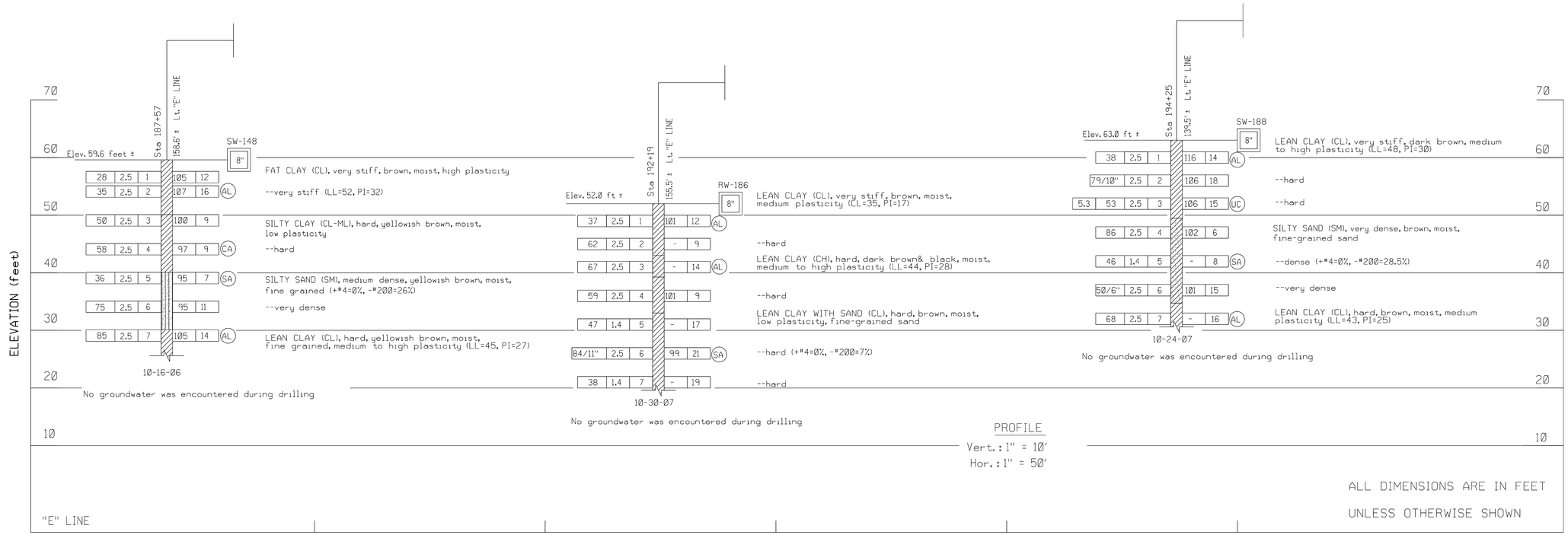

PROFILE
Vert.: 1" = 10'
Hor.: 1" = 50'

ALL DIMENSIONS ARE IN FEET UNLESS OTHERWISE SHOWN

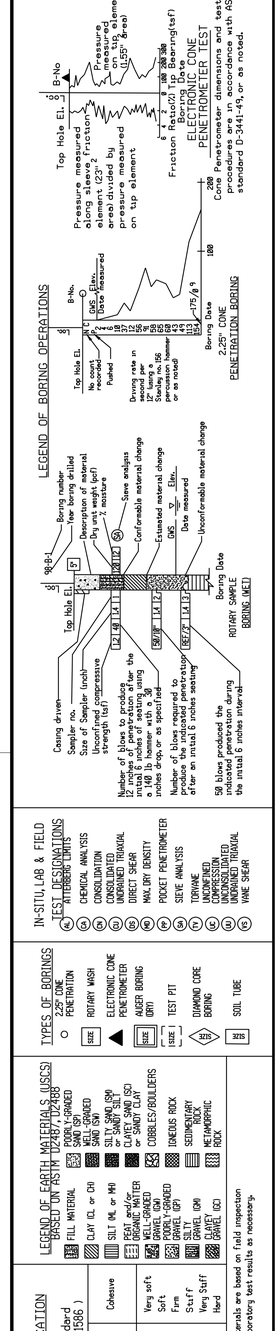

DESIGN OVERSIGHT	DRAWN BY	OKSAN GOUTHIER	GANGA TRIPATHI	PREPARED FOR THE STATE OF CALIFORNIA DEPARTMENT OF TRANSPORTATION	PARTHA SIRCAR	BRIDGE NO.	SOUNDWALL NO. 1
SIGN OFF DATE	CHECKED BY	PARTHA SIRCAR	FIELD INVESTIGATION BY: DATE: 09/2006		PROJECT ENGINEER	POST MILE	LOG OF TEST BORINGS 2 OF 2

OSF GEOTECHNICAL LOG OF TEST BORINGS SHEET (ENGLISH) (REV. 2/25/05)

ORIGINAL SCALE IN INCHES FOR REDUCED PLANS 0 1 2 3

PROJECT NUMBER & PHASE: 04000210801
CONTRACT NO: 04-109404 UNIT:0750

DISREGARD PRINTS BEARING EARLIER REVISION DATES — REVISION DATES (PRELIMINARY STAGE ONLY) 8/14/09 3/1/10 8/9/11 — SHEET — OF

FILE => 040002108Ora075.dgn

USERNAME => s117606 DATE PLOTTED => 19-JAN-2012 TIME PLOTTED => 08:39

DIST	COUNTY	ROUTE	POST MILES TOTAL PROJECT	SHEET No	TOTAL SHEETS
04	CC	4	27.3/R29.0	511	950

GEOTECHNICAL PROFESSIONAL — DATE 8/9/11

1-17-12
PLANS APPROVAL DATE

REGISTERED PROFESSIONAL ENGINEER — GARY PARIKH — No. G.E. 666 — Exp. 12/31/11 — GEOTECHNICAL — STATE OF CALIFORNIA

CONTRA COSTA
TRANSPORTATION AUTHORITY
2999 OAK ROAD, SUITE 100
WALNUT CREEK, CA 94597

PARIKH CONSULTANTS, INC.
2360 QUME DRIVE, SUITE A
SAN JOSE CA 95131

The State of California or its officers or agents shall not be responsible for the accuracy or completeness of electronic copies of this plan sheet.

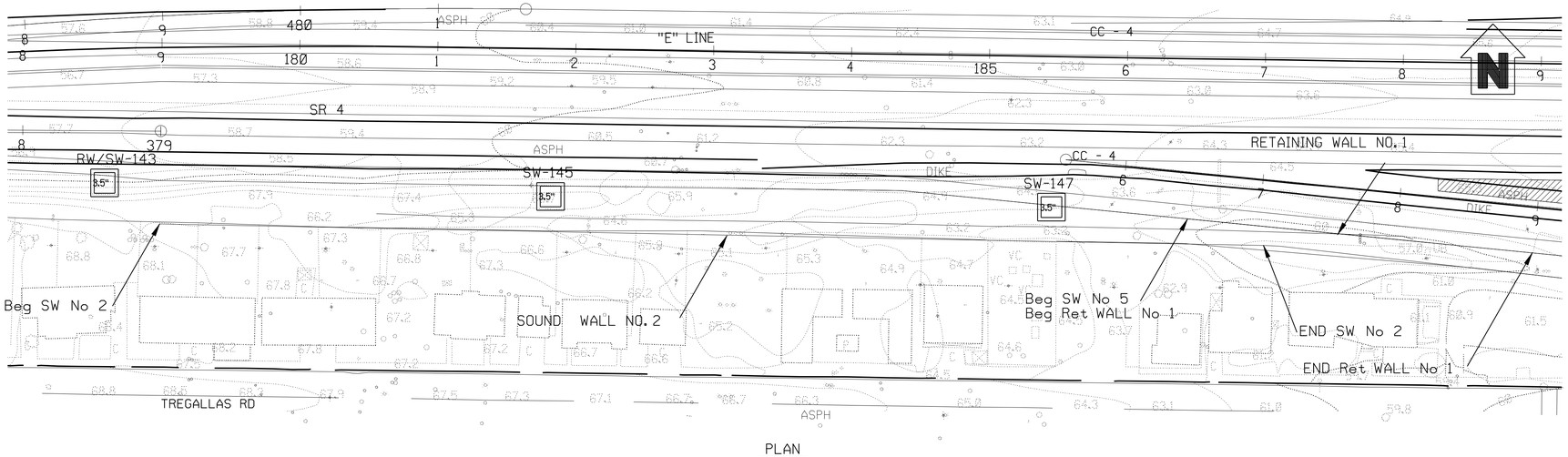

PLAN
1"=50'

Note:
Standard Penetration Test Sampler: I.D. = 1.4"; O.D. = 2"
Modified California Sampler: I.D. = 2.5"; O.D. = 3"
Hammer Assembly: A 140 lb hammer with a 30" drop (Automatic Hammer)

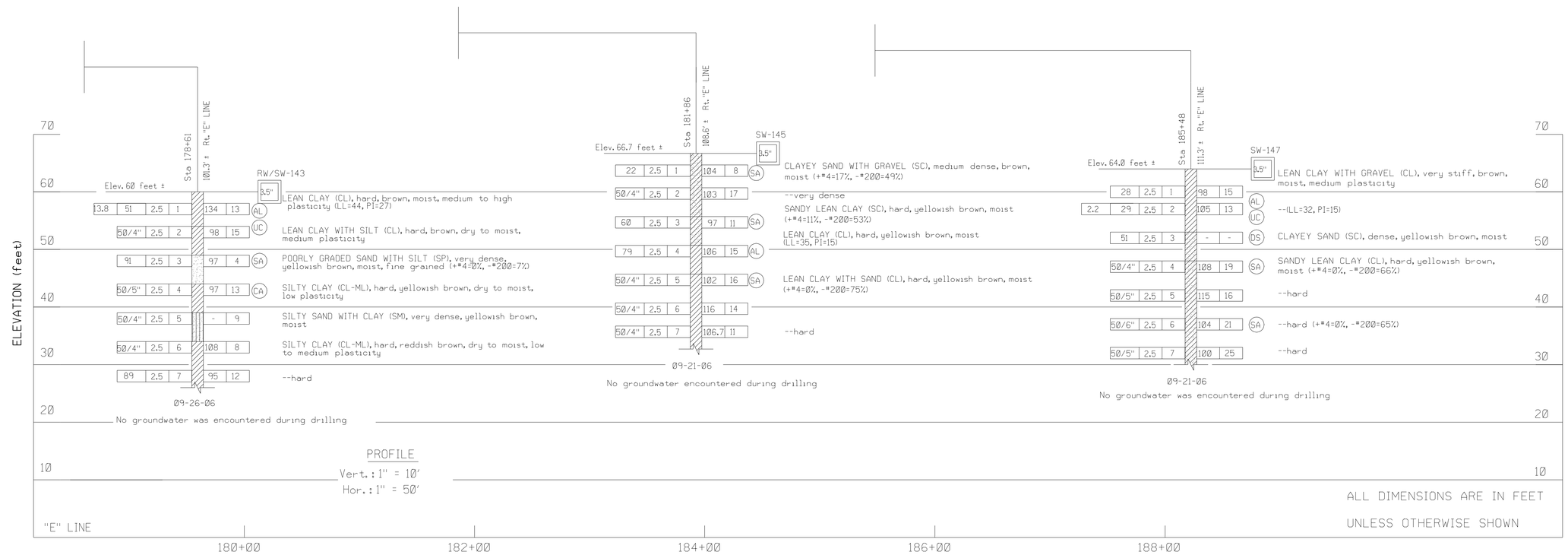

PROFILE
Vert.: 1" = 10'
Hor.: 1" = 50'

ALL DIMENSIONS ARE IN FEET UNLESS OTHERWISE SHOWN

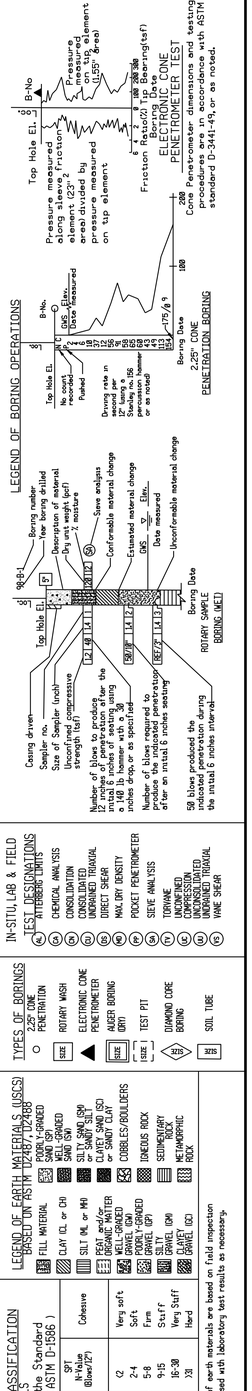

DESIGN OVERSIGHT	DRAWN BY	OKSAN GOUTHIER	GANGA TRIPATHI — FIELD INVESTIGATION BY:
SIGN OFF DATE	CHECKED BY	PARTHA SIRCAR	DATE: 09/2006

PREPARED FOR THE STATE OF CALIFORNIA DEPARTMENT OF TRANSPORTATION

PARTHA SIRCAR
PROJECT ENGINEER

BRIDGE NO.
POST MILE

SOUNDWALL NO. 2

LOG OF TEST BORINGS 1 OF 2

OSF GEOTECHNICAL LOG OF TEST BORINGS SHEET (ENGLISH) (REV. 2/25/05)

ORIGINAL SCALE IN INCHES FOR REDUCED PLANS 0 1 2 3

PROJECT NUMBER & PHASE: 04000210801
CONTRACT NO: 04-1G9404 UNIT: 0750

DISREGARD PRINTS BEARING EARLIER REVISION DATES

REVISION DATES (PRELIMINARY STAGE ONLY): 8/14/09 3/1/10 8/9/11

SHEET OF

FILE => 040002108 0rb076.dgn

USERNAME => s117606 DATE PLOTTED => 19-JAN-2012 TIME PLOTTED => 08:39

DIST	COUNTY	ROUTE	POST MILES TOTAL PROJECT	SHEET No	TOTAL SHEETS
04	CC	4	27.3/R29.0	512	950

GEOTECHNICAL PROFESSIONAL — DATE 8/9/11

1-17-12
PLANS APPROVAL DATE

REGISTERED PROFESSIONAL ENGINEER — GARY PARIKH — No. G.E. 666 — Exp. 12/31/11 — GEOTECHNICAL — STATE OF CALIFORNIA

CONTRA COSTA TRANSPORTATION AUTHORITY
2999 OAK ROAD, SUITE 100
WALNUT CREEK, CA 94597

PARIKH CONSULTANTS, INC.
2360 QUME DRIVE, SUITE A
SAN JOSE CA 95131

The State of California or its officers or agents shall not be responsible for the accuracy or completeness of electronic copies of this plan sheet.

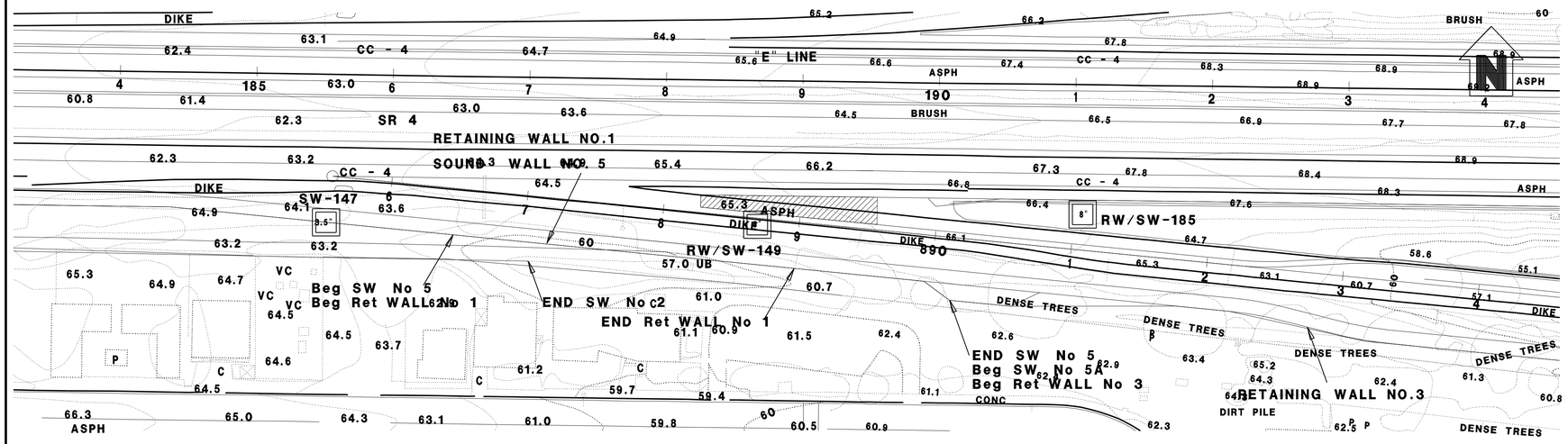

PLAN
1" =50'

Note:
Standard Penetration Test Sampler: I.D. = 1.4"; O.D. = 2"
Modified California Sampler: I.D. = 2.5"; O.D. = 3"
Hammer Assembly: A 140 lb hammer with a 30" drop (Automatic Hammer)

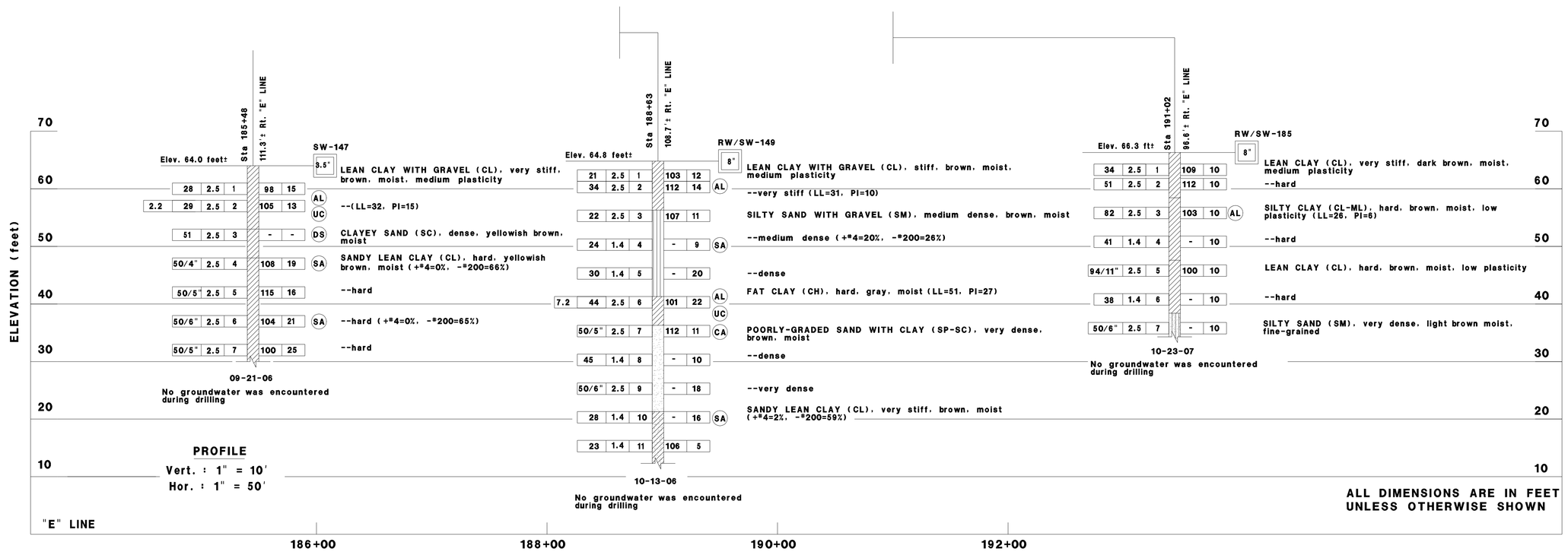

PROFILE
Vert. : 1" = 10'
Hor. : 1" = 50'

ALL DIMENSIONS ARE IN FEET UNLESS OTHERWISE SHOWN

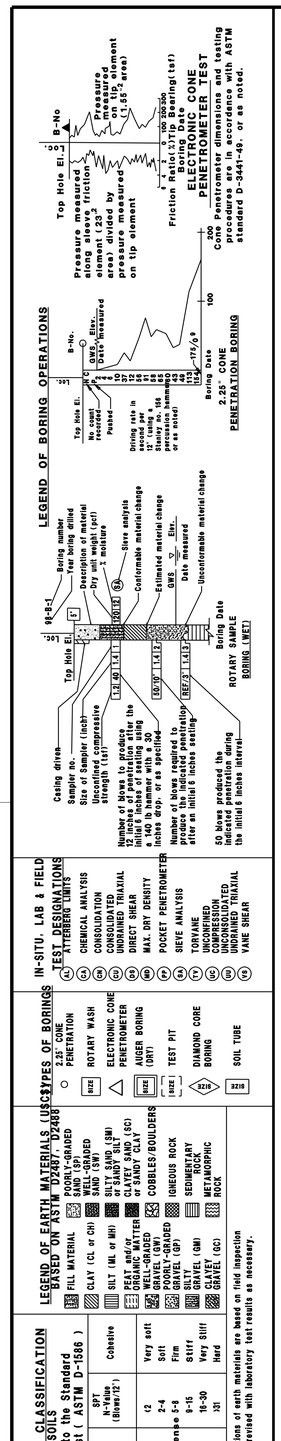

DESIGN OVERSIGHT	DRAWN BY: OKSAN GOUTHIER	GANGA TRIPATHI FIELD INVESTIGATION BY:	PREPARED FOR THE STATE OF CALIFORNIA DEPARTMENT OF TRANSPORTATION
SIGN OFF DATE	CHECKED BY: PARTHA SIRCAR	DATE: 09-10/2006 - 10/2007	PARTHA SIRCAR, PROJECT ENGINEER

BRIDGE NO. / POST MILE

SOUNDWALL NO. 2
LOG OF TEST BORINGS 2 OF 2

PROJECT NUMBER & PHASE: 04000210801
CONTRACT NO: 04-1G9404 UNIT: 0750

DISREGARD PRINTS BEARING EARLIER REVISION DATES → 8/14/09, 3/1/10, 8/9/11

ORIGINAL SCALE IN INCHES FOR REDUCED PLANS 0 1 2 3

OSF GEOTECHNICAL LOG OF TEST BORINGS SHEET (ENGLISH) (REV. 2/25/05)

FILE => 0400021080rb077.dgn

USERNAME => s117606 DATE PLOTTED => 19-JAN-2012 TIME PLOTTED => 08:39

DIST	COUNTY	ROUTE	POST MILES TOTAL PROJECT	SHEET No	TOTAL SHEETS
04	CC	4	27.3/R29.0	513	950

GEOTECHNICAL PROFESSIONAL — DATE 8/9/11

1-17-12
PLANS APPROVAL DATE

REGISTERED PROFESSIONAL ENGINEER — GARY PARIKH — No. G.E. 666 — Exp. 12/31/11 — GEOTECHNICAL — STATE OF CALIFORNIA

CONTRA COSTA TRANSPORTATION AUTHORITY
2999 OAK ROAD, SUITE 100
WALNUT CREEK, CA 94597

PARIKH CONSULTANTS, INC.
2360 QUME DRIVE, SUITE A
SAN JOSE CA 95131

The State of California or its officers or agents shall not be responsible for the accuracy or completeness of electronic copies of this plan sheet.

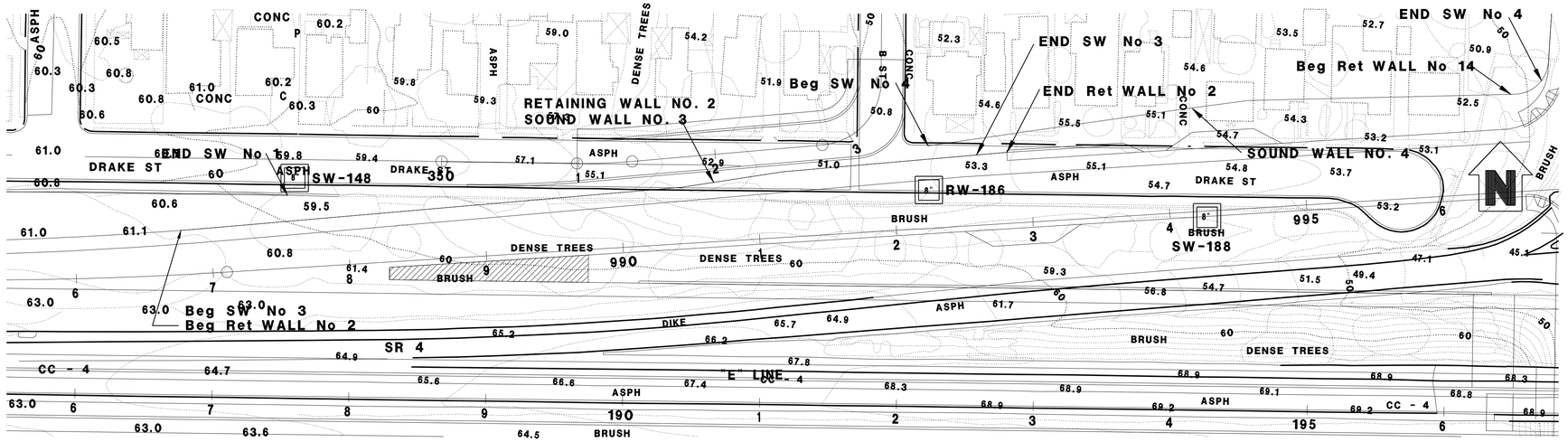

PLAN
1"=50'

Note:
Standard Penetration Test Sampler: I.D. = 1.4"; O.D. = 2"
Modified California Sampler: I.D. = 2.5"; O.D. = 3"
Hammer Assembly: A 140 lb hammer with a 30" drop (Automatic Hammer)

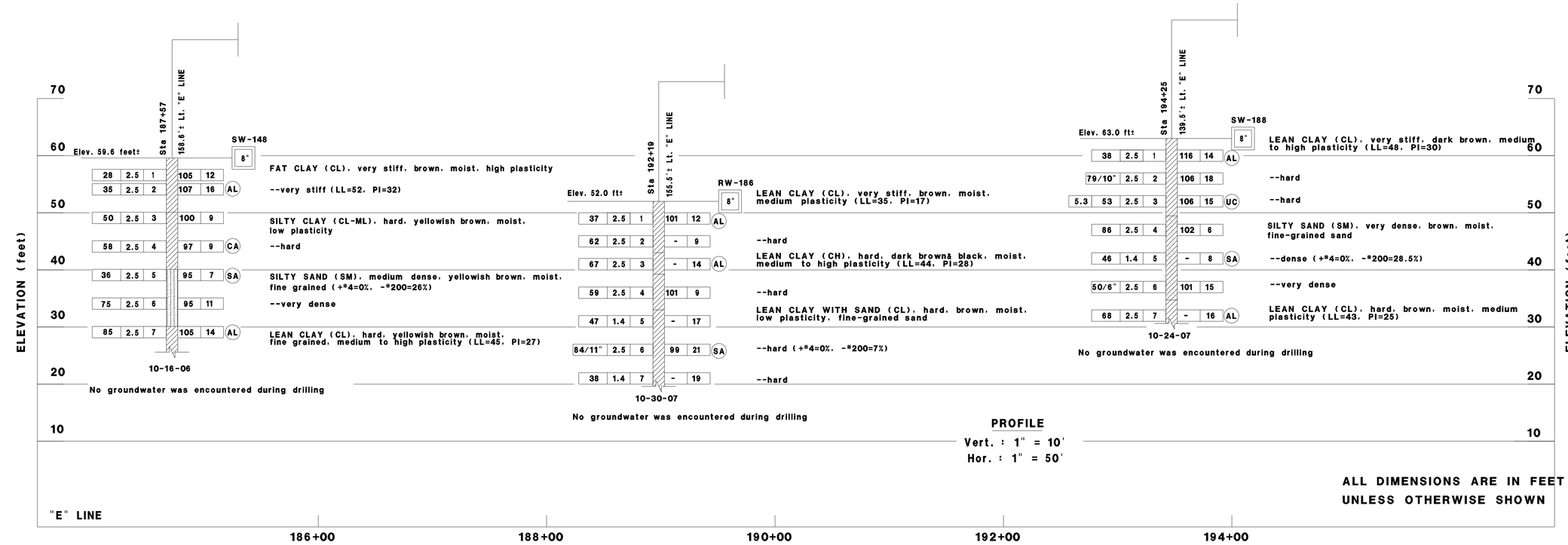

PROFILE
Vert. : 1" = 10'
Hor. : 1" = 50'

ALL DIMENSIONS ARE IN FEET UNLESS OTHERWISE SHOWN

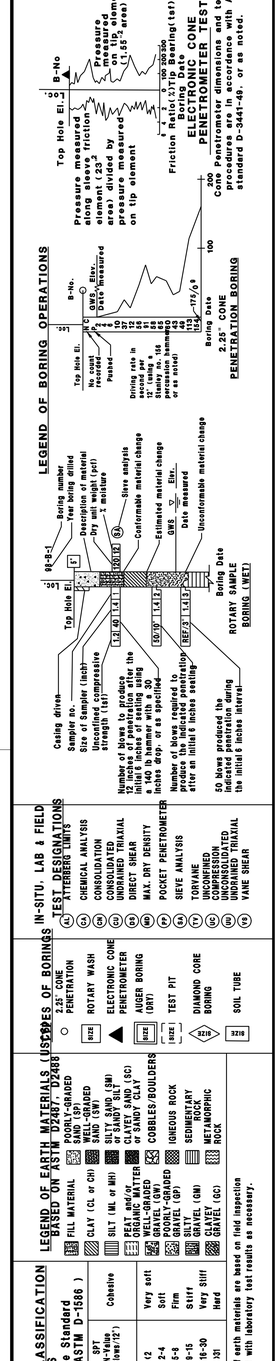

DESIGN OVERSIGHT	DRAWN BY	OKSAN GOUTHIER	GANGA TRIPATHI — FIELD INVESTIGATION BY:
SIGN OFF DATE	CHECKED BY	PARTHA SIRCAR	DATE: 09/2006 - 10/2006

PREPARED FOR THE STATE OF CALIFORNIA DEPARTMENT OF TRANSPORTATION

PARTHA SIRCAR
PROJECT ENGINEER

BRIDGE NO.
POST MILE

SOUNDWALL NO. 4
LOG OF TEST BORINGS

OSF GEOTECHNICAL LOG OF TEST BORINGS SHEET (ENGLISH) (REV. 2/25/05)

ORIGINAL SCALE IN INCHES FOR REDUCED PLANS 0 1 2 3

PROJECT NUMBER & PHASE: 0400021081
CONTRACT NO: 04-1G9404 UNIT:0750

DISREGARD PRINTS BEARING EARLIER REVISION DATES → 8/14/09 3/1/10 8/9/11

REVISION DATES (PRELIMINARY STAGE ONLY) — SHEET — OF

FILE => 0400021080rd078.dgn

USERNAME => s8177606 DATE PLOTTED => 19-JAN-2012 TIME PLOTTED => 08:40

DIST	COUNTY	ROUTE	POST MILES TOTAL PROJECT	SHEET No	TOTAL SHEETS
04	CC	4	27.3/R29.0	514	950

GEOTECHNICAL PROFESSIONAL — DATE 8/9/11

1-17-12
PLANS APPROVAL DATE

REGISTERED PROFESSIONAL ENGINEER — GARY PARIKH — No. G.E. 666 — Exp. 12/31/11 — GEOTECHNICAL — STATE OF CALIFORNIA

CONTRA COSTA
TRANSPORTATION AUTHORITY
2999 OAK ROAD, SUITE 100
WALNUT CREEK, CA 94597

PARIKH CONSULTANTS, INC.
2360 QUME DRIVE, SUITE A
SAN JOSE CA 95131

The State of California or its officers or agents shall not be responsible for the accuracy or completeness of electronic copies of this plan sheet.

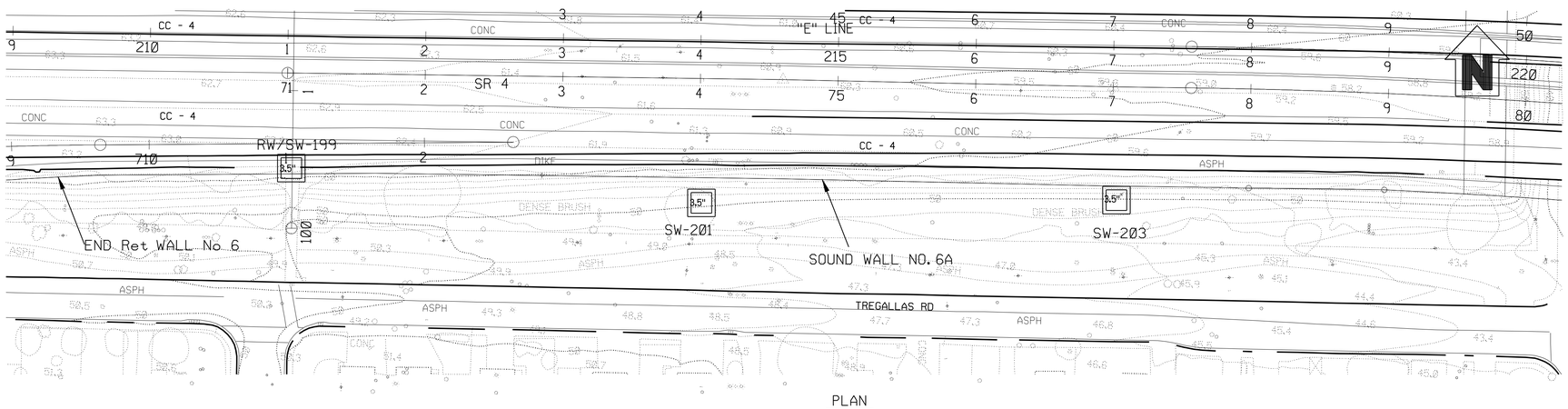

PLAN
1"=50'

Note:
Standard Penetration Test Sampler: I.D. = 1.4"; O.D. = 2"
Modified California Sampler: I.D. = 2.5"; O.D. = 3"
Hammer Assembly: A 140 lb hammer with a 30" drop
(Automatic Hammer)

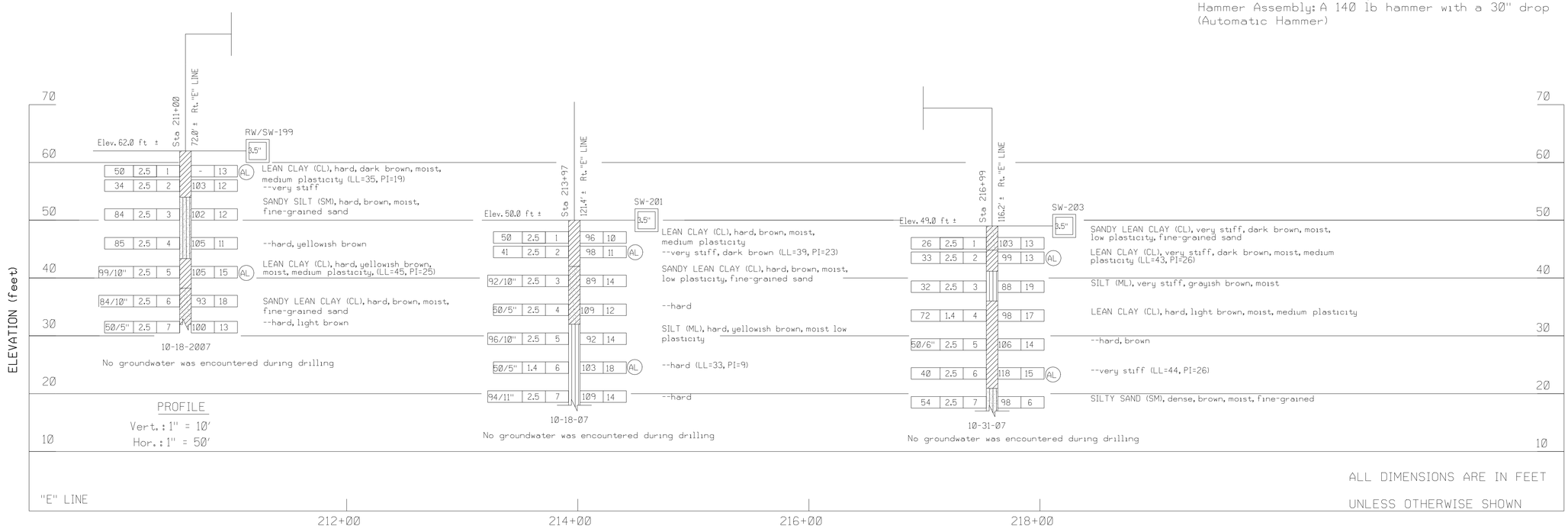

ALL DIMENSIONS ARE IN FEET
UNLESS OTHERWISE SHOWN

LEGEND OF BORING OPERATIONS

Boring number
Year boring drilled
Description of material
Dry unit weight (pcf)
% moisture
Sieve analysis
Conformable material change
Extrapolated material change
GWS Elev.
Date measured
Unconformable material change
Top Hole El.
Casing driven
Sampler no.
Size of Sampler (inch)
Unconfined compressive strength (tsf)
Number of blows to produce 12 inches of penetration after the initial 6 inches of seating using a 140 lb hammer with a 30 inches drop in automatic mode
Number of blows required to produce the indicated penetration after an initial 6 inches seating
50 blows produced the indicated penetration during the initial 6 inches interval
Boring Date
ROTARY SAMPLE BORING (MET)

Pressure measured on friction element (23)² area divided by pressure measured on tip element
Friction Ratio (%) = (fs/qc) x 100
Boring Date
ELECTRONIC CONE PENETROMETER TEST
Cone Penetrometer dimensions and testing procedures in accordance with ASTM standard D-3441-49, or as noted.

Top Hole El.
Pushed
Driving rate in seconds per 12" using a 350 lb. Vulcan 156 percussion hammer or as noted
Boring Date
2.25" CONE PENETRATION BORING

IN-SITU, LAB & FIELD TEST DESIGNATIONS

(A)	ATTERBERG LIMITS
(B)	CHEMICAL ANALYSIS
(C)	CONSOLIDATION
(D)	CONSOLIDATED UNDRAINED TRIAXIAL
(E)	DIRECT SHEAR
(F)	MAX. DRY DENSITY
(G)	POCKET PENETROMETER
(H)	SIEVE ANALYSIS
(I)	TORVANE
(J)	UNCONFINED COMPRESSION
(K)	UNCONSOLIDATED UNDRAINED TRIAXIAL
(L)	VANE SHEAR

TYPES OF BORINGS

2.25" CONE PENETRATION	
SHR	ROTARY WASH
	ELECTRONIC CONE PENETROMETER
SHR (SSR)	AUGER BORING (DM)
	TEST PIT
NTS	DIAMOND CORE BORING
NTS	SOIL TUBE

LEGEND OF EARTH MATERIALS (USCS) BASED ON ASTM D2487/D2488

	FILL MATERIAL
CH	CLAY (CL or CH)
MH	SILT (ML or MH)
Pt	PEAT and/or ORGANIC MATTER
GW	WELL-GRADED GRAVEL (GW)
GP	POORLY-GRADED GRAVEL (GP)
GM	SILTY GRAVEL (GM)
GC	CLAYEY GRAVEL (GC)
SW	WELL-GRADED SAND (SW)
SP	POORLY-GRADED SAND (SP)
SM	SILTY SAND (SM)
SC	CLAYEY SAND (SC) or SANDY CLAY
	COBBLES/BOULDERS
	IGNEOUS ROCK
	SEDIMENTARY ROCK
	METAMORPHIC ROCK

CONSISTENCY CLASSIFICATION FOR SOILS

According to the Standard Penetration Test (ASTM D-1586)

SPT N-Value (Blows/FT)	Granular	SPT N-Value (Blows/FT)	Cohesive
0-4	Very loose	<2	Very soft
5-10	Loose	2-4	Soft
11-30	Medium Dense	5-8	Firm
31-50	Dense	9-15	Stiff
>50	Very Dense	16-30	Very Stiff
		>31	Hard

NOTE: Visual classifications of earth materials are based on field inspection and or a confirmed or revised with laboratory test results as necessary.

DESIGN OVERSIGHT	DRAWN BY	OKSAN GOUTHIER	GANGA TRIPATHI — FIELD INVESTIGATION BY:
SIGN OFF DATE	CHECKED BY	PARTHA SIRCAR	DATE: 09/2006 - 10/2006

PREPARED FOR THE STATE OF CALIFORNIA DEPARTMENT OF TRANSPORTATION

PARTHA SIRCAR
PROJECT ENGINEER

BRIDGE NO.
POST MILE

SOUNDWALL NO. 6A

LOG OF TEST BORINGS 1 OF 3

OSF GEOTECHNICAL LOG OF TEST BORINGS SHEET (ENGLISH) (REV. 2/25/05)

ORIGINAL SCALE IN INCHES FOR REDUCED PLANS 0 1 2 3

PROJECT NUMBER & PHASE: 04000210801
CONTRACT NO: 04-1G9404 UNIT: 0750

DISREGARD PRINTS BEARING EARLIER REVISION DATES — REVISION DATES (PRELIMINARY STAGE ONLY): 8/14/09 3/1/10 8/9/11

SHEET OF

FILE => 0400021080rh079.dgn

USERNAME => s117606 DATE PLOTTED => 19-JAN-2012 TIME PLOTTED => 08:40

DIST	COUNTY	ROUTE	POST MILES TOTAL PROJECT	SHEET No	TOTAL SHEETS
04	CC	4	27.3/R29.0	515	950

GEOTECHNICAL PROFESSIONAL — DATE 8/9/11

1-17-12
PLANS APPROVAL DATE

REGISTERED PROFESSIONAL ENGINEER — GARY PARIKH — No. G.E. 666 — Exp. 12/31/11 — GEOTECHNICAL — STATE OF CALIFORNIA

CONTRA COSTA TRANSPORTATION AUTHORITY
2999 OAK ROAD. SUITE 100
WALNUT CREEK. CA 94597

PARIKH CONSULTANTS, INC.
2360 QUME DRIVE, SUITE A
SAN JOSE CA 95131

The State of California or its officers or agents shall not be responsible for the accuracy or completeness of electronic copies of this plan sheet.

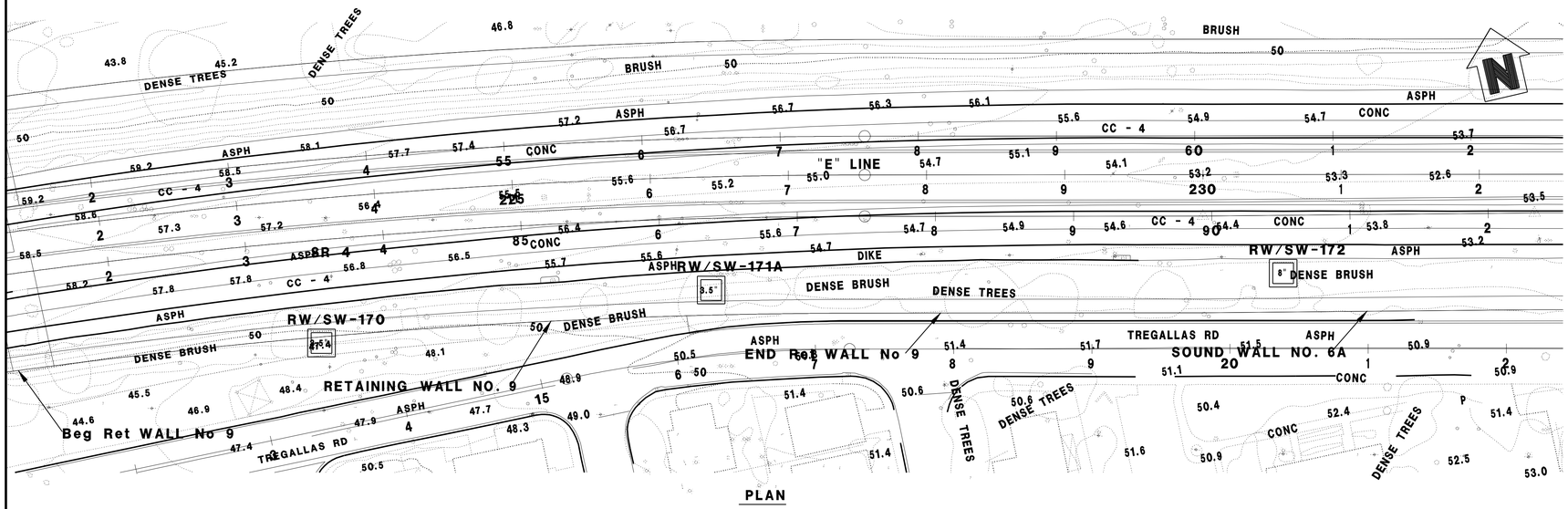

PLAN
1"=50'

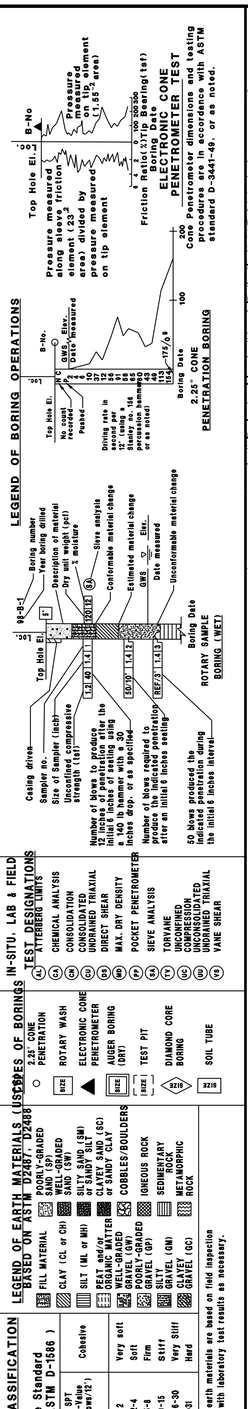

Note:
Standard Penetration Test Sampler: I.D. = 1.4"; O.D. = 2"
Modified California Sampler: I.D. = 2.5"; O.D. = 3"
Hammer Assembly: A 140 lb hammer with a 30" drop (Automatic Hammer)

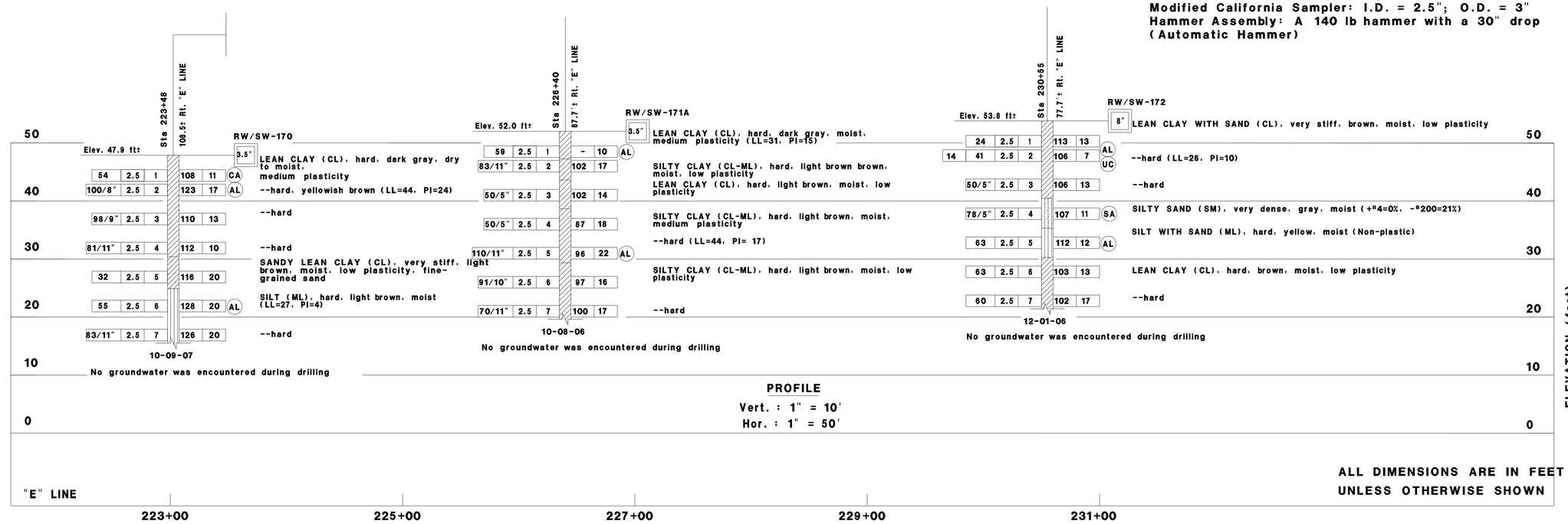

PROFILE
Vert. : 1" = 10'
Hor. : 1" = 50'

ALL DIMENSIONS ARE IN FEET UNLESS OTHERWISE SHOWN

DESIGN OVERSIGHT	DRAWN BY: OKSAN GOUTHIER	GANGA TRIPATHI FIELD INVESTIGATION BY:	**PREPARED FOR THE STATE OF CALIFORNIA DEPARTMENT OF TRANSPORTATION**	PARTHA SIRCAR PROJECT ENGINEER
SIGN OFF DATE	CHECKED BY: PARTHA SIRCAR	DATE: 09/2006 - 10/2006		

BRIDGE NO.
POST MILE

SOUNDWALL NO. 6A
LOG OF TEST BORINGS 2 OF 3

PROJECT NUMBER & PHASE: 0400021081
CONTRACT NO: 04-1G9404 UNIT:0750

ORIGINAL SCALE IN INCHES FOR REDUCED PLANS 0 1 2 3

DISREGARD PRINTS BEARING EARLIER REVISION DATES — REVISION DATES (PRELIMINARY STAGE ONLY) 8/16/09 3/4/10 8/9/11

SHEET OF

DIST	COUNTY	ROUTE	POST MILES TOTAL PROJECT	SHEET No	TOTAL SHEETS
04	CC	4	27.3/R29.0	516	950

GEOTECHNICAL PROFESSIONAL — DATE 8/9/11

1-17-12
PLANS APPROVAL DATE

REGISTERED PROFESSIONAL ENGINEER — GARY PARIKH — No. G.E. 666 — Exp. 12/31/11 — GEOTECHNICAL — STATE OF CALIFORNIA

CONTRA COSTA TRANSPORTATION AUTHORITY
2999 OAK ROAD, SUITE 100
WALNUT CREEK, CA 94597

PARIKH CONSULTANTS, INC.
2360 QUME DRIVE, SUITE A
SAN JOSE CA 95131

The State of California or its officers or agents shall not be responsible for the accuracy or completeness of electronic copies of this plan sheet.

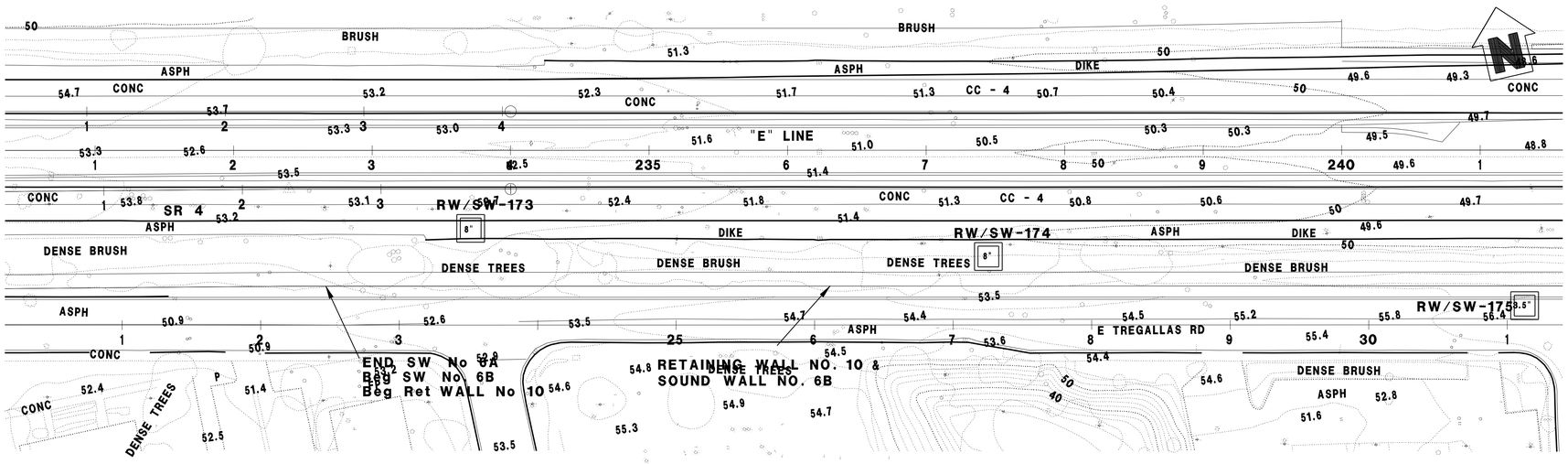

PLAN
1"=50'

Note:
Standard Penetration Test Sampler: I.D. = 1.4"; O.D. = 2"
Modified California Sampler: I.D. = 2.5"; O.D. = 3"
Hammer Assembly: A 140 lb hammer with a 30" drop (Automatic Hammer)

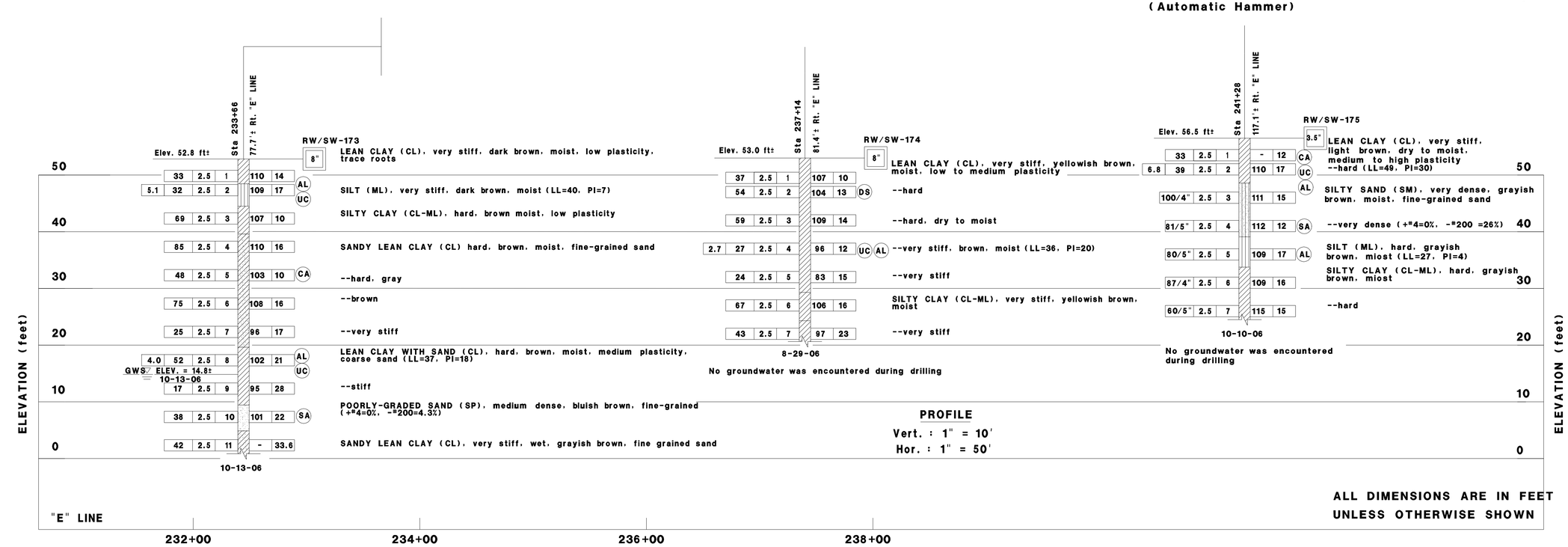

PROFILE
Vert. : 1" = 10'
Hor. : 1" = 50'

ALL DIMENSIONS ARE IN FEET UNLESS OTHERWISE SHOWN

LEGEND OF BORING OPERATIONS

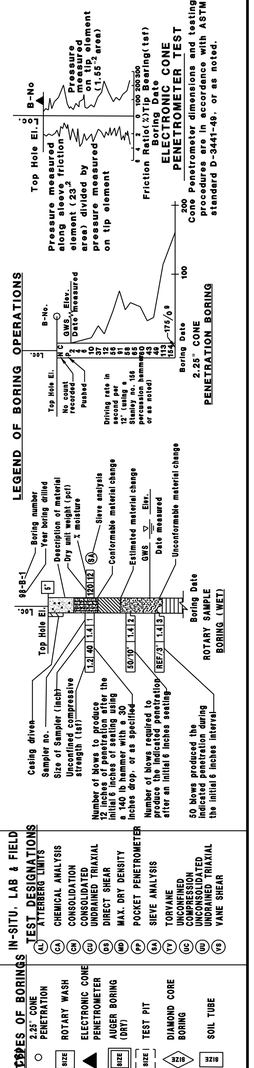

IN-SITU, LAB & FIELD TEST DESIGNATIONS

PC	POCKET PENETROMETER
SV	SIEVE ANALYSIS
TV	TORVANE
UC	UNCONFINED COMPRESSION
UU	UNCONSOLIDATED UNDRAINED TRIAXIAL
VS	VANE SHEAR
AL	ATTERBERG LIMITS
CA	CHEMICAL ANALYSIS
CN	CONSOLIDATION
CU	CONSOLIDATED UNDRAINED TRIAXIAL
DS	DIRECT SHEAR
MD	MAX. DRY DENSITY

TYPES OF BORINGS

○	2.25" CONE PENETRATION
RB#2	ROTARY WASH
◀	ELECTRONIC CONE PENETROMETER
HSA	AUGER BORING (DRY)
TP	TEST PIT
3218	DIAMOND CORE BORING
3218	SOIL TUBE

LEGEND OF EARTH MATERIALS (USCS) BASED ON ASTM D2487, D2488

FILL MATERIAL	POORLY-GRADED GRAVEL (GP)
CLAY (CL or CH)	WELL-GRADED SAND (SW)
SILT (ML or MH)	SILTY SAND (SM)
PEAT and/or ORGANIC MATTER	CLAYEY SAND (SC) or SANDY CLAY
WELL-GRADED GRAVEL (GW)	COBBLES/BOULDERS
POORLY-GRADED GRAVEL (GP)	IGNEOUS ROCK
SILTY GRAVEL (GM)	SEDIMENTARY ROCK
CLAYEY GRAVEL (GC)	METAMORPHIC ROCK

CONSISTENCY CLASSIFICATION FOR SOILS According to the Standard Penetration Test (ASTM D-1586)

SPT N-Value (Blows/ft)	Granular	SPT N-Value (Blows/ft)	Cohesive
0-4	Very loose	<2	Very soft
5-10	Loose	2-4	Soft
11-30	Medium Dense	5-8	Firm
31-50	Dense	9-15	Stiff
>50	Very Dense	16-30	Very Stiff
		>31	Hard

NOTE: Visual classifications of earth materials are based on field inspection and or a confirmed or revised with laboratory test results as necessary.

DESIGN OVERSIGHT	DRAWN BY	OKSAN GOUTHIER	GANGA TRIPATHI — FIELD INVESTIGATION BY:
SIGN OFF DATE	CHECKED BY	PARTHA SIRCAR	DATE: 09/2006 - 10/2006

PREPARED FOR THE STATE OF CALIFORNIA DEPARTMENT OF TRANSPORTATION

PARTHA SIRCAR
PROJECT ENGINEER

BRIDGE NO.
POST MILE

SOUNDWALL NO. 6A
LOG OF TEST BORINGS 3 OF 3

OSF GEOTECHNICAL LOG OF TEST BORINGS SHEET (ENGLISH) (REV. 2/25/05)

ORIGINAL SCALE IN INCHES FOR REDUCED PLANS 0 1 2 3

PROJECT NUMBER & PHASE: 0400021081
CONTRACT NO: 04-169404 UNIT:0750

DISREGARD PRINTS BEARING EARLIER REVISION DATES

REVISION DATES (PRELIMINARY STAGE ONLY): 8/14/09 3/1/10 8/9/11

SHEET OF

FILE => 0400021080rh081.dgn

USERNAME => s114640 DATE PLOTTED => 19-JAN-2012 TIME PLOTTED => 08:41

Dist	COUNTY	ROUTE	POST MILES TOTAL PROJECT	SHEET No.	TOTAL SHEETS
04	CC	4	27.3/R29.0	517	950

REGISTERED ELECTRICAL ENGINEER 8/9/11 DATE

1-17-12
PLANS APPROVAL DATE

REGISTERED PROFESSIONAL ENGINEER ALLAN RAY MORRIS No. 16958 Exp. 6/30/13 ELECTRICAL STATE OF CALIFORNIA

THE STATE OF CALIFORNIA OR ITS OFFICERS OR AGENTS SHALL NOT BE RESPONSIBLE FOR THE ACCURACY OR COMPLETENESS OF SCANNED COPIES OF THIS PLAN SHEET.

T Y LIN INTERNATIONAL
2010 CROW CANYON PLACE, SUITE 350
SAN RAMON, CA 94583

CCTA
2999 OAK ROAD, SUITE 100
WALNUT CREEK, CA 94597

INDEX OF ELECTRICAL PLANS:

E-1 TO E-2	INDEX OF ELECTRICAL PLANS, GENERAL NOTES, LEGEND, AND PROJECT NOTES
E-3 TO E-8	LIGHTING AND SIGN ILLUMINATION
E-9 TO E-13	LIGHTING (CITY STREET)
E-14 TO E-19	TRAFFIC OPERATIONS SYSTEM, COMMUNICATION CONDUIT (FIBER OPTIC), RELOCATE WIRELESS VEHICLE DETECTOR SYSTEM (WVDS)
E-20 TO E-25	SIGNAL AND LIGHTING (LOCATION 1 & 2), EMERGENCY VEHICLE DETECTOR SYSTEM, INTERCONNECTION CONDUIT AND CABLE
E-26 TO E-30	SIGNAL AND LIGHTING (CITY STREET LOCATION 1 & 2)
E-31 TO E-33	MODIFY SIGNAL AND LIGHTING (CITY STREET LOCATION 3)
E-34 TO E-58	ELECTRICAL DETAILS
E-59	GENERAL NOTES (TEMPORARY), PROJECT NOTES (TEMPORARY), AND LEGEND (TEMPORARY)
E-60 TO E-92	LIGHTING (TEMPORARY)
E-93 TO E-105	SIGNAL AND LIGHTING (TEMPORARY LOCATION 1 & 2)
E-106 TO E-111	ELECTRICAL DETAILS (TEMPORARY)

LEGEND:

PROPOSED	EXISTING	
APN	-	ACCESS POINT NAME
COMM	-	COMMUNICATION
CT ID	-	CALTRANS IDENTIFICATION
F/O ▭	-	FIBER OPTIC VAULT. SEE DETAILS ON SHEET E-46
FOPB ▭	-	FIBER OPTIC PULL BOX. SEE DETAILS ON SHEET E-47
-	flr	FLUORESCENT
GPRS	gprs	GENERAL PACKET RADIO SYSTEM
GPS	-	GLOBAL POSITIONING SYSTEM
HCC	-	HYBRID CAMERA CABLE
-	mv	MERCURY VAPOR
OLA	-	OVERLAP A
PDP	-	PACKET DATA PROTOCAL
PGE ▭	PGE ⁝⁝	PG&E PULL BOX PER SERVICE UTILITY REQUIREMENTS. SEE SHEET E-37
TC	tc	TELEPHONE CABLE
TOU	-	TIME OF USE
● ●	☼ ☼	VEHICLE SENSOR NODE
WVDS	-	WIRELESS VEHICLE DETECTOR SYSTEM
▬	◁▭▷	WVDS ON POLE TYPE VDS 40/15TS STANDARD

GENERAL NOTES:

1. FOR ACCURATE RIGHT OF WAY DATA, CONTACT RIGHT OF WAY ENGINEERING AT THE DISTRICT OFFICE.
2. ALL EXISTING EQUIPMENT SHALL REMAIN IN PLACE UNLESS OTHERWISE NOTED.
3. LOCATION OF CONTROLLERS, STANDARDS, CONDUITS, PULL BOXES AND OTHER EQUIPMENT SHOWN ON THE PLANS ARE APPROXIMATE AND MAY BE CHANGED TO SUIT FIELD CONDITIONS OR AS DIRECTED BY THE ENGINEER.
4. ALL PULL BOXES TO BE INSTALLED IN UNPAVED AREAS SHALL BE INSTALLED AT LEAST 2 Ft AWAY FROM EDGE OF PAVEMENT.
5. THE CONTRACTOR SHALL NOTIFY UNDERGROUND SERVICE ALERT (U.S.A.), 1-800-227-2600, A MINIMUM OF 2 WORKING DAYS PRIOR TO COMMENCING ANY EXCAVATION.
6. CONTROLLER CABINET SHALL BE 10 Ft MINIMUM FROM SERVICE EQUIPMENT ENCLOSURE.
7. NO ABOVE GROUND ELECTRICAL WORK SHALL BE PERFORMED ON ANY SYSTEM WITHIN THE PROJECT SITE UNTIL ALL CONTRACTOR-FURNISHED ELECTRICAL MATERIALS FOR THAT INDIVIDUAL SYSTEM HAVE BEEN TESTED AND DELIVERED TO THE CONTRACTOR.
8. THE NEUTRAL CONDUCTOR SHALL RUN FROM THE SERVICE EQUIPMENT ENCLOSURE TO THE CONTROLLER CABINET WITHOUT SPLICING TO ANY OTHER NEUTRAL CONDUCTOR.
9. THE CLEARANCE BETWEEN THE BOTTOM OF THE LOWEST CIRCUIT BREAKER AND THE BOTTOM OF THE SERVICE EQUIPMENT ENCLOSURE FOR A TYPE III-A SERIES SHALL BE 24 INCHES MINIMUM.
10. NO OVERHEAD SIGN PANEL SHALL BE INSTALLED UNTIL THE OVERHEAD SIGN LIGHTING IS COMPLETELY OPERATIONAL.
11. WHERE ONE OR MORE TRAFFIC SIGNAL DETECTOR(S) CONSIST OF A SEQUENCE OF 4 LOOPS IN A SINGLE LANE, THE FRONT LOOP CLOSEST TO THE LIMIT LINE OR CROSSWALK SHALL BE LOCATED 1 FOOT FROM THE LINE. THE SET OF 3 LOOPS OR 4 LOOPS ASSIGNED TO THE SAME LOOP DETECTOR LEAD-IN CABLE (DLC) SHALL BE CONNECTED IN SERIES FOR TRAFFIC SIGNAL SYSTEM ONLY AND NOT FOR RAMP METERING SYSTEM.
12. WHERE 6 OR MORE 3-INCH CONDUITS ENTER A No. 6 PULL BOX, THE CONDUITS SHALL ENTER AT AN ANGLE NOT GREATER THAN 45-DEGREES FROM THE HORIZONTAL.
13. AT LEAST THREE WORKING DAYS PRIOR TO PERFORMING ANY WORK ON EACH EXISTING SYSTEM, THE CONTRACTOR SHALL NOTIFY THE DEPARTMENT OF TRANSPORTATION, ELECTRICAL AND SIGNAL MAINTENANCE SUPERINTENDENT, PHONE (415) 330-6500.
14. PULL BOXES FOR CIRCUITS LABELED "(CITY/COUNTY) CIRCUIT" ON THE PLANS SHALL NOT HAVE THE "CALTRANS" COVER MARKING. THE COVERS SHALL BE MARKED AS "STREET LIGHTING", "TRAFFIC SIGNAL" OR INTERCONNECT.
15. COLOR CODING OF TRAFFIC SIGNAL CONDUCTOR FOR OVERLAP PHASES, SEE DETAIL 1 ON SHEET E-22, "CONDUCTOR, POLE AND EQUIPMENT SCHEDULES".
16. SLEEVE NUTS SHALL BE USED ON TYPE 1-B STANDARD. FOUNDATIONS FOR TYPE 1-B STANDARDS SHALL CONFORM TO THE DETAILS ON STANDARD PLAN ES-7B, "ANCHOR BOLTS WITH SLEEVE NUTS", EXCEPT THAT THE BOTTOM OF THE BASE PLATE SHALL BE FLUSH WITH THE FINISHED GRADE.
17. ALL CITY PEDESTRIAN SIGNAL HEADS SHALL BE COUNT DOWN TYPE.

INDEX OF ELECTRICAL PLANS, GENERAL NOTES, LEGEND, AND PROJECT NOTES

E-1

DAVID SETO	REVISED BY	CC
ALLAN MORRIS	DATE REVISED	8/9/11
CALCULATED-DESIGNED BY		
CHECKED BY		
CONSULTANT FUNCTIONAL SUPERVISOR		
HATEM AHMED		

STATE OF CALIFORNIA - DEPARTMENT OF TRANSPORTATION
Caltrans

LAST REVISION 8-9-11
DATE PLOTTED => 19-JAN-2012
TIME PLOTTED => 08:41

Dist	COUNTY	ROUTE	POST MILES TOTAL PROJECT	SHEET No.	TOTAL SHEETS
04	CC	4	27.3/R29.0	518	950

REGISTERED ELECTRICAL ENGINEER 8/9/11 DATE

1-17-12
PLANS APPROVAL DATE

REGISTERED PROFESSIONAL ENGINEER ALLAN RAY MORRIS No. 16958 Exp. 6/30/13 ELECTRICAL STATE OF CALIFORNIA

THE STATE OF CALIFORNIA OR ITS OFFICERS OR AGENTS SHALL NOT BE RESPONSIBLE FOR THE ACCURACY OR COMPLETENESS OF SCANNED COPIES OF THIS PLAN SHEET.

T Y LIN INTERNATIONAL
2010 CROW CANYON PLACE, SUITE 350
SAN RAMON, CA 94583

CCTA
2999 OAK ROAD, SUITE 100
WALNUT CREEK, CA 94597

PROJECT NOTES:

1. SEE S AND SD (SIGN PLAN AND SIGN DETAIL) SHEETS FOR OH SIGN STRUCTURE INFORMATION.
2. NOT USED.
3. INSTALL TYPE 21 STANDARD ON CONCRETE BARRIER. SEE SOUND WALL PLAN, RETAINING WALL PLAN AND STANDARD PLANS B11-56 FOR FOUNDATION AND MOUNTING DETAILS.
4. INSTALL DUAL PEU (120 V) ON TYPE 1-B STANDARD APPROXIMATELY 7 Ft FROM SERVICE EQUIPMENT ENCLOSURE.
5. NOT USED.
6. SEE GUIDELINES FOR PG&E SERVICE CONNECTION ON SHEET E-37. SERVICE CONNECTION SHALL BE COORDINATED WITH PG&E.
7. INSTALL PULL BOX ADJACENT TO CONCRETE BARRIER.
8. INSTALL TYPE 1-B STANDARD ADJACENT TO CONCRETE BARRIER.
9. INSTALL TYPE III-AF SERVICE EQUIPMENT ENCLOSURE. SEE SHEET E-42 FOR CITY SERVICE EQUIPMENT AND TYPICAL WIRING DIAGRAM DETAILS.
10. INSTALL STATE-FURNISHED MODEL 170E CONTROLLER ASSEMBLY WITH STATE-FURNISHED MODEL 334 CABINET. INSTALL CONTRACTOR-FURNISHED GPRS WIRELESS MODEM ASSEMBLY PER DETAILS ON SHEET E-36.
11. SEE DETECTOR SPACING DETAILS ON SHEET E-35.
12. INSTALL No. 9 STRUCTURE PULL BOX TO BART BARRIER. SEE DETAILS ON SHEET E-41.
13. INSTALL CITY SERVICE EQUIPMENT ENCLOSURE AND BATTERY BACKUP SYSTEM. SEE SHEET E-58 FOR CITY SERVICE EQUIPMENT AND WIRING DIAGRAM DETAILS.
14. RELOCATE EXISTING MODEL 170E CONTROLLER ASSEMBLY WITH MODEL 334 CABINET AND EXISTING EMS RADIO CONTROLLER ASSEMBLY.
15. INSTALL STATE-FURNISHED MODEL 2070L CONTROLLER ASSEMBLY.
16. INSTALL INTEGRATED CCTV CAMERA UNIT ON HIGH MAST CCTV 60' POLE. SEE STANDARD PLAN ES-16C, SHEETS E-44, E-52 AND E-53 FOR CCTV INSTALLATION DETAILS.
17. RELOCATE EXISTING EMS AND WOOD POST PER DETAILS ON SHEET E-38.
18. INSTALL TYPE 1-B STANDARD WITH RAMP METERING SIGNAL AS SHOWN IN DETAILS 'SIG' ON SHEET E-34.
19. INSTALL TYPE 1-B STANDARD WITH "METER ON" SIGN MOUNTED ON TOP OF STANDARD AS SHOWN IN DETAIL 'METER ON' SIGN ON SHEET E-34.
20. INSTALL TYPE 27-4-100 STANDARD WITH 40 Ft MAST ARM AND RAMP METERING SIGNAL HEADS AS SHOWN IN DETAIL 'MA' ON SHEET E-34. SEE STANDARD PLANS ES-11 FOR FOUNDATION INSTALLATION DETAILS ON INSTALLATION DETAILS ON CUT SLOPES STEEPER THAN 4:1.
21. INSTALL TYPE III-AF SERVICE EQUIPMENT ENCLOSURE WITH "TIME OF USE" METER. SEE SHEET E-39 FOR SERVICE EQUIPMENT AND TYPICAL WIRING DIAGRAM DETAILS.
22. RS EXISTING TYPE III-AF SERVICE EQUIPMENT ENCLOSURE AND INSTALL NEW TYPE III-AF SERVICE EQUIPMENT ENCLOSURE WITH "TIME OF USE" METER ON EXISTING FOUNDATION. THE NEW TYPE III-AF SHALL HAVE THE SAME FOOTING SIZE AS THE EXISTING TYPE III-AF. SEE SHEET E-39 FOR SERVICE EQUIPMENT AND TYPICAL WIRING DIAGRAM DETAILS.
23. NOT USE.
24. INSTALL No. 9 STRUCTURE PULL BOX TO CONCRETE BARRIER. SEE STANDARD PLANS ON B11-56.
25. INSTALL No. 9 STRUCTURE PULL BOX TO TYPE 60D CONCRETE BARRIER. SEE DETAILS ON SHEET E-41.
26. BORE 4" STEEL CASING PIPE, PLACE CONDUIT IN STEEL CASING AND FILL WITH CONCRETE. COORDINATE CONDUIT DEPTH WITH E-BART BARRIER DETAILS.
27. INSTALL INTEGRATED CCTV CAMERA UNIT ON CCTV 45' POLE. SEE STANDARD PLAN ES-16A, SHEETS E-43 TO E-45 FOR INSTALLATION DETAILS.
28. INSTALL TYPE B TELEPHONE DEMARCATION CABINET PER STANDARD PLANS RSP ES-3E. SEE SHEET E-49 AND E-50 FOR TDC WIRING DETAILS.
29. INSTALL STATE-FURNISHED CCTV ROUTER IN CONTRACTOR-FURNISHED MODEL 334 CABINET. INSTALL CONTRACTOR-FURNISHED GPRS WIRELESS MODEM, VEU, CCU, INPUT FILE AND PDA PER DETAILS ON SHEETS E-36, E-44 AND E-45.
30. INSTALL CONCRETE PAD WITH THREE No. 5 AND ONE No. 5(T) PULL BOXES. SEE SHEET E-40 FOR INSTALLATION DETAILS.
31. INSTALL 18" STEEL PIPE SLEEVE WITH 3-3"C Dia RIGID STEEL CONDUIT, 1-2"C Dia RIGID STEEL CONDUIT, AND 1-5"C Dia PVC WITH 3" Dia PVC INSIDE. SEE SHEET E-40 FOR INSTALLATION DETAILS.
32. INSTALL 18" X 18" CONCRETE ENCASEMENT WITH 3-3"C Dia RIGID STEEL CONDUIT, 1-2"C Dia RIGID STEEL CONDUIT, AND 1-5"C Dia PVC WITH 3" Dia PVC INSIDE. SEE SHEET E-40 FOR INSTALLATION DETAILS.
33. 2"C, 2#10 (120 V "METER ON" SIGN), 2#6 (120 V RAMP METER CONTROLLER NORTH), 3 DLC.
34. CABINET SHALL BE INSTALLED ADJACENT TO THE BACK OF SIDEWALK.
35. INSTALL STATE-FURNISHED MODEL 170E CONTROLLER UNIT IN CONTRACTOR-FURNISHED MODEL 334 CABINET. INSTALL CONTRACTOR-FURNISHED GPRS WIRELESS MODEM PER DETAILS ON SHEET E-36.
36. 3"C, 2#6 (240 V HIGHWAY LIGHTING), 2#8 (240 V SIGN LIGHTING), 2#14 (120 V SIGN TEST SWITCH).
37. INSTALL CONDUIT RUN IN BRIDGE UTILITY OPENING PER STANDARD PLANS B14-3. CONDUIT BENDS SHALL BE 45 DEGREE OR LESS AS MEASURED FROM HORIZONTAL.
38. 4-1½"C, MT (FUTURE FO CONDUIT), TYPE B. SEE DETAILS ON SHEET E-48, AND E-51 AND FOR TRENCH AND INSTALLATION DETAILS.
39. INSTALL CONDUIT THROUGH UTILITY OPENING IN STEM OF RETAINING WALL PER STANDARD PLANS B3-9.
40. INSTALL CITY-FURNISHED MODEL 170E CONTROLLER ASSEMBLY WITH CITY-FURNISHED MODEL 332A CABINET.
41. RELOCATE EXISTING WVDS POLE TYPE VDS-40 STANDARD AND ACCESS POINT EQUIPMENT PER DETAILS ON SHEET E-56.
42. REPLACE VEHICLE SENSOR NODES PER DETAILS ON SHEET E-55.
43. RELOCATE EXISTING WVDS POLE TYPE 15TS STANDARD AND REPEATER EQUIPMENT.
44. 2"C, 2#6 (120 V RAMP METER CONTROLLER NORTH), 2#6 (EMS CONTROLLER), 2#6 (120 V CCTV CONTROLLER).
45. 2"C, 1 TC
46. 2"C, 2 TC
47. 3"C, 1 TC
48. 3"C, 2 TC
49. 3"C, 3 TC
50. INSTALL R49(CA) ON TYPE 1 PEDESTRIAN BARRICADE.
51. LOCATIONS OF EXISTING VEHICLE NODE SENSORS AND POLE LOCATIONS ARE APPROXIMATE ONLY.
52. INSTALL PULL BOX ADJACENT TO WALL.
53. INSTALL CONTRACTOR-FURNISHED MODEL 170E CONTROLLER ASSEMBLY WITH CONTRACTOR-FURNISHED MODEL 332A CABINET ON NEW FOUNDATION PER STANDARD PLAN ES-3C.

INDEX OF ELECTRICAL PLANS, GENERAL NOTES, LEGEND, AND PROJECT NOTES

E-2

REVISED BY	DATE REVISED
CC	8/9/11

DAVID SETO — ALLAN MORRIS
CALCULATED-DESIGNED BY — CHECKED BY
CONSULTANT FUNCTIONAL SUPERVISOR — HATEM AHMED

STATE OF CALIFORNIA - DEPARTMENT OF TRANSPORTATION
Caltrans

LAST REVISION 8-9-11
DATE PLOTTED => 19-JAN-2012
TIME PLOTTED => 08:41

Dist	COUNTY	ROUTE	POST MILES TOTAL PROJECT	SHEET No.	TOTAL SHEETS
04	CC	4	27.3/R29.0	519	950

REGISTERED ELECTRICAL ENGINEER 8/9/11 DATE

1-17-12
PLANS APPROVAL DATE

REGISTERED PROFESSIONAL ENGINEER ALLAN RAY MORRIS No. 16958 Exp. 6/30/13 ELECTRICAL STATE OF CALIFORNIA

THE STATE OF CALIFORNIA OR ITS OFFICERS OR AGENTS SHALL NOT BE RESPONSIBLE FOR THE ACCURACY OR COMPLETENESS OF SCANNED COPIES OF THIS PLAN SHEET.

T Y LIN INTERNATIONAL
2010 CROW CANYON PLACE, SUITE 350
SAN RAMON, CA 94583

CCTA
2999 OAK ROAD, SUITE 100
WALNUT CREEK, CA 94597

NOTE:

FOR ACCURATE RIGHT OF WAY DATA, CONTACT RIGHT OF WAY ENGINEERING AT THE DISTRICT OFFICE.

EQUIPMENT TO BE REMOVED AND SALVAGED

5 - TYPE 30 STANDARDS

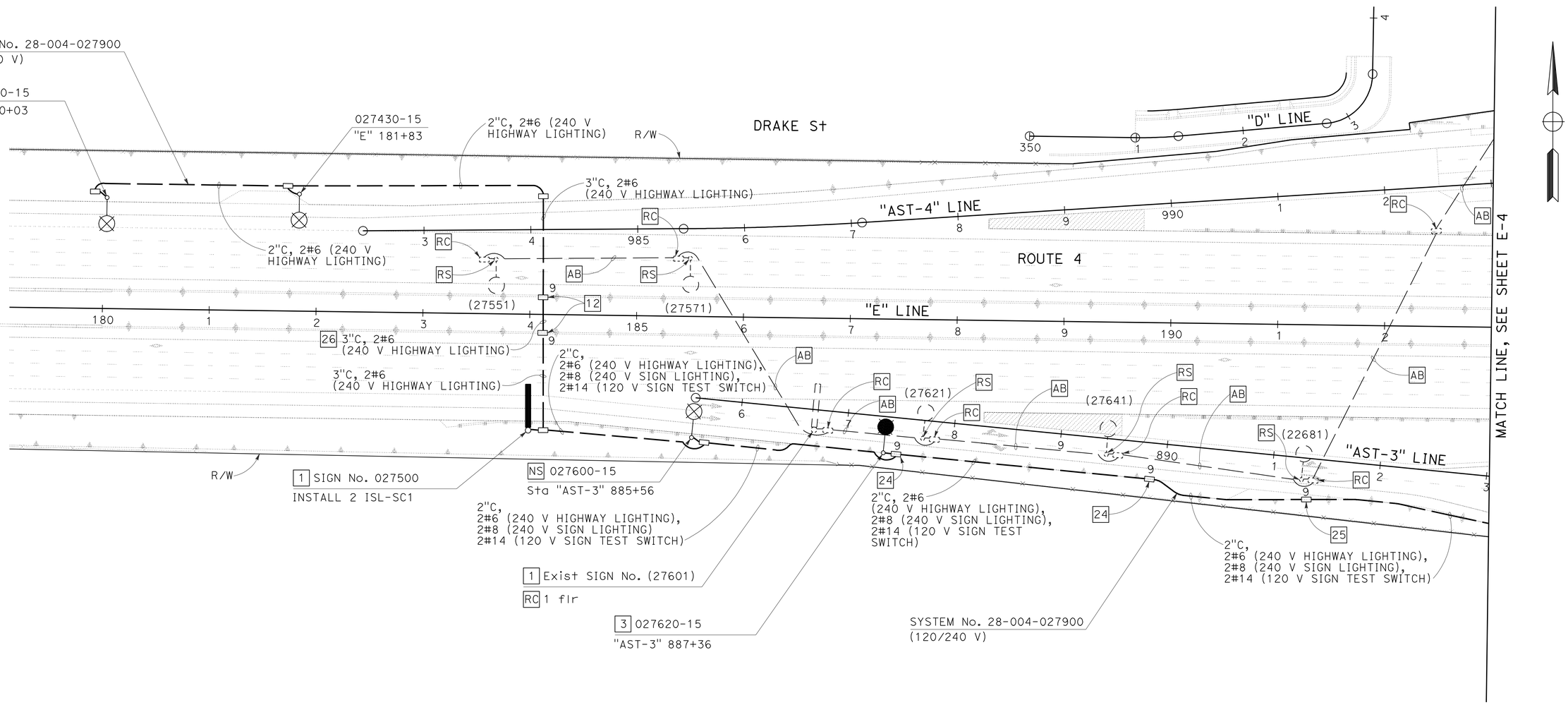

FOR NOTES, ABBREVIATIONS AND LEGEND, SEE SHEETS E-1 AND E-2

THIS PLAN IS ACCURATE FOR ELECTRICAL WORK ONLY

LIGHTING AND SIGN ILLUMINATION

SCALE: 1" = 50'

E-3

STATE OF CALIFORNIA - DEPARTMENT OF TRANSPORTATION

Caltrans

CONSULTANT FUNCTIONAL SUPERVISOR: HATEM AHMED

CALCULATED-DESIGNED BY: DAVID SETO

CHECKED BY: ALLAN MORRIS

REVISED BY: CC

DATE REVISED: 8/9/11

LAST REVISION 8-9-11

DATE PLOTTED => 19-JAN-2012
TIME PLOTTED => 08:41

Dist	COUNTY	ROUTE	POST MILES TOTAL PROJECT	SHEET No.	TOTAL SHEETS
04	CC	4	27.3/R29.0	520	950

REGISTERED ELECTRICAL ENGINEER 8/9/11 DATE

1-17-12
PLANS APPROVAL DATE

REGISTERED PROFESSIONAL ENGINEER ALLAN RAY MORRIS No. 16958 Exp. 6/30/13 ELECTRICAL STATE OF CALIFORNIA

THE STATE OF CALIFORNIA OR ITS OFFICERS OR AGENTS SHALL NOT BE RESPONSIBLE FOR THE ACCURACY OR COMPLETENESS OF SCANNED COPIES OF THIS PLAN SHEET.

T Y LIN INTERNATIONAL
2010 CROW CANYON PLACE, SUITE 350
SAN RAMON, CA 94583

CCTA
2999 OAK ROAD, SUITE 100
WALNUT CREEK, CA 94597

NOTE:

FOR ACCURATE RIGHT OF WAY DATA, CONTACT RIGHT OF WAY ENGINEERING AT THE DISTRICT OFFICE.

Exist SYSTEM No. 28-004-27711 (120/240 V)
Exist TYPE F SERVICE (120/240 V)
Exist LOAD:
5-310 W HPS LUMINAIRE
318 W FLUORESCENT SIGN LIGHTING
RC SYSTEM No. 28-004-27711
RC TYPE F SERVICE

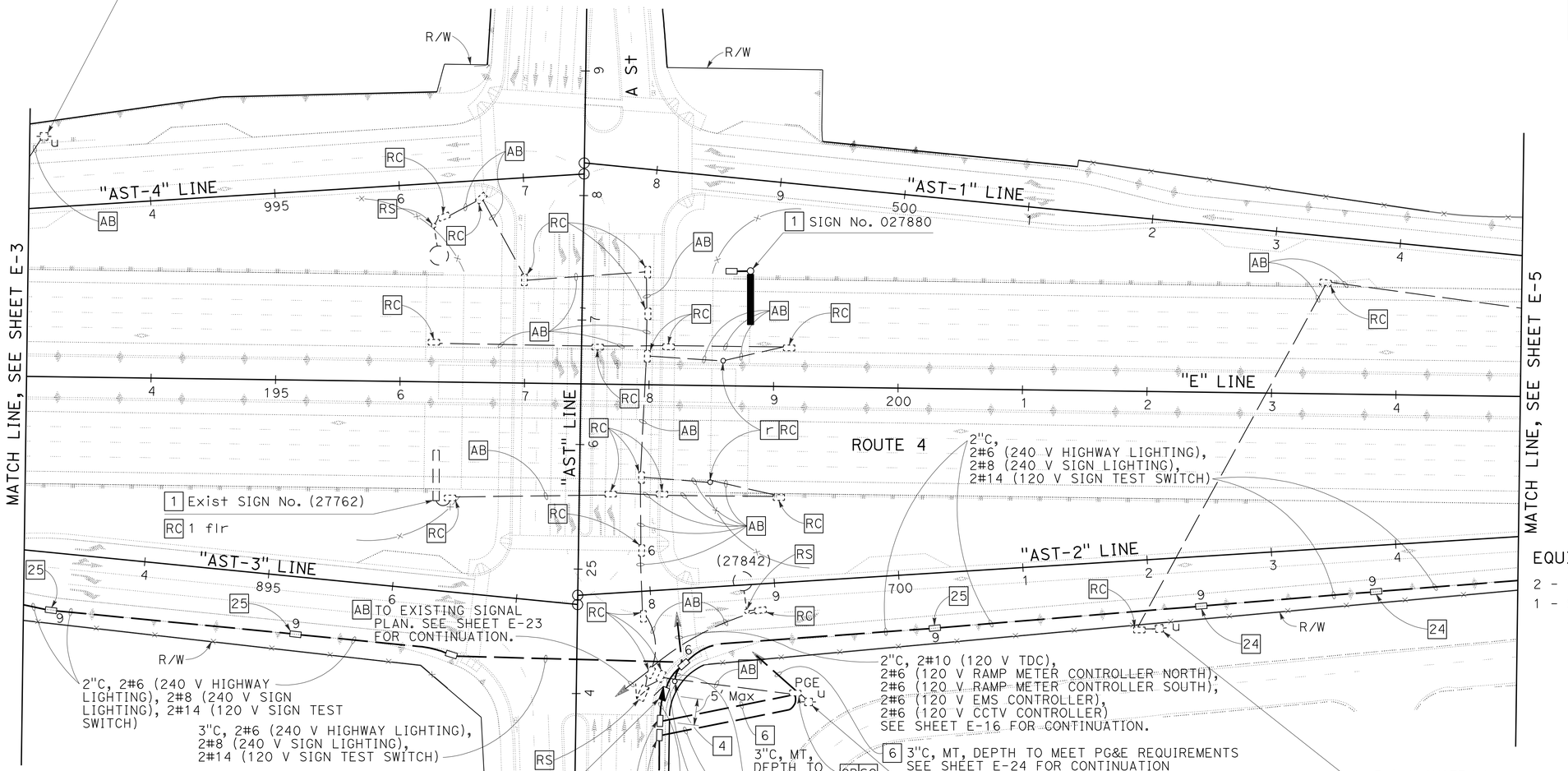

EQUIPMENT TO BE REMOVED AND SALVAGED

2 - TYPE 30 STANDARD
1 - SERVICE EQUIPMENT ENCLOSURE

FOR NOTES, ABBREVIATIONS AND LEGEND, SEE SHEETS E-1 AND E-2

THIS PLAN IS ACCURATE FOR ELECTRICAL WORK ONLY

LIGHTING AND SIGN ILLUMINATION

SCALE: 1" = 50'

E-4

REVISED BY	DATE REVISED
CC	8/9/11

CALCULATED-DESIGNED BY: DAVID SETO
CHECKED BY: ALLAN MORRIS
CONSULTANT FUNCTIONAL SUPERVISOR: HATEM AHMED

STATE OF CALIFORNIA - DEPARTMENT OF TRANSPORTATION
Caltrans

LAST REVISION 8-9-11
DATE PLOTTED => 19-JAN-2012
TIME PLOTTED => 08:41

Dist	COUNTY	ROUTE	POST MILES TOTAL PROJECT	SHEET No.	TOTAL SHEETS
04	CC	4	27.3/R29.0	521	950

REGISTERED ELECTRICAL ENGINEER 8/9/11 DATE

1-17-12
PLANS APPROVAL DATE

REGISTERED PROFESSIONAL ENGINEER
ALLAN RAY MORRIS
No. 16958
Exp. 6/30/13
ELECTRICAL
STATE OF CALIFORNIA

THE STATE OF CALIFORNIA OR ITS OFFICERS OR AGENTS SHALL NOT BE RESPONSIBLE FOR THE ACCURACY OR COMPLETENESS OF SCANNED COPIES OF THIS PLAN SHEET.

T Y LIN INTERNATIONAL
2010 CROW CANYON PLACE, SUITE 350
SAN RAMON, CA 94583

CCTA
2999 OAK ROAD, SUITE 100
WALNUT CREEK, CA 94597

NOTE:

FOR ACCURATE RIGHT OF WAY DATA, CONTACT RIGHT OF WAY ENGINEERING AT THE DISTRICT OFFICE.

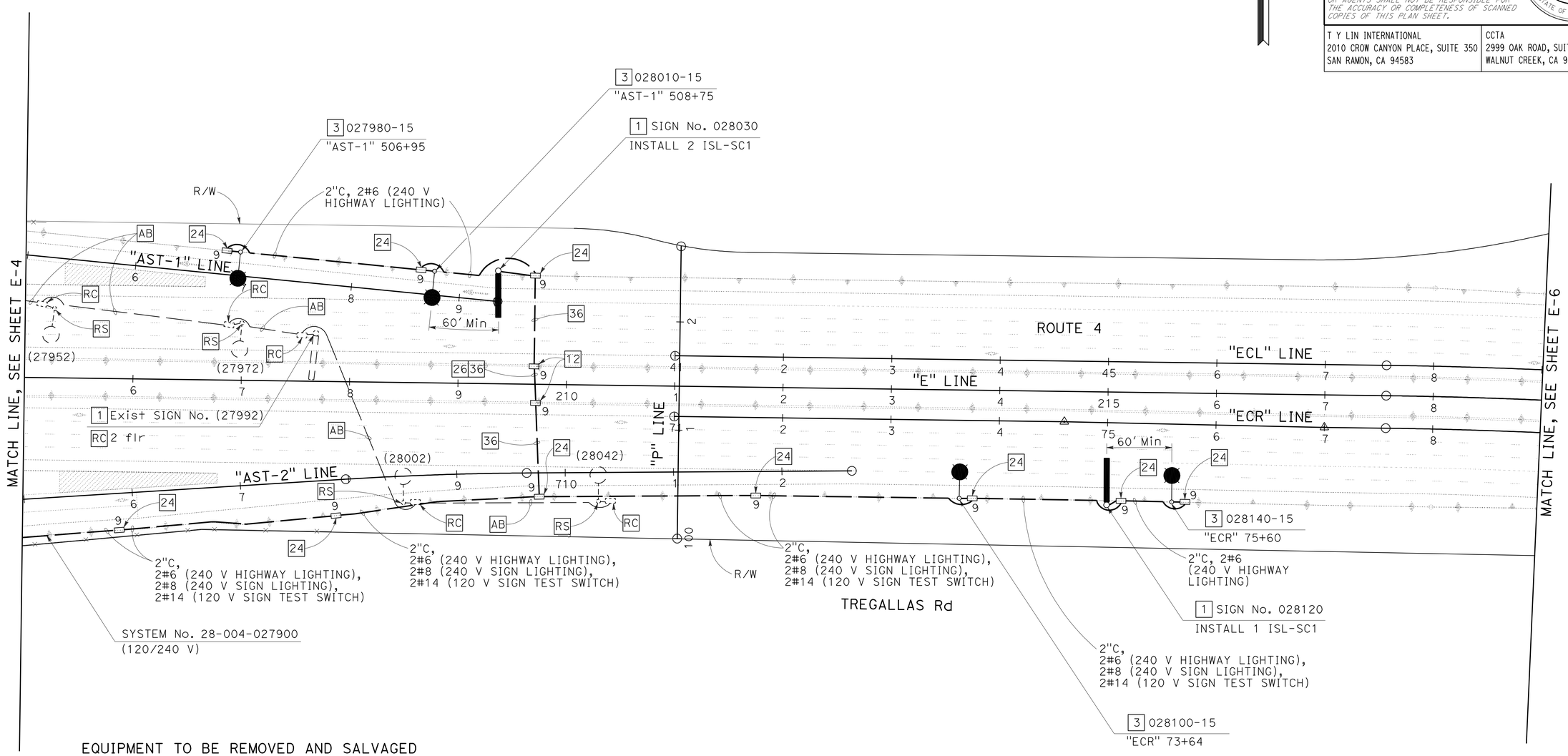

EQUIPMENT TO BE REMOVED AND SALVAGED

4 - TYPE 30 STANDARD

FOR NOTES, ABBREVIATIONS AND LEGEND, SEE SHEETS E-1 AND E-2

THIS PLAN IS ACCURATE FOR ELECTRICAL WORK ONLY

LIGHTING AND SIGN ILLUMINATION

SCALE: 1" = 50'

E-5

REVISED BY	DATE REVISED
CC	8/9/11

CALCULATED-DESIGNED BY: DAVID SETO
CHECKED BY: ALLAN MORRIS
CONSULTANT FUNCTIONAL SUPERVISOR: HATEM AHMED

STATE OF CALIFORNIA - DEPARTMENT OF TRANSPORTATION
Caltrans

LAST REVISION 8-9-11
DATE PLOTTED => 19-JAN-2012
TIME PLOTTED => 08:41

Dist	COUNTY	ROUTE	POST MILES TOTAL PROJECT	SHEET No.	TOTAL SHEETS
04	CC	4	27.3/R29.0	522	950

REGISTERED ELECTRICAL ENGINEER 8/9/11 DATE

1-17-12
PLANS APPROVAL DATE

REGISTERED PROFESSIONAL ENGINEER
ALLAN RAY MORRIS
No. 16958
Exp. 6/30/13
ELECTRICAL
STATE OF CALIFORNIA

THE STATE OF CALIFORNIA OR ITS OFFICERS OR AGENTS SHALL NOT BE RESPONSIBLE FOR THE ACCURACY OR COMPLETENESS OF SCANNED COPIES OF THIS PLAN SHEET.

T Y LIN INTERNATIONAL
2010 CROW CANYON PLACE, SUITE 350
SAN RAMON, CA 94583

CCTA
2999 OAK ROAD, SUITE 100
WALNUT CREEK, CA 94597

NOTE:

FOR ACCURATE RIGHT OF WAY DATA, CONTACT RIGHT OF WAY ENGINEERING AT THE DISTRICT OFFICE.

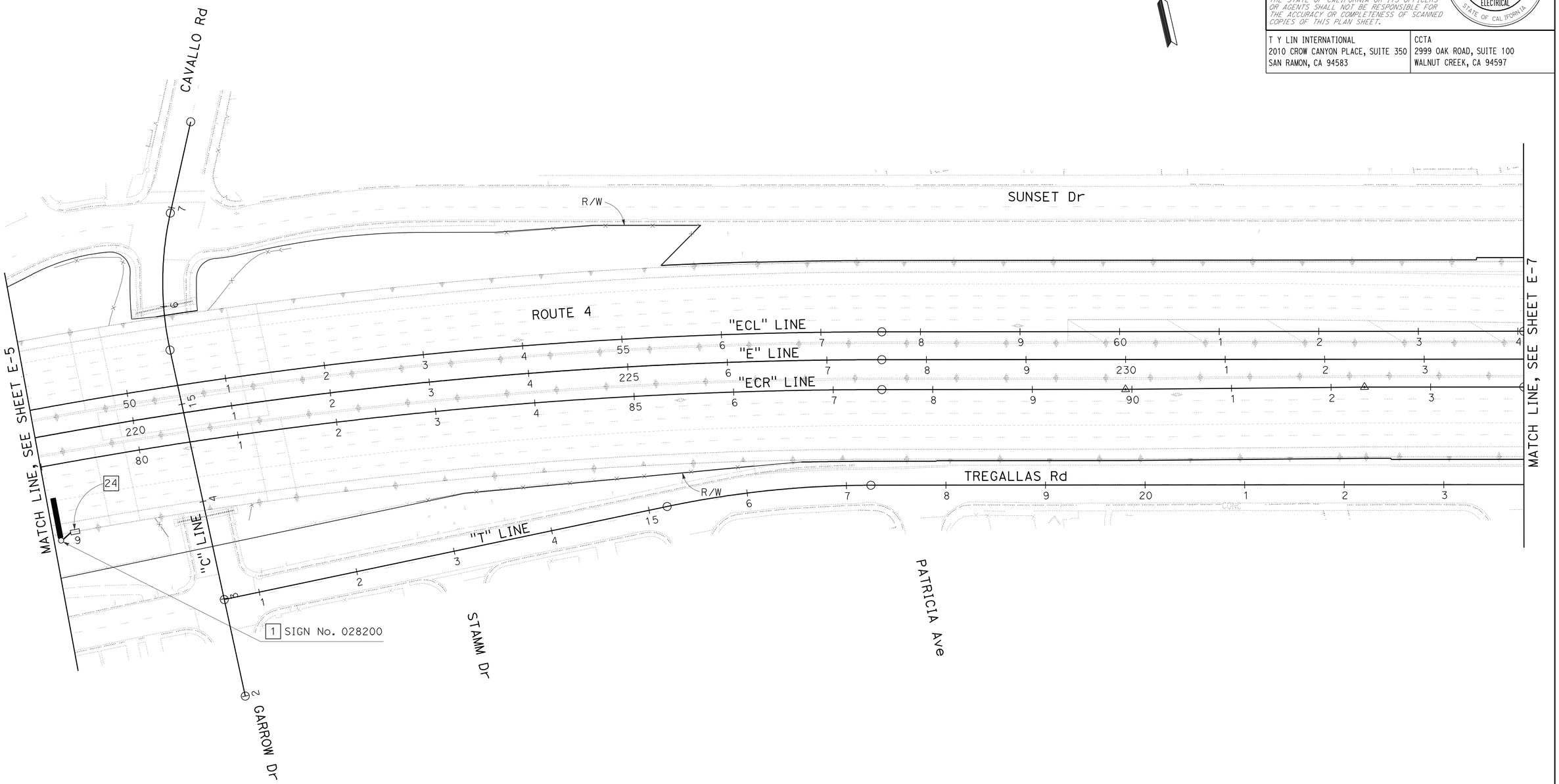

FOR NOTES, ABBREVIATIONS AND LEGEND, SEE SHEETS E-1 AND E-2

THIS PLAN IS ACCURATE FOR ELECTRICAL WORK ONLY

LIGHTING AND SIGN ILLUMINATION

SCALE: 1" = 50'

E-6

STATE OF CALIFORNIA - DEPARTMENT OF TRANSPORTATION

Caltrans

CONSULTANT FUNCTIONAL SUPERVISOR: HATEM AHMED

CALCULATED-DESIGNED BY: DAVID SETO

CHECKED BY: ALLAN MORRIS

REVISED BY: CC

DATE REVISED: 8/9/11

LAST REVISION

DATE PLOTTED => 19-JAN-2012

TIME PLOTTED => 08:41

Dist	COUNTY	ROUTE	POST MILES TOTAL PROJECT	SHEET No.	TOTAL SHEETS
04	CC	4	27.3/R29.0	523	950

REGISTERED ELECTRICAL ENGINEER 8/9/11 DATE

1-17-12
PLANS APPROVAL DATE

REGISTERED PROFESSIONAL ENGINEER
ALLAN RAY MORRIS
No. 16958
Exp. 6/30/13
ELECTRICAL
STATE OF CALIFORNIA

THE STATE OF CALIFORNIA OR ITS OFFICERS OR AGENTS SHALL NOT BE RESPONSIBLE FOR THE ACCURACY OR COMPLETENESS OF SCANNED COPIES OF THIS PLAN SHEET.

T Y LIN INTERNATIONAL
2010 CROW CANYON PLACE, SUITE 350
SAN RAMON, CA 94583

CCTA
2999 OAK ROAD, SUITE 100
WALNUT CREEK, CA 94597

NOTE:

FOR ACCURATE RIGHT OF WAY DATA, CONTACT RIGHT OF WAY ENGINEERING AT THE DISTRICT OFFICE.

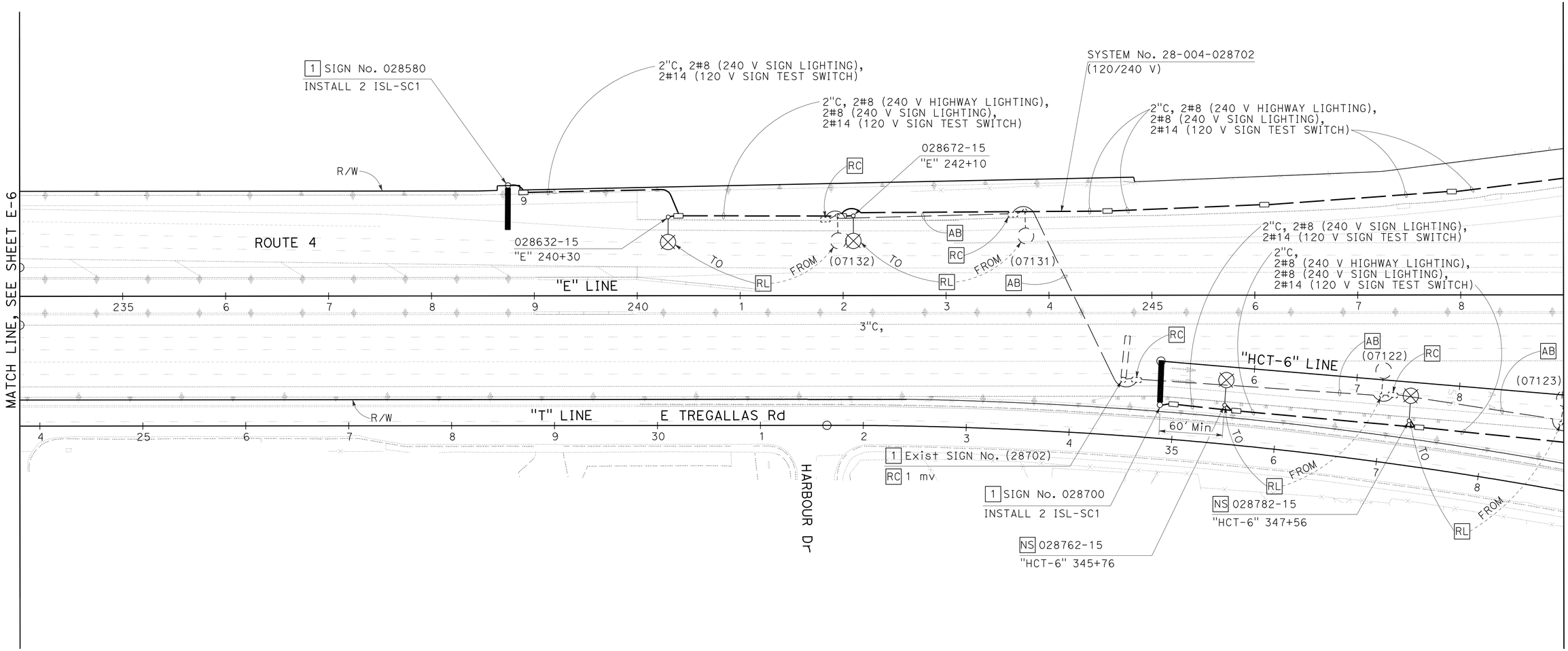

FOR NOTES, ABBREVIATIONS AND LEGEND, SEE SHEETS E-1 AND E-2

THIS PLAN IS ACCURATE FOR ELECTRICAL WORK ONLY

LIGHTING AND SIGN ILLUMINATION

SCALE: 1" = 50'

E-7

CC	8/9/11	DAVID SETO	ALLAN MORRIS
REVISED BY	DATE REVISED	CALCULATED-DESIGNED BY	CHECKED BY

CONSULTANT FUNCTIONAL SUPERVISOR: HATEM AHMED

STATE OF CALIFORNIA - DEPARTMENT OF TRANSPORTATION

Caltrans

LAST REVISION 8-9-11 | DATE PLOTTED => 19-JAN-2012 | TIME PLOTTED => 08:41

BORDER LAST REVISED 7/2/2010 | USERNAME => s114640 | DGN FILE => 0400021080ua007.dgn | RELATIVE BORDER SCALE IS IN INCHES 0 1 2 3 | UNIT 4275 | PROJECT NUMBER & PHASE 04000210801

Dist	COUNTY	ROUTE	POST MILES TOTAL PROJECT	SHEET No.	TOTAL SHEETS
04	CC	4	27.3/R29.0	524	950

REGISTERED ELECTRICAL ENGINEER 8/9/11 DATE

1-17-12
PLANS APPROVAL DATE

REGISTERED PROFESSIONAL ENGINEER ALLAN RAY MORRIS No. 16958 Exp. 6/30/13 ELECTRICAL STATE OF CALIFORNIA

THE STATE OF CALIFORNIA OR ITS OFFICERS OR AGENTS SHALL NOT BE RESPONSIBLE FOR THE ACCURACY OR COMPLETENESS OF SCANNED COPIES OF THIS PLAN SHEET.

T Y LIN INTERNATIONAL
2010 CROW CANYON PLACE, SUITE 350
SAN RAMON, CA 94583

CCTA
2999 OAK ROAD, SUITE 100
WALNUT CREEK, CA 94597

NOTE:

FOR ACCURATE RIGHT OF WAY DATA, CONTACT RIGHT OF WAY ENGINEERING AT THE DISTRICT OFFICE.

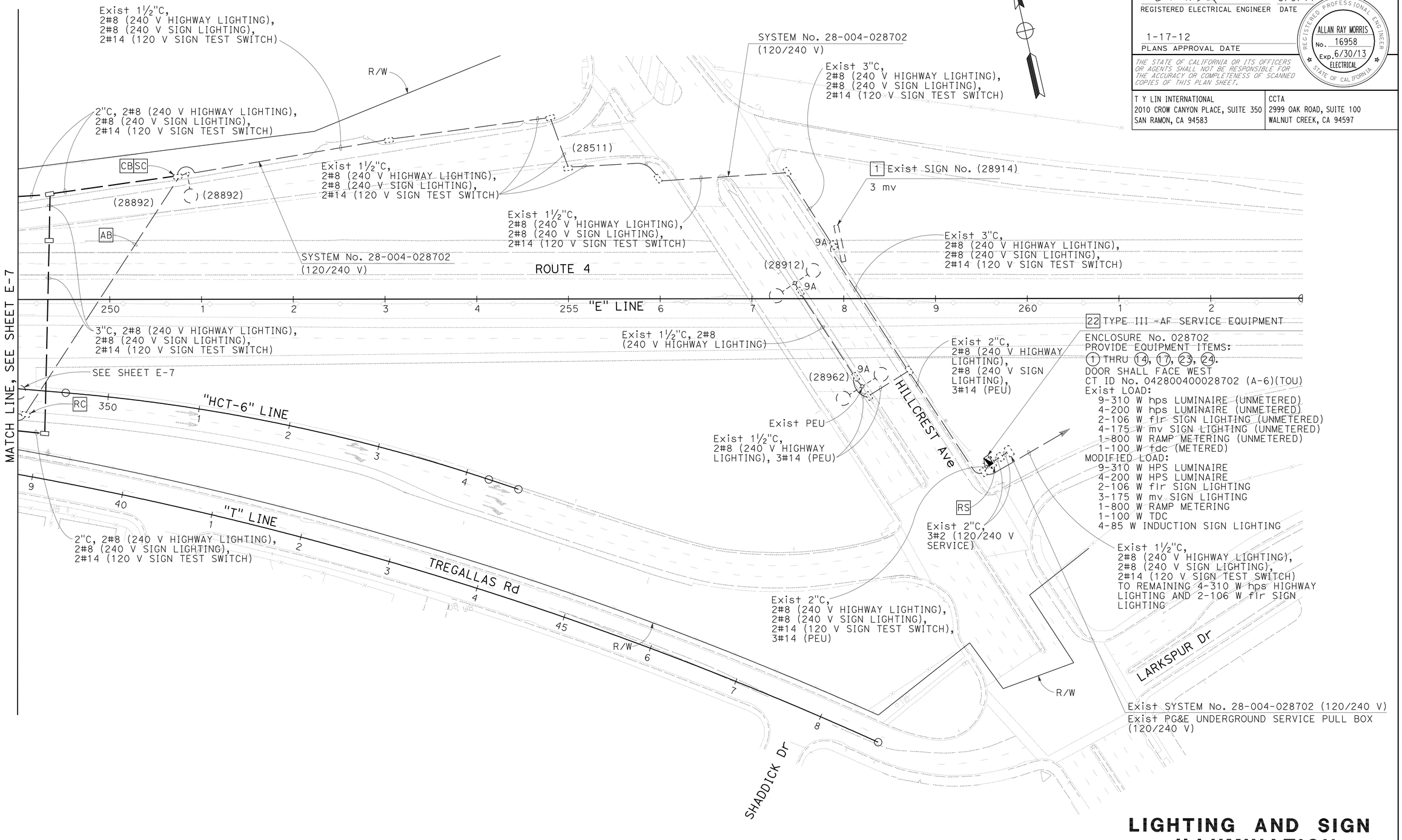

LIGHTING AND SIGN ILLUMINATION

SCALE: 1" = 50'

E-8

FOR NOTES, ABBREVIATIONS AND LEGEND, SEE SHEETS E-1 AND E-2

THIS PLAN IS ACCURATE FOR ELECTRICAL WORK ONLY

REVISED BY	DATE REVISED
CC	8/9/11

DAVID SETO — ALLAN MORRIS — CALCULATED-DESIGNED BY — CHECKED BY

CONSULTANT FUNCTIONAL SUPERVISOR: HATEM AHMED

STATE OF CALIFORNIA - DEPARTMENT OF TRANSPORTATION

Caltrans

LAST REVISION 8-9-11 — DATE PLOTTED => 19-JAN-2012 — TIME PLOTTED => 08:41

Dist	COUNTY	ROUTE	POST MILES TOTAL PROJECT	SHEET No.	TOTAL SHEETS
04	CC	4	27.3/R29.0	525	950

REGISTERED ELECTRICAL ENGINEER 8/9/11 DATE

1-17-12
PLANS APPROVAL DATE

REGISTERED PROFESSIONAL ENGINEER ALLAN RAY MORRIS No. 16958 Exp. 6/30/13 ELECTRICAL STATE OF CALIFORNIA

THE STATE OF CALIFORNIA OR ITS OFFICERS OR AGENTS SHALL NOT BE RESPONSIBLE FOR THE ACCURACY OR COMPLETENESS OF SCANNED COPIES OF THIS PLAN SHEET.

T Y LIN INTERNATIONAL
2010 CROW CANYON PLACE, SUITE 350
SAN RAMON, CA 94583

CCTA
2999 OAK ROAD, SUITE 100
WALNUT CREEK, CA 94597

NOTE:

FOR ACCURATE RIGHT OF WAY DATA, CONTACT RIGHT OF WAY ENGINEERING AT THE DISTRICT OFFICE.

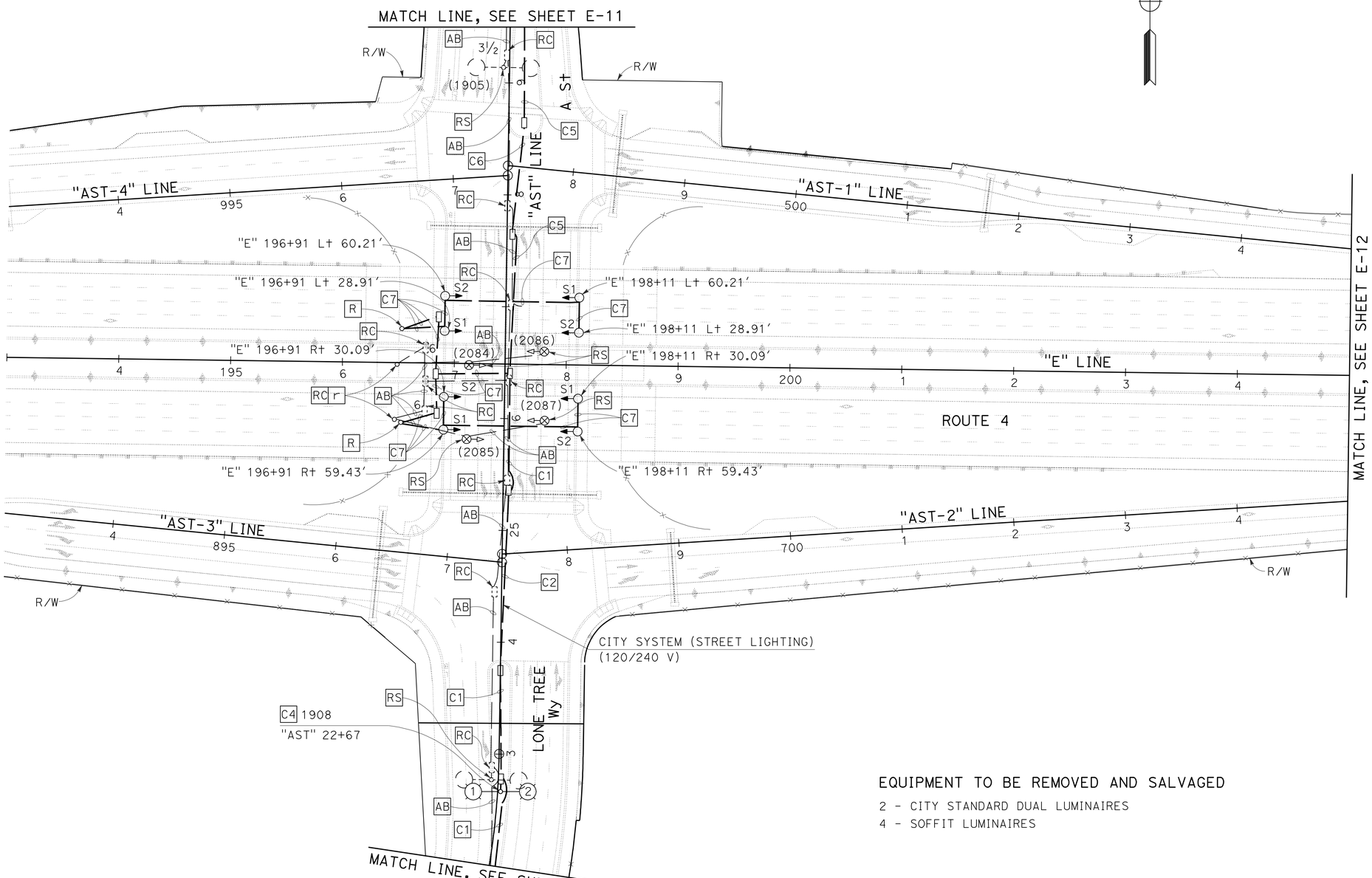

PROJECT NOTES (CITY):

- C1 2"C, 3#6 (120 V STREET LIGHTING).
- C2 3"C, 3#6 (120 V STREET LIGHTING).
- C3 INSTALL 120 W FLUORESCENT PUC FIXTURE PER STANDARD DETAIL ES-12B.
- C4 INSTALL CITY STANDARD DUAL 120 W LUMINAIRE ON NEW FOUNDATION, PER CITY OF ANTIOCH ELECTROLIER DETAIL CD-79, IN CENTER OF NEW MEDIAN.
- C5 2"C, 3#6 (120 V STREET LIGHTING), 3#8 (120 V SOFFIT LIGHTING).
- C6 3"C, 3#6 (120 V STREET LIGHTING), 3#8 (120 V SOFFIT LIGHTING).
- C7 2"C, 3#8 (120 V SOFFIT LIGHTING).
- C8 INSTALL CITY STANDARD SINGLE 120 W LUMINAIRE ON NEW FOUNDATION, PER CITY OF ANTIOCH ELECTROLIER DETAIL CD-79.
- C9 2"C, 2#6 (120 V STREET LIGHTING).
- C10 2"C, 2#8 (120 V SOFFIT LIGHTING).

GENERAL NOTES (CITY):

1. EXISTING LIGHTING CIRCUITS TO BE PRESERVED DURING CONSTRUCTION TO MINIMIZE TIME WITHOUT LIGHTING.
2. EXISTING LIGHTING CIRCUITS AND NEW AND RELOCATED LIGHTING CIRCUITS TO BE COORDINATED WITH CITY AND PG&E.

LEGEND (CITY):

- (1)—o—(2) DUAL 120 W LUMINAIRE WITH LUMINAIRE CIRCUIT NUMBER 1 AND 2.
- ▮# NEW 120 W FLUORESCENT LUMINAIRE WITH LUMINAIRE CIRCUIT NUMBER
- o—(#) NEW SINGLE 120 W LUMINAIRE WITH LUMINAIRE CIRCUIT NUMBER
- EXISTING 120 W FLUORESCENT LUMINAIRE

EQUIPMENT TO BE REMOVED AND SALVAGED

2 - CITY STANDARD DUAL LUMINAIRES
4 - SOFFIT LUMINAIRES

LIGHTING (CITY STREET)

SCALE: 1" = 50'

E-9

FOR NOTES, ABBREVIATIONS AND LEGEND, SEE SHEETS E-1 AND E-2

THIS PLAN IS ACCURATE FOR ELECTRICAL WORK ONLY

STATE OF CALIFORNIA - DEPARTMENT OF TRANSPORTATION

Caltrans

CONSULTANT FUNCTIONAL SUPERVISOR: HATEM AHMED

CALCULATED-DESIGNED BY: DAVID SETO

CHECKED BY: ALLAN MORRIS

REVISED BY: CC

DATE REVISED: 8/9/11

LAST REVISION 8-9-11 DATE PLOTTED => 19-JAN-2012 TIME PLOTTED => 08:41

Dist	COUNTY	ROUTE	POST MILES TOTAL PROJECT	SHEET No.	TOTAL SHEETS
04	CC	4	27.3/R29.0	526	950

REGISTERED ELECTRICAL ENGINEER 8/9/11 DATE

1-17-12
PLANS APPROVAL DATE

REGISTERED PROFESSIONAL ENGINEER ALLAN RAY MORRIS No. 16958 Exp. 6/30/13 ELECTRICAL STATE OF CALIFORNIA

THE STATE OF CALIFORNIA OR ITS OFFICERS OR AGENTS SHALL NOT BE RESPONSIBLE FOR THE ACCURACY OR COMPLETENESS OF SCANNED COPIES OF THIS PLAN SHEET.

T Y LIN INTERNATIONAL
2010 CROW CANYON PLACE, SUITE 350
SAN RAMON, CA 94583

CCTA
2999 OAK ROAD, SUITE 100
WALNUT CREEK, CA 94597

NOTES:

1. SEE SHEET E-9 FOR PROJECT NOTES (CITY), GENERAL NOTES (CITY) AND LEGEND (CITY).
2. FOR ACCURATE RIGHT OF WAY DATA, CONTACT RIGHT OF WAY ENGINEERING AT THE DISTRICT OFFICE.

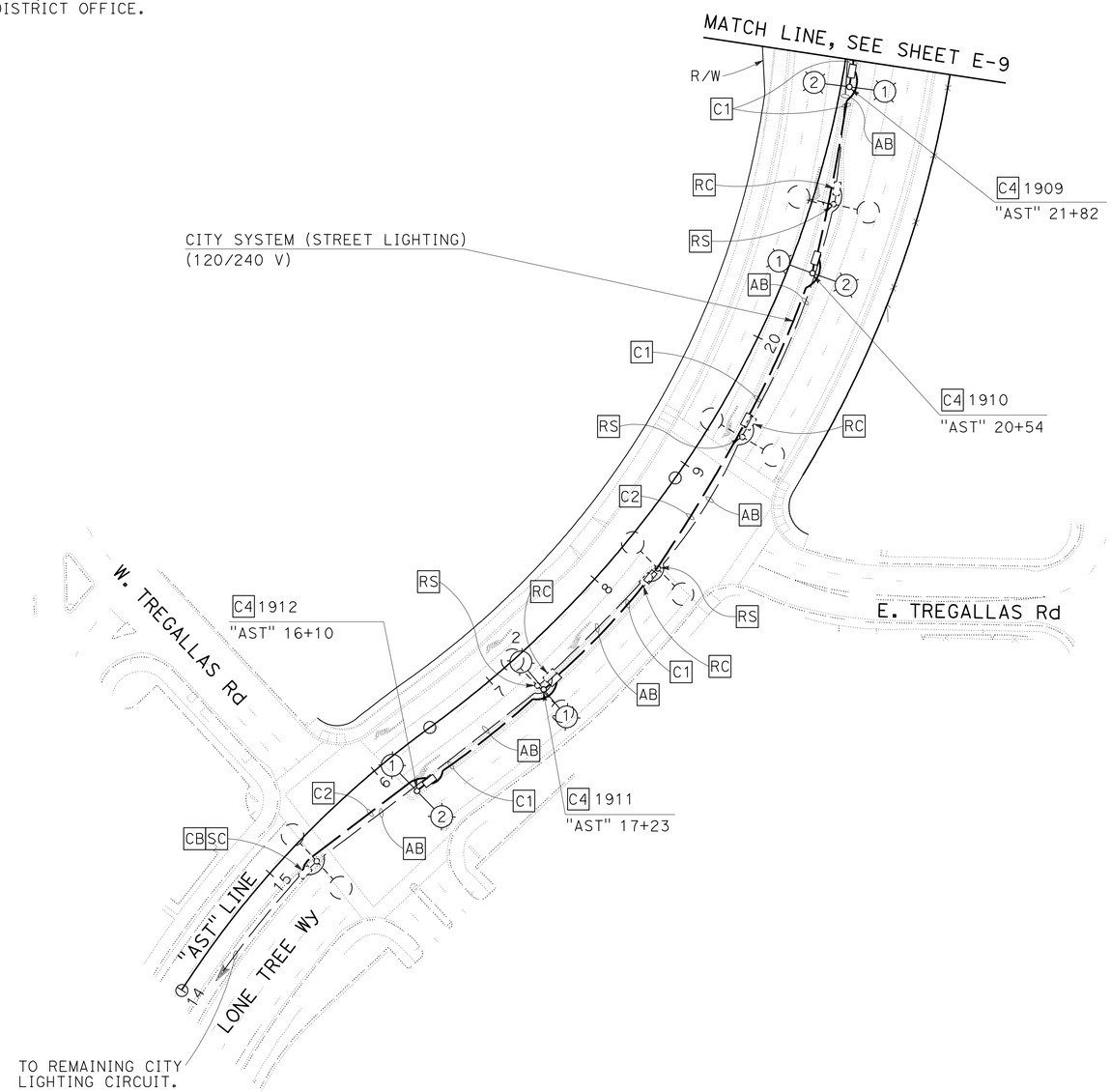

EQUIPMENT TO BE REMOVED AND SALVAGED
4 - CITY STANDARD DUAL LUMINAIRE

FOR NOTES, ABBREVIATIONS AND LEGEND, SEE SHEETS E-1 AND E-2

THIS PLAN IS ACCURATE FOR ELECTRICAL WORK ONLY

LIGHTING (CITY STREET)

SCALE: 1" = 50'

E-10

STATE OF CALIFORNIA - DEPARTMENT OF TRANSPORTATION
Caltrans

CONSULTANT FUNCTIONAL SUPERVISOR: HATEM AHMED
CALCULATED-DESIGNED BY: DAVID SETO
CHECKED BY: ALLAN MORRIS
REVISED BY: CC
DATE REVISED: 8/9/11

LAST REVISION 8-9-11
DATE PLOTTED => 19-JAN-2012
TIME PLOTTED => 08:41

Dist	COUNTY	ROUTE	POST MILES TOTAL PROJECT	SHEET No.	TOTAL SHEETS
04	CC	4	27.3/R29.0	527	950

REGISTERED ELECTRICAL ENGINEER — DATE 8/9/11

1-17-12
PLANS APPROVAL DATE

REGISTERED PROFESSIONAL ENGINEER — ALLAN RAY MORRIS — No. 16958 — Exp. 6/30/13 — ELECTRICAL — STATE OF CALIFORNIA

THE STATE OF CALIFORNIA OR ITS OFFICERS OR AGENTS SHALL NOT BE RESPONSIBLE FOR THE ACCURACY OR COMPLETENESS OF SCANNED COPIES OF THIS PLAN SHEET.

T Y LIN INTERNATIONAL
2010 CROW CANYON PLACE, SUITE 350
SAN RAMON, CA 94583

CCTA
2999 OAK ROAD, SUITE 100
WALNUT CREEK, CA 94597

NOTES:

1. SEE SHEET E-9 FOR PROJECT NOTES (CITY), GENERAL NOTES (CITY) AND LEGEND (CITY).
2. FOR ACCURATE RIGHT OF WAY DATA, CONTACT RIGHT OF WAY ENGINEERING AT THE DISTRICT OFFICE.

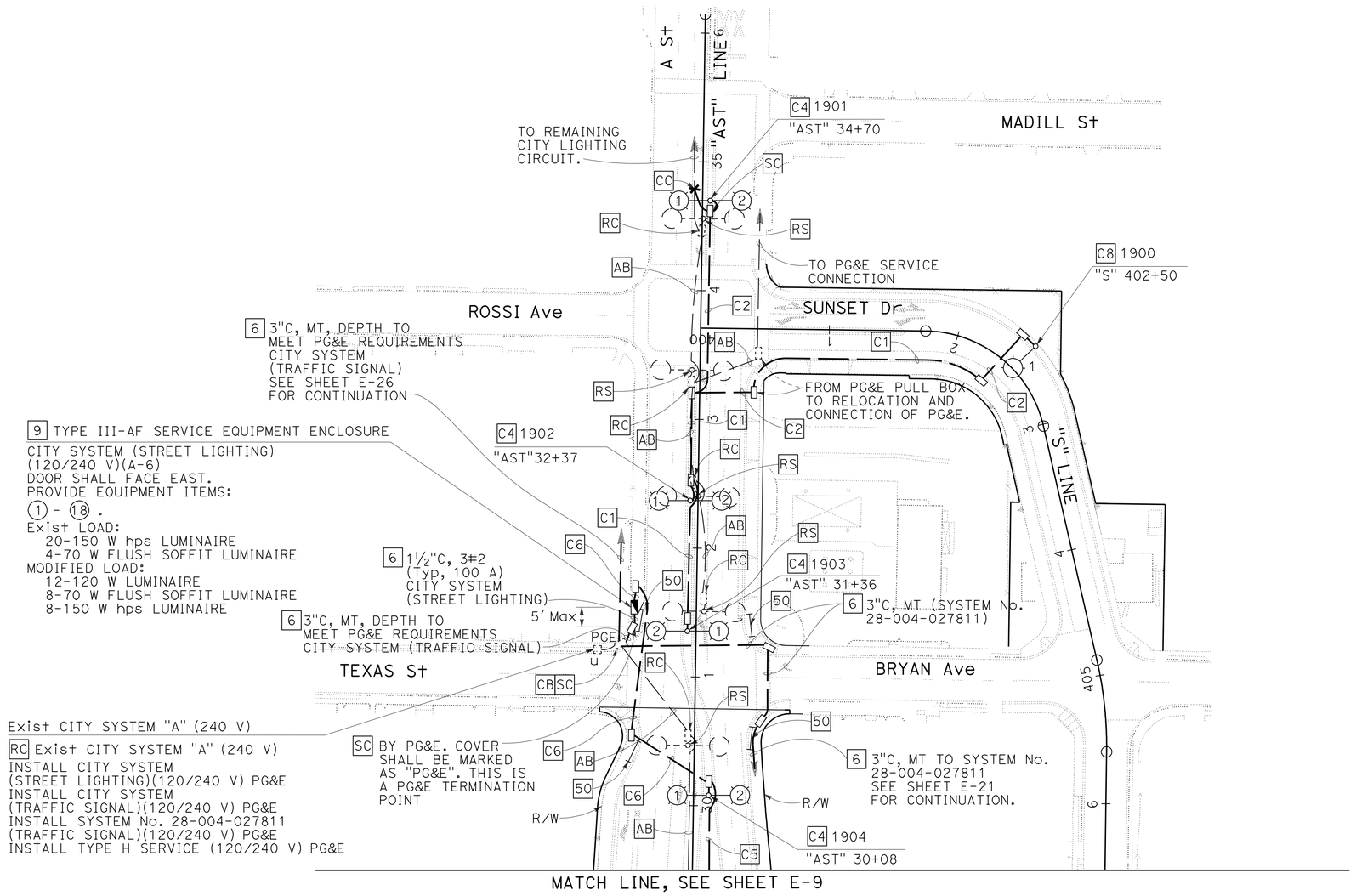

EQUIPMENT TO BE REMOVED AND SALVAGED
5 - CITY STANDARD DUAL LUMINAIRE

LIGHTING (CITY STREET)

SCALE: 1" = 50'

E-11

FOR NOTES, ABBREVIATIONS AND LEGEND, SEE SHEETS E-1 AND E-2

THIS PLAN IS ACCURATE FOR ELECTRICAL WORK ONLY

STATE OF CALIFORNIA - DEPARTMENT OF TRANSPORTATION — Caltrans

CONSULTANT FUNCTIONAL SUPERVISOR: HATEM AHMED

CALCULATED-DESIGNED BY: DAVID SETO — CHECKED BY: ALLAN MORRIS

REVISED BY: CC — DATE REVISED: 8/9/11

LAST REVISION 8-9-11 — DATE PLOTTED => 19-JAN-2012 — TIME PLOTTED => 08:41

Dist	COUNTY	ROUTE	POST MILES TOTAL PROJECT	SHEET No.	TOTAL SHEETS
04	CC	4	27.3/R29.0	528	950

REGISTERED ELECTRICAL ENGINEER 8/9/11 DATE

1-17-12
PLANS APPROVAL DATE

REGISTERED PROFESSIONAL ENGINEER
ALLAN RAY MORRIS
No. 16958
Exp. 6/30/13
ELECTRICAL
STATE OF CALIFORNIA

THE STATE OF CALIFORNIA OR ITS OFFICERS OR AGENTS SHALL NOT BE RESPONSIBLE FOR THE ACCURACY OR COMPLETENESS OF SCANNED COPIES OF THIS PLAN SHEET.

T Y LIN INTERNATIONAL
2010 CROW CANYON PLACE, SUITE 350
SAN RAMON, CA 94583

CCTA
2999 OAK ROAD, SUITE 100
WALNUT CREEK, CA 94597

NOTES:

1. SEE SHEET E-9 FOR PROJECT NOTES (CITY), GENERAL NOTES (CITY) AND LEGEND (CITY).
2. FOR ACCURATE RIGHT OF WAY DATA, CONTACT RIGHT OF WAY ENGINEERING AT THE DISTRICT OFFICE.

EQUIPMENT TO BE REMOVED AND SALVAGED

2 - CITY STANDARD SINGLE LUMINAIRE
9 - FLUORESCENT LUMINAIRE

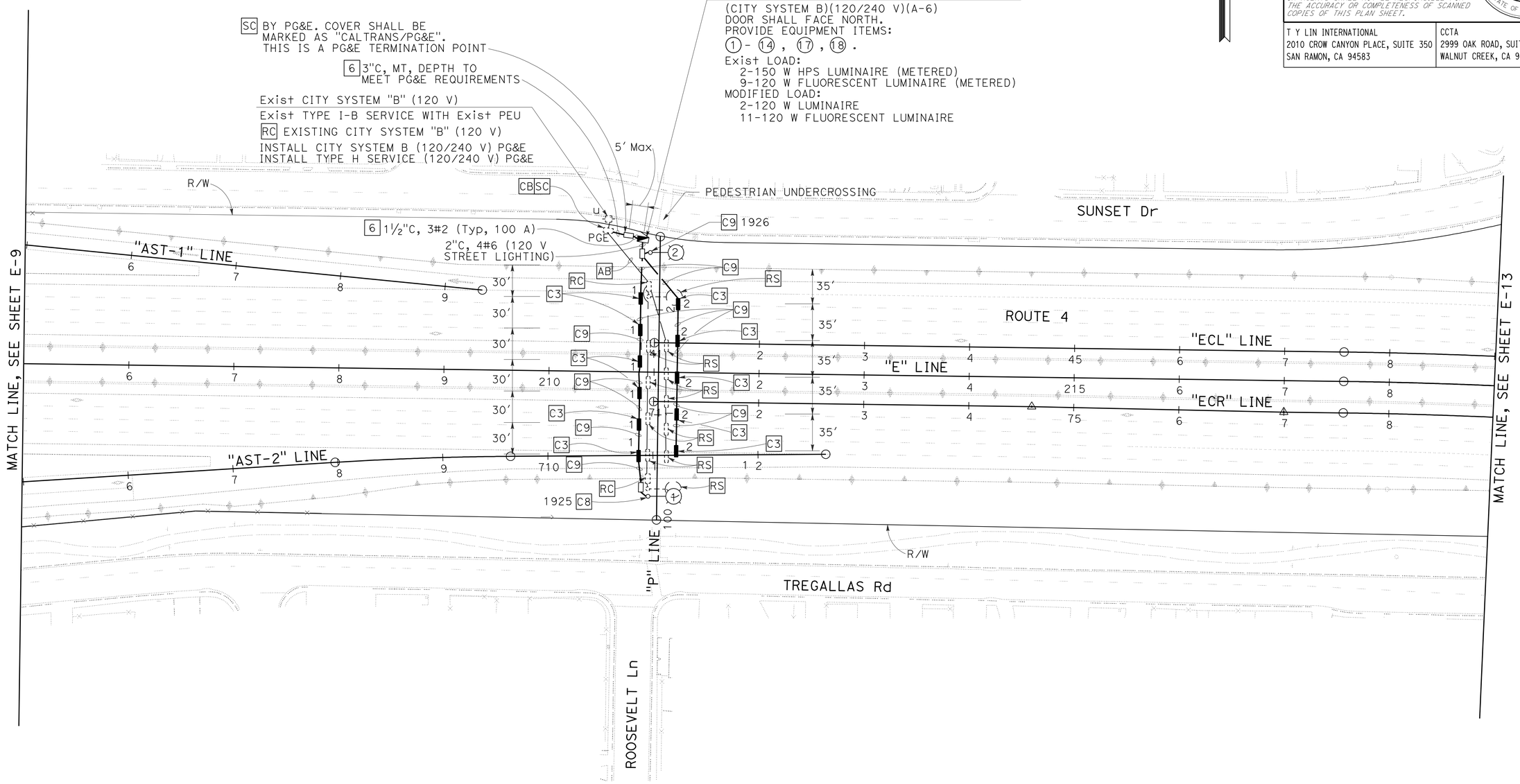

FOR NOTES, ABBREVIATIONS AND LEGEND, SEE SHEETS E-1 AND E-2

THIS PLAN IS ACCURATE FOR ELECTRICAL WORK ONLY

LIGHTING (CITY STREET)

SCALE: 1" = 50'

E-12

REVISED BY	DATE REVISED
CC	8/9/11

DAVID SETO — ALLAN MORRIS — CALCULATED-DESIGNED BY — CHECKED BY

CONSULTANT FUNCTIONAL SUPERVISOR: HATEM AHMED

STATE OF CALIFORNIA - DEPARTMENT OF TRANSPORTATION

Caltrans

LAST REVISION 8-9-11 — DATE PLOTTED => 19-JAN-2012 — TIME PLOTTED => 08:41

Dist	COUNTY	ROUTE	POST MILES TOTAL PROJECT	SHEET No.	TOTAL SHEETS
04	CC	4	27.3/R29.0	529	950

REGISTERED ELECTRICAL ENGINEER 8/9/11 DATE

1-17-12
PLANS APPROVAL DATE

REGISTERED PROFESSIONAL ENGINEER ALLAN RAY MORRIS No. 16958 Exp. 6/30/13 ELECTRICAL STATE OF CALIFORNIA

THE STATE OF CALIFORNIA OR ITS OFFICERS OR AGENTS SHALL NOT BE RESPONSIBLE FOR THE ACCURACY OR COMPLETENESS OF SCANNED COPIES OF THIS PLAN SHEET.

T Y LIN INTERNATIONAL
2010 CROW CANYON PLACE, SUITE 350
SAN RAMON, CA 94583

CCTA
2999 OAK ROAD, SUITE 100
WALNUT CREEK, CA 94597

NOTES:

1. SEE SHEET E-9 FOR PROJECT NOTES (CITY), GENERAL NOTES (CITY) AND LEGEND (CITY).
2. FOR ACCURATE RIGHT OF WAY DATA, CONTACT RIGHT OF WAY ENGINEERING AT THE DISTRICT OFFICE.

EQUIPMENT TO BE REMOVED AND SALVAGED

2 - SOFFIT LUMINAIRE

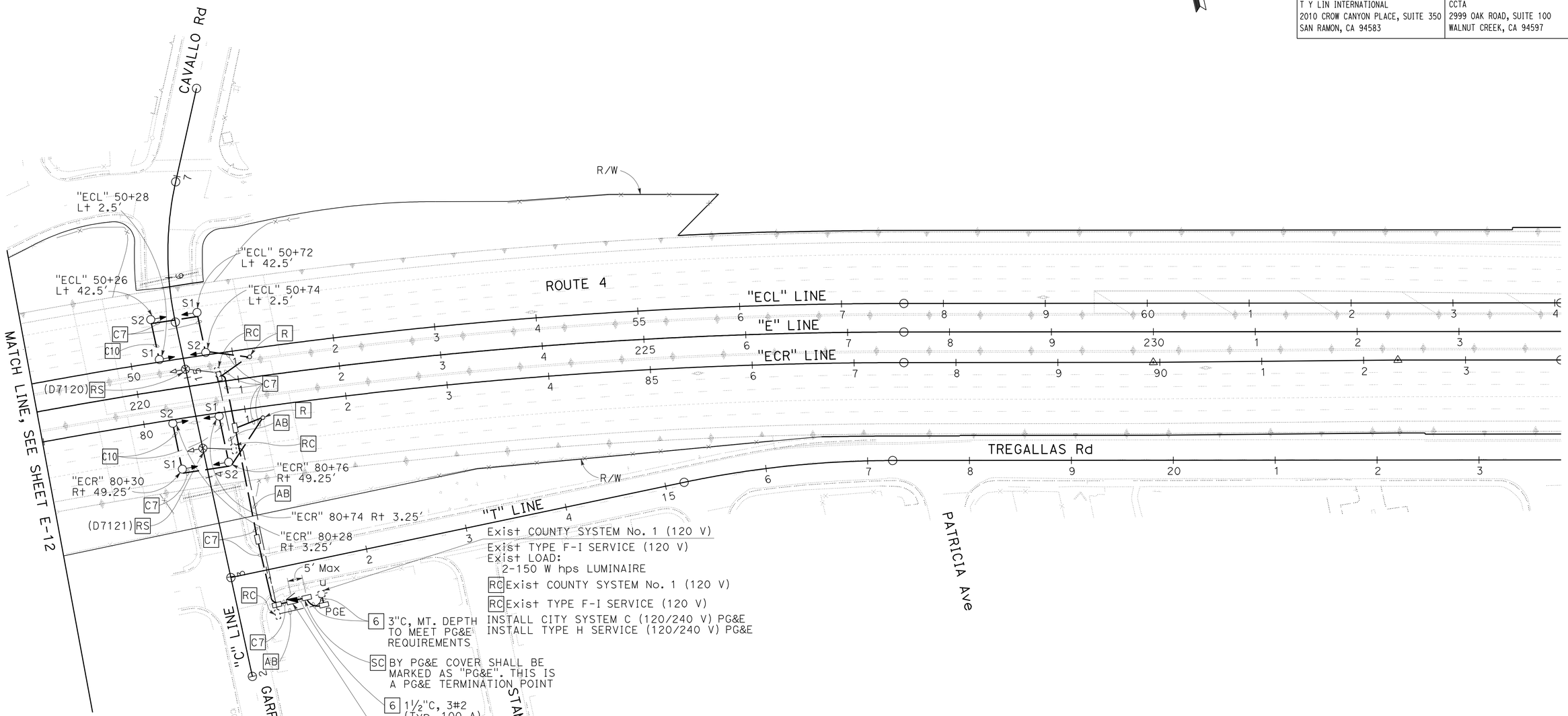

FOR NOTES, ABBREVIATIONS AND LEGEND, SEE SHEETS E-1 AND E-2

LIGHTING (CITY STREET)

SCALE: 1" = 50'

E-13

THIS PLAN IS ACCURATE FOR ELECTRICAL WORK ONLY

STATE OF CALIFORNIA - DEPARTMENT OF TRANSPORTATION

Caltrans

CONSULTANT FUNCTIONAL SUPERVISOR: HATEM AHMED

CALCULATED-DESIGNED BY: DAVID SETO

CHECKED BY: ALLAN MORRIS

REVISED BY: CC

DATE REVISED: 8/9/11

LAST REVISION DATE PLOTTED => 19-JAN-2012
TIME PLOTTED => 08:41

Dist	COUNTY	ROUTE	POST MILES TOTAL PROJECT	SHEET No.	TOTAL SHEETS
04	CC	4	27.3/R29.0	530	950

REGISTERED ELECTRICAL ENGINEER 8/9/11 DATE

1-17-12
PLANS APPROVAL DATE

REGISTERED PROFESSIONAL ENGINEER
ALLAN RAY MORRIS
No. 16958
Exp. 6/30/13
ELECTRICAL
STATE OF CALIFORNIA

THE STATE OF CALIFORNIA OR ITS OFFICERS OR AGENTS SHALL NOT BE RESPONSIBLE FOR THE ACCURACY OR COMPLETENESS OF SCANNED COPIES OF THIS PLAN SHEET.

T Y LIN INTERNATIONAL
2010 CROW CANYON PLACE, SUITE 350
SAN RAMON, CA 94583

CCTA
2999 OAK ROAD, SUITE 100
WALNUT CREEK, CA 94597

NOTE:

FOR ACCURATE RIGHT OF WAY DATA, CONTACT RIGHT OF WAY ENGINEERING AT THE DISTRICT OFFICE.

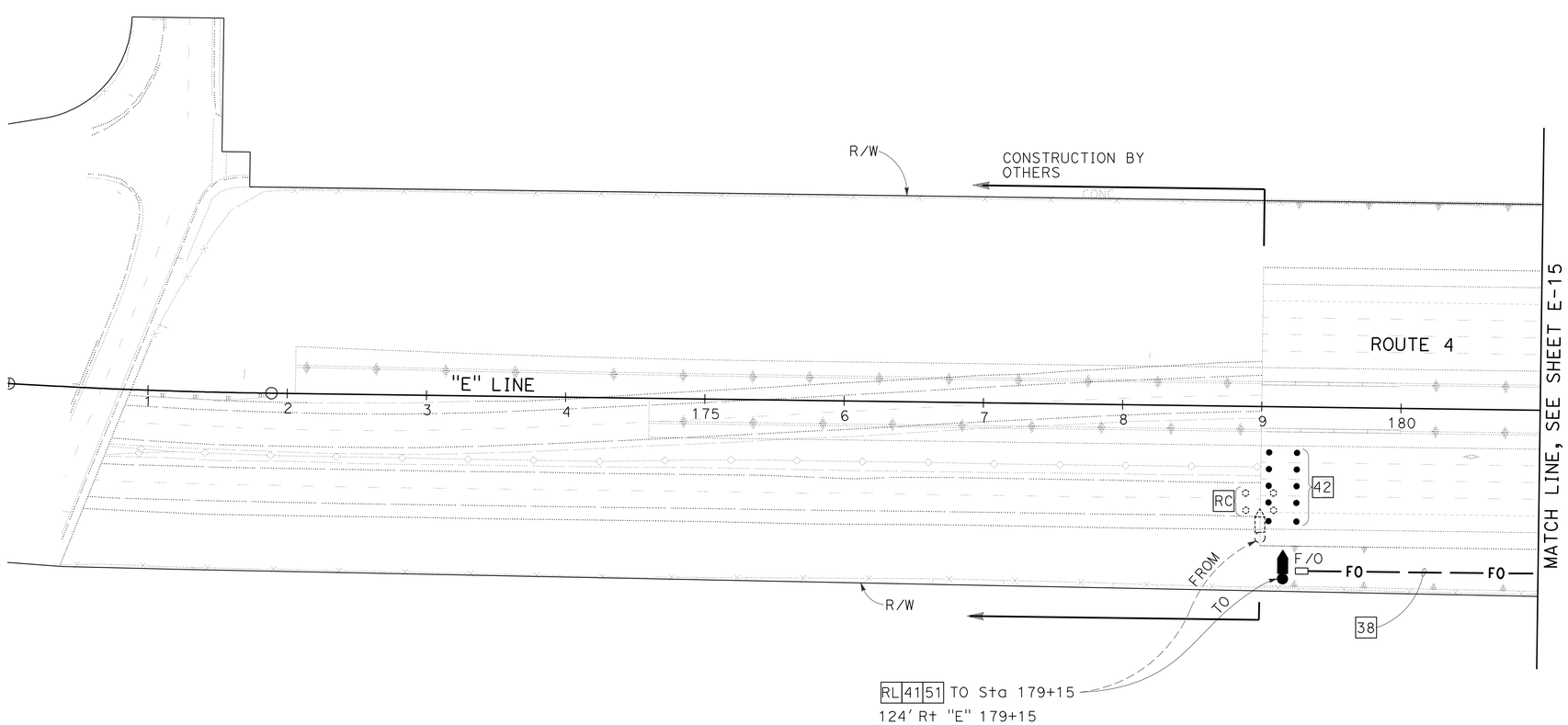

TRAFFIC OPERATIONS SYSTEM COMMUNICATION CONDUIT (FIBER OPTIC), RELOCATE WIRELESS VEHICLE DETECTOR SYSTEM (WVDS)

SCALE: 1" = 50'

E-14

FOR NOTES, ABBREVIATIONS AND LEGEND, SEE SHEETS E-1 AND E-2

THIS PLAN IS ACCURATE FOR ELECTRICAL WORK ONLY

STATE OF CALIFORNIA - DEPARTMENT OF TRANSPORTATION
Caltrans

CONSULTANT FUNCTIONAL SUPERVISOR: HATEM AHMED
CALCULATED-DESIGNED BY: DAVID SETO
CHECKED BY: ALLAN MORRIS
REVISED BY: CC
DATE REVISED: 8/9/11

LAST REVISION 8-9-11
DATE PLOTTED => 19-JAN-2012
TIME PLOTTED => 08:42

Dist	COUNTY	ROUTE	POST MILES TOTAL PROJECT	SHEET No.	TOTAL SHEETS
04	CC	4	27.3/R29.0	531	950

REGISTERED ELECTRICAL ENGINEER 8/9/11 DATE

1-17-12
PLANS APPROVAL DATE

REGISTERED PROFESSIONAL ENGINEER
ALLAN RAY MORRIS
No. 16958
Exp. 6/30/13
ELECTRICAL
STATE OF CALIFORNIA

THE STATE OF CALIFORNIA OR ITS OFFICERS OR AGENTS SHALL NOT BE RESPONSIBLE FOR THE ACCURACY OR COMPLETENESS OF SCANNED COPIES OF THIS PLAN SHEET.

T Y LIN INTERNATIONAL
2010 CROW CANYON PLACE, SUITE 350
SAN RAMON, CA 94583

CCTA
2999 OAK ROAD, SUITE 100
WALNUT CREEK, CA 94597

NOTE:

FOR ACCURATE RIGHT OF WAY DATA, CONTACT RIGHT OF WAY ENGINEERING AT THE DISTRICT OFFICE.

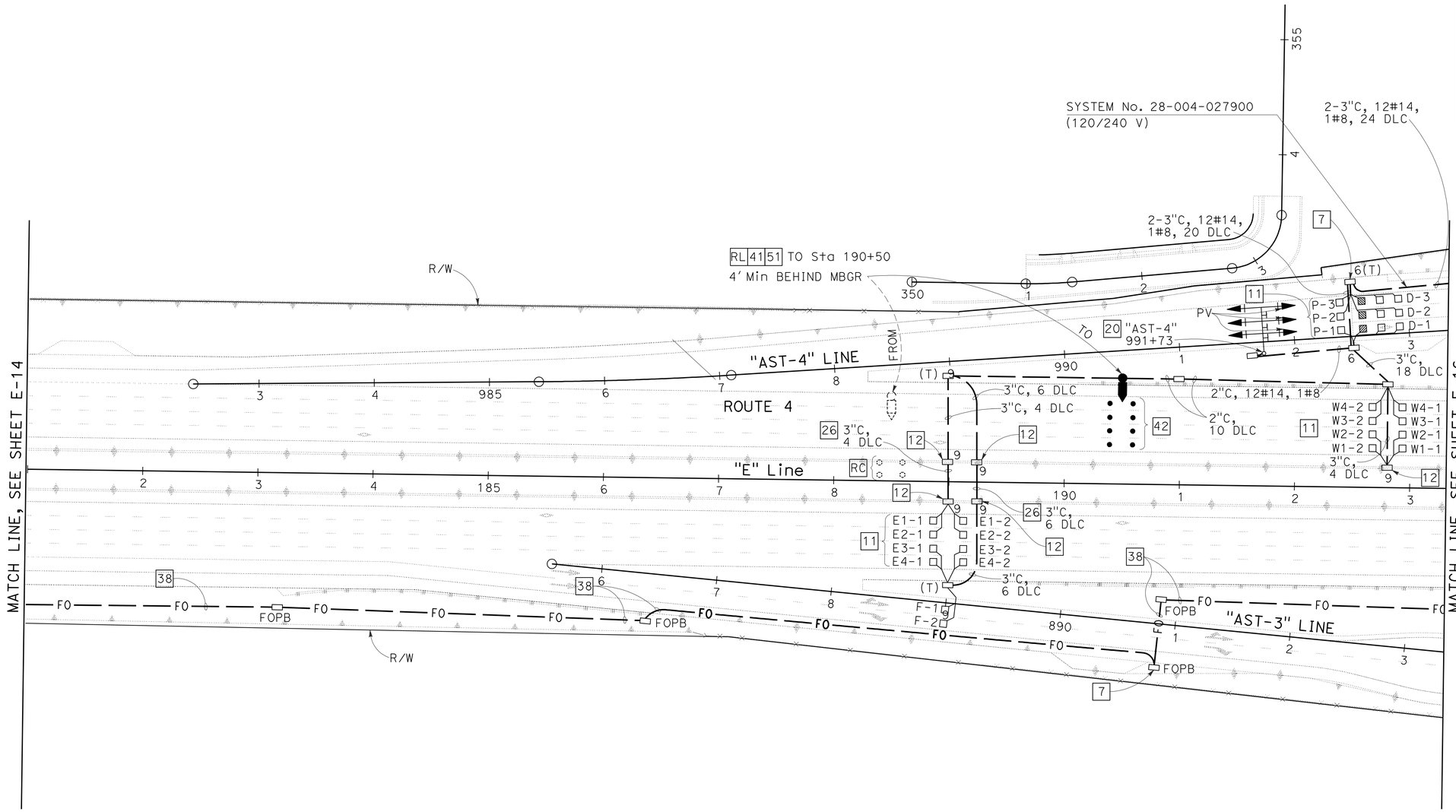

TRAFFIC OPERATIONS SYSTEM COMMUNICATION CONDUIT (FIBER OPTIC), RELOCATE WIRELESS VEHICLE DETECTOR SYSTEM (WVDS)

SCALE: 1" = 50'

E-15

FOR NOTES, ABBREVIATIONS AND LEGEND, SEE SHEETS E-1 AND E-2

THIS PLAN IS ACCURATE FOR ELECTRICAL WORK ONLY

STATE OF CALIFORNIA - DEPARTMENT OF TRANSPORTATION
Caltrans

CONSULTANT FUNCTIONAL SUPERVISOR: HATEM AHMED

DAVID SETO — ALLAN MORRIS

REVISED BY: CC — DATE REVISED: 8/9/11

CALCULATED-DESIGNED BY — CHECKED BY

LAST REVISION 8-9-11 — DATE PLOTTED => 19-JAN-2012 TIME PLOTTED => 08:42

Dist	COUNTY	ROUTE	POST MILES TOTAL PROJECT	SHEET No.	TOTAL SHEETS
04	CC	4	27.3/R29.0	532	950

REGISTERED ELECTRICAL ENGINEER 8/9/11 DATE

1-17-12
PLANS APPROVAL DATE

REGISTERED PROFESSIONAL ENGINEER ALLAN RAY MORRIS No. 16958 Exp. 6/30/13 ELECTRICAL STATE OF CALIFORNIA

THE STATE OF CALIFORNIA OR ITS OFFICERS OR AGENTS SHALL NOT BE RESPONSIBLE FOR THE ACCURACY OR COMPLETENESS OF SCANNED COPIES OF THIS PLAN SHEET.

T Y LIN INTERNATIONAL
2010 CROW CANYON PLACE, SUITE 350
SAN RAMON, CA 94583

CCTA
2999 OAK ROAD, SUITE 100
WALNUT CREEK, CA 94597

NOTE:

FOR ACCURATE RIGHT OF WAY DATA, CONTACT RIGHT OF WAY ENGINEERING AT THE DISTRICT OFFICE.

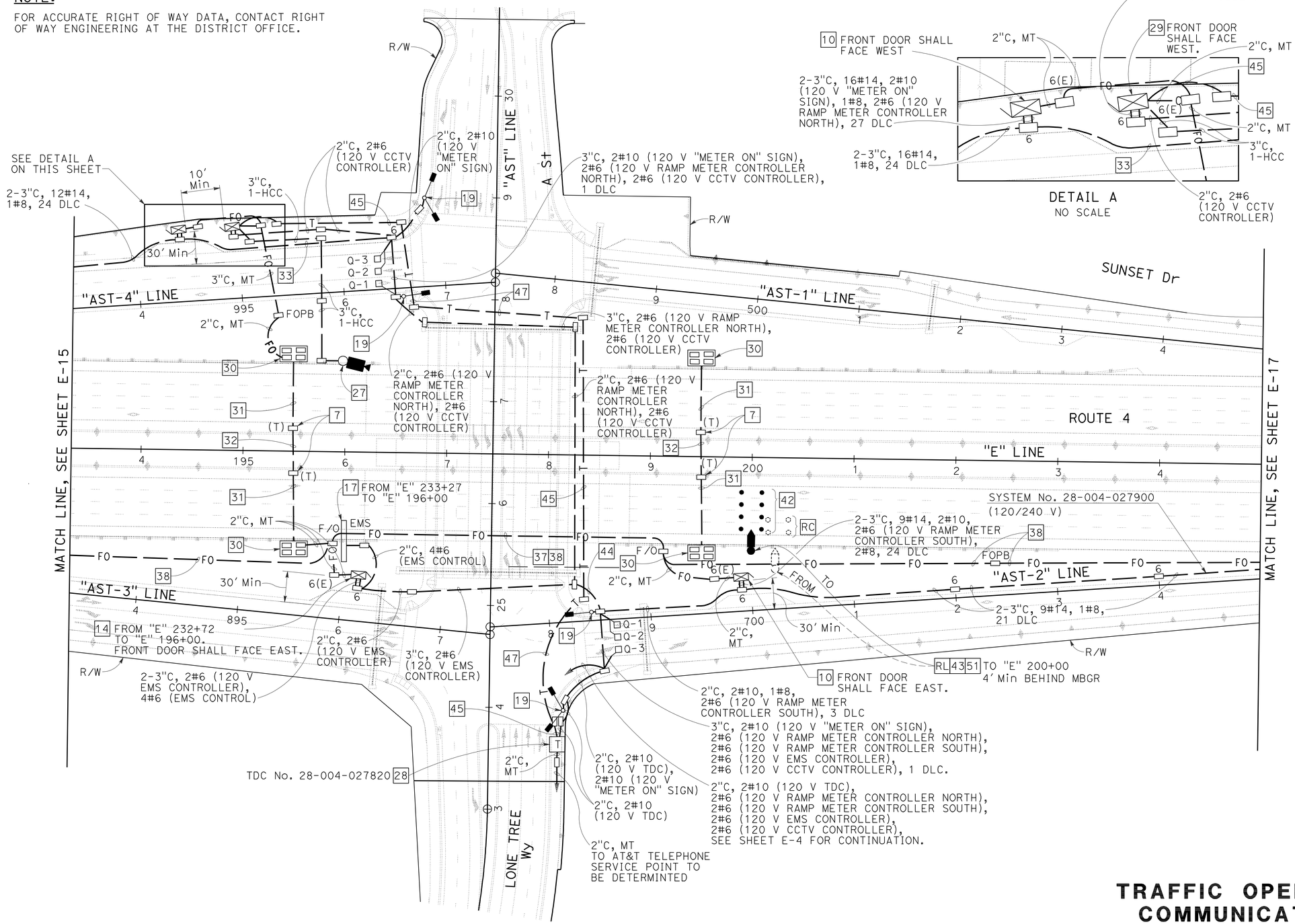

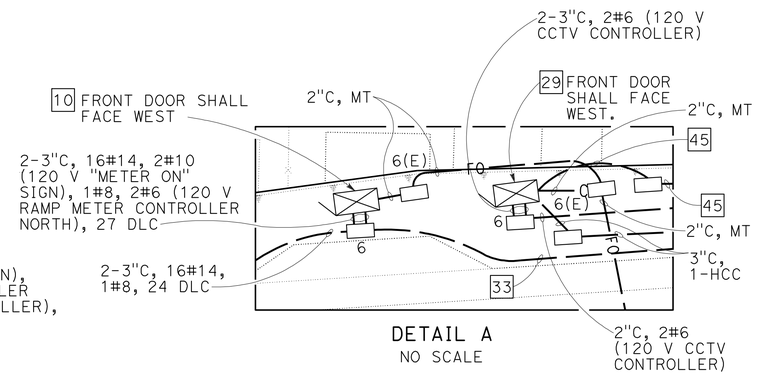

DETAIL A
NO SCALE

FOR NOTES, ABBREVIATIONS AND LEGEND, SEE SHEETS E-1 AND E-2

THIS PLAN IS ACCURATE FOR ELECTRICAL WORK ONLY

TRAFFIC OPERATIONS SYSTEM COMMUNICATION CONDUIT (FIBER OPTIC), RELOCATE WIRELESS VEHICLE DETECTOR SYSTEM (WVDS)

SCALE: 1" = 50'

E-16

STATE OF CALIFORNIA - DEPARTMENT OF TRANSPORTATION
Caltrans

CONSULTANT FUNCTIONAL SUPERVISOR	HATEM AHMED
CALCULATED-DESIGNED BY	DAVID SETO
CHECKED BY	ALLAN MORRIS
REVISED BY	CC
DATE REVISED	8/9/11

LAST REVISION 8-9-11 | DATE PLOTTED => 19-JAN-2012 TIME PLOTTED => 08:42

Dist	COUNTY	ROUTE	POST MILES TOTAL PROJECT	SHEET No.	TOTAL SHEETS
04	CC	4	27.3/R29.0	533	950

REGISTERED ELECTRICAL ENGINEER 8/9/11 DATE

1-17-12
PLANS APPROVAL DATE

REGISTERED PROFESSIONAL ENGINEER
ALLAN RAY MORRIS
No. 16958
Exp. 6/30/13
ELECTRICAL
STATE OF CALIFORNIA

THE STATE OF CALIFORNIA OR ITS OFFICERS OR AGENTS SHALL NOT BE RESPONSIBLE FOR THE ACCURACY OR COMPLETENESS OF SCANNED COPIES OF THIS PLAN SHEET.

T Y LIN INTERNATIONAL
2010 CROW CANYON PLACE, SUITE 350
SAN RAMON, CA 94583

CCTA
2999 OAK ROAD, SUITE 100
WALNUT CREEK, CA 94597

NOTE:

FOR ACCURATE RIGHT OF WAY DATA, CONTACT RIGHT OF WAY ENGINEERING AT THE DISTRICT OFFICE.

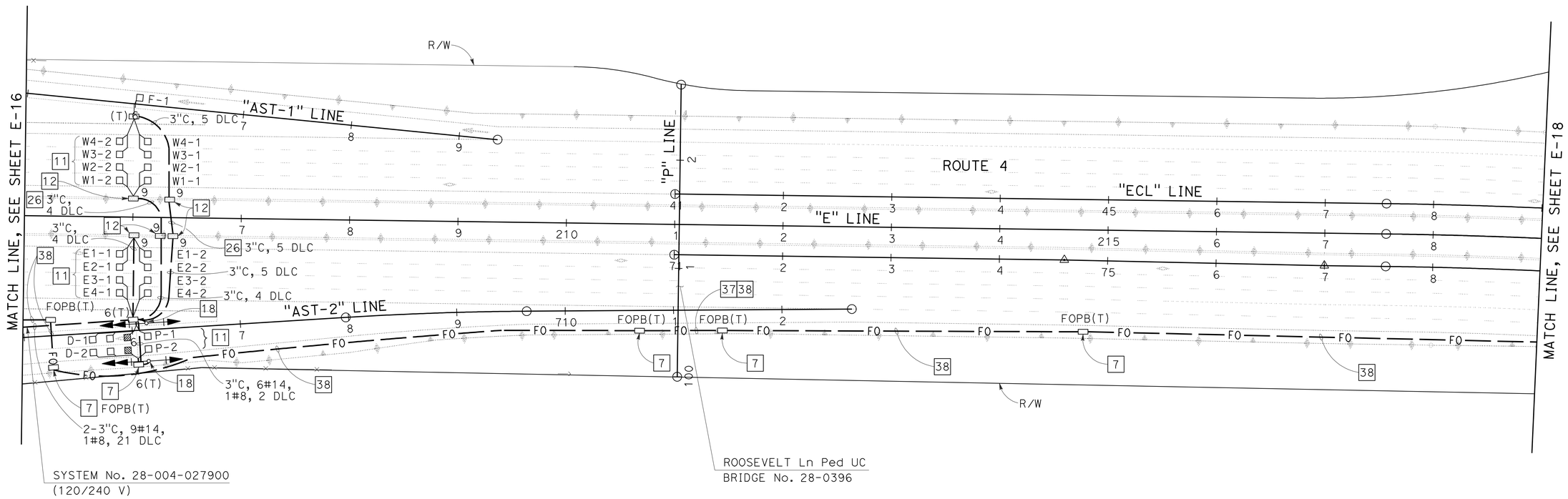

TRAFFIC OPERATIONS SYSTEM COMMUNICATION CONDUIT (FIBER OPTIC)

SCALE: 1" = 50'

E-17

FOR NOTES, ABBREVIATIONS AND LEGEND, SEE SHEETS E-1 AND E-2

THIS PLAN IS ACCURATE FOR ELECTRICAL WORK ONLY

STATE OF CALIFORNIA - DEPARTMENT OF TRANSPORTATION

Caltrans

CONSULTANT FUNCTIONAL SUPERVISOR: HATEM AHMED

CALCULATED-DESIGNED BY: DAVID SETO

CHECKED BY: ALLAN MORRIS

REVISED BY: CC

DATE REVISED: 8/9/11

LAST REVISION 8-9-11

DATE PLOTTED => 19-JAN-2012
TIME PLOTTED => 08:42

Dist	COUNTY	ROUTE	POST MILES TOTAL PROJECT	SHEET No.	TOTAL SHEETS
04	CC	4	27.3/R29.0	534	950

REGISTERED ELECTRICAL ENGINEER 8/9/11 DATE

1-17-12
PLANS APPROVAL DATE

REGISTERED PROFESSIONAL ENGINEER ALLAN RAY MORRIS No. 16958 Exp. 6/30/13 ELECTRICAL STATE OF CALIFORNIA

THE STATE OF CALIFORNIA OR ITS OFFICERS OR AGENTS SHALL NOT BE RESPONSIBLE FOR THE ACCURACY OR COMPLETENESS OF SCANNED COPIES OF THIS PLAN SHEET.

T Y LIN INTERNATIONAL
2010 CROW CANYON PLACE, SUITE 350
SAN RAMON, CA 94583

CCTA
2999 OAK ROAD, SUITE 100
WALNUT CREEK, CA 94597

NOTE:

FOR ACCURATE RIGHT OF WAY DATA, CONTACT RIGHT OF WAY ENGINEERING AT THE DISTRICT OFFICE.

21 TYPE III-AF SERVICE EQUIPMENT
ENCLOSURE No. 028403 (120/240 V)(A-6)(TOU)
DOOR SHALL FACE NORTH.
CT ID No. 04-28-004-000028403
PROVIDE EQUIPMENT ITEMS:
1 THRU 9, 24 THRU 26, 30.
Exist LOAD:
2500 W tms/ems/cctv
100 W tdc
MODIFIED LOAD:
1-800 W CCTV
1-800 W CCTV WINCH
1-100 W TDC
1-250 W TMS

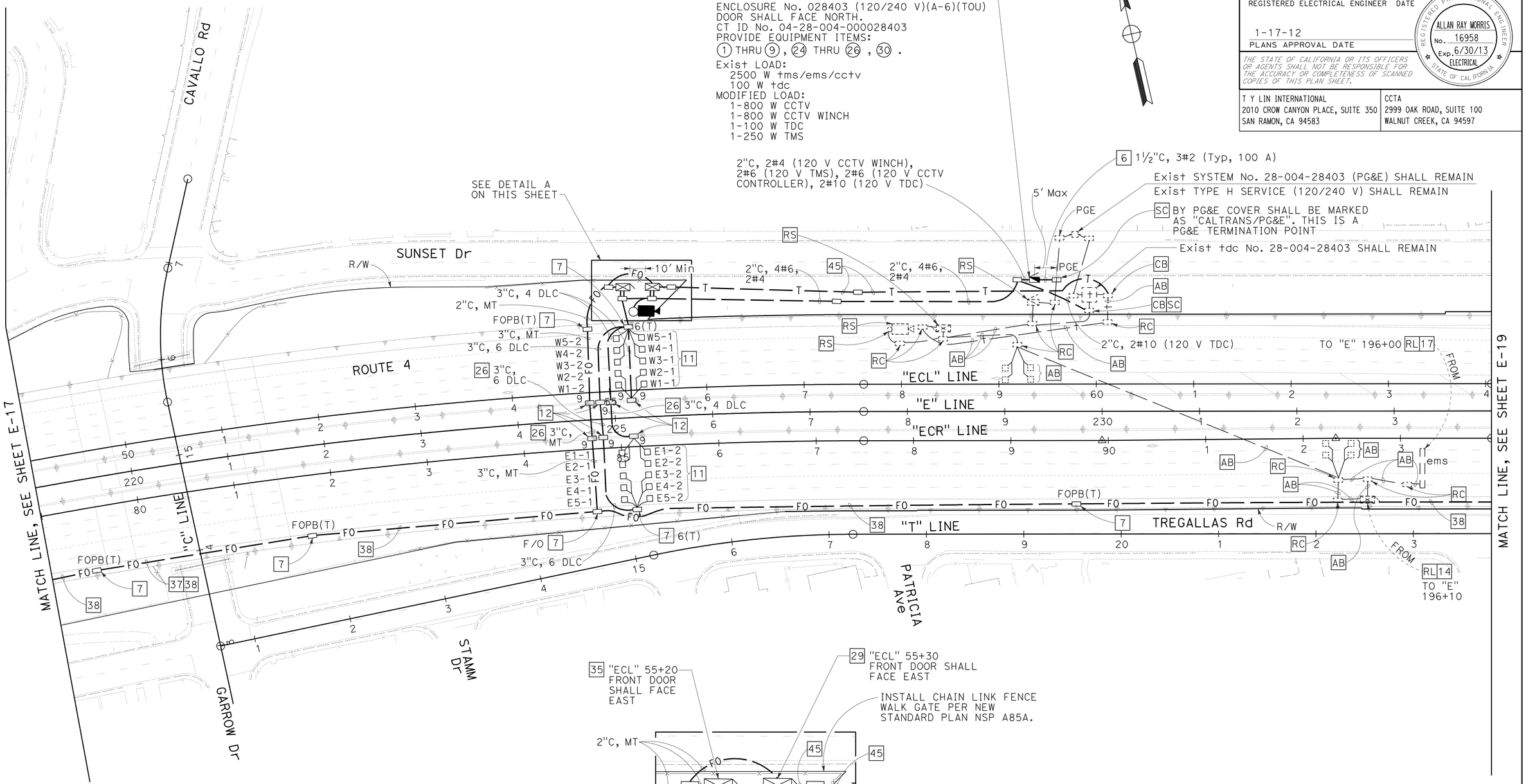

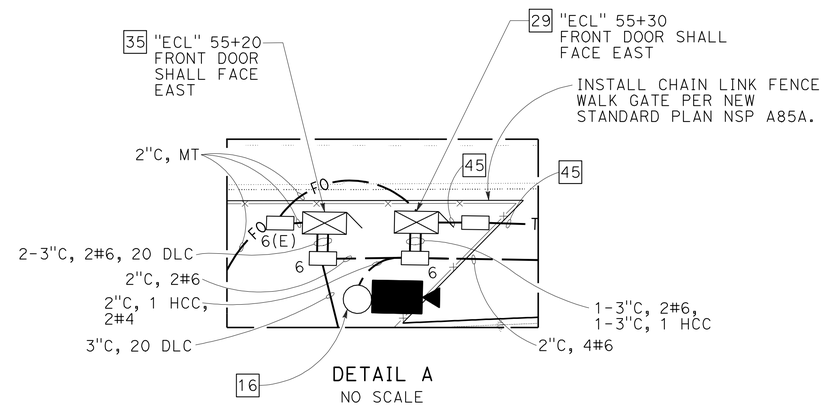

DETAIL A
NO SCALE

EQUIPMENT TO BE REMOVED AND SALVAGED
- 1 - SERVICE EQUIPMENT ENCLOSURE
- 1 - MODEL 170E CONTROLLER ASSUMBLEY
- 1 - MODEL 334 CONTROLLER CABINET
- 1 - CCTV
- 1 - CCTV POLE

FOR NOTES, ABBREVIATIONS AND LEGEND, SEE SHEETS E-1 AND E-2

TRAFFIC OPERATIONS SYSTEM COMMUNICATION CONDUIT (FIBER OPTIC)

SCALE: 1" = 50'

E-18

THIS PLAN IS ACCURATE FOR ELECTRICAL WORK ONLY

REVISED BY	DATE REVISED
CC	8/9/11

CALCULATED-DESIGNED BY: DAVID SETO
CHECKED BY: ALLAN MORRIS
CONSULTANT FUNCTIONAL SUPERVISOR: HATEM AHMED

STATE OF CALIFORNIA - DEPARTMENT OF TRANSPORTATION
Caltrans

LAST REVISION 8-9-11
DATE PLOTTED => 19-JAN-2012
TIME PLOTTED => 08:42

Dist	COUNTY	ROUTE	POST MILES TOTAL PROJECT	SHEET No.	TOTAL SHEETS
04	CC	4	27.3/R29.0	535	950

REGISTERED ELECTRICAL ENGINEER 8/9/11 DATE

1-17-12
PLANS APPROVAL DATE

REGISTERED PROFESSIONAL ENGINEER
ALLAN RAY MORRIS
No. 16958
Exp. 6/30/13
ELECTRICAL
STATE OF CALIFORNIA

THE STATE OF CALIFORNIA OR ITS OFFICERS OR AGENTS SHALL NOT BE RESPONSIBLE FOR THE ACCURACY OR COMPLETENESS OF SCANNED COPIES OF THIS PLAN SHEET.

T Y LIN INTERNATIONAL
2010 CROW CANYON PLACE, SUITE 350
SAN RAMON, CA 94583

CCTA
2999 OAK ROAD, SUITE 100
WALNUT CREEK, CA 94597

NOTE:

FOR ACCURATE RIGHT OF WAY DATA, CONTACT RIGHT OF WAY ENGINEERING AT THE DISTRICT OFFICE.

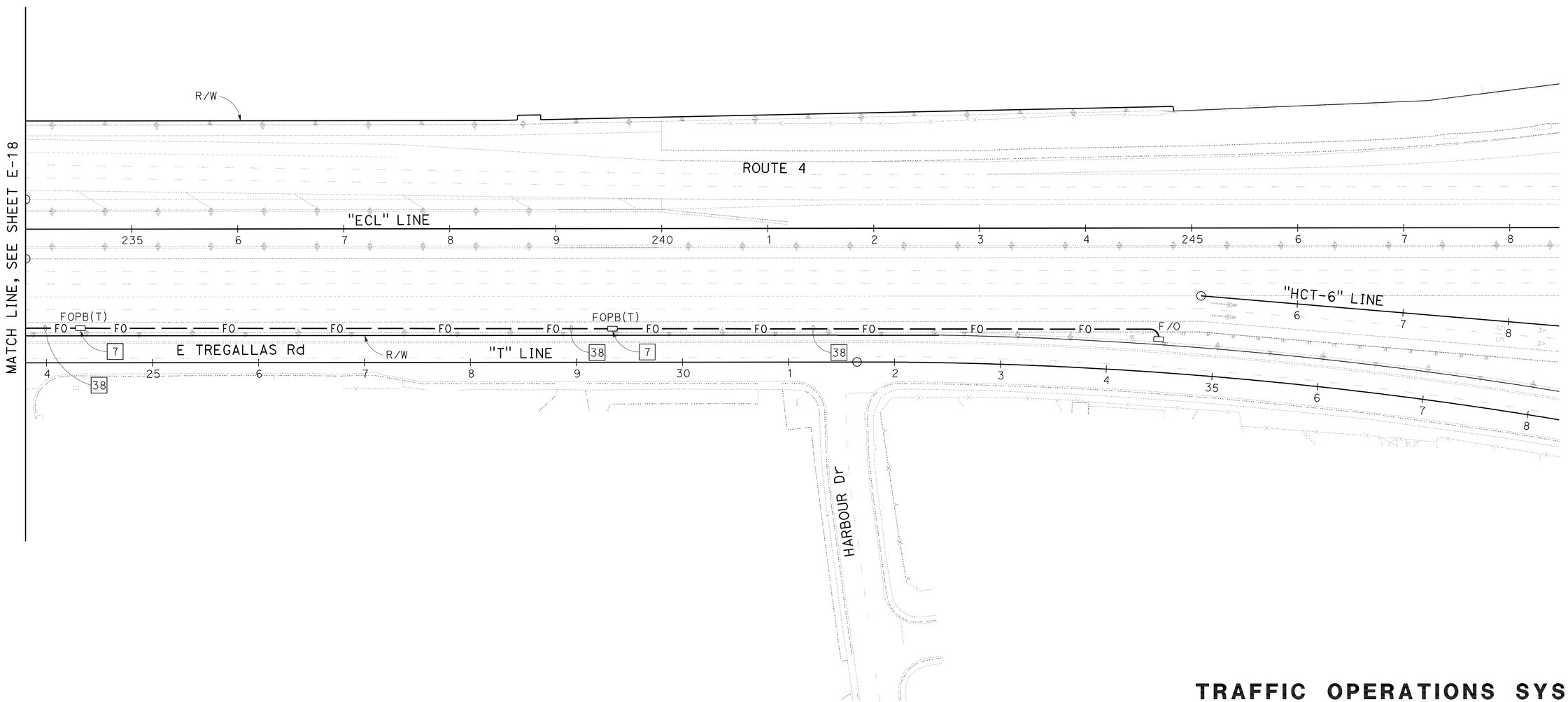

FOR NOTES, ABBREVIATIONS AND LEGEND, SEE SHEETS E-1 AND E-2

TRAFFIC OPERATIONS SYSTEM COMMUNICATION CONDUIT (FIBER OPTIC)

SCALE: 1" = 50'

E-19

THIS PLAN IS ACCURATE FOR ELECTRICAL WORK ONLY

STATE OF CALIFORNIA - DEPARTMENT OF TRANSPORTATION	Caltrans
CONSULTANT FUNCTIONAL SUPERVISOR	HATEM AHMED
CALCULATED-DESIGNED BY	DAVID SETO
CHECKED BY	ALLAN MORRIS
REVISED BY	CC
DATE REVISED	8/9/11

LAST REVISION 8-9-11
DATE PLOTTED => 19-JAN-2012
TIME PLOTTED => 08:42

Dist	COUNTY	ROUTE	POST MILES TOTAL PROJECT	SHEET No.	TOTAL SHEETS
04	CC	4	27.3/R29.0	536	950

REGISTERED ELECTRICAL ENGINEER — DATE 8/9/11

1-17-12
PLANS APPROVAL DATE

REGISTERED PROFESSIONAL ENGINEER — ALLAN RAY MORRIS — No. 16958 — Exp. 6/30/13 — ELECTRICAL — STATE OF CALIFORNIA

THE STATE OF CALIFORNIA OR ITS OFFICERS OR AGENTS SHALL NOT BE RESPONSIBLE FOR THE ACCURACY OR COMPLETENESS OF SCANNED COPIES OF THIS PLAN SHEET.

T Y LIN INTERNATIONAL
2010 CROW CANYON PLACE, SUITE 350
SAN RAMON, CA 94583

CCTA
2999 OAK ROAD, SUITE 100
WALNUT CREEK, CA 94597

NOTE:

FOR ACCURATE RIGHT OF WAY DATA, CONTACT RIGHT OF WAY ENGINEERING AT THE DISTRICT OFFICE.

STEADY DEMAND SEQUENCE →

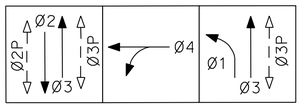

EXISTING PHASE DIAGRAM
(EXISTING MODEL 170E CONTROLLER)

EQUIPMENT TO BE REMOVED AND SALVAGED

5 - TYPE 1 STANDARD
2 - TYPE 19 STANDARD
1 - PPB POST
11 - VEHICLE SIGNAL HEAD
6 - PEDESTRIAN SIGNAL HEAD
6 - PEDESTRIAN PUSH BUTTON
2 - 200 W HPS LUMINAIRE
2 - EMERGENCY VEHICLE PREEMPTION DETECTOR

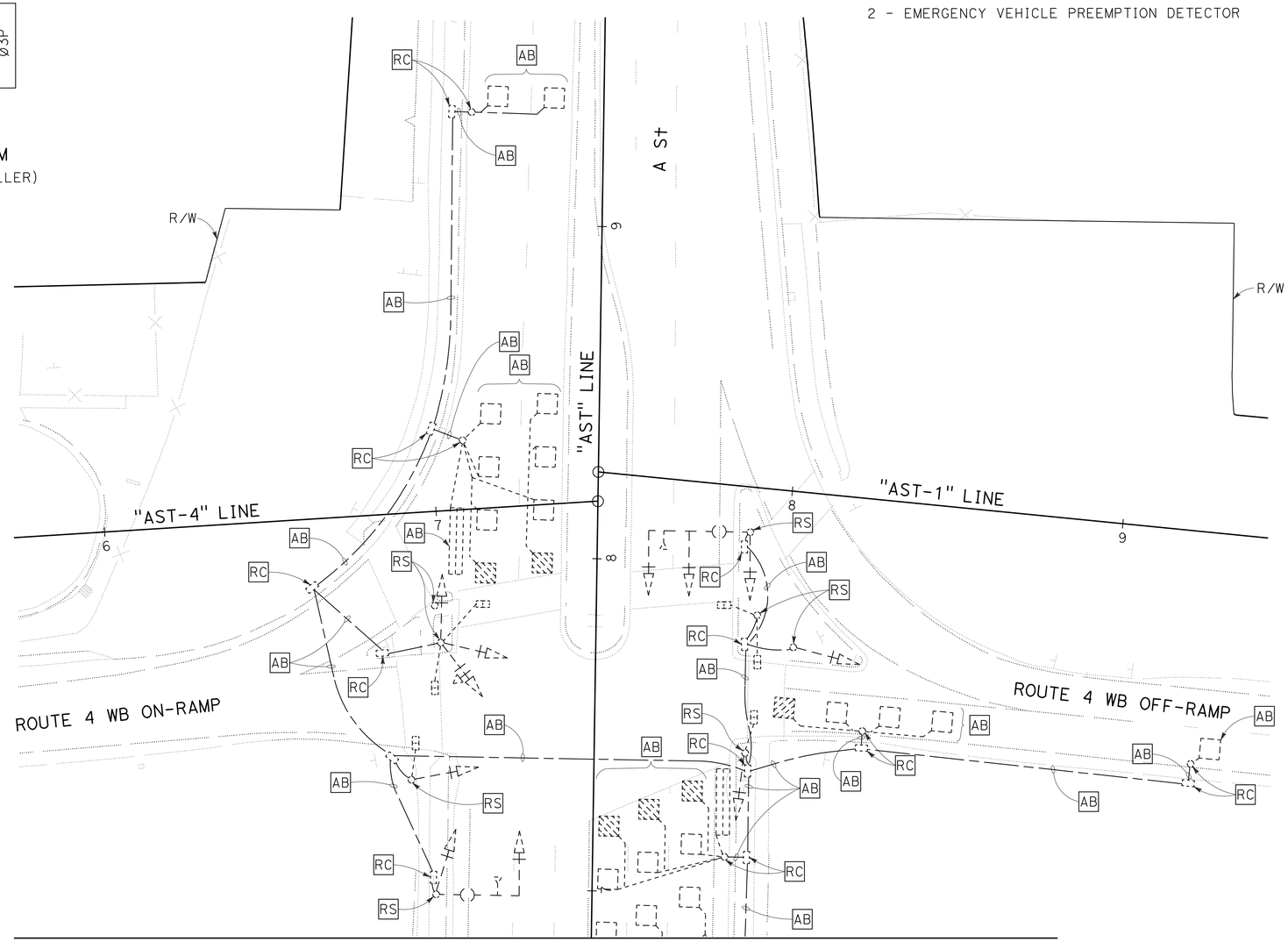

MATCH LINE, SEE SHEET E-23

SIGNAL AND LIGHTING (LOCATION 1)

SCALE: 1" = 20'

E-20

FOR NOTES, ABBREVIATIONS AND LEGEND, SEE SHEETS E-1 AND E-2

THIS PLAN IS ACCURATE FOR ELECTRICAL WORK ONLY

STATE OF CALIFORNIA - DEPARTMENT OF TRANSPORTATION — Caltrans

CONSULTANT FUNCTIONAL SUPERVISOR: HATEM AHMED

CALCULATED-DESIGNED BY: HUAFENG GONG — CHECKED BY: ANDY SUMANADASA

REVISED BY: CC — DATE REVISED: 8/9/11

LAST REVISION 8-9-11 — DATE PLOTTED => 19-JAN-2012 — TIME PLOTTED => 08:42

Dist	COUNTY	ROUTE	POST MILES TOTAL PROJECT	SHEET No.	TOTAL SHEETS
04	CC	4	27.3/R29.0	537	950

REGISTERED ELECTRICAL ENGINEER 8/9/11 DATE

1-17-12
PLANS APPROVAL DATE

REGISTERED PROFESSIONAL ENGINEER ALLAN RAY MORRIS No. 16958 Exp. 6/30/13 ELECTRICAL STATE OF CALIFORNIA

THE STATE OF CALIFORNIA OR ITS OFFICERS OR AGENTS SHALL NOT BE RESPONSIBLE FOR THE ACCURACY OR COMPLETENESS OF SCANNED COPIES OF THIS PLAN SHEET.

T Y LIN INTERNATIONAL
2010 CROW CANYON PLACE, SUITE 350
SAN RAMON, CA 94583

CCTA
2999 OAK ROAD, SUITE 100
WALNUT CREEK, CA 94597

NOTE:

FOR ACCURATE RIGHT OF WAY DATA, CONTACT RIGHT OF WAY ENGINEERING AT THE DISTRICT OFFICE.

STEADY DEMAND SEQUENCE

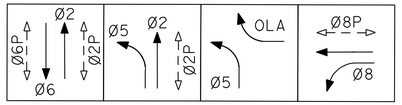

PROPOSED PHASE DIAGRAM
MODEL 2070L CONTROLLER

EVDA = Ø2 + Ø5
EVDB = Ø6

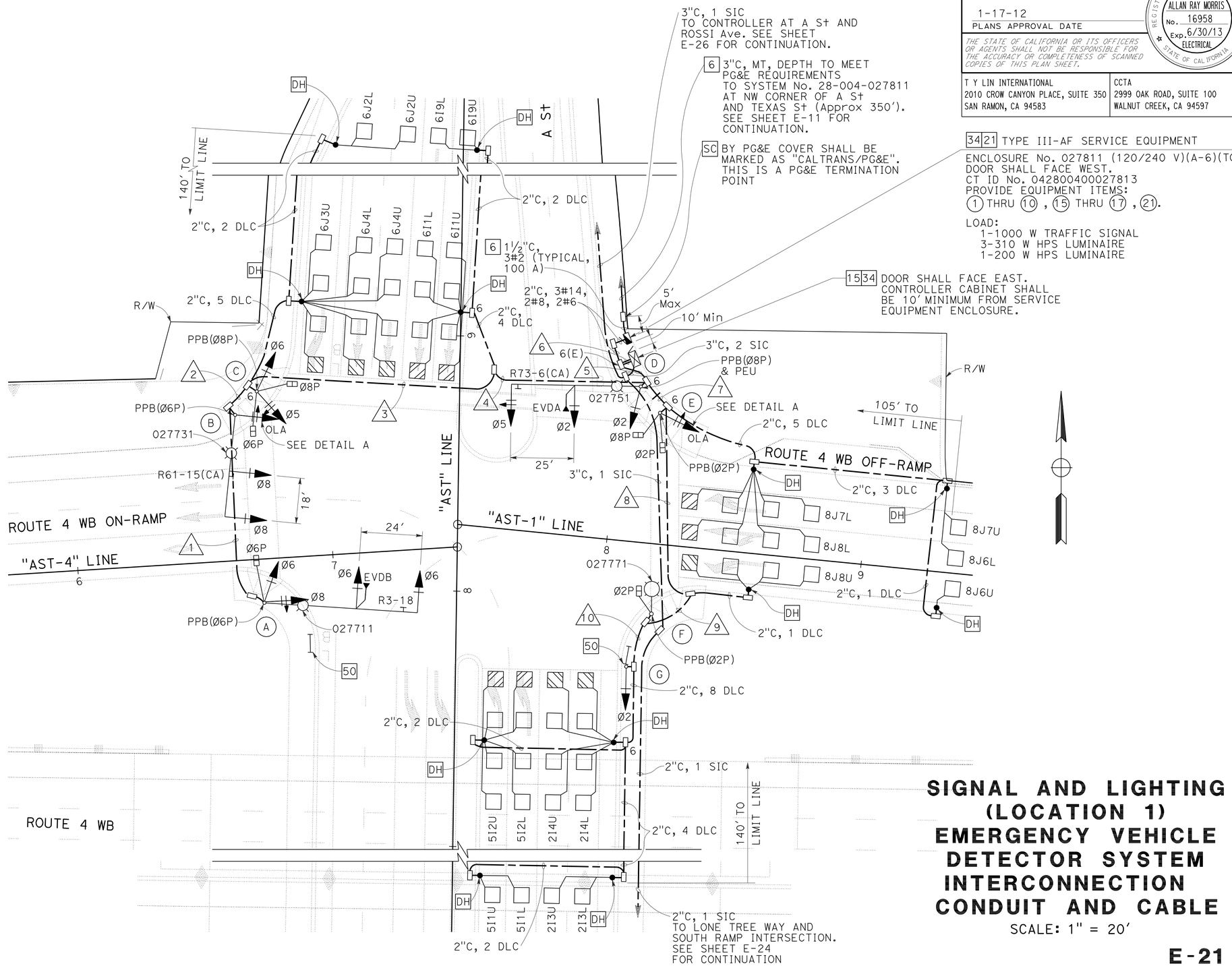

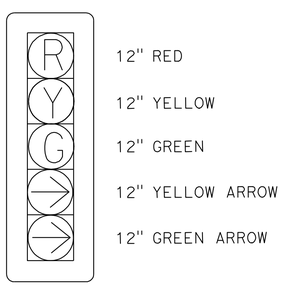

DETAIL A
5-SECTION SIGNAL HEAD
NTS

FOR NOTES, ABBREVIATIONS AND LEGEND, SEE SHEETS E-1 AND E-2

THIS PLAN IS ACCURATE FOR ELECTRICAL WORK ONLY.

SIGNAL AND LIGHTING (LOCATION 1) EMERGENCY VEHICLE DETECTOR SYSTEM INTERCONNECTION CONDUIT AND CABLE

SCALE: 1" = 20'

E-21

STATE OF CALIFORNIA - DEPARTMENT OF TRANSPORTATION
Caltrans

CONSULTANT FUNCTIONAL SUPERVISOR: HATEM AHMED
CALCULATED-DESIGNED BY: HUAFENG GONG
CHECKED BY: ANDY SUMANADASA
REVISED BY: CC
DATE REVISED: 8/9/11

LAST REVISION 8-9-11
DATE PLOTTED => 19-JAN-2012
TIME PLOTTED => 08:42

Dist	COUNTY	ROUTE	POST MILES TOTAL PROJECT	SHEET No.	TOTAL SHEETS
04	CC	4	27.3/R29.0	538	950

REGISTERED ELECTRICAL ENGINEER 8/9/11 DATE

1-17-12
PLANS APPROVAL DATE

REGISTERED PROFESSIONAL ENGINEER
ALLAN RAY MORRIS
No. 16958
Exp. 6/30/13
ELECTRICAL
STATE OF CALIFORNIA

THE STATE OF CALIFORNIA OR ITS OFFICERS OR AGENTS SHALL NOT BE RESPONSIBLE FOR THE ACCURACY OR COMPLETENESS OF SCANNED COPIES OF THIS PLAN SHEET.

T Y LIN INTERNATIONAL
2010 CROW CANYON PLACE, SUITE 350
SAN RAMON, CA 94583

CCTA
2999 OAK ROAD, SUITE 100
WALNUT CREEK, CA 94597

CONDUCTOR AND CONDUIT SCHEDULE

CONDUCTOR	CONDUCTOR RUN	1	2	3	4	5	6	7	8	9	10
No. 14	Ø2					3	3	3	3	3	3
	Ø5			3	3	3	3				
	Ø6	3	3	3	3	3	3				
	Ø8	3	3	3	3	6	6	3			
	OLA		2	2	2	4	4	2			
	Ø2P					2	2	2	2	2	
	Ø6P	2	2	2	2	2	2				
	Ø8P			2	2	4	4	2			
	Ø2PPB					1	1	1	1	1	
	Ø6PPB	1	1	1	1	1	1				
	Ø8PPB			1	1	1	1				
	PPB COMMON	1	1	1	1	2	2	1	1	1	
	SPARES	3	3	3	3	6	6	3	3	3	3
	PEU					3					
	TOTAL	13	15	21	21	41	38	17	10	10	6
No. 8	LUMINAIRES	2	2	2	2	2		2	2	2	
	SIGNAL COMMON	1	1	1	1	2	2	1	1	1	1
	TOTAL	3	3	3	3	4	2	3	3	3	1
No. 6	SIGNAL SERVICE						2				
	TOTAL						2				
DETECTOR CABLE	2I3U					1	1	1	1	1	1
	2I3L					1	1	1	1	1	1
	2I4U					1	1	1	1	1	1
	2I4L					1	1	1	1	1	1
	5J1U					1	1	1	1	1	1
	5J1L					1	1	1	1	1	1
	5I2U					1	1	1	1	1	1
	5I2L					1	1	1	1	1	1
	6I1U				1	1	1				
	6I1L				1	1	1				
	6I9U				1	1	1				
	6I9L				1	1	1				
	6J2U			1	1	1	1				
	6J2L			1	1	1	1				
	6J3U			1	1	1	1				
	6J4U			1	1	1	1				
	6J4L			1	1	1	1				
	8J6U					1	1	1			
	8J6L					1	1	1			
	8J7U					1	1	1			
	8J7L					1	1	1			
	8J8U					1	1	1	1		
	8J8L					1	1	1			
	TOTAL			5	9	23	23	14	9	8	8
EVD CABLE	EVDA					1	1				
	EVDB	1	1	1	1	1	1				
	TOTAL	1	1	1	1	2	2				
	CONDUIT SIZE	2"	2"	3"	3"	2-3"	2-3"	3"	3"	3"	3"

POLE AND EQUIPMENT SCHEDULE

No.	STANDARD Type	SMA	LMA	VEH SIG MTG Mast Arm	Pole	PED SIGNAL MTG	PPB Ø	ARROW	HPS LUMINAIRE (W)	SPECIAL REQUIREMENTS
A	61A-5-100	60'	15'	MAS MAS	SV-2-TA	SP-1-T	6	←	310	INSTALL R3-18 ON SIGNAL MAST ARM. INSTALL EVDB ON SIGNAL HEAD.
B	26A-3-100	40'	15'	MAS MAS	SV-1-T	-	6	←	310	INSTALL R61-15(CA) SIGN ON SIGNAL MAST ARM.
C	1-B	-	-	-	TV-2-T	SP-2-T	8	→	-	
D	29A-5-100	50'	15'	MAS MAS	SV-1-T	-	8	←	310	INSTALL R73-6 ON SIGNAL MAST ARM. INSTALL PEU ON TOP OF POLE. INSTALL EVDA ON SIGNAL HEAD.
E	1-B	-	-	-	TV-1-T	SP-2-T	2	←	-	
F	15TS	-	15'	-	-	SP-1-T	2	→	200	
G	1-B	-	-	-	TV-1-T	-	-	-	-	

TRAFFIC SIGNAL CONDUCTORS FOR PHASE OVERLAPS SHALL BE DOUBLE STRIPED AS FOLLOWS:

SIGNAL PHASE	BASE COLOR	DOUBLE STRIPE COLOR
OLA	RE, YE, BRN	BLACK/BLUE
OLB	RE, YE, BRN	BLACK/ORANGE
OLC	RE, YE, BRN	BLACK/PURPLE
OLD	RE, YE, BRN	BLACK/GRAY

DETAIL 1

SIGNAL AND LIGHTING (LOCATION 1)

(POLE, EQUIPMENT AND CONDUCTOR SCHEDULE)

E-22

STATE OF CALIFORNIA - DEPARTMENT OF TRANSPORTATION
Caltrans

CONSULTANT FUNCTIONAL SUPERVISOR: HATEM AHMED
CALCULATED-DESIGNED BY: HUAFENG GONG
CHECKED BY: ANDY SUMANADASA
REVISED BY: CC
DATE REVISED: 8/9/11

LAST REVISION 8-9-11
DATE PLOTTED => 19-JAN-2012
TIME PLOTTED => 08:42

Dist	COUNTY	ROUTE	POST MILES TOTAL PROJECT	SHEET No.	TOTAL SHEETS
04	CC	4	27.3/R29.0	539	950

REGISTERED ELECTRICAL ENGINEER 8/9/11 DATE

1-17-12
PLANS APPROVAL DATE

REGISTERED PROFESSIONAL ENGINEER
ALLAN RAY MORRIS
No. 16958
Exp. 6/30/13
ELECTRICAL
STATE OF CALIFORNIA

THE STATE OF CALIFORNIA OR ITS OFFICERS OR AGENTS SHALL NOT BE RESPONSIBLE FOR THE ACCURACY OR COMPLETENESS OF SCANNED COPIES OF THIS PLAN SHEET.

T Y LIN INTERNATIONAL
2010 CROW CANYON PLACE, SUITE 350
SAN RAMON, CA 94583

CCTA
2999 OAK ROAD, SUITE 100
WALNUT CREEK, CA 94597

NOTE:

FOR ACCURATE RIGHT OF WAY DATA, CONTACT RIGHT OF WAY ENGINEERING AT THE DISTRICT OFFICE.

STEADY DEMAND SEQUENCE

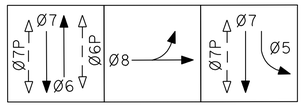

EXISTING PHASE DIAGRAM
(EXISTING MODEL 170E CONTROLLER)

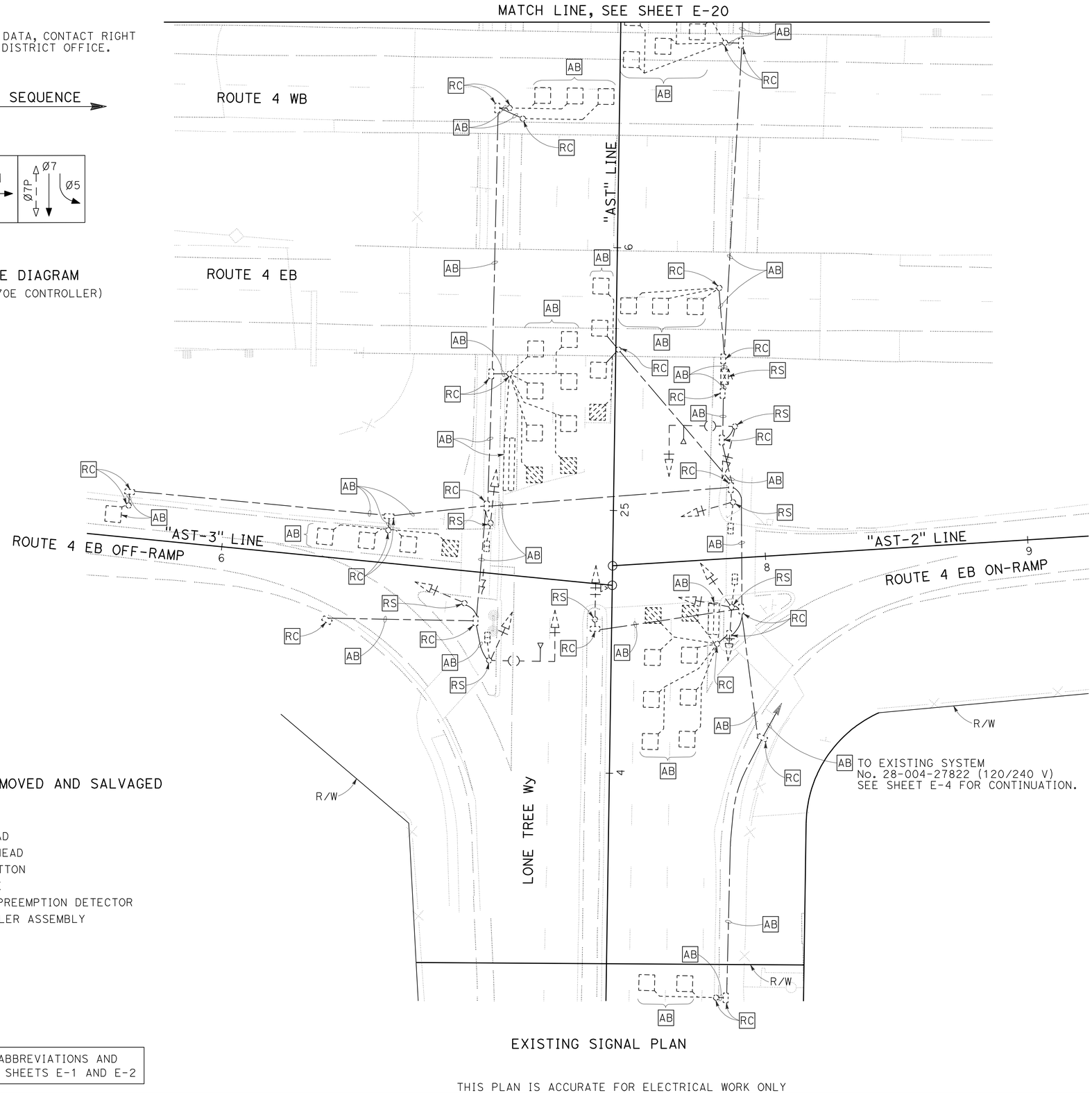

EXISTING SIGNAL PLAN

EQUIPMENT TO BE REMOVED AND SALVAGED

5 - TYPE 1 STANDARD
2 - TYPE 19 STANDARD
11 - VEHICLE SIGNAL HEAD
4 - PEDESTRIAN SIGNAL HEAD
4 - PEDESTRIAN PUSH BUTTON
2 - 200 W HPS LUMINAIRE
2 - EMERGENCY VEHICLE PREEMPTION DETECTOR
1 - MODEL 170E CONTROLLER ASSEMBLY

FOR NOTES, ABBREVIATIONS AND LEGEND, SEE SHEETS E-1 AND E-2

THIS PLAN IS ACCURATE FOR ELECTRICAL WORK ONLY

SIGNAL AND LIGHTING (LOCATION 2)

SCALE: 1" = 20'

E-23

STATE OF CALIFORNIA - DEPARTMENT OF TRANSPORTATION
Caltrans

CONSULTANT FUNCTIONAL SUPERVISOR: HATEM AHMED
CALCULATED-DESIGNED BY: HUAFENG GONG
CHECKED BY: ANDY SUMANADASA
REVISED BY: CC
DATE REVISED: 8/9/11

LAST REVISION 8-9-11
DATE PLOTTED => 19-JAN-2012
TIME PLOTTED => 08:42

Dist	COUNTY	ROUTE	POST MILES TOTAL PROJECT	SHEET No.	TOTAL SHEETS
04	CC	4	27.3/R29.0	540	950

REGISTERED ELECTRICAL ENGINEER 8/9/11 DATE

1-17-12
PLANS APPROVAL DATE

REGISTERED PROFESSIONAL ENGINEER ALLAN RAY MORRIS No. 16958 Exp. 6/30/13 ELECTRICAL STATE OF CALIFORNIA

THE STATE OF CALIFORNIA OR ITS OFFICERS OR AGENTS SHALL NOT BE RESPONSIBLE FOR THE ACCURACY OR COMPLETENESS OF SCANNED COPIES OF THIS PLAN SHEET.

T Y LIN INTERNATIONAL
2010 CROW CANYON PLACE, SUITE 350
SAN RAMON, CA 94583

CCTA
2999 OAK ROAD, SUITE 100
WALNUT CREEK, CA 94597

NOTE:

FOR ACCURATE RIGHT OF WAY DATA, CONTACT RIGHT OF WAY ENGINEERING AT THE DISTRICT OFFICE.

STEADY DEMAND SEQUENCE →

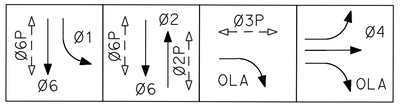

PROPOSED PHASE DIAGRAM
MODEL 2070L CONTROLLER

EVDA = Ø2
EVDB = Ø1 + Ø6

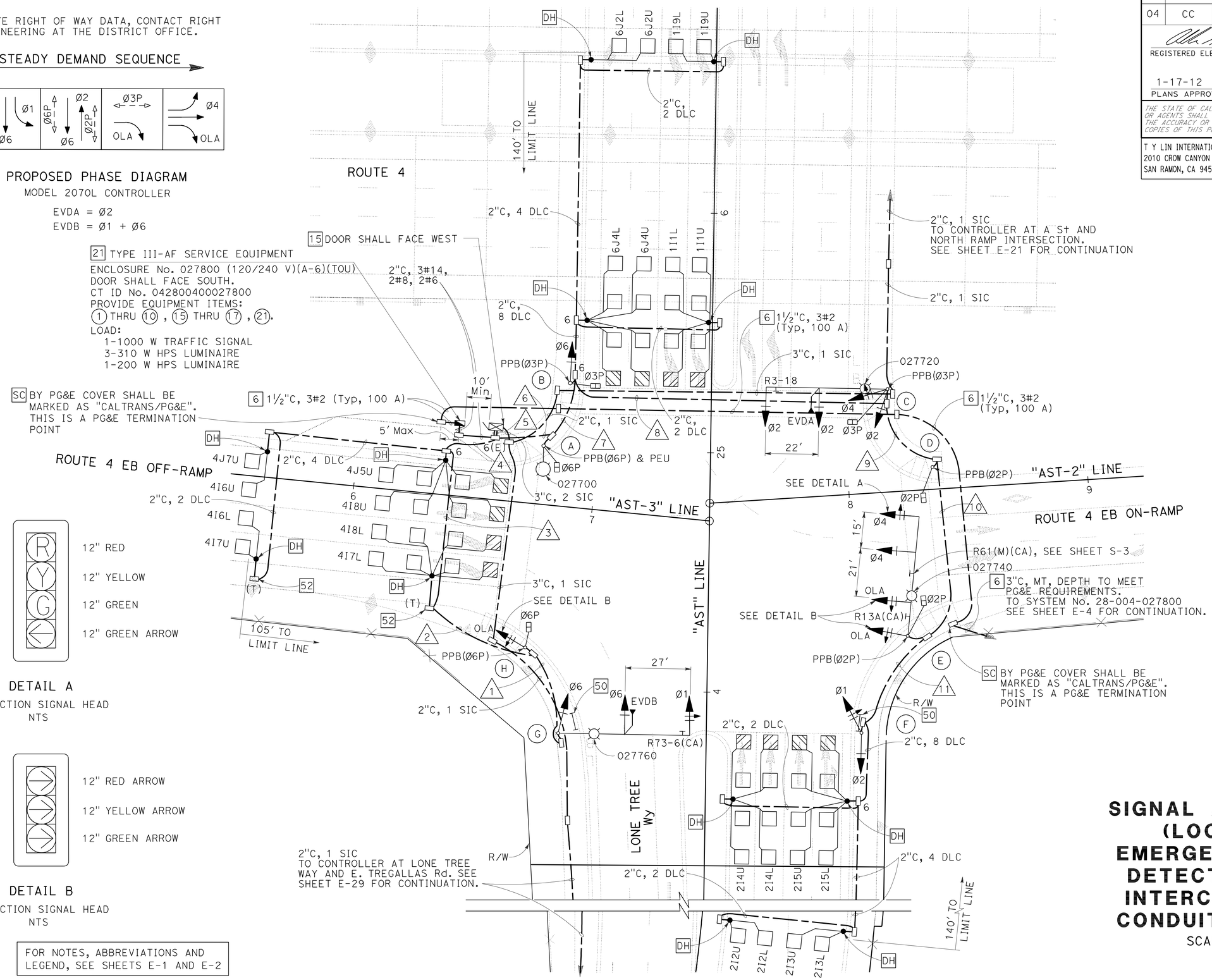

12" RED
12" YELLOW
12" GREEN
12" GREEN ARROW

DETAIL A
4-SECTION SIGNAL HEAD
NTS

12" RED ARROW
12" YELLOW ARROW
12" GREEN ARROW

DETAIL B
3-SECTION SIGNAL HEAD
NTS

FOR NOTES, ABBREVIATIONS AND LEGEND, SEE SHEETS E-1 AND E-2

SIGNAL AND LIGHTING (LOCATION 2) EMERGENCY VEHICLE DETECTOR SYSTEM INTERCONNECTION CONDUIT AND CABLE

SCALE: 1" = 20'

E-24

THIS PLAN IS ACCURATE FOR ELECTRICAL WORK ONLY

STATE OF CALIFORNIA - DEPARTMENT OF TRANSPORTATION
Caltrans

CONSULTANT FUNCTIONAL SUPERVISOR: HATEM AHMED
CALCULATED-DESIGNED BY: HUAFENG GONG
CHECKED BY: ANDY SUMANADASA
REVISED BY: CC
DATE REVISED: 8/9/11

LAST REVISION DATE PLOTTED => 19-JAN-2012
TIME PLOTTED => 08:42

Dist	COUNTY	ROUTE	POST MILES TOTAL PROJECT	SHEET No.	TOTAL SHEETS
04	CC	4	27.3/R29.0	541	950

REGISTERED ELECTRICAL ENGINEER 8/9/11 DATE

1-17-12
PLANS APPROVAL DATE

REGISTERED PROFESSIONAL ENGINEER ALLAN RAY MORRIS No. 16958 Exp. 6/30/13 ELECTRICAL STATE OF CALIFORNIA

THE STATE OF CALIFORNIA OR ITS OFFICERS OR AGENTS SHALL NOT BE RESPONSIBLE FOR THE ACCURACY OR COMPLETENESS OF SCANNED COPIES OF THIS PLAN SHEET.

T Y LIN INTERNATIONAL
2010 CROW CANYON PLACE, SUITE 350
SAN RAMON, CA 94583

CCTA
2999 OAK ROAD, SUITE 100
WALNUT CREEK, CA 94597

CONDUCTOR AND CONDUIT SCHEDULE

CONDUCTOR	CONDUCTOR RUN	1	2	3	4	5	6	7	8	9	10	11
No. 14	Ø1	3	3	3	3	6	3	3	3	3	3	3
	Ø2					3	3	3	3	3	3	3
	Ø4					4	4	4	4	4	4	
	Ø6	3	3	3	3	6	3	3				
	OLA		3	3	3	6	3	3	3	3	3	
	Ø2P					2	2	2	2	2	2	
	Ø3P					2	2	2	2			
	Ø6P		2	2	2	4	2					
	Ø2PPB					1	1	1	1	1	1	
	Ø3PPB					1	1	1	1			
	Ø6PPB		1	1	1	2	1					
	PPB COMMON		1	1	1	2	1	1	1	1	1	
	SPARES	3	3	3	3	6	3	3	3	3	3	3
	TOTAL	9	16	16	16	45	32	26	23	20	20	9
No. 8	LUMINAIRES	2	2	2	2		2	2	2	2	2	
	SIGNAL COMMON	1	1	1	1	2	1	1	1	1	1	1
	TOTAL	3	3	3	3	2	3	3	3	3	3	1
No. 6	SIGNAL SERVICE					2						
	TOTAL					2						
DETECTOR CABLE	1I1U					1	1	1				
	1I1L					1	1	1				
	1I9U					1	1	1				
	1I9L					1	1	1				
	2I2U					1	1	1	1	1	1	1
	2I2L					1	1	1	1	1	1	1
	2I3U					1	1	1	1	1	1	1
	2I3L					1	1	1	1	1	1	1
	2I4U					1	1	1	1	1	1	1
	2I4L					1	1	1	1	1	1	1
	2I5U					1	1	1	1	1	1	1
	2I5L					1	1	1	1	1	1	1
	4I6U				1	1						
	4I6L				1	1						
	4I7U				1	1						
	4I7L			1	1	1						
	4I8U				1	1						
	4I8L			1	1	1						
	4J5U				1	1						
	4J7U				1	1						
	6J2U					1	1	1				
	6J2L					1	1	1				
	6J4U					1	1	1				
	6J4L					1	1	1				
	TOTAL			2	8	24	16	16	8	8	8	8
EVD CABLE	EVDA					1	1	1	1			
	EVDB	1	1	1	1	1						
	TOTAL	1	1	1	1	2	1	1	1			
	CONDUIT SIZE	2"	2"	3"	3"	2-3"	4"	4"	3"	3"	3"	3"

POLE AND EQUIPMENT SCHEDULE

No.	STANDARD Type	STANDARD SMA	STANDARD LMA	VEH SIG MTG Mast Arm	VEH SIG MTG Pole	PED SIGNAL MTG	PPB Ø	PPB ARROW	HPS LUMINAIRE (W)	SPECIAL REQUIREMENTS
A	15TS	-	15′	-	-	SP-1-T	6	→	200	INSTALL PEU ON TOP OF POLE.
B	1-B	-	-	-	TV-1-T	SP-1-T	3	→	-	
C	29A-5-100	50′	15′	MAS MAS	SV-2-TA	SP-1-T	3	←	310	INSTALL R3-18 ON SIGNAL MAST ARM. INSTALL EVDA ON SIGNAL HEAD.
D	1-B	-	-	-	-	TP-1-T	2	→	-	
E	29A-5-100	50′	15′	MAS MAS MAS	SV-1-T	SP-1-T	2	→	310	INSTALL R61(M)(CA) AND R13(CA) SIGNS ON SIGNAL MAST ARM.
F	1-B	-	-	-	TV-2-T	-	-	-	-	
G	29A-5-100	55′	15′	MAS MAS	SV-1-T	-	-	-	310	INSTALL R73-6(CA) ON SIGNAL MAST ARM. INSTALL EVDB ON SIGNAL HEAD.
H	1-B	-	-	-	TV-1-T	SP-1-T	6	←	-	

TRAFFIC SIGNAL CONDUCTORS FOR PHASE OVERLAPS SHALL BE DOUBLE STRIPED AS FOLLOWS:

SIGNAL PHASE	BASE COLOR	DOUBLE STRIPE COLOR
OLA	RE, YE, BRN	BLACK/BLUE
OLB	RE, YE, BRN	BLACK/ORANGE
OLC	RE, YE, BRN	BLACK/PURPLE
OLD	RE, YE, BRN	BLACK/GRAY

DETAIL 1

SIGNAL AND LIGHTING (LOCATION 2)

(POLE, EQUIPMENT AND CONDUCTOR SCHEDULE)

E-25

REVISED BY	DATE REVISED
CC	8/9/11

HUAFENG GONG — ANDY SUMANADASA
CALCULATED-DESIGNED BY — CHECKED BY
CONSULTANT FUNCTIONAL SUPERVISOR — HATEM AHMED

STATE OF CALIFORNIA - DEPARTMENT OF TRANSPORTATION
Caltrans

LAST REVISION 8-9-11
DATE PLOTTED => 19-JAN-2012
TIME PLOTTED => 08:42

Dist	COUNTY	ROUTE	POST MILES TOTAL PROJECT	SHEET No.	TOTAL SHEETS
04	CC	4	27.3/R29.0	542	950

REGISTERED ELECTRICAL ENGINEER 8/9/11 DATE

1-17-12
PLANS APPROVAL DATE

REGISTERED PROFESSIONAL ENGINEER
ALLAN RAY MORRIS
No. 16958
Exp. 6/30/13
ELECTRICAL
STATE OF CALIFORNIA

THE STATE OF CALIFORNIA OR ITS OFFICERS OR AGENTS SHALL NOT BE RESPONSIBLE FOR THE ACCURACY OR COMPLETENESS OF SCANNED COPIES OF THIS PLAN SHEET.

T Y LIN INTERNATIONAL
2010 CROW CANYON PLACE, SUITE 350
SAN RAMON, CA 94583

CCTA
2999 OAK ROAD, SUITE 100
WALNUT CREEK, CA 94597

NOTE:

FOR ACCURATE RIGHT OF WAY DATA, CONTACT RIGHT OF WAY ENGINEERING AT THE DISTRICT OFFICE.

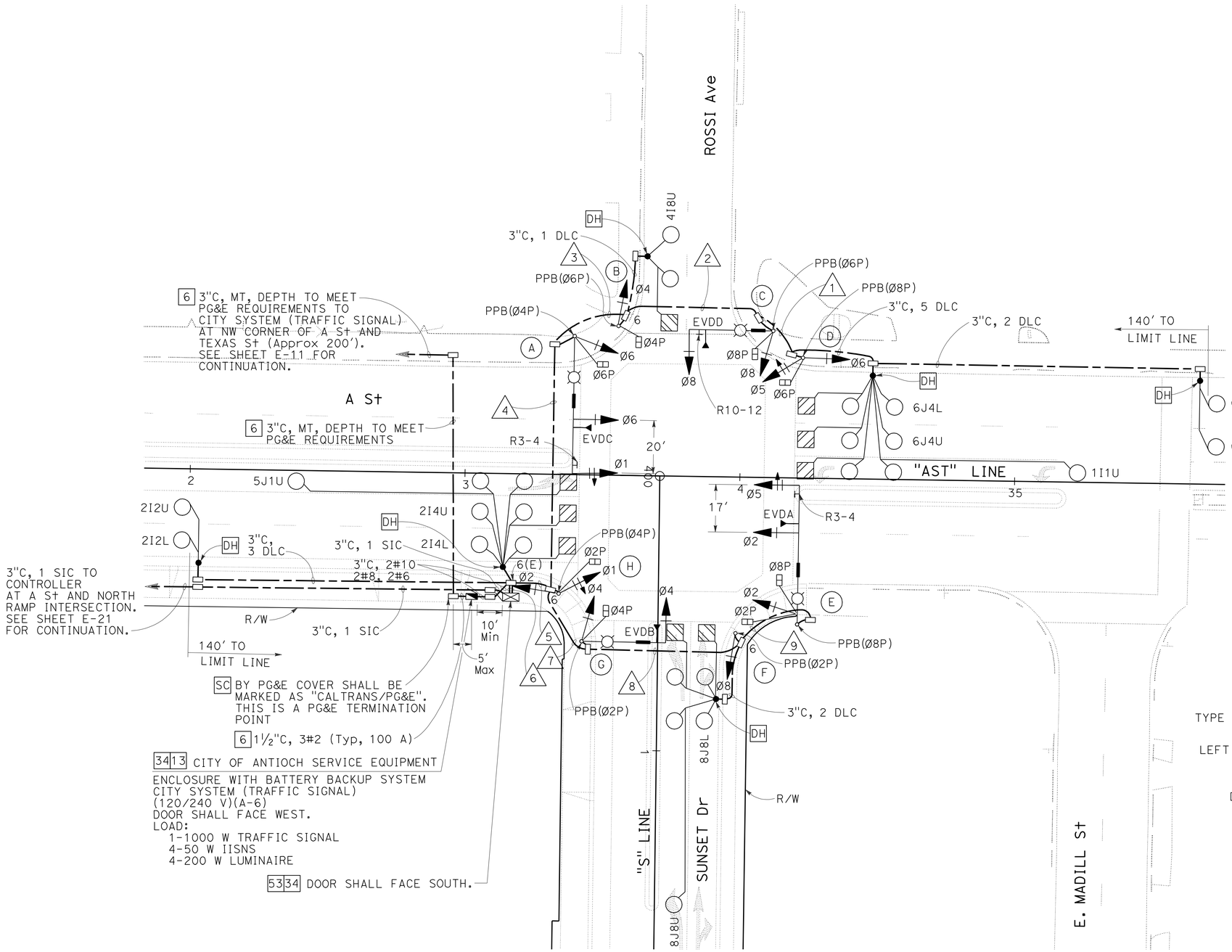

STEADY DEMAND SEQUENCE

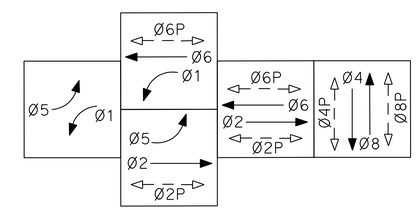

PROPOSED PHASE DIAGRAM
MODEL 170E CONTROLLER

EVDA = Ø2 + Ø5
EVDB = Ø4
EVDC = Ø1 + Ø6
EVDD = Ø8

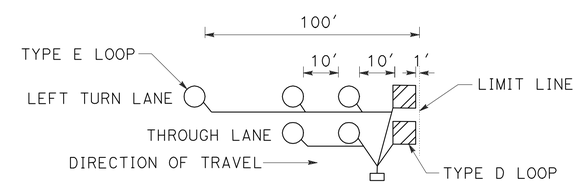

CITY OF ANTIOCH
DETECTOR LOOP PLACEMENT DETAIL
(THIS SHEET ONLY)
NO SCALE

SIGNAL AND LIGHTING (CITY STREET LOCATION 1)

SCALE: 1" = 20'

FOR NOTES, ABBREVIATIONS AND LEGEND, SEE SHEETS E-1 AND E-2

THIS PLAN IS ACCURATE FOR ELECTRICAL WORK ONLY

E-26

REVISED BY	CC
DATE REVISED	8/9/11
CALCULATED-DESIGNED BY	HUA FENG GONG
CHECKED BY	ANDY SUMANADASA
CONSULTANT FUNCTIONAL SUPERVISOR	HATEM AHMED

STATE OF CALIFORNIA - DEPARTMENT OF TRANSPORTATION
Caltrans

LAST REVISION 8-9-11
DATE PLOTTED => 19-JAN-2012
TIME PLOTTED => 08:42

Dist	COUNTY	ROUTE	POST MILES TOTAL PROJECT	SHEET No.	TOTAL SHEETS
04	CC	4	27.3/R29.0	543	950

REGISTERED ELECTRICAL ENGINEER 8/9/11 DATE

1-17-12
PLANS APPROVAL DATE

REGISTERED PROFESSIONAL ENGINEER
ALLAN RAY MORRIS
No. 16958
Exp. 6/30/13
ELECTRICAL
STATE OF CALIFORNIA

THE STATE OF CALIFORNIA OR ITS OFFICERS OR AGENTS SHALL NOT BE RESPONSIBLE FOR THE ACCURACY OR COMPLETENESS OF SCANNED COPIES OF THIS PLAN SHEET.

T Y LIN INTERNATIONAL
2010 CROW CANYON PLACE, SUITE 350
SAN RAMON, CA 94583

CCTA
2999 OAK ROAD, SUITE 100
WALNUT CREEK, CA 94597

CONDUCTOR AND CONDUIT SCHEDULE

CONDUCTOR	CONDUCTOR RUN	1	2	3	4	5	6	7	8	9
No. 14	Ø1				3	3	3			
	Ø2					3	3	3	3	3
	Ø4			3	3	6	6	3		
	Ø5	3	3	3	3	6	6	3	3	3
	Ø6	3	3	3	3	3	3			
	Ø8		3	3	3	6	6	3	3	
	Ø2P					2	2	2	2	2
	Ø4P			2	2	4	4	2		
	Ø6P	2	2	2	2	2	2			
	Ø8P		2	2	2	4	4	2	2	2
	Ø2PPB					1	1	1	1	
	Ø4PPB				1	1	1	1		
	Ø6PPB		1	1	1	1	1			
	Ø8PPB	1	1	1	1	2	2	1	1	1
	PPB COMMON	1	1	1	1	2	2	1	1	1
	SPARES	3	3	3	3	6	6	3	3	3
	TOTAL	13	19	24	28	55	52	28	19	15
No. 10	IISNS		2	2	2	2		2	2	2
	TOTAL		2	2	2	2		2	2	2
No. 8	LUMINAIRES		2	2	2	2		2	2	2
	SIGNAL COMMON	1	1	1	1	2	2	1	1	1
	TOTAL	1	3	3	3	4	2	3	3	3
No. 6	SIGNAL SERVICE						2			
	TOTAL						2			
DETECTOR CABLE	1I1U	1	1	1	1	1	1			
	2I2U						1			
	2I2L						1			
	2I4U						1			
	2I4L						1			
	4I8U			1	1	1	1			
	5J1U						1			
	6J2U	1	1	1	1	1	1			
	6J2L	1	1	1	1	1	1			
	6J4U	1	1	1	1	1	1			
	6J4L	1	1	1	1	1	1			
	8J8U					1	1	1	1	
	8J8L					1	1	1	1	
	TOTAL	5	5	6	6	8	13	2	2	
EVD CABLE	EVDA					1	1	1	1	1
	EVDB					1	1	1		
	EVDC				1	1	1			
	EVDD		1	1	1	1	1			
	TOTAL		1	1	2	4	4	2	1	1
	CONDUIT SIZE	3"	3"	3"	3"	4"	2-3"	3"	3"	3"

POLE AND EQUIPMENT SCHEDULE

No.	STANDARD Type	STANDARD SMA	STANDARD LMA	VEH SIG MTG Mast Arm	VEH SIG MTG Pole	PED SIGNAL MTG	PPB Ø	PPB ARROW	LUMINAIRE (W)	SPECIAL REQUIREMENTS
A	29-5-100	50′	15′	MAS MAS	SV-1-T	SP-1-T	4	←	200	INSTALL R3-4, IISNS AND EVDC ON SIGNAL MAST ARM.
B	1-B	-	-	-	TV-1-T	SP-1-T	6	→	-	
C	19-4-100	30′	12′	MAS	SV-1-T	SP-1-T	6	←	200	INSTALL R10-12, IISNS AND EVDD ON SIGNAL MAST ARM.
D	1-B	-	-	-	TV-2-T	SP-1-T	8	→	-	
E	29-5-100	50′	15′	MAS MAS	SV-1-T	SP-2-T	8	←	200	INSTALL R3-4, IISNS AND EVDA ON SIGNAL MAST ARM.
F	1-B	-	-	-	TV-1-T	-	2	→	-	
G	19-4-100	30′	12′	MAS	SV-1-T	SP-1-T	2	→	200	INSTALL PEU ON TOP OF POLE AND IISNS AND EVDB ON SIGNAL MAST ARM.
H	1-B	-	-	-	TV-2-T	SP-1-T	4	→	-	

IISNS SCHEDULE

POLE LOCATION	MESSAGE	SIZE	LED
A	Rossi Ave	6′	50 W
C	A Street	6′	50 W
E	Sunset Dr	6′	50 W
G	A Street	6′	50 W

SIGNAL AND LIGHTING (CITY STREET LOCATION 1)

(POLE, EQUIPMENT AND CONDUCTOR SCHEDULE)

E-27

STATE OF CALIFORNIA - DEPARTMENT OF TRANSPORTATION
Caltrans

CONSULTANT FUNCTIONAL SUPERVISOR: HATEM AHMED
CALCULATED-DESIGNED BY: DAVID SETO
CHECKED BY: ANDY SUMANADASA
REVISED BY: CC
DATE REVISED: 8/9/11

LAST REVISION 8-9-11
DATE PLOTTED => 19-JAN-2012
TIME PLOTTED => 08:42

Dist	COUNTY	ROUTE	POST MILES TOTAL PROJECT	SHEET No.	TOTAL SHEETS
04	CC	4	27.3/R29.0	544	950

REGISTERED ELECTRICAL ENGINEER 8/9/11 DATE

1-17-12
PLANS APPROVAL DATE

REGISTERED PROFESSIONAL ENGINEER
ALLAN RAY MORRIS
No. 16958
Exp. 6/30/13
ELECTRICAL
STATE OF CALIFORNIA

THE STATE OF CALIFORNIA OR ITS OFFICERS OR AGENTS SHALL NOT BE RESPONSIBLE FOR THE ACCURACY OR COMPLETENESS OF SCANNED COPIES OF THIS PLAN SHEET.

T Y LIN INTERNATIONAL
2010 CROW CANYON PLACE, SUITE 350
SAN RAMON, CA 94583

CCTA
2999 OAK ROAD, SUITE 100
WALNUT CREEK, CA 94597

NOTE:

FOR ACCURATE RIGHT OF WAY DATA, CONTACT RIGHT OF WAY ENGINEERING AT THE DISTRICT OFFICE.

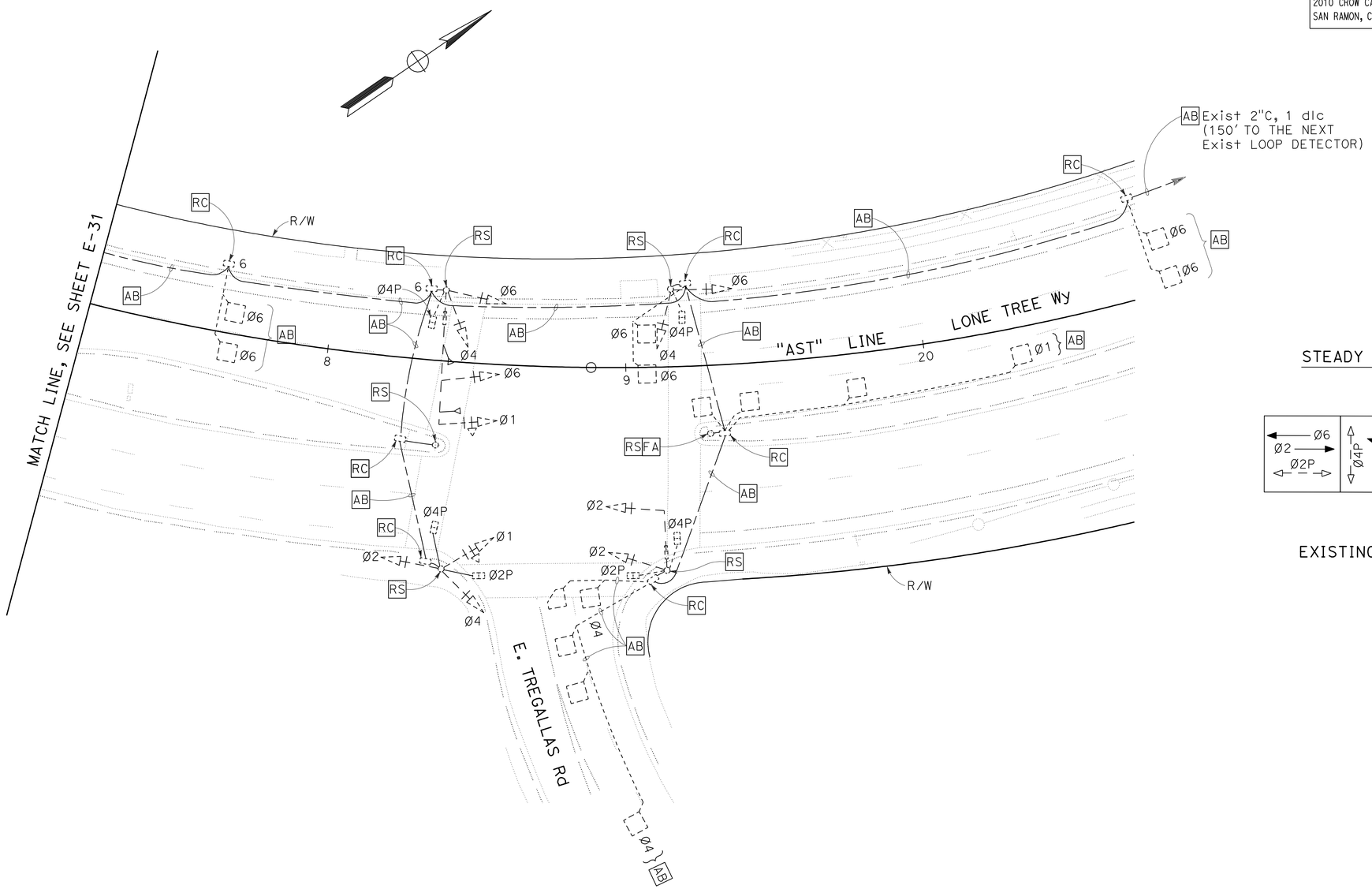

STEADY DEMAND SEQUENCE

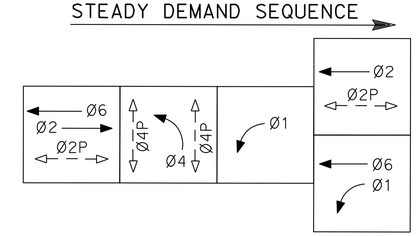

EXISTING PHASE DIAGRAM

FOR NOTES, ABBREVIATIONS AND LEGEND, SEE SHEETS E-1 AND E-2

THIS PLAN IS ACCURATE FOR ELECTRICAL WORK ONLY

SIGNAL AND LIGHTING (CITY STREET LOCATION 2)

SCALE: 1" = 20'

E-28

REVISED BY	DATE REVISED
CC	8/9/11

CALCULATED-DESIGNED BY: HUAFENG GONG
CHECKED BY: ANDY SUMANADASA
CONSULTANT FUNCTIONAL SUPERVISOR: HATEM AHMED

STATE OF CALIFORNIA - DEPARTMENT OF TRANSPORTATION
Caltrans

LAST REVISION 8-9-11
DATE PLOTTED => 19-JAN-2012
TIME PLOTTED => 08:42

Dist	COUNTY	ROUTE	POST MILES TOTAL PROJECT	SHEET No.	TOTAL SHEETS
04	CC	4	27.3/R29.0	545	950

REGISTERED ELECTRICAL ENGINEER 8/9/11 DATE

1-17-12
PLANS APPROVAL DATE

REGISTERED PROFESSIONAL ENGINEER ALLAN RAY MORRIS No. 16958 Exp. 6/30/13 ELECTRICAL STATE OF CALIFORNIA

THE STATE OF CALIFORNIA OR ITS OFFICERS OR AGENTS SHALL NOT BE RESPONSIBLE FOR THE ACCURACY OR COMPLETENESS OF SCANNED COPIES OF THIS PLAN SHEET.

T Y LIN INTERNATIONAL
2010 CROW CANYON PLACE, SUITE 350
SAN RAMON, CA 94583

CCTA
2999 OAK ROAD, SUITE 100
WALNUT CREEK, CA 94597

NOTE:

FOR ACCURATE RIGHT OF WAY DATA, CONTACT RIGHT OF WAY ENGINEERING AT THE DISTRICT OFFICE.

STEADY DEMAND SEQUENCE

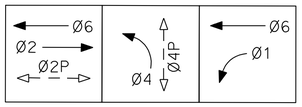

PROPOSED PHASE DIAGRAM
MODEL 170E CONTROLLER

EVDA = Ø2
EVDB = Ø4
EVDC = Ø6

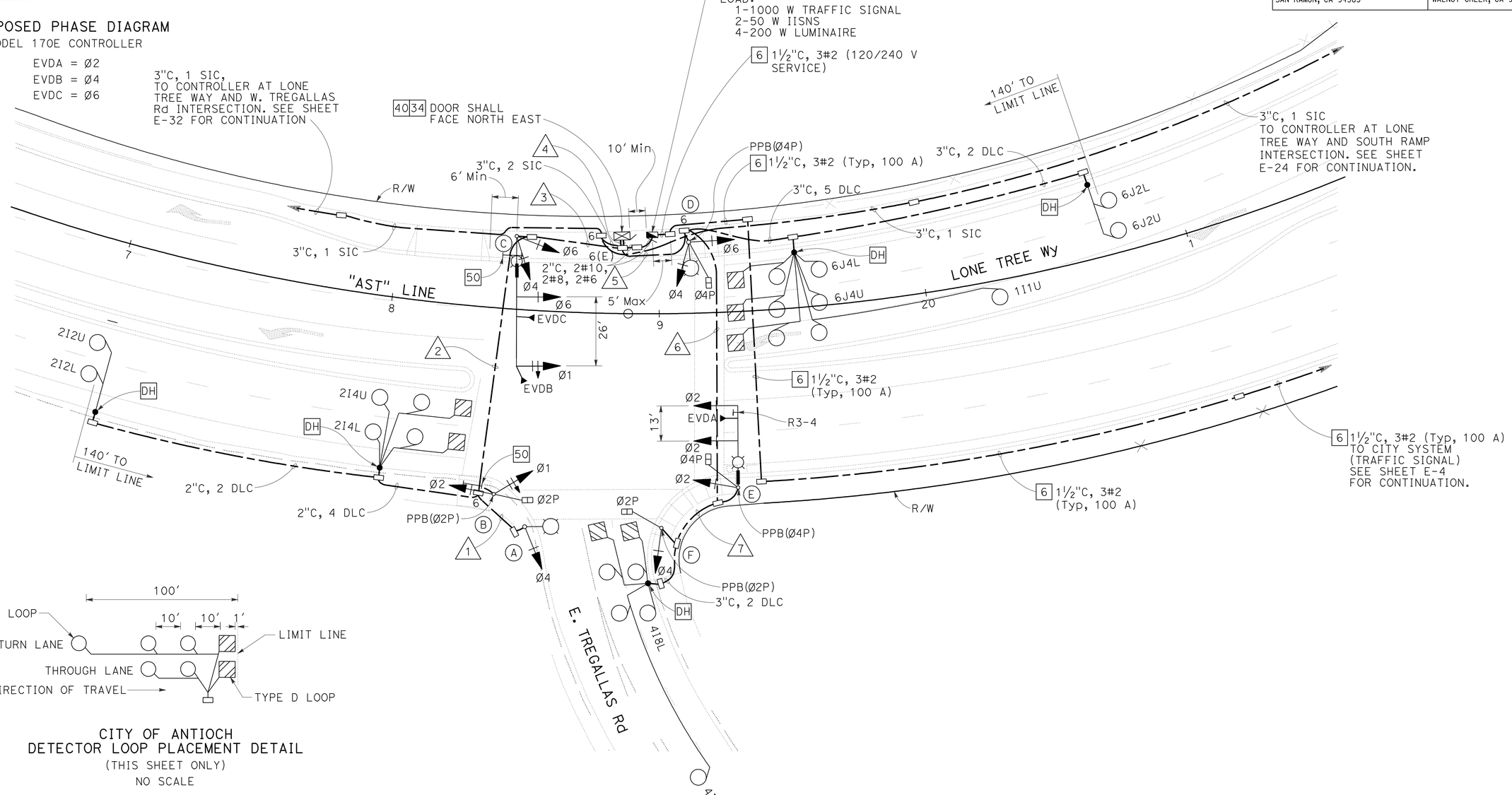

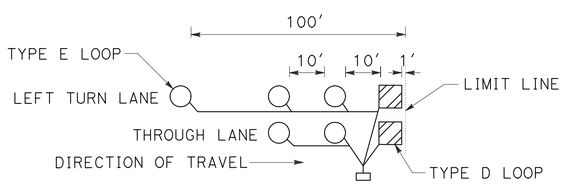

CITY OF ANTIOCH
DETECTOR LOOP PLACEMENT DETAIL
(THIS SHEET ONLY)
NO SCALE

FOR NOTES, ABBREVIATIONS AND LEGEND, SEE SHEETS E-1 AND E-2

THIS PLAN IS ACCURATE FOR ELECTRICAL WORK ONLY

SIGNAL AND LIGHTING (CITY STREET LOCATION 2)

SCALE: 1" = 20'

E-29

STATE OF CALIFORNIA - DEPARTMENT OF TRANSPORTATION
Caltrans

CONSULTANT FUNCTIONAL SUPERVISOR: HATEM AHMED
CALCULATED-DESIGNED BY: HUAFENG GONG
CHECKED BY: ANDY SUMANADASA
REVISED BY: CC
DATE REVISED: 8/9/11

LAST REVISION 8-9-11
DATE PLOTTED => 19-JAN-2012
TIME PLOTTED => 08:42

Dist	COUNTY	ROUTE	POST MILES TOTAL PROJECT	SHEET No.	TOTAL SHEETS
04	CC	4	27.3/R29.0	546	950

REGISTERED ELECTRICAL ENGINEER 8/9/11 DATE

1-17-12
PLANS APPROVAL DATE

REGISTERED PROFESSIONAL ENGINEER
ALLAN RAY MORRIS
No. 16958
Exp. 6/30/13
ELECTRICAL
STATE OF CALIFORNIA

THE STATE OF CALIFORNIA OR ITS OFFICERS OR AGENTS SHALL NOT BE RESPONSIBLE FOR THE ACCURACY OR COMPLETENESS OF SCANNED COPIES OF THIS PLAN SHEET.

T Y LIN INTERNATIONAL
2010 CROW CANYON PLACE, SUITE 350
SAN RAMON, CA 94583

CCTA
2999 OAK ROAD, SUITE 100
WALNUT CREEK, CA 94597

CONDUCTOR AND CONDUIT SCHEDULE

CONDUCTOR	CONDUCTOR RUN	1	2	3	4	5	6	7
No. 14	Ø1		3	3	3			
	Ø2		3	3	6	3	3	
	Ø4	3	3	3	6	3	3	3
	Ø6			3	6	3		
	Ø2P		2	2	4	2	2	2
	Ø4P				2	2	2	
	PPB(Ø2P)		1	1	2	1	1	1
	PPB(Ø4P)				1	1	1	
	PPB COMMON		1	1	2	1	1	1
	SPARES	3	3	3	6	3	3	3
	TOTAL	6	16	19	38	19	16	10
No. 10	IISNS			2		2	2	
	TOTAL			2		2	2	
No. 8	LUMINAIRES	2	2	2		2	2	
	SIGNAL COMMON	1	1	1	2	1	1	1
	TOTAL	3	3	3	2	3	3	1
No. 6	SIGNAL SERVICE				2			
	TOTAL				2			
DETECTOR LEAD-IN CABLE	1I1U				1	1		
	2I2U		1	1	1			
	2I2L		1	1	1			
	2I4U		1	1	1			
	2I4L		1	1	1			
	4I8U				1	1	1	1
	4I8L				1	1	1	1
	6J2U				1	1		
	6J2L				1	1		
	6J4U				1	1		
	6J4L				1	1		
	TOTAL		4	4	11	7	2	2
EVD CABLE	EVDA				1	1	1	
	EVDB			1	1			
	EVDC			1	1			
	TOTAL			2	3	1	1	
	CONDUIT SIZE (INCHES)	3"	3"	3"	2-3"	3"	3"	3"

POLE AND EQUIPMENT SCHEDULE

No.	STANDARD			VEH SIG MTG		PED SIGNAL	PPB		LUMINAIRE (W)	SPECIAL REQUIREMENTS
	Type	SMA	LMA	Mast Arm	Pole	MTG	Ø	ARROW		
A	15TS	-	12′	-	SV-1-T	-	-	-	200	
B	1-B	-	-	-	TV-2-T	SP-1-T	2	→	-	
C	29-5-100	50′	15′	MAS MAS	SV-2-TA	-	-	-	200	INSTALL IISNS, EVDB AND EVDC ON SIGNAL MAST ARM.
D	15TS	-	-	-	SV-2-TA	SP-1-T	4	←	200	
E	19A-4-100	30′	15′	MAS MAS	SV-1-T	SP-1-T	4	←	200	INSTALL IISNS, EVDA AND R3-4 ON SIGNAL MAST ARM.
F	1-B	-	-	-	TV-1-T	SP-1-T	2	→	-	

IISNS SCHEDULE

POLE LOCATION	MESSAGE	SIZE	LED
C	E. Tregallas Rd	8′	50 W
E	E. Tregallas Rd	8′	50 W

SIGNAL AND LIGHTING (CITY STREET LOCATION 2)

(POLE, EQUIPMENT AND CONDUCTOR SCHEDULE)

E-30

REVISED BY	DATE REVISED
CC	8/9/11

HUAFENG GONG — ANDY SUMANADASA
CALCULATED-DESIGNED BY — CHECKED BY
CONSULTANT FUNCTIONAL SUPERVISOR — HATEM AHMED

STATE OF CALIFORNIA - DEPARTMENT OF TRANSPORTATION
Caltrans

LAST REVISION 8-9-11
DATE PLOTTED => 19-JAN-2012
TIME PLOTTED => 08:42

Dist	COUNTY	ROUTE	POST MILES TOTAL PROJECT	SHEET No.	TOTAL SHEETS
04	CC	4	27.3/R29.0	547	950

REGISTERED ELECTRICAL ENGINEER — DATE 8/9/11

1-17-12
PLANS APPROVAL DATE

REGISTERED PROFESSIONAL ENGINEER — ALLAN RAY MORRIS — No. 16958 — Exp. 6/30/13 — ELECTRICAL — STATE OF CALIFORNIA

THE STATE OF CALIFORNIA OR ITS OFFICERS OR AGENTS SHALL NOT BE RESPONSIBLE FOR THE ACCURACY OR COMPLETENESS OF SCANNED COPIES OF THIS PLAN SHEET.

T Y LIN INTERNATIONAL
2010 CROW CANYON PLACE, SUITE 350
SAN RAMON, CA 94583

CCTA
2999 OAK ROAD, SUITE 100
WALNUT CREEK, CA 94597

NOTE:

FOR ACCURATE RIGHT OF WAY DATA, CONTACT RIGHT OF WAY ENGINEERING AT THE DISTRICT OFFICE.

STEADY DEMAND SEQUENCE

EXISTING PHASE DIAGRAM

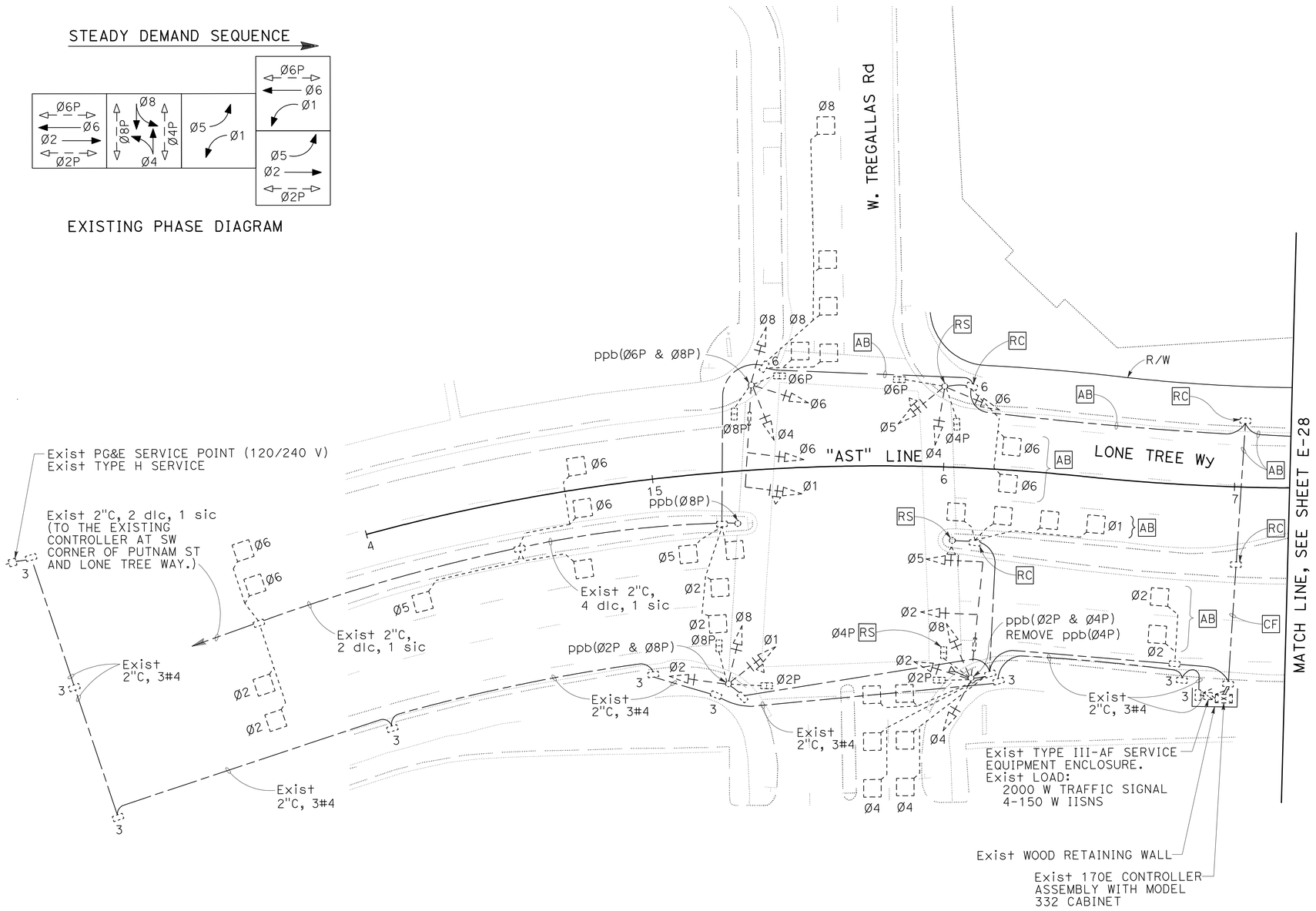

MODIFY SIGNAL AND LIGHTING (CITY STREET LOCATION 3)

SCALE: 1" = 20'

E-31

FOR NOTES, ABBREVIATIONS AND LEGEND, SEE SHEETS E-1 AND E-2

THIS PLAN IS ACCURATE FOR ELECTRICAL WORK ONLY

REVISED BY	DATE REVISED
CC	8/9/11

CALCULATED-DESIGNED BY: HUAFENG GONG
CHECKED BY: ANDY SUMANADASA
CONSULTANT FUNCTIONAL SUPERVISOR: HATEM AHMED

STATE OF CALIFORNIA - DEPARTMENT OF TRANSPORTATION
Caltrans

LAST REVISION 8-9-11 | DATE PLOTTED => 19-JAN-2012 | TIME PLOTTED => 08:42

Dist	COUNTY	ROUTE	POST MILES TOTAL PROJECT	SHEET No.	TOTAL SHEETS
04	CC	4	27.3/R29.0	548	950

REGISTERED ELECTRICAL ENGINEER — DATE 8/9/11

1-17-12
PLANS APPROVAL DATE

REGISTERED PROFESSIONAL ENGINEER — ALLAN RAY MORRIS — No. 16958 — Exp. 6/30/13 — ELECTRICAL — STATE OF CALIFORNIA

THE STATE OF CALIFORNIA OR ITS OFFICERS OR AGENTS SHALL NOT BE RESPONSIBLE FOR THE ACCURACY OR COMPLETENESS OF SCANNED COPIES OF THIS PLAN SHEET.

T Y LIN INTERNATIONAL
2010 CROW CANYON PLACE, SUITE 350
SAN RAMON, CA 94583

CCTA
2999 OAK ROAD, SUITE 100
WALNUT CREEK, CA 94597

NOTE:

FOR ACCURATE RIGHT OF WAY DATA, CONTACT RIGHT OF WAY ENGINEERING AT THE DISTRICT OFFICE.

STEADY DEMAND SEQUENCE

PROPOSED PHASE DIAGRAM
EXISTING MODE 170E CONTROLLER

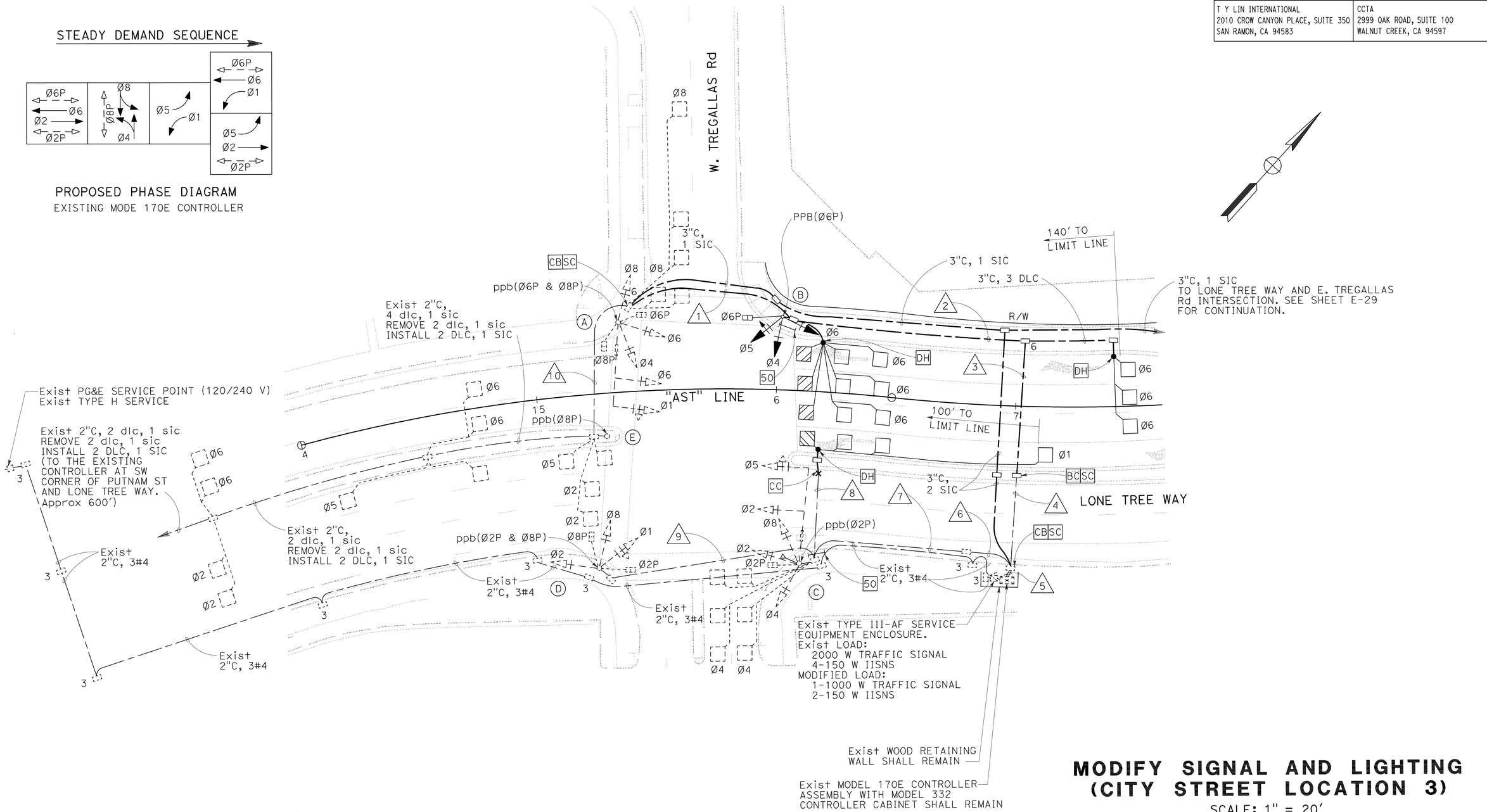

FOR NOTES, ABBREVIATIONS AND LEGEND, SEE SHEETS E-1 AND E-2

THIS PLAN IS ACCURATE FOR ELECTRICAL WORK ONLY

MODIFY SIGNAL AND LIGHTING (CITY STREET LOCATION 3)

SCALE: 1" = 20'

E-32

REVISED BY	DATE REVISED
CC	8/9/11

CALCULATED-DESIGNED BY: HUAFENG GONG
CHECKED BY: ANDY SUMANADASA
CONSULTANT FUNCTIONAL SUPERVISOR: HATEM AHMED

STATE OF CALIFORNIA - DEPARTMENT OF TRANSPORTATION

LAST REVISION 8-9-11
DATE PLOTTED => 19-JAN-2012
TIME PLOTTED => 08:42

Dist	COUNTY	ROUTE	POST MILES TOTAL PROJECT	SHEET No.	TOTAL SHEETS
04	CC	4	27.3/R29.0	549	950

REGISTERED ELECTRICAL ENGINEER 8/9/11 DATE

1-17-12
PLANS APPROVAL DATE

REGISTERED PROFESSIONAL ENGINEER
ALLAN RAY MORRIS
No. 16958
Exp. 6/30/13
ELECTRICAL
STATE OF CALIFORNIA

THE STATE OF CALIFORNIA OR ITS OFFICERS OR AGENTS SHALL NOT BE RESPONSIBLE FOR THE ACCURACY OR COMPLETENESS OF SCANNED COPIES OF THIS PLAN SHEET.

T Y LIN INTERNATIONAL
2010 CROW CANYON PLACE, SUITE 350
SAN RAMON, CA 94583

CCTA
2999 OAK ROAD, SUITE 100
WALNUT CREEK, CA 94597

CONDUCTOR AND CONDUIT SCHEDULE

CONDUCTOR	CONDUCTOR RUN	1	2	3	4	5	6	7	8	9	10
No. 14	Ø1	3	3	3	3	(12)*	(3)	(3)	(3)	(3)	
	Ø2					(9)*	(6)	(6)	(6)	(3)	
	Ø4	3	3	3	3	(9)*					
	Ø5		3	3	3	(6)	(3)	(3)	(3)		
	Ø6	3	3	3	3	(9)*					
	Ø8	3	3	3	3	(12)*	(6)	(6)	(6)	(3)	
	Ø2P					(8)*	(4)	(4)	(4)	(2)	
	Ø6P	2	2	2	2	(4)*					
	Ø8P	2	2	2	2	(8)*	(4)	(4)	(4)	(2)	
	PPB(Ø2P)			1	1	(4)*	(2)	(2)	(2)	(1)	
	PPB(Ø6P)	1	1	1	1	(2)*					
	PPB(Ø8P)	1	1	1	1	(6)*	(3)	(3)	(2)	(1)	(1)
	SPARES	3	3	3	3	(12)*	(3)	(3)	(3)	(3)	(3)
	TOTAL	21	24	25	25	(109)*	(34)	(34)	(33)	(18)	(4)
No. 12	IISNS	2	2	4	4	(6)	(2)	(2)			
	PPB COMMON	1	1	2	2	(3)	(1)	(1)	(1)	(1)	(1)
	TOTAL	3	3	6	6	(9)	(3)	(3)	(1)	(1)	(1)
No. 8	120 V AC NEUTRAL	1	1	1	1	(2)	(1)	(1)	(1)	(1)	(1)
	TOTAL	1	1	1	1	(2)	(1)	(1)	(1)	(1)	(1)
DETECTOR LEAD-IN CABLE	Ø1					1	1	1	1		
	Ø2	2	2	2	2	2	2				2
	Ø4					(2)	(2)	(2)			
	Ø5	2	2	2	2	2					2
	Ø6		3	6	6	6					
	Ø8	2	2	2	2	2					
	TOTAL	6	9	12	12	15	5	3	1		4
SIC CABLE	SIGNAL INTERCONNECT					2					1
	TOTAL					2					1
	CONDUIT SIZE (INCHES)	3"	3"	2-4"	(2-4")	(2-4")	(2½")	(2½")	(2")	(2")	(2")

ALL CONDUITS AND CONDUCTORS ARE NEW, UNLESS OTHERWISE NOTED.
(#) = EXISTING
* SAVE EXTRA CONDUCTORS AS SPARE.

POLE AND EQUIPMENT SCHEDULE

No.	STANDARD Type	STANDARD SMA	STANDARD LMA	VEH SIG MTG Mast Arm	VEH SIG MTG Pole	PED SIGNAL MTG	PPB Ø	PPB ARROW	LUMINAIRE	SPECIAL REQUIREMENTS
A	23-4-80	35′	-	2-MAS	SV-3-T	SP-2-T	6 8	←←	-	
B	1-B (N)	-	-	-	TV-3-T (N)	SP-1-T (N)	6	←	-	
C	27-4-80	40′	-	2-MAS	SV-3-T	SP-1-T	2	←	-	
D	1-B	-	-	-	TV-3-T	SP-2-T	2 8	←→	-	
E	PPB POST	-	-	-	-	-	8	↔	-	

(N)=NEW

MODIFY SIGNAL AND LIGHTING (CITY STREET LOCATION 3)

(POLE, EQUIPMENT AND CONDUCTOR SCHEDULE)

E-33

REVISED BY	DATE REVISED
CC	8/9/11

HUAFENG GONG — ANDY SUMANADASA
CALCULATED-DESIGNED BY — CHECKED BY
CONSULTANT FUNCTIONAL SUPERVISOR — HATEM AHMED
STATE OF CALIFORNIA - DEPARTMENT OF TRANSPORTATION
Caltrans

LAST REVISION 8-9-11
DATE PLOTTED => 19-JAN-2012
TIME PLOTTED => 08:42

Dist	COUNTY	ROUTE	POST MILES TOTAL PROJECT	SHEET No.	TOTAL SHEETS
04	CC	4	27.3/R29.0	550	950

REGISTERED CIVIL ENGINEER — DATE 8/9/11

1-17-12
PLANS APPROVAL DATE

REGISTERED PROFESSIONAL ENGINEER — HATEM A. AHMED No. 46995 Exp. 12/31/11 CIVIL — STATE OF CALIFORNIA

THE STATE OF CALIFORNIA OR ITS OFFICERS OR AGENTS SHALL NOT BE RESPONSIBLE FOR THE ACCURACY OR COMPLETENESS OF SCANNED COPIES OF THIS PLAN SHEET.

T Y LIN INTERNATIONAL
2010 CROW CANYON PLACE, SUITE 350
SAN RAMON, CA 94583

CCTA
2999 OAK ROAD, SUITE 100
WALNUT CREEK, CA 94597

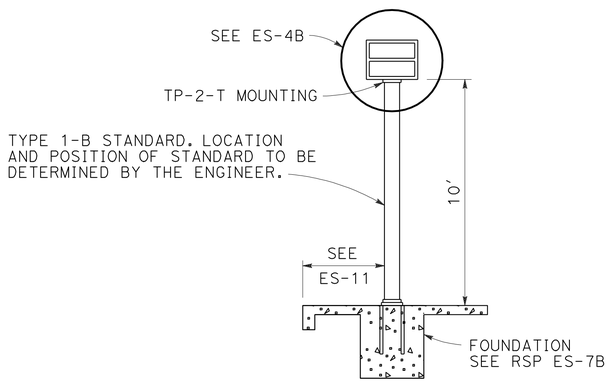

DETAIL "METER ON" SIGN

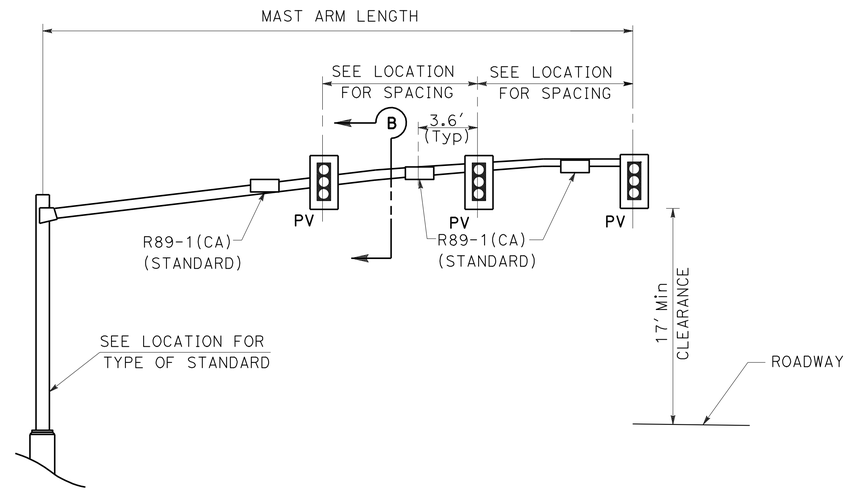

3 LANE MASTARM
DETAIL "MA"
RAMP METER SIGNAL, MAST ARM MOUNTED DETAIL

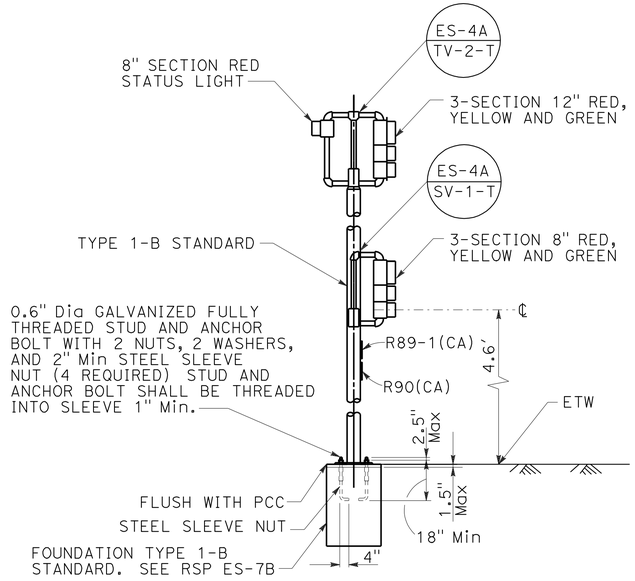

DETAIL "SIG"
RAMP METERING 1-B STANDARD DETAIL

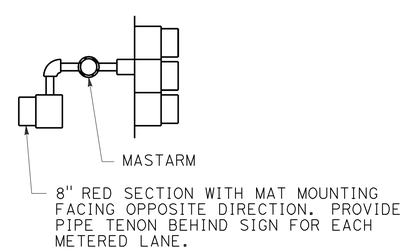

SECTION B

ELECTRICAL DETAILS
("METER ON" SIGN, RAMP METERING 1-B STANDARD, 3-LANE MASTARM)

NO SCALE

E-34

STATE OF CALIFORNIA - DEPARTMENT OF TRANSPORTATION
Caltrans®

CONSULTANT FUNCTIONAL SUPERVISOR: HATEM AHMED
CALCULATED-DESIGNED BY: DAVID SETO
CHECKED BY: ALLAN MORRIS
REVISED BY: CC
DATE REVISED: 8/9/11

LAST REVISION 8-9-11
DATE PLOTTED => 19-JAN-2012
TIME PLOTTED => 08:42

Dist	COUNTY	ROUTE	POST MILES TOTAL PROJECT	SHEET No.	TOTAL SHEETS
04	CC	4	27.3/R29.0	551	950

REGISTERED ELECTRICAL ENGINEER 8/9/11 DATE

1-17-12
PLANS APPROVAL DATE

REGISTERED PROFESSIONAL ENGINEER ALLAN RAY MORRIS No. 16958 Exp. 6/30/13 ELECTRICAL STATE OF CALIFORNIA

THE STATE OF CALIFORNIA OR ITS OFFICERS OR AGENTS SHALL NOT BE RESPONSIBLE FOR THE ACCURACY OR COMPLETENESS OF SCANNED COPIES OF THIS PLAN SHEET.

T Y LIN INTERNATIONAL
2010 CROW CANYON PLACE, SUITE 350
SAN RAMON, CA 94583

CCTA
2999 OAK ROAD, SUITE 100
WALNUT CREEK, CA 94597

INSTALL FOUR 6X6 3-TURN, TYPE A OR D LOOPS CENTERED IN LANE. IDENTIFY AND CONNECT TO DLC AS INDICATED ON THE PLAN.

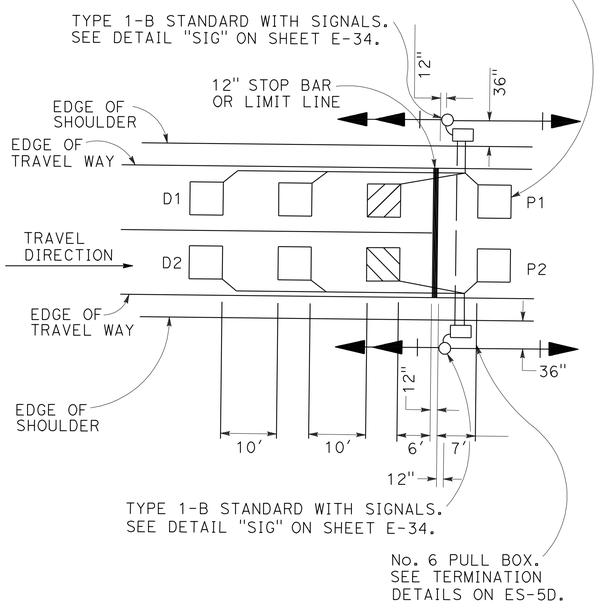

TWO LANE RAMP METERING

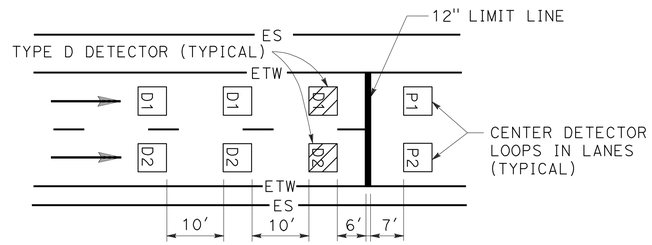

TWO LANES

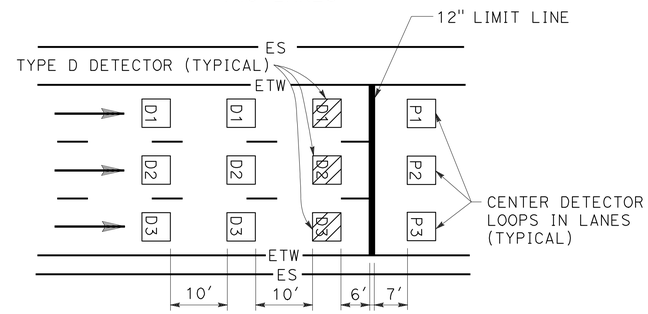

THREE LANES

NOTES:

1. SEE RSP ES-5A, ES-5B, ES-5D, AND ES-13A FOR ADDITIONAL DETAILS.
2. DLC CONDUCTORS SHALL BE SPLICED TO THE LOOP CONDUCTORS IN THE NEAREST PULLBOX.
3. ALL SPLICES SHALL BE TYPE "S" OR TYPE "ST" AS REQUIRED.

DETAIL "RM"
RAMP METERING STATION

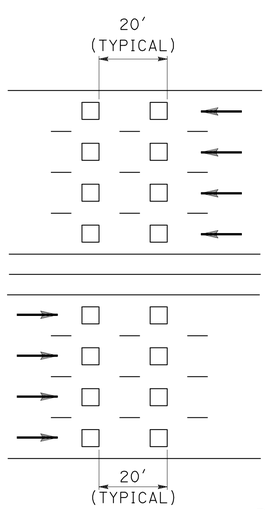

DETAIL "TM"
TRAFFIC MONITORING STATION

TRAFFIC MONITORING STATION NOTES

FREEWAY MAINLINE DETECTOR DESIGNATION:

- N=NORTHBOUND LANES (NB)
- S=SOUTHBOUND LANES (SB)
- E=EASTBOUND LANES (EB)
- W=WESTBOUND LANES (WB)

NUMBER OF LANES FROM LEFT WITH RESPECT TO DIRECTION OF TRAFFIC:

- 1=FIRST LANE FROM LEFT
- 2=SECOND LANE FROM LEFT
- 3=THIRD LANE FROM LEFT
- 4=FOURTH LANE FROM LEFT

NUMBER OF DETECTOR IN THE SAME LANE:

- 1=ENTERING DETECTOR
- 2=LEAVING DETECTOR

N 3-2

RAMP DETECTOR DESIGNATION:

- D=DEMAND DETECTOR
- P=PASSAGE DETECTOR
- Q=QUEUE DETECTOR
- F=OFFRAMP DETECTOR

- 1=FIRST LANE FROM LEFT
- 2=SECOND LANE FROM LEFT
- 3=THIRD LANE FROM LEFT

D-2

ELECTRICAL DETAILS
(RAMP METERING AND TRAFFIC MONITORING DETECTOR SPACING AND DESIGNATION)

NO SCALE

E-35

CC	8/9/11
REVISED BY	DATE REVISED
DAVID SETO	ALLAN MORRIS
CALCULATED-DESIGNED BY	CHECKED BY
CONSULTANT FUNCTIONAL SUPERVISOR	HATEM AHMED

STATE OF CALIFORNIA - DEPARTMENT OF TRANSPORTATION

LAST REVISION 8-9-11
DATE PLOTTED => 19-JAN-2012
TIME PLOTTED => 08:40

Dist	COUNTY	ROUTE	POST MILES TOTAL PROJECT	SHEET No.	TOTAL SHEETS
04	CC	4	27.3/R29.0	552	950

REGISTERED ELECTRICAL ENGINEER 8/9/11 DATE

1-17-12
PLANS APPROVAL DATE

REGISTERED PROFESSIONAL ENGINEER
ALLAN RAY MORRIS
No. 16958
Exp. 6/30/13
ELECTRICAL
STATE OF CALIFORNIA

THE STATE OF CALIFORNIA OR ITS OFFICERS OR AGENTS SHALL NOT BE RESPONSIBLE FOR THE ACCURACY OR COMPLETENESS OF SCANNED COPIES OF THIS PLAN SHEET.

T Y LIN INTERNATIONAL
2010 CROW CANYON PLACE, SUITE 350
SAN RAMON, CA 94583

CCTA
2999 OAK ROAD, SUITE 100
WALNUT CREEK, CA 94597

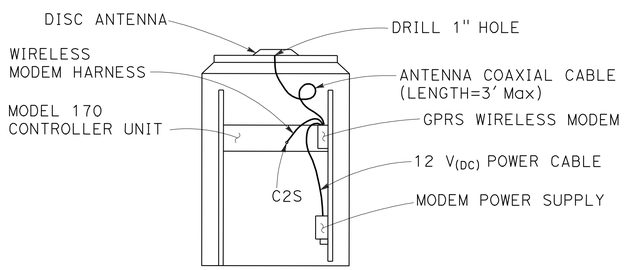

REAR VIEW OF THE MODEL 334 CONTROLLER CABINET

GPRS WIRELESS MODEM AND
ANTENNA INSTALLATION DETAIL

CONTRACTOR'S WORK IN THE CONTROLLER CABINET

1. PROVIDE THE GPRS MODEM AND WIRELESS MODEM HARANESS TO THE ENGINEER 30 WORKING DAYS BEFORE INSTALLATION. THE ENGINEER WILL RETURN THE PROGRAMMED MODEM, WITH PDP CONTEXT AND APN, AND HARNESS WITHIN 15 WORKING DAYS.
2. DRILL 1" HOLE THROUGH THE TOP OF THE CABINET. ATTACH THE ANTENNA ON THE CABINET AS DIRECTED BY THE MANUFACTURER.
3. MOUNT THE MODEM UNIT ON THE CABINET. ATTACH THE ANTENNA ON THE CABINET AS DIRECTED BY THE MANUFACTURER.
4. MOUNT THE MODEM IS 12 $V_{(DC)}$ POWER SUPPLY DIRECTLY TO THE CABINET.
5. CONNECT POWER CABLE TO 12 $V_{(DC)}$ POWER ADAPTER.
6. CONNECT THE ANTENNA COAXIAL CABLE TO THE MODEM.
7. CONNECT MODEM HARNESS BETWEEN THE MODEM AND THE MODEL 170 CONTROLLER UNIT AS SHOWN.
8. RECORD THE SERIAL NUMBER OF THE MODEM ON THE CHECK LIST SHEET.

WIRELESS MODEM HARNESS INSTALLATION DETAILS

1. CABLE PIN OUT DIAGRAM

AMP 201360-2-ND DB9-P

L — 2
K — 3
N — 5
D, H — 1,4,6,7,8,9 N/C
J, M

2. CONSTRUCT AND INSTALL COMMUNICATION CABLE.

ELECTRICAL DETAILS
(GENERAL PACKET RADIO SYSTEM WIRELESS MODEM INSTALLATION DETAILS)

NO SCALE

E-36

STATE OF CALIFORNIA - DEPARTMENT OF TRANSPORTATION	CONSULTANT FUNCTIONAL SUPERVISOR	CALCULATED-DESIGNED BY	REVISED BY
Caltrans	HATEM AHMED	CHECKED BY	DATE REVISED
		DAVID SETO	CC
		ALLAN MORRIS	8/9/11

LAST REVISION 8-9-11
DATE PLOTTED => 19-JAN-2012
TIME PLOTTED => 08:40

Dist	COUNTY	ROUTE	POST MILES TOTAL PROJECT	SHEET No.	TOTAL SHEETS
04	CC	4	27.3/R29.0	553	950

REGISTERED ELECTRICAL ENGINEER 8/9/11 DATE

1-17-12
PLANS APPROVAL DATE

REGISTERED PROFESSIONAL ENGINEER
ALLAN RAY MORRIS
No. 16958
Exp. 6/30/13
ELECTRICAL
STATE OF CALIFORNIA

THE STATE OF CALIFORNIA OR ITS OFFICERS OR AGENTS SHALL NOT BE RESPONSIBLE FOR THE ACCURACY OR COMPLETENESS OF SCANNED COPIES OF THIS PLAN SHEET.

T Y LIN INTERNATIONAL
2010 CROW CANYON PLACE, SUITE 350
SAN RAMON, CA 94583

CCTA
2999 OAK ROAD, SUITE 100
WALNUT CREEK, CA 94597

GUIDELINES FOR PG&E SERVICE CONNECTIONS

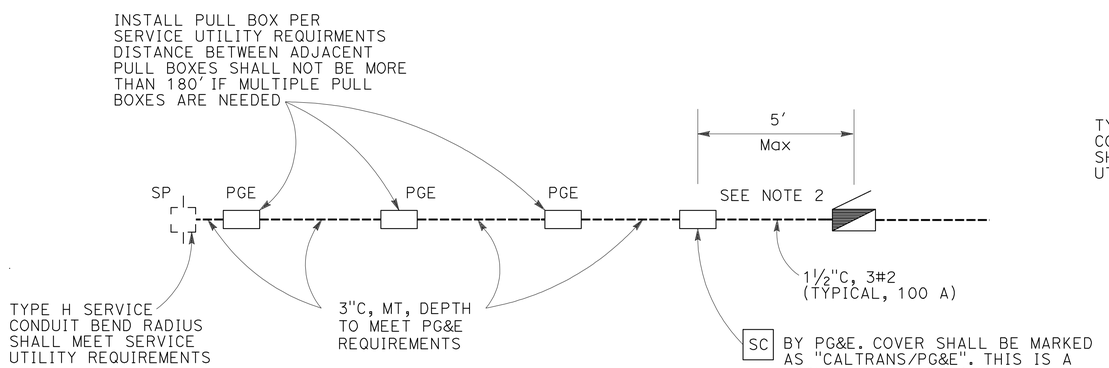

CASE I

BOTH SERVICE POINT AND SERVICE EQUIPMENT ENCLOSURE ARE INSIDE OR OUTSIDE OF STATE R/W LINE

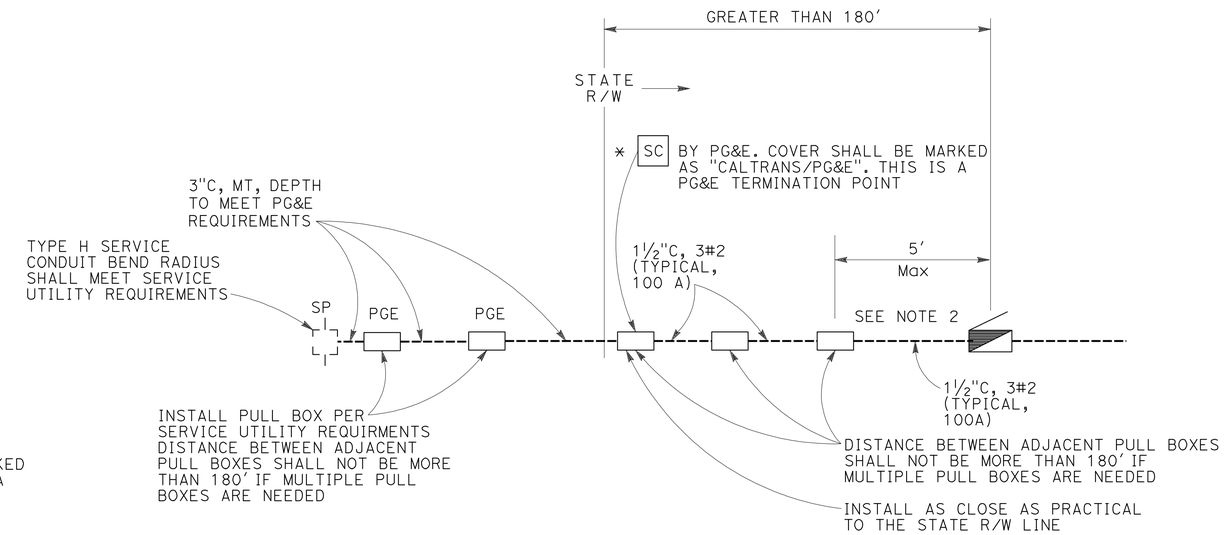

CASE II

NOTES (CASE I AND II):

1. AFTER CONSTRUCTION, CONDUITS AND PULL BOXES FROM SERVICE POINT TO PG&E TERMINATION POINT WILL BE CEDED TO AND MAINTAINED BY SERVICE UTILITY.
2. THIS PULL BOX SHALL BE INSTALLED AS REQUESTED BY MAINTENANCE.
3. IF SERVICE POINT IS AN UNDERGROUND VAULT/BOX, CONTACT PG&E FOR THE CASE-BY-CASE INSTALLATION DETAILS AND INCORPORATE THE DETAILS ON PROJECT PLAN.

ELECTRICAL DETAILS
(PG&E SERVICE CONNECTION)

NO SCALE

E-37

REVISED BY	DATE REVISED
CC	8/9/11

CALCULATED-DESIGNED BY: DAVID SETO
CHECKED BY: ALLAN MORRIS
CONSULTANT FUNCTIONAL SUPERVISOR: HATEM AHMED

STATE OF CALIFORNIA - DEPARTMENT OF TRANSPORTATION
Caltrans

LAST REVISION 8-9-11
DATE PLOTTED => 19-JAN-2012
TIME PLOTTED => 08:41

Dist	COUNTY	ROUTE	POST MILES TOTAL PROJECT	SHEET No.	TOTAL SHEETS
04	CC	4	27.3/R29.0	554	950

REGISTERED ELECTRICAL ENGINEER 8/9/11 DATE

1-17-12
PLANS APPROVAL DATE

REGISTERED PROFESSIONAL ENGINEER ALLAN RAY MORRIS No. 16958 Exp. 6/30/13 ELECTRICAL STATE OF CALIFORNIA

THE STATE OF CALIFORNIA OR ITS OFFICERS OR AGENTS SHALL NOT BE RESPONSIBLE FOR THE ACCURACY OR COMPLETENESS OF SCANNED COPIES OF THIS PLAN SHEET.

T Y LIN INTERNATIONAL
2010 CROW CANYON PLACE, SUITE 350
SAN RAMON, CA 94583

CCTA
2999 OAK ROAD, SUITE 100
WALNUT CREEK, CA 94597

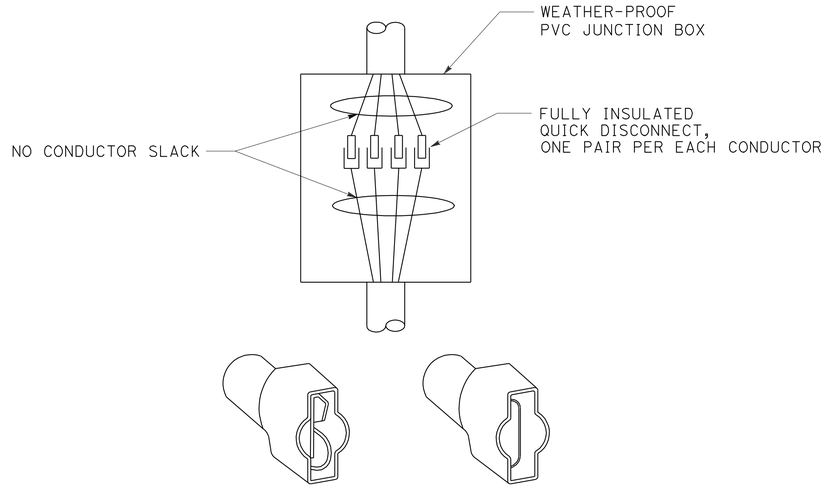

FULLY INSULATED QUICK DISCONNECTS

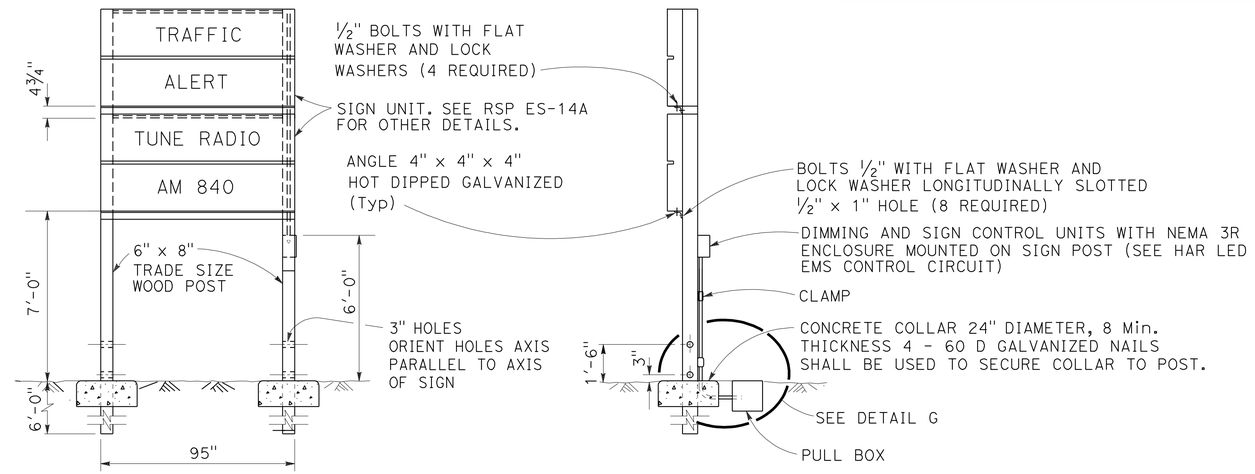

FRONT SIDE

DETAIL H
HIGHWAY ADVISORY RADIO LED EXTINGUISHABLE MESSAGE SIGN

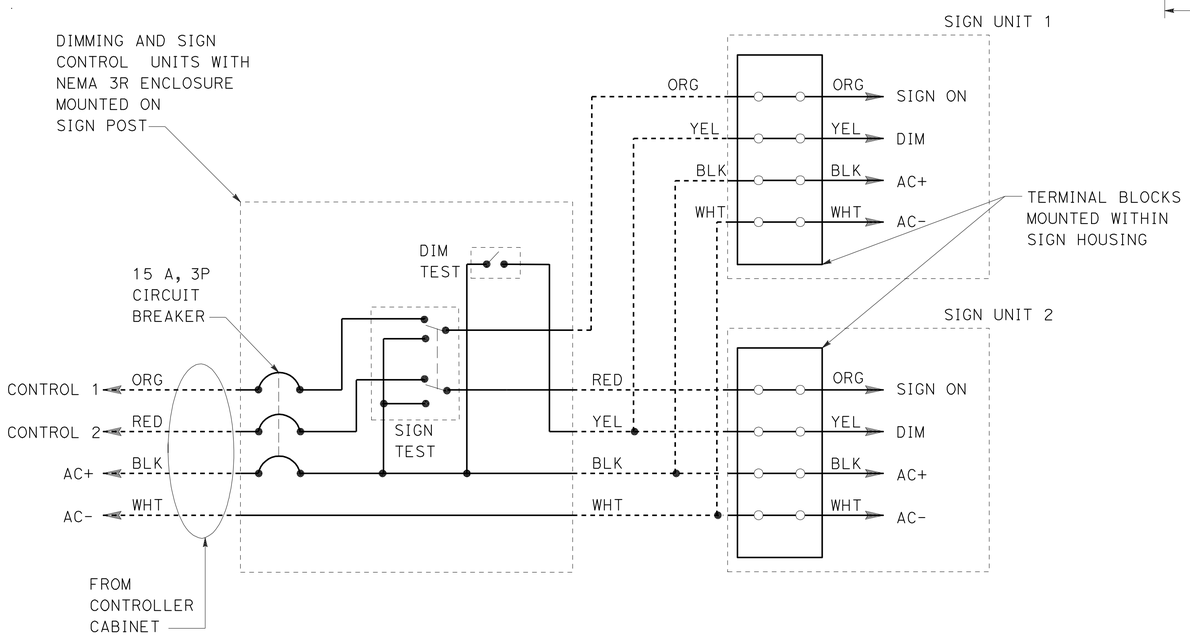

HIGHWAY ADVISORY RADIO LED EMS CONTROL CIRCUIT

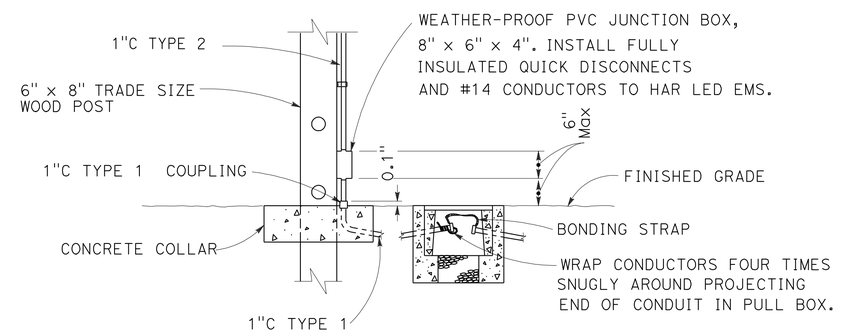

DETAIL G
CONDUIT BREAKAWAY

ELECTRICAL DETAILS
(HIGHWAY ADVISORY RADIO LED EMS WITH CONTROL CIRCUIT)

NO SCALE

E-38

REVISED BY	DATE REVISED
CC	8/9/11

DAVID SETO — ALLAN MORRIS — CALCULATED-DESIGNED BY — CHECKED BY

CONSULTANT FUNCTIONAL SUPERVISOR: HATEM AHMED

STATE OF CALIFORNIA - DEPARTMENT OF TRANSPORTATION — Caltrans

LAST REVISION 8-9-11 — DATE PLOTTED => 19-JAN-2012 — TIME PLOTTED => 08:41

Dist	COUNTY	ROUTE	POST MILES TOTAL PROJECT	SHEET No.	TOTAL SHEETS
04	CC	4	27.3/R29.0	555	950

REGISTERED ELECTRICAL ENGINEER 8/9/11 DATE

1-17-12
PLANS APPROVAL DATE

REGISTERED PROFESSIONAL ENGINEER ALLAN RAY MORRIS No. 16958 Exp. 6/30/13 ELECTRICAL STATE OF CALIFORNIA

THE STATE OF CALIFORNIA OR ITS OFFICERS OR AGENTS SHALL NOT BE RESPONSIBLE FOR THE ACCURACY OR COMPLETENESS OF SCANNED COPIES OF THIS PLAN SHEET.

T Y LIN INTERNATIONAL
2010 CROW CANYON PLACE, SUITE 350
SAN RAMON, CA 94583

CCTA
2999 OAK ROAD, SUITE 100
WALNUT CREEK, CA 94597

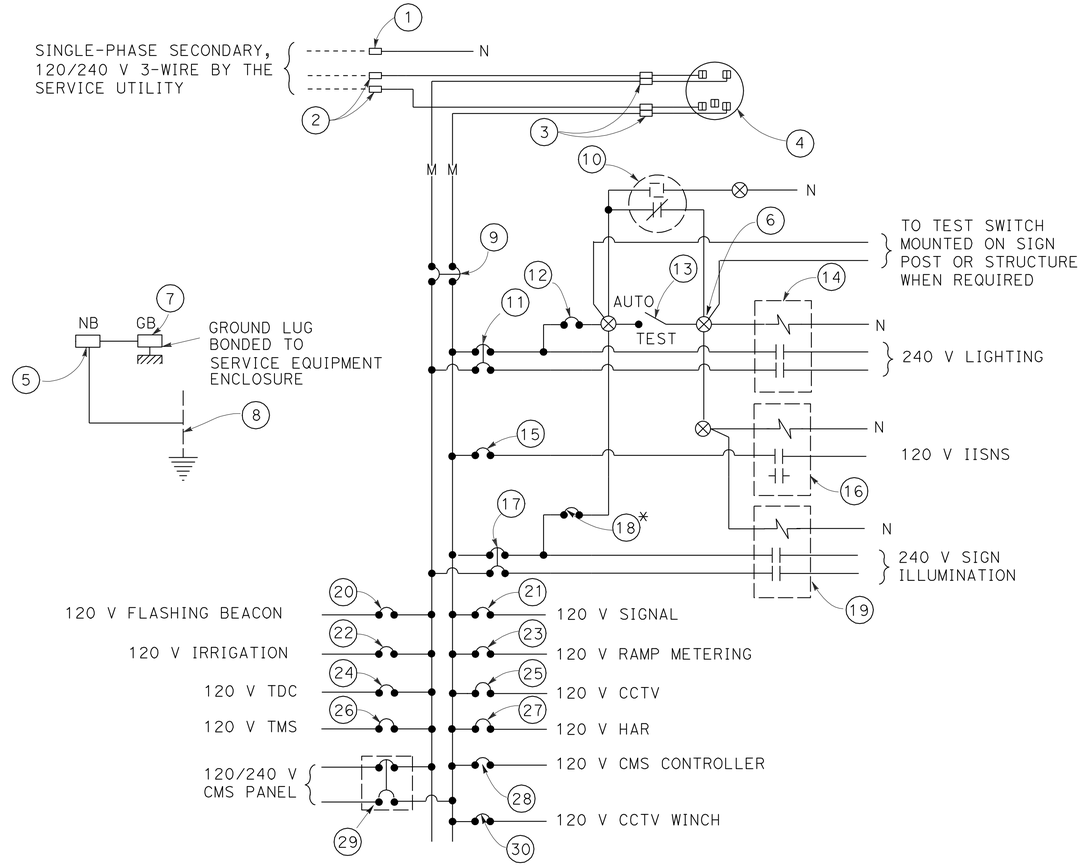

120/240 V SERVICE WIRING DIAGRAM (TYPICAL)

TYPE III-A SERVICE (120/240 V) EQUIPMENT LEGEND

ITEM No.	COMPONENT	NAMEPLATE DESCRIPTION
1	NEUTRAL LUG	
2	LANDING LUG	
3	TEST BYPASS FACILITY	
4	METER SOCKET AND SUPPORT	
5	NEUTRAL BUS	
6	TERMINAL BLOCK	
7	GROUND BUS	
8	GROUNDING ELECTRODE	
9	100 A, 240 V, 2P, CB	MAIN BREAKER
10	PHOTOELECTRIC UNIT (NOTE 7)	
11	30 A, 240 V, 2P, CB	LIGHTING
12	15 A, 120 V, 1P, CB	LIGHTING CONTROL
13	15 A, 1P, TEST SWITCH	TEST SWITCH
14	30 A, 2PNO, CONTACTOR	
15	15 A, 120 V, 1P, CB	IISNS
16	30 A, 2PNO, CONTACTOR	

ITEM No.	COMPONENT	NAMEPLATE DESCRIPTION
17	30 A, 240 V, 2P, CB	SIGN ILLUMINATION
18*	15 A, 120 V, 1P, CB	SIGN ILLUMINATION CONTROL
19	30 A, 2PNO, CONTACTOR	
20	15 A, 120 V, 1P, CB	FLASHING BEACON
21	50 A, 120 V, 1P, CB	SIGNALS
22	20 A, 120 V, 1P, CB	IRRIGATION
23	30 A, 120 V, 1P, CB	RAMP METERING
24	15 A, 120 V, 1P, CB	TELEPHONE DEMARCATION CABINET
25	30 A, 120 V, 1P, CB	CCTV
26	30 A, 120 V, 1P, CB	TMS
27	30 A, 120 V, 1P, CB	HAR
28	30 A, 120 V, 1P, CB	CMS CONTROLLER
29	30 A, 240 V, 2P, CB	CMS PANEL
30	50 A, 120 V, 1P, CB	CCTV WINCH

* PROVIDE ITEM 12 WHEN BOTH CIRCUITS OF SIGN ILLUMINATION AND LIGHTING ARE USED. ITEM 18 IS NOT REQUIRED.

LEGEND:

(SEE RSP ES-1A & RSP ES-1C)

NOTES: (FOR SERVICE EQUIPMENT)

1. VOLTAGE RATINGS OF SERVICE EQUIPMENT SHALL CONFORM TO THE SERVICE VOLTAGES INDICATED ON THE PLANS.
2. UNLESS OTHERWISE INDICATED ON THE PLANS, ALL SERVICE EQUIPMENT ITEMS SHALL BE PROVIDED FOR EACH SERVICE EQUIPMENT ENCLOSURE AS SHOWN.
3. ITEM No. 1 AND 5 SHALL BE ISOLATED FROM THE CABINET.
4. METER SOCKETS SHALL BE 5 CLIP TYPE.
5. SERVICE UTILITY WILL INSTALL THE TIME-OF-USE METER IF APPLICABLE.
6. UNLESS OTHERWISE NOTED, THE MAXIMUM NUMBER OF SINGLE-POLE CB SPACES IN THE ENCLOSURE IS FOURTEEN.
7. PHOTOELECTRIC CONTROL SHALL BE TYPE II.

ELECTRICAL DETAILS
(SERVICE EQUIPMENT AND TYPICAL WIRING DIAGRAM TYPE III-A SERIES)

NO SCALE

E-39

REVISED BY	DATE REVISED
CC	8/9/11

DAVID SETO — CALCULATED-DESIGNED BY
ALLAN MORRIS — CHECKED BY
HATEM AHMED — CONSULTANT FUNCTIONAL SUPERVISOR

STATE OF CALIFORNIA - DEPARTMENT OF TRANSPORTATION
Caltrans

LAST REVISION 8-9-11
DATE PLOTTED => 19-JAN-2012
TIME PLOTTED => 08:41

Dist	COUNTY	ROUTE	POST MILES TOTAL PROJECT	SHEET No.	TOTAL SHEETS
04	CC	4	27.3/R29.0	556	950

REGISTERED ELECTRICAL ENGINEER 8/9/11 DATE

1-17-12
PLANS APPROVAL DATE

REGISTERED PROFESSIONAL ENGINEER
ALLAN RAY MORRIS
No. 16958
Exp. 6/30/13
ELECTRICAL
STATE OF CALIFORNIA

THE STATE OF CALIFORNIA OR ITS OFFICERS OR AGENTS SHALL NOT BE RESPONSIBLE FOR THE ACCURACY OR COMPLETENESS OF SCANNED COPIES OF THIS PLAN SHEET.

T Y LIN INTERNATIONAL
2010 CROW CANYON PLACE, SUITE 350
SAN RAMON, CA 94583

CCTA
2999 OAK ROAD, SUITE 100
WALNUT CREEK, CA 94597

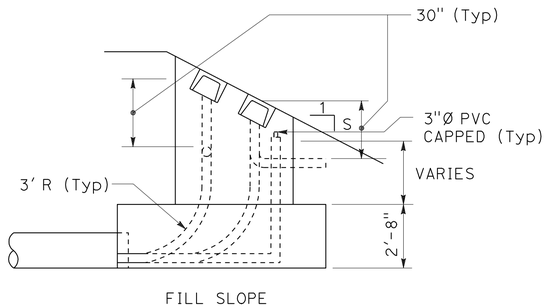

FILL SLOPE

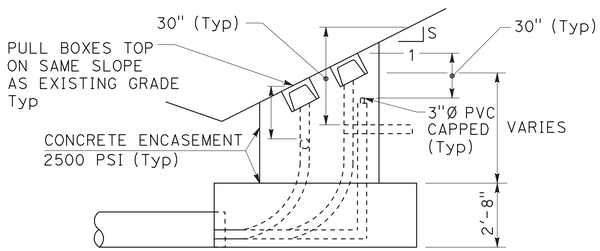

CUT SLOPE

SECTION D-D

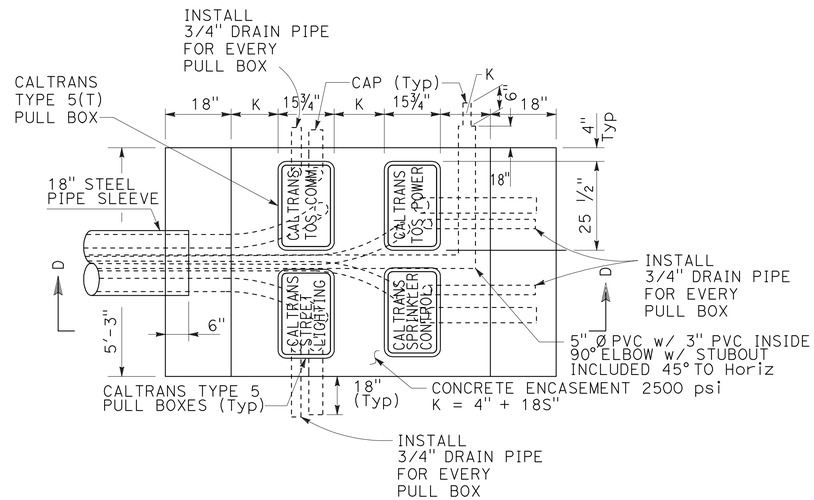

SECTION C-C

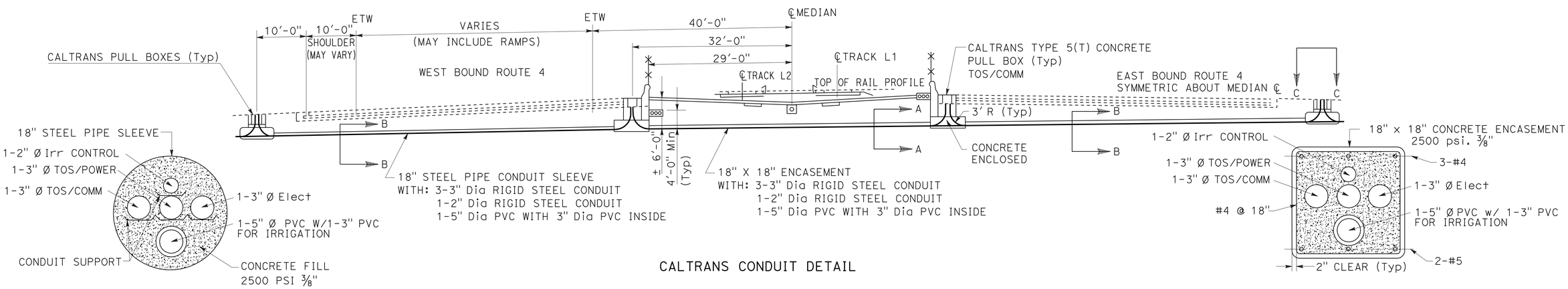

CALTRANS CONDUIT DETAIL

SECTION B-B

SECTION A-A

ELECTRICAL DETAILS
(LATERAL COMMUNICATION DETAIL)

NO SCALE

E-40

REVISED BY	CC
DATE REVISED	8/9/11
DAVID SETO	ALLAN MORRIS
CALCULATED-DESIGNED BY	
CHECKED BY	
CONSULTANT FUNCTIONAL SUPERVISOR	HATEM AHMED

STATE OF CALIFORNIA - DEPARTMENT OF TRANSPORTATION

LAST REVISION 8-9-11
DATE PLOTTED => 19-JAN-2012
TIME PLOTTED => 08:41

Dist	COUNTY	ROUTE	POST MILES TOTAL PROJECT	SHEET No.	TOTAL SHEETS
04	CC	4	27.3/R29.0	557	950

REGISTERED ELECTRICAL ENGINEER 8/9/11 DATE

1-17-12
PLANS APPROVAL DATE

REGISTERED PROFESSIONAL ENGINEER
ALLAN RAY MORRIS
No. 16958
Exp. 6/30/13
ELECTRICAL
STATE OF CALIFORNIA

THE STATE OF CALIFORNIA OR ITS OFFICERS OR AGENTS SHALL NOT BE RESPONSIBLE FOR THE ACCURACY OR COMPLETENESS OF SCANNED COPIES OF THIS PLAN SHEET.

T Y LIN INTERNATIONAL
2010 CROW CANYON PLACE, SUITE 350
SAN RAMON, CA 94583

CCTA
2999 OAK ROAD, SUITE 100
WALNUT CREEK, CA 94597

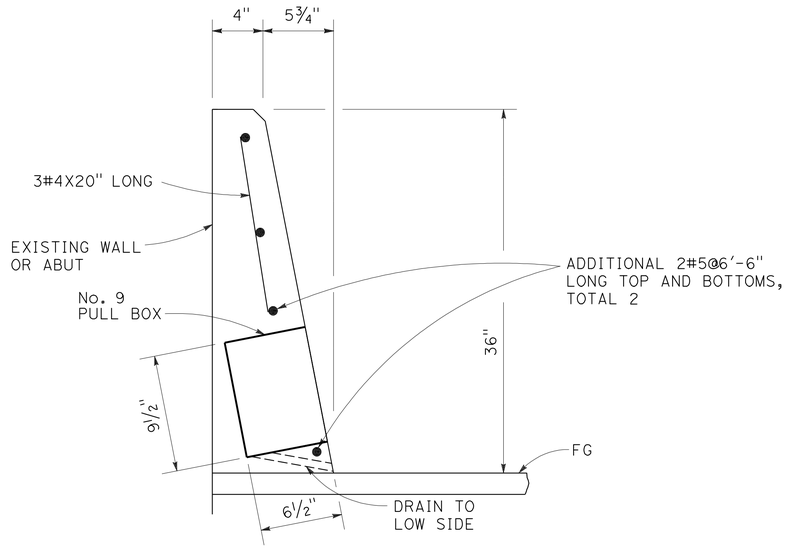

SEE CALTRANS Std PLANS RSP A76A, RSP ES-9C, AND ES-9D FOR DETAILS NOT SHOWN.

No. 9 PULL BOX IN CONCRETE BARRIER TYPE 60D

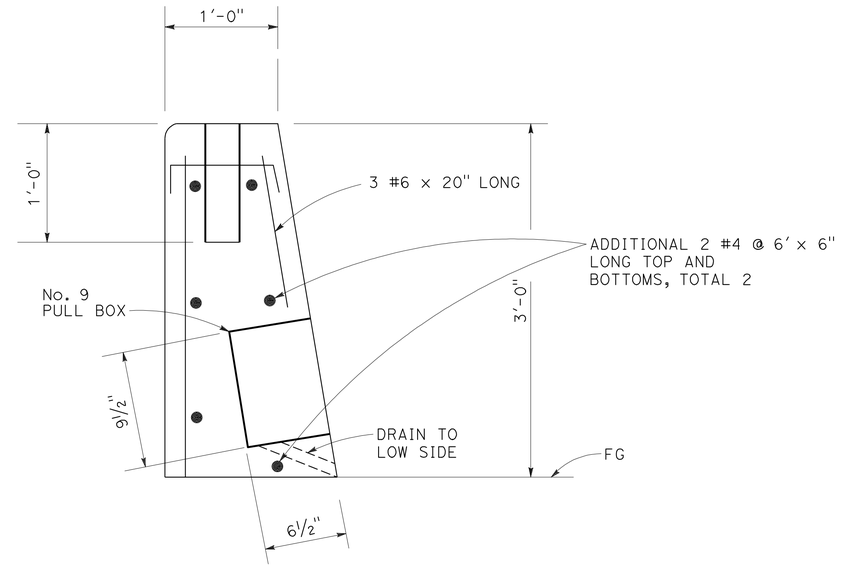

SEE SHEET C-41, AND CALTRANS Std PLANS RSP ES-9C, ES-9D FOR DETAILS NOT SHOWN.

No. 9 PULL BOX IN BART BARRIER

ELECTRICAL DETAILS
(PULL BOX INSTALLATION IN CONCRETE BARRIER AND BART BARRIER)

NO SCALE

E-41

STATE OF CALIFORNIA - DEPARTMENT OF TRANSPORTATION
Caltrans

CONSULTANT FUNCTIONAL SUPERVISOR: HATEM AHMED
CALCULATED-DESIGNED BY: DAVID SETO
CHECKED BY: ALLAN MORRIS
REVISED BY: CC
DATE REVISED: 8/9/11

LAST REVISION 8-9-11
DATE PLOTTED => 19-JAN-2012
TIME PLOTTED => 08:41

Dist	COUNTY	ROUTE	POST MILES TOTAL PROJECT	SHEET No.	TOTAL SHEETS
04	CC	4	27.3/R29.0	558	950

REGISTERED ELECTRICAL ENGINEER — DATE 8/9/11

1-17-12
PLANS APPROVAL DATE

REGISTERED PROFESSIONAL ENGINEER — ALLAN RAY MORRIS — No. 16958 — Exp. 6/30/13 — ELECTRICAL — STATE OF CALIFORNIA

THE STATE OF CALIFORNIA OR ITS OFFICERS OR AGENTS SHALL NOT BE RESPONSIBLE FOR THE ACCURACY OR COMPLETENESS OF SCANNED COPIES OF THIS PLAN SHEET.

T Y LIN INTERNATIONAL
2010 CROW CANYON PLACE, SUITE 350
SAN RAMON, CA 94583

CCTA
2999 OAK ROAD, SUITE 100
WALNUT CREEK, CA 94597

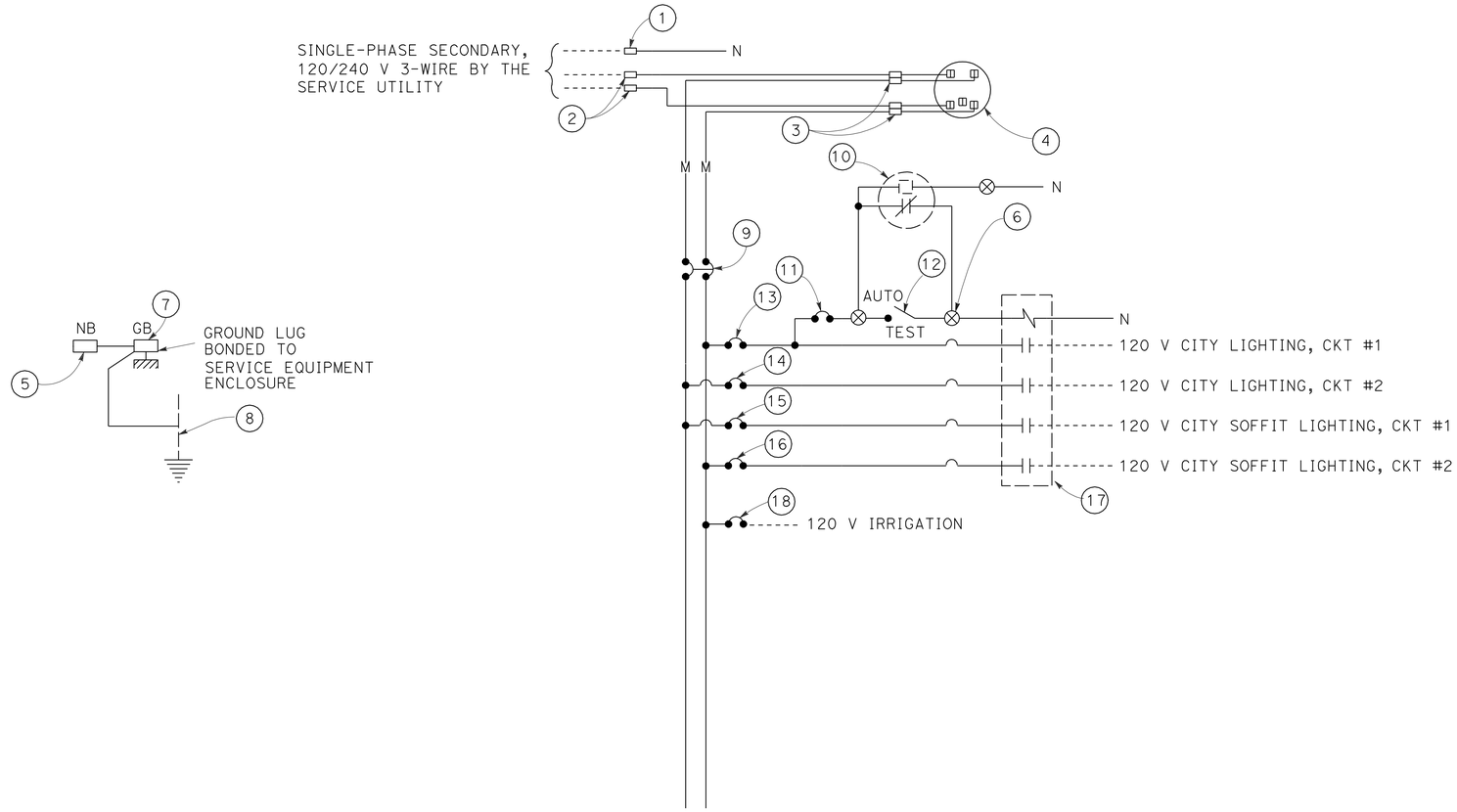

120/240 V SERVICE WIRING DIAGRAM (TYPICAL)

TYPE III-A SERVICE (120/240 V) EQUIPMENT LEGEND

ITEM No.	COMPONENT	NAMEPLATE DESCRIPTION
1	NEUTRAL LUG	
2	LANDING LUG	
3	TEST BYPASS FACILITY	
4	METER SOCKET AND SUPPORT	
5	NEUTRAL BUS	
6	TERMINAL BLOCK	
7	GROUND BUS	
8	GROUNDING ELECTRODE	
9	100 A, 240 V, 2P, CB	MAIN BREAKER
10	PHOTOELECTRIC UNIT (NOTE 7)	
11	15 A, 120 V, 1P, CB	LIGHTING CONTROL
12	15 A, 120 V, 1P, CB	LIGHTING TEST SWITCH
13	30 A, 120 V, 1P, CB	CITY LIGHTING, CKT #1
14	30 A, 120 V, 1P, CB	CITY LIGHTING, CKT #2
15	30 A, 120 V, 1P, CB	CITY SOFFIT LIGHTING, CKT #1
16	30 A, 120 V, 1P, CB	CITY SOFFIT LIGHTING, CKT #2

ITEM No.	COMPONENT	NAMEPLATE DESCRIPTION
17	40 A, 4PNO, CONTACTOR	CITY LIGHTING
18	15 A, 120 V, 1P, CB	IRRIGATION

LEGEND: (SEE RSP ES-1A & RSP ES-1C)

NOTES: (FOR SERVICE EQUIPMENT)

1. VOLTAGE RATINGS OF SERVICE EQUIPMENT SHALL CONFORM TO THE SERVICE VOLTAGES INDICATED ON THE PLANS.
2. UNLESS OTHERWISE INDICATED ON THE PLANS, ALL SERVICE EQUIPMENT ITEMS SHALL BE PROVIDED FOR EACH SERVICE EQUIPMENT ENCLOSURE AS SHOWN.
3. ITEM NO. 1 AND 5 SHALL BE ISOLATED FROM THE CABINET.
4. METER SOCKETS SHALL BE 5 CLIP TYPE.
5. SERVICE UTILITY WILL INSTALL THE TIME-OF-USE METER IF APPLICABLE
6. UNLESS OTHERWISE NOTED, NO MORE THAN 14 CB CAN BE INSTALLED IN THE ENCLOSURE.
7. PHOTOELECTRIC CONTROL SHALL BE TYPE V.
8. SERVICE ENCLOSURE SHALL BE PAINTED MINT GREEN.

ELECTRICAL DETAILS
(CITY SERVICE EQUIPMENT AND TYPICAL WIRING DIAGRAM TYPE III-A SERIES)

NO SCALE

E-42

REVISED BY	CC
DATE REVISED	8/9/11
DAVID SETO	ALLAN MORRIS
CALCULATED-DESIGNED BY	CHECKED BY
CONSULTANT FUNCTIONAL SUPERVISOR	HATEM AHMED

STATE OF CALIFORNIA - DEPARTMENT OF TRANSPORTATION — Caltrans

LAST REVISION 8-9-11 — DATE PLOTTED => 19-JAN-2012 — TIME PLOTTED => 08:41

Dist	COUNTY	ROUTE	POST MILES TOTAL PROJECT	SHEET No.	TOTAL SHEETS
04	CC	4	27.3/R29.0	559	950

REGISTERED ELECTRICAL ENGINEER 8/9/11 DATE

1-17-12
PLANS APPROVAL DATE

REGISTERED PROFESSIONAL ENGINEER ALLAN RAY MORRIS No. 16958 Exp. 6/30/13 ELECTRICAL STATE OF CALIFORNIA

THE STATE OF CALIFORNIA OR ITS OFFICERS OR AGENTS SHALL NOT BE RESPONSIBLE FOR THE ACCURACY OR COMPLETENESS OF SCANNED COPIES OF THIS PLAN SHEET.

T Y LIN INTERNATIONAL
2010 CROW CANYON PLACE, SUITE 350
SAN RAMON, CA 94583

CCTA
2999 OAK ROAD, SUITE 100
WALNUT CREEK, CA 94597

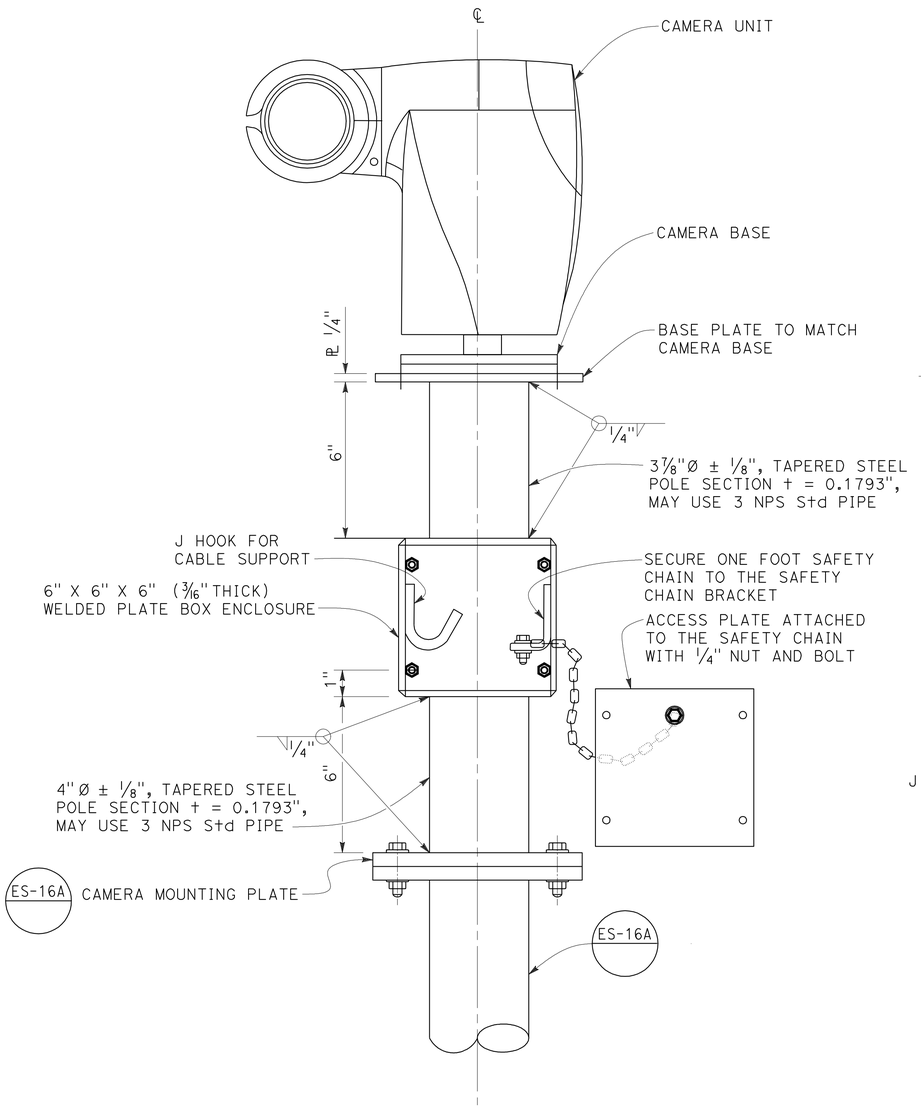

DETAIL A
CCTV POLE MOUNTING WITH ADAPTER

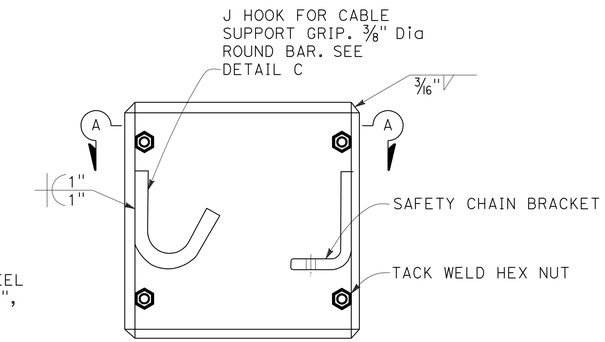

DETAIL B
BOX ENCLOSURE

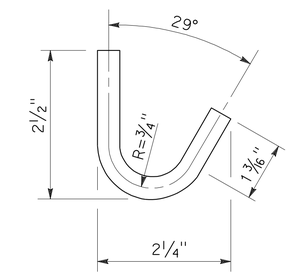

DETAIL C
J HOOK

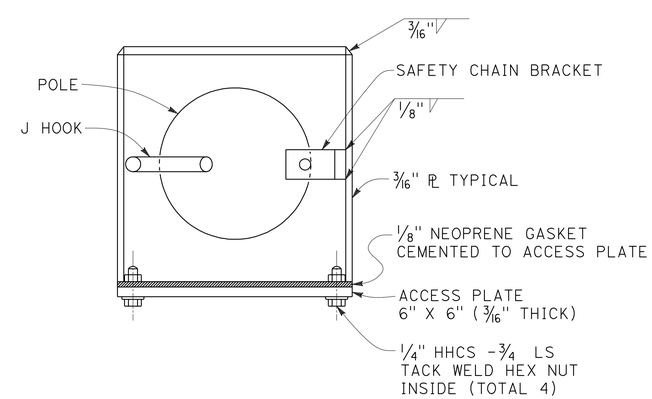

SECTION A-A

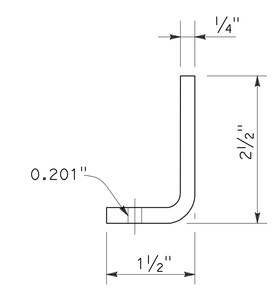

DETAIL D
SAFETY CHAIN BRACKET

ELECTRICAL DETAILS
(CAMERA MOUNTING DETAILS)
NO SCALE

E-43

CALCULATED- DESIGNED BY	CHECKED BY	CONSULTANT FUNCTIONAL SUPERVISOR	REVISED BY	DATE REVISED
DAVID SETO	ALLAN MORRIS	HATEM AHMED	CC	8/9/11

STATE OF CALIFORNIA - DEPARTMENT OF TRANSPORTATION
Caltrans

LAST REVISION 8-9-11
DATE PLOTTED => 19-JAN-2012
TIME PLOTTED => 08:41

Dist	COUNTY	ROUTE	POST MILES TOTAL PROJECT	SHEET No.	TOTAL SHEETS
04	CC	4	27.3/R29.0	560	950

REGISTERED ELECTRICAL ENGINEER 8/9/11 DATE

1-17-12
PLANS APPROVAL DATE

REGISTERED PROFESSIONAL ENGINEER ALLAN RAY MORRIS No. 16958 Exp. 6/30/13 ELECTRICAL STATE OF CALIFORNIA

THE STATE OF CALIFORNIA OR ITS OFFICERS OR AGENTS SHALL NOT BE RESPONSIBLE FOR THE ACCURACY OR COMPLETENESS OF SCANNED COPIES OF THIS PLAN SHEET.

T Y LIN INTERNATIONAL
2010 CROW CANYON PLACE, SUITE 350
SAN RAMON, CA 94583

CCTA
2999 OAK ROAD, SUITE 100
WALNUT CREEK, CA 94597

8-POSITION CONNECTING BLOCK		No. 18 AWG SOLID CONDUCTOR COLOR	TBO POSITION ASSIGMENT
CIRCUIT 1	GREEN TERMINAL	WHITE	7
	RED TERMINAL	BROWN	8
CIRCUIT 2	GREEN TERMINAL	WHITE	9
	RED TERMINAL	GRAY	10
CIRCUIT 3	GREEN TERMINAL	RED	11
	RED TERMINAL	BLUE	12

NOTE:

1. USE ONE CONNECTING BLOCK FOR EACH REQUIRED CIRCUIT FOR EACH LOCATION.

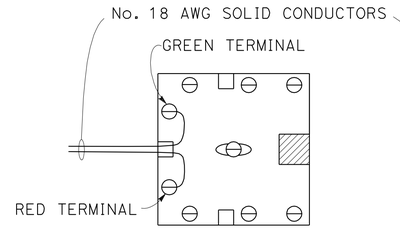

8-POSITION CONNECTING BLOCK

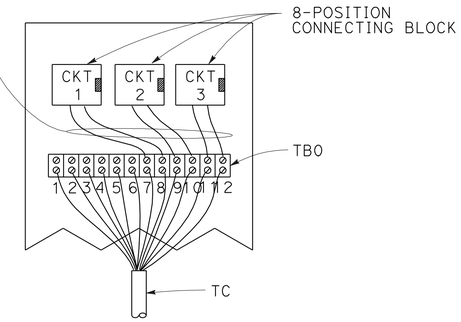

SERVICE PANEL FOR MODEL 334 CABINET

WIRING DETAIL FOR TELEPHONE CABLE INSIDE CONTROLLER CABINET

ABBREVIATIONS (FOR THIS SHEET ONLY)

TC - TELEPHONE CABLE
HCC - HYBRID CAMERA CABLE
TBO - TERMINAL BLOCK 0
PDA - POWER DISTRIBUTION ASSEMBLY
CCU - CAMERA CONTROL UNIT
VEU - VIDEO ENCODER UNIT

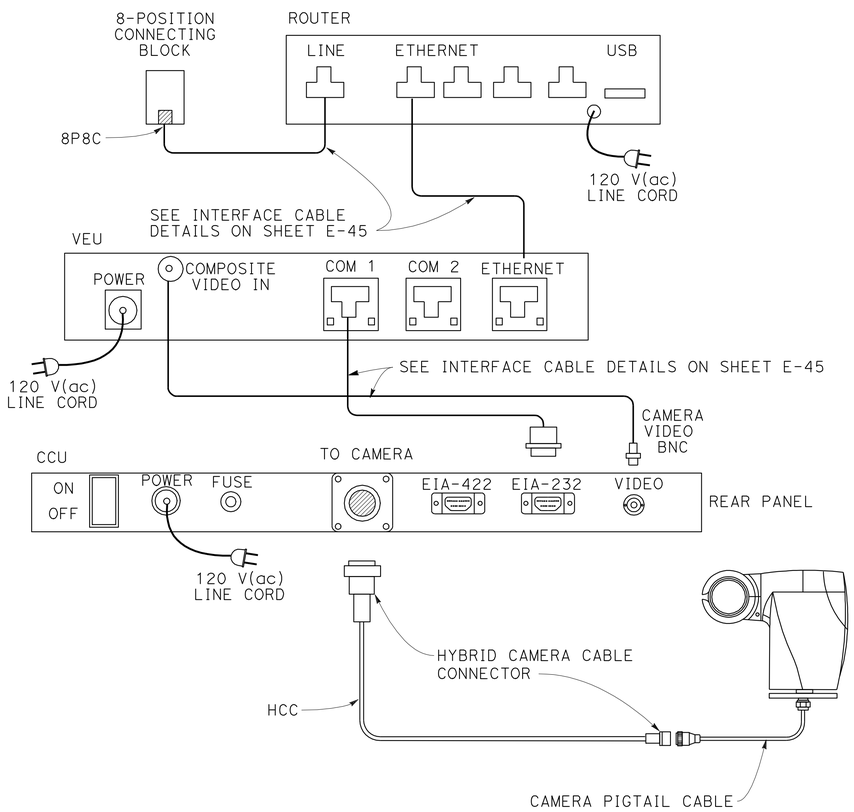

CCTV SYSTEM LAYOUT

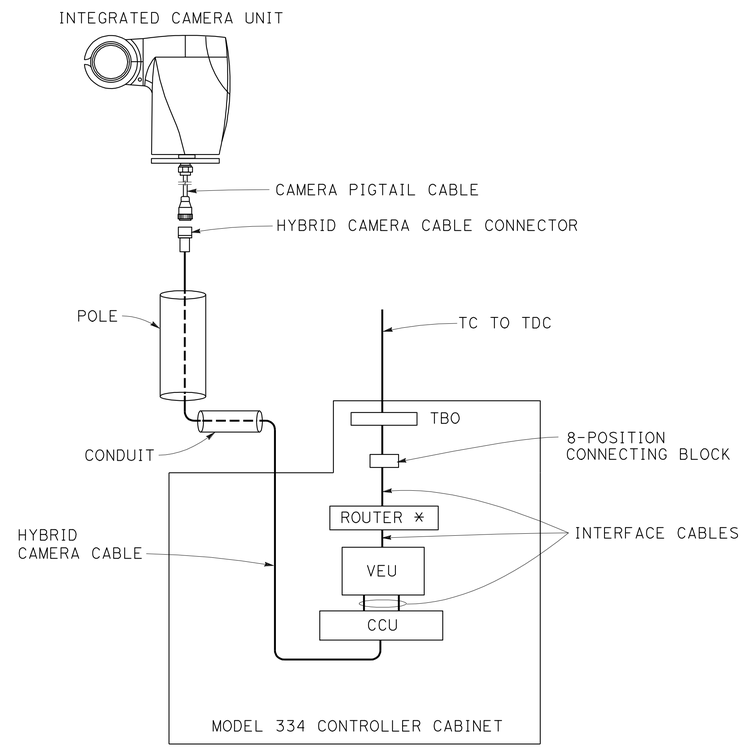

CCTV SYSTEM BLOCK DIAGRAM

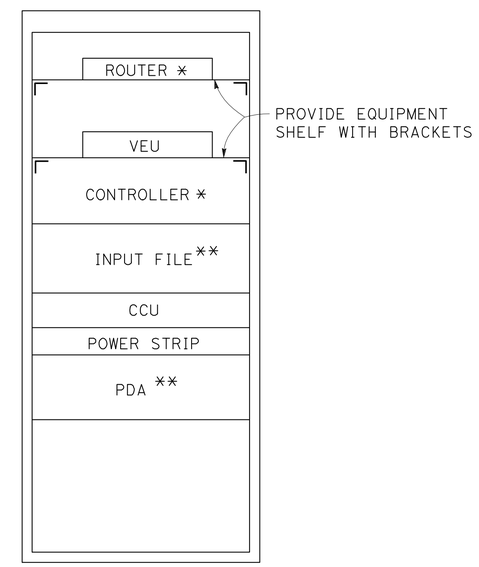

MODEL 334 CONTROLLER CABINET LAYOUT
(FRONT VIEW)

* STATE-FURNISHED

** PDA AND INPUT FILE WILL BE INCLUDED ONLY WITH STATE-FURNISHED CONTROLLER CABINET.

ELECTRICAL DETAILS
(CCTV WITH TELEPHONE SERVICE)

NO SCALE

E-44

STATE OF CALIFORNIA - DEPARTMENT OF TRANSPORTATION
Caltrans
CONSULTANT FUNCTIONAL SUPERVISOR: HATEM AHMED
CALCULATED-DESIGNED BY: DAVID SETO
CHECKED BY: ALLAN MORRIS
REVISED BY: CC
DATE REVISED: 8/9/11

LAST REVISION 8-9-11
DATE PLOTTED => 19-JAN-2012
TIME PLOTTED => 08:41

Dist	COUNTY	ROUTE	POST MILES TOTAL PROJECT	SHEET No.	TOTAL SHEETS
04	CC	4	27.3/R29.0	561	950

REGISTERED ELECTRICAL ENGINEER 8/9/11 DATE

1-17-12
PLANS APPROVAL DATE

REGISTERED PROFESSIONAL ENGINEER
ALLAN RAY MORRIS
No. 16958
Exp. 6/30/13
ELECTRICAL
STATE OF CALIFORNIA

THE STATE OF CALIFORNIA OR ITS OFFICERS OR AGENTS SHALL NOT BE RESPONSIBLE FOR THE ACCURACY OR COMPLETENESS OF SCANNED COPIES OF THIS PLAN SHEET.

T Y LIN INTERNATIONAL
2010 CROW CANYON PLACE, SUITE 350
SAN RAMON, CA 94583

CCTA
2999 OAK ROAD, SUITE 100
WALNUT CREEK, CA 94597

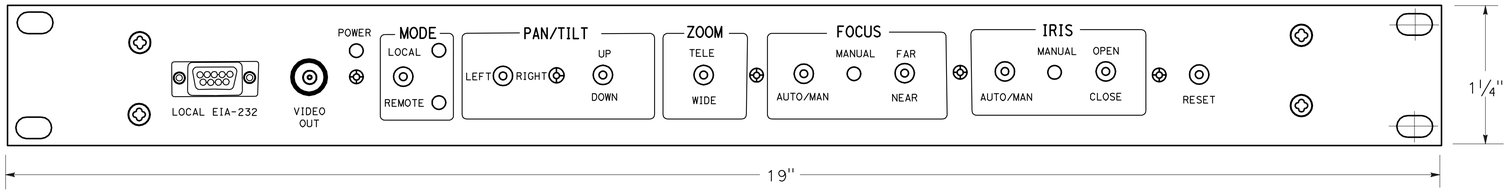

CCU FRONT PANEL LAYOUT

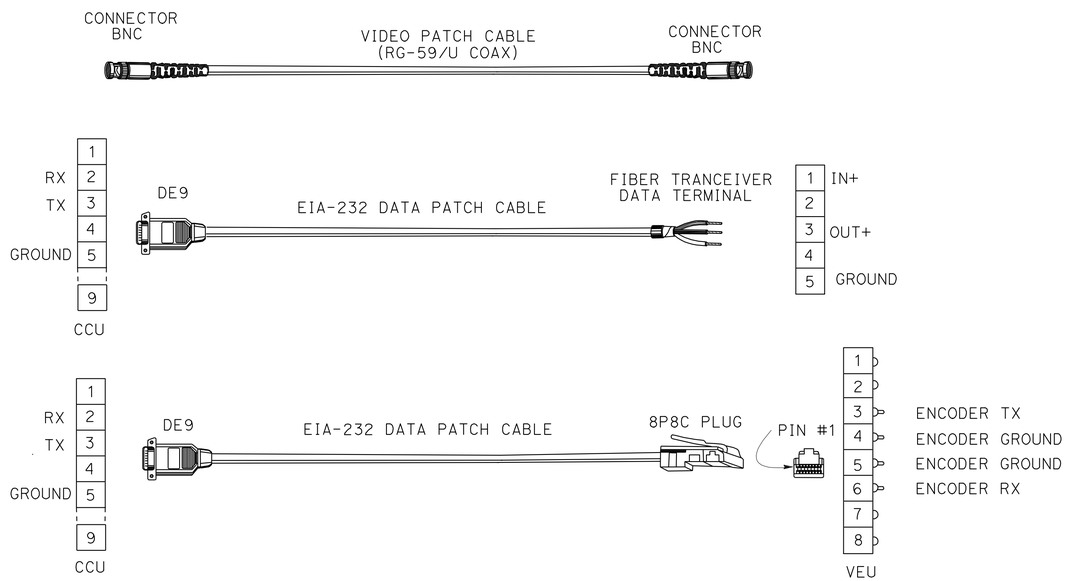

INTERFACE CABLE DETAILS

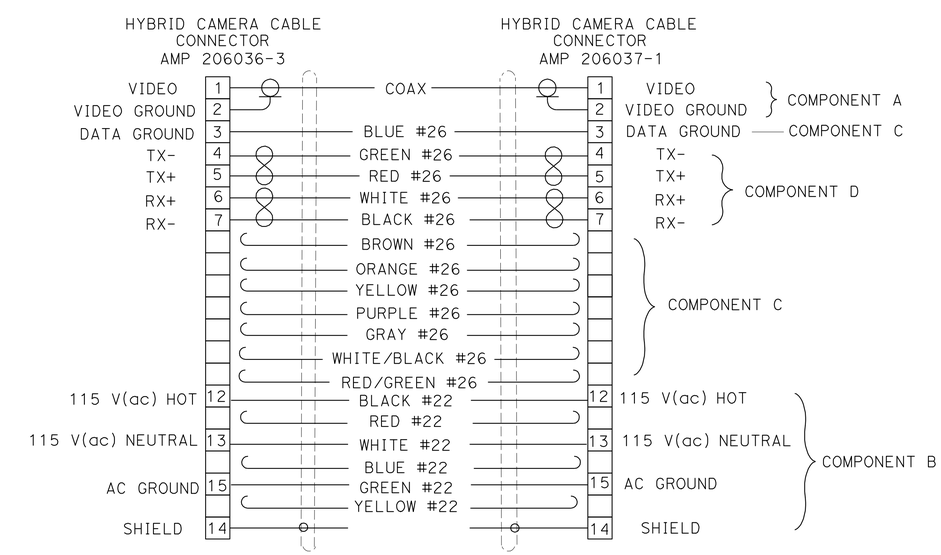

COMPONENT	CONDUCTOR	DESCRIPTION
A	COAX	75 OHM, RG-59/U TYPE, STANDARD ANALOG VIDEO CABLE, 0.242" NOMINAL DIAMETER
B	6 CONDUCTOR	22 AWG, COPPER INSULATED CONDUCTOR, 0.048" NOMINAL DIAMETER, COLOR CODED: B1-BLACK, B2-RED, B3-GREEN, B4-WHITE, B5-BLUE, B6-YELLOW
C	8 CONDUCTOR	26 AWG, COPPER INSULATED CONDUCTOR, 0.037" NOMINAL DIAMETER, COLOR CODED: C1-BROWN, C2-BLUE, C3-ORANGE, C4-YELLOW, C5-PURPLE, C6-GRAY, C7-WHITE/BLACK, C8-RED/GREEN
D	4 CONDUCTOR	26 AWG, COPPER INSULATED CONDUCTOR, 0.037" NOMINAL DIAMETER, COLOR CODED: D1-BLACK & WHITE, D2-RED & GREEN

HYBRID CAMERA CABLE AND CONNECTORS DETAIL

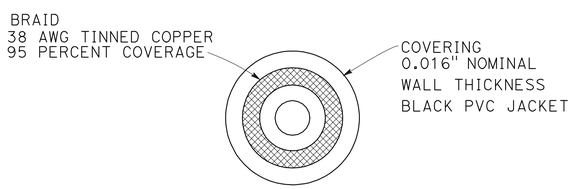

COMPONENT A

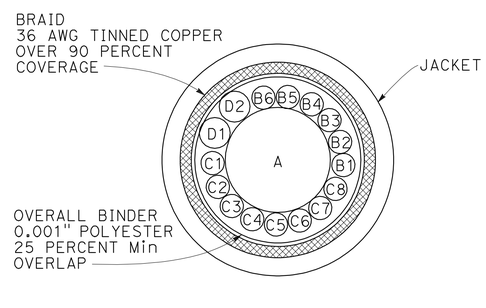

HYBRID CAMERA CABLE CROSS SECTION

ELECTRICAL DETAILS
(CCTV MOUNTING DETAILS)
NO SCALE

E-45

STATE OF CALIFORNIA - DEPARTMENT OF TRANSPORTATION
Caltrans

CONSULTANT FUNCTIONAL SUPERVISOR: HATEM AHMED
CALCULATED-DESIGNED BY: DAVID SETO
CHECKED BY: ALLAN MORRIS
REVISED BY: CC
DATE REVISED: 8/9/11

LAST REVISION 8-9-11
DATE PLOTTED => 19-JAN-2012
TIME PLOTTED => 08:41

Dist	COUNTY	ROUTE	POST MILES TOTAL PROJECT	SHEET No.	TOTAL SHEETS
04	CC	4	27.3/R29.0	562	950

REGISTERED ELECTRICAL ENGINEER 8/9/11 DATE

1-17-12
PLANS APPROVAL DATE

REGISTERED PROFESSIONAL ENGINEER ALLAN RAY MORRIS No. 16958 Exp. 6/30/13 ELECTRICAL STATE OF CALIFORNIA

THE STATE OF CALIFORNIA OR ITS OFFICERS OR AGENTS SHALL NOT BE RESPONSIBLE FOR THE ACCURACY OR COMPLETENESS OF SCANNED COPIES OF THIS PLAN SHEET.

T Y LIN INTERNATIONAL
2010 CROW CANYON PLACE, SUITE 350
SAN RAMON, CA 94583

CCTA
2999 OAK ROAD, SUITE 100
WALNUT CREEK, CA 94597

NOTES (THIS SHEET ONLY):

1. BACKFILL ACCORDING TO STANDARD SPECIFICATIONS, SECTION 19. CONCRETE SHOULD BE PLACED AROUND AND UNDER VAULT (6" MINIMUM) AND SHOULD CONTAIN A MINIMUM OF 550 lbs OF PORTLAND CEMENT PER CUBIC YARD.
2. PORTLAND CEMENT CONCRETE FLOOR OVER CLEAN CRUSHED ROCK SUMP AS PER ES-8. BOTTOM ES-8 BOTTOM OF VAULT SHALL BE SLOPED TOWARD THE DRAIN PIPE AND SHALL HAVE A SMOOTH FINISH.
3. MINIMUM VAULT DEPTH SHALL BE 20". IF NECESSARY, AN EXTENSION MAY BE USED TO MEET THE REQUIREMENT.
4. VAULT, VAULT EXTENSION AND VAULT COVER SHALL BE QUAZITE OR APPROVED EQUIVALENT, AND SUPPORT MINIMUM TEST LOAD OF 25,000 lbs. IF VAULT IS LOCATED IN TRAVEL WAY, VAULT AND COVER AND COVER SHALL CONFORM VERTICAL PROOF LOAD STRENGTH REQUIREMENT AS PER STANDARD SPECIFICATIONS, SECTION 86-2.07.
5. LOCKING MECHANISM SHALL BE PROVIDED FOR COVER. TWO ⅜" ø BRASS OR STAINLESS STEEL STUD BOLTS NUTS, AND WASHERS, 4 PER BOX. RECESS IN COVER FOR NUT.
6. "CALTRANS TOS COMMUNICATIONS" SHALL BE CASTED ON THE TOP FACE OF ALL COVERS.
7. IF APPLICABLE, VAULT HEIGHT ABOVE EXISTING DIRT GRADE SHALL PERMIT 1" OF FUTURE SURFACE LANDSCAPING. WHEN VAULT IS INSTALLED IN EXISTING SIDEWALK, VAULT COVER SHALL SIT FLUSH WITH THE PAVEMENT.
8. SEE PLAN SHEETS FOR NUMBER AND SIZE OF CONDUIT.
9. ALL CONDUITS SHALL ENTER THROUGH, KNOCKOUTS. IF MORE THAN 3 CONDUITS ARE REQUIRED IN SAME KNOCKOUT, KNOCKOUT SHALL BE WIDENED TO ⅜" MORE THAN THE COMBINED CONDUIT WIDTH.
10. TRUNK LINE CONDUITS FROM THE TYPICAL BORE OR TRENCH SECTION SHOULD NOT DEFLECT BY MORE THAN ONE FEET PER 10 Ft FROM THE ALIGNMENT PRECEDING OR FOLLOWING VAULT ENTRANCE/EXIT.
11. BOTTOM OF CONDUIT CENTERLINE SHALL BE ALIGNED TO EXIT TOP OF VAULT TO FACILITATE CABLE PULLING. IF EXISTING CONDUIT IS USED, CONTRACTOR SHALL MODIFY CONDUIT TO MATCH SWEEP AS SHOWN. CONTRACTOR SHALL INSTALL CONDUIT ELBOW AS SHOWN.
12. EXCESS CONDUIT FOR ALL CONDUIT ENDS SHALL BE CUT BACK TO PROVIDE STUB ENDS OF 1" MINIMUM TO 2" MAXIMUM.
13. ALL METALLIC CONDUITS SHALL HAVE THREADED METALLIC BUSHINGS. ALL PVC AND HDPE CONDUITS SHALL HAVE BELL ENDS.
14. INSTALL CAPS OR DUCT PLUGS FOR ALL CONDUITS.
15. ALL VAULT SHALL BE FURNISHED WITH TWO RACKS AND HOOKS INSTALLED ON EACH OF THE TWO LONG SIDES.
16. SPLICE ENCLOSURES IN FIBER OPTIC VAULT SHALL BE USED ONLY WHERE SHOWN ON THE PLANS. SPLICE ENCLOSURE SHALL BE ATTACHED TO THE RACK AND HOOK SYSTEM ON THE SAME SIDE AS THE FIBER OPTIC CABLE. THE SPLICE ENCLOSURE SHALL BE ANGLED TO FACILITATE MINIMUM BENDING RADIUS IN THE CABLE.
17. ALL FIBER OPTIC VAULT SHALL HAVE PERMANENT MARKERS AS SHOWN ON SHEET E-48.

LEGEND:

1. FIBER OPTIC SPLICE ENCLOSURE.
2. FIBER OPTIC VAULT COVER.
3. RACK & HOOK ASSEMBLY, SEE NOTE 15.
4. 45 DEGREE ELBOW, 3' RADIUS Min. ELBOW AND COUPLING MAY NOT BE NECESSARY FOR NEW CONDUIT INSTALLED BY DIRECTIONAL BORING, NEW CONDUIT INSTALLED BY DIRECTIONAL DRILLING SHALL ENTER PULLBOX WITH A BENDING RADIUS OF 3' MINIMUM.
5. WARNING TAPE (FOR NEW CONDUIT INSTALLED BY TRENCHING).

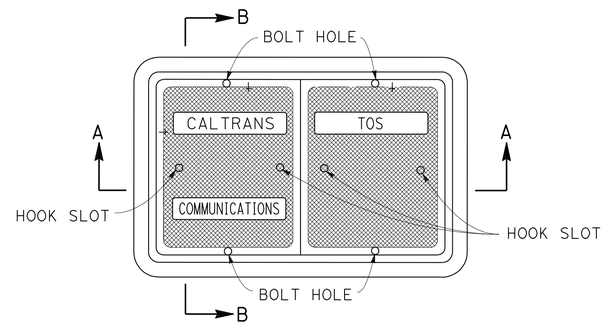

PLAN VIEW

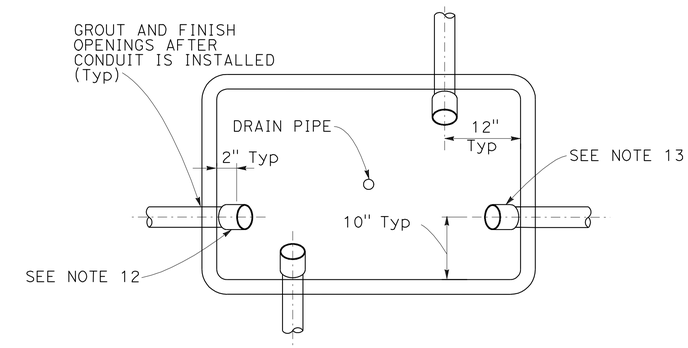

PLAN VIEW WITHOUT COVER

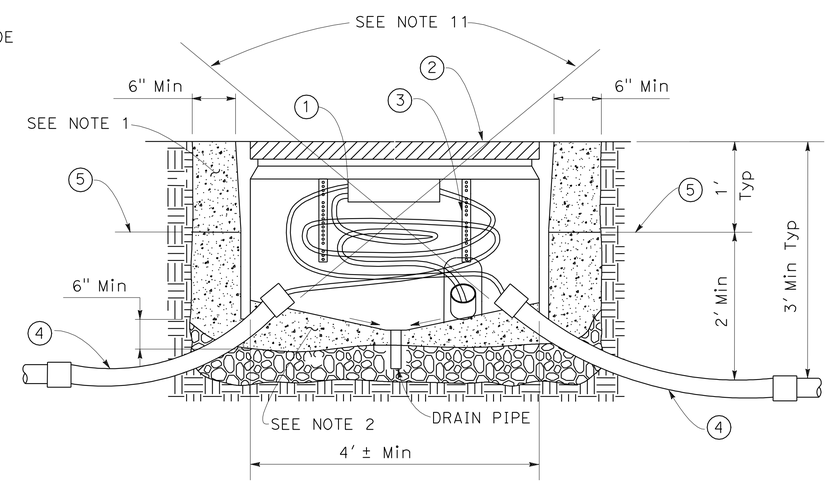

SECTION A-A

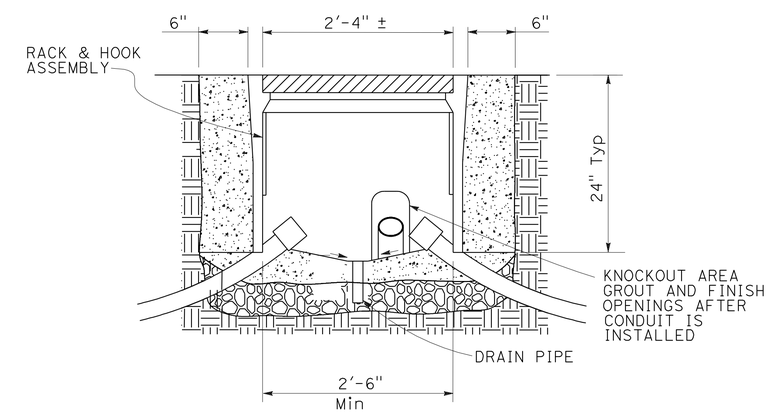

SECTION B-B

ELECTRICAL DETAILS
(FIBER OPTIC VAULT)

NO SCALE

E-46

STATE OF CALIFORNIA - DEPARTMENT OF TRANSPORTATION
Caltrans

CONSULTANT FUNCTIONAL SUPERVISOR: HATEM AHMED
CALCULATED-DESIGNED BY: DAVID SETO
CHECKED BY: ALLAN MORRIS
REVISED BY: CC
DATE REVISED: 8/9/11

LAST REVISION 8-9-11
DATE PLOTTED => 19-JAN-2012
TIME PLOTTED => 08:41

Dist	COUNTY	ROUTE	POST MILES TOTAL PROJECT	SHEET No.	TOTAL SHEETS
04	CC	4	27.3/R29.0	563	950

REGISTERED ELECTRICAL ENGINEER 8/9/11 DATE

1-17-12
PLANS APPROVAL DATE

REGISTERED PROFESSIONAL ENGINEER ALLAN RAY MORRIS No. 16958 Exp. 6/30/13 ELECTRICAL STATE OF CALIFORNIA

THE STATE OF CALIFORNIA OR ITS OFFICERS OR AGENTS SHALL NOT BE RESPONSIBLE FOR THE ACCURACY OR COMPLETENESS OF SCANNED COPIES OF THIS PLAN SHEET.

T Y LIN INTERNATIONAL
2010 CROW CANYON PLACE, SUITE 350
SAN RAMON, CA 94583

CCTA
2999 OAK ROAD, SUITE 100
WALNUT CREEK, CA 94597

NOTES (THIS SHEET ONLY):

1. CONCRETE SHOULD BE PLACED AROUND AND UNDER PULL BOXES (6" MINIMUM) AND SHOULD CONTAIN A MINIMUM OF 550 lbs OF PORTLAND CEMENT PER CUBIC YARD.
2. PORTLAND CEMENT CONCRETE FLOOR OVER CLEAN CRUSHED ROCK SUMP. BOTTOM OF PULL BOX SHALL BE SLOPED TOWARD DRAIN PIPE FOR DRAINAGE AND SHALL HAVE SMOOTH FINISH.
3. PULL BOX SHALL BE PRECAST OF STEEL REINFORCED PORTLAND CEMENT CONCRETE. PULL BOX COVER SHALL BE POLYMER CONCRETE. PULL BOX AND COVER SHALL SUPPORT MINIMUM TEST LOAD OF 25,000 lbs IF BOX IS LOCATED IN TRAVEL WAY, PULL BOX AND COVER SHALL CONFORM VERTICAL PROOF-LOAD STRENGTH REQUIREMENT AS PER STANDARD SPECIFICATIONS, SECTION 86-2.07.
4. IF APPLICABLE, PULL BOX HEIGHT ABOVE EXISTING DIRT GRADE SHALL PERMIT 1" OF FUTURE SURFACE LANDSCAPING. WHEN PULL BOX IS INSTALLED IN EXISTING SIDEWALK, PULL BOX COVER SHALL SIT FLUSH WITH THE PAVEMENT.
5. LOCKING MECHANISM SHALL BE PROVIDED FOR COVER. TWO ⅜" Ø BRASS OR STAINLESS STEEL STUB BOLTS NUTS, AND WASHERS. 2 PER BOX, RECESS IN COVER FOR NUT.
6. "CALTRANS TOS COMMUNICATIONS" SHALL BE CASTED ON THE TOP FACE OF ALL COVERS.
7. MINIMUM PULL BOX DEPTH WITH EXTENSION SHALL BE 20".
8. SEE PLAN SHEETS FOR NUMBER AND SIZE OF CONDUIT.
9. ALL CONDUITS SHALL ENTER THROUGH KNOCKOUTS. IF MORE THAN 3 CONDUITS ARE REQUIRED IN SAME KNOCKOUT, KNOCKOUT SHALL BE WIDENED TO ⅜" MORE THAN THE COMBINED CONDUIT WIDTH.
10. CONDUIT FROM THE TYPICAL BORE OR TRENCH SECTION SHOULD NOT DEFLECT BY MORE THAN 1′ PER 10′ FROM THE ALIGNMENT PRECEDING OR FOLLOWING THE PULL BOX.
11. BOTTOM OF CONDUIT CENTERLINE SHALL BE ALIGNED TO EXIT TOP OF PULL BOX TO FACILITATE CABLE PULLING. IF EXISTING CONDUIT USED, CONTRACTOR SHALL MODIFY CONDUIT SWEEP (IF NEEDED) AS SHOWN. IF NEW CONDUIT USED, CONTRACTOR SHALL INSTALL CONDUIT ELBOW AS SHOWN.
12. EXCESS CONDUIT FOR ALL CONDUIT ENDS SHALL BE CUT BACK TO PROVIDE STUB ENDS OF 1" MINIMUM TO 2" MAXIMUM.
13. ALL METALLIC CONDUIT SHALL HAVE THREADED METALLIC BUSHINGS. ALL PVC AND HDPE CONDUITS SHALL HAVE BELL ENDS.
14. INSTALL CAPS OR DUCT PLUGS FOR ALL CONDUITS.
15. ALL CONDUITS AND PULL BOXES CONTAINING FIBER OPTIC CABLE SHALL HAVE PERMANENT MARKERS AS SHOWN ON DRAWING SHEET E-48.

LEGEND: (THIS SHEET ONLY)

(1) 45 DEGREE ELBOW, 3′ RADIUS Min. ELBOW AND COUPLING MAY NOT BE NECESSARY FOR NEW CONDUIT INSTALLED BY DIRECTIONAL BORING. NEW CONDUIT INSTALLED BY DIRECTIONAL BORING SHALL ENTER THE PULL BOX WITH BENDING RADIUS OF 3′ Min.

(2) WARNING TAPE (FOR NEW CONDUIT IF INSTALLED BY TRENCHING).

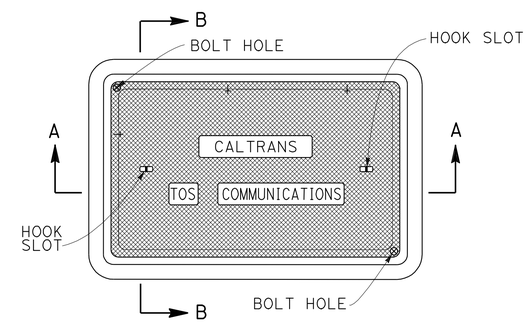

PLAN VIEW

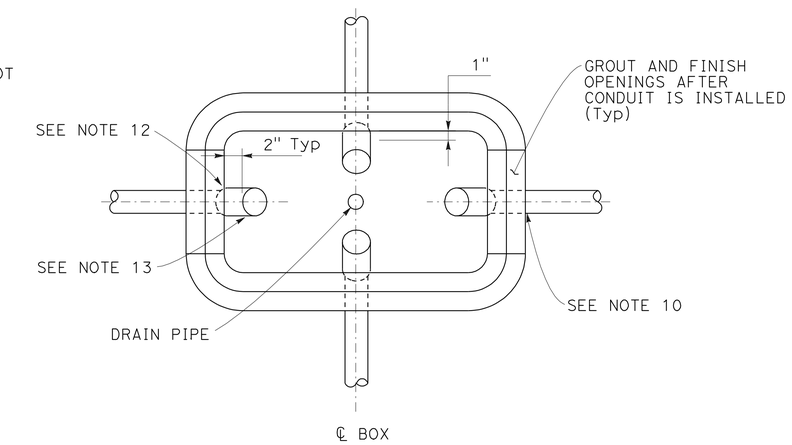

PLAN VIEW
WITHOUT COVER

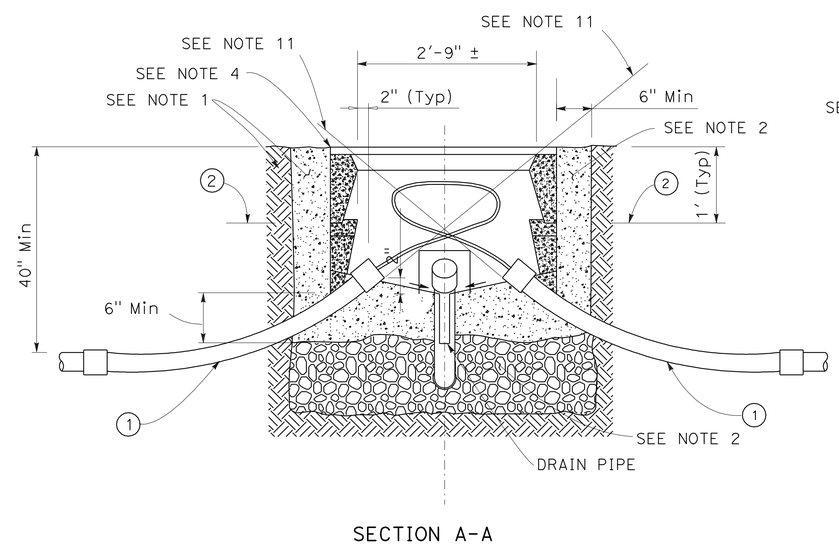

SECTION A-A

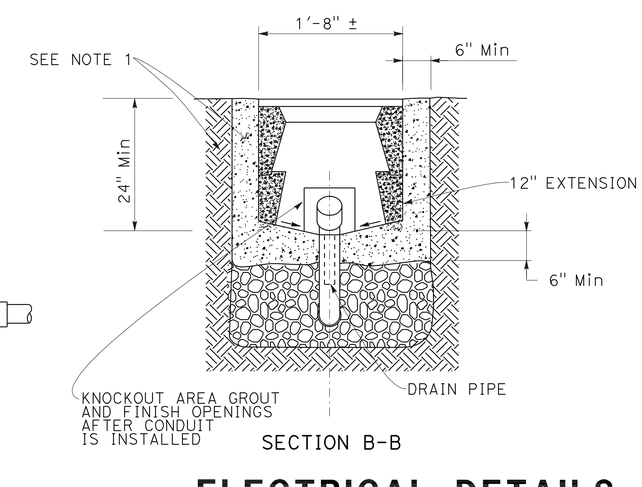

SECTION B-B

ELECTRICAL DETAILS
(FIBER OPTIC PULL BOX)
NO SCALE

E-47

STATE OF CALIFORNIA - DEPARTMENT OF TRANSPORTATION
Caltrans

CONSULTANT FUNCTIONAL SUPERVISOR: HATEM AHMED
CALCULATED-DESIGNED BY: DAVID SETO
CHECKED BY: ALLAN MORRIS
REVISED BY: CC
DATE REVISED: 8/9/11

LAST REVISION 8-9-11
DATE PLOTTED => 19-JAN-2012
TIME PLOTTED => 08:41

Dist	COUNTY	ROUTE	POST MILES TOTAL PROJECT	SHEET No.	TOTAL SHEETS
04	CC	4	27.3/R29.0	564	950

REGISTERED ELECTRICAL ENGINEER 8/9/11 DATE

1-17-12
PLANS APPROVAL DATE

REGISTERED PROFESSIONAL ENGINEER
ALLAN RAY MORRIS
No. 16958
Exp. 6/30/13
ELECTRICAL
STATE OF CALIFORNIA

THE STATE OF CALIFORNIA OR ITS OFFICERS OR AGENTS SHALL NOT BE RESPONSIBLE FOR THE ACCURACY OR COMPLETENESS OF SCANNED COPIES OF THIS PLAN SHEET.

T Y LIN INTERNATIONAL
2010 CROW CANYON PLACE, SUITE 350
SAN RAMON, CA 94583

CCTA
2999 OAK ROAD, SUITE 100
WALNUT CREEK, CA 94597

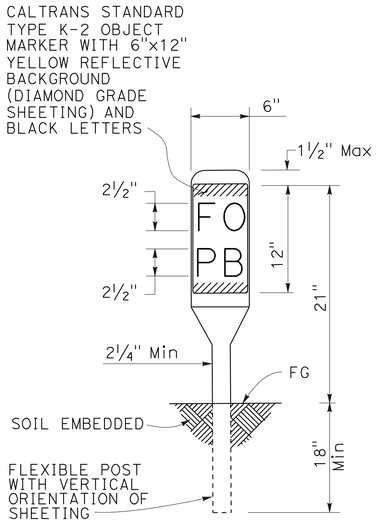

PERMANENT FIBER OPTIC
VAULT OR PULL BOX MARKER

PERMANENT FIBER OPTIC
CABLE MARKER
PAVED AREAS

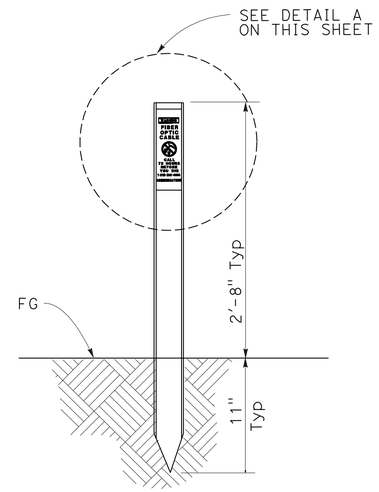

PERMANENT FIBER OPTIC
CABLE MARKER
UNPAVED AREAS

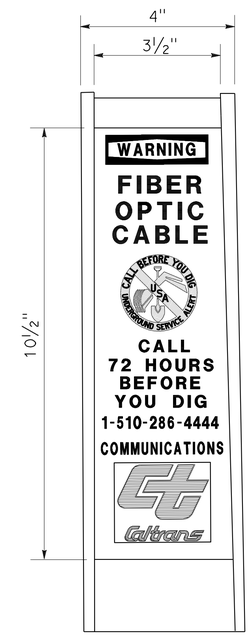

DETAIL A

NOTE: IN UNPAVED AREAS, INSTALL ONE MARKER 1 FOOT AWAY FROM EACH VAULT OR PULL BOX IN WHICH FIBER OPTIC CABLE IS INSTALLED.

ELECTRICAL DETAILS
(FIBER OPTIC MARKER)
NO SCALE

E-48

REVISED BY	DATE REVISED
CC	8/9/11

DAVID SETO — CALCULATED-DESIGNED BY
ALLAN MORRIS — CHECKED BY
HATEM AHMED — CONSULTANT FUNCTIONAL SUPERVISOR

STATE OF CALIFORNIA - DEPARTMENT OF TRANSPORTATION
Caltrans

LAST REVISION 8-9-11
DATE PLOTTED => 19-JAN-2012
TIME PLOTTED => 08:42

Dist	COUNTY	ROUTE	POST MILES TOTAL PROJECT	SHEET No.	TOTAL SHEETS
04	CC	4	27.3/R29.0	565	950

REGISTERED ELECTRICAL ENGINEER 8/9/11 DATE

1-17-12
PLANS APPROVAL DATE

REGISTERED PROFESSIONAL ENGINEER ALLAN RAY MORRIS No. 16958 Exp. 6/30/13 ELECTRICAL STATE OF CALIFORNIA

THE STATE OF CALIFORNIA OR ITS OFFICERS OR AGENTS SHALL NOT BE RESPONSIBLE FOR THE ACCURACY OR COMPLETENESS OF SCANNED COPIES OF THIS PLAN SHEET.

T Y LIN INTERNATIONAL
2010 CROW CANYON PLACE, SUITE 350
SAN RAMON, CA 94583

CCTA
2999 OAK ROAD, SUITE 100
WALNUT CREEK, CA 94597

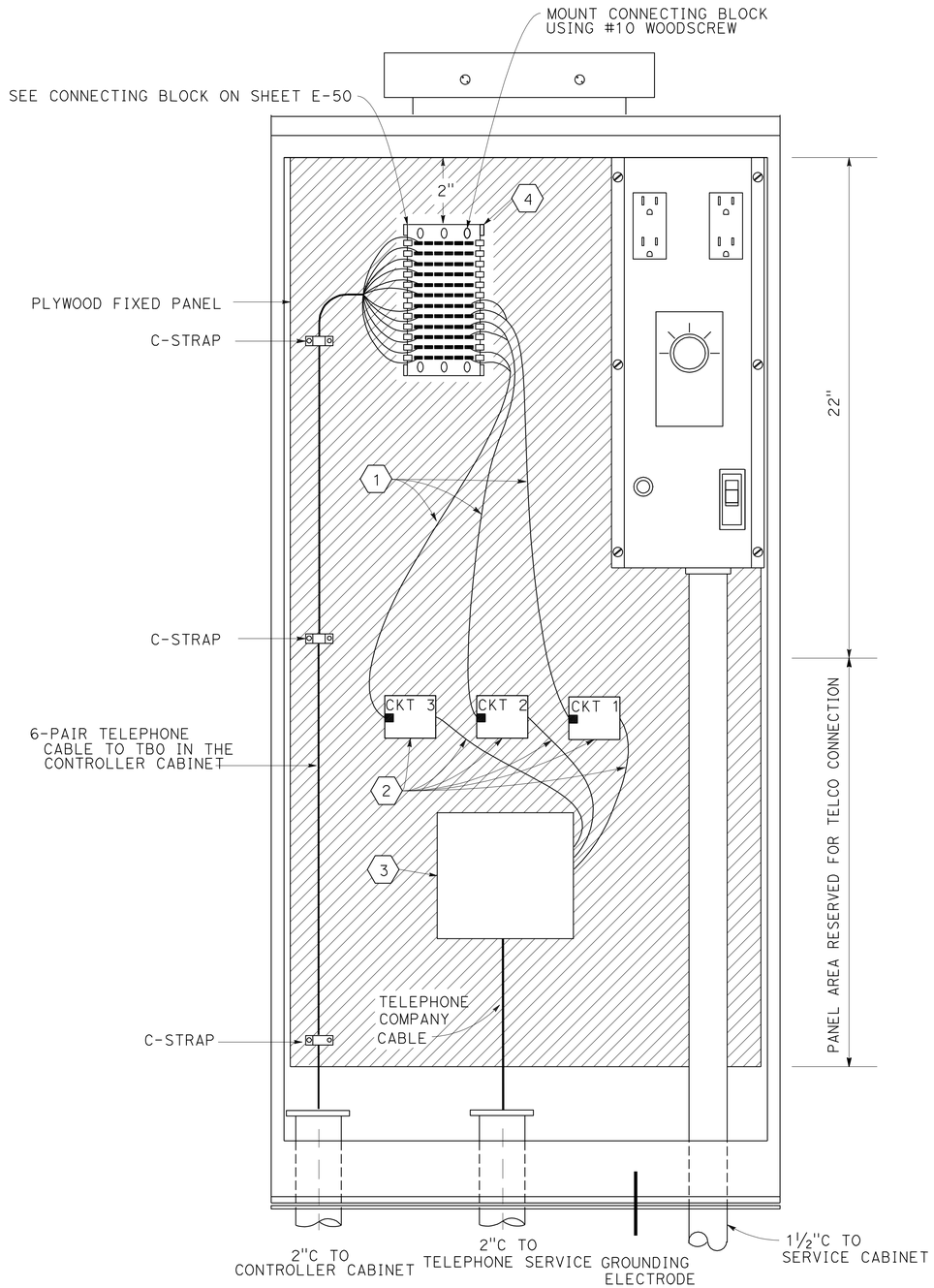

TELEPHONE DEMARCATION CABINET, TYPE B WIRING DETAIL

SEE RSP ES-3E

ABBREVIATIONS (FOR THIS SHEET ONLY):

T/R	TIP AND RING
TC	TELEPHONE CABLE
TELCO	TELEPHONE COMPANY

CONDUCTOR LIST FOR DEMARCATION CABINET

CABLE TYPE	FUNCTION	PAIR COLORS	12 ROW PUNCH BLOCK
TC	SPARE	WHITE & BLUE	ROW 1, ROW 2
TC	SPARE	WHITE & ORANGE	ROW 3, ROW 4
TC	SPARE	WHITE & GREEN	ROW 5, ROW 6
TC	CIRCUIT 1	WHITE & BROWN	ROW 7, ROW 8
TC	CIRCUIT 2	WHITE & GRAY	ROW 9, ROW 10
TC	CIRCUIT 3 (DIAL-UP: T/R PAIR)	RED & BLUE	ROW 11, ROW 12

NOTES (FOR THIS SHEET ONLY):

1. 3' SINGLE ENDED 2-PAIR MODULAR CORD WITH RJ11 PLUG CONNECTOR. CONDUCTORS SHALL BE 22 AWG, SOLID.
2. SERVICE CORD AND CONNECTION BLOCK FURNISHED AND INSTALLED BY TELEPHONE COMPANY
3. TELEPHONE COMPANY STANDARD PROTECTOR EQUIPMENT FURNISHED AND INSTALLED BY TELEPHONE COMPANY.
4. CONNECTING BLOCK SHALL BE TYPE SIEMON S66B1-6 OR EQUIVALENT.

ELECTRICAL DETAILS
(TDC WIRING)

NO SCALE

E-49

REVISED BY	DATE REVISED
CC	8/9/11

DAVID SETO — ALLAN MORRIS — CALCULATED-DESIGNED BY — CHECKED BY

CONSULTANT FUNCTIONAL SUPERVISOR: HATEM AHMED

STATE OF CALIFORNIA - DEPARTMENT OF TRANSPORTATION — Caltrans

LAST REVISION 8-9-11 — DATE PLOTTED => 19-JAN-2012 — TIME PLOTTED => 08:42

Dist	COUNTY	ROUTE	POST MILES TOTAL PROJECT	SHEET No.	TOTAL SHEETS
04	CC	4	27.3/R29.0	566	950

REGISTERED ELECTRICAL ENGINEER 8/9/11 DATE

1-17-12
PLANS APPROVAL DATE

REGISTERED PROFESSIONAL ENGINEER ALLAN RAY MORRIS No. 16958 Exp. 6/30/13 ELECTRICAL STATE OF CALIFORNIA

THE STATE OF CALIFORNIA OR ITS OFFICERS OR AGENTS SHALL NOT BE RESPONSIBLE FOR THE ACCURACY OR COMPLETENESS OF SCANNED COPIES OF THIS PLAN SHEET.

T Y LIN INTERNATIONAL
2010 CROW CANYON PLACE, SUITE 350
SAN RAMON, CA 94583

CCTA
2999 OAK ROAD, SUITE 100
WALNUT CREEK, CA 94597

NOTES (FOR THIS SHEET ONLY):

1. SINGLE ENDED 2-PAIR MODULAR CORD, 3' LONG. CONDUCTORS SHALL BE 22 AWG, SOLID.
2. USE PUNCH DOWN IMPACT TOOL TO TERMINAL CONDUCTORS ON THE CLIP. STRIP INSULATION 1/4" FROM THE END OF CONDUCTOR BEFORE TERMINATING TO THE CLIP.
3. TERMINATE EACH CABLE TO A COLUMN OF CLIPS AS SHOWN.
4. USE SAME TWISTED PAIR CONDUCTOR COLOR ARRANGEMENT FOR OTHER CABLES IF REQUIRED.
5. PLUG CONTACTS SHALL BE GRADE A COPPER ALOOY PLATED WITH 50 MICRO INCHES GOLD OVER NICKEL.

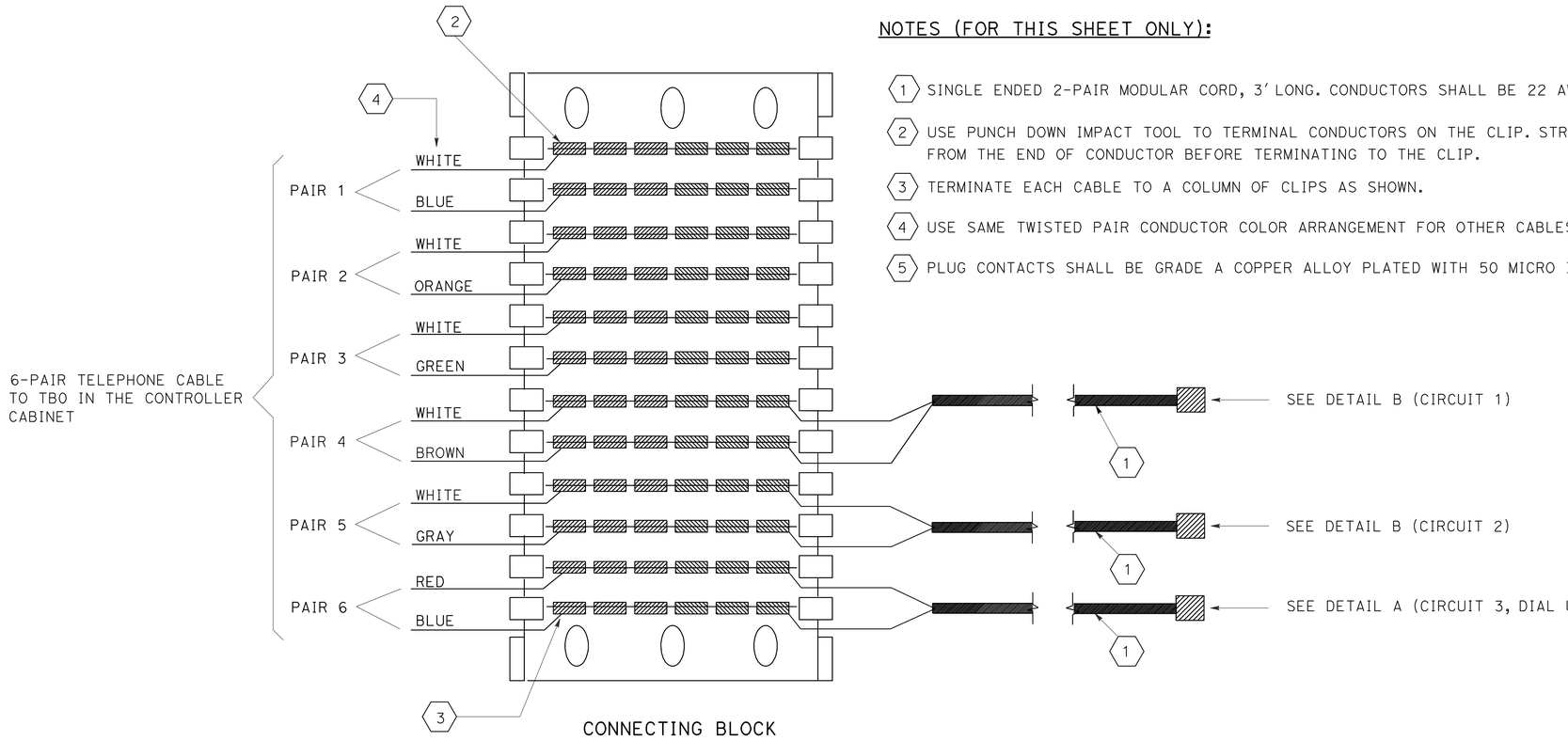

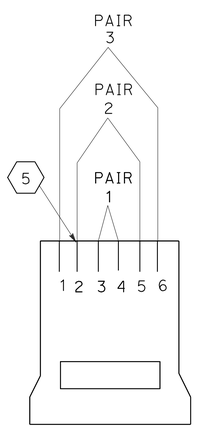

PAIR ID	PIN #	
T1	4	T/R PAIR FOR DIAL-UP CIRCUIT
R1	3	
T2	2	N/C
R2	5	
T3	6	N/C
R3	1	

DETAIL A

RJ11 6P-4C MODULAR PLUG

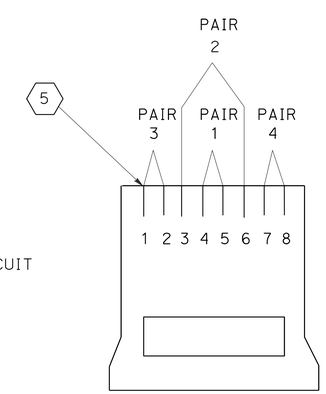

PAIR ID	PIN #	FUNCTION
T1	5	TRANSIMIT AND RECEIVE PAIR
R1	4	
T2	3	N/C
R2	6	
T3	1	N/C
R3	2	
T4	7	N/C
R4	8	

DETAIL B

8P8C MODULAR PLUG

ABBREVIATIONS (FOR THIS SHEET ONLY):

T/R	TIP AND RING
N/C	NO CONNECTION
TBO	TERMINAL BLOCK O

TELEPHONE DEMARCATION CABINET, TYPE B WIRING DETAIL

SEE RSP ES-3E

ELECTRICAL DETAILS
(TDC WIRING)

NO SCALE

E-50

STATE OF CALIFORNIA - DEPARTMENT OF TRANSPORTATION
Caltrans

CONSULTANT FUNCTIONAL SUPERVISOR: HATEM AHMED
DAVID SETO — ALLAN MORRIS
REVISED BY: CC — DATE REVISED: 8/9/11
CALCULATED-DESIGNED BY — CHECKED BY

LAST REVISION 8-9-11
DATE PLOTTED => 19-JAN-2012
TIME PLOTTED => 08:42

Dist	COUNTY	ROUTE	POST MILES TOTAL PROJECT	SHEET No.	TOTAL SHEETS
04	CC	4	27.3/R29.0	567	950

REGISTERED ELECTRICAL ENGINEER 8/9/11 DATE

1-17-12
PLANS APPROVAL DATE

REGISTERED PROFESSIONAL ENGINEER
ALLAN RAY MORRIS
No. 16958
Exp. 6/30/13
ELECTRICAL
STATE OF CALIFORNIA

THE STATE OF CALIFORNIA OR ITS OFFICERS OR AGENTS SHALL NOT BE RESPONSIBLE FOR THE ACCURACY OR COMPLETENESS OF SCANNED COPIES OF THIS PLAN SHEET.

T Y LIN INTERNATIONAL
2010 CROW CANYON PLACE, SUITE 350
SAN RAMON, CA 94583

CCTA
2999 OAK ROAD, SUITE 100
WALNUT CREEK, CA 94597

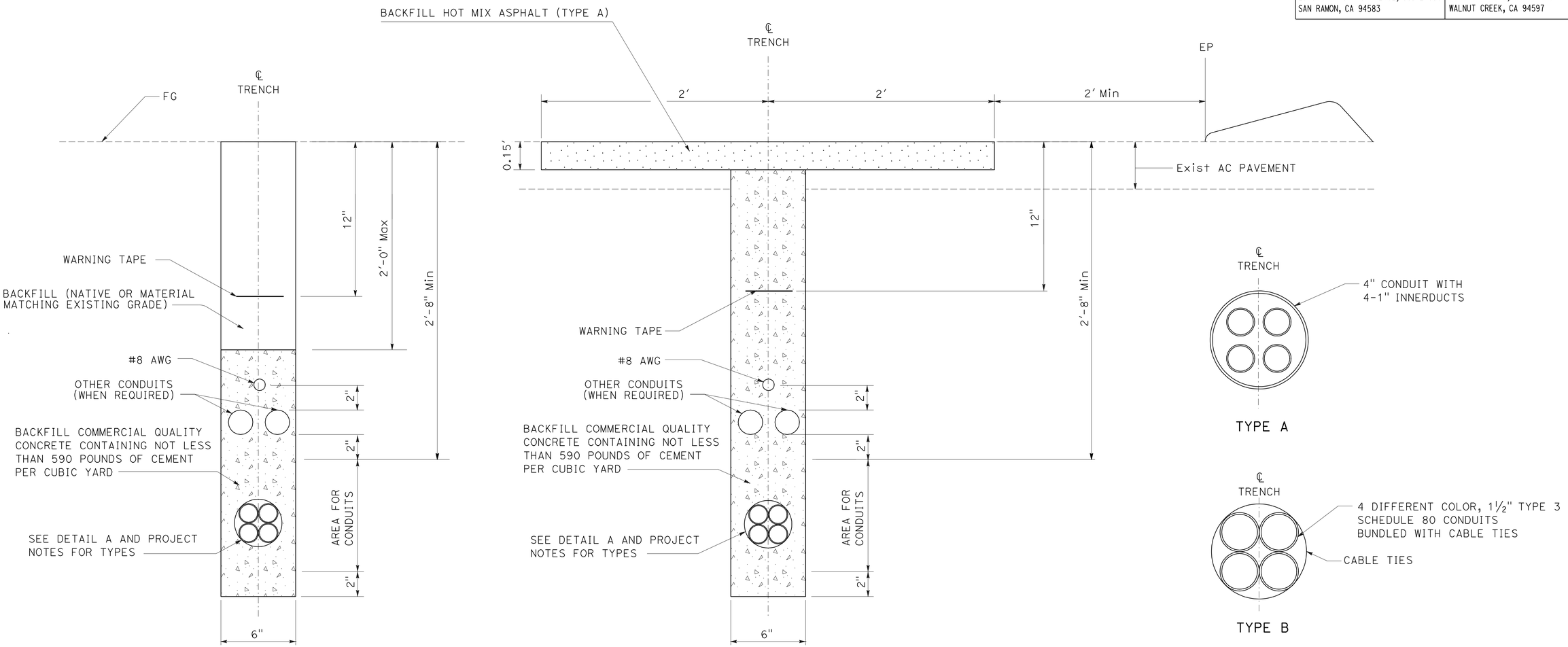

TRENCH IN DIRT

TRENCH IN PAVEMENT

MULTI CONDUIT (Typ)
DETAIL A

ELECTRICAL DETAILS
(FIBER OPTIC CONDUIT AND TRENCH DETAILS)

NO SCALE

E-51

STATE OF CALIFORNIA - DEPARTMENT OF TRANSPORTATION
Caltrans®

CONSULTANT FUNCTIONAL SUPERVISOR: HATEM AHMED
CALCULATED-DESIGNED BY: DAVID SETO
CHECKED BY: ALLAN MORRIS
REVISED BY: CC
DATE REVISED: 8/9/11

LAST REVISION 8-9-11
DATE PLOTTED => 19-JAN-2012
TIME PLOTTED => 08:42

Dist	COUNTY	ROUTE	POST MILES TOTAL PROJECT	SHEET No.	TOTAL SHEETS
04	CC	4	27.3/R29.0	568	950

REGISTERED ELECTRICAL ENGINEER 8/9/11 DATE

1-17-12
PLANS APPROVAL DATE

REGISTERED PROFESSIONAL ENGINEER
ALLAN RAY MORRIS
No. 16958
Exp. 6/30/13
ELECTRICAL
STATE OF CALIFORNIA

THE STATE OF CALIFORNIA OR ITS OFFICERS OR AGENTS SHALL NOT BE RESPONSIBLE FOR THE ACCURACY OR COMPLETENESS OF SCANNED COPIES OF THIS PLAN SHEET.

T Y LIN INTERNATIONAL
2010 CROW CANYON PLACE, SUITE 350
SAN RAMON, CA 94583

CCTA
2999 OAK ROAD, SUITE 100
WALNUT CREEK, CA 94597

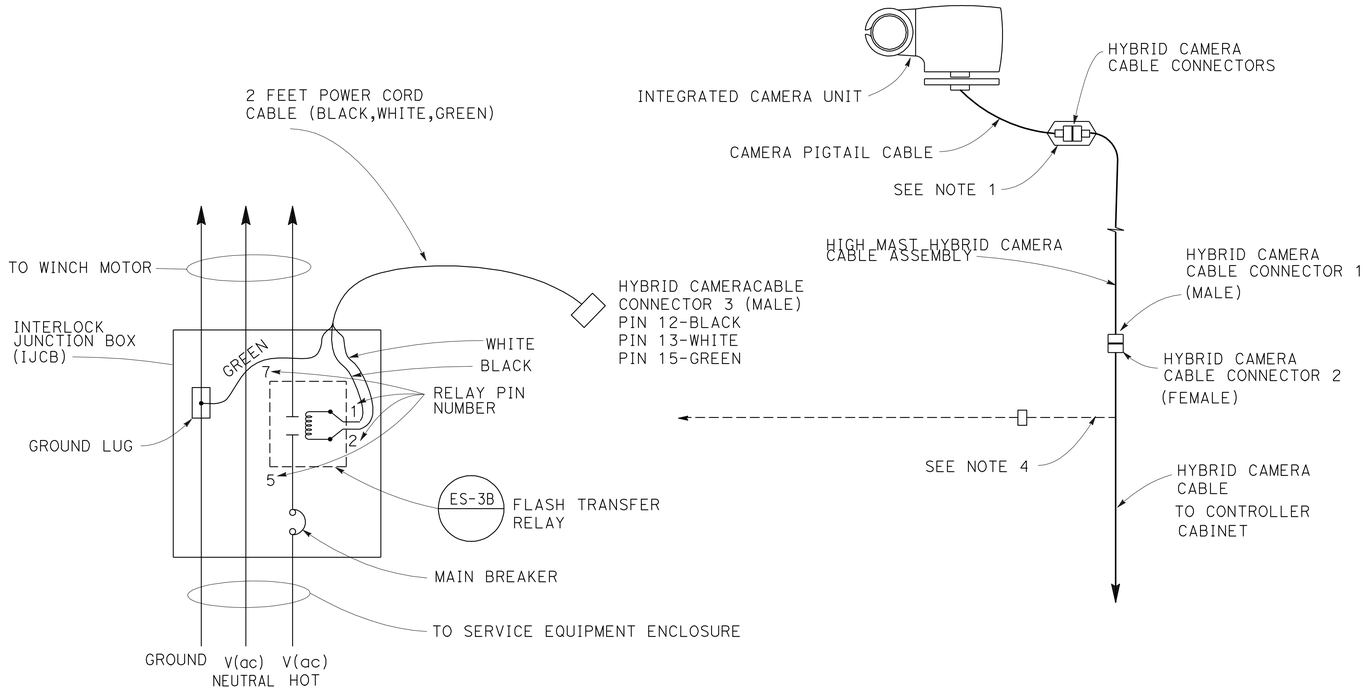

ELECTRICAL CIRCUIT DIAGRAM

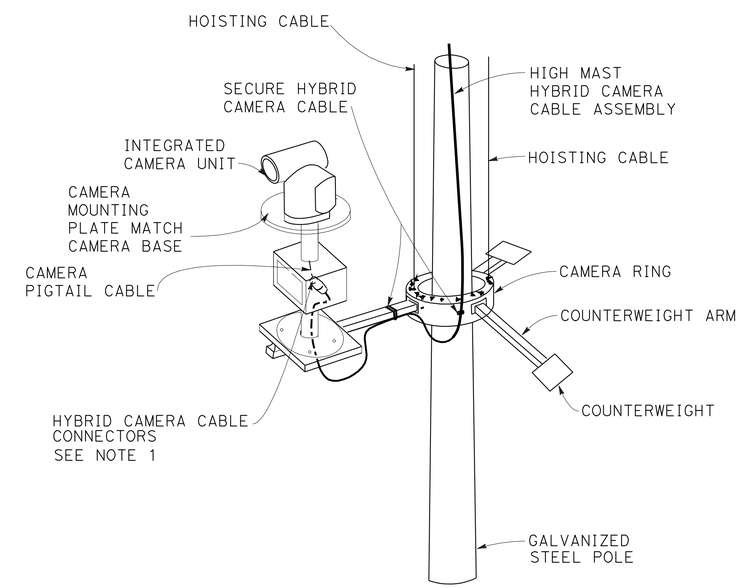

CAMERA RING AT MIDDLE POSITION

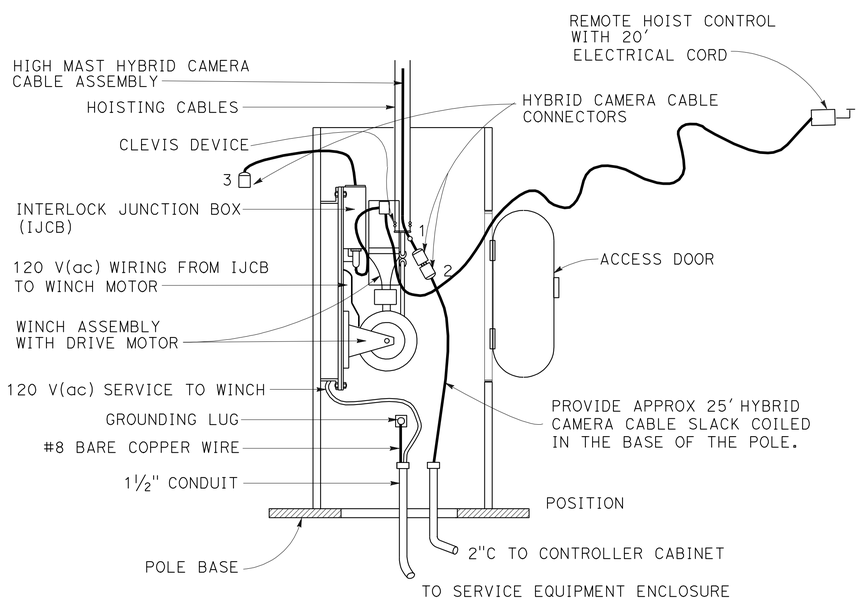

CABLE CONNECTION DETAIL

NOTES:

1. PLACE HYBRID CAMERA CABLE CONNECTORS IN ADAPTER JUNCTION BOX.
2. SEE STANDARD PLANS ES-16C FOR OTHER DETAILS.
3. PROVIDE PULL ROPE WITH LENGTH EQUAL TO POLE HEIGHT PLUS 35 FEET. TIE ONE END OF PULL ROPE TO HYBRID CAMERA CABLE CONNECTOR 1 USING CHAIN HITCH KNOTS, TAPE KNOTS TO CABLE. COIL PULL ROPE INSIDE THE POLE WHEN CAMERA RING IS AT RAISED POSITION.
4. TO LOWER CAMERA RING, DISCONNECT HYBRID CAMERA CABLE CONNECTORS 1 AND 2. CONNECT HYBRID CAMERA CABLE CONNECTOR 2 TO 3 TO ENABLE WINCH MOTOR. RECONNECT HYBRID CAMERA CABLE CONNECTOR 2 TO CAMERA PIGTAIL CABLE WHEN CAMERA RING IS AT LOWERED POSITION.

ELECTRICAL DETAILS
(HIGH MAST CCTV)

NO SCALE

E-52

REVISED BY	DATE REVISED
CC	8/9/11

CALCULATED-DESIGNED BY: DAVID SETO
CHECKED BY: ALLAN MORRIS
CONSULTANT FUNCTIONAL SUPERVISOR: HATEM AHMED

STATE OF CALIFORNIA - DEPARTMENT OF TRANSPORTATION
Caltrans

LAST REVISION 8-9-11
DATE PLOTTED => 19-JAN-2012
TIME PLOTTED => 08:42

Dist	COUNTY	ROUTE	POST MILES TOTAL PROJECT	SHEET No.	TOTAL SHEETS
04	CC	4	27.3/R29.0	569	950

REGISTERED CIVIL ENGINEER — DATE 8/9/11

1-17-12
PLANS APPROVAL DATE

REGISTERED PROFESSIONAL ENGINEER — HATEM A. AHMED — No. 46995 — Exp. 12/31/11 — CIVIL — STATE OF CALIFORNIA

THE STATE OF CALIFORNIA OR ITS OFFICERS OR AGENTS SHALL NOT BE RESPONSIBLE FOR THE ACCURACY OR COMPLETENESS OF SCANNED COPIES OF THIS PLAN SHEET.

T Y LIN INTERNATIONAL
2010 CROW CANYON PLACE, SUITE 350
SAN RAMON, CA 94583

CCTA
2999 OAK ROAD, SUITE 100
WALNUT CREEK, CA 94597

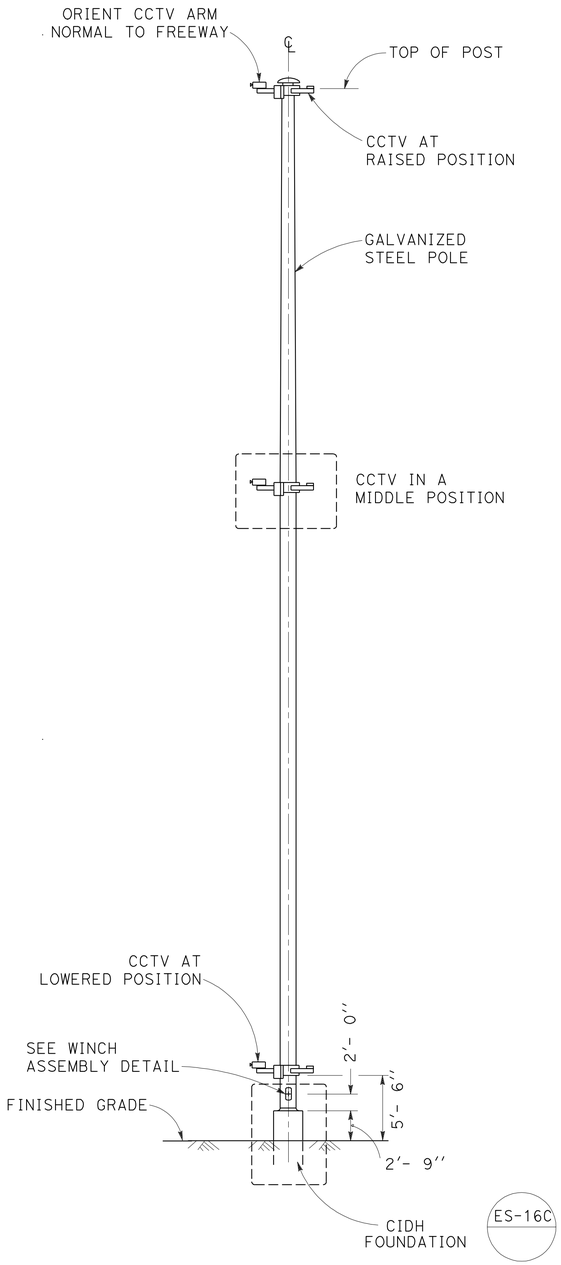

TABLE A

POLE HEIGHT	RING INSIDE DIAMETER (NOMINAL)
60'-70'	30"
80'-90'	36"

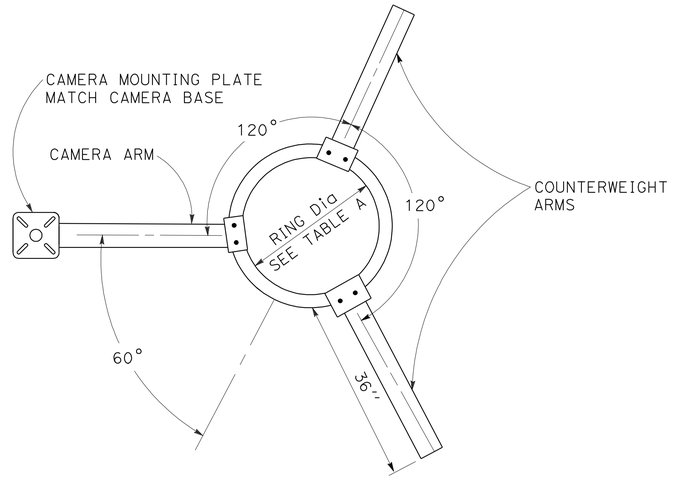

TOP VIEW OF RING AND ARM ASSEMBLIES

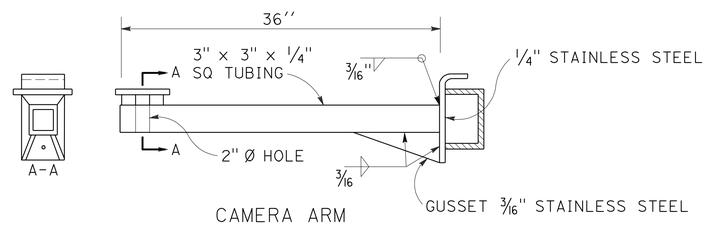

CAMERA ARM

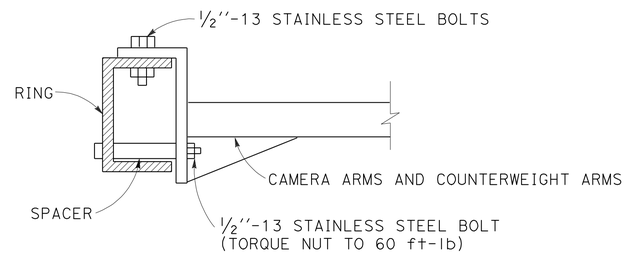

RING ARM MOUNTING DETAIL

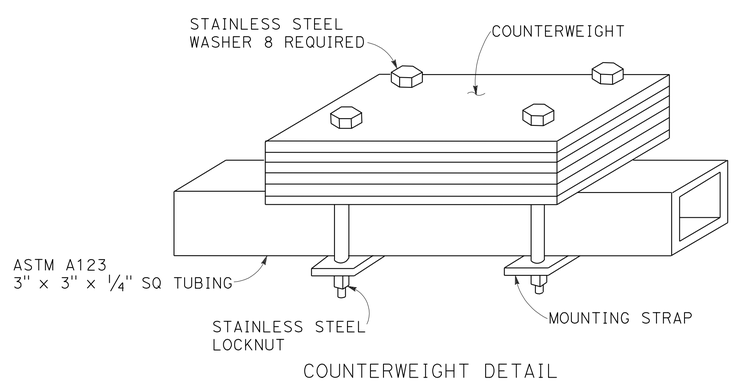

COUNTERWEIGHT DETAIL

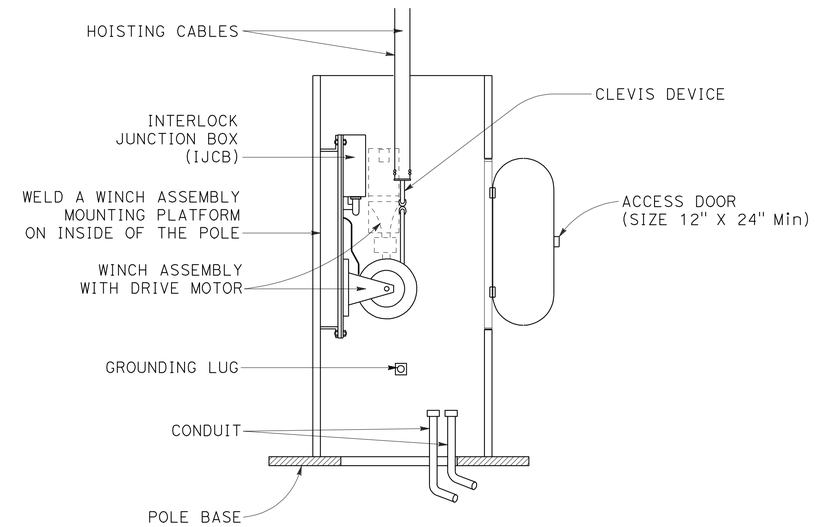

WINCH ASSEMBLY DETAIL

NOTES: (FOR THIS SHEET ONLY)

1. ALL MOUNTING PLATE WELDS AND CONNECTIONS BETWEEN RING AND ARMS, ARE SHOWN FOR EXAMPLE. THE CONTRACTOR SHALL SUBMIT ACTUAL MOUNTING DETAILS TO THE ENGINEER FOR APPROVAL PRIOR TO FABRICATION.
2. COUNTERWEIGHT AND CAMERA ARMS SHALL HAVE IDENTICAL MOUNTING ATTACHMENT TO RING.
3. COUNTERWEIGHT DETAIL IS SHOWN FOR EXAMPLE. MODIFY DETAIL TO BALANCE CCTV/RING/ARMS ASSEMBLY ABOUT THE CENTER OF THE RING.
4. EACH COUNTERWEIGHT SHALL HAVE ITS WEIGHT EQUAL TO THE WEIGHT OF INTEGRATED CAMERA UNIT.
5. ALL WELDS ARE METAL - ARC WITH E 6011 ROD WITH 72000 PSI TENSILE STRENGTH AS WELDED.
6. COUNTERWEIGHT AND RELATED HARDWARE SHALL BE GALVANIZED PER ASTM 123.

ELECTRICAL DETAILS
(HIGH MAST CCTV POLE)
NO SCALE

E-53

STATE OF CALIFORNIA - DEPARTMENT OF TRANSPORTATION
Caltrans

CONSULTANT FUNCTIONAL SUPERVISOR: HATEM AHMED
CALCULATED-DESIGNED BY: DAVID SETO
CHECKED BY: ALLAN MORRIS
REVISED BY: CC
DATE REVISED: 8/9/11

LAST REVISION — DATE PLOTTED => 19-JAN-2012 — TIME PLOTTED => 08:42

Dist	COUNTY	ROUTE	POST MILES TOTAL PROJECT	SHEET No.	TOTAL SHEETS
04	CC	4	27.3/R29.0	570	950

REGISTERED CIVIL ENGINEER — DATE 8/9/11

1-17-12
PLANS APPROVAL DATE

REGISTERED PROFESSIONAL ENGINEER — HATEM A. AHMED — No. 46995 — Exp. 12/31/11 — CIVIL — STATE OF CALIFORNIA

THE STATE OF CALIFORNIA OR ITS OFFICERS OR AGENTS SHALL NOT BE RESPONSIBLE FOR THE ACCURACY OR COMPLETENESS OF SCANNED COPIES OF THIS PLAN SHEET.

T Y LIN INTERNATIONAL
2010 CROW CANYON PLACE, SUITE 350
SAN RAMON, CA 94583

CCTA
2999 OAK ROAD, SUITE 100
WALNUT CREEK, CA 94597

ABBREVIATIONS:

WVDS = WIRELESS VEHICLE DETECTOR SYSTEM
AP = ACCESS POINT
POA = POWER OVER ETHERNET
PV = PHOTO-VOLTAIC
VSN = VEHICLE SENSOR NODE

GENERAL NOTES:

1. PULL BOX COVERS SHALL BE MARKED "TOS, CALTRANS".
2. EXISTING UTILITY FACILITIES HAVE NOT BEEN POSITIVELY LOCATED.

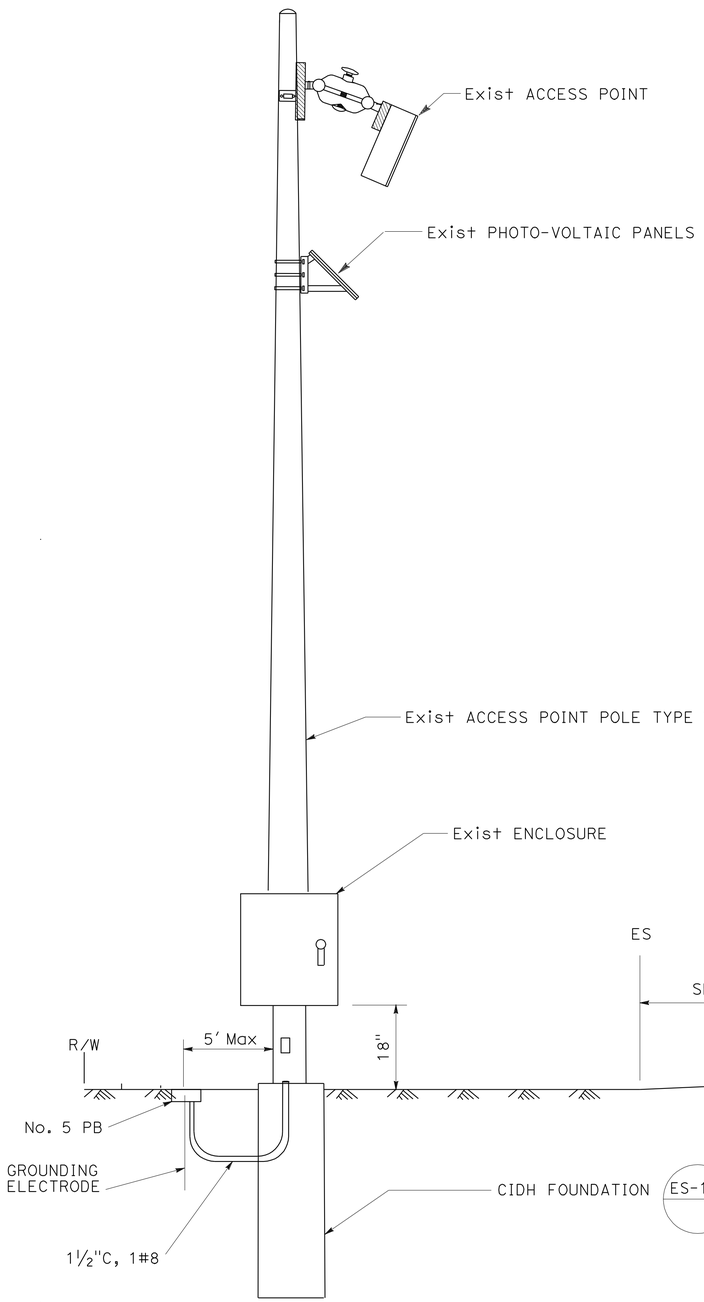

LOCATION OF ENCLOSURE ON POLE

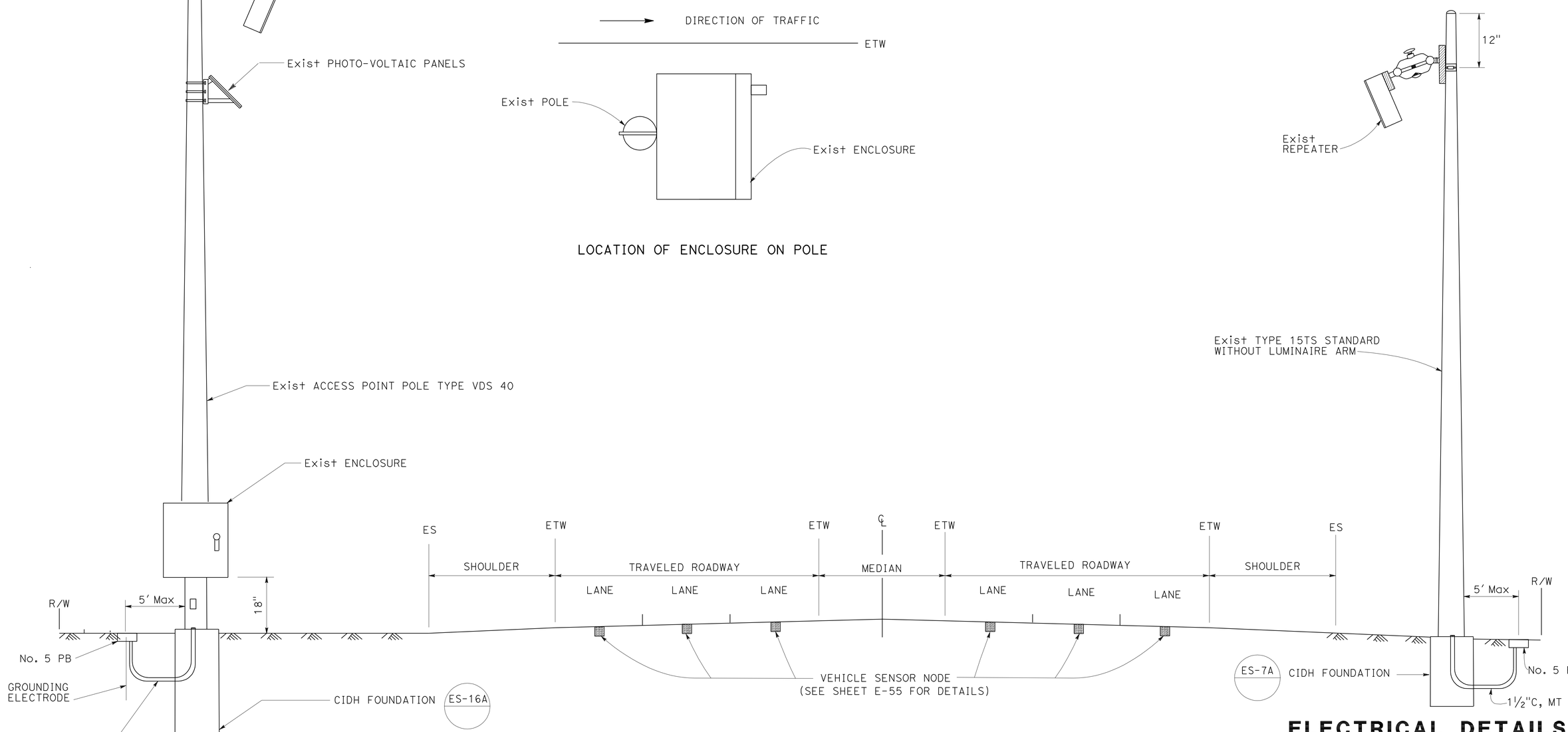

TYPICAL LAYOUT

ELECTRICAL DETAILS

RELOCATE WIRELESS VEHICLE DETECTOR SYSTEM (WVDS)

NO SCALE

E-54

DAVID SETO	REVISED BY
ALLAN MORRIS	DATE REVISED
CC	
8/9/11	
CALCULATED-DESIGNED BY	
CHECKED BY	
CONSULTANT FUNCTIONAL SUPERVISOR	
HATEM AHMED	

STATE OF CALIFORNIA - DEPARTMENT OF TRANSPORTATION

LAST REVISION 8-9-11
DATE PLOTTED => 19-JAN-2012
TIME PLOTTED => 08:42

Dist	COUNTY	ROUTE	POST MILES TOTAL PROJECT	SHEET No.	TOTAL SHEETS
04	CC	4	27.3/R29.0	571	950

REGISTERED ELECTRICAL ENGINEER 8/9/11 DATE

1-17-12
PLANS APPROVAL DATE

REGISTERED PROFESSIONAL ENGINEER ALLAN RAY MORRIS No. 16958 Exp. 6/30/13 ELECTRICAL STATE OF CALIFORNIA

THE STATE OF CALIFORNIA OR ITS OFFICERS OR AGENTS SHALL NOT BE RESPONSIBLE FOR THE ACCURACY OR COMPLETENESS OF SCANNED COPIES OF THIS PLAN SHEET.

T Y LIN INTERNATIONAL
2010 CROW CANYON PLACE, SUITE 350
SAN RAMON, CA 94583

CCTA
2999 OAK ROAD, SUITE 100
WALNUT CREEK, CA 94597

VEHICLE SENSOR NODE INSTALLATION PROCEDURES

1. PRIOR TO INSTALLATION, IDENTIFY VEHICLE SENSOR NODE'S ID, LANE NUMBER, AND LOCATION IN LANE.
2. MAKE SURE THE VEHICLE SENSOR NODE IS INSTALLED FLAT IN THE CORED HOLE AND IS NOT TILTED.
3. USE HEAT-GUN OR HOT COMPRESSED AIR TO DRY THE INSIDE OF THE CORED HOLE. THERE MUST BE ABSOLUTELY NO MOISTURE ON THE APPLIED SURFACE.
4. FILL THE HOLE ABOUT 1/4 FULL OF SEALANT.
5. PLACE VEHICLE SENSOR NODE IN THE HOLE WITH ARROW POINTING IN THE DIRECTION OF TRAFFIC. THE SEALANT SHOULD STILL HAVE WORK TIME, SO THE VEHICLE SENSOR NODE CAN BE ROTATED TO THE CORRECT ORIENTATION. PUSH VEHICLE SENSOR NODE DOWN SO IT LAYS FLAT ON THE BOTTOM OF THE HOLE.
6. FILL THE HOLE WITH THE REMAINING SEALANT TO COVER THE VEHICLE SENSOR NODE. LEVEL SEALANT WITH THE SURFACE OF ROAD.
7. IMMEDIATELY AFTER PROCEDURE #4, COMPLETE PROCEDURE #5 AND #6 WITHIN 30 SECONDS.
8. DEPENDING ON AMBIENT TEMPERATURE AND HUMIDITY, SEALANT DRYING TIME WILL VARY FROM 5 MINUTES TO 15 MINUTES. VERIFY HARDNESS OF SEALANT BEFORE REOPENING THE LANE FOR TRAFFIC.
9. RECORD DISTANCES BETWEEN EACH VEHICLE SENSOR NODE PAIR.

VEHICLE SENSOR NODE REMOVAL AND DISPOSAL PROCEDURES

1. LOCATE AND MARK THE SENSOR TO BE REMOVED.
2. CORE A 5" DIAMETER HOLE INTO THE ROAD AROUND THE SENSOR TO A DEPTH OF APPROXIMATELY 2 1/2".
3. PERMANENTLY MARK THE DIRECTION OF TRAFFIC ONTO THE TOP OF THE SENSOR/EPOXY PLUG.
4. USE THE PRY BAR AS NEEDED TO WORK THE SENSOR/EPOXY PLUG FREE FROM THE BOTTOM OF THE HOLE.
5. PULL THE SENSOR/EPOXY PLUG FREE FROM THE HOLE.
6. REMOVE LOOSE DIRT OR DEBRIS.
7. PATCH HOLE WITH CALTRANS APPROVED MATERIALS.
8. THE SENSORS CONTAIN NO SERVICEABLE PARTS AND SHOULD NOT BE DISASSEMBLED.
9. INSTALLATION AND REMOVAL OF SENSORS FROM PAVEMENT SHOULD ONLY BE DONE BY TRAINED PERSONNEL AND CARE SHOULD BE TAKEN TO INSURE THAT THE SENSOR CASING IS NOT PUNCTURED OR CRUSHED.
10. DISPOSE OF SENSORS CONTAINING BATTERIES IN ACCORDANCE WITH RESIDENT ENGINEER'S INSTRUCTIONS.

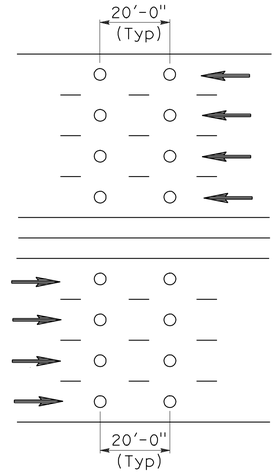

DETAIL "TM"

WVDS NOTES

FREEWAY MAINLINE DETECTOR DESIGNATION:

N=NORTHBOUND LANES (NB)
S=SOUTHBOUND LANES (SB)
E=EASTBOUND LANES (EB)
W=WESTBOUND LANES (WB)

NUMBER OF LANES FROM LEFT WITH RESPECT TO DIRECTION OF TRAFFIC:

1=FIRST LANE FROM LEFT
2=SECOND LANE FROM LEFT
3=THIRD LANE FROM LEFT
4=FOURTH LANE FROM LEFT

NUMBER OF VSN IN THE SAME LANE:

1=ENTERING DETECTOR
2=LEAVING DETECTOR

N 3-2

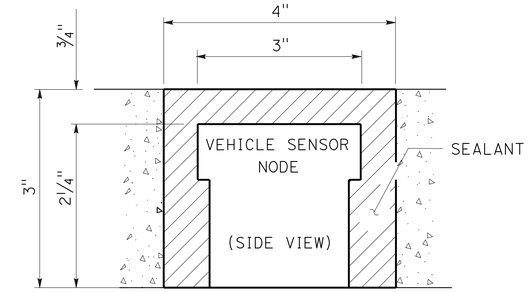

DETAIL B
VEHICLE SENSOR NODE INSTALLED IN ROADWAY

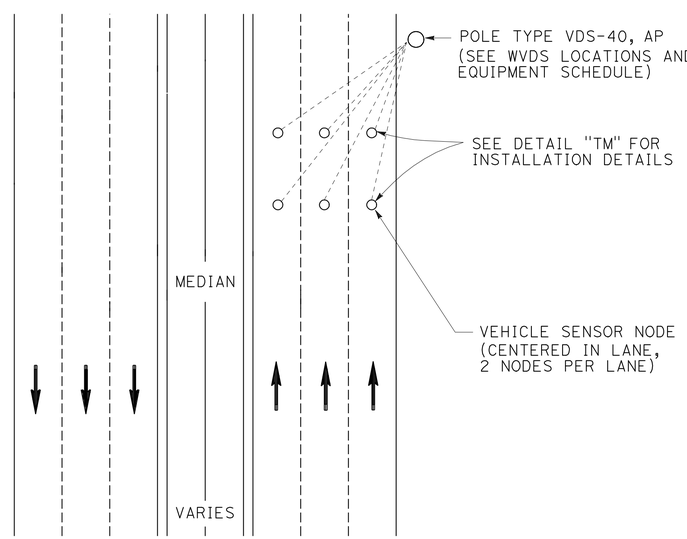

TYPE I

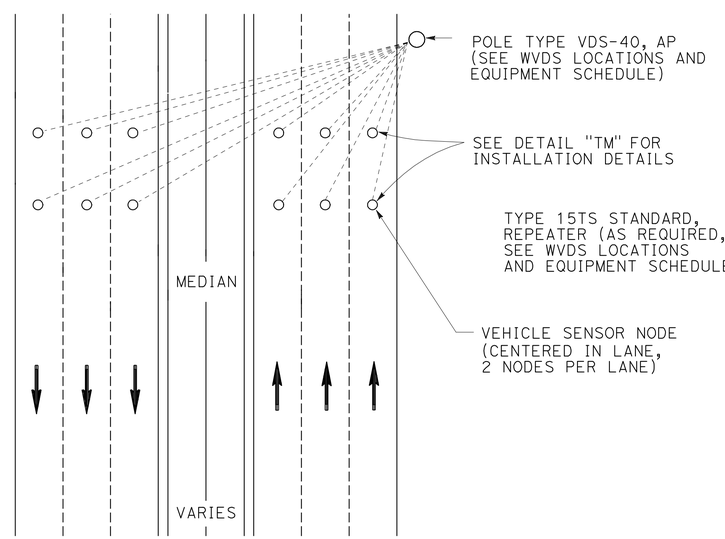

TYPE II

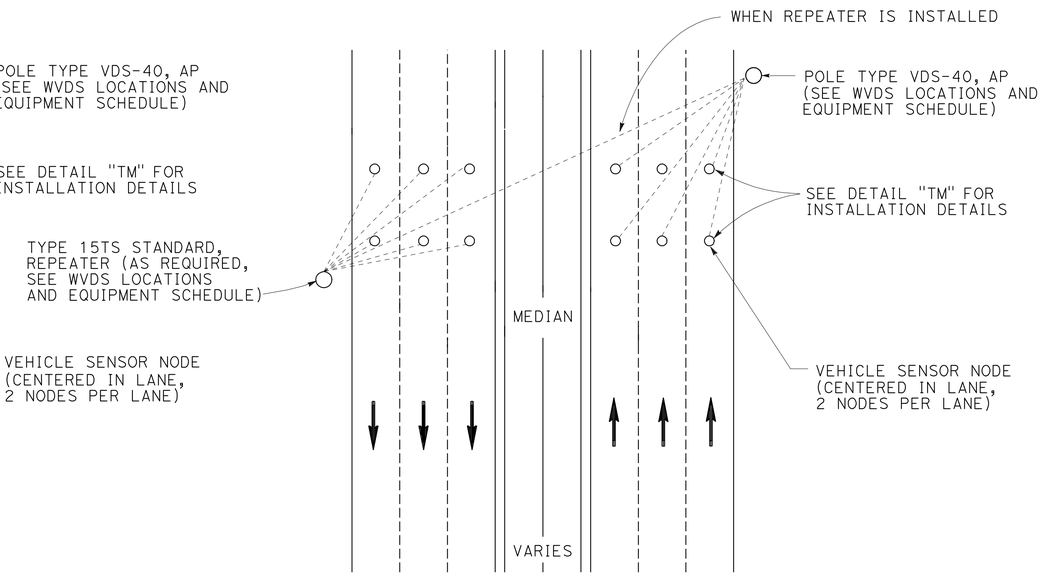

TYPE III

DETAIL A
VEHICLE SENSOR NODE PLACEMENT DETAIL

LEGEND

DIRECTION OF TRAFFIC
WIRELESS COMMUNICATION LINK

ELECTRICAL DETAILS
RELOCATE WIRELESS VEHICLE DETECTOR SYSTEM (WVDS) (VEHICLE SENSOR NODE SYSTEM DETAILS)

NO SCALE

E-55

STATE OF CALIFORNIA - DEPARTMENT OF TRANSPORTATION	Caltrans
CONSULTANT FUNCTIONAL SUPERVISOR	HATEM AHMED
CALCULATED-DESIGNED BY	DAVID SETO
CHECKED BY	ALLAN MORRIS
REVISED BY	CC
DATE REVISED	8/9/11

LAST REVISION 8-9-11
DATE PLOTTED => 19-JAN-2012
TIME PLOTTED => 08:42

Dist	COUNTY	ROUTE	POST MILES TOTAL PROJECT	SHEET No.	TOTAL SHEETS
04	CC	4	27.3/R29.0	572	950

REGISTERED CIVIL ENGINEER — DATE 8/9/11

1-17-12
PLANS APPROVAL DATE

REGISTERED PROFESSIONAL ENGINEER — HATEM A. AHMED — No. 46995 — Exp. 12/31/11 — CIVIL — STATE OF CALIFORNIA

THE STATE OF CALIFORNIA OR ITS OFFICERS OR AGENTS SHALL NOT BE RESPONSIBLE FOR THE ACCURACY OR COMPLETENESS OF SCANNED COPIES OF THIS PLAN SHEET.

T Y LIN INTERNATIONAL
2010 CROW CANYON PLACE, SUITE 350
SAN RAMON, CA 94583

CCTA
2999 OAK ROAD, SUITE 100
WALNUT CREEK, CA 94597

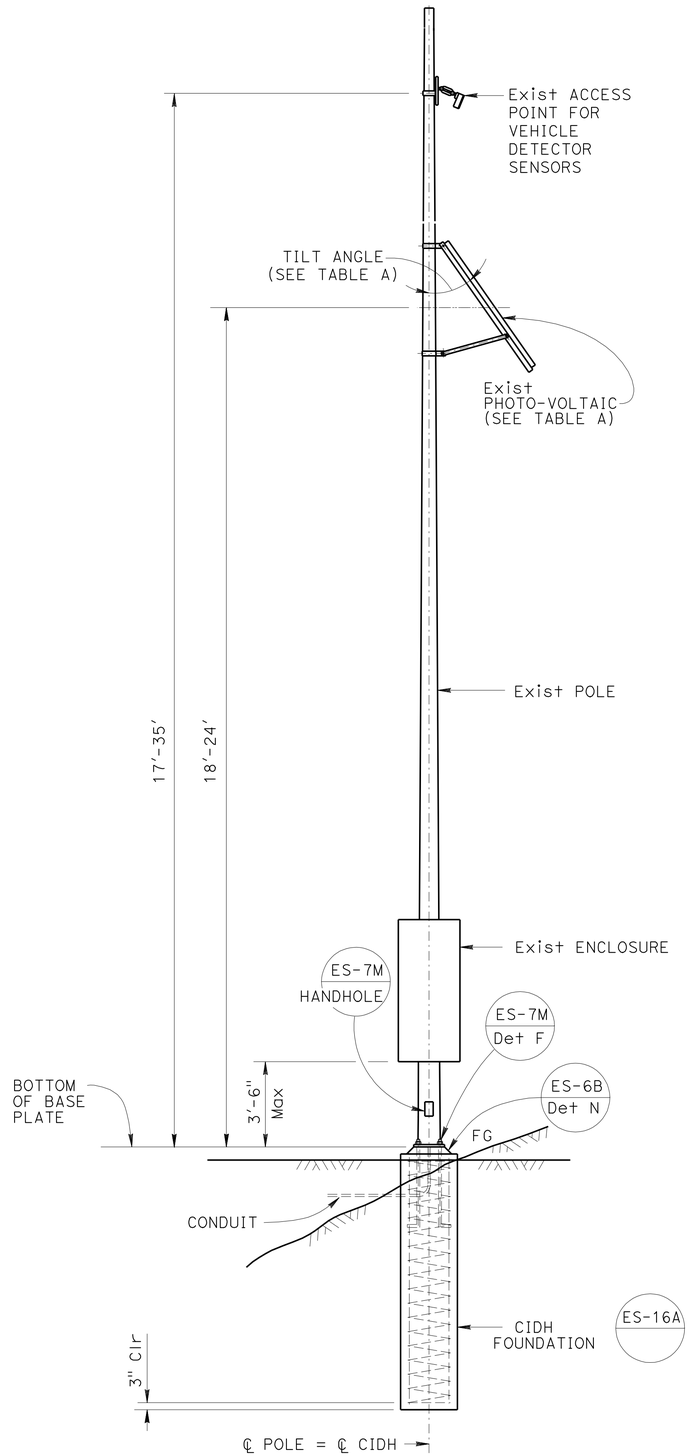

ELEVATION

TABLE A

PHOTO-VOLTAIC PANEL LIMITS	
PANEL SIZE	TILT ANGLE
16 SQFT Max	40°

ELECTRICAL DETAILS
RELOCATE WIRELESS VEHICLE DETECTOR SYSTEM (WVDS) (POLE DETAILS)
NO SCALE

E-56

STATE OF CALIFORNIA - DEPARTMENT OF TRANSPORTATION
Caltrans

CONSULTANT FUNCTIONAL SUPERVISOR: HATEM AHMED
CALCULATED-DESIGNED BY: DAVID SETO
CHECKED BY: ALLAN MORRIS
REVISED BY: CC
DATE REVISED: 8/9/11

LAST REVISION 8-9-11
DATE PLOTTED => 19-JAN-2012
TIME PLOTTED => 08:42

Dist	COUNTY	ROUTE	POST MILES TOTAL PROJECT	SHEET No.	TOTAL SHEETS
04	CC	4	27.3/R29.0	573	950

REGISTERED ELECTRICAL ENGINEER 8/9/11 DATE

1-17-12
PLANS APPROVAL DATE

REGISTERED PROFESSIONAL ENGINEER
ALLAN RAY MORRIS
No. 16958
Exp. 6/30/13
ELECTRICAL
STATE OF CALIFORNIA

THE STATE OF CALIFORNIA OR ITS OFFICERS OR AGENTS SHALL NOT BE RESPONSIBLE FOR THE ACCURACY OR COMPLETENESS OF SCANNED COPIES OF THIS PLAN SHEET.

T Y LIN INTERNATIONAL
2010 CROW CANYON PLACE, SUITE 350
SAN RAMON, CA 94583

CCTA
2999 OAK ROAD, SUITE 100
WALNUT CREEK, CA 94597

THIS PAGE IS INTENTIONALLY LEFT BLANK.

E-57

STATE OF CALIFORNIA - DEPARTMENT OF TRANSPORTATION
Caltrans

CONSULTANT FUNCTIONAL SUPERVISOR: HATEM AHMED

CALCULATED-DESIGNED BY: DAVID SETO

CHECKED BY: ALLAN MORRIS

REVISED BY: CC

DATE REVISED: 8/9/11

LAST REVISION 8-9-11

DATE PLOTTED => 19-JAN-2012
TIME PLOTTED => 08:43

Dist	COUNTY	ROUTE	POST MILES TOTAL PROJECT	SHEET No.	TOTAL SHEETS
04	CC	4	27.3/R29.0	574	950

REGISTERED ELECTRICAL ENGINEER 8/9/11 DATE

1-17-12
PLANS APPROVAL DATE

REGISTERED PROFESSIONAL ENGINEER
ALLAN RAY MORRIS
No. 16958
Exp. 6/30/13
ELECTRICAL
STATE OF CALIFORNIA

THE STATE OF CALIFORNIA OR ITS OFFICERS OR AGENTS SHALL NOT BE RESPONSIBLE FOR THE ACCURACY OR COMPLETENESS OF SCANNED COPIES OF THIS PLAN SHEET.

T Y LIN INTERNATIONAL
2010 CROW CANYON PLACE, SUITE 350
SAN RAMON, CA 94583

CCTA
2999 OAK ROAD, SUITE 100
WALNUT CREEK, CA 94597

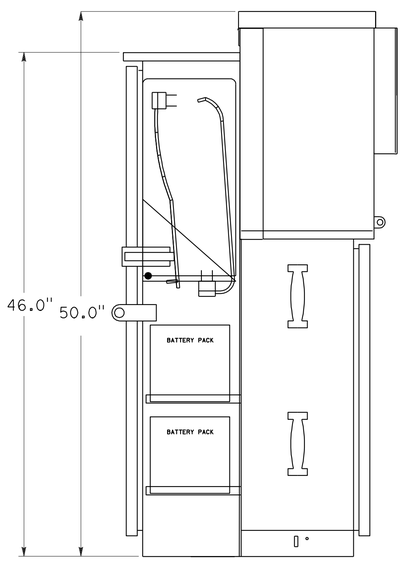

LEFT SIDE

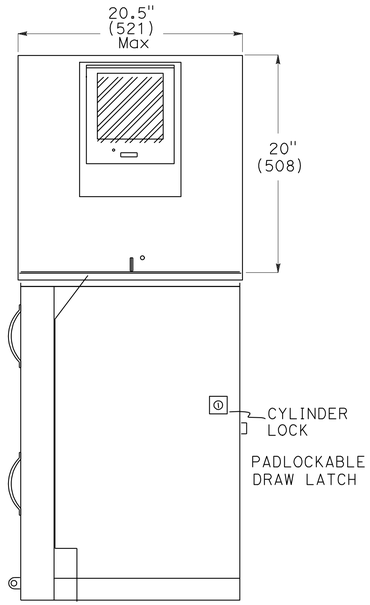

FRONT VIEW

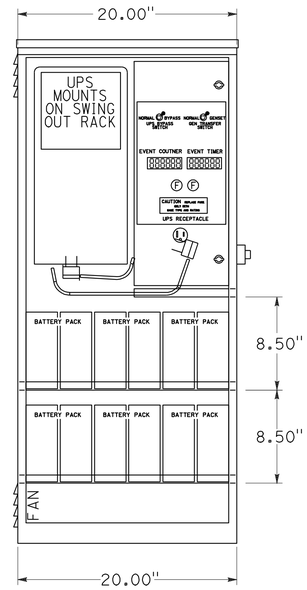

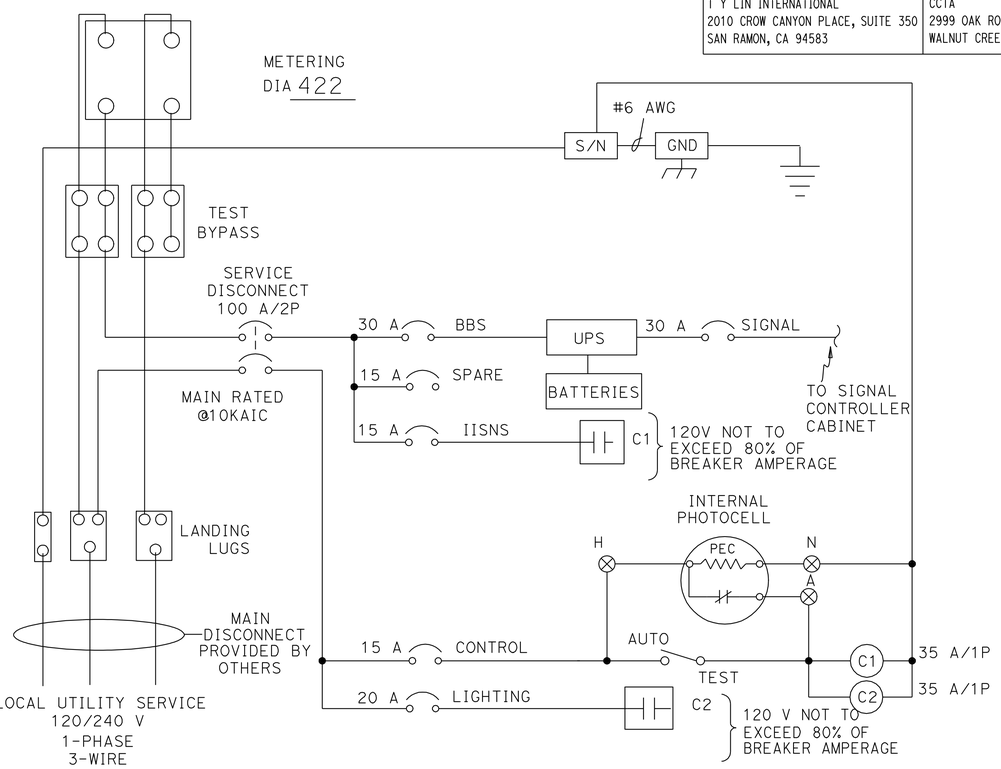

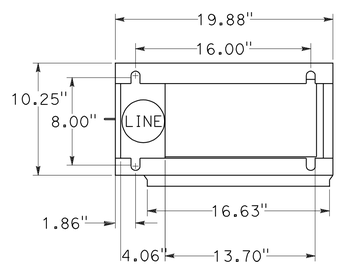

BASE DETAIL

NOTE: LOAD CURRENT FOR ALL BREAKERS NOT TO EXCEED 80% OF BREAKER AMPERAGE

ENCLOSURE CONSTRUCTION NOTES

1. FABRICATED FROM 14 GA. #304 D STAINLESS STEEL AND INT. 14 GA. COLD ROLLED STEEL ELECTRICALLY WELDED AND REINFORCED WHERE REQUIRED.
2. CONSTRUCTION WILL BE NEMA 3R, RAINTIGHT.
3. ALL NUTS, BOLTS AND SCREWS WILL BE STAINLESS STEEL.
4. NUTS, BOLTS & SCREWS WILL NOT BE VISIBLE FROM OUTSIDE OF ENCLOSURE.
5. NAMEPLATES WILL BE PROVIDED AS REQUIRED.
6. CONTROL WIRING WILL BE MARKED AT BOTH ENDS BY PERMANENT WIRE MARKERS.
7. A PLASTIC COVERED WIRING DIAGRAM WILL BE ATTACHED TO THE INSIDE OF THE FRONT DOOR.
8. ENCLOSURE WILL BE FACTORY WIRED AND CONFORM TO REQUIRED NEMA STANDARDS. AND SHALL BEAR A UL 508 LABEL.
9. SERVICE ENCLOSURE SHALL BE PAINTED MINT GREEN.

ELECTRICAL DETAILS
(CITY SIGNAL SERVICE EQUIPMENT ENCLOSURE WITH BATTERY BACKUP SYSTEM AND WIRING DIAGRAM)

NO SCALE

E-58

STATE OF CALIFORNIA - DEPARTMENT OF TRANSPORTATION
Caltrans

CONSULTANT FUNCTIONAL SUPERVISOR: HATEM AHMED
CALCULATED-DESIGNED BY: DAVID SETO
CHECKED BY: ALLAN MORRIS
REVISED BY: CC
DATE REVISED: 8/9/11

LAST REVISION 8-9-11
DATE PLOTTED => 19-JAN-2012
TIME PLOTTED => 08:36

Dist	COUNTY	ROUTE	POST MILES TOTAL PROJECT	SHEET No.	TOTAL SHEETS
04	CC	4	27.3/R29.0	575	950

REGISTERED ELECTRICAL ENGINEER 8/9/11 DATE

1-17-12
PLANS APPROVAL DATE

REGISTERED PROFESSIONAL ENGINEER ALLAN RAY MORRIS No. 16958 Exp. 6/30/13 ELECTRICAL STATE OF CALIFORNIA

THE STATE OF CALIFORNIA OR ITS OFFICERS OR AGENTS SHALL NOT BE RESPONSIBLE FOR THE ACCURACY OR COMPLETENESS OF SCANNED COPIES OF THIS PLAN SHEET.

T Y LIN INTERNATIONAL
2010 CROW CANYON PLACE, SUITE 350
SAN RAMON, CA 94583

CCTA
2999 OAK ROAD, SUITE 100
WALNUT CREEK, CA 94597

GENERAL NOTES (TEMPORARY):

1. EXACT LOCATION OF TEMPORARY ELECTRICAL EQUIPMENT WILL BE DETERMINED BY THE ENGINEER.
2. ALL TEMPORARY ELECTRICAL EQUIPMENT NO LONGER REQUIRED AT THE END OF A STAGE SHALL BE REMOVED AND DISPOSED OF OR REUSED IN STAGES THAT FOLLOW EXCEPT CONDUIT NO LONGER USED SHALL BE ABANDONED IN PLACE. PULL BOXES AND FOUNDATIONS SHALL BE REMOVED AND BECOME THE PROPERTY OF THE CONTRACTOR OR ABANDONED AS DIRECTED BY THE ENGINEER.
3. PERMANENT ELECTRICAL EQUIPMENT NOT SHOWN ON THE PLANS CAN BE INSTALLED AT ANY STAGE IF NOT INTERFERING WITH CONSTRUCTION AND AS DIRECTED BY THE ENGINEER.
4. WOOD POLE FOR TEMPORARY LIGHTING SHALL BE PROTECTED WITH A CONCRETE BARRIER BETWEEN IT AND THE TRAVELED WAY. CONCRETE BARRIER SHALL BE INCLUDED AS TRAFFIC HANDLING ITEM.
5. TEMPORARY WOOD POLE SHALL BE INSTALLED 30′ MINIMUM FROM THE EDGE OF TRAVELED WAY. IF K-RAIL IS PROVIDED, LOCATE 3′ BEHIND RAILING.
6. THE LOWEST SAG POINT OF THE TETHER WIRE SHALL BE 17′ MINIMUM CLEARANCE FROM THE FINISHED ROADWAY GRADE.
7. OVERHEAD CONDUCTORS SHALL BE TIED ON MESSENGER WIRE AT EVERY 3′ MAXIMUM WITH SELF-CLINGING NYLON TIES.
8. OVERHEAD ENTRANCE CONDUIT FITTING SHALL BE INSTALLED IN SUCH A WAY SO THAT RAINWATER SHALL NOT SEEP INTO THE ELECTRICAL EQUIPMENT THROUGH THE ENTRANCE FITTING. FORM A DRIP LOOP AT THE ENTRANCE FITTING.
9. PROVIDE GUY WIRE, GUY GUARDS, AND ANCHORS AS REQUIRED. POLE GUYS SHALL BE INSTALLED AS DIRECTED BY ENGINEER.
10. ESTABLISH CONTINUOUS GROUND WITH THE SYSTEM GROUND TO ALL METAL PARTS IN THE SYSTEM BY BONDING JUMPERS AND CONDUITS.
11. A GROUNDING ELECTRODE SHALL BE INSTALLED IN THE PULL BOX ADJACENT TO WOOD POLES AND BONDED TO RIGID METAL CONDUIT, UNLESS OTHERWISE NOTED.
12. ALL TEMPORARY LIGHTING SHOWN ON THE PLANS SHALL BE INSTALLED PRIOR TO THE BEGINNING OF THE STAGE AND MAINTAINED UNTIL PERMANENT LIGHTING IS INSTALLED AND OPERATIONAL.
13. EXACT SIZE AND LOCATION OF VIDEO DETECTION ZONE TO BE DETERMINED BY THE ENGINEER IN THE FIELD.
14. MAXIMUM DISTANCE BETWEEN TEMPORARY WOOD POLES SHALL BE 100′ AND EXACT LOCATIONS TO BE DETERMINED BY THE ENGINEER IN THE FIELD.

PROJECT NOTES (TEMPORARY):

1A INSTALL WOOD POLE. INSTALL EQUIPMENT AS INDICATED. SEE SHEET E-106 TO E-111.

2A INSTALL MESSENGER WIRE WITH CONDUCTORS/ CABLES AS INDICATED. SEE SHEET E-106. TO E-111.

3A INSTALL TEMPORARY CONNECTION AS SHOWN. CONDUIT SHALL BE 2", UNLESS OTHERWISE SHOWN.

4A NOT USED.

5A COVER ELECTRICAL EQUIPMENT AS SHOWN ON PLAN.

6A THE CONTRACTOR SHALL ARRANGE TO HAVE SERVICE AVAILABLE FOR TEMPORARY WORK PRIOR TO BEGINNING OF CONSTRUCTION STAGING.

7A INSTALL VIDEO DETECTION CAMERA ON LUMINAIRE MAST ARM. SEE SHEET E-106.

8A NOT USED.

9A ROTATE SIGNAL HEADS TO ALIGN WITH CENTER OF LANE.

10A INSTALL PEU ON POLE.

11A PART OF PERMANENT ELECTRICAL EQUIPMENT OR WORK, AS SHOWN ON OTHER PARTS OF THESE CONTRACT PLANS TO BE INSTALLED AND CONNECTED AS PART OF TEMPORARY WORK. PERMANENT EQUIPMENT SHALL NOT INTERFERE WITH LATER CONSTRUCTION STAGES.

12A PRIOR TO THE INSTALLATION OF THE SERVICE EQUIPMENT ENCLOSURE, THE PERMANENT LOCATION SHALL BE BUILT TO THE FINAL ROADWAY GRADE.

13A NOT USED.

14A NOT USED.

15A ROTATE PEDESTRIAN SIGNAL HEAD AS SHOWN ON PLAN

16A INSTALL STATE-FURNISHED MODEL 2070L CONTROLLER ASSEMBLY WITH STATE-FURNISHED MODEL 332A CABINET. SEE STANDARD PLANS ES-3C FOR FOUNDATION INSTALLATION DETAILS. INSTALL TIMEBASE COORDINATION TIME CLOCK (GPS OR WWV) PER ENGINEER'S APPROVAL.

17A COVER PEDESTRIAN PUSH BUTTON. PHASING FOR PEDESTRIAN SIGNAL WILL FOLLOW PHASE DIAGRAM ON SHEET. NO PEDESTRIAN CALL IS REQUIRED TO ACTIVATE PEDESTRIAN PHASE.

LEGEND (TEMPORARY):

SEE STANDARD PLANS RSP ES-1A, RSP ES-1B AND RSP ES-1C.

PROPOSED	EXISTING	
		TEMPORARY WOOD POLE WITH GUY WIRE, CONDUCTORS, CONDUIT, RISERS, AND OTHER EQUIPMENT AS REQUIRED.
OH	oh	MESSENGER WIRE WITH 1/2"-7 STRAND GALVANIZED STEEL CABLE AND CONDUCTORS AS SHOWN ON PLAN.
		TEMPORARY WOOD POLE WITH 310 WATT HPS LUMINAIRE ON 12′ MAST ARM.

GENERAL NOTES (TEMPORARY) PROJECT NOTES (TEMPORARY) AND LEGEND (TEMPORARY)

E-59

STATE OF CALIFORNIA - DEPARTMENT OF TRANSPORTATION
Caltrans

CONSULTANT FUNCTIONAL SUPERVISOR: HATEM AHMED
CALCULATED-DESIGNED BY: DAVID SETO
CHECKED BY: ALLAN MORRIS
REVISED BY: CC
DATE REVISED: 8/9/11

LAST REVISION 8-9-11
DATE PLOTTED => 19-JAN-2012
TIME PLOTTED => 08:36

Dist	COUNTY	ROUTE	POST MILES TOTAL PROJECT	SHEET No.	TOTAL SHEETS
04	CC	4	27.3/R29.0	576	950

REGISTERED ELECTRICAL ENGINEER 8/9/11 DATE

1-17-12
PLANS APPROVAL DATE

REGISTERED PROFESSIONAL ENGINEER
ALLAN RAY MORRIS
No. 16958
Exp. 6/30/13
ELECTRICAL
STATE OF CALIFORNIA

THE STATE OF CALIFORNIA OR ITS OFFICERS OR AGENTS SHALL NOT BE RESPONSIBLE FOR THE ACCURACY OR COMPLETENESS OF SCANNED COPIES OF THIS PLAN SHEET.

T Y LIN INTERNATIONAL
2010 CROW CANYON PLACE, SUITE 350
SAN RAMON, CA 94583

CCTA
2999 OAK ROAD, SUITE 100
WALNUT CREEK, CA 94597

NOTES (TEMPORARY):

1. SEE SHEET E-59 FOR GENERAL NOTES (TEMPORARY), LEGEND (TEMPORARY), AND PROJECT NOTES (TEMPORARY).
2. FOR ACCURATE RIGHT OF WAY DATA, CONTACT RIGHT OF WAY ENGINEERING AT THE DISTRICT OFFICE.

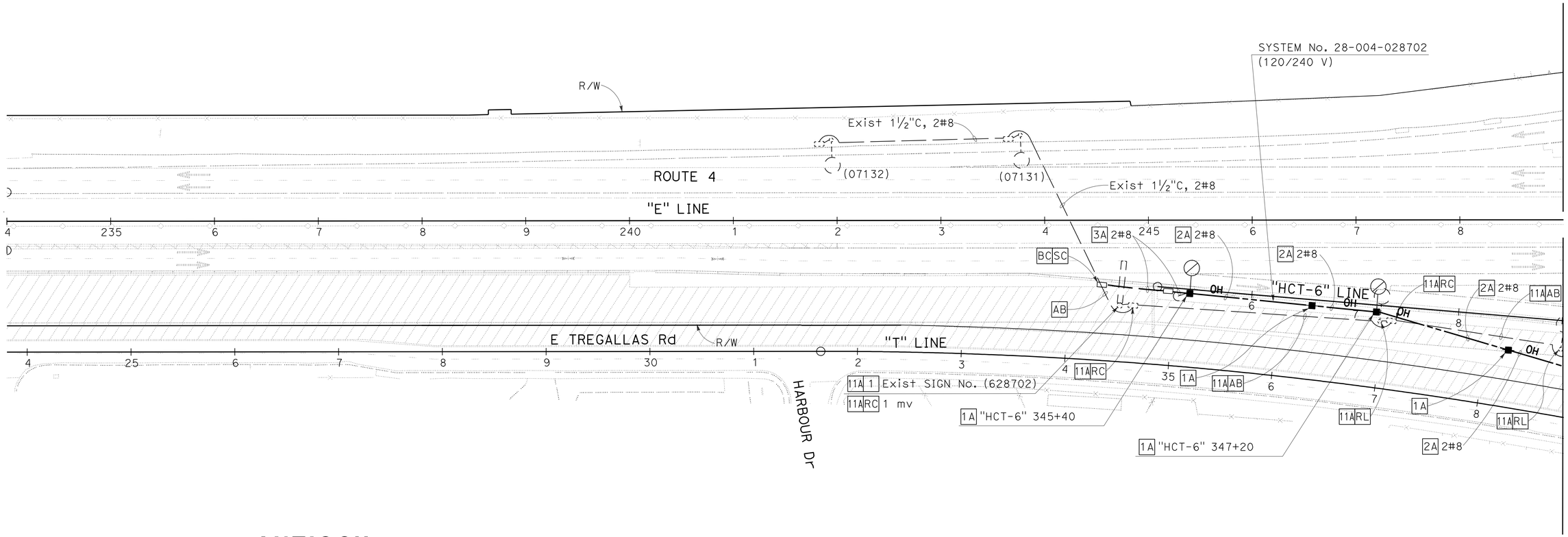

ANTIOCH

FOR NOTES, ABBREVIATIONS AND LEGEND, SEE SHEETS E-1 AND E-2

LIGHTING (TEMPORARY)

(STAGE 1)

SCALE: 1" = 50'

E-60

THIS PLAN IS ACCURATE FOR ELECTRICAL WORK ONLY

REVISED BY	CC
DATE REVISED	8/9/11
DAVID SETO	ALLAN MORRIS
CALCULATED-DESIGNED BY	CHECKED BY
CONSULTANT FUNCTIONAL SUPERVISOR	HATEM AHMED

STATE OF CALIFORNIA - DEPARTMENT OF TRANSPORTATION

Caltrans

LAST REVISION 8-9-11 | DATE PLOTTED => 19-JAN-2012 | TIME PLOTTED => 08:36

Dist	COUNTY	ROUTE	POST MILES TOTAL PROJECT	SHEET No.	TOTAL SHEETS
04	CC	4	27.3/R29.0	577	950

REGISTERED ELECTRICAL ENGINEER 8/9/11 DATE

1-17-12
PLANS APPROVAL DATE

REGISTERED PROFESSIONAL ENGINEER
ALLAN RAY MORRIS
No. 16958
Exp. 6/30/13
ELECTRICAL
STATE OF CALIFORNIA

THE STATE OF CALIFORNIA OR ITS OFFICERS OR AGENTS SHALL NOT BE RESPONSIBLE FOR THE ACCURACY OR COMPLETENESS OF SCANNED COPIES OF THIS PLAN SHEET.

T Y LIN INTERNATIONAL
2010 CROW CANYON PLACE, SUITE 350
SAN RAMON, CA 94583

CCTA
2999 OAK ROAD, SUITE 100
WALNUT CREEK, CA 94597

NOTES (TEMPORARY):

1. SEE SHEET E-59 FOR GENERAL NOTES (TEMPORARY), LEGEND (TEMPORARY), AND PROJECT NOTES (TEMPORARY).
2. FOR ACCURATE RIGHT OF WAY DATA, CONTACT RIGHT OF WAY ENGINEERING AT THE DISTRICT OFFICE.

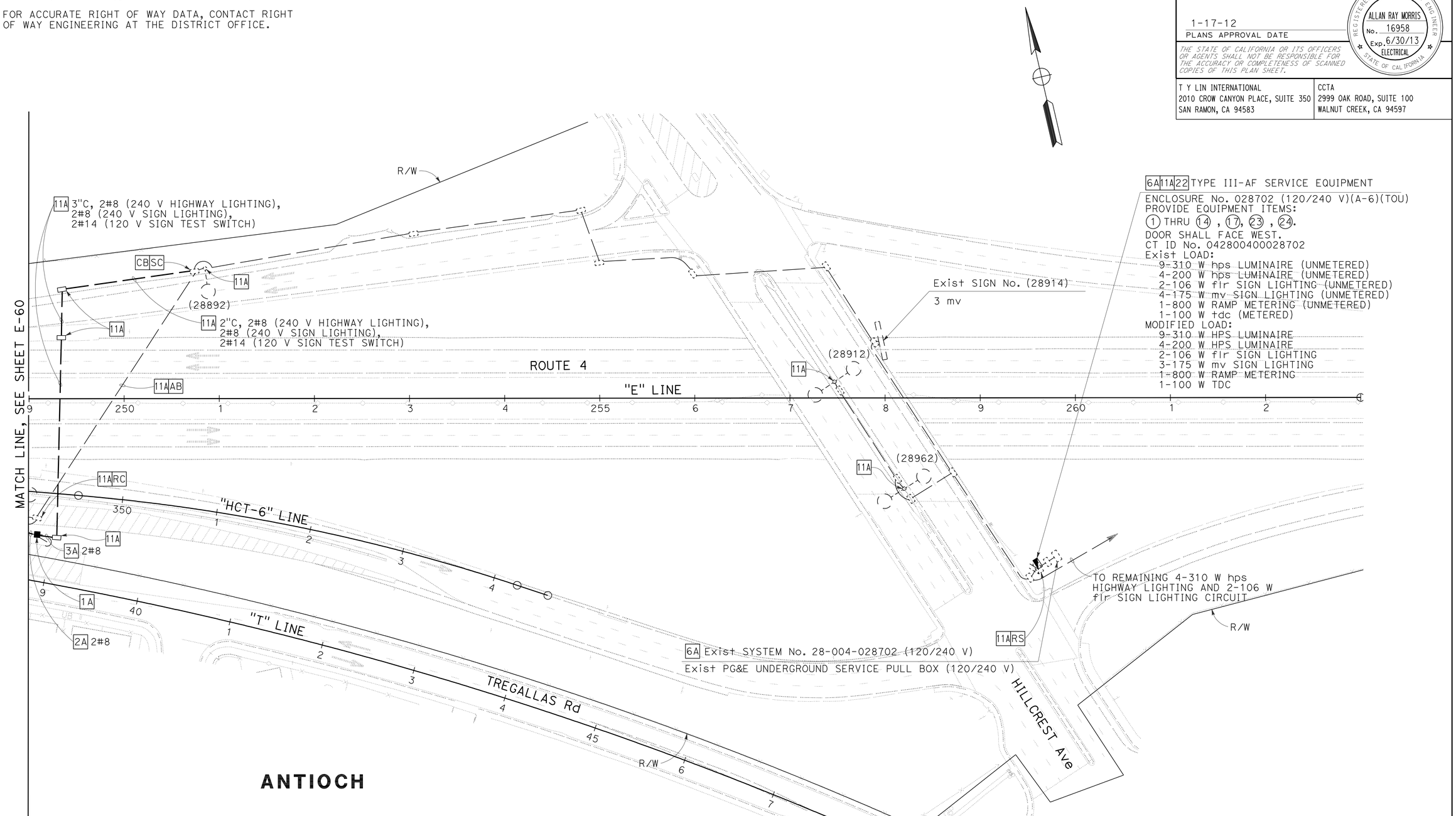

6A 11A 22 TYPE III-AF SERVICE EQUIPMENT
ENCLOSURE No. 028702 (120/240 V)(A-6)(TOU)
PROVIDE EQUIPMENT ITEMS:
(1) THRU (14), (17), (23), (24).
DOOR SHALL FACE WEST.
CT ID No. 042800400028702
Exist LOAD:
9-310 W hps LUMINAIRE (UNMETERED)
4-200 W hps LUMINAIRE (UNMETERED)
2-106 W flr SIGN LIGHTING (UNMETERED)
4-175 W mv SIGN LIGHTING (UNMETERED)
1-800 W RAMP METERING (UNMETERED)
1-100 W tdc (METERED)
MODIFIED LOAD:
9-310 W HPS LUMINAIRE
4-200 W HPS LUMINAIRE
2-106 W flr SIGN LIGHTING
3-175 W mv SIGN LIGHTING
1-800 W RAMP METERING
1-100 W TDC

LIGHTING (TEMPORARY)
(STAGE 1)
SCALE: 1" = 50'

E-61

FOR NOTES, ABBREVIATIONS AND LEGEND, SEE SHEETS E-1 AND E-2

THIS PLAN IS ACCURATE FOR ELECTRICAL WORK ONLY

STATE OF CALIFORNIA - DEPARTMENT OF TRANSPORTATION
Caltrans

CONSULTANT FUNCTIONAL SUPERVISOR: HATEM AHMED
CALCULATED-DESIGNED BY: DAVID SETO
CHECKED BY: ALLAN MORRIS
REVISED BY: CC
DATE REVISED: 8/9/11

LAST REVISION 8-9-11
DATE PLOTTED => 19-JAN-2012
TIME PLOTTED => 08:36

Dist	COUNTY	ROUTE	POST MILES TOTAL PROJECT	SHEET No.	TOTAL SHEETS
04	CC	4	27.3/R29.0	578	950

REGISTERED ELECTRICAL ENGINEER 8/9/11 DATE

1-17-12
PLANS APPROVAL DATE

REGISTERED PROFESSIONAL ENGINEER ALLAN RAY MORRIS No. 16958 Exp. 6/30/13 ELECTRICAL STATE OF CALIFORNIA

THE STATE OF CALIFORNIA OR ITS OFFICERS OR AGENTS SHALL NOT BE RESPONSIBLE FOR THE ACCURACY OR COMPLETENESS OF SCANNED COPIES OF THIS PLAN SHEET.

T Y LIN INTERNATIONAL
2010 CROW CANYON PLACE, SUITE 350
SAN RAMON, CA 94583

CCTA
2999 OAK ROAD, SUITE 100
WALNUT CREEK, CA 94597

NOTES (TEMPORARY):

1. SEE SHEET E-59 FOR GENERAL NOTES (TEMPORARY), LEGEND (TEMPORARY), AND PROJECT NOTES (TEMPORARY).
2. FOR ACCURATE RIGHT OF WAY DATA, CONTACT RIGHT OF WAY ENGINEERING AT THE DISTRICT OFFICE.

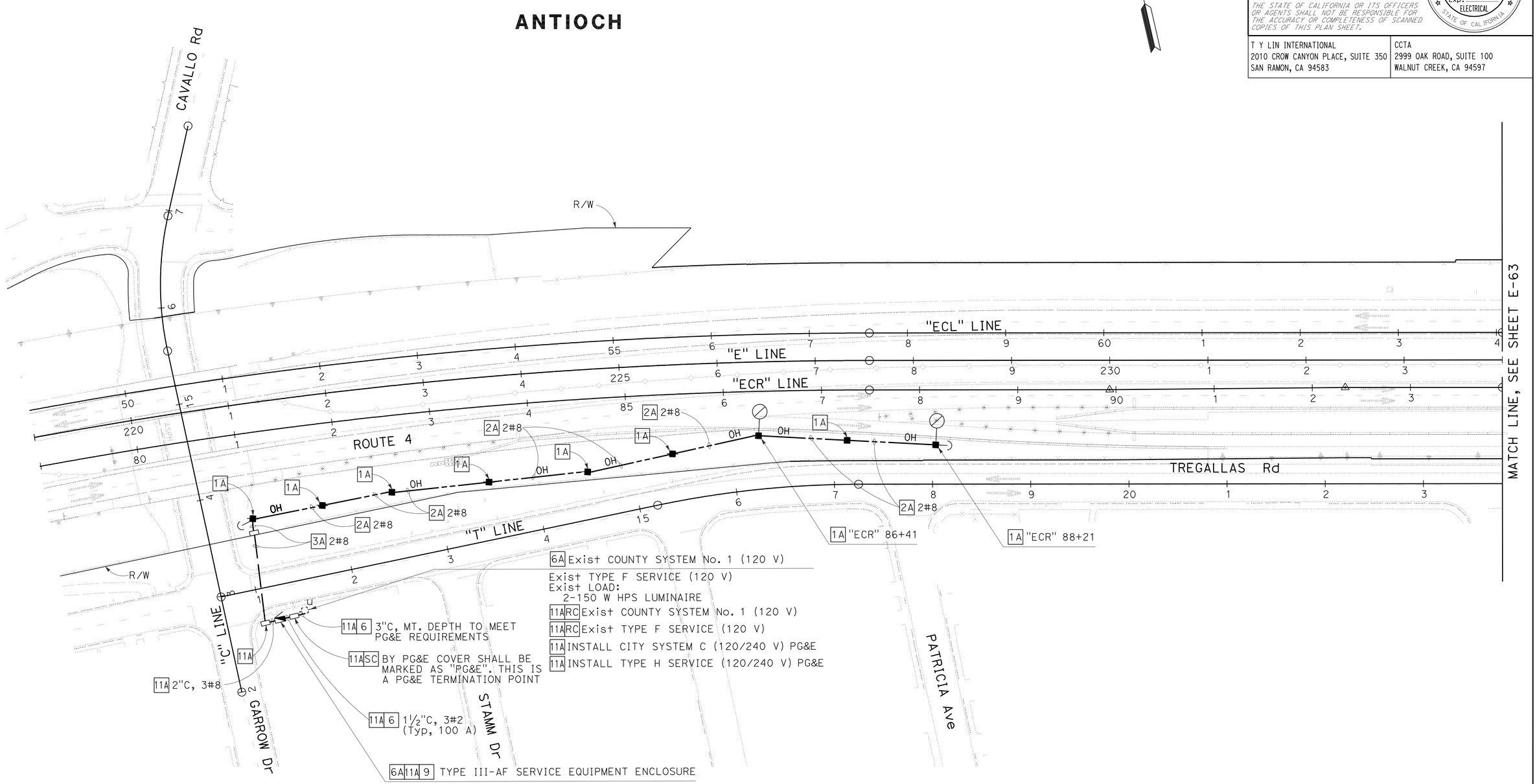

FOR NOTES, ABBREVIATIONS AND LEGEND, SEE SHEETS E-1 AND E-2

LIGHTING (TEMPORARY)

(STAGE 2)

SCALE: 1" = 50'

E-62

THIS PLAN IS ACCURATE FOR ELECTRICAL WORK ONLY

STATE OF CALIFORNIA - DEPARTMENT OF TRANSPORTATION
Caltrans

CONSULTANT FUNCTIONAL SUPERVISOR: HATEM AHMED

CALCULATED-DESIGNED BY: DAVID SETO
CHECKED BY: ALLAN MORRIS

REVISED BY: CC
DATE REVISED: 8/9/11

LAST REVISION 8-9-11
DATE PLOTTED => 19-JAN-2012
TIME PLOTTED => 08:36

Dist	COUNTY	ROUTE	POST MILES TOTAL PROJECT	SHEET No.	TOTAL SHEETS
04	CC	4	27.3/R29.0	579	950

REGISTERED ELECTRICAL ENGINEER 8/9/11 DATE

1-17-12
PLANS APPROVAL DATE

REGISTERED PROFESSIONAL ENGINEER
ALLAN RAY MORRIS
No. 16958
Exp. 6/30/13
ELECTRICAL
STATE OF CALIFORNIA

THE STATE OF CALIFORNIA OR ITS OFFICERS OR AGENTS SHALL NOT BE RESPONSIBLE FOR THE ACCURACY OR COMPLETENESS OF SCANNED COPIES OF THIS PLAN SHEET.

T Y LIN INTERNATIONAL
2010 CROW CANYON PLACE, SUITE 350
SAN RAMON, CA 94583

CCTA
2999 OAK ROAD, SUITE 100
WALNUT CREEK, CA 94597

NOTES (TEMPORARY):

1. SEE SHEET E-59 FOR GENERAL NOTES (TEMPORARY), LEGEND (TEMPORARY), AND PROJECT NOTES (TEMPORARY).
2. FOR ACCURATE RIGHT OF WAY DATA, CONTACT RIGHT OF WAY ENGINEERING AT THE DISTRICT OFFICE.

ANTIOCH

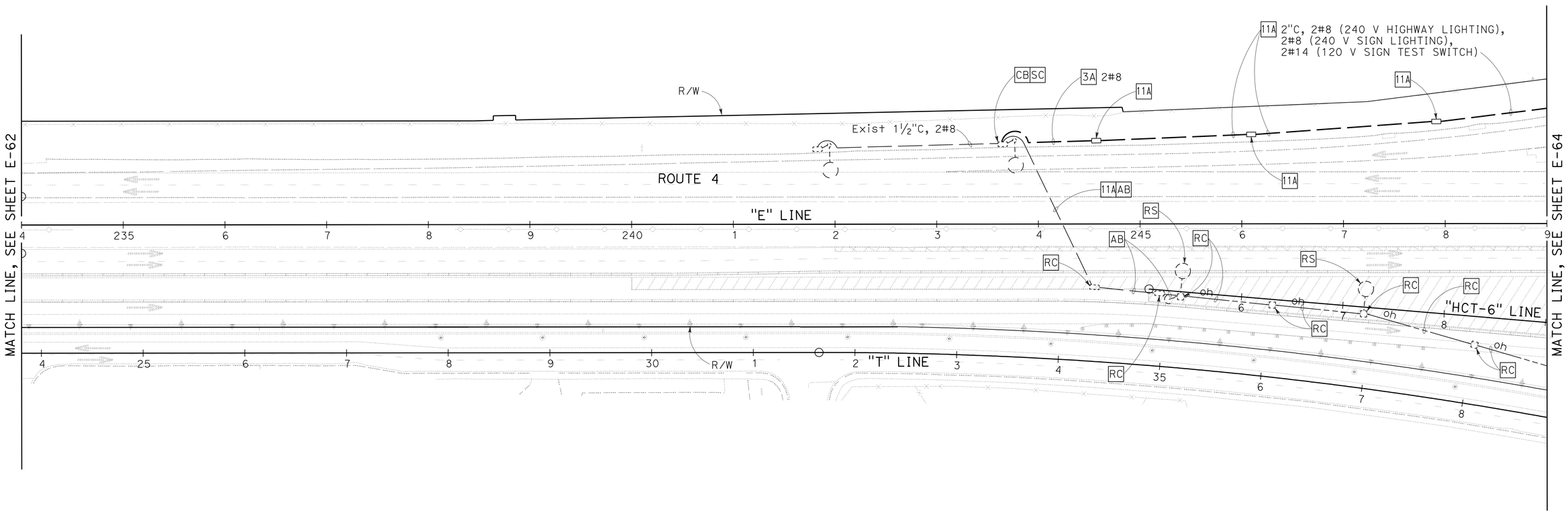

FOR NOTES, ABBREVIATIONS AND LEGEND, SEE SHEETS E-1 AND E-2

THIS PLAN IS ACCURATE FOR ELECTRICAL WORK ONLY

LIGHTING (TEMPORARY)

(STAGE 2)

SCALE: 1" = 50'

E-63

STATE OF CALIFORNIA - DEPARTMENT OF TRANSPORTATION
Caltrans

CONSULTANT FUNCTIONAL SUPERVISOR: HATEM AHMED
CALCULATED-DESIGNED BY: DAVID SETO
CHECKED BY: ALLAN MORRIS
REVISED BY: CC
DATE REVISED: 8/9/11

LAST REVISION 8-9-11
DATE PLOTTED => 19-JAN-2012
TIME PLOTTED => 08:36

Dist	COUNTY	ROUTE	POST MILES TOTAL PROJECT	SHEET No.	TOTAL SHEETS
04	CC	4	27.3/R29.0	580	950

REGISTERED ELECTRICAL ENGINEER 8/9/11 DATE

1-17-12
PLANS APPROVAL DATE

REGISTERED PROFESSIONAL ENGINEER ALLAN RAY MORRIS No. 16958 Exp. 6/30/13 ELECTRICAL STATE OF CALIFORNIA

THE STATE OF CALIFORNIA OR ITS OFFICERS OR AGENTS SHALL NOT BE RESPONSIBLE FOR THE ACCURACY OR COMPLETENESS OF SCANNED COPIES OF THIS PLAN SHEET.

T Y LIN INTERNATIONAL
2010 CROW CANYON PLACE, SUITE 350
SAN RAMON, CA 94583

CCTA
2999 OAK ROAD, SUITE 100
WALNUT CREEK, CA 94597

NOTES (TEMPORARY):

1. SEE SHEET E-59 FOR GENERAL NOTES (TEMPORARY), LEGEND (TEMPORARY), AND PROJECT NOTES (TEMPORARY).
2. FOR ACCURATE RIGHT OF WAY DATA, CONTACT RIGHT OF WAY ENGINEERING AT THE DISTRICT OFFICE.

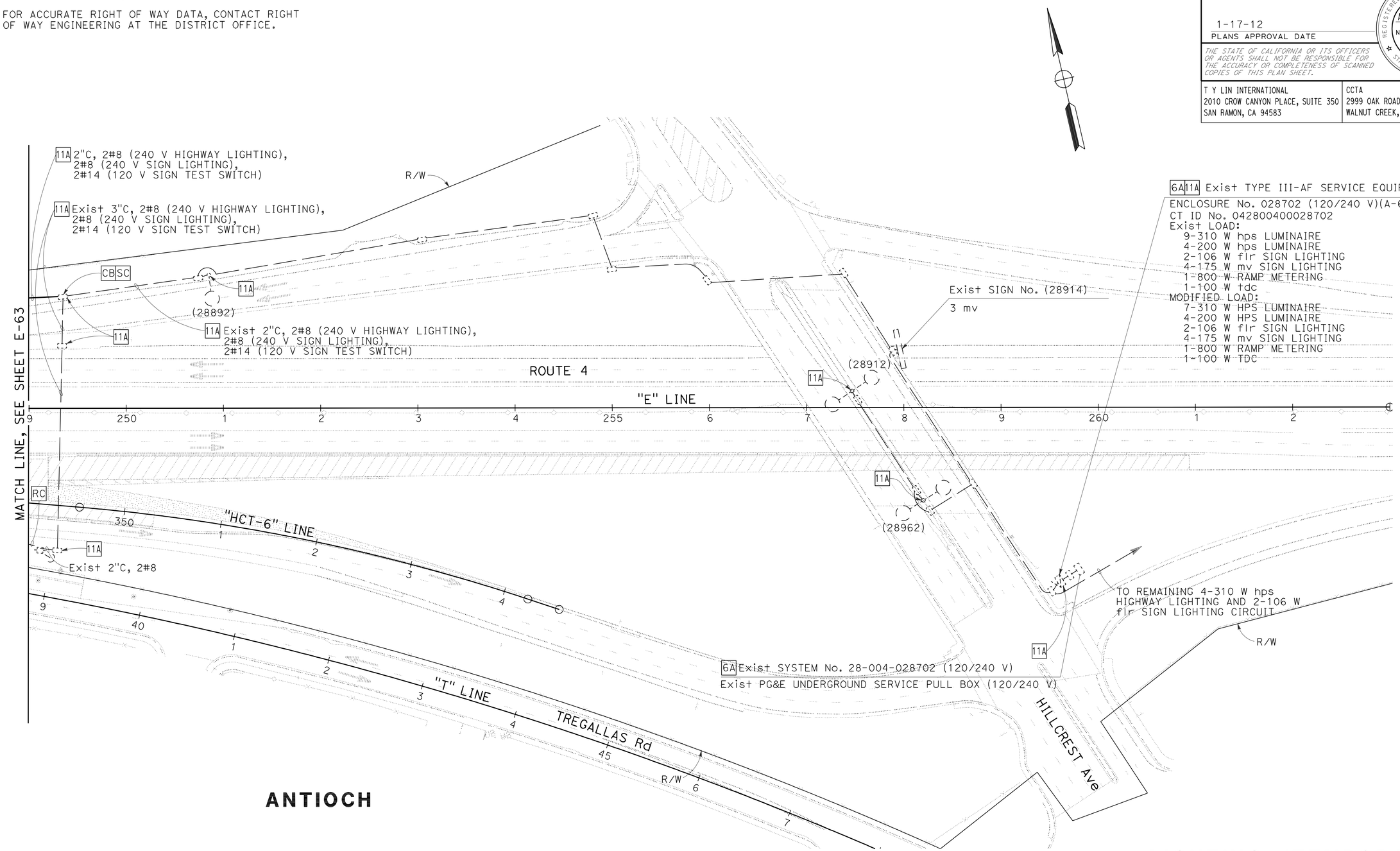

FOR NOTES, ABBREVIATIONS AND LEGEND, SEE SHEETS E-1 AND E-2

THIS PLAN IS ACCURATE FOR ELECTRICAL WORK ONLY

LIGHTING (TEMPORARY)
(STAGE 2)

SCALE: 1" = 50'

E-64

STATE OF CALIFORNIA - DEPARTMENT OF TRANSPORTATION
Caltrans

CONSULTANT FUNCTIONAL SUPERVISOR: HATEM AHMED
CALCULATED-DESIGNED BY: DAVID SETO
CHECKED BY: ALLAN MORRIS
REVISED BY: CC
DATE REVISED: 8/9/11

LAST REVISION 8-9-11
DATE PLOTTED => 19-JAN-2012
TIME PLOTTED => 08:36

Dist	COUNTY	ROUTE	POST MILES TOTAL PROJECT	SHEET No.	TOTAL SHEETS
04	CC	4	27.3/R29.0	581	950

REGISTERED ELECTRICAL ENGINEER 8/9/11 DATE

1-17-12
PLANS APPROVAL DATE

REGISTERED PROFESSIONAL ENGINEER
ALLAN RAY MORRIS
No. 16958
Exp. 6/30/13
ELECTRICAL
STATE OF CALIFORNIA

THE STATE OF CALIFORNIA OR ITS OFFICERS OR AGENTS SHALL NOT BE RESPONSIBLE FOR THE ACCURACY OR COMPLETENESS OF SCANNED COPIES OF THIS PLAN SHEET.

T Y LIN INTERNATIONAL
2010 CROW CANYON PLACE, SUITE 350
SAN RAMON, CA 94583

CCTA
2999 OAK ROAD, SUITE 100
WALNUT CREEK, CA 94597

NOTES (TEMPORARY):

1. SEE SHEET E-59 FOR GENERAL NOTES (TEMPORARY), LEGEND (TEMPORARY), AND PROJECT NOTES (TEMPORARY).
2. FOR ACCURATE RIGHT OF WAY DATA, CONTACT RIGHT OF WAY ENGINEERING AT THE DISTRICT OFFICE.

ANTIOCH

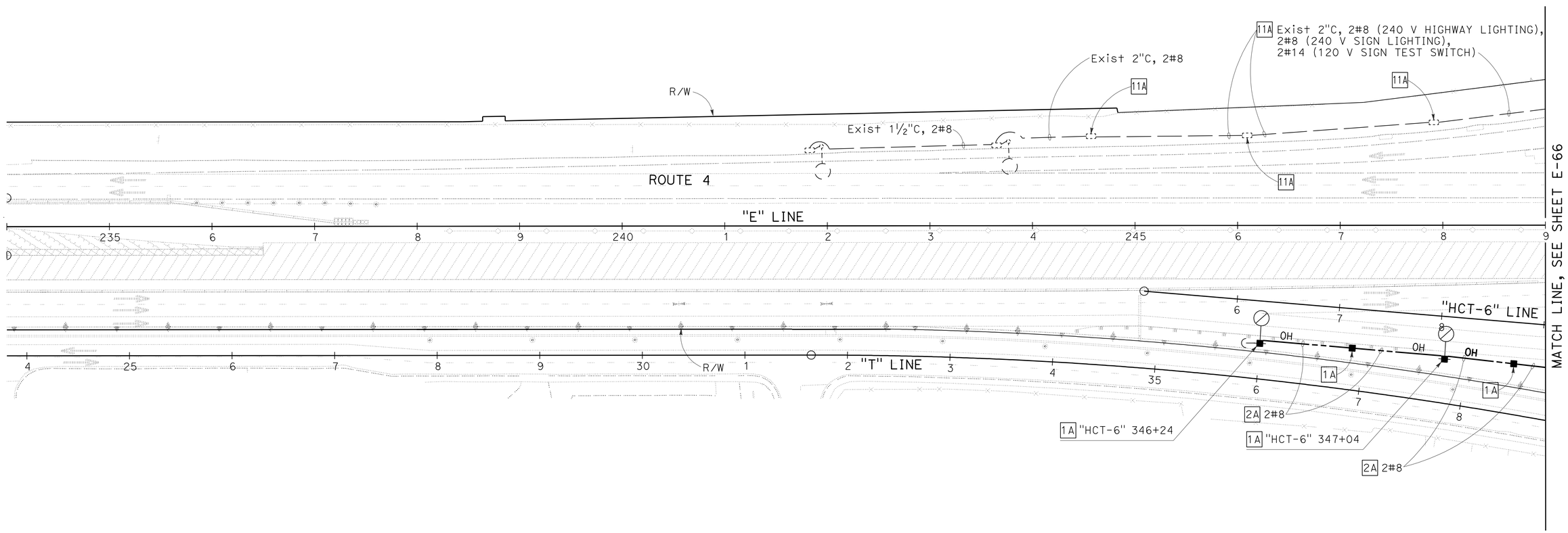

LIGHTING (TEMPORARY)

(STAGE 3)

SCALE: 1" = 50'

E-65

FOR NOTES, ABBREVIATIONS AND LEGEND, SEE SHEETS E-1 AND E-2

THIS PLAN IS ACCURATE FOR ELECTRICAL WORK ONLY

STATE OF CALIFORNIA - DEPARTMENT OF TRANSPORTATION
Caltrans

CONSULTANT FUNCTIONAL SUPERVISOR: HATEM AHMED
CALCULATED-DESIGNED BY: DAVID SETO
CHECKED BY: ALLAN MORRIS
REVISED BY: CC
DATE REVISED: 8/9/11

LAST REVISION 8-9-11
DATE PLOTTED => 19-JAN-2012
TIME PLOTTED => 08:36

Dist	COUNTY	ROUTE	POST MILES TOTAL PROJECT	SHEET No.	TOTAL SHEETS
04	CC	4	27.3/R29.0	582	950

REGISTERED ELECTRICAL ENGINEER 8/9/11 DATE

1-17-12
PLANS APPROVAL DATE

REGISTERED PROFESSIONAL ENGINEER ALLAN RAY MORRIS No. 16958 Exp. 6/30/13 ELECTRICAL STATE OF CALIFORNIA

THE STATE OF CALIFORNIA OR ITS OFFICERS OR AGENTS SHALL NOT BE RESPONSIBLE FOR THE ACCURACY OR COMPLETENESS OF SCANNED COPIES OF THIS PLAN SHEET.

T Y LIN INTERNATIONAL
2010 CROW CANYON PLACE, SUITE 350
SAN RAMON, CA 94583

CCTA
2999 OAK ROAD, SUITE 100
WALNUT CREEK, CA 94597

NOTES (TEMPORARY):

1. SEE SHEET E-59 FOR GENERAL NOTES (TEMPORARY), LEGEND (TEMPORARY), AND PROJECT NOTES (TEMPORARY).
2. FOR ACCURATE RIGHT OF WAY DATA, CONTACT RIGHT OF WAY ENGINEERING AT THE DISTRICT OFFICE.

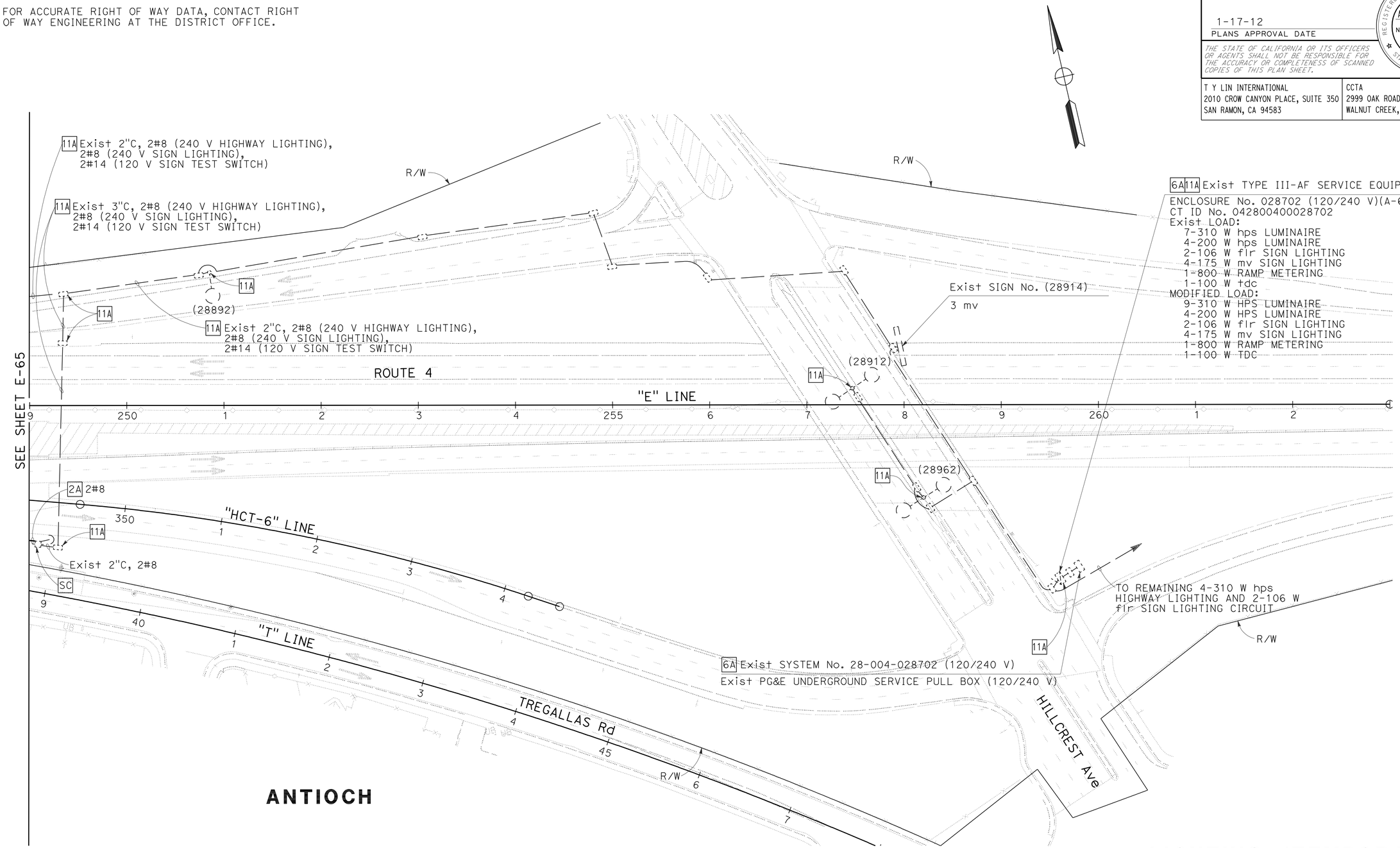

FOR NOTES, ABBREVIATIONS AND LEGEND, SEE SHEETS E-1 AND E-2

LIGHTING (TEMPORARY)

(STAGE 3)

SCALE: 1" = 50'

E-66

THIS PLAN IS ACCURATE FOR ELECTRICAL WORK ONLY

STATE OF CALIFORNIA - DEPARTMENT OF TRANSPORTATION

Caltrans

CONSULTANT FUNCTIONAL SUPERVISOR: HATEM AHMED

CALCULATED-DESIGNED BY: DAVID SETO

CHECKED BY: ALLAN MORRIS

REVISED BY: CC

DATE REVISED: 8/9/11

LAST REVISION 8-9-11

DATE PLOTTED => 19-JAN-2012
TIME PLOTTED => 08:37

Dist	COUNTY	ROUTE	POST MILES TOTAL PROJECT	SHEET No.	TOTAL SHEETS
04	CC	4	27.3/R29.0	583	950

REGISTERED ELECTRICAL ENGINEER 8/9/11 DATE

1-17-12
PLANS APPROVAL DATE

REGISTERED PROFESSIONAL ENGINEER
ALLAN RAY MORRIS
No. 16958
Exp. 6/30/13
ELECTRICAL
STATE OF CALIFORNIA

THE STATE OF CALIFORNIA OR ITS OFFICERS OR AGENTS SHALL NOT BE RESPONSIBLE FOR THE ACCURACY OR COMPLETENESS OF SCANNED COPIES OF THIS PLAN SHEET.

T Y LIN INTERNATIONAL
2010 CROW CANYON PLACE, SUITE 350
SAN RAMON, CA 94583

CCTA
2999 OAK ROAD, SUITE 100
WALNUT CREEK, CA 94597

NOTES (TEMPORARY):

1. SEE SHEET E-59 FOR GENERAL NOTES (TEMPORARY), LEGEND (TEMPORARY), AND PROJECT NOTES (TEMPORARY).
2. FOR ACCURATE RIGHT OF WAY DATA, CONTACT RIGHT OF WAY ENGINEERING AT THE DISTRICT OFFICE.

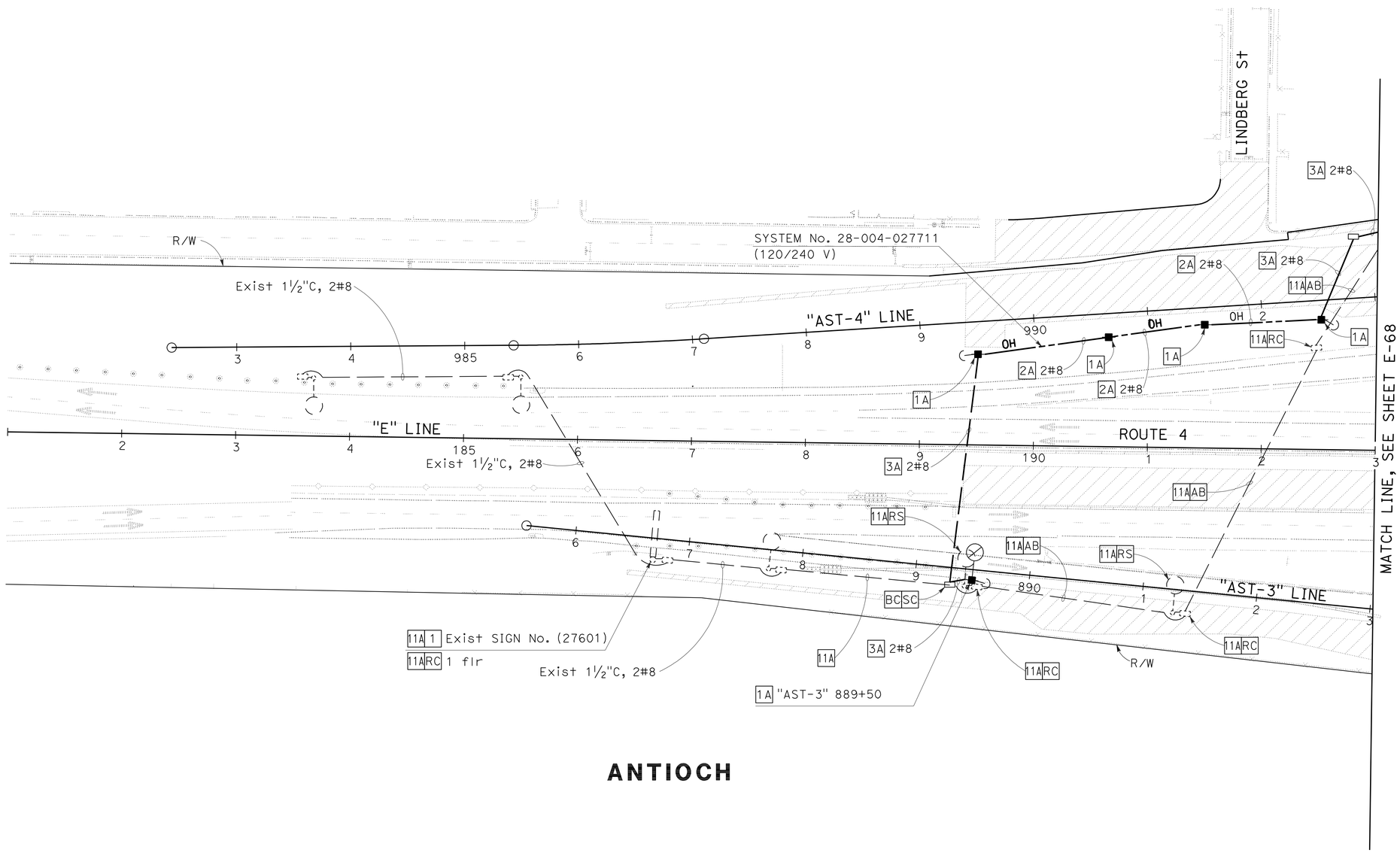

ANTIOCH

FOR NOTES, ABBREVIATIONS AND LEGEND, SEE SHEETS E-1 AND E-2

THIS PLAN IS ACCURATE FOR ELECTRICAL WORK ONLY

LIGHTING (TEMPORARY)

(STAGE 4 - PHASE A)

SCALE: 1" = 50'

E-67

REVISED BY	DATE REVISED
CC	8/9/11

DAVID SETO — ALLAN MORRIS — CALCULATED-DESIGNED BY — CHECKED BY

CONSULTANT FUNCTIONAL SUPERVISOR — HATEM AHMED

STATE OF CALIFORNIA - DEPARTMENT OF TRANSPORTATION — Caltrans

LAST REVISION 8-9-11 — DATE PLOTTED => 19-JAN-2012 — TIME PLOTTED => 08:37

Dist	COUNTY	ROUTE	POST MILES TOTAL PROJECT	SHEET No.	TOTAL SHEETS
04	CC	4	27.3/R29.0	584	950

REGISTERED ELECTRICAL ENGINEER 8/9/11 DATE

1-17-12
PLANS APPROVAL DATE

REGISTERED PROFESSIONAL ENGINEER ALLAN RAY MORRIS No. 16958 Exp. 6/30/13 ELECTRICAL STATE OF CALIFORNIA

THE STATE OF CALIFORNIA OR ITS OFFICERS OR AGENTS SHALL NOT BE RESPONSIBLE FOR THE ACCURACY OR COMPLETENESS OF SCANNED COPIES OF THIS PLAN SHEET.

T Y LIN INTERNATIONAL
2010 CROW CANYON PLACE, SUITE 350
SAN RAMON, CA 94583

CCTA
2999 OAK ROAD, SUITE 100
WALNUT CREEK, CA 94597

NOTES (TEMPORARY):

1. SEE SHEET E-59 FOR GENERAL NOTES (TEMPORARY), LEGEND (TEMPORARY), AND PROJECT NOTES (TEMPORARY).
2. FOR ACCURATE RIGHT OF WAY DATA, CONTACT RIGHT OF WAY ENGINEERING AT THE DISTRICT OFFICE.

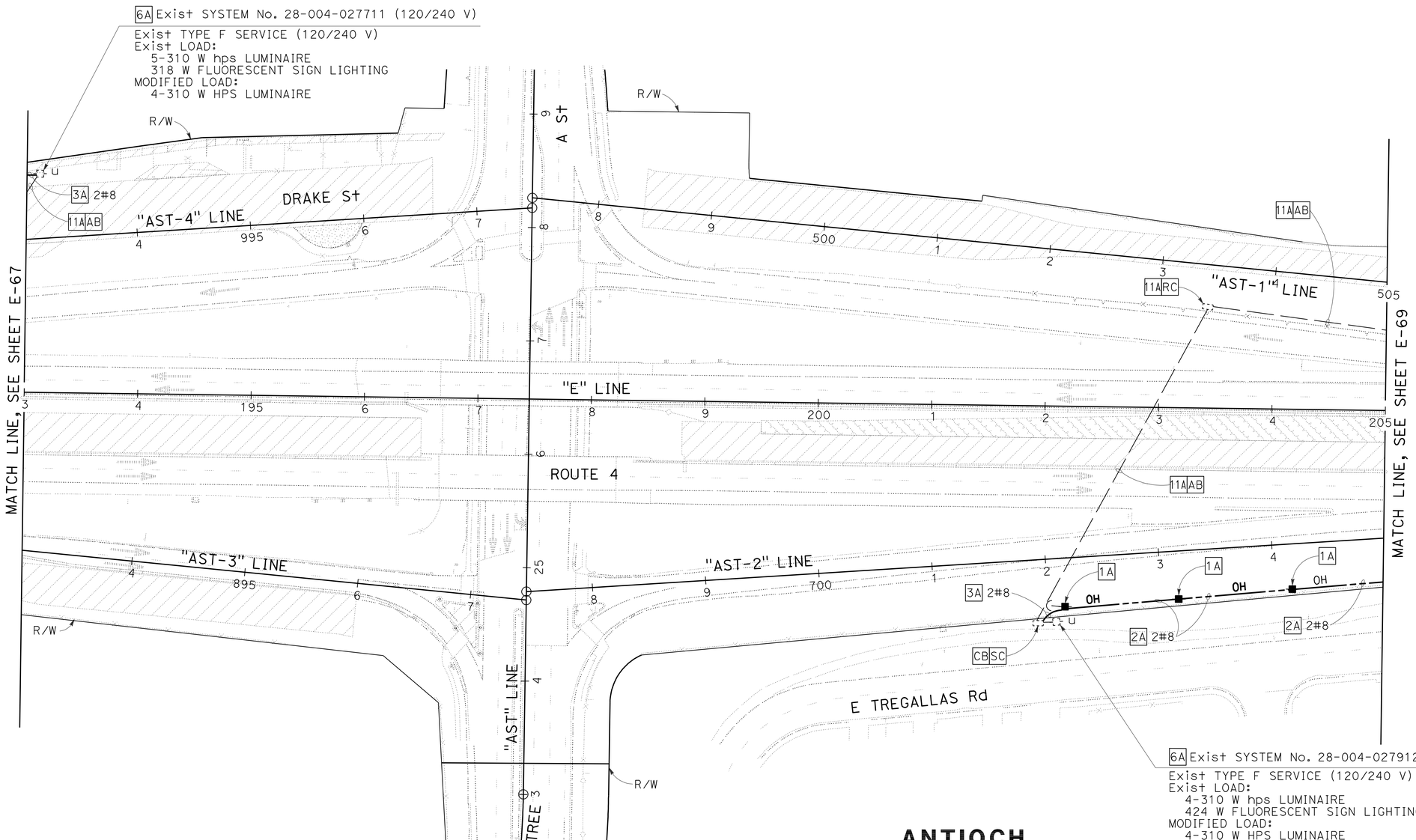

FOR NOTES, ABBREVIATIONS AND LEGEND, SEE SHEETS E-1 AND E-2

LIGHTING (TEMPORARY)

(STAGE 4 - PHASE A)

SCALE: 1" = 50'

E-68

THIS PLAN IS ACCURATE FOR ELECTRICAL WORK ONLY

STATE OF CALIFORNIA - DEPARTMENT OF TRANSPORTATION
Caltrans

CONSULTANT FUNCTIONAL SUPERVISOR: HATEM AHMED
CALCULATED-DESIGNED BY: ALLAN MORRIS
CHECKED BY: DAVID SETO
REVISED BY: CC
DATE REVISED: 8/9/11

LAST REVISION 8-9-11
DATE PLOTTED => 19-JAN-2012
TIME PLOTTED => 08:37

Dist	COUNTY	ROUTE	POST MILES TOTAL PROJECT	SHEET No.	TOTAL SHEETS
04	CC	4	27.3/R29.0	585	950

REGISTERED ELECTRICAL ENGINEER 8/9/11 DATE

1-17-12
PLANS APPROVAL DATE

REGISTERED PROFESSIONAL ENGINEER ALLAN RAY MORRIS No. 16958 Exp. 6/30/13 ELECTRICAL STATE OF CALIFORNIA

THE STATE OF CALIFORNIA OR ITS OFFICERS OR AGENTS SHALL NOT BE RESPONSIBLE FOR THE ACCURACY OR COMPLETENESS OF SCANNED COPIES OF THIS PLAN SHEET.

T Y LIN INTERNATIONAL
2010 CROW CANYON PLACE, SUITE 350
SAN RAMON, CA 94583

CCTA
2999 OAK ROAD, SUITE 100
WALNUT CREEK, CA 94597

NOTES (TEMPORARY):

1. SEE SHEET E-59 FOR GENERAL NOTES (TEMPORARY), LEGEND (TEMPORARY), AND PROJECT NOTES (TEMPORARY).
2. FOR ACCURATE RIGHT OF WAY DATA, CONTACT RIGHT OF WAY ENGINEERING AT THE DISTRICT OFFICE.

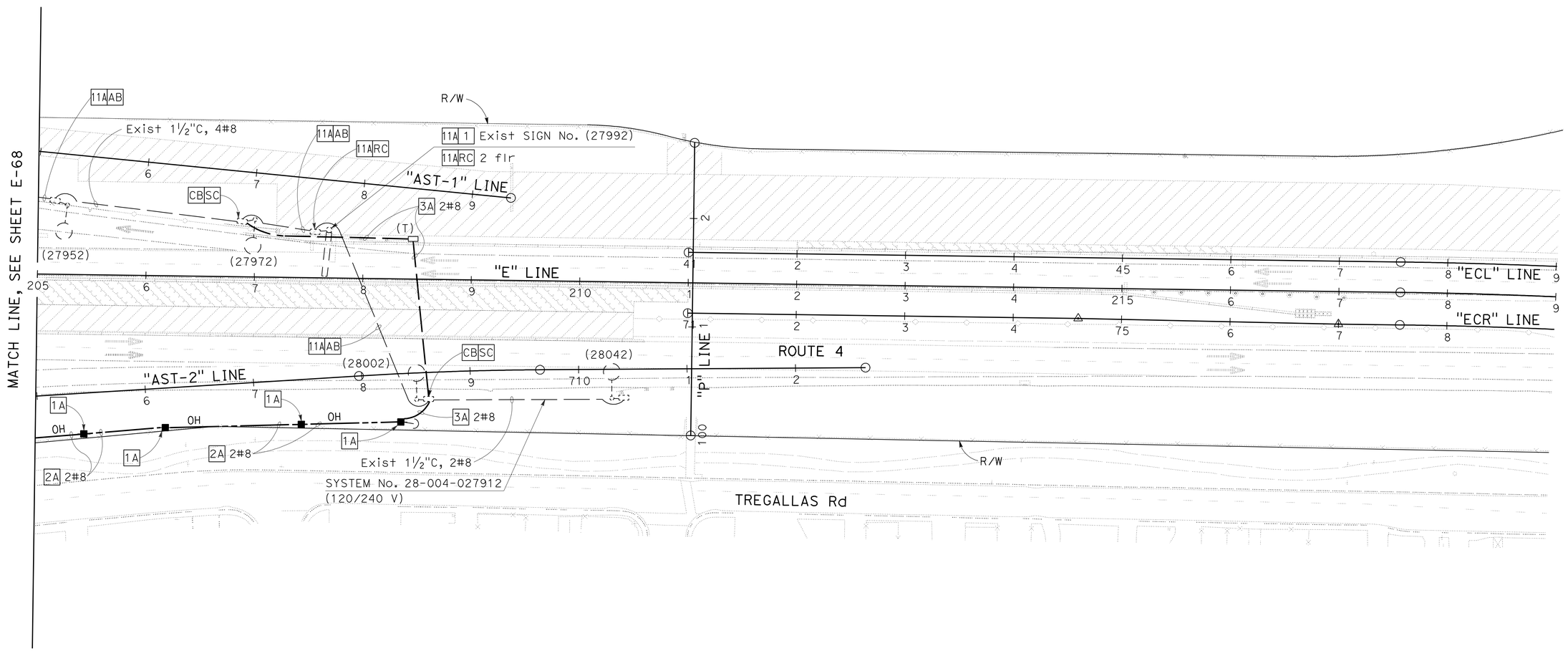

FOR NOTES, ABBREVIATIONS AND LEGEND, SEE SHEETS E-1 AND E-2

THIS PLAN IS ACCURATE FOR ELECTRICAL WORK ONLY

LIGHTING (TEMPORARY)

(STAGE 4 - PHASE A)

SCALE: 1" = 50'

E-69

STATE OF CALIFORNIA - DEPARTMENT OF TRANSPORTATION

Caltrans

CONSULTANT FUNCTIONAL SUPERVISOR: HATEM AHMED

CALCULATED-DESIGNED BY: DAVID SETO

CHECKED BY: ALLAN MORRIS

REVISED BY: CC

DATE REVISED: 8/9/11

LAST REVISION 8-9-11

DATE PLOTTED => 19-JAN-2012
TIME PLOTTED => 08:37

Dist	COUNTY	ROUTE	POST MILES TOTAL PROJECT	SHEET No.	TOTAL SHEETS
04	CC	4	27.3/R29.0	586	950

REGISTERED ELECTRICAL ENGINEER 8/9/11 DATE

1-17-12
PLANS APPROVAL DATE

REGISTERED PROFESSIONAL ENGINEER ALLAN RAY MORRIS No. 16958 Exp. 6/30/13 ELECTRICAL STATE OF CALIFORNIA

THE STATE OF CALIFORNIA OR ITS OFFICERS OR AGENTS SHALL NOT BE RESPONSIBLE FOR THE ACCURACY OR COMPLETENESS OF SCANNED COPIES OF THIS PLAN SHEET.

T Y LIN INTERNATIONAL
2010 CROW CANYON PLACE, SUITE 350
SAN RAMON, CA 94583

CCTA
2999 OAK ROAD, SUITE 100
WALNUT CREEK, CA 94597

NOTES (TEMPORARY):

1. SEE SHEET E-59 FOR GENERAL NOTES (TEMPORARY), LEGEND (TEMPORARY), AND PROJECT NOTES (TEMPORARY).
2. FOR ACCURATE RIGHT OF WAY DATA, CONTACT RIGHT OF WAY ENGINEERING AT THE DISTRICT OFFICE.

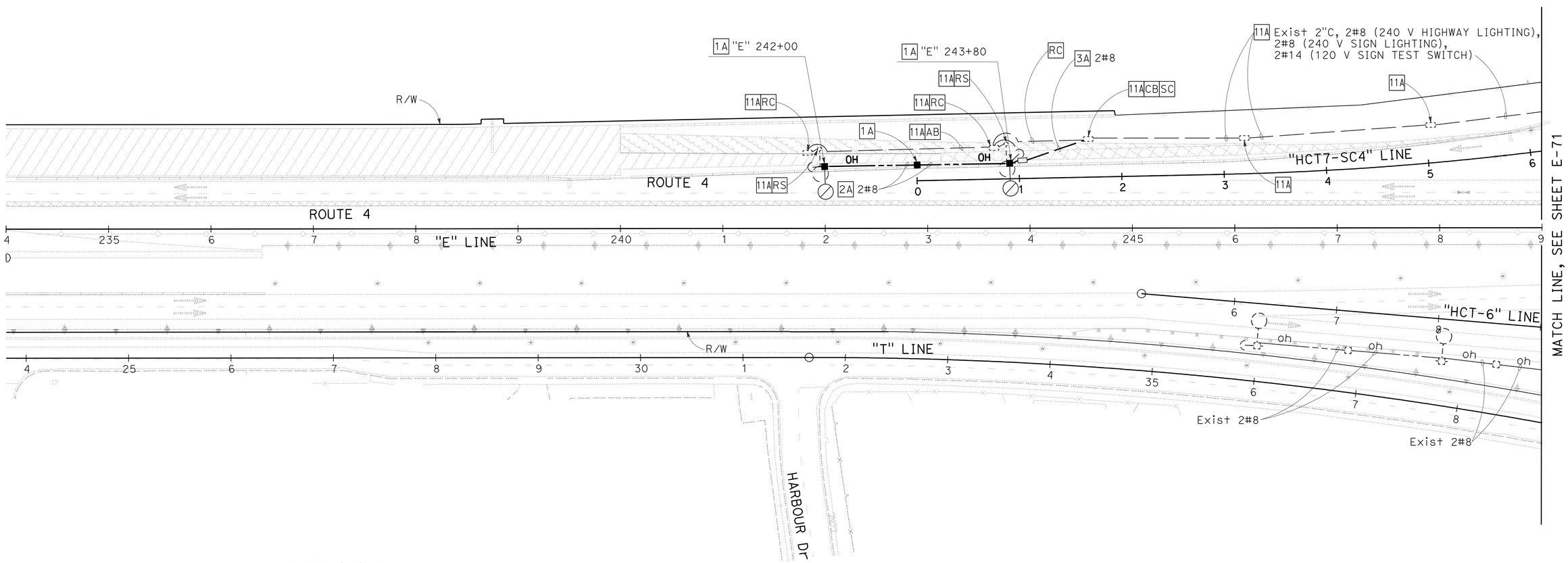

ANTIOCH

FOR NOTES, ABBREVIATIONS AND LEGEND, SEE SHEETS E-1 AND E-2

THIS PLAN IS ACCURATE FOR ELECTRICAL WORK ONLY

LIGHTING (TEMPORARY)
(STAGE 4 - PHASE A)

SCALE: 1" = 50'

E-70

CC	8/9/11
REVISED BY	DATE REVISED
DAVID SETO	ALLAN MORRIS
CALCULATED-DESIGNED BY	CHECKED BY
CONSULTANT FUNCTIONAL SUPERVISOR	HATEM AHMED

STATE OF CALIFORNIA - DEPARTMENT OF TRANSPORTATION
Caltrans

LAST REVISION 8-9-11
DATE PLOTTED => 19-JAN-2012
TIME PLOTTED => 08:37

Dist	COUNTY	ROUTE	POST MILES TOTAL PROJECT	SHEET No.	TOTAL SHEETS
04	CC	4	27.3/R29.0	587	950

REGISTERED ELECTRICAL ENGINEER 8/9/11 DATE

1-17-12
PLANS APPROVAL DATE

REGISTERED PROFESSIONAL ENGINEER
ALLAN RAY MORRIS
No. 16958
Exp. 6/30/13
ELECTRICAL
STATE OF CALIFORNIA

THE STATE OF CALIFORNIA OR ITS OFFICERS OR AGENTS SHALL NOT BE RESPONSIBLE FOR THE ACCURACY OR COMPLETENESS OF SCANNED COPIES OF THIS PLAN SHEET.

T Y LIN INTERNATIONAL
2010 CROW CANYON PLACE, SUITE 350
SAN RAMON, CA 94583

CCTA
2999 OAK ROAD, SUITE 100
WALNUT CREEK, CA 94597

NOTES (TEMPORARY):

1. SEE SHEET E-59 FOR GENERAL NOTES (TEMPORARY), LEGEND (TEMPORARY), AND PROJECT NOTES (TEMPORARY).
2. FOR ACCURATE RIGHT OF WAY DATA, CONTACT RIGHT OF WAY ENGINEERING AT THE DISTRICT OFFICE.

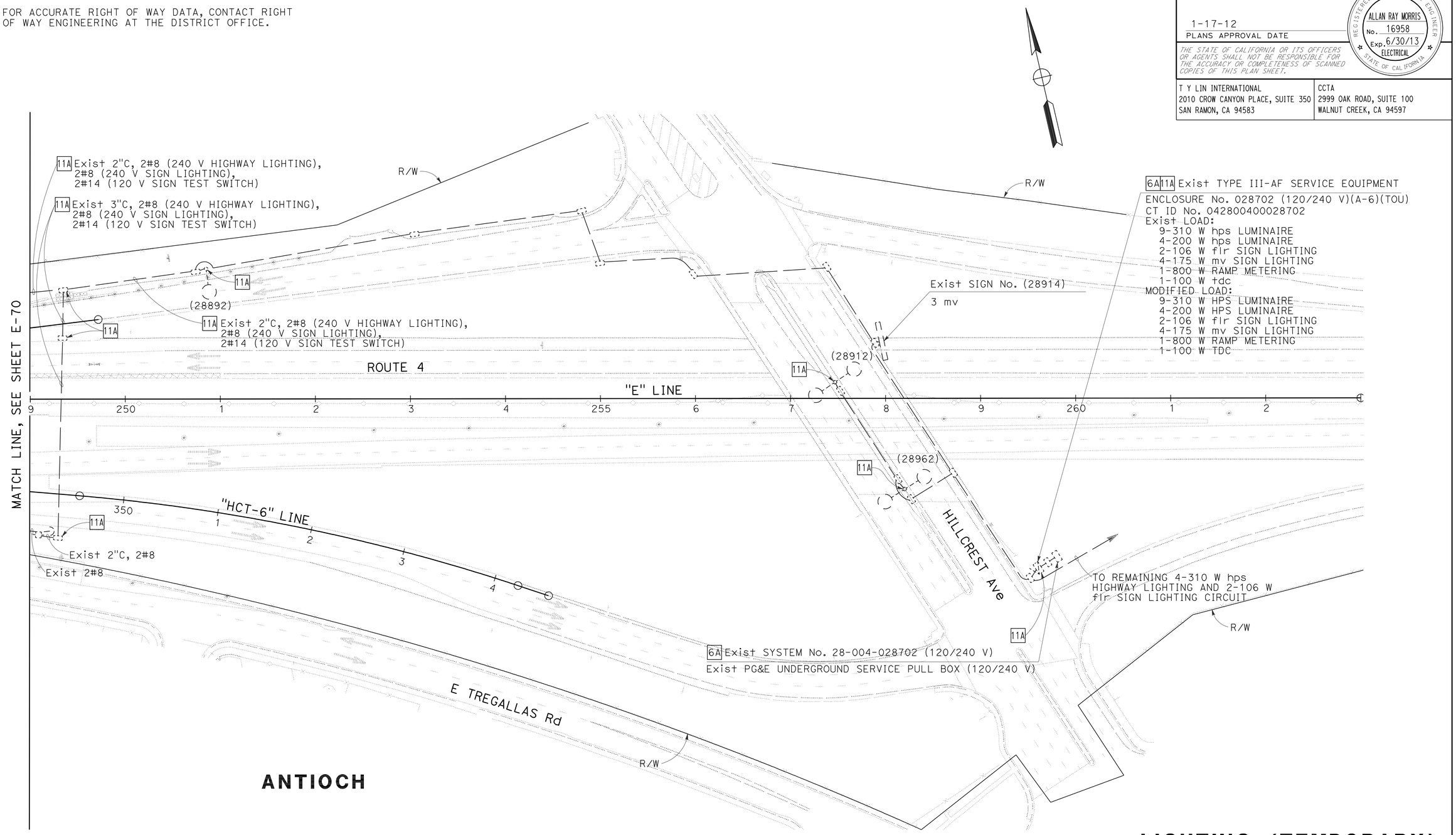

FOR NOTES, ABBREVIATIONS AND LEGEND, SEE SHEETS E-1 AND E-2

THIS PLAN IS ACCURATE FOR ELECTRICAL WORK ONLY

LIGHTING (TEMPORARY)

(STAGE 4 - PHASE A)

SCALE: 1" = 50'

E-71

STATE OF CALIFORNIA - DEPARTMENT OF TRANSPORTATION	CONSULTANT FUNCTIONAL SUPERVISOR	HATEM AHMED
Caltrans	CALCULATED-DESIGNED BY	DAVID SETO
	CHECKED BY	ALLAN MORRIS
	REVISED BY	CC
	DATE REVISED	8/9/11

LAST REVISION 8-9-11
DATE PLOTTED => 19-JAN-2012
TIME PLOTTED => 08:37

Dist	COUNTY	ROUTE	POST MILES TOTAL PROJECT	SHEET No.	TOTAL SHEETS
04	CC	4	27.3/R29.0	588	950

REGISTERED ELECTRICAL ENGINEER — DATE 8/9/11

1-17-12
PLANS APPROVAL DATE

REGISTERED PROFESSIONAL ENGINEER — ALLAN RAY MORRIS — No. 16958 — Exp. 6/30/13 — ELECTRICAL — STATE OF CALIFORNIA

THE STATE OF CALIFORNIA OR ITS OFFICERS OR AGENTS SHALL NOT BE RESPONSIBLE FOR THE ACCURACY OR COMPLETENESS OF SCANNED COPIES OF THIS PLAN SHEET.

T Y LIN INTERNATIONAL
2010 CROW CANYON PLACE, SUITE 350
SAN RAMON, CA 94583

CCTA
2999 OAK ROAD, SUITE 100
WALNUT CREEK, CA 94597

NOTES (TEMPORARY):

1. SEE SHEET E-59 FOR GENERAL NOTES (TEMPORARY), LEGEND (TEMPORARY), AND PROJECT NOTES (TEMPORARY).
2. FOR ACCURATE RIGHT OF WAY DATA, CONTACT RIGHT OF WAY ENGINEERING AT THE DISTRICT OFFICE.

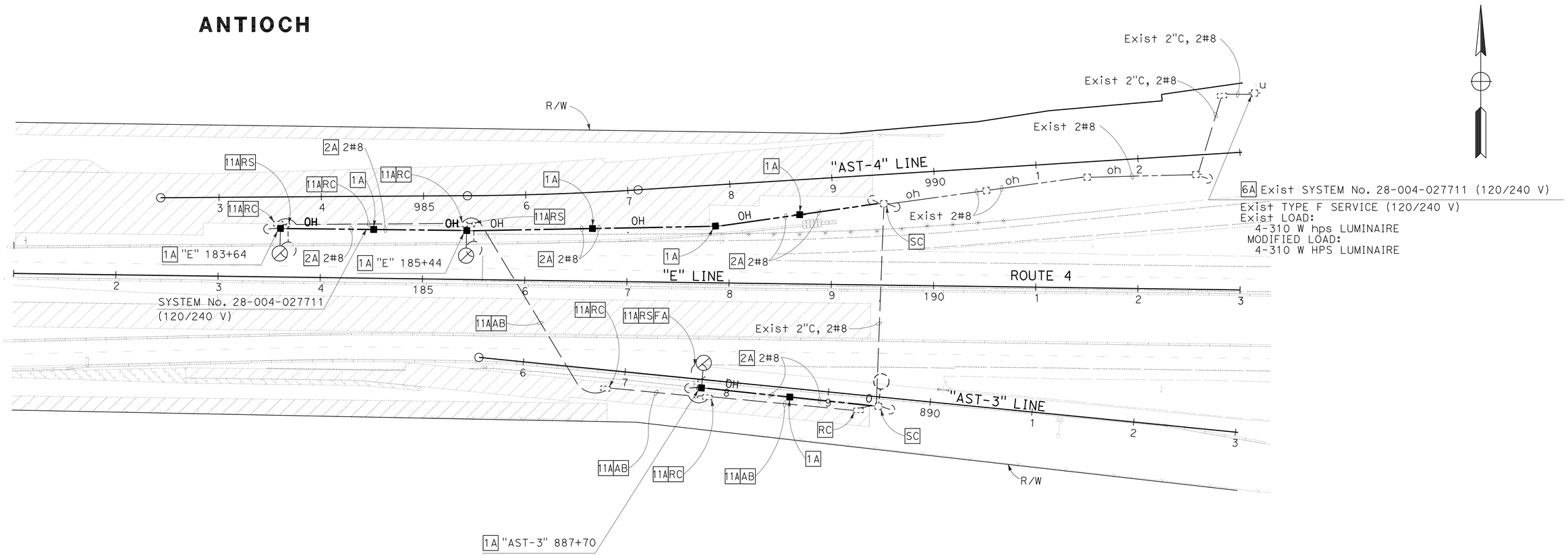

FOR NOTES, ABBREVIATIONS AND LEGEND, SEE SHEETS E-1 AND E-2

LIGHTING (TEMPORARY)

(STAGE 4 - PHASE C)

SCALE: 1" = 50'

E-72

THIS PLAN IS ACCURATE FOR ELECTRICAL WORK ONLY

STATE OF CALIFORNIA - DEPARTMENT OF TRANSPORTATION — Caltrans

CONSULTANT FUNCTIONAL SUPERVISOR: HATEM AHMED

CALCULATED-DESIGNED BY: DAVID SETO — CHECKED BY: ALLAN MORRIS

REVISED BY: CC — DATE REVISED: 8/9/11

LAST REVISION 8-9-11 — DATE PLOTTED => 19-JAN-2012 — TIME PLOTTED => 08:37

Dist	COUNTY	ROUTE	POST MILES TOTAL PROJECT	SHEET No.	TOTAL SHEETS
04	CC	4	27.3/R29.0	589	950

REGISTERED ELECTRICAL ENGINEER 8/9/11 DATE

1-17-12
PLANS APPROVAL DATE

REGISTERED PROFESSIONAL ENGINEER
ALLAN RAY MORRIS
No. 16958
Exp. 6/30/13
ELECTRICAL
STATE OF CALIFORNIA

THE STATE OF CALIFORNIA OR ITS OFFICERS OR AGENTS SHALL NOT BE RESPONSIBLE FOR THE ACCURACY OR COMPLETENESS OF SCANNED COPIES OF THIS PLAN SHEET.

T Y LIN INTERNATIONAL
2010 CROW CANYON PLACE, SUITE 350
SAN RAMON, CA 94583

CCTA
2999 OAK ROAD, SUITE 100
WALNUT CREEK, CA 94597

NOTES (TEMPORARY):

1. SEE SHEET E-59 FOR GENERAL NOTES (TEMPORARY), LEGEND (TEMPORARY), AND PROJECT NOTES (TEMPORARY).
2. FOR ACCURATE RIGHT OF WAY DATA, CONTACT RIGHT OF WAY ENGINEERING AT THE DISTRICT OFFICE.

ANTIOCH

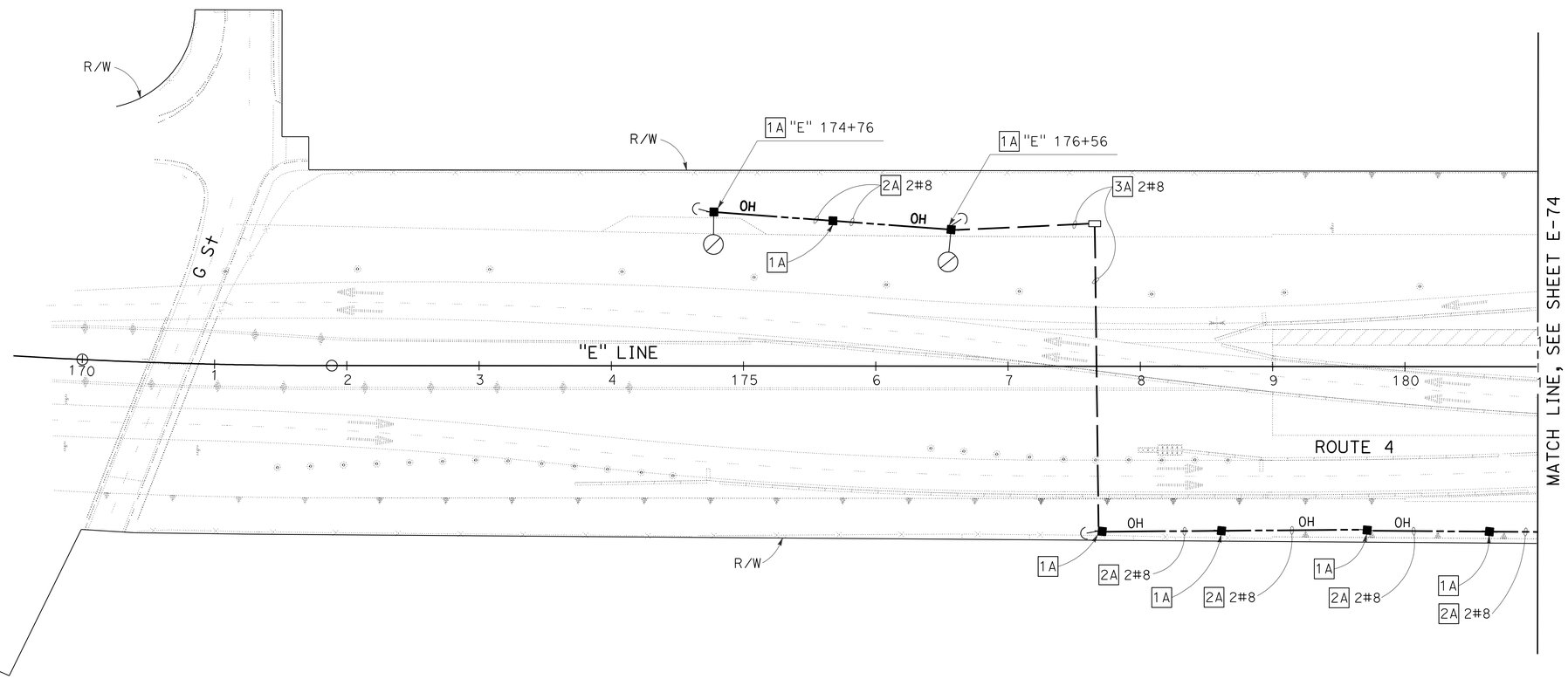

FOR NOTES, ABBREVIATIONS AND LEGEND, SEE SHEETS E-1 AND E-2

THIS PLAN IS ACCURATE FOR ELECTRICAL WORK ONLY

LIGHTING (TEMPORARY)

(STAGE 4 - PHASE D)

SCALE: 1" = 50'

E-73

STATE OF CALIFORNIA - DEPARTMENT OF TRANSPORTATION
Caltrans

CONSULTANT FUNCTIONAL SUPERVISOR: HATEM AHMED
CALCULATED-DESIGNED BY: DAVID SETO
CHECKED BY: ALLAN MORRIS
REVISED BY: CC
DATE REVISED: 8/9/11

LAST REVISION 8-9-11
DATE PLOTTED => 19-JAN-2012
TIME PLOTTED => 08:37

Dist	COUNTY	ROUTE	POST MILES TOTAL PROJECT	SHEET No.	TOTAL SHEETS
04	CC	4	27.3/R29.0	590	950

REGISTERED ELECTRICAL ENGINEER 8/9/11 DATE

1-17-12
PLANS APPROVAL DATE

REGISTERED PROFESSIONAL ENGINEER ALLAN RAY MORRIS No. 16958 Exp. 6/30/13 ELECTRICAL STATE OF CALIFORNIA

THE STATE OF CALIFORNIA OR ITS OFFICERS OR AGENTS SHALL NOT BE RESPONSIBLE FOR THE ACCURACY OR COMPLETENESS OF SCANNED COPIES OF THIS PLAN SHEET.

T Y LIN INTERNATIONAL
2010 CROW CANYON PLACE, SUITE 350
SAN RAMON, CA 94583

CCTA
2999 OAK ROAD, SUITE 100
WALNUT CREEK, CA 94597

NOTES (TEMPORARY):

1. SEE SHEET E-59 FOR GENERAL NOTES (TEMPORARY), LEGEND (TEMPORARY), AND PROJECT NOTES (TEMPORARY).
2. FOR ACCURATE RIGHT OF WAY DATA, CONTACT RIGHT OF WAY ENGINEERING AT THE DISTRICT OFFICE.

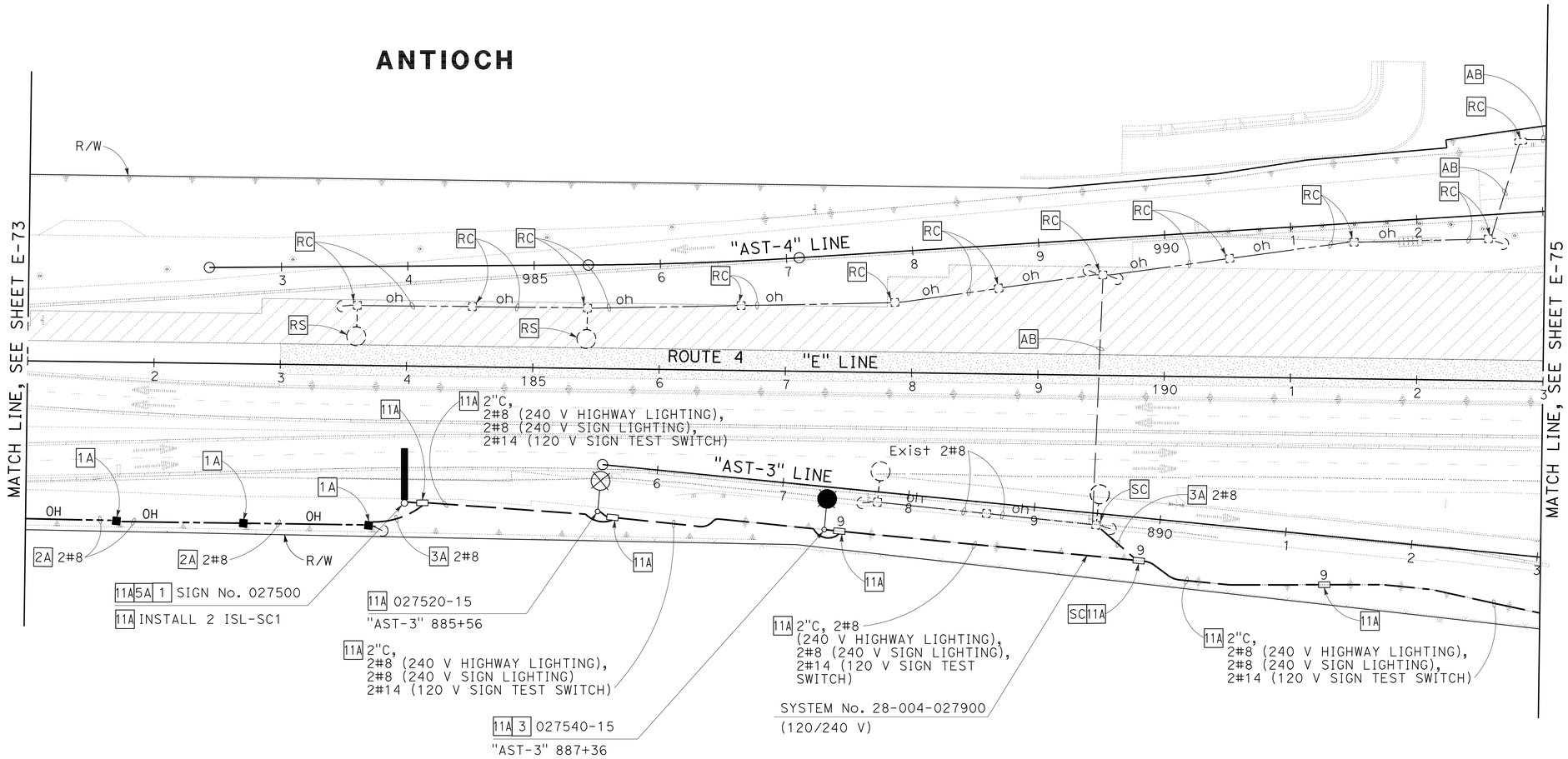

LIGHTING (TEMPORARY)

(STAGE 4 - PHASE D)

SCALE: 1" = 50'

E-74

FOR NOTES, ABBREVIATIONS AND LEGEND, SEE SHEETS E-1 AND E-2

THIS PLAN IS ACCURATE FOR ELECTRICAL WORK ONLY

STATE OF CALIFORNIA - DEPARTMENT OF TRANSPORTATION
Caltrans

CONSULTANT FUNCTIONAL SUPERVISOR: HATEM AHMED
CALCULATED-DESIGNED BY: DAVID SETO
CHECKED BY: ALLAN MORRIS
REVISED BY: CC
DATE REVISED: 8/9/11

LAST REVISION 8-9-11
DATE PLOTTED => 19-JAN-2012
TIME PLOTTED => 08:37

Dist	COUNTY	ROUTE	POST MILES TOTAL PROJECT	SHEET No.	TOTAL SHEETS
04	CC	4	27.3/R29.0	591	950

REGISTERED ELECTRICAL ENGINEER 8/9/11 DATE

1-17-12
PLANS APPROVAL DATE

REGISTERED PROFESSIONAL ENGINEER
ALLAN RAY MORRIS
No. 16958
Exp. 6/30/13
ELECTRICAL
STATE OF CALIFORNIA

THE STATE OF CALIFORNIA OR ITS OFFICERS OR AGENTS SHALL NOT BE RESPONSIBLE FOR THE ACCURACY OR COMPLETENESS OF SCANNED COPIES OF THIS PLAN SHEET.

T Y LIN INTERNATIONAL
2010 CROW CANYON PLACE, SUITE 350
SAN RAMON, CA 94583

CCTA
2999 OAK ROAD, SUITE 100
WALNUT CREEK, CA 94597

NOTES (TEMPORARY):

1. SEE SHEET E-59 FOR GENERAL NOTES (TEMPORARY), LEGEND (TEMPORARY), AND PROJECT NOTES (TEMPORARY).
2. FOR ACCURATE RIGHT OF WAY DATA, CONTACT RIGHT OF WAY ENGINEERING AT THE DISTRICT OFFICE.

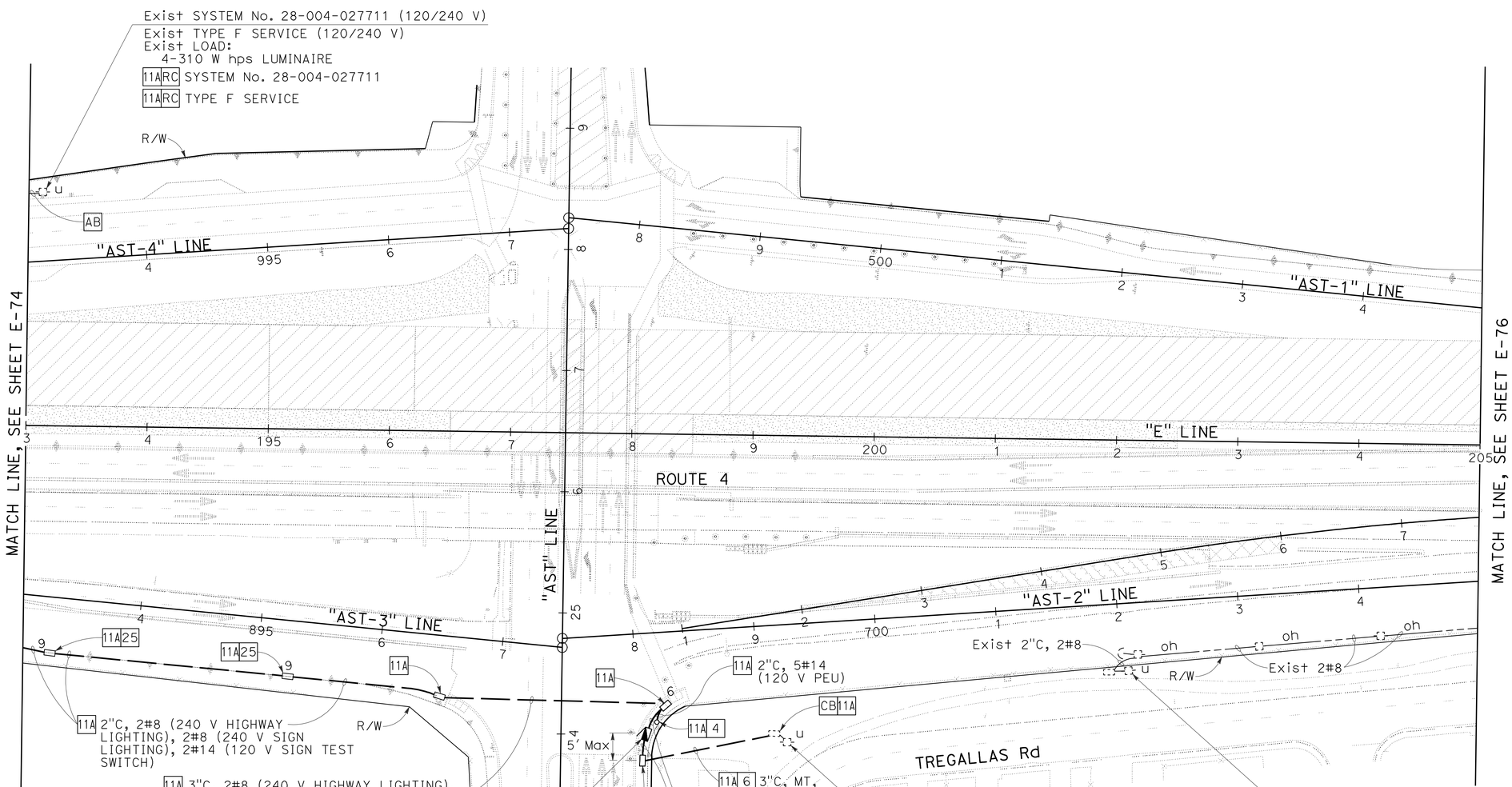

FOR NOTES, ABBREVIATIONS AND LEGEND, SEE SHEETS E-1 AND E-2

THIS PLAN IS ACCURATE FOR ELECTRICAL WORK ONLY

LIGHTING (TEMPORARY)

(STAGE 4 - PHASE D)

SCALE: 1" = 50'

E-75

STATE OF CALIFORNIA - DEPARTMENT OF TRANSPORTATION

Caltrans

CONSULTANT FUNCTIONAL SUPERVISOR: HATEM AHMED

CALCULATED-DESIGNED BY: DAVID SETO

CHECKED BY: ALLAN MORRIS

REVISED BY: CC

DATE REVISED: 8/9/11

LAST REVISION DATE PLOTTED => 19-JAN-2012
TIME PLOTTED => 08:38
8-9-11

Dist	COUNTY	ROUTE	POST MILES TOTAL PROJECT	SHEET No.	TOTAL SHEETS
04	CC	4	27.3/R29.0	592	950

REGISTERED ELECTRICAL ENGINEER 8/9/11 DATE

1-17-12
PLANS APPROVAL DATE

REGISTERED PROFESSIONAL ENGINEER ALLAN RAY MORRIS No. 16958 Exp. 6/30/13 ELECTRICAL STATE OF CALIFORNIA

THE STATE OF CALIFORNIA OR ITS OFFICERS OR AGENTS SHALL NOT BE RESPONSIBLE FOR THE ACCURACY OR COMPLETENESS OF SCANNED COPIES OF THIS PLAN SHEET.

T Y LIN INTERNATIONAL
2010 CROW CANYON PLACE, SUITE 350
SAN RAMON, CA 94583

CCTA
2999 OAK ROAD, SUITE 100
WALNUT CREEK, CA 94597

NOTES (TEMPORARY):

1. SEE SHEET E-59 FOR GENERAL NOTES (TEMPORARY), LEGEND (TEMPORARY), AND PROJECT NOTES (TEMPORARY).
2. FOR ACCURATE RIGHT OF WAY DATA, CONTACT RIGHT OF WAY ENGINEERING AT THE DISTRICT OFFICE.

ANTIOCH

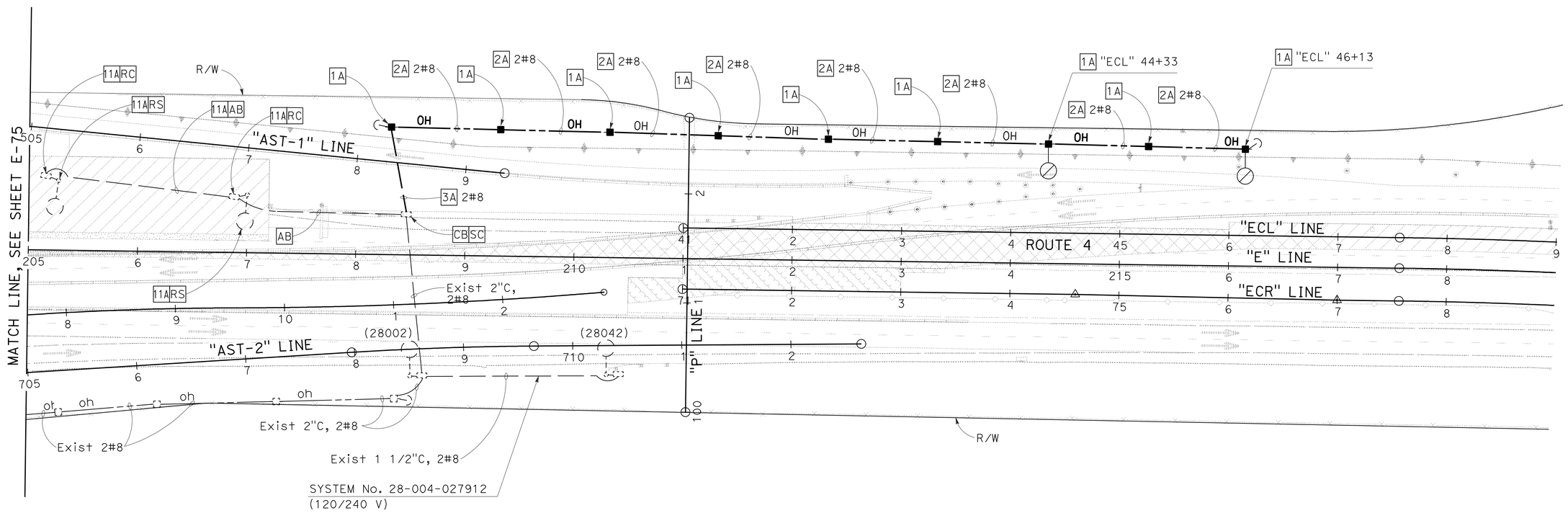

FOR NOTES, ABBREVIATIONS AND LEGEND, SEE SHEETS E-1 AND E-2

THIS PLAN IS ACCURATE FOR ELECTRICAL WORK ONLY

LIGHTING (TEMPORARY)

(STAGE 4 - PHASE D)

SCALE: 1" = 50'

E-76

STATE OF CALIFORNIA - DEPARTMENT OF TRANSPORTATION

Caltrans

CONSULTANT FUNCTIONAL SUPERVISOR: HATEM AHMED

CALCULATED-DESIGNED BY: DAVID SETO

CHECKED BY: ALLAN MORRIS

REVISED BY: CC

DATE REVISED: 8/9/11

LAST REVISION 8-9-11

DATE PLOTTED => 19-JAN-2012
TIME PLOTTED => 08:38

Dist	COUNTY	ROUTE	POST MILES TOTAL PROJECT	SHEET No.	TOTAL SHEETS
04	CC	4	27.3/R29.0	593	950

REGISTERED ELECTRICAL ENGINEER 8/9/11 DATE

1-17-12
PLANS APPROVAL DATE

REGISTERED PROFESSIONAL ENGINEER ALLAN RAY MORRIS No. 16958 Exp. 6/30/13 ELECTRICAL STATE OF CALIFORNIA

THE STATE OF CALIFORNIA OR ITS OFFICERS OR AGENTS SHALL NOT BE RESPONSIBLE FOR THE ACCURACY OR COMPLETENESS OF SCANNED COPIES OF THIS PLAN SHEET.

T Y LIN INTERNATIONAL
2010 CROW CANYON PLACE, SUITE 350
SAN RAMON, CA 94583

CCTA
2999 OAK ROAD, SUITE 100
WALNUT CREEK, CA 94597

NOTES (TEMPORARY):

1. SEE SHEET E-59 FOR GENERAL NOTES (TEMPORARY), LEGEND (TEMPORARY), AND PROJECT NOTES (TEMPORARY).
2. FOR ACCURATE RIGHT OF WAY DATA, CONTACT RIGHT OF WAY ENGINEERING AT THE DISTRICT OFFICE.

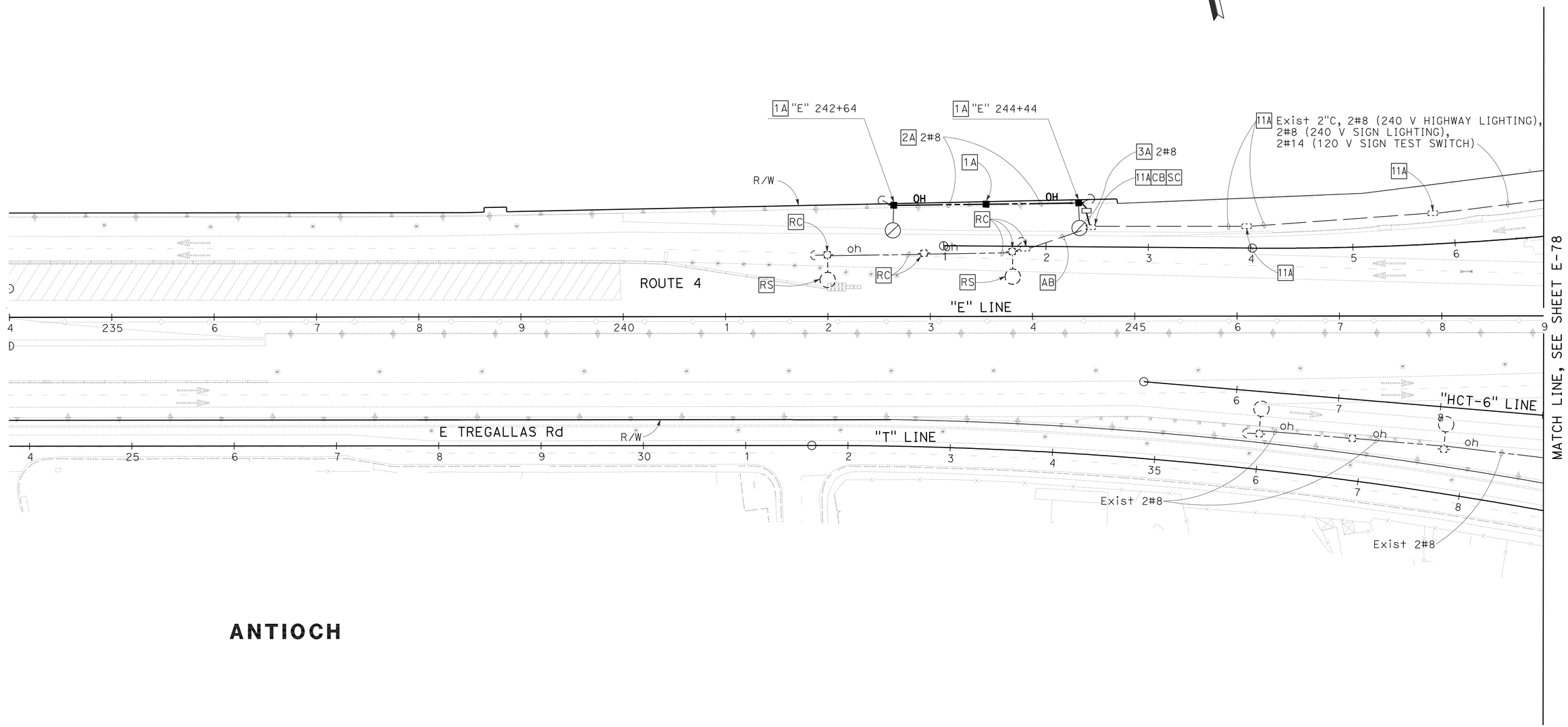

ANTIOCH

LIGHTING (TEMPORARY)

(STAGE 4 - PHASE D)

SCALE: 1" = 50'

E-77

FOR NOTES, ABBREVIATIONS AND LEGEND, SEE SHEETS E-1 AND E-2

THIS PLAN IS ACCURATE FOR ELECTRICAL WORK ONLY

REVISED BY	DATE REVISED
CC	8/9/11

DAVID SETO — CALCULATED-DESIGNED BY
ALLAN MORRIS — CHECKED BY
HATEM AHMED — CONSULTANT FUNCTIONAL SUPERVISOR

STATE OF CALIFORNIA - DEPARTMENT OF TRANSPORTATION
Caltrans

LAST REVISION 8-9-11
DATE PLOTTED => 19-JAN-2012
TIME PLOTTED => 08:38

Dist	COUNTY	ROUTE	POST MILES TOTAL PROJECT	SHEET No.	TOTAL SHEETS
04	CC	4	27.3/R29.0	594	950

REGISTERED ELECTRICAL ENGINEER 8/9/11 DATE

1-17-12
PLANS APPROVAL DATE

REGISTERED PROFESSIONAL ENGINEER ALLAN RAY MORRIS No. 16958 Exp. 6/30/13 ELECTRICAL STATE OF CALIFORNIA

THE STATE OF CALIFORNIA OR ITS OFFICERS OR AGENTS SHALL NOT BE RESPONSIBLE FOR THE ACCURACY OR COMPLETENESS OF SCANNED COPIES OF THIS PLAN SHEET.

T Y LIN INTERNATIONAL
2010 CROW CANYON PLACE, SUITE 350
SAN RAMON, CA 94583

CCTA
2999 OAK ROAD, SUITE 100
WALNUT CREEK, CA 94597

NOTES (TEMPORARY):

1. SEE SHEET E-59 FOR GENERAL NOTES (TEMPORARY), LEGEND (TEMPORARY), AND PROJECT NOTES (TEMPORARY).
2. FOR ACCURATE RIGHT OF WAY DATA, CONTACT RIGHT OF WAY ENGINEERING AT THE DISTRICT OFFICE.

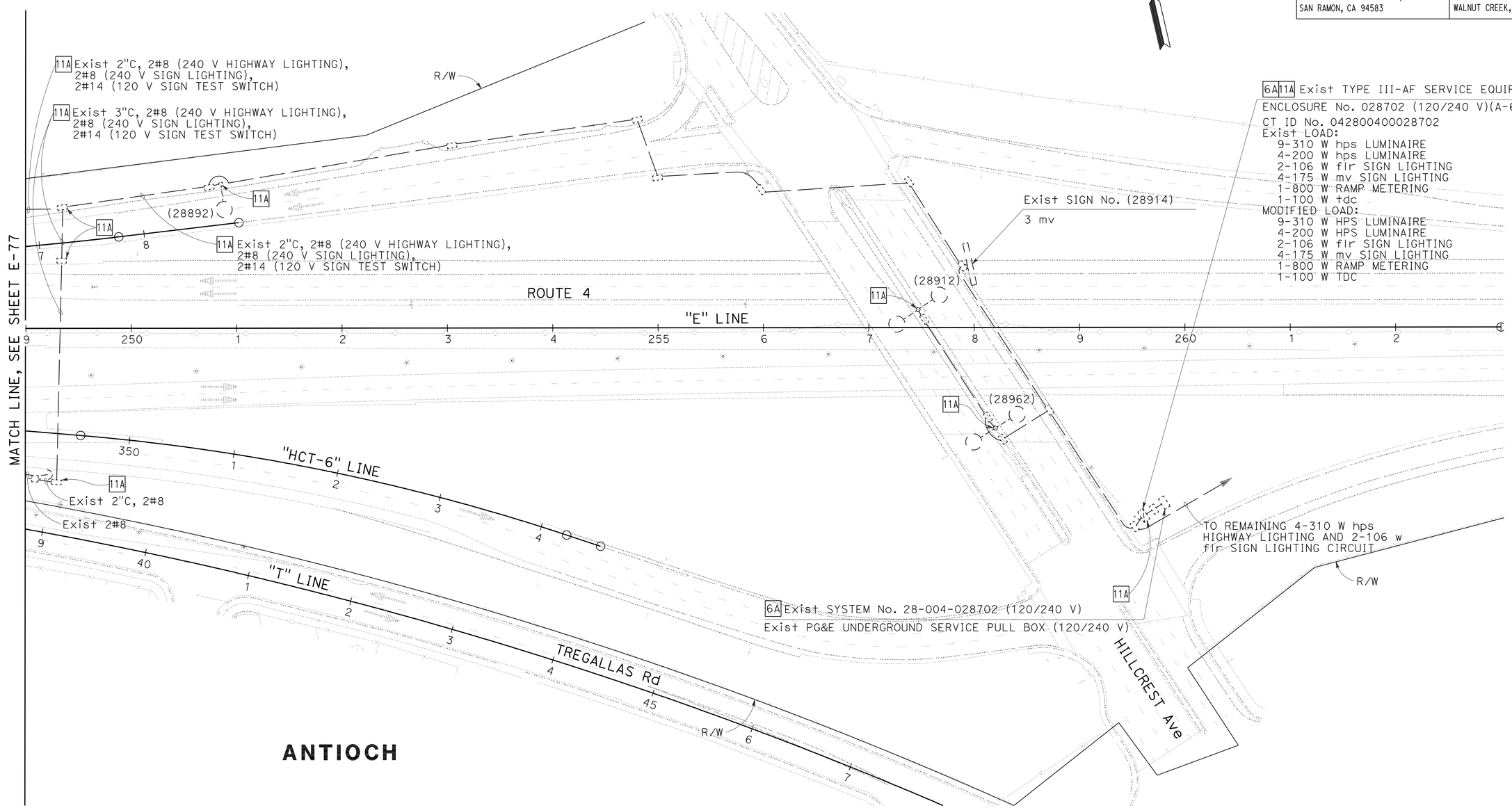

FOR NOTES, ABBREVIATIONS AND LEGEND, SEE SHEETS E-1 AND E-2

THIS PLAN IS ACCURATE FOR ELECTRICAL WORK ONLY

LIGHTING (TEMPORARY)

(STAGE 4 - PHASE D)

SCALE: 1" = 50'

E-78

STATE OF CALIFORNIA - DEPARTMENT OF TRANSPORTATION

Caltrans

CONSULTANT FUNCTIONAL SUPERVISOR: HATEM AHMED

CALCULATED-DESIGNED BY: DAVID SETO

CHECKED BY: ALLAN MORRIS

REVISED BY: CC

DATE REVISED: 8/9/11

LAST REVISION 8-9-11

DATE PLOTTED => 19-JAN-2012
TIME PLOTTED => 08:38

Dist	COUNTY	ROUTE	POST MILES TOTAL PROJECT	SHEET No.	TOTAL SHEETS
04	CC	4	27.3/R29.0	595	950

REGISTERED ELECTRICAL ENGINEER 8/9/11 DATE

1-17-12
PLANS APPROVAL DATE

REGISTERED PROFESSIONAL ENGINEER
ALLAN RAY MORRIS
No. 16958
Exp. 6/30/13
ELECTRICAL
STATE OF CALIFORNIA

THE STATE OF CALIFORNIA OR ITS OFFICERS OR AGENTS SHALL NOT BE RESPONSIBLE FOR THE ACCURACY OR COMPLETENESS OF SCANNED COPIES OF THIS PLAN SHEET.

T Y LIN INTERNATIONAL
2010 CROW CANYON PLACE, SUITE 350
SAN RAMON, CA 94583

CCTA
2999 OAK ROAD, SUITE 100
WALNUT CREEK, CA 94597

NOTES (TEMPORARY):

1. SEE SHEET E-59 FOR GENERAL NOTES (TEMPORARY), LEGEND (TEMPORARY), AND PROJECT NOTES (TEMPORARY).
2. FOR ACCURATE RIGHT OF WAY DATA, CONTACT RIGHT OF WAY ENGINEERING AT THE DISTRICT OFFICE.

ANTIOCH

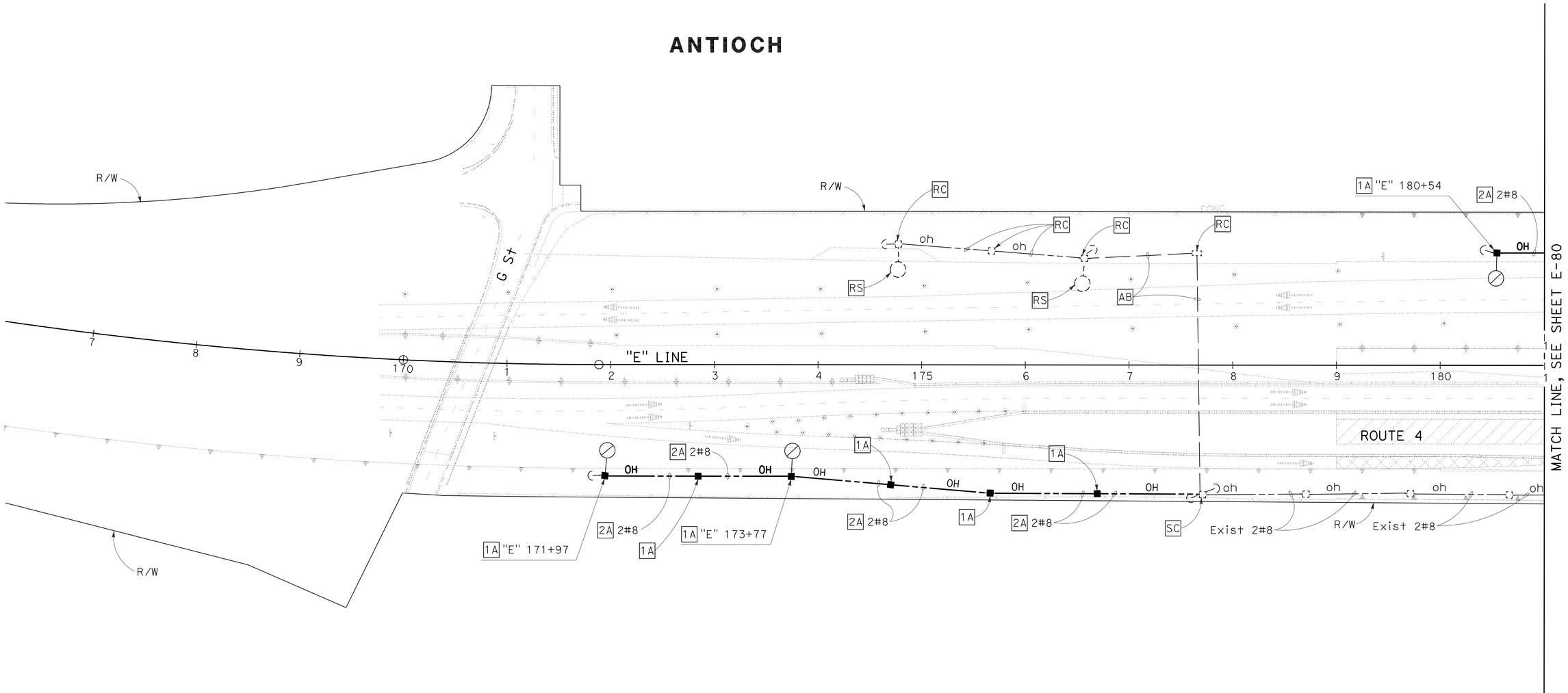

LIGHTING (TEMPORARY)

(STAGE 5)

SCALE: 1" = 50'

E-79

FOR NOTES, ABBREVIATIONS AND LEGEND, SEE SHEETS E-1 AND E-2

THIS PLAN IS ACCURATE FOR ELECTRICAL WORK ONLY

REVISED BY	CC
DATE REVISED	8/9/11
DAVID SETO	
ALLAN MORRIS	
CALCULATED-DESIGNED BY	
CHECKED BY	
CONSULTANT FUNCTIONAL SUPERVISOR	HATEM AHMED

STATE OF CALIFORNIA - DEPARTMENT OF TRANSPORTATION
Caltrans

LAST REVISION 8-9-11
DATE PLOTTED => 19-JAN-2012
TIME PLOTTED => 08:38

Dist	COUNTY	ROUTE	POST MILES TOTAL PROJECT	SHEET No.	TOTAL SHEETS
04	CC	4	27.3/R29.0	596	950

REGISTERED ELECTRICAL ENGINEER 8/9/11 DATE

1-17-12
PLANS APPROVAL DATE

REGISTERED PROFESSIONAL ENGINEER ALLAN RAY MORRIS No. 16958 Exp. 6/30/13 ELECTRICAL STATE OF CALIFORNIA

THE STATE OF CALIFORNIA OR ITS OFFICERS OR AGENTS SHALL NOT BE RESPONSIBLE FOR THE ACCURACY OR COMPLETENESS OF SCANNED COPIES OF THIS PLAN SHEET.

T Y LIN INTERNATIONAL
2010 CROW CANYON PLACE, SUITE 350
SAN RAMON, CA 94583

CCTA
2999 OAK ROAD, SUITE 100
WALNUT CREEK, CA 94597

NOTES (TEMPORARY):

1. SEE SHEET E-59 FOR GENERAL NOTES (TEMPORARY), LEGEND (TEMPORARY), AND PROJECT NOTES (TEMPORARY).
2. FOR ACCURATE RIGHT OF WAY DATA, CONTACT RIGHT OF WAY ENGINEERING AT THE DISTRICT OFFICE.

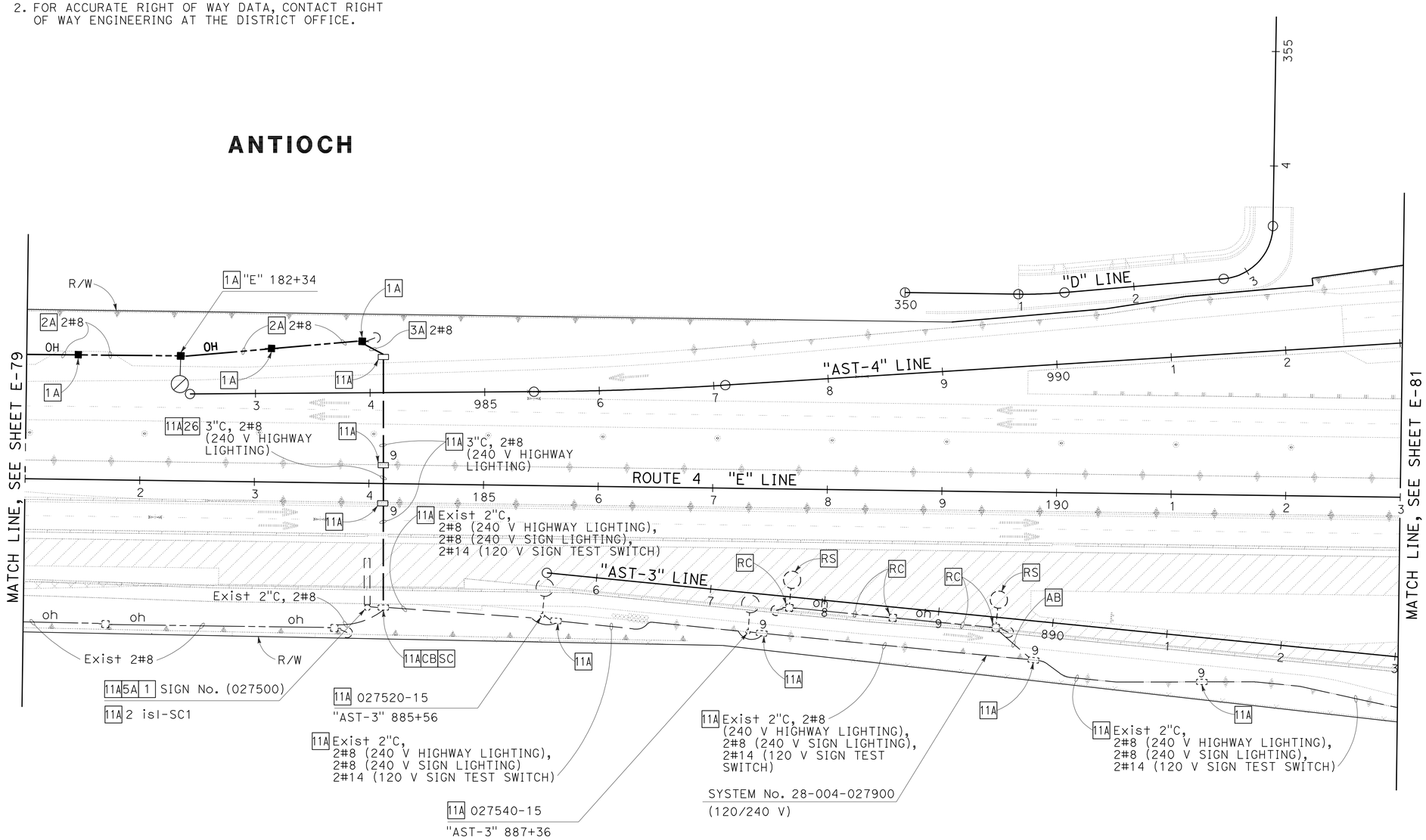

FOR NOTES, ABBREVIATIONS AND LEGEND, SEE SHEETS E-1 AND E-2

THIS PLAN IS ACCURATE FOR ELECTRICAL WORK ONLY

LIGHTING (TEMPORARY)
(STAGE 5)

SCALE: 1" = 50'

E-80

STATE OF CALIFORNIA - DEPARTMENT OF TRANSPORTATION
Caltrans

CONSULTANT FUNCTIONAL SUPERVISOR: HATEM AHMED
CALCULATED-DESIGNED BY: DAVID SETO
CHECKED BY: ALLAN MORRIS
REVISED BY: CC
DATE REVISED: 8/9/11

LAST REVISION 8-9-11
DATE PLOTTED => 19-JAN-2012
TIME PLOTTED => 08:38

Dist	COUNTY	ROUTE	POST MILES TOTAL PROJECT	SHEET No.	TOTAL SHEETS
04	CC	4	27.3/R29.0	597	950

REGISTERED ELECTRICAL ENGINEER 8/9/11 DATE

1-17-12
PLANS APPROVAL DATE

REGISTERED PROFESSIONAL ENGINEER ALLAN RAY MORRIS No. 16958 Exp. 6/30/13 ELECTRICAL STATE OF CALIFORNIA

THE STATE OF CALIFORNIA OR ITS OFFICERS OR AGENTS SHALL NOT BE RESPONSIBLE FOR THE ACCURACY OR COMPLETENESS OF SCANNED COPIES OF THIS PLAN SHEET.

T Y LIN INTERNATIONAL
2010 CROW CANYON PLACE, SUITE 350
SAN RAMON, CA 94583

CCTA
2999 OAK ROAD, SUITE 100
WALNUT CREEK, CA 94597

NOTES (TEMPORARY):

1. SEE SHEET E-59 FOR GENERAL NOTES (TEMPORARY), LEGEND (TEMPORARY), AND PROJECT NOTES (TEMPORARY).
2. FOR ACCURATE RIGHT OF WAY DATA, CONTACT RIGHT OF WAY ENGINEERING AT THE DISTRICT OFFICE.

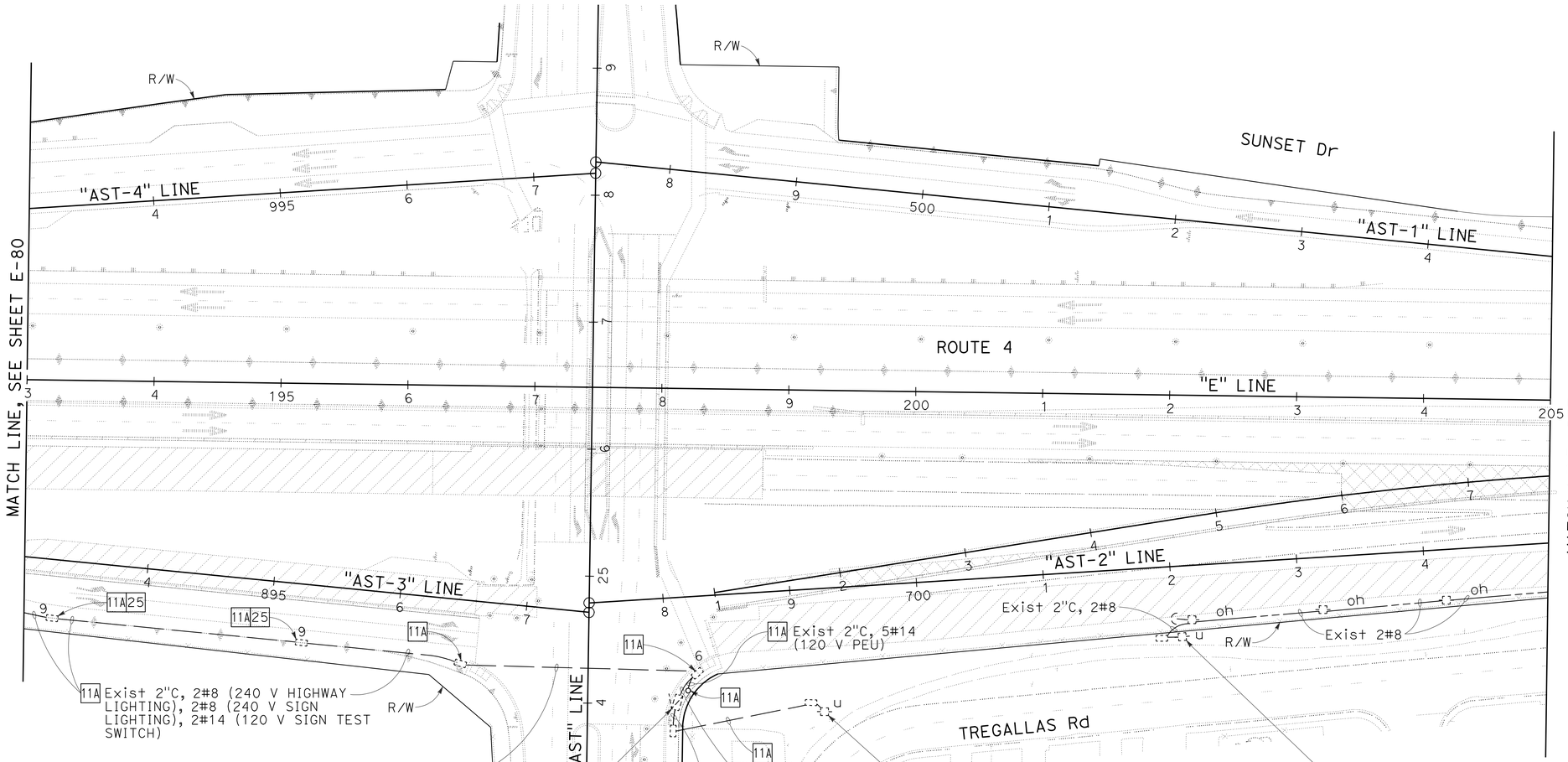

11A Exist 2"C, 2#8 (240 V HIGHWAY LIGHTING), 2#8 (240 V SIGN LIGHTING), 2#14 (120 V SIGN TEST SWITCH)

11A Exist 3"C, 2#8 (240 V HIGHWAY LIGHTING), 2#8 (240 V SIGN LIGHTING), 2#14 (120 V SIGN TEST SWITCH)

6A 11A Exist TYPE III-AF SERVICE EQUIPMENT
ENCLOSURE No. 027900 (120/240 V)(A-6)(TOU)
CT ID No. 042800400027900
Exist LOAD:
4-310 W HPS LUMINAIRE
MODIFIED LOAD:
4-310 W HPS LUMINAIRE

11A Exist 2"C, 5#14 (120 V PEU)

6A Exist SYSTEM No. 28-004-027900 (120/240 V)
Exist TYPE H SERVICE (120/240 V)

6A Exist SYSTEM No. 28-004-027912 (120/240 V)
Exist TYPE F SERVICE (120/240 V)
Exist LOAD:
4-310 W hps LUMINAIRE
MODIFIED LOAD:
4-310 W HPS LUMINAIRE

11A Exist 2"C, 2#14 (120 V SIGN TEST SWITCH), 5#14 (120 V PEU), 2#10 (120 V TDC), 2#8 (240 V HIGHWAY LIGHTING), 2#8 (240 V SIGN LIGHTING), 2#6 (120 V RAMP METER CONTROLLER), 2#6 (120 V RAMP METER CONTROLLER), 2#6 (120 V EMS CONTROLLER), 2#6 (120 V CCTV CONTROLLER)

11A Exist 1½"C, 3#2 (Typ, 100 A)

FOR NOTES, ABBREVIATIONS AND LEGEND, SEE SHEETS E-1 AND E-2

ANTIOCH

LIGHTING (TEMPORARY)

(STAGE 5)

SCALE: 1" = 50'

E-81

THIS PLAN IS ACCURATE FOR ELECTRICAL WORK ONLY

STATE OF CALIFORNIA - DEPARTMENT OF TRANSPORTATION
Caltrans

CONSULTANT FUNCTIONAL SUPERVISOR: HATEM AHMED
CALCULATED-DESIGNED BY: DAVID SETO
CHECKED BY: ALLAN MORRIS
REVISED BY: CC
DATE REVISED: 8/9/11

LAST REVISION 8-9-11
DATE PLOTTED => 19-JAN-2012
TIME PLOTTED => 08:38

Dist	COUNTY	ROUTE	POST MILES TOTAL PROJECT	SHEET No.	TOTAL SHEETS
04	CC	4	27.3/R29.0	598	950

REGISTERED ELECTRICAL ENGINEER 8/9/11 DATE

1-17-12
PLANS APPROVAL DATE

REGISTERED PROFESSIONAL ENGINEER
ALLAN RAY MORRIS
No. 16958
Exp. 6/30/13
ELECTRICAL
STATE OF CALIFORNIA

THE STATE OF CALIFORNIA OR ITS OFFICERS OR AGENTS SHALL NOT BE RESPONSIBLE FOR THE ACCURACY OR COMPLETENESS OF SCANNED COPIES OF THIS PLAN SHEET.

T Y LIN INTERNATIONAL
2010 CROW CANYON PLACE, SUITE 350
SAN RAMON, CA 94583

CCTA
2999 OAK ROAD, SUITE 100
WALNUT CREEK, CA 94597

NOTES (TEMPORARY):

1. SEE SHEET E-59 FOR GENERAL NOTES (TEMPORARY), LEGEND (TEMPORARY), AND PROJECT NOTES (TEMPORARY).
2. FOR ACCURATE RIGHT OF WAY DATA, CONTACT RIGHT OF WAY ENGINEERING AT THE DISTRICT OFFICE.

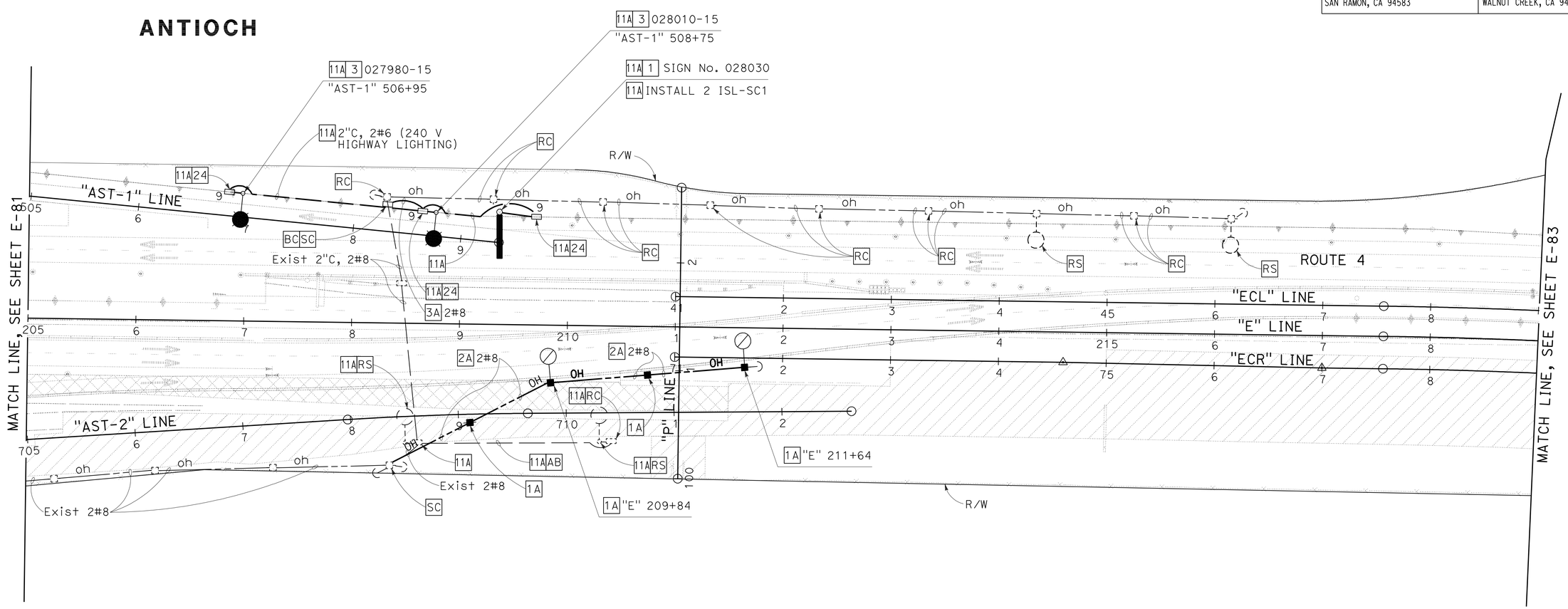

FOR NOTES, ABBREVIATIONS AND LEGEND, SEE SHEETS E-1 AND E-2

LIGHTING (TEMPORARY)

(STAGE 5)

SCALE: 1" = 50'

E-82

THIS PLAN IS ACCURATE FOR ELECTRICAL WORK ONLY

STATE OF CALIFORNIA - DEPARTMENT OF TRANSPORTATION
Caltrans

CONSULTANT FUNCTIONAL SUPERVISOR: HATEM AHMED
CALCULATED-DESIGNED BY: ALLAN MORRIS
CHECKED BY: DAVID SETO
REVISED BY: CC
DATE REVISED: 8/9/11

LAST REVISION 8-9-11
DATE PLOTTED => 19-JAN-2012
TIME PLOTTED => 08:38

Dist	COUNTY	ROUTE	POST MILES TOTAL PROJECT	SHEET No.	TOTAL SHEETS
04	CC	4	27.3/R29.0	599	950

REGISTERED ELECTRICAL ENGINEER 8/9/11 DATE

1-17-12
PLANS APPROVAL DATE

REGISTERED PROFESSIONAL ENGINEER ALLAN RAY MORRIS No. 16958 Exp. 6/30/13 ELECTRICAL STATE OF CALIFORNIA

THE STATE OF CALIFORNIA OR ITS OFFICERS OR AGENTS SHALL NOT BE RESPONSIBLE FOR THE ACCURACY OR COMPLETENESS OF SCANNED COPIES OF THIS PLAN SHEET.

T Y LIN INTERNATIONAL
2010 CROW CANYON PLACE, SUITE 350
SAN RAMON, CA 94583

CCTA
2999 OAK ROAD, SUITE 100
WALNUT CREEK, CA 94597

NOTES (TEMPORARY):

1. SEE SHEET E-59 FOR GENERAL NOTES (TEMPORARY), LEGEND (TEMPORARY), AND PROJECT NOTES (TEMPORARY).
2. FOR ACCURATE RIGHT OF WAY DATA, CONTACT RIGHT OF WAY ENGINEERING AT THE DISTRICT OFFICE.

ANTIOCH

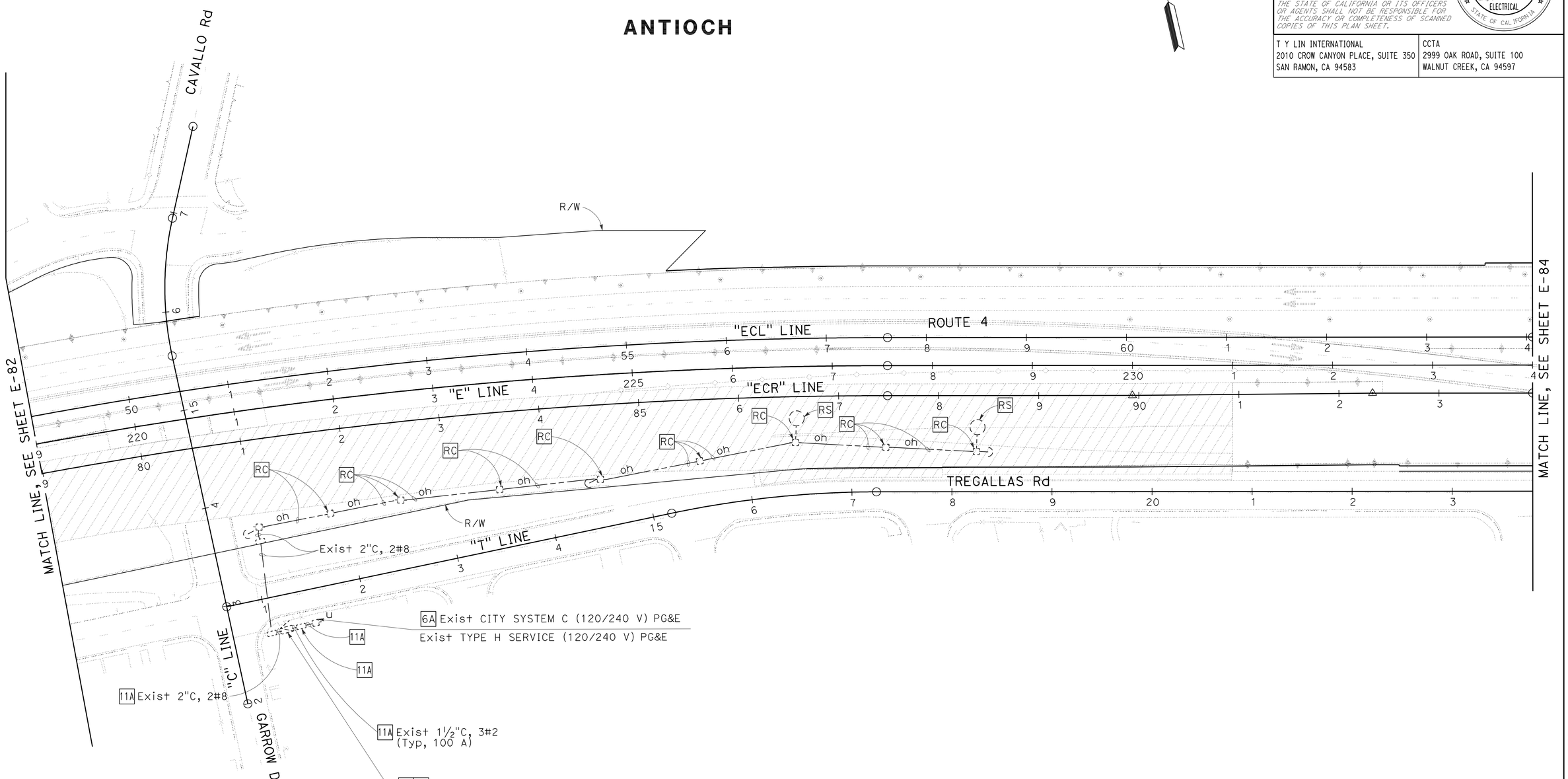

FOR NOTES, ABBREVIATIONS AND LEGEND, SEE SHEETS E-1 AND E-2

THIS PLAN IS ACCURATE FOR ELECTRICAL WORK ONLY

LIGHTING (TEMPORARY)

(STAGE 5)

SCALE: 1" = 50'

E-83

STATE OF CALIFORNIA - DEPARTMENT OF TRANSPORTATION

Caltrans

CONSULTANT FUNCTIONAL SUPERVISOR: HATEM AHMED

CALCULATED-DESIGNED BY: DAVID SETO

CHECKED BY: ALLAN MORRIS

REVISED BY: CC

DATE REVISED: 8/9/11

LAST REVISION: 8-9-11

DATE PLOTTED => 19-JAN-2012
TIME PLOTTED => 08:38

Dist	COUNTY	ROUTE	POST MILES TOTAL PROJECT	SHEET No.	TOTAL SHEETS
04	CC	4	27.3/R29.0	600	950

REGISTERED ELECTRICAL ENGINEER 8/9/11 DATE

1-17-12
PLANS APPROVAL DATE

REGISTERED PROFESSIONAL ENGINEER
ALLAN RAY MORRIS
No. 16958
Exp. 6/30/13
ELECTRICAL
STATE OF CALIFORNIA

THE STATE OF CALIFORNIA OR ITS OFFICERS OR AGENTS SHALL NOT BE RESPONSIBLE FOR THE ACCURACY OR COMPLETENESS OF SCANNED COPIES OF THIS PLAN SHEET.

T Y LIN INTERNATIONAL
2010 CROW CANYON PLACE, SUITE 350
SAN RAMON, CA 94583

CCTA
2999 OAK ROAD, SUITE 100
WALNUT CREEK, CA 94597

NOTES (TEMPORARY):

1. SEE SHEET E-59 FOR GENERAL NOTES (TEMPORARY), LEGEND (TEMPORARY), AND PROJECT NOTES (TEMPORARY).
2. FOR ACCURATE RIGHT OF WAY DATA, CONTACT RIGHT OF WAY ENGINEERING AT THE DISTRICT OFFICE.

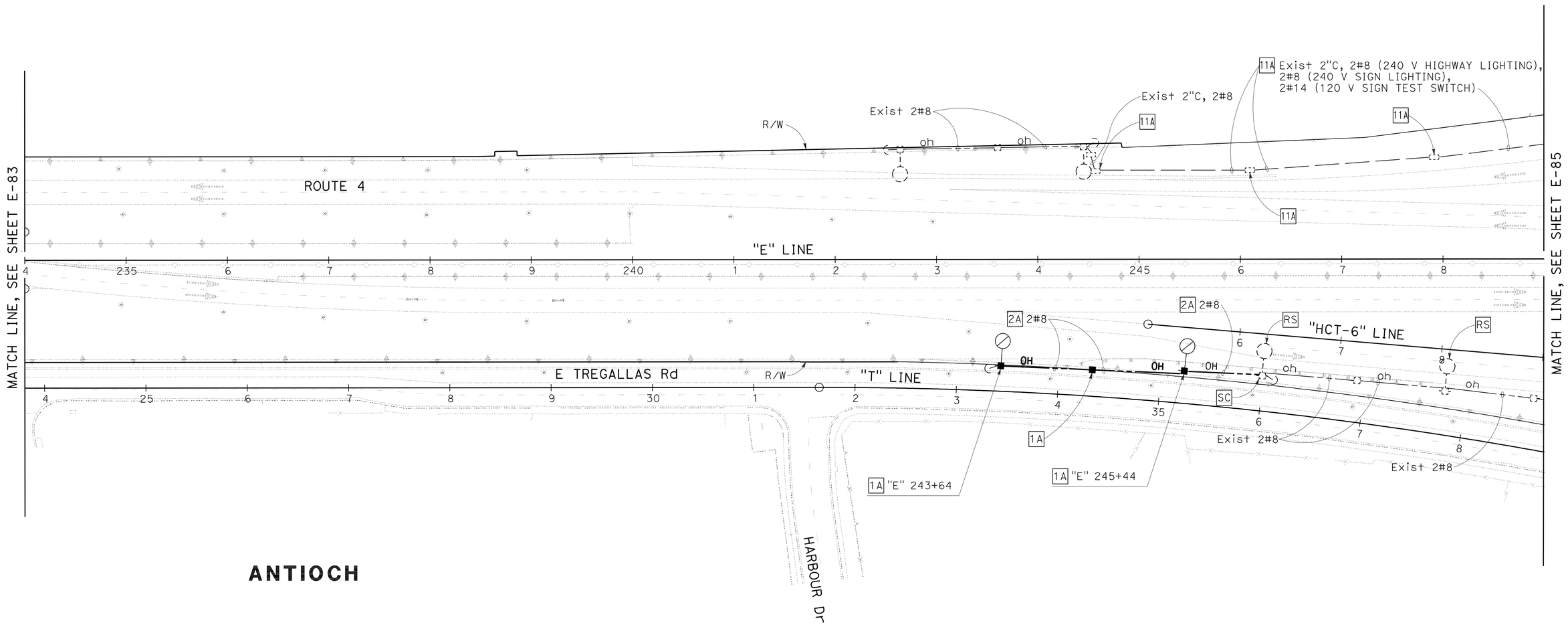

FOR NOTES, ABBREVIATIONS AND LEGEND, SEE SHEETS E-1 AND E-2

THIS PLAN IS ACCURATE FOR ELECTRICAL WORK ONLY

LIGHTING (TEMPORARY)
(STAGE 5)

SCALE: 1" = 50'

E-84

STATE OF CALIFORNIA - DEPARTMENT OF TRANSPORTATION
Caltrans

CONSULTANT FUNCTIONAL SUPERVISOR: HATEM AHMED
CALCULATED-DESIGNED BY: DAVID SETO
CHECKED BY: ALLAN MORRIS
REVISED BY: CC
DATE REVISED: 8/9/11

LAST REVISION 8-9-11
DATE PLOTTED => 19-JAN-2012
TIME PLOTTED => 08:39