Dist	COUNTY	ROUTE	POST MILES TOTAL PROJECT	SHEET No.	TOTAL SHEETS
04	CC	4	27.3/R29.0	101	950

REGISTERED CIVIL ENGINEER 8/9/11 DATE

1-17-12
PLANS APPROVAL DATE

REGISTERED PROFESSIONAL ENGINEER C.P. SMITH No. C47861 Exp. 12/31/11 CIVIL STATE OF CALIFORNIA

THE STATE OF CALIFORNIA OR ITS OFFICERS OR AGENTS SHALL NOT BE RESPONSIBLE FOR THE ACCURACY OR COMPLETENESS OF SCANNED COPIES OF THIS PLAN SHEET.

PGH WONG ENGINEERING, INC
182 2ND STREET, SUITE 500
SAN FRANCISCO, CA 94105

CCTA
2999 OAK ROAD, SUITE 100
WALNUT CREEK, CA 94597

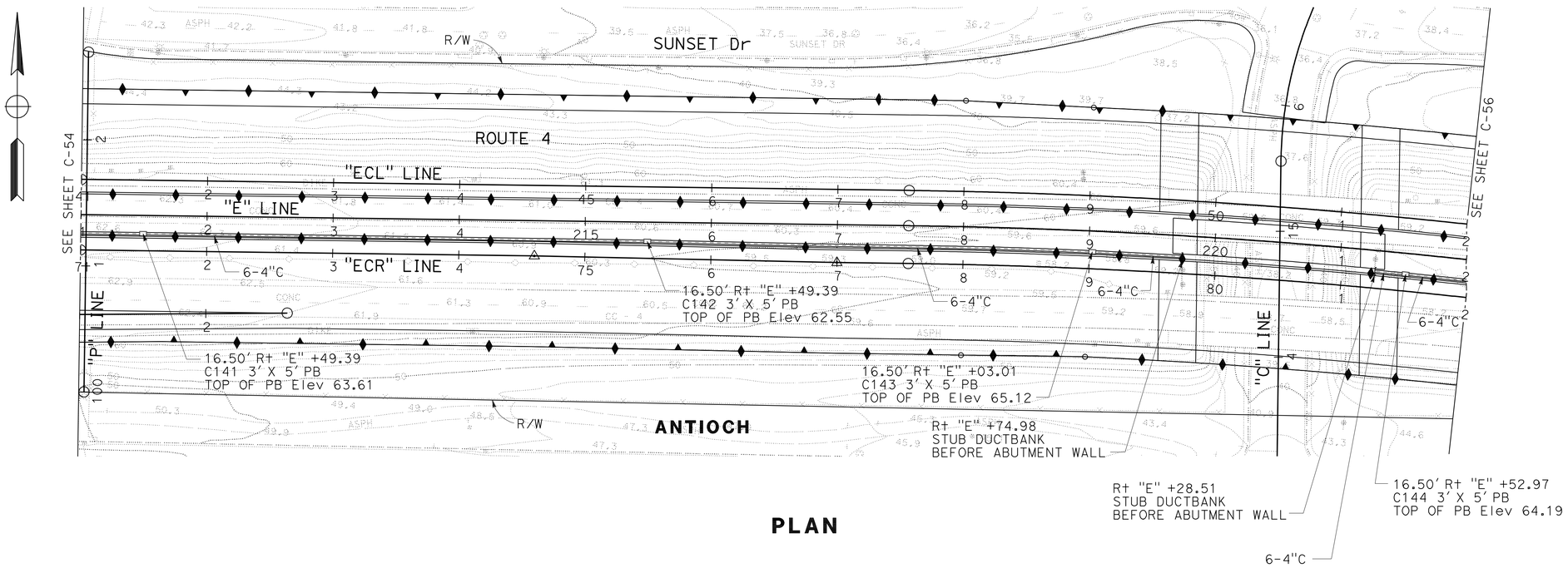

PLAN

NOTE:

FOR eBART CONDUIT PULL BOXES AND RACEWAYS NOTES, SEE SHEET C-51.

CONSTRUCTION DETAILS
eBART CONDUIT PLAN
SCALE: 1" = 50'

C-55

REVISED BY	DATE REVISED
LK	8/9/11

LYDIA KAN — CALCULATED-DESIGNED BY
DAVID CORONA — CHECKED BY
JEFFREY A. HURLEY — CONSULTANT FUNCTIONAL SUPERVISOR

STATE OF CALIFORNIA - DEPARTMENT OF TRANSPORTATION
Caltrans

LAST REVISION 8-9-11
DATE PLOTTED => 30-JAN-2012
TIME PLOTTED => 09:41

Dist	COUNTY	ROUTE	POST MILES TOTAL PROJECT	SHEET No.	TOTAL SHEETS
04	CC	4	27.3/R29.0	102	950

REGISTERED CIVIL ENGINEER 8/9/11 DATE

1-17-12
PLANS APPROVAL DATE

REGISTERED PROFESSIONAL ENGINEER C.P. SMITH No. C47861 Exp. 12/31/11 CIVIL STATE OF CALIFORNIA

THE STATE OF CALIFORNIA OR ITS OFFICERS OR AGENTS SHALL NOT BE RESPONSIBLE FOR THE ACCURACY OR COMPLETENESS OF SCANNED COPIES OF THIS PLAN SHEET.

PGH WONG ENGINEERING, INC
182 2ND STREET, SUITE 500
SAN FRANCISCO, CA 94105

CCTA
2999 OAK ROAD, SUITE 100
WALNUT CREEK, CA 94597

NOTE:

FOR eBART CONDUIT PULL BOXES AND RACEWAYS NOTES, SEE SHEET C-51.

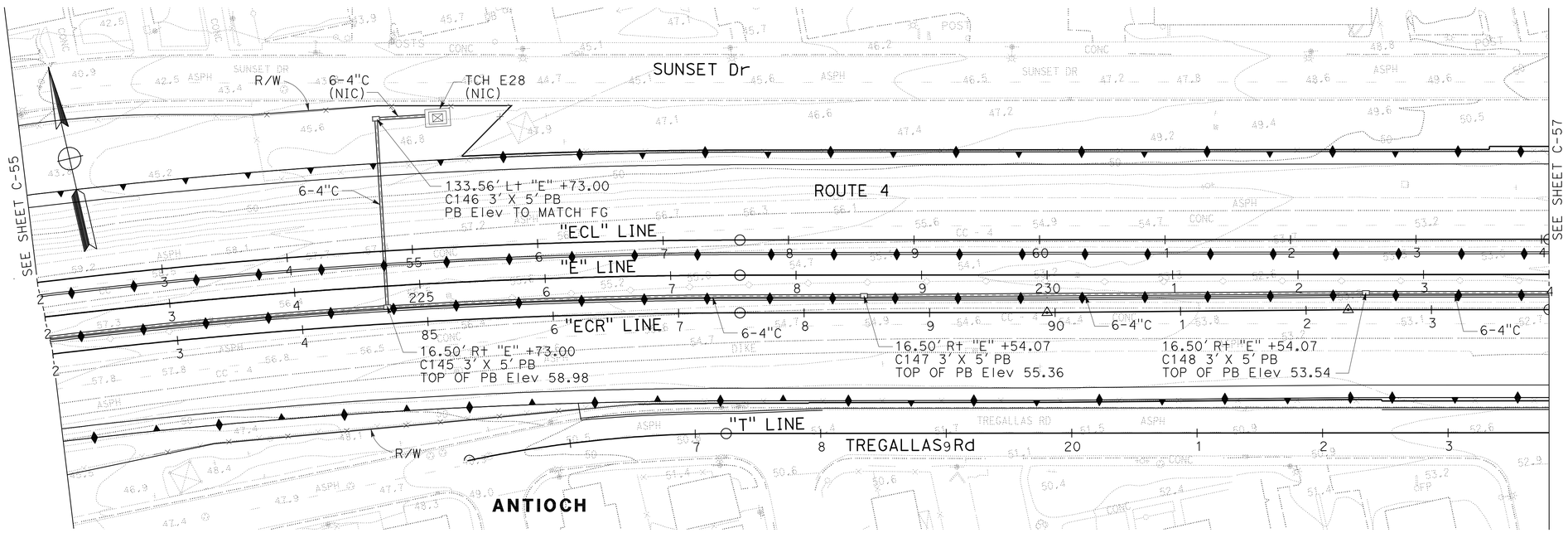

PLAN

CONSTRUCTION DETAILS
eBART CONDUIT PLAN
SCALE: 1" = 50'

C-56

STATE OF CALIFORNIA - DEPARTMENT OF TRANSPORTATION
Caltrans

CONSULTANT FUNCTIONAL SUPERVISOR: JEFFREY A. HURLEY
CALCULATED-DESIGNED BY: LYDIAN KAN
CHECKED BY: DAVID CORONA
REVISED BY: LK
DATE REVISED: 8/9/11

LAST REVISION: DATE PLOTTED => 30-JAN-2012 TIME PLOTTED => 09:41 8-9-11

Dist	COUNTY	ROUTE	POST MILES TOTAL PROJECT	SHEET No.	TOTAL SHEETS
04	CC	4	27.3/R29.0	103	950

REGISTERED CIVIL ENGINEER 8/9/11 DATE

1-17-12
PLANS APPROVAL DATE

REGISTERED PROFESSIONAL ENGINEER C.P. SMITH No. C47861 Exp. 12/31/11 CIVIL STATE OF CALIFORNIA

THE STATE OF CALIFORNIA OR ITS OFFICERS OR AGENTS SHALL NOT BE RESPONSIBLE FOR THE ACCURACY OR COMPLETENESS OF SCANNED COPIES OF THIS PLAN SHEET.

PGH WONG ENGINEERING, INC
182 2ND STREET, SUITE 500
SAN FRANCISCO, CA 94105

CCTA
2999 OAK ROAD, SUITE 100
WALNUT CREEK, CA 94597

NOTE:

FOR eBART CONDUIT PULL BOXES AND RACEWAYS NOTES, SEE SHEET C-51.

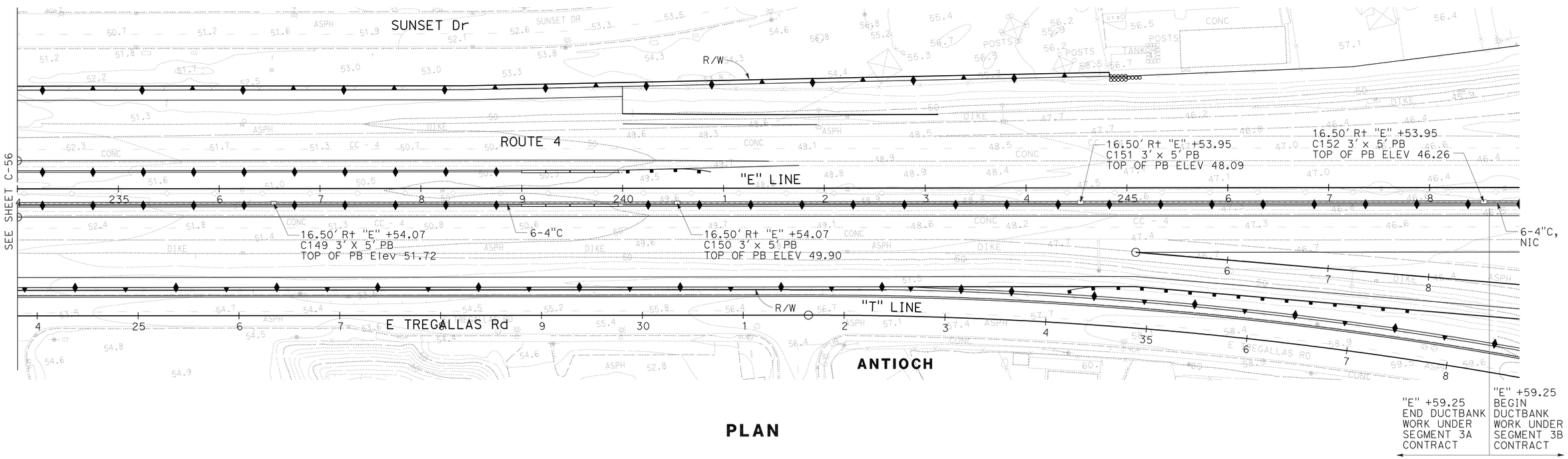

PLAN

CONSTRUCTION DETAILS
eBART CONDUIT PLAN
SCALE: 1" = 50'

C-57

REVISED BY	DATE REVISED
LK	8/9/11

LYDIAN KAN — CALCULATED-DESIGNED BY
DAVID CORONA — CHECKED BY
JEFFREY A. HURLEY — CONSULTANT FUNCTIONAL SUPERVISOR

STATE OF CALIFORNIA - DEPARTMENT OF TRANSPORTATION
Caltrans

LAST REVISION 8-9-11
DATE PLOTTED => 30-JAN-2012
TIME PLOTTED => 09:41

Dist	COUNTY	ROUTE	POST MILES TOTAL PROJECT	SHEET No.	TOTAL SHEETS
04	CC	4	27.3/R29.0	104	950

REGISTERED CIVIL ENGINEER 8/9/11 DATE

1-17-12
PLANS APPROVAL DATE

REGISTERED PROFESSIONAL ENGINEER C.P. SMITH No. C47861 Exp. 12/31/11 CIVIL STATE OF CALIFORNIA

THE STATE OF CALIFORNIA OR ITS OFFICERS OR AGENTS SHALL NOT BE RESPONSIBLE FOR THE ACCURACY OR COMPLETENESS OF SCANNED COPIES OF THIS PLAN SHEET.

PGH WONG ENGINEERING, INC
182 2ND STREET, SUITE 500
SAN FRANCISCO, CA 94105

CCTA
2999 OAK ROAD, SUITE 100
WALNUT CREEK, CA 94597

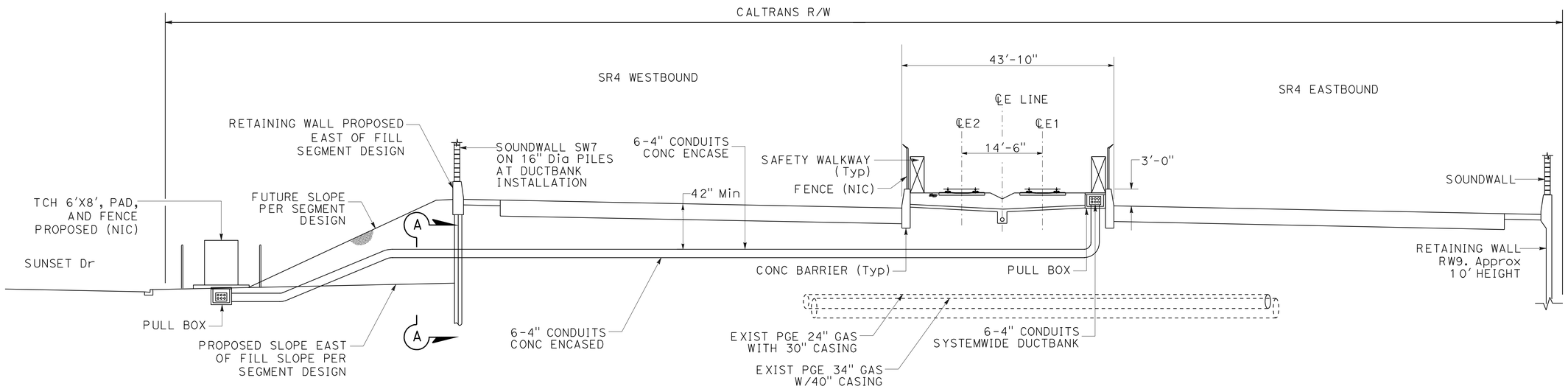

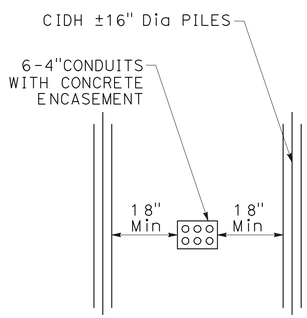

PLAN DETAIL

SECTION A-A

TRAIN CONTROL HOUSE E28 CAVALLO RD

STATION "E" 224+73 SR 4 PLANS

CONSTRUCTION DETAILS

eBART CONDUIT SECTION

NO SCALE

C-58

STATE OF CALIFORNIA - DEPARTMENT OF TRANSPORTATION
Caltrans

CONSULTANT FUNCTIONAL SUPERVISOR: JEFFREY A. HURLEY
CALCULATED-DESIGNED BY: LYDIA KAN
CHECKED BY: DAVID CORONA
REVISED BY: LK
DATE REVISED: 8/9/11

LAST REVISION 8-9-11
DATE PLOTTED => 30-JAN-2012
TIME PLOTTED => 09:41

Dist	COUNTY	ROUTE	POST MILES TOTAL PROJECT	SHEET No.	TOTAL SHEETS
04	CC	4	27.3/R29.0	105	950

REGISTERED CIVIL ENGINEER 8/9/11 DATE

1-17-12
PLANS APPROVAL DATE

REGISTERED PROFESSIONAL ENGINEER C.P. SMITH No. C47861 Exp. 12/31/11 CIVIL STATE OF CALIFORNIA

THE STATE OF CALIFORNIA OR ITS OFFICERS OR AGENTS SHALL NOT BE RESPONSIBLE FOR THE ACCURACY OR COMPLETENESS OF SCANNED COPIES OF THIS PLAN SHEET.

PGH WONG ENGINEERING, INC
182 2ND STREET, SUITE 500
SAN FRANCISCO, CA 94105

CCTA
2999 OAK ROAD, SUITE 100
WALNUT CREEK, CA 94597

COVER

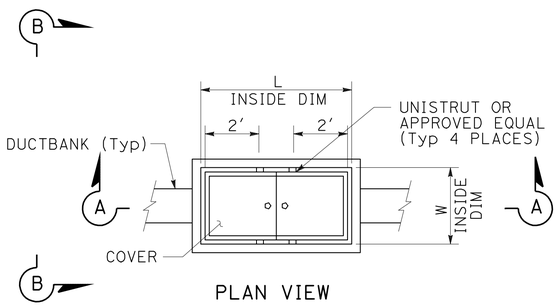

PLAN VIEW

DIMENSION TABLE				
CONCRETE BOX				
PULL BOX TYPE	Min DEPTH BOX D (NOTE 9)	Min L	Min W	AREA USED
E	30" (Min)	66"	38"	SYSTEM WIDE DUCTBANK

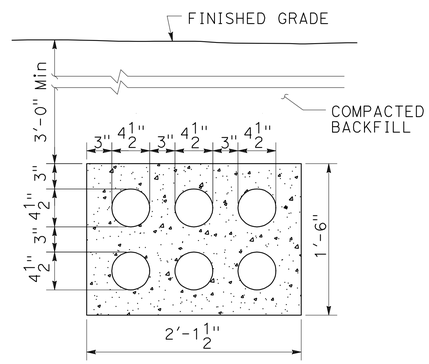

6-4" CONDUITS

RACEWAY SECTION

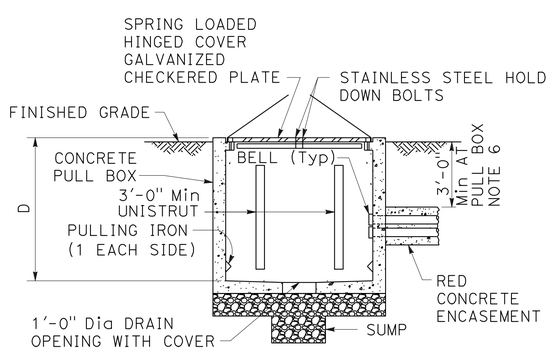

SECTION A-A

INSTALLATION DETAIL - PULL BOX E

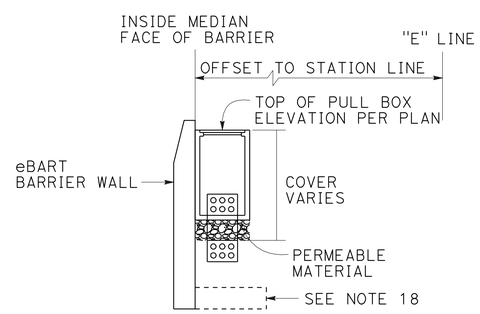

SECTION B-B

NOTES:

1. TOP OF PULL BOXES SHALL BE FLUSH WITH SURROUNDING GRADE OR TOP OF ADJACENT CURB, EXCEPT IN THE MEDIAN GUILDWAY, THE PULL BOXES SHALL BE SET TO THE FINISH ELEVATION AS NOTED ON PLANS.
2. WHEN THE DUCTBANK IS INSTALLED ON THE eBART BARRIER FOOTING; CONDUIT COVER OF THE SYSTEMWIDE DUCTBANK WILL VARY FROM 18" (Min) TO 36" (Max). EXCEPT AT THE APPROACH TO GRADE SEPARATIONS, THE COVER OF THE SYSTEMWIDE DUCTBANK SHALL NOT EXCEED 36". WHEN THE DUCTBANK IS NOT INSTALLED OVER ANY FOOTING; CONDUIT COVER OF THE SYSTEMWIDE DUCTBANK SHALL BE 36".
3. PULL BOX SHALL NOT BE WITHIN THE BOUNDARIES OF NEW OR EXISTING WHEELCHAIR RAMPS.
4. ALL CONDUITS AND CABLES SHALL BE LABELED AS SPECIFIED IN THE CONTRACT SPECIFICATIONS.
5. ALL CONDUITS SHALL BE SEALED AS SPECIFIED IN THE CONTRACT SPECIFICATIONS.
6. ALL PULL BOXES SHALL READ "COMMUNICATION", "eBART ELEC", "ELEC" OR ANY OTHER APPROPRIATE LABEL THAT IS APPROVED BY THE ENGINEER.
7. PULL BOXES THAT ARE BEING INSTALLED FOR AN AUTHORITY OTHER THAN BART, SHALL MEET THE REQUIREMENTS OF THAT AUTHORITY.
8. EXTENSIONS MAY BE USED PER MANUFACTURER'S GUIDELINES.
9. KNOCK-OUT AREA AROUND CONDUIT SHALL BE GROUTED WITH NON-SHRINK GROUT PER CONTRACT SPECIFICATIONS.
10. CONDUITS SHALL SLOPE DOWN TOWARDS THE PULL BOX SO AS TO ALLOW THE CONDUITS TO DRAIN INTO THE PULL BOX.
11. PULL BOXES SHALL BE VEHICULAR TRAFFIC RATED BASED ON ASTM C-857 "MINIMUM STRUCTURAL DESIGN LOADING FOR UNDERGROUND PRECAST CONCRETE UTILITY STRUCTURES".
12. WHERE CONDUITS ARE TO REMAIN EMPTY, CONTRACTOR SHALL MANDREL THE CONDUITS PER NEMA TCB 2-2000 AND INSTALL A PULL STRING. IMMEDIATELY FOLLOWING, THE CONTRACTOR SHALL INSTALL AND TIGHTEN DOWN THE PULL BOX COVERS. CONTRACTOR SHALL NOTIFY THE ENGINEER 48 HOURS PRIOR TO MANDRELING.
13. INSTALL PERMEABLE MATERIAL UNDER PULL BOXES CONSISTING OF CRUSHED STONE, FREE FROM ORGANIC MATERIAL, CLAY BALLS, OR OTHER DELETERIOUS MATERIAL.
14. CONTRACTOR MAY USE A TRAFFIC RATED PULL BOX IN LIEU OF CAST-IN-PLACE CONCRETE.
15. WHERE CROSSING UNDER TRACK, TOP OF DUCT BANKS SHALL BE 3.5' MINIMUM BELOW TOP OF TIE UNLESS OTHERWISE INDICATED.
16. TRANSITION FROM PULL BOX ENTRANCE TO NORMAL DEPTH AS SHOWN ON DUCT BANK SECTIONS SHALL BE MADE WITH LONG CONDUIT SWEEPS.
17. MINIMUM DIMENSIONS DO NOT APPLY AT CROSSINGS UNDER UTILITY PIPES.
18. SOME eBART BARRIER WALLS HAVE FOOTINGS. SEE DRAWING C-41 FOR BARRIER WALL TYPES.

CONSTRUCTION DETAILS
eBART CONDUIT DETAILS
NO SCALE

C-59

DAVID CORONA	LK	8/9/11	REVISED BY / DATE REVISED
JEFFREY A. HURLEY			CALCULATED-DESIGNED BY / CHECKED BY
JEFFREY A. HURLEY			CONSULTANT FUNCTIONAL SUPERVISOR

STATE OF CALIFORNIA - DEPARTMENT OF TRANSPORTATION
Caltrans

LAST REVISION 8-9-11 | DATE PLOTTED => 30-JAN-2012 TIME PLOTTED => 09:41

Dist	COUNTY	ROUTE	POST MILES TOTAL PROJECT	SHEET No.	TOTAL SHEETS
04	CC	4	27.3/R29.0	106	950

REGISTERED CIVIL ENGINEER 8/9/11 DATE

1-17-12
PLANS APPROVAL DATE

REGISTERED PROFESSIONAL ENGINEER C.P. SMITH No. C47861 Exp. 12/31/11 CIVIL STATE OF CALIFORNIA

THE STATE OF CALIFORNIA OR ITS OFFICERS OR AGENTS SHALL NOT BE RESPONSIBLE FOR THE ACCURACY OR COMPLETENESS OF SCANNED COPIES OF THIS PLAN SHEET.

PGH WONG ENGINEERING, INC
182 2ND STREET, SUITE 500
SAN FRANCISCO, CA 94105

CCTA
2999 OAK ROAD, SUITE 100
WALNUT CREEK, CA 94597

PULLBOX & CONDUIT QUANTITIES

PLAN SHEET	PULL BOX TYPE "E"	RACEWAY SECTION 6 - 4"
	EA	ft
C-51	1	645
C-52	3	985
C-53	3	762
C-54	2	990
C-55	4	926
C-56	4	1331
C-57	2	990
C-58	2	447
TOTAL	21	7076

CONSTRUCTION DETAILS
eBART CONDUIT QUANTITIES

C-60

REVISED BY	LK
DATE REVISED	8/9/11
LYDIA KAN	
DAVID CORONA	
CALCULATED-DESIGNED BY	
CHECKED BY	
CONSULTANT FUNCTIONAL SUPERVISOR	
JEFFREY A. HURLEY	

STATE OF CALIFORNIA - DEPARTMENT OF TRANSPORTATION
Caltrans

LAST REVISION DATE PLOTTED => 30-JAN-2012
TIME PLOTTED => 09:42
8-9-11

Dist	COUNTY	ROUTE	POST MILES TOTAL PROJECT	SHEET No.	TOTAL SHEETS
04	CC	4	27.3/R29.0	107	950

REGISTERED CIVIL ENGINEER 10/31/11 DATE

1-17-12
PLANS APPROVAL DATE

REGISTERED PROFESSIONAL ENGINEER Keith D. Rhodes No. C53587 Exp. 6/30/13 CIVIL STATE OF CALIFORNIA

THE STATE OF CALIFORNIA OR ITS OFFICERS OR AGENTS SHALL NOT BE RESPONSIBLE FOR THE ACCURACY OR COMPLETENESS OF SCANNED COPIES OF THIS PLAN SHEET.

T Y LIN INTERNATIONAL
2010 CROW CANYON PLACE, SUITE 350
SAN RAMON, CA 94583

CCTA
2999 OAK ROAD, SUITE 100
WALNUT CREEK, CA 94597

NOTE:

FOR ACCURATE RIGHT OF WAY DATA, CONTACT RIGHT OF WAY ENGINEERING AT THE DISTRICT OFFICE.

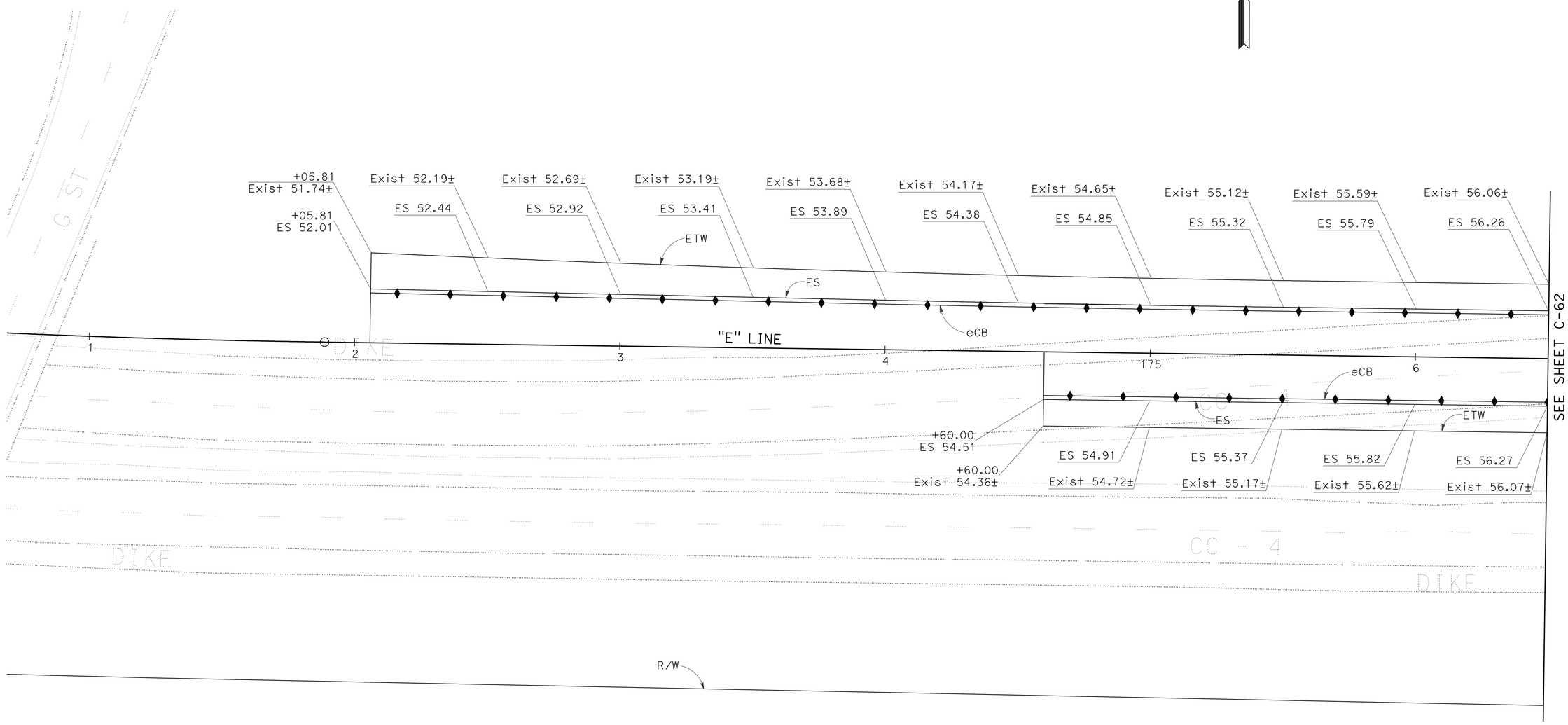

CONSTRUCTION DETAILS

PAVEMENT ELEVATION

SCALE: 1" = 20'

FOR NOTES, ABBREVIATIONS AND LEGEND, SEE SHEET C-1

THIS PLAN ACCURATE FOR PAVEMENT ELEVATION WORK ONLY

C-61

LAST REVISION	10-31-11
DATE PLOTTED =>	19-JAN-2012
TIME PLOTTED =>	07:04

STATE OF CALIFORNIA - DEPARTMENT OF TRANSPORTATION

Caltrans

CONSULTANT FUNCTIONAL SUPERVISOR: KEITH RHODES

CALCULATED-DESIGNED BY: LAURIE LAPACHET

CHECKED BY: KEITH RHODES

REVISED BY: LL

DATE REVISED: 10/31/11

Dist	COUNTY	ROUTE	POST MILES TOTAL PROJECT	SHEET No.	TOTAL SHEETS
04	CC	4	27.3/R29.0	108	950

REGISTERED CIVIL ENGINEER 10/31/11 DATE

1-17-12
PLANS APPROVAL DATE

REGISTERED PROFESSIONAL ENGINEER Keith D. Rhodes No. C53587 Exp. 6/30/13 CIVIL STATE OF CALIFORNIA

THE STATE OF CALIFORNIA OR ITS OFFICERS OR AGENTS SHALL NOT BE RESPONSIBLE FOR THE ACCURACY OR COMPLETENESS OF SCANNED COPIES OF THIS PLAN SHEET.

T Y LIN INTERNATIONAL
2010 CROW CANYON PLACE, SUITE 350
SAN RAMON, CA 94583

CCTA
2999 OAK ROAD, SUITE 100
WALNUT CREEK, CA 94597

NOTE:

FOR ACCURATE RIGHT OF WAY DATA, CONTACT RIGHT OF WAY ENGINEERING AT THE DISTRICT OFFICE.

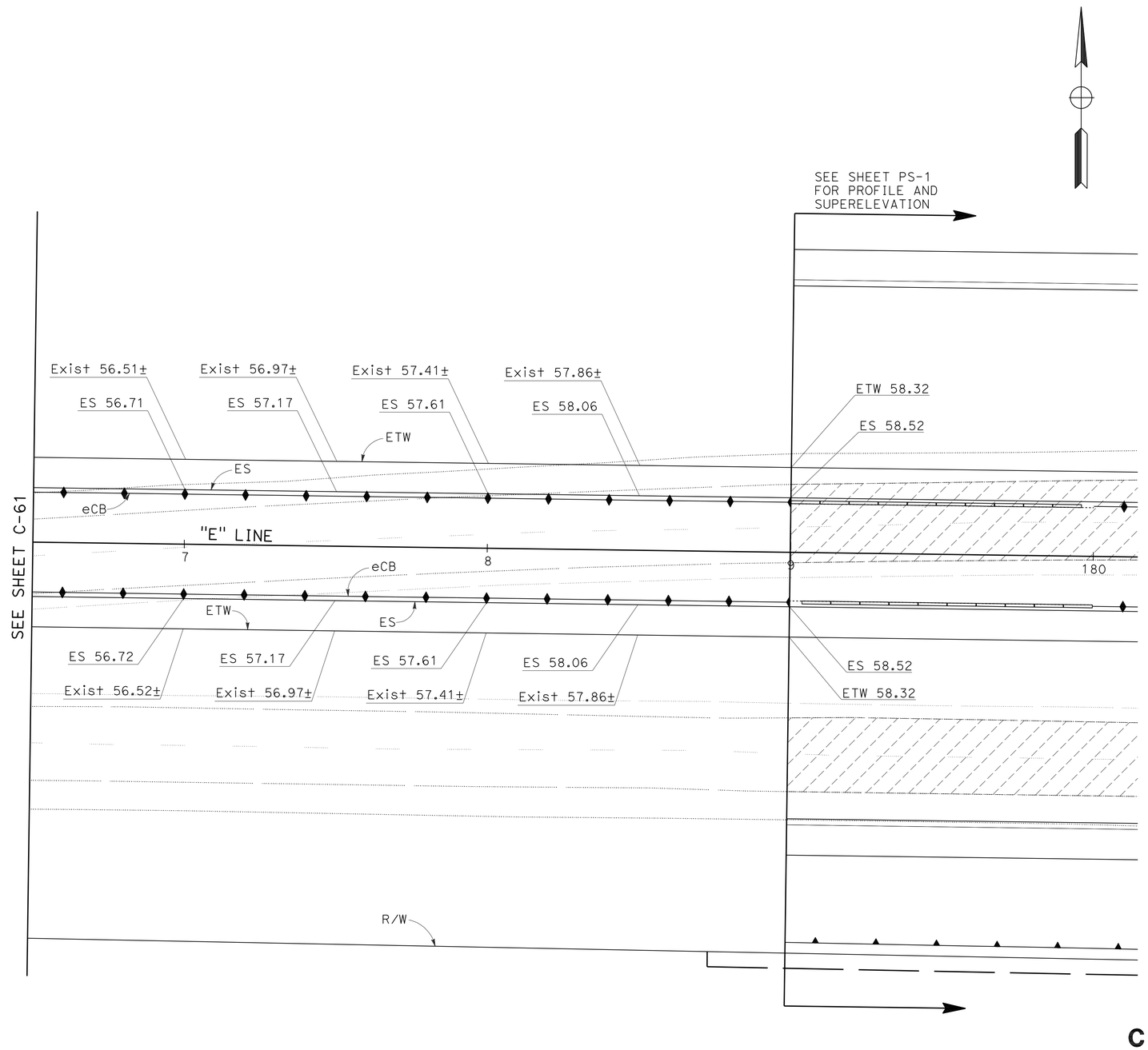

CONSTRUCTION DETAILS

PAVEMENT ELEVATION

SCALE: 1" = 20'

C-62

FOR NOTES, ABBREVIATIONS AND LEGEND, SEE SHEET C-1

THIS PLAN ACCURATE FOR PAVEMENT ELEVATION WORK ONLY

STATE OF CALIFORNIA - DEPARTMENT OF TRANSPORTATION

Caltrans

CONSULTANT FUNCTIONAL SUPERVISOR: KEITH RHODES

CALCULATED-DESIGNED BY: LAURIE LAPACHET

CHECKED BY: KEITH RHODES

REVISED BY: LL

DATE REVISED: 10/31/11

LAST REVISION: 10-31-11

DATE PLOTTED => 19-JAN-2012
TIME PLOTTED => 07:04

Dist	COUNTY	ROUTE	POST MILES TOTAL PROJECT	SHEET No.	TOTAL SHEETS
04	CC	4	27.3/R29.0	109	950

REGISTERED CIVIL ENGINEER 10/31/11 DATE

1-17-12
PLANS APPROVAL DATE

REGISTERED PROFESSIONAL ENGINEER Keith D. Rhodes No. C53587 Exp. 6/30/13 CIVIL STATE OF CALIFORNIA

THE STATE OF CALIFORNIA OR ITS OFFICERS OR AGENTS SHALL NOT BE RESPONSIBLE FOR THE ACCURACY OR COMPLETENESS OF SCANNED COPIES OF THIS PLAN SHEET.

T Y LIN INTERNATIONAL
2010 CROW CANYON PLACE, SUITE 350
SAN RAMON, CA 94583

CCTA
2999 OAK ROAD, SUITE 100
WALNUT CREEK, CA 94597

TEMPORARY WATER POLLUTION CONTROL QUANTITIES

STATION	TEMPORARY DRAINAGE INLET PROTECTION	TEMPORARY SILT FENCE	TEMPORARY CONSTRUCTION ENTRANCE	TEMPORARY COVER	TEMPORARY CONCRETE WASHOUT BIN	MOVE-IN/MOVE-OUT (TEMPORARY EROSION CONTROL)	TEMPORARY HYDRAULIC MULCH (BONDED FIBER MATRIX)
	EA	LF	EA	SQYD	EA	EA	SQYD
"AST" 14+00 TO 22+00	3						
"AST" 15+84 TO 35+41							2232
"AST" 29+50 TO 36+14.79	15						
"AST-1" 497+89 TO 509+35							16173
"AST-2" 698+07 TO 712+64							9089
"AST-3" 889+00 TO 897+49							7639
"AST-4" 989+02 TO 997+13							11155
"AST-4" 992+27 TO 994+65							
"AST-4" 994+65 TO 996+62							
"D" 350+00 TO 355+35							791
"E" 179+00 TO 181+00	7	400					
"E" 179+00 TO 186+45							
"E" 179+00 TO 186+75							
"E" 179+00 TO 243+14							
"E" 179+00 TO 261+39							
"E" 179+00 TO "E" 261+39							98316
"E" 181+00 TO 193+00	30	1794					
"E" 189+56 TO 196+80							
"E" 189+74 TO 196+80							
"E" 193+00 TO 205+00	63	2211					
"E" 198+20 TO 205+34							
"E" 198+20 TO 205+36							
"E" 205+00 TO 219+00	36	3224					
"E" 205+79 TO 210+99							
"E" 207+82 TO 210+99							
"E" 211+09 TO 220+09							
"E" 211+11 TO 220+15							
"E" 219+00 TO 234+00	39	687					
"E" 220+82 TO 225+17							
"E" 221+07 TO 223+03							
"E" 234+00 TO 249+00	33						
"E" 244+57 TO "HCT-6" 347+94							
"E" 249+00 TO 263+00	21	212					
"HCT-6" 345+08 TO 354+59							3889
"HCT-6" 347+94 TO 352+82							
"S" 400+00 TO 406+64							1985
VARIOUS			5	5114	265	14	
TOTAL	247	8528	5	5114	265	14	151269

TEMPORARY WATER POLLUTION CONTROL QUANTITIES

WPCQ-1

STATE OF CALIFORNIA - DEPARTMENT OF TRANSPORTATION
Caltrans

CONSULTANT FUNCTIONAL SUPERVISOR: KEITH RHODES
CALCULATED-DESIGNED BY: VENKATA KANNEKANTI
CHECKED BY: KEITH RHODES
REVISED BY: VK
DATE REVISED: 10/31/11

LAST REVISION 10-31-11 | DATE PLOTTED => 19-JAN-2012 | TIME PLOTTED => 07:04

Dist	COUNTY	ROUTE	POST MILES TOTAL PROJECT	SHEET No.	TOTAL SHEETS
04	CC	4	27.3/R29.0	110	950

REGISTERED CIVIL ENGINEER 10/31/11 DATE

1-17-12
PLANS APPROVAL DATE

REGISTERED PROFESSIONAL ENGINEER Keith D. Rhodes No. C53587 Exp. 6/30/13 CIVIL STATE OF CALIFORNIA

THE STATE OF CALIFORNIA OR ITS OFFICERS OR AGENTS SHALL NOT BE RESPONSIBLE FOR THE ACCURACY OR COMPLETENESS OF SCANNED COPIES OF THIS PLAN SHEET.

T Y LIN INTERNATIONAL
2010 CROW CANYON PLACE, SUITE 350
SAN RAMON, CA 94583

CCTA
2999 OAK ROAD, SUITE 100
WALNUT CREEK, CA 94597

NOTE:

FOR ACCURATE RIGHT OF WAY DATA, CONTACT RIGHT OF WAY ENGINEERING AT THE DISTRICT OFFICE.

LEGEND:

—— FR —— FIBER ROLLS

EROSION CONTROL (HYDROSEED)

NOTE:

THE MAXIMUM SPACING BETWEEN FIBER ROLLS IS 20'. FOR ADDITIONAL FIBER ROLL PLACEMENT DETAILS, SEE CALTRANS STANDARD PLAN RNSP H51.

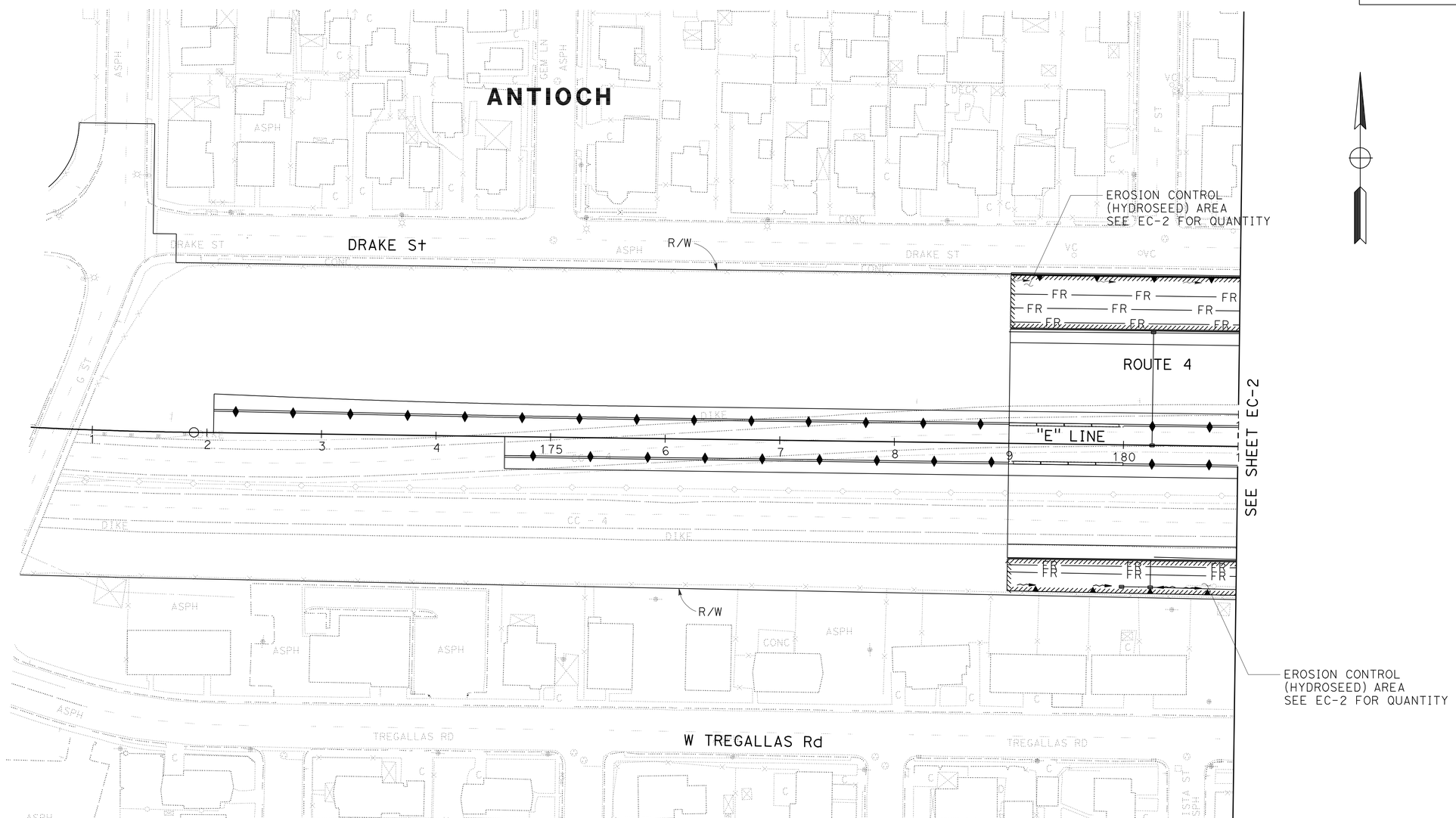

EROSION CONTROL PLAN

SCALE: 1" = 50'

EC-1

THIS PLAN ACCURATE FOR EROSION CONTROL WORK ONLY.

STATE OF CALIFORNIA - DEPARTMENT OF TRANSPORTATION

Caltrans

CONSULTANT FUNCTIONAL SUPERVISOR: KEITH RHODES

CALCULATED-DESIGNED BY: VENKATA KANNEKANTI

CHECKED BY: KEITH RHODES

REVISED BY: VK

DATE REVISED: 10/31/11

LAST REVISION 10-31-11 | DATE PLOTTED => 19-JAN-2012 | TIME PLOTTED => 08:50

BORDER LAST REVISED 7/2/2010

USERNAME => s113946
DGN FILE => 0400021080ge001.dgn

RELATIVE BORDER SCALE IS IN INCHES 0 1 2 3

UNIT 4275

PROJECT NUMBER & PHASE 04000210801

Dist	COUNTY	ROUTE	POST MILES TOTAL PROJECT	SHEET No.	TOTAL SHEETS
04	CC	4	27.3/R29.0	111	950

REGISTERED CIVIL ENGINEER 10/31/11 DATE

1-17-12
PLANS APPROVAL DATE

REGISTERED PROFESSIONAL ENGINEER Keith D. Rhodes No. C53587 Exp. 6/30/13 CIVIL STATE OF CALIFORNIA

THE STATE OF CALIFORNIA OR ITS OFFICERS OR AGENTS SHALL NOT BE RESPONSIBLE FOR THE ACCURACY OR COMPLETENESS OF SCANNED COPIES OF THIS PLAN SHEET.

T Y LIN INTERNATIONAL
2010 CROW CANYON PLACE, SUITE 350
SAN RAMON, CA 94583

CCTA
2999 OAK ROAD, SUITE 100
WALNUT CREEK, CA 94597

NOTE:

FOR ACCURATE RIGHT OF WAY DATA, CONTACT RIGHT OF WAY ENGINEERING AT THE DISTRICT OFFICE.

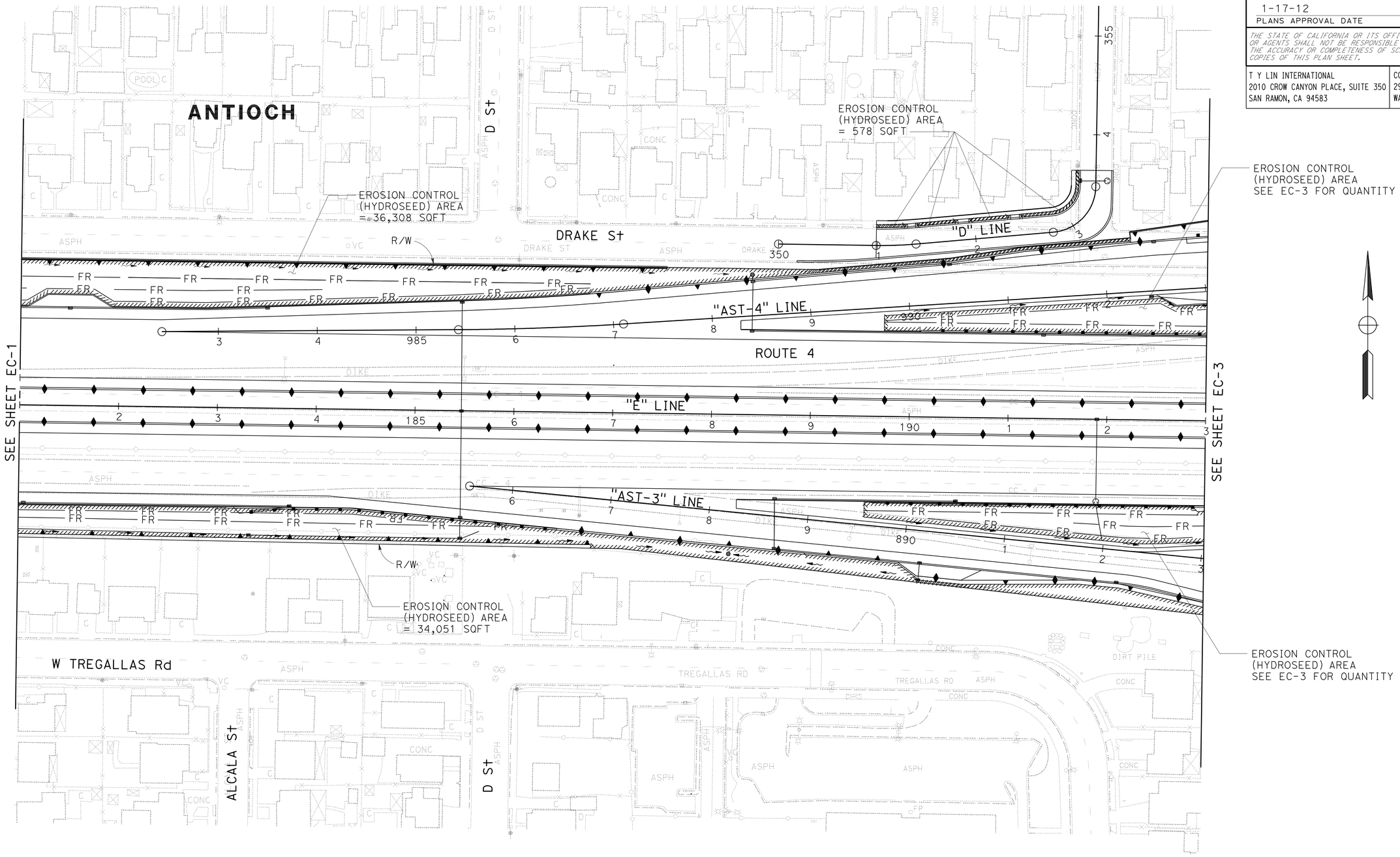

EROSION CONTROL PLAN

SCALE: 1" = 50'

EC-2

FOR NOTES, ABBREVIATIONS AND LEGEND, SEE SHEET EC-1

THIS PLAN ACCURATE FOR EROSION CONTROL WORK ONLY.

VENKATA KANNEKANTI	VK	10/31/11	
KEITH RHODES			
CALCULATED-DESIGNED BY	REVISED BY	DATE REVISED	
CHECKED BY			
CONSULTANT FUNCTIONAL SUPERVISOR			
KEITH RHODES			

STATE OF CALIFORNIA - DEPARTMENT OF TRANSPORTATION

Caltrans

LAST REVISION 10-31-11 | DATE PLOTTED => 19-JAN-2012 | TIME PLOTTED => 08:50

Dist	COUNTY	ROUTE	POST MILES TOTAL PROJECT	SHEET No.	TOTAL SHEETS
04	CC	4	27.3/R29.0	112	950

REGISTERED CIVIL ENGINEER 10/31/11 DATE

1-17-12
PLANS APPROVAL DATE

REGISTERED PROFESSIONAL ENGINEER Keith D. Rhodes No. C53587 Exp. 6/30/13 CIVIL STATE OF CALIFORNIA

THE STATE OF CALIFORNIA OR ITS OFFICERS OR AGENTS SHALL NOT BE RESPONSIBLE FOR THE ACCURACY OR COMPLETENESS OF SCANNED COPIES OF THIS PLAN SHEET.

T Y LIN INTERNATIONAL
2010 CROW CANYON PLACE, SUITE 350
SAN RAMON, CA 94583

CCTA
2999 OAK ROAD, SUITE 100
WALNUT CREEK, CA 94597

NOTE:

FOR ACCURATE RIGHT OF WAY DATA, CONTACT RIGHT OF WAY ENGINEERING AT THE DISTRICT OFFICE.

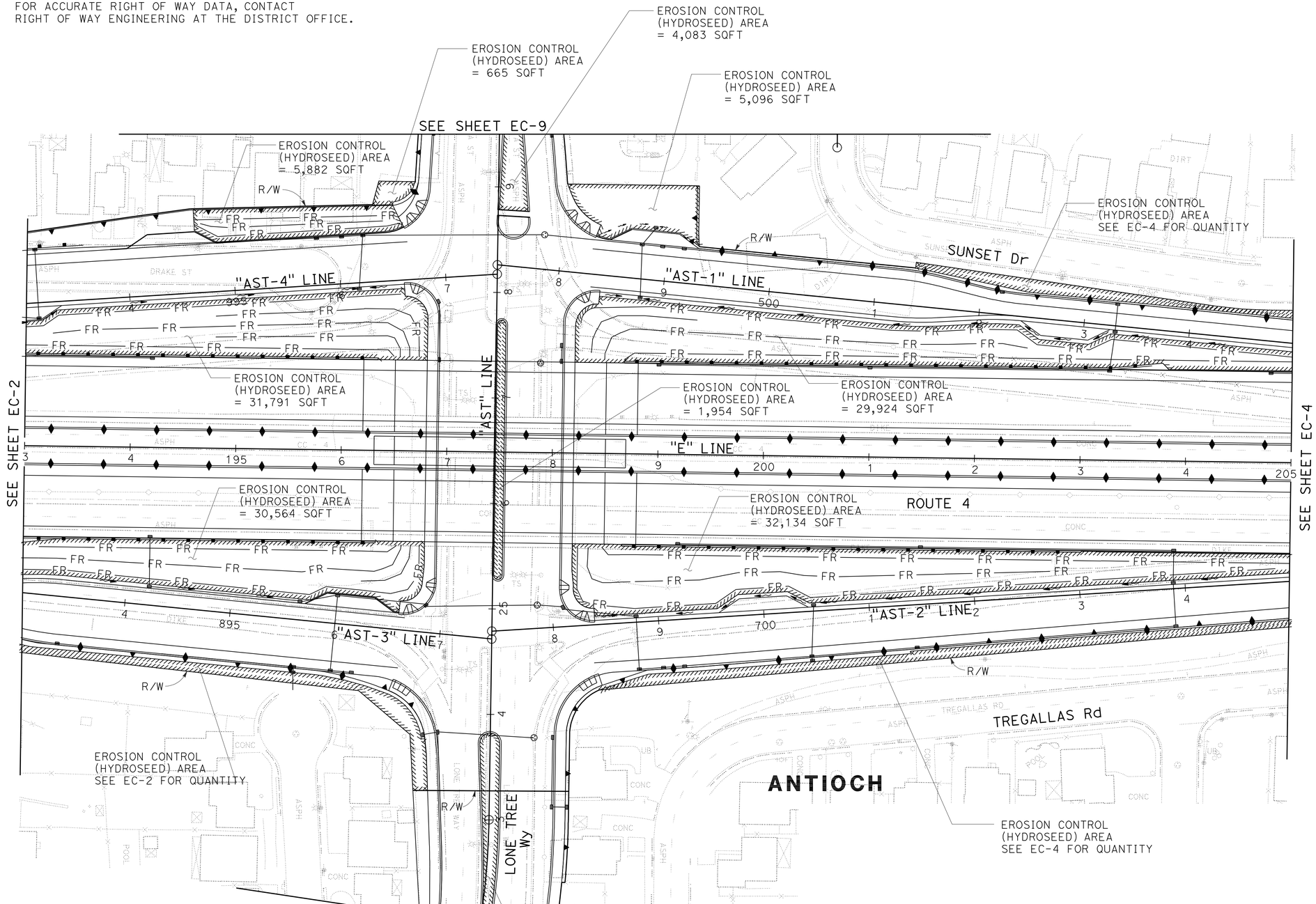

EROSION CONTROL PLAN

SCALE: 1" = 50'

EC-3

FOR NOTES, ABBREVIATIONS AND LEGEND, SEE SHEET EC-1

THIS PLAN ACCURATE FOR EROSION CONTROL WORK ONLY.

REVISED BY	DATE REVISED
VK	10/31/11

VENKATA KANNEKANTI — CALCULATED-DESIGNED BY
KEITH RHODES — CHECKED BY
KEITH RHODES — CONSULTANT FUNCTIONAL SUPERVISOR

STATE OF CALIFORNIA - DEPARTMENT OF TRANSPORTATION
Caltrans

LAST REVISION 10-31-11 | DATE PLOTTED => 19-JAN-2012 | TIME PLOTTED => 08:50

Dist	COUNTY	ROUTE	POST MILES TOTAL PROJECT	SHEET No.	TOTAL SHEETS
04	CC	4	27.3/R29.0	113	950

REGISTERED CIVIL ENGINEER 10/31/11 DATE

1-17-12
PLANS APPROVAL DATE

REGISTERED PROFESSIONAL ENGINEER Keith D. Rhodes No. C53587 Exp. 6/30/13 CIVIL STATE OF CALIFORNIA

THE STATE OF CALIFORNIA OR ITS OFFICERS OR AGENTS SHALL NOT BE RESPONSIBLE FOR THE ACCURACY OR COMPLETENESS OF SCANNED COPIES OF THIS PLAN SHEET.

T Y LIN INTERNATIONAL
2010 CROW CANYON PLACE, SUITE 350
SAN RAMON, CA 94583

CCTA
2999 OAK ROAD, SUITE 100
WALNUT CREEK, CA 94597

NOTE:

FOR ACCURATE RIGHT OF WAY DATA, CONTACT RIGHT OF WAY ENGINEERING AT THE DISTRICT OFFICE.

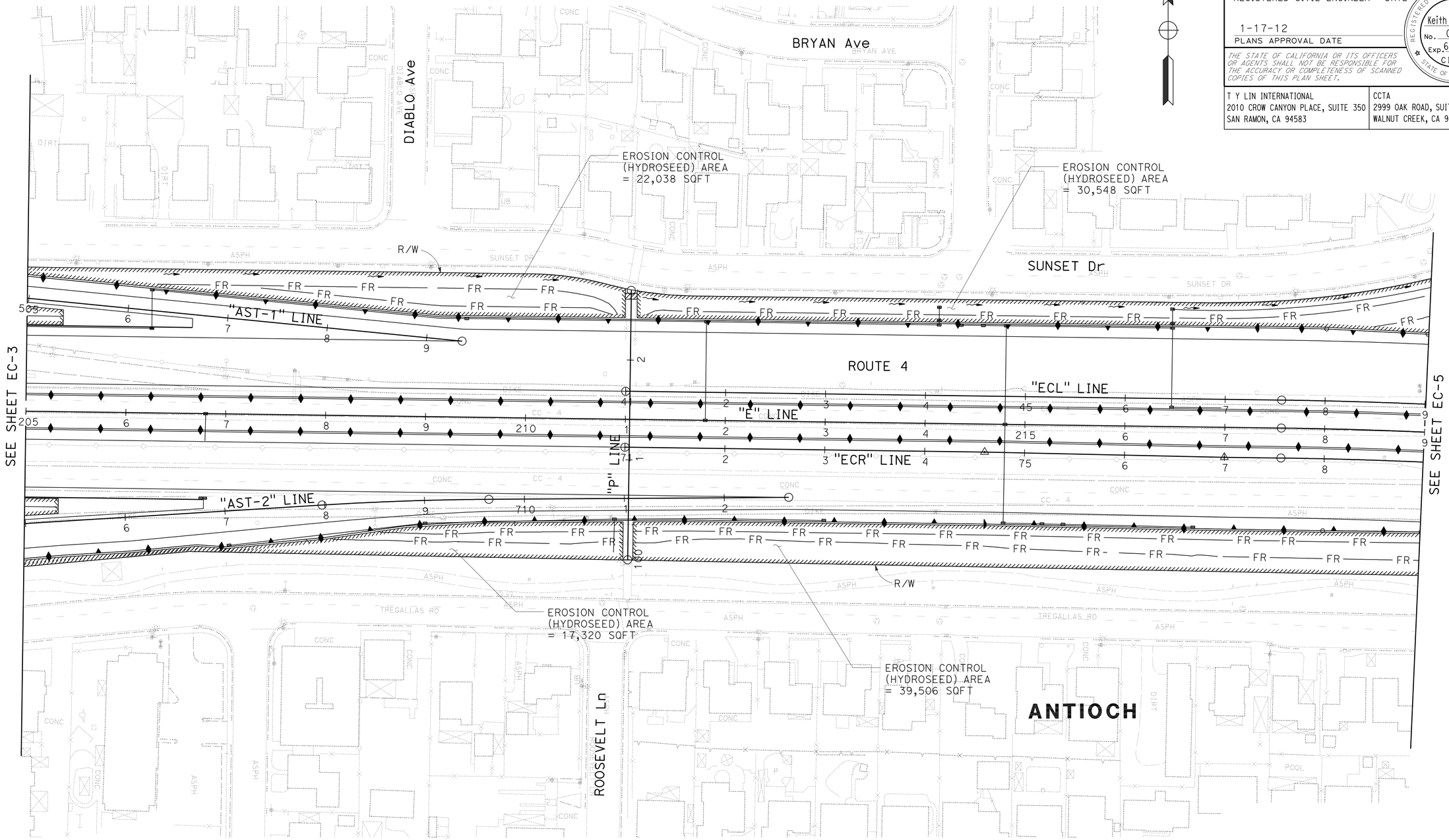

EROSION CONTROL PLAN

SCALE: 1" = 50'

EC-4

FOR NOTES, ABBREVIATIONS AND LEGEND, SEE SHEET EC-1

THIS PLAN ACCURATE FOR EROSION CONTROL WORK ONLY.

STATE OF CALIFORNIA - DEPARTMENT OF TRANSPORTATION

Caltrans

CONSULTANT FUNCTIONAL SUPERVISOR: KEITH RHODES

CALCULATED-DESIGNED BY: VENKATA KANNEKANTI

CHECKED BY: KEITH RHODES

REVISED BY: VK

DATE REVISED: 10/31/11

LAST REVISION 10-31-11 | DATE PLOTTED => 19-JAN-2012 | TIME PLOTTED => 08:50

Dist	COUNTY	ROUTE	POST MILES TOTAL PROJECT	SHEET No.	TOTAL SHEETS
04	CC	4	27.3/R29.0	114	950

REGISTERED CIVIL ENGINEER 10/31/11 DATE

1-17-12
PLANS APPROVAL DATE

REGISTERED PROFESSIONAL ENGINEER Keith D. Rhodes No. C53587 Exp. 6/30/13 CIVIL STATE OF CALIFORNIA

THE STATE OF CALIFORNIA OR ITS OFFICERS OR AGENTS SHALL NOT BE RESPONSIBLE FOR THE ACCURACY OR COMPLETENESS OF SCANNED COPIES OF THIS PLAN SHEET.

T Y LIN INTERNATIONAL
2010 CROW CANYON PLACE, SUITE 350
SAN RAMON, CA 94583

CCTA
2999 OAK ROAD, SUITE 100
WALNUT CREEK, CA 94597

NOTE:

FOR ACCURATE RIGHT OF WAY DATA, CONTACT RIGHT OF WAY ENGINEERING AT THE DISTRICT OFFICE.

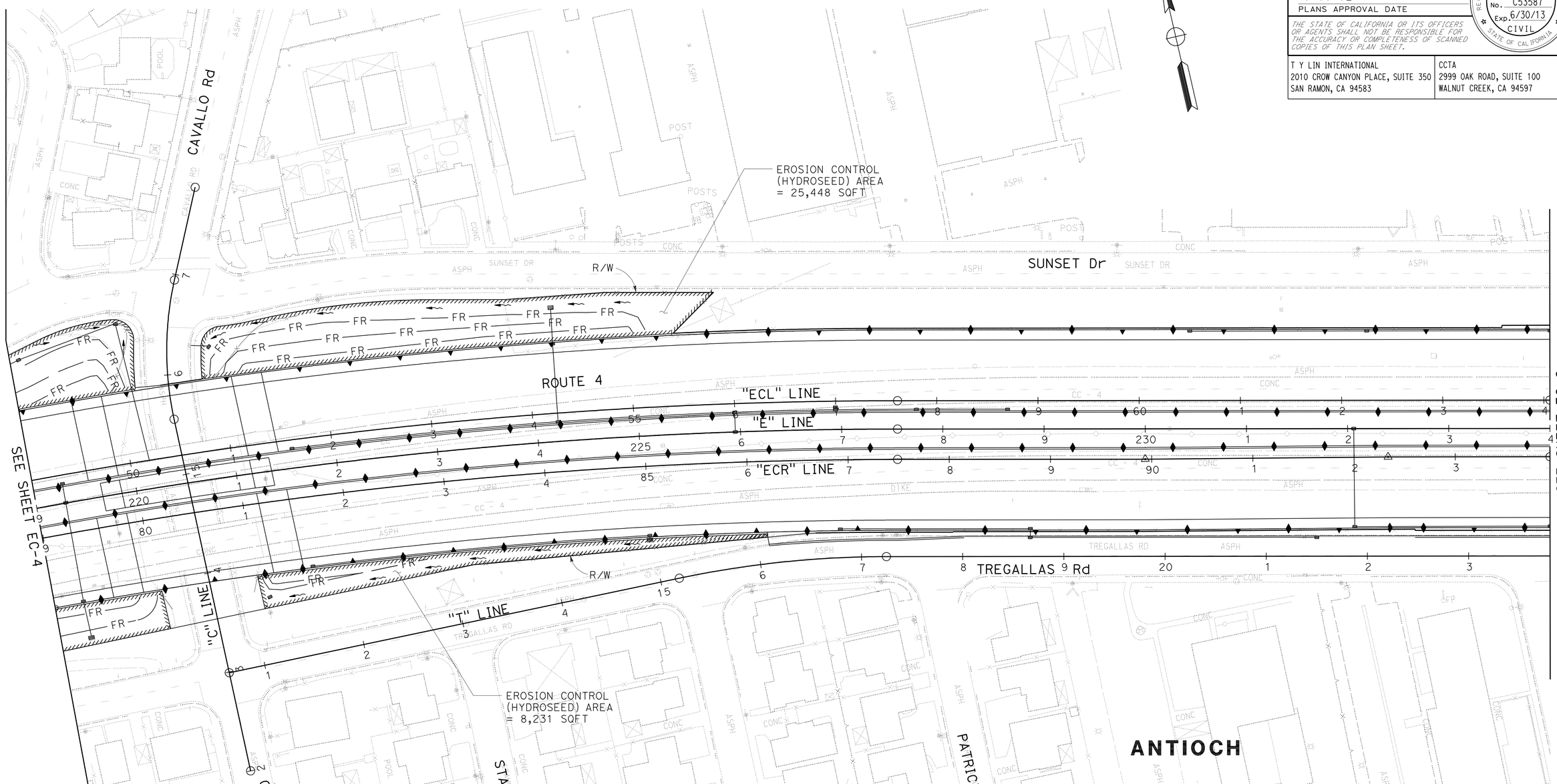

EROSION CONTROL PLAN

SCALE: 1" = 50'

EC-5

FOR NOTES, ABBREVIATIONS AND LEGEND, SEE SHEET EC-1

THIS PLAN ACCURATE FOR EROSION CONTROL WORK ONLY.

STATE OF CALIFORNIA - DEPARTMENT OF TRANSPORTATION

Caltrans

CONSULTANT FUNCTIONAL SUPERVISOR: KEITH RHODES

CALCULATED-DESIGNED BY: VENKATA KANNEKANTI

CHECKED BY: KEITH RHODES

REVISED BY: VK

DATE REVISED: 10/31/11

LAST REVISION: 10-31-11

DATE PLOTTED => 19-JAN-2012
TIME PLOTTED => 08:50

Dist	COUNTY	ROUTE	POST MILES TOTAL PROJECT	SHEET No.	TOTAL SHEETS
04	CC	4	27.3/R29.0	115	950

REGISTERED CIVIL ENGINEER 10/31/11 DATE

1-17-12
PLANS APPROVAL DATE

REGISTERED PROFESSIONAL ENGINEER Keith D. Rhodes No. C53587 Exp. 6/30/13 CIVIL STATE OF CALIFORNIA

THE STATE OF CALIFORNIA OR ITS OFFICERS OR AGENTS SHALL NOT BE RESPONSIBLE FOR THE ACCURACY OR COMPLETENESS OF SCANNED COPIES OF THIS PLAN SHEET.

T Y LIN INTERNATIONAL
2010 CROW CANYON PLACE, SUITE 350
SAN RAMON, CA 94583

CCTA
2999 OAK ROAD, SUITE 100
WALNUT CREEK, CA 94597

NOTE:

FOR ACCURATE RIGHT OF WAY DATA, CONTACT RIGHT OF WAY ENGINEERING AT THE DISTRICT OFFICE.

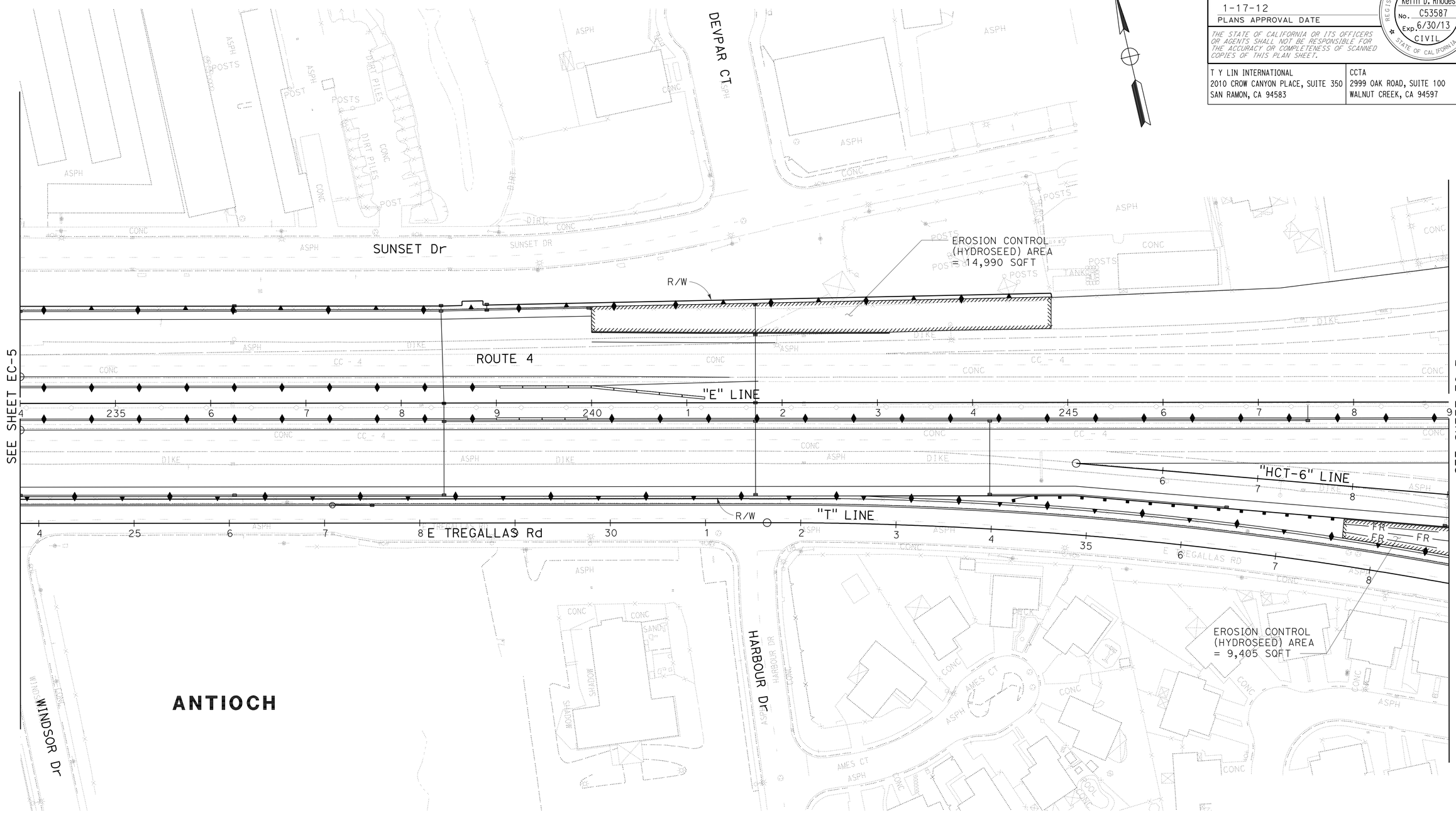

EROSION CONTROL PLAN

SCALE: 1" = 50'

FOR NOTES, ABBREVIATIONS AND LEGEND, SEE SHEET EC-1

THIS PLAN ACCURATE FOR EROSION CONTROL WORK ONLY.

EC-6

VENKATA KANNEKANTI	VK
KEITH RHODES	10/31/11
KEITH RHODES	

REVISED BY / DATE REVISED
CALCULATED-DESIGNED BY / CHECKED BY
CONSULTANT FUNCTIONAL SUPERVISOR

STATE OF CALIFORNIA - DEPARTMENT OF TRANSPORTATION
Caltrans

LAST REVISION 10-31-11 | DATE PLOTTED => 19-JAN-2012 | TIME PLOTTED => 08:51

Dist	COUNTY	ROUTE	POST MILES TOTAL PROJECT	SHEET No.	TOTAL SHEETS
04	CC	4	27.3/R29.0	116	950

REGISTERED CIVIL ENGINEER 10/31/11 DATE

1-17-12
PLANS APPROVAL DATE

REGISTERED PROFESSIONAL ENGINEER Keith D. Rhodes No. C53587 Exp. 6/30/13 CIVIL STATE OF CALIFORNIA

THE STATE OF CALIFORNIA OR ITS OFFICERS OR AGENTS SHALL NOT BE RESPONSIBLE FOR THE ACCURACY OR COMPLETENESS OF SCANNED COPIES OF THIS PLAN SHEET.

T Y LIN INTERNATIONAL
2010 CROW CANYON PLACE, SUITE 350
SAN RAMON, CA 94583

CCTA
2999 OAK ROAD, SUITE 100
WALNUT CREEK, CA 94597

NOTE:

FOR ACCURATE RIGHT OF WAY DATA, CONTACT
RIGHT OF WAY ENGINEERING AT THE DISTRICT OFFICE.

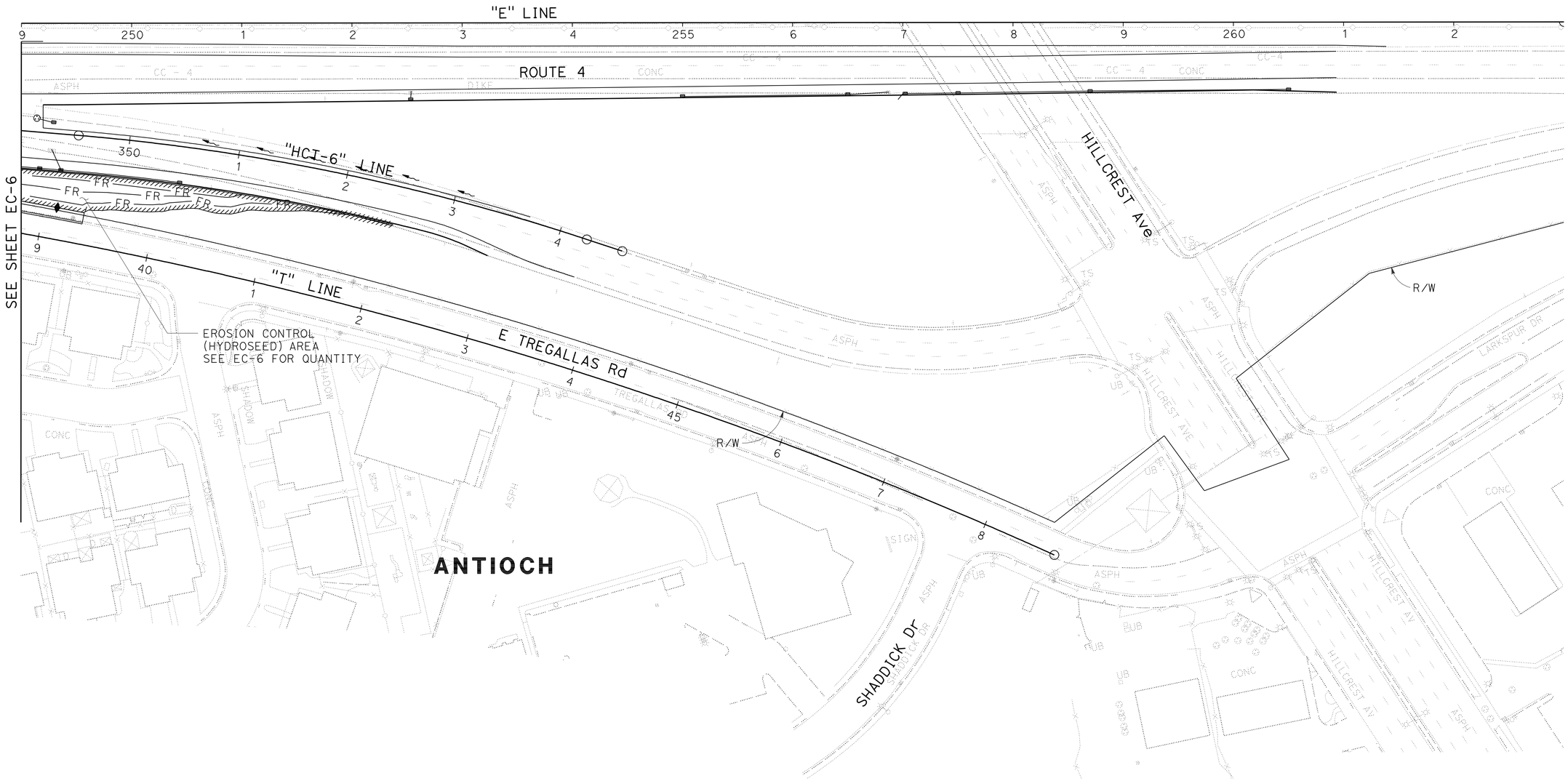

THIS PLAN ACCURATE FOR EROSION CONTROL WORK ONLY.

FOR NOTES, ABBREVIATIONS AND LEGEND, SEE SHEET EC-1

EROSION CONTROL PLAN

SCALE: 1" = 50'

EC-7

STATE OF CALIFORNIA - DEPARTMENT OF TRANSPORTATION

Caltrans

CONSULTANT FUNCTIONAL SUPERVISOR: KEITH RHODES

CALCULATED-DESIGNED BY: VENKATA KANNEKANTI

CHECKED BY: KEITH RHODES

REVISED BY: VK

DATE REVISED: 10/31/11

LAST REVISION: 10-31-11

DATE PLOTTED => 19-JAN-2012
TIME PLOTTED => 08:51

Dist	COUNTY	ROUTE	POST MILES TOTAL PROJECT	SHEET No.	TOTAL SHEETS
04	CC	4	27.3/R29.0	117	950

REGISTERED CIVIL ENGINEER 10/31/11 DATE

1-17-12
PLANS APPROVAL DATE

REGISTERED PROFESSIONAL ENGINEER Keith D. Rhodes No. C53587 Exp. 6/30/13 CIVIL STATE OF CALIFORNIA

THE STATE OF CALIFORNIA OR ITS OFFICERS OR AGENTS SHALL NOT BE RESPONSIBLE FOR THE ACCURACY OR COMPLETENESS OF SCANNED COPIES OF THIS PLAN SHEET.

T Y LIN INTERNATIONAL
2010 CROW CANYON PLACE, SUITE 350
SAN RAMON, CA 94583

CCTA
2999 OAK ROAD, SUITE 100
WALNUT CREEK, CA 94597

NOTE:

FOR ACCURATE RIGHT OF WAY DATA, CONTACT RIGHT OF WAY ENGINEERING AT THE DISTRICT OFFICE.

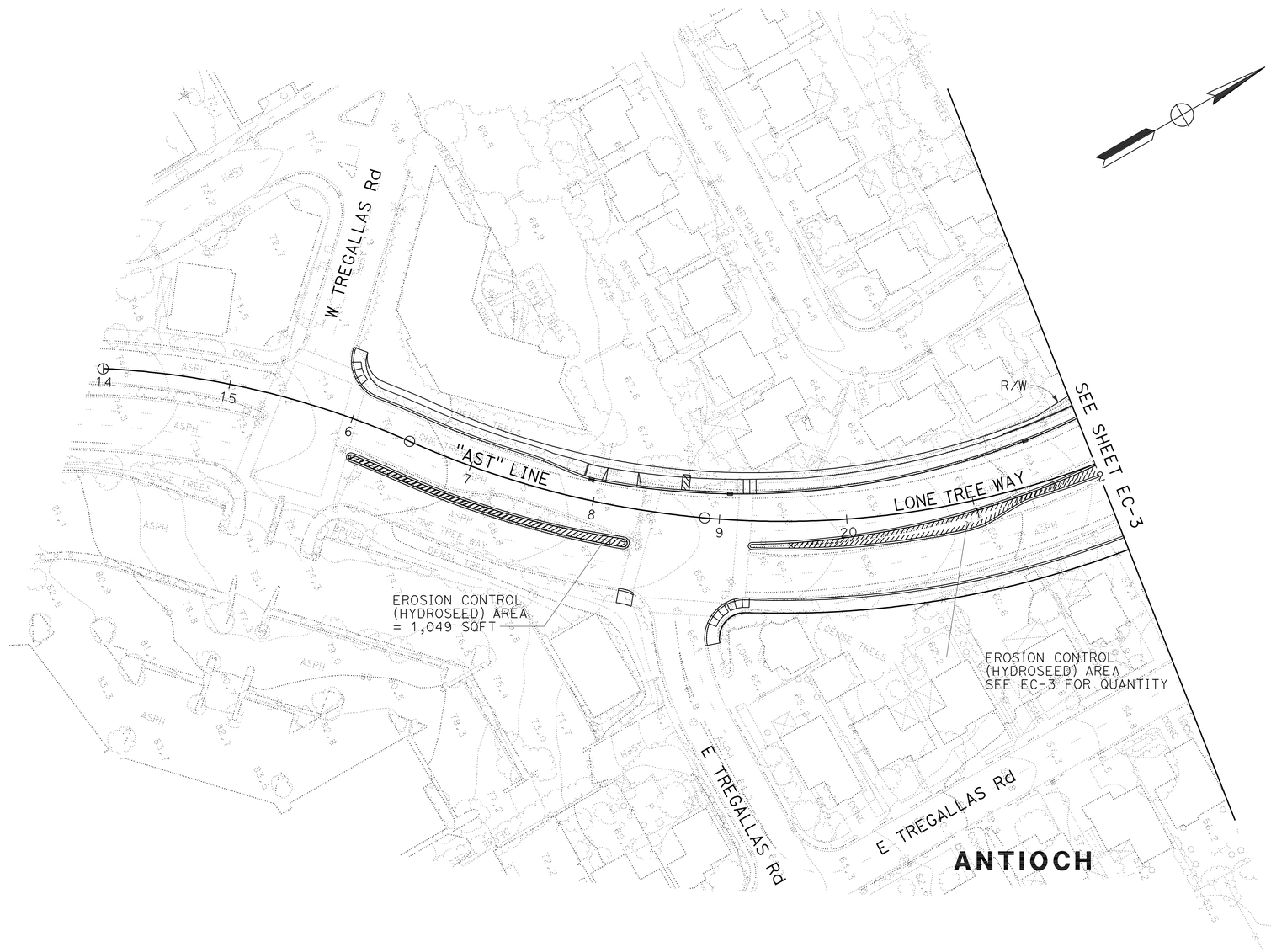

THIS PLAN ACCURATE FOR EROSION CONTROL WORK ONLY.

FOR NOTES, ABBREVIATIONS AND LEGEND, SEE SHEET EC-1

EROSION CONTROL PLAN

SCALE: 1" = 50'

EC-8

PM	10/31/11	PRASANNA MUTHIREDDY	STATE OF CALIFORNIA - DEPARTMENT OF TRANSPORTATION
REVISED BY	DATE REVISED	KEITH RHODES	Caltrans
CALCULATED-DESIGNED BY	CHECKED BY	CONSULTANT FUNCTIONAL SUPERVISOR	KEITH RHODES

LAST REVISION 10-31-11 | DATE PLOTTED => 19-JAN-2012 | TIME PLOTTED => 08:51

Dist	COUNTY	ROUTE	POST MILES TOTAL PROJECT	SHEET No.	TOTAL SHEETS
04	CC	4	27.3/R29.0	118	950

REGISTERED CIVIL ENGINEER 8/9/11 DATE

1-17-12
PLANS APPROVAL DATE

REGISTERED PROFESSIONAL ENGINEER Keith D. Rhodes No. C53587 Exp. 6/30/13 CIVIL STATE OF CALIFORNIA

THE STATE OF CALIFORNIA OR ITS OFFICERS OR AGENTS SHALL NOT BE RESPONSIBLE FOR THE ACCURACY OR COMPLETENESS OF SCANNED COPIES OF THIS PLAN SHEET.

T Y LIN INTERNATIONAL
2010 CROW CANYON PLACE, SUITE 350
SAN RAMON, CA 94583

CCTA
2999 OAK ROAD, SUITE 100
WALNUT CREEK, CA 94597

NOTE:

FOR ACCURATE RIGHT OF WAY DATA, CONTACT RIGHT OF WAY ENGINEERING AT THE DISTRICT OFFICE.

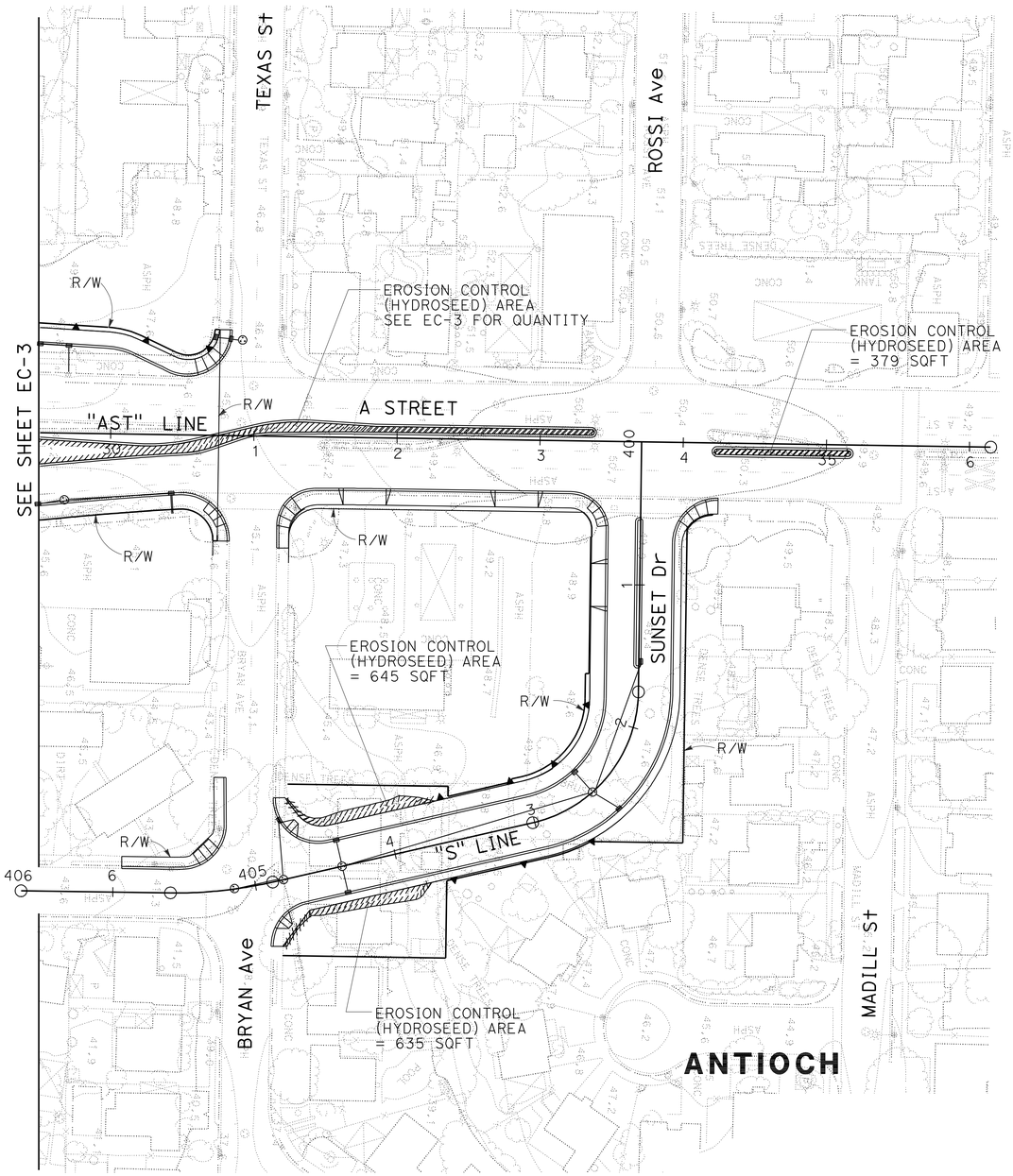

EROSION CONTROL PLAN

SCALE: 1" = 50'

EC-9

FOR NOTES, ABBREVIATIONS AND LEGEND, SEE SHEET EC-1

THIS PLAN ACCURATE FOR EROSION CONTROL WORK ONLY.

STATE OF CALIFORNIA - DEPARTMENT OF TRANSPORTATION

Caltrans

CONSULTANT FUNCTIONAL SUPERVISOR: KEITH RHODES

CALCULATED-DESIGNED BY: PRASANNA MUTHIREDDY

CHECKED BY: KEITH RHODES

REVISED BY: PM

DATE REVISED: 8/9/11

LAST REVISION 10-31-11

DATE PLOTTED => 19-JAN-2012
TIME PLOTTED => 08:51

Dist	COUNTY	ROUTE	POST MILES TOTAL PROJECT	SHEET No.	TOTAL SHEETS
04	CC	4	27.3/R29.0	119	950

REGISTERED CIVIL ENGINEER 10/31/11 DATE

1-17-12
PLANS APPROVAL DATE

REGISTERED PROFESSIONAL ENGINEER Keith D. Rhodes No. C53587 Exp. 6/30/13 CIVIL STATE OF CALIFORNIA

THE STATE OF CALIFORNIA OR ITS OFFICERS OR AGENTS SHALL NOT BE RESPONSIBLE FOR THE ACCURACY OR COMPLETENESS OF SCANNED COPIES OF THIS PLAN SHEET.

T Y LIN INTERNATIONAL
2010 CROW CANYON PLACE, SUITE 350
SAN RAMON, CA 94583

CCTA
2999 OAK ROAD, SUITE 100
WALNUT CREEK, CA 94597

EROSION CONTROL QUANTITIES

SHEET No.	STATION	LOCATION	FIBER ROLL	EROSION CONTROL (HYDROSEED)	MOVE-IN/MOVE-OUT (EROSION CONTROL)
			LF	SQFT	EA
EC-1 TO 2	"E" 179+00 TO 186+75	L†	1975		
EC-1 TO 2	"E" 179+00 TO 192+21	L†		36308	
EC-1 TO 2	"E" 179+00 TO 186+45	R†	1324		
EC-1 TO 3	"E" 179+00 TO AST 23+27	R†		34051	
EC-2	"D" 350+98.89 TO 353+63.88	L†		578	
EC-2 TO 3	"E" 189+74 TO 196+80	L†	2143	31791	
EC-2 TO 3	"E" 189+56 TO 196+80	R†	1965	30564	
EC-3	"AST-4" 994+65 TO 996+61.53	L†	572	5882	
EC-3	"AST" 28+81.40 TO 29+03.84	L†		665	
EC-3	"AST" 28+46.58 TO 29+03.78	R†		5096	
EC-3	"AST" 25+27.91 TO 27+73.85	L† & R†		1954	
EC-3 TO 4	"E" 198+20 TO 205+34	R†	1874	32134	
EC-3 TO 4	"E" 198+20 TO 205+36	L†	2004	29924	
EC-3 TO 4	"AST-2" 698+39.47 TO "E" 210+99	R†		17320	
EC-3 TO 4	"AST-1" 501+35.88 TO "E" 210+99	L†		22038	
EC-3 TO 8	"AST" 19+24.88 TO 23+82.42	L† & R†		4439	
EC-3 TO 9	"AST" 28+77.54 TO 33+39.28	L† & R†		4083	
EC-4	"E" 207+82 TO 210+99	R†	543		
EC-4	"E" 211+09 TO 220+09	R†	1777	39506	
EC-4	"E" 211+11 TO 220+15	L†	1192	30548	
EC-4	"E" 205+79 TO 210+99	L†	830		
EC-5	"E" 220+82 TO 225+17	L†	1195		
EC-5	"E" 220+82 TO 225+78.85	L†		25448	
EC-5	"E" 221+07 TO 223+03	R†	275		
EC-5	"E" 221+07 TO 226+24	R†		8231	
EC-6	"E" 240+00 TO 244+83	L†		14990	
EC-6 TO 7	"HCT-6" 347+94 TO 352+82	R†	895	9405	
EC-8	"AST" 16+07.44 TO 18+31.79	R†		1049	
EC-9	"AST" 34+21.81 TO 35+17.30	R†		379	
EC-9	"S" 403+65.08 TO 404+65+60	R†		645	
EC-9	"S" 403+65.08 TO 404+65+60	R†		635	
EC-1 TO 9	VARIOUS				12
TOTAL			18564	387,663	12

EROSION CONTROL QUANTITIES
ECQ-1

STATE OF CALIFORNIA - DEPARTMENT OF TRANSPORTATION
Caltrans

CONSULTANT FUNCTIONAL SUPERVISOR: KEITH RHODES
CALCULATED-DESIGNED BY: VENKATA KANNEKANTI
CHECKED BY: KEITH RHODES
REVISED BY: VK
DATE REVISED: 10/31/11

LAST REVISION: DATE PLOTTED => 19-JAN-2012 TIME PLOTTED => 08:51
10-31-11

Dist	COUNTY	ROUTE	POST MILES TOTAL PROJECT	SHEET No.	TOTAL SHEETS
04	CC	4	27.3/R29.0	120	950

REGISTERED CIVIL ENGINEER 10/31/11 DATE

1-17-12
PLANS APPROVAL DATE

REGISTERED PROFESSIONAL ENGINEER Keith D. Rhodes No. C53587 Exp. 6/30/13 CIVIL STATE OF CALIFORNIA

THE STATE OF CALIFORNIA OR ITS OFFICERS OR AGENTS SHALL NOT BE RESPONSIBLE FOR THE ACCURACY OR COMPLETENESS OF SCANNED COPIES OF THIS PLAN SHEET.

T Y LIN INTERNATIONAL
2010 CROW CANYON PLACE, SUITE 350
SAN RAMON, CA 94583

CCTA
2999 OAK ROAD, SUITE 100
WALNUT CREEK, CA 94597

NOTE:

FOR ACCURATE RIGHT OF WAY DATA, CONTACT
RIGHT OF WAY ENGINEERING AT THE DISTRICT OFFICE.

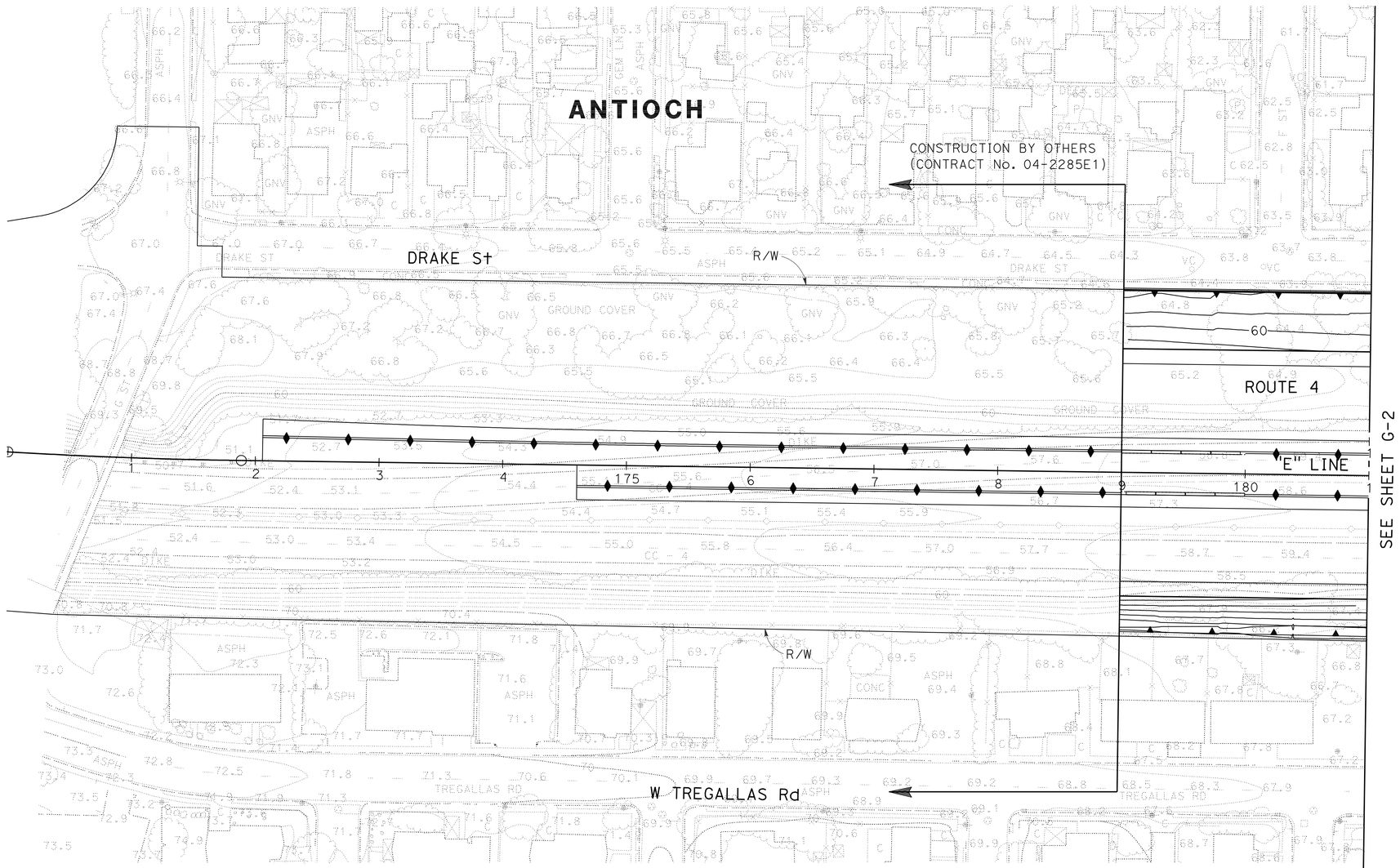

CONTOUR GRADING

SCALE: 1" = 50'

G-1

THIS PLAN ACCURATE FOR CONTOUR GRADING WORK ONLY

STATE OF CALIFORNIA - DEPARTMENT OF TRANSPORTATION
Caltrans

CONSULTANT FUNCTIONAL SUPERVISOR: KEITH RHODES
CALCULATED-DESIGNED BY: PRASANNA MUTHIREDDY
CHECKED BY: KEITH RHODES
REVISED BY: PM
DATE REVISED: 10/31/11

LAST REVISION 10-31-11
DATE PLOTTED => 19-JAN-2012
TIME PLOTTED => 06:18

Dist	COUNTY	ROUTE	POST MILES TOTAL PROJECT	SHEET No.	TOTAL SHEETS
04	CC	4	27.3/R29.0	121	950

REGISTERED CIVIL ENGINEER 10/31/11 DATE

1-17-12
PLANS APPROVAL DATE

REGISTERED PROFESSIONAL ENGINEER
Keith D. Rhodes
No. C53587
Exp. 6/30/13
CIVIL
STATE OF CALIFORNIA

THE STATE OF CALIFORNIA OR ITS OFFICERS OR AGENTS SHALL NOT BE RESPONSIBLE FOR THE ACCURACY OR COMPLETENESS OF SCANNED COPIES OF THIS PLAN SHEET.

T Y LIN INTERNATIONAL
2010 CROW CANYON PLACE, SUITE 350
SAN RAMON, CA 94583

CCTA
2999 OAK ROAD, SUITE 100
WALNUT CREEK, CA 94597

NOTE:

FOR ACCURATE RIGHT OF WAY DATA, CONTACT RIGHT OF WAY ENGINEERING AT THE DISTRICT OFFICE.

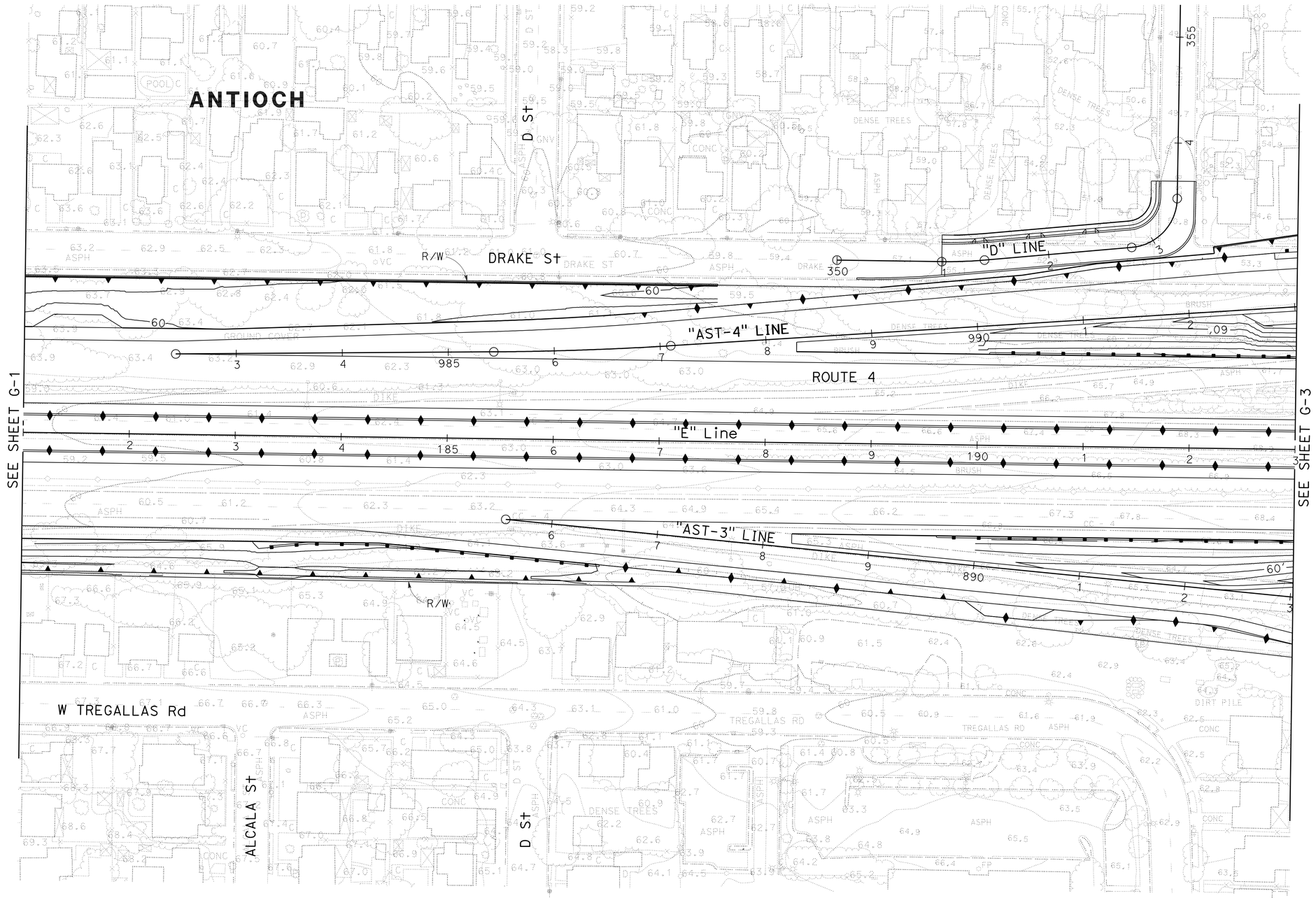

CONTOUR GRADING

SCALE: 1" = 50'

G-2

THIS PLAN ACCURATE FOR CONTOUR GRADING WORK ONLY

STATE OF CALIFORNIA - DEPARTMENT OF TRANSPORTATION
Caltrans

CONSULTANT FUNCTIONAL SUPERVISOR: KEITH RHODES
CALCULATED-DESIGNED BY: PRASANNA MUTHIREDDY
CHECKED BY: KEITH RHODES
REVISED BY: PM
DATE REVISED: 10/31/11

LAST REVISION 10-31-11
DATE PLOTTED => 19-JAN-2012
TIME PLOTTED => 06:18

Dist	COUNTY	ROUTE	POST MILES TOTAL PROJECT	SHEET No.	TOTAL SHEETS
04	CC	4	27.3/R29.0	122	950

REGISTERED CIVIL ENGINEER 10/31/11 DATE

1-17-12
PLANS APPROVAL DATE

REGISTERED PROFESSIONAL ENGINEER Keith D. Rhodes No. C53587 Exp. 6/30/13 CIVIL STATE OF CALIFORNIA

THE STATE OF CALIFORNIA OR ITS OFFICERS OR AGENTS SHALL NOT BE RESPONSIBLE FOR THE ACCURACY OR COMPLETENESS OF SCANNED COPIES OF THIS PLAN SHEET.

T Y LIN INTERNATIONAL
2010 CROW CANYON PLACE, SUITE 350
SAN RAMON, CA 94583

CCTA
2999 OAK ROAD, SUITE 100
WALNUT CREEK, CA 94597

NOTE:

FOR ACCURATE RIGHT OF WAY DATA, CONTACT RIGHT OF WAY ENGINEERING AT THE DISTRICT OFFICE.

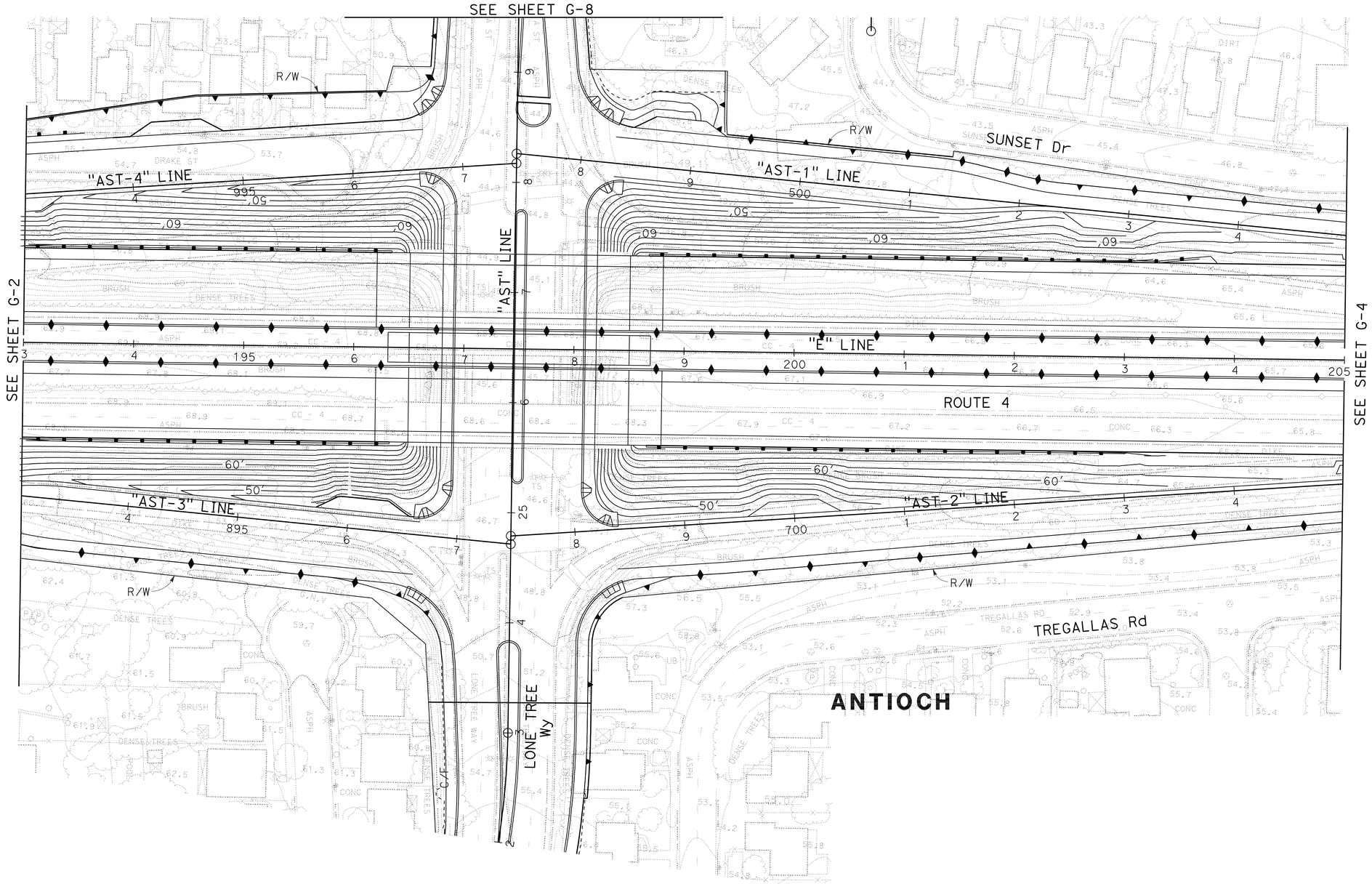

CONTOUR GRADING

SCALE: 1" = 50'

G-3

THIS PLAN ACCURATE FOR CONTOUR GRADING WORK ONLY

STATE OF CALIFORNIA - DEPARTMENT OF TRANSPORTATION

Caltrans

CONSULTANT FUNCTIONAL SUPERVISOR: KEITH RHODES

CALCULATED-DESIGNED BY: PRASANNA MUTHIREDDY

CHECKED BY: KEITH RHODES

REVISED BY: PM

DATE REVISED: 10/31/11

LAST REVISION 10-31-11 DATE PLOTTED => 19-JAN-2012 TIME PLOTTED => 06:18

Dist	COUNTY	ROUTE	POST MILES TOTAL PROJECT	SHEET No.	TOTAL SHEETS
04	CC	4	27.3/R29.0	123	950

REGISTERED CIVIL ENGINEER 10/31/11 DATE

1-17-12
PLANS APPROVAL DATE

REGISTERED PROFESSIONAL ENGINEER Keith D. Rhodes No. C53587 Exp. 6/30/13 CIVIL STATE OF CALIFORNIA

THE STATE OF CALIFORNIA OR ITS OFFICERS OR AGENTS SHALL NOT BE RESPONSIBLE FOR THE ACCURACY OR COMPLETENESS OF SCANNED COPIES OF THIS PLAN SHEET.

T Y LIN INTERNATIONAL
2010 CROW CANYON PLACE, SUITE 350
SAN RAMON, CA 94583

CCTA
2999 OAK ROAD, SUITE 100
WALNUT CREEK, CA 94597

NOTE:

FOR ACCURATE RIGHT OF WAY DATA, CONTACT
RIGHT OF WAY ENGINEERING AT THE DISTRICT OFFICE.

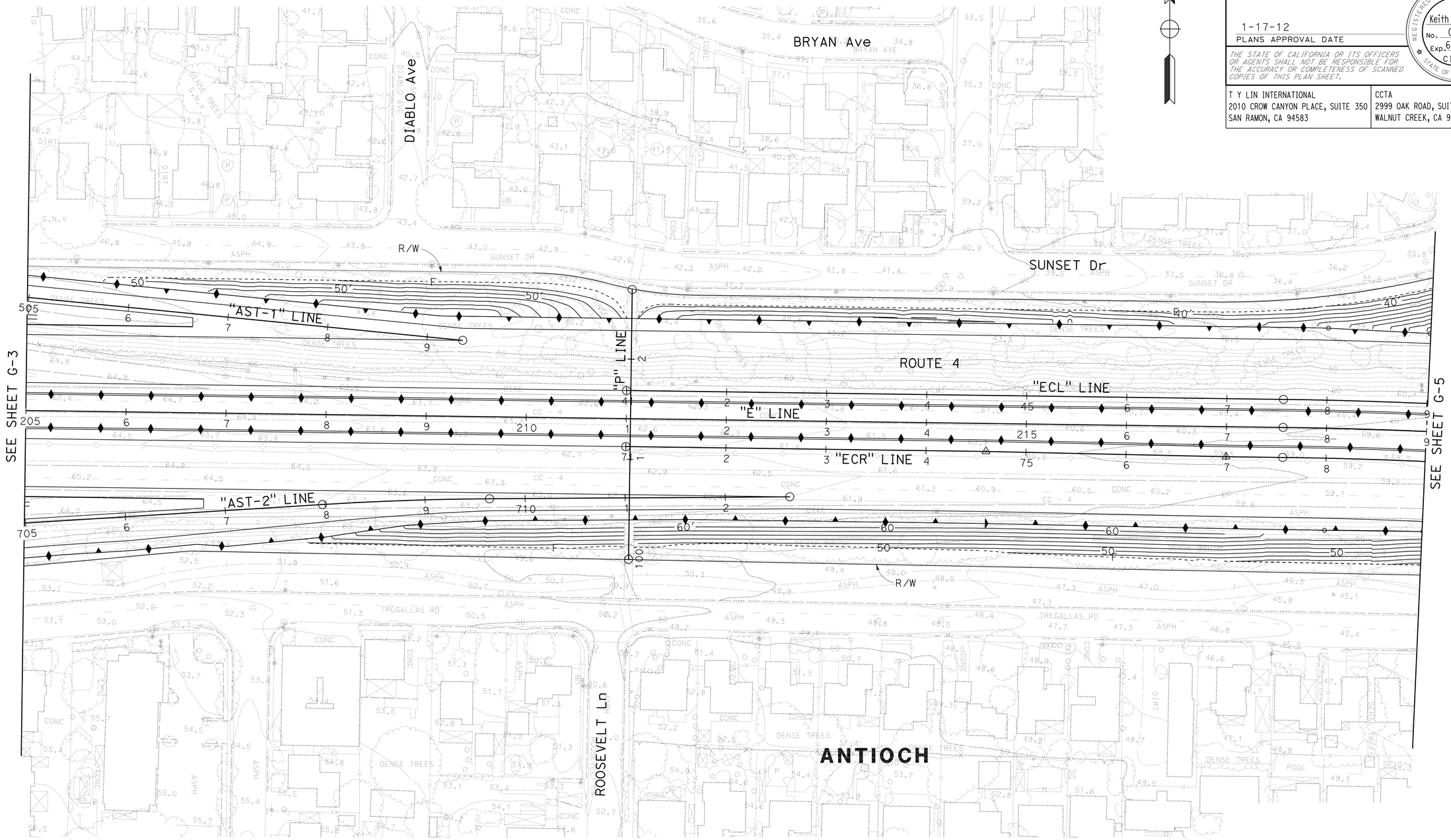

CONTOUR GRADING

SCALE: 1" = 50'

G-4

THIS PLAN ACCURATE FOR CONTOUR GRADING WORK ONLY

PM	REVISED BY
10/31/11	DATE REVISED
PRASANNA MUTHIREDDY	
KEITH RHODES	
CALCULATED-DESIGNED BY	
CHECKED BY	
CONSULTANT FUNCTIONAL SUPERVISOR	
KEITH RHODES	

STATE OF CALIFORNIA - DEPARTMENT OF TRANSPORTATION

Caltrans

LAST REVISION 10-31-11 | DATE PLOTTED => 19-JAN-2012 | TIME PLOTTED => 06:18

Dist	COUNTY	ROUTE	POST MILES TOTAL PROJECT	SHEET No.	TOTAL SHEETS
04	CC	4	27.3/R29.0	124	950

REGISTERED CIVIL ENGINEER 10/31/11 DATE

1-17-12
PLANS APPROVAL DATE

REGISTERED PROFESSIONAL ENGINEER Keith D. Rhodes No. C53587 Exp. 6/30/13 CIVIL STATE OF CALIFORNIA

THE STATE OF CALIFORNIA OR ITS OFFICERS OR AGENTS SHALL NOT BE RESPONSIBLE FOR THE ACCURACY OR COMPLETENESS OF SCANNED COPIES OF THIS PLAN SHEET.

T Y LIN INTERNATIONAL
2010 CROW CANYON PLACE, SUITE 350
SAN RAMON, CA 94583

CCTA
2999 OAK ROAD, SUITE 100
WALNUT CREEK, CA 94597

NOTE:

FOR ACCURATE RIGHT OF WAY DATA, CONTACT
RIGHT OF WAY ENGINEERING AT THE DISTRICT OFFICE.

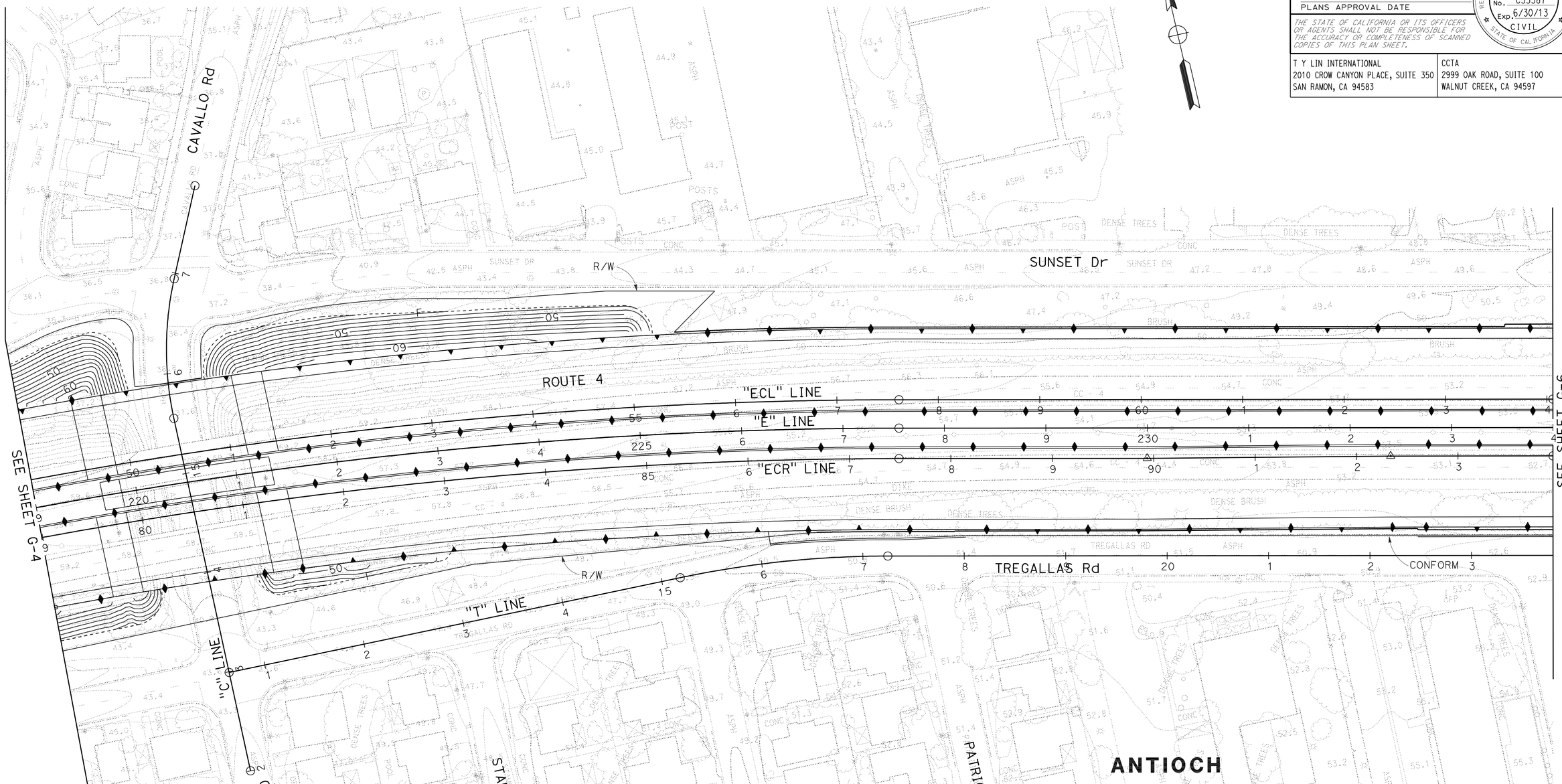

CONTOUR GRADING

SCALE: 1" = 50'

G-5

THIS PLAN ACCURATE FOR CONTOUR GRADING WORK ONLY

STATE OF CALIFORNIA - DEPARTMENT OF TRANSPORTATION

Caltrans

CONSULTANT FUNCTIONAL SUPERVISOR: KEITH RHODES

CALCULATED-DESIGNED BY: PRASANNA MUTHIREDDY

CHECKED BY: KEITH RHODES

REVISED BY: PM

DATE REVISED: 10/31/11

LAST REVISION DATE PLOTTED => 19-JAN-2012
TIME PLOTTED => 06:19

Dist	COUNTY	ROUTE	POST MILES TOTAL PROJECT	SHEET No.	TOTAL SHEETS
04	CC	4	27.3/R29.0	125	950

REGISTERED CIVIL ENGINEER 10/31/11 DATE

1-17-12
PLANS APPROVAL DATE

REGISTERED PROFESSIONAL ENGINEER Keith D. Rhodes No. C53587 Exp. 6/30/13 CIVIL STATE OF CALIFORNIA

THE STATE OF CALIFORNIA OR ITS OFFICERS OR AGENTS SHALL NOT BE RESPONSIBLE FOR THE ACCURACY OR COMPLETENESS OF SCANNED COPIES OF THIS PLAN SHEET.

T Y LIN INTERNATIONAL
2010 CROW CANYON PLACE, SUITE 350
SAN RAMON, CA 94583

CCTA
2999 OAK ROAD, SUITE 100
WALNUT CREEK, CA 94597

NOTE:

FOR ACCURATE RIGHT OF WAY DATA, CONTACT
RIGHT OF WAY ENGINEERING AT THE DISTRICT OFFICE.

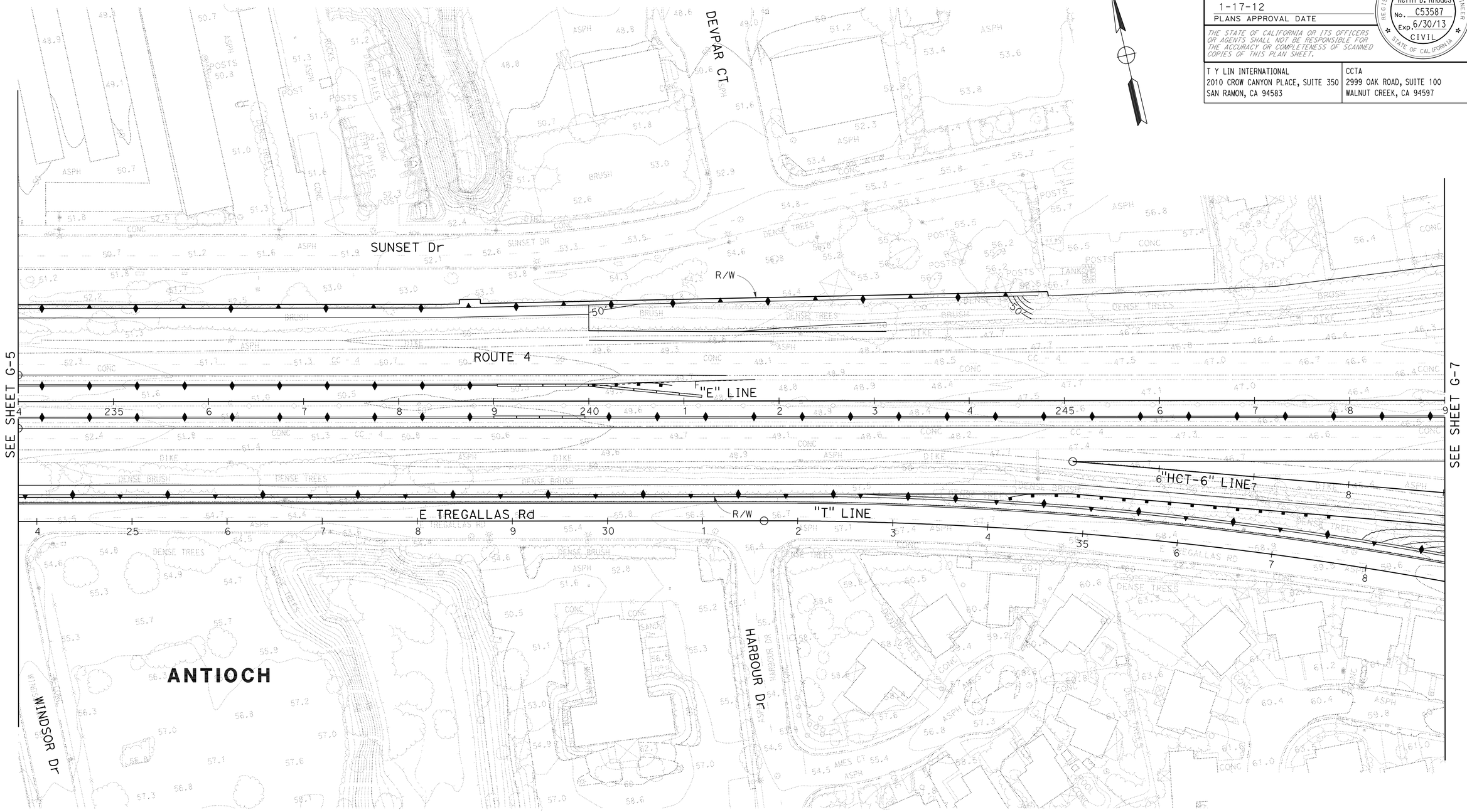

CONTOUR GRADING

SCALE: 1" = 50'

G-6

THIS PLAN ACCURATE FOR CONTOUR GRADING WORK ONLY

STATE OF CALIFORNIA - DEPARTMENT OF TRANSPORTATION
Caltrans

CONSULTANT FUNCTIONAL SUPERVISOR: KEITH RHODES
CALCULATED-DESIGNED BY: PRASANNA MUTHIREDDY
CHECKED BY: KEITH RHODES
REVISED BY: PM
DATE REVISED: 10/31/11

LAST REVISION 10-31-11
DATE PLOTTED => 19-JAN-2012
TIME PLOTTED => 06:19

Dist	COUNTY	ROUTE	POST MILES TOTAL PROJECT	SHEET No.	TOTAL SHEETS
04	CC	4	27.3/R29.0	126	950

REGISTERED CIVIL ENGINEER 10/31/11 DATE

1-17-12
PLANS APPROVAL DATE

REGISTERED PROFESSIONAL ENGINEER
Keith D. Rhodes
No. C53587
Exp. 6/30/13
CIVIL
STATE OF CALIFORNIA

THE STATE OF CALIFORNIA OR ITS OFFICERS OR AGENTS SHALL NOT BE RESPONSIBLE FOR THE ACCURACY OR COMPLETENESS OF SCANNED COPIES OF THIS PLAN SHEET.

T Y LIN INTERNATIONAL
2010 CROW CANYON PLACE, SUITE 350
SAN RAMON, CA 94583

CCTA
2999 OAK ROAD, SUITE 100
WALNUT CREEK, CA 94597

NOTE:

FOR ACCURATE RIGHT OF WAY DATA, CONTACT
RIGHT OF WAY ENGINEERING AT THE DISTRICT OFFICE.

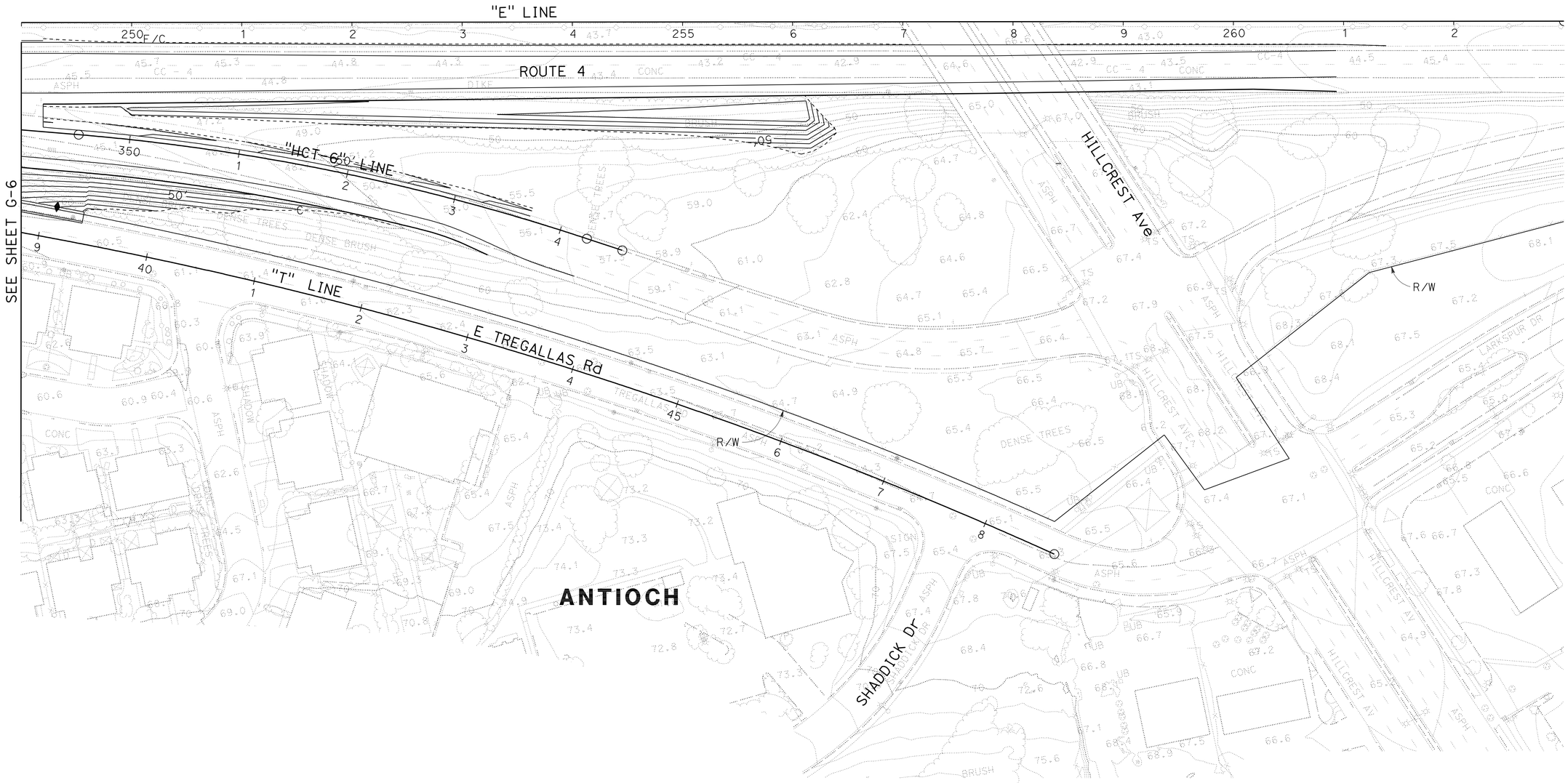

CONTOUR GRADING

SCALE: 1" = 50'

G-7

THIS PLAN ACCURATE FOR CONTOUR GRADING WORK ONLY

STATE OF CALIFORNIA - DEPARTMENT OF TRANSPORTATION
Caltrans

CONSULTANT FUNCTIONAL SUPERVISOR: KEITH D. RHODES
CALCULATED-DESIGNED BY: PRASANNA MUTHIREDDY
CHECKED BY: KEITH RHODES
REVISED BY: PM
DATE REVISED: 10/31/11

LAST REVISION 10-31-11
DATE PLOTTED => 19-JAN-2012
TIME PLOTTED => 06:19

Dist	COUNTY	ROUTE	POST MILES TOTAL PROJECT	SHEET No.	TOTAL SHEETS
04	CC	4	27.3/R29.0	127	950

REGISTERED CIVIL ENGINEER 10/31/11 DATE

1-17-12
PLANS APPROVAL DATE

REGISTERED PROFESSIONAL ENGINEER Keith D. Rhodes No. C53587 Exp. 6/30/13 CIVIL STATE OF CALIFORNIA

THE STATE OF CALIFORNIA OR ITS OFFICERS OR AGENTS SHALL NOT BE RESPONSIBLE FOR THE ACCURACY OR COMPLETENESS OF SCANNED COPIES OF THIS PLAN SHEET.

T Y LIN INTERNATIONAL
2010 CROW CANYON PLACE, SUITE 350
SAN RAMON, CA 94583

CCTA
2999 OAK ROAD, SUITE 100
WALNUT CREEK, CA 94597

NOTE:

FOR ACCURATE RIGHT OF WAY DATA, CONTACT RIGHT OF WAY ENGINEERING AT THE DISTRICT OFFICE.

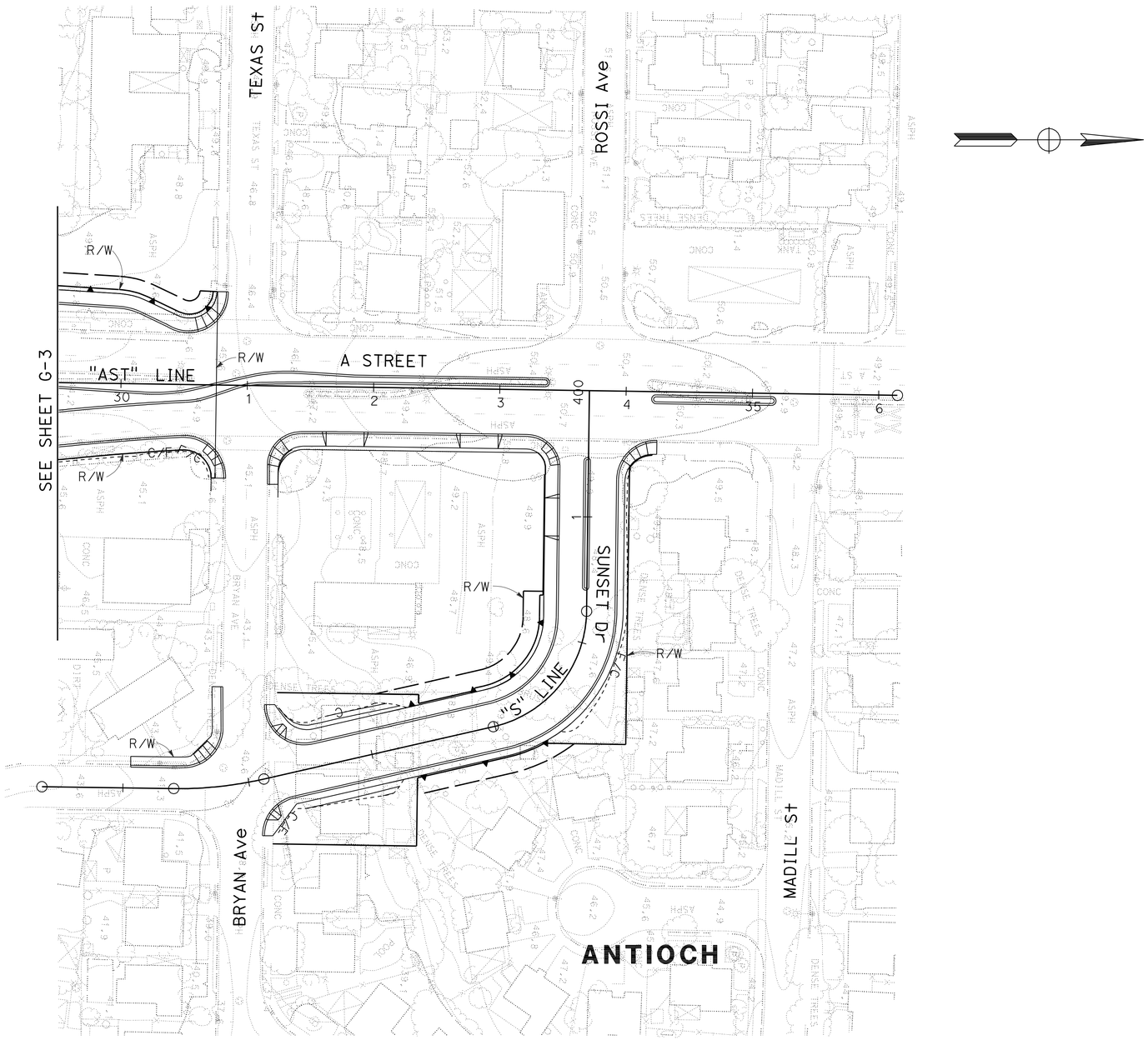

CONTOUR GRADING

SCALE: 1" = 50'

THIS PLAN ACCURATE FOR CONTOUR GRADING WORK ONLY

G-8

PRASANNA MUTHIREDDY	PM
KEITH RHODES	10/31/11
CALCULATED-DESIGNED BY	REVISED BY
CHECKED BY	DATE REVISED
CONSULTANT FUNCTIONAL SUPERVISOR	
KEITH RHODES	

STATE OF CALIFORNIA - DEPARTMENT OF TRANSPORTATION

LAST REVISION 10-31-11 | DATE PLOTTED => 19-JAN-2012 | TIME PLOTTED => 06:19

Dist	COUNTY	ROUTE	POST MILES TOTAL PROJECT	SHEET No.	TOTAL SHEETS
04	CC	4	27.3/R29.0	128	950

Joseph E. Peterson 8/9/11
REGISTERED CIVIL ENGINEER DATE

1-17-12
PLANS APPROVAL DATE

REGISTERED PROFESSIONAL ENGINEER J.E.Peterson No. 42777 Exp. 3/31/12 CIVIL STATE OF CALIFORNIA

THE STATE OF CALIFORNIA OR ITS OFFICERS OR AGENTS SHALL NOT BE RESPONSIBLE FOR THE ACCURACY OR COMPLETENESS OF SCANNED COPIES OF THIS PLAN SHEET.

CALTRANS
111 GRAND AVENUE
OAKLAND, CA 94612

CCTA
2999 OAK ROAD, SUITE 100
WALNUT CREEK, CA 94597

LEGEND:

- DRAINAGE SYSTEM No.
- DRAINAGE UNIT
- RSP
- SIDEWALK OPENING w/ CHECKERED PLATE
- EXISTING DRAINAGE INLET
- EXISTING CULVERT
- DITCH/GUTTER FLOWLINE
- EXISTING PIPE INLET

NOTES:

1. VERTICAL DATUM IS NGVD 1929.
2. LOCATIONS OF EXISTING DRAINAGE FACILITIES ARE APPROXIMATE. VERIFY LOCATION AND ELEVATION OF EXISTING DRAINAGE FACILITIES PRIOR TO MODIFYING.
3. TOP OF GRATE ELEVATIONS, STATION AND OFFSET TIES TO DRAINAGE STRUCTURES ARE MEASURED AS PER THE DETAIL ON SHEET DD-1.
4. ALL TIES TO STORM DRAIN MANHOLES ARE TO BE AT THE CENTER OF THE BASE, UNLESS OTHERWISE NOTED.
5. FOR ACCURATE RIGHT OF WAY DATA, CONTACT RIGHT OF WAY ENGINEERING AT THE DISTRICT OFFICE.

ABBREVATIONS:

ACP	ASBESTOS CEMENT PIPE
ASP	ALTERNATIVE SLOTTED PIPE
COA	CITY OF ANTIOCH
HMAOD	HOT MIX ASPHALT OVERSIDE DRAIN
SO	SIDE OPENING
TC	TOP OF COVER
TG	TOP OF GRATE
w/	WITH

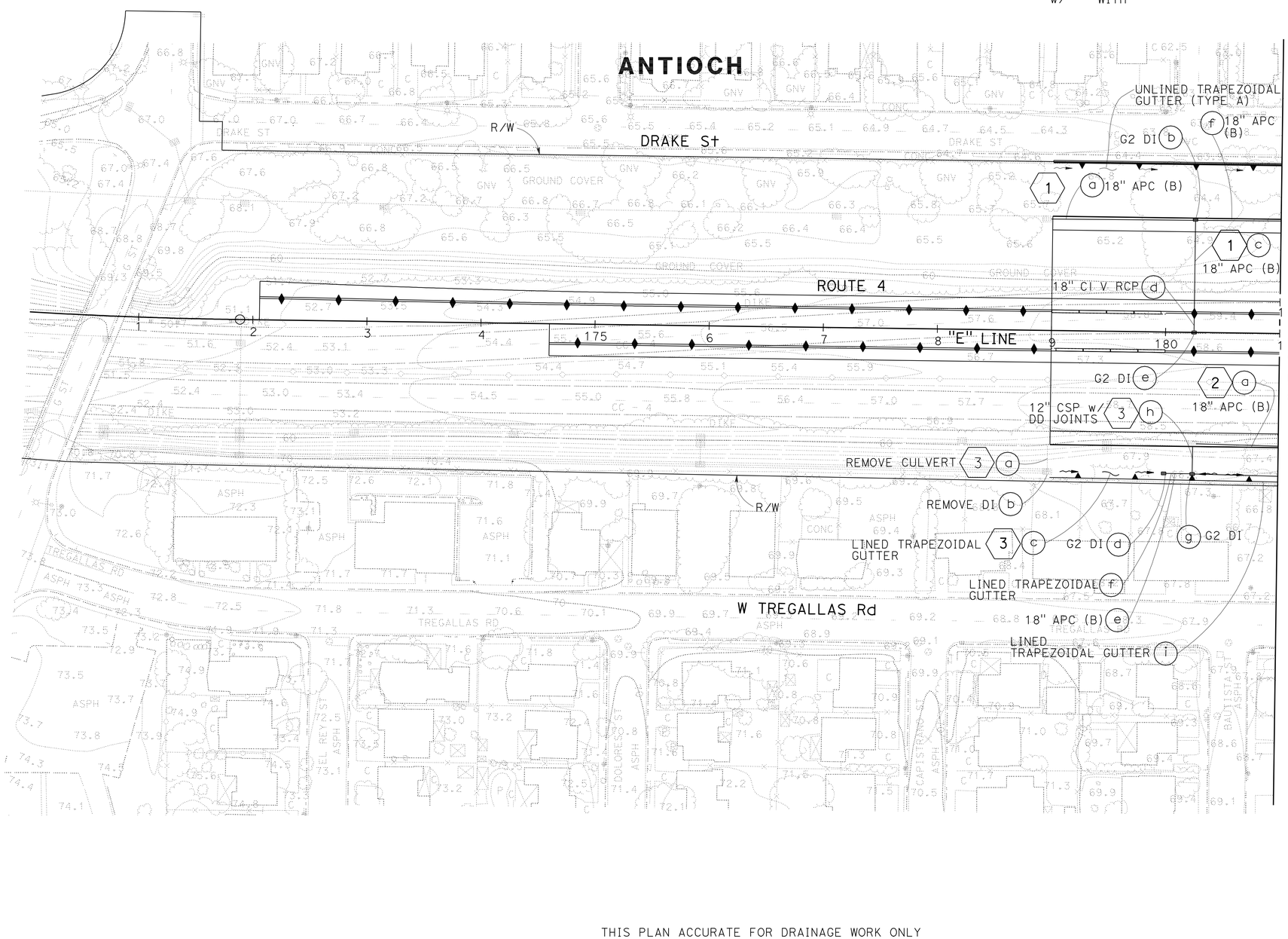

DRAINAGE PLAN

SCALE: 1" = 50'

D-1

THIS PLAN ACCURATE FOR DRAINAGE WORK ONLY

STATE OF CALIFORNIA - DEPARTMENT OF TRANSPORTATION
Caltrans

CONSULTANT FUNCTIONAL SUPERVISOR: JOSEPH PETERSON
CALCULATED-DESIGNED BY: KATHLEEN M. REILLY
CHECKED BY: SHARON L. PATCH
REVISED BY: KR
DATE REVISED: 8/9/11

LAST REVISION 8-9-11
DATE PLOTTED => 19-JAN-2012
TIME PLOTTED => 06:19

Dist	COUNTY	ROUTE	POST MILES TOTAL PROJECT	SHEET No.	TOTAL SHEETS
04	CC	4	27.3/R29.0	129	950

REGISTERED CIVIL ENGINEER — DATE 8/9/11

1-17-12
PLANS APPROVAL DATE

REGISTERED PROFESSIONAL ENGINEER — J.E.Peterson No. 42777 Exp. 3/31/12 CIVIL — STATE OF CALIFORNIA

THE STATE OF CALIFORNIA OR ITS OFFICERS OR AGENTS SHALL NOT BE RESPONSIBLE FOR THE ACCURACY OR COMPLETENESS OF SCANNED COPIES OF THIS PLAN SHEET.

CALTRANS
111 GRAND AVENUE
OAKLAND, CA 94612

CCTA
2999 OAK ROAD, SUITE 100
WALNUT CREEK, CA 94597

NOTE:

FOR ACCURATE RIGHT OF WAY DATA, CONTACT RIGHT OF WAY ENGINEERING AT THE DISTRICT OFFICE.

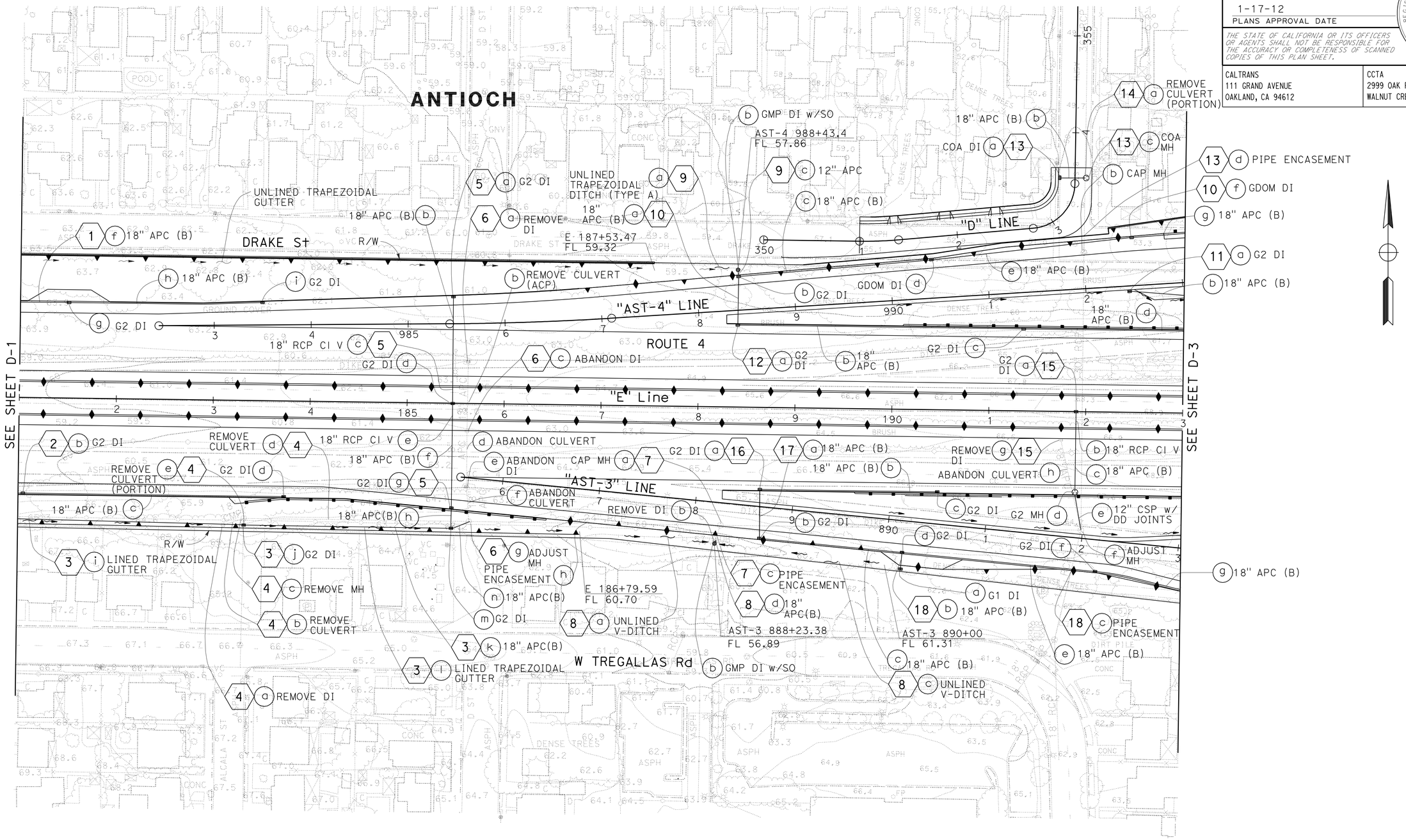

FOR NOTES, ABBREVIATIONS AND LEGEND, SEE SHEET D-1

THIS PLAN ACCURATE FOR DRAINAGE WORK ONLY

DRAINAGE PLAN

SCALE: 1" = 50'

D-2

REVISED BY	KR
DATE REVISED	8/9/11
CALCULATED-DESIGNED BY	KATHLEEN M. REILLY
CHECKED BY	SHARON L. PATCH
CONSULTANT FUNCTIONAL SUPERVISOR	JOSEPH PETERSON

STATE OF CALIFORNIA - DEPARTMENT OF TRANSPORTATION

Caltrans

LAST REVISION 8-9-11 — DATE PLOTTED => 19-JAN-2012 — TIME PLOTTED => 06:20

Dist	COUNTY	ROUTE	POST MILES TOTAL PROJECT	SHEET No.	TOTAL SHEETS
04	CC	4	27.3/R29.0	130	950

Joseph E. Peterson 10/31/11
REGISTERED CIVIL ENGINEER DATE

1-17-12
PLANS APPROVAL DATE

REGISTERED PROFESSIONAL ENGINEER J.E.Peterson No. 42777 Exp. 3/31/12 CIVIL STATE OF CALIFORNIA

THE STATE OF CALIFORNIA OR ITS OFFICERS OR AGENTS SHALL NOT BE RESPONSIBLE FOR THE ACCURACY OR COMPLETENESS OF SCANNED COPIES OF THIS PLAN SHEET.

CALTRANS
111 GRAND AVENUE
OAKLAND, CA 94612

CCTA
2999 OAK ROAD, SUITE 100
WALNUT CREEK, CA 94597

NOTE:

FOR ACCURATE RIGHT OF WAY DATA, CONTACT RIGHT OF WAY ENGINEERING AT THE DISTRICT OFFICE.

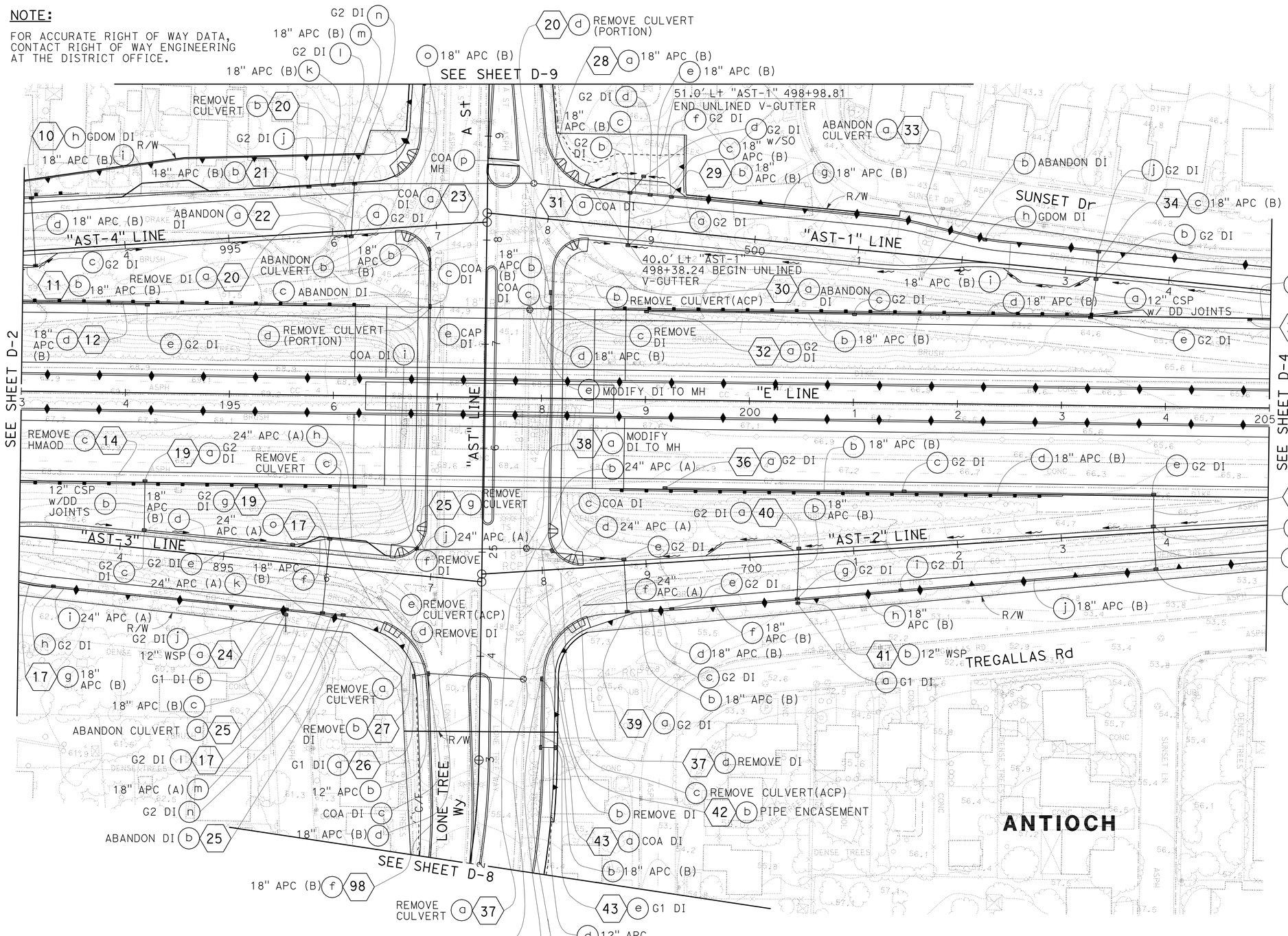

FOR NOTES, ABBREVIATIONS AND LEGEND, SEE SHEET D-1

THIS PLAN ACCURATE FOR DRAINAGE WORK ONLY

DRAINAGE PLAN

SCALE: 1" = 50'

D-3

STATE OF CALIFORNIA - DEPARTMENT OF TRANSPORTATION
Caltrans

CONSULTANT FUNCTIONAL SUPERVISOR: JOSEPH PETERSON
CALCULATED-DESIGNED BY: KATHLEEN M. REILLY
CHECKED BY: SHARON L. PATCH
REVISED BY: KR
DATE REVISED: 10/31/11

LAST REVISION 10-31-11
DATE PLOTTED => 19-JAN-2012
TIME PLOTTED => 06:20

Dist	COUNTY	ROUTE	POST MILES TOTAL PROJECT	SHEET No.	TOTAL SHEETS
04	CC	4	27.3/R29.0	131	950

Joseph E. Peterson 8/9/11
REGISTERED CIVIL ENGINEER DATE

1-17-12
PLANS APPROVAL DATE

REGISTERED PROFESSIONAL ENGINEER J.E.Peterson No. 42777 Exp. 3/31/12 CIVIL STATE OF CALIFORNIA

THE STATE OF CALIFORNIA OR ITS OFFICERS OR AGENTS SHALL NOT BE RESPONSIBLE FOR THE ACCURACY OR COMPLETENESS OF SCANNED COPIES OF THIS PLAN SHEET.

CALTRANS
111 GRAND AVENUE
OAKLAND, CA 94612

CCTA
2999 OAK ROAD, SUITE 100
WALNUT CREEK, CA 94597

NOTE:

FOR ACCURATE RIGHT OF WAY DATA, CONTACT RIGHT OF WAY ENGINEERING AT THE DISTRICT OFFICE.

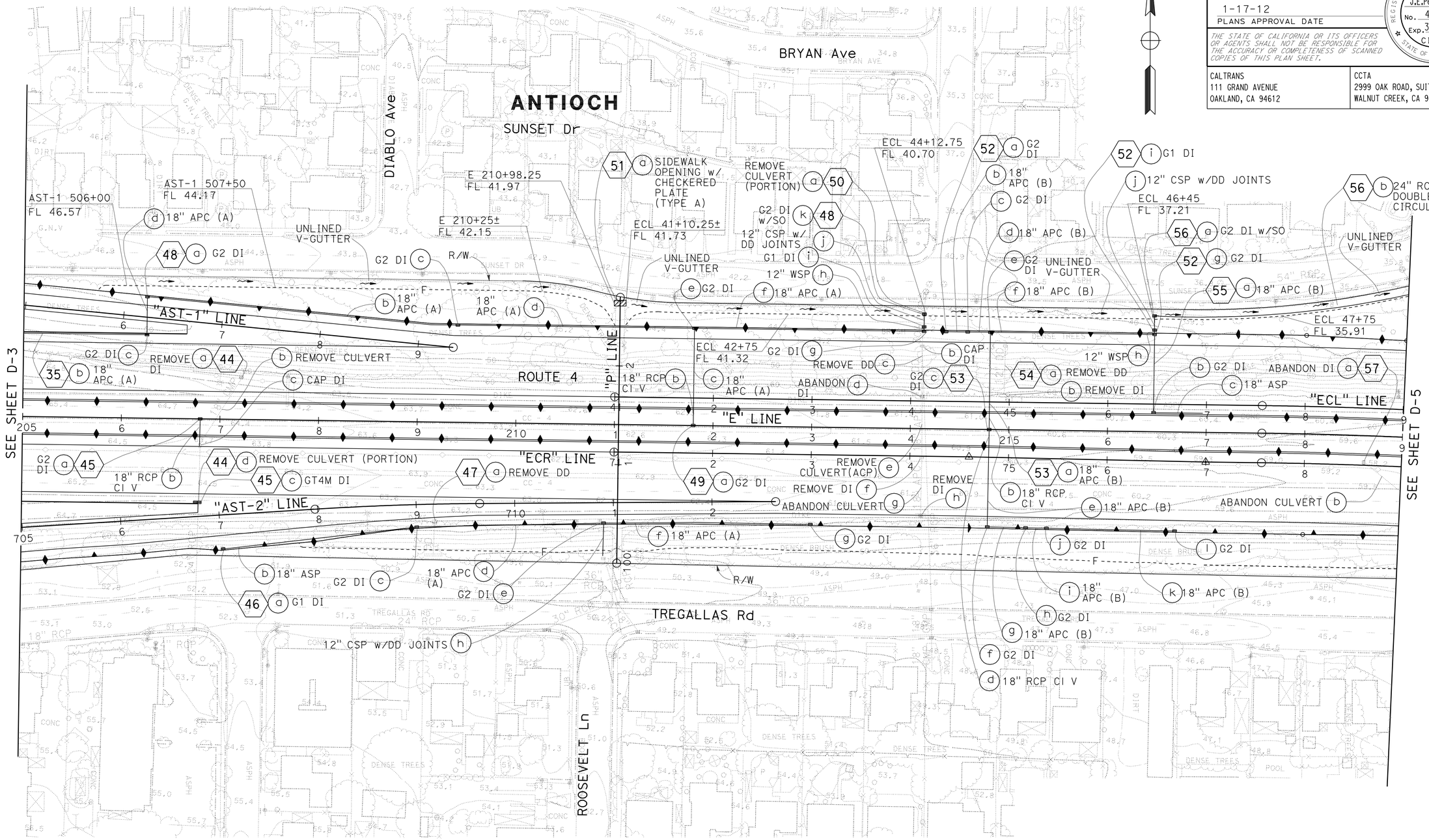

DRAINAGE PLAN

SCALE: 1" = 50'

D-4

FOR NOTES, ABBREVIATIONS AND LEGEND, SEE SHEET D-1

THIS PLAN ACCURATE FOR DRAINAGE WORK ONLY

STATE OF CALIFORNIA - DEPARTMENT OF TRANSPORTATION
Caltrans

CONSULTANT FUNCTIONAL SUPERVISOR: JOSEPH PETERSON
CALCULATED-DESIGNED BY: SHARON L. PATCH
CHECKED BY: KATHLEEN M. REILLY
REVISED BY: KR
DATE REVISED: 8/9/11

LAST REVISION 8-9-11
DATE PLOTTED => 19-JAN-2012
TIME PLOTTED => 06:20

Dist	COUNTY	ROUTE	POST MILES TOTAL PROJECT	SHEET No.	TOTAL SHEETS
04	CC	4	27.3/R29.0	132	950

Joseph E. Peterson 8/9/11
REGISTERED CIVIL ENGINEER DATE

1-17-12
PLANS APPROVAL DATE

REGISTERED PROFESSIONAL ENGINEER J.E.Peterson No. 42777 Exp. 3/31/12 CIVIL STATE OF CALIFORNIA

THE STATE OF CALIFORNIA OR ITS OFFICERS OR AGENTS SHALL NOT BE RESPONSIBLE FOR THE ACCURACY OR COMPLETENESS OF SCANNED COPIES OF THIS PLAN SHEET.

CALTRANS
111 GRAND AVENUE
OAKLAND, CA 94612

CCTA
2999 OAK ROAD, SUITE 100
WALNUT CREEK, CA 94597

NOTE:

FOR ACCURATE RIGHT OF WAY DATA, CONTACT RIGHT OF WAY ENGINEERING AT THE DISTRICT OFFICE.

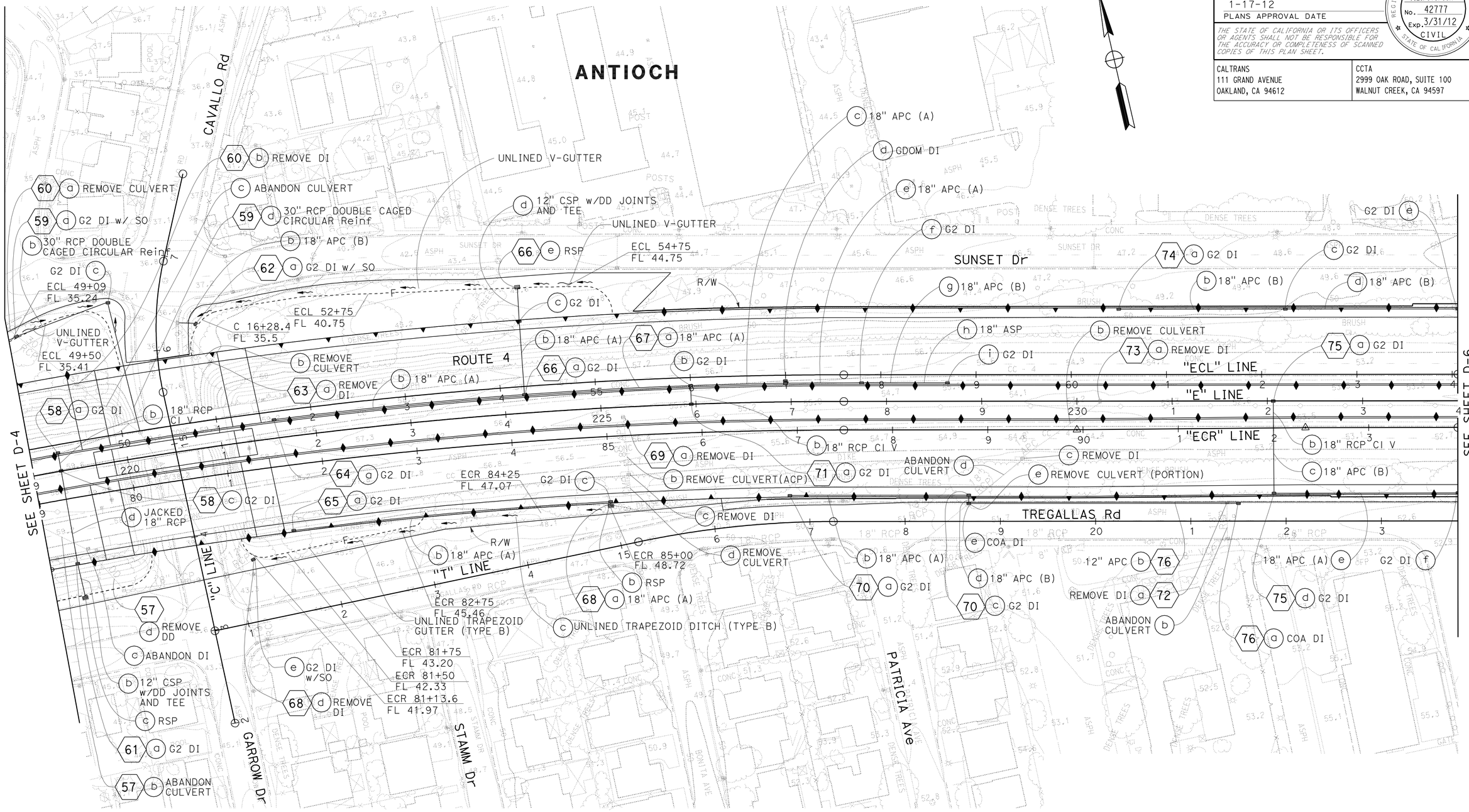

DRAINAGE PLAN

SCALE: 1" = 50'

D-5

FOR NOTES, ABBREVIATIONS AND LEGEND, SEE SHEET D-1

THIS PLAN ACCURATE FOR DRAINAGE WORK ONLY

STATE OF CALIFORNIA - DEPARTMENT OF TRANSPORTATION

Caltrans

CONSULTANT FUNCTIONAL SUPERVISOR: JOSEPH PETERSON

CALCULATED-DESIGNED BY: KATHLEEN M. REILLY

CHECKED BY: SHARON L. PATCH

REVISED BY: KR

DATE REVISED: 8/9/11

LAST REVISION 8-9-11

DATE PLOTTED => 19-JAN-2012
TIME PLOTTED => 06:20

Dist	COUNTY	ROUTE	POST MILES TOTAL PROJECT	SHEET No.	TOTAL SHEETS
04	CC	4	27.3/R29.0	133	950

Joseph E. Peterson 10/31/11
REGISTERED CIVIL ENGINEER DATE

1-17-12
PLANS APPROVAL DATE

REGISTERED PROFESSIONAL ENGINEER J.E.Peterson No. 42777 Exp. 3/31/12 CIVIL STATE OF CALIFORNIA

THE STATE OF CALIFORNIA OR ITS OFFICERS OR AGENTS SHALL NOT BE RESPONSIBLE FOR THE ACCURACY OR COMPLETENESS OF SCANNED COPIES OF THIS PLAN SHEET.

CALTRANS
111 GRAND AVENUE
OAKLAND, CA 94612

CCTA
2999 OAK ROAD, SUITE 100
WALNUT CREEK, CA 94597

NOTE:

FOR ACCURATE RIGHT OF WAY DATA, CONTACT RIGHT OF WAY ENGINEERING AT THE DISTRICT OFFICE.

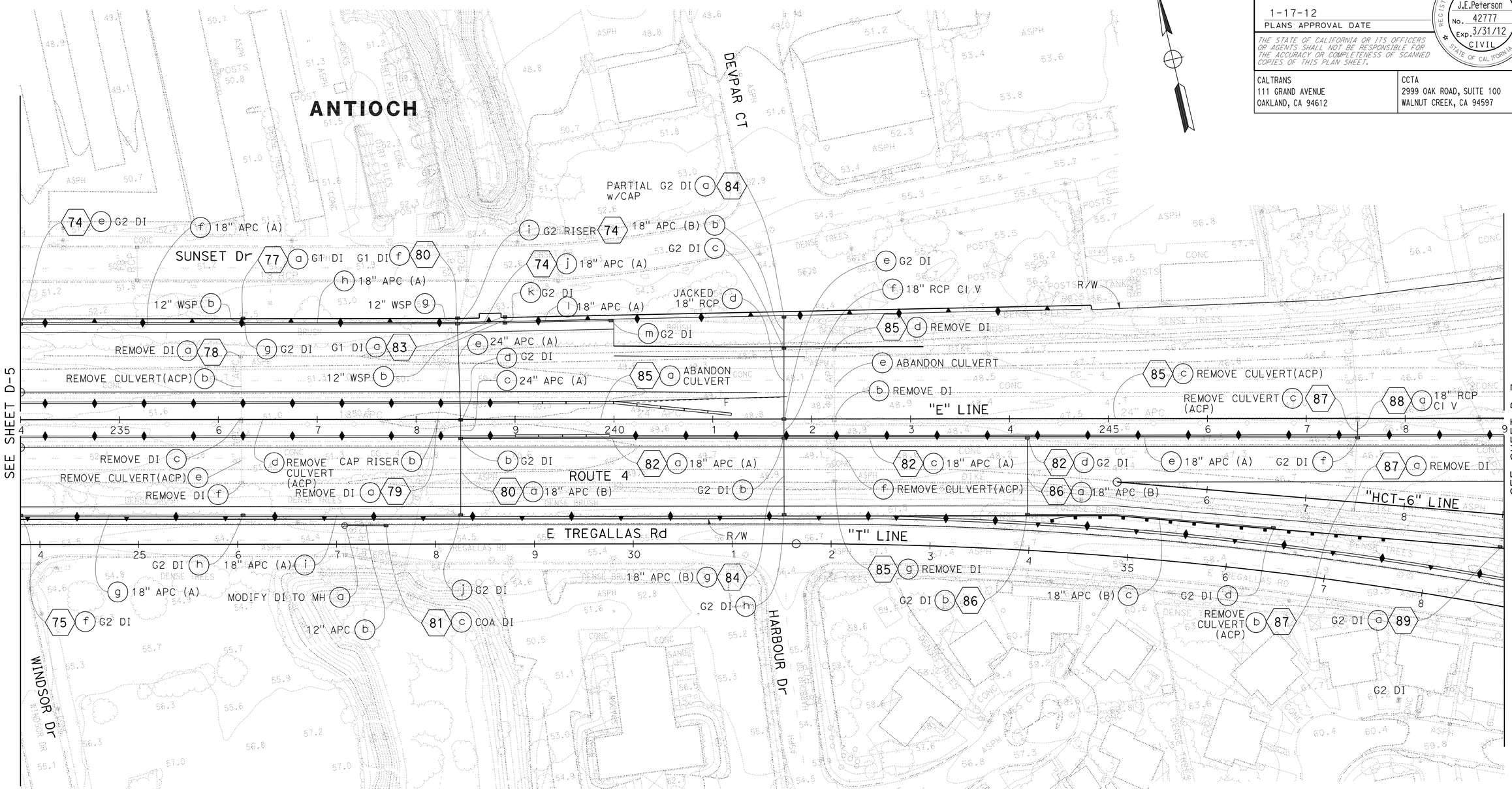

DRAINAGE PLAN

SCALE: 1" = 50'

D-6

FOR NOTES, ABBREVIATIONS AND LEGEND, SEE SHEET D-1

THIS PLAN ACCURATE FOR DRAINAGE WORK ONLY

REVISED BY	KR
DATE REVISED	10/31/11
CALCULATED-DESIGNED BY	KATHLEEN M. REILLY
CHECKED BY	SHARON L. PATCH
CONSULTANT FUNCTIONAL SUPERVISOR	JOSEPH PETERSON

STATE OF CALIFORNIA - DEPARTMENT OF TRANSPORTATION

Caltrans

LAST REVISION 10-31-11 | DATE PLOTTED => 19-JAN-2012 TIME PLOTTED => 08:21

Dist	COUNTY	ROUTE	POST MILES TOTAL PROJECT	SHEET No.	TOTAL SHEETS
04	CC	4	27.3/R29.0	134	950

Joseph E. Peterson 10/31/11
REGISTERED CIVIL ENGINEER DATE

1-17-12
PLANS APPROVAL DATE

REGISTERED PROFESSIONAL ENGINEER J.E.Peterson No. 42777 Exp. 3/31/12 CIVIL STATE OF CALIFORNIA

THE STATE OF CALIFORNIA OR ITS OFFICERS OR AGENTS SHALL NOT BE RESPONSIBLE FOR THE ACCURACY OR COMPLETENESS OF SCANNED COPIES OF THIS PLAN SHEET.

CALTRANS
111 GRAND AVENUE
OAKLAND, CA 94612

CCTA
2999 OAK ROAD, SUITE 100
WALNUT CREEK, CA 94597

NOTE:

FOR ACCURATE RIGHT OF WAY DATA, CONTACT RIGHT OF WAY ENGINEERING AT THE DISTRICT OFFICE.

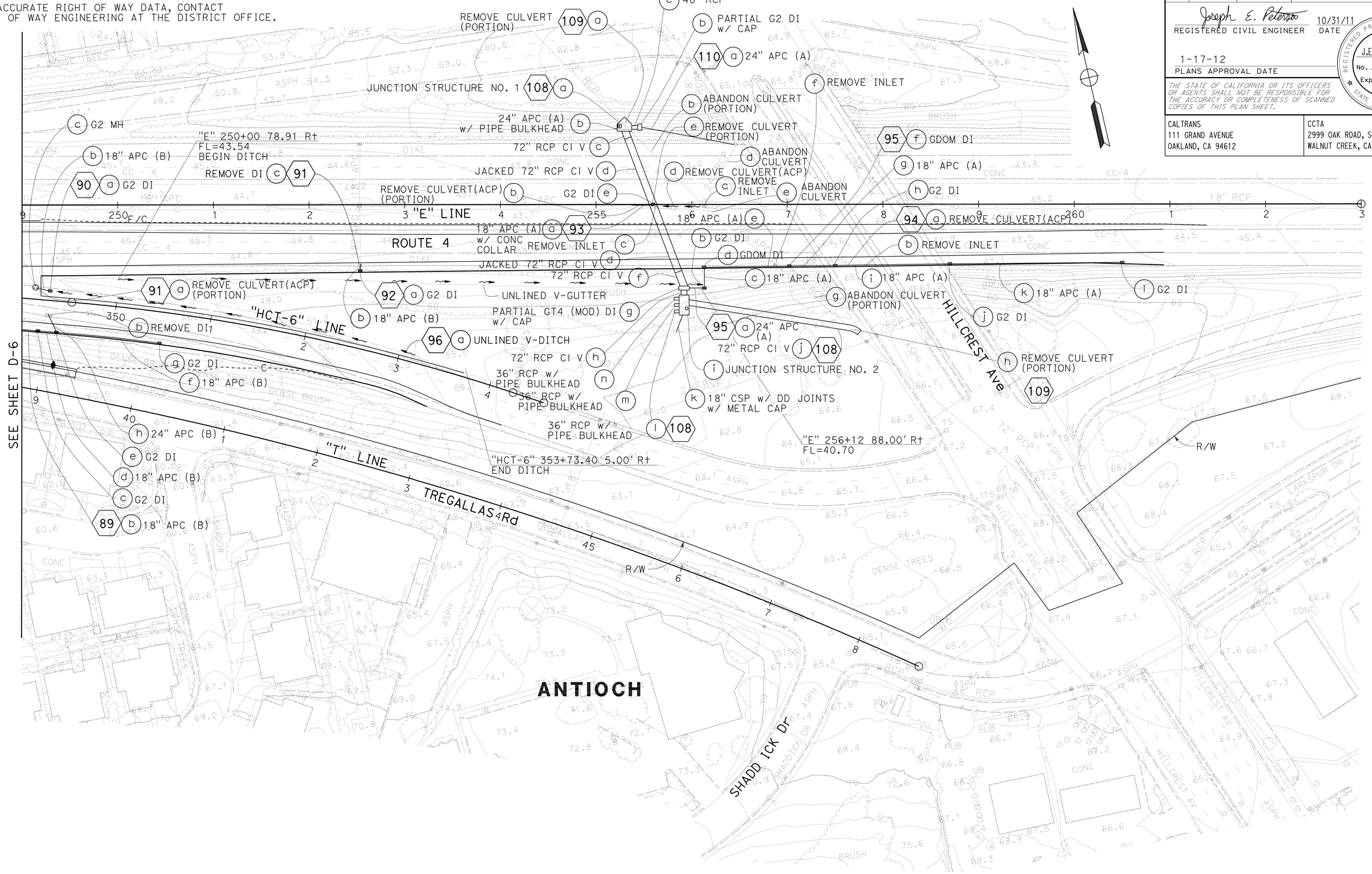

FOR NOTES, ABBREVIATIONS AND LEGEND, SEE SHEET D-1

THIS PLAN ACCURATE FOR DRAINAGE WORK ONLY

DRAINAGE PLAN

SCALE: 1" = 50'

D-7

STATE OF CALIFORNIA - DEPARTMENT OF TRANSPORTATION
Caltrans

CONSULTANT FUNCTIONAL SUPERVISOR: JOSEPH PETERSON
CALCULATED-DESIGNED BY: KATHLEEN M. REILLY
CHECKED BY: SHARON L. PATCH
REVISED BY: KR
DATE REVISED: 10/31/11

LAST REVISION 10-31-11
DATE PLOTTED => 19-JAN-2012
TIME PLOTTED => 06:21

Dist	COUNTY	ROUTE	POST MILES TOTAL PROJECT	SHEET No.	TOTAL SHEETS
04	CC	4	27.3/R29.0	135	950

Joseph E. Peterson 10/31/11
REGISTERED CIVIL ENGINEER DATE

1-17-12
PLANS APPROVAL DATE

REGISTERED PROFESSIONAL ENGINEER
J.E.Peterson
No. 42777
Exp. 3/31/12
CIVIL
STATE OF CALIFORNIA

THE STATE OF CALIFORNIA OR ITS OFFICERS OR AGENTS SHALL NOT BE RESPONSIBLE FOR THE ACCURACY OR COMPLETENESS OF SCANNED COPIES OF THIS PLAN SHEET.

CALTRANS
111 GRAND AVENUE
OAKLAND, CA 94612

CCTA
2999 OAK ROAD, SUITE 100
WALNUT CREEK, CA 94597

NOTE:

FOR ACCURATE RIGHT OF WAY DATA, CONTACT
RIGHT OF WAY ENGINEERING AT THE DISTRICT OFFICE.

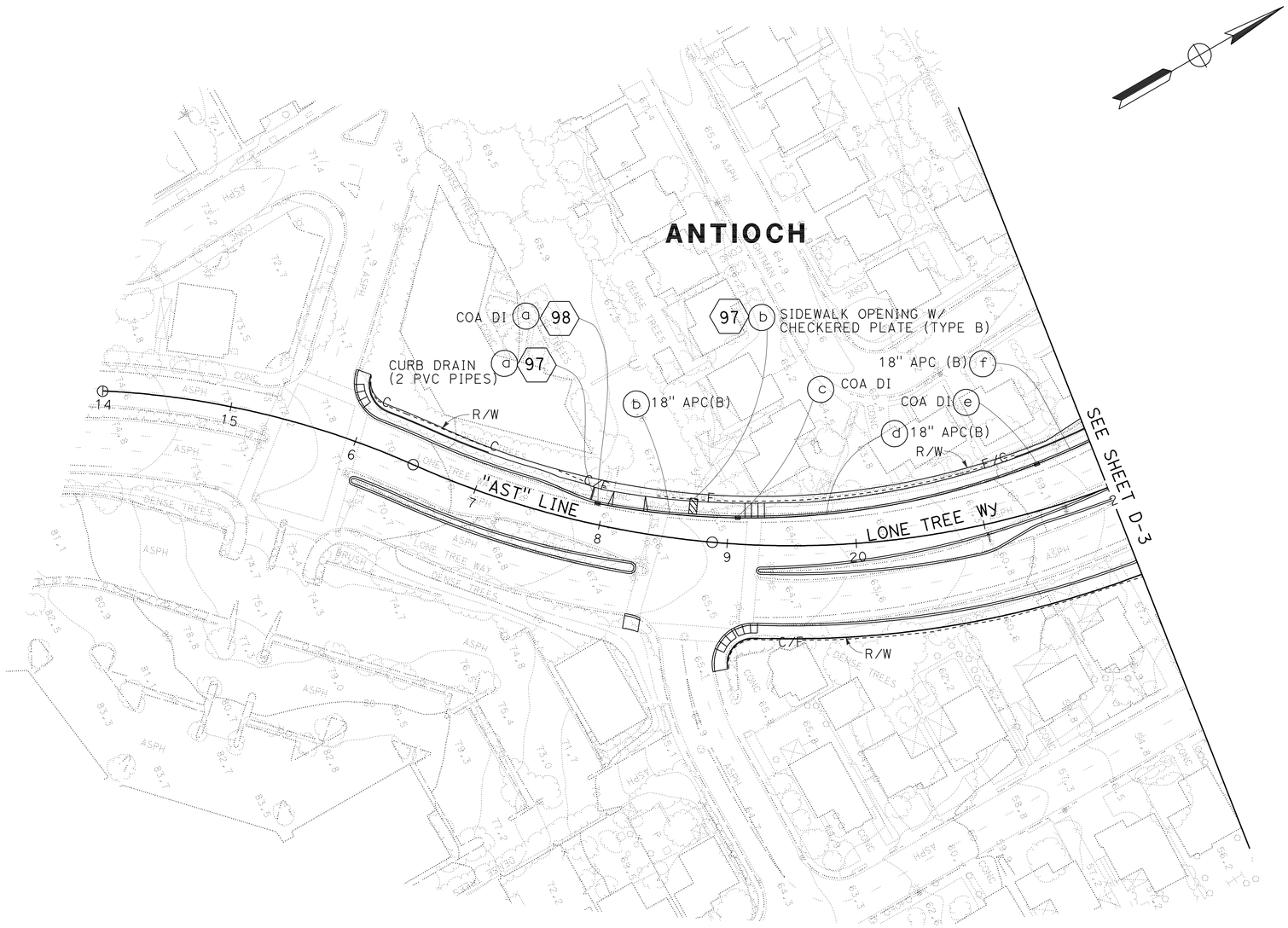

FOR NOTES, ABBREVIATIONS AND LEGEND, SEE SHEET D-1

THIS PLAN ACCURATE FOR DRAINAGE WORK ONLY

DRAINAGE PLAN

SCALE: 1" = 50'

D-8

STATE OF CALIFORNIA - DEPARTMENT OF TRANSPORTATION
Caltrans

CONSULTANT FUNCTIONAL SUPERVISOR: JOSEPH PETERSON
CALCULATED-DESIGNED BY: KATHLEEN M. REILLY
CHECKED BY: SHARON L. PATCH
REVISED BY: KR
DATE REVISED: 10/31/11

LAST REVISION 10-31-11
DATE PLOTTED => 19-JAN-2012
TIME PLOTTED => 06:21

Dist	COUNTY	ROUTE	POST MILES TOTAL PROJECT	SHEET No.	TOTAL SHEETS
04	CC	4	27.3/R29.0	136	950

Joseph E. Peterson 10/31/11
REGISTERED CIVIL ENGINEER DATE

1-17-12
PLANS APPROVAL DATE

REGISTERED PROFESSIONAL ENGINEER
J.E.Peterson
No. 42777
Exp. 3/31/12
CIVIL
STATE OF CALIFORNIA

THE STATE OF CALIFORNIA OR ITS OFFICERS OR AGENTS SHALL NOT BE RESPONSIBLE FOR THE ACCURACY OR COMPLETENESS OF SCANNED COPIES OF THIS PLAN SHEET.

CALTRANS
111 GRAND AVENUE
OAKLAND, CA 94612

CCTA
2999 OAK ROAD, SUITE 100
WALNUT CREEK, CA 94597

NOTE:

FOR ACCURATE RIGHT OF WAY DATA, CONTACT RIGHT OF WAY ENGINEERING AT THE DISTRICT OFFICE.

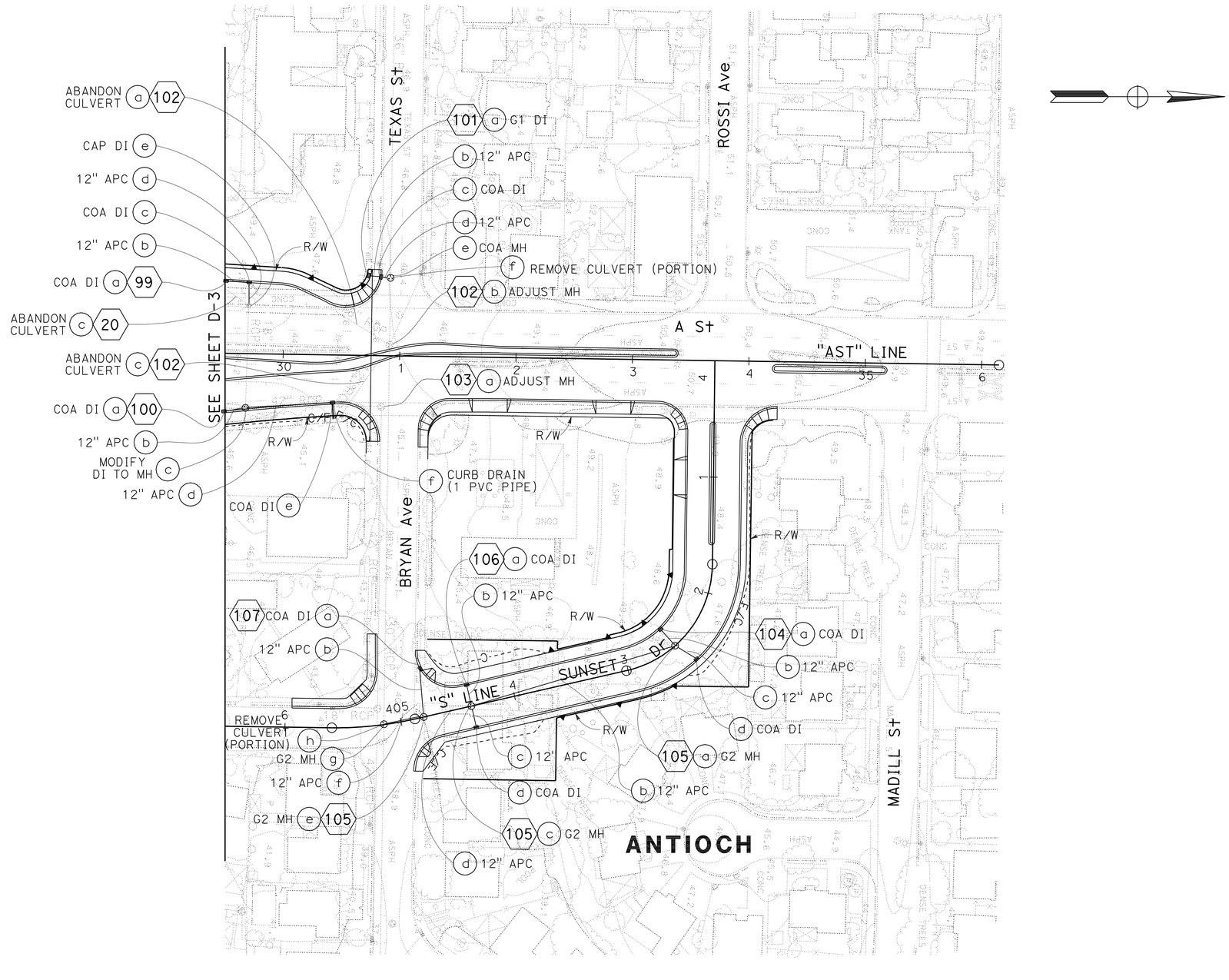

FOR NOTES, ABBREVIATIONS AND LEGEND, SEE SHEET D-1

THIS PLAN ACCURATE FOR DRAINAGE WORK ONLY

DRAINAGE PLAN

SCALE: 1" = 50'

D-9

REVISED BY	KR
DATE REVISED	10/31/11
KATHLEEN M. REILLY	
SHARON L. PATCH	
CALCULATED-DESIGNED BY	
CHECKED BY	
CONSULTANT FUNCTIONAL SUPERVISOR	
JOSEPH PETERSON	

STATE OF CALIFORNIA - DEPARTMENT OF TRANSPORTATION

Caltrans

LAST REVISION 10-31-11 | DATE PLOTTED => 19-JAN-2012 | TIME PLOTTED => 06:21

Dist	COUNTY	ROUTE	POST MILES TOTAL PROJECT	SHEET No.	TOTAL SHEETS
04	CC	4	27.3/R29.0	137	950

Joseph E. Peterson 10/31/11
REGISTERED CIVIL ENGINEER DATE

1-17-12
PLANS APPROVAL DATE

REGISTERED PROFESSIONAL ENGINEER J.E.Peterson No. 42777 Exp. 3/31/12 CIVIL STATE OF CALIFORNIA

THE STATE OF CALIFORNIA OR ITS OFFICERS OR AGENTS SHALL NOT BE RESPONSIBLE FOR THE ACCURACY OR COMPLETENESS OF SCANNED COPIES OF THIS PLAN SHEET.

CALTRANS
111 GRAND AVENUE
OAKLAND, CA 94612

CCTA
2999 OAK ROAD, SUITE 100
WALNUT CREEK, CA 94597

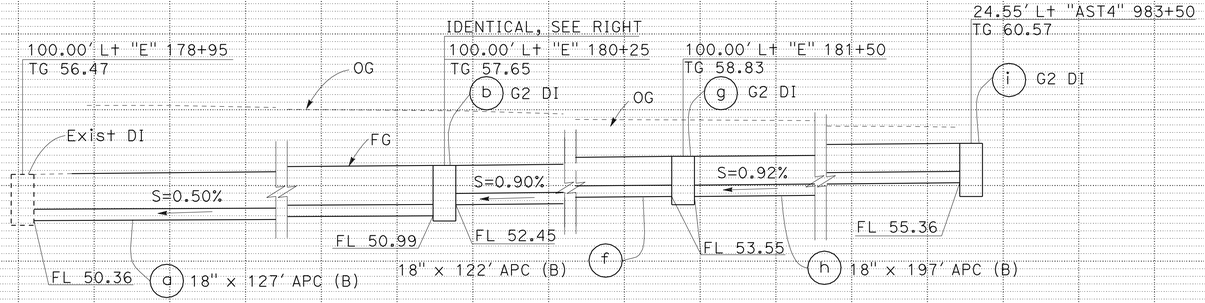

DRAINAGE SYSTEM No. 1

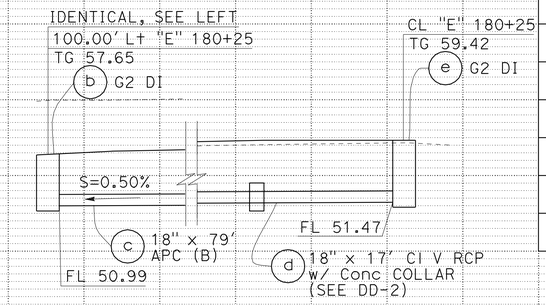

DRAINAGE SYSTEM No. 1

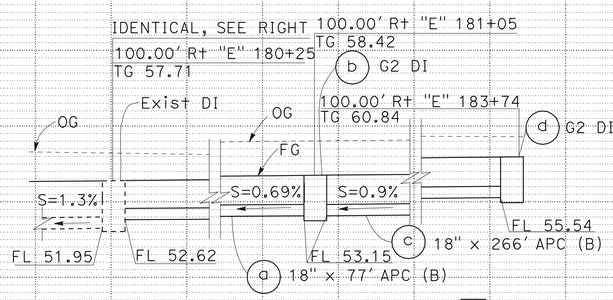

DRAINAGE SYSTEM No. 2

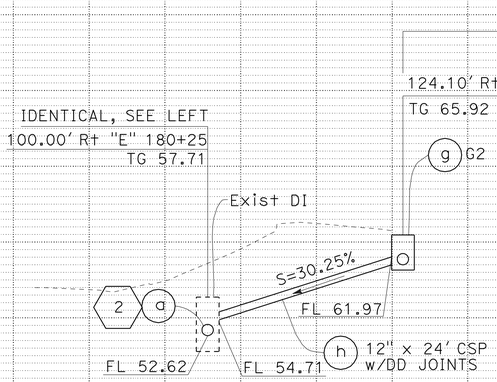

DRAINAGE SYSTEM No. 3

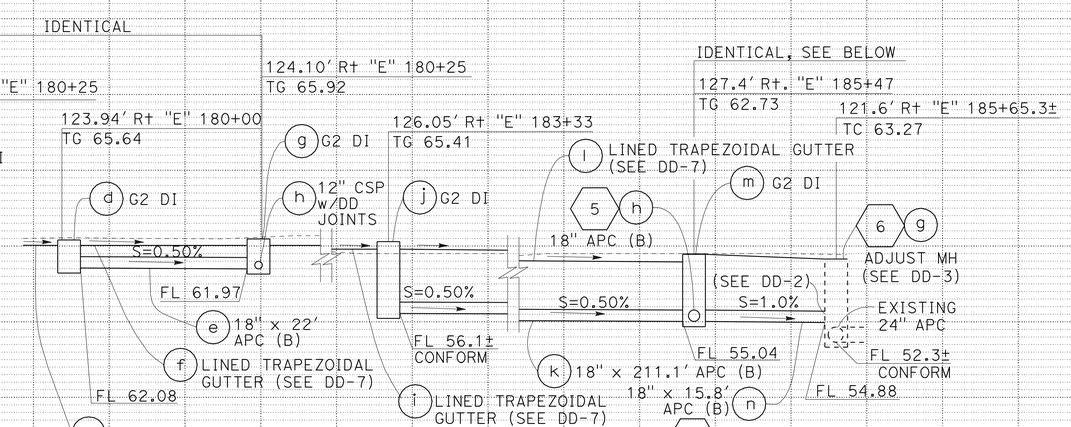

DRAINAGE SYSTEM No. 3

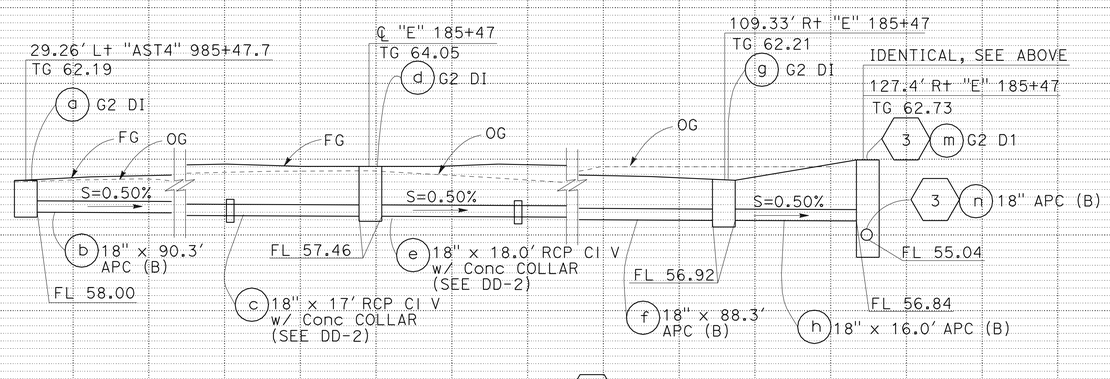

DRAINAGE SYSTEM No. 5

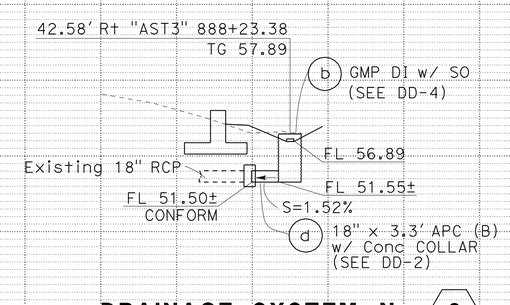

DRAINAGE SYSTEM No. 8

DRAINAGE PROFILES

SCALE: Horiz 1" = 10'
Vert 1" = 10'

DP-1

STATE OF CALIFORNIA - DEPARTMENT OF TRANSPORTATION
Caltrans

CONSULTANT FUNCTIONAL SUPERVISOR: JOSEPH PETERSON
CALCULATED-DESIGNED BY: KATHLEEN M. REILLY
CHECKED BY: SHARON L. PATCH
REVISED BY: KR
DATE REVISED: 10/31/11

LAST REVISION 10-31-11 DATE PLOTTED => 19-JAN-2012 TIME PLOTTED => 06:22

Dist	COUNTY	ROUTE	POST MILES TOTAL PROJECT	SHEET No.	TOTAL SHEETS
04	CC	4	27.3/R29.0	138	950

Joseph E. Peterson 10/31/11
REGISTERED CIVIL ENGINEER DATE

1-17-12
PLANS APPROVAL DATE

REGISTERED PROFESSIONAL ENGINEER J.E.Peterson No. 42777 Exp. 3/31/12 CIVIL STATE OF CALIFORNIA

THE STATE OF CALIFORNIA OR ITS OFFICERS OR AGENTS SHALL NOT BE RESPONSIBLE FOR THE ACCURACY OR COMPLETENESS OF SCANNED COPIES OF THIS PLAN SHEET.

CALTRANS
111 GRAND AVENUE
OAKLAND, CA 94612

CCTA
2999 OAK ROAD, SUITE 100
WALNUT CREEK, CA 94597

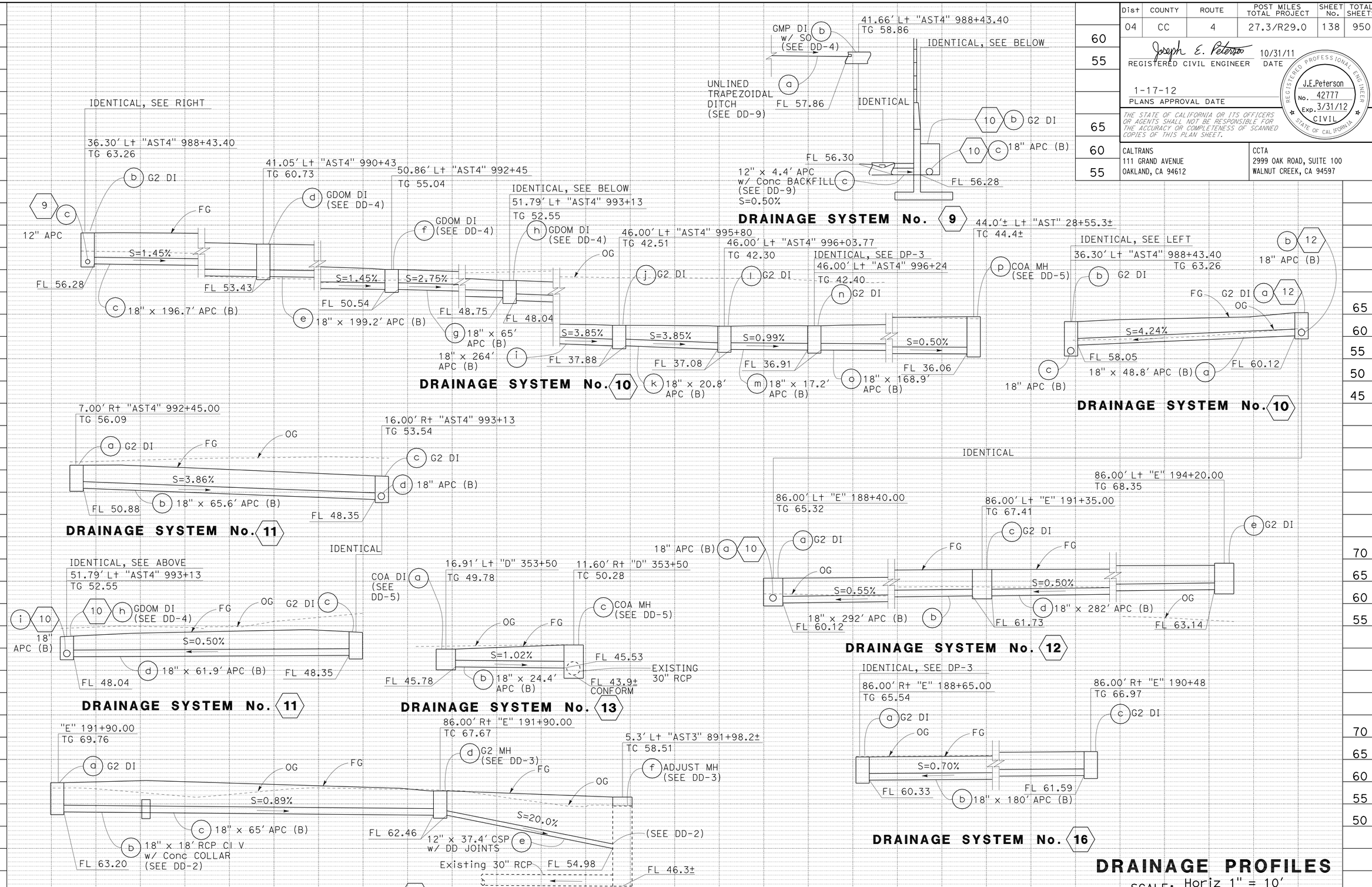

DRAINAGE PROFILES

SCALE: Horiz 1" = 10'
Vert 1" = 10'

DP-2

REVISED BY	KR	DATE REVISED	10/31/11
KATHLEEN M. REILLY	SHARON L. PATCH		
CALCULATED-DESIGNED BY		CHECKED BY	
CONSULTANT FUNCTIONAL SUPERVISOR	JOSEPH PETERSON		

STATE OF CALIFORNIA - DEPARTMENT OF TRANSPORTATION

Caltrans

LAST REVISION 10-31-11
DATE PLOTTED => 19-JAN-2012
TIME PLOTTED => 06:22

Dist	COUNTY	ROUTE	POST MILES TOTAL PROJECT	SHEET No.	TOTAL SHEETS
04	CC	4	27.3/R29.0	139	950

Joseph E. Peterson 8/9/11
REGISTERED CIVIL ENGINEER DATE

1-17-12
PLANS APPROVAL DATE

REGISTERED PROFESSIONAL ENGINEER J.E.Peterson No. 42777 Exp. 3/31/12 CIVIL STATE OF CALIFORNIA

THE STATE OF CALIFORNIA OR ITS OFFICERS OR AGENTS SHALL NOT BE RESPONSIBLE FOR THE ACCURACY OR COMPLETENESS OF SCANNED COPIES OF THIS PLAN SHEET.

CALTRANS
111 GRAND AVENUE
OAKLAND, CA 94612

CCTA
2999 OAK ROAD, SUITE 100
WALNUT CREEK, CA 94597

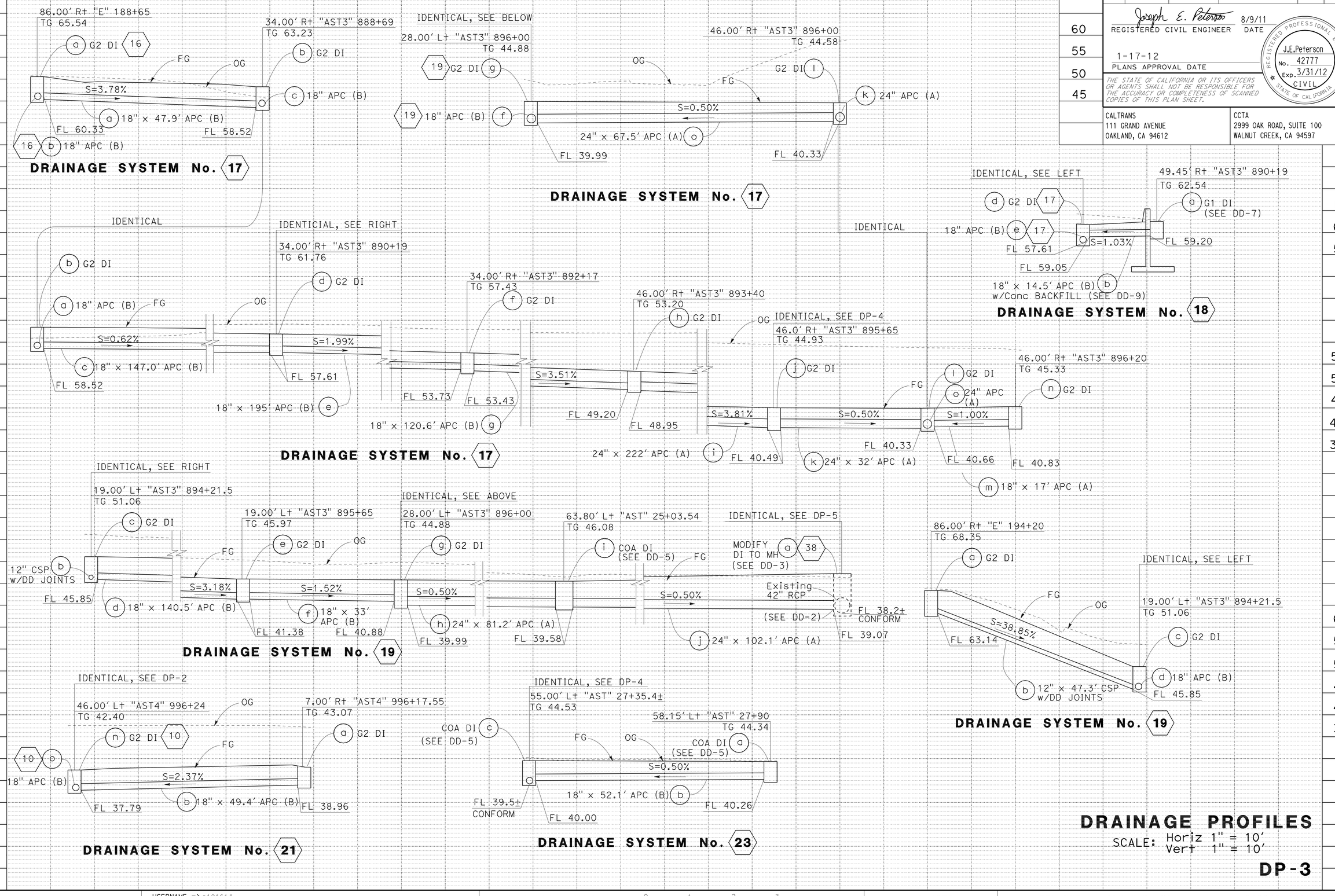

DRAINAGE PROFILES

SCALE: Horiz 1" = 10'
Vert 1" = 10'

DP-3

REVISED BY	DATE REVISED
KR	8/9/11

KATHLEEN M. REILLY — CALCULATED-DESIGNED BY
SHARON L. PATCH — CHECKED BY
JOSEPH PETERSON — CONSULTANT FUNCTIONAL SUPERVISOR

STATE OF CALIFORNIA - DEPARTMENT OF TRANSPORTATION
Caltrans

LAST REVISION 8-9-11 | DATE PLOTTED => 19-JAN-2012 | TIME PLOTTED => 06:22

Dist	COUNTY	ROUTE	POST MILES TOTAL PROJECT	SHEET No.	TOTAL SHEETS
04	CC	4	27.3/R29.0	140	950

REGISTERED CIVIL ENGINEER — 10/31/11 DATE

1-17-12
PLANS APPROVAL DATE

REGISTERED PROFESSIONAL ENGINEER J.E.Peterson No. 42777 Exp. 3/31/12 CIVIL STATE OF CALIFORNIA

THE STATE OF CALIFORNIA OR ITS OFFICERS OR AGENTS SHALL NOT BE RESPONSIBLE FOR THE ACCURACY OR COMPLETENESS OF SCANNED COPIES OF THIS PLAN SHEET.

CALTRANS
111 GRAND AVENUE
OAKLAND, CA 94612

CCTA
2999 OAK ROAD, SUITE 100
WALNUT CREEK, CA 94597

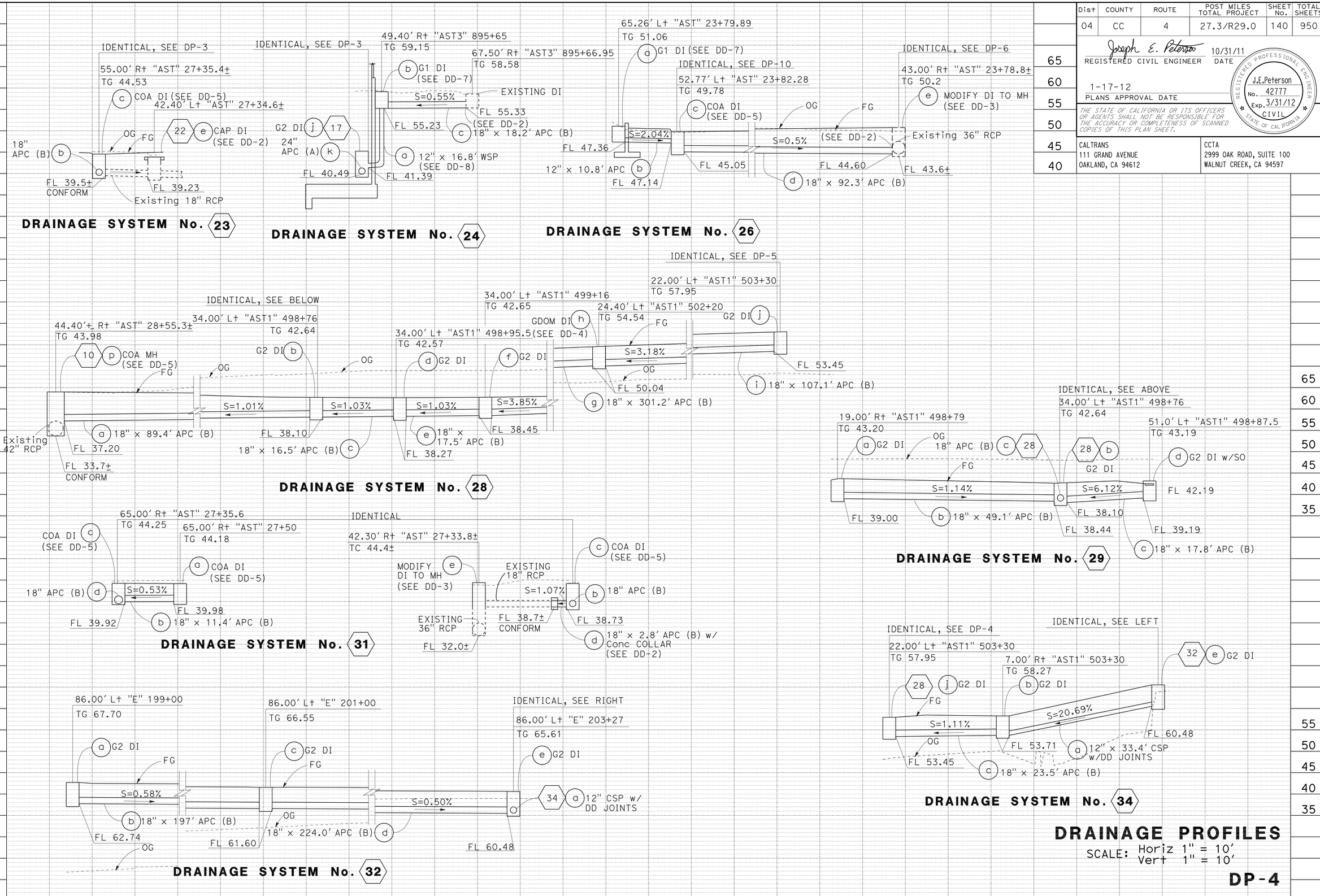

DRAINAGE PROFILES

SCALE: Horiz 1" = 10'
Vert 1" = 10'

DP-4

REVISED BY: KR — DATE REVISED: 10/31/11
CALCULATED-DESIGNED BY: KATHLEEN M. REILLY — CHECKED BY: SHARON L. PATCH
CONSULTANT FUNCTIONAL SUPERVISOR: JOSEPH PETERSON
STATE OF CALIFORNIA - DEPARTMENT OF TRANSPORTATION — Caltrans

LAST REVISION 10-31-11 — DATE PLOTTED => 19-JAN-2012 — TIME PLOTTED => 06:22

Dist	COUNTY	ROUTE	POST MILES TOTAL PROJECT	SHEET No.	TOTAL SHEETS
04	CC	4	27.3/R29.0	141	950

Joseph E. Peterson 10/31/11
REGISTERED CIVIL ENGINEER DATE

1-17-12
PLANS APPROVAL DATE

REGISTERED PROFESSIONAL ENGINEER J.E.Peterson No. 42777 Exp. 3/31/12 CIVIL STATE OF CALIFORNIA

THE STATE OF CALIFORNIA OR ITS OFFICERS OR AGENTS SHALL NOT BE RESPONSIBLE FOR THE ACCURACY OR COMPLETENESS OF SCANNED COPIES OF THIS PLAN SHEET.

CALTRANS
111 GRAND AVENUE
OAKLAND, CA 94612

CCTA
2999 OAK ROAD, SUITE 100
WALNUT CREEK, CA 94597

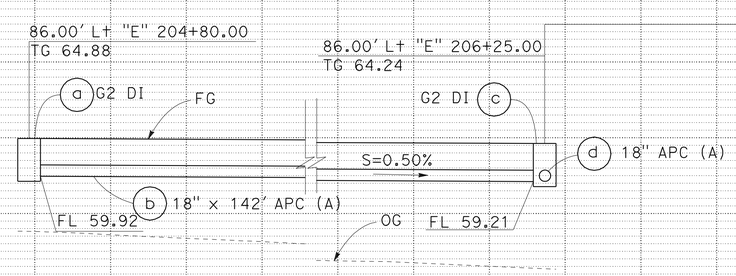

DRAINAGE SYSTEM No. 35

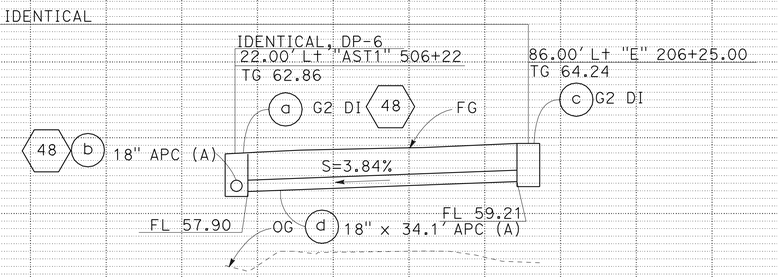

DRAINAGE SYSTEM No. 35

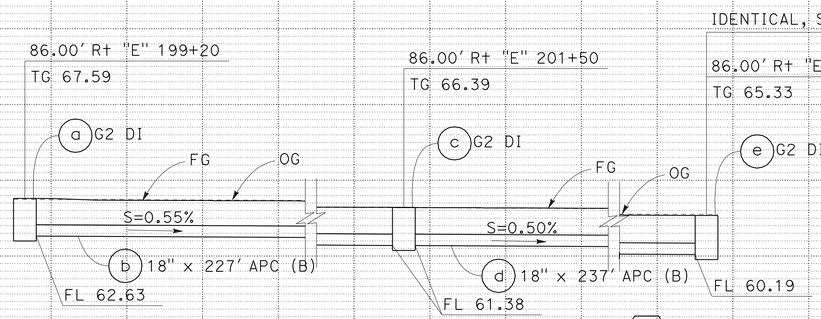

DRAINAGE SYSTEM No. 36

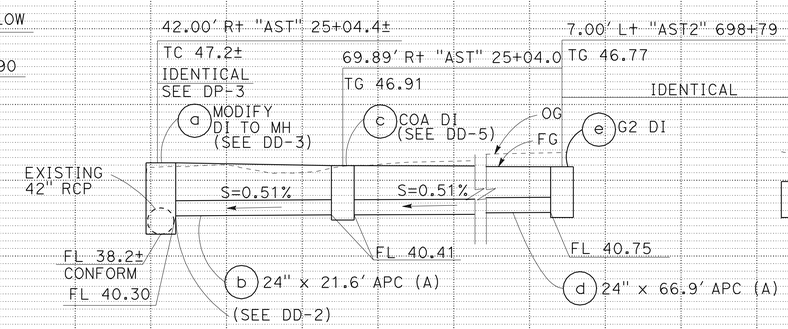

DRAINAGE SYSTEM No. 38

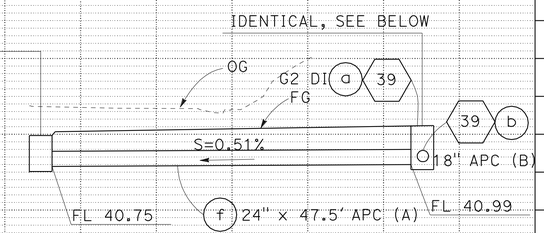

DRAINAGE SYSTEM No. 38

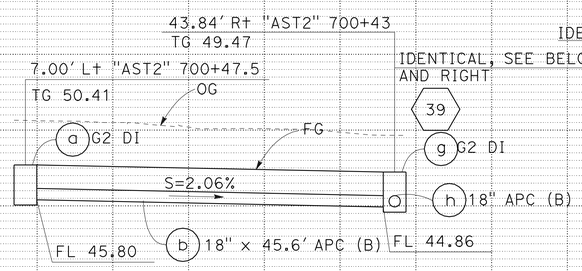

DRAINAGE SYSTEM No. 40

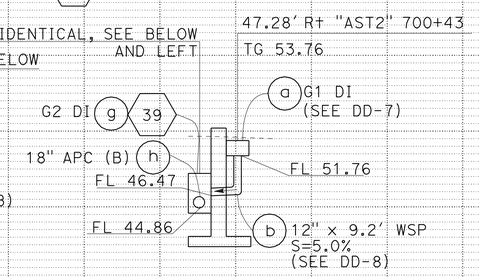

DRAINAGE SYSTEM No. 41

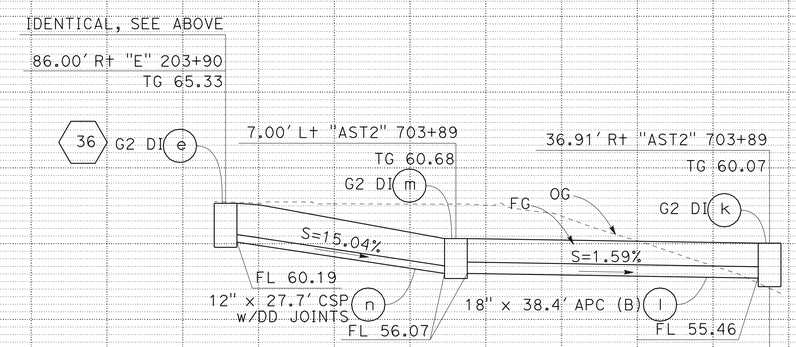

DRAINAGE SYSTEM No. 39

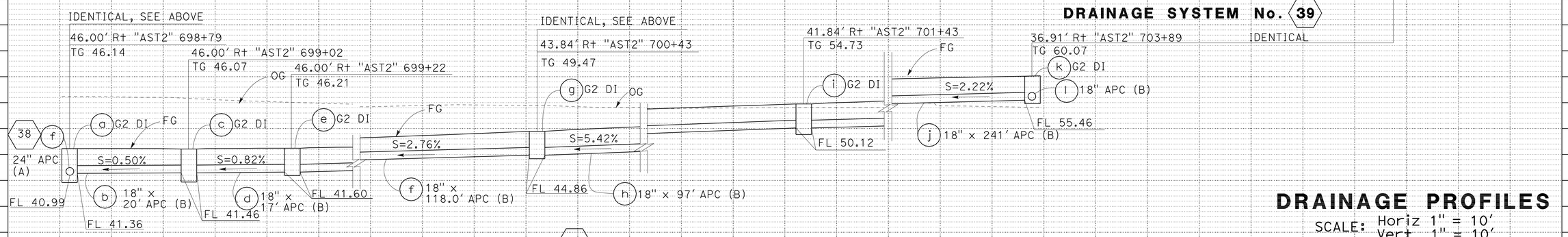

DRAINAGE SYSTEM No. 39

DRAINAGE PROFILES

SCALE: Horiz 1" = 10'
Vert 1" = 10'

DP-5

STATE OF CALIFORNIA - DEPARTMENT OF TRANSPORTATION
Caltrans

CONSULTANT FUNCTIONAL SUPERVISOR: JOSEPH PETERSON
CALCULATED-DESIGNED BY: KATHLEEN M. REILLY
CHECKED BY: SHARON L. PATCH
REVISED BY: KR
DATE REVISED: 10/31/11

LAST REVISION DATE PLOTTED => 19-JAN-2012
TIME PLOTTED => 06:22

Dist	COUNTY	ROUTE	POST MILES TOTAL PROJECT	SHEET No.	TOTAL SHEETS
04	CC	4	27.3/R29.0	142	950

Joseph E. Peterson 8/9/11
REGISTERED CIVIL ENGINEER DATE

1-17-12
PLANS APPROVAL DATE

REGISTERED PROFESSIONAL ENGINEER J.E.Peterson No. 42777 Exp. 3/31/12 CIVIL STATE OF CALIFORNIA

THE STATE OF CALIFORNIA OR ITS OFFICERS OR AGENTS SHALL NOT BE RESPONSIBLE FOR THE ACCURACY OR COMPLETENESS OF SCANNED COPIES OF THIS PLAN SHEET.

CALTRANS
111 GRAND AVENUE
OAKLAND, CA 94612

CCTA
2999 OAK ROAD, SUITE 100
WALNUT CREEK, CA 94597

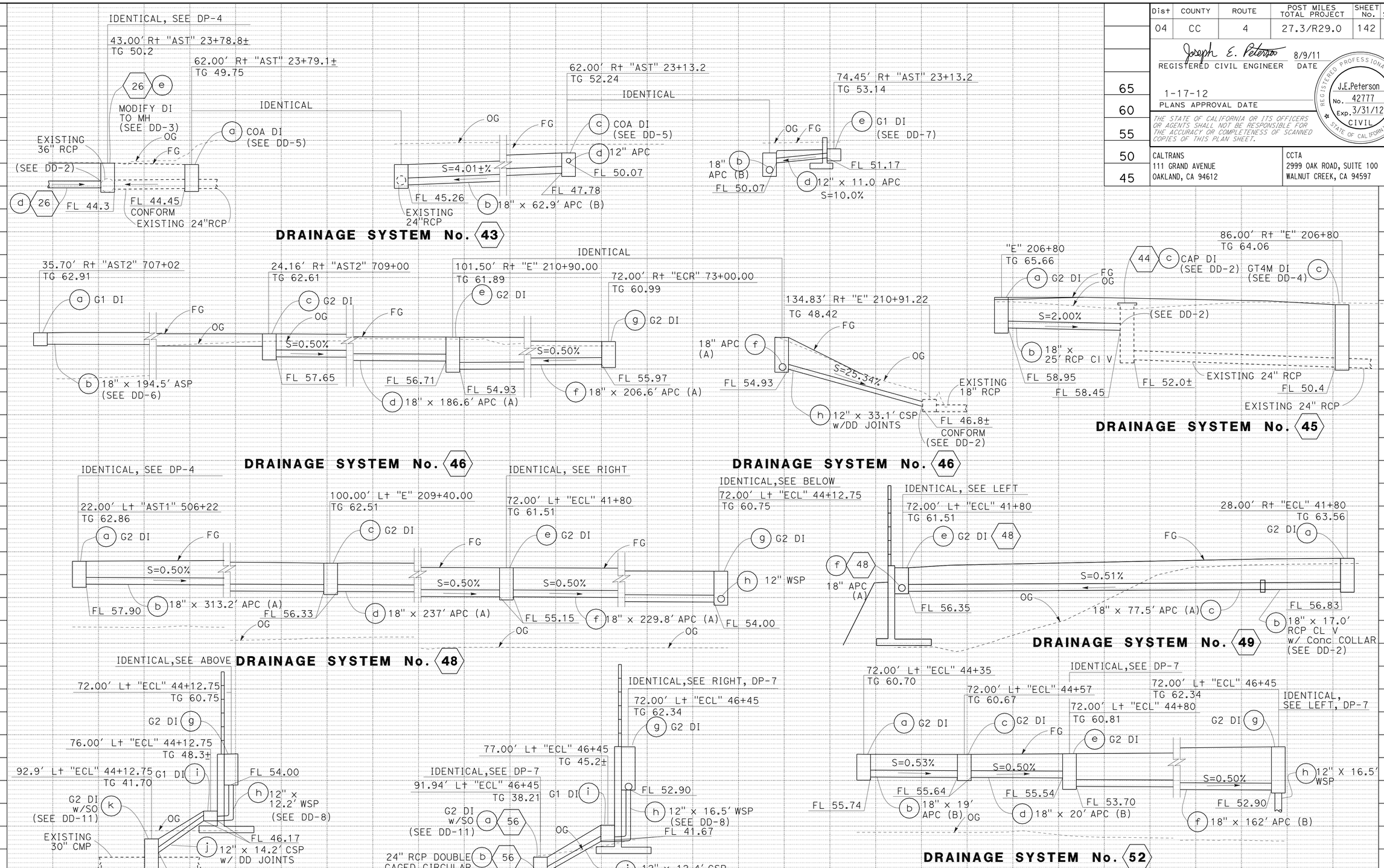

DRAINAGE PROFILES

SCALE: Horiz 1" = 10'
Vert 1" = 10'

DP-6

STATE OF CALIFORNIA - DEPARTMENT OF TRANSPORTATION
Caltrans

CONSULTANT FUNCTIONAL SUPERVISOR: JOSEPH PETERSON
CALCULATED-DESIGNED BY: KATHLEEN M. REILLY
CHECKED BY: SHARON L. PATCH
REVISED BY: KR
DATE REVISED: 8/9/11

LAST REVISION 8-9-11
DATE PLOTTED => 19-JAN-2012
TIME PLOTTED => 06:22

Dist	COUNTY	ROUTE	POST MILES TOTAL PROJECT	SHEET No.	TOTAL SHEETS
04	CC	4	27.3/R29.0	143	950

Joseph E. Peterson 10/31/11
REGISTERED CIVIL ENGINEER DATE

1-17-12
PLANS APPROVAL DATE

REGISTERED PROFESSIONAL ENGINEER J.E.Peterson No. 42777 Exp. 3/31/12 CIVIL STATE OF CALIFORNIA

THE STATE OF CALIFORNIA OR ITS OFFICERS OR AGENTS SHALL NOT BE RESPONSIBLE FOR THE ACCURACY OR COMPLETENESS OF SCANNED COPIES OF THIS PLAN SHEET.

CALTRANS
111 GRAND AVENUE
OAKLAND, CA 94612

CCTA
2999 OAK ROAD, SUITE 100
WALNUT CREEK, CA 94597

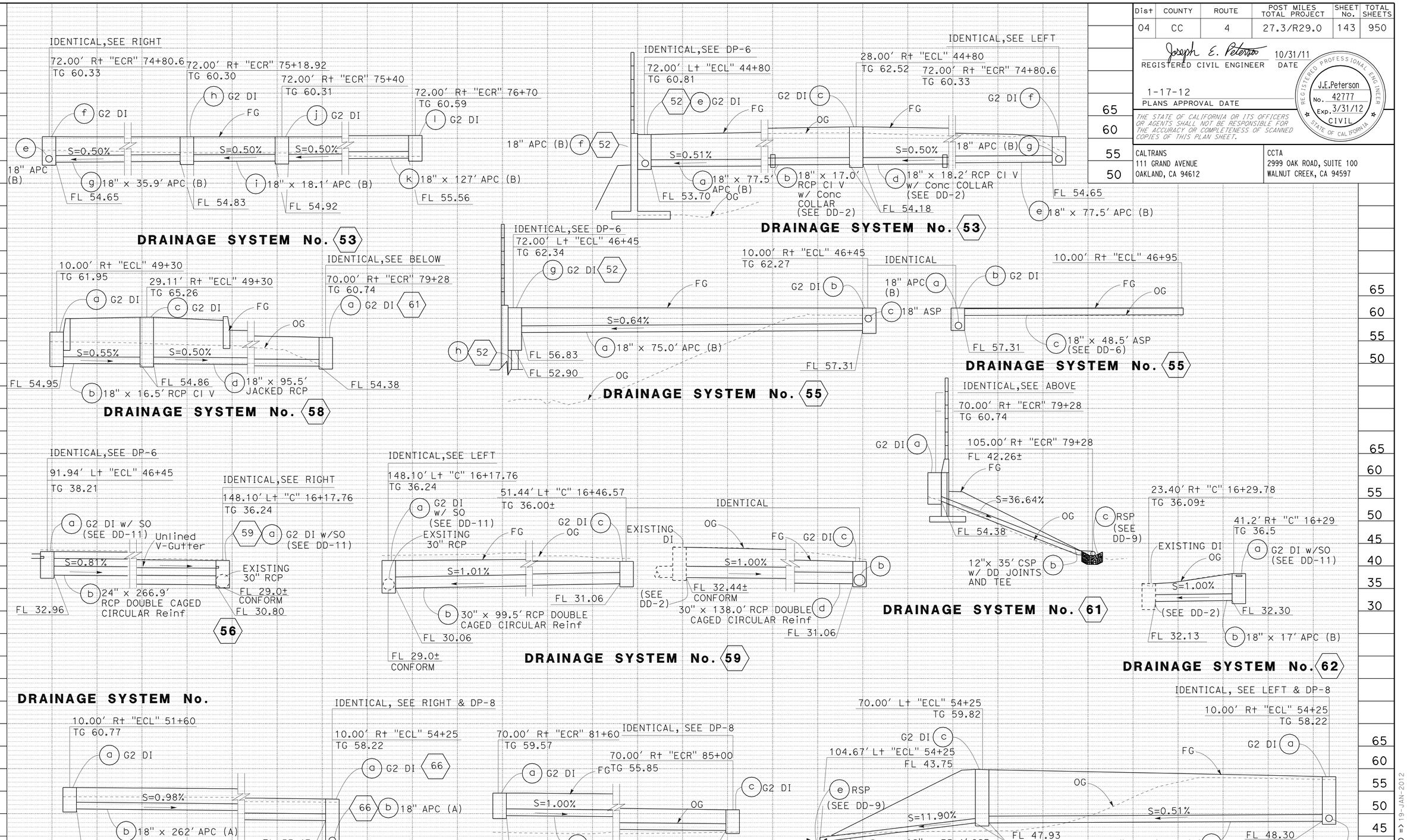

DRAINAGE PROFILES

SCALE: Horiz 1" = 10'
Vert 1" = 10'

DP-7

REVISED BY	DATE REVISED
KR	10/31/11

KATHLEEN M. REILLY — CALCULATED-DESIGNED BY
SHARON L. PATCH — CHECKED BY
CONSULTANT FUNCTIONAL SUPERVISOR — JOSEPH PETERSON

STATE OF CALIFORNIA - DEPARTMENT OF TRANSPORTATION
Caltrans

LAST REVISION 10-31-11 | DATE PLOTTED => 19-JAN-2012 | TIME PLOTTED => 06:23

Dist	COUNTY	ROUTE	POST MILES TOTAL PROJECT	SHEET No.	TOTAL SHEETS
04	CC	4	27.3/R29.0	144	950

REGISTERED CIVIL ENGINEER — DATE 10/31/11

1-17-12
PLANS APPROVAL DATE

REGISTERED PROFESSIONAL ENGINEER — J.E.Peterson No. 42777 Exp. 3/31/12 CIVIL — STATE OF CALIFORNIA

THE STATE OF CALIFORNIA OR ITS OFFICERS OR AGENTS SHALL NOT BE RESPONSIBLE FOR THE ACCURACY OR COMPLETENESS OF SCANNED COPIES OF THIS PLAN SHEET.

CALTRANS
111 GRAND AVENUE
OAKLAND, CA 94612

CCTA
2999 OAK ROAD, SUITE 100
WALNUT CREEK, CA 94597

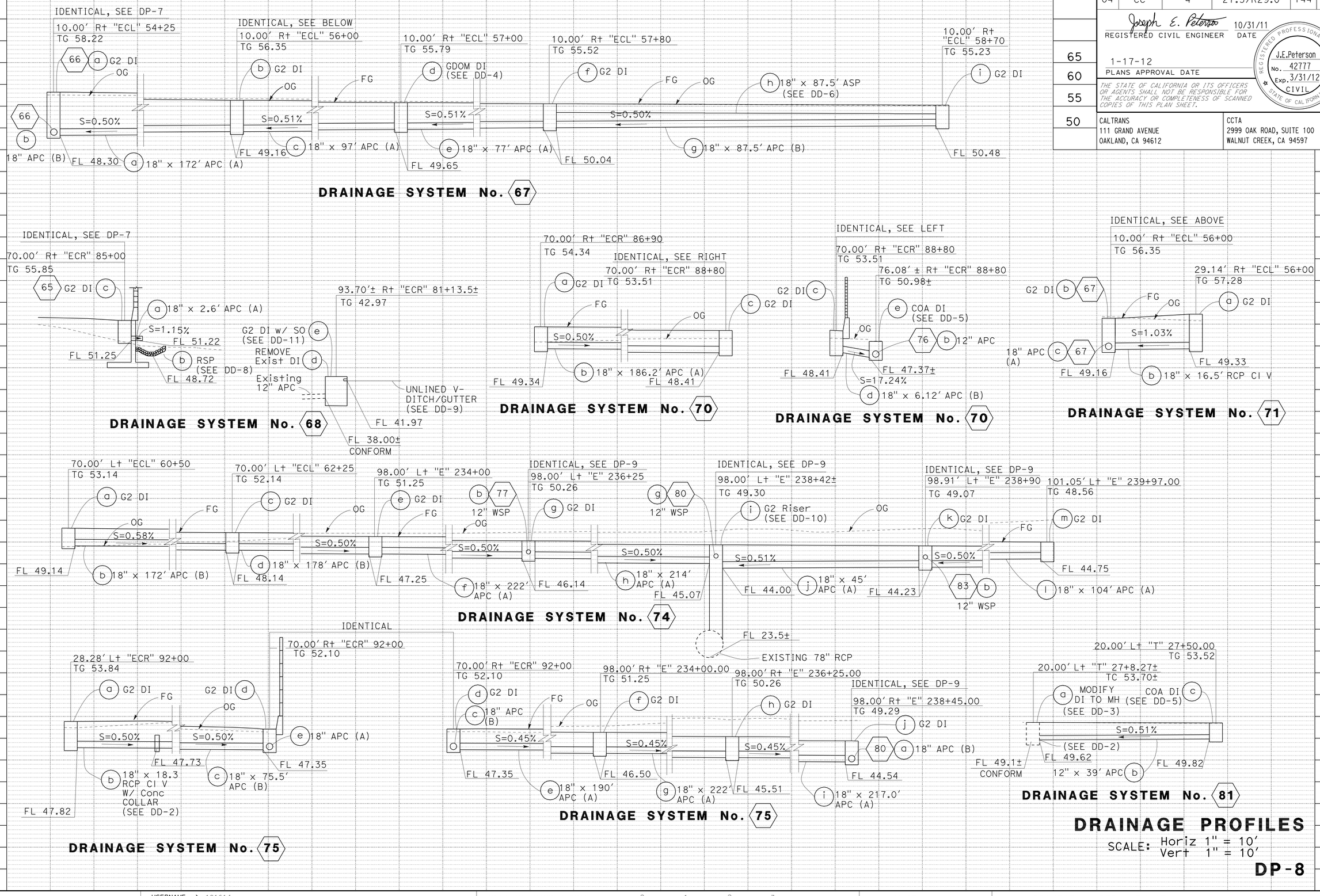

DRAINAGE PROFILES

SCALE: Horiz 1" = 10'
Vert 1" = 10'

DP-8

STATE OF CALIFORNIA - DEPARTMENT OF TRANSPORTATION
Caltrans
CONSULTANT FUNCTIONAL SUPERVISOR: JOSEPH PETERSON
CALCULATED-DESIGNED BY: KATHLEEN M. REILLY
CHECKED BY: SHARON L. PATCH
REVISED BY: KR
DATE REVISED: 10/31/11

LAST REVISION 10-31-11
DATE PLOTTED => 19-JAN-2012
TIME PLOTTED => 06:23

Dist	COUNTY	ROUTE	POST MILES TOTAL PROJECT	SHEET No.	TOTAL SHEETS
04	CC	4	27.3/R29.0	145	950

REGISTERED CIVIL ENGINEER — DATE: 10/31/11

1-17-12
PLANS APPROVAL DATE

REGISTERED PROFESSIONAL ENGINEER — J.E.Peterson No. 42777 Exp. 3/31/12 CIVIL — STATE OF CALIFORNIA

THE STATE OF CALIFORNIA OR ITS OFFICERS OR AGENTS SHALL NOT BE RESPONSIBLE FOR THE ACCURACY OR COMPLETENESS OF SCANNED COPIES OF THIS PLAN SHEET.

CALTRANS
111 GRAND AVENUE
OAKLAND, CA 94612

CCTA
2999 OAK ROAD, SUITE 100
WALNUT CREEK, CA 94597

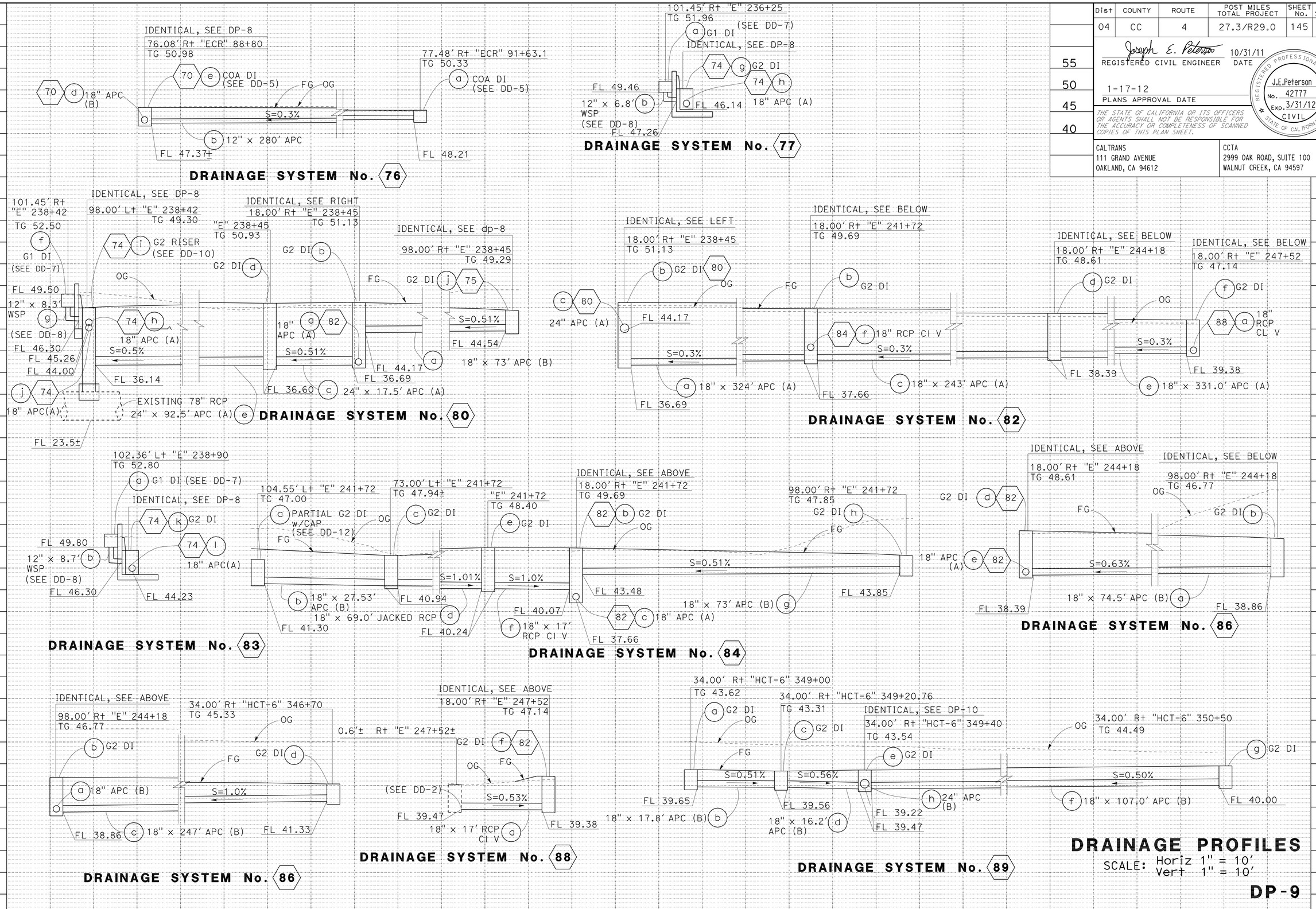

DRAINAGE PROFILES

SCALE: Horiz 1" = 10'
Vert 1" = 10'

DP-9

REVISED BY	DATE REVISED
KR	10/31/11

KATHLEEN M. REILLY — CALCULATED-DESIGNED BY
SHARON L. PATCH — CHECKED BY
CONSULTANT FUNCTIONAL SUPERVISOR: JOSEPH PETERSON

STATE OF CALIFORNIA - DEPARTMENT OF TRANSPORTATION — Caltrans

LAST REVISION 10-31-11 — DATE PLOTTED => 19-JAN-2012 — TIME PLOTTED => 06:23

Dist	COUNTY	ROUTE	POST MILES TOTAL PROJECT	SHEET No.	TOTAL SHEETS
04	CC	4	27.3/R29.0	146	950

REGISTERED CIVIL ENGINEER — Joseph E. Peterson — DATE 10/31/11

PLANS APPROVAL DATE 1-17-12

REGISTERED PROFESSIONAL ENGINEER — J.E.Peterson — No. 42777 — Exp. 3/31/12 — CIVIL — STATE OF CALIFORNIA

THE STATE OF CALIFORNIA OR ITS OFFICERS OR AGENTS SHALL NOT BE RESPONSIBLE FOR THE ACCURACY OR COMPLETENESS OF SCANNED COPIES OF THIS PLAN SHEET.

CALTRANS
111 GRAND AVENUE
OAKLAND, CA 94612

CCTA
2999 OAK ROAD, SUITE 100
WALNUT CREEK, CA 94597

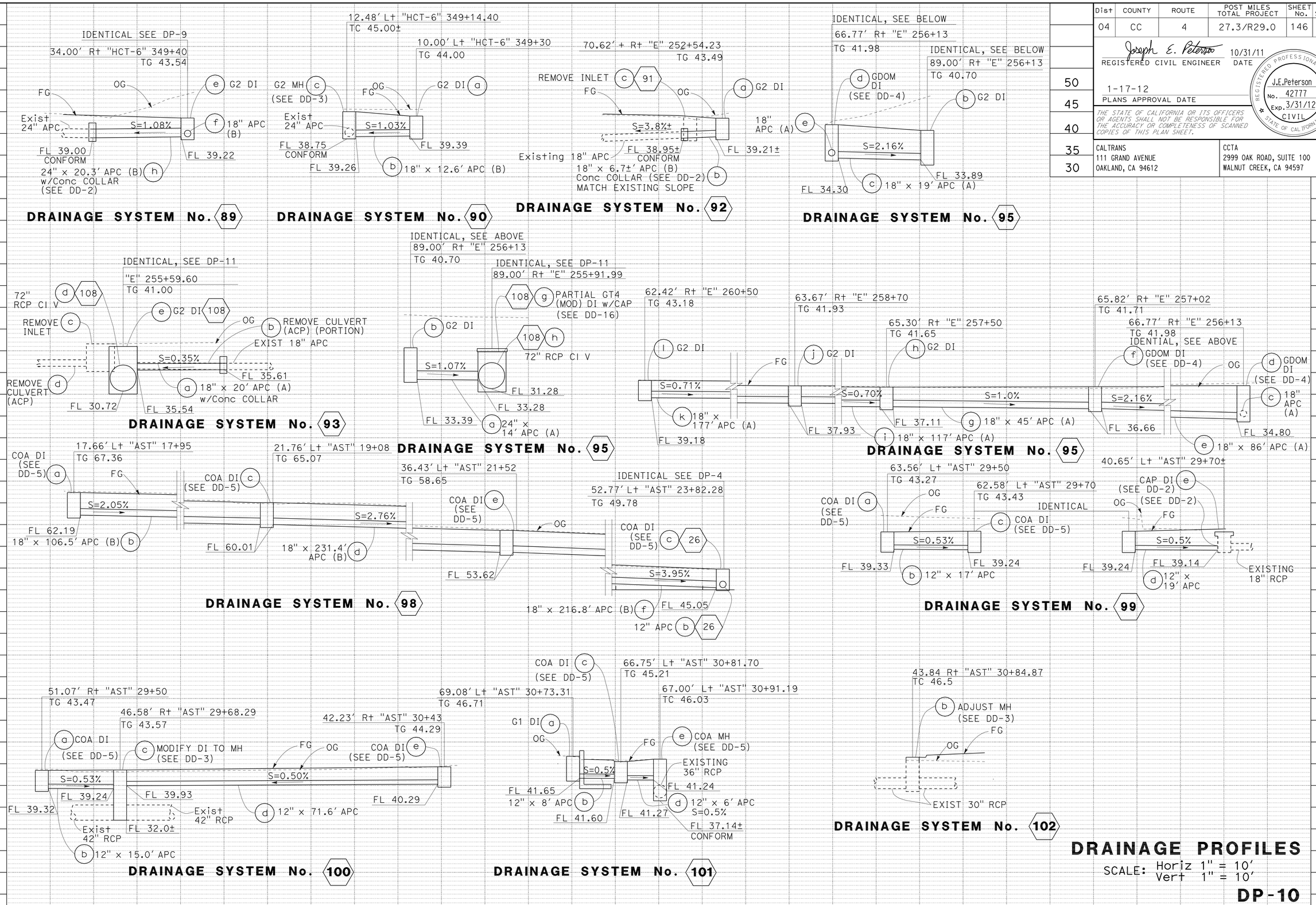

DRAINAGE PROFILES

SCALE: Horiz 1" = 10'
Vert 1" = 10'

DP-10

REVISED BY: KR — DATE REVISED: 10/31/11

KATHLEEN M. REILLY — CALCULATED-DESIGNED BY
SHARON L. PATCH — CHECKED BY

CONSULTANT FUNCTIONAL SUPERVISOR: JOSEPH PETERSON

STATE OF CALIFORNIA - DEPARTMENT OF TRANSPORTATION — Caltrans

LAST REVISION — DATE PLOTTED => 19-JAN-2012 — TIME PLOTTED => 06:23

Dist	COUNTY	ROUTE	POST MILES TOTAL PROJECT	SHEET No.	TOTAL SHEETS
04	CC	4	27.3/R29.0	147	950

Joseph E. Peterson 10/31/11
REGISTERED CIVIL ENGINEER DATE

1-17-12
PLANS APPROVAL DATE

REGISTERED PROFESSIONAL ENGINEER J.E.Peterson No. 42777 Exp. 3/31/12 CIVIL STATE OF CALIFORNIA

THE STATE OF CALIFORNIA OR ITS OFFICERS OR AGENTS SHALL NOT BE RESPONSIBLE FOR THE ACCURACY OR COMPLETENESS OF SCANNED COPIES OF THIS PLAN SHEET.

CALTRANS
111 GRAND AVENUE
OAKLAND, CA 94612

CCTA
2999 OAK ROAD, SUITE 100
WALNUT CREEK, CA 94597

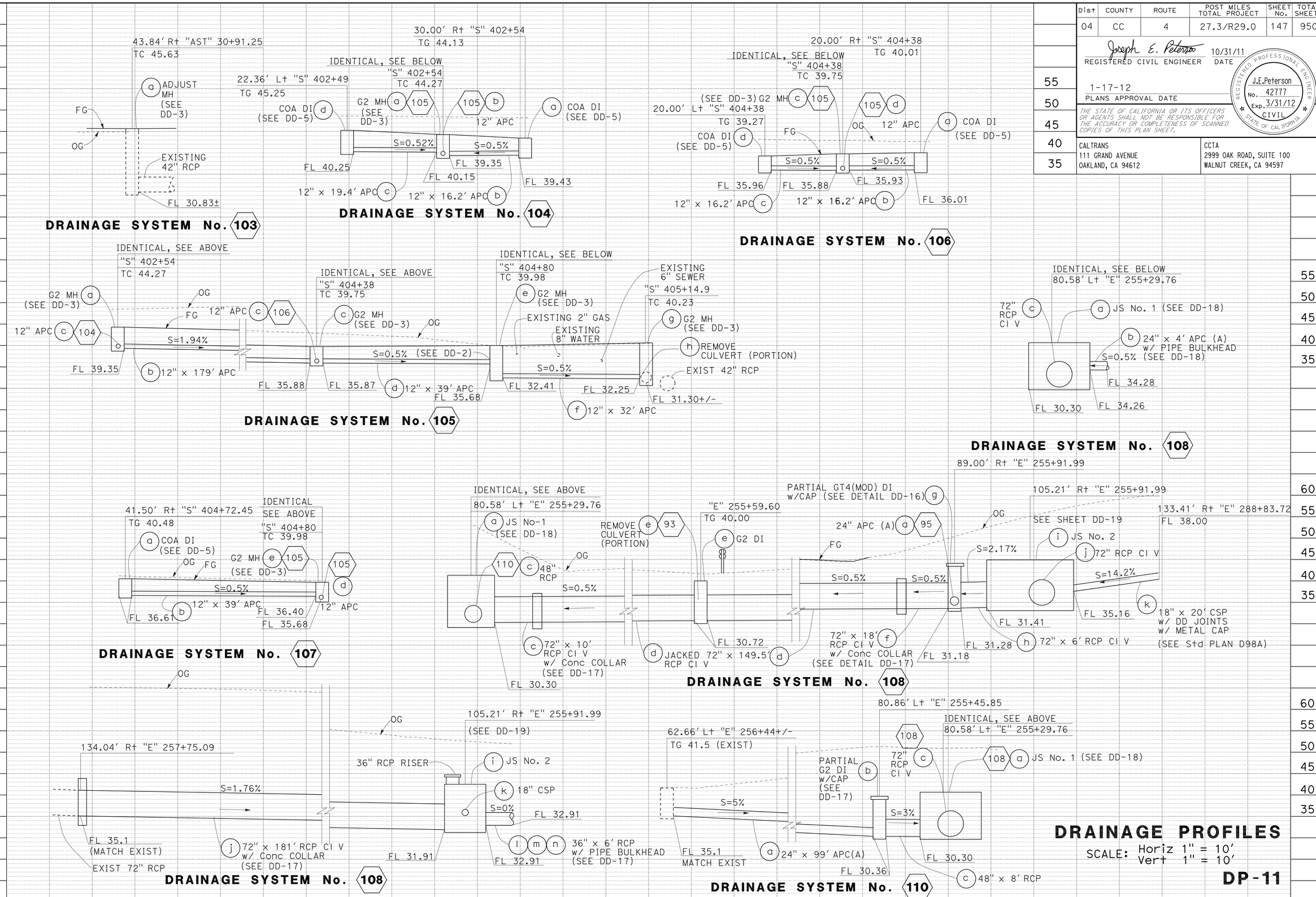

DRAINAGE PROFILES

SCALE: Horiz 1" = 10'
Vert 1" = 10'

DP-11

REVISED BY	DATE REVISED
KR	10/31/11

KATHLEEN M. REILLY — CALCULATED-DESIGNED BY
SHARON L. PATCH — CHECKED BY
JOSEPH PETERSON — CONSULTANT FUNCTIONAL SUPERVISOR

STATE OF CALIFORNIA - DEPARTMENT OF TRANSPORTATION
Caltrans

LAST REVISION 10-31-11
DATE PLOTTED => 19-JAN-2012
TIME PLOTTED => 06:23

Dist	COUNTY	ROUTE	POST MILES TOTAL PROJECT	SHEET No.	TOTAL SHEETS
04	CC	4	27.3/R29.0	148	950

Joseph E. Peterson 8/9/11
REGISTERED CIVIL ENGINEER DATE

1-17-12
PLANS APPROVAL DATE

REGISTERED PROFESSIONAL ENGINEER J.E.Peterson No. 42777 Exp. 3/31/12 CIVIL STATE OF CALIFORNIA

THE STATE OF CALIFORNIA OR ITS OFFICERS OR AGENTS SHALL NOT BE RESPONSIBLE FOR THE ACCURACY OR COMPLETENESS OF SCANNED COPIES OF THIS PLAN SHEET.

CALTRANS
111 GRAND AVENUE
OAKLAND, CA 94612

CCTA
2999 OAK ROAD, SUITE 100
WALNUT CREEK, CA 94597

NOTES:

1. FOR INFORMATION NOT SHOWN, SEE STANDARD PLAN D73 THRU D74B SHEETS.
2. ORIENTATION OF TYPE G1 INLETS SIMILAR.

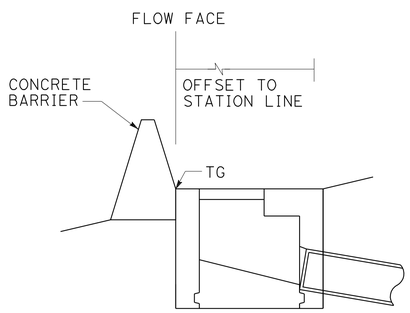

SECTION B-B

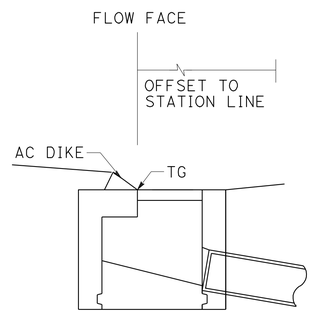

SECTION C-C

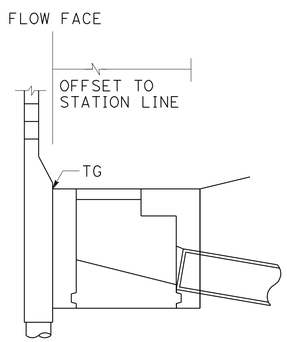

SECTION A-A

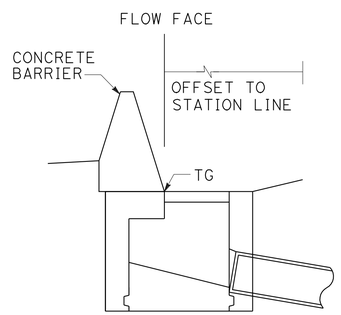

SECTION D-D

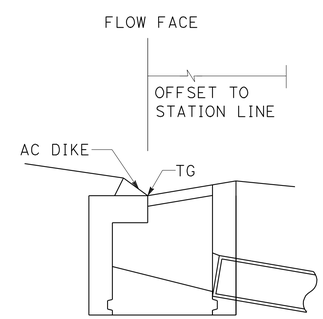

ELEVATION

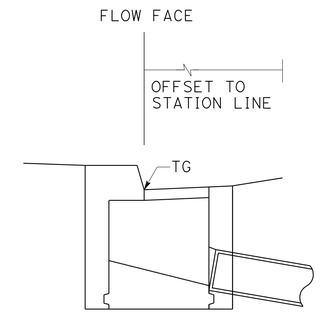

ELEVATION

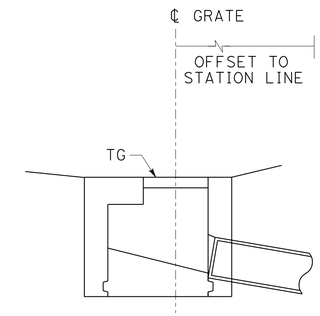

ELEVATION

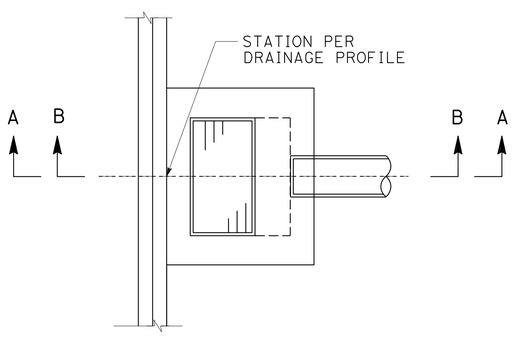

PLAN

INLET ADJACENT TO SOUND WALL (SECTION A-A)
(TYPES 736 S/SV)
OR CONCRETE BARRIER (SECTION B-B)
(TYPES 60E, 60GE, 60SC, 60SE, OR HIGH SIDE OF TYPES 60C, 60GC)

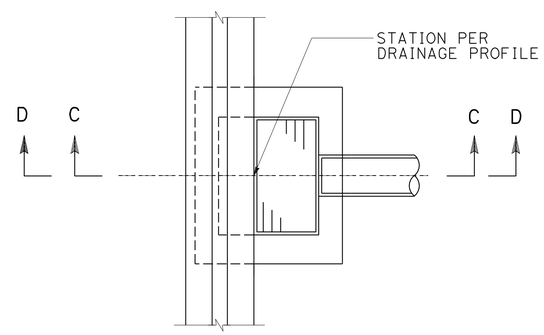

PLAN

INLET ADJACENT TO AC DIKE (SECTION C-C)
OR CONCRETE BARRIER (SECTION D-D)
(TYPE 60C SHOWN, TYPES 60, 60G, 60GC SIMILAR)

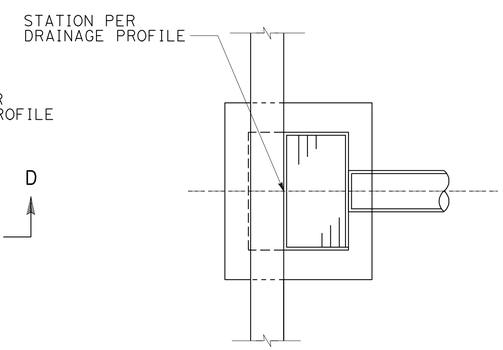

PLAN

INLET WITHIN AC SIDE GUTTER

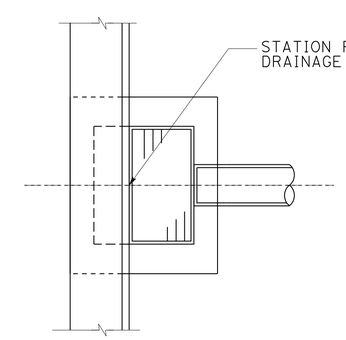

PLAN

INLET ADJACENT TO CURB

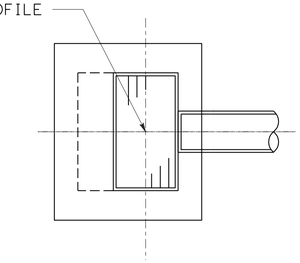

PLAN

FIELD INLET

DRAINAGE DETAILS

NO SCALE

DD-1

STATE OF CALIFORNIA - DEPARTMENT OF TRANSPORTATION
Caltrans
CONSULTANT FUNCTIONAL SUPERVISOR: JOSEPH PETERSON
CALCULATED-DESIGNED BY: KATHLEEN M. REILLY
CHECKED BY: SHARON L. PATCH
REVISED BY: KR
DATE REVISED: 8/9/11

LAST REVISION 8-9-11
DATE PLOTTED => 19-JAN-2012
TIME PLOTTED => 06:24

Dist	COUNTY	ROUTE	POST MILES TOTAL PROJECT	SHEET No.	TOTAL SHEETS
04	CC	4	27.3/R29.0	149	950

Joseph E. Peterson 8/9/11
REGISTERED CIVIL ENGINEER DATE

1-17-12
PLANS APPROVAL DATE

REGISTERED PROFESSIONAL ENGINEER J.E.Peterson No. 42777 Exp. 3/31/12 CIVIL STATE OF CALIFORNIA

THE STATE OF CALIFORNIA OR ITS OFFICERS OR AGENTS SHALL NOT BE RESPONSIBLE FOR THE ACCURACY OR COMPLETENESS OF SCANNED COPIES OF THIS PLAN SHEET.

CALTRANS
111 GRAND AVENUE
OAKLAND, CA 94612

CCTA
2999 OAK ROAD, SUITE 100
WALNUT CREEK, CA 94597

NOTES:

1. TOP OF CAP TO BE 1'-0" BELOW THE GRADING PLANE.
2. REMOVE EXISTING DRAINAGE STRUCTURE WALLS WHERE REQUIRED.
3. DRAINAGE INLET SHOWN. SIMILAR FOR MANHOLE AND PIPE RISER.

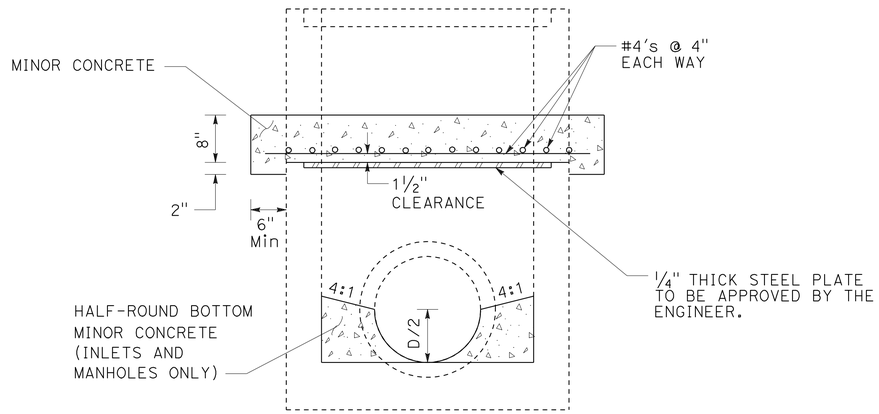

CAP DRAINAGE STRUCTURE

7 a 14 b 22 e 44 c 50 b 79 b 99 e

NOTES:

1. W = 1'-6" WHERE D2 ≤ 2'-0"
   W = 2'-6" WHERE 2'-0" < D2
2. SQUARE OR ROUND COLLAR OPTIONAL.
3. COLLAR TO BE USED FOR JOINING PROPOSED PIPE TO EXISITNG PIPE, PIPES OF DIFFERENT TYPES OR PIPES OF DIFFERENT SIZES.

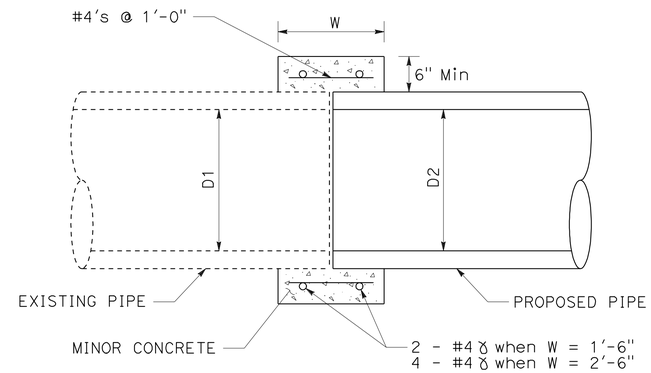

CONCRETE COLLAR

DRAINAGE UNIT	X, HEIGHT OF REMOVAL(FT)	H, HEIGHT OF ADJUSTMENT (FT)	PROPOSED TG ELEVATION
93e	1.0	0.5	41.82±

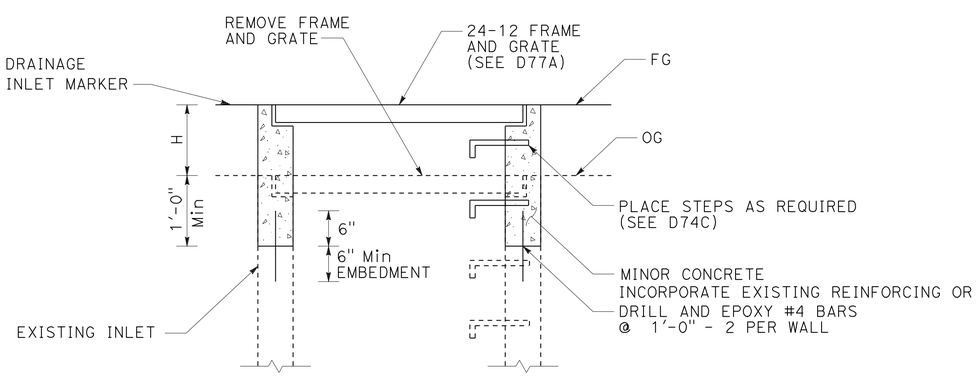

ADJUST DRAINAGE INLET

93 e

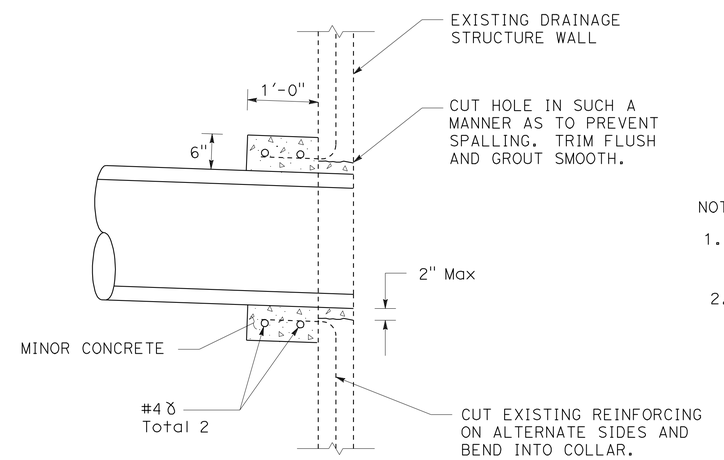

PIPE CONNECTION TO EXISTING DRAINAGE STRUCTURE

NOTES:

1. IF WALL OF EXISTING DRAINAGE STRUCTURE HAS NO REINFORCEING, DRILL AND BOND #4 DOWELS, 1' ON CENTER, 6" INTO WALL AND BEND INTO COLLAR.
2. SQUARE OR CIRCULAR COLLAR OPTIONAL.

DRAINAGE DETAILS

NO SCALE

DD-2

STATE OF CALIFORNIA - DEPARTMENT OF TRANSPORTATION

CONSULTANT FUNCTIONAL SUPERVISOR: JOSEPH PETERSON

CALCULATED-DESIGNED BY: KATHLEEN M. REILLY

CHECKED BY: SHARON L. PATCH

REVISED BY: KR

DATE REVISED: 8/9/11

LAST REVISION 8-9-11

DATE PLOTTED => 19-JAN-2012
TIME PLOTTED => 06:24

Dist	COUNTY	ROUTE	POST MILES TOTAL PROJECT	SHEET No.	TOTAL SHEETS
04	CC	4	27.3/R29.0	150	950

REGISTERED CIVIL ENGINEER — DATE: 10/31/11

1-17-12
PLANS APPROVAL DATE

REGISTERED PROFESSIONAL ENGINEER — J.E.Peterson — No. 42777 — Exp. 3/31/12 — CIVIL — STATE OF CALIFORNIA

THE STATE OF CALIFORNIA OR ITS OFFICERS OR AGENTS SHALL NOT BE RESPONSIBLE FOR THE ACCURACY OR COMPLETENESS OF SCANNED COPIES OF THIS PLAN SHEET.

CALTRANS
111 GRAND AVENUE
OAKLAND, CA 94612

CCTA
2999 OAK ROAD, SUITE 100
WALNUT CREEK, CA 94597

NOTES:

1. EXISTING PAVEMENT TO BE SAWCUT PRIOR TO MODIFYING INLET TO MANHOLE.
2. FOR INLET DETAILS NOT SHOWN, SEE STANDARD PLAN D73 - TYPE G2.
3. FOR FRAME AND COVER DETAILS NOT SHOWN, SEE STANDARD PLAN B7-11.

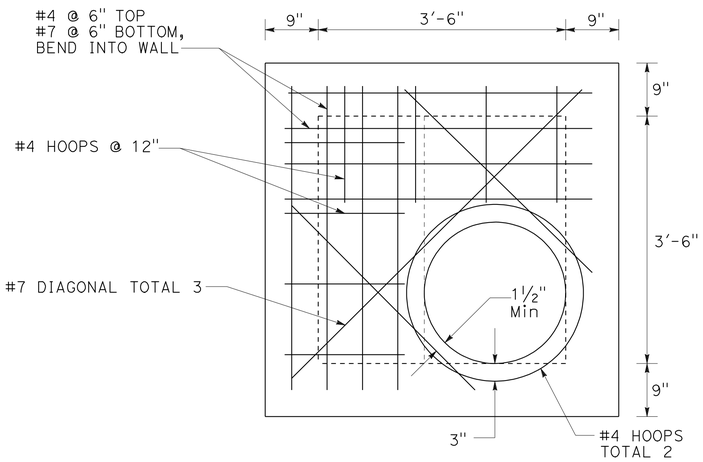

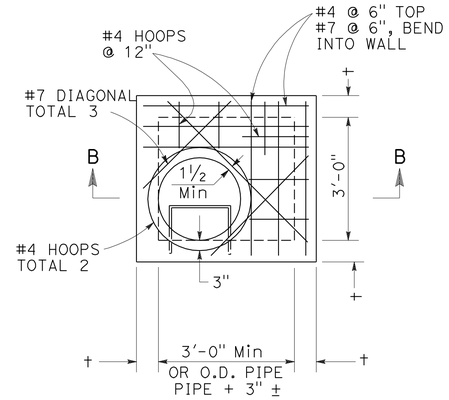

PLAN

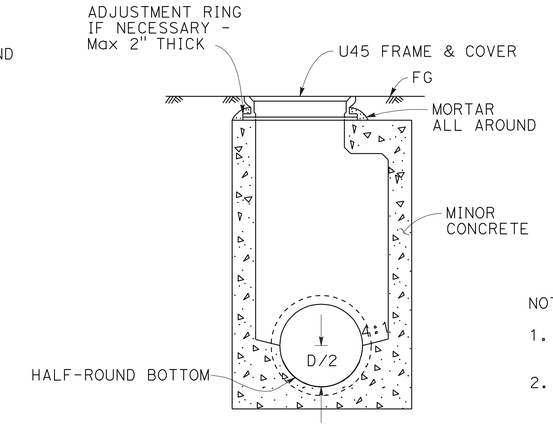

SECTION B-B

NOTES:

1. FOR INLET DETAILS NOT SHOWN, SEE STANDARD PLAN D73 - TYPE G2.
2. FOR FRAME AND COVER DETAILS, SEE STANDARD PLAN B7-11.

G2 MANHOLE

15 d 90 c 105 a c e g

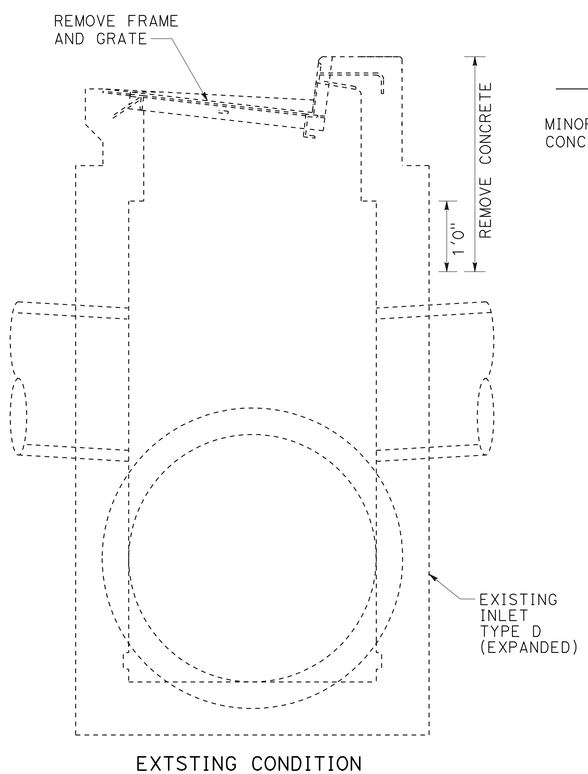

EXTSTING CONDITION

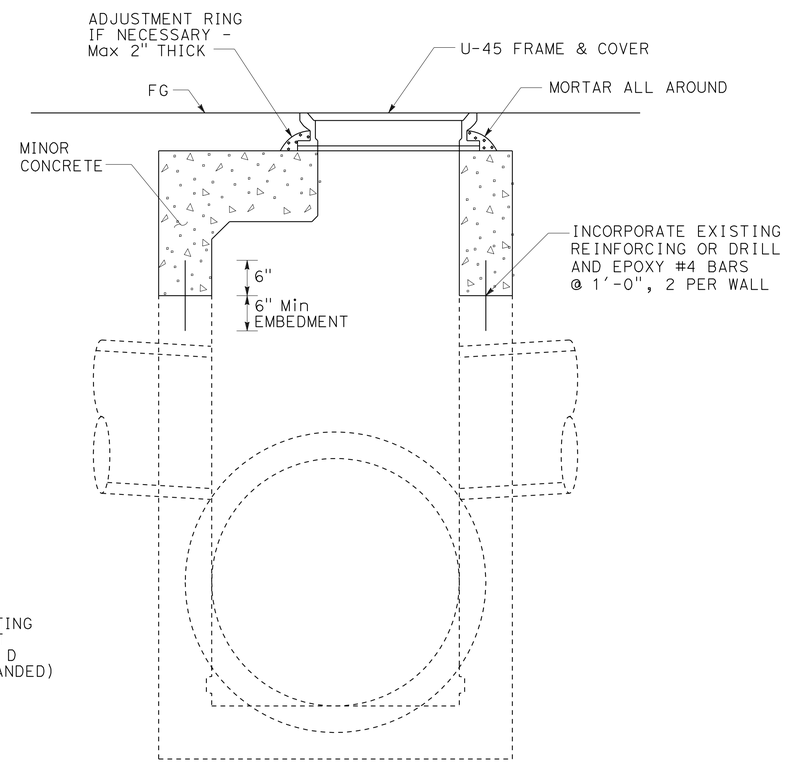

MODIFIED CONDITION

MODIFY DI TO MH

26 e 31 e 38 a 81 a 100 c

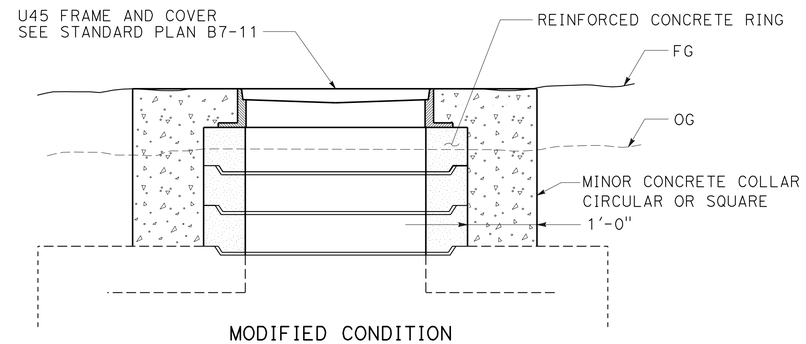

MODIFIED CONDITION

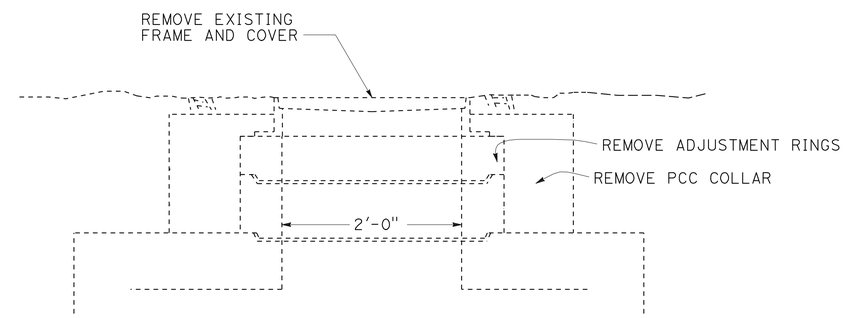

EXISTING CONDITION

ADJUST MANHOLE

6 g 15 f 102 b 103 a

DRAINAGE DETAILS

NO SCALE

DD-3

STATE OF CALIFORNIA - DEPARTMENT OF TRANSPORTATION — Caltrans

CONSULTANT FUNCTIONAL SUPERVISOR: JOSEPH PETERSON

CALCULATED-DESIGNED BY: KATHLEEN M. REILLY

CHECKED BY: SHARON L. PATCH

REVISED BY: KR — DATE REVISED: 10/31/11

LAST REVISION: 10-31-11 — DATE PLOTTED => 19-JAN-2012 — TIME PLOTTED => 06:24

Dist	COUNTY	ROUTE	POST MILES TOTAL PROJECT	SHEET No.	TOTAL SHEETS
04	CC	4	27.3/R29.0	151	950

Joseph E. Peterson 10/31/11
REGISTERED CIVIL ENGINEER DATE

1-17-12
PLANS APPROVAL DATE

REGISTERED PROFESSIONAL ENGINEER J.E.Peterson No. 42777 Exp. 3/31/12 CIVIL STATE OF CALIFORNIA

THE STATE OF CALIFORNIA OR ITS OFFICERS OR AGENTS SHALL NOT BE RESPONSIBLE FOR THE ACCURACY OR COMPLETENESS OF SCANNED COPIES OF THIS PLAN SHEET.

CALTRANS
111 GRAND AVENUE
OAKLAND, CA 94612

CCTA
2999 OAK ROAD, SUITE 100
WALNUT CREEK, CA 94597

NOTE: FOR FRAME AND GRATE DETAILS NOT SHOWN, SEE STANDARD PLAN D77A.

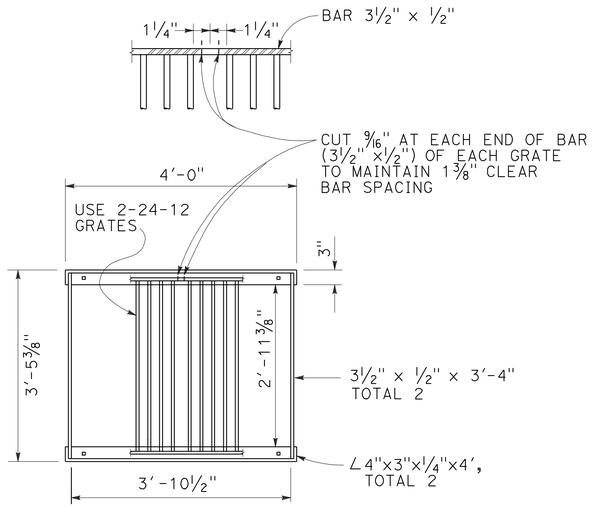

PLAN

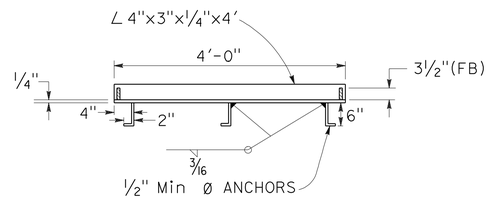

CROSS SECTION
(THRU FRAME)

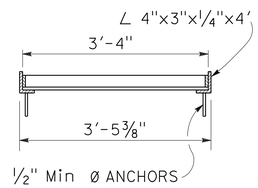

LONGITUDINAL SECTION
(THRU FRAME & GRATE)

MODIFIED GRATE FRAME DETAIL

NOTE: FOR INLET DETAILS NOT SHOWN, SEE STANDARD PLAN D74B.

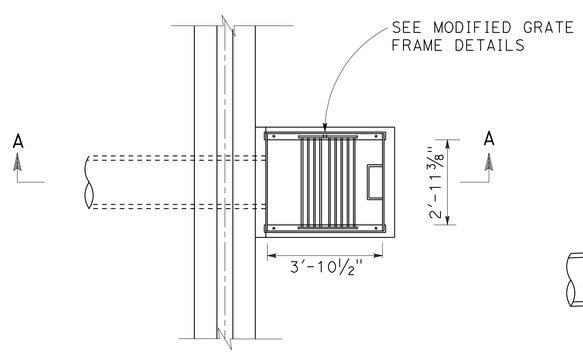

PLAN

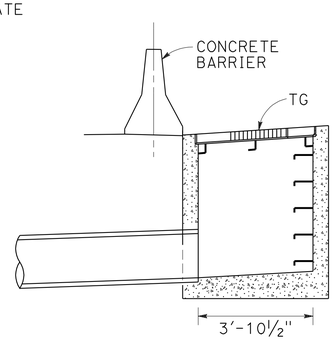

SECTION A-A

GDOM INLET

10 d f h 28 h 67 d 95 d f

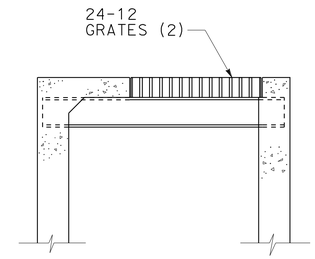

NOTE:

FOR DETAILS NOT SHOWN, SEE STANDARD PLAN D74A, TYPE GT4.

GT4M INLET

45 c

NOTES:

1. GMP DI WITH SIDE OPENING SHOWN. TRANSITION SIMILAR FOR OTHER DI'S WITH SIDE OPENING.
2. TRANSITION FOR V-DITCH SHOWN. SIMILAR FOR TRAPEZOIDAL DITCH.

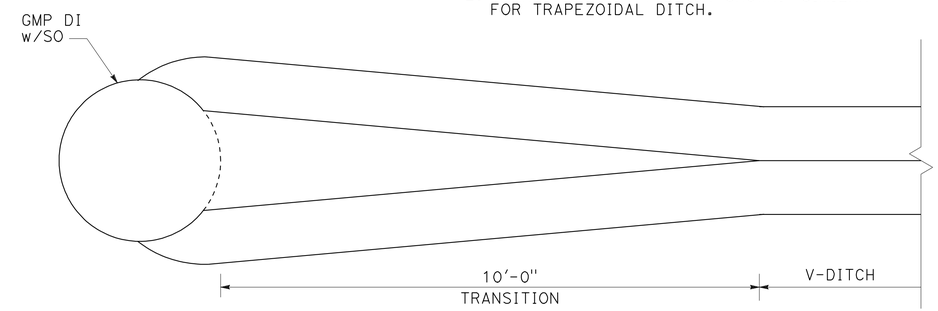

PLAN

DITCH TRANSITION AT DI WITH SIDE OPENING.

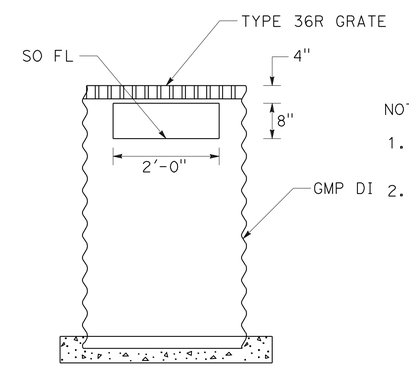

NOTES:

1. FOR GMP INLET DETAILS NOT SHOWN, SEE STANDARD PLAN D75A.
2. FOR TYPE 36R GRATE DETAILS NOT SHOWN, SEE STANDARD PLAN D77B.

GMP DI WITH SIDE OPENING(S)

8 b 9 b

DRAINAGE DETAILS

NO SCALE

DD-4

KATHLEEN M. REILLY	KR		
SHARON L. PATCH	10/31/11		
REVISED BY	DATE REVISED		
CALCULATED-DESIGNED BY	CHECKED BY		
CONSULTANT FUNCTIONAL SUPERVISOR			
JOSEPH PETERSON			

STATE OF CALIFORNIA - DEPARTMENT OF TRANSPORTATION

Caltrans

LAST REVISION 10-31-11 | DATE PLOTTED => 19-JAN-2012 | TIME PLOTTED => 06:24

Dist	COUNTY	ROUTE	POST MILES TOTAL PROJECT	SHEET No.	TOTAL SHEETS
04	CC	4	27.3/R29.0	152	950

Joseph E. Peterson 10/31/11
REGISTERED CIVIL ENGINEER DATE

1-17-12
PLANS APPROVAL DATE

REGISTERED PROFESSIONAL ENGINEER J.E.Peterson No. 42777 Exp. 3/31/12 CIVIL STATE OF CALIFORNIA

THE STATE OF CALIFORNIA OR ITS OFFICERS OR AGENTS SHALL NOT BE RESPONSIBLE FOR THE ACCURACY OR COMPLETENESS OF SCANNED COPIES OF THIS PLAN SHEET.

CALTRANS
111 GRAND AVENUE
OAKLAND, CA 94612

CCTA
2999 OAK ROAD, SUITE 100
WALNUT CREEK, CA 94597

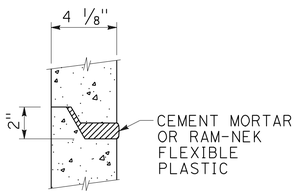

JOINT DETAIL

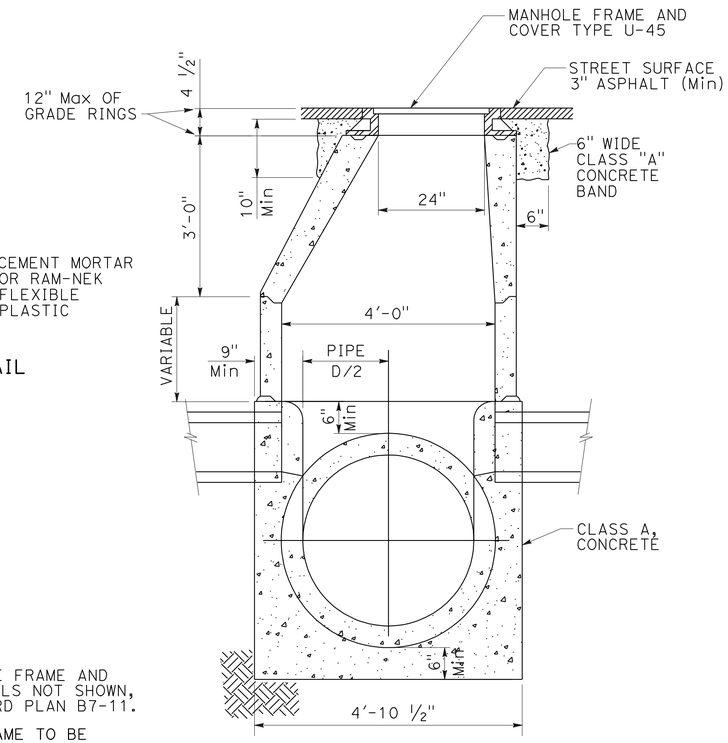

SECTION

NOTES:

1. FOR MANHOLE FRAME AND COVER DETAILS NOT SHOWN, SEE STANDARD PLAN B7-11.
2. MANHOLE FRAME TO BE SLOPED TO MATCH STREET GRADE.
3. PRECAST MANHOLE SECTIONS TO BE AS DESIGNATED BY A.S.T.M. SPEC. C-76-57 T. CLASS II

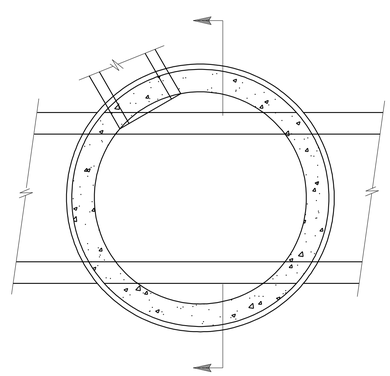

PLAN

CITY OF ANTIOCH

DRAINAGE MANHOLE TYPE III

10 (P) 13 (c) 101 (e)

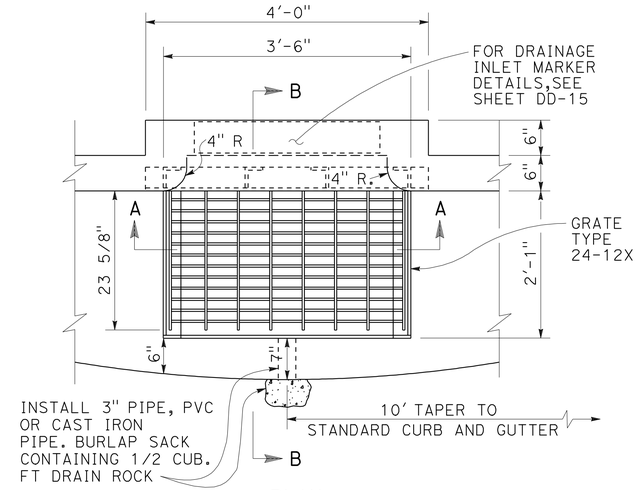

PLAN

NOTES:

1. ALL IRON WORK SHALL BE 1/2" GALVANIZED STEEL.
2. FOR FRAME AND GRATE DETAILS NOT SHOWN, SEE STANDAED PLANS D77A AND B.
3. FOR FACE ANGLE ANCHOR DETAILS, SEE STANDARD PLAN D74C.
4. TOP OF GRATE ELEVATION DOES NOT INCLUDE GUTTER DEPRESSION AT INLET.

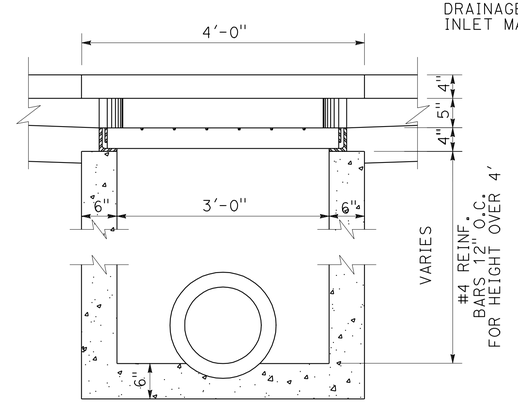

SECTION A-A

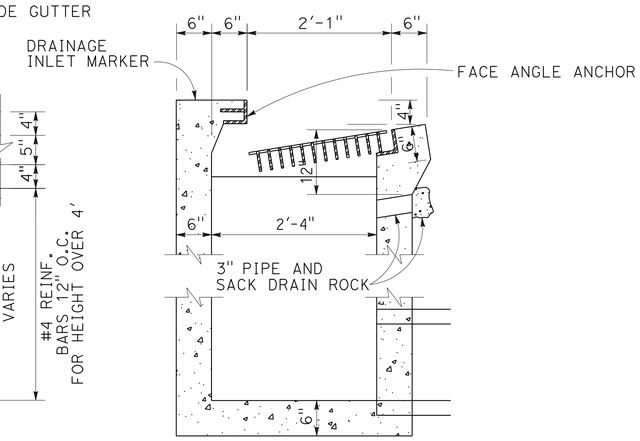

SECTION B-B

CITY OF ANTIOCH

DRAINAGE INLET TYPE "C" (BICYCLE GRATE)

13 (a) 19 (i) 23 (a)(c) 26 (c) 31 (a)(c) 38 (c) 43 (a)(c) 70 (e) 76 (a) 81 (c)

98 (a)(c)(e) 99 (a)(c) 100 (a)(e) 101 (c) 104 (a)(d) 106 (a)(d) 107 (a)

DRAINAGE DETAILS

NO SCALE

DD-5

STATE OF CALIFORNIA - DEPARTMENT OF TRANSPORTATION
Caltrans

CONSULTANT FUNCTIONAL SUPERVISOR: JOSEPH PETERSON
CALCULATED-DESIGNED BY: KATHLEEN M. REILLY
CHECKED BY: SHARON L. PATCH
REVISED BY: KR
DATE REVISED: 10/31/11

LAST REVISION 10-31-11
DATE PLOTTED => 19-JAN-2012
TIME PLOTTED => 06:24

Dist	COUNTY	ROUTE	POST MILES TOTAL PROJECT	SHEET No.	TOTAL SHEETS
04	CC	4	27.3/R29.0	153	950

Joseph E. Peterson 8/9/11
REGISTERED CIVIL ENGINEER DATE

1-17-12
PLANS APPROVAL DATE

REGISTERED PROFESSIONAL ENGINEER J.E.Peterson No. 42777 Exp. 3/31/12 CIVIL STATE OF CALIFORNIA

THE STATE OF CALIFORNIA OR ITS OFFICERS OR AGENTS SHALL NOT BE RESPONSIBLE FOR THE ACCURACY OR COMPLETENESS OF SCANNED COPIES OF THIS PLAN SHEET.

CALTRANS
111 GRAND AVENUE
OAKLAND, CA 94612

CCTA
2999 OAK ROAD, SUITE 100
WALNUT CREEK, CA 94597

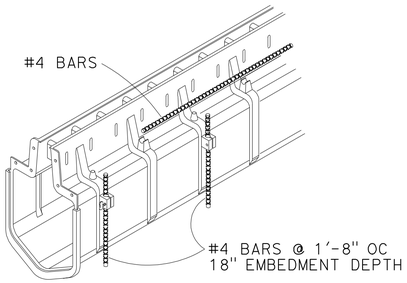

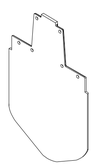

END CAP

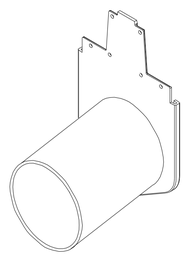

PLASTIC 12" OUTLET

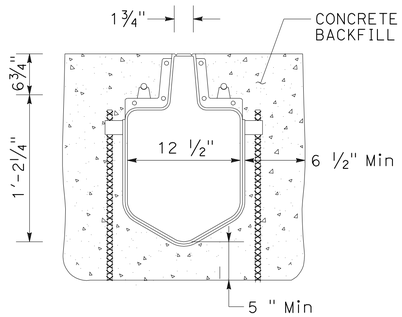

MINIMUM FLOW AREA = 1.711 FT^2

SLOTTED PLASTIC LINE DRAIN
(SPLD)

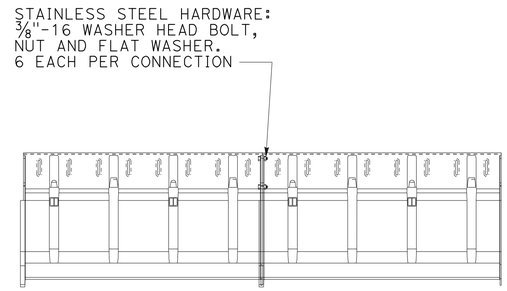

CONNECTION - SIDE VIEW

NOTES:

1. FOR SCSP DETAILS NOT SHOWN, SEE STANDARD PLANS D98A and D98B.
2. TRENCH SHAPE REQUIRED AS SHOWN.
3. FOR INLET DETAILS NOT SHOWN, SEE THE STANDARD PLANS.

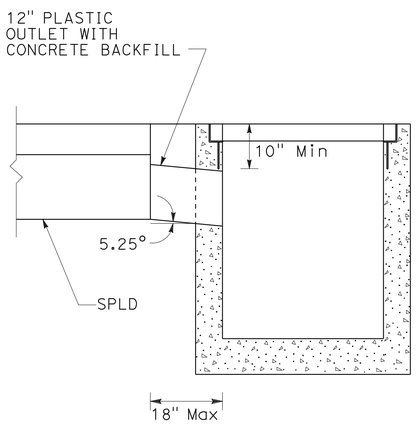

SPLD INTO DRAINAGE INLET

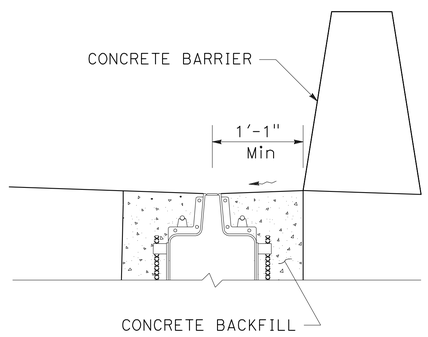

INSTALLATION OF ASP
SPLD OPTION

ALTERNATIVE SLOTTED PIPE

46 b 55 c 67 h

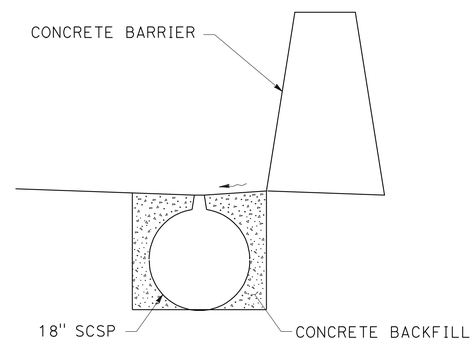

INSTALLATION OF ASP
SCSP OPTION

DRAINAGE DETAILS

NO SCALE

DD-6

STATE OF CALIFORNIA - DEPARTMENT OF TRANSPORTATION
Caltrans

CONSULTANT FUNCTIONAL SUPERVISOR: JOSEPH PETERSON
CALCULATED-DESIGNED BY: KATHLEEN M. REILLY
CHECKED BY: SHARON L. PATCH
REVISED BY: KR
DATE REVISED: 8/9/11

LAST REVISION 8-9-11
DATE PLOTTED => 19-JAN-2012
TIME PLOTTED => 06:24

Dist	COUNTY	ROUTE	POST MILES TOTAL PROJECT	SHEET No.	TOTAL SHEETS
04	CC	4	27.3/R29.0	154	950

REGISTERED CIVIL ENGINEER — DATE 10/31/11

1-17-12
PLANS APPROVAL DATE

REGISTERED PROFESSIONAL ENGINEER — J.E.Peterson No. 42777 Exp. 3/31/12 CIVIL — STATE OF CALIFORNIA

THE STATE OF CALIFORNIA OR ITS OFFICERS OR AGENTS SHALL NOT BE RESPONSIBLE FOR THE ACCURACY OR COMPLETENESS OF SCANNED COPIES OF THIS PLAN SHEET.

CALTRANS
111 GRAND AVENUE
OAKLAND, CA 94612

CCTA
2999 OAK ROAD, SUITE 100
WALNUT CREEK, CA 94597

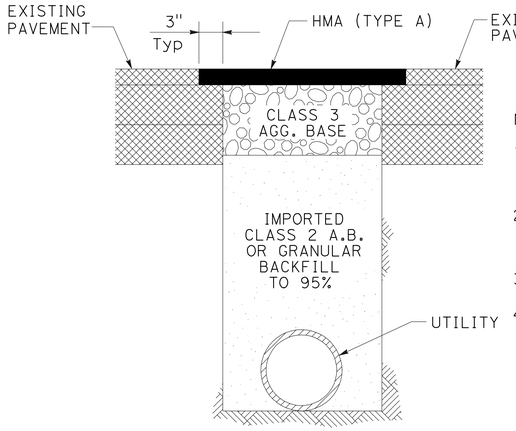

NOTES:

1. ALL EXCAVATED MATERIAL TO BE REMOVED. ALL TRENCHES TO BE BACKFILLED THE SAME DAY. OPEN TRENCH SHALL NOT EXCEED 300' Max TEMPORARY SURFACING TO BE PLACED EACH NIGHT.
2. ALL IMPORTED GRANULAR BACKFILL AND AGGREGATE BASE TO BE COMPACTED TO 95% OF RELATIVE DENSITY WITHIN 2½' OF FINAL GRADE & 90% BELOW 2½'.
3. Exist PAVEMENT TO BE SAWCUT IN NEAT AND PARALLEL STRAIGHT LINES.
4. SEAL COAT STREET AS REQUIRED BY THE ENGINEER.

CITY OF ANTIOCH
TRENCH EXCAVATION AND BACKFILL IN EXISTING PAVEMENT

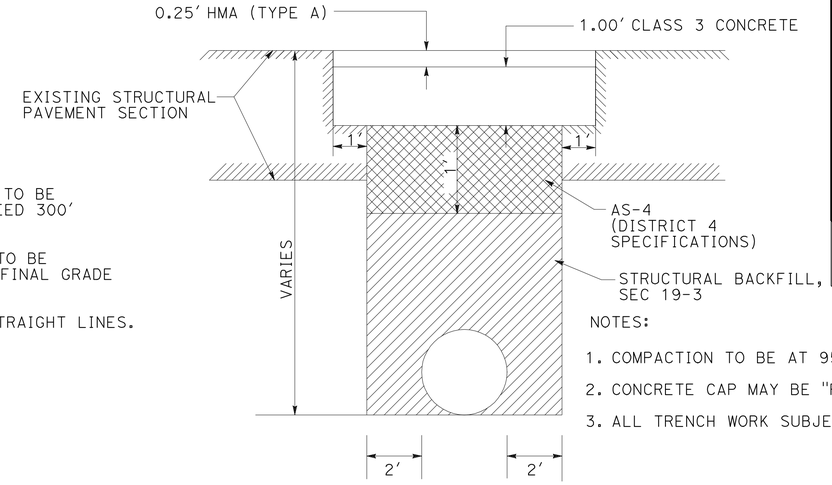

NOTES:

1. COMPACTION TO BE AT 95% RELATIVE COMPACTION, SUBJECT TO TESTING.
2. CONCRETE CAP MAY BE "RAPID SET" PCC.
3. ALL TRENCH WORK SUBJECT TO STATE REGULATIONS AND INSPECTION.

STREET TRENCH PAVING DETAIL IN STATE RIGHT OF WAY

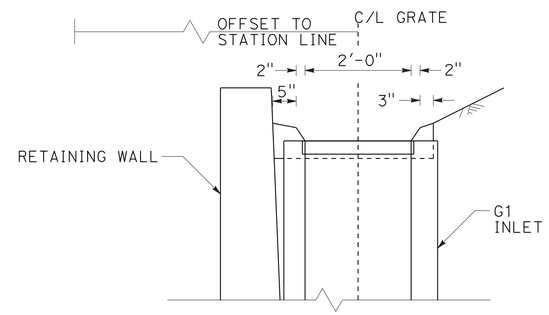

SECTION A-A

NOTES:

1. FOR G1 TYPE INLET DETAILS NOT SHOWN, SEE STANDARD PLAN D73.
2. FOR FRAME AND GRATE DETAILS NOT SHOWN, SEE STANDARD PLAN D77A.
3. FOR RETAINING WALL GUTTER DETAILS NOT SHOWN, SEE STANDARD PLAN B3-9.
4. THE GUTTER TRANSITION AT ITEM 83a WILL OCCUR ON THE EAST SIDE OF THE INLET ONLY. THE RETAINING WALL No.12 GUTTER WILL HAVE A 2' BASE BETWEEN "E" LINE 238+85.5 AND ITEM 83a.

NOTES:

1. CUTOFF WALL REQUIRED AT THE BEGINNING AND ENDING OF ALL LINED DITCHES.
2. CUTOFF WALL TO BE PLACED AT 100' INTERVALS OR AS DIRECTED BY THE ENGINEER.
3. LONGITUDINAL SLOPE OF DITCH TO FOLLOW PG OF SOUND WALL No. 2. FL DITCH = PG Elev - 0.15
4. FOR SOUND WALL INFORMATION, SEE SOUND WALL PLANS.

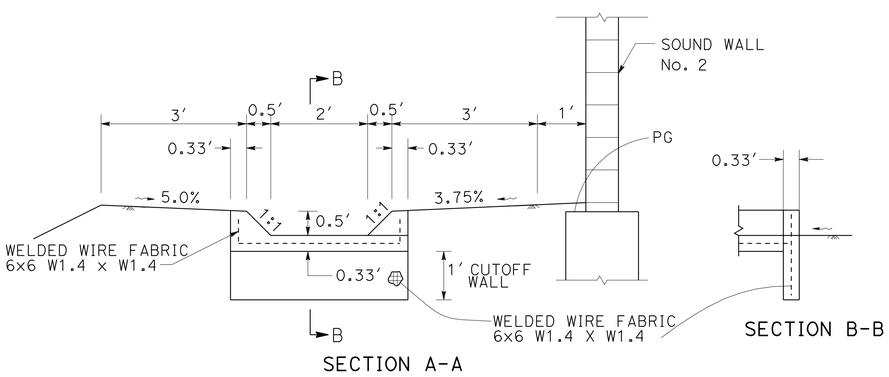

MINOR CONCRETE LINED TRAPEZOIDAL GUTTER

3 c f i l

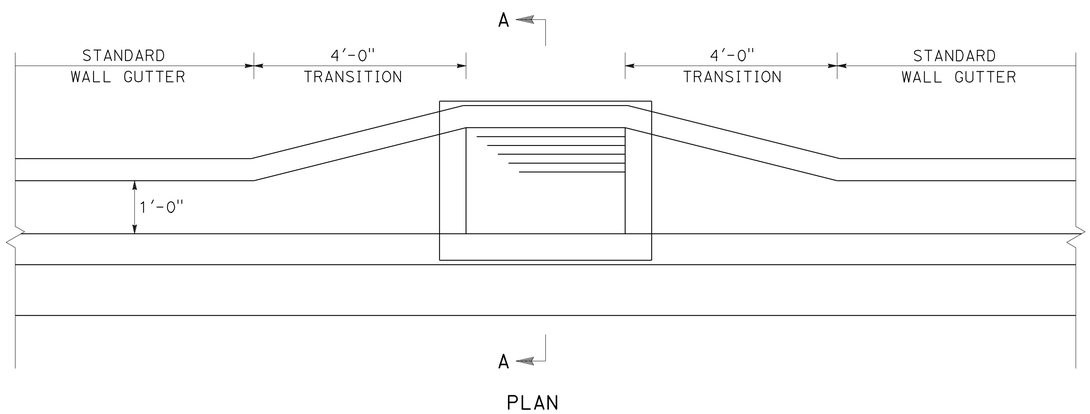

PLAN

RETAINING WALL GUTTER TRANSITION AT G1 INLET

18 a 24 b 26 a 41 a 43 e 77 a 80 f 83 a

DRAINAGE DETAILS

NO SCALE

DD-7

STATE OF CALIFORNIA - DEPARTMENT OF TRANSPORTATION

Caltrans

CONSULTANT FUNCTIONAL SUPERVISOR: JOSEPH PETERSON

CALCULATED-DESIGNED BY: KATHLEEN M. REILLY

CHECKED BY: SHARON L. PATCH

REVISED BY: KR

DATE REVISED: 10/31/11

LAST REVISION — DATE PLOTTED => 19-JAN-2012 — TIME PLOTTED => 06:24

10-31-11

Dist	COUNTY	ROUTE	POST MILES TOTAL PROJECT	SHEET No.	TOTAL SHEETS
04	CC	4	27.3/R29.0	155	950

Joseph E. Peterson 10/31/11
REGISTERED CIVIL ENGINEER DATE

1-17-12
PLANS APPROVAL DATE

REGISTERED PROFESSIONAL ENGINEER J.E.Peterson No. 42777 Exp. 3/31/12 CIVIL STATE OF CALIFORNIA

THE STATE OF CALIFORNIA OR ITS OFFICERS OR AGENTS SHALL NOT BE RESPONSIBLE FOR THE ACCURACY OR COMPLETENESS OF SCANNED COPIES OF THIS PLAN SHEET.

CALTRANS
111 GRAND AVENUE
OAKLAND, CA 94612

CCTA
2999 OAK ROAD, SUITE 100
WALNUT CREEK, CA 94597

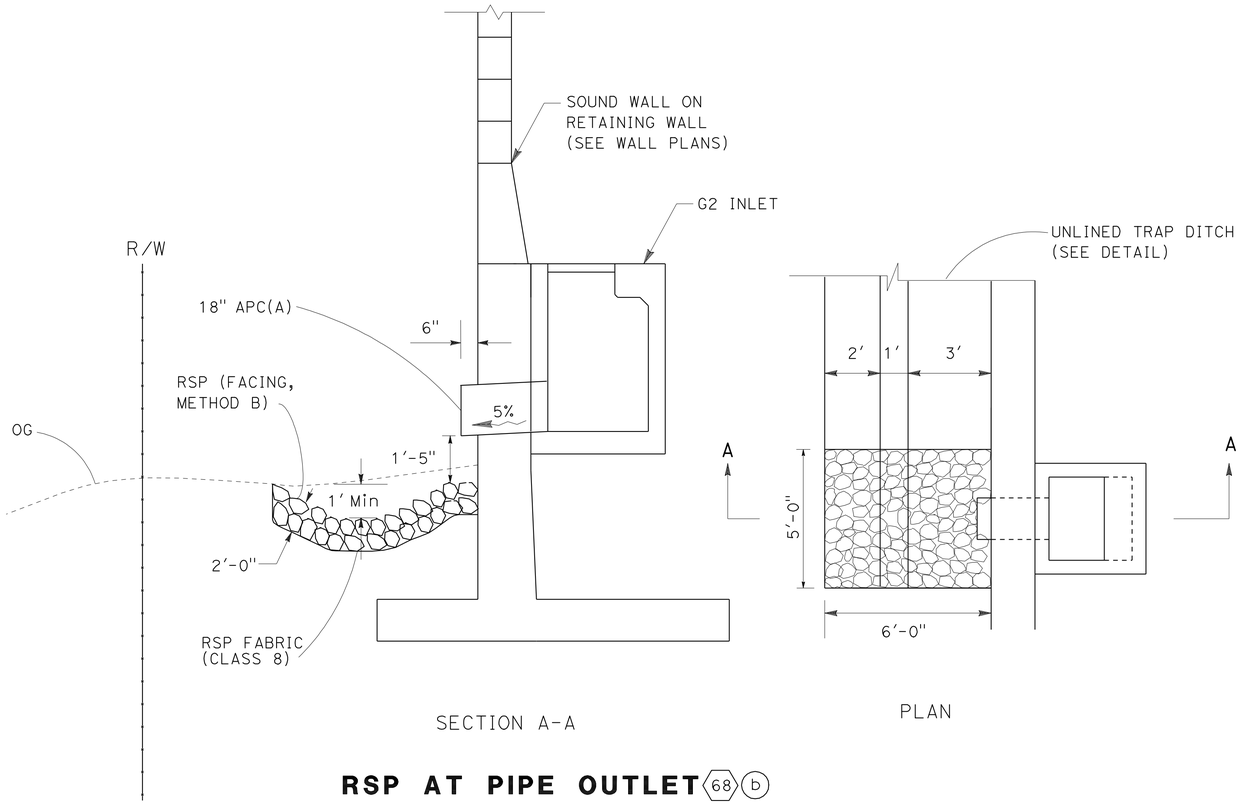

SECTION A-A

PLAN

RSP AT PIPE OUTLET (68)(b)

NOTES:

1. FOR G1 AND G2 INLET DETAILS NOT SHOWN, SEE STANDARD PLAN D73.
2. FOR RETAINING WALL UTILITY OPENING DETAIL, SEE STANDARD PLAN B3-9.

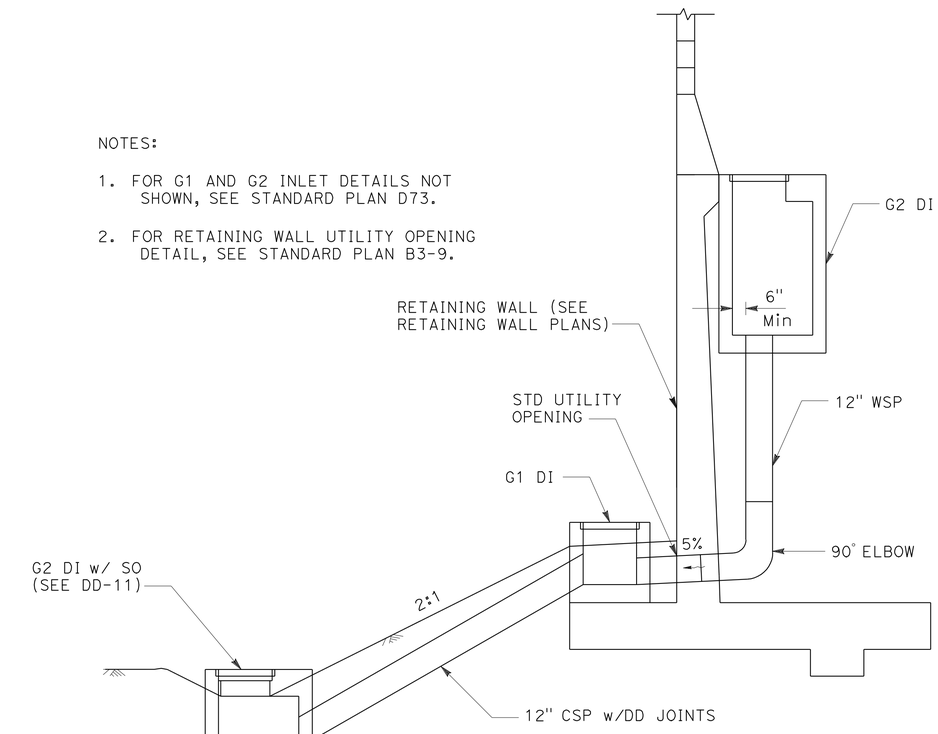

WSP FROM DI IN SHOULDER

(48)(h)(52)(h)

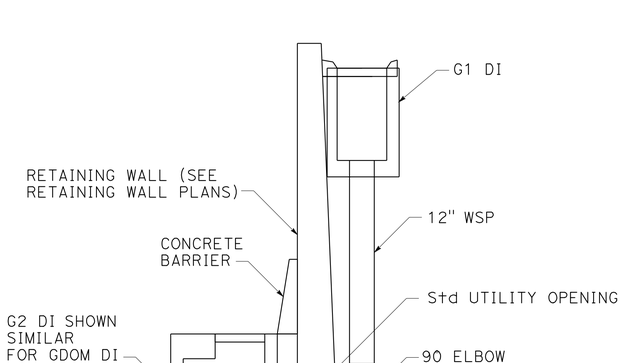

WSP FROM DI IN WALL GUTTER

(24)(a)(41)(b)(77)(b)(80)(g)(83)(b)

NOTES:

1. FOR G1 OR G2 INLET DETAILS NOT SHOWN, SEE STANDARD PLAN D73. FOR GDOM INLET DETAILS NOT SHOWN, SEE DD-4.
2. FOR RETAINING WALL GUTTER DETAILS NOT SHOWN, SEE STANDARD PLAN B3-9.
3. FOR RETAINING WALL GUTTER TRANSITION DETAILS NOT SHOWN, SEE SHEET DD-7.
4. FOR RETAINING WALL UTILITY OPENING DETAIL, SEE STANDARD PLAN B3-9.

DRAINAGE DETAILS

NO SCALE

DD-8

STATE OF CALIFORNIA - DEPARTMENT OF TRANSPORTATION
Caltrans

CONSULTANT FUNCTIONAL SUPERVISOR: JOSEPH PETERSON
CALCULATED-DESIGNED BY: KATHLEEN M. REILLY
CHECKED BY: SHARON L. PATCH
REVISED BY: KR
DATE REVISED: 10/31/11

LAST REVISION 10-31-11 | DATE PLOTTED => 19-JAN-2012 | TIME PLOTTED => 06:24

Dist	COUNTY	ROUTE	POST MILES TOTAL PROJECT	SHEET No.	TOTAL SHEETS
04	CC	4	27.3/R29.0	156	950

Joseph E. Peterson 10/31/11
REGISTERED CIVIL ENGINEER DATE

1-17-12
PLANS APPROVAL DATE

REGISTERED PROFESSIONAL ENGINEER J.E.Peterson No. 42777 Exp. 3/31/12 CIVIL STATE OF CALIFORNIA

THE STATE OF CALIFORNIA OR ITS OFFICERS OR AGENTS SHALL NOT BE RESPONSIBLE FOR THE ACCURACY OR COMPLETENESS OF SCANNED COPIES OF THIS PLAN SHEET.

CALTRANS
111 GRAND AVENUE
OAKLAND, CA 94612

CCTA
2999 OAK ROAD, SUITE 100
WALNUT CREEK, CA 94597

NOTE:

FOR DETAILS NOT SHOWN, SEE STANDARD PLAN D87A AND C.

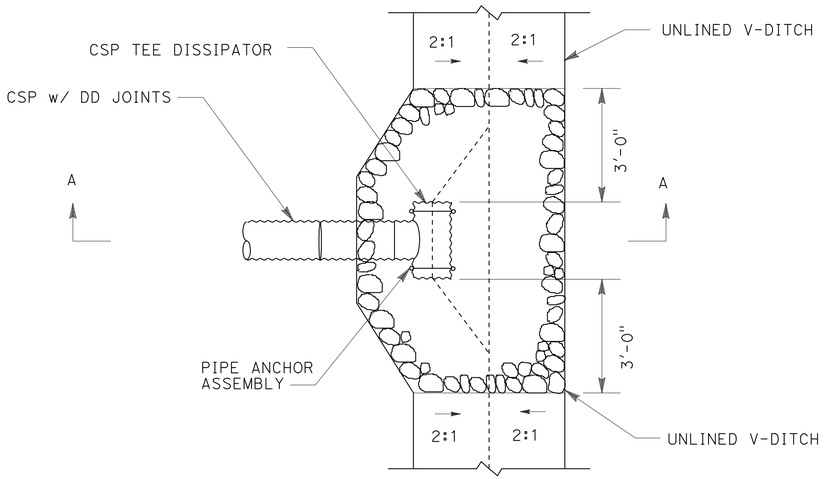

PLAN

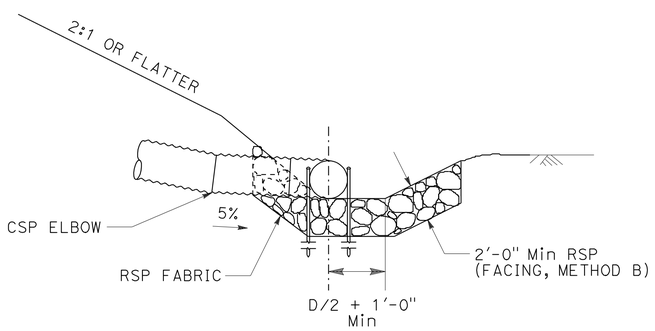

SECTION A-A

RSP AT TEE DISSIPATOR INTO UNLINED V-DITCH

61 c 66 e

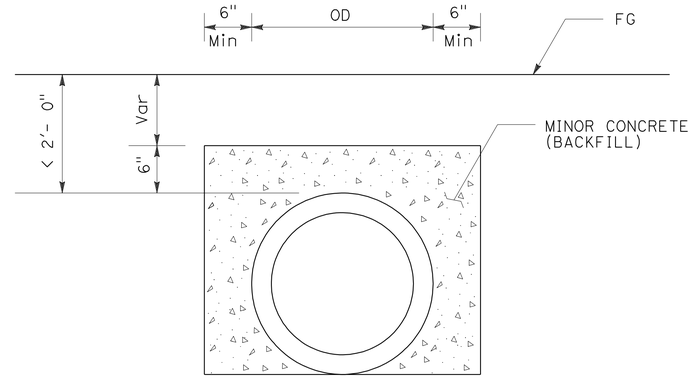

MINOR CONCRETE BACKFILL

PIPES WITH LESS THAN 2' COVER

9 c 18 b 93 b d

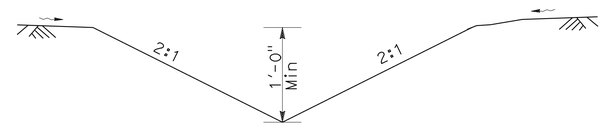

UNLINED V-DITCH/GUTTER

MINIMUM SLOPE = 0.25%

8 a c 96 a

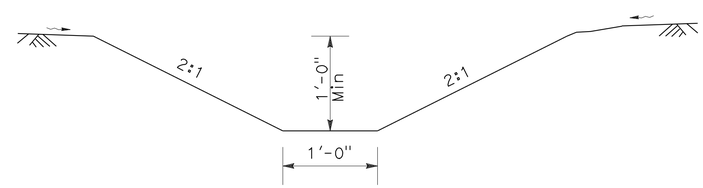

68 c

UNLINED TRAPEZOID DITCH/GUTTER (TYPE B)

MINIMUM SLOPE = 0.25%

NOTE:

1. LONGITUDINAL SLOPE TO FOLLOW PG OF SOUND WALL No. 1
2. FOR SOUND WALL INFORMATION, SEE SOUND WALL PLANS

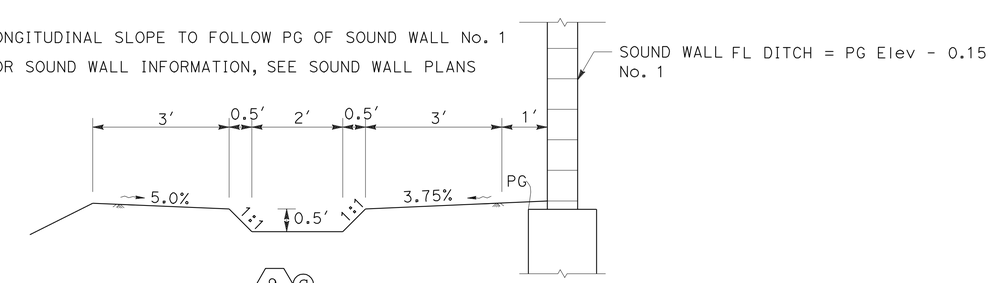

9 a

UNLINED TRAPEZOIDAL DITCH/GUTTER (TYPE A)

MINIMUM SLOPE = 0.25%

DRAINAGE DETAILS

NO SCALE

DD-9

STATE OF CALIFORNIA - DEPARTMENT OF TRANSPORTATION
Caltrans

CONSULTANT FUNCTIONAL SUPERVISOR: JOSEPH PETERSON
CALCULATED-DESIGNED BY: KATHLEEN M. REILLY
CHECKED BY: SHARON L. PATCH
REVISED BY: KR
DATE REVISED: 10/31/11

LAST REVISION 10-31-11
DATE PLOTTED => 19-JAN-2012
TIME PLOTTED => 06:25

Dist	COUNTY	ROUTE	POST MILES TOTAL PROJECT	SHEET No.	TOTAL SHEETS
04	CC	4	27.3/R29.0	157	950

Joseph E. Peterson 10/31/11
REGISTERED CIVIL ENGINEER DATE

1-17-12
PLANS APPROVAL DATE

REGISTERED PROFESSIONAL ENGINEER J.E.Peterson No. 42777 Exp. 3/31/12 CIVIL STATE OF CALIFORNIA

THE STATE OF CALIFORNIA OR ITS OFFICERS OR AGENTS SHALL NOT BE RESPONSIBLE FOR THE ACCURACY OR COMPLETENESS OF SCANNED COPIES OF THIS PLAN SHEET.

CALTRANS
111 GRAND AVENUE
OAKLAND, CA 94612

CCTA
2999 OAK ROAD, SUITE 100
WALNUT CREEK, CA 94597

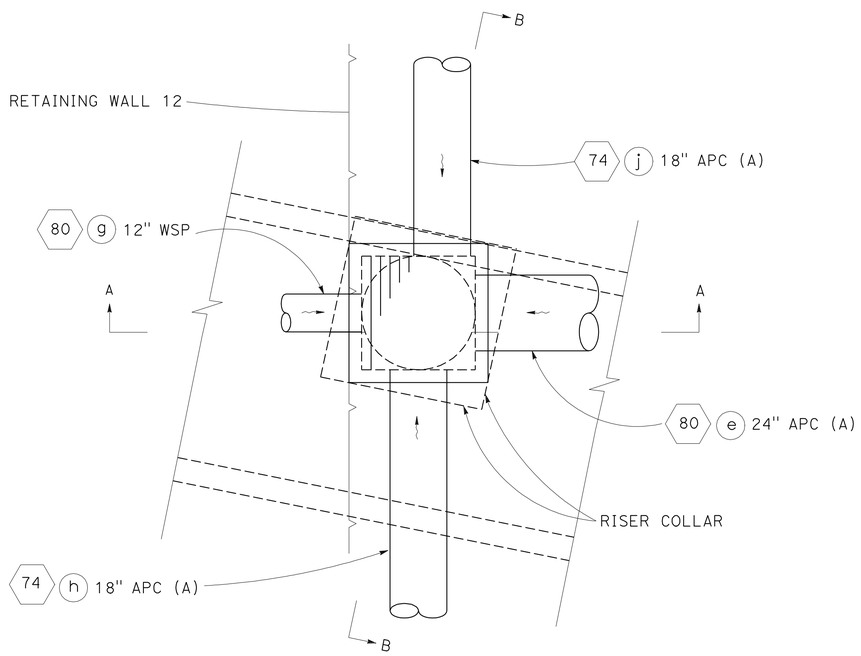

PLAN

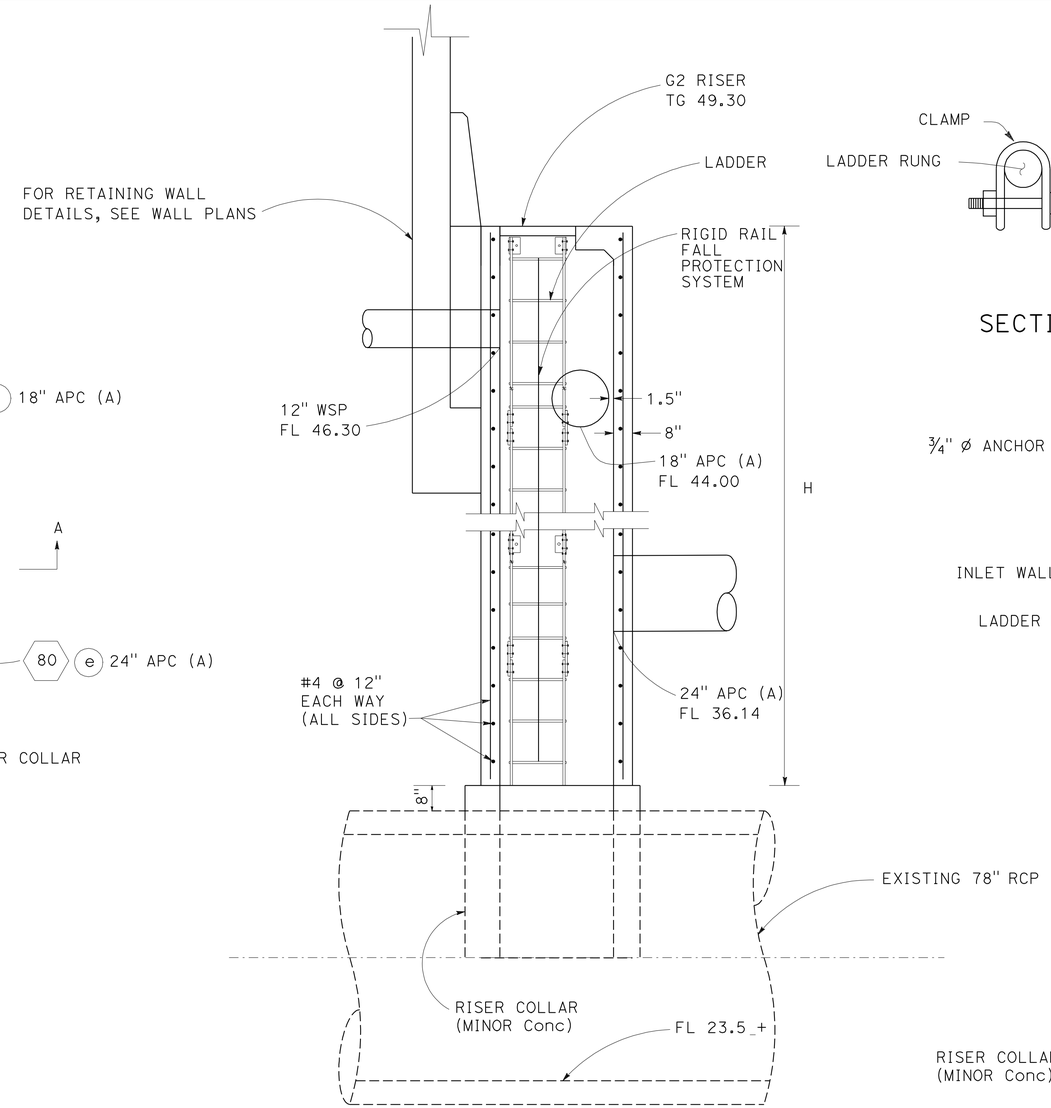

SECTION A-A

G2 RISER

74 i

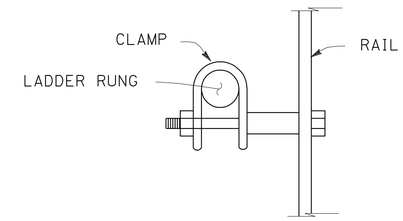

SECTION D-D

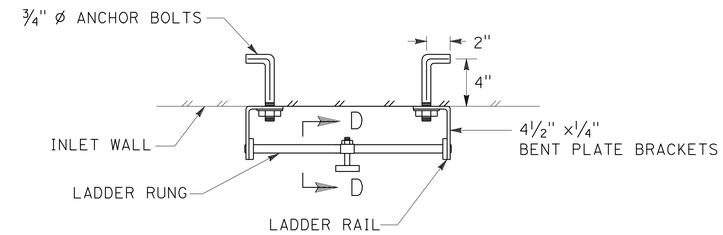

LADDER CONNECTION TO STRAIGHT WALLS

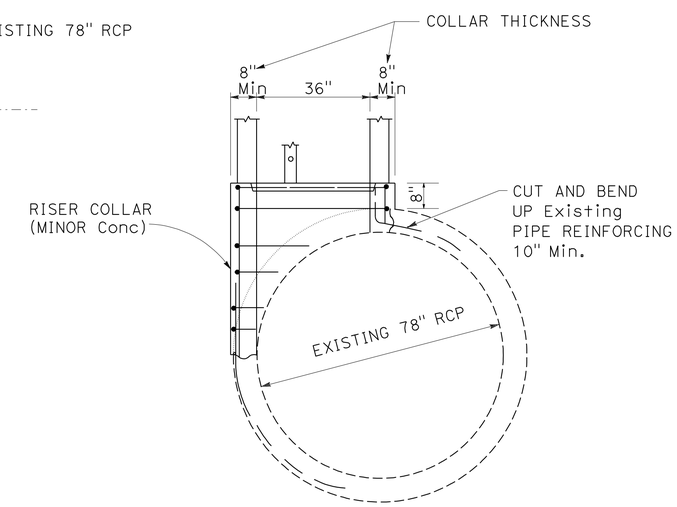

SECTION B-B

NOTES:
1. FOR RISER COLLAR REINFORCING, SEE Std PLAN D93A.
2. FOR G2 RISER DETAILS NOT SHOWN, SEE TYPE G2 DRAINAGE INLET ON Std PLAN D73.
3. FOR LADDER DETAILS NOT SHOWN, SEE Std PLAN D93A.

DRAINAGE DETAILS

NO SCALE

DD-10

STATE OF CALIFORNIA - DEPARTMENT OF TRANSPORTATION
Caltrans®

CONSULTANT FUNCTIONAL SUPERVISOR: JOSEPH PETERSON
CALCULATED-DESIGNED BY: KATHLEEN M. REILLY
CHECKED BY: SHARON L. PATCH
REVISED BY: KR
DATE REVISED: 10/31/11

LAST REVISION 10-31-11
DATE PLOTTED => 19-JAN-2012
TIME PLOTTED => 06:25

Dist	COUNTY	ROUTE	POST MILES TOTAL PROJECT	SHEET No.	TOTAL SHEETS
04	CC	4	27.3/R29.0	158	950

Joseph E. Peterson 8/9/11
REGISTERED CIVIL ENGINEER DATE

1-17-12
PLANS APPROVAL DATE

REGISTERED PROFESSIONAL ENGINEER J.E.Peterson No. 42777 Exp. 3/31/12 CIVIL STATE OF CALIFORNIA

THE STATE OF CALIFORNIA OR ITS OFFICERS OR AGENTS SHALL NOT BE RESPONSIBLE FOR THE ACCURACY OR COMPLETENESS OF SCANNED COPIES OF THIS PLAN SHEET.

CALTRANS
111 GRAND AVENUE
OAKLAND, CA 94612

CCTA
2999 OAK ROAD, SUITE 100
WALNUT CREEK, CA 94597

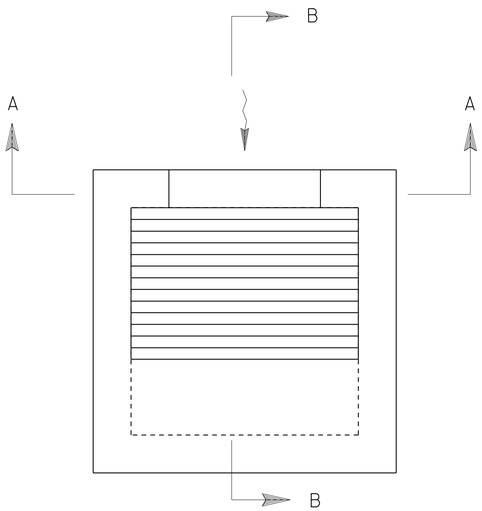

PLAN

NOTES:

1. FOR G2 INLET DETAILS NOT SHOWN, SEE STANDARD PLAN D73.
2. OFFSET TAKEN TO CENTER OF GRATE.
3. FOR INLETS AT A LOW POINT, PROVIDE TWO SIDE OPENINGS.

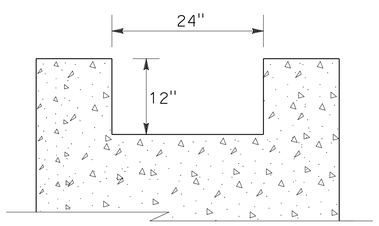

SECTION A-A

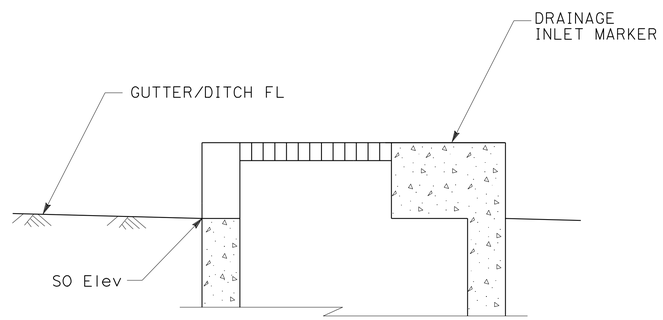

SECTION B-B

G2 INLET w/ SO

29 d 48 k 56 a 59 a 62 a 68 e

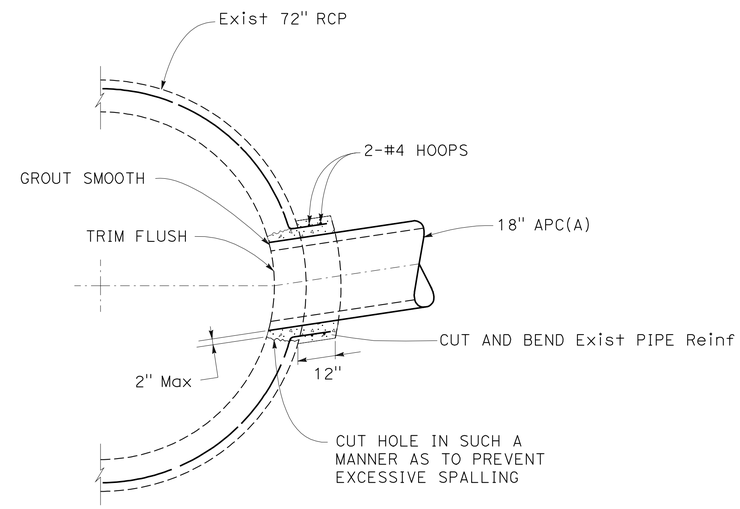

PIPE CONNECTION

95 a

DRAINAGE DETAILS

NO SCALE

DD-11

KATHLEEN M. REILLY	REVISED BY KR
SHARON L. PATCH	DATE REVISED 8/9/11
CALCULATED-DESIGNED BY	
CHECKED BY	
CONSULTANT FUNCTIONAL SUPERVISOR	JOSEPH PETERSON

STATE OF CALIFORNIA - DEPARTMENT OF TRANSPORTATION

Caltrans

LAST REVISION 8-9-11 | DATE PLOTTED => 19-JAN-2012 TIME PLOTTED => 06:25

Dist	COUNTY	ROUTE	POST MILES TOTAL PROJECT	SHEET No.	TOTAL SHEETS
04	CC	4	27.3/R29.0	159	950

Joseph E. Peterson 8/9/11
REGISTERED CIVIL ENGINEER DATE

1-17-12
PLANS APPROVAL DATE

REGISTERED PROFESSIONAL ENGINEER J.E.Peterson No. 42777 Exp. 3/31/12 CIVIL STATE OF CALIFORNIA

THE STATE OF CALIFORNIA OR ITS OFFICERS OR AGENTS SHALL NOT BE RESPONSIBLE FOR THE ACCURACY OR COMPLETENESS OF SCANNED COPIES OF THIS PLAN SHEET.

CALTRANS
111 GRAND AVENUE
OAKLAND, CA 94612

CCTA
2999 OAK ROAD, SUITE 100
WALNUT CREEK, CA 94597

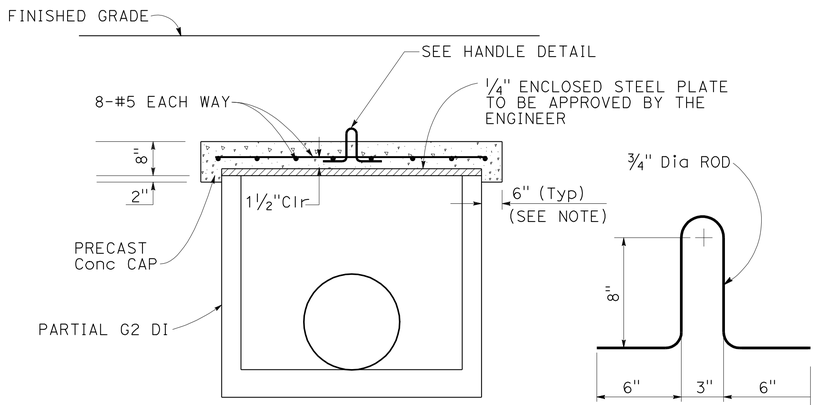

SECTION A-A

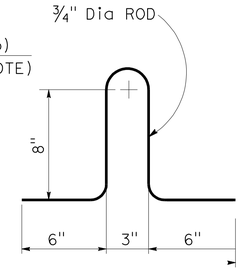

HANDLE DETAIL

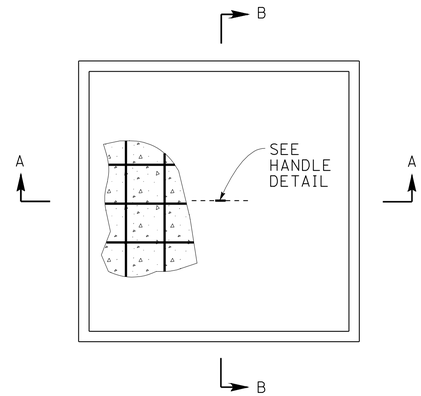

PLAN (CAP ONLY)

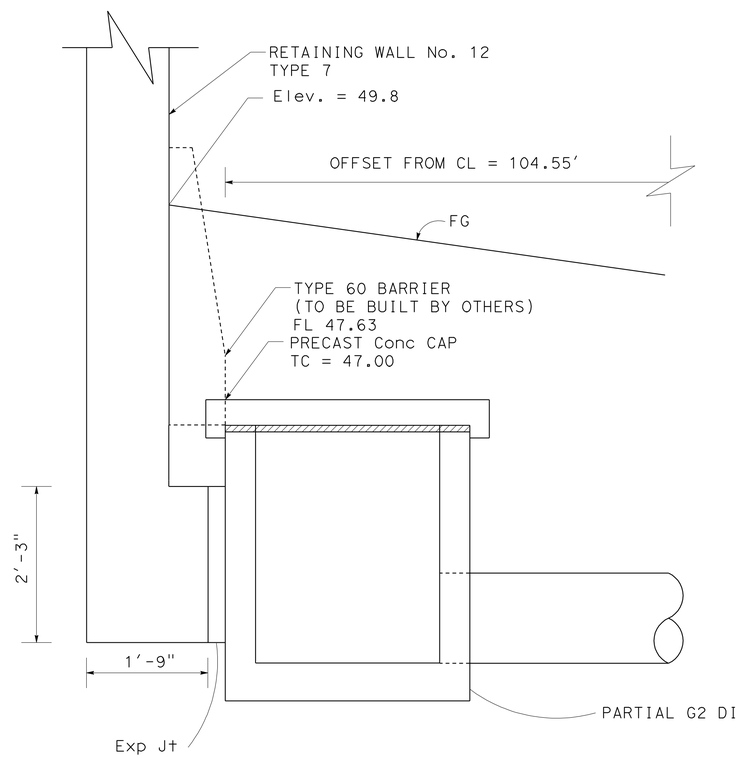

SECTION B-B

PARTIAL G2 DI w/ CAP

(84) (a)

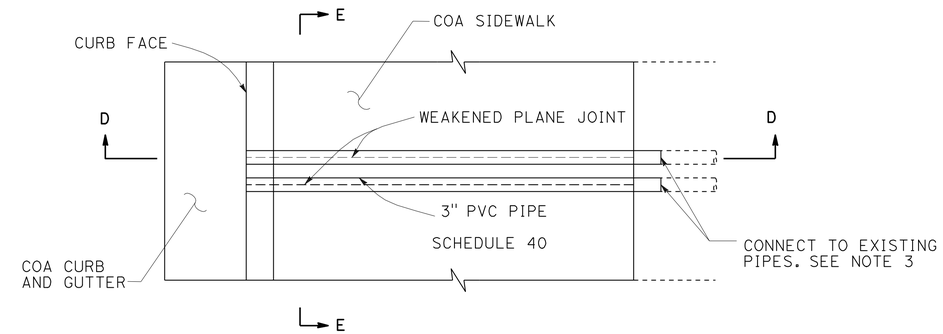

PLAN

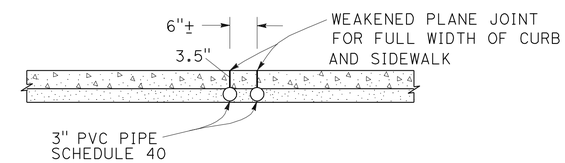

SECTION E-E

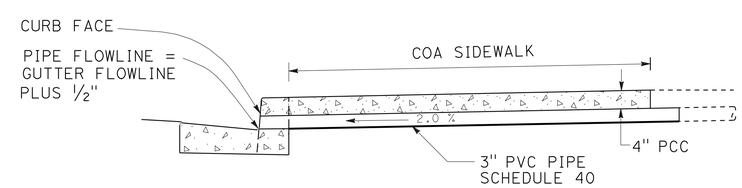

SECTION D-D

CURB DRAIN

(97) (a)

(100) (f) *SEE NOTE 4

NOTES:

1. FOR COA CURB AND GUTTER AND COA SIDEWALK DETAILS NOT SHOWN, SEE SHEET C-18. FOR COA INLET DETAIL, SEE SHEET DD-5.
2. TWO PVC PIPES SHOWN. SEE DRAINAGE PLAN FOR NUMBER OF PIPES REQUIRED AT EACH LOCATION.
3. PROVIDE WATER TIGHT CONNECTION.
4. CURB DRAIN WILL OUTLET INTO A COA INLET.

DRAINAGE DETAILS

NO SCALE

DD-12

STATE OF CALIFORNIA - DEPARTMENT OF TRANSPORTATION
Caltrans
CONSULTANT FUNCTIONAL SUPERVISOR: JOSEPH PETERSON
CALCULATED-DESIGNED BY: KATHLEEN M. REILLY
CHECKED BY: SHARON L. PATCH
REVISED BY: KR
DATE REVISED: 8/9/11

LAST REVISION 8-9-11
DATE PLOTTED => 19-JAN-2012
TIME PLOTTED => 06:25

Dist	COUNTY	ROUTE	POST MILES TOTAL PROJECT	SHEET No.	TOTAL SHEETS
04	CC	4	27.3/R29.0	160	950

Joseph E. Peterson 8/9/11
REGISTERED CIVIL ENGINEER DATE

1-17-12
PLANS APPROVAL DATE

REGISTERED PROFESSIONAL ENGINEER J.E.Peterson No. 42777 Exp. 3/31/12 CIVIL STATE OF CALIFORNIA

THE STATE OF CALIFORNIA OR ITS OFFICERS OR AGENTS SHALL NOT BE RESPONSIBLE FOR THE ACCURACY OR COMPLETENESS OF SCANNED COPIES OF THIS PLAN SHEET.

CALTRANS
111 GRAND AVENUE
OAKLAND, CA 94612

CCTA
2999 OAK ROAD, SUITE 100
WALNUT CREEK, CA 94597

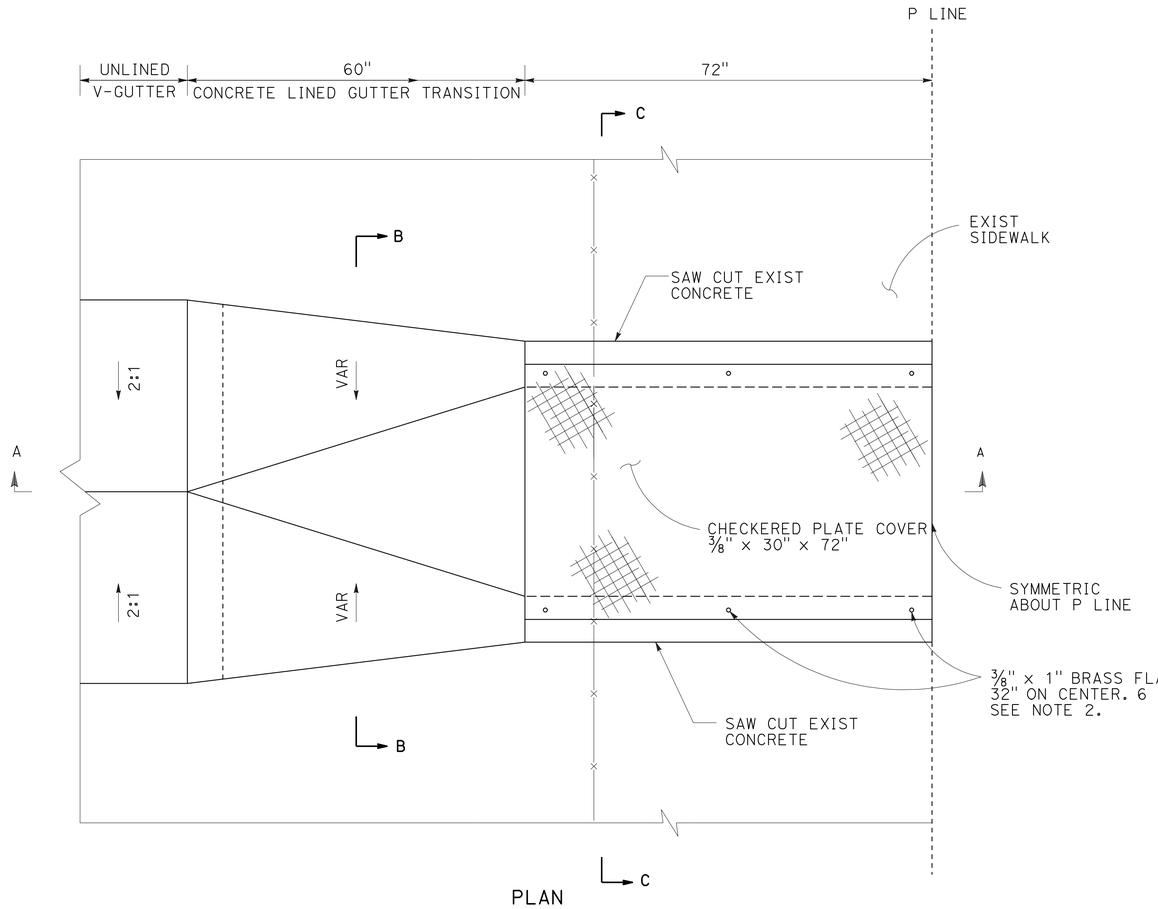

PLAN

NOTE: 1. LONGITUDINAL SLOPE UNDER SIDEWALK IS 2% Max.

2. DRILL HOLES IN PLATE COVER AND CHANNEL WALLS AT 32" ON CENTER. GROUT EXPANSION PLUGS INTO WALLS. ATTACH PLATE COVER TO WALLS WITH 3/8" x 1" BRASS FLATHEAD SCREWS, 6 PER PLATE.

3. FL UPSTREAM = 41.97
FL DOWNSTREAM = 41.73

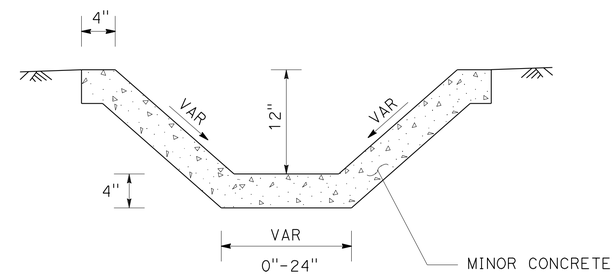

SECTION B-B

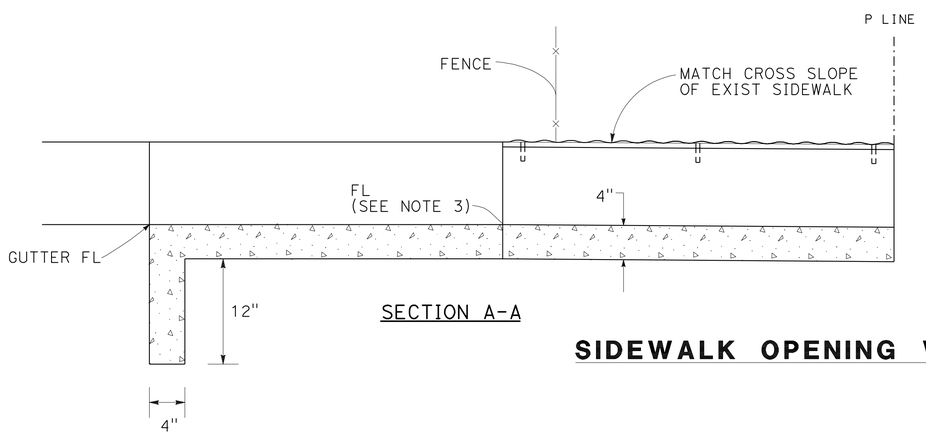

SECTION A-A

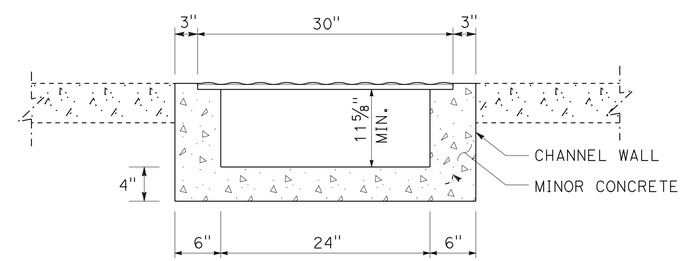

SECTION C-C

SIDEWALK OPENING WITH CHECKERED PLATE (TYPE A)

51 a

DRAINAGE DETAILS

NO SCALE

DD-13

REVISED BY	DATE REVISED
KR	8/9/11

KATHLEEN M. REILLY — CALCULATED-DESIGNED BY
SHARON L. PATCH — CHECKED BY
JOSEPH PETERSON — CONSULTANT FUNCTIONAL SUPERVISOR

STATE OF CALIFORNIA - DEPARTMENT OF TRANSPORTATION
Caltrans

LAST REVISION 8-9-11 | DATE PLOTTED => 19-JAN-2012 | TIME PLOTTED => 06:25

Dist	COUNTY	ROUTE	POST MILES TOTAL PROJECT	SHEET No.	TOTAL SHEETS
04	CC	4	27.3/R29.0	161	950

Joseph E. Peterson 10/31/11
REGISTERED CIVIL ENGINEER DATE

1-17-12
PLANS APPROVAL DATE

REGISTERED PROFESSIONAL ENGINEER J.E.Peterson No. 42777 Exp. 3/31/12 CIVIL STATE OF CALIFORNIA

THE STATE OF CALIFORNIA OR ITS OFFICERS OR AGENTS SHALL NOT BE RESPONSIBLE FOR THE ACCURACY OR COMPLETENESS OF SCANNED COPIES OF THIS PLAN SHEET.

CALTRANS
111 GRAND AVENUE
OAKLAND, CA 94612

CCTA
2999 OAK ROAD, SUITE 100
WALNUT CREEK, CA 94597

NOTE: FOR COA CURB AND GUTTER AND COA SIDEWALK DETAILS, NOT SHOWN, SEE SHEET C-18.

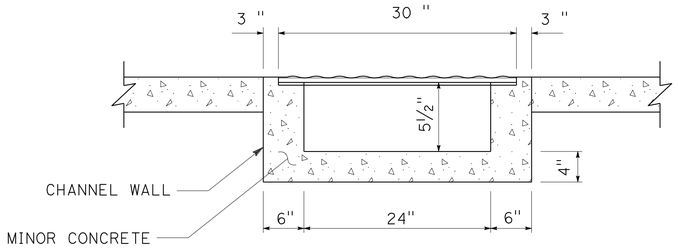

SECTION F-F

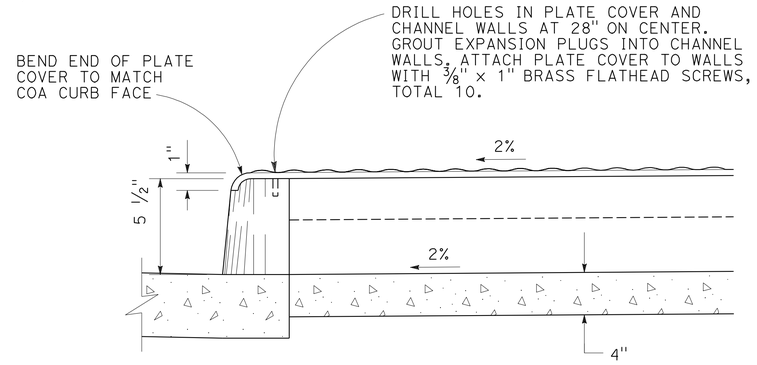

SECTION G-G

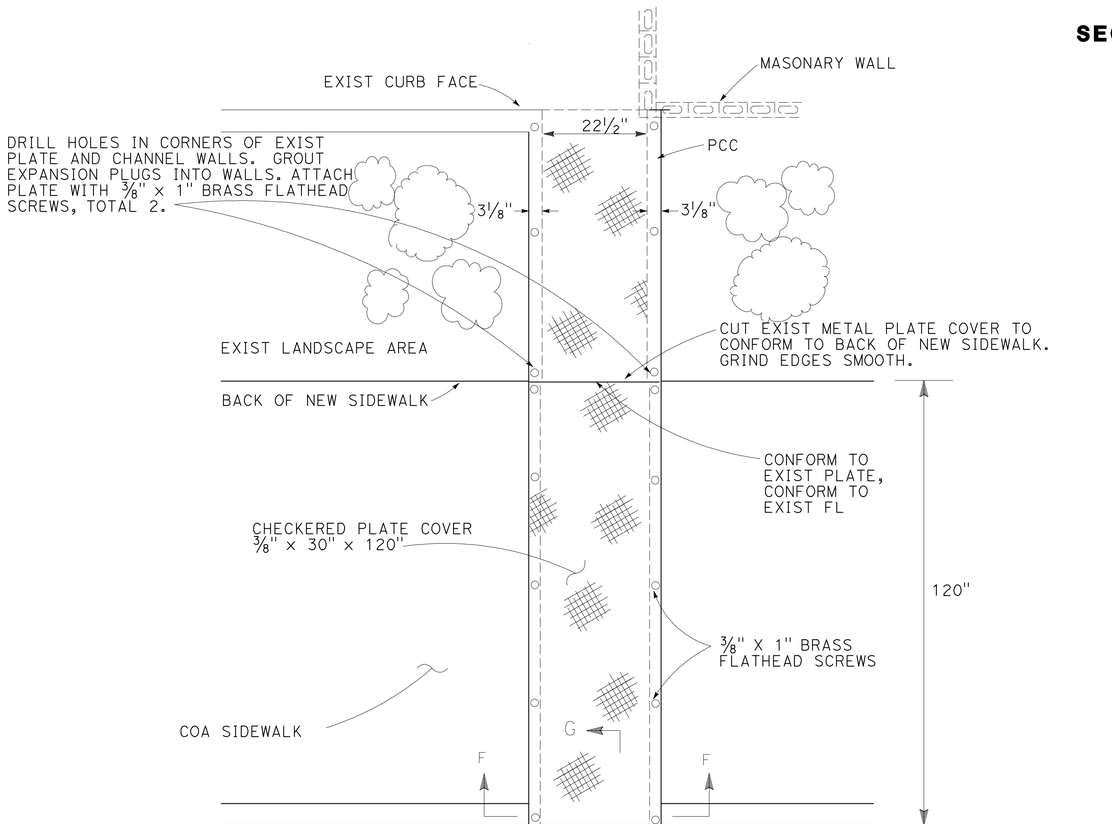

PLAN

SIDEWALK OPENING WITH CHECKERED PLATE (TYPE B)

97 b

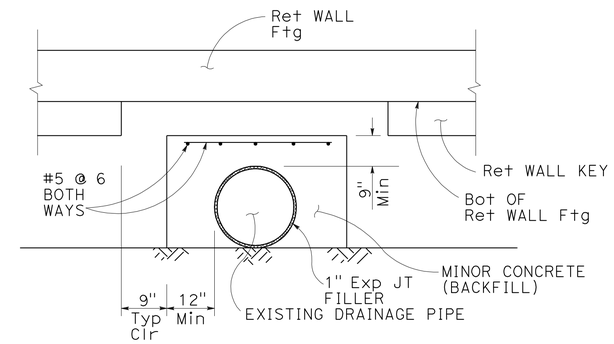

SECTION A-A
NO SCALE

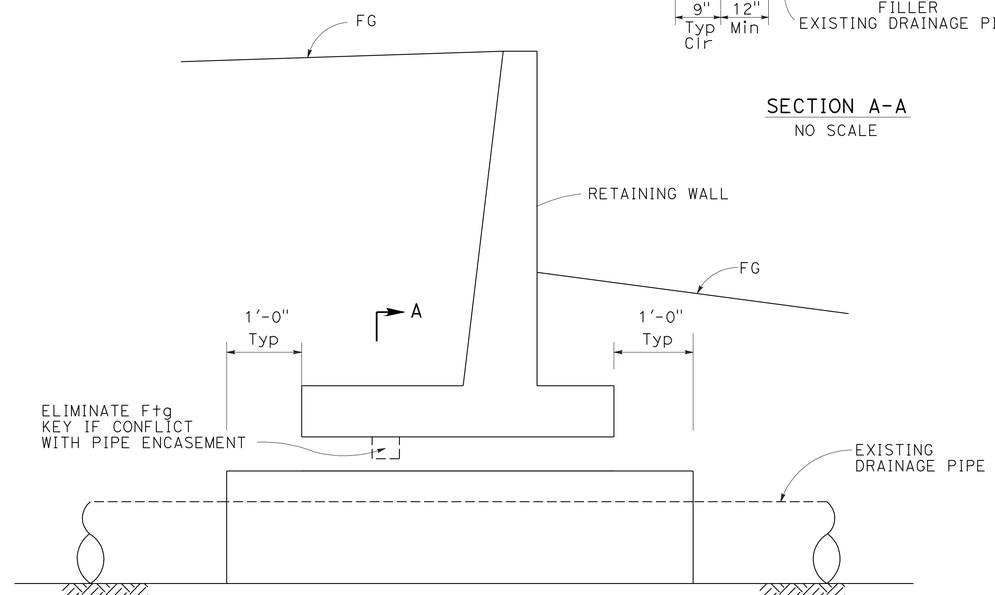

ELEVATION
NO SCALE

CONCRETE ENCASEMENT OF EXISTING PIPES

6 h 7 c 13 d 18 c 42 b

DRAINAGE DETAILS

NO SCALE

DD-14

STATE OF CALIFORNIA - DEPARTMENT OF TRANSPORTATION
Caltrans®

CONSULTANT FUNCTIONAL SUPERVISOR: JOSEPH PETERSON
CALCULATED-DESIGNED BY: KATHLEEN M. REILLY
CHECKED BY: SHARON L. PATCH
REVISED BY: KR
DATE REVISED: 10/31/11

LAST REVISION 10-31-11
DATE PLOTTED => 19-JAN-2012
TIME PLOTTED => 06:25

Dist	COUNTY	ROUTE	POST MILES TOTAL PROJECT	SHEET No.	TOTAL SHEETS
04	CC	4	27.3/R29.0	162	950

REGISTERED CIVIL ENGINEER 10/31/11 DATE

1-17-12
PLANS APPROVAL DATE

REGISTERED PROFESSIONAL ENGINEER Keith D. Rhodes No. C53587 Exp. 6/30/13 CIVIL STATE OF CALIFORNIA

THE STATE OF CALIFORNIA OR ITS OFFICERS OR AGENTS SHALL NOT BE RESPONSIBLE FOR THE ACCURACY OR COMPLETENESS OF SCANNED COPIES OF THIS PLAN SHEET.

T Y LIN INTERNATIONAL
2010 CROW CANYON PLACE, SUITE 350
SAN RAMON, CA 94583

CCTA
2999 OAK ROAD, SUITE 100
WALNUT CREEK, CA 94597

NOTE:

ALL CALTRANS DRAINAGE INLET MARKERS SHOULD BE IN ACCORDANCE WITH NSP D71.

ABBREVIATIONS:

COA CITY OF ANTIOCH
DIM DRAINAGE INLET MARKER

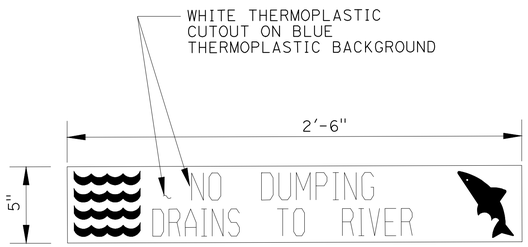

COA DRAINAGE INLET MARKER

13 a 19 i 23 a c 26 c 31 a c 38 c 43 a c 70 e 76 a 81 c
98 a c e 99 a c 100 a e 101 c 104 a d 106 a d 107 a

DRAINAGE DETAILS

NO SCALE

DD-15

REVISED BY	DATE REVISED
SN	10/31/11

SAMATHA NARRA
KEITH D. RHODES

CALCULATED-DESIGNED BY
CHECKED BY

CONSULTANT FUNCTIONAL SUPERVISOR
KEITH RHODES

STATE OF CALIFORNIA - DEPARTMENT OF TRANSPORTATION
Caltrans

LAST REVISION 10-31-11 | DATE PLOTTED => 19-JAN-2012 TIME PLOTTED => 08:25

Dist	COUNTY	ROUTE	POST MILES TOTAL PROJECT	SHEET No.	TOTAL SHEETS
04	CC	4	27.3/R29.0	163	950

Joseph E. Peterson 10/31/11
REGISTERED CIVIL ENGINEER DATE

1-17-12
PLANS APPROVAL DATE

REGISTERED PROFESSIONAL ENGINEER J.E.Peterson No. 42777 Exp. 3/31/12 CIVIL STATE OF CALIFORNIA

THE STATE OF CALIFORNIA OR ITS OFFICERS OR AGENTS SHALL NOT BE RESPONSIBLE FOR THE ACCURACY OR COMPLETENESS OF SCANNED COPIES OF THIS PLAN SHEET.

CALTRANS
111 GRAND AVENUE
OAKLAND, CA 94612

CCTA
2999 OAK ROAD, SUITE 100
WALNUT CREEK, CA 94597

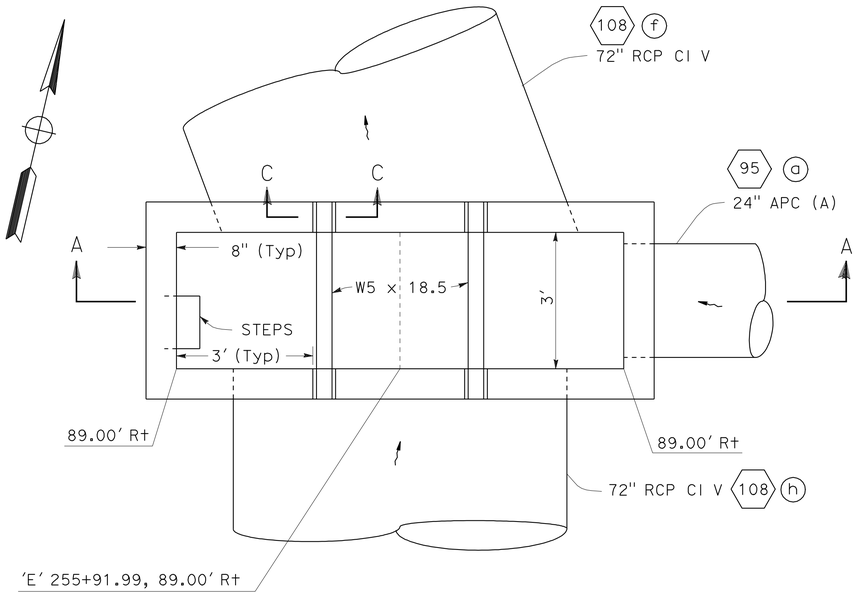

PLAN
(CAP NOT SHOWN)

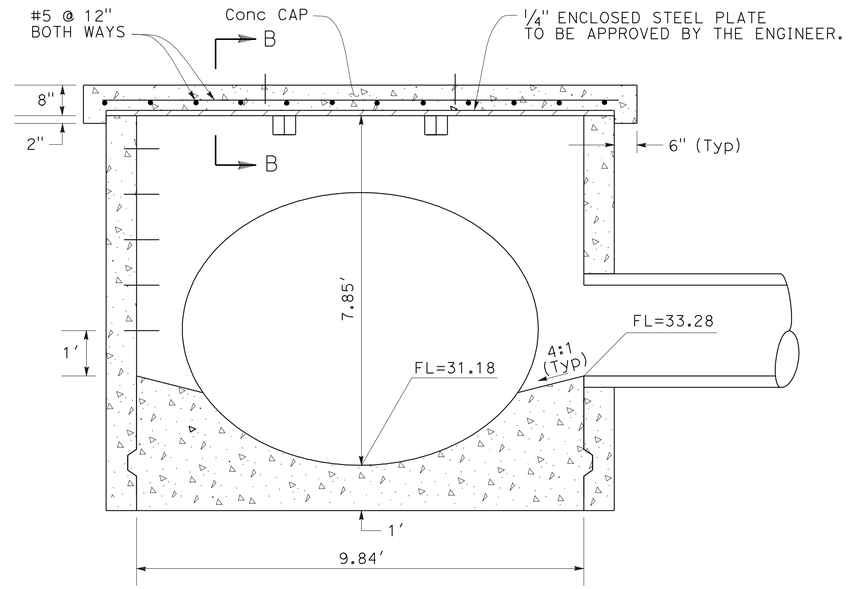

SECTION A-A

NOTES:

1. SEE Std PLAN D74A, TYPE GT4 INLET FOR ADDITIONAL DETAILS NOT SHOWN.
2. WALLS SHALL BE REINFORCED WITH #4 BARS AT 1'-6" CENTERS PLACED 1½" CLEAR TO INSIDE OF BOX.
3. STEP SPACING SHALL BE PER NOTE5, Std PLAN D74A.

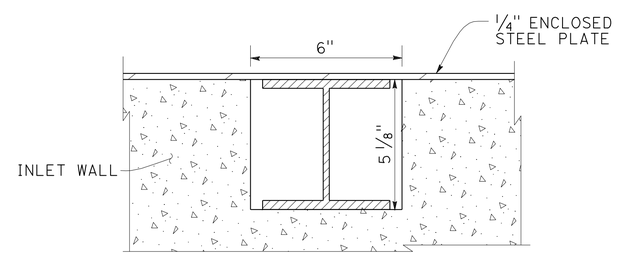

SECTION C-C
(Conc Cap not shown)

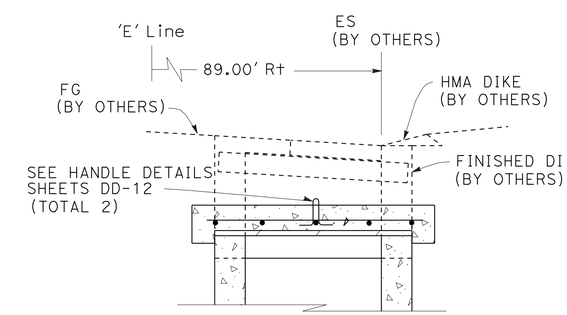

SECTION B-B

PARTIAL GT4 (MOD) INLET w/ CAP

108 g

DRAINAGE DETAILS

NO SCALE

DD-16

STATE OF CALIFORNIA - DEPARTMENT OF TRANSPORTATION
Caltrans®

CONSULTANT FUNCTIONAL SUPERVISOR: JOSEPH PETERSON

CALCULATED-DESIGNED BY: KATHLEEN M. REILLY
CHECKED BY: SHARON L. PATCH

REVISED BY: KR
DATE REVISED: 10/31/11

LAST REVISION 10-31-11 | DATE PLOTTED => 19-JAN-2012 | TIME PLOTTED => 06:25

Dist	COUNTY	ROUTE	POST MILES TOTAL PROJECT	SHEET No.	TOTAL SHEETS
04	CC	4	27.3/R29.0	164	950

REGISTERED CIVIL ENGINEER — DATE 10/31/11

1-17-12
PLANS APPROVAL DATE

REGISTERED PROFESSIONAL ENGINEER — J.E.Peterson No. 42777 Exp. 3/31/12 CIVIL — STATE OF CALIFORNIA

THE STATE OF CALIFORNIA OR ITS OFFICERS OR AGENTS SHALL NOT BE RESPONSIBLE FOR THE ACCURACY OR COMPLETENESS OF SCANNED COPIES OF THIS PLAN SHEET.

CALTRANS
111 GRAND AVENUE
OAKLAND, CA 94612

CCTA
2999 OAK ROAD, SUITE 100
WALNUT CREEK, CA 94597

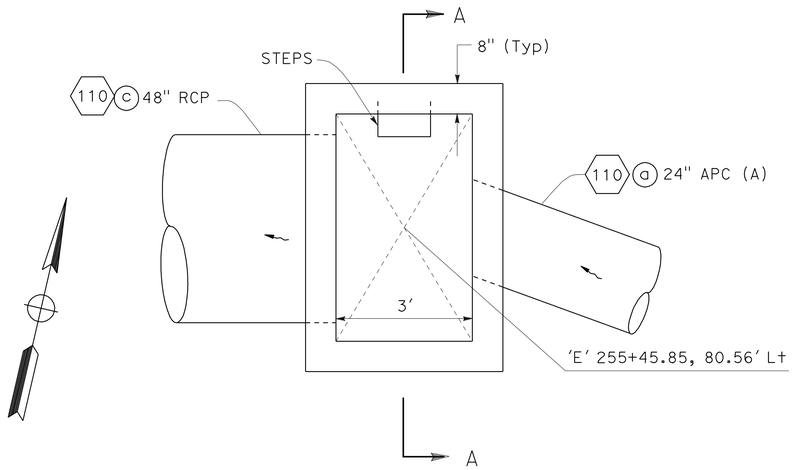

PLAN
(CAP NOT SHOWN)

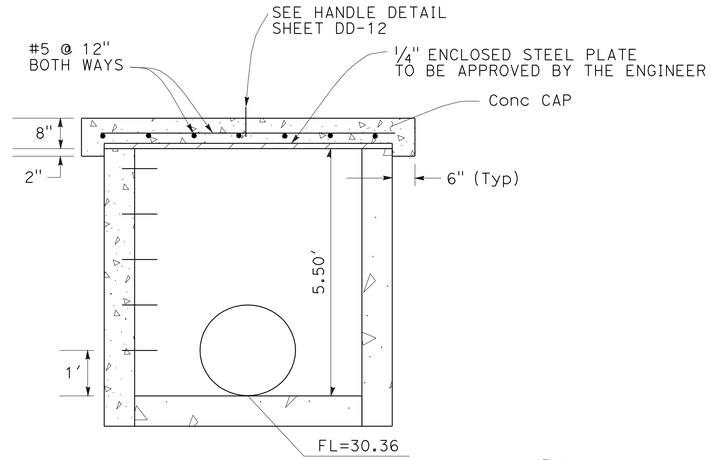

SECTION A-A

NOTES:
1. R=22.5'
2. L=12.3', measured along centerline of pipe.

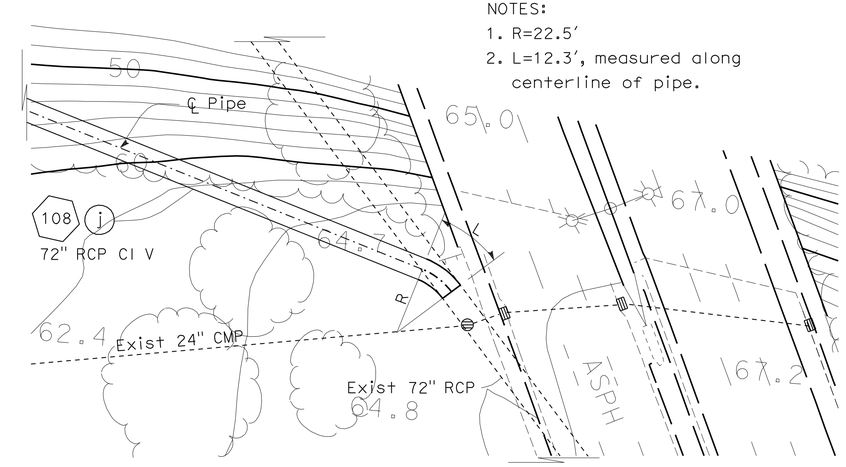

72" PIPE CURVE DETAIL

108 j

NOTES:
1. SEE Std PLAN D74A, TYPE GT4 INLET FOR ADDITIONAL DETAILS NOT SHOWN.
2. WALLS SHALL BE REINFORCED WITH #4 BARS AT 1'-6" CENTERS PLACED 1½" CLEAR TO INSIDE OF BOX.
3. STEP SPACING SHALL BE PER NOTE5, Std PLAN D74A.

PARTIAL G2 INLET w/ CAP

110 b

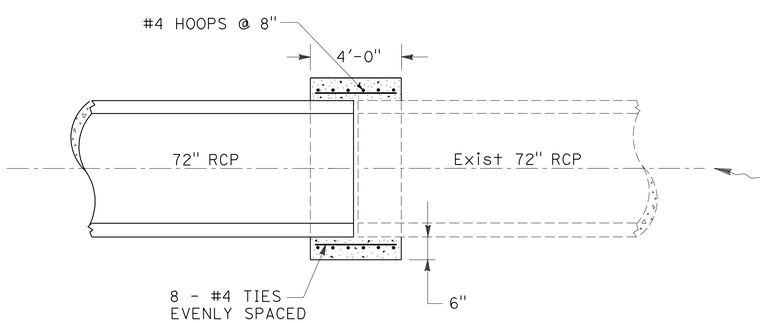

CONCRETE COLLAR

108 c f j

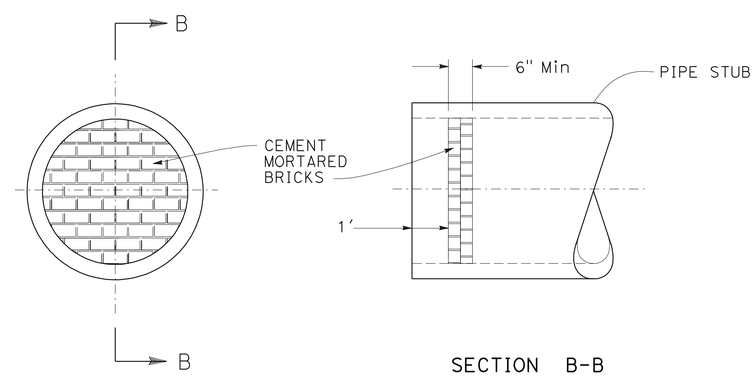

SECTION B-B

PIPE BULKHEAD

108 b l m n

DRAINAGE DETAILS

NO SCALE

DD-17

STATE OF CALIFORNIA - DEPARTMENT OF TRANSPORTATION
Caltrans
CONSULTANT FUNCTIONAL SUPERVISOR: JOSEPH PETERSON
CALCULATED-DESIGNED BY
CHECKED BY
REVISED BY
DATE REVISED 10/31/11

LAST REVISION 10-31-11
DATE PLOTTED => 19-JAN-2012
TIME PLOTTED => 06:58

Dist	COUNTY	ROUTE	POST MILES TOTAL PROJECT	SHEET No.	TOTAL SHEETS
04	CC	4	27.3/R29.0	165	950

REGISTERED CIVIL ENGINEER — DATE 10/4/11

1-17-12
PLANS APPROVAL DATE

REGISTERED PROFESSIONAL ENGINEER — Brett Makley No. C66397 Exp. 6/30/12 CIVIL — STATE OF CALIFORNIA

THE STATE OF CALIFORNIA OR ITS OFFICERS OR AGENTS SHALL NOT BE RESPONSIBLE FOR THE ACCURACY OR COMPLETENESS OF SCANNED COPIES OF THIS PLAN SHEET.

T Y LIN INTERNATIONAL
2010 CROW CANYON PLACE, SUITE 350
SAN RAMON, CA 94583

CCTA
2999 OAK ROAD, SUITE 100
WALNUT CREEK, CA 94597

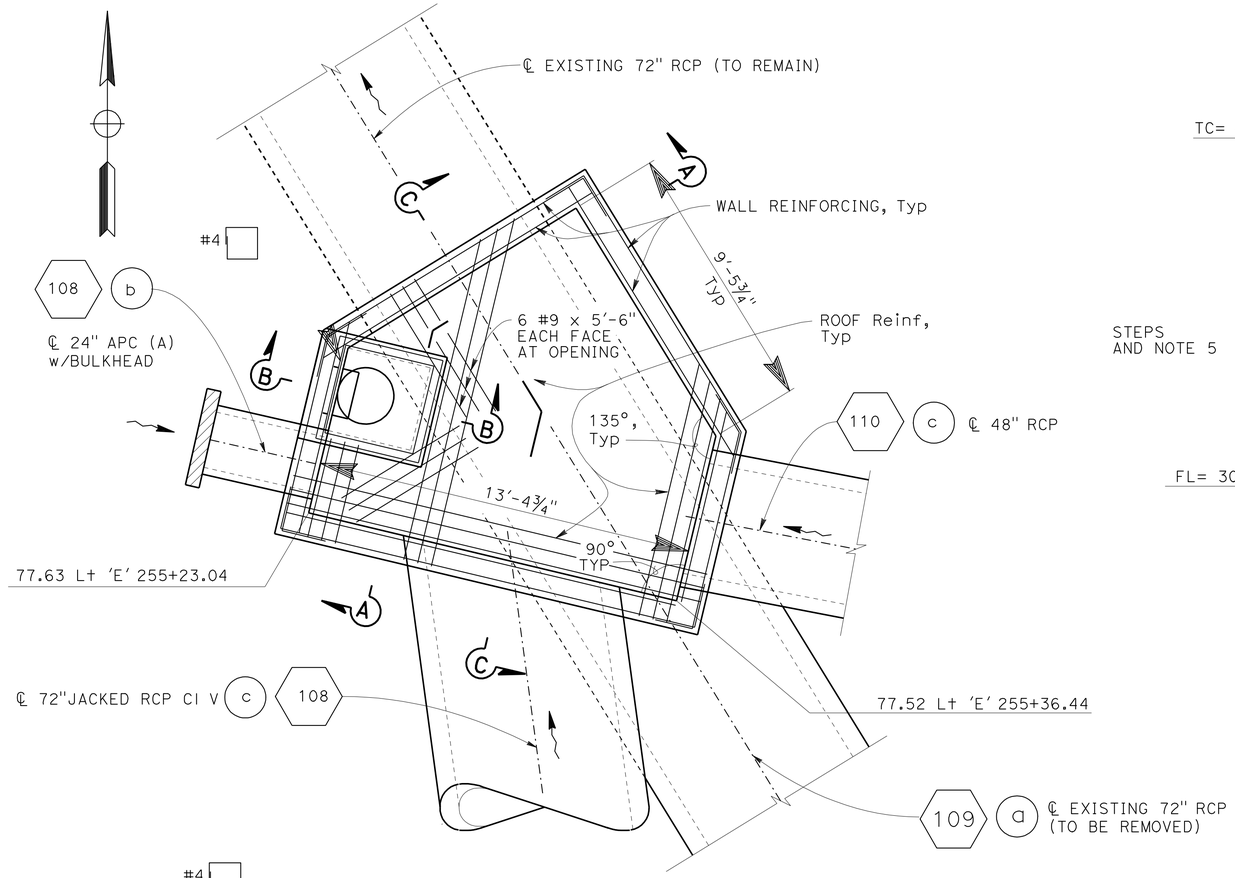

PLAN
⅜"=1'-0"

NOTE: NOT ALL REINFORCING SHOWN FOR CLARITY.

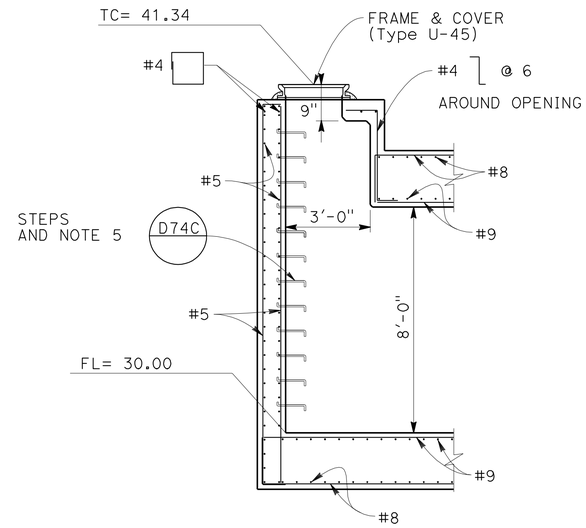

SECTION B-B
⅜"=1'-0"

DESIGN NOTES:

CONCRETE f'c = 3600 psi
REINFORCING: fy = 60,000 psi

GENERAL NOTES:

1. IT SHALL BE THE CONTRACTORS RESPONSIBILITY TO PROVIDE SUFFIDIENT AND SAFE SUPPORT FOR ANY EXCAVATION AS WELL AS FOR ADJACENT STRUCTURES THAT COULD BE DAMAGED BY THE EARTH MOVEMENT.
2. THE CONTRACTOR SHALL LOCATE AND/OR VERFIY THE LOCATION OF EXISTING UTILITIES PRIOR TO EXCAVATION.
3. MINIMUM LAP SPLICE LENGTH OF REINFORCING SHALL BE 45 BAR DIAMETERS.
4. CLEARANCE TO REINFORCING FOR JUNCTION BOX SHALL BE 2" UNLESS OTHERWISE SHOWN ON PLANS.
5. SEE NOTE 5 IN D73

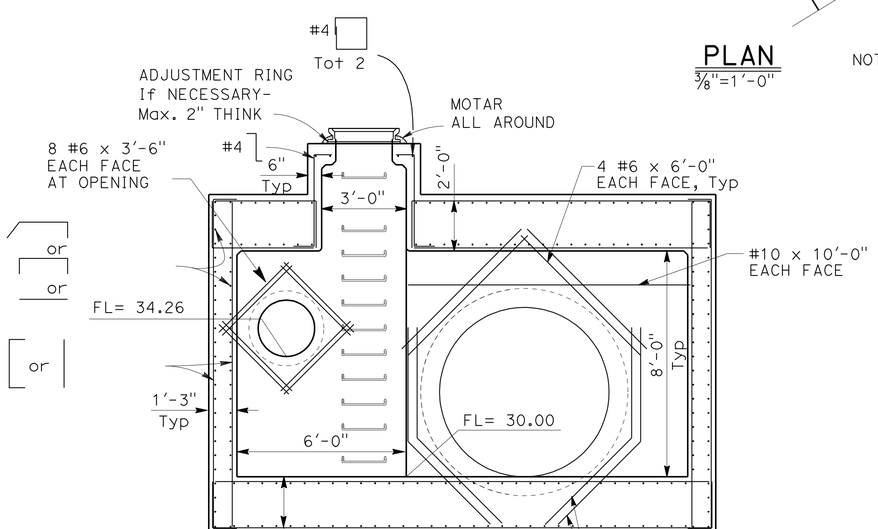

SECTION A-A
⅜"=1'-0"

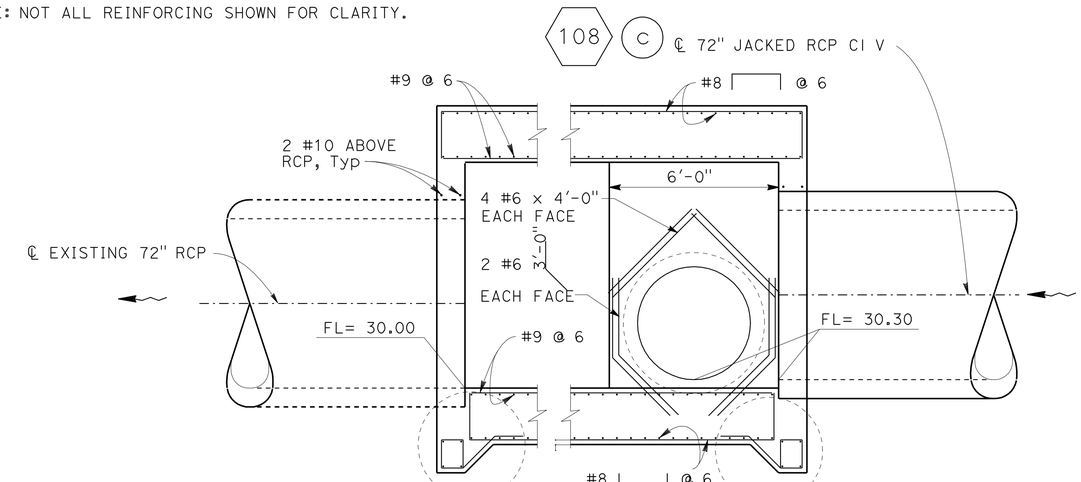

SECTION C-C
⅜"=1'-0"

JUNCTION STRUCTURE No.1

108 a

DRAINAGE DETAILS

NO SCALE

DD-18

STATE OF CALIFORNIA - DEPARTMENT OF TRANSPORTATION
Caltrans

CONSULTANT FUNCTIONAL SUPERVISOR: KEITH RHODES
CALCULATED-DESIGNED BY: Josh Nickerson
CHECKED BY: Brett Makley
REVISED BY: SN
DATE REVISED: 10/4/11

LAST REVISION 8-9-11
DATE PLOTTED => 19-JAN-2012
TIME PLOTTED => 06:58

Dist	COUNTY	ROUTE	POST MILES TOTAL PROJECT	SHEET No.	TOTAL SHEETS
04	CC	4	27.3/R29.0	166	950

REGISTERED CIVIL ENGINEER — DATE 10/4/11

1-17-12
PLANS APPROVAL DATE

REGISTERED PROFESSIONAL ENGINEER — Brett Makley No. C66397 Exp. 6/30/12 CIVIL — STATE OF CALIFORNIA

THE STATE OF CALIFORNIA OR ITS OFFICERS OR AGENTS SHALL NOT BE RESPONSIBLE FOR THE ACCURACY OR COMPLETENESS OF SCANNED COPIES OF THIS PLAN SHEET.

T Y LIN INTERNATIONAL
2010 CROW CANYON PLACE, SUITE 350
SAN RAMON, CA 94583

CCTA
2999 OAK ROAD, SUITE 100
WALNUT CREEK, CA 94597

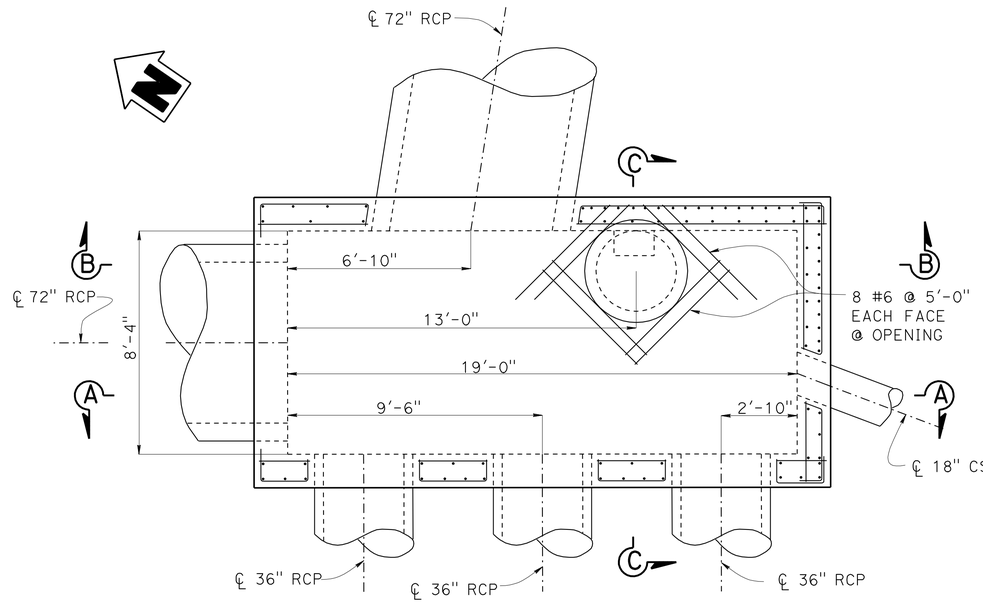

PLAN
3/8" = 1'-0"

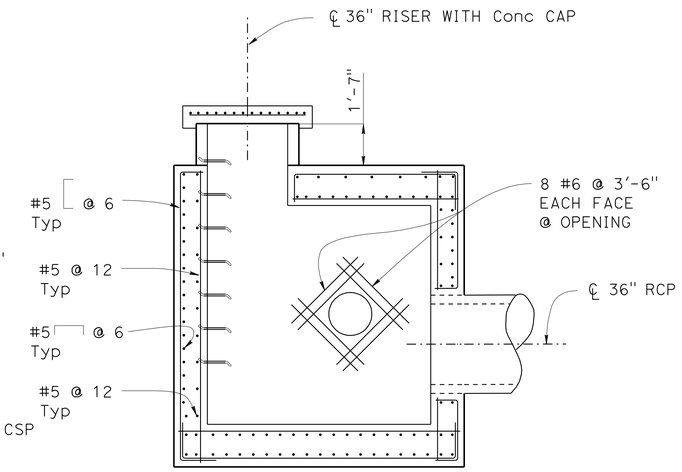

SECTION C-C
3/8" = 1'-0"

DESIGN NOTES:

CONCRETE: f'c = 3600 psi
REINFORCING: fy = 60,000 psi

GENERAL NOTES:

1. IT SHALL BE THE CONTRACTORS RESPONSIBILITY TO PROVIDE SUFFIDIENT AND SAFE SUPPORT FOR ANY EXCAVATION AS WELL AS FOR ADJACENT STRUCTURES THAT COULD BE DAMAGED BY THE EARTH MOVEMENT.
2. THE CONTRACTOR SHALL LOCATE AND/OR VERFIY THE LOCATION OF EXISTING UTILITIES PRIOR TO EXCAVATION.
3. MINIMUM LAP SPLICE LENGTH OF REINFORCING SHALL BE 45 BAR DIAMETERS.
4. CLEARANCE TO REINFORCING FOR JUNCTION BOX SHALL BE 2" UNLESS OTHERWISE SHOWN ON PLANS.
5. MANUFACTURER'S TECHNICAL DATA VERIFYING CAPACITIES OF RISER PIPE ARE TO BE PROVIDED BY THE CONTRACTOR.
6. SEE NOTE 5 IN (D73)

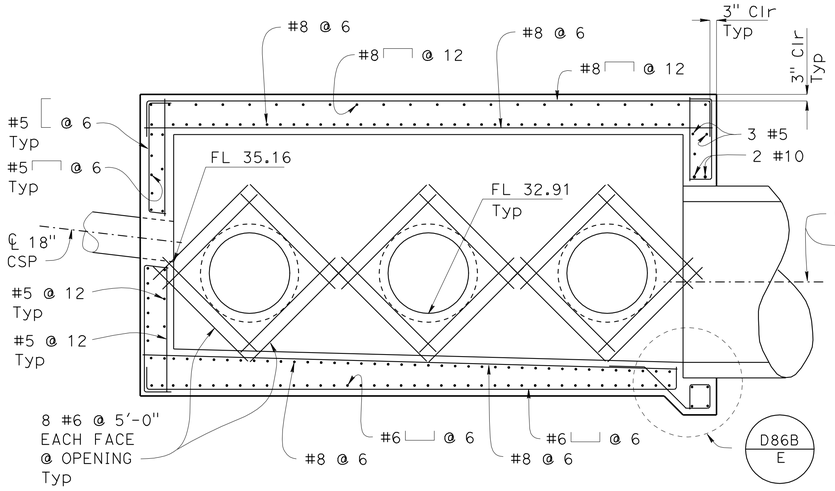

NOTE: FOR DETAILS NOT SHOWN, SEE "SECTION B-B"

SECTION A-A
3/8" = 1'-0"

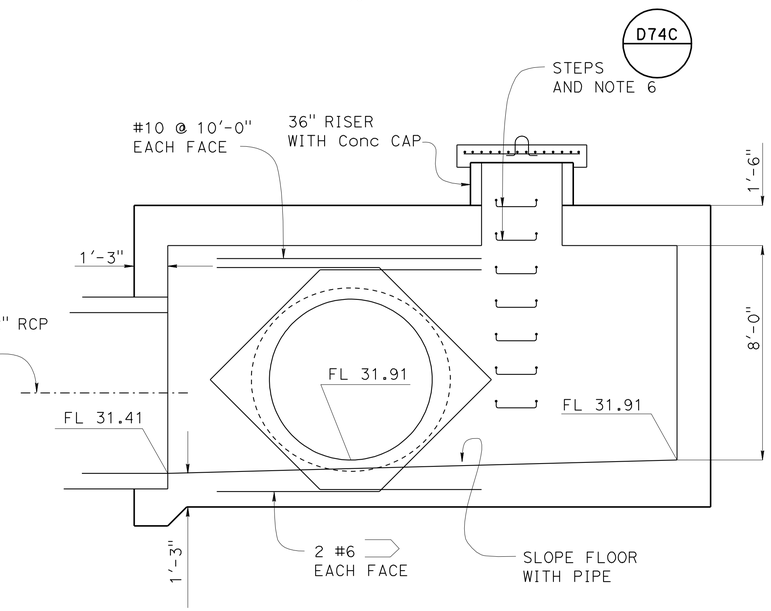

NOTE: FOR DETAILS NOT SHOWN, SEE "SECTION A-A"

SECTION B-B
3/8" = 1'-0"

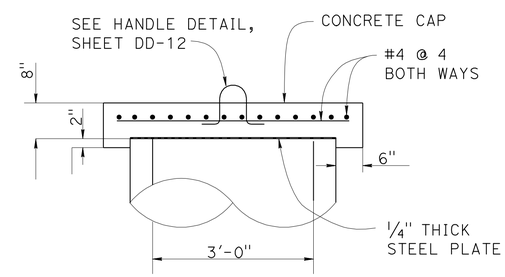

CONCRETE CAP DETAIL
3/4" = 1'-0"

JUNCTION STRUCTURE No.2

(108) (i)

DRAINAGE DETAILS

NO SCALE

DD-19

REVISED BY	DATE REVISED
SN	10/4/11

CALCULATED-DESIGNED BY: Josh Nickerson
CHECKED BY: Brett Makley
CONSULTANT FUNCTIONAL SUPERVISOR: KEITH RHODES

STATE OF CALIFORNIA - DEPARTMENT OF TRANSPORTATION
Caltrans

LAST REVISION 8-9-11
DATE PLOTTED => 19-JAN-2012
TIME PLOTTED => 06:58

Dist	COUNTY	ROUTE	POST MILES TOTAL PROJECT	SHEET No.	TOTAL SHEETS
04	CC	4	27.3/R29.0	167	950

10/31/11
REGISTERED CIVIL ENGINEER DATE

1-17-12
PLANS APPROVAL DATE

THE STATE OF CALIFORNIA OR ITS OFFICERS OR AGENTS SHALL NOT BE RESPONSIBLE FOR THE ACCURACY OR COMPLETENESS OF SCANNED COPIES OF THIS PLAN SHEET.

REGISTERED PROFESSIONAL ENGINEER
Keith D. Rhodes
No. C53587
Exp. 6/30/13
CIVIL
STATE OF CALIFORNIA

T Y LIN INTERNATIONAL
2010 CROW CANYON PLACE, SUITE 350
SAN RAMON, CA 94583

CCTA
2999 OAK ROAD, SUITE 100
WALNUT CREEK, CA 94597

ABBREVIATIONS:

BG BICYCLE GRATE
COA CITY OF ANTIOCH
COR CORRUGATED
DIM DRAINAGE INLET MARKER (FOR DETAIL, SEE DD-15 SHEET)
DD DOWNDRAIN DRAIN
PP PLASTIC PIPE
S STANDARD JOINT
SGD STANDARD GUTTER DEPRESSION
SM SMOOTH
SO SIDE OPENING
TRAP TRAPEZOIDAL
w/ WITH
WTJ WATERTIGHT JOINT

NOTES:

1. ALL CITY OF ANTIOCH MANHOLES SHALL USE STANDARD MH FRAME AND COVER. DRAINAGE QUANTITY FOR COA MANHOLE INCLUDES QUANTITY FOR STANDARD MH FRAME AND COVER.
2. THE "MAXIMUM COVER" PROVIDED FOR THE REINFORCED CONCRETE PIPE WITH DOUBLE CAGED, CIRCULAR REINFORCEMENT REFLECTS THE EFFECTIVE MAXIMUM COVER. THE EFFECTIVE MAXIMUM COVER IS DEFINED AS THE DIFFERENCE IN ELEVATION BETWEEN THE TOP OF PIPE AND THE FINISHED GRADE OF THE ROADWAY CREATING UNEQUAL LOADING ON THE PIPE. THIS DIFFERENCE IN ELEVATION SHOULD BE USED TO CLASS THE REINFORCED CONRETE PIPE WITH DOUBLE CAGED CIRCULAR REINFORCEMENT.
3. ALLOWABLE ALTERNATIVE SLOTTED PIPE SHALL INCLUDE PLASTIC AND CORRUGATED STEEL.
4. MAXIMUM COVER PROVIDED FOR "REMOVE CULVERT" IS MEASURED FROM THE TOP OF EXISTING CULVERT TO OG.

ALTERNATIVE PIPE CULVERTS
ALLOWABLE PIPE MATERIAL AND PROTECTION

DESIGNATION	RCP	CSP		SSRP		PLASTIC	
	SIZE (in)	Bit Ctd SIZE (in)	Bit Ctd THICK (in)	Bit Ctd SIZE (in)	Bit Ctd THICK (in)	CORRUGATED SIZE (in)	SMOOTH SIZE (in)
12"APC	12	NO	NO	NO	NO	NO	12
18"APC (A)	18	NO	NO	NO	NO	NO	18
18"APC (B)	18	18	0.064	18	0.064	18	18
24"APC (A)	24	NO	NO	NO	NO	NO	24
24"APC (B)	24	24	0.064	24	0.064	24	24

DRAINAGE QUANTITIES

DRAINAGE SYSTEM No.	DRAINAGE UNIT	ABANDON CULVERT	ABANDON INLET	REMOVE CULVERT	REMOVE CULVERT(ACP)	REMOVE INLET	REMOVE DOWN DRAIN	REMOVE MH	REMOVE AC OVERSIDE DRAIN	Adj MH FRAME & COVER TO GRADE	MODIFY INLET TO MH	CAP INLET	CAP MH	CAP RISER	SAND BACKFILL	DITCH EXCAVATION	MINOR Conc (MINOR STRUCTURE)	MINOR Conc (BACKFILL)	MINOR Conc (GUTTER LINING)	MINOR Conc (Misc CONSTRUCTION)	12" APC	18" APC (A)	18" APC (B)	24" APC (A)	24" APC (B)	18" ASP	3" PVC PIPE (SCHEDULE 40)	18" RCP Cl V	RIGID RAIL FALL PROTECTION SYSTEM	24" RCP DOUBLE CAGED CIRCULAR Reinf	30" RCP DOUBLE CAGED CIRCULAR Reinf	JACKED 18" RCP (CLASS II)	12" CSP (0.064" THICK)	ANCHOR ASSEMBLY	36" CORRUGATED STEEL PIPE INLET (.064" THICK, BIT COATED)	12" WSP (0.25" THICK)	PIPE JOINT CLASSIFICATION (N)	COA DI TYPE C (BG)	COA MH (TYPE III)	RSP (FACING METHOD B)	RSP FABRIC	PARTIAL INLET w/CAP	TYPE 24-12 F&G (N)	TYPE 24-12X F&G (N)	TYPE 36-R F&G (N)	TYPE U 45 F&C (N)	Misc IRON & STEEL	DRAINAGE INLET MARKER	SIDEWALK OPENING w/ CHECKERED PLATE	MAXIMUM COVER (N) (SEE NOTE 4)	HEIGHT OF INLET (N)	DESCRIPTION	STATION	DRAINAGE PLAN SHEET No.	DRAINAGE SYSTEM No.	DRAINAGE UNIT
		EA	EA	LF	LF	EA	EA	EA	EA	EA	EA	EA	EA	EA	CY	CY	CY	CY	CY	CY	LF	LF	LF	LF	LF	LF	LF	LF	EA	LF	LF	LF	LF	EA	LF	LF		EA	EA	CY	SQFT	EA	EA	EA	EA	EA	LB	EA	EA	LF	LF					
1	a																						127														S													5.2		18" APC (B)		D-1	1	a
1	b																2.24																										1				326				6.7	G2 INLET	100.00' Lt "E" 180+25	D-1	1	b
1	c																						79														S													6.5		18" APC (B)		D-1	2	c
1	d																											17									S													6.5		18" RCP Cl V w/Conc COLLAR		D-1	2	d
1	e																2.57																										1				326				8.0	G2 INLET	CL "E" 180+25	D-1	2	e
1	f																						122														S													3.8		18" APC (B)		D-1/2	1	f
1	g																1.89																										1				326				5.3	G2 INLET	100.00' Lt "E" 181+50	D-2	1	g
1	h																						197														S													3.8		18" APC (B)		D-2	1	h
1	i																1.87																										1				326				5.2	G2 INLET	24.55' Lt "AST4" 983+50	D-2	1	i
2	a																						77														S													3.8		18" APC (B)		D-1/2	2	a
2	b																1.89																										1				326				5.3	G2 INLET	100.00' Rt "E" 181+05	D-2	2	b
2	c																						266														S													3.8		18" APC (B)		D-2	2	c
2	d																1.90																										1				326				5.3	G2 INLET	100.00' Rt "E" 183+74	D-2	2	d
3	a			23																																														4.1		REMOVE CULVERT		D-1	3	a
3	b					1																																														REMOVE DI	122.00' Rt "E" 179+05	D-1	3	b
3	c																		6.96																																	LINED TRAP GUTTER		D-1/2	3	c
3	d																1.45																										1				326				3.6	G2 INLET	123.94' Rt "E" 180+00	D-1	3	d
3	e																						22														S													2.5		18" APC (B)		D-1	3	e
3	f																		1.86																																	LINED TRAP GUTTER		D-1	3	f
3	g																1.55																										1				326				4.0	G2 INLET	124.10' Rt "E" 180+25	D-1	3	g
3	h																																24	1			DD													4.8		12" CSP w/DD JOINTS		D-1	3	h
3	i																		20.46																																	LINED TRAP GUTTER		D-1	3	i
3	j																3.97																										1				326				9.3	G2 INLET	126.05' Rt "E" 183+33	D-2	3	j
3	k																						211.1														S													7.8		18" APC (B)		D-2	3	k
3	l																		14.28																																	LINED TRAP GUTTER		D-2	3	l
3	m																2.51																										1				326				7.7	G2 INLET	127.40' Rt "E" 185+47	D-2	3	m
3	n																						15.8														S													6.9		18" APC (B)		D-2	3	n
4	a					1																																														REMOVE DI	128.89' Rt "E" 183+12	D-2	4	a
4	b			22.5																																														4.4		REMOVE CULVERT		D-2	4	b
4	c							1																																												REMOVE MANHOLE	121.61' Rt "E" 183+33	D-2	4	c
4	d			232																																														7.8		REMOVE CULVERT		D-2	4	d
4	e			3																																														7.8		REMOVE CULVERT (PORTION)		D-2	4	e
5	a																1.61																										1				326				4.2	G2 INLET	29.26' Lt "AST-4" 985+47.7	D-2	5	a
		-	-	280.5	-	2	-	1	-	-	-	-	-	-	-	-	23.45	-	43.56	-	-	-	1116.9	-	-	-	-	17	-	-	-	-	24	1	-	-	-	-	-	-	-	-	11	-	-	-	3586	-	-			SHEET TOTAL				

(N) = NOT A SEPARATE PAY ITEM, FOR INFORMATION ONLY

DRAINAGE QUANTITIES
DQ-1

STATE OF CALIFORNIA - DEPARTMENT OF TRANSPORTATION
Caltrans®

CONSULTANT FUNCTIONAL SUPERVISOR	KEITH D. RHODES
CALCULATED-DESIGNED BY	SAMATHA NARRA
CHECKED BY	KEITH D. RHODES
REVISED BY	SN
DATE REVISED	10/31/11

LAST REVISION 10-31-11
DATE PLOTTED => 19-JAN-2012
TIME PLOTTED => 06:58

BORDER LAST REVISED 7/2/2010
USERNAME => s119571
DGN FILE => 0400021080id001.dgn
RELATIVE BORDER SCALE IS IN INCHES 0 1 2 3
UNIT 4275
PROJECT NUMBER & PHASE 04000210801

REGISTERED CIVIL ENGINEER 10/31/11 DATE

1-17-12
PLANS APPROVAL DATE

REGISTERED PROFESSIONAL ENGINEER Keith D. Rhodes No. C53587 Exp. 6/30/13 CIVIL STATE OF CALIFORNIA

THE STATE OF CALIFORNIA OR ITS OFFICERS OR AGENTS SHALL NOT BE RESPONSIBLE FOR THE ACCURACY OR COMPLETENESS OF SCANNED COPIES OF THIS PLAN SHEET.

T Y LIN INTERNATIONAL
2010 CROW CANYON PLACE, SUITE 350
SAN RAMON, CA 94583

CCTA
2999 OAK ROAD, SUITE 100
WALNUT CREEK, CA 94597

DRAINAGE SYSTEM No.	DRAINAGE UNIT	ABANDON CULVERT	ABANDON INLET	REMOVE CULVERT	REMOVE CULVERT(ACP)	REMOVE INLET	REMOVE DOWN DRAIN	REMOVE MH	REMOVE AC OVERSIDE DRAIN	Adj MH FRAME & COVER TO GRADE	MODIFY INLET TO MH	CAP INLET	CAP MH	CAP RISER	SAND BACKFILL	DITCH EXCAVATION	MINOR Conc (MINOR STRUCTURE)	MINOR Conc (BACKFILL)	MINOR Conc (GUTTER LINING)	MINOR Conc (Misc CONSTRUCTION)	12" APC	18" APC (A)	18" APC (B)	24" APC (A)	24" APC (B)	18" ASP	3" PVC PIPE (SCHEDULE 40)	18" RCP CI V	RIGID RAIL FALL PROTECTION SYSTEM	24" RCP DOUBLE CAGED CIRCULAR Reinf	30" RCP DOUBLE CAGED CIRCULAR Reinf	JACKED 18" RCP (CLASS II)	12" CSP (0.064" THICK)	ANCHOR ASSEMBLY	36" CORRUGATED STEEL PIPE INLET (.064" THICK, BIT COATED)	12" WSP (0.25" THICK)	PIPE JOINT CLASSIFICATION (N)	COA DI, TYPE C (BG)	COA MH (TYPE III)	RSP (FACING METHOD B)	RSP FABRIC	PARTIAL INLET w/CAP	TYPE 24-12 F&G (N)	TYPE 24-12X F&G (N)	TYPE 36-R F&G (N)	TYPE U 45 F&C (N)	Misc IRON & STEEL	DRAINAGE INLET MARKER	SIDEWALK OPENING w/ CHECKERED PLATE	MAXIMUM COVER (N) (SEE NOTE 4)	HEIGHT OF INLET (N)	DESCRIPTION	STATION	DRAINAGE PLAN SHEET No.	DRAINAGE SYSTEM No.	DRAINAGE UNIT
		EA	EA	LF	LF	EA	EA	EA	EA	EA	EA	EA	EA	EA	CY	CY	CY	CY	CY	CY	LF	LF	LF	LF	LF	LF	LF	LF	EA	LF	LF	LF	LF	EA	LF	LF		EA	EA	CY	SQFT	EA	EA	EA	EA	EA	LB	EA	EA	LF	LF					
5	b																						90.3														S													5.1		18" APC (B)		D-2	5	b
5	c																											17									S													5.1		18" RCP CI V w/Conc COLLAR		D-2	5	c
5	d																2.23																										1				326				6.6	G2 INLET	CL "E" 185+47	D-2	5	d
5	e																											18									S													6.1		18" RCP CI V w/Conc COLLAR		D-2	5	e
5	f																						88.3														S													6.1		18" APC (B)		D-2	5	f
5	g																1.89																										1				326				5.3	G2 INLET	109.33′ Rt "E" 185+47	D-2	5	g
5	h																						16														S													4.4		18" APC (B)		D-2	5	h
6	a					1																																														REMOVE DI	41.72′ Rt "E" 185+62.5	D-2	6	a
6	b				69																																													3.8		REMOVE CULVERT (ACP)		D-2	6	b
6	c		1																																																	ABANDON DI	27.26′ Rt "E" 185+62	D-2	6	c
6	d	1													3.76																																			6		ABANDON CULVERT		D-2	6	d
6	e		1																																																	ABANDON DI	86.95′ Rt "E" 185+65.34	D-2	6	e
6	f	1													2.32																																			9.1		ABANDON CULVERT		D-2	6	f
6	g									1																																										ADJUST MANHOLE	121.80′ Rt "E" 185+65.25	D-2	6	g
6	h																	2.91																																		PIPE ENCASEMENT FOR 24" CULVERT		D-2	6	h
7	a												1																																							CAP MANHOLE	23.13′ Rt "AST-3" 888+27.8	D-2	7	a
7	b					1																																														REMOVE DI	41.25′ Rt "AST-3" 888+24	D-2	7	b
7	c																	2.26																																		PIPE ENCASEMENT FOR 18" CULVERT		D-2	7	c
8	a															19.85																																				UNLINED V-DITCH		D-2	8	a
8	b																1.42			0.3															6.5										1		236				6.5	GMP DI w/SO	42.58′ Rt "AST-3" 888+23.38	D-2	8	b
8	c															14.07																																				UNLINED V-DITCH		D-2	8	c
8	d																						3.3														S													5.0		18" APC(B) w/Conc COLLAR		D-2	8	d
9	a															4.44																																				UNLINED TRAPEZODIAL DITCH (TYPE A)		D-2	9	a
9	b																1.42			0.3															2.5										1		236				2.5	GMP DI w/SO	41.66′ Lt "AST-4" 988+43.40	D-2	9	b
9	c																	0.33			4.4																S													1.5		12" APC		D-2	9	c
10	a																						48.8														S													5.5		18" APC (B)		D-2	10	a
10	b																2.32																										1				326				7.0	G2 INLET	36.30′ Lt "AST-4" 988+43.40	D-2	10	b
10	c																						196.7														S													5.8		18" APC (B)		D-2	10	c
10	d																3																										2				634				7.3	GDOM INLET	41.05′ Lt "AST-4" 990+43	D-2	10	d
10	e																						199.2														S													5.8		18" APC (B)		D-2	10	e
10	f																2.1																										2				634				4.5	GDOM INLET	50.86′ Lt "AST-4" 992+45	D-2	10	f
10	g																						65														S													3.0		18" APC (B)		D-3	10	g
10	h																2.11																										2				634				4.5	GDOM INLET	51.79′ Lt "AST-4" 993+13	D-3	10	h
		2	2	-	69	2	-	-	-	1	-	-	1	-	6.08	38.36	16.49	5.5	-	0.6	4.4	-	707.6	-	-	-	-	35	-	-	-	-	-	-	9.0	-	-	-	-	-	-	-	9	-	2	-	3352	-	-			SHEET TOTAL				

(N) = NOT A SEPARATE PAY ITEM, FOR INFORMATION ONLY

DRAINAGE QUANTITIES
DQ-2

Dist	COUNTY	ROUTE	POST MILES TOTAL PROJECT	SHEET No.	TOTAL SHEETS
04	CC	4	27.3/R29.0	169	950

REGISTERED CIVIL ENGINEER 10/31/11 DATE

1-17-12
PLANS APPROVAL DATE

REGISTERED PROFESSIONAL ENGINEER Keith D. Rhodes No. C53587 Exp. 6/30/13 CIVIL STATE OF CALIFORNIA

THE STATE OF CALIFORNIA OR ITS OFFICERS OR AGENTS SHALL NOT BE RESPONSIBLE FOR THE ACCURACY OR COMPLETENESS OF SCANNED COPIES OF THIS PLAN SHEET.

T Y LIN INTERNATIONAL
2010 CROW CANYON PLACE, SUITE 350
SAN RAMON, CA 94583

CCTA
2999 OAK ROAD, SUITE 100
WALNUT CREEK, CA 94597

DRAINAGE SYSTEM No. ⬡	DRAINAGE UNIT ◯	ABANDON CULVERT (EA)	ABANDON INLET (EA)	REMOVE CULVERT (LF)	REMOVE CULVERT(ACP) (LF)	REMOVE INLET (EA)	REMOVE DOWN DRAIN (EA)	REMOVE MH (EA)	REMOVE AC OVERSIDE DRAIN (EA)	Adj MH FRAME & COVER TO GRADE (EA)	MODIFY INLET TO MH (EA)	CAP INLET (EA)	CAP MH (EA)	CAP RISER (EA)	SAND BACKFILL (CY)	DITCH EXCAVATION (CY)	MINOR Conc (MINOR STRUCTURE) (CY)	MINOR Conc (BACKFILL) (CY)	MINOR Conc (GUTTER LINING) (CY)	MINOR Conc (Misc CONSTRUCTION) (CY)	12" APC (LF)	18" APC (A) (LF)	18" APC (B) (LF)	24" APC (A) (LF)	24" APC (B) (LF)	18" ASP (LF)	3" PVC PIPE (SCHEDULE 40) (LF)	18" RCP Cl V (LF)	RIGID RAIL FALL PROTECTION SYSTEM (EA)	24" RCP DOUBLE CAGED CIRCULAR Reinf (LF)	30" RCP DOUBLE CAGED CIRCULAR Reinf (LF)	JACKED 18" RCP (CLASS II) (LF)	12" CSP (0.064" THICK) (LF)	ANCHOR ASSEMBLY (EA)	36" CORRUGATED STEEL PIPE INLET (.064" THICK, BIT COATED) (LF)	12" WSP (0.25" THICK) (LF)	PIPE JOINT CLASSIFICATION (N) (S)	COA DI TYPE C (BG) (EA)	COA MH (TYPE III) (EA)	RSP (FACING METHOD B) (CY)	RSP FABRIC (SQFT)	PARTIAL INLET w/CAP (EA)	TYPE 24-12 F&G (N) (EA)	TYPE 24-12X F&G (N) (EA)	TYPE 36-R F&G (N) (EA)	TYPE U 45 F&C (N) (EA)	Misc IRON & STEEL (LB)	DRAINAGE INLET MARKER (EA)	SIDEWALK OPENING w/ CHECKERED PLATE (EA)	MAXIMUM COVER (N) (SEE NOTE 4) (LF)	HEIGHT OF INLET (N) (LF)	DESCRIPTION	STATION	DRAINAGE PLAN SHEET No.	DRAINAGE SYSTEM No. ⬡	DRAINAGE UNIT ◯
10	i																						264															S																			
10	j																1.73																										1				326				4.6	G2 INLET	46.00′ L+ "AST-4" 995+80	D-3	10	j
10	k																						20.8															S													3.7		18" APC (B)		D-3	10	k
10	l																1.88																										1				326				5.2	G2 INLET	46.00′ L+ "AST-4" 996+03.77	D-3	10	l
10	m																						17.2															S													4.0		18" APC (B)		D-3	10	m
10	n																1.94																										1				326				5.5	G2 INLET	46.00′ L+ "AST-4" 996+24	D-3	10	n
10	o																						168.9															S													6.8		18" APC (B)		D-3	10	o
10	p																																							1							1				8.3	COA MH	44.0′± L+ "AST" 28+55.3±	D-3	10	p
11	a																1.87																										1				326				5.2	G2 INLET	7.00′ R+ "AST-4" 992+45.00	D-2	11	a
11	b																						65.6															S													3.7		18" APC (B)		D-2/3	11	b
11	c																1.87																										1				326				5.2	G2 INLET	16.00′ R+ "AST-4" 993+13	D-3	11	c
11	d																						61.9															S													3.7		18" APC (B)		D-3	11	d
12	a																1.87																										1				326				5.2	G2 INLET	86.00′ L+ "E" 188+40.00	D-2	12	a
12	b																						292															S													4.2		18" APC (B)		D-2	12	b
12	c																1.99																										1				326				5.7	G2 INLET	86.00′ L+ "E" 191+35.00	D-2	12	c
12	d																						282															S													4.2		18" APC (B)		D-2/3	12	d
12	e																1.87																										1				326				5.2	G2 INLET	86.00′ L+ "E" 194+20.00	D-3	12	e
13	a																																					S	1					1				1			4	COA DI w/DIM	16.91′ L+ "D" 353+50	D-2	13	a
13	b																						24.4																													3.3		18" APC (B)		D-2	13	b
13	c																																							1							1				6.4	COA MH	11.60′ R+ "D" 353+50	D-2	13	c
13	d																	3.87																																			PIPE ENCASEMENT FOR 30" CULVERT		D-2	13	d
14	a			3																																															4.5		REMOVE CULVERT (PORTION)		D-2	14	a
14	b											1																																								CAP MH	37.35′ L+ "AST-4" 992+00.48	D-2	14	b
14	c								1																																											REMOVE HMAOD		D-3	14	c
15	a																2.22																										1				326				6.6	G2 INLET	"E" 191+90.00	D-2	15	a
15	b																												18									S													5.1		18" RCP Cl V w/Conc COLLAR		D-2	15	b
15	c																						65															S													5.1		18" APC (B)		D-2	15	c
15	d																1.87																												1	435				5.2	G2 MANHOLE	86.00′ R+ "E" 191+90.00	D-2	15	d
15	e																																37.4	1			DD													4.2		12" CSP w/DD JOINTS		D-2	15	e
15	f									1																																											ADJUST MANHOLE	5.30′ L+ "AST-3" 891+98.2±	D-2	15	f
15	g						1																																														REMOVE DI	28.00′ R+ "E" 191+74.85	D-2	15	g
15	h	1													6.22																																				2.5		ABANDON CULVERT		D-2	15	h
16	a																1.87																										1				326				5.2	G2 INLET	86.00′ R+ "E" 188+65.00	D-2	16	a
		1	-	3	-	1	-	-	1	1	-	-	1	-	6.22	-	20.98	3.87	-	-	-	-	1261.8	-	-	-	-	18	-	-	-	-	37.4	1	-	-	-	1	2	-	-	-	10	1	-	3	3695	1	-			SHEET TOTAL				

(N) = NOT A SEPARATE PAY ITEM, FOR INFORMATION ONLY

DRAINAGE QUANTITIES
DQ-3

STATE OF CALIFORNIA - DEPARTMENT OF TRANSPORTATION
Caltrans

CONSULTANT FUNCTIONAL SUPERVISOR: KEITH D. RHODES
CALCULATED-DESIGNED BY
CHECKED BY
SAMATHA NARRA
KEITH D. RHODES
REVISED BY: SN
DATE REVISED: 10/31/11

LAST REVISION: 10-31-11
DATE PLOTTED => 19-JAN-2012
TIME PLOTTED => 06:58

Dist	COUNTY	ROUTE	POST MILES TOTAL PROJECT	SHEET No.	TOTAL SHEETS
04	CC	4	27.3/R29.0	170	950

REGISTERED CIVIL ENGINEER 10/31/11 DATE

1-17-12
PLANS APPROVAL DATE

REGISTERED PROFESSIONAL ENGINEER Keith D. Rhodes No. C53587 Exp. 6/30/13 CIVIL STATE OF CALIFORNIA

THE STATE OF CALIFORNIA OR ITS OFFICERS OR AGENTS SHALL NOT BE RESPONSIBLE FOR THE ACCURACY OR COMPLETENESS OF SCANNED COPIES OF THIS PLAN SHEET.

T Y LIN INTERNATIONAL
2010 CROW CANYON PLACE, SUITE 350
SAN RAMON, CA 94583

CCTA
2999 OAK ROAD, SUITE 100
WALNUT CREEK, CA 94597

DRAINAGE SYSTEM No. ⬡	DRAINAGE UNIT ◯	ABANDON CULVERT	ABANDON INLET	REMOVE CULVERT	REMOVE CULVERT(ACP)	REMOVE INLET	REMOVE DOWN DRAIN	REMOVE MH	REMOVE AC OVERSIDE DRAIN	Adj MH FRAME & COVER TO GRADE	MODIFY INLET TO MH	CAP INLET	CAP MH	CAP RISER	SAND BACKFILL	DITCH EXCAVATION	MINOR Conc (MINOR STRUCTURE)	MINOR Conc (BACKFILL)	MINOR Conc (GUTTER LINING)	MINOR Conc (Misc CONSTRUCTION)	12" APC	18" APC (A)	18" APC (B)	24" APC (A)	24" APC (B)	18" ASP	3" PVC PIPE (SCHEDULE 40)	18" RCP CI V	RIGID RAIL FALL PROTECTION SYSTEM	24" RCP DOUBLE CAGED CIRCULAR Reinf	30" RCP DOUBLE CAGED CIRCULAR Reinf	JACKED 18" RCP (CLASS II)	12" CSP (0.064" THICK)	ANCHOR ASSEMBLY	36" CORRUGATED STEEL PIPE INLET (.064" THICK, BIT COATED)	12" WSP (0.25" THICK)	PIPE JOINT CLASSIFICATION (N)	COA DI, TYPE C (BG)	COA MH (TYPE III)	RSP (FACING METHOD B)	RSP FABRIC	PARTIAL INLET w/CAP	TYPE 24-12 F&G (N)	TYPE 24-12X F&G (N)	TYPE 36-R F&G (N)	TYPE U 45 F&C (N)	Misc IRON & STEEL	DRAINAGE INLET MARKER	SIDEWALK OPENING w/ CHECKERED PLATE	MAXIMUM COVER (N) (SEE NOTE 4)	HEIGHT OF INLET (N)	DESCRIPTION	STATION	DRAINAGE PLAN SHEET No.	DRAINAGE SYSTEM No. ⬡	DRAINAGE UNIT ◯
		EA	EA	LF	LF	EA	EA	EA	EA	EA	EA	EA	EA	EA	CY	CY	CY	CY	CY	CY	LF	LF	LF	LF	LF	LF	LF	LF	EA	LF	LF	LF	LF	EA	LF	LF		EA	EA	CY	SQFT	EA	EA	EA	EA	EA	LB	EA	EA	LF	LF				
16	b																						180														S														3.9		18" APC (B)		D-2	16	b
16	c																1.92																											1				326				5.4	G2 INLET	86.00′ R+ "E" 190+48	D-2	16	c
17	a																						47.9														S														3.7		18" APC (B)		D-2	17	a
17	b																1.75																											1				326				4.7	G2 INLET	34.00′ R+ "AST-3" 888+69	D-2	17	b
17	c																						147														S														3.2		18" APC (B)		D-2	17	c
17	d																1.60																											1				326				4.2	G2 INLET	34.00′ R+ "AST-3" 890+19	D-2	17	d
17	e																						195														S														2.7		18" APC (B)		D-2	17	e
17	f																1.57																											1				326				4	G2 INLET	34.00′ R+ "AST-3" 892+17	D-2	17	f
17	g																						120.6														S														2.5		18" APC (B)		D-2/3	17	g
17	h																1.63																											1				326				4.3	G2 INLET	46.00′ R+ "AST-3" 893+40	D-3	17	h
17	i																							222													S														2.4		24" APC (A)		D-3	17	i
17	j																1.68																											1				326				4.4	G2 INLET	46.00′ R+ "AST-3" 895+65	D-3	17	j
17	k																							32													S														2.4		24" APC (A)		D-3	17	k
17	l																1.63																											1				326				4.3	G2 INLET	46.00 R+ "AST-3" 896+00	D-3	17	l
17	m																					17															S														3		18" APC (A)		D-3	17	m
17	n																1.69																											1				326				4.5	G2 INLET	46.00′ R+ "AST-3" 896+20	D-3	17	n
17	o																							67.5													S														2.9		24" APC (A)		D-3	17	o
18	a																1.02																											1				326				3.3	G1 INLET	49.45′ R+ "AST-3" 890+19	D-2	18	a
18	b																	1.88					14.5														S														2.8		18" APC (B)		D-2	18	b
18	c																	2.26																																			PIPE ENCASEMENT FOR 18" CULVERT		D-2	18	c
19	a																1.87																											1				326				5.2	G2 INLET	86.00′ R+ "E" 194+20	D-3	19	a
19	b																																47.3	1			DD														4.2		12" CSP w/DD JOINTS		D-3	19	b
19	c																1.87																											1				326				5.2	G2 INLET	19.00′ L+ "AST-3" 894+21.5	D-3	19	c
19	d																						140.5														S														3.7		18" APC (B)		D-3	19	d
19	e																1.72																											1				326				4.6	G2 INLET	19.00′ L+ "AST-3" 895+65	D-3	19	e
19	f																						33														S														3.1		18" APC (B)		D-3	19	f
19	g																1.79																											1				326				4.9	G2 INLET	28.00′ L+ "AST-3" 896+00	D-3	19	g
19	h																							81.2													S														4.5		24" APC (A)		D-3	19	h
19	i																																					1						1				1			6.5	COA DI w/DIM	63.80′ L+ "AST" 25+03.54	D-3	19	i
19	j																							102.1													S														6.1		24" APC (A)		D-3	19	j
20	a					1																																															REMOVE DI	3.37 L+ "AST-4" 995+99.88	D-3	20	a
20	b			142.5																																																2.9		REMOVE CULVERT		D-3	20	b
20	c	1													3.31																																					3.7		ABANDON CULVERT (PORTION)		D-9	20	c
20	d			5																																																9		REMOVE CULVERT (PORTION)		D-3	20	d
		1	-	147.5	-	1	-	-	-	-	-	-	-	-	3.31	-	21.74	4.14	-	-	-	17	878.5	504.8	-	-	-	-	-	-	-	-	47.3	1	-	-	-	1	-	-	-	-	13	1	-	-	4238	1	-			SHEET TOTAL				

(N) = NOT A SEPARATE PAY ITEM, FOR INFORMATION ONLY

DRAINAGE QUANTITIES
DQ-4

SAMATHA NARRA	REVISED BY	SN
KEITH D. RHODES	DATE REVISED	10/31/11

CALCULATED-DESIGNED BY
CHECKED BY

CONSULTANT FUNCTIONAL SUPERVISOR
KEITH D. RHODES

STATE OF CALIFORNIA - DEPARTMENT OF TRANSPORTATION
Caltrans

LAST REVISION 10-31-11
DATE PLOTTED => 19-JAN-2012
TIME PLOTTED => 06:58

Dist	COUNTY	ROUTE	POST MILES TOTAL PROJECT	SHEET No.	TOTAL SHEETS
04	CC	4	27.3/R29.0	171	950

10/31/11
REGISTERED CIVIL ENGINEER DATE

1-17-12
PLANS APPROVAL DATE

THE STATE OF CALIFORNIA OR ITS OFFICERS OR AGENTS SHALL NOT BE RESPONSIBLE FOR THE ACCURACY OR COMPLETENESS OF SCANNED COPIES OF THIS PLAN SHEET.

REGISTERED PROFESSIONAL ENGINEER
Keith D. Rhodes
No. C53587
Exp. 6/30/13
CIVIL
STATE OF CALIFORNIA

T Y LIN INTERNATIONAL
2010 CROW CANYON PLACE, SUITE 350
SAN RAMON, CA 94583

CCTA
2999 OAK ROAD, SUITE 100
WALNUT CREEK, CA 94597

DRAINAGE SYSTEM No.	DRAINAGE UNIT	ABANDON CULVERT	ABANDON INLET	REMOVE CULVERT	REMOVE CULVERT(ACP)	REMOVE INLET	REMOVE DOWN DRAIN	REMOVE MH	REMOVE AC OVERSIDE DRAIN	Adj MH FRAME & COVER TO GRADE	MODIFY INLET TO MH	CAP INLET	CAP MH	CAP RISER	SAND BACKFILL	DITCH EXCAVATION	MINOR Conc (MINOR STRUCTURE)	MINOR Conc (BACKFILL)	MINOR Conc (GUTTER LINING)	MINOR Conc (Misc CONSTRUCTION)	12" APC	18" APC (A)	18" APC (B)	24" APC (A)	24" APC (B)	18" ASP	3" PVC PIPE (SCHEDULE 40)	18" RCP Cl V	RIGID RAIL FALL PROTECTION SYSTEM	24" RCP DOUBLE CAGED CIRCULAR Reinf	30" RCP DOUBLE CAGED CIRCULAR Reinf	JACKED 18" RCP (CLASS II)	12" CSP (0.064" THICK)	ANCHOR ASSEMBLY	36" CORRUGATED STEEL PIPE INLET (.064" THICK, BIT COATED)	12" WSP (0.25" THICK)	PIPE JOINT CLASSIFICATION (N)	COA DI, TYPE C (BG)	COA MH (TYPE III)	RSP (FACING METHOD B)	RSP FABRIC	PARTIAL INLET w/CAP	TYPE 24-12 F&G (N)	TYPE 24-12X F&G (N)	TYPE 36-R F&G (N)	TYPE U 45 F&C (N)	Misc IRON & STEEL	DRAINAGE INLET MARKER	SIDEWALK OPENING w/ CHECKERED PLATE	MAXIMUM COVER (N) (SEE NOTE 4)	HEIGHT OF INLET (N)	DESCRIPTION	STATION	DRAINAGE PLAN SHEET No.	DRAINAGE SYSTEM No.	DRAINAGE UNIT
		EA	EA	LF	LF	EA	EA	EA	EA	EA	EA	EA	EA	EA	CY	CY	CY	CY	CY	CY	LF	LF	LF	LF	LF	LF	LF	LF	EA	LF	LF	LF	LF	EA	LF	LF		EA	EA	CY	SQFT	EA	EA	EA	EA	EA	LB	EA	EA	LF	LF					
21	a																1.59																										1				326				4.1	G2 INLET	7.00' Rt "AST-4" 996+17.55	D-3	21	a
21	b																						49.4														S													3.1		18" APC (B)		D-3	21	b
22	a		1																																																	ABANDON DI	40.73' Rt "AST-4" 996+15	D-3	22	a
22	b	1													4.88																																			3.0		ABANDON CULVERT		D-3	22	b
22	c		1																																																	ABANDON DI	60.85' Lt "AST" 27+35.21	D-3	22	c
22	d			3																																														3.5		REMOVE CULVERT (PORTION)		D-3	22	d
22	e											1																																								CAP DI	42.40' Lt "AST" 27+34.6±	D-3	22	e
23	a																																					1						1				1			4.1	COA DI w/DIM	58.15' Lt "AST" 27+90	D-3	23	a
23	b																						52.1														S													3.0		18" APC (B)		D-3	23	b
23	c																																					1						1				1			5.0	COA DI w/DIM	55.00' Lt "AST" 27+35.4±	D-3	23	c
24	a																																		16.8	S															12" WSP		D-3	24	a
24	b																1.15																										1				326				3.9	G1 INLET	49.40' Rt "AST-3" 895+65	D-3	24	b
24	c																						18.2														S													2.4		18" APC (B)		D-3	24	c
25	a	1													3.83																																			2.3		ABANDON CULVERT		D-3	25	a
25	b		1																																																	ABANDON DI	54.64' Rt "AST-3" 896+23.7	D-3	25	b
25	c			40.5																																														3.2		REMOVE CULVERT		D-3	25	c
25	d					1																																														REMOVE DI	24.68' Rt "AST-3" 896+53.3	D-3	25	d
25	e				57.5																																													3.9		REMOVE CULVERT(ACP)		D-3	25	e
25	f					1																																														REMOVE DI	24.33' Lt "AST-3" 896+86.24	D-3	25	f
25	g			99																																														4		REMOVE CULVERT		D-3	25	g
26	a																1.1																										1				326				3.7	GI INLET	65.26' Lt "AST" 23+79.89	D-3	26	a
26	b																				10.8																S													2.7		12" APC		D-3	26	b
26	c																																					1						1				1			4.8	COA DI w/DIM	52.77' Lt "AST" 23+82	D-3	26	c
26	d																						92.3														S													4.1		18" APC (B)		D-3	26	d
26	e										1																																			1					6.6	MODIFY DI TO MH	43.00' Rt "AST" 23+78.8±	D-3	26	e
27	a			74.6																																														3.2		REMOVE CULVERT		D-3	27	a
27	b					1																																														REMOVE DI	53.67' Lt "AST" 23+90.4	D-3	27	b
28	a																						89.4														S													5.3		18" APC (B)		D-3	28	a
28	b																1.7																										1				326				4.5	G2 INLET	34.00' Lt "AST-1" 498+76	D-3	28	b
28	c																						16.5														S													3.0		18" APC (B)		D-3	28	c
28	d																1.64																										1				326				4.3	G2 INLET	34.00' Lt "AST-1" 498+95.5	D-3	28	d
		2	3	217.1	57.5	3	-	-	-	-	1	1	-	-	8.71	-	7.18	-	-	-	10.8	-	317.9	-	-	-	-	-	-	-	-	-	-	-	-	16.8	-	3	-	-	-	-	5	3	-	1	1630	3	-			SHEET TOTAL				

(N) = NOT A SEPARATE PAY ITEM, FOR INFORMATION ONLY

DRAINAGE QUANTITIES
DQ-5

STATE OF CALIFORNIA - DEPARTMENT OF TRANSPORTATION
Caltrans®

CONSULTANT FUNCTIONAL SUPERVISOR: KEITH D. RHODES
CALCULATED-DESIGNED BY: SAMATHA NARRA
CHECKED BY: KEITH D. RHODES
REVISED BY: SN
DATE REVISED: 10/31/11

Dist	COUNTY	ROUTE	POST MILES TOTAL PROJECT	SHEET No.	TOTAL SHEETS
04	CC	4	27.3/R29.0	172	950

REGISTERED CIVIL ENGINEER 10/31/11 DATE

1-17-12
PLANS APPROVAL DATE

REGISTERED PROFESSIONAL ENGINEER Keith D. Rhodes No. C53587 Exp. 6/30/13 CIVIL STATE OF CALIFORNIA

THE STATE OF CALIFORNIA OR ITS OFFICERS OR AGENTS SHALL NOT BE RESPONSIBLE FOR THE ACCURACY OR COMPLETENESS OF SCANNED COPIES OF THIS PLAN SHEET.

T Y LIN INTERNATIONAL
2010 CROW CANYON PLACE, SUITE 350
SAN RAMON, CA 94583

CCTA
2999 OAK ROAD, SUITE 100
WALNUT CREEK, CA 94597

DRAINAGE SYSTEM No. ⬡	DRAINAGE UNIT ◯	ABANDON CULVERT	ABANDON INLET	REMOVE CULVERT	REMOVE CULVERT(ACP)	REMOVE INLET	REMOVE DOWN DRAIN	REMOVE MH	REMOVE AC OVERSIDE DRAIN	Adj MH FRAME & COVER TO GRADE	MODIFY INLET TO MH	CAP INLET	CAP MH	CAP RISER	SAND BACKFILL	DITCH EXCAVATION	MINOR Conc (MINOR STRUCTURE)	MINOR Conc (BACKFILL)	MINOR Conc (GUTTER LINING)	MINOR Conc (Misc CONSTRUCTION)	12" APC	18" APC (A)	18" APC (B)	24" APC (A)	24" APC (B)	18" ASP	3" PVC PIPE (SCHEDULE 40)	18" RCP Cl V	RIGID RAIL FALL PROTECTION SYSTEM	24" RCP DOUBLE CAGED CIRCULAR Reinf	30" RCP DOUBLE CAGED CIRCULAR Reinf	JACKED 18" RCP (CLASS II)	12" CSP (0.064" THICK)	ANCHOR ASSEMBLY	36" CORRUGATED STEEL PIPE INLET (.064" THICK, BIT COATED)	12" WSP (0.25" THICK)	PIPE JOINT CLASSIFICATION (N)	COA DI, TYPE C (BG)	COA MH (TYPE III)	RSP (FACING METHOD B)	RSP FABRIC	PARTIAL INLET w/CAP	TYPE 24-12 F&G (N)	TYPE 24-12X F&G (N)	TYPE 36-R F&G (N)	TYPE U 45 F&C (N)	Misc IRON & STEEL	DRAINAGE INLET MARKER	SIDEWALK OPENING w/ CHECKERED PLATE	MAXIMUM COVER (N) (SEE NOTE 4)	HEIGHT OF INLET (N)	DESCRIPTION	STATION	DRAINAGE PLAN SHEET No.	DRAINAGE SYSTEM No. ⬡	DRAINAGE UNIT ◯
		EA	EA	LF	LF	EA	EA	EA	EA	EA	EA	EA	EA	EA	CY	CY	CY	CY	CY	CY	LF	LF	LF	LF	LF	LF	LF	LF	EA	LF	LF	LF	LF	EA	LF	LF		EA	EA	CY	SQFT	EA	EA	EA	EA	EA	LB	EA	EA	LF	LF					
28	e																						17.5														S														2.8		18" APC (B)		D-3	28	e
28	f																1.62																											1				326				4.2	G2 INLET	34.00′ L+ "AST-1" 499+16	D-3	28	f
28	g																						301.2														S														3		18" APC (B)		D-3	28	g
28	h																2.1																											2				634				4.5	GDOM INLET	24.40′ L+ "AST-1" 502+20	D-3	28	h
28	i																						107.1														S														3		18" APC (B)		D-3	28	i
28	j																1.69																											1				326				4.5	G2 INLET	22.00′ L+ "AST-1" 503+30	D-3	28	j
29	a																1.62																											1				326				4.2	G2 INLET	19.00′ R+ "AST-1" 498+79	D-3	29	a
29	b																						49.1														S														2.7		18" APC (B)		D-3	29	b
29	c																						17.8														S														3		18" APC (B)		D-3	29	c
29	d																1.57																											1				326				4	G2 INLET w/SO	51.0′ L+ "AST-1" 498+87.5	D-3	29	d
30	a		1																																																			ABANDON DI	129.52′ R+ "AST" 27+70.56	D-3	30	a
30	b				75.5																																															3.9		REMOVE CULVERT(ACP)		D-3	30	b
30	c					1																																																REMOVE DI	65.00′ R+ "AST" 27+35.60±	D-3	30	c
31	a																																					1						1				1			4.2	COA DI w/DIM	65.00′ R+ "AST" 27+50	D-3	31	a
31	b																						11.4														S														2.8		18" APC (B)		D-3	31	b
31	c																																					1						1				1			5.5	COA DI w/DIM	65.00′ R+ "AST" 27+35.6	D-3	31	c
31	d																						2.8														S														4.0		18" APC (B) w/Conc COLLAR		D-3	31	d
31	e										1																																			1						12.4	MODIFY DI TO MH	42.30′ R+ "AST" 27+33.8±	D-3	31	e
32	a																1.81																											1				326				5.0	G2 INLET	86.00′ L+ "E" 199+00	D-3	32	a
32	b																						197														S														3.5		18" APC (B)		D-3	32	b
32	c																1.81																											1				326				5.0	G2 INLET	86.00′ L+ "E" 201+00	D-3	32	c
32	d																						224														S														3.6		18" APC (B)		D-3	32	d
32	e																1.85																											1				326				5.1	G2 INLET	86.00′ L+ "E" 203+27	D-3	32	e
33	a	1													5.4																																					2.3		ABANDON CULVERT		D-3	33	a
33	b		1																																																			ABANDON DI	17.25′ R+ "AST-1" 501+63.5	D-3	33	b
34	a																																33.4	1			DD														4.1		12" CSP w/DD JOINTS		D-3	34	a
34	b																1.71																											1				326				4.6	G2 INLET	7.00′ R+ "AST-1" 503+30	D-3	34	b
34	c																						23.5														S														3.1		18" APC (B)		D-3	34	c
35	a																1.81																											1				326				5.0	G2 INLET	86.00′ L+ "E" 204+80	D-3	35	a
35	b																					142															S														3.5		18" APC (A)		D-3/4	35	b
35	c																1.83																											1				326				5.0	G2 INLET	86.00′ L+ "E" 206+25	D-4	35	c
35	d																					34.1															S														3.5		18" APC (A)		D-4	35	d
		1	2	-	75.5	1	-	-	-	-	1	-	-	-	5.4	-	19.42	-	-	-	-	176.1	951.4	-	-	-	-	-	-	-	-	-	33.4	1	-	-	-	2	-	-	-	-	12	2	-	1	3894	2	-			SHEET TOTAL				

(N) = NOT A SEPARATE PAY ITEM, FOR INFORMATION ONLY

DRAINAGE QUANTITIES

DQ-6

SAMATHA NARRA — REVISED BY — SN
KEITH D. RHODES — DATE REVISED — 10/31/11
CALCULATED-DESIGNED BY
CHECKED BY
CONSULTANT FUNCTIONAL SUPERVISOR — KEITH D. RHODES

STATE OF CALIFORNIA - DEPARTMENT OF TRANSPORTATION
Caltrans

LAST REVISION 10-31-11 | DATE PLOTTED => 19-JAN-2012 | TIME PLOTTED => 06:59

Dist	COUNTY	ROUTE	POST MILES TOTAL PROJECT	SHEET No.	TOTAL SHEETS
04	CC	4	27.3/R29.0	173	950

REGISTERED CIVIL ENGINEER 10/31/11 DATE

1-17-12
PLANS APPROVAL DATE

REGISTERED PROFESSIONAL ENGINEER Keith D. Rhodes No. C53587 Exp. 6/30/13 CIVIL STATE OF CALIFORNIA

THE STATE OF CALIFORNIA OR ITS OFFICERS OR AGENTS SHALL NOT BE RESPONSIBLE FOR THE ACCURACY OR COMPLETENESS OF SCANNED COPIES OF THIS PLAN SHEET.

T Y LIN INTERNATIONAL
2010 CROW CANYON PLACE, SUITE 350
SAN RAMON, CA 94583

CCTA
2999 OAK ROAD, SUITE 100
WALNUT CREEK, CA 94597

DRAINAGE SYSTEM No.	DRAINAGE UNIT	ABANDON CULVERT	ABANDON INLET	REMOVE CULVERT	REMOVE CULVERT(ACP)	REMOVE INLET	REMOVE DOWN DRAIN	REMOVE MH	REMOVE AC OVERSIDE DRAIN	Adj MH FRAME & COVER TO GRADE	MODIFY INLET TO MH	CAP INLET	CAP MH	CAP RISER	SAND BACKFILL	DITCH EXCAVATION	MINOR Conc (MINOR STRUCTURE)	MINOR Conc (BACKFILL)	MINOR Conc (GUTTER LINING)	MINOR Conc (Misc CONSTRUCTION)	12" APC	18" APC (A)	18" APC (B)	24" APC (A)	24" APC (B)	18" ASP	3" PVC PIPE (SCHEDULE 40)	18" RCP CI V
		EA	EA	LF	LF	EA	EA	EA	EA	EA	EA	EA	EA	EA	CY	CY	CY	CY	CY	CY	LF	LF	LF	LF	LF	LF	LF	LF
36	a																1.81											
36	b																						227					
36	c																1.82											
36	d																						237					
36	e																1.86											
37	a			14																								
37	b					1																						
37	c				54																							
37	d					1																						
38	a										1																	
38	b																							21.6				
38	c																											
38	d																							66.9				
38	e																2.08											
38	f																							47.5				
39	a																1.86											
39	b																						20					
39	c																1.72											
39	d																						17					
39	e																1.72											
39	f																						118					
39	g																1.72											
39	h																						97					
39	i																1.72											
39	j																						241					
39	k																1.72											
39	l																						38.4					
39	m																1.72											
39	n																											
40	a																1.72											
40	b																						45.6					
41	a																0.95											
41	b																											
		-	-	14	54	2	-	-	-	-	1	-	-	-	-	-	22.42	-	-	-	-	-	1041	136	-	-	-	-

DRAINAGE SYSTEM No.	DRAINAGE UNIT	RIGID RAIL FALL PROTECTION SYSTEM	24" RCP DOUBLE CAGED CIRCULAR Reinf	30" RCP DOUBLE CAGED CIRCULAR Reinf	JACKED 18" RCP (CLASS II)	12" CSP (0.064" THICK)	ANCHOR ASSEMBLY	36" CORRUGATED STEEL PIPE INLET (.064" THICK, BIT COATED)	12" WSP (0.25" THICK)	PIPE JOINT CLASSIFICATION (N)	COA DI, TYPE C (BG)	COA MH (TYPE III)	RSP (FACING METHOD B)	RSP FABRIC	PARTIAL INLET w/CAP	TYPE 24-12 F&G (N)	TYPE 24-12X F&G (N)	TYPE 36-R F&G (N)	TYPE U 45 F&C (N)	Misc IRON & STEEL	DRAINAGE INLET MARKER	SIDEWALK OPENING w/ CHECKERED PLATE	MAXIMUM COVER (N) (SEE NOTE 4)	HEIGHT OF INLET (N)	DESCRIPTION	STATION	DRAINAGE PLAN SHEET No.	DRAINAGE SYSTEM No.	DRAINAGE UNIT
		EA	LF	LF	LF	LF	EA	LF	LF		EA	EA	CY	SQFT	EA	EA	EA	EA	EA	LB	EA	EA	LF	LF					
36	a															1				326				5.0	G2 INLET	86.00' Rt "E" 199+20	D-3	36	a
36	b									S													3.5		18" APC (B)		D-3	36	b
36	c															1				326				5.0	G2 INLET	86.00' Rt "E" 201+50	D-3	36	c
36	d									S													3.6		18" APC (B)		D-3	36	d
36	e															1				326				5.1	G2 INLET	86.00' Rt "E" 203+90	D-3	36	e
37	a																						3.1		REMOVE CULVERT		D-3	37	a
37	b																								REMOVE DI	57.93' Rt "AST" 25+04	D-3	37	b
37	c																						3.0		REMOVE CULVERT(ACP)		D-3	37	c
37	d																								REMOVE DI	92.86' Rt "AST" 24+60	D-3	37	d
38	a																		1					9.0	MODIFY DI TO MH	42.00' Rt "AST" 25+04.4±	D-3	38	a
38	b									S													4.9		24" APC (A)		D-3	38	b
38	c										1						1				1			6.5	COA DI w/DIM	69.89' Rt "AST" 25+04	D-3	38	c
38	d									S													4.5		24" APC (A)		D-3	38	d
38	e															1				326				6.0	G2 INLET	7.00' Lt "AST-2" 698+79	D-3	38	e
38	f									S													4.0		24" APC (A)		D-3	38	f
39	a															1				326				5.2	G2 INLET	46.00' Rt "AST-2" 698+79	D-3	39	a
39	b									S													3.3		18" APC (B)		D-3	39	b
39	c															1				326				4.6	G2 INLET	46.00' Rt "AST-2" 699+02	D-3	39	c
39	d									S													3.1		18" APC (B)		D-3	39	d
39	e															1				326				4.6	G2 INLET	46.00' Rt "AST-2" 699+22	D-3	39	e
39	f									S													3.1		18" APC (B)		D-3	39	f
39	g															1				326				4.6	G2 INLET	43.84' Rt "AST-2" 700+43	D-3	39	g
39	h									S													3.1		18" APC (B)		D-3	39	h
39	i															1				326				4.6	G2 INLET	41.00' Rt "AST-2" 701+43	D-3	39	i
39	j									S													3.1		18" APC (B)		D-3	39	j
39	k															1				326				4.6	G2 INLET	36.91' Rt "AST-2" 703+89	D-3	39	k
39	l									S													3.1		18" APC (B)		D-3	39	l
39	m															1				326				4.6	G2 INLET	7.00' Lt "AST-2" 703+89	D-3	39	m
39	n					27.7	1			DD													4.1		12" CSP w/DD JOINTS		D-3	39	n
40	a															1				326				4.6	G2 INLET	7.00' Lt "AST-2" 700+47.5	D-3	40	a
40	b									S													3.1		18" APC (B)		D-3	40	b
41	a															1				326				2	G1 INLET	47.28' Rt "AST-2" 700+43	D-3	41	a
41	b								9.2	S													3.6		12" WSP		D-3	41	b
		-	-	-	-	27.7	1	-	9.2		1	-	-	-	-	13	1	-	1	4238	1	-			SHEET TOTAL				

(N) = NOT A SEPARATE PAY ITEM, FOR INFORMATION ONLY

DRAINAGE QUANTITIES
DQ-7

STATE OF CALIFORNIA - DEPARTMENT OF TRANSPORTATION
Caltrans

CONSULTANT FUNCTIONAL SUPERVISOR: KEITH D. RHODES
CALCULATED-DESIGNED BY: SAMATHA NARRA
CHECKED BY: KEITH D. RHODES
REVISED BY: SN
DATE REVISED: 10/31/11

LAST REVISION 10-31-11
DATE PLOTTED => 19-JAN-2012
TIME PLOTTED => 06:59

Dist	COUNTY	ROUTE	POST MILES TOTAL PROJECT	SHEET No.	TOTAL SHEETS
04	CC	4	27.3/R29.0	174	950

REGISTERED CIVIL ENGINEER 10/31/11 DATE

1-17-12
PLANS APPROVAL DATE

REGISTERED PROFESSIONAL ENGINEER Keith D. Rhodes No. C53587 Exp. 6/30/13 CIVIL STATE OF CALIFORNIA

THE STATE OF CALIFORNIA OR ITS OFFICERS OR AGENTS SHALL NOT BE RESPONSIBLE FOR THE ACCURACY OR COMPLETENESS OF SCANNED COPIES OF THIS PLAN SHEET.

T Y LIN INTERNATIONAL
2010 CROW CANYON PLACE, SUITE 350
SAN RAMON, CA 94583

CCTA
2999 OAK ROAD, SUITE 100
WALNUT CREEK, CA 94597

DRAINAGE SYSTEM No. ⬡	DRAINAGE UNIT ◯	ABANDON CULVERT (EA)	ABANDON INLET (EA)	REMOVE CULVERT (LF)	REMOVE CULVERT(ACP) (LF)	REMOVE INLET (EA)	REMOVE DOWN DRAIN (EA)	REMOVE MH (EA)	REMOVE AC OVERSIDE DRAIN (EA)	Adj MH FRAME & COVER TO GRADE (EA)	MODIFY INLET TO MH (EA)	CAP INLET (EA)	CAP MH (EA)	CAP RISER (EA)	SAND BACKFILL (CY)	DITCH EXCAVATION (CY)	MINOR Conc (MINOR STRUCTURE) (CY)	MINOR Conc (BACKFILL) (CY)	MINOR Conc (GUTTER LINING) (CY)	MINOR Conc (Misc CONSTRUCTION) (CY)	12" APC (LF)	18" APC (A) (LF)	18" APC (B) (LF)	24" APC (A) (LF)	24" APC (B) (LF)	18" ASP (LF)	3" PVC PIPE (SCHEDULE 40) (LF)	18" RCP CI V (LF)	RIGID RAIL FALL PROTECTION SYSTEM (EA)	24" RCP DOUBLE CAGED CIRCULAR Reinf (LF)	30" RCP DOUBLE CAGED CIRCULAR Reinf (LF)	JACKED 18" RCP (CLASS II) (LF)	12" CSP (0.064" THICK) (LF)	ANCHOR ASSEMBLY (EA)	36" CORRUGATED STEEL PIPE INLET (.064" THICK, BIT COATED) (LF)	12" WSP (0.25" THICK) (LF)	PIPE JOINT CLASSIFICATION (N)	COA DI, TYPE C (BG) (EA)	COA MH (TYPE III) (EA)	RSP (FACING METHOD B) (CY)	RSP FABRIC (SQFT)	PARTIAL INLET w/CAP (EA)	TYPE 24-12 F&G (N) (EA)	TYPE 24-12X F&G (N) (EA)	TYPE 36-R F&G (N) (EA)	TYPE U 45 F&C (N) (EA)	Misc IRON & STEEL (LB)	DRAINAGE INLET MARKER (EA)	SIDEWALK OPENING w/ CHECKERED PLATE (EA)	MAXIMUM COVER (N) (SEE NOTE 4) (LF)	HEIGHT OF INLET (N) (LF)	DESCRIPTION	STATION	DRAINAGE PLAN SHEET No.	DRAINAGE SYSTEM No. ⬡	DRAINAGE UNIT ◯
42	a			3																																																					
42	b																	2.7																																						
43	a																																						1						1				1			5.3	62.00′ R+ "AST" 23+79.1±	D-3	43	a
43	b																						62.9														S													3.0	18" APC (B)	D-3	43	b
43	c																																						1						1				1			4.5	62.00′ R+ "AST" 23+13.2	D-3	43	c
43	d																				11																S													1.2	12" APC	D-3	43	d
43	e																0.95																												1			326				2.0	G1 INLET	74.45′ R+ "AST" 23+13.2	D-3	43	e
44	a					1																																																REMOVE INLET	41.41′ L+ "E" 207+21.2	D-4	44	a
44	b			79																																																9.2		REMOVE CULVERT		D-4	44	b
44	c											1																																									CAP DI	27.12′ R+ "E" 206+79.73	D-4	44	c
44	d			3																																														6.9		REMOVE CULVERT (PORTION)		D-4	44	d
45	a																2.26																												1			326				6.7	G2 INLET	"E" 206+80	D-4	45	a
45	b																											25									S													5.2		18" RCP CI V		D-4	45	b
45	c																6.28																												2			652				13.7	GT4M INLET	86.00′ R+ "E" 206+80	D-4	45	c
46	a																0.95																												1			326				2.0	G1 INLET	35.70′ R+ "AST-2" 707+02	D-4	46	a
46	b																									194.5											S													3.5		18" ASP		D-4	46	b
46	c																1.81																												1			326				5.0	G2 INLET	24.16′ R+ "AST-2" 709+00	D-4	46	c
46	d																					186.6															S													3.7		18" APC (A)		D-4	46	d
46	e																2.32																												1			326				7.0	G2 INLET	101.50′ R+ "E" 210+90.00	D-4	46	e
46	f																					206.6															S													5.5		18" APC (A)		D-4	46	f
46	g																1.83																												1			326				5.0	G2 INLET	72.00′ R+ "ECR" 73+00.00	D-4	46	g
46	h																																33.1	1			DD													6.0		12" CSP w/DD JOINTS		D-4	46	h
47	a						1																																															REMOVE DOWNDRAIN		D-4	47	a
48	a																1.81																												1			326				5.0	G2 INLET	22.00′ L+ "AST-1" 506+22	D-4	48	a
48	b																					313.2															S													4.7		18" APC (A)		D-4	48	b
48	c																2.12																												1			326				6.2	G2 INLET	100.00′ L+ "E" 209+40.00	D-4	48	c
48	d																					237															S													4.9		18" APC (A)		D-4	48	d
48	e																2.17																												1			326				6.4	G2 INLET	72.00′ L+ "ECL" 41+80	D-4	48	e
48	f																					229.8															S													5.3		18" APC (A)		D-4	48	f
48	g																2.27																												1			326				6.8	G2 INLET	72.00′ L+ "ECL" 44+12.75	D-4	48	g
48	h																																			12.2	S													5.3		12" WSP		D-4	48	h
48	i																0.95																												1			326				2.1	G1 INLET	76.00′ L+ "ECL" 44+12.75	D-4	48	i
		-	-	85	-	1	1	-	-	-	-	1	-	-	-	-	25.72	2.7	-	-	11	1173.2	62.9	-	-	194.5	-	25	-	-	-	-	33.1	1	-	12.2	-	2	-	-	-	-	13	2	-	-	4238	2	-			SHEET TOTAL			

(N) = NOT A SEPARATE PAY ITEM, FOR INFORMATION ONLY

DRAINAGE QUANTITIES
DQ-8

SAMATHA NARRA — REVISED BY — SN
KEITH D. RHODES — DATE REVISED — 10/31/11
CALCULATED-DESIGNED BY
CHECKED BY
CONSULTANT FUNCTIONAL SUPERVISOR — KEITH D. RHODES

STATE OF CALIFORNIA - DEPARTMENT OF TRANSPORTATION
Caltrans

LAST REVISION — DATE PLOTTED => 19-JAN-2012 — TIME PLOTTED => 06:59
10-31-11

Dist	COUNTY	ROUTE	POST MILES TOTAL PROJECT	SHEET No.	TOTAL SHEETS
04	CC	4	27.3/R29.0	175	950

10/31/11
REGISTERED CIVIL ENGINEER DATE

1-17-12
PLANS APPROVAL DATE

THE STATE OF CALIFORNIA OR ITS OFFICERS OR AGENTS SHALL NOT BE RESPONSIBLE FOR THE ACCURACY OR COMPLETENESS OF SCANNED COPIES OF THIS PLAN SHEET.

REGISTERED PROFESSIONAL ENGINEER
Keith D. Rhodes
No. C53587
Exp. 6/30/13
CIVIL
STATE OF CALIFORNIA

T Y LIN INTERNATIONAL
2010 CROW CANYON PLACE, SUITE 350
SAN RAMON, CA 94583

CCTA
2999 OAK ROAD, SUITE 100
WALNUT CREEK, CA 94597

DRAINAGE SYSTEM No.	DRAINAGE UNIT	ABANDON CULVERT	ABANDON INLET	REMOVE CULVERT	REMOVE CULVERT(ACP)	REMOVE INLET	REMOVE DOWN DRAIN	REMOVE MH	REMOVE AC OVERSIDE DRAIN	Adj MH FRAME & COVER TO GRADE	MODIFY INLET TO MH	CAP INLET	CAP MH	CAP RISER	SAND BACKFILL	DITCH EXCAVATION	MINOR Conc (MINOR STRUCTURE)	MINOR Conc (BACKFILL)	MINOR Conc (GUTTER LINING)	MINOR Conc (Misc CONSTRUCTION)	12" APC	18" APC (A)	18" APC (B)	24" APC (A)	24" APC (B)	18" ASP	3" PVC PIPE (SCHEDULE 40)	18" RCP Cl V	RIGID RAIL FALL PROTECTION SYSTEM	24" RCP DOUBLE CAGED CIRCULAR Reinf	30" RCP DOUBLE CAGED CIRCULAR Reinf	JACKED 18" RCP (CLASS II)	12" CSP (0.064" THICK)	ANCHOR ASSEMBLY	36" CORRUGATED STEEL PIPE INLET (.064" THICK, BIT COATED)	12" WSP (0.25" THICK)	PIPE JOINT CLASSIFICATION (N)	COA DI, TYPE C (BG)	COA MH (TYPE III)	RSP (FACING METHOD B)	RSP FABRIC	PARTIAL INLET w/CAP	TYPE 24-12 F&G (N)	TYPE 24-12X F&G (N)	TYPE 36-R F&G (N)	TYPE U 45 F&C (N)	Misc IRON & STEEL	DRAINAGE INLET MARKER	SIDEWALK OPENING w/ CHECKERED PLATE	MAXIMUM COVER (N) (SEE NOTE 4)	HEIGHT OF INLET (N)	DESCRIPTION	STATION	DRAINAGE PLAN SHEET No.	DRAINAGE SYSTEM No.	DRAINAGE UNIT
		EA	EA	LF	LF	EA	EA	EA	EA	EA	EA	EA	EA	EA	CY	CY	CY	CY	CY	CY	LF	LF	LF	LF	LF	LF	LF	LF	EA	LF	LF	LF	LF	EA	LF	LF		EA	EA	CY	SQFT	EA	EA	EA	EA	EA	LB	EA	EA	LF	LF					
48	j																																14.2				DD													1.5		12" CSP w/DD JOINTS		D-4	48	j
48	k																2.08																										1				326				6.0	G2 INLET w/SO	92.90' Lt "ECL" 44+12.75	D-4	48	k
49	a																2.26																				S						1				326				6.7	G2 INLET	28.00' Rt "ECL" 41+80	D-4	49	a
49	b																											17									S													5.2		18" RCP Cl V w/Conc COLLAR		D-4	49	b
49	c																					77.5																													5.2		18" APC (A)		D-4	49	c
50	a			3																																														15.0		REMOVE CULVERT (PORTION)		D-4	50	a
50	b											1																																								CAP DI	84.07' Lt "E" 214+11.13±	D-4	50	b
50	c						1																																													REMOVE DOWNDRAIN		D-4	50	c
50	d		1																																																	ABANDON DI	31.92' Lt "E" 214+12±	D-4	50	d
50	e				59																																													5.0		REMOVE CULVERT (ACP)		D-4	50	e
50	f					1																																														REMOVE DI	29.76' Rt "E" 214+13.2±	D-4	50	f
50	g	1													3.67																																			3.5		ABANDON CULVERT		D-4	50	g
50	h					1																																														REMOVE DI	88.41' Rt "E" 214+11.7±	D-4	50	h
51	a																																																1			SIDEWALK OPENING w/CHECKERED PLATE (TYPE A)	95.00' Lt "ECL" 41+04.25	D-4	51	a
52	a																1.81																										1				326				5.0	G2 INLET	72.00' Lt "ECL" 44+35	D-4	52	a
52	b																						19														S													3.5		18" APC (B)		D-4	52	b
52	c																1.83																										1				326				5.0	G2 INLET	72.00' Lt "ECL" 44+57	D-4	52	c
52	d																						20														S													3.8		18" APC (B)		D-4	52	d
52	e																2.36																										1				326				7.1	G2 INLET	72.00' Lt "ECL" 44+80	D-4	52	e
52	f																						162														S													7.9		18" APC (B)		D-4	52	f
52	g																4.01																										1				326				9.4	G2 INLET	72.00' Lt "ECL" 46+45	D-4	52	g
52	h																																			16.5	S													7.9		12" WSP		D-4	52	h
52	i																1.07																										1				326				3.5	G1 INLET	77.00' Lt "ECL" 46+45	D-4	52	i
52	j																																12.4				DD													2.5		12" CSP w/DD JOINTS		D-4	52	j
53	a																						77.5														S													6.8		18" APC (B)		D-4	53	a
53	b																											17									S													6.8		18" RCP Cl V w/Conc COLLAR		D-4	53	b
53	c																3.62																										1				326				8.3	G2 INLET	28.00' Rt "ECL" 44+80	D-4	53	c
53	d																											18.2									S													6.8		18" RCP Cl V w/Conc COLLAR		D-4	53	d
53	e																						77.5														S													6.8		18" APC (B)		D-4	53	e
53	f																1.99																										1				326				5.7	G2 INLET	72.00' Rt "ECR" 74+80.6	D-4	53	f
53	g																						35.9														S													4.2		18" APC (B)		D-4	53	g
53	h																1.94																										1				326				5.5	G2 INLET	72.00' Rt "ECR" 75+18.92	D-4	53	h
53	i																						18.1														S													4.0		18" APC (B)		D-4	53	i
		1	1	3	59	2	1	-	-	-	-	1	-	-	3.67	-	22.97	-	-	-	-	77.5	410	-	-	-	-	52.2	-	-	-	-	26.6	-	-	16.5	-	-	-	-	-	-	10	-	-	-	3260	-	1			SHEET TOTAL				

(N) = NOT A SEPARATE PAY ITEM, FOR INFORMATION ONLY

DRAINAGE QUANTITIES
DQ-9

SAMATHA NARRA	SN
KEITH D. RHODES	10/31/11
REVISED BY	DATE REVISED
CALCULATED-DESIGNED BY	CHECKED BY
CONSULTANT FUNCTIONAL SUPERVISOR	KEITH D. RHODES

STATE OF CALIFORNIA - DEPARTMENT OF TRANSPORTATION
Caltrans

Dist	COUNTY	ROUTE	POST MILES TOTAL PROJECT	SHEET No.	TOTAL SHEETS
04	CC	4	27.3/R29.0	176	950

REGISTERED CIVIL ENGINEER 10/31/11 DATE

1-17-12
PLANS APPROVAL DATE

REGISTERED PROFESSIONAL ENGINEER Keith D. Rhodes No. C53587 Exp. 6/30/13 CIVIL STATE OF CALIFORNIA

THE STATE OF CALIFORNIA OR ITS OFFICERS OR AGENTS SHALL NOT BE RESPONSIBLE FOR THE ACCURACY OR COMPLETENESS OF SCANNED COPIES OF THIS PLAN SHEET.

T Y LIN INTERNATIONAL
2010 CROW CANYON PLACE, SUITE 350
SAN RAMON, CA 94583

CCTA
2999 OAK ROAD, SUITE 100
WALNUT CREEK, CA 94597

DRAINAGE SYSTEM No. ⬡	DRAINAGE UNIT ◯	ABANDON CULVERT	ABANDON INLET	REMOVE CULVERT	REMOVE CULVERT(ACP)	REMOVE INLET	REMOVE DOWN DRAIN	REMOVE MH	REMOVE AC OVERSIDE DRAIN	Adj MH FRAME & COVER TO GRADE	MODIFY INLET TO MH	CAP INLET	CAP MH	CAP RISER	SAND BACKFILL	DITCH EXCAVATION	MINOR Conc (MINOR STRUCTURE)	MINOR Conc (BACKFILL)	MINOR Conc (GUTTER LINING)	MINOR Conc (Misc CONSTRUCTION)	12" APC	18" APC (A)	18" APC (B)	24" APC (A)	24" APC (B)	18" ASP	3" PVC PIPE (SCHEDULE 40)	18" RCP CI V	RIGID RAIL FALL PROTECTION SYSTEM	24" RCP DOUBLE CAGED CIRCULAR Reinf	30" RCP DOUBLE CAGED CIRCULAR Reinf	JACKED 18" RCP (CLASS II)	12" CSP (0.064" THICK)	ANCHOR ASSEMBLY	36" CORRUGATED STEEL PIPE INLET (.064" THICK, BIT COATED)	12" WSP (0.25" THICK)	PIPE JOINT CLASSIFICATION (N)	COA DI, TYPE C (BG)	COA MH (TYPE III)	RSP (FACING METHOD B)	RSP FABRIC	PARTIAL INLET w/CAP	TYPE 24-12 F&G (N)	TYPE 24-12X F&G (N)	TYPE 36-R F&G (N)	TYPE U 45 F&C (N)	Misc IRON & STEEL	DRAINAGE INLET MARKER	SIDEWALK OPENING w/ CHECKERED PLATE	MAXIMUM COVER (N) (SEE NOTE 4)	HEIGHT OF INLET (N)	DESCRIPTION	STATION	DRAINAGE PLAN SHEET No.	DRAINAGE SYSTEM No. ⬡	DRAINAGE UNIT ◯
		EA	EA	LF	LF	EA	EA	EA	EA	EA	EA	EA	EA	EA	CY	CY	CY	CY	CY	CY	LF	LF	LF	LF	LF	LF	LF	LF	EA	LF	LF	LF	LF	EA	LF	LF		EA	EA	CY	SQFT	EA	EA	EA	EA	EA	LB	EA	EA	LF	LF				
53	j																1.92																										1				326				5.4	G2 INLET	72.00′ R+ "ECR" 75+40	D-4	53	j
53	k																						127														S													3.9		18" APC (B)		D-4	53	k
53	l																1.83																										1				326				5.0	G2 INLET	72.00′ R+ "ECR" 76+70	D-4	53	l
54	a						1																																														REMOVE DOWNDRAIN		D-4	54	a
54	b					1																																															REMOVE DI	35.60′ L+ "E" 214+94.9	D-4	54	b
55	a																						75														S													4.0		18" APC (B)		D-4	55	a
55	b																1.81																										1				326				5	G2 INLET	10.00′ R+ "ECL" 46+45	D-4	55	b
55	c																								48.5												S															18" ASP		D-4	55	c
56	a																1.88																										1				326				5.3	G2 DI w/SO	91.94′ L+ "ECL" 46+45	D-4	56	a
56	b																												266.9																					3.4		24" RCP DOUBLE CAGED CIRCULAR Reinf		D-4	56	b
57	a		1																																																	ABANDON DI	27.31′ R+ "E" 218+60.35	D-4	57	a
57	b	1														6.41																																		5.3		ABANDON CULVERT		D-4/5	57	b
57	c		1																																																	ABANDON DI	84.85′ R+ "E" 219+42.92+	D-5	57	c
57	d						1																																													REMOVE DOWNDRAIN		D-5	57	d
58	a																2.33																										1				326				7	G2 INLET	10.00′ R+ "ECL" 49+30	D-5	58	a
58	b																											16.5									S													8.9		18" RCP CI V		D-5	58	b
58	c																4.36																										1				326				10.4	G2 INLET	29.11′ R+ "ECL" 49+30	D-5	58	c
58	d																														95.5						S													8.9		JACKED 18" RCP		D-5	58	d
59	a																2.12																										1				326				6.2	G2 INLET w/SO	148.10′ L+ "C" 16+17.76	D-5	59	a
59	b																													99.5							S													3.7		30" RCP DOUBLE CAGED CIRCULAR Reinf		D-5	59	b
59	c																1.8																										1				326				4.9	G2 INLET	51.44′ L+ "C" 16+46.57	D-5	59	c
59	d																													138							S													2.4		30" RCP DOUBLE CAGED CIRCULAR Reinf		D-5	59	d
60	a			98																																															4.4		REMOVE CULVERT		D-5	60	a
60	b					1																																															REMOVE DI	87.11′ L+ "E" 219+60.24±	D-5	60	b
60	c	1														5.58																																		4.4		ABANDON CULVERT		D-5	60	c
61	a																2.17																										1				326				6.4	G2 INLET	70.00′ R+ "ECR" 79+28	D-5	61	a
61	b																															35	2			DD																12" CSP w/DD JOINTS & TEE		D-5	61	b
61	c																																							1.5	341.38											RSP	105.00′ R+ "ECR" 79+28	D-5	61	c
62	a																1.62																										1				326				4.2	G2 INLET w/SO	41.20′ R+ "C" 16+29	D-5	62	a
62	b																						17														S													2.7		18" APC (B)		D-5	62	b
		2	2	98	-	2	2	-	-	-	-	-	-	-	-	11.99	-	21.84	-	-	-	-	-	219	-	-	48.5	-	16.5	-	266.9	237.5	95.5	35	2	-	-	-	-	-	1.5	341.38	-	10	-	-	-	3260	-	-			SHEET TOTAL				

(N) = NOT A SEPARATE PAY ITEM, FOR INFORMATION ONLY

DRAINAGE QUANTITIES
DQ-10

SAMATHA NARRA — REVISED BY — SN
KEITH D. RHODES — DATE REVISED — 10/31/11
CALCULATED-DESIGNED BY
CHECKED BY
CONSULTANT FUNCTIONAL SUPERVISOR
KEITH D. RHODES

STATE OF CALIFORNIA - DEPARTMENT OF TRANSPORTATION
Caltrans

LAST REVISION 10-31-11
DATE PLOTTED => 19-JAN-2012
TIME PLOTTED => 06:59

Dist	COUNTY	ROUTE	POST MILES TOTAL PROJECT	SHEET No.	TOTAL SHEETS
04	CC	4	27.3/R29.0	177	950

10/31/11
REGISTERED CIVIL ENGINEER DATE

1-17-12
PLANS APPROVAL DATE

REGISTERED PROFESSIONAL ENGINEER
Keith D. Rhodes
No. C53587
Exp. 6/30/13
CIVIL
STATE OF CALIFORNIA

THE STATE OF CALIFORNIA OR ITS OFFICERS OR AGENTS SHALL NOT BE RESPONSIBLE FOR THE ACCURACY OR COMPLETENESS OF SCANNED COPIES OF THIS PLAN SHEET.

T Y LIN INTERNATIONAL
2010 CROW CANYON PLACE, SUITE 350
SAN RAMON, CA 94583

CCTA
2999 OAK ROAD, SUITE 100
WALNUT CREEK, CA 94597

DRAINAGE SYSTEM No.	DRAINAGE UNIT	ABANDON CULVERT	ABANDON INLET	REMOVE CULVERT	REMOVE CULVERT(ACP)	REMOVE INLET	REMOVE DOWN DRAIN	REMOVE MH	REMOVE AC OVERSIDE DRAIN	Adj MH FRAME & COVER TO GRADE	MODIFY INLET TO MH	CAP INLET	CAP MH	CAP RISER	SAND BACKFILL	DITCH EXCAVATION	MINOR Conc (MINOR STRUCTURE)	MINOR Conc (BACKFILL)	MINOR Conc (GUTTER LINING)	MINOR Conc (Misc CONSTRUCTION)
		EA	EA	LF	LF	EA	EA	EA	EA	EA	EA	EA	EA	EA	CY	CY	CY	CY	CY	CY
63	a					1														
63	b			53																
64	a																1.75			
64	b																			
65	a																1.82			
65	b																			
65	c																1.72			
66	a																4.19			
66	b																			
66	c																4.89			
66	d																			
66	e																			
67	a																			
67	b																2.38			
67	c																			
67	d																2.63			
67	e																			
67	f																1.94			
67	g																			
67	h																			
67	i																1.76			
68	a																			
68	b																			
68	c															22.33				
68	d					1														
68	e																1.81			
69	a					1														
69	b				60															
69	c					1														
69	d			28																
		-	-	81	60	4	-	-		-	-	-	-	-	-	22.33	24.89	-	-	-

DRAINAGE SYSTEM No.	DRAINAGE UNIT	12" APC	18" APC (A)	18" APC (B)	24" APC (A)	24" APC (B)	18" ASP	3" PVC PIPE (SCHEDULE 40)	18" RCP Cl V	RIGID RAIL FALL PROTECTION SYSTEM	24" RCP DOUBLE CAGED CIRCULAR Reinf	30" RCP DOUBLE CAGED CIRCULAR Reinf	JACKED 18" RCP (CLASS II)	12" CSP (0.064" THICK)	ANCHOR ASSEMBLY	36" CORRUGATED STEEL PIPE INLET (.064" THICK, BIT COATED)	12" WSP (0.25" THICK)
		LF	LF	LF	LF	LF	LF	LF	LF	EA	LF	LF	LF	LF	EA	LF	LF
63	a																
63	b																
64	a																
64	b		262														
65	a																
65	b		332														
65	c																
66	a																
66	b		73														
66	c																
66	d													35.4	2		
66	e																
67	a		172														
67	b																
67	c		97														
67	d																
67	e		77														
67	f																
67	g			87.5													
67	h						87.5										
67	i																
68	a		2.6														
68	b																
68	c																
68	d																
68	e																
69	a																
69	b																
69	c																
69	d																
		-	1015.6	87.5	-	-	87.5	-	-	-	-	-	-	35.4	2	-	-

DRAINAGE SYSTEM No.	DRAINAGE UNIT	PIPE JOINT CLASSIFICATION (N)	COA DI, TYPE C (BG)	COA MH (TYPE III)	RSP (FACING METHOD B)	RSP FABRIC	PARTIAL INLET w/CAP	TYPE 24-12 F&G (N)	TYPE 24-12X F&G (N)	TYPE 36-R F&G (N)	TYPE U 45 F&C (N)	Misc IRON & STEEL	DRAINAGE INLET MARKER	SIDEWALK OPENING w/ CHECKERED PLATE	MAXIMUM COVER (N) (SEE NOTE 4)	HEIGHT OF INLET (N)	DESCRIPTION	STATION	DRAINAGE PLAN SHEET No.	DRAINAGE SYSTEM No.	DRAINAGE UNIT
			EA	EA	CY	SQFT	EA	EA	EA	EA	EA	LB	EA	EA	LF	LF					
63	a																REMOVE DI	88.84' Lt "E" 219+60.17±	D-5	63	a
63	b																REMOVE CULVERT (PORTION)		D-5	63	b
64	a							1				326				4.7	G2 INLET	10.00' Rt "ECL" 51+60	D-5	64	a
64	b	S													3.2		18" APC (A)		D-5	64	b
65	a							1				326				5	G2 INLET	70.00' Rt "ECR" 81+60	D-5	65	a
65	b	S													3.5		18" APC (A)		D-5	65	b
65	c							1				326				4.6	G2 INLET	70.00' Rt "ECR" 85+00	D-5	65	c
66	a							1				326				9.9	G2 INLET	10.00' Rt "ECL" 54+25	D-5	66	a
66	b	S													10.4		18" APC (A)		D-5	66	b
66	c							1				326				11.9	G2 INLET	70.00' Lt "ECL" 54+25	D-5	66	c
66	d	DD													10.9		12" CSP w/DD JOINTS & TEE		D-5	66	d
66	e				1.42	38.38											RSP	104.67' Lt "ECL" 54+25	D-5	66	e
67	a	S													8.4		18" APC (A)		D-4	67	a
67	b							1				326				7.2	G2 INLET	10.00' Rt "ECL" 56+00	D-4	67	b
67	c	S													5.7		18" APC (A)		D-4	67	c
67	d							2				634				6.1	GDOM INLET	10.00' Rt "ECL" 57+00	D-4	67	d
67	e	S													4.6		18" APC (A)		D-4	67	e
67	f							1				326				5.5	G2 INLET	10.00' Rt "ECL" 57+80	D-4	67	f
67	g	S													4.0		18" APC (B)		D-4	67	g
67	h	S													1.0		18" ASP		D-4	67	h
67	i							1				326				4.8	G2 INLET	10.00' Rt "ECL" 58+70	D-4	67	i
68	a	S															18" APC (A)		D-5	68	a
68	b				1.11	30											RSP		D-5	68	b
68	c																UNLINED TRAPEZOIDAL DITCH (TYPE B)		D-5	68	c
68	d																REMOVE INLET		D-5	68	d
68	e							1				326				5.0	G2 INLET w/SO	93.70' Rt "ECR" 81+13.5±	D-5	68	e
69	a																REMOVE DI	9.44' Rt "E" 225+22.73±	D-5	69	a
69	b														4.3		REMOVE CULVERT(ACP)		D-5	69	b
69	c																REMOVE DI	71.31' Rt "E" 225+25.74±	D-5	69	c
69	d														4.3		REMOVE CULVERT		D-5	69	d
		-	-	-	2.53	68.38	-	11	-	-	-	3568	-	-			SHEET TOTAL				

(N) = NOT A SEPARATE PAY ITEM, FOR INFORMATION ONLY

DRAINAGE QUANTITIES
DQ-11

STATE OF CALIFORNIA - DEPARTMENT OF TRANSPORTATION
Caltrans

CONSULTANT FUNCTIONAL SUPERVISOR: KEITH D. RHODES
CALCULATED-DESIGNED BY: SAMATHA NARRA
CHECKED BY: KEITH D. RHODES
REVISED BY: SN
DATE REVISED: 10/31/11

LAST REVISION 10-31-11 | DATE PLOTTED => 19-JAN-2012 | TIME PLOTTED => 06:59

Dist	COUNTY	ROUTE	POST MILES TOTAL PROJECT	SHEET No.	TOTAL SHEETS
04	CC	4	27.3/R29.0	178	950

REGISTERED CIVIL ENGINEER 10/31/11 DATE

1-17-12
PLANS APPROVAL DATE

REGISTERED PROFESSIONAL ENGINEER Keith D. Rhodes No. C53587 Exp. 6/30/13 CIVIL STATE OF CALIFORNIA

THE STATE OF CALIFORNIA OR ITS OFFICERS OR AGENTS SHALL NOT BE RESPONSIBLE FOR THE ACCURACY OR COMPLETENESS OF SCANNED COPIES OF THIS PLAN SHEET.

T Y LIN INTERNATIONAL
2010 CROW CANYON PLACE, SUITE 350
SAN RAMON, CA 94583

CCTA
2999 OAK ROAD, SUITE 100
WALNUT CREEK, CA 94597

DRAINAGE SYSTEM No. ⬡	DRAINAGE UNIT ◯	ABANDON CULVERT (EA)	ABANDON INLET (EA)	REMOVE CULVERT (LF)	REMOVE CULVERT(ACP) (LF)	REMOVE INLET (EA)	REMOVE DOWN DRAIN (EA)	REMOVE MH (EA)	REMOVE AC OVERSIDE DRAIN (EA)	Adj MH FRAME & COVER TO GRADE (EA)	MODIFY INLET TO MH (EA)	CAP INLET (EA)	CAP MH (EA)	CAP RISER (EA)	SAND BACKFILL (CY)	DITCH EXCAVATION (CY)	MINOR Conc (MINOR STRUCTURE) (CY)	MINOR Conc (BACKFILL) (CY)	MINOR Conc (GUTTER LINING) (CY)	MINOR Conc (Misc CONSTRUCTION) (CY)	12" APC (LF)	18" APC (A) (LF)	18" APC (B) (LF)	24" APC (A) (LF)	24" APC (B) (LF)	18" ASP (LF)	3" PVC PIPE (SCHEDULE 40) (LF)	18" RCP CI V (LF)	RIGID RAIL FALL PROTECTION SYSTEM (EA)	24" RCP DOUBLE CAGED CIRCULAR Reinf (LF)	30" RCP DOUBLE CAGED CIRCULAR Reinf (LF)	JACKED 18" RCP (CLASS II) (LF)	12" CSP (0.064" THICK) (LF)	ANCHOR ASSEMBLY (EA)	36" CORRUGATED STEEL PIPE INLET (.064" THICK, BIT COATED) (LF)	12" WSP (0.25" THICK) (LF)	PIPE JOINT CLASSIFICATION (N)	COA DI, TYPE C (BG) (EA)	COA MH (TYPE III) (EA)	RSP (FACING METHOD B) (CY)	RSP FABRIC (SQFT)	PARTIAL INLET w/CAP (EA)	TYPE 24-12 F&G (N) (EA)	TYPE 24-12X F&G (N) (EA)	TYPE 36-R F&G (N) (EA)	TYPE U 45 F&C (N) (EA)	Misc IRON & STEEL (LB)	DRAINAGE INLET MARKER (EA)	SIDEWALK OPENING w/ CHECKERED PLATE (EA)	MAXIMUM COVER (N) (SEE NOTE 4) (LF)	HEIGHT OF INLET (N) (LF)	DESCRIPTION	STATION	DRAINAGE PLAN SHEET No.	DRAINAGE SYSTEM No. ⬡	DRAINAGE UNIT ◯
70	a																1.82																									1				326				5	G2 INLET	70.00′ R+ "ECR" 86+90	D-5	70	a
70	b																					186.2																S											3.6		18" APC (A)		D-5	70	b
70	c																1.85																									1				326				5.1	G2 INLET	70.00′ R+ "ECR" 88+80	D-5	70	c
70	d																						6.12															S											3.6		18" APC (B)		D-5	70	d
70	e																																						1						1			1		3.6	COA DI w/DIM	76.08′ R+ "ECR" 88+80	D-5	70	e
71	a																2.57																									1				326				8.0	G2 INLET	29.14′ R+ "ECL" 56+00	D-5	71	a
71	b																											16.5										S											6.5		18" RCP CI V		D-5	71	b
72	a					1																																														REMOVE DI	76.00′ R+ "ECR" 91+50.7±	D-5	72	a
72	b	1													2.49																																			1.4		ABANDON CULVERT		D-5	72	b
73	a					1																																														REMOVE DI	"E" 230+24.55+	D-5	73	a
73	b			100																																														3.5		REMOVE CULVERT		D-5	73	b
73	c					1																																														REMOVE DI	59.22′ R+ "E" 229+42.7+	D-5	73	c
73	d	1													4.84																																			3.5		ABANDON CULVERT		D-5	73	d
73	e			4																																														2.6		REMOVE CULVERT (PORTION)		D-5	73	e
74	a																1.57																									1				326				4	G2 INLET	70.00′ L+ "ECL" 60+50	D-5	74	a
74	b																						172															S											2.5		18" APC (B)		D-5	74	b
74	c																1.57																									1				326				4	G2 INLET	70.00′ L+ "ECL" 62+25	D-5	74	c
74	d																						178															S											2.5		18" APC (B)		D-5	74	d
74	e																1.57																									1				326				4	G2 INLET	98.00′ L+ "E" 234+00	D-5/6	74	e
74	f																					222																S											2.6		18" APC (A)		D-6	74	f
74	g																1.6																									1				326				4.1	G2 INLET	98.00′ L+ "E" 236+25	D-6	74	g
74	h																					214																S											2.7		18" APC (A)		D-6	74	h
74	i																7.06												1													1				326				18	G2 RISER	98.00′ L+ "E" 238+42±	D-6	74	i
74	j																					45																S											3.8		18" APC (A)		D-6	74	j
74	k																1.78																									1				326				4.8	G2 INLET	98.91′ L+ "E" 238+90	D-6	74	k
74	l																					104																S											3.3		18" APC (A)		D-6	74	l
74	m																1.52																									1				326				3.8	G2 INLET	101.05′ L+ "E" 239+97	D-6	74	m
75	a																2.08																									1				326				6.0	G2 INLET	28.28′ L+ "ECR" 92+00	D-5	75	a
75	b																											18.3										S											4.5		18" RCP CI V w/Conc COLLAR		D-5	75	b
75	c																						75.5															S											4.5		18" APC (B)		D-5	75	c
75	d																1.76																									1				326				4.8	G2 INLET	70.00′ R+ "ECR" 92+00	D-5	75	d
75	e																					190																S											3.3		18" APC (A)		D-5	75	e
75	f																1.76																									1				326				4.8	G2 INLET	98.00′ R+ "E" 234+00	D-5/6	75	f
		2	-	104	-	3	-	-	-	-	-	-	-	-	7.33	-	28.51	-	-	-	-	961.2	431.62	-	-	-	-	34.8	1	-	-	-	-	-	-	-	-	1	-	-	-	-	13	1	-	-	4238	1	-			SHEET TOTAL				

(N) = NOT A SEPARATE PAY ITEM, FOR INFORMATION ONLY

DRAINAGE QUANTITIES
DQ-12

SAMATHA NARRA — REVISED BY — SN
KEITH D. RHODES — DATE REVISED — 10/31/11
CALCULATED-DESIGNED BY
CHECKED BY
CONSULTANT FUNCTIONAL SUPERVISOR — KEITH D. RHODES

STATE OF CALIFORNIA - DEPARTMENT OF TRANSPORTATION
Caltrans

LAST REVISION — DATE PLOTTED => 19-JAN-2012 — TIME PLOTTED => 06:59
10-31-11

Dist	COUNTY	ROUTE	POST MILES TOTAL PROJECT	SHEET No.	TOTAL SHEETS
04	CC	4	27.3/R29.0	179	950

REGISTERED CIVIL ENGINEER 10/31/11 DATE

1-17-12
PLANS APPROVAL DATE

REGISTERED PROFESSIONAL ENGINEER Keith D. Rhodes No. C53587 Exp. 6/30/13 CIVIL STATE OF CALIFORNIA

THE STATE OF CALIFORNIA OR ITS OFFICERS OR AGENTS SHALL NOT BE RESPONSIBLE FOR THE ACCURACY OR COMPLETENESS OF SCANNED COPIES OF THIS PLAN SHEET.

T Y LIN INTERNATIONAL
2010 CROW CANYON PLACE, SUITE 350
SAN RAMON, CA 94583

CCTA
2999 OAK ROAD, SUITE 100
WALNUT CREEK, CA 94597

DRAINAGE SYSTEM No. ⬡	DRAINAGE UNIT ◯	ABANDON CULVERT	ABANDON INLET	REMOVE CULVERT	REMOVE CULVERT(ACP)	REMOVE INLET	REMOVE DOWN DRAIN	REMOVE MH	REMOVE AC OVERSIDE DRAIN	Adj MH FRAME & COVER TO GRADE	MODIFY INLET TO MH	CAP INLET	CAP MH	CAP RISER	SAND BACKFILL	DITCH EXCAVATION	MINOR Conc (MINOR STRUCTURE)	MINOR Conc (BACKFILL)	MINOR Conc (GUTTER LINING)	MINOR Conc (Misc CONSTRUCTION)	12" APC	18" APC (A)	18" APC (B)	24" APC (A)	24" APC (B)	18" ASP	3" PVC PIPE (SCHEDULE 40)	18" RCP CI V	RIGID RAIL FALL PROTECTION SYSTEM	24" RCP DOUBLE CAGED CIRCULAR Reinf	30" RCP DOUBLE CAGED CIRCULAR Reinf	JACKED 18" RCP (CLASS II)	12" CSP (0.064" THICK)	ANCHOR ASSEMBLY	36" CORRUGATED STEEL PIPE INLET (.064" THICK, BIT COATED)	12" WSP (0.25" THICK)	PIPE JOINT CLASSIFICATION (N)	COA DI, TYPE C (BG)	COA MH (TYPE III)	RSP (FACING METHOD B)	RSP FABRIC	PARTIAL INLET w/CAP	TYPE 24-12 F&G (N)	TYPE 24-12X F&G (N)	TYPE 36-R F&G (N)	TYPE U 45 F&C (N)	Misc IRON & STEEL	DRAINAGE INLET MARKER	SIDEWALK OPENING w/ CHECKERED PLATE	MAXIMUM COVER (N) (SEE NOTE 4)	HEIGHT OF INLET (N)	DESCRIPTION	STATION	DRAINAGE PLAN SHEET No.	DRAINAGE SYSTEM No. ⬡	DRAINAGE UNIT ◯
		EA	EA	LF	LF	EA	EA	EA	EA	EA	EA	EA	EA	EA	CY	CY	CY	CY	CY	CY	LF	LF	LF	LF	LF	LF	LF	LF	EA	LF	LF	LF	LF	EA	LF	LF		EA	EA	CY	SQFT	EA	EA	EA	EA	EA	LB	EA	EA	LF	LF					
75	g																					222															S														3.3		18" APC (A)		D-6	75	g
75	h																1.76																											1				326				4.8	G2 INLET	98.00′ R+ "E" 236+25	D-6	75	h
75	i																					217															S														3.3		18" APC (A)		D-6	75	i
75	j																1.76																											1				326				4.8	G2 INLET	98.00′ R+ "E" 238+45	D-6	75	j
76	a																																					1						1					1			2.1	COA DI w/DIM	77.48′ R+ "ECR" 91+63.1	D-5	76	a
76	b																				280																S														2.6		12" APC		D-5	76	b
77	a																0.95																											1				326				2.5	G1 INLET	101.45′ R+ "E" 236+25	D-6	77	a
77	b																																			6.8	S														1.5		12" WSP		D-6	77	b
78	a					1																																															REMOVE DI	62.89′ L+ "E" 236+22.85±	D-6	78	a
78	b				61																																															2.7		REMOVE CULVERT(ACP)		D-6	78	b
78	c					1																																																REMOVE DI	"E" 236+23.25±	D-6	78	c
78	d				195																																															2.7		REMOVE CULVERT(ACP)		D-6	78	d
78	e				59																																															2.7		REMOVE CULVERT(ACP)		D-6	78	e
78	f					1																																																REMOVE DI	62.70′ R+ "E" 236+23.82±	D-6	78	f
79	a					1																																																REMOVE DI	2.33′ R+ "E" 238+21.84	D-6	79	a
79	b													1																																								CAP RISER		D-6	79	b
80	a																						73														S														5.5		18" APC (B)		D-6	80	a
80	b																5.8																											1				326				14.4	G2 INLET	18.00′ R+ "E" 238+45	D-6	80	b
80	c																							17.5													S														12.4		24" APC (A)		D-6	80	c
80	d																5.76																											1				326				14.3	G2 INLET	"E" 238+45	D-6	80	d
80	e																							92.5													S														12.3		24" APC (A)		D-6	80	e
80	f																0.95																											1				326				3.0	G1 INLET	101.45′ R+ "E" 238+42	D-6	80	f
80	g																																			8.3	S														2.0		12" WSP		D-6	80	g
81	a									1																																			1							4.1	MODIFY DI TO MH	20.00′ L+ "T" 27+8.27±	D-6	81	a
81	b																				39																S														3.1		12" APC		D-6	81	b
81	c																																					1						1					1			3.7	COA DI w/DIM	20.00′ L+ "T" 27+50	D-6	81	c
82	a																					324															S														12.9		18" APC (A)		D-6	82	a
82	b																4.94																											1				326				12.0	G2 INLET	18.00′ R+ "E" 241+72	D-6	82	b
82	c																					243															S														10.5		18" APC (A)		D-6	82	c
82	d																4.29																											1				326				10.2	G2 INLET	18.00′ R+ "E" 244+18	D-6	82	d
82	e																					331															S														8.7		18" APC (A)		D-6	82	e
82	f																2.52																											1				326				7.8	G2 INLET	18.00′ R+ "E" 247+52	D-6	82	f
		-	-	-	315	4	-	-	-	-	1	-	-	1	-	-	28.73	-	-	-	319	1337	73	110	-	-	-	-	-	-	-	-	-	-	15.1	-	2	-	-	-	-	9	2	-	1	2934	2	-			SHEET TOTAL				

(N) = NOT A SEPARATE PAY ITEM, FOR INFORMATION ONLY

DRAINAGE QUANTITIES
DQ-13

SAMATHA NARRA — REVISED BY — SN
KEITH D. RHODES — DATE REVISED — 10/31/11
CALCULATED-DESIGNED BY
CHECKED BY
CONSULTANT FUNCTIONAL SUPERVISOR — KEITH D. RHODES

STATE OF CALIFORNIA - DEPARTMENT OF TRANSPORTATION
Caltrans

LAST REVISION 10-31-11
DATE PLOTTED => 19-JAN-2012
TIME PLOTTED => 06:59

Dist	COUNTY	ROUTE	POST MILES TOTAL PROJECT	SHEET No.	TOTAL SHEETS
04	CC	4	27.3/R29.0	180	950

REGISTERED CIVIL ENGINEER 10/31/11 DATE

1-17-12
PLANS APPROVAL DATE

REGISTERED PROFESSIONAL ENGINEER Keith D. Rhodes No. C53587 Exp. 6/30/13 CIVIL STATE OF CALIFORNIA

THE STATE OF CALIFORNIA OR ITS OFFICERS OR AGENTS SHALL NOT BE RESPONSIBLE FOR THE ACCURACY OR COMPLETENESS OF SCANNED COPIES OF THIS PLAN SHEET.

T Y LIN INTERNATIONAL
2010 CROW CANYON PLACE, SUITE 350
SAN RAMON, CA 94583

CCTA
2999 OAK ROAD, SUITE 100
WALNUT CREEK, CA 94597

DRAINAGE SYSTEM No.	DRAINAGE UNIT	ABANDON CULVERT	ABANDON INLET	REMOVE CULVERT	REMOVE CULVERT(ACP)	REMOVE INLET	REMOVE DOWN DRAIN	REMOVE MH	REMOVE AC OVERSIDE DRAIN	Adj MH FRAME & COVER TO GRADE	MODIFY INLET TO MH	CAP INLET	CAP MH	CAP RISER	SAND BACKFILL	DITCH EXCAVATION	MINOR Conc (MINOR STRUCTURE)	MINOR Conc (BACKFILL)	MINOR Conc (GUTTER LINING)	MINOR Conc (Misc CONSTRUCTION)	12" APC	18" APC (A)	18" APC (B)	24" APC (A)	24" APC (B)	18" ASP	3" PVC PIPE (SCHEDULE 40)	18" RCP CI V	RIGID RAIL FALL PROTECTION SYSTEM	24" RCP DOUBLE CAGED CIRCULAR Reinf	30" RCP DOUBLE CAGED CIRCULAR Reinf	JACKED 18" RCP (CLASS II)	12" CSP (0.064" THICK)	ANCHOR ASSEMBLY	36" CORRUGATED STEEL PIPE INLET (.064" THICK, BIT COATED)	12" WSP (0.25" THICK)	PIPE JOINT CLASSIFICATION (N)	COA DI, TYPE C (BG)	COA MH (TYPE III)	RSP (FACING METHOD B)	RSP FABRIC	PARTIAL INLET w/CAP	TYPE 24-12 F&G (N)	TYPE 24-12X F&G (N)	TYPE 36-R F&G (N)	TYPE U 45 F&C (N)	Misc IRON & STEEL	DRAINAGE INLET MARKER	SIDEWALK OPENING w/ CHECKERED PLATE	MAXIMUM COVER (N) (SEE NOTE 4)	HEIGHT OF INLET (N)	DESCRIPTION	STATION	DRAINAGE PLAN SHEET No.	DRAINAGE SYSTEM No.	DRAINAGE UNIT
		EA	EA	LF	LF	EA	EA	EA	EA	EA	EA	EA	EA	EA	CY	CY	CY	CY	CY	CY	LF	LF	LF	LF	LF	LF	LF	LF	EA	LF	LF	LF	LF	EA	LF	LF		EA	EA	CY	SQFT	EA	EA	EA	EA	EA	LB	EA	EA	LF	LF					
83	a																0.95																										1				326				3	G1 INLET	102.36′ Lt "E" 238+90	D-6	83	a
83	b																																			8.7	S													2.1		12" WSP		D-6	83	b
84	a																																									1									5.7	PARTIAL G2 DI w/CAP	104.55′ Lt "E" 241+72	D-6	84	a
84	b																						27.5														S													7.0		18" APC (B)		D-6	84	b
84	c																2.33																										1				326				7	G2 INLET	73.00′ Lt "E" 241+72	D-6	84	c
84	d																															69					S													6.7		18" JACKED RCP		D-6	84	d
84	e																3.56																										1				326				8.2	G2 INLET	"E" 241+72	D-6	84	e
84	f																											17									S													8.1		18" RCP CI V		D-6	84	f
84	g																						73														S													4.7		18" APC (B)		D-6	84	g
84	h																1.57																										1				326				4	G2 INLET	98.00′ Rt "E" 241+72	D-6	84	h
85	a	1													26.05																																			22.8		ABANDON CULVERT		D-6	85	a
85	b					1																																														REMOVE DI	"E" 242+23±	D-6	85	b
85	c				526																																													7.8		REMOVE CULVERT(ACP)		D-6	85	c
85	d					1																																														REMOVE DI	71.68′ Lt "E" 242+22.55±	D-6	85	d
85	e	1													4.39																																			7.8		ABANDON CULVERT		D-6	85	e
85	f				59																																													7.8		REMOVE CULVERT(ACP)		D-6	85	f
85	g					1																																														REMOVE DI	64.11′ Rt "E" 242+23.79±	D-6	85	g
86	a																						74.5														S													8.7		18" APC (B)		D-6	86	a
86	b																2.56																										1				326				7.9	G2 INLET	98.00′ Rt "E" 244+18	D-6	86	b
86	c																						247														S													6.4		18" APC (B)		D-6	86	c
86	d																1.57																										1				326				4	G2 INLET	34.00′ Rt "HCT6" 346+70	D-6	86	d
87	a					1																																														REMOVE DI	90.42′ Rt "E" 247+47.18±	D-6	87	a
87	b				71																																													4.1		REMOVE CULVERT (ACP)		D-6	87	b
87	c				17																																													4.1		REMOVE CULVERT (ACP)		D-6	87	c
88	a																											17									S													6.3		18" RCP CI V		D-6	88	a
89	a																1.56																										1				326				4	G2 INLET	34.00′ Rt "HCT-6" 349+00	D-6	89	a
89	b																						17.8														S													2.5		18" APC (B)		D-6/7	89	b
89	c																1.50																										1				326				3.8	G2 INLET	34.00′ Rt "HCT-6" 349+20.76	D-7	89	c
89	d																						16.2														S													2.6		18" APC (B)		D-7	89	d
89	e																1.65																										1				326				4.3	G2 INLET	34.00′ Rt "HCT-6" 349+40	D-7	89	e
89	f																						107														S													3.0		18" APC (B)		D-7	89	f
		2	-	-	673	4	-	-	-	-	-	-	-	-	30.44	-	17.25	-	-	-	-	-	563	-	-	-	-	34	-	-	-	69	-	-	-	8.7	-	-	-	-	-	1	9	-	-	-	2934	-	-			SHEET TOTAL				

(N) = NOT A SEPARATE PAY ITEM, FOR INFORMATION ONLY

DRAINAGE QUANTITIES
DQ-14

REVISED BY SN
DATE REVISED 10/31/11
SAMATHA NARRA
KEITH D. RHODES
CALCULATED-DESIGNED BY
CHECKED BY
CONSULTANT FUNCTIONAL SUPERVISOR KEITH D. RHODES
STATE OF CALIFORNIA - DEPARTMENT OF TRANSPORTATION
Caltrans®

LAST REVISION 10-31-11
DATE PLOTTED => 19-JAN-2012
TIME PLOTTED => 06:59

Dist	COUNTY	ROUTE	POST MILES TOTAL PROJECT	SHEET No.	TOTAL SHEETS
04	CC	4	27.3/R29.0	181	950

REGISTERED CIVIL ENGINEER 10/31/11 DATE

1-17-12
PLANS APPROVAL DATE

REGISTERED PROFESSIONAL ENGINEER Keith D. Rhodes No. C53587 Exp. 6/30/13 CIVIL STATE OF CALIFORNIA

THE STATE OF CALIFORNIA OR ITS OFFICERS OR AGENTS SHALL NOT BE RESPONSIBLE FOR THE ACCURACY OR COMPLETENESS OF SCANNED COPIES OF THIS PLAN SHEET.

T Y LIN INTERNATIONAL
2010 CROW CANYON PLACE, SUITE 350
SAN RAMON, CA 94583

CCTA
2999 OAK ROAD, SUITE 100
WALNUT CREEK, CA 94597

DRAINAGE SYSTEM No. ⬡	DRAINAGE UNIT ◯	ABANDON CULVERT (EA)	ABANDON INLET (EA)	REMOVE CULVERT (LF)	REMOVE CULVERT(ACP) (LF)	REMOVE INLET (EA)	REMOVE DOWN DRAIN (EA)	REMOVE MH (EA)	REMOVE AC OVERSIDE DRAIN (EA)	Adj MH FRAME & COVER TO GRADE (EA)	MODIFY INLET TO MH (EA)	CAP INLET (EA)	CAP MH (EA)	CAP RISER (EA)	SAND BACKFILL (CY)	DITCH EXCAVATION (CY)	MINOR Conc (MINOR STRUCTURE) (CY)	MINOR Conc (BACKFILL) (CY)	MINOR Conc (GUTTER LINING) (CY)	MINOR Conc (Misc CONSTRUCTION) (CY)	12" APC (LF)	18" APC (A) (LF)	18" APC (B) (LF)	24" APC (A) (LF)	24" APC (B) (LF)	18" ASP (LF)	3" PVC PIPE (SCHEDULE 40) (LF)	18" RCP CI V (LF)	RIGID RAIL FALL PROTECTION SYSTEM (EA)	24" RCP DOUBLE CAGED CIRCULAR Reinf (LF)	30" RCP DOUBLE CAGED CIRCULAR Reinf (LF)	JACKED 18" RCP (CLASS II) (LF)	12" CSP (0.064" THICK) (LF)	ANCHOR ASSEMBLY (EA)	36" CORRUGATED STEEL PIPE INLET (.064" THICK, BIT COATED) (LF)	12" WSP (0.25" THICK) (LF)	PIPE JOINT CLASSIFICATION (N)	COA DI, TYPE C (BG) (EA)	COA MH (TYPE III) (EA)	RSP (FACING METHOD B) (CY)	RSP FABRIC (SQFT)	PARTIAL INLET w/CAP (EA)	TYPE 24-12 F&G (N) (EA)	TYPE 24-12X F&G (N) (EA)	TYPE 36-R F&G (N) (EA)	TYPE U 45 F&C (N) (EA)	Misc IRON & STEEL (LB)	DRAINAGE INLET MARKER (EA)	SIDEWALK OPENING w/ CHECKERED PLATE (EA)	MAXIMUM COVER (N) (SEE NOTE 4) (LF)	HEIGHT OF INLET (N) (LF)	DESCRIPTION	STATION	DRAINAGE PLAN SHEET No.	DRAINAGE SYSTEM No. ⬡	DRAINAGE UNIT ◯
89	g																1.69																									1				326				4.5	G2 INLET	34.00′ R+ "HCT-6" 350+50	D-7	89	g
89	h																								20.3												S												3.8		24" APC (B) w/Conc COLLAR		D-7	89	h
90	a																1.72																									1				326				4.6	G2 INLET	10.00′ L+ "HCT-6" 349+30	D-7	90	a
90	b																						12.6														S												4.2		18" APC (B)		D-7	90	b
90	c																2.01																												1	435				5.7	G2 MANHOLE	12.48′ L+ "HCT-6" 349+14.40	D-7	90	c
91	a				31																																												4.7		REMOVE CULVERT(PORTION)(ACP)		D-7	91	a
91	b					1																																													REMOVE DI	16.87′ R+ "HCT-6" 349+30.47±	D-7	91	b
91	c					1																																													REMOVE DI	63.50′ R+ "E" 252+53.61±	D-7	91	c
92	a																1.64																									1				326				4.3	G2 INLET	70.62′ R+ "E" 252+54.23	D-7	92	a
92	b																						6.7														S												3.5		18" APC (B) w/Conc COLLAR		D-7	92	b
93	a																					20															S														18" APC (A)		D-7	93	a
93	b				24																																														REMOVE CULVERT(PORTION) (ACP)		D-7	93	b
93	c					1																																													REMOVE DI	"E" 255+63	D-7	93	c
93	d				49																																														REMOVE CULVERT (ACP)		D-7	93	d
93	e			9																																															REMOVE CULVERT(PORTION)		D-7	93	e
95	a																							14													S												5.6		24" APC (A)		D-7	95	a
95	b																2.41																									1				326				7.3	G2 INLET	89.00′ R+ "E" 256+13	D-7	95	b
95	c																					19															S												5.7		18" APC (A)		D-7	95	c
95	d																2.97																									2				634				7.2	GDOM INLET	66.77′ R+ "E" 256+13	D-7	95	d
95	e																					86															S												5.7		18" APC (A)		D-7	95	e
95	f																2.63																									2				634				6.1	GDOM INLET	65.82′ R+ "E" 257+02	D-7	95	f
95	g																					45															S												3.6		18" APC (A)		D-7	95	g
95	h																1.7																									1				326				4.5	G2 INLET	65.30′ R+ "E" 257+50	D-7	95	h
95	i																					117															S												3.0		18" APC (A)		D-7	95	i
95	j																1.57																									1				326				4	G2 INLET	63.67′ R+ "E" 258+70	D-7	95	j
95	k																					177															S												2.5		18" APC (A)		D-7	95	k
95	l																1.57																									1				326				4	G2 INLET	62.42′ R+ "E" 260+50	D-7	95	l
96	a															32.59																																			UNLINED V-DITCH		D-7	96	a
																																																				L+ AST 17+89				
97	a																										20																									CURB DRAIN (2 PVC PIPES)		D-8	97	a
97	b																																															1			SIDEWALK OPENING W/CHECKERED PLATE (TYPE B)		D-8	97	b
98	a																																					1					1				1			5.3	COA DI w/DIM	17.66′ L+ "AST" 17+95	D-8	98	a
		-	-	9	104	3	-	-	-	-	-	-	-	-	-	32.59	19.19	-	-	-	-	464	19.3	14	20.3	-	20	-	-	-	-	-	-	-	-	-	-	1	-	-	-	-	11	1	-	1	3985	1	1			SHEET TOTAL				

(N) = NOT A SEPARATE PAY ITEM, FOR INFORMATION ONLY

DRAINAGE QUANTITIES
DQ-15

REVISED BY: SN — DATE REVISED: 10/31/11

SAMATHA NARRA — CALCULATED-DESIGNED BY
KEITH D. RHODES — CHECKED BY

CONSULTANT FUNCTIONAL SUPERVISOR: KEITH D. RHODES

STATE OF CALIFORNIA - DEPARTMENT OF TRANSPORTATION
Caltrans

LAST REVISION 10-31-11 — DATE PLOTTED => 19-JAN-2012 — TIME PLOTTED => 06:59

Dist	COUNTY	ROUTE	POST MILES TOTAL PROJECT	SHEET No.	TOTAL SHEETS
04	CC	4	27.3/R29.0	182	950

REGISTERED CIVIL ENGINEER 10/31/11 DATE

1-17-12
PLANS APPROVAL DATE

REGISTERED PROFESSIONAL ENGINEER Keith D. Rhodes No. C53587 Exp. 6/30/13 CIVIL STATE OF CALIFORNIA

THE STATE OF CALIFORNIA OR ITS OFFICERS OR AGENTS SHALL NOT BE RESPONSIBLE FOR THE ACCURACY OR COMPLETENESS OF SCANNED COPIES OF THIS PLAN SHEET.

T Y LIN INTERNATIONAL
2010 CROW CANYON PLACE, SUITE 350
SAN RAMON, CA 94583

CCTA
2999 OAK ROAD, SUITE 100
WALNUT CREEK, CA 94597

DRAINAGE SYSTEM No. ⬡	DRAINAGE UNIT ◯	ABANDON CULVERT (EA)	ABANDON INLET (EA)	REMOVE CULVERT (LF)	REMOVE CULVERT(ACP) (LF)	REMOVE INLET (EA)	REMOVE DOWN DRAIN (EA)	REMOVE MH (EA)	REMOVE AC OVERSIDE DRAIN (EA)	Adj MH FRAME & COVER TO GRADE (EA)	MODIFY INLET TO MH (EA)	CAP INLET (EA)	CAP MH (EA)	CAP RISER (EA)	SAND BACKFILL (CY)	DITCH EXCAVATION (CY)	MINOR Conc (MINOR STRUCTURE) (CY)	MINOR Conc (BACKFILL) (CY)	MINOR Conc (GUTTER LINING) (CY)	MINOR Conc (Misc CONSTRUCTION) (CY)	12" APC (LF)	18" APC (A) (LF)	18" APC (B) (LF)	24" APC (A) (LF)	24" APC (B) (LF)	18" ASP (LF)	3" PVC PIPE (SCHEDULE 40) (LF)	18" RCP CI V (LF)	RIGID RAIL FALL PROTECTION SYSTEM (EA)	24" RCP DOUBLE CAGED CIRCULAR Reinf (LF)	30" RCP DOUBLE CAGED CIRCULAR Reinf (LF)	JACKED 18" RCP (CLASS II) (LF)	12" CSP (0.064" THICK) (LF)	ANCHOR ASSEMBLY (EA)	36" CORRUGATED STEEL PIPE INLET (.064" THICK, BIT COATED) (LF)	12" WSP (0.25" THICK) (LF)	PIPE JOINT CLASSIFICATION (N)	COA DI, TYPE C (BG) (EA)	COA MH (TYPE III) (EA)	RSP (FACING METHOD B) (CY)	RSP FABRIC (SQFT)	PARTIAL INLET w/CAP (EA)	TYPE 24-12 F&G (N) (EA)	TYPE 24-12X F&G (N) (EA)	TYPE 36-R F&G (N) (EA)	TYPE U 45 F&C (N) (EA)	Misc IRON & STEEL (LB)	DRAINAGE INLET MARKER (EA)	SIDEWALK OPENING w/ CHECKERED PLATE (EA)	MAXIMUM COVER (N) (SEE NOTE 4) (LF)	HEIGHT OF INLET (N) (LF)	DESCRIPTION	STATION	DRAINAGE PLAN SHEET No.	DRAINAGE SYSTEM No. ⬡	DRAINAGE UNIT ◯
98	b																						106.5														S													3.8		18" APC (B)		D-8	98	b
98	c																																				1						1				1				5.2	COA DI w/DIM	21.78′ L+ "AST" 19+08	D-8	98	c
98	d																						231.4														S													3.7		18" APC (B)		D-8	98	d
98	e																																				1						1				1				5.1	COA DI w/DIM	36.43′ L+ "AST" 21+52	D-8	98	e
98	f																						216.8														S													3.6		18" APC (B)		D-3/8	98	f
99	a																																				1						1				1				4	COA DI w/DIM	63.56′ L+ "AST" 29+50	D-9	99	a
99	b																				17																S													3.3		12" APC		D-9	99	b
99	c																																				1						1				1				4.3	COA DI w/DIM	62.58′ L+ "AST" 29+70	D-9	99	c
99	d																				19																S													3.3		12" APC		D-9	99	d
99	e											1																																								CAP DI	41.90′ L+ "AST" 29+70±	D-9	99	e
100	a																																				1										1				4.4	COA DI w/DIM	46.58′ R+ "AST" 29+68.29	D-9	100	a
100	b																				15																S													3.4		12" APC		D-9	100	b
100	c										1																																1								4.3	MODIFY DI TO MH	51.07′ R+ "AST" 29+50	D-9	100	c
100	d																				71.6																S													3.0		12" APC		D-9	100	d
100	e																																				1						1				1				4.0	COA DI w/DIM	42.23′ R+ "AST" 30+43	D-9	100	e
100	f																		20																																	CURB DRAIN (1 PVC PIPE)		D-9	100	f
101	a																1.40																										1		239					5.1	G1 INLET	68.43′ L+ "AST" 30+73.64	D-9	101	a
101	b																				8																S													4.1		12" APC		D-9	101	b
101	c																																				1						1				1				4	COA DI w/DIM	67.87′ L+ "AST" 30+81.70	D-9	101	c
101	d																				6																S													3.8		12" APC		D-9	101	d
101	e																																					1						1							4.8	COA MH	67.00′ L+ "AST" 30+91.19	D-9	101	e
101	f			4.9																																																REMOVE CULVERT		D-9	101	f
102	a	1													3.67																																				6.1		ABANDON CULVERT		D-9	102	a
102	b									1																																										ADJUST MANHOLE	9.33′ L+ "AST" 30+91.25	D-9	102	b
102	c	1													5.63																																			13.3		ABANDON CULVERT		D-9	102	c
103	a									1																																									5.1	ADJUST MANHOLE	43.84′ R+ "AST" 30+91.25	D-9	103	a
104	a																																				1						1				1				4.7	COA DI w/DIM	30.00′ R+ "S" 402+54	D-9	104	a
104	b																				16.2																S													3.9		12" APC		D-9	104	b
104	c																				19.4																S													4.0		12" APC		D-9	104	c
104	d																																				1						1				1				5	COA DI w/DIM	22.36′ L+ "S" 402+49	D-9	104	d
105	a																1.8																											1	435					4.9	G2 MANHOLE	"S" 402+54	D-9	105	a
		2	-	4.9	-	-	-	-	-	2	1	1	-	-	9.3	-	3.2	-	-	-	172.2	-	554.7	-	-	-	20	-	-	-	-	-	-	-	-	-	-	9	1	-	-	-	-	10	-	2	674	9	-	-	-	SHEET TOTAL				

(N) = NOT A SEPARATE PAY ITEM, FOR INFORMATION ONLY

DRAINAGE QUANTITIES
DQ-16

SAMATHA NARRA — REVISED BY — SN
KEITH D. RHODES — DATE REVISED — 10/31/11
CALCULATED-DESIGNED BY
CHECKED BY
CONSULTANT FUNCTIONAL SUPERVISOR — KEITH D. RHODES

STATE OF CALIFORNIA - DEPARTMENT OF TRANSPORTATION — Caltrans

LAST REVISION 10-31-11 | DATE PLOTTED => 19-JAN-2012 | TIME PLOTTED => 07:00

Dist	COUNTY	ROUTE	POST MILES TOTAL PROJECT	SHEET No.	TOTAL SHEETS
04	CC	4	27.3/R29.0	183	950

REGISTERED CIVIL ENGINEER 10/31/11 DATE

1-17-12
PLANS APPROVAL DATE

REGISTERED PROFESSIONAL ENGINEER Keith D. Rhodes No. C53587 Exp. 6/30/13 CIVIL STATE OF CALIFORNIA

THE STATE OF CALIFORNIA OR ITS OFFICERS OR AGENTS SHALL NOT BE RESPONSIBLE FOR THE ACCURACY OR COMPLETENESS OF SCANNED COPIES OF THIS PLAN SHEET.

T Y LIN INTERNATIONAL
2010 CROW CANYON PLACE, SUITE 350
SAN RAMON, CA 94583

CCTA
2999 OAK ROAD, SUITE 100
WALNUT CREEK, CA 94597

DRAINAGE SYSTEM No. ⬡	DRAINAGE UNIT ◯	ABANDON CULVERT (EA)	ABANDON INLET (EA)	REMOVE CULVERT (LF)	REMOVE CULVERT(ACP) (LF)	REMOVE INLET (EA)	REMOVE DOWN DRAIN (EA)	REMOVE MH (EA)	REMOVE AC OVERSIDE DRAIN (EA)	Adj MH FRAME & COVER TO GRADE (EA)	MODIFY INLET TO MH (EA)	CAP INLET (EA)	CAP MH (EA)	CAP RISER (EA)	SAND BACKFILL (CY)	DITCH EXCAVATION (CY)	MINOR Conc (MINOR STRUCTURE) (CY)	MINOR Conc (BACKFILL) (CY)	MINOR Conc (GUTTER LINING) (CY)	MINOR Conc (Misc CONSTRUCTION) (CY)	12" APC (LF)	18" APC (A) (LF)	18" APC (B) (LF)	24" APC (A) (LF)	24" APC (B) (LF)	18" ASP (LF)	3" PVC PIPE (SCHEDULE 40) (LF)	18" RCP CI V (LF)	RIGID RAIL FALL PROTECTION SYSTEM (EA)	24" RCP DOUBLE CAGED CIRCULAR Reinf (LF)	30" RCP DOUBLE CAGED CIRCULAR Reinf (LF)	JACKED 18" RCP (CLASS II) (LF)	12" CSP (0.064" THICK) (LF)	ANCHOR ASSEMBLY (EA)	36" CORRUGATED STEEL PIPE INLET (.064" THICK, BIT COATED) (LF)	12" WSP (0.25" THICK) (LF)	PIPE JOINT CLASSIFICATION (N)	COA DI, TYPE C (BG) (EA)	COA MH (TYPE III) (EA)	RSP (FACING METHOD B) (CY)	RSP FABRIC (SQFT)	PARTIAL INLET w/CAP (EA)	TYPE 24-12 F&G (N) (EA)	TYPE 24-12X F&G (N) (EA)	TYPE 36-R F&G (N) (EA)	TYPE U 45 F&C (N) (EA)	Misc IRON & STEEL (LB)	DRAINAGE INLET MARKER (EA)	SIDEWALK OPENING w/ CHECKERED PLATE (EA)	MAXIMUM COVER (N) (SEE NOTE 4) (LF)	HEIGHT OF INLET (N) (LF)	DESCRIPTION	STATION	DRAINAGE PLAN SHEET No.	DRAINAGE SYSTEM No. ⬡	DRAINAGE UNIT ◯
105	b																				179																	S													3.9		12" APC		D-9	105	b
105	c																1.53																														1	435			3.9	G2 MANHOLE	"S" 404+38	D-9	105	c
105	d																				39																	S													3.3		12" APC		D-9	105	d
105	e																2.48																														1	435			7.6	G2 MANHOLE	"S" 404+80	D-9	105	e
105	f																				32																	S													4.2		12" APC		D-9	105	f
105	g																3.84																																		9.0	G2 MANHOLE	"S" 404+14.9	D-9	105	g
105	h			4																																																REMOVE CULVERT(PORTION)		D-9	105	h
106	a																																						1						1				1			4	COA DI w/DIM	20.00′ R+ "S" 404+38	D-9	106	a
106	b																				16.2																	S													2.8		12" APC		D-9	106	b
106	c																				16.2																	S													2.9		12" APC		D-9	106	c
106	d																																						1						1				1			3.3	COA DI w/DIM	20.00′ L+ "S" 404+38	D-9	106	d
107	a																																						1						1				1			4	COA DI w/DIM	45.79′ R+ "S" 404+73.39	D-9	107	a
107	b																				39																	S													3.0		12" APC		D-9	107	b
		-	-	4	-	-	-	-	-	-	-	-	-	-	-	-	3.17	-	-	-	282.4	-	-	-	-	-	-	-	-	-	-	-	-	-	-	-	-	-	3	-	-	-	-	-	3	-	2	870	3	-			SHEET TOTAL			
		16 *	10	1051 *	1467	35 *	4	1	1	4	5	4	2	1	92.45 *	93.28	327.87 *	16.2	43.0	0.6	838.85	221.6	8696.1	764.8 *	20.3	330.5	40	215.5	1	266.9	237.5	164.5	299.9	10	9.0	78.5	-	26	3	4.1	109.76	1 *	157 *	27	2	12	5394 *	26	2			GRAND TOTAL			

(N) = NOT A SEPARATE PAY ITEM, FOR INFORMATION ONLY

* = REFER TO SHEET DQ-18 FOR FINAL TOTAL

DRAINAGE QUANTITIES
DQ-17

SAMATHA NARRA — REVISED BY — SN
KEITH D. RHODES — DATE REVISED — 10/31/11
CALCULATED-DESIGNED BY
CHECKED BY
CONSULTANT FUNCTIONAL SUPERVISOR — KEITH D. RHODES

STATE OF CALIFORNIA - DEPARTMENT OF TRANSPORTATION — Caltrans

LAST REVISION 10-31-11 — DATE PLOTTED => 19-JAN-2012 — TIME PLOTTED => 07:00

Dist	COUNTY	ROUTE	POST MILES TOTAL PROJECT	SHEET No.	TOTAL SHEETS
04	CC	4	27.3/R29.0	184	950

REGISTERED CIVIL ENGINEER 10/31/11 DATE

1-17-12
PLANS APPROVAL DATE

REGISTERED PROFESSIONAL ENGINEER Keith D. Rhodes No. C53587 Exp. 6/30/13 CIVIL STATE OF CALIFORNIA

THE STATE OF CALIFORNIA OR ITS OFFICERS OR AGENTS SHALL NOT BE RESPONSIBLE FOR THE ACCURACY OR COMPLETENESS OF SCANNED COPIES OF THIS PLAN SHEET.

T Y LIN INTERNATIONAL
2010 CROW CANYON PLACE, SUITE 350
SAN RAMON, CA 94583

CCTA
2999 OAK ROAD, SUITE 100
WALNUT CREEK, CA 94597

DRAINAGE SYSTEM No. ⬡	DRAINAGE UNIT ◯	ABANDON CULVERT	REMOVE CULVERT	SAND BACKFILL	REMOVE INLET	MINOR CONC (MINOR STRUCTURE)**	24" APC (A)	36" RCP	48" RCP	72" RCP CI V	18" CSP w/METAL CAP	BAR REINFORCING STEEL (JUNCTION STRUCTURE)	STRUCTURAL CONCRETE (JUNCTION STRUCTURE)	JACKED 72" RCP CLASS V	PIPE JOINT CLASSIFICATION (N)	PIPE BULKHEAD (N)	PARTIAL INLETI w/CAP	TYPE 24-12 FRAME & GRATE (N)	TYPE U 45 FRAME & GRATE (N)	Misc IRON & STEEL**	MAXIMUM COVER (N)	HEIGHT OF INLET(N)	DESCRIPTION	STATION	DRAINAGE PLAN SHEET No.	DRAINAGE SYSTEM No. ⬡	DRAINAGE UNIT ◯
		EA	LF	CY	EA	CY	LF	LF	LF	LF	LF	LB	CY	LF		EA	EA	EA	EA	LB	LF	LF					
108	a											12725	33.13						1	435			JUNCTION STRUCTURE No.1		D-7	108	a
108	b						4								S	1					16.6		24" APC (A) w/ PIPE BULKHEAD		D-7	108	b
108	c									10					S						20.4		72" RCP CI V		D-7	108	c
108	d													149.5	S						8.6		JACKED 72" RCP CI V		D-7	108	d
108	e					4.31												1		326		10.3	G2 INLET	"E" 255+59.60	D-7	108	e
108	f									18					S						10.4		72" RCP CI V		D-7	108	f
108	g																1						PARTIAL GT4 MODIFIED INLET w/ CAP	89.00′ R+ "E" 255+91.99	D-7	108	g
108	h									6					S						10.6		72" RCP CI V		D-7	108	h
108	i											14673	44										JUNCTION STRUCTURE No.2	105.21′ R+ "E" 255+91.99	D-7	108	i
108	j									181					S						15		72" RCP CI V		D-7	108	j
108	k										20				DD						18.3		18" CSP w/DD JOINTS w/METAL CAP		D-7	108	k
108	l							6							S	1					6		36" RCP w/PIPE BULKHEAD		D-7	108	l
108	m							6							S	1					6		36" RCP w/PIPE BULKHEAD		D-7	108	m
108	n							6							S	1					6		36" RCP w/PIPE BULKHEAD		D-7	108	n
109	a		20	20.9																			REMOVE CULVERT(PORTION)		D-7	109	a
109	b	1																					ABANDON CULVERT(PORTION)		D-7	109	b
109	c				1																		REMOVE INLET	"E" 255+61	D-7	109	c
109	d	1																					ABANDON CULVERT		D-7	109	d
109	e	1																					ABANDON CULVERT		D-7	109	e
109	f				1																		REMOVE INLET	60.00′ R+ "E" 256+88.3	D-7	109	f
109	g	1																					ABANDON CULVERT(PORTION)		D-7	109	g
109	h		20	20.9																			REMOVE CULVERT(PORTION)		D-7	109	h
110	a						99																24" APC (A)		D-7	110	a
110	b																1						PARTIAL G2 INLET w/CAP	80.56′ L+ "E" 255+29.76	D-7	110	b
110	c								8														48" RCP		D-7	110	c
		4	40	41.8	2	4.31	103	18	8	215	20	27398	77.13	149.5	-	4	2	1	1	761			TOTAL				
		20	1091	134.25	37	32.18	867.8	18	8	215	20	27398	77.13	149.5	-	4	3	158	1	54703			FINAL TOTAL				

(N) = NOT A SEPARATE PAY ITEM, FOR INFORMATION ONLY

** SEE TDQ AND SBQ SHEETS FOR ADDIOTIONAL QUANTITIES

DRAINAGE QUANTITIES
DQ-18

STATE OF CALIFORNIA - DEPARTMENT OF TRANSPORTATION
Caltrans

CONSULTANT FUNCTIONAL SUPERVISOR: KEITH RHODES

CALCULATED-DESIGNED BY: SAMATHA NARRA
CHECKED BY: KEITH D. RHODES

REVISED BY: SN
DATE REVISED: 10/31/11

LAST REVISION: 10-31-11
DATE PLOTTED => 19-JAN-2012
TIME PLOTTED => 06:47

Dist	COUNTY	ROUTE	POST MILES TOTAL PROJECT	SHEET No.	TOTAL SHEETS
04	CC	4	27.3/R29.0	185	950

REGISTERED CIVIL ENGINEER 8/9/11 DATE

1-17-12
PLANS APPROVAL DATE

REGISTERED PROFESSIONAL ENGINEER T.E. Hillesland No. C54200 Exp. 12/31/11 CIVIL STATE OF CALIFORNIA

THE STATE OF CALIFORNIA OR ITS OFFICERS OR AGENTS SHALL NOT BE RESPONSIBLE FOR THE ACCURACY OR COMPLETENESS OF SCANNED COPIES OF THIS PLAN SHEET.

MOFFATT & NICHOL
1300 CLAY ST, STE 550
OAKLAND, CA 94612

CCTA
2999 OAK ROAD, SUITE 100
WALNUT CREEK, CA 94597

LEGEND:

- (No.) DRAINAGE SYSTEM No.
- (a) DRAINAGE ITEM
- INLET
- UNDERDRAIN RISER
- UNDERDRAIN

NOTES:

1. FOR UNDERDRAIN PROFILES, SEE SHEETS SBP-1 TO SBP-9.
2. FOR UNDERDRAIN DETAILS, SEE SHEET SBD-1 AND STANDARD PLANS D102.
3. ALL UNDERDRAIN CONNECTIONS TO INLET STRUCTURES SHALL BE STANDARD JOINTS.

ABBREVIATIONS:

NIC	NOT IN CONTRACT
PPP	PERFORATED PLASTIC PIPE
UDTR	UNDERDRAIN TERMINAL RISER
UDR	UNDERDRAIN RISER

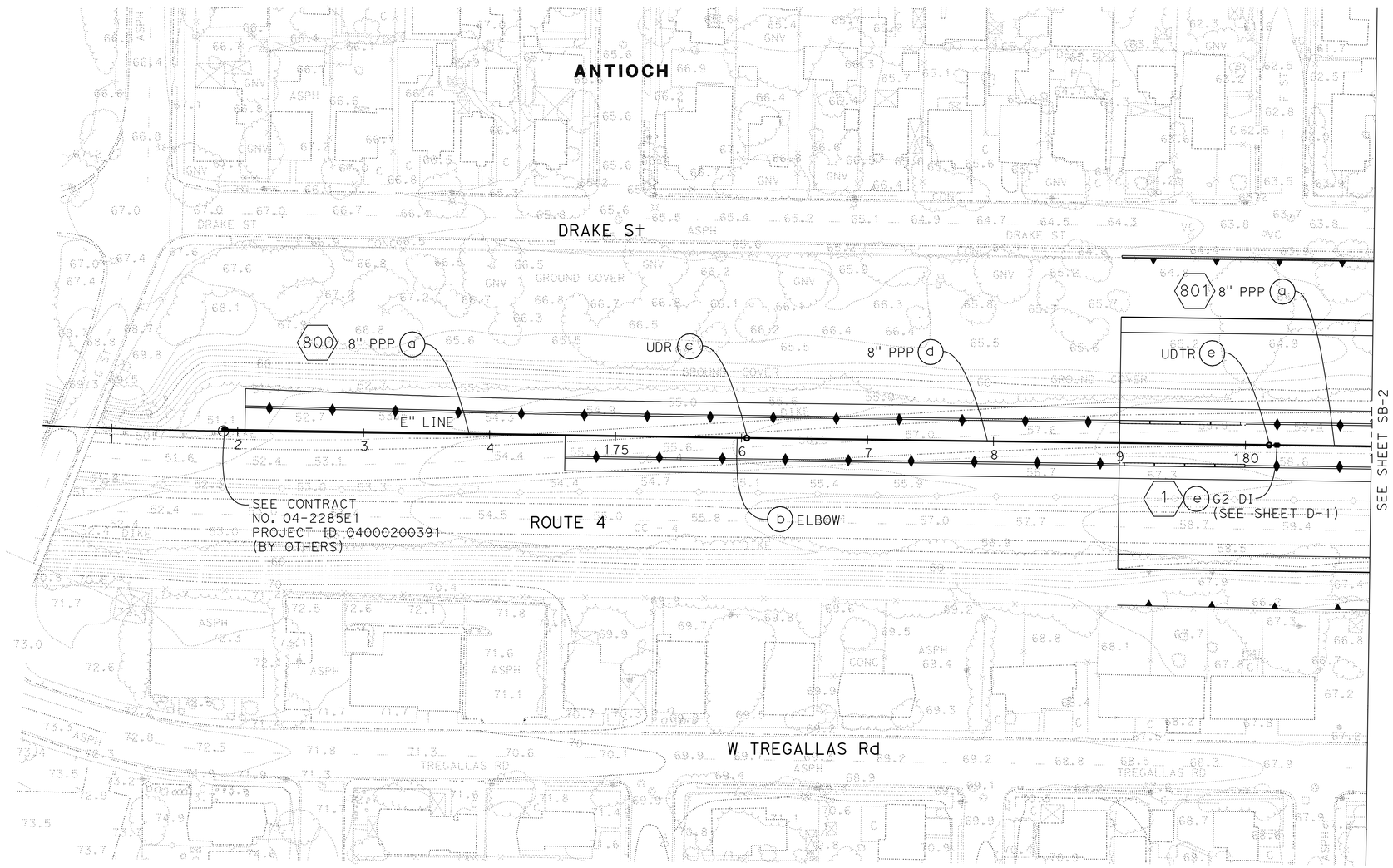

SUBSURFACE DRAINAGE PLAN
UNDERDRAIN
(eBART)

SCALE: 1" = 50'

THIS PLAN ACCURATE FOR UNDERDRAIN WORK ONLY

SB-1

STATE OF CALIFORNIA - DEPARTMENT OF TRANSPORTATION
Caltrans

CONSULTANT FUNCTIONAL SUPERVISOR: TOM HILLESLAND
CALCULATED-DESIGNED BY: NIKKI KOBAYASHI
CHECKED BY: BRUCE ZAENI
REVISED BY: NK
DATE REVISED: 8/9/11

LAST REVISION 8-9-11
DATE PLOTTED => 19-JAN-2012
TIME PLOTTED => 06:47

Dist	COUNTY	ROUTE	POST MILES TOTAL PROJECT	SHEET No.	TOTAL SHEETS
04	CC	4	27.3/R29.0	186	950

REGISTERED CIVIL ENGINEER 8/9/11 DATE

1-17-12
PLANS APPROVAL DATE

REGISTERED PROFESSIONAL ENGINEER T.E. Hillesland No. C54200 Exp. 12/31/11 CIVIL STATE OF CALIFORNIA

THE STATE OF CALIFORNIA OR ITS OFFICERS OR AGENTS SHALL NOT BE RESPONSIBLE FOR THE ACCURACY OR COMPLETENESS OF SCANNED COPIES OF THIS PLAN SHEET.

MOFFATT & NICHOL
1300 CLAY ST, STE 550
OAKLAND, CA 94612

CCTA
2999 OAK ROAD, SUITE 100
WALNUT CREEK, CA 94597

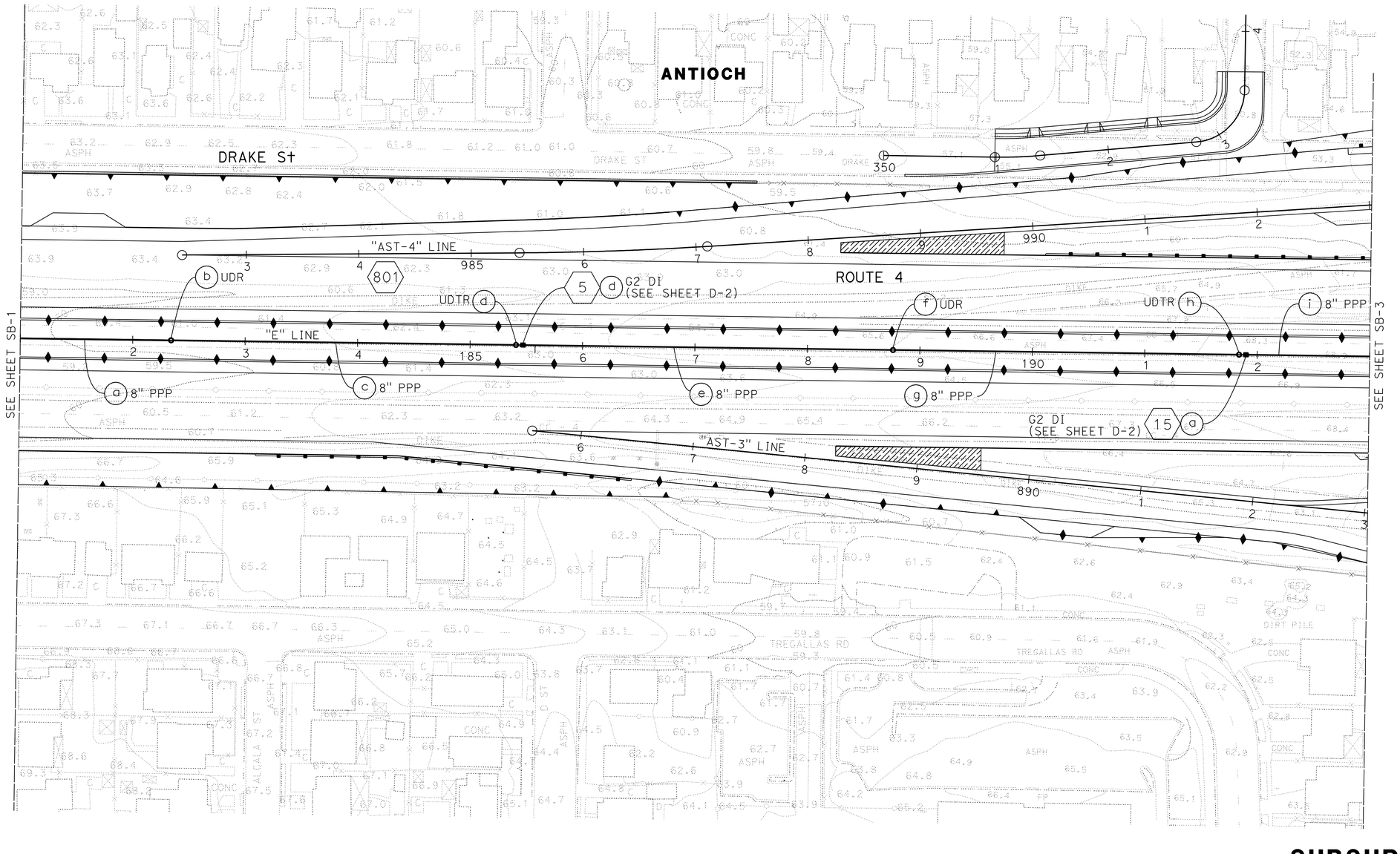

THIS PLAN ACCURATE FOR UNDERDRAIN WORK ONLY

FOR NOTES, ABBREVIATIONS AND LEGEND. SEE SHEET SB-1

SUBSURFACE DRAINAGE PLAN UNDERDRAIN (eBART)

SCALE 1" = 50'

SB-2

REVISED BY	DATE REVISED
NK	8/9/11

NIKKI KOBAYASHI
BRUCE ZAENI

CALCULATED-DESIGNED BY
CHECKED BY

CONSULTANT FUNCTIONAL SUPERVISOR
TOM HILLESLAND

STATE OF CALIFORNIA - DEPARTMENT OF TRANSPORTATION
Caltrans

LAST REVISION 8-9-11
DATE PLOTTED => 19-JAN-2012
TIME PLOTTED => 06:47

Dist	COUNTY	ROUTE	POST MILES TOTAL PROJECT	SHEET No.	TOTAL SHEETS
04	CC	4	27.3/R29.0	187	950

REGISTERED CIVIL ENGINEER 8/9/11 DATE

1-17-12
PLANS APPROVAL DATE

REGISTERED PROFESSIONAL ENGINEER T.E. Hillesland No. C54200 Exp. 12/31/11 CIVIL STATE OF CALIFORNIA

THE STATE OF CALIFORNIA OR ITS OFFICERS OR AGENTS SHALL NOT BE RESPONSIBLE FOR THE ACCURACY OR COMPLETENESS OF SCANNED COPIES OF THIS PLAN SHEET.

MOFFATT & NICHOL
1300 CLAY ST, STE 550
OAKLAND, CA 94612

CCTA
2999 OAK ROAD, SUITE 100
WALNUT CREEK, CA 94597

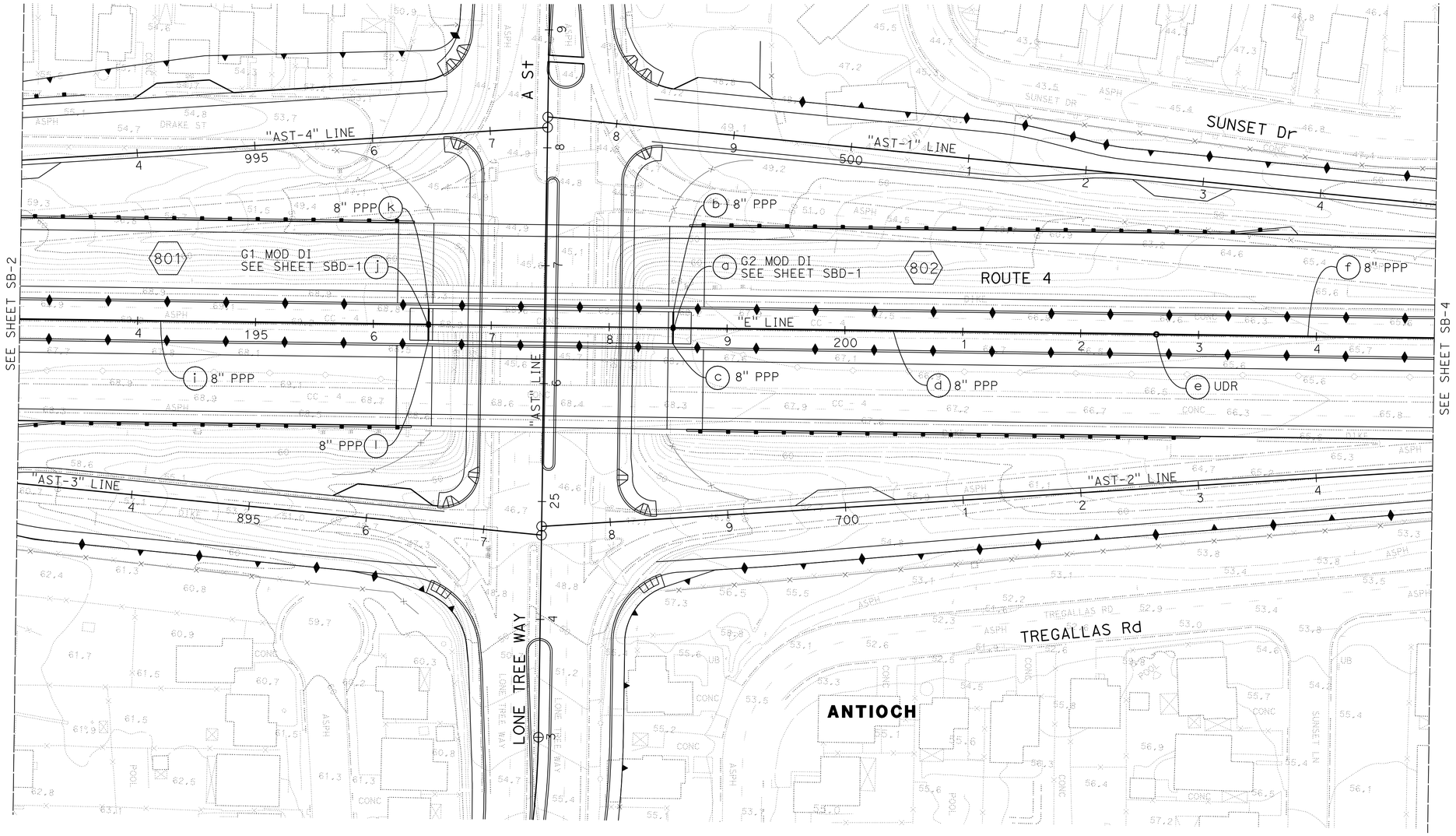

SUBSURFACE DRAINAGE PLAN
UNDERDRAIN
(eBART)

SCALE 1" = 50'

SB-3

THIS PLAN ACCURATE FOR UNDERDRAIN WORK ONLY

FOR NOTES, ABBREVIATIONS AND LEGEND. SEE SHEET SB-1

STATE OF CALIFORNIA - DEPARTMENT OF TRANSPORTATION

Caltrans

CONSULTANT FUNCTIONAL SUPERVISOR: TOM HILLESLAND

CALCULATED-DESIGNED BY: NIKKI KOBAYASHI

CHECKED BY: BRUCE ZAENI

REVISED BY: NK

DATE REVISED: 8/9/11

LAST REVISION 8-9-11

DATE PLOTTED => 19-JAN-2012
TIME PLOTTED => 06:47

Dist	COUNTY	ROUTE	POST MILES TOTAL PROJECT	SHEET No.	TOTAL SHEETS
04	CC	4	27.3/R29.0	188	950

REGISTERED CIVIL ENGINEER — DATE 8/9/11

1-17-12
PLANS APPROVAL DATE

REGISTERED PROFESSIONAL ENGINEER — T.E. Hillesland — No. C54200 — Exp. 12/31/11 — CIVIL — STATE OF CALIFORNIA

THE STATE OF CALIFORNIA OR ITS OFFICERS OR AGENTS SHALL NOT BE RESPONSIBLE FOR THE ACCURACY OR COMPLETENESS OF SCANNED COPIES OF THIS PLAN SHEET.

MOFFATT & NICHOL
1300 CLAY ST, STE 550
OAKLAND, CA 94612

CCTA
2999 OAK ROAD, SUITE 100
WALNUT CREEK, CA 94597

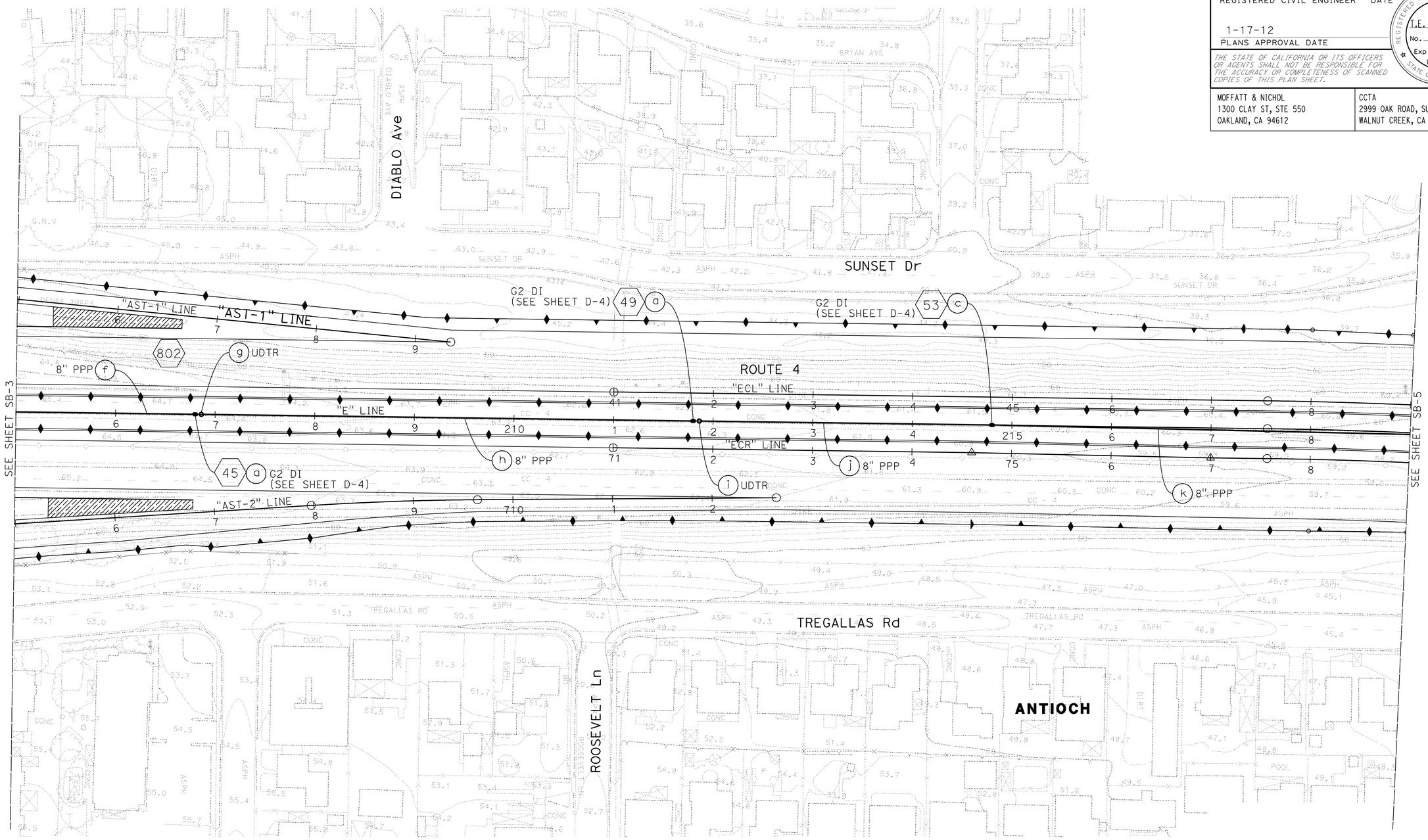

SUBSURFACE DRAINAGE PLAN UNDERDRAIN (eBART)

SCALE 1" = 50'

FOR NOTES, ABBREVIATIONS AND LEGEND. SEE SHEET SB-1

THIS PLAN ACCURATE FOR UNDERDRAIN WORK ONLY

SB-4

REVISED BY	NK
DATE REVISED	8/9/11
CALCULATED-DESIGNED BY	NIKKI KOBAYASHI
CHECKED BY	BRUCE ZAENI
CONSULTANT FUNCTIONAL SUPERVISOR	TOM HILLESLAND

STATE OF CALIFORNIA - DEPARTMENT OF TRANSPORTATION

Caltrans

LAST REVISION 8-9-11 — DATE PLOTTED => 19-JAN-2012 — TIME PLOTTED => 06:48

Dist	COUNTY	ROUTE	POST MILES TOTAL PROJECT	SHEET No.	TOTAL SHEETS
04	CC	4	27.3/R29.0	189	950

REGISTERED CIVIL ENGINEER — DATE 8/9/11

1-17-12
PLANS APPROVAL DATE

REGISTERED PROFESSIONAL ENGINEER — T.E. Hillesland — No. C54200 — Exp. 12/31/11 — CIVIL — STATE OF CALIFORNIA

THE STATE OF CALIFORNIA OR ITS OFFICERS OR AGENTS SHALL NOT BE RESPONSIBLE FOR THE ACCURACY OR COMPLETENESS OF SCANNED COPIES OF THIS PLAN SHEET.

MOFFATT & NICHOL
1300 CLAY ST, STE 550
OAKLAND, CA 94612

CCTA
2999 OAK ROAD, SUITE 100
WALNUT CREEK, CA 94597

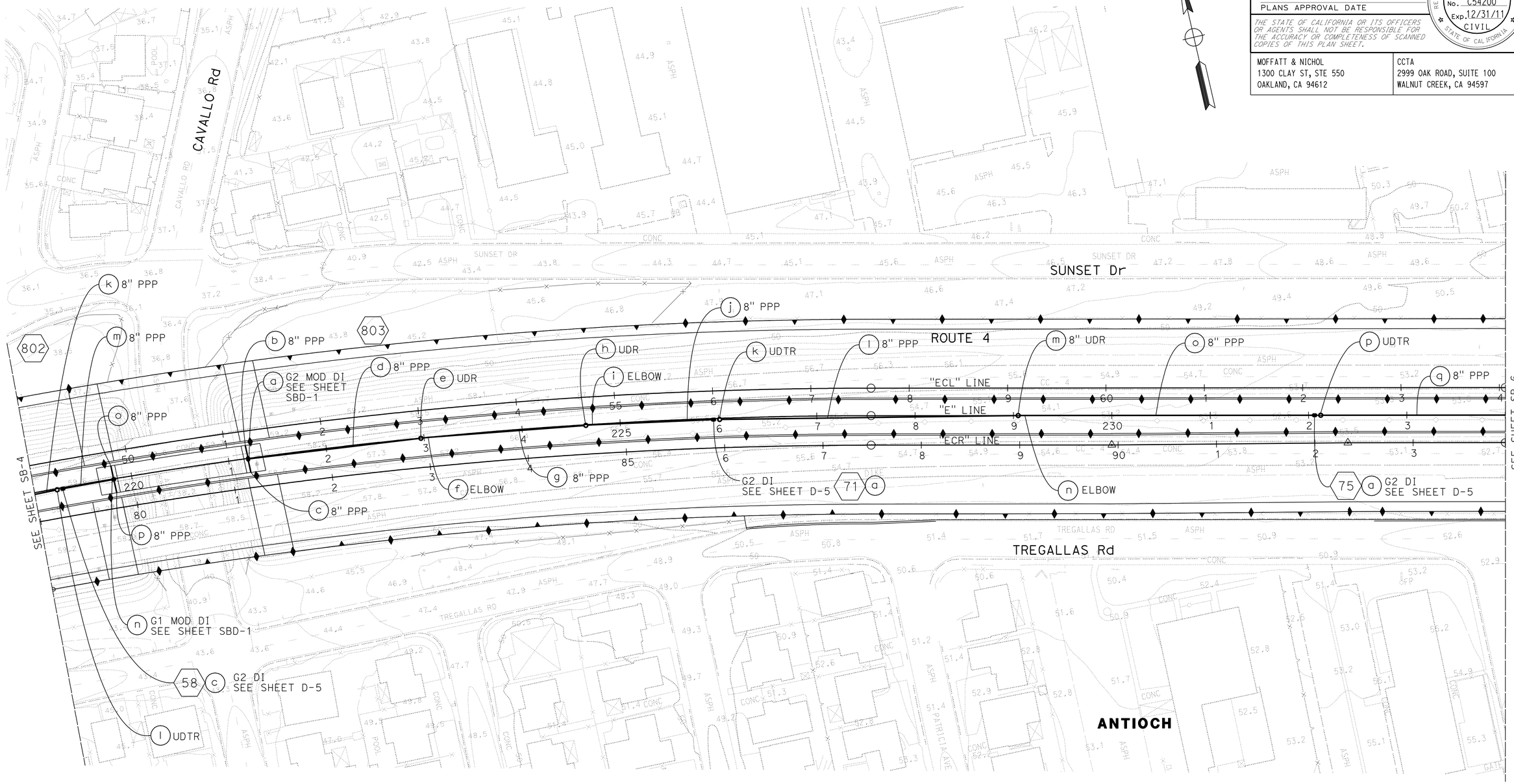

SUBSURFACE DRAINAGE PLAN UNDERDRAIN (eBART)

SCALE: 1" = 50'

THIS PLAN ACCURATE FOR UNDERDRAIN WORK ONLY

FOR NOTES, ABBREVIATIONS AND LEGEND. SEE SHEET SB-1

SB-5

STATE OF CALIFORNIA - DEPARTMENT OF TRANSPORTATION — Caltrans

CONSULTANT FUNCTIONAL SUPERVISOR: TOM HILLESLAND

CALCULATED-DESIGNED BY: NIKKI KOBAYASHI — CHECKED BY: BRUCE ZAENI

REVISED BY: NK — DATE REVISED: 8/9/11

LAST REVISION 8-9-11 — DATE PLOTTED => 19-JAN-2012 — TIME PLOTTED => 06:48

Dist	COUNTY	ROUTE	POST MILES TOTAL PROJECT	SHEET No.	TOTAL SHEETS
04	CC	4	27.3/R29.0	190	950

REGISTERED CIVIL ENGINEER — DATE: 8/9/11

1-17-12
PLANS APPROVAL DATE

REGISTERED PROFESSIONAL ENGINEER — T.E. Hillesland — No. C54200 — Exp. 12/31/11 — CIVIL — STATE OF CALIFORNIA

THE STATE OF CALIFORNIA OR ITS OFFICERS OR AGENTS SHALL NOT BE RESPONSIBLE FOR THE ACCURACY OR COMPLETENESS OF SCANNED COPIES OF THIS PLAN SHEET.

MOFFATT & NICHOL
1300 CLAY ST, STE 550
OAKLAND, CA 94612

CCTA
2999 OAK ROAD, SUITE 100
WALNUT CREEK, CA 94597

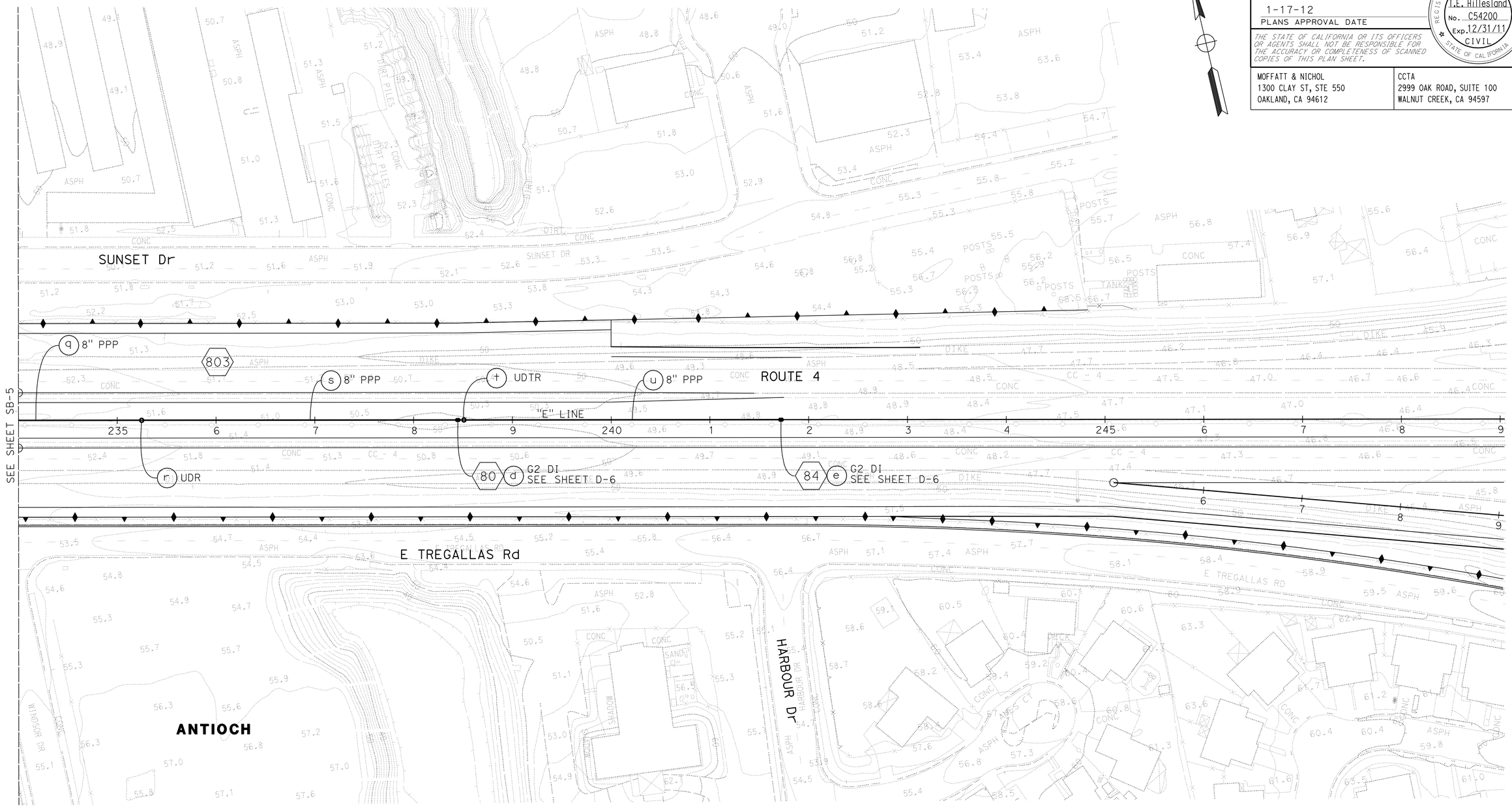

SUBSURFACE DRAINAGE PLAN
UNDERDRAIN
(eBART)

SCALE: 1" = 50'

THIS PLAN ACCURATE FOR UNDERDRAIN WORK ONLY

FOR NOTES, ABBREVIATIONS AND LEGEND. SEE SHEET SB-1

SB-6

STATE OF CALIFORNIA - DEPARTMENT OF TRANSPORTATION — Caltrans

CONSULTANT FUNCTIONAL SUPERVISOR: TOM HILLESLAND

CALCULATED-DESIGNED BY: NIKI MIKKOLA, MAYA YASHI

CHECKED BY: BRUCE CLEMENI

REVISED BY: NK

DATE REVISED: 8/9/11

LAST REVISION: 8-9-11

DATE PLOTTED => 19-JAN-2012
TIME PLOTTED => 06:48

Dist	COUNTY	ROUTE	POST MILES TOTAL PROJECT	SHEET No.	TOTAL SHEETS
04	CC	4	27.3/R29.0	191	950

REGISTERED CIVIL ENGINEER 8/9/11 DATE

1-17-12
PLANS APPROVAL DATE

REGISTERED PROFESSIONAL ENGINEER T.E. Hillesland No. C54200 Exp. 12/31/11 CIVIL STATE OF CALIFORNIA

THE STATE OF CALIFORNIA OR ITS OFFICERS OR AGENTS SHALL NOT BE RESPONSIBLE FOR THE ACCURACY OR COMPLETENESS OF SCANNED COPIES OF THIS PLAN SHEET.

MOFFATT & NICHOL
1300 CLAY ST, STE 550
OAKLAND, CA 94612

CCTA
2999 OAK ROAD, SUITE 100
WALNUT CREEK, CA 94597

SUBSURFACE DRAINAGE PROFILES
UNDERDRAIN
(eBART)

SCALE: Horiz 1" = 10'
Vert 1" = 10'

SBP-1

REVISED BY NK
DATE REVISED 8/9/11
NIKKI KOBAYASHI
BRUCE ZAENI
CALCULATED-DESIGNED BY
CHECKED BY
CONSULTANT FUNCTIONAL SUPERVISOR
TOM HILLESLAND
STATE OF CALIFORNIA - DEPARTMENT OF TRANSPORTATION
Caltrans

LAST REVISION 8-9-11
DATE PLOTTED => 19-JAN-2012
TIME PLOTTED => 06:48

Dist	COUNTY	ROUTE	POST MILES TOTAL PROJECT	SHEET No.	TOTAL SHEETS
04	CC	4	27.3/R29.0	192	950

REGISTERED CIVIL ENGINEER 8/9/11 DATE

1-17-12
PLANS APPROVAL DATE

REGISTERED PROFESSIONAL ENGINEER T.E. Hillesland No. C54200 Exp. 12/31/11 CIVIL STATE OF CALIFORNIA

THE STATE OF CALIFORNIA OR ITS OFFICERS OR AGENTS SHALL NOT BE RESPONSIBLE FOR THE ACCURACY OR COMPLETENESS OF SCANNED COPIES OF THIS PLAN SHEET.

MOFFATT & NICHOL
1300 CLAY ST, STE 550
OAKLAND, CA 94612

CCTA
2999 OAK ROAD, SUITE 100
WALNUT CREEK, CA 94597

NOTE:

ALL UTILITIES SHOWN ON THESE PLANS ARE APPROXIMATE AND SHALL BE VERIFIED BY THE CONTRACTOR PRIOR TO CONSTRUCTION. SEE UTILITY PLANS FOR MORE DETAILS.

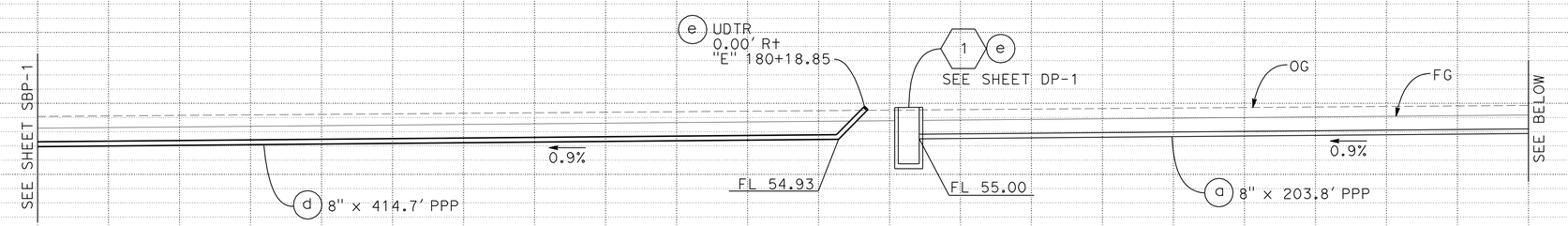

DRAINAGE SYSTEM No. 800 801

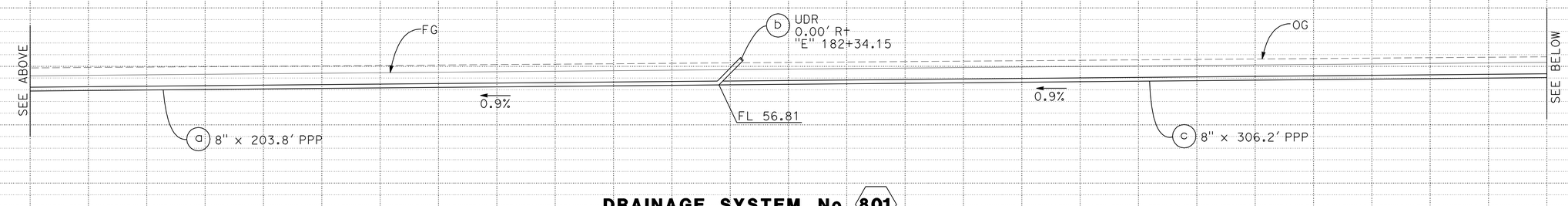

DRAINAGE SYSTEM No. 801

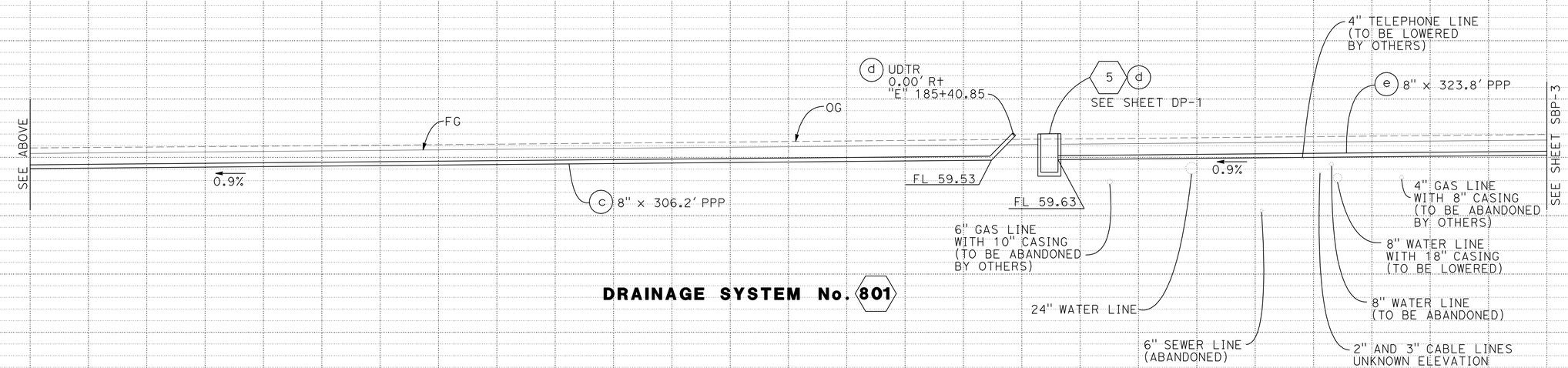

DRAINAGE SYSTEM No. 801

SUBSURFACE DRAINAGE PROFILES UNDERDRAIN (eBART)

SCALE: Horiz 1" = 10'
Vert 1" = 10'

SBP-2

NK	8/9/11
REVISED BY	DATE REVISED
NIKKI KOBAYASHI	BRUCE ZAENI
CALCULATED-DESIGNED BY	CHECKED BY
TOM HILLESLAND	
CONSULTANT FUNCTIONAL SUPERVISOR	

STATE OF CALIFORNIA - DEPARTMENT OF TRANSPORTATION
Caltrans

LAST REVISION 8-9-11
DATE PLOTTED => 19-JAN-2012
TIME PLOTTED => 06:48

Dist	COUNTY	ROUTE	POST MILES TOTAL PROJECT	SHEET No.	TOTAL SHEETS
04	CC	4	27.3/R29.0	193	950

REGISTERED CIVIL ENGINEER 8/9/11 DATE

1-17-12
PLANS APPROVAL DATE

REGISTERED PROFESSIONAL ENGINEER T.E. Hillesland No. C54200 Exp. 12/31/11 CIVIL STATE OF CALIFORNIA

THE STATE OF CALIFORNIA OR ITS OFFICERS OR AGENTS SHALL NOT BE RESPONSIBLE FOR THE ACCURACY OR COMPLETENESS OF SCANNED COPIES OF THIS PLAN SHEET.

MOFFATT & NICHOL
1300 CLAY ST, STE 550
OAKLAND, CA 94612

CCTA
2999 OAK ROAD, SUITE 100
WALNUT CREEK, CA 94597

NOTE:

ALL UTILITIES SHOWN ON THESE PLANS ARE APPROXIMATE AND SHALL BE VERIFIED BY THE CONTRACTOR PRIOR TO CONSTRUCTION. SEE UTILITY PLANS FOR MORE DETAILS.

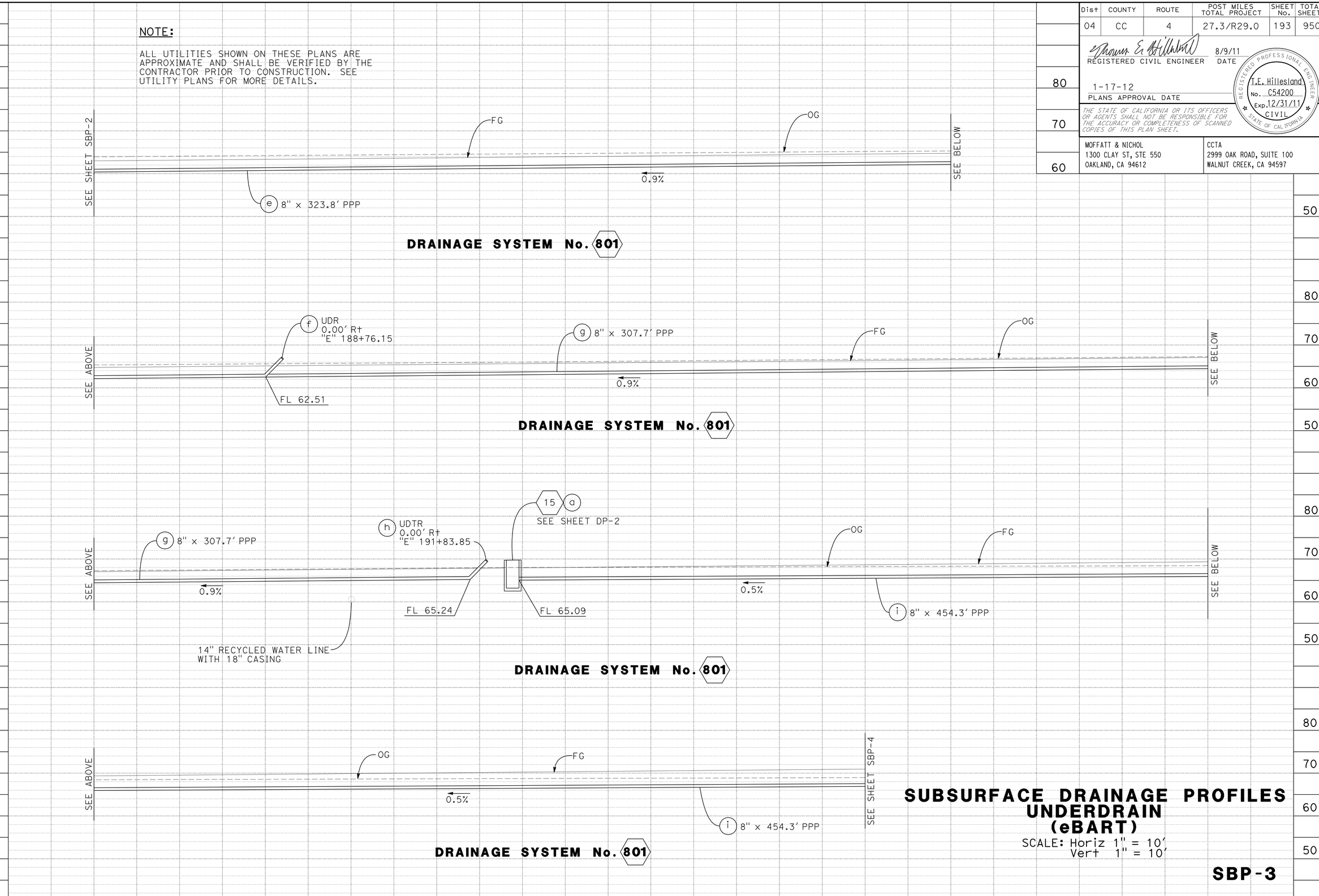

SUBSURFACE DRAINAGE PROFILES
UNDERDRAIN
(eBART)

SCALE: Horiz 1" = 10'
Vert 1" = 10'

SBP-3

REVISED BY	DATE REVISED
NK	8/9/11

NIKKI KOBAYASHI — BRUCE ZAENI

CALCULATED-DESIGNED BY — CHECKED BY

CONSULTANT FUNCTIONAL SUPERVISOR: TOM HILLESLAND

STATE OF CALIFORNIA - DEPARTMENT OF TRANSPORTATION — Caltrans

LAST REVISION 8-9-11 — DATE PLOTTED => 19-JAN-2012 — TIME PLOTTED => 06:48

Dist	COUNTY	ROUTE	POST MILES TOTAL PROJECT	SHEET No.	TOTAL SHEETS
04	CC	4	27.3/R29.0	194	950

REGISTERED CIVIL ENGINEER 8/9/11 DATE

1-17-12
PLANS APPROVAL DATE

REGISTERED PROFESSIONAL ENGINEER T.E. Hillesland No. C54200 Exp. 12/31/11 CIVIL STATE OF CALIFORNIA

THE STATE OF CALIFORNIA OR ITS OFFICERS OR AGENTS SHALL NOT BE RESPONSIBLE FOR THE ACCURACY OR COMPLETENESS OF SCANNED COPIES OF THIS PLAN SHEET.

MOFFATT & NICHOL
1300 CLAY ST, STE 550
OAKLAND, CA 94612

CCTA
2999 OAK ROAD, SUITE 100
WALNUT CREEK, CA 94597

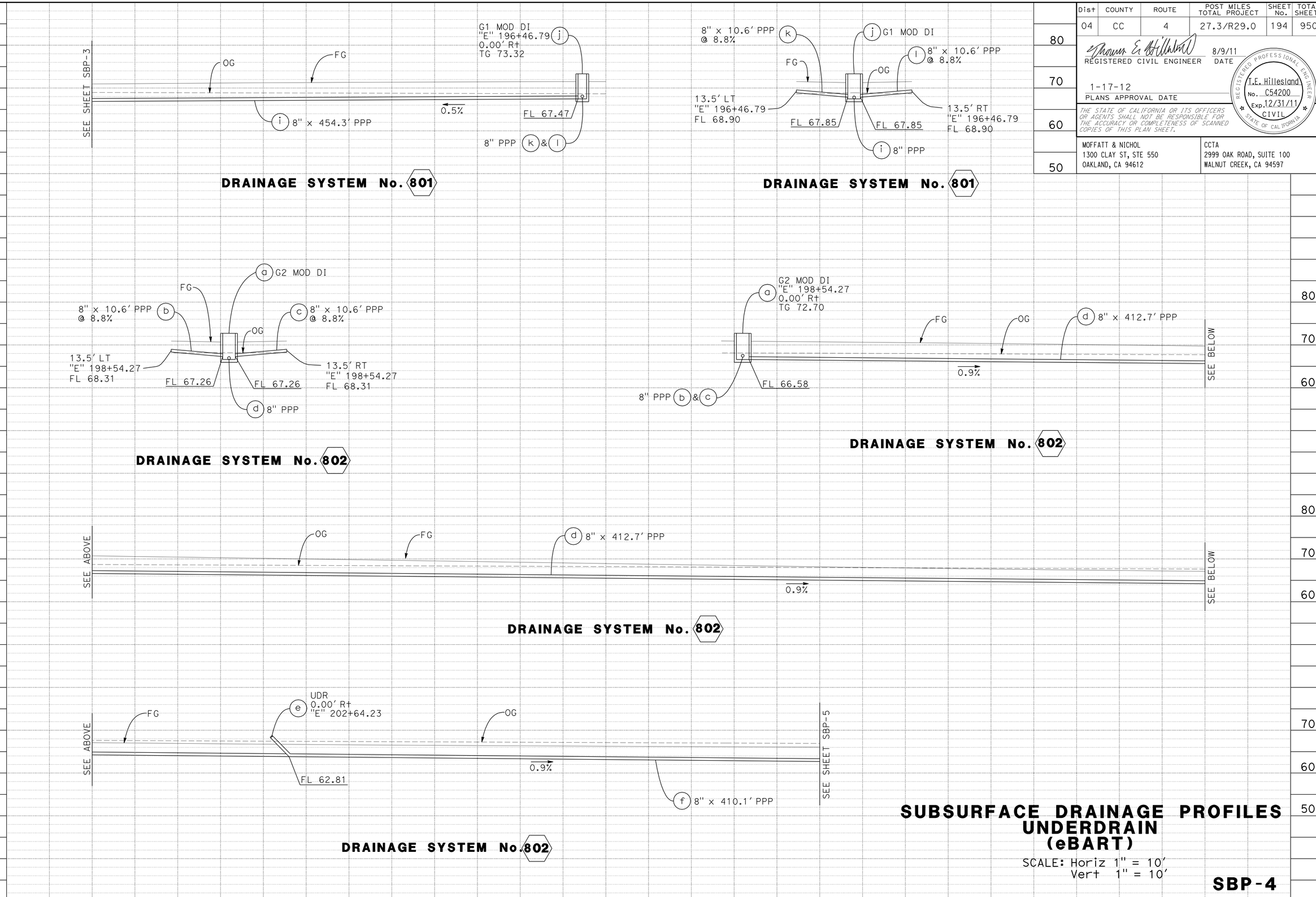

SUBSURFACE DRAINAGE PROFILES UNDERDRAIN (eBART)

SCALE: Horiz 1" = 10'
Vert 1" = 10'

SBP-4

DATE REVISED	REVISED BY
8/9/11	NK

CALCULATED-DESIGNED BY: NIKKI KOBAYASHI
CHECKED BY: BRUCE ZAENI
CONSULTANT FUNCTIONAL SUPERVISOR: TOM HILLESLAND

STATE OF CALIFORNIA - DEPARTMENT OF TRANSPORTATION
Caltrans

LAST REVISION DATE PLOTTED => 19-JAN-2012
TIME PLOTTED => 06:48

Dist	COUNTY	ROUTE	POST MILES TOTAL PROJECT	SHEET No.	TOTAL SHEETS
04	CC	4	27.3/R29.0	195	950

REGISTERED CIVIL ENGINEER 8/9/11 DATE

1-17-12
PLANS APPROVAL DATE

REGISTERED PROFESSIONAL ENGINEER T.E. Hillesland No. C54200 Exp. 12/31/11 CIVIL STATE OF CALIFORNIA

THE STATE OF CALIFORNIA OR ITS OFFICERS OR AGENTS SHALL NOT BE RESPONSIBLE FOR THE ACCURACY OR COMPLETENESS OF SCANNED COPIES OF THIS PLAN SHEET.

MOFFATT & NICHOL
1300 CLAY ST, STE 550
OAKLAND, CA 94612

CCTA
2999 OAK ROAD, SUITE 100
WALNUT CREEK, CA 94597

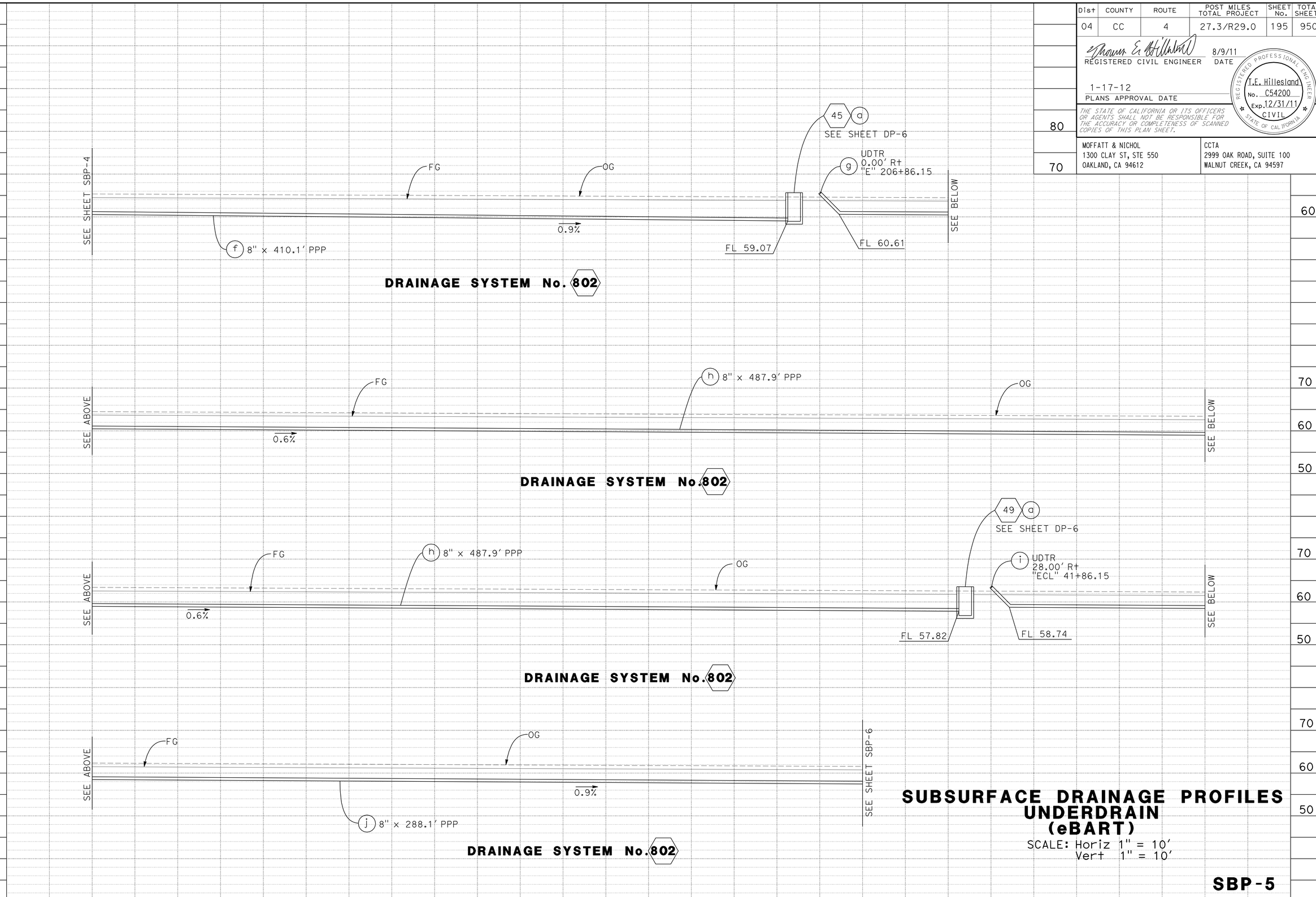

SUBSURFACE DRAINAGE PROFILES UNDERDRAIN (eBART)

SCALE: Horiz 1" = 10'
Vert 1" = 10'

SBP-5

REVISED BY	DATE REVISED
NK	8/9/11

NIKKI KOBAYASHI
BRUCE ZAENI

CALCULATED-DESIGNED BY
CHECKED BY

CONSULTANT FUNCTIONAL SUPERVISOR
TOM HILLESLAND

STATE OF CALIFORNIA - DEPARTMENT OF TRANSPORTATION
Caltrans

LAST REVISION 8-9-11
DATE PLOTTED => 19-JAN-2012
TIME PLOTTED => 06:49

Dist	COUNTY	ROUTE	POST MILES TOTAL PROJECT	SHEET No.	TOTAL SHEETS
04	CC	4	27.3/R29.0	196	950

REGISTERED CIVIL ENGINEER 8/9/11 DATE

1-17-12
PLANS APPROVAL DATE

REGISTERED PROFESSIONAL ENGINEER T.E. Hillesland No. C54200 Exp. 12/31/11 CIVIL STATE OF CALIFORNIA

THE STATE OF CALIFORNIA OR ITS OFFICERS OR AGENTS SHALL NOT BE RESPONSIBLE FOR THE ACCURACY OR COMPLETENESS OF SCANNED COPIES OF THIS PLAN SHEET.

MOFFATT & NICHOL
1300 CLAY ST, STE 550
OAKLAND, CA 94612

CCTA
2999 OAK ROAD, SUITE 100
WALNUT CREEK, CA 94597

NOTE:

ALL UTILITIES SHOWN ON THESE PLANS ARE APPROXIMATE AND SHALL BE VERIFIED BY THE CONTRACTOR PRIOR TO CONSTRUCTION. SEE UTILITY PLANS FOR MORE DETAILS.

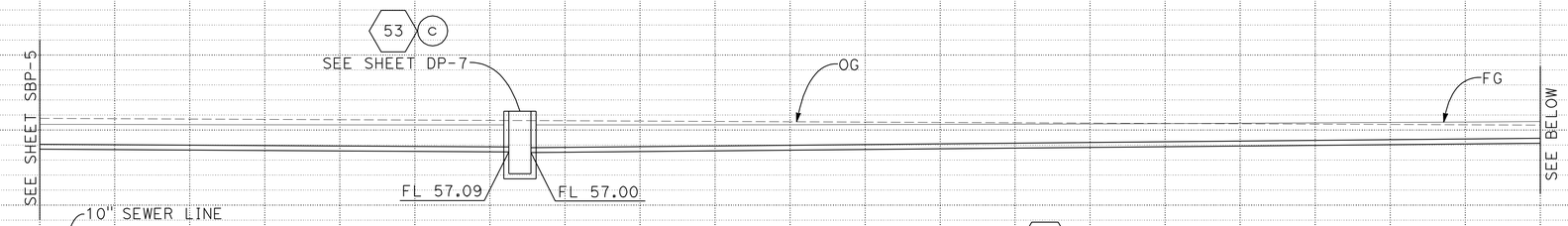

DRAINAGE SYSTEM No. 802

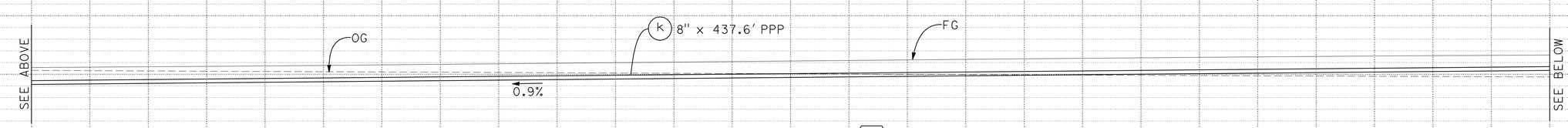

DRAINAGE SYSTEM No. 802

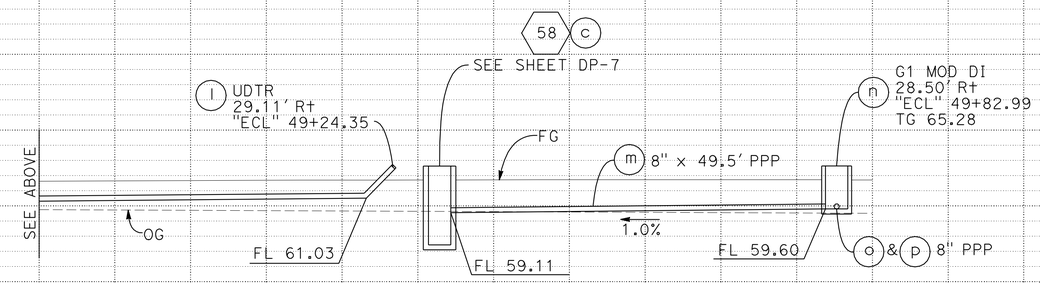

DRAINAGE SYSTEM No. 802

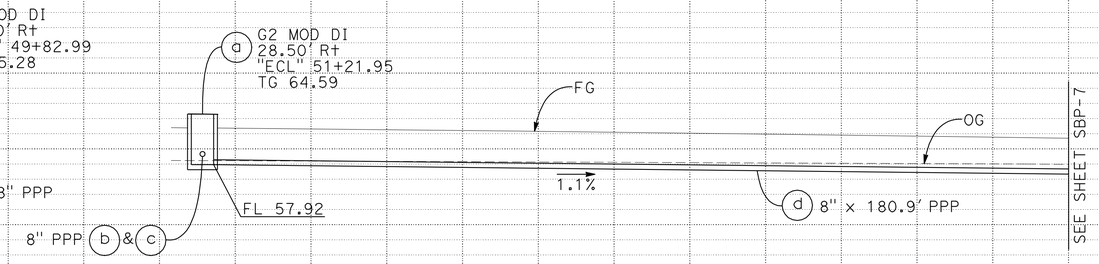

DRAINAGE SYSTEM No. 803

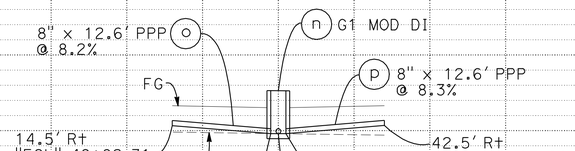

DRAINAGE SYSTEM No. 802

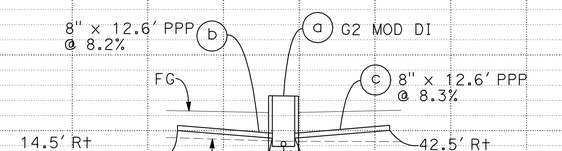

DRAINAGE SYSTEM No. 803

SUBSURFACE DRAINAGE PROFILES
UNDERDRAIN
(eBART)

SCALE: Horiz 1" = 10'
Vert 1" = 10'

SBP-6

REVISED BY	DATE REVISED
NK	8/9/11

NIKKI KOBAYASHI — BRUCE ZAENI — CALCULATED-DESIGNED BY — CHECKED BY

CONSULTANT FUNCTIONAL SUPERVISOR: TOM HILLESLAND

STATE OF CALIFORNIA - DEPARTMENT OF TRANSPORTATION — Caltrans

LAST REVISION 8-9-11 — DATE PLOTTED => 19-JAN-2012 — TIME PLOTTED => 06:49

Dist	COUNTY	ROUTE	POST MILES TOTAL PROJECT	SHEET No.	TOTAL SHEETS
04	CC	4	27.3/R29.0	197	950

REGISTERED CIVIL ENGINEER 8/9/11 DATE

1-17-12
PLANS APPROVAL DATE

REGISTERED PROFESSIONAL ENGINEER T.E. Hillesland No. C54200 Exp. 12/31/11 CIVIL STATE OF CALIFORNIA

THE STATE OF CALIFORNIA OR ITS OFFICERS OR AGENTS SHALL NOT BE RESPONSIBLE FOR THE ACCURACY OR COMPLETENESS OF SCANNED COPIES OF THIS PLAN SHEET.

MOFFATT & NICHOL
1300 CLAY ST, STE 550
OAKLAND, CA 94612

CCTA
2999 OAK ROAD, SUITE 100
WALNUT CREEK, CA 94597

NOTE:

ALL UTILITIES SHOWN ON THESE PLANS ARE APPROXIMATE AND SHALL BE VERIFIED BY THE CONTRACTOR PRIOR TO CONSTRUCTION. SEE UTILITY PLANS FOR MORE DETAILS.

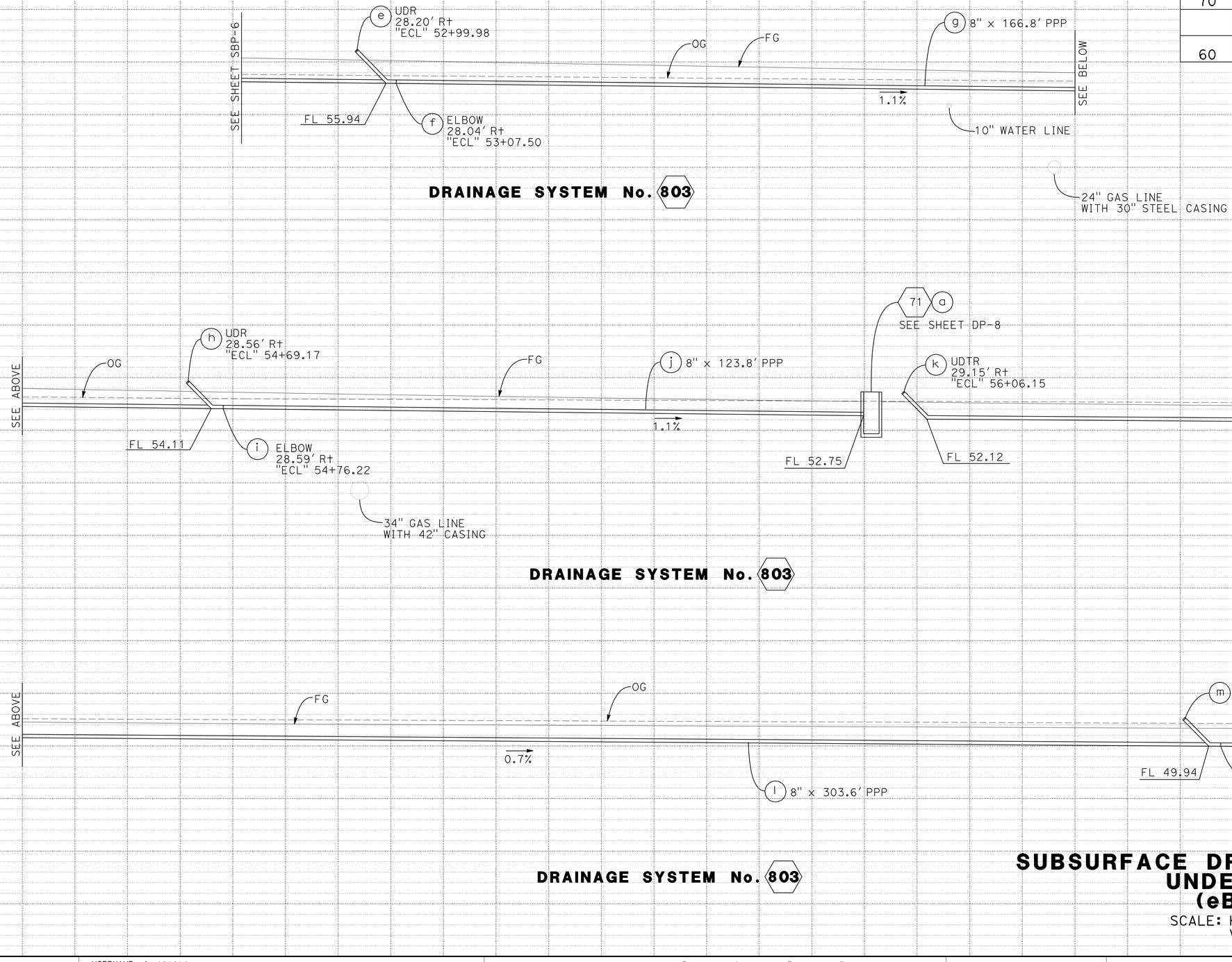

SUBSURFACE DRAINAGE PROFILES UNDERDRAIN (eBART)

SCALE: Horiz 1" = 10'
Vert 1" = 10'

SBP-7

REVISED BY	DATE REVISED
NK	8/9/11

NIKKI KOBAYASHI
BRUCE ZAENI
CALCULATED-DESIGNED BY
CHECKED BY
CONSULTANT FUNCTIONAL SUPERVISOR
TOM HILLESLAND

STATE OF CALIFORNIA - DEPARTMENT OF TRANSPORTATION
Caltrans

LAST REVISION 8-9-11
DATE PLOTTED => 19-JAN-2012
TIME PLOTTED => 06:49

Dist	COUNTY	ROUTE	POST MILES TOTAL PROJECT	SHEET No.	TOTAL SHEETS
04	CC	4	27.3/R29.0	198	950

REGISTERED CIVIL ENGINEER 8/9/11 DATE

1-17-12
PLANS APPROVAL DATE

REGISTERED PROFESSIONAL ENGINEER T.E. Hillesland No. C54200 Exp. 12/31/11 CIVIL STATE OF CALIFORNIA

THE STATE OF CALIFORNIA OR ITS OFFICERS OR AGENTS SHALL NOT BE RESPONSIBLE FOR THE ACCURACY OR COMPLETENESS OF SCANNED COPIES OF THIS PLAN SHEET.

MOFFATT & NICHOL
1300 CLAY ST, STE 550
OAKLAND, CA 94612

CCTA
2999 OAK ROAD, SUITE 100
WALNUT CREEK, CA 94597

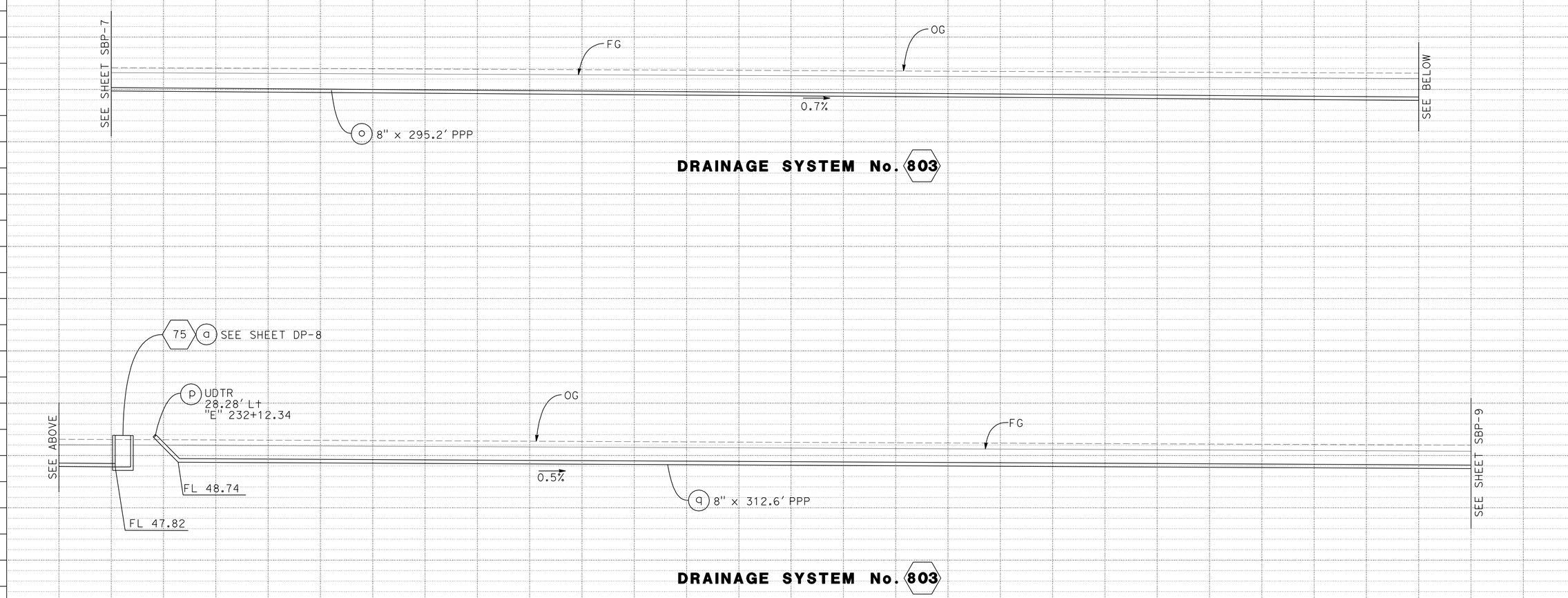

SUBSURFACE DRAINAGE PROFILES UNDERDRAIN (eBART)

SCALE: Horiz 1" = 10'
Vert 1" = 10'

SBP-8

STATE OF CALIFORNIA - DEPARTMENT OF TRANSPORTATION
Caltrans

CONSULTANT FUNCTIONAL SUPERVISOR: TOM HILLESLAND
CALCULATED-DESIGNED BY: NIKKI KOBAYASHI
CHECKED BY: BRUCE ZAENI
REVISED BY: NK
DATE REVISED: 8/9/11

LAST REVISION 8-9-11
DATE PLOTTED => 19-JAN-2012
TIME PLOTTED => 06:49

Dist	COUNTY	ROUTE	POST MILES TOTAL PROJECT	SHEET No.	TOTAL SHEETS
04	CC	4	27.3/R29.0	199	950

REGISTERED CIVIL ENGINEER 8/9/11 DATE

1-17-12
PLANS APPROVAL DATE

REGISTERED PROFESSIONAL ENGINEER T.E. Hillesland No. C54200 Exp. 12/31/11 CIVIL STATE OF CALIFORNIA

THE STATE OF CALIFORNIA OR ITS OFFICERS OR AGENTS SHALL NOT BE RESPONSIBLE FOR THE ACCURACY OR COMPLETENESS OF SCANNED COPIES OF THIS PLAN SHEET.

MOFFATT & NICHOL
1300 CLAY ST, STE 550
OAKLAND, CA 94612

CCTA
2999 OAK ROAD, SUITE 100
WALNUT CREEK, CA 94597

NOTE:

ALL UTILITIES SHOWN ON THESE PLANS ARE APPROXIMATE AND SHALL BE VERIFIED BY THE CONTRACTOR PRIOR TO CONSTRUCTION. SEE UTILITY PLANS FOR MORE DETAILS.

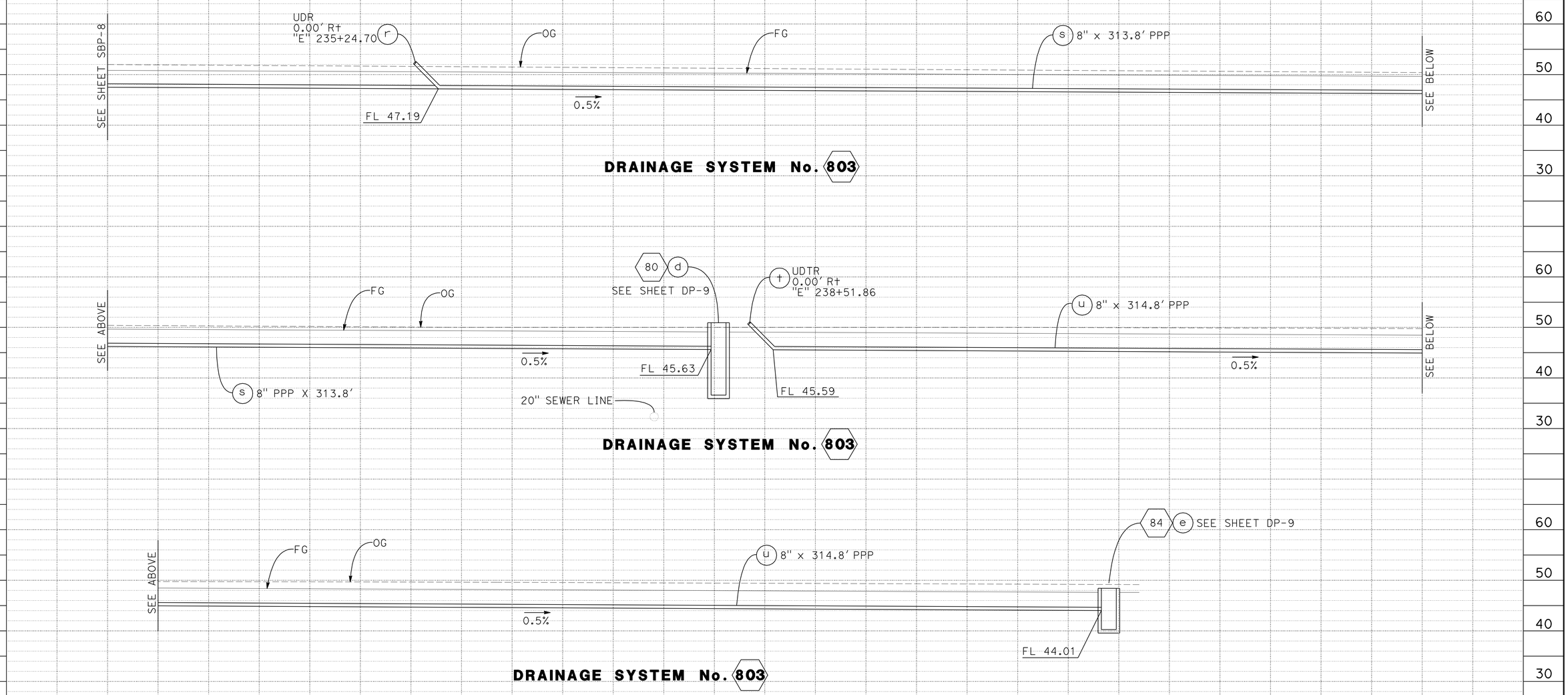

SUBSURFACE DRAINAGE PROFILES UNDERDRAIN (eBART)

SCALE: Horiz 1" = 10'
Vert 1" = 10'

SBP-9

REVISED BY	DATE REVISED
NK	8/9/11

NIKKI KOBAYASHI
BRUCE ZAENI
CALCULATED-DESIGNED BY
CHECKED BY
CONSULTANT FUNCTIONAL SUPERVISOR
TOM HILLESLAND

STATE OF CALIFORNIA - DEPARTMENT OF TRANSPORTATION
Caltrans

LAST REVISION 8-9-11
DATE PLOTTED => 19-JAN-2012
TIME PLOTTED => 06:49

Dist	COUNTY	ROUTE	POST MILES TOTAL PROJECT	SHEET No.	TOTAL SHEETS
04	CC	4	27.3/R29.0	200	950

REGISTERED CIVIL ENGINEER 8/9/11 DATE

1-17-12
PLANS APPROVAL DATE

REGISTERED PROFESSIONAL ENGINEER T.E. Hillesland No. C54200 Exp. 12/31/11 CIVIL STATE OF CALIFORNIA

THE STATE OF CALIFORNIA OR ITS OFFICERS OR AGENTS SHALL NOT BE RESPONSIBLE FOR THE ACCURACY OR COMPLETENESS OF SCANNED COPIES OF THIS PLAN SHEET.

MOFFATT & NICHOL
1300 CLAY ST, STE 550
OAKLAND, CA 94612

CCTA
2999 OAK ROAD, SUITE 100
WALNUT CREEK, CA 94597

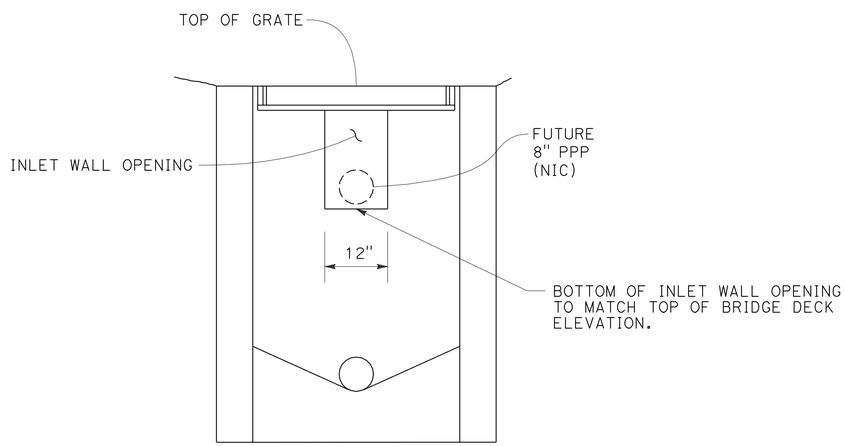

SECTION A-A

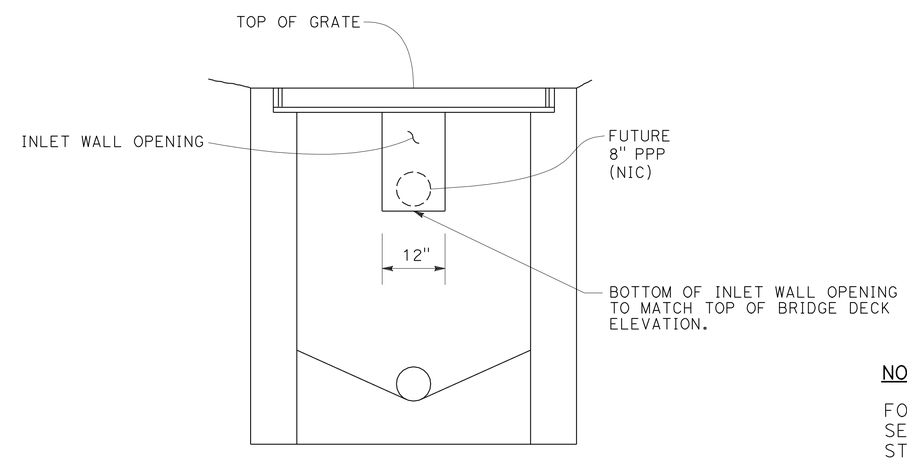

SECTION B-B

NOTE:

FOR DIMENSIONS AND DETAILS NOT SHOWN, SEE TYPE G1 & G2 INLET DETAILS ON STANDARD PLANS D73 AND D77A.

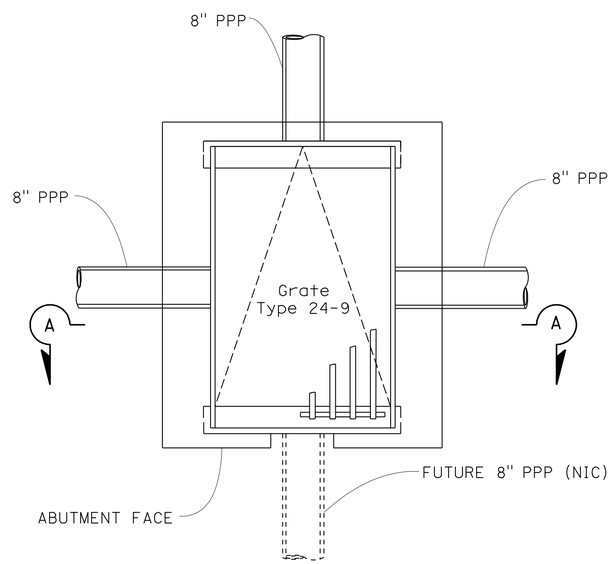

PLAN

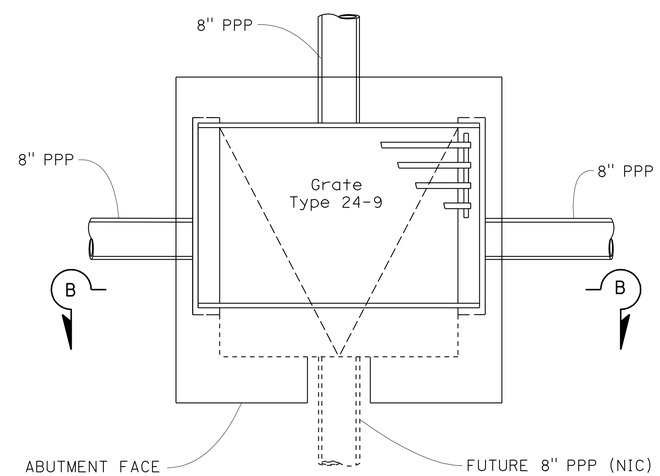

PLAN 802 a

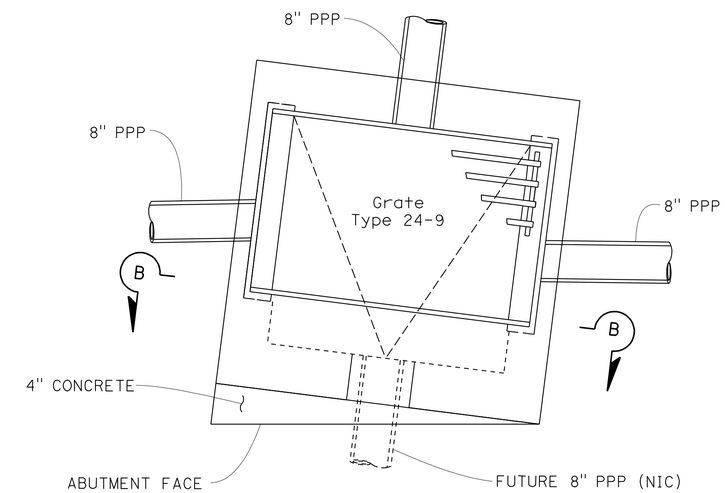

PLAN 803 a

G1 MOD INLET DETAIL 801 j 802 n

G2 MOD INLET DETAIL

SUBSURFACE DRAINAGE DETAILS
UNDERDRAIN
(eBART)

NO SCALE

SBD-1

REVISED BY	NK
DATE REVISED	8/9/11
NIKKI KOBAYASHI	
BRUCE ZAENI	
CALCULATED-DESIGNED BY	
CHECKED BY	
CONSULTANT FUNCTIONAL SUPERVISOR	
TOM HILLESLAND	

STATE OF CALIFORNIA - DEPARTMENT OF TRANSPORTATION

Caltrans

LAST REVISION 8-9-11
DATE PLOTTED => 19-JAN-2012
TIME PLOTTED => 06:49