Dist	COUNTY	ROUTE	POST MILES TOTAL PROJECT	SHEET No.	TOTAL SHEETS
04	CC	4,80	R15.4/R16.7, 7.3/7.6	1	48

STATE OF CALIFORNIA

DEPARTMENT OF TRANSPORTATION

ACHSNH-P004(145)E

PROJECT PLANS FOR CONSTRUCTION ON

STATE HIGHWAY

IN CONTRA COSTA COUNTY
IN CONCORD AND PINOLE
ON ROUTE 4 FROM PORT CHICAGO HIGHWAY UNDERCROSSING TO 0.1 MILE WEST OF WILLOW PASS ROAD UNDERCROSSING AND ON ROUTE 80 FROM 0.3 MILE WEST OF APPIAN WAY OVERCROSSING TO APPIAN WAY OVERCROSSING

TO BE SUPPLEMENTED BY STANDARD PLANS DATED MAY 2006

INDEX OF PLANS

SHEET No.	DESCRIPTION
1	TITLE SHEET AND LOCATION MAP
2 - 3	TYPICAL CROSS SECTIONS
4 - 11	LAYOUT
12 - 19	CONSTRUCTION DETAILS
20	TEMPORARY WATER POLLUTION CONTROL QUANTITIES
21	EROSION CONTROL DETAILS AND QUANTITIES
22	DRAINAGE DETAILS
23 - 24	UTILITY PLAN
25 - 27	CONSTRUCTION AREA SIGNS
28 - 29	PAVEMENT DELINEATION PLAN AND QUANTITIES
30 - 31	SUMMARY OF QUANTITIES
32 - 48	REVISED AND NEW STANDARD PLANS

THE STANDARD PLANS LIST APPLICABLE TO THIS CONTRACT IS INCLUDED IN THE NOTICE TO BIDDERS AND SPECIAL PROVISIONS BOOK.

LOCATION MAP

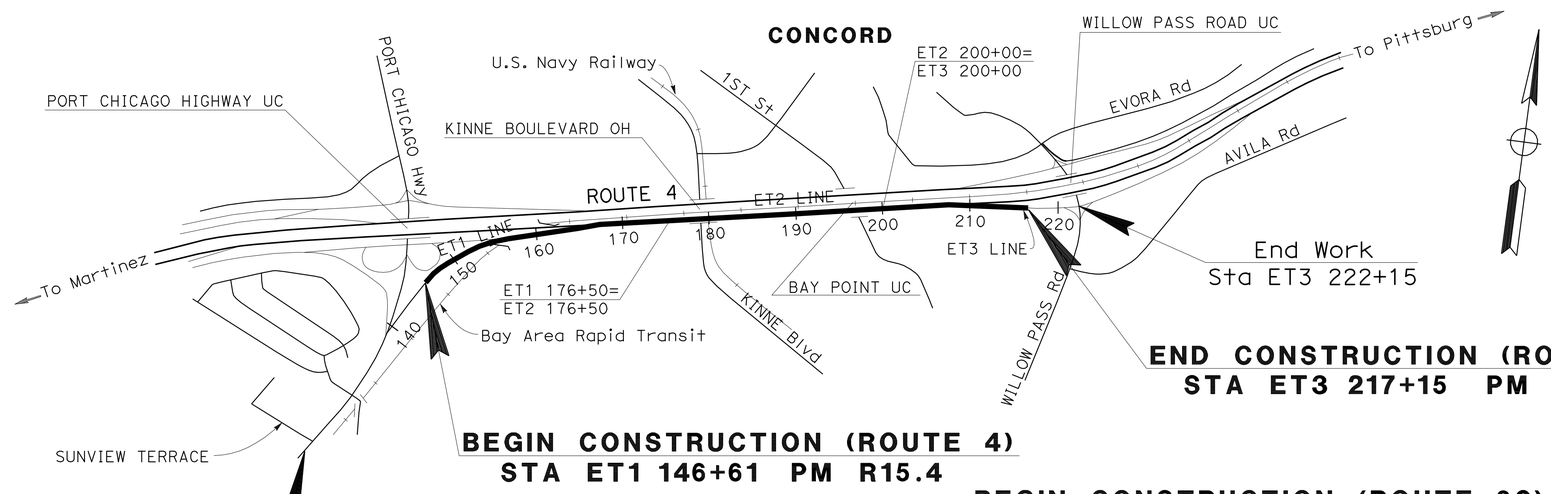

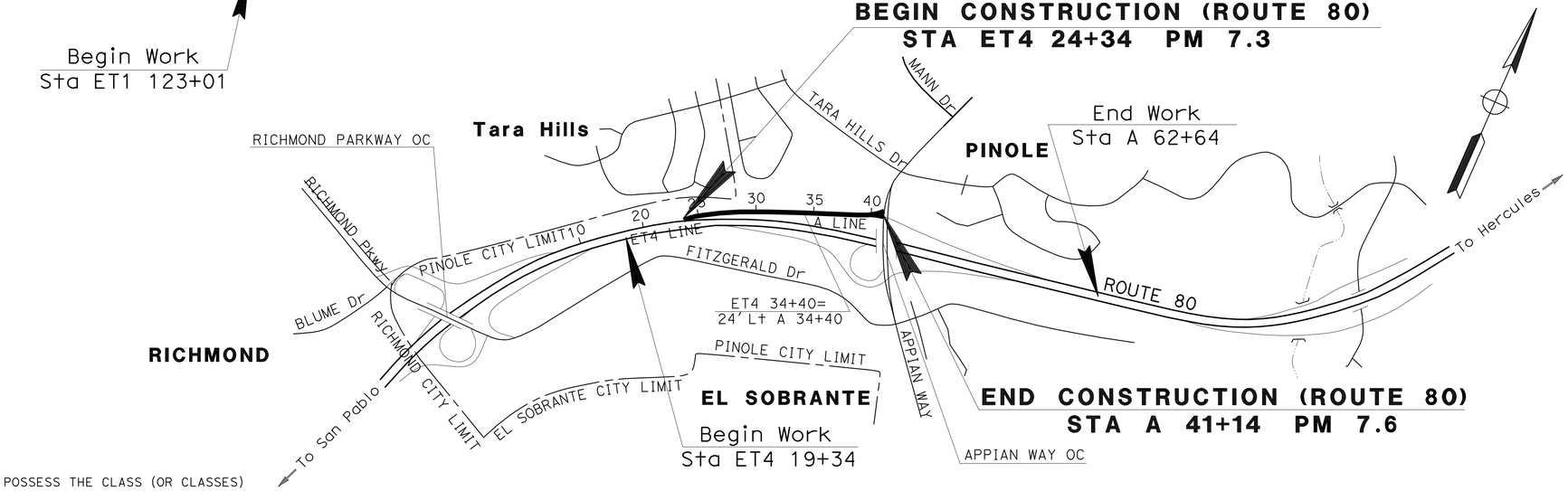

THE CONTRACTOR SHALL POSSESS THE CLASS (OR CLASSES) OF LICENSE AS SPECIFIED IN THE "NOTICE TO BIDDERS."

NO SCALE

PROJECT MANAGER: LAURIE LAU

DESIGN ENGINEER: GEORGE LO

5-3-12
PROJECT ENGINEER REGISTERED CIVIL ENGINEER — DATE

June 18, 2012
PLANS APPROVAL DATE

REGISTERED PROFESSIONAL ENGINEER — Ber-lin Wei — No. 49855 — Exp. 9-30-12 — CIVIL — STATE OF CALIFORNIA

THE STATE OF CALIFORNIA OR ITS OFFICERS OR AGENTS SHALL NOT BE RESPONSIBLE FOR THE ACCURACY OR COMPLETENESS OF SCANNED COPIES OF THIS PLAN SHEET.

CONTRACT No.	04-1G5504
PROJECT ID	0400020034

LAST REVISION 06-18-12 — DATE PLOTTED => 15-AUG-2012 — TIME PLOTTED => 09:08

Dist	COUNTY	ROUTE	POST MILES TOTAL PROJECT	SHEET No.	TOTAL SHEETS
04	CC	4,80	R15.4/R16.7, 7.3/7.6	2	48

REGISTERED CIVIL ENGINEER 5-3-12 DATE

6-18-12
PLANS APPROVAL DATE

REGISTERED PROFESSIONAL ENGINEER Ber-lin Wei No. 49855 Exp. 9-30-12 CIVIL STATE OF CALIFORNIA

THE STATE OF CALIFORNIA OR ITS OFFICERS OR AGENTS SHALL NOT BE RESPONSIBLE FOR THE ACCURACY OR COMPLETENESS OF SCANNED COPIES OF THIS PLAN SHEET.

NOTES:

1. DIMENSIONS OF THE PAVEMENT STRUCTURES (STRUCTURAL SECTIONS) ARE SUBJECT TO TOLERANCES SPECIFIED IN THE STANDARD SPECIFICATIONS.
2. SUPERELEVATION AS SHOWN OR AS DIRECTED BY THE ENGINEER.
3. LIMIT OF VEGETATION CONTROL (ASPHALT COMPOSITE) EXTENDS HORIZONTALLY FROM THE HMA DIKE BACK TO HINGE POINT UNLESS OTHERWISE NOTED.
4. CONTRACTOR SHALL REPLACE THE PAD AT CONTRACTOR'S EXPENSE IF THE PAD BELOW THE EXISTING DIKE WERE DAMAGED DURING REMOVAL PROCESS.

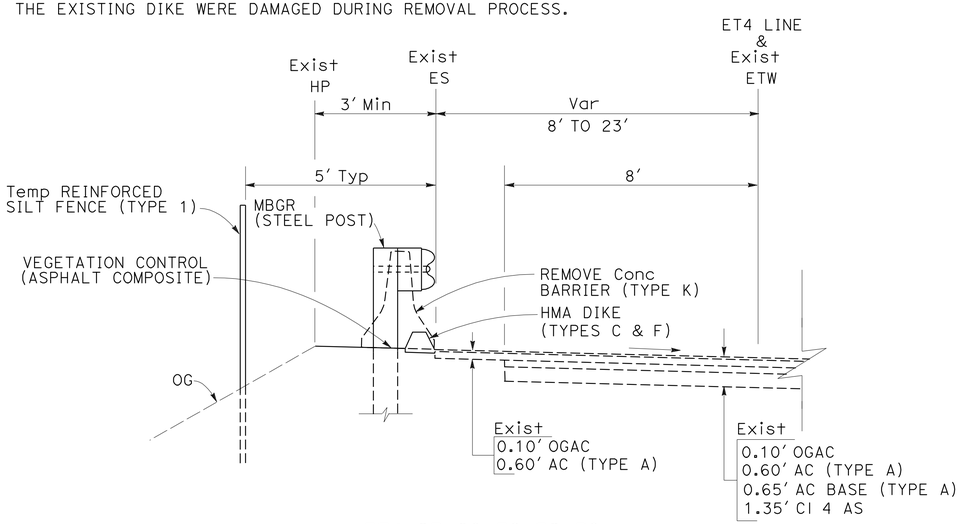

ET4 27+60 TO 32+70
WB APPIAN WAY ON-RAMP
ROUTE 80

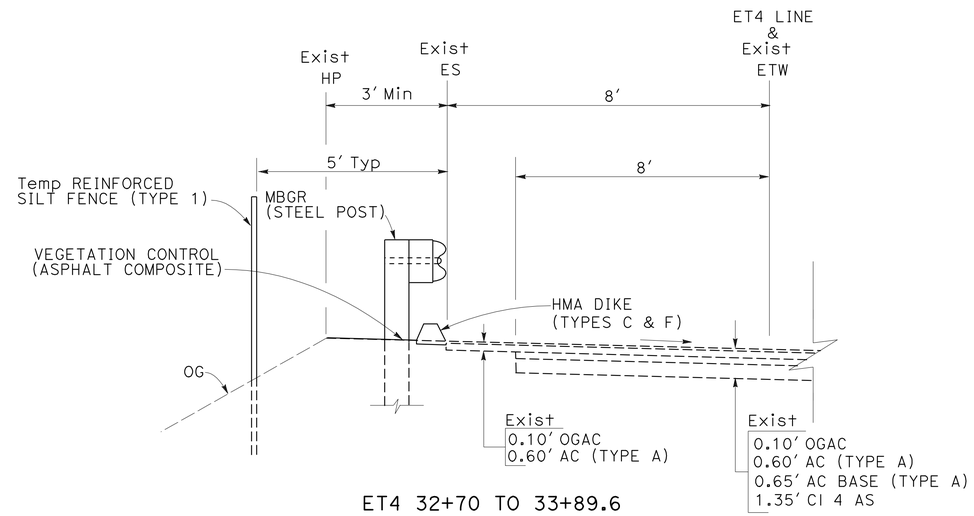

ET4 32+70 TO 33+89.6
WB APPIAN WAY ON-RAMP
ROUTE 80

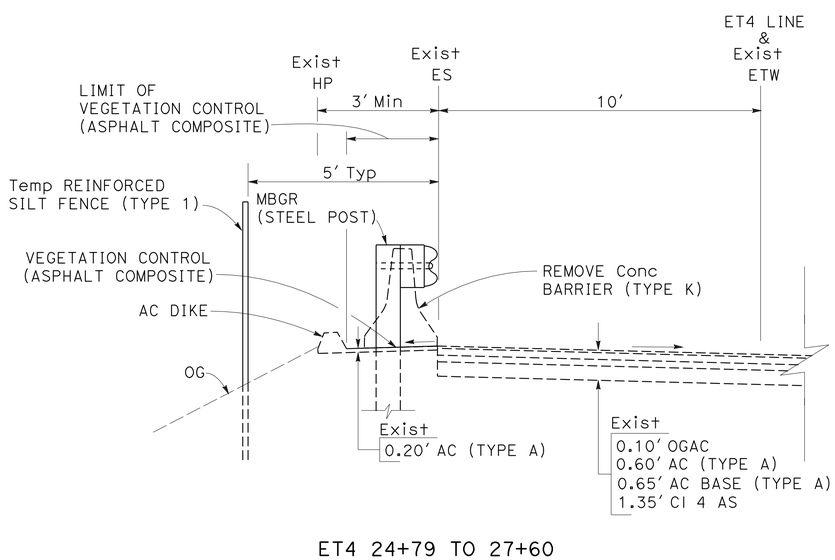

ET4 24+79 TO 27+60
WB APPIAN WAY ON-RAMP
ROUTE 80

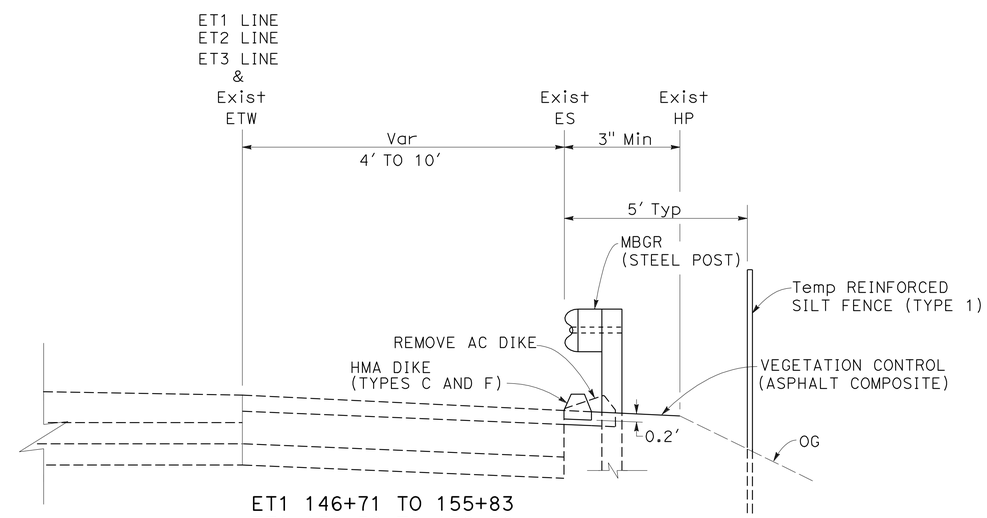

ET1 146+71 TO 155+83
ET1 158+50 TO 176+50
ET2 176+50 TO 177+08
ET2 191+60 TO 200+00
ET3 200+00 TO 216+70
BETWEEN PORT CHICAGO Hwy ON-RAMP AND WILLOW PASS Rd OFF-RAMP
ROUTE 4

TYPICAL CROSS SECTIONS
NO SCALE

X-1

REVISED BY	DATE REVISED
LC	2/17/12

CALCULATED-DESIGNED BY: HUNG C HSU, LLEWELLYN CHAN
CHECKED BY: BER-LIN WEI
FUNCTIONAL SUPERVISOR: GEORGE LO

STATE OF CALIFORNIA - DEPARTMENT OF TRANSPORTATION
Caltrans
DESIGN

LAST REVISION 04-30-12 | DATE PLOTTED => 15-AUG-2012 | TIME PLOTTED => 09:08

Dist	COUNTY	ROUTE	POST MILES TOTAL PROJECT	SHEET No.	TOTAL SHEETS
04	CC	4,80	R15.4/R16.7, 7.3/7.6	3	48

REGISTERED CIVIL ENGINEER 5-3-12 DATE

6-18-12
PLANS APPROVAL DATE

REGISTERED PROFESSIONAL ENGINEER Ber-lin Wei No. 49855 Exp. 9-30-12 CIVIL STATE OF CALIFORNIA

THE STATE OF CALIFORNIA OR ITS OFFICERS OR AGENTS SHALL NOT BE RESPONSIBLE FOR THE ACCURACY OR COMPLETENESS OF SCANNED COPIES OF THIS PLAN SHEET.

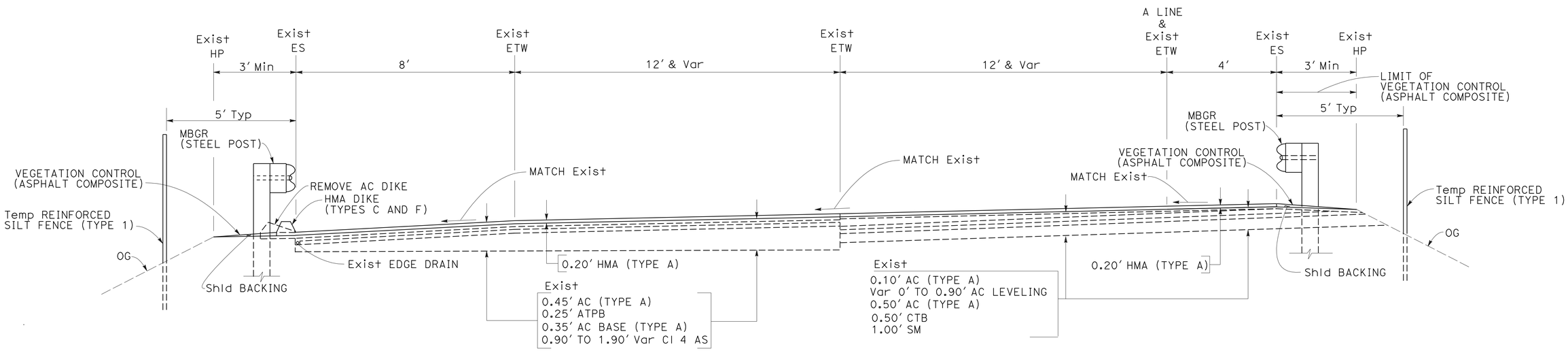

A 36+50 TO 41+14
WB APPIAN WAY ON-RAMP
ROUTE 80

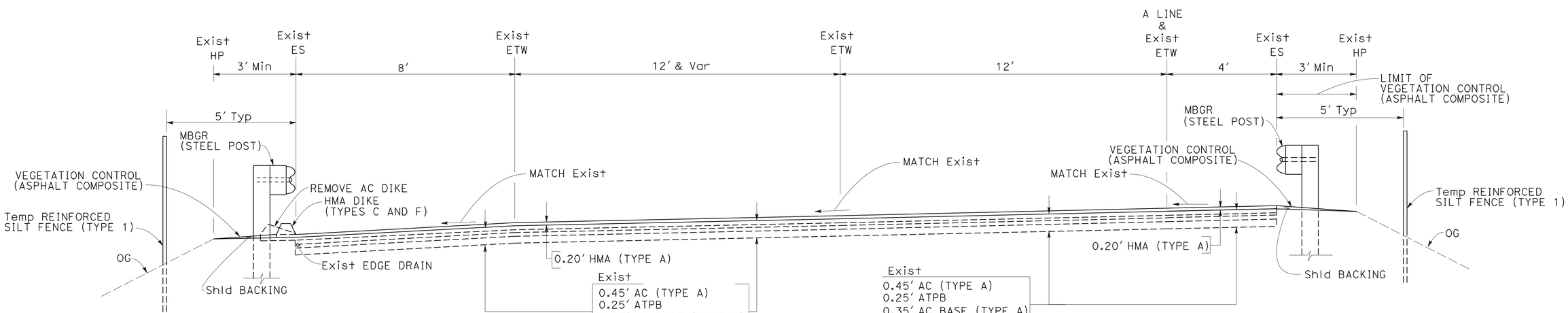

A 33+89.6 TO 36+50
WB APPIAN WAY ON-RAMP
ROUTE 80

TYPICAL CROSS SECTIONS

NO SCALE

FOR NOTES, ABBREVIATIONS AND LEGEND, SEE SHEET X-1

X-2

REVISED BY	DATE REVISED
LC	2/17/12

CALCULATED-DESIGNED BY: HUNG C HSU, LLEWELLYN CHAN
CHECKED BY: BER-LIN WEI

FUNCTIONAL SUPERVISOR: GEORGE LO

STATE OF CALIFORNIA - DEPARTMENT OF TRANSPORTATION
Caltrans
DESIGN

LAST REVISION 04-30-12 | DATE PLOTTED => 15-AUG-2012 | TIME PLOTTED => 09:08

Dist	COUNTY	ROUTE	POST MILES TOTAL PROJECT	SHEET No.	TOTAL SHEETS
04	CC	4,80	R15.4/R16.7, 7.3/7.6	4	48

REGISTERED CIVIL ENGINEER 5-3-12 DATE

6-18-12
PLANS APPROVAL DATE

REGISTERED PROFESSIONAL ENGINEER Ber-lin Wei No. 49855 Exp. 9-30-12 CIVIL STATE OF CALIFORNIA

THE STATE OF CALIFORNIA OR ITS OFFICERS OR AGENTS SHALL NOT BE RESPONSIBLE FOR THE ACCURACY OR COMPLETENESS OF SCANNED COPIES OF THIS PLAN SHEET.

NOTE:

RIGHT OF WAY LIMITS ARE INDETERMINATE, AND ARE NOT SHOWN. THE CONTRACTOR MUST CONTACT RIGHT OF WAY ENGINEERING AT THE DISTRICT OFFICE FOR CONDITIONS OF USE PRIOR TO COMMENCING WORK.

LEGEND:

HMA SURFACING

COLD PLANE AC PAVEMENT AND HMA SURFACING

—xx— TRSF — TEMPORARY REINFORCED SILT FENCE (TYPE 1)

ABBREVIATION:

BART BAY AREA RAPID TRANSIT

CURVE DATA

No. ⑮	R	Δ	T	L	N-COORDINATE	E-COORDINATE
1	13539′	00° 12′ 59"	25.56′	51.12′	2188912.018	6135976.551
2	49472′	00° 09′ 47"	70.34′	140.68′	2179291.937	6170597.026
3	752′	01° 19′ 18"	8.67′	17.34′	2192469.060	6123693.021
4	968′	02° 00′ 04"	16.91′	33.81′	2192405.773	6123899.848
5	4258′	00° 57′ 31"	35.61′	71.23′	2191295.745	6126996.635
6	384′	02° 09′ 04"	7.22′	14.43′	2192628.859	6123358.747
7	1500′	23° 35′ 23"	313.22′	617.57′	2192246.422	6124408.868
8	1593′	02° 10′ 47"	30.31′	60.60′	2192215.193	6124508.518
9	846′	04° 46′ 25"	35.27′	70.49′	2192733.846	6123970.004
10	2163′	00° 34′ 55"	10.99′	21.97′	2191694.984	6124779.557
11	1546′	08° 15′ 47"	111.70′	223.00′	2192203.961	6124429.287
12	1581′	16° 35′ 19"	230.44′	457.65′	2192163.336	6124427.556

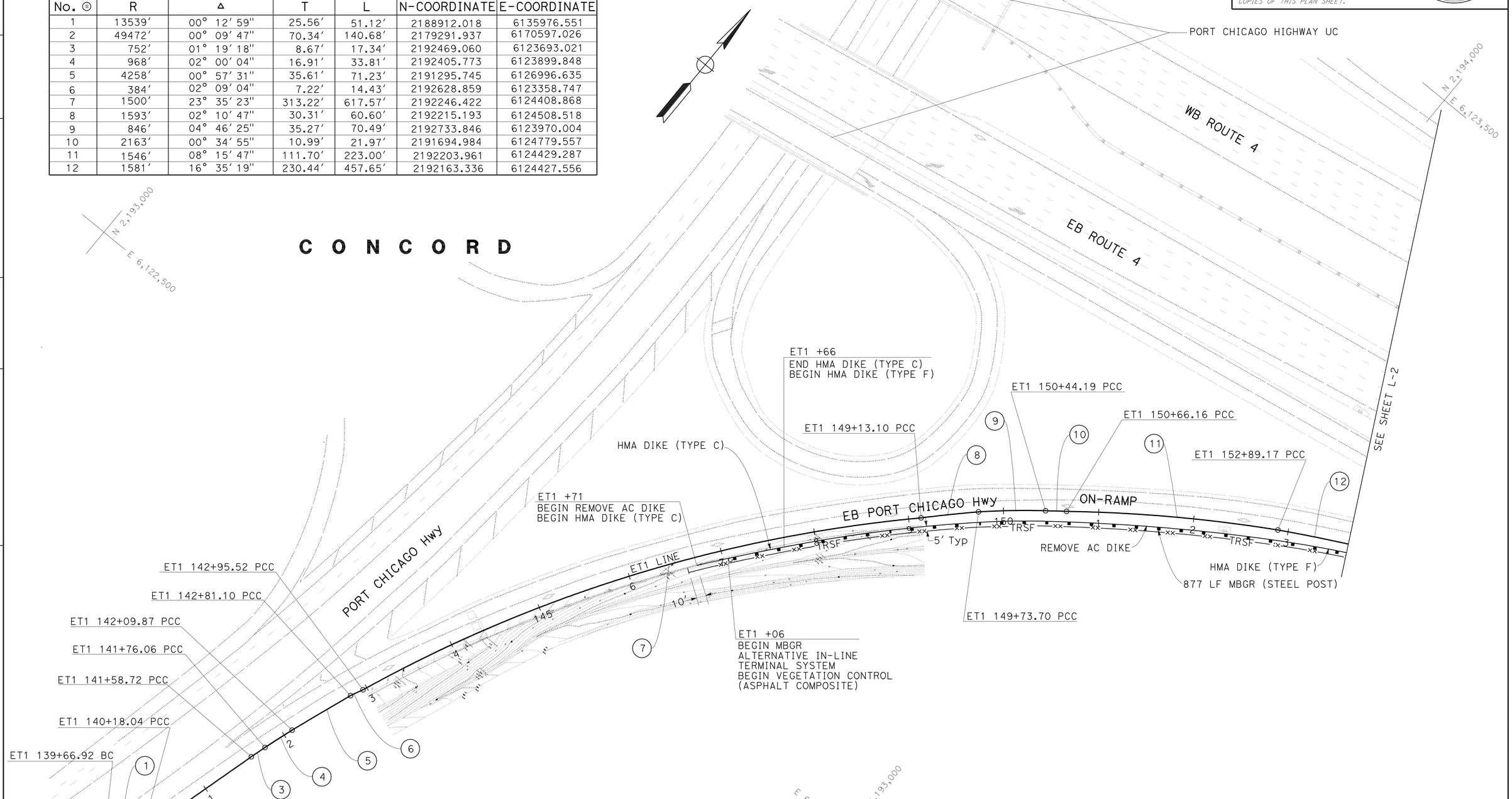

LAYOUT
SCALE: 1" = 50′

L-1

STATE OF CALIFORNIA - DEPARTMENT OF TRANSPORTATION
Caltrans
DESIGN
FUNCTIONAL SUPERVISOR: GEORGE LO
REVISED BY: LC — DATE REVISED: 12/22/11
CALCULATED-DESIGNED BY: HUNG C HSU, LLEWELLYN CHAN — CHECKED BY: BER-LIN WEI

LAST REVISION 04-24-12 | DATE PLOTTED => 15-AUG-2012 | TIME PLOTTED => 09:08

Dist	COUNTY	ROUTE	POST MILES TOTAL PROJECT	SHEET No.	TOTAL SHEETS
04	CC	4,80	R15.4/R16.7, 7.3/7.6	5	48

REGISTERED CIVIL ENGINEER 5-3-12 DATE

6-18-12
PLANS APPROVAL DATE

REGISTERED PROFESSIONAL ENGINEER Ber-lin Wei No. 49855 Exp. 9-30-12 CIVIL STATE OF CALIFORNIA

THE STATE OF CALIFORNIA OR ITS OFFICERS OR AGENTS SHALL NOT BE RESPONSIBLE FOR THE ACCURACY OR COMPLETENESS OF SCANNED COPIES OF THIS PLAN SHEET.

NOTE:

RIGHT OF WAY LIMITS ARE INDETERMINATE, AND ARE NOT SHOWN.
THE CONTRACTOR MUST CONTACT RIGHT OF WAY ENGINEERING AT THE DISTRICT OFFICE FOR CONDITIONS OF USE PRIOR TO COMMENCING WORK.

CURVE DATA

No. ⊕	R	Δ	T	L	N-COORDINATE	E-COORDINATE
12	1581′	16° 35′ 19"	230.44′	457.65′	2192163.336	6124427.556
13	1541′	01° 12′ 46"	16.31′	32.63′	2192200.086	6124412.456
14	6752′	00° 41′ 19"	40.58′	81.15′	2187089.926	6125429.360
15	6752′	00° 59′ 04"	58.00′	116.00′	2200364.538	6122953.234
16	3423′	00° 35′ 47"	17.81′	35.62′	2197112.455	6123648.529
17	1262′	02° 11′ 13"	24.08′	48.15′	2195021.403	6124194.477
18	33265′	00° 11′ 11"	54.09′	108.17′	2161790.707	6133562.186
19	1941′	05° 06′ 24"	86.54′	172.97′	2192013.269	6125327.633

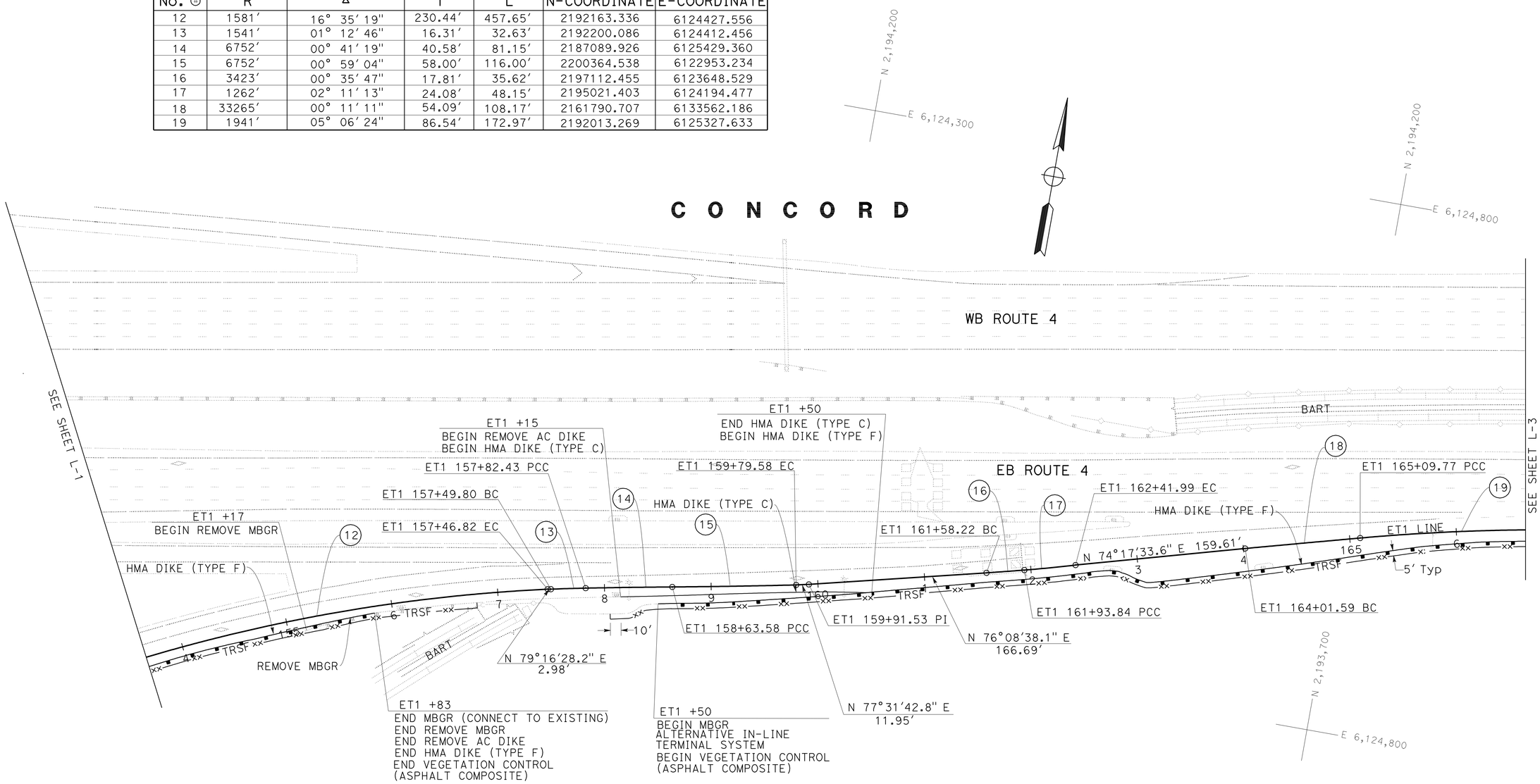

FOR NOTES, ABBREVIATIONS AND LEGEND, SEE SHEET L-1

LAYOUT

SCALE: 1" = 50′

L-2

REVISED BY	DATE REVISED
LC	12/22/11

HUNG C HSU
LLEWELLYN CHAN
BER-LIN WEI

CALCULATED-DESIGNED BY
CHECKED BY

FUNCTIONAL SUPERVISOR
GEORGE LO

STATE OF CALIFORNIA - DEPARTMENT OF TRANSPORTATION
Caltrans
DESIGN

LAST REVISION 06-18-12
DATE PLOTTED => 15-AUG-2012
TIME PLOTTED => 09:08

Dist	COUNTY	ROUTE	POST MILES TOTAL PROJECT	SHEET No.	TOTAL SHEETS
04	CC	4,80	R15.4/R16.7, 7.3/7.6	6	48

REGISTERED CIVIL ENGINEER 5-3-12 DATE

6-18-12
PLANS APPROVAL DATE

REGISTERED PROFESSIONAL ENGINEER Ber-lin Wei No. 49855 Exp. 9-30-12 CIVIL STATE OF CALIFORNIA

THE STATE OF CALIFORNIA OR ITS OFFICERS OR AGENTS SHALL NOT BE RESPONSIBLE FOR THE ACCURACY OR COMPLETENESS OF SCANNED COPIES OF THIS PLAN SHEET.

NOTE:

RIGHT OF WAY LIMITS ARE INDETERMINATE, AND ARE NOT SHOWN. THE CONTRACTOR MUST CONTACT RIGHT OF WAY ENGINEERING AT THE DISTRICT OFFICE FOR CONDITIONS OF USE PRIOR TO COMMENCING WORK.

CURVE DATA

No. ⊕	R	Δ	T	L	N-COORDINATE	E-COORDINATE
19	1941′	05° 06′ 24"	86.54′	172.97′	2192013.269	6125327.633
20	1245′	01° 38′ 35"	17.85′	35.71′	2195150.900	6124775.884
21	16118′	00° 27′ 13"	63.79′	127.57′	2209731.949	6121844.928
22	23507′	01° 06′ 19"	226.73′	453.44′	2170947.160	6129961.008
23	12314′	00° 16′ 58"	30.37′	60.75′	2181968.416	6128000.389
24	2750′	01° 00′ 06"	24.04′	48.07′	2191371.175	6126253.350
25	2750′	00° 42′ 24"	16.96′	33.92′	2196795.475	6125343.297
26	27835′	00° 13′ 30"	54.69′	109.37′	2221481.932	6120887.819

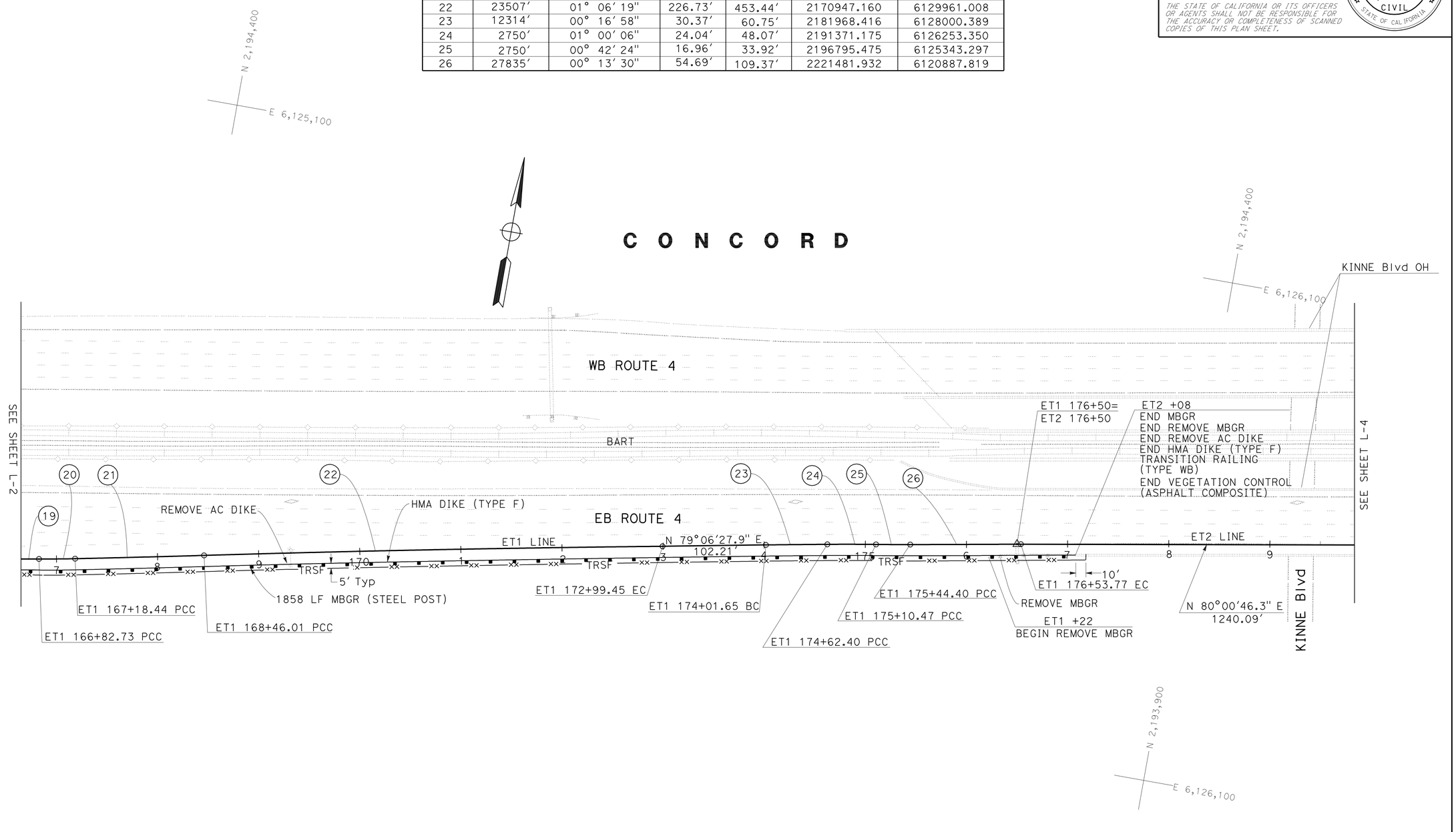

FOR NOTES, ABBREVIATIONS AND LEGEND, SEE SHEET L-1

LAYOUT

SCALE: 1" = 50′

L-3

LC	12/22/11
REVISED BY	DATE REVISED
HUNG C HSU LLEWELLYN CHAN	BER-LIN WEI
CALCULATED-DESIGNED BY	CHECKED BY
FUNCTIONAL SUPERVISOR	GEORGE LO

STATE OF CALIFORNIA - DEPARTMENT OF TRANSPORTATION

Caltrans® DESIGN

LAST REVISION 04-25-11 | DATE PLOTTED => 15-AUG-2012 | TIME PLOTTED => 09:08

Dist	COUNTY	ROUTE	POST MILES TOTAL PROJECT	SHEET No.	TOTAL SHEETS
04	CC	4,80	R15.4/R16.7, 7.3/7.6	7	48

REGISTERED CIVIL ENGINEER 5-3-12 DATE

6-18-12
PLANS APPROVAL DATE

REGISTERED PROFESSIONAL ENGINEER Ber-lin Wei No. 49855 Exp. 9-30-12 CIVIL STATE OF CALIFORNIA

THE STATE OF CALIFORNIA OR ITS OFFICERS OR AGENTS SHALL NOT BE RESPONSIBLE FOR THE ACCURACY OR COMPLETENESS OF SCANNED COPIES OF THIS PLAN SHEET.

NOTE:

RIGHT OF WAY LIMITS ARE INDETERMINATE, AND ARE NOT SHOWN. THE CONTRACTOR MUST CONTACT RIGHT OF WAY ENGINEERING AT THE DISTRICT OFFICE FOR CONDITIONS OF USE PRIOR TO COMMENCING WORK.

CURVE DATA

No. ⊕	R	Δ	T	L	N-COORDINATE	E-COORDINATE
27	18333′	00°29′02"	77.43′	154.86′	2176297.852	6130501.472
28	28417′	00°24′36"	101.70′	203.41′	2166367.377	6132255.303

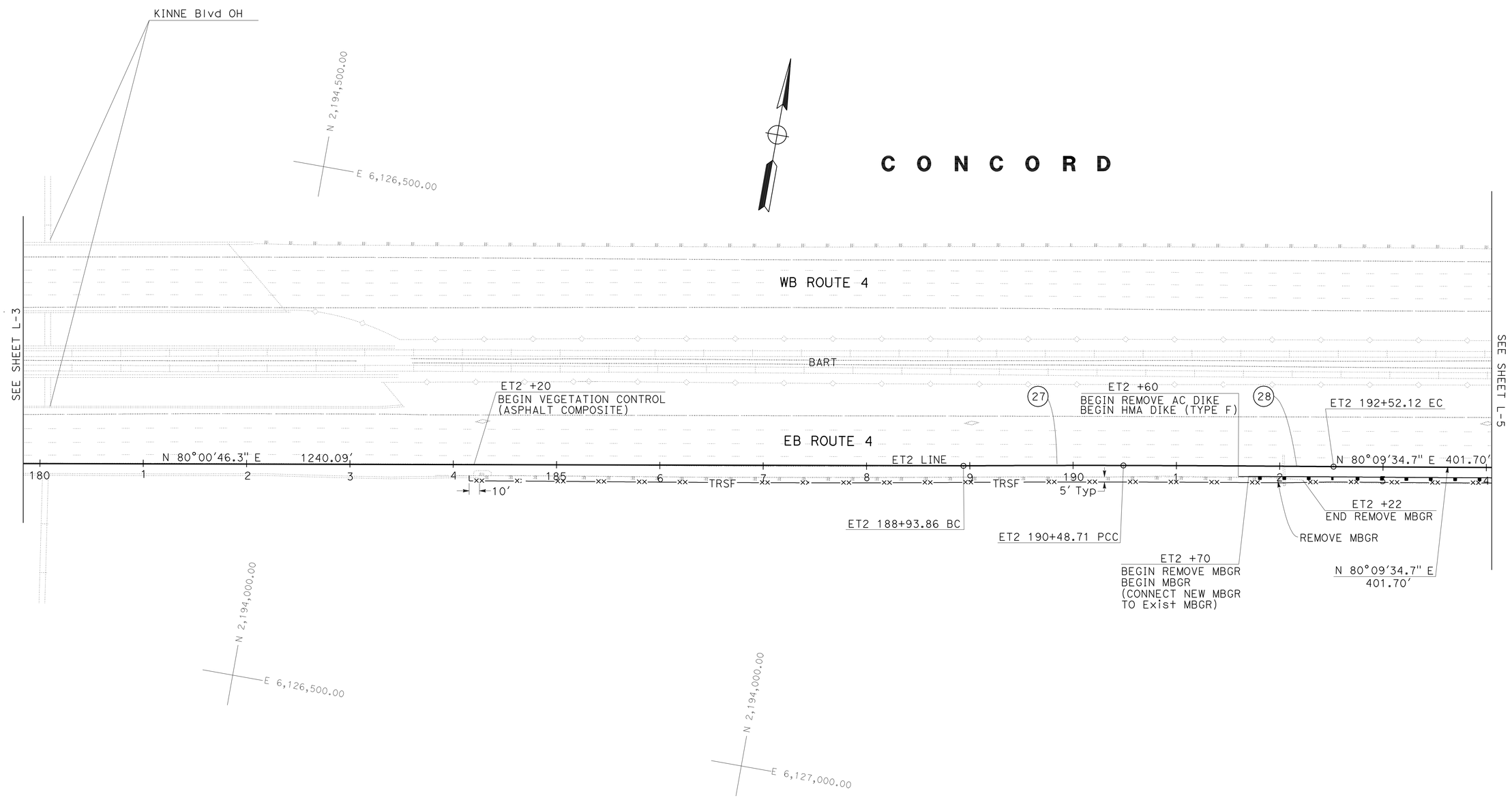

FOR NOTES, ABBREVIATIONS AND LEGEND, SEE SHEET L-1

LAYOUT
SCALE: 1" = 50′

L-4

REVISED BY	LC
DATE REVISED	12/22/11
CALCULATED-DESIGNED BY	HUNG C HSU LLEWELLYN CHAN
CHECKED BY	BER-LIN WEI
FUNCTIONAL SUPERVISOR	GEORGE LO

STATE OF CALIFORNIA - DEPARTMENT OF TRANSPORTATION
Caltrans
DESIGN

LAST REVISION 04-30-11 | DATE PLOTTED => 15-AUG-2012 | TIME PLOTTED => 09:08

Dist	COUNTY	ROUTE	POST MILES TOTAL PROJECT	SHEET No.	TOTAL SHEETS
04	CC	4,80	R15.4/R16.7, 7.3/7.6	8	48

REGISTERED CIVIL ENGINEER 5-3-12 DATE

6-18-12
PLANS APPROVAL DATE

REGISTERED PROFESSIONAL ENGINEER Ber-lin Wei No. 49855 Exp. 9-30-12 CIVIL STATE OF CALIFORNIA

THE STATE OF CALIFORNIA OR ITS OFFICERS OR AGENTS SHALL NOT BE RESPONSIBLE FOR THE ACCURACY OR COMPLETENESS OF SCANNED COPIES OF THIS PLAN SHEET.

NOTE:

RIGHT OF WAY LIMITS ARE INDETERMINATE, AND ARE NOT SHOWN.
THE CONTRACTOR MUST CONTACT RIGHT OF WAY ENGINEERING AT THE DISTRICT OFFICE FOR CONDITIONS OF USE PRIOR TO COMMENCING WORK.

CURVE DATA

No. ⊛	R	Δ	T	L	N-COORDINATE	E-COORDINATE
29	13510′	00° 08′ 19"	16.35′	32.70′	2181138.854	6130188.935
30	3887′	00° 29′ 34"	16.72′	33.43′	2190756.878	6129358.103
31	98858′	00° 05′ 52"	84.30′	168.60′	2096878.084	6143722.072
32	8905′	00° 19′ 32"	25.29′	50.59′	2185820.007	6130268.672
33	442′	03° 44′ 29"	14.44′	28.87′	2194194.508	6129050.562
34	3573′	00° 41′ 35"	21.61′	43.23′	2191075.830	6129329.674

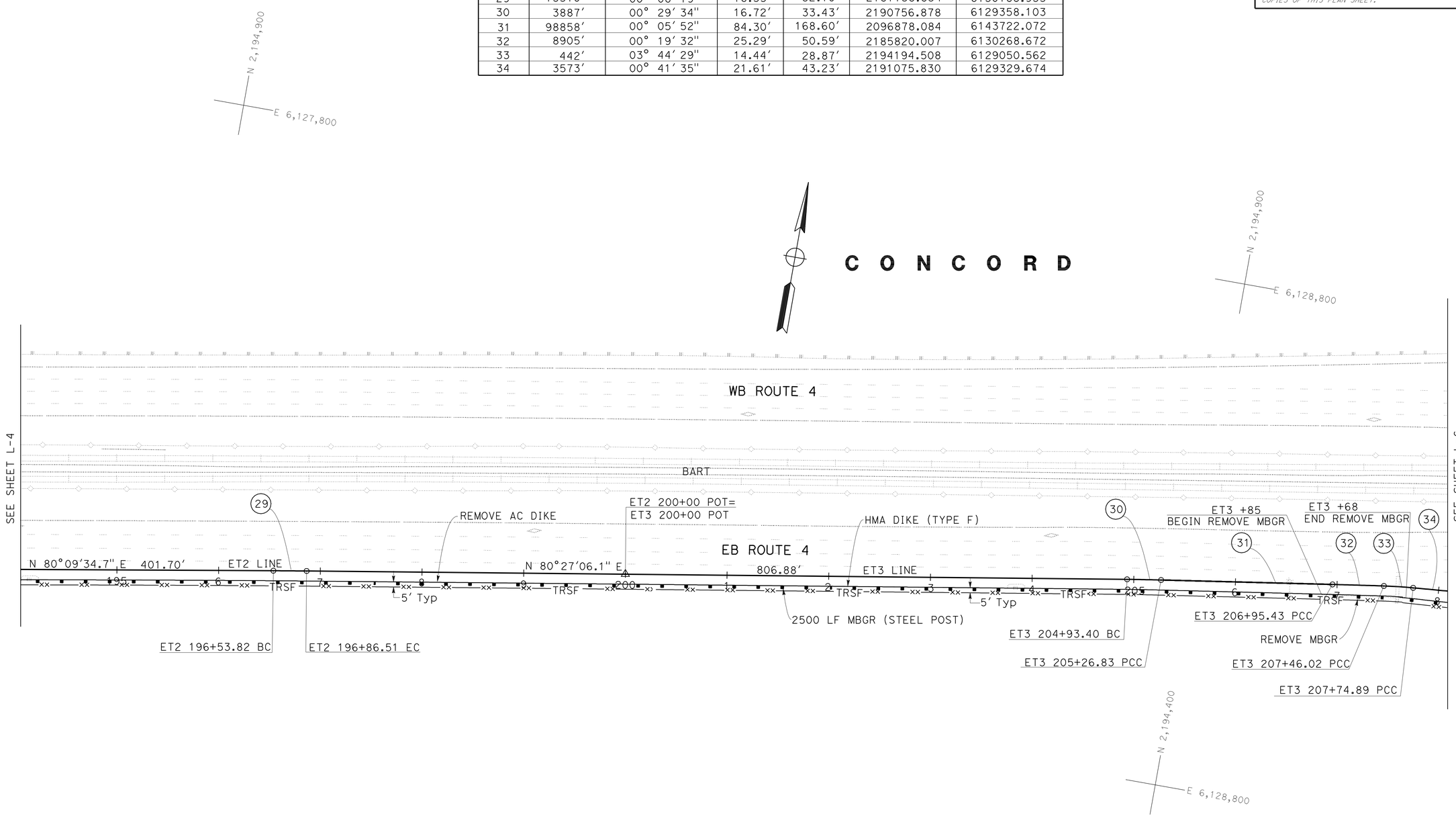

LAYOUT
SCALE: 1" = 50′

FOR NOTES, ABBREVIATIONS AND LEGEND, SEE SHEET L-1

L-5

STATE OF CALIFORNIA - DEPARTMENT OF TRANSPORTATION
Caltrans DESIGN
FUNCTIONAL SUPERVISOR GEORGE LO
CALCULATED-DESIGNED BY HUNG C HSU LLEWELLYN CHAN
CHECKED BY BER-LIN WEI
REVISED BY LC
DATE REVISED 12/22/11

LAST REVISION 04-25-12 | DATE PLOTTED => 15-AUG-2012 | TIME PLOTTED => 09:08

Dist	COUNTY	ROUTE	POST MILES TOTAL PROJECT	SHEET No.	TOTAL SHEETS
04	CC	4,80	R15.4/R16.7, 7.3/7.6	9	48

REGISTERED CIVIL ENGINEER 5-3-12 DATE

6-18-12
PLANS APPROVAL DATE

REGISTERED PROFESSIONAL ENGINEER Ber-lin Wei No. 49855 Exp. 9-30-12 CIVIL STATE OF CALIFORNIA

THE STATE OF CALIFORNIA OR ITS OFFICERS OR AGENTS SHALL NOT BE RESPONSIBLE FOR THE ACCURACY OR COMPLETENESS OF SCANNED COPIES OF THIS PLAN SHEET.

NOTE:

RIGHT OF WAY LIMITS ARE INDETERMINATE, AND ARE NOT SHOWN.
THE CONTRACTOR MUST CONTACT RIGHT OF WAY ENGINEERING AT THE DISTRICT OFFICE FOR CONDITIONS OF USE PRIOR TO COMMENCING WORK.

CURVE DATA

No. ⓢ	R	Δ	T	L	N-COORDINATE	E-COORDINATE
34	3573′	00° 41′ 35"	21.61′	43.23′	2191075.830	6129329.674
35	5262′	00° 35′ 19"	27.03′	54.06′	2199910.638	6129003.032
36	469′	02° 50′ 12"	11.61′	23.22′	2195177.814	6129815.650
37	448′	10° 26′ 19"	40.89′	81.55′	2194271.444	6129951.873
38	2140′	02° 10′ 17"	40.55′	81.08′	2196858.003	6129975.072
39	692′	01° 27′ 10"	8.78′	17.56′	2195412.167	6130037.037
40	150′	05° 28′ 48"	7.18′	14.35′	2194871.031	6130073.992
41	10714′	00° 19′ 26"	30.29′	60.57′	2184064.833	6131183.891
42	2900′	00° 37′ 22"	15.76′	31.51′	2191843.694	6130443.047
43	3802′	00° 50′ 27"	27.90′	55.81′	2190944.088	6130518.868
44	187′	03° 43" 19"	6.09"	12.18"	2194550.261	6130268.171

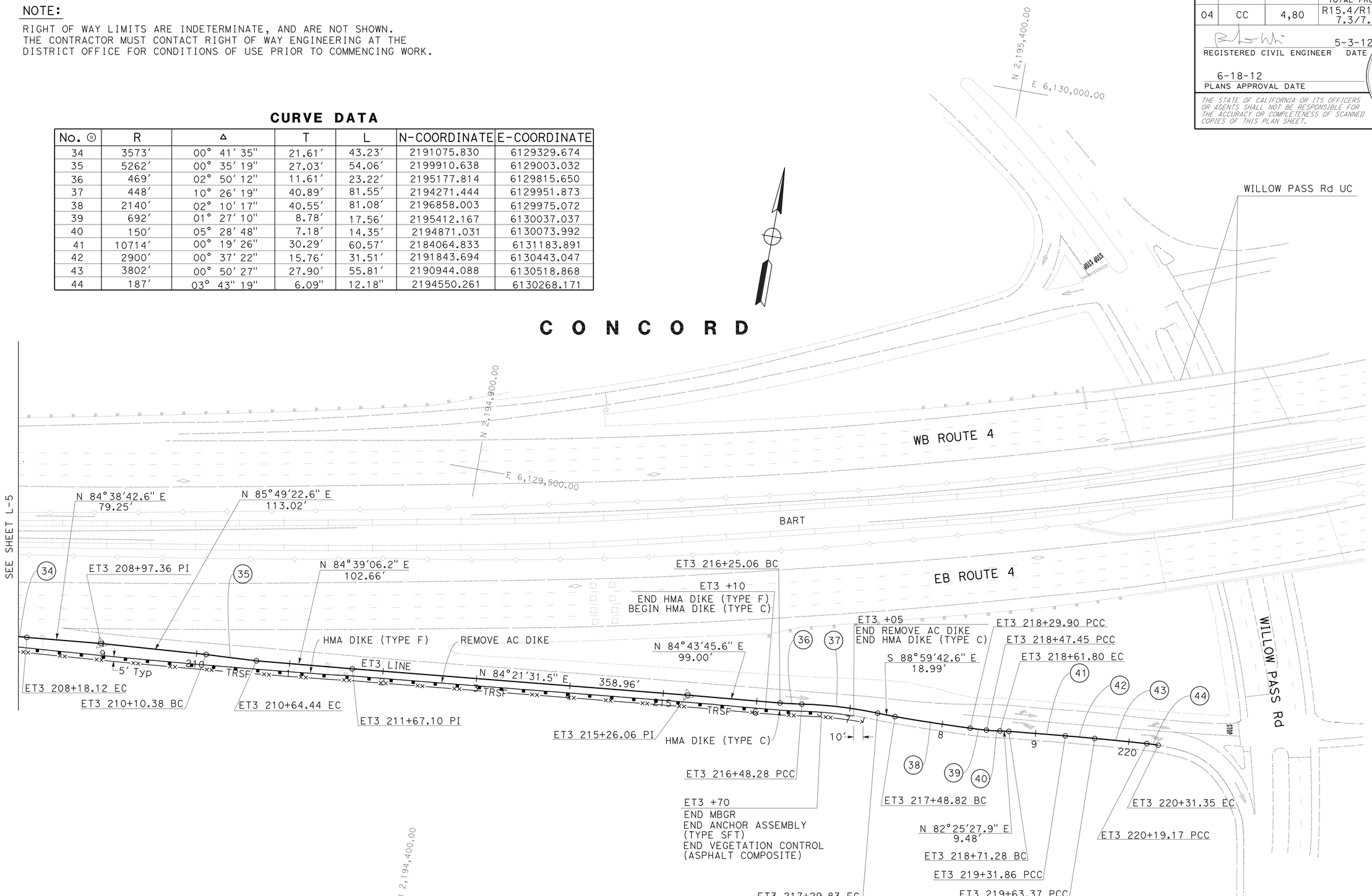

FOR NOTES, ABBREVIATIONS AND LEGEND, SEE SHEET L-1

LAYOUT
SCALE: 1" = 50′

L-6

CALCULATED-DESIGNED BY	HUNG C HSU LLEWELLYN CHAN
CHECKED BY	BER-LIN WEI
REVISED BY	LC
DATE REVISED	12/22/11
FUNCTIONAL SUPERVISOR	GEORGE LO

STATE OF CALIFORNIA - DEPARTMENT OF TRANSPORTATION
Caltrans
DESIGN

LAST REVISION 04-25-12 | DATE PLOTTED => 15-AUG-2012 | TIME PLOTTED => 09:08

Dist	COUNTY	ROUTE	POST MILES TOTAL PROJECT	SHEET No.	TOTAL SHEETS
04	CC	4,80	R15.4/R16.7, 7.3/7.6	10	48

REGISTERED CIVIL ENGINEER 5-3-12 DATE

6-18-12
PLANS APPROVAL DATE

REGISTERED PROFESSIONAL ENGINEER Ber-lin Wei No. 49855 Exp. 9-30-12 CIVIL STATE OF CALIFORNIA

THE STATE OF CALIFORNIA OR ITS OFFICERS OR AGENTS SHALL NOT BE RESPONSIBLE FOR THE ACCURACY OR COMPLETENESS OF SCANNED COPIES OF THIS PLAN SHEET.

NOTE:

FOR ACCURATE RIGHT OF WAY DATA, CONTACT RIGHT OF WAY ENGINEERING AT THE DISTRICT OFFICE.

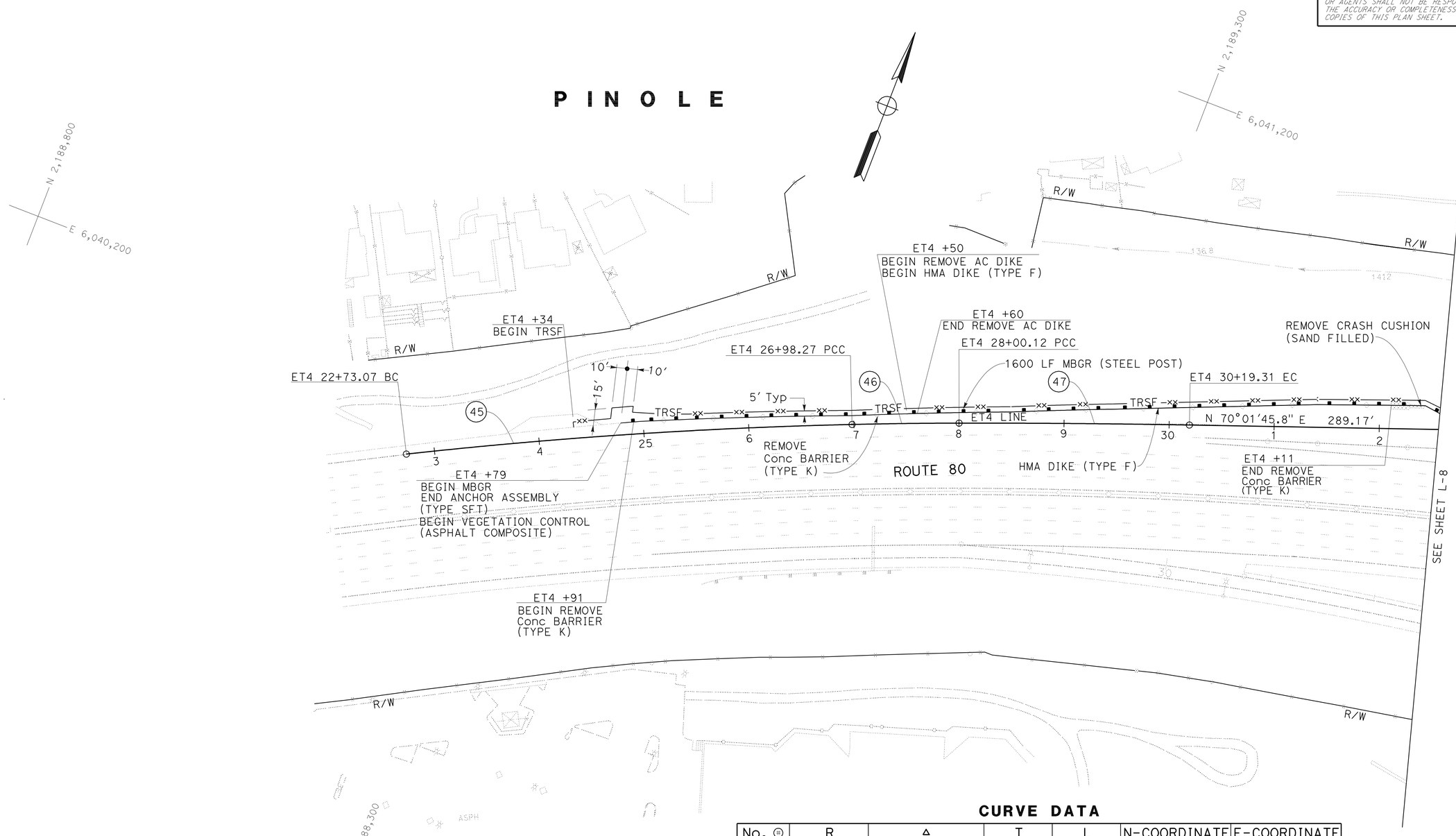

CURVE DATA

No. ⊕	R	Δ	T	L	N-COORDINATE	E-COORDINATE
45	4927′	04° 56′ 42"	212.73′	425.20′	2184335.533	6042866.112
46	4686′	01° 14′ 44"	50.93′	101.86′	2184558.177	6042774.657
47	11260′	01° 06′ 55"	109.60′	219.19′	2178424.585	6045139.690

FOR NOTES, ABBREVIATIONS AND LEGEND, SEE SHEET L-1

LAYOUT

SCALE: 1" = 50′

L-7

CALCULATED-DESIGNED BY	CHECKED BY	REVISED BY	DATE REVISED	FUNCTIONAL SUPERVISOR
HUNG C HSU LLEWELLYN CHAN	BER-LIN WEI	LC	12/22/11	GEORGE LO

STATE OF CALIFORNIA - DEPARTMENT OF TRANSPORTATION

Caltrans® DESIGN

LAST REVISION 04-25-12 | DATE PLOTTED => 15-AUG-2012 | TIME PLOTTED => 09:09

Dist	COUNTY	ROUTE	POST MILES TOTAL PROJECT	SHEET No.	TOTAL SHEETS
04	CC	4,80	R15.4/R16.7, 7.3/7.6	11	48

REGISTERED CIVIL ENGINEER 5-3-12 DATE

6-18-12
PLANS APPROVAL DATE

REGISTERED PROFESSIONAL ENGINEER Ber-lin Wei No. 49855 Exp. 9-30-12 CIVIL STATE OF CALIFORNIA

THE STATE OF CALIFORNIA OR ITS OFFICERS OR AGENTS SHALL NOT BE RESPONSIBLE FOR THE ACCURACY OR COMPLETENESS OF SCANNED COPIES OF THIS PLAN SHEET.

NOTE:

FOR ACCURATE RIGHT OF WAY DATA, CONTACT RIGHT OF WAY ENGINEERING AT THE DISTRICT OFFICE.

NOTE:

1. REFER TO DETAIL "TAPERED INLET AND FLUME DOWNDRAIN" ON STANDARD PLAN SHEET D87D.

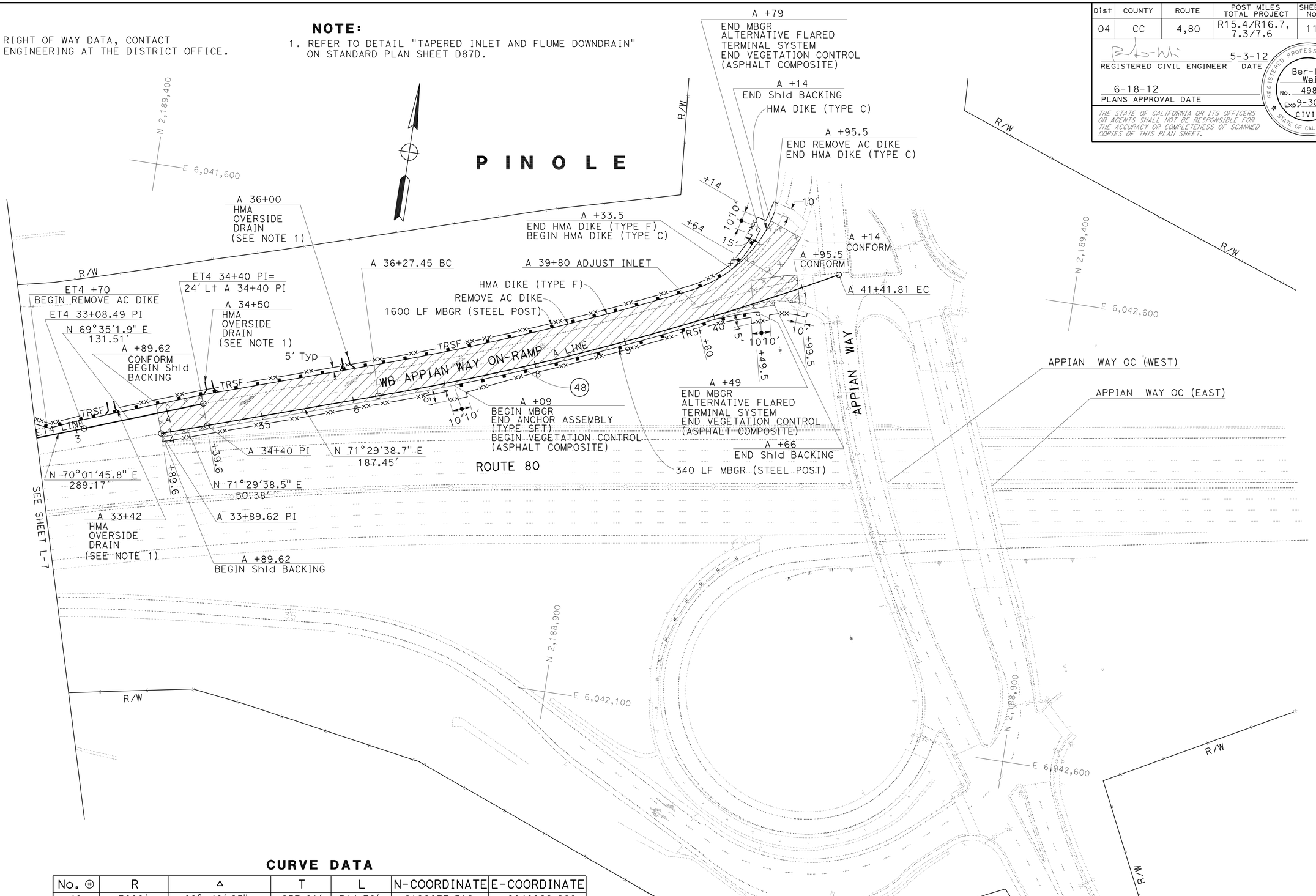

CURVE DATA

No. Ⓔ	R	Δ	T	L	N-COORDINATE	E-COORDINATE
48	3000'	09° 49' 25"	257.81'	514.36'	2192033.512	6040922.260

FOR NOTES, ABBREVIATIONS AND LEGEND, SEE SHEET L-1

LAYOUT

SCALE: 1" = 50'

L-8

FUNCTIONAL SUPERVISOR	GEORGE LO
CALCULATED-DESIGNED BY	HUNG C HSU LLEWELLYN CHAN
CHECKED BY	BER-LIN WEI
REVISED BY	LC
DATE REVISED	12/22/11

STATE OF CALIFORNIA - DEPARTMENT OF TRANSPORTATION

Caltrans DESIGN

LAST REVISION 04-30-12 DATE PLOTTED => 15-AUG-2012 TIME PLOTTED => 09:09

Dist	COUNTY	ROUTE	POST MILES TOTAL PROJECT	SHEET No.	TOTAL SHEETS
04	CC	4,80	R15.4/R16.7, 7.3/7.6	12	48

REGISTERED CIVIL ENGINEER 5-3-12 DATE

6-18-12
PLANS APPROVAL DATE

REGISTERED PROFESSIONAL ENGINEER
Ber-lin Wei
No. 49855
Exp. 9-30-12
CIVIL
STATE OF CALIFORNIA

THE STATE OF CALIFORNIA OR ITS OFFICERS OR AGENTS SHALL NOT BE RESPONSIBLE FOR THE ACCURACY OR COMPLETENESS OF SCANNED COPIES OF THIS PLAN SHEET.

NOTE:

RIGHT OF WAY LIMITS ARE INDETERMINATE, AND ARE NOT SHOWN.
THE CONTRACTOR MUST CONTACT RIGHT OF WAY ENGINEERING AT THE DISTRICT OFFICE FOR CONDITIONS OF USE PRIOR TO COMMENCING WORK.

LEGEND:

OBJECT MARKER/GUARD RAILING DELINEATOR
F TYPE F DELINEATOR

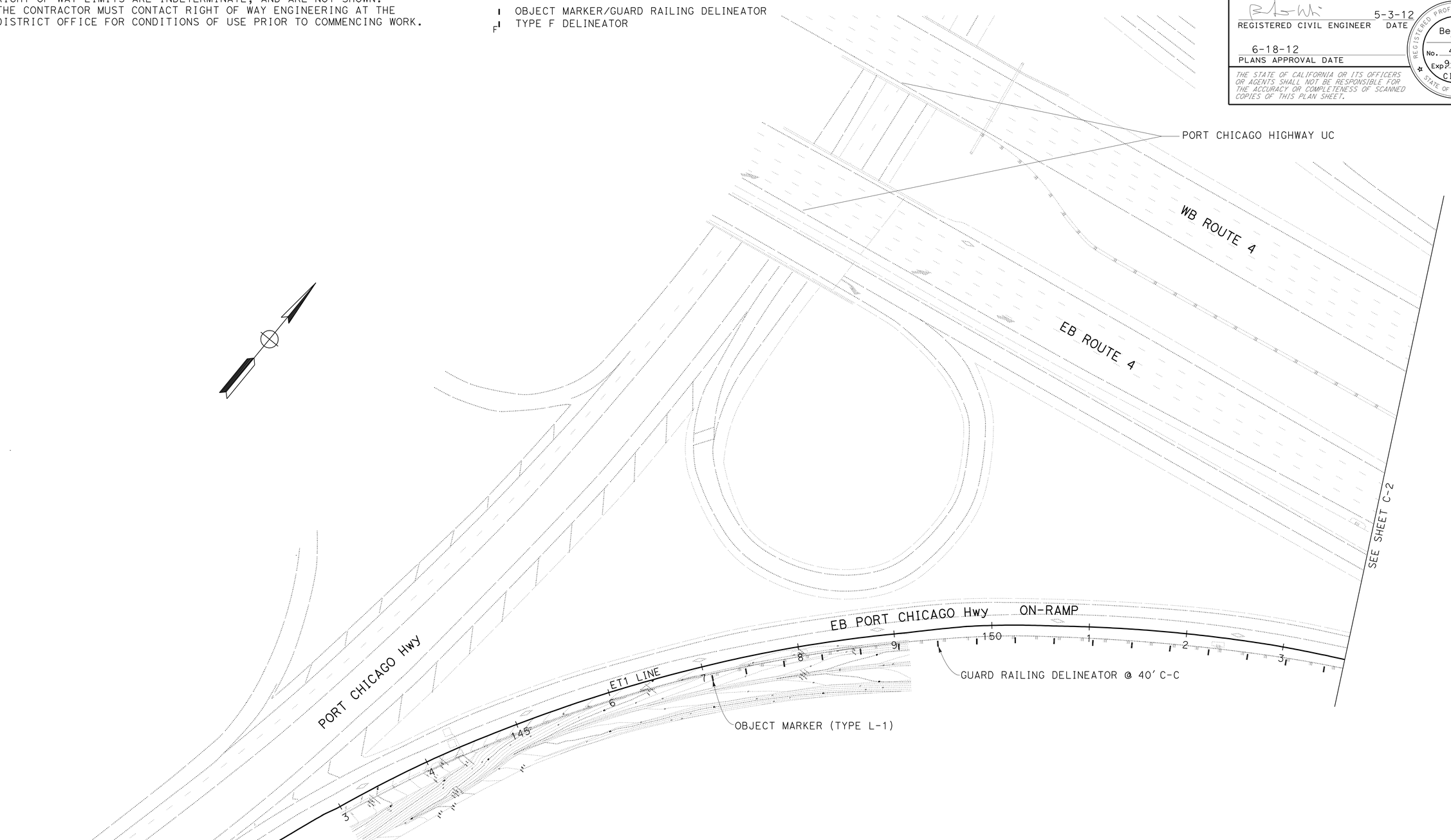

CONSTRUCTION DETAILS

NO SCALE

C-1

STATE OF CALIFORNIA - DEPARTMENT OF TRANSPORTATION
Caltrans
DESIGN

FUNCTIONAL SUPERVISOR: GEORGE LO

CALCULATED-DESIGNED BY: HUNG C HSU, LLEWELLYN CHAN
CHECKED BY: BER-LIN WEI

REVISED BY: LC
DATE REVISED: 2/14/12

LAST REVISION 04-25-12
DATE PLOTTED => 15-AUG-2012
TIME PLOTTED => 09:09

Dist	COUNTY	ROUTE	POST MILES TOTAL PROJECT	SHEET No.	TOTAL SHEETS
04	CC	4,80	R15.4/R16.7, 7.3/7.6	13	48

REGISTERED CIVIL ENGINEER 5-3-12 DATE

6-18-12
PLANS APPROVAL DATE

REGISTERED PROFESSIONAL ENGINEER
Ber-lin Wei
No. 49855
Exp. 9-30-12
CIVIL
STATE OF CALIFORNIA

THE STATE OF CALIFORNIA OR ITS OFFICERS OR AGENTS SHALL NOT BE RESPONSIBLE FOR THE ACCURACY OR COMPLETENESS OF SCANNED COPIES OF THIS PLAN SHEET.

NOTE:

RIGHT OF WAY LIMITS ARE INDETERMINATE, AND ARE NOT SHOWN. THE CONTRACTOR MUST CONTACT RIGHT OF WAY ENGINEERING AT THE DISTRICT OFFICE FOR CONDITIONS OF USE PRIOR TO COMMENCING WORK.

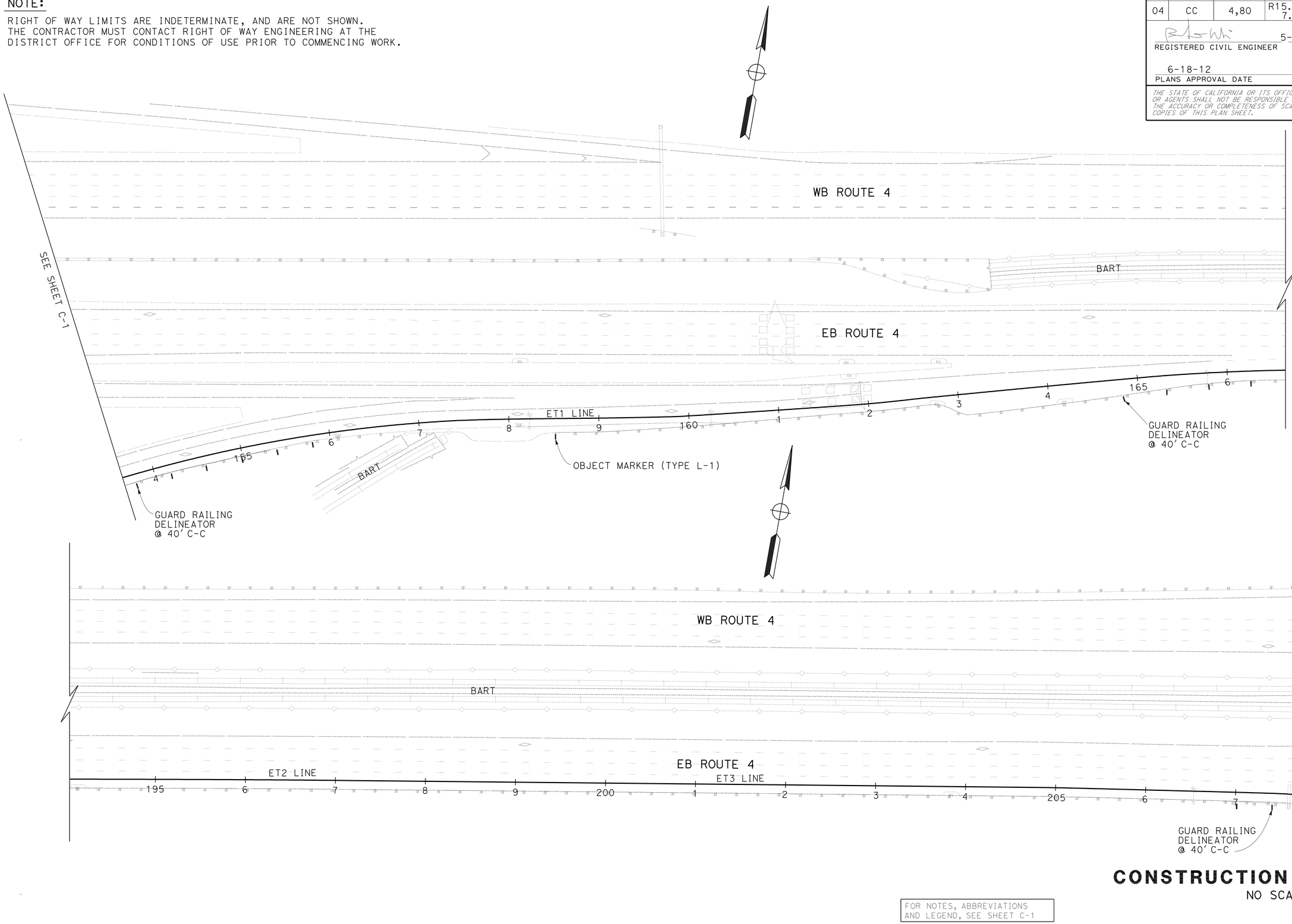

CONSTRUCTION DETAILS

NO SCALE

FOR NOTES, ABBREVIATIONS AND LEGEND, SEE SHEET C-1

C-2

REVISED BY	DATE REVISED
LC	2/14/12

CALCULATED-DESIGNED BY: HUNG C HSU, LLEWELLYN CHAN
CHECKED BY: BER-LIN WEI

FUNCTIONAL SUPERVISOR: GEORGE LO

STATE OF CALIFORNIA - DEPARTMENT OF TRANSPORTATION
Caltrans
DESIGN

LAST REVISION 04-25-11 | DATE PLOTTED => 15-AUG-2012 | TIME PLOTTED => 09:09

Dist	COUNTY	ROUTE	POST MILES TOTAL PROJECT	SHEET No.	TOTAL SHEETS
04	CC	4,80	R15.4/R16.7, 7.3/7.6	14	48

REGISTERED CIVIL ENGINEER 5-3-12 DATE

6-18-12
PLANS APPROVAL DATE

REGISTERED PROFESSIONAL ENGINEER
Ber-lin Wei
No. 49855
Exp. 9-30-12
CIVIL
STATE OF CALIFORNIA

THE STATE OF CALIFORNIA OR ITS OFFICERS OR AGENTS SHALL NOT BE RESPONSIBLE FOR THE ACCURACY OR COMPLETENESS OF SCANNED COPIES OF THIS PLAN SHEET.

NOTE:

RIGHT OF WAY LIMITS ARE INDETERMINATE, AND ARE NOT SHOWN.
THE CONTRACTOR MUST CONTACT RIGHT OF WAY ENGINEERING AT THE DISTRICT OFFICE FOR CONDITIONS OF USE PRIOR TO COMMENCING WORK.

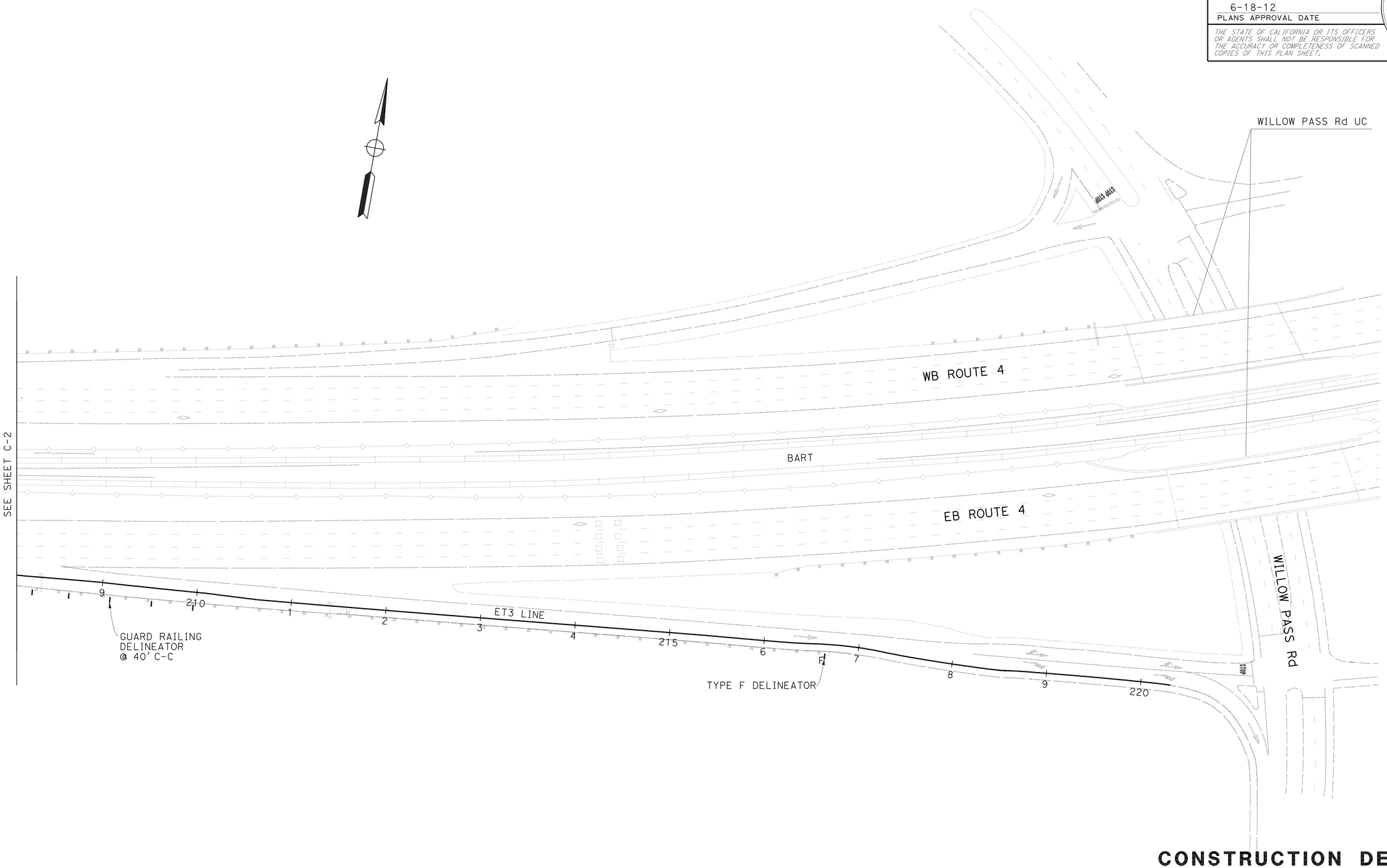

CONSTRUCTION DETAILS

NO SCALE

FOR NOTES, ABBREVIATIONS AND LEGEND, SEE SHEET C-1

C-3

STATE OF CALIFORNIA - DEPARTMENT OF TRANSPORTATION
Caltrans
DESIGN

FUNCTIONAL SUPERVISOR: GEORGE LO
CALCULATED-DESIGNED BY: HUNG C HSU, LLEWELLYN CHAN
CHECKED BY: BER-LIN WEI
REVISED BY: LC
DATE REVISED: 12/22/11

LAST REVISION 04-25-12
DATE PLOTTED => 15-AUG-2012
TIME PLOTTED => 09:09

BORDER LAST REVISED 7/2/2010
USERNAME => s133066
DGN FILE => 0400020034ga003.dgn
RELATIVE BORDER SCALE IS IN INCHES 0 1 2 3
UNIT 0704
PROJECT NUMBER & PHASE 04000200341

Dist	COUNTY	ROUTE	POST MILES TOTAL PROJECT	SHEET No.	TOTAL SHEETS
04	CC	4,80	R15.4/R16.7, 7.3/7.6	15	48

REGISTERED CIVIL ENGINEER 5-3-12 DATE

6-18-12
PLANS APPROVAL DATE

REGISTERED PROFESSIONAL ENGINEER Ber-lin Wei No. 49855 Exp. 9-30-12 CIVIL STATE OF CALIFORNIA

THE STATE OF CALIFORNIA OR ITS OFFICERS OR AGENTS SHALL NOT BE RESPONSIBLE FOR THE ACCURACY OR COMPLETENESS OF SCANNED COPIES OF THIS PLAN SHEET.

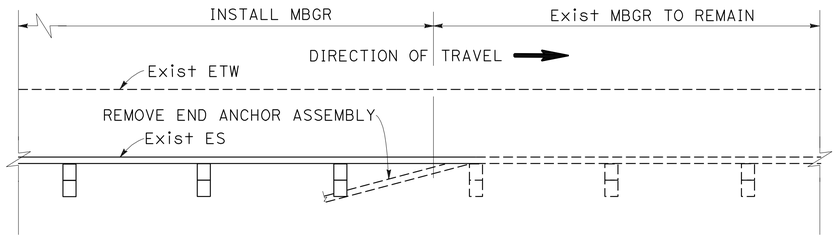

PLAN

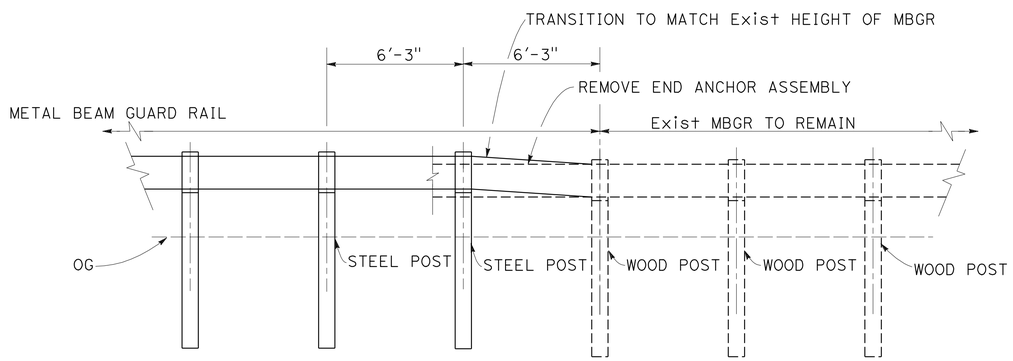

ELEVATION

MBGR TRANSITION TO EXISTING MBGR

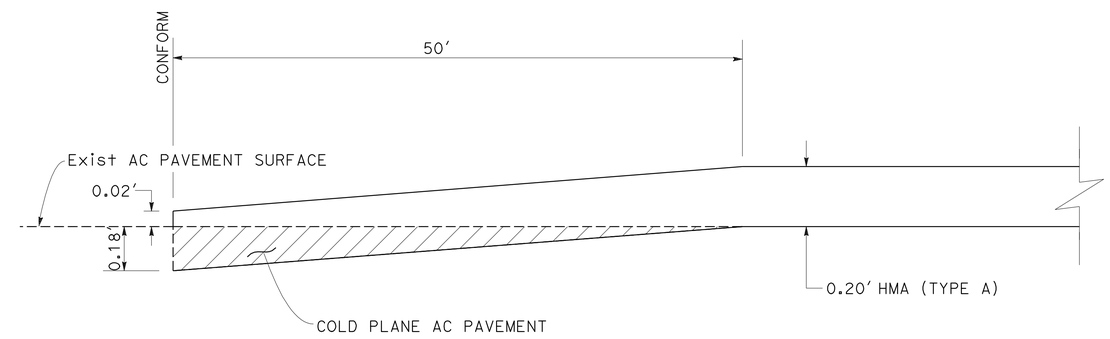

PAVING CONFORM AT EXISTING AC PAVEMENT SURFACE

A 33+89.6 TO 34+39.6
A 40+64 TO 41+14
A 40+49.5 TO 40+99.5

CONSTRUCTION DETAILS

NO SCALE

C-4

STATE OF CALIFORNIA - DEPARTMENT OF TRANSPORTATION
Caltrans DESIGN

FUNCTIONAL SUPERVISOR: GEORGE LO
CALCULATED-DESIGNED BY: HUNG C HSU
CHECKED BY: BER-LIN WEI
REVISED BY: LC
DATE REVISED: 2/14/12

LAST REVISION 04-26-12 | DATE PLOTTED => 15-AUG-2012 | TIME PLOTTED => 09:09

Dist	COUNTY	ROUTE	POST MILES TOTAL PROJECT	SHEET No.	TOTAL SHEETS
04	CC	4,80	R15.4/R16.7, 7.3/7.6	16	48

LICENSED LANDSCAPE ARCHITECT

6-18-12
PLANS APPROVAL DATE

THE STATE OF CALIFORNIA OR ITS OFFICERS OR AGENTS SHALL NOT BE RESPONSIBLE FOR THE ACCURACY OR COMPLETENESS OF SCANNED COPIES OF THIS PLAN SHEET.

LICENSED LANDSCAPE ARCHITECT
DENNIS CALLOWAY No. 3357
Signature
11-30-13
Renewal Date
4-11-2012
Date
STATE OF CALIFORNIA

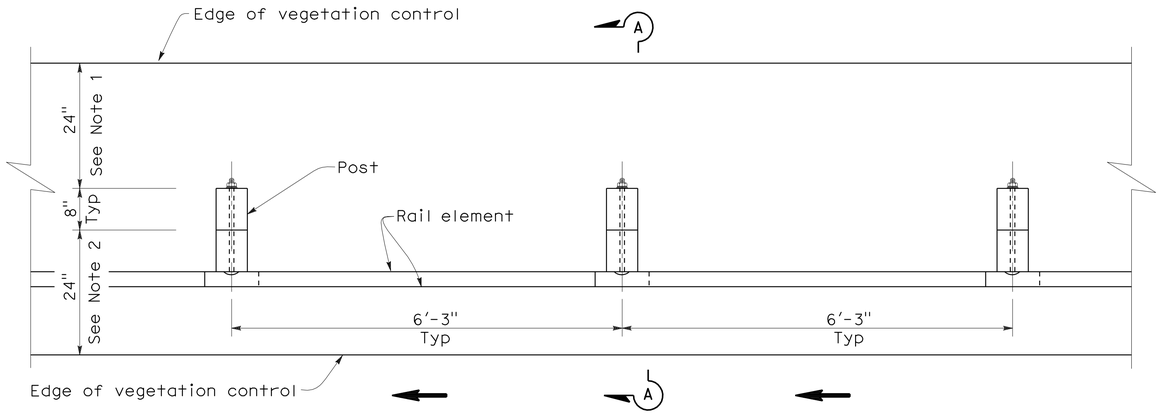

PLAN

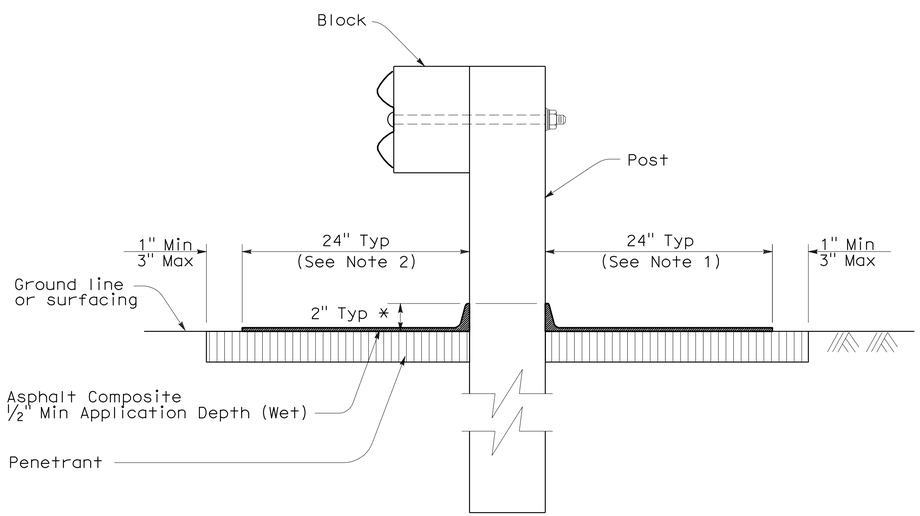

* (See Note 3)

SECTION A-A

NOTES:

1. Where the distance between back of post and hinge point is less than 24", vegetation control to be constructed 6" beyond the hinge point with the edge keyed in.
2. Where curb or dike is constructed under railing, construct vegetation control to back edge of curb or dike. Where paved shoulder is constructed within 24" in front of the post, construct vegetation control to the edge of paved shoulder.
3. Feather edge of asphalt composite transition up posts and back of curbs and dikes. Transition line shall form a reasonably straight line, horizontally from post to post or along top edge of curb or dike.
4. Direction of adjacent traffic indicated by ← .

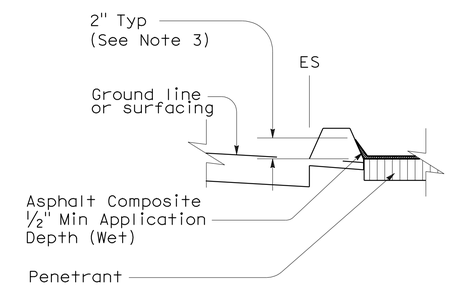

VEGETATION CONTROL at CURB OR DIKE

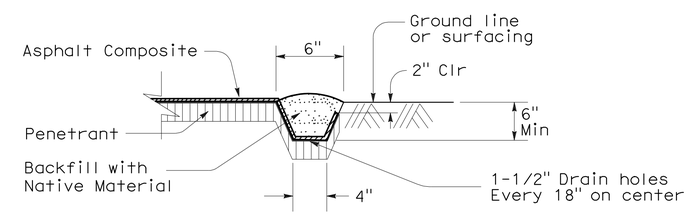

KEY EDGE

CONSTRUCTION DETAILS

METAL BEAM GUARD RAILING
VEGETATION CONTROL (ASPHALT COMPOSITE)
STANDARD RAILING SECTION

NO SCALE

C-5

STATE OF CALIFORNIA - DEPARTMENT OF TRANSPORTATION
Caltrans LANDSCAPE ARCHITECTURE

SENIOR LANDSCAPE ARCHITECT: BRYAN WALKER
CALCULATED-DESIGNED BY: GREG BALZER
CHECKED BY: DENNIS CALLOWAY
REVISED BY: GB
DATE REVISED: 4/11/12

LAST REVISION 4-11-12
DATE PLOTTED => 15-AUG-2012
TIME PLOTTED => 09:09

Dist	COUNTY	ROUTE	POST MILES TOTAL PROJECT	SHEET No.	TOTAL SHEETS
04	CC	4,80	R15.4/R16.7, 7.3/7.6	17	48

LICENSED LANDSCAPE ARCHITECT

6-18-12
PLANS APPROVAL DATE

THE STATE OF CALIFORNIA OR ITS OFFICERS OR AGENTS SHALL NOT BE RESPONSIBLE FOR THE ACCURACY OR COMPLETENESS OF SCANNED COPIES OF THIS PLAN SHEET.

LICENSED LANDSCAPE ARCHITECT
DENNIS CALLOWAY No. 3357
Signature
11-30-13
Renewal Date
4-11-2012
Date
STATE OF CALIFORNIA

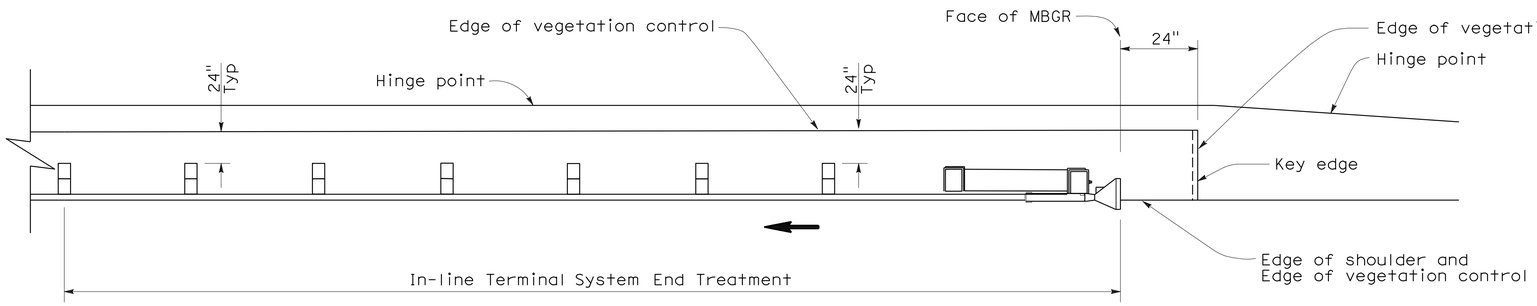

PLAN

NOTES:

1. See sheets C-5, C-7 and C-8 for additional vegetation control details.
2. Where the distance between back of post and hinge point is less than 24", vegetation control to be constructed 6" beyond the hinge point with the edge keyed in.
3. Where dike is constructed under railing, construct vegetation control to back edge of curb or dike. Where paved shoulder is constructed within 24" in front of the post, construct vegetation control to the edge of paved shoulder.
4. Direction of adjacent traffic indicated by ←.

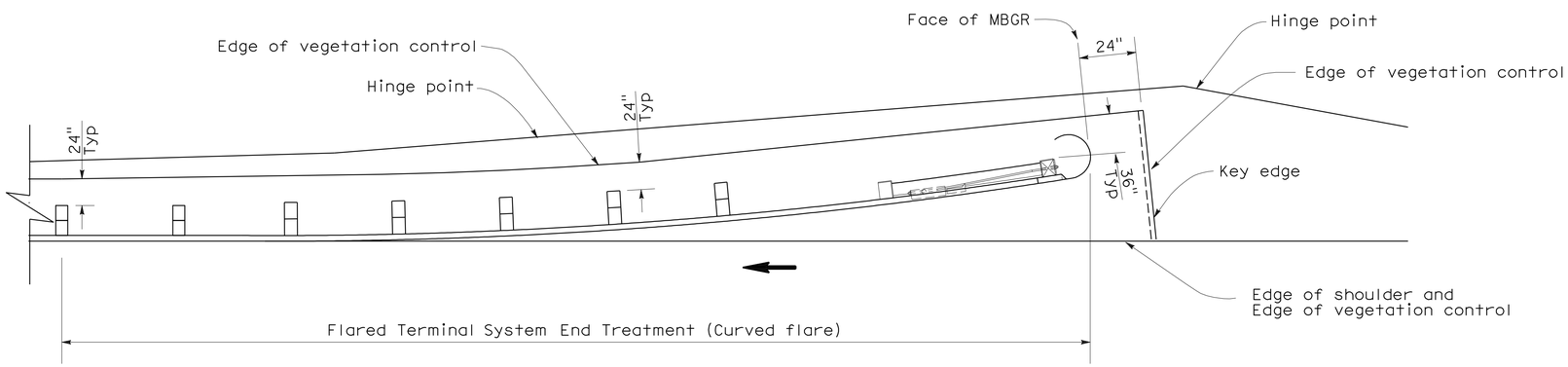

PLAN

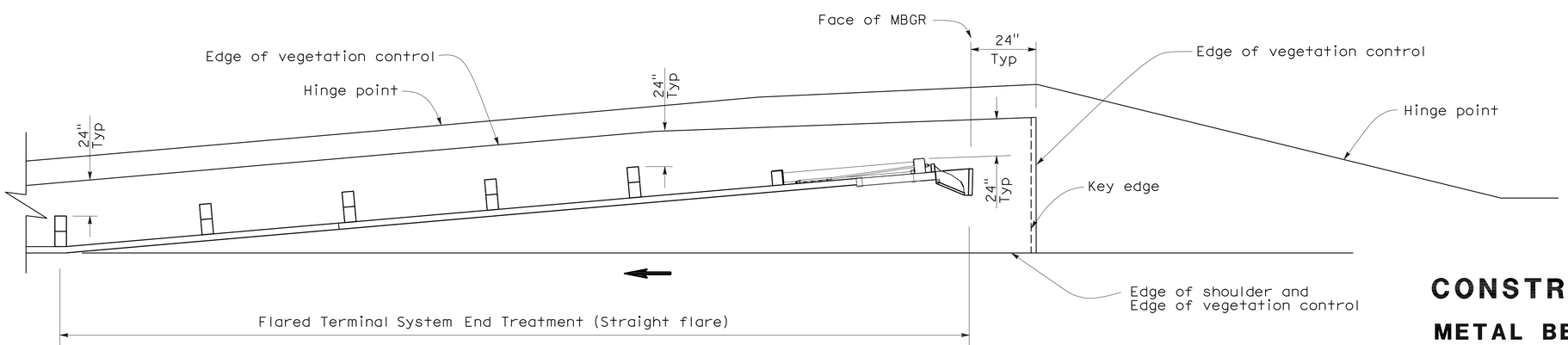

PLAN

CONSTRUCTION DETAILS

METAL BEAM GUARD RAILING
VEGETATION CONTROL (ASPHALT COMPOSITE)
FOR TERMINAL SYSTEM END TREATMENTS

NO SCALE

C-6

STATE OF CALIFORNIA - DEPARTMENT OF TRANSPORTATION
Caltrans LANDSCAPE ARCHITECTURE

SENIOR LANDSCAPE ARCHITECT: BRYAN WALKER
CALCULATED-DESIGNED BY: GREG BALZER
CHECKED BY: DENNIS CALLOWAY
REVISED BY: GB
DATE REVISED: 4/11/12

LAST REVISION 4-11-12
DATE PLOTTED => 15-AUG-2012
TIME PLOTTED => 09:09

Dist	COUNTY	ROUTE	POST MILES TOTAL PROJECT	SHEET No.	TOTAL SHEETS
04	CC	4,80	R15.4/R16.7, 7.3/7.6	18	48

LICENSED LANDSCAPE ARCHITECT

6-18-12
PLANS APPROVAL DATE

LICENSED LANDSCAPE ARCHITECT — DENNIS CALLOWAY No. 3557 — Signature — 11-30-13 Renewal Date — 4-11-2012 Date — STATE OF CALIFORNIA

THE STATE OF CALIFORNIA OR ITS OFFICERS OR AGENTS SHALL NOT BE RESPONSIBLE FOR THE ACCURACY OR COMPLETENESS OF SCANNED COPIES OF THIS PLAN SHEET.

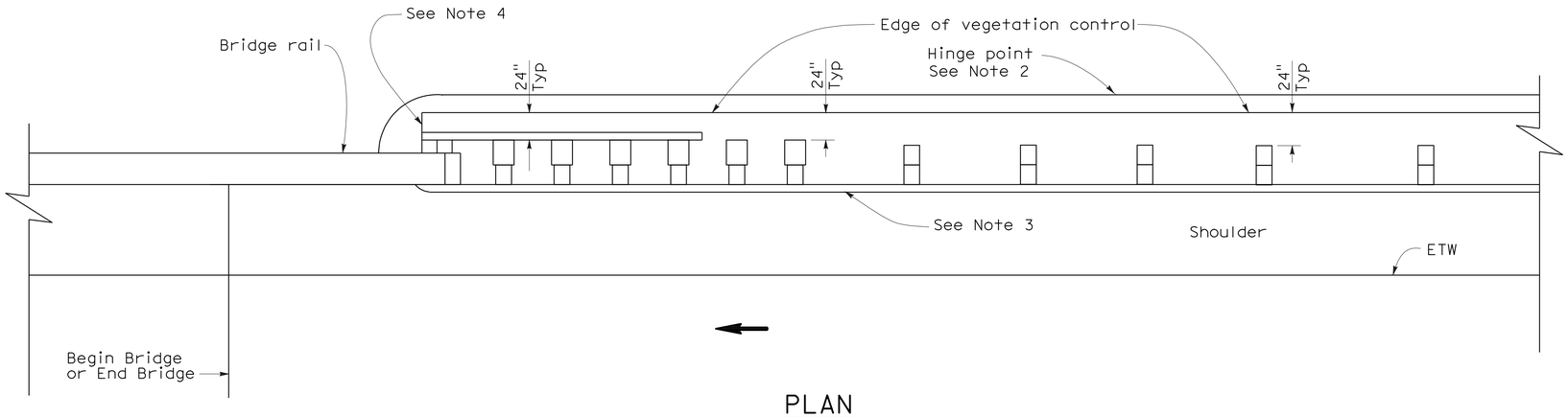

PLAN

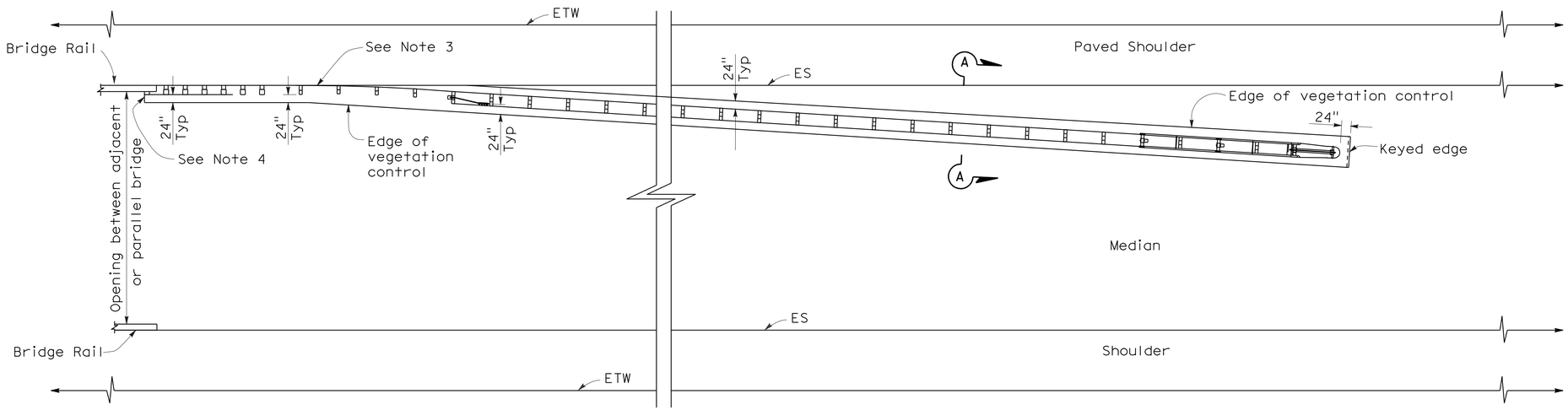

PLAN

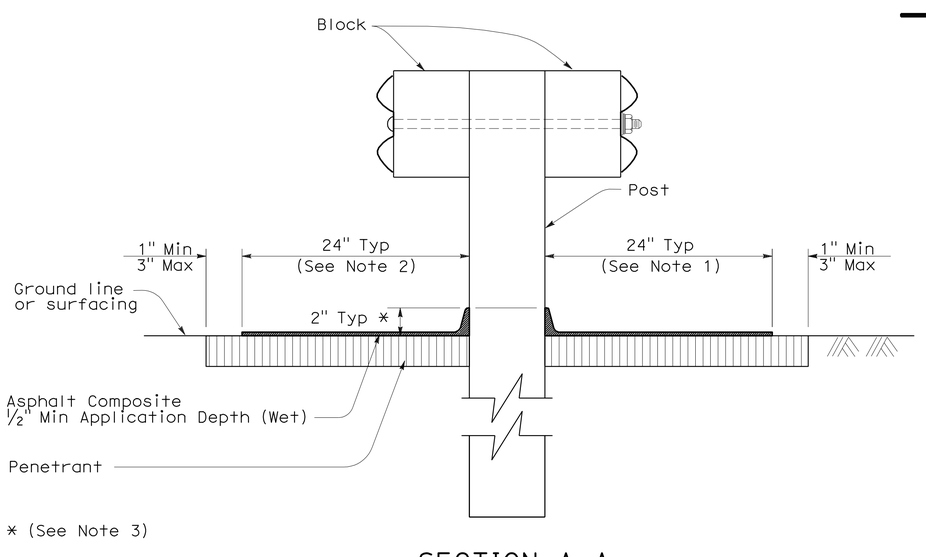

SECTION A-A

NOTES:

1. See sheets C-5, C-6 and C-8 for additional vegetation control details.
2. Where the distance between back of post and hinge point is less than 24", vegetation control to be constructed 6" beyond the hinge point with the edge keyed in.
3. Where dike is constructed under railing, construct vegetation control to back edge of curb or dike. Where paved shoulder is constructed within 24" in front of the post, construct vegetation control to the edge of paved shoulder.
4. End vegetation control at end of backside rail element.
5. Direction of adjacent traffic indicated by ←.

CONSTRUCTION DETAILS

METAL BEAM GUARD RAILING VEGETATION CONTROL (ASPHALT COMPOSITE) AT STRUCTURE APPROACH AND DEPARTURE

NO SCALE

C-7

REVISED BY	DATE REVISED
GB	4/11/12

GREG BALZER — DENNIS CALLOWAY — CALCULATED-DESIGNED BY — CHECKED BY — SENIOR LANDSCAPE ARCHITECT — BRYAN WALKER

STATE OF CALIFORNIA - DEPARTMENT OF TRANSPORTATION
Caltrans LANDSCAPE ARCHITECTURE

LAST REVISION 4-11-12 — DATE PLOTTED => 15-AUG-2012 — TIME PLOTTED => 09:09

Dist	COUNTY	ROUTE	POST MILES TOTAL PROJECT	SHEET No.	TOTAL SHEETS
04	CC	4,80	R15.4/R16.7, 7.3/7.6	19	48

LICENSED LANDSCAPE ARCHITECT

6-18-12
PLANS APPROVAL DATE

THE STATE OF CALIFORNIA OR ITS OFFICERS OR AGENTS SHALL NOT BE RESPONSIBLE FOR THE ACCURACY OR COMPLETENESS OF SCANNED COPIES OF THIS PLAN SHEET.

LICENSED LANDSCAPE ARCHITECT
DENNIS CALLOWAY No. 3350
Signature
11-30-13
Renewal Date
4-11-2012
Date
STATE OF CALIFORNIA

NOTES:

1. See sheets C-5, C-6 and C-7 for additional vegetation control details.
2. Where the distance between back of post or fixed object and hinge point is less than 24", vegetation control to be constructed 6" beyond the hinge point with the edge keyed in.
3. Where dike is constructed under railing, construct vegetation control to back edge of curb or dike. Where paved shoulder is constructed within 24" in front of the post, construct vegetation control to the edge of paved shoulder.
4. Direction of adjacent traffic indicated by ←.

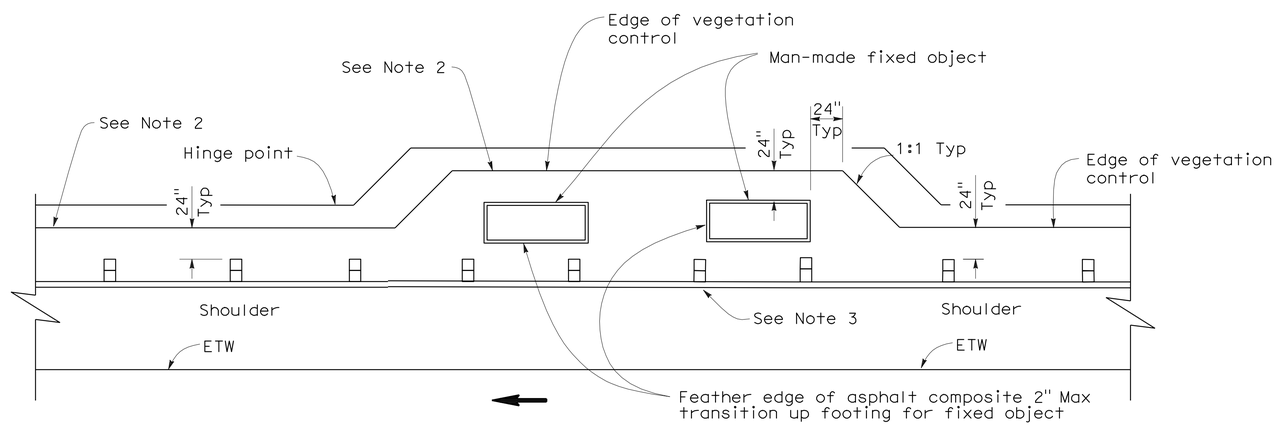

PLAN

FIXED OBJECT(S) ON SHOULDER

CONSTRUCTION DETAILS

METAL BEAM GUARD RAILING
VEGETATION CONTROL (ASPHALT COMPOSITE)
AT FIXED OBJECT

NO SCALE

C-8

STATE OF CALIFORNIA - DEPARTMENT OF TRANSPORTATION
Caltrans LANDSCAPE ARCHITECTURE

SENIOR LANDSCAPE ARCHITECT: BRYAN WALKER
CALCULATED-DESIGNED BY: GREG BALZER
CHECKED BY: DENNIS CALLOWAY
REVISED BY: GB
DATE REVISED: 4/11/12

LAST REVISION 4-11-12
DATE PLOTTED => 15-AUG-2012
TIME PLOTTED => 09:09

Dist	COUNTY	ROUTE	POST MILES TOTAL PROJECT	SHEET No.	TOTAL SHEETS
04	CC	4,80	R15.4/R16.7, 7.3/7.6	20	48

2/23/12
REGISTERED CIVIL ENGINEER DATE

6-18-12
PLANS APPROVAL DATE

REGISTERED PROFESSIONAL ENGINEER
JIANGFAN CHEN
No. C 77248
Exp. 6/30/13
CIVIL
STATE OF CALIFORNIA

THE STATE OF CALIFORNIA OR ITS OFFICERS OR AGENTS SHALL NOT BE RESPONSIBLE FOR THE ACCURACY OR COMPLETENESS OF SCANNED COPIES OF THIS PLAN SHEET.

TEMPORARY WATER POLLUTION CONTROL QUANTITIES

STATION	TEMPORARY DRAINAGE INET PROTECTION	TEMPORARY REINFORCED SILT FENCE	TEMPORARY COVER
	EA	LF	SQYD
ET1 143+00.00 TO ET1 153+64.05	3	900	200
ET1 153+64.05 TO ET2 177+18.18	7	2,500	0
ET2 177+18.18 TO ET3 208+08.11	3	2,500	0
ET3 208+08.11 TO ET3 217+18.00	1	1,100	0
ET4 22+92.18 TO ET4 32+57.46	0	1,000	0
ET4 32+57.46 TO A 41+41.81	0	2,000	0
TOTAL	14	10,000	200

TEMPORARY WATER POLLUTION CONTROL QUANTITIES

WPCQ-1

STATE OF CALIFORNIA - DEPARTMENT OF TRANSPORTATION
Caltrans® WATER QUALITY

FUNCTIONAL SUPERVISOR: KAMRAN NAKHJIRI
CALCULATED-DESIGNED BY: JIANGFAN CHEN
CHECKED BY: KAMRAN NAKHJIRI
REVISED BY: JC
DATE REVISED: 2/23/12

LAST REVISION 2/23/12
DATE PLOTTED => 15-AUG-2012
TIME PLOTTED => 09:09

Dist	COUNTY	ROUTE	POST MILES TOTAL PROJECT	SHEET No.	TOTAL SHEETS
04	CC	4,80	R15.4/R16.7, 7.3/7.6	21	48

Alex McDonald
LICENSED LANDSCAPE ARCHITECT

6-18-12
PLANS APPROVAL DATE

LICENSED LANDSCAPE ARCHITECT
ALEXANDER K. MCDONALD No. 5342
Alex McDonald
Signature
8-31-12
Renewal Date
3-1-12
Date
STATE OF CALIFORNIA

THE STATE OF CALIFORNIA OR ITS OFFICERS OR AGENTS SHALL NOT BE RESPONSIBLE FOR THE ACCURACY OR COMPLETENESS OF SCANNED COPIES OF THIS PLAN SHEET.

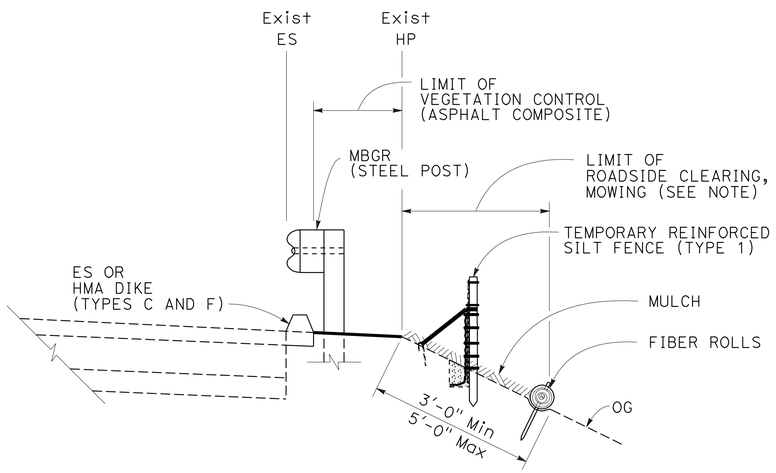

TYPICAL SECTION

EROSION CONTROL AT VEGETATION CONTROL (ASPHALT COMPOSITE), TYPICAL

NOTE: WEEDS SHALL BE MOWED TO A HEIGHT OF 2 INCHES TO 4 INCHES. DISPOSAL OF MOWED MATERIAL WILL NOT BE REQUIRED.

EROSION CONTROL QUANTITIES

ROUTE	STATION LIMITS	FIBER ROLLS	MULCH	SQFT (N)
		LF	CY	
4	ET1 146+61 TO ET2 177+18, R†	3,067	113	12,228
4	ET2 184+15 TO ET3 217+15, R†	3,310	122	13,200
80	ET4 24+51 TO A 41+05, L†	1,664	61	6,616
80	A 33+89 TO A 40+95, R†	-	26	2,824
	TOTAL	8,041	322	34,868

(N) NOT A SEPARATE PAY ITEM, FOR INFORMATION ONLY.

EROSION CONTROL DETAILS AND QUANTITIES

NO SCALE

ECD-1

STATE OF CALIFORNIA - DEPARTMENT OF TRANSPORTATION
Caltrans®
WATER QUALITY

SENIOR LANDSCAPE ARCHITECT: DAVID W. YAM
CALCULATED-DESIGNED BY: Alex McDonald
CHECKED BY: Chris Padick
REVISED BY: AKM
DATE REVISED: 2/15/12

LAST REVISION 01-30-12
DATE PLOTTED => 15-AUG-2012
TIME PLOTTED => 09:09

Dist	COUNTY	ROUTE	POST MILES TOTAL PROJECT	SHEET No.	TOTAL SHEETS
04	CC	4,80	R15.4/R16.7, 7.3/7.6	22	48

Eric Kawakita 5-2-12
REGISTERED CIVIL ENGINEER DATE

6-18-12
PLANS APPROVAL DATE

REGISTERED PROFESSIONAL ENGINEER
Eric S. Kawakita
No. 78480
Exp. 9-30-13
CIVIL
STATE OF CALIFORNIA

THE STATE OF CALIFORNIA OR ITS OFFICERS OR AGENTS SHALL NOT BE RESPONSIBLE FOR THE ACCURACY OR COMPLETENESS OF SCANNED COPIES OF THIS PLAN SHEET.

NOTES:

1. LOCATE MH OPENING OVER EXISTING STEPS OR AS DIRECTED BY THE ENGINEER.
2. PLACE NEW STEP RUNGS WHERE REQUIRED AND REMOVE EXISTING.
3. FOR INLET AND REINFORCEMENT DETAILS NOT SHOWN, SEE Std PLAN D73 (INLET TYPE G2).
4. THE DRAINAGE INLET TO BE ADJUSTED TO GRADE SHALL BE CLEANED AFTER THE HMA OVERLAY.

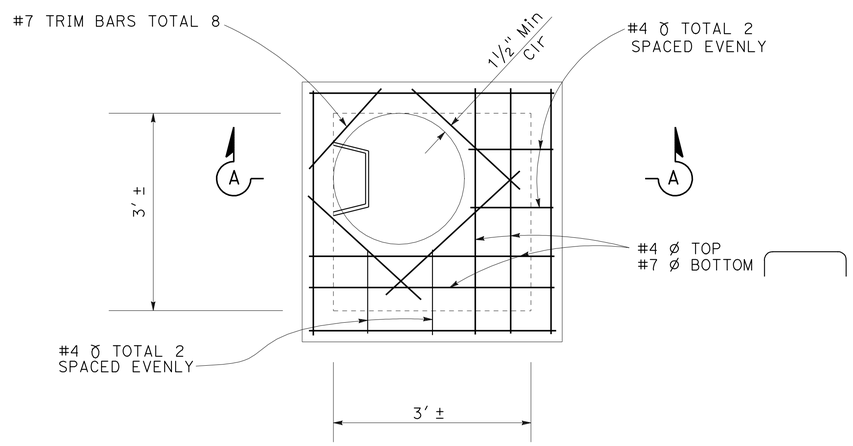

PLAN

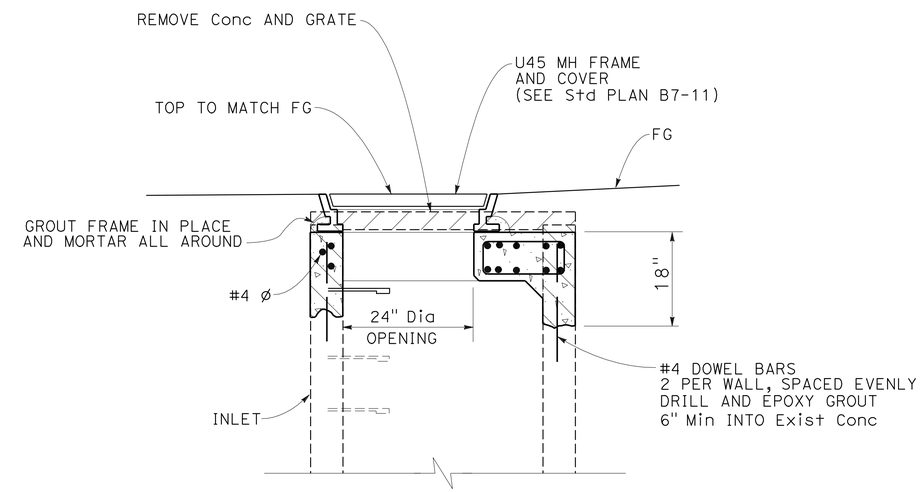

SECTION A-A

ADJUST INLET
A 39+80

APPROVED FOR DRAINAGE WORK ONLY

DRAINAGE DETAILS
NO SCALE
DD-1

STATE OF CALIFORNIA - DEPARTMENT OF TRANSPORTATION
Caltrans® HYDRAULICS

FUNCTIONAL SUPERVISOR: CRAIG TOMIMATSU
CALCULATED-DESIGNED BY: ERIC KAWAKITA
CHECKED BY: CRAIG TOMIMATSU
REVISED BY: EK
DATE REVISED: 2/1/12

LAST REVISION 04-26-12
DATE PLOTTED => 15-AUG-2012
TIME PLOTTED => 09:09

Dist	COUNTY	ROUTE	POST MILES TOTAL PROJECT	SHEET No.	TOTAL SHEETS
04	CC	4,80	R15.4/16.7, 7.3/7.6	23	48

REGISTERED CIVIL ENGINEER 5-3-12 DATE

6-18-12
PLANS APPROVAL DATE

REGISTERED PROFESSIONAL ENGINEER Ber-lin Wei No. 49855 Exp. 9-30-12 CIVIL STATE OF CALIFORNIA

THE STATE OF CALIFORNIA OR ITS OFFICERS OR AGENTS SHALL NOT BE RESPONSIBLE FOR THE ACCURACY OR COMPLETENESS OF SCANNED COPIES OF THIS PLAN SHEET.

NOTE:

RIGHT OF WAY LIMITS ARE INDETERMINATE, AND ARE NOT SHOWN. THE CONTRACTOR MUST CONTACT RIGHT OF WAY ENGINEERING AT THE DISTRICT OFFICE FOR CONDITIONS OF USE PRIOR TO COMMENCING WORK.

NOTES:

1. UTILITY OWNERSHIP:
   GAS - PACIFIC GAS & ELECTRIC (PG&E)
   ELECTRICAL - PACIFIC GAS & ELECTRIC (PG&E)
   WATER - EAST BAY MUNICIPAL UTILITY DISTRICT (EBMUD)
   RECLAMATION CANAL - U.S. BUREAU OF RECLAMATION (RECLAMATION)
   TELEPHONE - AMERICAN TELEPHONE & TELEGRAPH (AT&T)
2. EXISTING UTILITY FACILITIES HAVE NOT BEEN POSITIVELY IDENTIFIED.

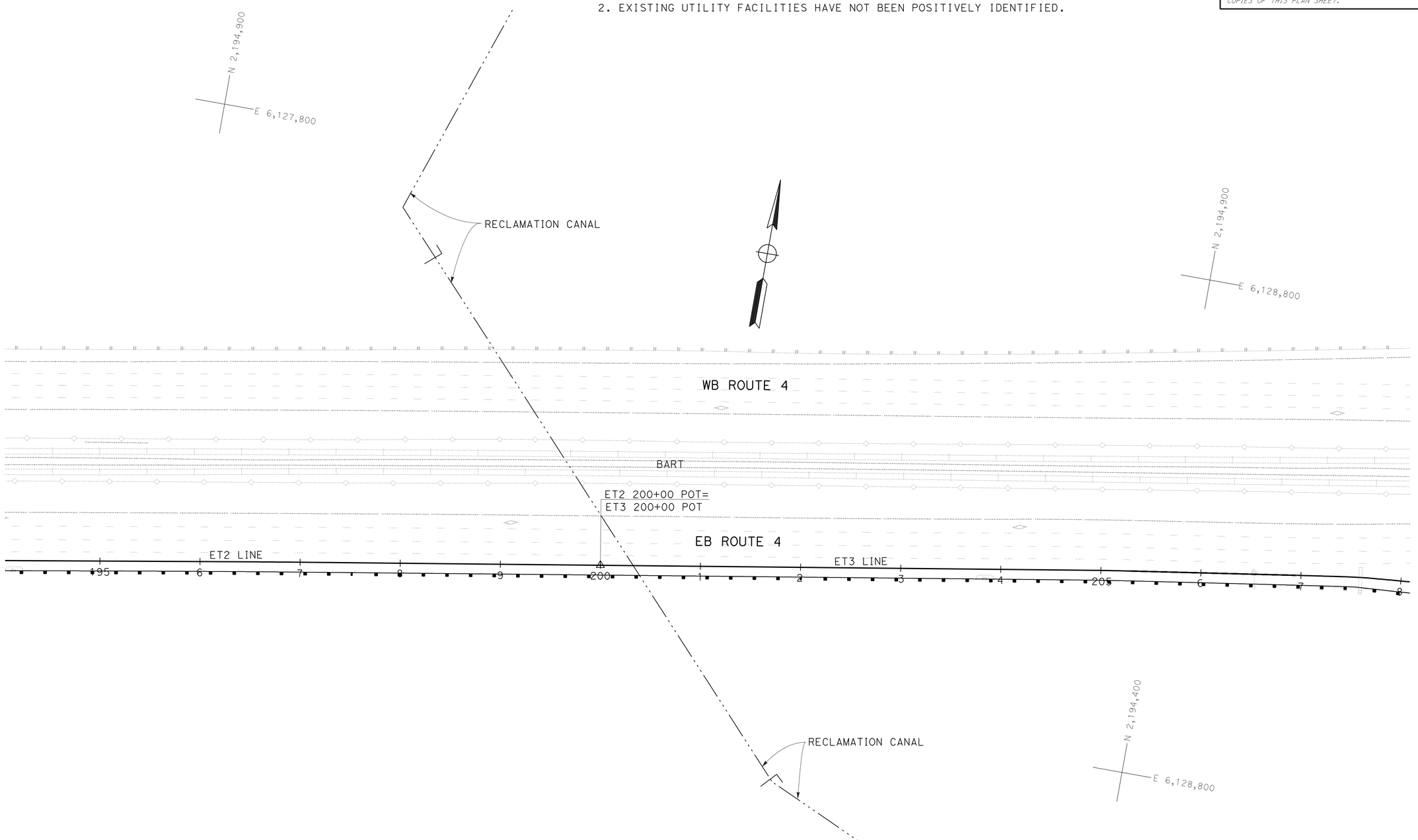

APPROVED FOR UTILITY INFORMATION ONLY

UTILITY PLAN

SCALE: 1" = 50'

U-1

STATE OF CALIFORNIA - DEPARTMENT OF TRANSPORTATION
Caltrans® **DESIGN**

FUNCTIONAL SUPERVISOR: GEORGE LO

CALCULATED-DESIGNED BY: HUNG C HSU, LLEWELLYN CHAN
CHECKED BY: BER-LIN WEI

REVISED BY: LC
DATE REVISED: 12/22/11

LAST REVISION: DATE PLOTTED => 15-AUG-2012
04-26-12 TIME PLOTTED => 09:09

Dist	COUNTY	ROUTE	POST MILES TOTAL PROJECT	SHEET No.	TOTAL SHEETS
04	CC	4,80	R15.4/16.7, 7.3/7.6	24	48

REGISTERED CIVIL ENGINEER 5-3-12 DATE

6-18-12
PLANS APPROVAL DATE

REGISTERED PROFESSIONAL ENGINEER
Ber-lin Wei
No. 49855
Exp. 9-30-12
CIVIL
STATE OF CALIFORNIA

THE STATE OF CALIFORNIA OR ITS OFFICERS OR AGENTS SHALL NOT BE RESPONSIBLE FOR THE ACCURACY OR COMPLETENESS OF SCANNED COPIES OF THIS PLAN SHEET.

NOTE:

FOR ACCURATE RIGHT OF WAY DATA, CONTACT RIGHT OF WAY ENGINEERING AT THE DISTRICT OFFICE.

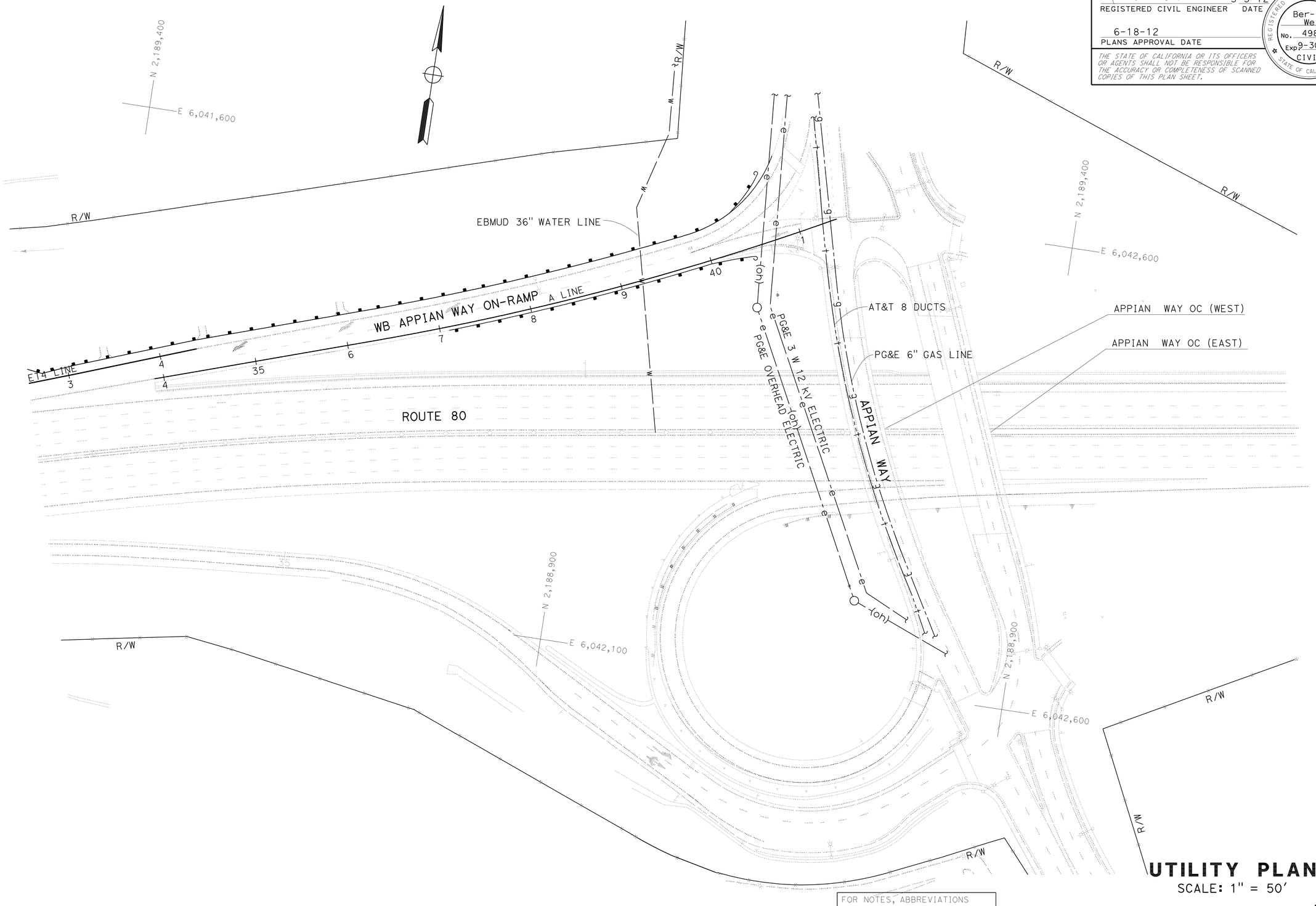

FOR NOTES, ABBREVIATIONS AND LEGEND, SEE SHEET U-1

APPROVED FOR UTILITY INFORMATION ONLY

UTILITY PLAN

SCALE: 1" = 50'

U-2

LC	12/22/11
REVISED BY	DATE REVISED
HUNG C HSU LLEWELLYN CHAN	BER-LIN WEI
CALCULATED-DESIGNED BY	CHECKED BY
FUNCTIONAL SUPERVISOR	GEORGE LO

STATE OF CALIFORNIA - DEPARTMENT OF TRANSPORTATION

Caltrans

DESIGN

LAST REVISION 04-19-12 | DATE PLOTTED => 15-AUG-2012 | TIME PLOTTED => 09:09

Dist	COUNTY	ROUTE	POST MILES TOTAL PROJECT	SHEET No.	TOTAL SHEETS
04	CC	4,80	R15.4/R16.7, 7.3/7.6	25	48

Florante P. Perez 5-14-12
REGISTERED CIVIL ENGINEER DATE

6-18-12
PLANS APPROVAL DATE

REGISTERED PROFESSIONAL ENGINEER
Florante P. Perez
No. 41030
Exp. 3-31-13
CIVIL
STATE OF CALIFORNIA

THE STATE OF CALIFORNIA OR ITS OFFICERS OR AGENTS SHALL NOT BE RESPONSIBLE FOR THE ACCURACY OR COMPLETENESS OF SCANNED COPIES OF THIS PLAN SHEET.

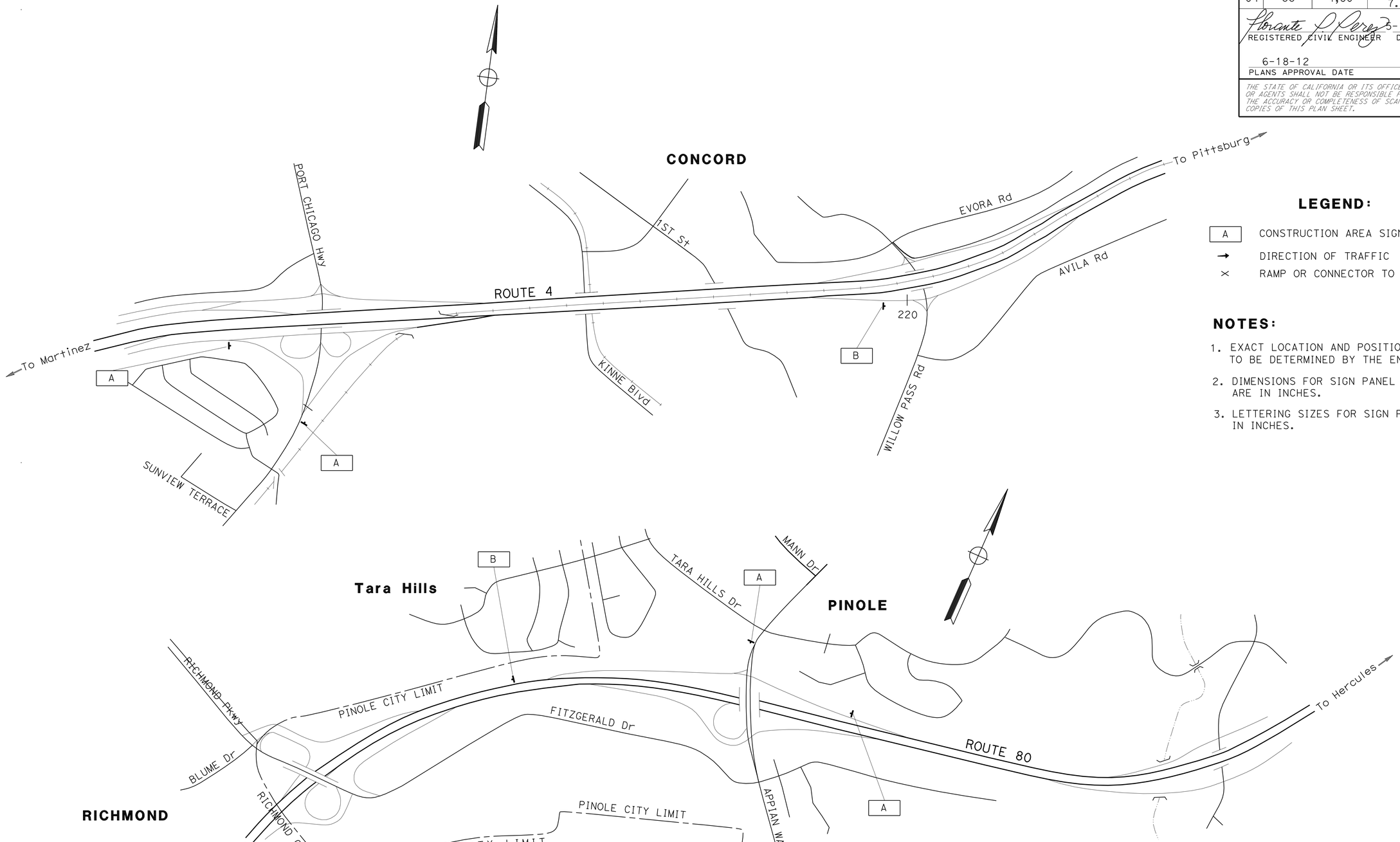

LEGEND:

A	CONSTRUCTION AREA SIGN
→	DIRECTION OF TRAFFIC
×	RAMP OR CONNECTOR TO BE CLOSED

NOTES:

1. EXACT LOCATION AND POSITION OF SIGN TO BE DETERMINED BY THE ENGINEER.
2. DIMENSIONS FOR SIGN PANEL AND POST ARE IN INCHES.
3. LETTERING SIZES FOR SIGN PANEL ARE IN INCHES.

CONSTRUCTION AREA SIGNS

NO SCALE

APPROVED FOR CONSTRUCTION AREA SIGN WORK ONLY

CS-1

STATE OF CALIFORNIA - DEPARTMENT OF TRANSPORTATION
Caltrans
TRAFFIC

FUNCTIONAL SUPERVISOR: LOURDES DAVID
CALCULATED-DESIGNED BY: PARWIN SARWARY
CHECKED BY: FLORANTE P. PEREZ
REVISED BY: PS
DATE REVISED: 2/16/12

LAST REVISION 05-03-12
DATE PLOTTED => 15-AUG-2012
TIME PLOTTED => 09:09

Dist	COUNTY	ROUTE	POST MILES TOTAL PROJECT	SHEET No.	TOTAL SHEETS
04	CC	4,80	R15.4/R16.7, 7.3/7.6	26	48

REGISTERED CIVIL ENGINEER 5-14-12 DATE

6-18-12
PLANS APPROVAL DATE

REGISTERED PROFESSIONAL ENGINEER
Florante P. Perez
No. 41030
Exp. 3-31-13
CIVIL
STATE OF CALIFORNIA

THE STATE OF CALIFORNIA OR ITS OFFICERS OR AGENTS SHALL NOT BE RESPONSIBLE FOR THE ACCURACY OR COMPLETENESS OF SCANNED COPIES OF THIS PLAN SHEET.

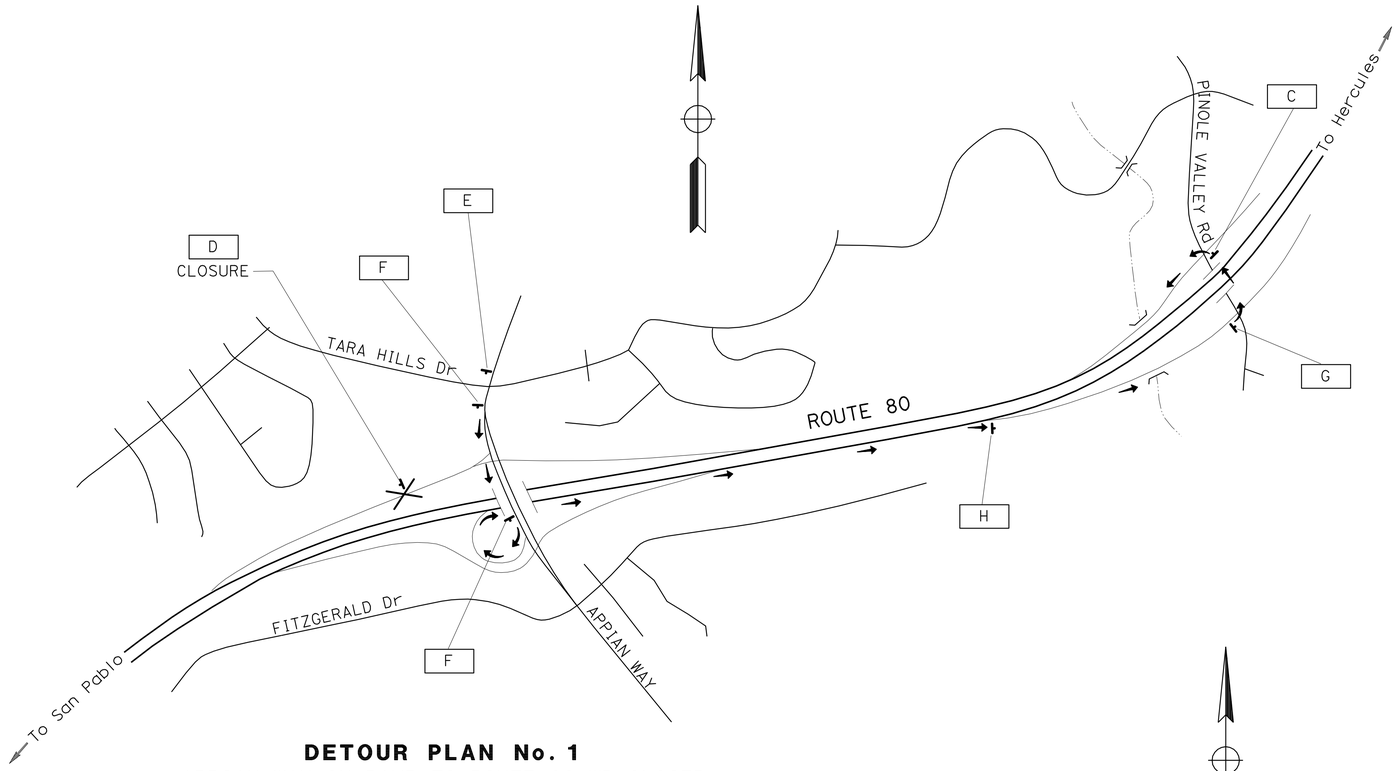

DETOUR PLAN No. 1

APPIAN WAY ON-RAMP TO ROUTE 80 WB CLOSED

DETOUR

FOR TRAFFIC TRAVELING SB ON APPIAN WAY:
1. TAKE THE ON-RAMP TO ROUTE 80 EB,
2. TAKE THE OFF-RAMP TO PINOLE VALLEY ROAD,
3. MAKE A LEFT AT PINOLE VALLEY ROAD,
4. TAKE THE ON-RAMP TO ROUTE 80 WB.

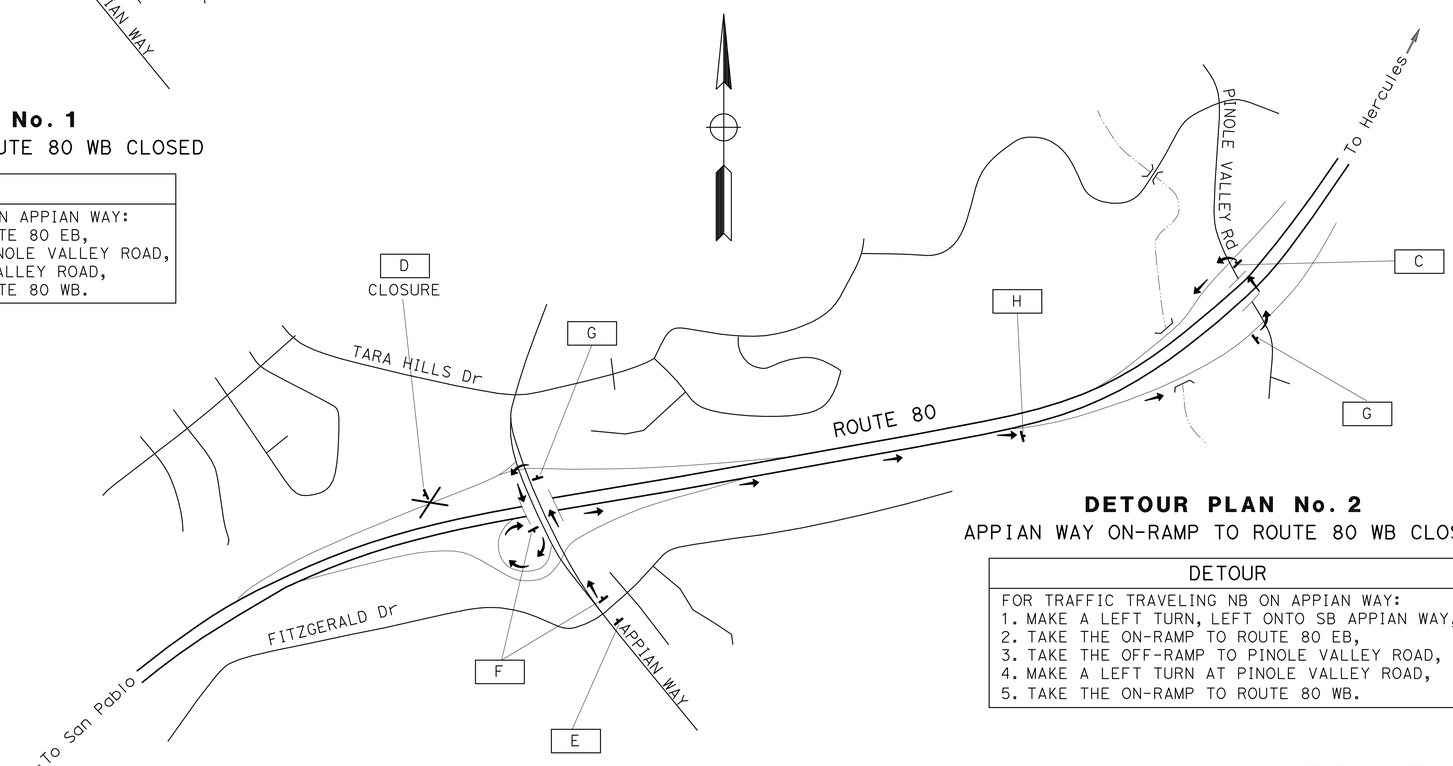

DETOUR PLAN No. 2

APPIAN WAY ON-RAMP TO ROUTE 80 WB CLOSED

DETOUR

FOR TRAFFIC TRAVELING NB ON APPIAN WAY:
1. MAKE A LEFT TURN, LEFT ONTO SB APPIAN WAY,
2. TAKE THE ON-RAMP TO ROUTE 80 EB,
3. TAKE THE OFF-RAMP TO PINOLE VALLEY ROAD,
4. MAKE A LEFT TURN AT PINOLE VALLEY ROAD,
5. TAKE THE ON-RAMP TO ROUTE 80 WB.

CONSTRUCTION AREA SIGNS

NO SCALE

APPROVED FOR CONSTRUCTION AREA SIGN WORK ONLY

FOR NOTES, ABBREVIATIONS AND LEGEND, SEE SHEET CS-1

CS-2

STATE OF CALIFORNIA - DEPARTMENT OF TRANSPORTATION
Caltrans
TRAFFIC

FUNCTIONAL SUPERVISOR: LOURDES DAVID
CALCULATED-DESIGNED BY: PARWIN SARWARY
CHECKED BY: FLORANTE P. PEREZ
REVISED BY: PS
DATE REVISED: 2/16/12

LAST REVISION 04-18-12
DATE PLOTTED => 15-AUG-2012
TIME PLOTTED => 09:09

Dist	COUNTY	ROUTE	POST MILES TOTAL PROJECT	SHEET No.	TOTAL SHEETS
04	CC	4,80	R15.4/R16.7, 7.3/7.6	27	48

Florante P. Perez 5-14-12
REGISTERED CIVIL ENGINEER DATE

6-18-12
PLANS APPROVAL DATE

REGISTERED PROFESSIONAL ENGINEER
Florante P. Perez
No. 41030
Exp. 3-31-13
CIVIL
STATE OF CALIFORNIA

THE STATE OF CALIFORNIA OR ITS OFFICERS OR AGENTS SHALL NOT BE RESPONSIBLE FOR THE ACCURACY OR COMPLETENESS OF SCANNED COPIES OF THIS PLAN SHEET.

STATIONARY MOUNTED CONSTRUCTION AREA SIGNS

SIGN	CODE	MESSAGE	PANEL SIZE (INCH x INCH)	NUMBER OF POSTS AND SIZE (EA-INCH x INCH)	NUMBER OF SIGNS
A	W20-1	ROAD WORK AHEAD	60 x 60	2 - 4 x 6	4
B	G20-2	END ROAD WORK	36 x 18	1 - 6 x 6	2
C	M4-8A	END DETOUR	24 x 18	1 - 4 x 4	2
D	SC6-3(CA)	RAMP CLOSED	48 x 60	1 - 6 x 6	2
E	W20-2	DETOUR AHEAD	36 x 36	1 - 4 x 6	2
F	M4-8	DETOUR	30 x 15	1 - 4 x 4	4
	G27-2(80)(CA)	STATE ROUTE SHIELD	24 x 24		
	M3-2	EAST	30 x 15		
	M6-3	STRAIGHT ARROW	21 x 15		
G	M4-8	DETOUR	30 x 15	1 - 4 x 4	3
	G27-2(80)(CA)	STATE ROUTE SHIELD	24 x 24		
	M3-2	EAST	30 x 15		
	M6-1	LEFT ARROW	21 x 15		
H	M4-8	DETOUR	30 x 15	1 - 4 x 4	2
	G27-2(80)(CA)	STATE ROUTE SHIELD	24 x 24		
	M3-2	EAST	30 x 15		
	M6-1	RIGHT ARROW	21 x 15		

CONSTRUCTION AREA SIGNS

FOR NOTES, ABBREVIATIONS AND LEGEND, SEE SHEET CS-1

CS-3

STATE OF CALIFORNIA - DEPARTMENT OF TRANSPORTATION
Caltrans
TRAFFIC

FUNCTIONAL SUPERVISOR: LOURDES DAVID
CALCULATED-DESIGNED BY: PARWIN SARWARY
CHECKED BY: FLORANTE P. PEREZ
REVISED BY: PS
DATE REVISED: 2/16/12

LAST REVISION 05-03-12
DATE PLOTTED => 15-AUG-2012
TIME PLOTTED => 09:09

Dist	COUNTY	ROUTE	POST MILES TOTAL PROJECT	SHEET No.	TOTAL SHEETS
04	CC	4,80	R15.4/R16.7, 7.3/7.6	28	48

REGISTERED CIVIL ENGINEER 5-3-12 DATE

6-18-12
PLANS APPROVAL DATE

REGISTERED PROFESSIONAL ENGINEER Ber-lin Wei No. 49855 Exp. 9-30-12 CIVIL STATE OF CALIFORNIA

THE STATE OF CALIFORNIA OR ITS OFFICERS OR AGENTS SHALL NOT BE RESPONSIBLE FOR THE ACCURACY OR COMPLETENESS OF SCANNED COPIES OF THIS PLAN SHEET.

NOTE:

FOR ACCURATE RIGHT OF WAY DATA, CONTACT RIGHT OF WAY ENGINEERING AT THE DISTRICT OFFICE.

LEGEND:

- (No.) TRAFFIC STRIPE DETAIL NUMBER
- BEGIN/END OF TRAFFIC STRIPE DETAIL
- CHANGE OF TRAFFIC STRIPE DETAIL
- o PAVEMENT MARKER (NON-REFLECTIVE)

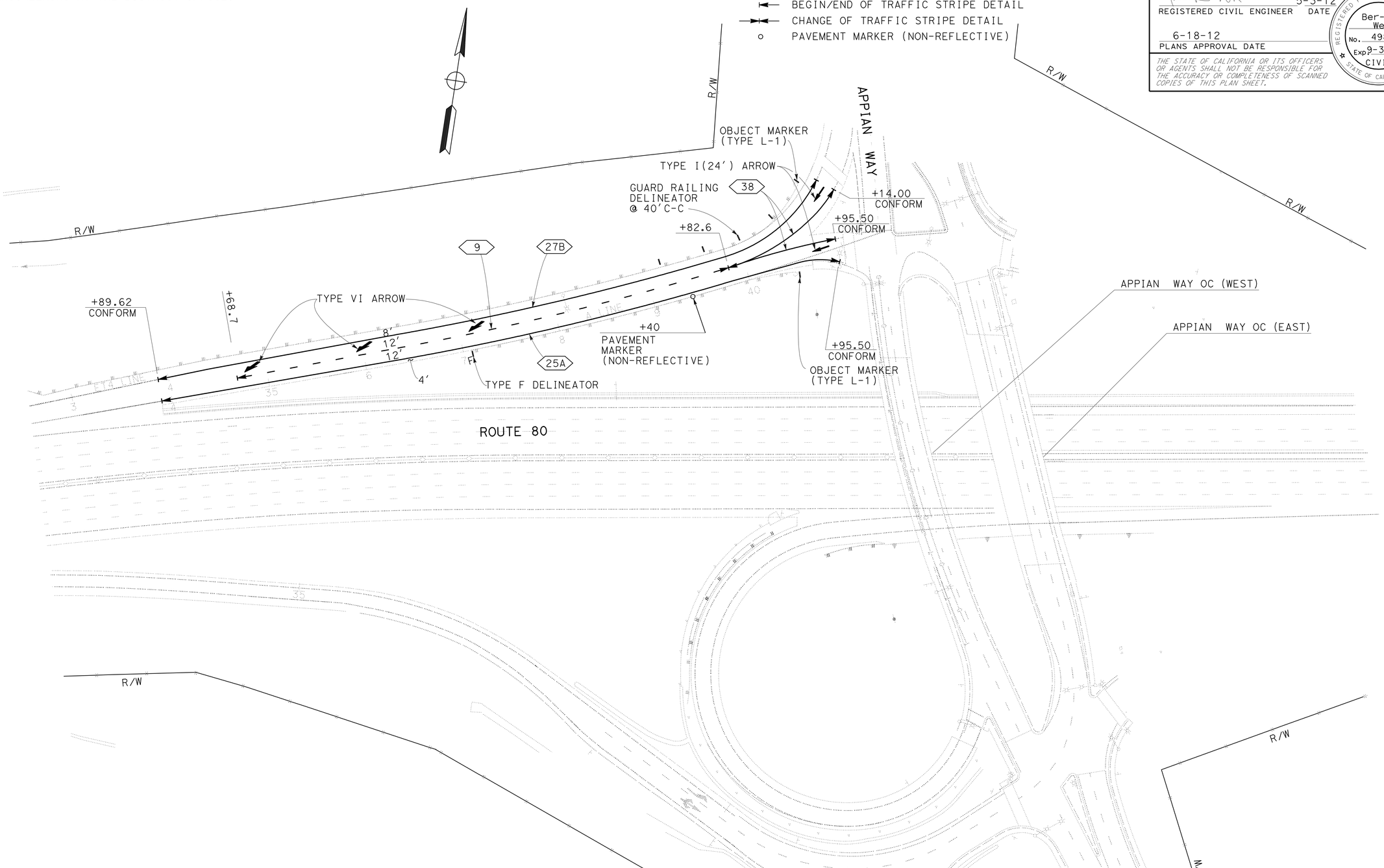

PAVEMENT DELINEATION PLAN

SCALE: 1" = 50'

APPROVED FOR PAVEMENT DELINEATION WORK ONLY

PD-1

REVISED BY	LC
DATE REVISED	1/26/11
HUNG C HSU LLEWELLYN CHAN	BER-LIN WEI
CALCULATED-DESIGNED BY	
CHECKED BY	
FUNCTIONAL SUPERVISOR	GEORGE LO

STATE OF CALIFORNIA - DEPARTMENT OF TRANSPORTATION

Caltrans DESIGN

LAST REVISION 04-26-12 | DATE PLOTTED => 15-AUG-2012 | TIME PLOTTED => 09:09

Dist	COUNTY	ROUTE	POST MILES TOTAL PROJECT	SHEET No.	TOTAL SHEETS
04	CC	4,80	R15.4/R16.7, 7.3/7.6	29	48

REGISTERED CIVIL ENGINEER 5-3-12 DATE

6-18-12
PLANS APPROVAL DATE

REGISTERED PROFESSIONAL ENGINEER Ber-lin Wei No. 49855 Exp. 9-30-12 CIVIL STATE OF CALIFORNIA

THE STATE OF CALIFORNIA OR ITS OFFICERS OR AGENTS SHALL NOT BE RESPONSIBLE FOR THE ACCURACY OR COMPLETENESS OF SCANNED COPIES OF THIS PLAN SHEET.

TRAFFIC STRIPES, PAVEMENT MARKINGS AND PAVEMENT MARKERS

SHEET No.	STATION	DETAIL No. OR PAVEMENT MARKING	PAVEMENT MARKER (NON-REFLECTIVE)	PAVEMENT MARKER (RETROREFLECTIVE)		THERMOPLASTIC TRAFFIC STRIPE				THERMOPLASTIC PAVEMENT MARKING	REMOVE PAVEMENT MARKER	REMOVE YELLOW THERMOPLASTIC TRAFFIC STRIPE (HAZARDOUS WASTE)
			TYPE A	TYPE G	TYPE H	4" YELLOW	4" WHITE	4" WHITE (BROKEN 17'-7')	8" WHITE			
				EA		LF				SQFT	EA	LF
PD-1	A 33+89.6 TO 41+14.0	25A			31	706					31	706
		9		12				514			12	
		38		12					245		12	
		27B					725					
		TYPE I (24') ARROW								168		
		TYPE VI ARROW								297		
PD-1	A 39+40		1								1	
SUBTOTAL				24	31	706	725					
TOTAL			1	55		1431		514	245	465	56	706

OBJECT MARKERS AND DELINEATORS

SHEET No.	STATION	LOCATION	OBJECT MARKER (TYPE L-1)	DELINEATOR (CLASS 1) TYPE F	GUARD RAILING DELINEATOR
			EA		
C-1, C-2	ET1 147+06 TO 155+83	R†	1		21
C-2	ET1 158+50	R†	1		
C-2	ET1 164+75 TO 166+35	R†			5
C-2, C-3	ET3 207+00 TO 210+00	R†			8
C-3	ET3 216+70	R†		1	
PD-1	A 39+20 TO 40+79	L†	1		4
PD-1	A 37+09 TO 40+49	R†	1	1	
TOTAL			4	2	38

PAVEMENT DELINEATION QUANTITIES

PDQ-1

REVISED BY	DATE REVISED
HCH	1/27/12

CALCULATED-DESIGNED BY: HUNG C HSU
CHECKED BY: BER-LIN WEI
FUNCTIONAL SUPERVISOR: GEORGE LO

STATE OF CALIFORNIA - DEPARTMENT OF TRANSPORTATION
Caltrans® DESIGN

LAST REVISION 04-26-12
DATE PLOTTED => 15-AUG-2012
TIME PLOTTED => 09:09

Dist	COUNTY	ROUTE	POST MILES TOTAL PROJECT	SHEET No.	TOTAL SHEETS
04	CC	4,80	R15.4/R16.7, 7.3/7.6	30	48

REGISTERED CIVIL ENGINEER 5-3-12 DATE

6-18-12
PLANS APPROVAL DATE

REGISTERED PROFESSIONAL ENGINEER Ber-lin Wei No. 49855 Exp. 9-30-12 CIVIL STATE OF CALIFORNIA

THE STATE OF CALIFORNIA OR ITS OFFICERS OR AGENTS SHALL NOT BE RESPONSIBLE FOR THE ACCURACY OR COMPLETENESS OF SCANNED COPIES OF THIS PLAN SHEET.

PAVEMENT STRUCTURE QUANTITIES SUMMARY

SHEET No.	STATION	HOT MIX ASPHALT (TYPE A)	TACK COAT	COLD PLANE ASPHALT CONCRETE PAVEMENT (0.2' Max)
		TON		SQYD
L-8	A 33+89.6 TO 34+40	26	0.1	
	A 33+89.6 TO 34+39.6			199
	A 34+40 TO 39+82.6	283	1.0	
	A 39+82.6 TO 41+14	99	0.3	
	A 40+64 TO 41+14			200
	A 40+49.5 TO 40+99.5			162
	PLACE HOT MIX ASPHALT DIKE	83	0.2	
	HMA OVERSIDE DRAIN	0.1		
TOTAL		491.1	1.6	561

METAL BEAM GUARD RAILING (STEEL POST)

SHEET No.	STATION	LOCATION	METAL BEAM GUARD RAILING (STEEL POST)	ALTERNATIVE FLARED TERMINAL SYSTEM	ALTERNATIVE IN-LINE TERMINAL SYSTEM	END ANCHOR ASSEMBLY (TYPE SFT)	TRANSITION RAILING (TYPE WB)
			LF	EA			
L-1, L-2	ET1 147+06 TO 155+83	R+	877		1		
L-2, L-3	ET1 158+50 TO 177+08	R+	1858		1		1
L-4, L-5	ET2 191+70 TO 200+00	R+	830				
L-5, L-6	ET3 200+00 TO 216+70	R+	1670			1	
L-7, L-8	ET4 24+79 TO 34+40	L+	961			1	
L-8	A 34+40 TO 40+79	L+	639	1			
	A 37+09 TO 40+49	R+	340	1		1	
TOTAL			7175	2	2	3	1

PLACE HOT MIX ASPHALT DIKE

SHEET No.	STATION	LOCATION	TYPE C	TYPE F	HOT MIX ASPHALT (TYPE A)	TACK COAT
			LF		TON	
L-1, L-2	ET1 146+71 TO 155+83	R+	95	817	11	
L-2, L-3	ET1 158+15 TO 176+50	R+	235	1600	22	0.1
	ET2 176+50 TO 177+08	R+		58	1	
L-4, L-5	ET2 191+60 TO 200+00	R+		840	11	
L-5, L-6	ET3 200+00 TO 217+05	R+	95	1610	21	0.1
L-7, L-8	ET4 27+50 TO 33+89.6	L+		630	8	
L-8	A 33+89.6 TO 41+05	L+	95	639	9	
TOTAL			520	6194	83*	0.2*

* QUANTITY INCLUDED IN PAVEMENT STRUCTURE QUANTITIES SUMMARY.

REMOVE ASPHALT CONCRETE DIKE

SHEET No.	STATION	LOCATION	LF
L-1, L-2	ET1 146+71 TO 155+83	R+	912
L-2, L-3	ET1 158+15 TO 176+50	R+	1835
	ET2 176+50 TO 177+08	R+	58
L-4, L-5	ET2 191+60 TO 200+00	R+	840
L-5, L-6	ET3 200+00 TO 217+05	R+	1705
L-7, L-8	ET4 32+70 TO 33+89.6	L+	119.6
L-8	A 33+89.6 TO 41+05	L+	715.4
TOTAL			6185

REMOVE MBGR

SHEET No.	STATION	LOCATION	LF
L-2	ET1 155+17 TO 155+83	R+	66
L-3	ET1 176+22 TO 177+08	R+	86
L-4	ET2 191+70 TO 192+22	R+	52
L-5	ET3 206+85 TO 207+68	R+	83
TOTAL			287

SHOULDER BACKING

SHEET No.	STATION	LOCATION	TON
X-1, X-2	A 33+89.6 TO 41+14	L+	12
	A 33+89.6 TO 40+99.5	R+	16
TOTAL			28

SUMMARY OF QUANTITIES

Q-1

STATE OF CALIFORNIA - DEPARTMENT OF TRANSPORTATION
Caltrans DESIGN

FUNCTIONAL SUPERVISOR: GEORGE LO
CALCULATED-DESIGNED BY: HUNG C HSU
CHECKED BY: BER-LIN WEI
REVISED BY: HCH
DATE REVISED: 1/27/12

LAST REVISION DATE PLOTTED => 15-AUG-2012
TIME PLOTTED => 09:09

Dist	COUNTY	ROUTE	POST MILES TOTAL PROJECT	SHEET No.	TOTAL SHEETS
04	CC	4,80	R15.4/R16.7, 7.3/7.6	31	48

REGISTERED CIVIL ENGINEER 5-3-12 DATE

6-18-12
PLANS APPROVAL DATE

REGISTERED PROFESSIONAL ENGINEER Ber-lin Wei No. 49855 Exp. 9-30-12 CIVIL STATE OF CALIFORNIA

THE STATE OF CALIFORNIA OR ITS OFFICERS OR AGENTS SHALL NOT BE RESPONSIBLE FOR THE ACCURACY OR COMPLETENESS OF SCANNED COPIES OF THIS PLAN SHEET.

VEGETATION CONTROL (ASPHALT COMPOSITE)

SHEET No.	STATION	LOCATION	SQYD
L-1, L-2	ET1 147+06 TO 155+83	R+	504
L-2, L-3	ET1 158+50 TO 177+08	R+	1040
L-4, L-5	ET2 184+20 TO 200+00	R+	941
L-5, L-6	ET3 200+00 TO 216+70	R+	959
L-7, L-8	ET4 24+79 TO 34+40	L+	558
L-8	A 34+40 TO 40+79	L+	367
L-8	A 37+09 TO 40+49	R+	196
TOTAL			4565

ADJUST INLET, Misc IRON & STEEL, FRAME & COVER AND MINOR Conc (MINOR Str)

SHEET No.	STATION	LOCATION	ADJUST INLET	Misc IRON & STEEL	FRAME & COVER (N)	MINOR CONCRETE (MINOR STRUCTURE)
					U45	
			EA	LB	EA	CY
L-8, DD-1	A 39+80	OUTSIDE LANE	1	435	1	0.93
TOTAL			1	435	1	0.93

(N) NOT A SEPARATE PAY ITEM, FOR INFORMATION ONLY.

REMOVE CONCRETE BARRIER (TYPE K)

SHEET No.	STATION	LOCATION	LF
L-7	ET4 24+91 TO 32+11	L+	720
TOTAL			720

REMOVE CRASH CUSHION (SAND FILLED)

SHEET No.	STATION	LOCATION	EA
L-7	ET4 32+11	L+	1
TOTAL			1

HMA OVERSIDE DRAIN

SHEET No.	STATION	LOCATION	EA	HOT MIX ASPHALT (TYPE A)	PLACE HOT MIX ASPHALT (MISCELLANEOUS AREA)
				TON	SQYD
L-8	A 33+42	L+	1	0.1	0.4
	A 34+40	L+	1		
	A 36+00	L+	1		
TOTAL			3	0.1*	0.4

*QUANTITY INCLUDED IN PAVEMENT STRUCTURE QUANTITIES SUMMARY.

SUMMARY OF QUANTITIES

Q-2

STATE OF CALIFORNIA - DEPARTMENT OF TRANSPORTATION
Caltrans DESIGN
FUNCTIONAL SUPERVISOR GEORGE LO
CALCULATED-DESIGNED BY HUNG C HSU
CHECKED BY BER-LIN WEI
REVISED BY HCH
DATE REVISED 1/27/12

LAST REVISION 04-26-12
DATE PLOTTED => 15-AUG-2012
TIME PLOTTED => 09:09

DIST	COUNTY	ROUTE	POST MILES TOTAL PROJECT	SHEET NO.	TOTAL SHEETS
04	CC	4,80	R15.4/R16.7, 7.3/7.6	32	48

REGISTERED CIVIL ENGINEER

April 20, 2012
PLANS APPROVAL DATE

REGISTERED PROFESSIONAL ENGINEER
Roberta L. McLaughlin
No. C40375
Exp. 3-31-13
CIVIL
STATE OF CALIFORNIA

The State of California or its officers or agents shall not be responsible for the accuracy or completeness of electronic copies of this plan sheet.

To accompany plans dated 6-18-12

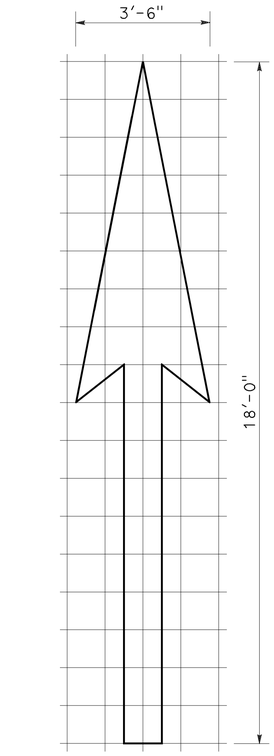

A=25 sq ft

TYPE I 18'-0" ARROW

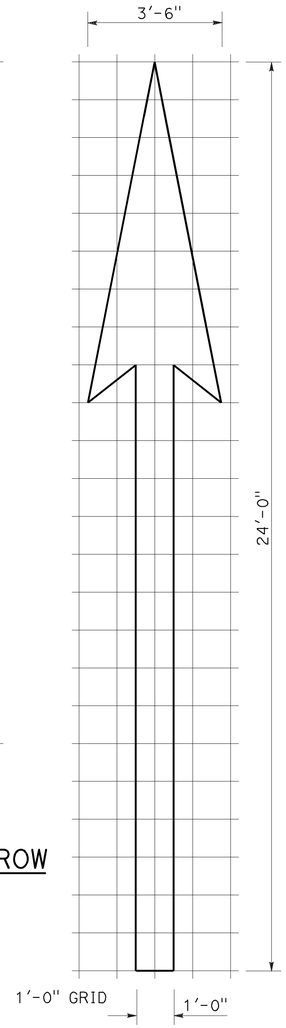

A=31 sq ft

TYPE I 24'-0" ARROW

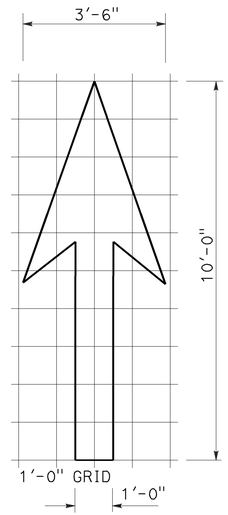

A=14 sq ft

TYPE I 10'-0" ARROW

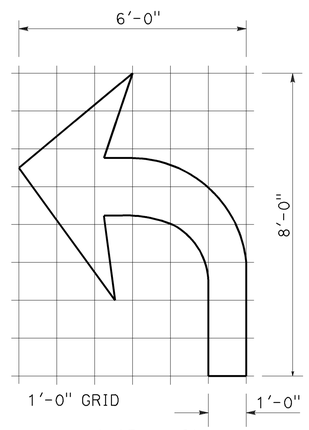

A=15 sq ft

TYPE IV (L) ARROW

(FOR TYPE IV (R) ARROW, USE MIRROR IMAGE)

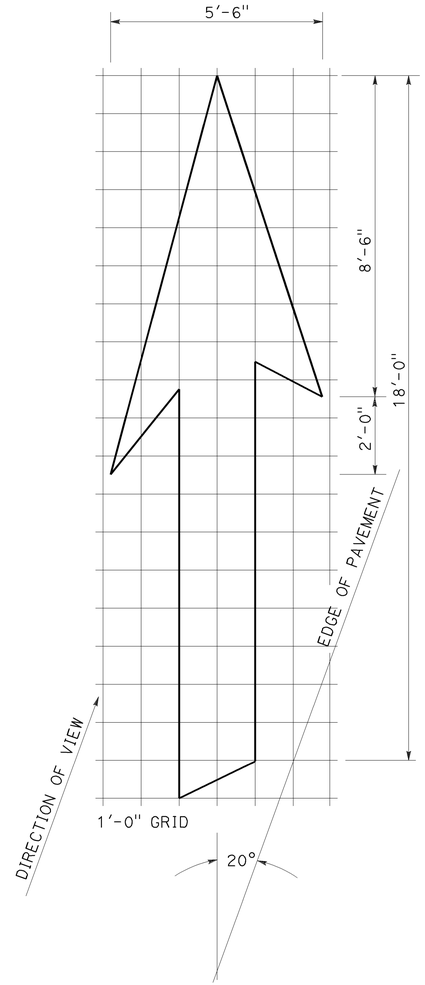

A=42 sq ft

TYPE VI ARROW

RIGHT LANE DROP ARROW (FOR LEFT LANE, USE MIRROR IMAGE)

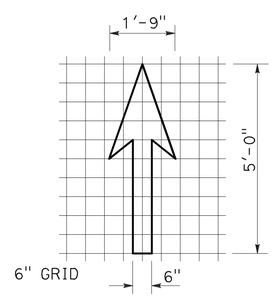

A=3.5 sq ft

BIKE LANE ARROW

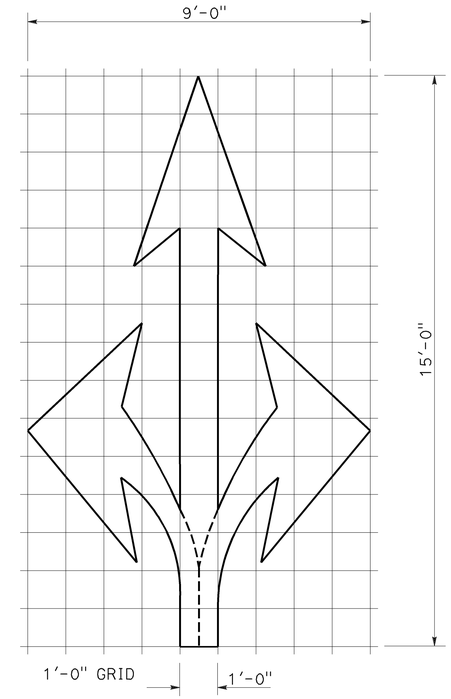

A=36 sq ft

TYPE VIII ARROW

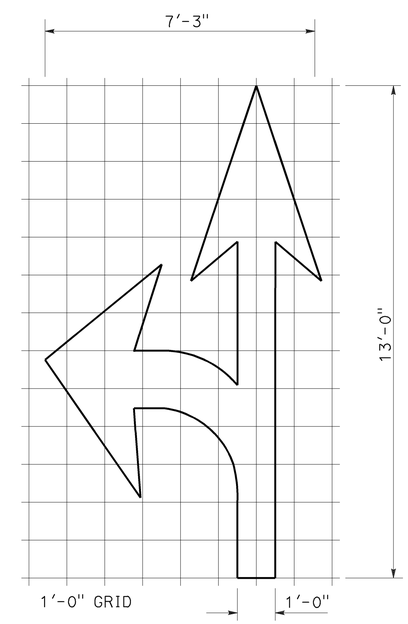

A=27 sq ft

TYPE VII (L) ARROW

(FOR TYPE VII (R) ARROW, USE MIRROR IMAGE)

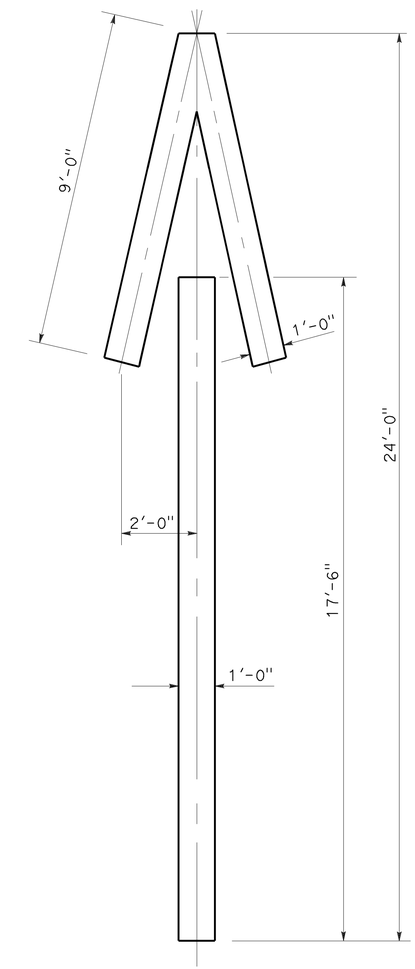

A=33 sq ft

TYPE V ARROW

NOTE:

MINOR VARIATIONS IN DIMENSIONS MAY BE ACCEPTED BY THE ENGINEER.

STATE OF CALIFORNIA
DEPARTMENT OF TRANSPORTATION

PAVEMENT MARKINGS ARROWS

NO SCALE

RSP A24A DATED APRIL 20, 2012 SUPERSEDES STANDARD PLAN A24A DATED MAY 1, 2006 - PAGE 9 OF THE STANDARD PLANS BOOK DATED MAY 2006.

REVISED STANDARD PLAN RSP A24A

2006 REVISED STANDARD PLAN RSP A24A

3-14-12

Dist	COUNTY	ROUTE	POST MILES TOTAL PROJECT	SHEET No.	TOTAL SHEETS
04	CC	4,80	R15.4/R16.7, 7.3/7.6	33	48

Randell D. Hiatt
REGISTERED CIVIL ENGINEER

May 20, 2011
PLANS APPROVAL DATE

REGISTERED PROFESSIONAL ENGINEER Randell D. Hiatt No. C50200 Exp. 6-30-11 CIVIL STATE OF CALIFORNIA

The State of California or its officers or agents shall not be responsible for the accuracy or completeness of electronic copies of this plan sheet.

To accompany plans dated 6-18-12

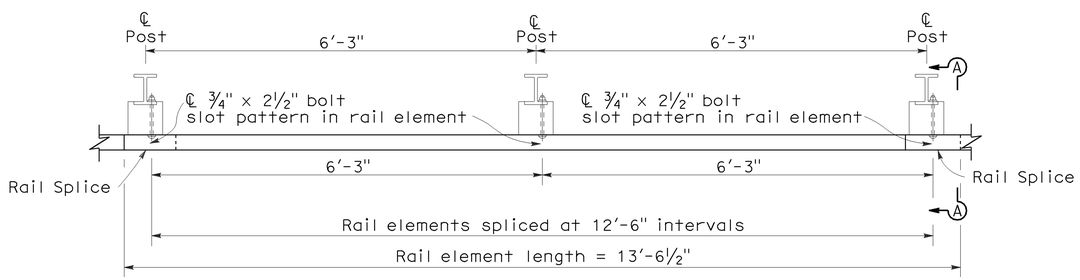

PLAN

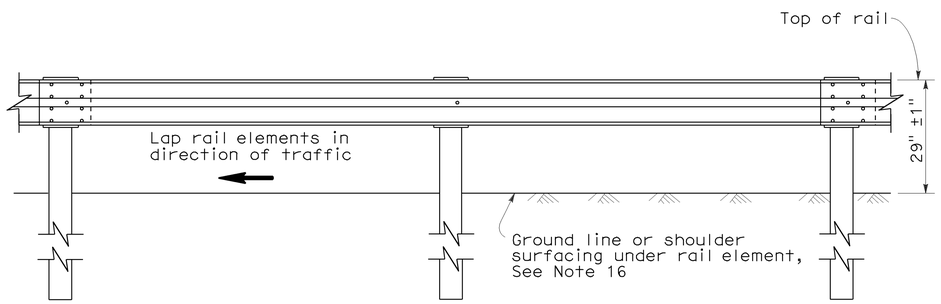

ELEVATION

METAL BEAM GUARD RAILING WITH STEEL POSTS AND NOTCHED WOOD OR NOTCHED RECYCLED PLASTIC BLOCKS

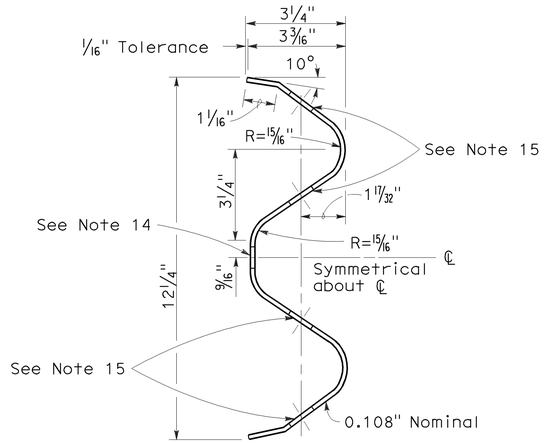

SECTION THRU RAIL ELEMENT

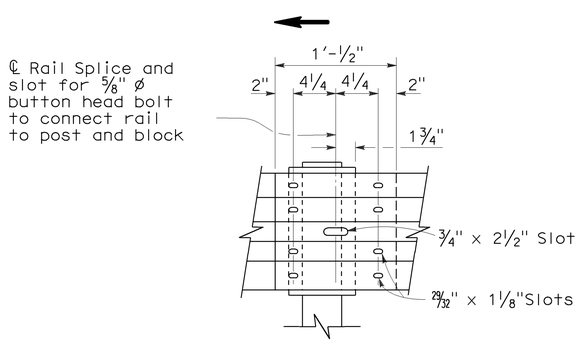

ELEVATION

RAIL ELEMENT SPLICE DETAIL

a) Connect the over lapped end of the rail elements with ⅝″ ø × 1⅜″ button head oval shoulder splice bolts inserted into the 29⁄32″ × 1⅛″ slots and bolted together with ⅝″ ø recessed hex nuts. Recess of hex nut points toward rail element. A total of 8 bolts and nuts are to be used at each rail splice connection.

b) The ends of the rail elements are to be overlapped in the direction of traffic (see details).

c) Where end cap is to be attached to the end of a rail element, a total of 4 of the above described splice bolts and nuts are to be used.

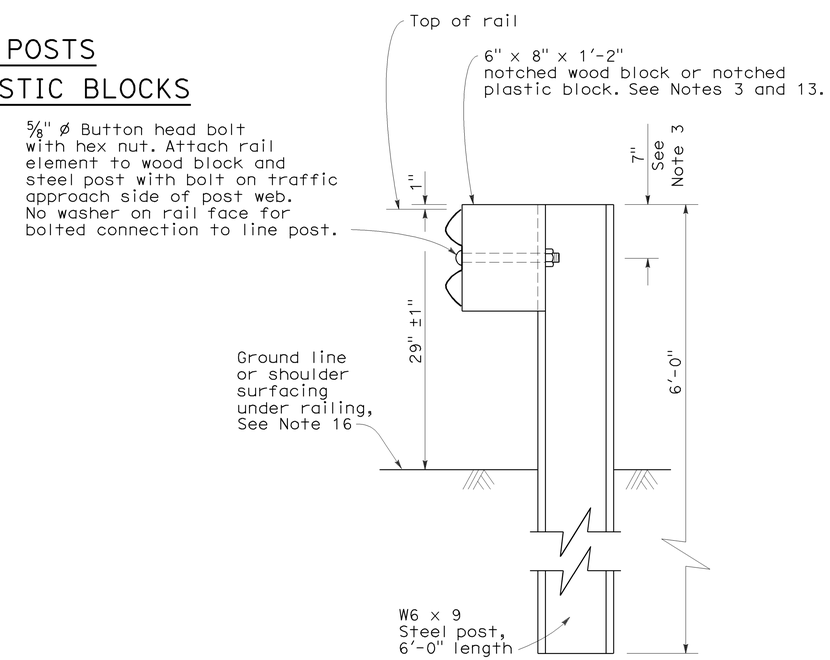

SECTION A-A

TYPICAL STEEL LINE POST INSTALLATION

See Note 4

NOTES:

1. For details of wood post installations, see Standard Plan A77A1.
2. For details of standard hardware used to construct guard railing, see Standard Plan A77B1.
3. For details of steel posts and notched wood blocks used to construct guard railing, see Standard Plan A77C2.
4. For additional installation details, see Standard Plan A77C3.
5. Guard railing post spacing to be 6′-3″ center to center, except as otherwise noted.
6. For guard railing typical layouts, see the A77E, A77F and A77G Series of Standard Plans.
7. For terminal system end treatment details, see the A77L Series of Standard Plans. To connect railing to terminal system end treatment, transition the top of railing height at a ratio of 120:1 to terminal system end treatment height plus one 12′-6″ standard railing section at the transitioned height for a horizontal connection to the end treatment.
8. For guard railing end anchor details, see Standard Plans A77H1 and A77I2.
9. For details of guard railing transition to bridge railing, see Standard Plan A77J4.
10. For additional details of guard railing connection to bridge railings, see Standard Plans A77J1, A77J2 and A77K1.
11. For dike positioning and guard railing delineation details, see Standard Plan A77C4.
12. Direction of adjacent traffic indicated by → .
13. Notched face of block faces steel post.
14. Slotted hole for bolted connection of rail element to block and post. See "Section Thru Rail Element".
15. Slotted holes for splice bolts to overlap ends of rail element. See "Section Thru Rail Element".
16. Install posts in soil.

STATE OF CALIFORNIA
DEPARTMENT OF TRANSPORTATION

METAL BEAM GUARD RAILING STANDARD RAILING SECTION (STEEL POST WITH NOTCHED WOOD OR NOTCHED RECYCLED PLASTIC BLOCK)

NO SCALE

RSP A77A2 DATED MAY 20, 2011 SUPERSEDES STANDARD PLAN A77A2 DATED MAY 1, 2006 - PAGE 42 OF THE STANDARD PLANS BOOK DATED MAY 2006.

REVISED STANDARD PLAN RSP A77A2

2006 REVISED STANDARD PLAN RSP A77A2

5-4-11

To accompany plans dated 6-18-12

Dist	COUNTY	ROUTE	POST MILES TOTAL PROJECT	SHEET No.	TOTAL SHEETS
04	CC	4,80	R15.4/R16.7, 7.3/7.6	34	48

Randell D. Hiatt
REGISTERED CIVIL ENGINEER

May 20, 2011
PLANS APPROVAL DATE

REGISTERED PROFESSIONAL ENGINEER
Randell D. Hiatt
No. C50200
Exp. 6-30-11
CIVIL
STATE OF CALIFORNIA

The State of California or its officers or agents shall not be responsible for the accuracy or completeness of electronic copies of this plan sheet.

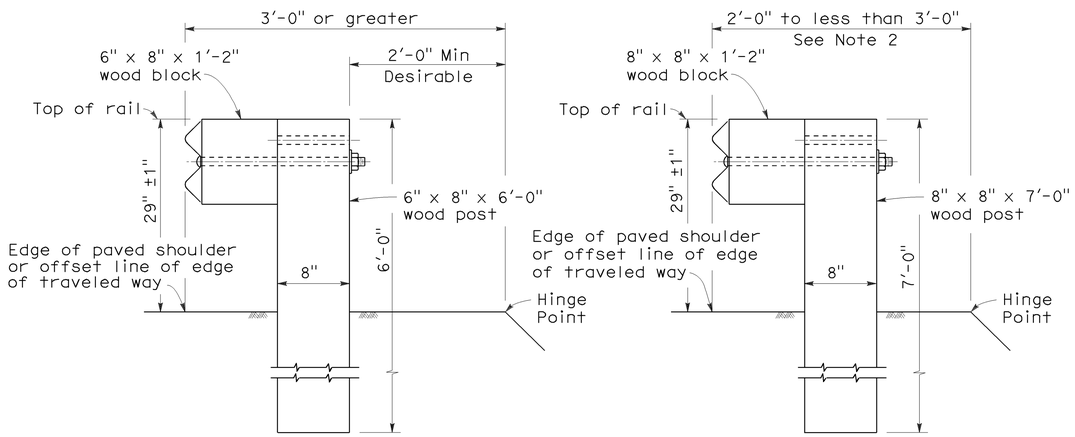

DETAIL A
TYPICAL ROADWAY INSTALLATION
See Note 1

DETAIL B
NARROW ROADWAY INSTALLATION
See Note 1

POST EMBEDMENT

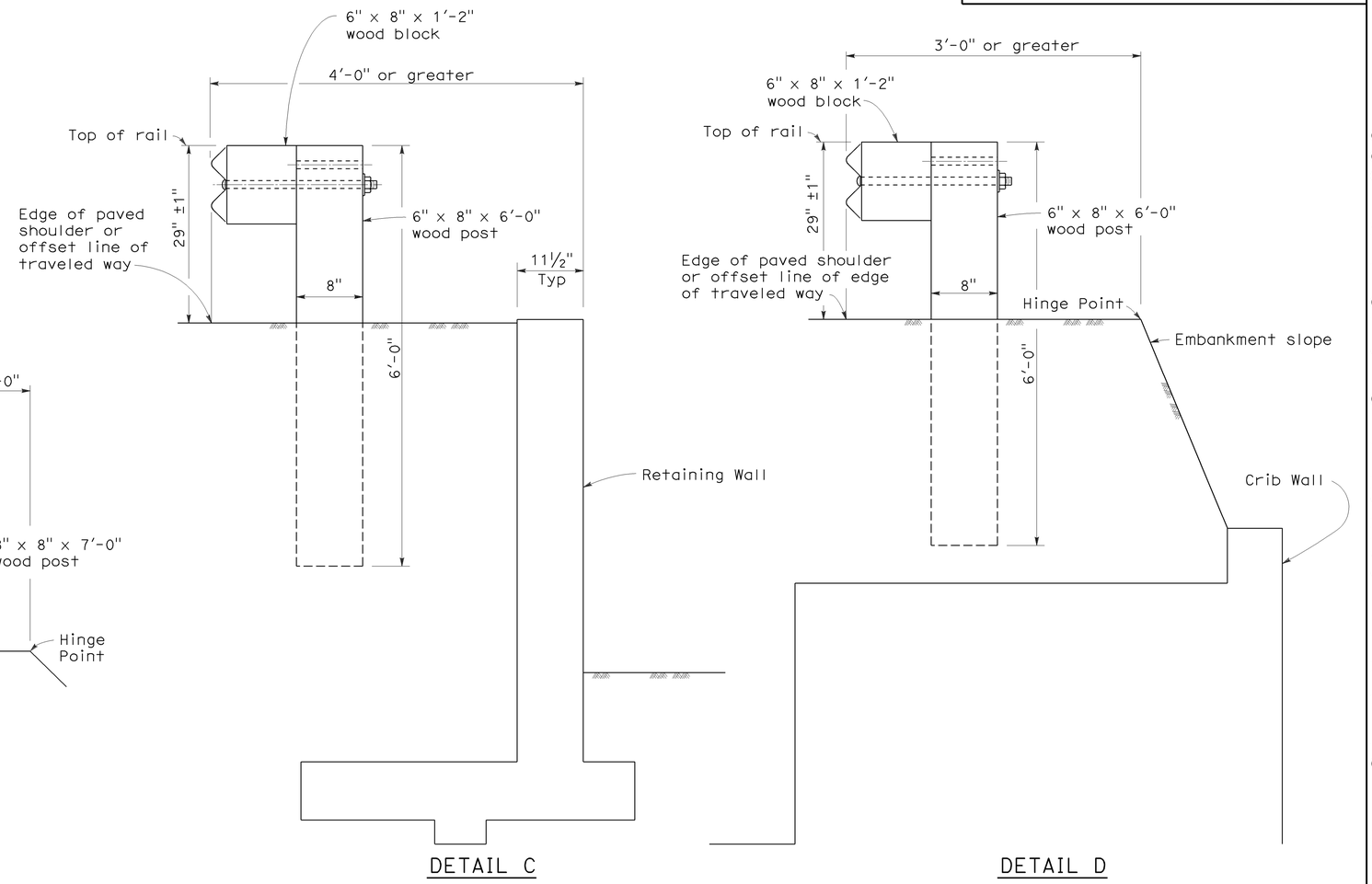

DETAIL C

DETAIL D

INSTALLATION AT EARTH RETAINING WALLS

NOTES:

1. These installation details also applicable to steel line post installations. For Detail A, C, and D, where steel line post installations are constructed, W6 x 9 steel post, 6'-0" in length, with 6" x 8" x 1'-2" notched wood blocks or notched recycled plastic blocks are to be used in place of the size of wood post and wood block shown. For Detail B, where steel line post installations are constructed, W6 x 9 steel post, 7'-0" in length, with 6" x 8" x 1'-2" notched wood blocks or notched recycled plastic blocks are to be used in place of the size of wood post and wood block shown. For additional installation details, see Standard Plans A77A1 and A77A2.
2. Where the distance between the face of the rail and the hinge point is less than 2'-0", see the Project Plans for special details.
3. For dike positioning with guard railing installations, see Standard Plan A77C4.

STATE OF CALIFORNIA
DEPARTMENT OF TRANSPORTATION

METAL BEAM GUARD RAILING TYPICAL LINE POST EMBEDMENT AND HINGE POINT OFFSET DETAILS

NO SCALE

RSP A77C3 DATED MAY 20, 2011 SUPERSEDES STANDARD PLAN A77C3
DATED MAY 1, 2006 - PAGE 46 OF THE STANDARD PLANS BOOK DATED MAY 2006.

REVISED STANDARD PLAN RSP A77C3

2006 REVISED STANDARD PLAN RSP A77C3

3-10-11

Dist	COUNTY	ROUTE	POST MILES TOTAL PROJECT	SHEET No.	TOTAL SHEETS
04	CC	4,80	R15.4/R16.7, 7.3/7.6	35	48

Randell D. Hiatt
REGISTERED CIVIL ENGINEER

May 20, 2011
PLANS APPROVAL DATE

REGISTERED PROFESSIONAL ENGINEER
Randell D. Hiatt
No. C50200
Exp. 6-30-11
CIVIL
STATE OF CALIFORNIA

The State of California or its officers or agents shall not be responsible for the accuracy or completeness of electronic copies of this plan sheet.

To accompany plans dated 6-18-12

NOTES:

1. When necessary to place dike in front of face of guard railing, only Type C dike may be used. For dike details, see Standard Plan A87B.
2. For standard railing post embedment, see Standard Plans A77C3.
3. Guard railing delineation to be used where shown on the Project Plans.
4. When dike or curb is placed under guard railing, the maximum height of the dike or curb shall be 4". Mountable dike should not be used. For dike and curb details, see Standard Plans A87A and A87B.
5. For details of typical distance between the face of rail and hinge point, see Standard Plan A77C3.
6. For steel line posts, use 1/4 - 20 self-tapping screws in 0.22" diameter holes or 1/4" bolts in 9/32" diameter holes.

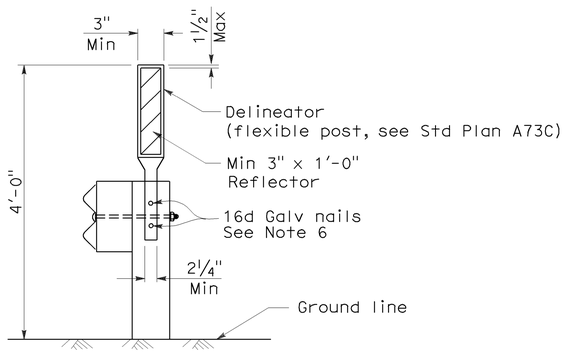

GUARD RAILING DELINEATION

See Note 3

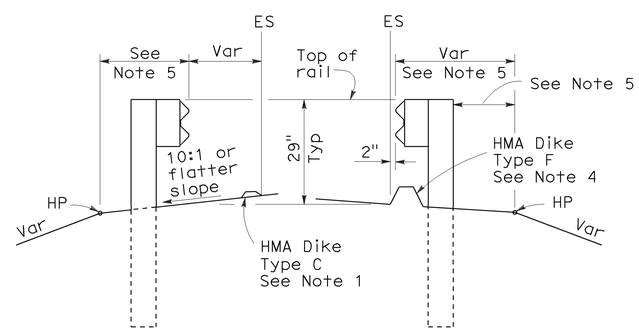

DIKE POSITIONING

See Note 1

STATE OF CALIFORNIA
DEPARTMENT OF TRANSPORTATION

METAL BEAM GUARD RAILING TYPICAL RAILING DELINEATION AND DIKE POSITIONING DETAILS

NO SCALE

RSP A77C4 DATED MAY 20, 2011 SUPERSEDES RSP A77C4 DATED JUNE 6, 2008 AND STANDARD PLAN A77C4 DATED MAY 1, 2006 - PAGE 47 OF THE STANDARD PLANS BOOK DATED MAY 2006.

REVISED STANDARD PLAN RSP A77C4

2006 REVISED STANDARD PLAN RSP A77C4

3-10-11

DIST	COUNTY	ROUTE	POST MILES TOTAL PROJECT	SHEET NO.	TOTAL SHEETS
04	CC	4,80	R15.4/R16.7, 7.3/7.6	36	48

Randell D. Hiatt
REGISTERED CIVIL ENGINEER

June 6, 2008
PLANS APPROVAL DATE

REGISTERED PROFESSIONAL ENGINEER Randell D. Hiatt No. C50200 Exp. 6-30-09 CIVIL STATE OF CALIFORNIA

The State of California or its officers or agents shall not be responsible for the accuracy or completeness of electronic copies of this plan sheet.

To accompany plans dated 6-18-12

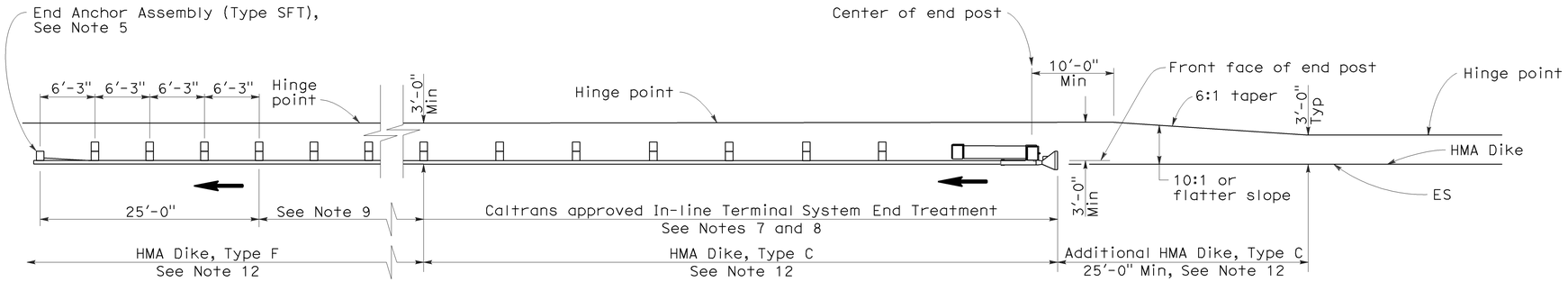

TYPE 11A LAYOUT

(EMBANKMENT GUARD INSTALLATION WITH IN-LINE END TREATMENT AT TRAFFIC APPROACH END OF RAILING)
See Note 6

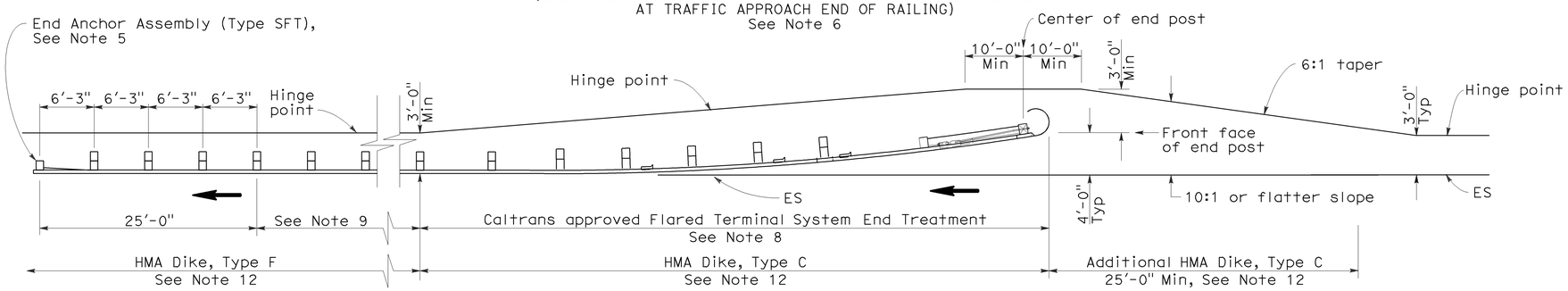

TYPE 11B LAYOUT

(EMBANKMENT GUARD RAILING INSTALLATION WITH FLARED END TREATMENT AT TRAFFIC APPROACH END OF RAILING)
See Note 6

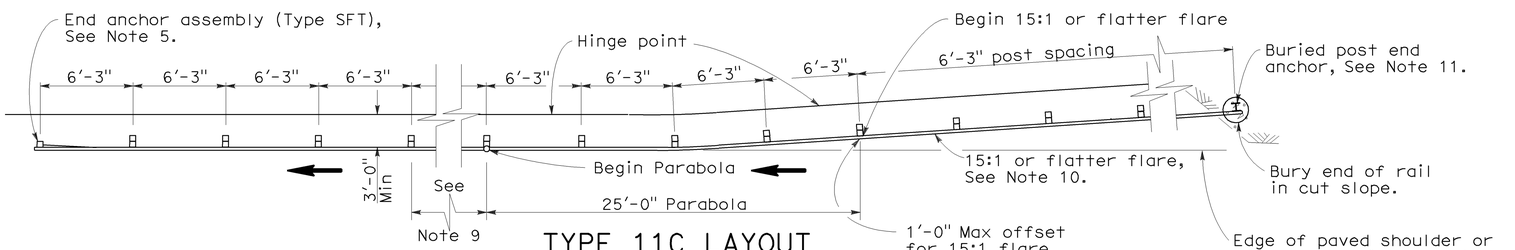

TYPE 11C LAYOUT

(EMBANKMENT GUARD RAILING INSTALLATION WITH BURIED END ANCHOR TREATMENT AT TRAFFIC APPROACH END OF RAILING)
See Notes 6 and 12

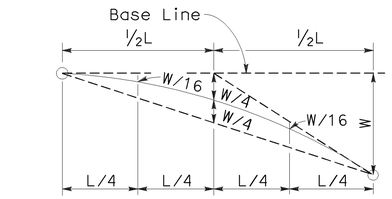

TYPICAL PARABOLIC LAYOUT

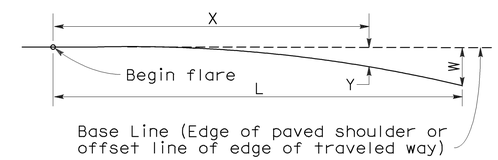

$$Y = \frac{WX^2}{L^2}$$

Y = Offset from base line
W = Maximum offset
X = Distance along base line
L = Length of flare

PARABOLIC FLARE OFFSETS

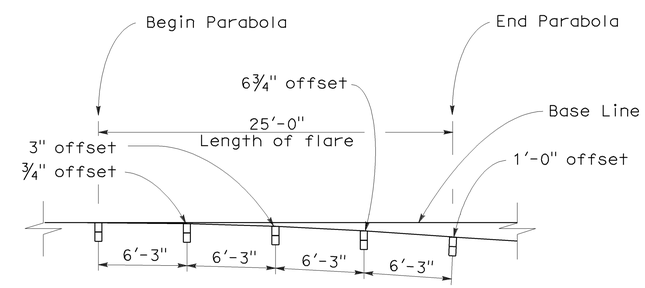

TYPICAL FLARE OFFSETS FOR 1 FOOT MAX END OFFSET

NOTES:

1. Line post, blocks and hardware to be used are shown on Standard Plans A77A1, A77A2, A77B1, A77C1, and A77C2.
2. Guard rail post spacing to be 6'-3" center to center, except as otherwise noted.
3. Except as noted, line posts are 6" x 8" x 6'-0" wood with 6" x 8" x 1'-2" wood blocks. W6 x 9 steel posts, 6'-0" in length, with 6" x 8" x 1'-2" notched wood blocks or recycled plastic blocks may be used for 6" x 8" x 6'-0" wood post with 6" x 8" x 1'-2" wood blocks where applicable and when specified.
4. Direction of adjacent traffic indicated by ⟶.
5. For End Anchor Assembly (Type SFT) details, see Standard Plan A77H1.
6. Layout Types 11A, 11B or 11C are typically used where guard railing is recommended to shield embankment slopes and a crashworthy end treatment is required for only one direction of traffic.
7. In-line Terminal System End Treatments are used where site conditions will not accommodate a flared end treatment.
8. The type of terminal system end treatment to be used will be shown on the Project Plans.
9. Dependent on site conditions (embankment height and side slope), construction of additional guard railing (length equal to multiples of 12'-6" with 6'-3" post spacing) may be advisable.
10. The 15:1 or flatter flare used with buried end anchors is based on the edge of the paved shoulder or offset line of edge of the traveled way. The length of guard railing within the 15:1 or flatter flare is based on site conditions and should be a length equal to multiples of 12'-6".
11. For details of the buried post end anchor used with Type 11C Layout, see Standard Plan A77I2.
12. Where placement of dike is required with guard railing installations, see Revised Standard Plan RSP A77C4 for dike positioning details.

STATE OF CALIFORNIA
DEPARTMENT OF TRANSPORTATION

METAL BEAM GUARD RAILING TYPICAL LAYOUTS FOR EMBANKMENTS

NO SCALE

RSP A77E1 DATED JUNE 6, 2008 SUPERSEDES STANDARD PLAN A77E1
DATED MAY 1, 2006 - PAGE 48 OF THE STANDARD PLANS BOOK DATED MAY 2006.

REVISED STANDARD PLAN RSP A77E1

2006 REVISED STANDARD PLAN RSP A77E1

12-10-07

DIST	COUNTY	ROUTE	POST MILES TOTAL PROJECT	SHEET NO.	TOTAL SHEETS
04	CC	4,80	R15.4/R16.7, 7.3/7.6	37	48

Randell D. Hiatt
REGISTERED CIVIL ENGINEER

June 6, 2008
PLANS APPROVAL DATE

REGISTERED PROFESSIONAL ENGINEER
Randell D. Hiatt
No. C50200
Exp. 6-30-09
CIVIL
STATE OF CALIFORNIA

The State of California or its officers or agents shall not be responsible for the accuracy or completeness of electronic copies of this plan sheet.

To accompany plans dated 6-18-12

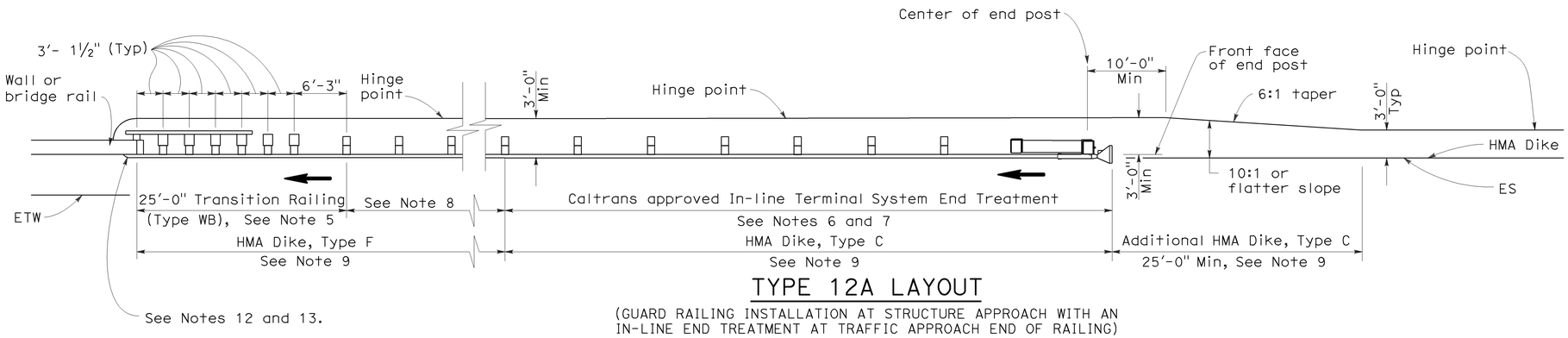

TYPE 12A LAYOUT

(GUARD RAILING INSTALLATION AT STRUCTURE APPROACH WITH AN IN-LINE END TREATMENT AT TRAFFIC APPROACH END OF RAILING)
See Notes 10

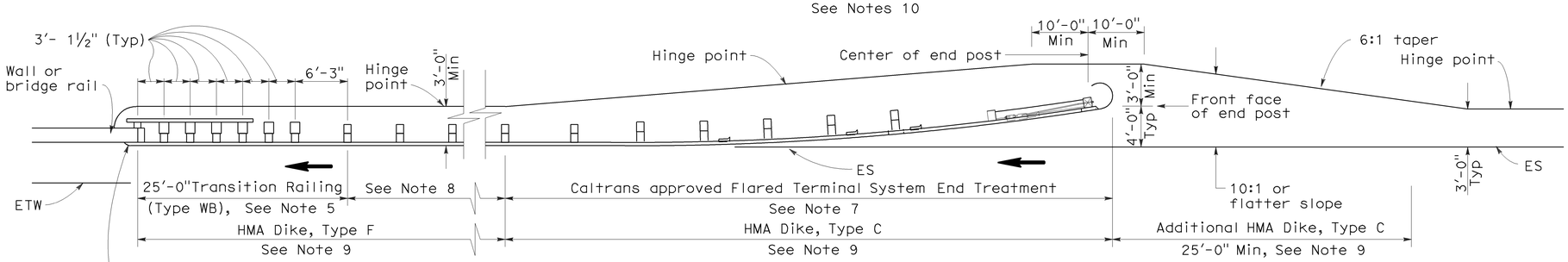

TYPE 12B LAYOUT

(GUARD RAILING INSTALLATION AT STRUCTURE APPROACH WITH A FLARED END TREATMENT AT TRAFFIC APPROACH END OF RAILING)
See Notes 10

NOTES:

1. Line post, blocks and hardware to be used are shown on Standard Plans A77A1, A77A2, A77B1, A77C1 and A77C2.
2. Guard rail post spacing to be 6'-3" center to center, except as otherwise noted.
3. Except as noted, line posts are 6" x 8" x 6'-0" wood with 6" x 8" x 1'-2" wood blocks. W6 x 9 steel posts, 6'-0" in length, with 6" x 8" x 1'-2" notched wood blocks or plastic blocks may be used for 6" x 8" x 6'-0" wood posts with 6" x 8" x 1'-2" wood blocks where applicable and when specified.
4. Direction of adjacent traffic indicated by ➡.
5. For Transition Railing (Type WB) details for Types 12A and 12B Layouts, see Standard Plan A77J4.
6. In-line Terminal System End Treatments are used where site conditions will not accommodate a flared end treatment.
7. The type of terminal system end treatment to be used will be shown on the Project Plans.
8. Dependent on site conditions (embankment height, side slopes, or other fixed objects), it may be advisable to construct additional guard railing (a length equal to multiples of 12'-6" with 6'-3" post spacing) between the transition railing and end treatment.
9. Where placement of dike is required with guard railing installations, see Revised Standard Plan RSP A77C4 for dike positioning details.
10. Type 12A or Type 12B Layouts are typically used:
    a. To the right of approaching traffic, at the end of a structure, on two-lane conventional highway where the roadbed width across the structure is less than 40 feet.
    b. To the left of approaching traffic, at the end of a structure, on two-lane conventional highway where the roadbed width across the structure is less than 40 feet.
    c. To the right of approaching traffic at the end of each structure on multilane freeways or expressways with separate adjacent or parallel bridges.
    d. To the right of approaching traffic at the end of the structure on multilane freeways or expressways with decked median on the bridge.
11. See Revised Standard Plan RSP A77F3 for typical layout used left of approaching traffic at the ends of each structure on multilane freeways or expressways with separate adjacent or parallel bridges.
12. For additional details of typical connections to bridge rail, see Connection Detail AA on Revised Standard Plans RSP A77J1 and RSP A77J2 and Connection Detail FF on Standard Plans A77K1 and A77K2.
13. For additional details of a typical connection to walls or abutments, see Standard Plan A77J3.

STATE OF CALIFORNIA
DEPARTMENT OF TRANSPORTATION

METAL BEAM GUARD RAILING TYPICAL LAYOUTS FOR STRUCTURE APPROACH

NO SCALE

RSP A77F1 DATED JUNE 6, 2008 SUPERSEDES STANDARD PLAN A77F1
DATED MAY 1, 2006 - PAGE 54 OF THE STANDARD PLANS BOOK DATED MAY 2006.

REVISED STANDARD PLAN RSP A77F1

2006 REVISED STANDARD PLAN RSP A77F1

12-10-07

Dist	COUNTY	ROUTE	POST MILES TOTAL PROJECT	SHEET No.	TOTAL SHEETS
04	CC	4,80	R15.4/R16.7, 7.3/7.6	38	48

Randell D. Hiatt
REGISTERED CIVIL ENGINEER

May 20, 2011
PLANS APPROVAL DATE

REGISTERED PROFESSIONAL ENGINEER
Randell D. Hiatt
No. C50200
Exp. 6-30-11
CIVIL
STATE OF CALIFORNIA

The State of California or its officers or agents shall not be responsible for the accuracy or completeness of electronic copies of this plan sheet.

To accompany plans dated 6-18-12

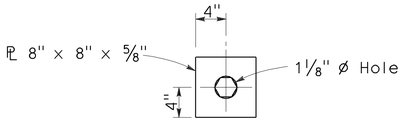

DETAIL A
CABLE CONNECTION
END PLATE

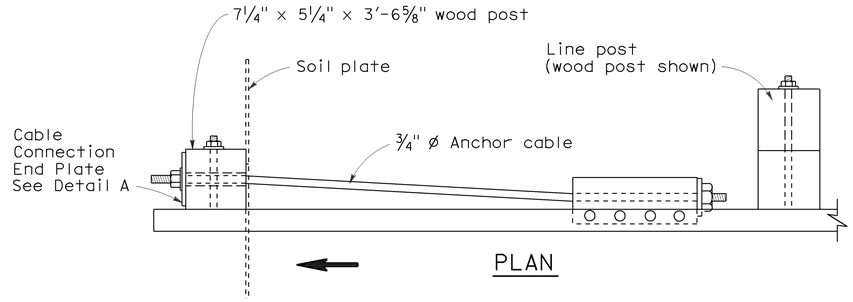

PLAN

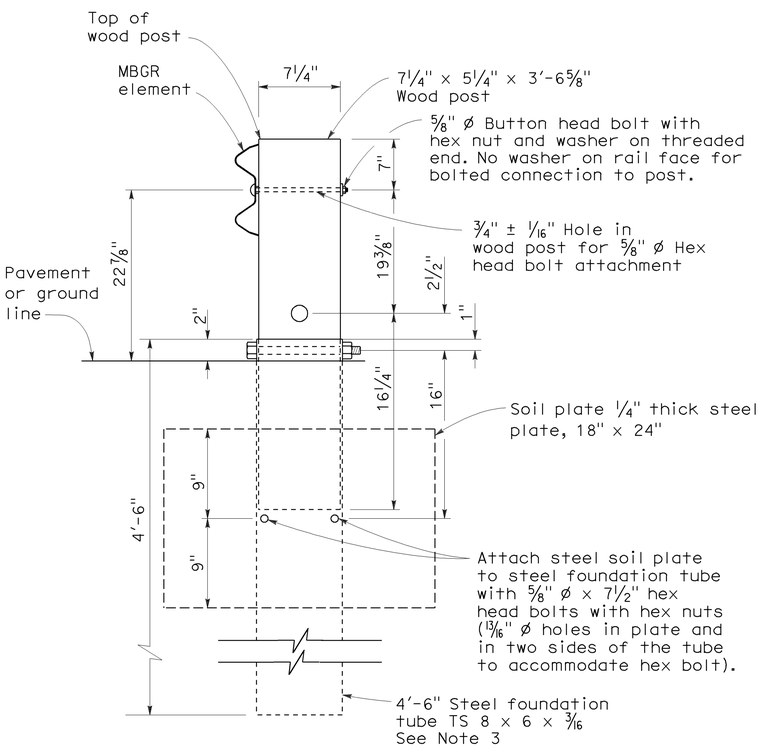

SECTION A-A

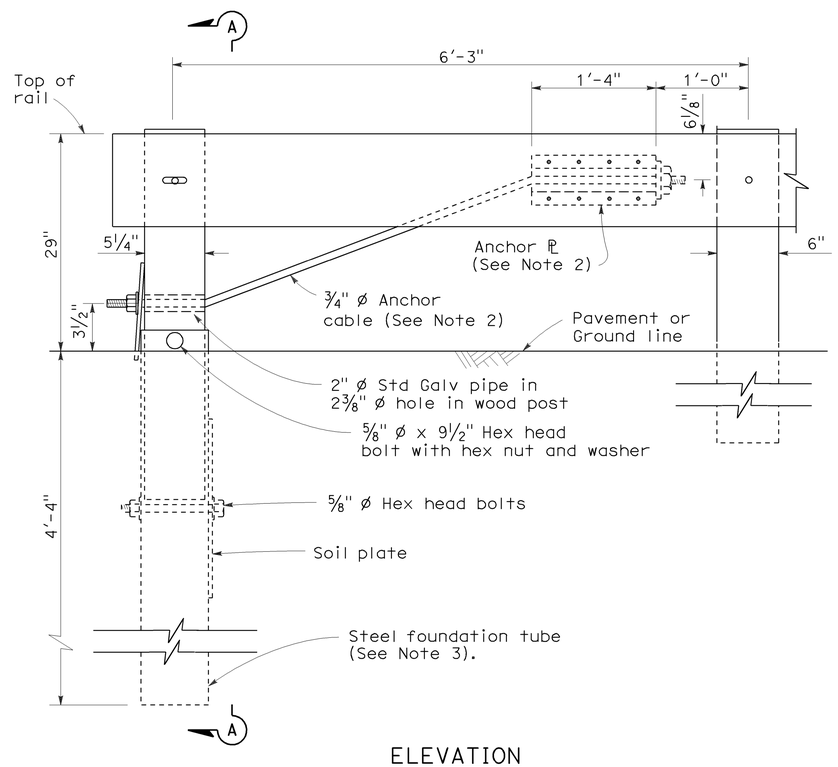

ELEVATION
END ANCHOR
ASSEMBLY (TYPE SFT)
See Note 1

NOTES:

1. See the A77E, A77F and A77G series of Standard Plans for typical use of End Anchor Assembly (Type SFT).
2. For details of the anchor plate and 3/4" cable, see Standard Plan A77H3.
3. A 6'-0" length steel foundation tube, TS 8 x 6 x 3/16, without a soil plate, may be furnished and installed in place of the 4'-6" length steel foundation tube and soil plate shown. Minimum embedment of the 6'-0" length tube shall be 5'-9". A 5/8" ø hex head bolt and nut shall be installed in the hole in the 6'-0" length tube to keep the wood post from dropping into the tube.
4. Direction of traffic indicated by ⟶.
5. Install line post, steel foundation tube and soil plate in soil.

STATE OF CALIFORNIA
DEPARTMENT OF TRANSPORTATION

METAL RAILING END ANCHOR ASSEMBLY (TYPE SFT)

NO SCALE

RSP A77H1 DATED MAY 20, 2011 SUPERSEDES STANDARD PLAN A77H1
DATED MAY 1, 2006 - PAGE 67 OF THE STANDARD PLANS BOOK DATED MAY 2006.

REVISED STANDARD PLAN RSP A77H1

2006 REVISED STANDARD PLAN RSP A77H1

DIST	COUNTY	ROUTE	POST MILES TOTAL PROJECT	SHEET NO.	TOTAL SHEETS
04	CC	4,80	R15.4/R16.7, 7.3/7.6	39	48

Randell D. Hiatt
REGISTERED CIVIL ENGINEER

June 6, 2008
PLANS APPROVAL DATE

REGISTERED PROFESSIONAL ENGINEER Randell D. Hiatt No. C50200 Exp. 6-30-09 CIVIL STATE OF CALIFORNIA

The State of California or its officers or agents shall not be responsible for the accuracy or completeness of electronic copies of this plan sheet.

To accompany plans dated 6-18-12

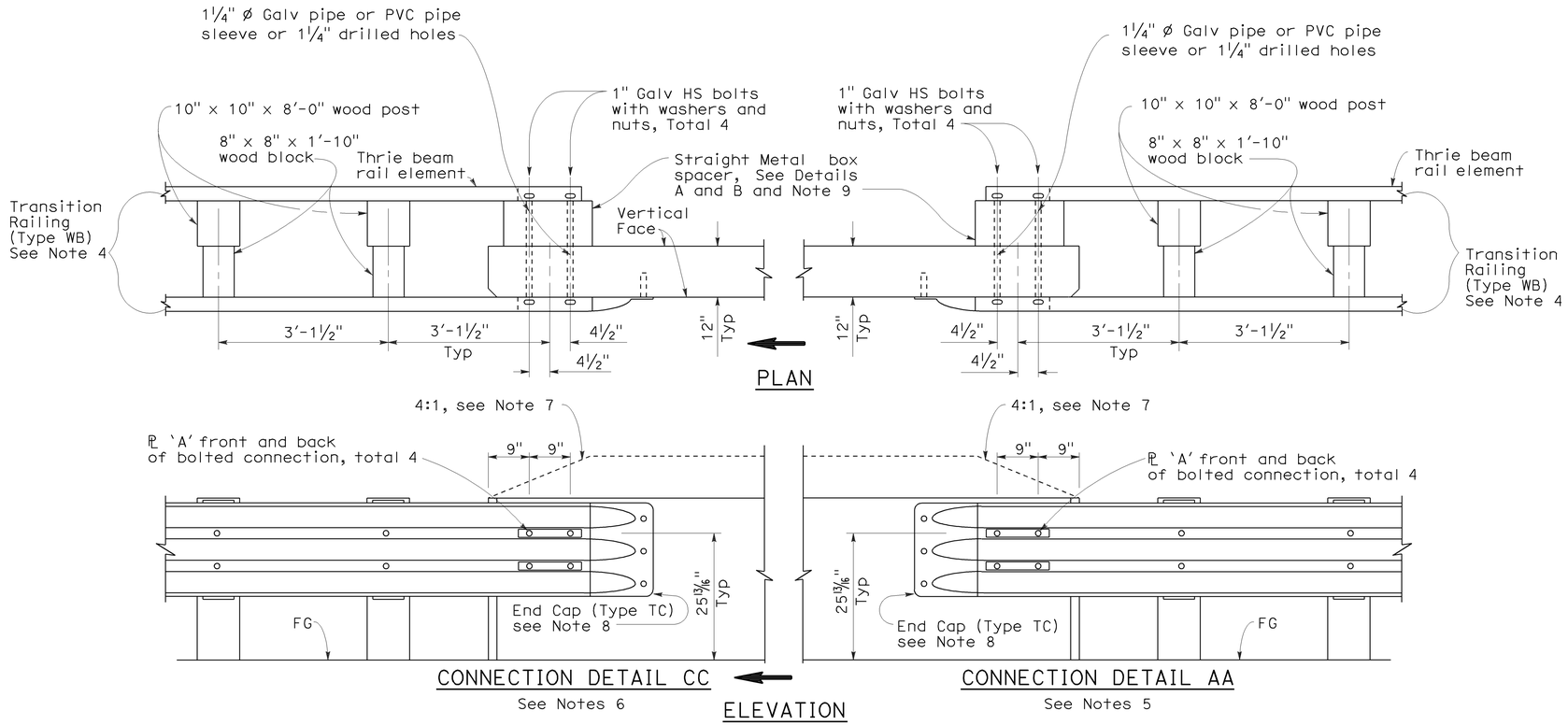

GUARD RAILING CONNECTION TO BRIDGE RAILING WITHOUT SIDEWALK

NOTES:

1. See Revised Standard Plan RSP A77J1 for additional connection details to bridges without sidewalks.
2. Additional details of posts, blocks and hardware are shown on Standard Plan A77B1, A77C1 and A77C2.
3. Direction of adjacent traffic indicated by ⟹.
4. For additional details of Transition Railing (Type WB), see Standard Plan A77J4. Transition Railing (Type WB) transitions the 12 gage w-beam standard railing section of guard railing to a heavier gage nested thrie beam railing section which is connected to the concrete bridge railing.
5. For typical use of Connection Detail AA, see Layout Types 12A and 12B on Revised Standard Plan RSP A77F1, Layout Types 12C and 12D on Standard Plan A77F2, and Layout Type 12E on Revised Standard Plan RSP A77F3.
6. For typical use of Connection Detail CC, see Layout Types 12AA and 12BB on Standard Plan A77F4 and Layout Type 12CC on Standard Plan A77F5.
7. Where the height of the bridge railing exceeds the height of the thrie beam railing by more than 1" at Connection Detail AA and connection Detail CC, taper the top of the end of the bridge railing at 4:1 to match the top elevation of the thrie beam railing.
8. For details of End Cap (Type TC), see Standard Plans A77J4.
9. See Standard Plans A77J4 for additional details regarding depth dimension for straight metal box spacer.

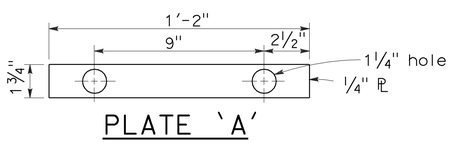

PLATE 'A'

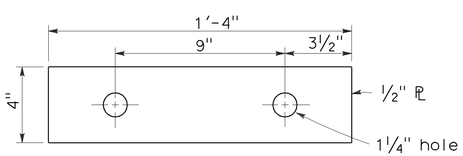

PLATE 'B'
(For backside of connection BB)

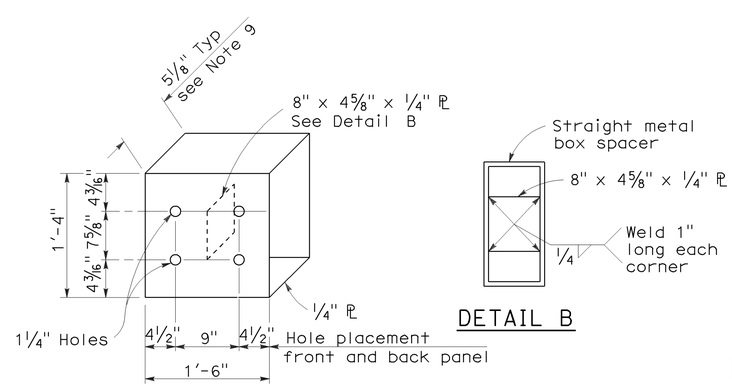

DETAIL A

DETAIL B

STRAIGHT METAL BOX SPACER

STATE OF CALIFORNIA
DEPARTMENT OF TRANSPORTATION

METAL BEAM GUARD RAILING CONNECTIONS TO BRIDGE RAILINGS WITHOUT SIDEWALKS DETAILS No.2

NO SCALE

RSP A77J2 DATED JUNE 6, 2008 SUPERSEDES STANDARD PLAN A77J2 DATED MAY 1, 2006 - PAGE 73 OF THE STANDARD PLANS BOOK DATED MAY 2006.

REVISED STANDARD PLAN RSP A77J2

2006 REVISED STANDARD PLAN RSP A77J2

12-10-07

Dist	COUNTY	ROUTE	POST MILES TOTAL PROJECT	SHEET No.	TOTAL SHEETS
04	CC	4,80	R15.4/R16.7, 7.3/7.6	40	48

Randell D. Hiatt
REGISTERED CIVIL ENGINEER

May 20, 2011
PLANS APPROVAL DATE

REGISTERED PROFESSIONAL ENGINEER Randell D. Hiatt No. C50200 Exp. 6-30-11 CIVIL STATE OF CALIFORNIA

To accompany plans dated 6-18-12

The State of California or its officers or agents shall not be responsible for the accuracy or completeness of electronic copies of this plan sheet.

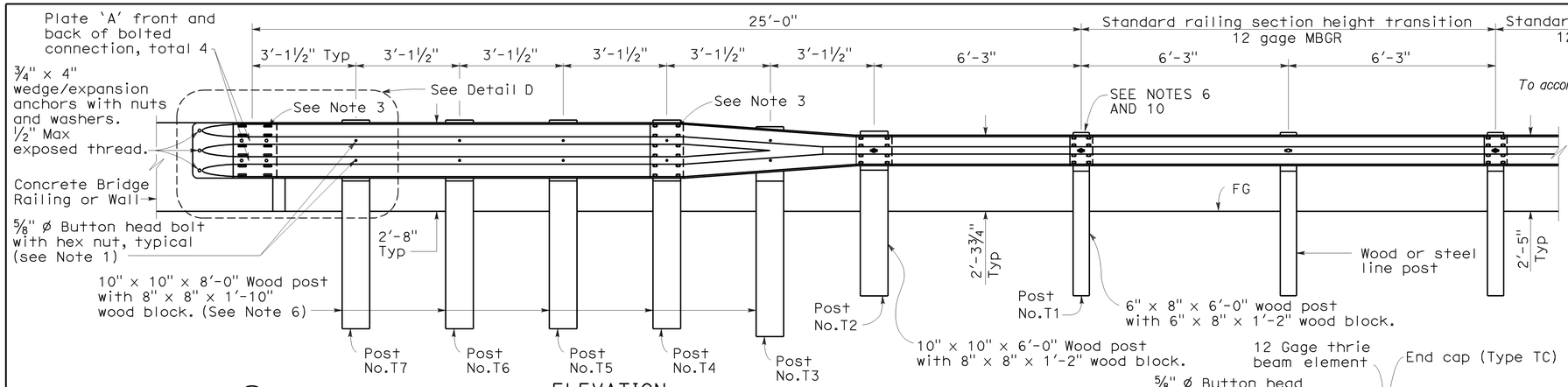

ELEVATION

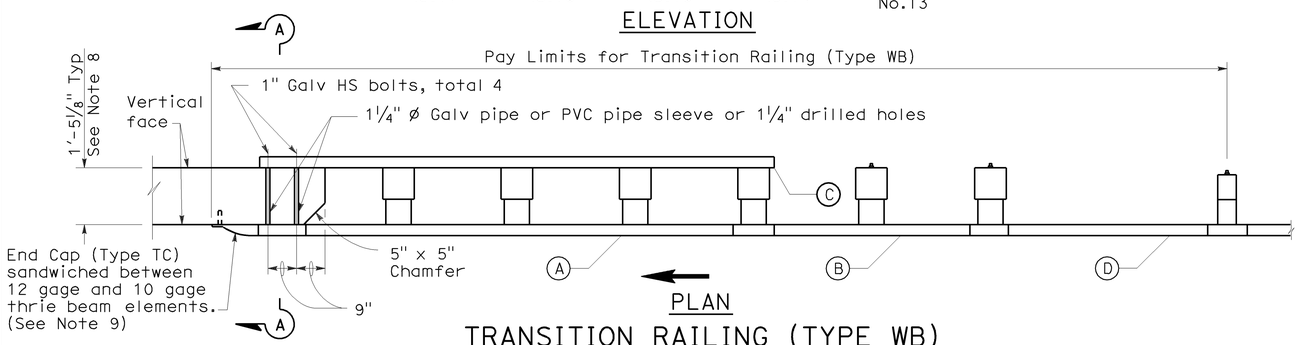

PLAN

TRANSITION RAILING (TYPE WB)

(No Blockout Attachment)

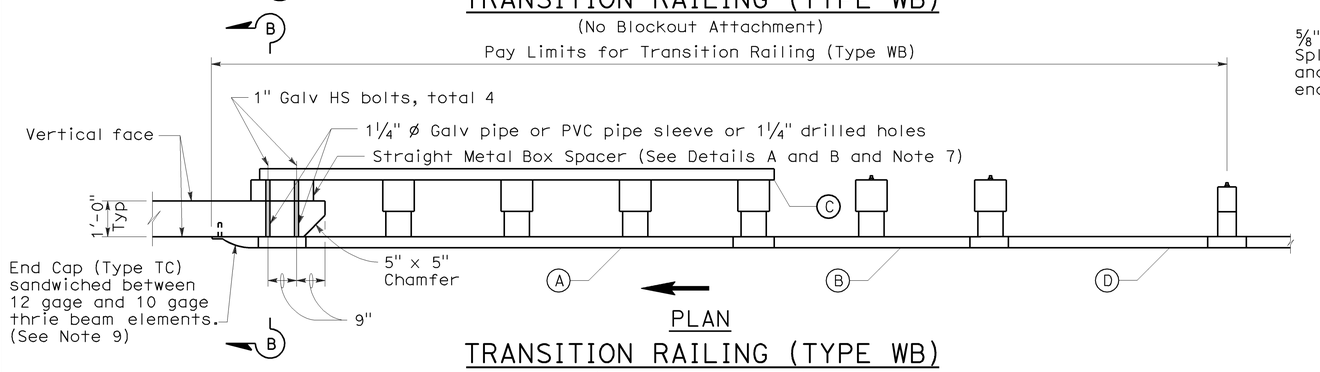

PLAN

TRANSITION RAILING (TYPE WB)

(Blockout Attachment)

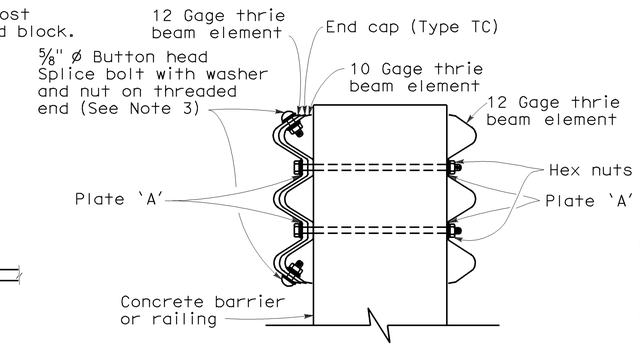

SECTION A-A

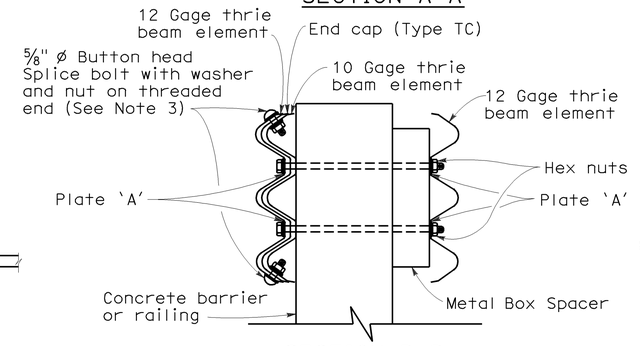

SECTION B-B

NOTES:

1. Use ⅝" ø Button head bolts and hex nuts for connections to posts. No washer on rail face for bolted connections to post.
2. The nested rail elements, end cap, and 'W' beam to thrie beam element may be spliced together prior to bolting the elements to the wood post and concrete barrier or railing.
3. Exterior splice bolt holes for rail element splices at Post No. T4 and the connection to the concrete barrier or railing shall be the standard 29/32" x 1⅛" slot size. Interior splice bolt holes at these locations may be increased up to 1¼" ø. Only the top 2 and the bottom 2 splice bolts with washers and nuts are required for rail splices at Post No. T4 and the connection to the concrete barrier or railing.
4. Direction of adjacent traffic indicated by ⟶ .
5. The top elevation of Posts No. T2 through No. T7 shall not project more than 1" above the top elevation of the rail element.
6. Typically, the railing connected to Transition Railing (Type WB) will be either standard railing section of metal beam guard railing with height transition ratio of 120:1 or an approved Caltrans end treatment attached to Post No. T1.
7. The depth of the metal box spacer varies from the 5⅛" to 1½" and is dependent on the width of the concrete railing or wall. The combined dimension for the depth of the metal box spacer plus the width of railing or wall is typically 17⅛". Where the space between the backside of the concrete railing or wall and the rear thrie beam element is less than 1½", metal plates similar to Plate 'A' are to be used as spacers.
8. Where the width of the concrete railing or wall is greater than 17⅛", wood blocks are to be used to fill the space created between the backside of Posts No. T4 through No. T7 and the rear thrie beam element. These wood blocks shall be 8" in width and 1'-2" in length. The dimension between the front thrie beam element and the rear thrie beam element is to match the width of the concrete railing or wall.
9. End cap may be installed over 12 gage and 10 gage thrie beam elements where transition railing is installed on the departure end of bridge railing.
10. Conform standard railing section height to 2'-3¾" at Post No. T1 using height transition ratio of 120:1.

LEGEND

(A) Nested thrie beam elements (one 12 gage element nested over one 10 gage element).

(B) One 10 gage "W" beam to thrie beam element.

(C) One 12 gage thrie beam element.

(D) One 10 gage "W" beam rail element (7'-3½" length)

10 gage = 0.135" thick

12 gage = 0.108" thick

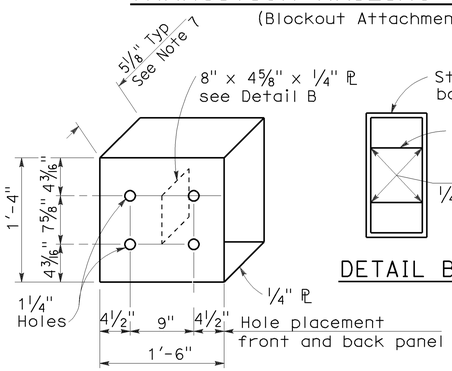

DETAIL A

STRAIGHT METAL BOX SPACER

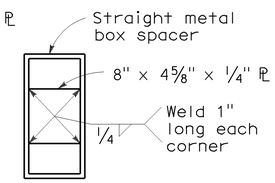

DETAIL B

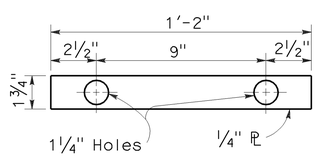

DETAIL C

PLATE 'A'

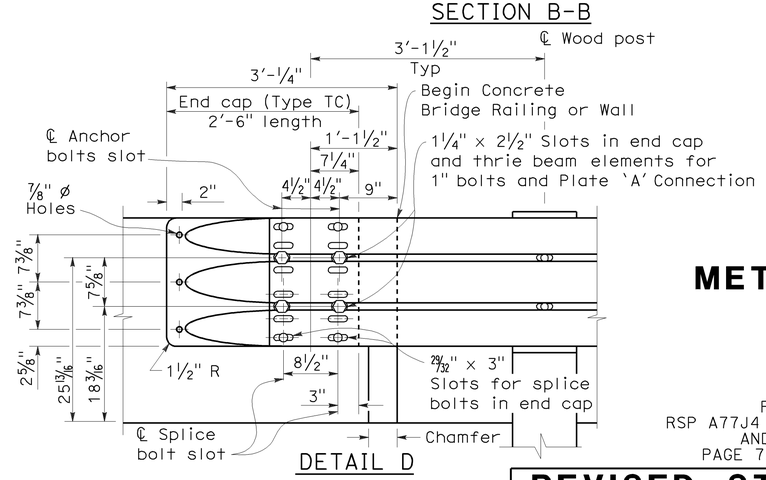

DETAIL D

STATE OF CALIFORNIA
DEPARTMENT OF TRANSPORTATION

METAL BEAM GUARD RAILING TRANSITION RAILING (TYPE WB)

NO SCALE

RSP A77J4 DATED MAY 20, 2011 SUPERSEDES
RSP A77J4 DATED JUNE 5, 2009, RSP A77J4 DATED JUNE 6, 2008
AND STANDARD PLAN A77J4 DATED MAY 1, 2006 -
PAGE 75 OF THE STANDARD PLANS BOOK DATED MAY 2006.

REVISED STANDARD PLAN RSP A77J4

2006 REVISED STANDARD PLAN RSP A77J4

5-14-09

DIST	COUNTY	ROUTE	POST MILES TOTAL PROJECT	SHEET NO.	TOTAL SHEETS
04	CC	4,80	R15.4/R16.7, 7.3/7.6	41	48

LICENSED LANDSCAPE ARCHITECT

April 3, 2009
PLANS APPROVAL DATE

The State of California or its officers or agents shall not be responsible for the accuracy or completeness of electronic copies of this plan sheet.

LICENSED LANDSCAPE ARCHITECT
Gregory A. Balzer 2576
02-28-11
Renewal Date
03-04-09
Date
STATE OF CALIFORNIA

To accompany plans dated 6-18-12

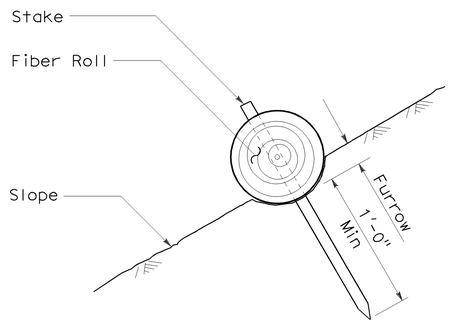

SECTION

FIBER ROLL (TYPE 1)

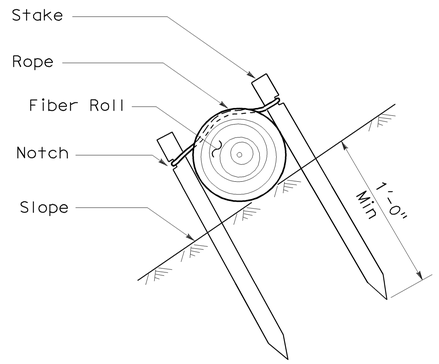

SECTION

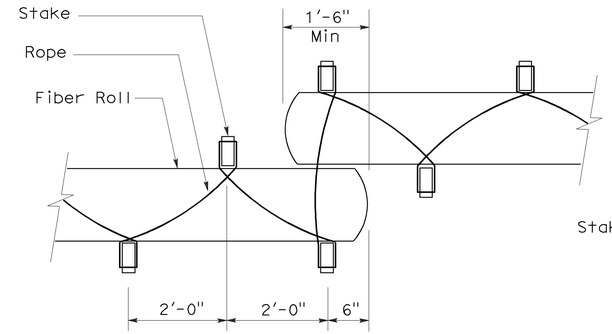

PLAN

FIBER ROLL (TYPE 2)

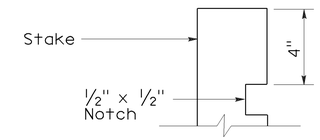

ELEVATION

STAKE NOTCH DETAIL

NOTES:

1. Fiber roll spacing varies depending upon slope inclination.
2. Installations shown in the perspectives are for slope inclination of 10:1 and steeper.

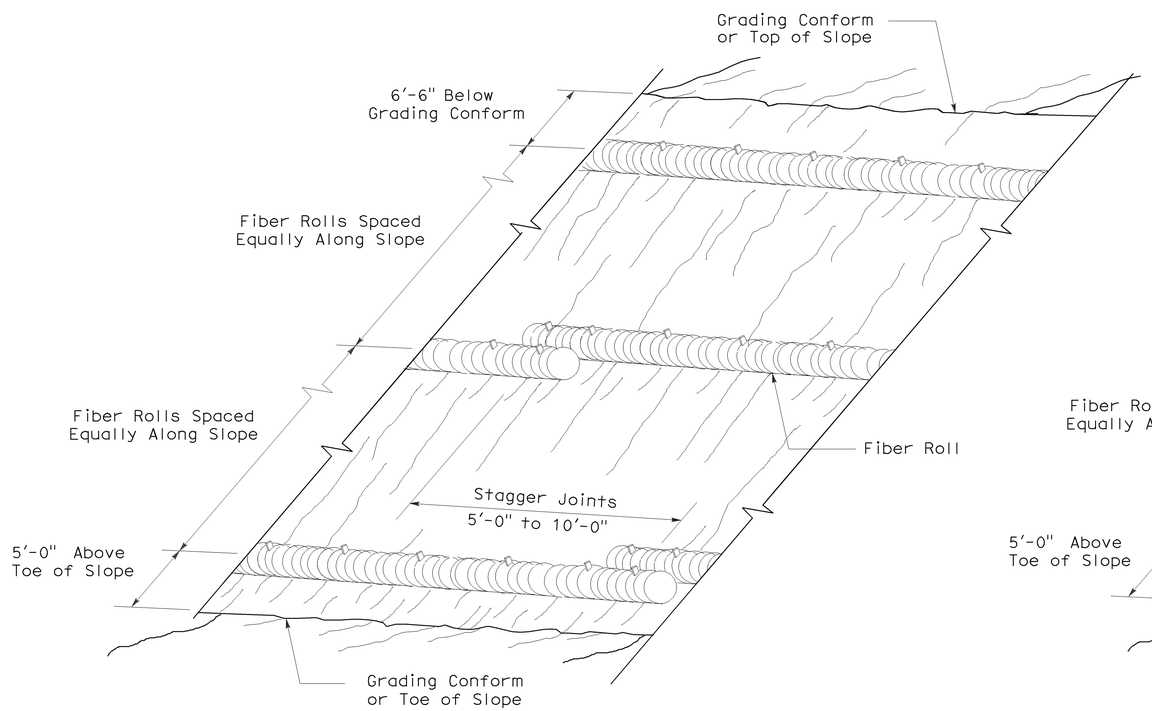

PERSPECTIVE

FIBER ROLL (TYPE 1)

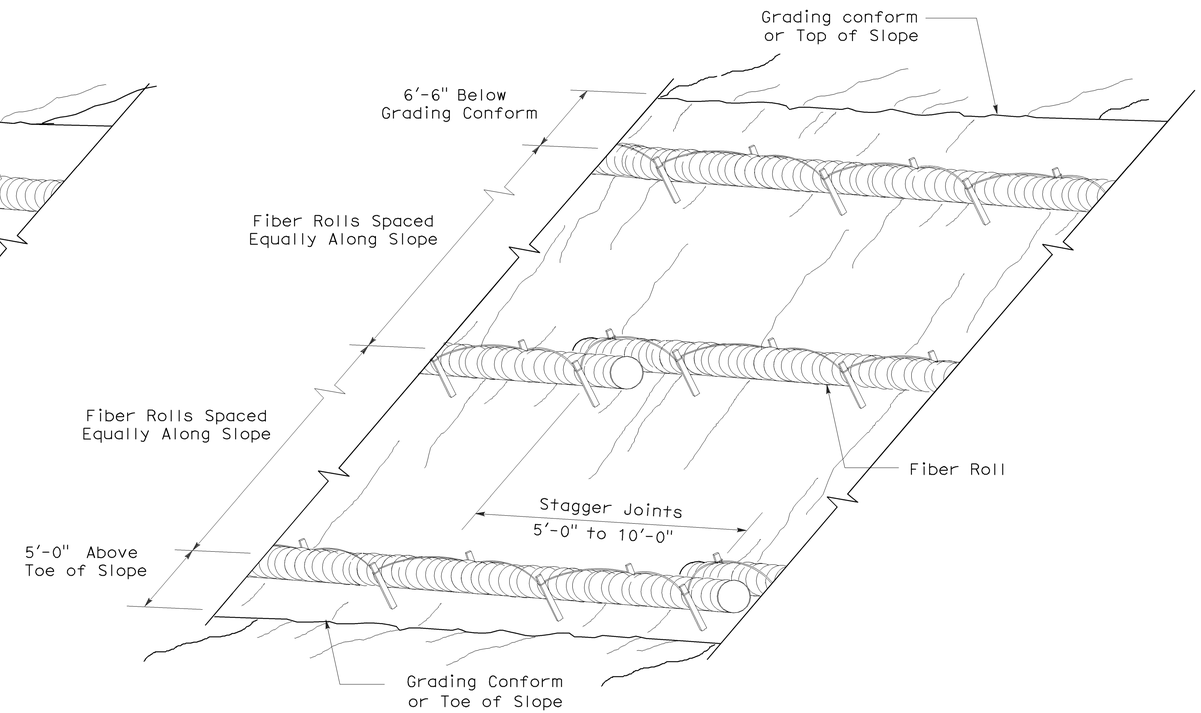

PERSPECTIVE

FIBER ROLL (TYPE 2)

STATE OF CALIFORNIA
DEPARTMENT OF TRANSPORTATION

EROSION CONTROL DETAILS (FIBER ROLL)

NO SCALE

RNSP H51 DATED APRIL 3, 2009 SUPERSEDES NSP H51 DATED DECEMBER 1, 2006 THAT SUPPLEMENTS THE STANDARD PLANS BOOK DATED MAY 2006.

REVISED NEW STANDARD PLAN RNSP H51

2006 REVISED NEW STANDARD PLAN RNSP H51

DIST	COUNTY	ROUTE	POST MILES TOTAL PROJECT	SHEET NO.	TOTAL SHEETS
04	CC	4,80	R15.4/R16.7, 7.3/7.6	42	48

LICENSED LANDSCAPE ARCHITECT

April 3, 2009
PLANS APPROVAL DATE

The State of California or its officers or agents shall not be responsible for the accuracy or completeness of electronic copies of this plan sheet.

LICENSED LANDSCAPE ARCHITECT
Gregory A. Balzer 2576
02-28-11
Renewal Date
03-04-09
Date
STATE OF CALIFORNIA

To accompany plans dated 6-18-12

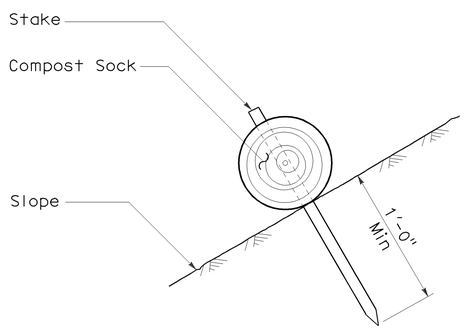

SECTION

COMPOST SOCK
(TYPE 1)

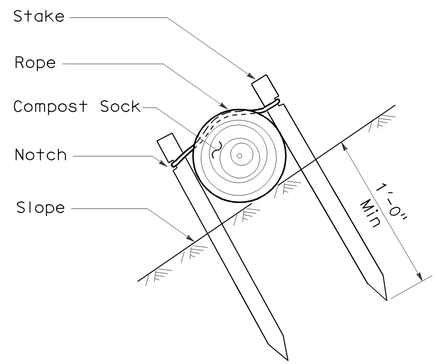

SECTION

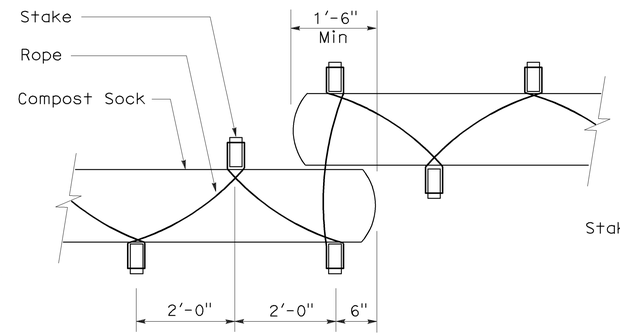

PLAN

COMPOST SOCK
(TYPE 2)

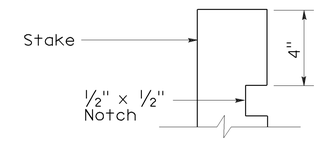

ELEVATION

STAKE NOTCH DETAIL

NOTE:

Compost sock spacing varies depending upon slope inclination.

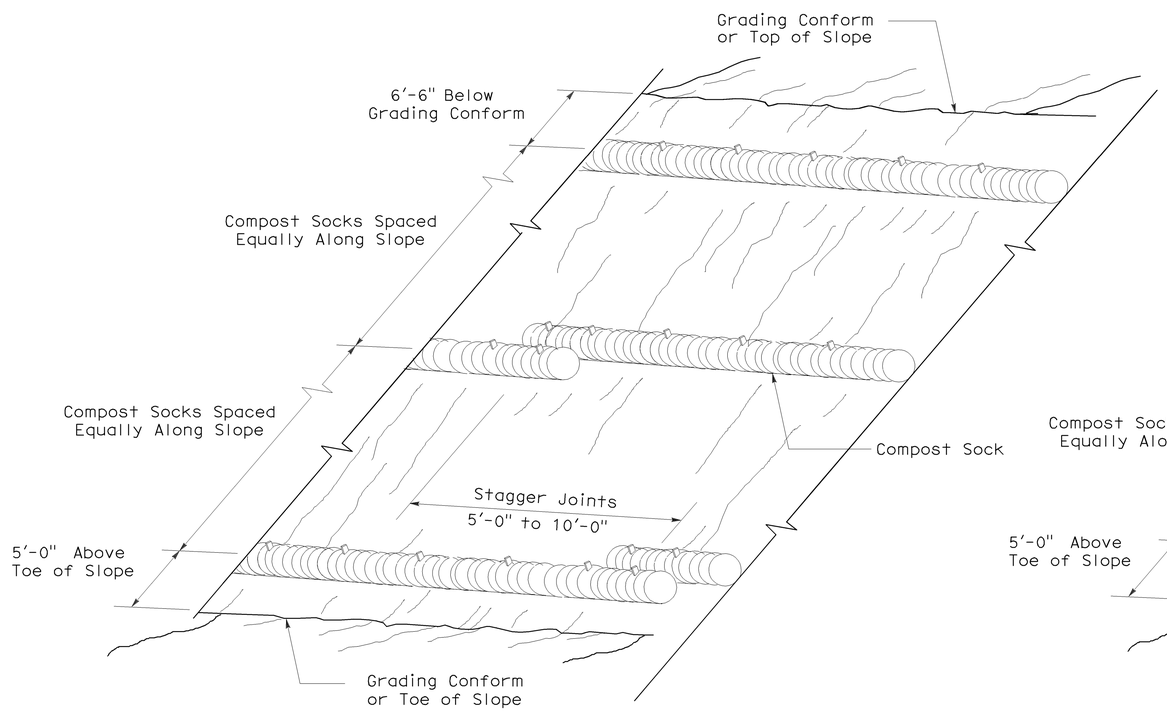

PERSPECTIVE

COMPOST SOCK (TYPE 1)

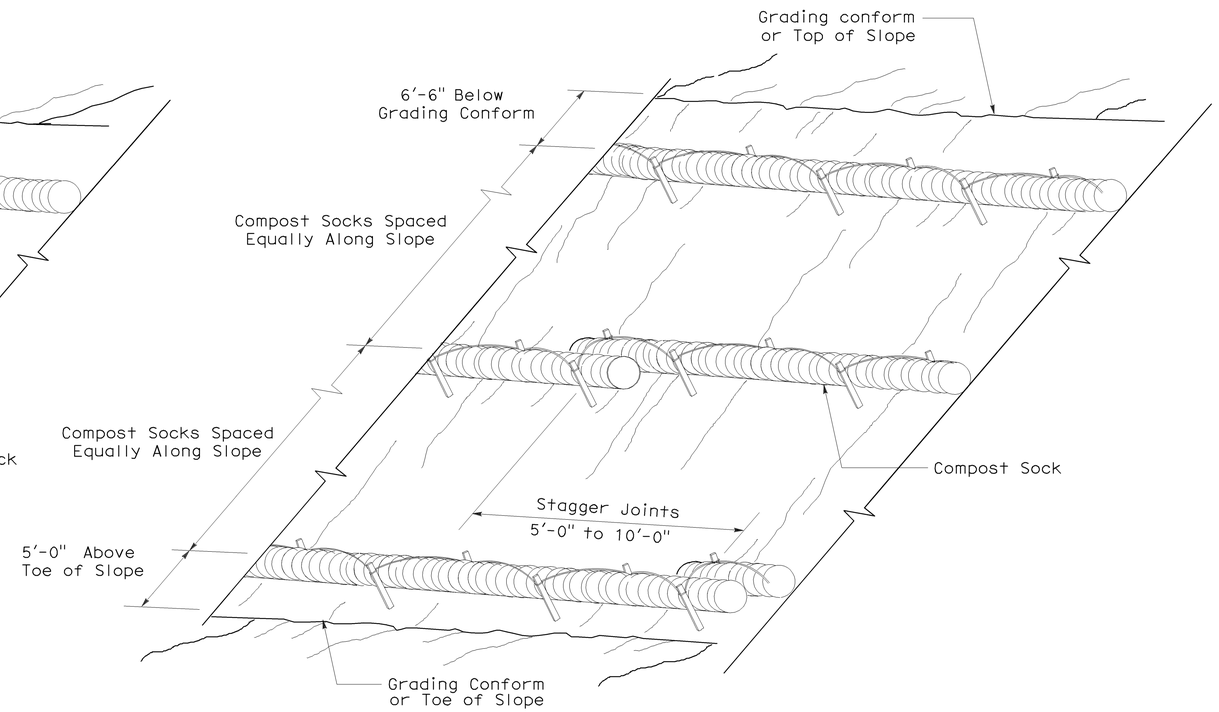

PERSPECTIVE

COMPOST SOCK (TYPE 2)

STATE OF CALIFORNIA
DEPARTMENT OF TRANSPORTATION

EROSION CONTROL DETAILS (COMPOST SOCK)

NO SCALE

NSP H52 DATED APRIL 3, 2009 SUPPLEMENTS
THE STANDARD PLANS BOOK DATED MAY 2006.

NEW STANDARD PLAN NSP H52

2006 NEW STANDARD PLAN NSP H52

3-3-09

DIST	COUNTY	ROUTE	POST MILES TOTAL PROJECT	SHEET NO.	TOTAL SHEETS
04	CC	4,80	R15.4/R16.7, 7.3/7.6	43	48

LICENSED LANDSCAPE ARCHITECT

June 5, 2009
PLANS APPROVAL DATE

The State of California or its officers or agents shall not be responsible for the accuracy or completeness of electronic copies of this plan sheet.

LICENSED LANDSCAPE ARCHITECT — Gregory A. Balzer 2576 — 06-09 Renewal Date — 2-28-11 Renewal Date — 5-14-09 Date — STATE OF CALIFORNIA

To accompany plans dated 6-18-12

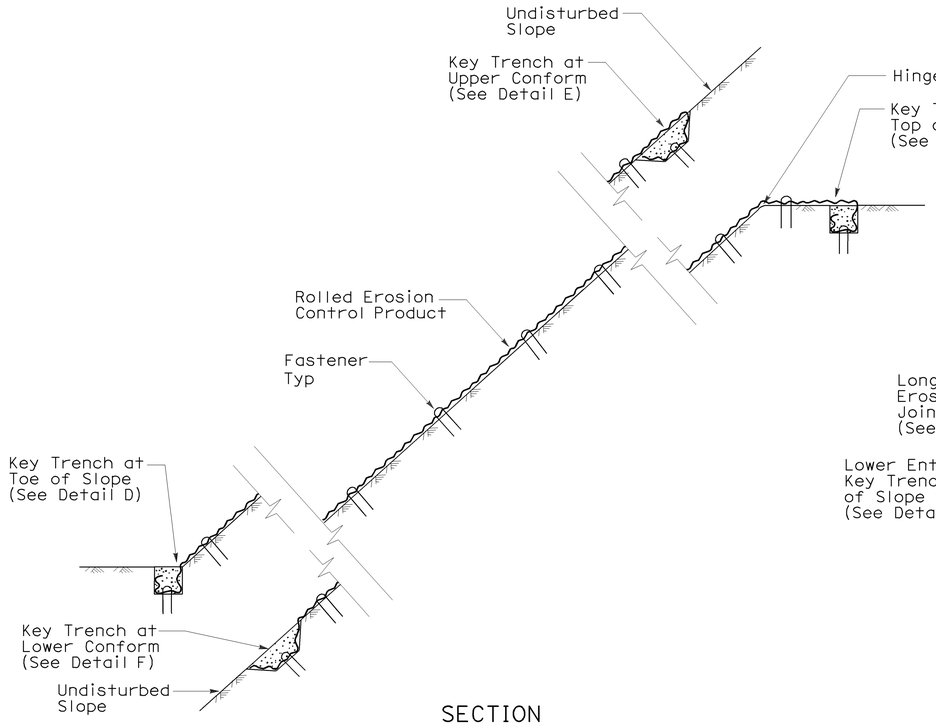

SECTION

ROLLED EROSION CONTROL PRODUCT ON SLOPE WITH VARIOUS KEY ENTRENCHMENTS

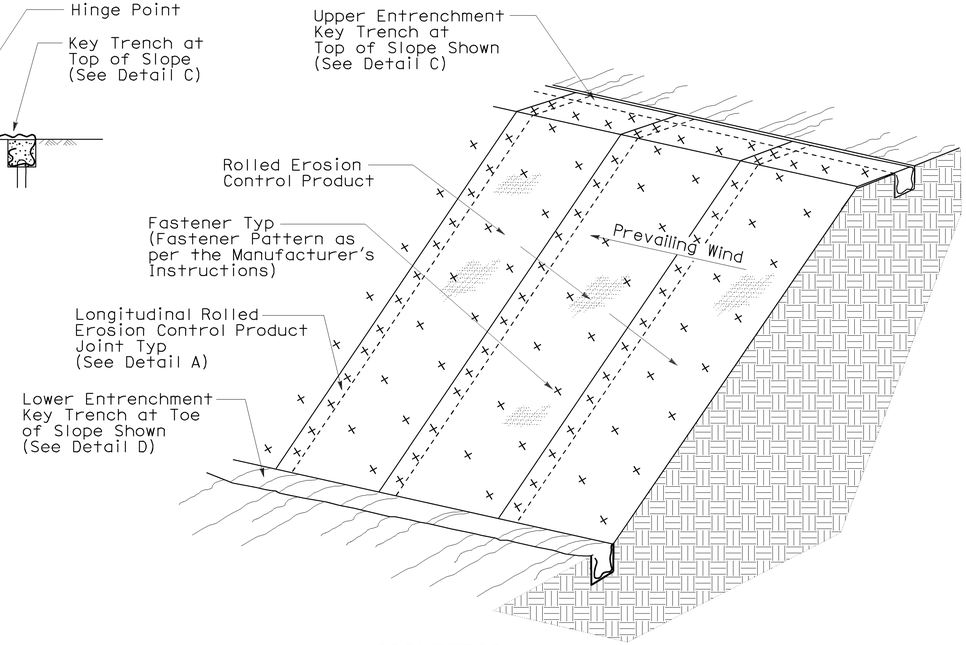

ISOMETRIC

ROLLED EROSION CONTROL PRODUCT ON SLOPE

NOTE:

1. Fiber Roll/Compost Sock shown for reference purposes only.
2. If transverse rolled erosion control product joints are required on slopes, see Detail B.

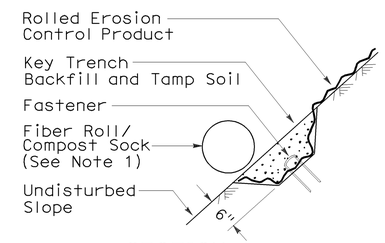

SECTION

DETAIL F
KEY TRENCH AT LOWER CONFORM

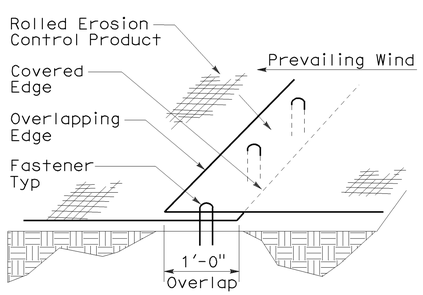

PERSPECTIVE

DETAIL A
LONGITUDINAL ROLLED EROSION CONTROL PRODUCT JOINT

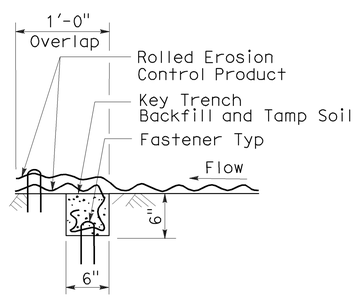

SECTION

DETAIL B
TRANSVERSE ROLLED EROSION CONTROL PRODUCT JOINT

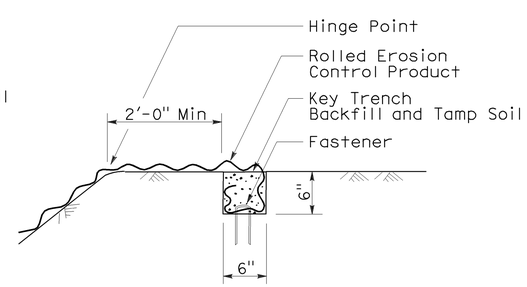

SECTION

DETAIL C
KEY TRENCH AT TOP OF SLOPE

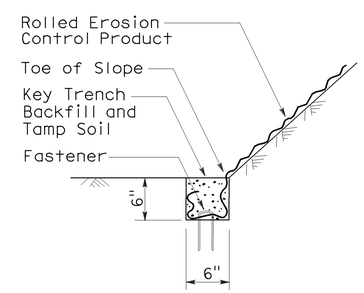

SECTION

DETAIL D
KEY TRENCH AT TOE OF SLOPE

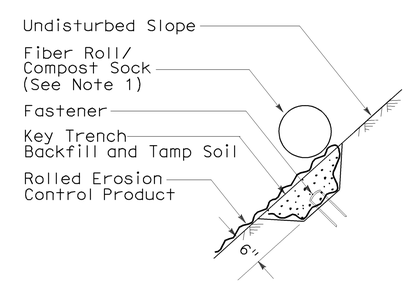

SECTION

DETAIL E
KEY TRENCH AT UPPER CONFORM

STATE OF CALIFORNIA
DEPARTMENT OF TRANSPORTATION

ROLLED EROSION CONTROL PRODUCT

NO SCALE

NSP H53 DATED JUNE 5, 2009 SUPPLEMENTS
THE STANDARD PLANS BOOK DATED MAY 2006.

NEW STANDARD PLAN NSP H53

2006 NEW STANDARD PLAN NSP H53

3-4-09

DIST	COUNTY	ROUTE	POST MILES TOTAL PROJECT	SHEET NO.	TOTAL SHEETS
04	CC	4,80	R15.4/R16.7, 7.3/7.6	44	48

Robert B Schott
LICENSED LANDSCAPE ARCHITECT

April 3, 2009
PLANS APPROVAL DATE

LICENSED LANDSCAPE ARCHITECT Robert B. Schott 3635 Registered Expiration 11-30-10 Renewal Date 2-25-09 Date STATE OF CALIFORNIA

The State of California or its officers or agents shall not be responsible for the accuracy or completeness of electronic copies of this plan sheet.

To accompany plans dated 6-18-12

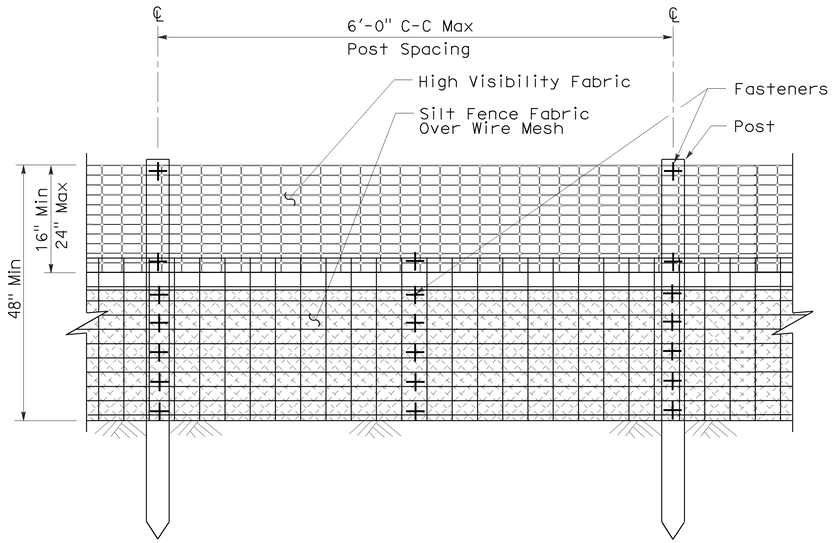

ELEVATION

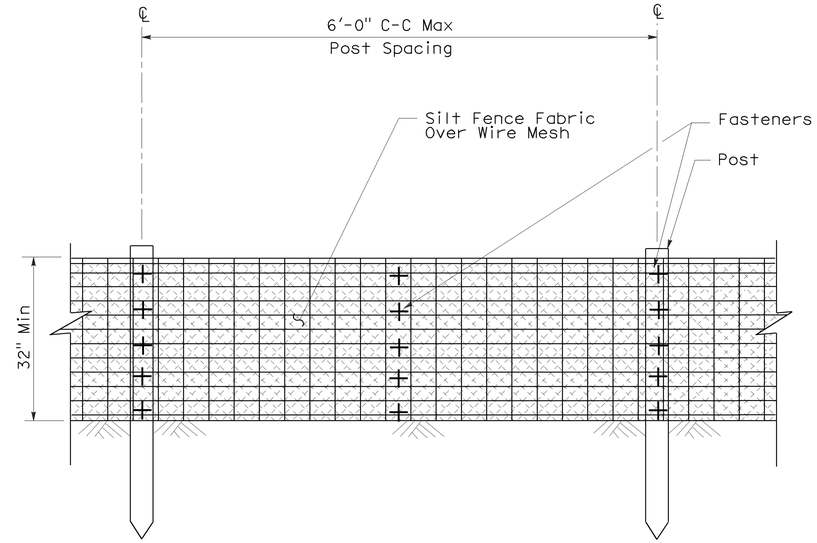

ELEVATION

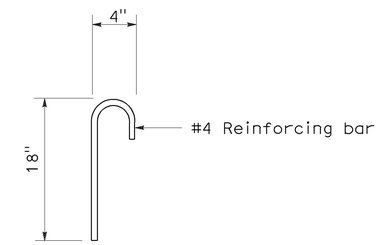

ANCHOR

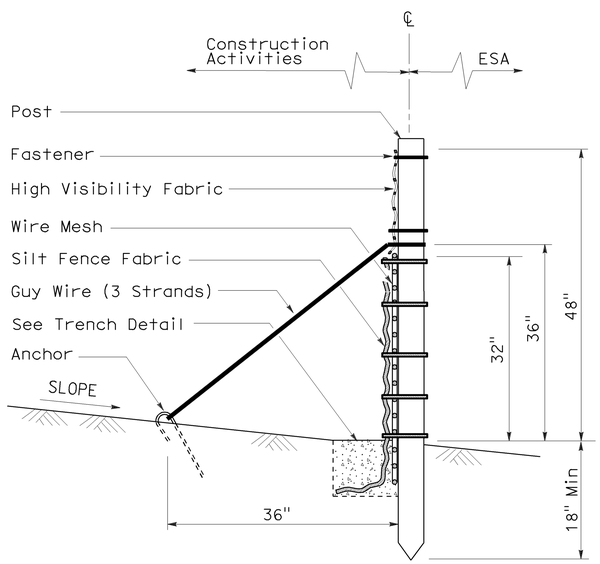

SECTION

TEMPORARY REINFORCED SILT FENCE (TYPE 1)

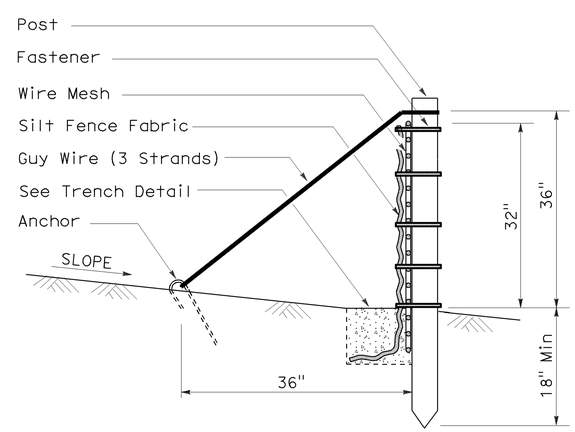

SECTION

TEMPORARY REINFORCED SILT FENCE (TYPE 2)

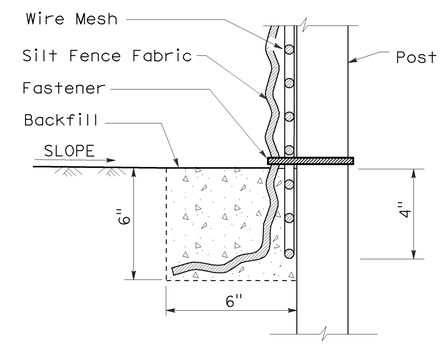

SECTION

TRENCH DETAIL

STATE OF CALIFORNIA
DEPARTMENT OF TRANSPORTATION

TEMPORARY WATER POLLUTION CONTROL DETAILS (TEMPORARY REINFORCED SILT FENCE)

NO SCALE

NSP T60 DATED APRIL 3, 2009 SUPPLEMENTS
THE STANDARD PLANS BOOK DATED MAY 2006.

NEW STANDARD PLAN NSP T60

2006 NEW STANDARD PLAN NSP T60

1-7-09

DIST	COUNTY	ROUTE	POST MILES TOTAL PROJECT	SHEET NO.	TOTAL SHEETS
04	CC	4,80	R15.4/R16.7, 7.3/7.6	45	48

LICENSED LANDSCAPE ARCHITECT

August 15, 2008
PLANS Approval DATE

The State of California or its officers or agents shall not be responsible for the accuracy or completeness of electronic copies of this plan sheet.

LICENSED LANDSCAPE ARCHITECT
Robert B. Schott 3635
Signature
11-04-08
Renewal Date
08-11-08
Date
STATE OF CALIFORNIA

To accompany plans dated 6-18-12

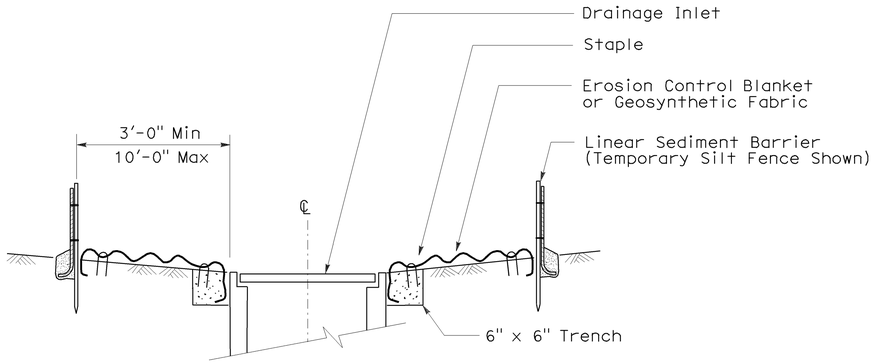

SECTION A-A

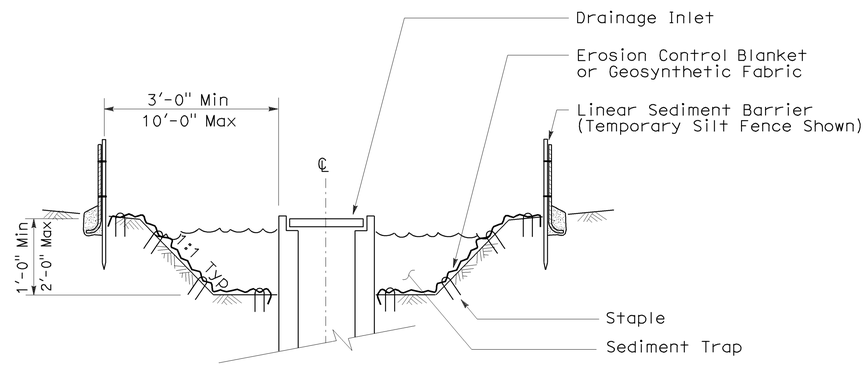

SECTION B-B

NOTES:

1. See Standard Plan T51 for Temporary Silt Fence.
2. Dimensions may vary to fit field conditions.

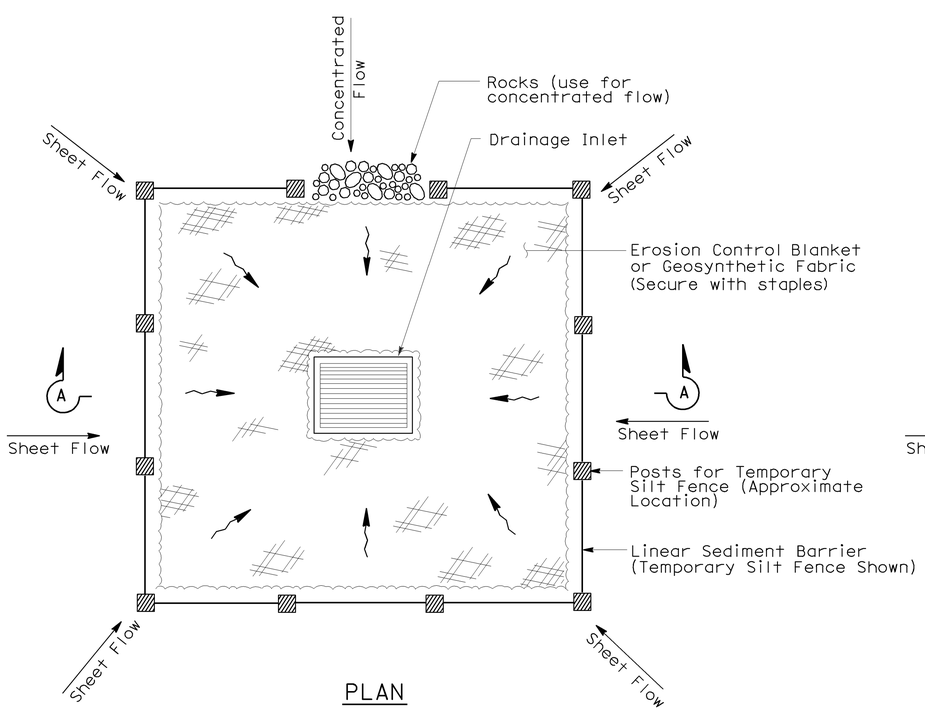

PLAN

TEMPORARY DRAINAGE INLET PROTECTION (TYPE 1)

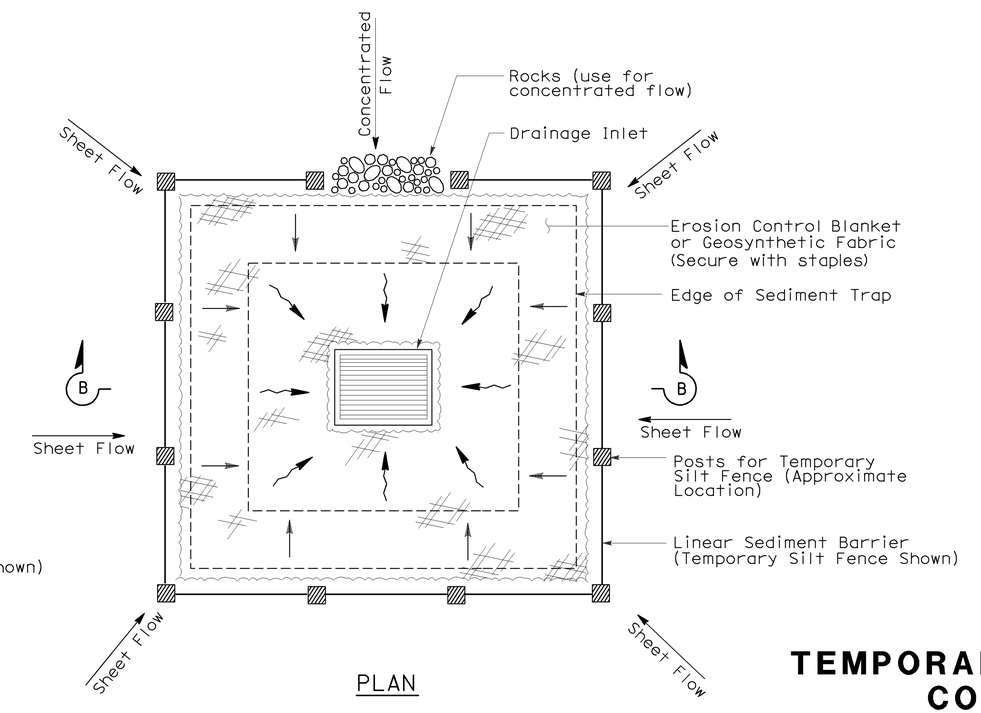

PLAN

TEMPORARY DRAINAGE INLET PROTECTION (TYPE 2) (EXCAVATED SEDIMENT TRAP)

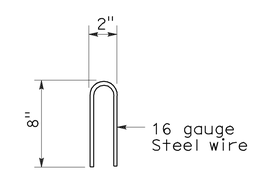

STAPLE DETAIL

STATE OF CALIFORNIA
DEPARTMENT OF TRANSPORTATION

TEMPORARY WATER POLLUTION CONTROL DETAILS (TEMPORARY DRAINAGE INLET PROTECTION)

NO SCALE

NSP T61 DATED AUGUST 15, 2008 SUPPLEMENTS THE STANDARD PLANS BOOK DATED MAY 2006.

NEW STANDARD PLAN NSP T61

2006 NEW STANDARD PLAN NSP T61

DIST	COUNTY	ROUTE	POST MILES TOTAL PROJECT	SHEET NO.	TOTAL SHEETS
04	CC	4,80	R15.4/R16.7, 7.3/7.6	46	48

LICENSED LANDSCAPE ARCHITECT

August 15, 2008
PLANS APPROVAL DATE

The State of California or its officers or agents shall not be responsible for the accuracy or completeness of electronic copies of this plan sheet.

LICENSED LANDSCAPE ARCHITECT — Robert B. Schott — 3635 — Signature — 11-04-08 Renewal Date — 08-11-08 Date — STATE OF CALIFORNIA

To accompany plans dated 6-18-12

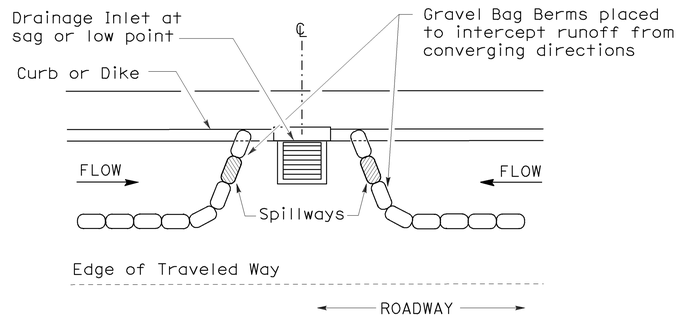

PLAN

CONFIGURATION FOR SAG POINT INLET (GRAVEL BAG BERM)

GRAVEL BAG BERM (TYPE 3A) SPACING TABLE

SLOPE OF ROADWAY (PERCENT)	1 to 3.9	4 to 5.9	6 to 7.9	8 to 10	10+
INTERVAL BETWEEN BERM	100′	75′	50′	25′	12′

For slope of less than 1%, install barriers only if erosion/sediment is prevalent

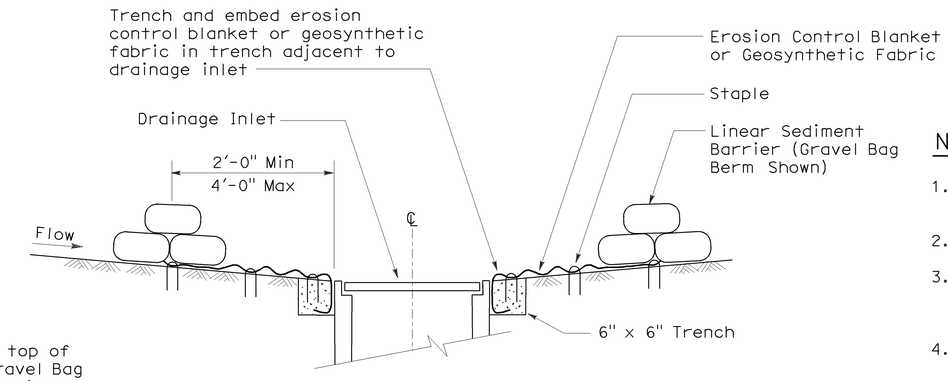

SECTION A-A

NOTES:

1. Place safety cones adjacent to drainage inlet protection.
2. Dimensions may vary to fit field conditions.
3. Install a minimum of 3 gravel bag berms upstream of each drainage inlet to be protected.
4. Position erosion control blanket or geosynthetic fabric at edge of concrete apron and secure in trench.
5. Erosion control blanket or geosynthetic fabric is not required if the area adjacent to the drainage inlet is vegetated or paved.

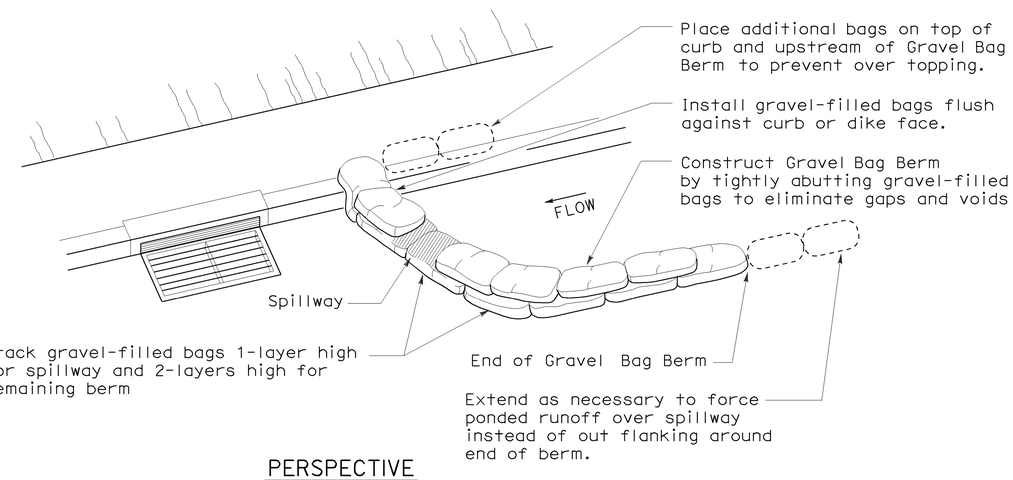

PERSPECTIVE

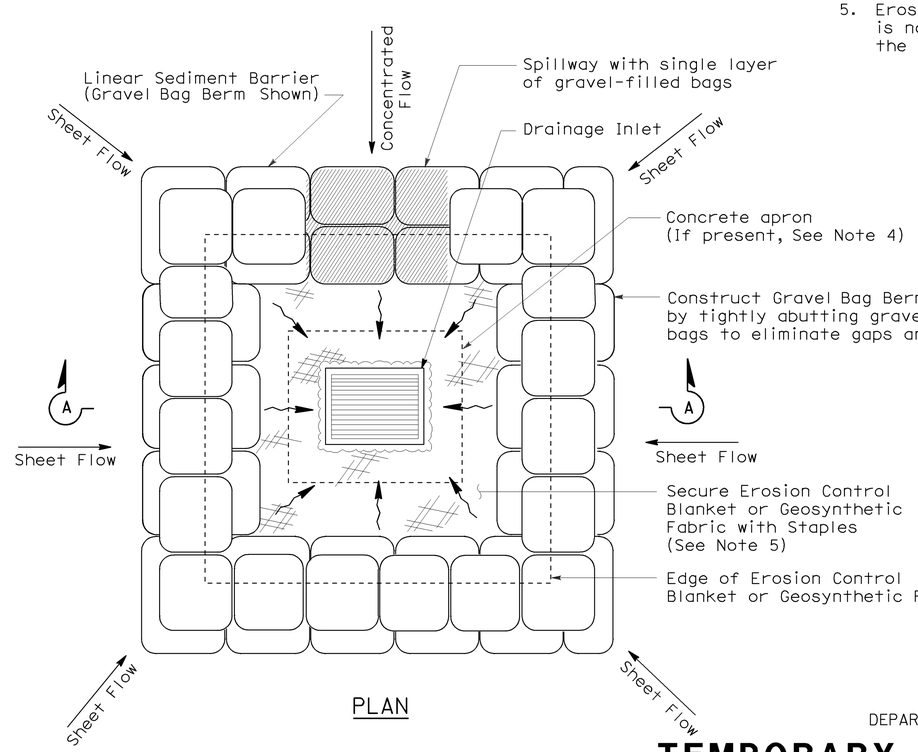

PLAN

TEMPORARY DRAINAGE INLET PROTECTION (TYPE 3B)

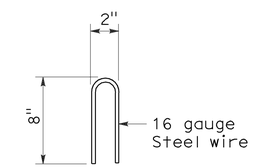

STAPLE DETAIL

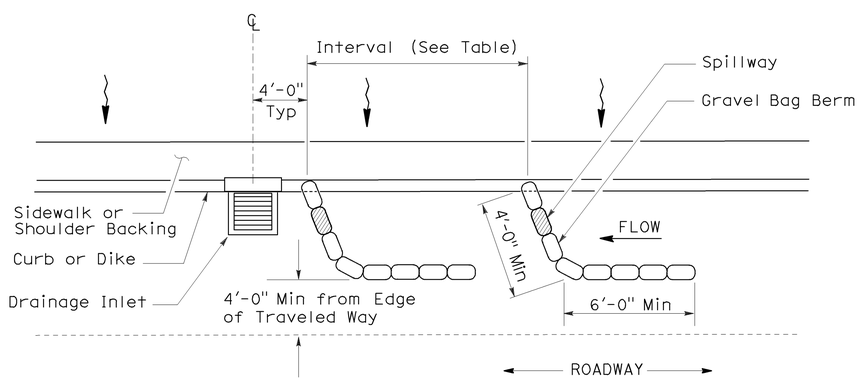

PLAN

TEMPORARY DRAINAGE INLET PROTECTION (TYPE 3A) (GRAVEL BAG BERM)

STATE OF CALIFORNIA
DEPARTMENT OF TRANSPORTATION

TEMPORARY WATER POLLUTION CONTROL DETAILS (TEMPORARY DRAINAGE INLET PROTECTION)

NO SCALE

NSP T62 DATED AUGUST 15, 2008 SUPPLEMENTS THE STANDARD PLANS BOOK DATED MAY 2006.

NEW STANDARD PLAN NSP T62

2006 NEW STANDARD PLAN NSP T62

7-11-08

DIST	COUNTY	ROUTE	POST MILES TOTAL PROJECT	SHEET NO.	TOTAL SHEETS
04	CC	4,80	R15.4/R16.7, 7.3/7.6	47	48

Robert B Schott
LICENSED LANDSCAPE ARCHITECT

August 15, 2008
PLANS APPROVAL DATE

LICENSED LANDSCAPE ARCHITECT Robert B. Schott 3635 Signature 11-04-08 Renewal Date 08-11-08 Date STATE OF CALIFORNIA

The State of California or its officers or agents shall not be responsible for the accuracy or completeness of electronic copies of this plan sheet.

To accompany plans dated 6-18-12

FLEXIBLE SEDIMENT BARRIER SPACING TABLE

SLOPE OF ROADWAY (PERCENT)	0 to 0.9	1 to 1.9	2 to 2.9	3 to 4	5+
INTERVAL BETWEEN BARRIERS	50′	35′	30′	25′	20′
ANGLE FROM FACE OF CURB	70°	70°	70°	45°	45°
SUGGESTED BARRIER LENGTH	6′	6′	6′	6′	6′

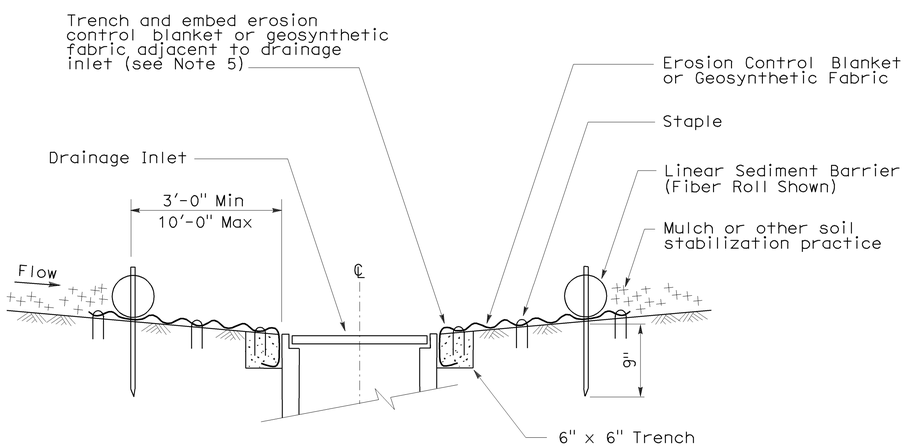

SECTION A-A

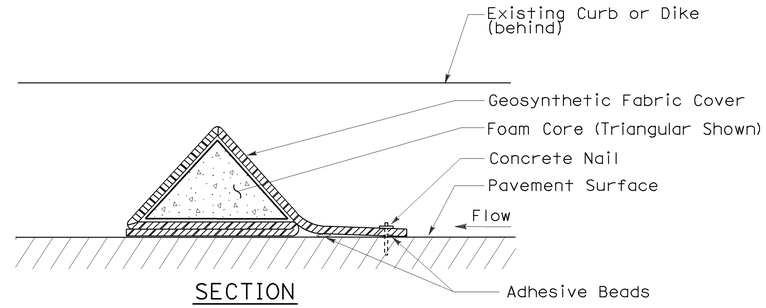

SECTION

FLEXIBLE SEDIMENT BARRIER DETAIL (FOAM BARRIER SHOWN)

NOTES:

1. See Standard Plan T51 for Temporary Silt Fence.
2. Dimensions may vary to fit field conditions.
3. Install a minimum of 3 flexible sediment barriers upstream of each drainage inlet to be protected.
4. Position erosion control blanket or geosynthetic fabric at edge of concrete apron and secure in trench.
5. Erosion control blanket or geosynthetic fabric is not required if the area adjacent to the drainage inlet is vegetated.

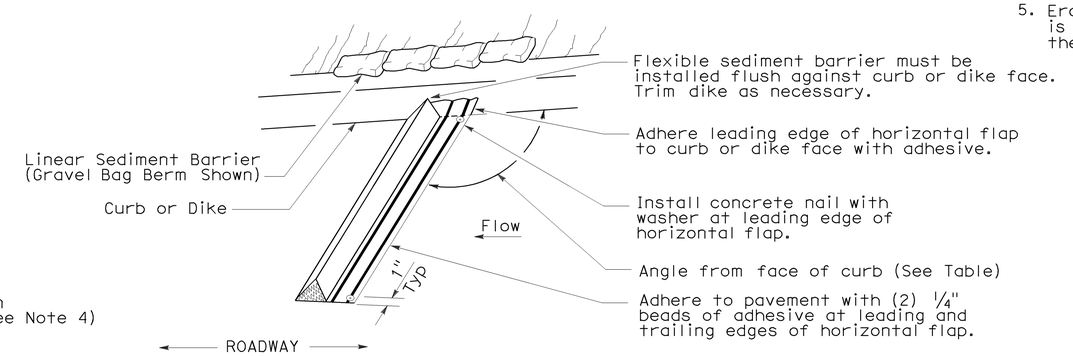

PERSPECTIVE

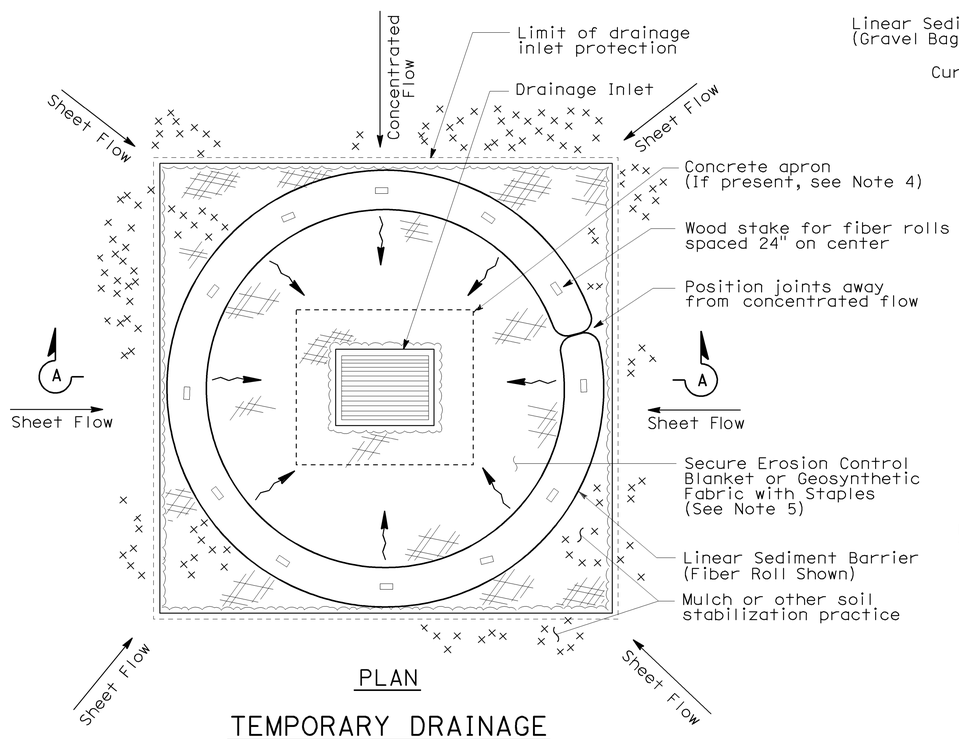

PLAN

TEMPORARY DRAINAGE INLET PROTECTION (TYPE 4A)

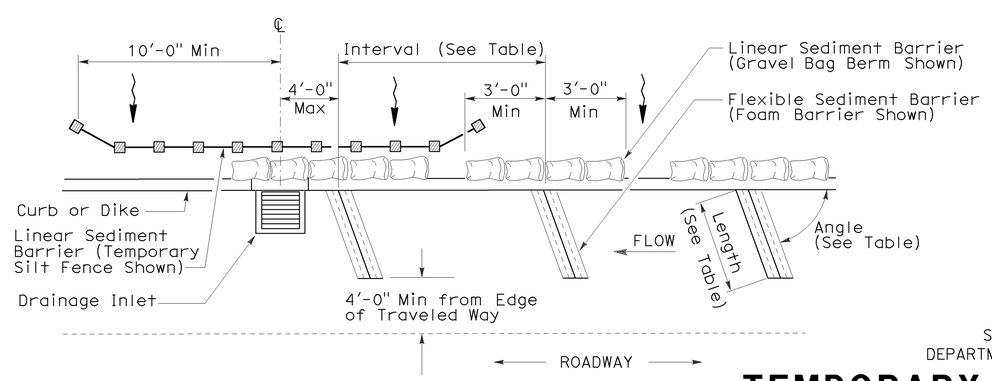

PLAN

TEMPORARY DRAINAGE INLET PROTECTION (TYPE 4B) FLEXIBLE SEDIMENT BARRIER

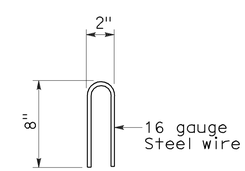

STAPLE DETAIL

STATE OF CALIFORNIA
DEPARTMENT OF TRANSPORTATION

TEMPORARY WATER POLLUTION CONTROL DETAILS (TEMPORARY DRAINAGE INLET PROTECTION)

NO SCALE

NSP T63 DATED AUGUST 15, 2008 SUPPLEMENTS THE STANDARD PLANS BOOK DATED MAY 2006.

NEW STANDARD PLAN NSP T63

2006 NEW STANDARD PLAN NSP T63

7-11-08

DIST	COUNTY	ROUTE	POST MILES TOTAL PROJECT	SHEET NO.	TOTAL SHEETS
04	CC	4,80	R15.4/R16.7, 7.3/7.6	48	48

LICENSED LANDSCAPE ARCHITECT

August 15, 2008
PLANS APPROVAL DATE

LICENSED LANDSCAPE ARCHITECT
Robert B. Schott 3635
Signature
11-04-08
Renewal Date
08-11-08
Date
STATE OF CALIFORNIA

The State of California or its officers or agents shall not be responsible for the accuracy or completeness of electronic copies of this plan sheet.

To accompany plans dated 6-18-12

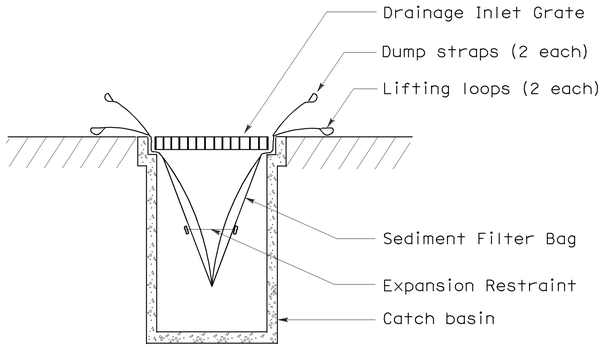

SECTION B-B

SEDIMENT FILTER BAG DETAIL

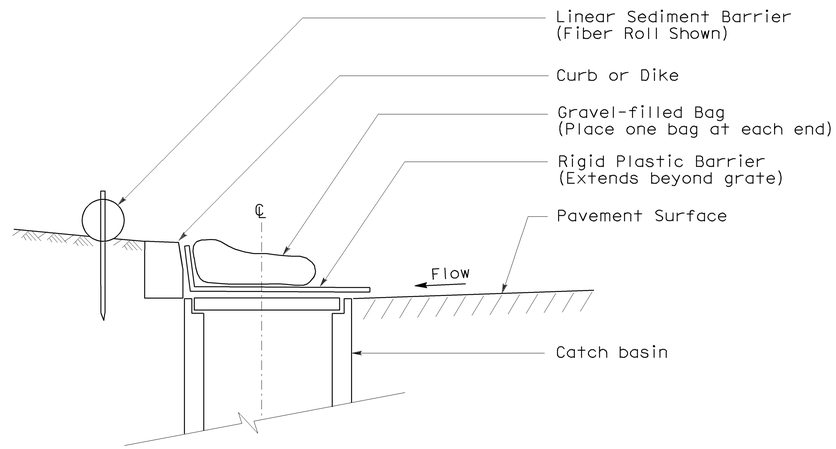

SECTION

TEMPORARY DRAINAGE INLET PROTECTION (TYPE 6A) (CATCH BASIN WITH GRATE)

NOTES:

1. See Standard Plan T51 for Temporary Silt Fence.
2. Dimensions may vary to fit field conditions.

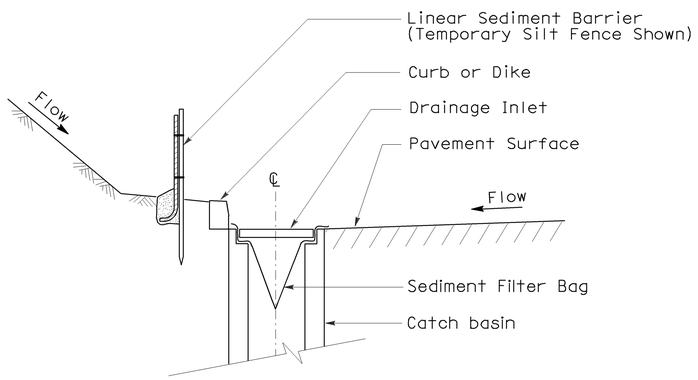

SECTION A-A

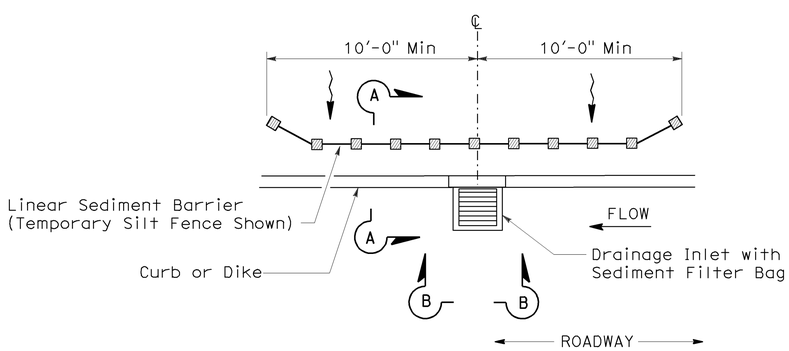

PLAN

TEMPORARY DRAINAGE INLET PROTECTION (TYPE 5) (SEDIMENT FILTER BAG)

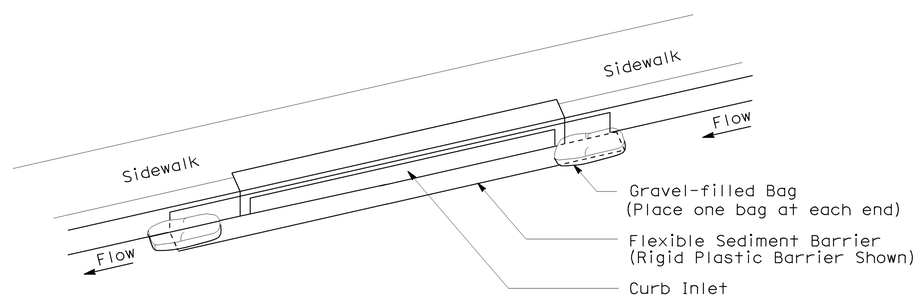

PERSPECTIVE

TEMPORARY DRAINAGE INLET PROTECTION (TYPE 6B) (CURB INLET WITHOUT GRATE)

STATE OF CALIFORNIA
DEPARTMENT OF TRANSPORTATION

TEMPORARY WATER POLLUTION CONTROL DETAILS (TEMPORARY DRAINAGE INLET PROTECTION)

NO SCALE

NSP T64 DATED AUGUST 15, 2008 SUPPLEMENTS THE STANDARD PLANS BOOK DATED MAY 2006.

NEW STANDARD PLAN NSP T64

2006 NEW STANDARD PLAN NSP T64

7-11-08