Dist	COUNTY	ROUTE	POST MILES TOTAL PROJECT	SHEET No.	TOTAL SHEETS
04	SCI	17	6.9/9.1	1	39

STATE OF CALIFORNIA

DEPARTMENT OF TRANSPORTATION

STP-P017(105)E

PROJECT PLANS FOR CONSTRUCTION ON

STATE HIGHWAY

IN SANTA CLARA COUNTY
IN LOS GATOS
FROM 0.3 MILE NORTH OF LOS GATOS SCHOOL PEDESTRIAN OVERCROSSING TO 0.2 MILE SOUTH OF ROUTE 17/85 CONNECTOR SEPARATION

TO BE SUPPLEMENTED BY STANDARD PLANS DATED MAY 2006
TO BE SUPPLEMENTED BY STANDARD PLANS DATED MAY 2006

INDEX OF PLANS

SHEET No.	DESCRIPTION
1	TITLE SHEET AND LOCATION MAP
2 & 3	TYPICAL CROSS SECTIONS
4 - 6	CONSTRUCTION DETAILS
7 - 15	CONSTRUCTION AREA SIGNS
16 & 17	PAVEMENT DELINEATION QUANTITIES
18 & 19	SUMMARY OF QUANTITIES
20 - 23	ELECTRICAL PLANS
24 - 39	REVISED AND NEW STANDARD PLANS

THE STANDARD PLANS LIST APPLICABLE TO THIS CONTRACT IS INCLUDED IN THE NOTICE TO BIDDERS AND SPECIAL PROVISIONS BOOK.

LOCATION MAP

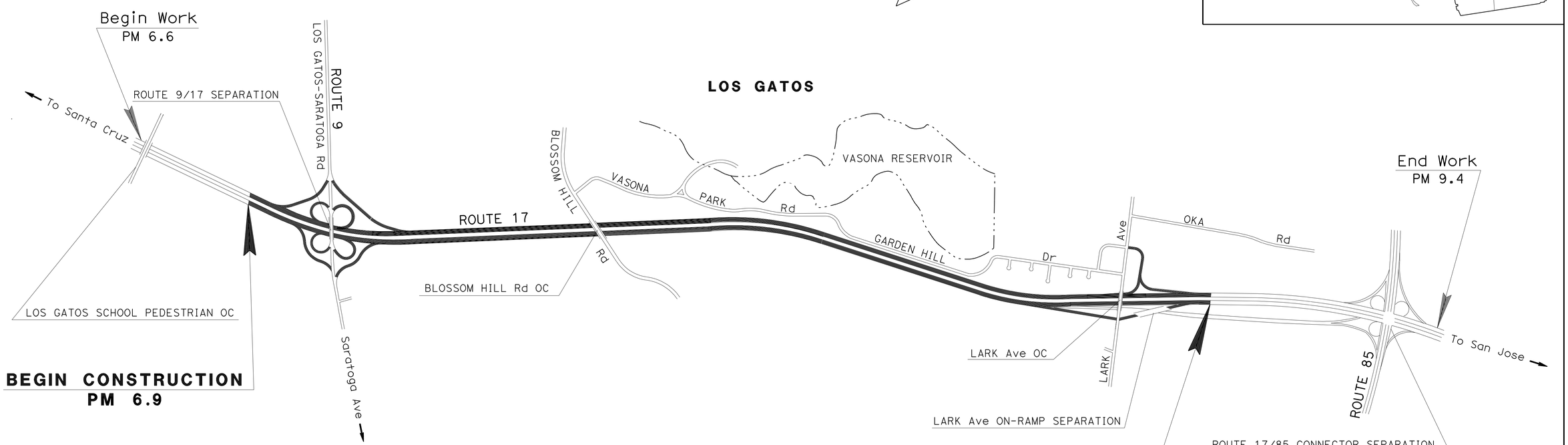

NO SCALE

Robert Camargo 7-21-10
PROJECT ENGINEER DATE
REGISTERED CIVIL ENGINEER

July 26, 2010
PLANS APPROVAL DATE

REGISTERED PROFESSIONAL ENGINEER
Robert Camargo
No. 34402
Exp. 9-30-11
CIVIL
STATE OF CALIFORNIA

THE STATE OF CALIFORNIA OR ITS OFFICERS OR AGENTS SHALL NOT BE RESPONSIBLE FOR THE ACCURACY OR COMPLETENESS OF SCANNED COPIES OF THIS PLAN SHEET.

PROJECT MANAGER RAMSES SARGISS

DESIGN ENGINEER SHERRY HUANG

THE CONTRACTOR SHALL POSSESS THE CLASS (OR CLASSES) OF LICENSE AS SPECIFIED IN THE "NOTICE TO BIDDERS."

CONTRACT No.	04-1E0904
PROJECT ID	0400020201

LAST REVISION 07-22-10
DATE PLOTTED => 09-SEP-2010
TIME PLOTTED => 09:47

Dist	COUNTY	ROUTE	POST MILES TOTAL PROJECT	SHEET No.	TOTAL SHEETS
04	SCI	17	6.9/9.1	2	39

REGISTERED CIVIL ENGINEER 7-21-10 DATE

7-26-10
PLANS APPROVAL DATE

Robert Camargo No. 34402 Exp. 9-30-11 CIVIL — REGISTERED PROFESSIONAL ENGINEER — STATE OF CALIFORNIA

THE STATE OF CALIFORNIA OR ITS OFFICERS OR AGENTS SHALL NOT BE RESPONSIBLE FOR THE ACCURACY OR COMPLETENESS OF SCANNED COPIES OF THIS PLAN SHEET.

FOR ACCURATE RIGHT OF WAY AND ACCESS DATA, CONTACT RIGHT OF WAY ENGINEERING AT THE DISTRICT OFFICE.

ABBREVIATIONS:

HMA (OGFC)	HOT MIX ASPHALT (OPEN GRADED FRICTION COURSE)
RHMA (G)	RUBBERIZED HOT MIX ASPHALT (TYPE G)
RSC	RAPID STRENGTH CONCRETE

NOTES:

1. DIMENSIONS OF THE Pvmt STRUCTURES (STRUCTURAL SECTIONS) ARE SUBJECT TO TOLERANCES SPECIFIED IN THE STANDARD SPECIFICATIONS.
2. SUPERELEVATION AS SHOWN OR AS DIRECTED BY THE ENGINEER.
3. VERTICAL CLEARANCE TO ALL BRIDGE STRUCTURES SHALL REMAIN THE SAME.

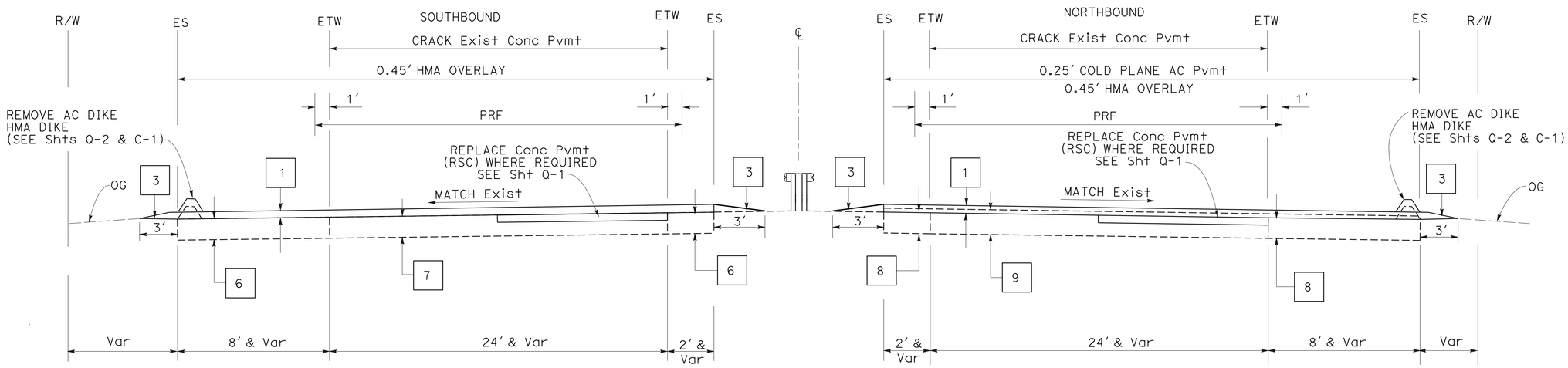

ROUTE 17

PM 7.1 TO 7.9

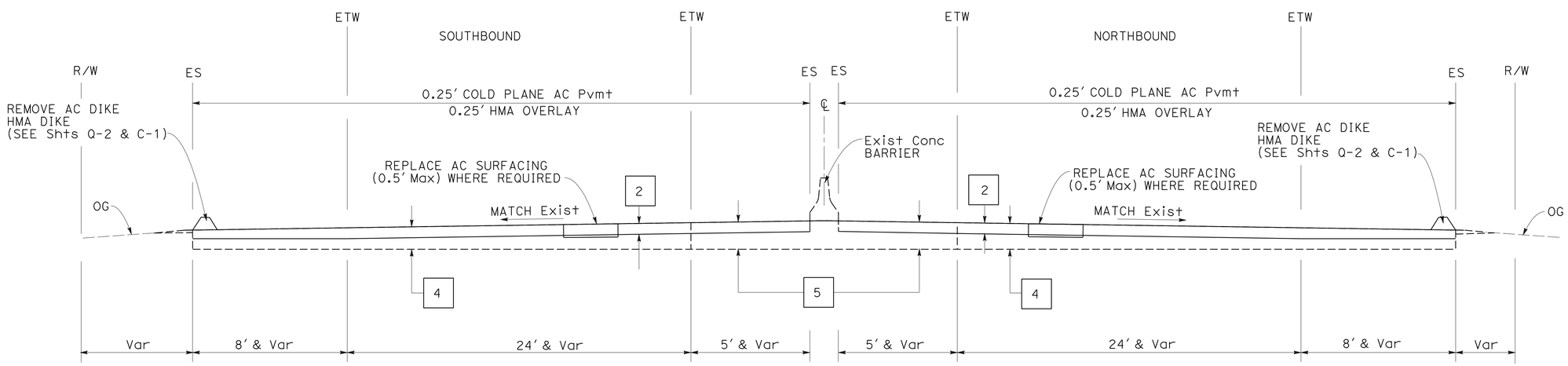

ROUTE 17

PM 6.9 TO 7.1

LEGEND:

1	0.10' HMA (OGFC) 0.15' RHMA (G) 0.10' HMA (A) PRF 0.10' HMA LEVELING
2	0.10' HMA (OGFC) 0.15' RHMA (G) REPLACE AC SURFACING (0.5' Max) WHERE REQUIRED
3	IMPORTED MATERIAL (SHOULDER BACKING)
4	Exist 0.10' OGAC 0.33' AC 0.50' CTB Cl B 1.25' SUBBASE
5	Exist 0.10' OGAC 0.25' AC 0.50' PCC 0.40' SUBBASE
6	Exist 0.25' AC 0.42' CTB Cl C 0.83' SUBBASE
7	Exist 0.67' PCC 0.33' CEMENT TREATED SUBGRADE 0.50' SUBBASE
8	Exist 0.50' AC 0.42' CTB Cl C 0.83' SUBBASE
9	Exist 0.25' AC 0.67' PCC 0.33' CEMENT TREATED SUBGRADE 0.50' SUBBASE
10	Exist 0.10' OGAC 0.50' AC 0.42' CTB Cl C 0.83 SUBBASE
11	Exist 0.10' OGAC 0.15' AC PRF 0.10' AC 0.67' PCC 0.33' CEMENT TREATED SUBGRADE 0.83 SUBBASE

TYPICAL CROSS SECTIONS

NO SCALE

X-1

REVISED BY	DATE REVISED
SH	7/12/10

CALCULATED-DESIGNED BY: SHERRY HUANG
CHECKED BY: ROBERT CAMARGO
FUNCTIONAL SUPERVISOR: RAMSES SARGISS

STATE OF CALIFORNIA - DEPARTMENT OF TRANSPORTATION
Caltrans
DESIGN

LAST REVISION 07-26-10 | DATE PLOTTED => 09-SEP-2010 | TIME PLOTTED => 09:47

Dist	COUNTY	ROUTE	POST MILES TOTAL PROJECT	SHEET No.	TOTAL SHEETS
04	SCI	17	6.9/9.1	3	39

Robert Camargo 7-21-10
REGISTERED CIVIL ENGINEER DATE

7-26-10
PLANS APPROVAL DATE

REGISTERED PROFESSIONAL ENGINEER
Robert Camargo
No. 34402
Exp. 9-30-11
CIVIL
STATE OF CALIFORNIA

THE STATE OF CALIFORNIA OR ITS OFFICERS OR AGENTS SHALL NOT BE RESPONSIBLE FOR THE ACCURACY OR COMPLETENESS OF SCANNED COPIES OF THIS PLAN SHEET.

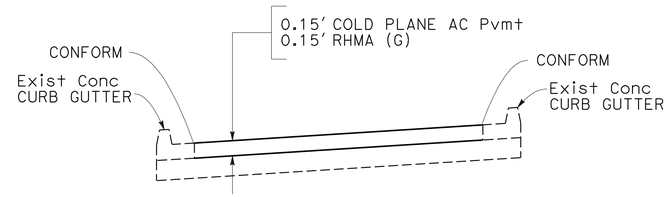

RAMPS
(TYPICAL)

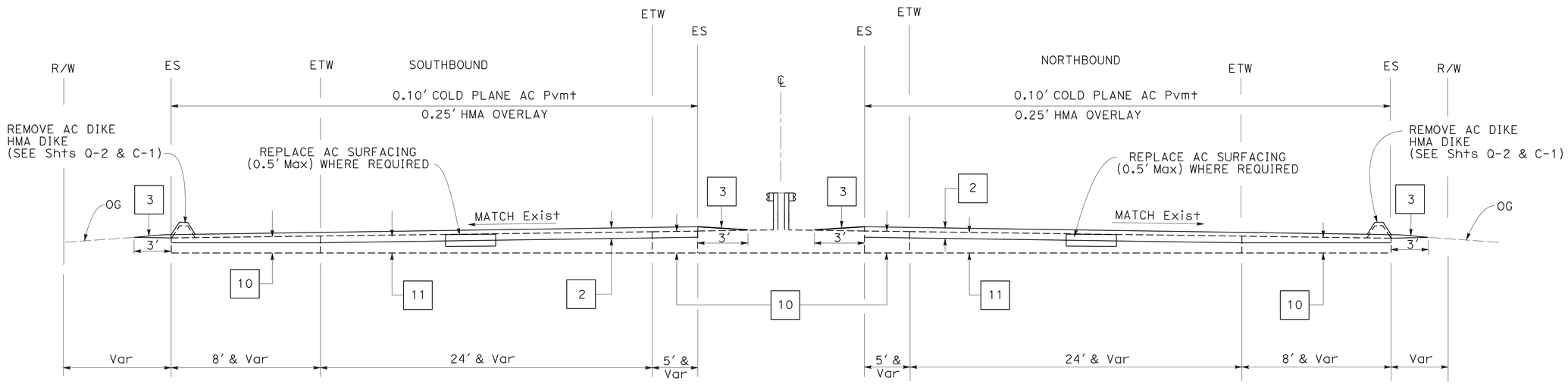

ROUTE 17
PM 7.9 TO 9.1

TYPICAL CROSS SECTIONS
NO SCALE

X-2

SHERRY HUANG	REVISED BY: SH
ROBERT CAMARGO	DATE REVISED: 7/12/10
CALCULATED-DESIGNED BY	
CHECKED BY	
FUNCTIONAL SUPERVISOR: RAMSES SARGISS	

STATE OF CALIFORNIA - DEPARTMENT OF TRANSPORTATION
Caltrans
DESIGN

LAST REVISION 07-26-10
DATE PLOTTED => 09-SEP-2010
TIME PLOTTED => 09:47

Dist	COUNTY	ROUTE	POST MILES TOTAL PROJECT	SHEET No.	TOTAL SHEETS
04	SCI	17	6.9/9.1	4	39

Robert Camargo 7-21-10
REGISTERED CIVIL ENGINEER DATE

7-26-10
PLANS APPROVAL DATE

REGISTERED PROFESSIONAL ENGINEER Robert Camargo No. 34402 Exp. 9-30-11 CIVIL STATE OF CALIFORNIA

THE STATE OF CALIFORNIA OR ITS OFFICERS OR AGENTS SHALL NOT BE RESPONSIBLE FOR THE ACCURACY OR COMPLETENESS OF SCANNED COPIES OF THIS PLAN SHEET.

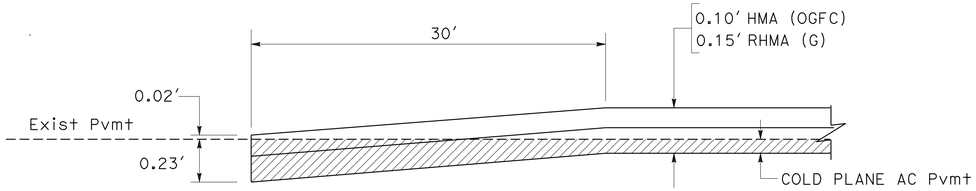

PAVING CONFORM @ BEGIN AND END CONSTRUCTION

DETAIL A

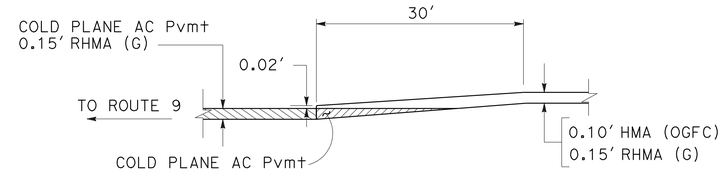

DETAIL E
PAVING CONFORM AT OTHER RAMPS

SEE DETAIL D FOR PAVING CONFORM @ SB OFF-RAMP TO SB ROUTE 9

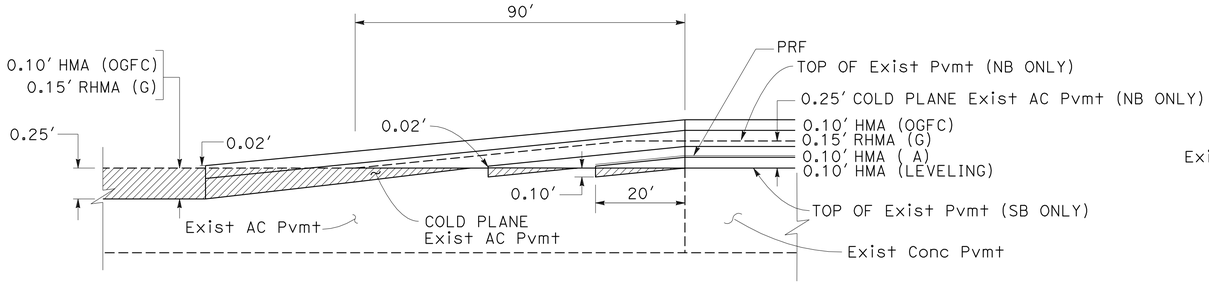

DETAIL B
PAVING DETAIL AT PM 7.1 (BEGIN PCC LIMIT)

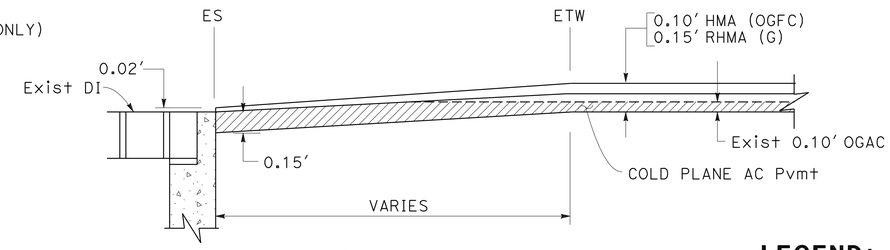

DETAIL F

PAVING CONFORM @ DRAINAGE INLET

LEGEND:

- DIRECTION OF TRAFFIC
- COLD PLANE Exist AC Pvmt OR GRIND Exist Conc Pvmt
- 0.15' COLD PLANE AC Pvmt 0.15' RHMA(A) Pvmt
- REPLACE Conc Pvmt WHERE REQUIRED

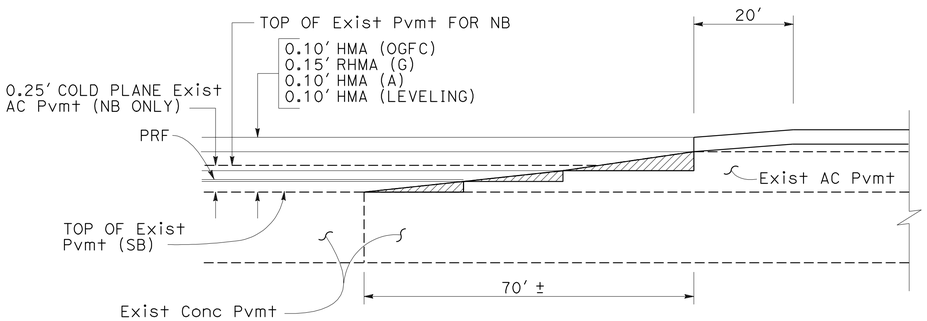

DETAIL C
CONFORM DETAIL AT PM 7.9 (END PCC LIMIT)

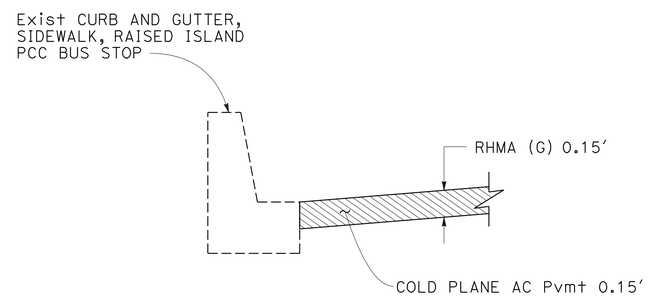

DETAIL G

PAVING CONFORM @ Exist CURB, GUTTER, SIDEWALK AND RAISED ISLAND

ABBREVIATIONS:

HMA (OGFC)	HOT MIX ASPHALT (OPEN GRADED FRICTION COURSE)
RHMA (G)	RUBBERIZED HOT MIX ASPHALT (TYPE G)
RSC	RAPID STRENGTH CONCRETE

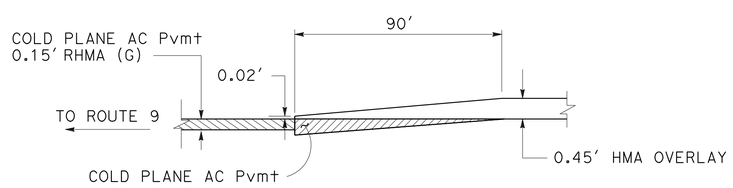

DETAIL D
PAVING CONFORM AT SB OFF-RAMP TO SB ROUTE 9

SEE DETAIL E FOR PAVING CONFORM AT OTHER RAMPS

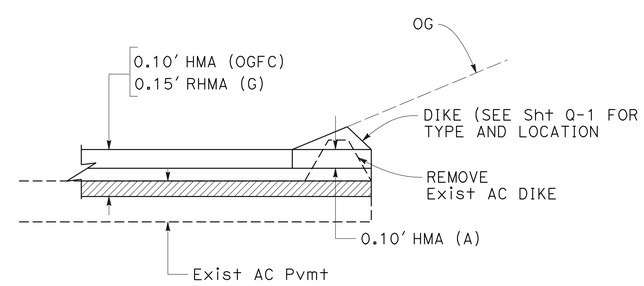

DETAIL H

PAVING CONFORM @ DIKE

CONSTRUCTION DETAILS

NO SCALE

C-1

STATE OF CALIFORNIA - DEPARTMENT OF TRANSPORTATION
Caltrans DESIGN

FUNCTIONAL SUPERVISOR: RAMSES SARGISS
CALCULATED-DESIGNED BY: SHERRY HUANG
CHECKED BY: ROBERT CAMARGO
REVISED BY: SH
DATE REVISED: 7/12/10

LAST REVISION 07-26-10 | DATE PLOTTED => 09-SEP-2010 | TIME PLOTTED => 09:47

Dist	COUNTY	ROUTE	POST MILES TOTAL PROJECT	SHEET No.	TOTAL SHEETS
04	SCI	17	6.9/9.1	5	39

Robert Camargo 7-21-10
REGISTERED CIVIL ENGINEER DATE

7-26-10
PLANS APPROVAL DATE

REGISTERED PROFESSIONAL ENGINEER
Robert Camargo
No. 34402
Exp. 9-30-11
CIVIL
STATE OF CALIFORNIA

THE STATE OF CALIFORNIA OR ITS OFFICERS OR AGENTS SHALL NOT BE RESPONSIBLE FOR THE ACCURACY OR COMPLETENESS OF SCANNED COPIES OF THIS PLAN SHEET.

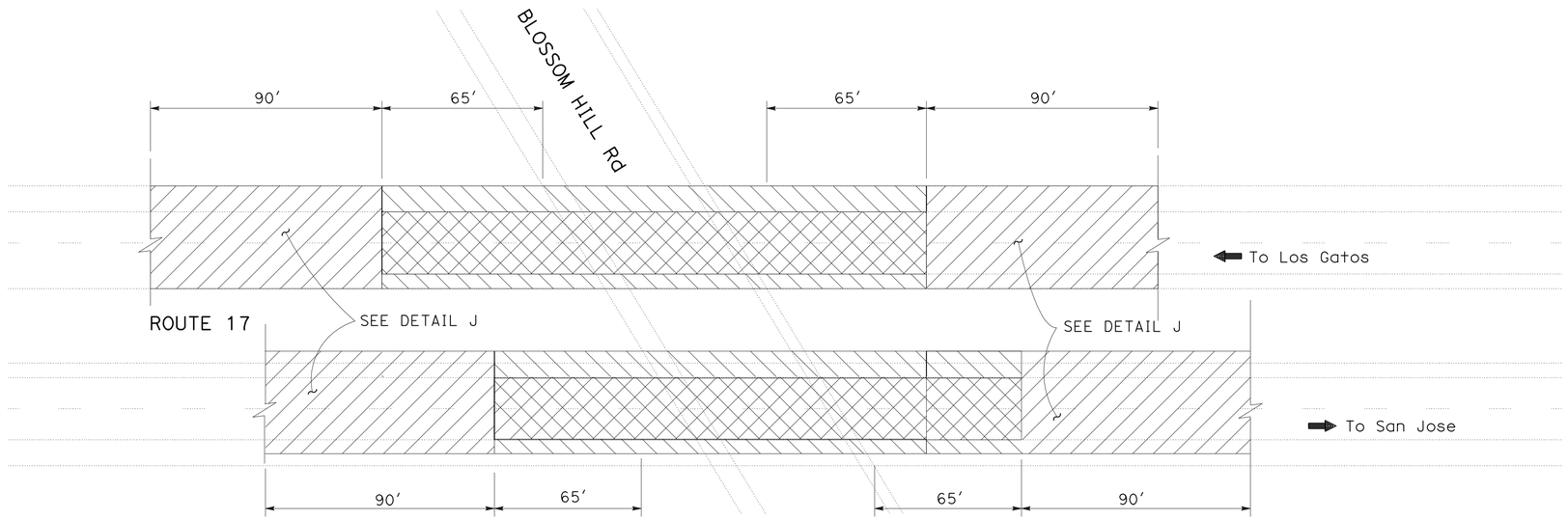

DETAIL I
CONFORM AREA AT BLOSSOM HILL ROAD OC

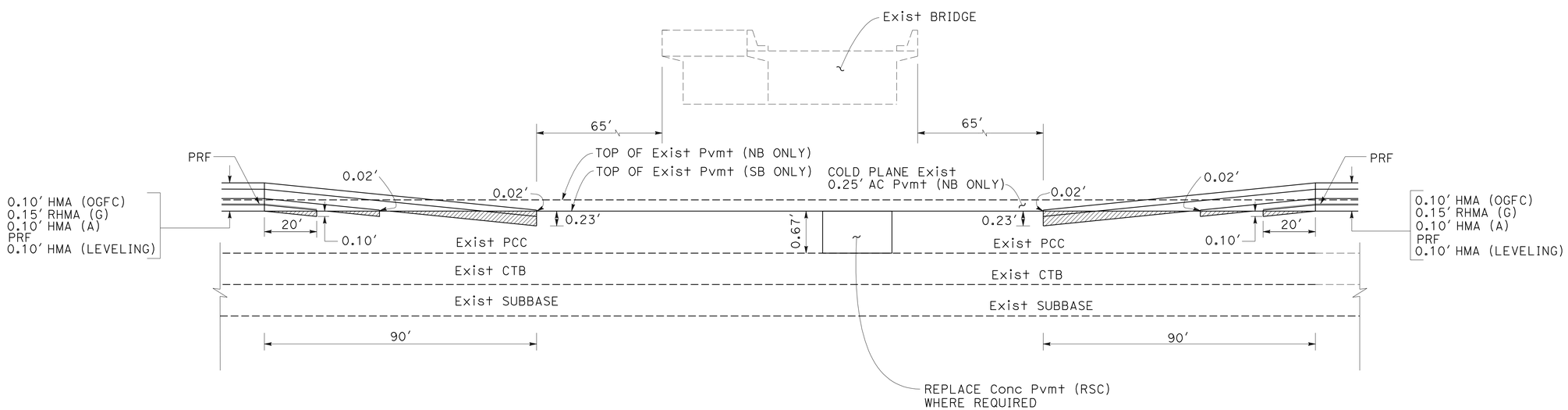

DETAIL J
PAVING DETAIL AT BLOSSOM HILL ROAD OC

CONSTRUCTION DETAILS
NO SCALE

FOR NOTES, ABBREVIATIONS AND LEGEND, SEE SHEET C-1

C-2

REVISED BY	DATE REVISED
SH	7/12/10

CALCULATED-DESIGNED BY: SHERRY HUANG
CHECKED BY: ROBERT CAMARGO
FUNCTIONAL SUPERVISOR: RAMSES SARGISS

STATE OF CALIFORNIA - DEPARTMENT OF TRANSPORTATION
Caltrans
DESIGN

LAST REVISION 07-26-10 | DATE PLOTTED => 09-SEP-2010 | TIME PLOTTED => 09:47

Dist	COUNTY	ROUTE	POST MILES TOTAL PROJECT	SHEET No.	TOTAL SHEETS
04	SCI	17	6.9/9.1	6	39

Robert Camargo 7-21-10
REGISTERED CIVIL ENGINEER DATE

7-26-10
PLANS APPROVAL DATE

REGISTERED PROFESSIONAL ENGINEER Robert Camargo No. 34402 Exp. 9-30-11 CIVIL STATE OF CALIFORNIA

THE STATE OF CALIFORNIA OR ITS OFFICERS OR AGENTS SHALL NOT BE RESPONSIBLE FOR THE ACCURACY OR COMPLETENESS OF SCANNED COPIES OF THIS PLAN SHEET.

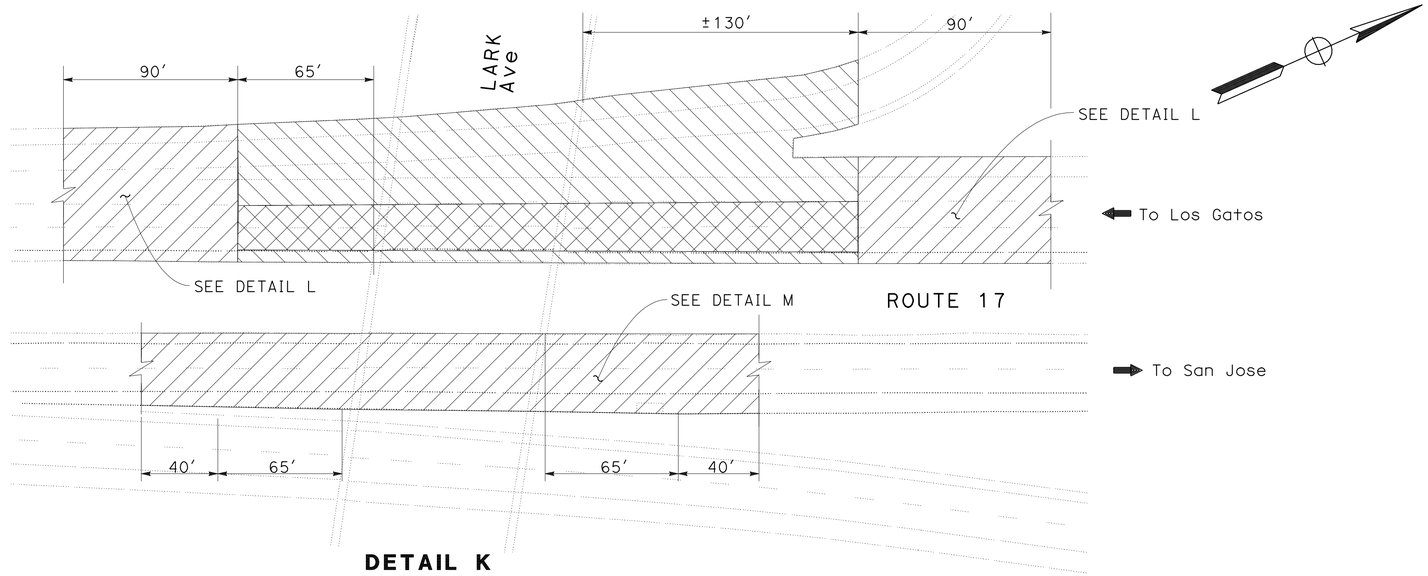

DETAIL K
CONFORM AREA AT LARK AVENUE OC

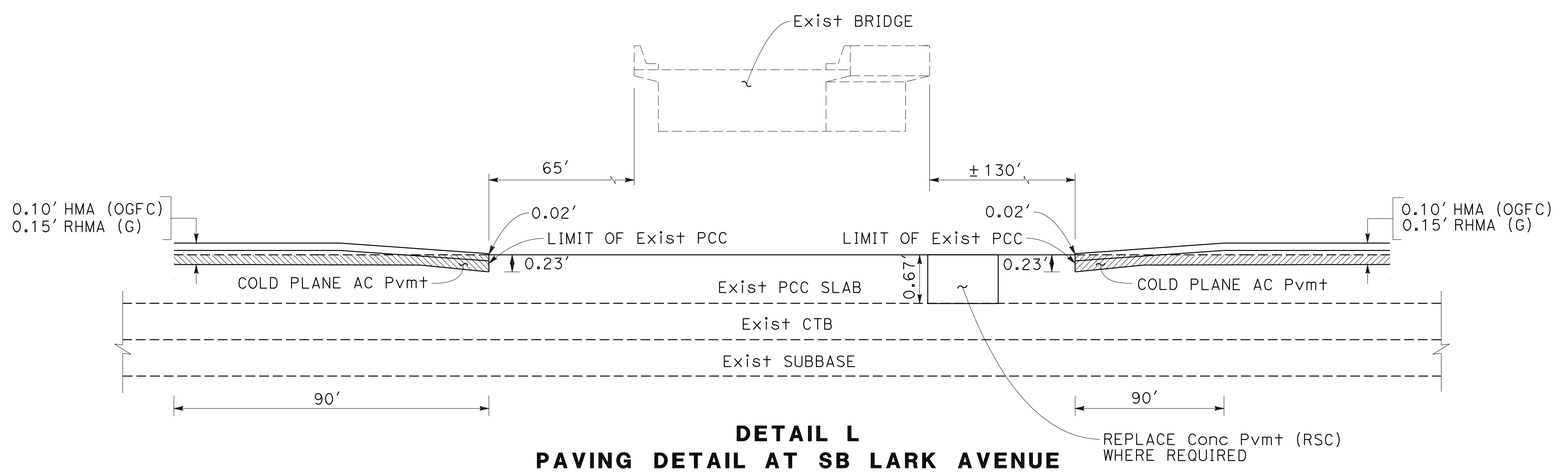

DETAIL L
PAVING DETAIL AT SB LARK AVENUE

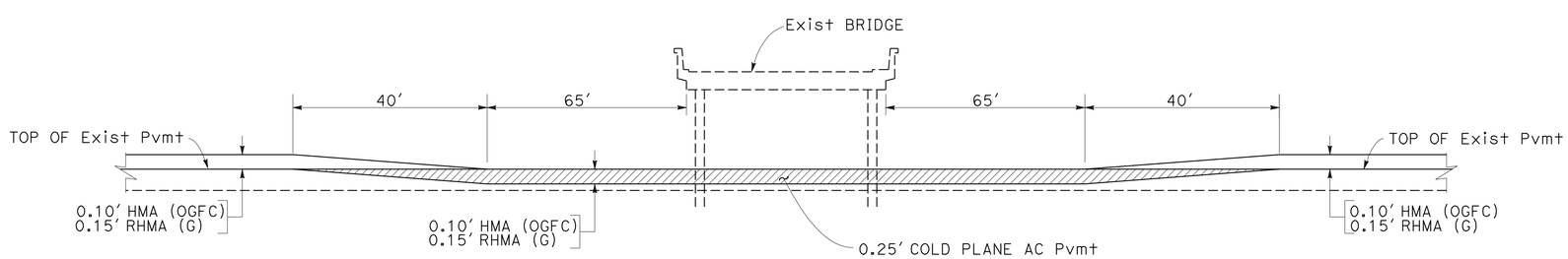

DETAIL M
PAVING DETAIL AT NB LARK Ave

FOR NOTES, ABBREVIATIONS AND LEGEND, SEE SHEET C-1

CONSTRUCTION DETAILS
NO SCALE

C-3

REVISED BY	DATE REVISED
SH	7/12/10

SHERRY HUANG — ROBERT CAMARGO — CALCULATED-DESIGNED BY — CHECKED BY

FUNCTIONAL SUPERVISOR: RAMSES SARGISS

STATE OF CALIFORNIA - DEPARTMENT OF TRANSPORTATION
Caltrans® DESIGN

LAST REVISION 07-26-10 — DATE PLOTTED => 09-SEP-2010 — TIME PLOTTED => 09:48

Dist	COUNTY	ROUTE	POST MILES TOTAL PROJECT	SHEET No.	TOTAL SHEETS
04	SCI	17	6.9/9.1	7	39

REGISTERED CIVIL ENGINEER 7-21-10 DATE

7-26-10
PLANS APPROVAL DATE

REGISTERED PROFESSIONAL ENGINEER Jerilyn L. Struven No. 49964 Exp. 12-31-10 CIVIL STATE OF CALIFORNIA

THE STATE OF CALIFORNIA OR ITS OFFICERS OR AGENTS SHALL NOT BE RESPONSIBLE FOR THE ACCURACY OR COMPLETENESS OF SCANNED COPIES OF THIS PLAN SHEET.

LEGEND:

A	CONSTRUCTION AREA SIGN LETTER
→	DIRECTION OF TRAFFIC
X	RAMP OR CONNECTOR TO BE CLOSED

NOTES:

1. EXACT LOCATION AND POSITION OF CONSTRUCTION AREA SIGNS TO BE DETERMINED BY THE ENGINEER.
2. CONSTRUCTION AREA SIGNS TO BE STATIONARY MOUNTED.
3. SIGN POST LENGTH ARE APPROXIMATE, EXACT SIZE AND LENGTH TO BE DETERMINED BY THE ENGINEER.

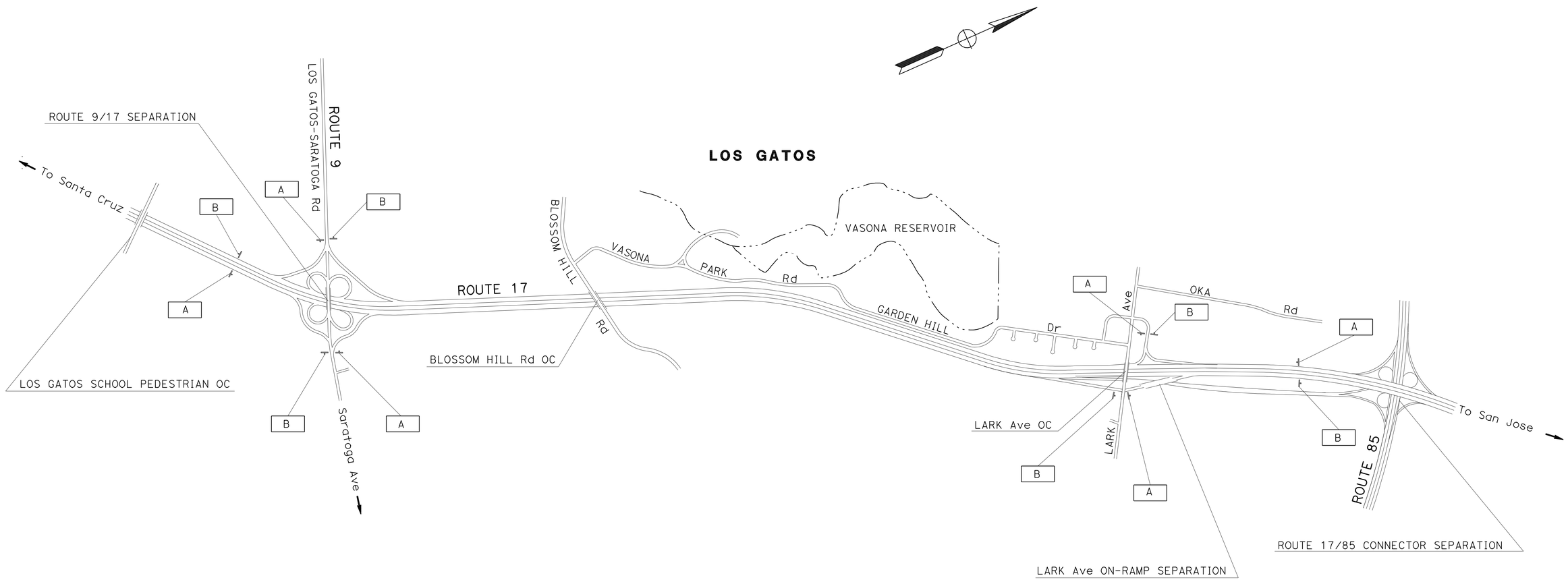

CONSTRUCTION AREA SIGNS

NO SCALE

THIS PLAN ACCURATE FOR CONSTRUCTION AREA SIGN WORK ONLY

CS-1

HENRY TAM	REVISED BY
JERILYN STRUVEN	DATE REVISED
HT	
7/12/10	
CALCULATED-DESIGNED BY	
CHECKED BY	
FUNCTIONAL SUPERVISOR	
ROLAND AU-YEUNG	

STATE OF CALIFORNIA - DEPARTMENT OF TRANSPORTATION

Caltrans

TRAFFIC

LAST REVISION 07-22-10 | DATE PLOTTED => 09-SEP-2010 | TIME PLOTTED => 09:48

Dist	COUNTY	ROUTE	POST MILES TOTAL PROJECT	SHEET No.	TOTAL SHEETS
04	SCI	17	6.9/9.1	8	39

REGISTERED CIVIL ENGINEER 7-21-10 DATE

7-26-10
PLANS APPROVAL DATE

REGISTERED PROFESSIONAL ENGINEER Jerilyn L. Struven No. 49964 Exp. 12-31-10 CIVIL STATE OF CALIFORNIA

THE STATE OF CALIFORNIA OR ITS OFFICERS OR AGENTS SHALL NOT BE RESPONSIBLE FOR THE ACCURACY OR COMPLETENESS OF SCANNED COPIES OF THIS PLAN SHEET.

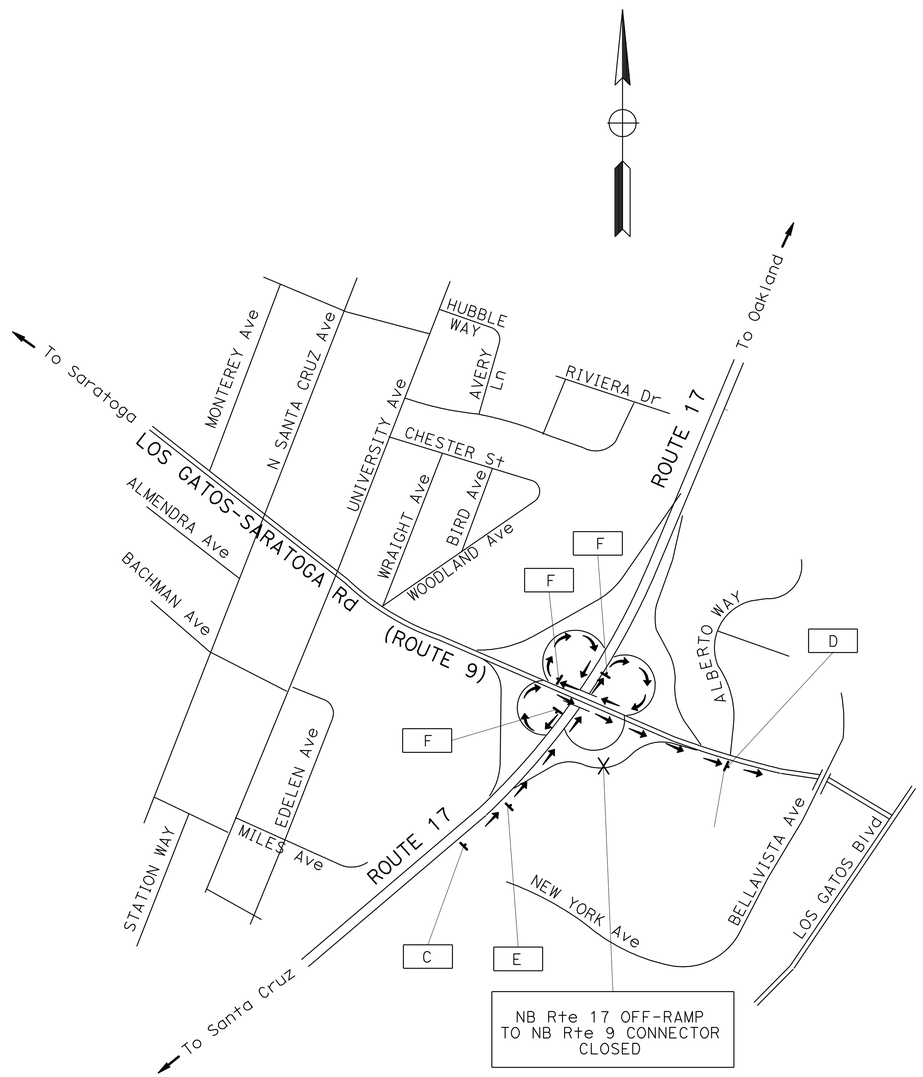

DETOUR PLAN No. 1

DETOUR
VIA
NB Rte 17; LOOP OFF-RAMP TO SB Rte 9; FROM SB Rte 9 LOOP ON-RAMP TO SB Rte 17; FROM SB Rte 17 LOOP OFF-RAMP TO NB Rte 9

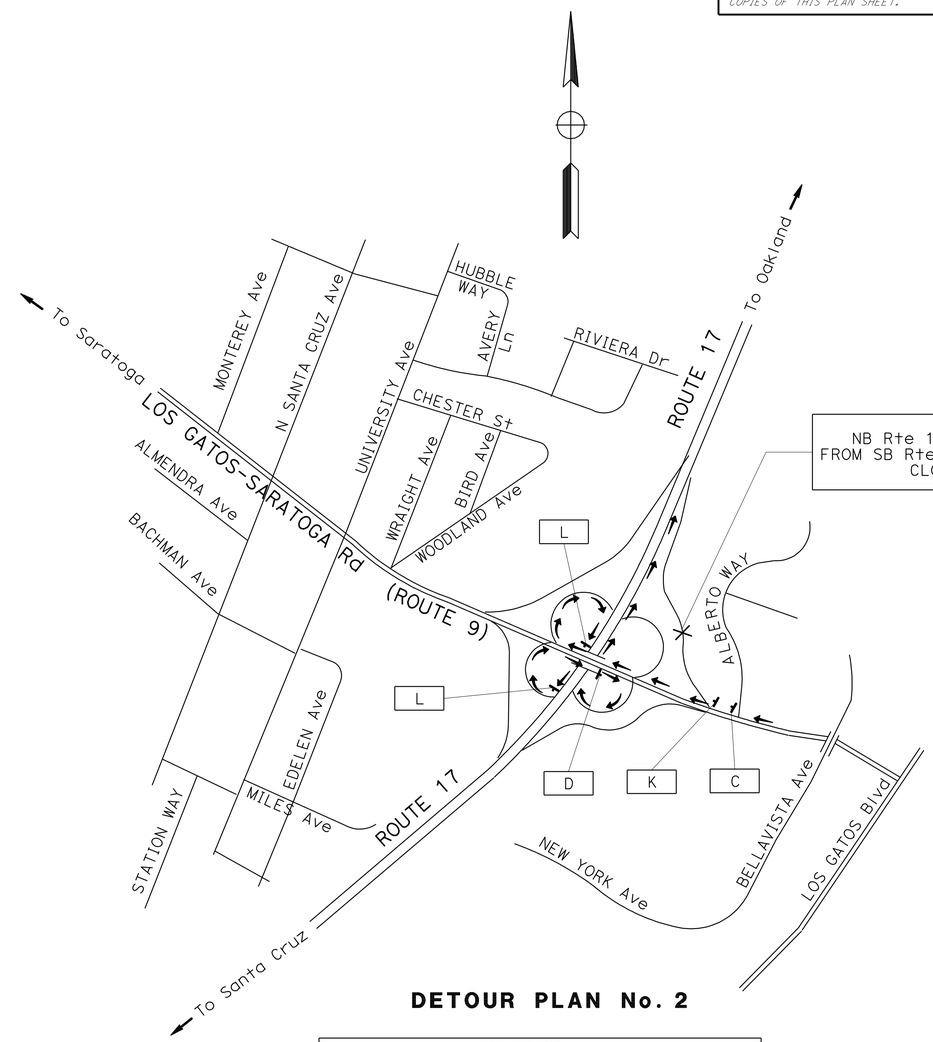

DETOUR PLAN No. 2

DETOUR
VIA
SB Rte 9; LOOP ON-RAMP TO SB Rte 17; FROM SB Rte 17 LOOP OFF-RAMP TO NB Rte 9; FROM NB Rte 9 LOOP ON-RAMP TO NB Rte 17

CONSTRUCTION AREA SIGNS
DETOUR PLAN
NO SCALE

FOR NOTES, ABBREVIATIONS AND LEGEND, SEE SHEET CS-1

THIS PLAN ACCURATE FOR CONSTRUCTION AREA SIGN WORK ONLY

CS-2

STATE OF CALIFORNIA - DEPARTMENT OF TRANSPORTATION
Caltrans®
TRAFFIC

FUNCTIONAL SUPERVISOR: ROLAND AU-YEUNG
CALCULATED-DESIGNED BY: HENRY TAM
CHECKED BY: JERILYN STRUVEN
REVISED BY: HT
DATE REVISED: 7/12/10

LAST REVISION 07-22-10
DATE PLOTTED => 09-SEP-2010
TIME PLOTTED => 09:48

Dist	COUNTY	ROUTE	POST MILES TOTAL PROJECT	SHEET No.	TOTAL SHEETS
04	SCI	17	6.9/9.1	9	39

REGISTERED CIVIL ENGINEER 7-21-10 DATE

7-26-10
PLANS APPROVAL DATE

REGISTERED PROFESSIONAL ENGINEER Jerilyn L. Struven No. 49964 Exp. 12-31-10 CIVIL STATE OF CALIFORNIA

THE STATE OF CALIFORNIA OR ITS OFFICERS OR AGENTS SHALL NOT BE RESPONSIBLE FOR THE ACCURACY OR COMPLETENESS OF SCANNED COPIES OF THIS PLAN SHEET.

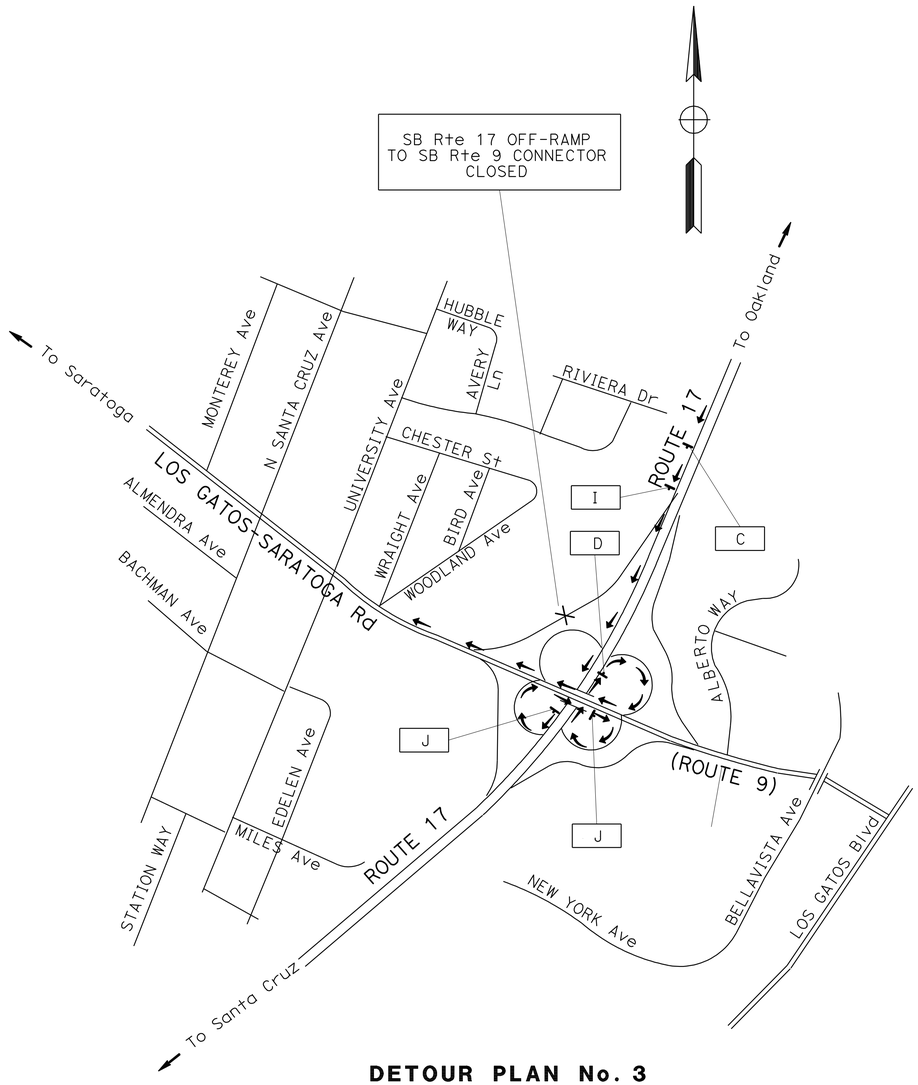

DETOUR PLAN No. 3

DETOUR
VIA
SB Rte 17; LOOP OFF-RAMP TO NB Rte 9; FROM NB Rte 9 LOOP OFF-RAMP TO NB Rte 17; FROM NB Rte 17 LOOP OFF-RAMP TO SB Rte 9

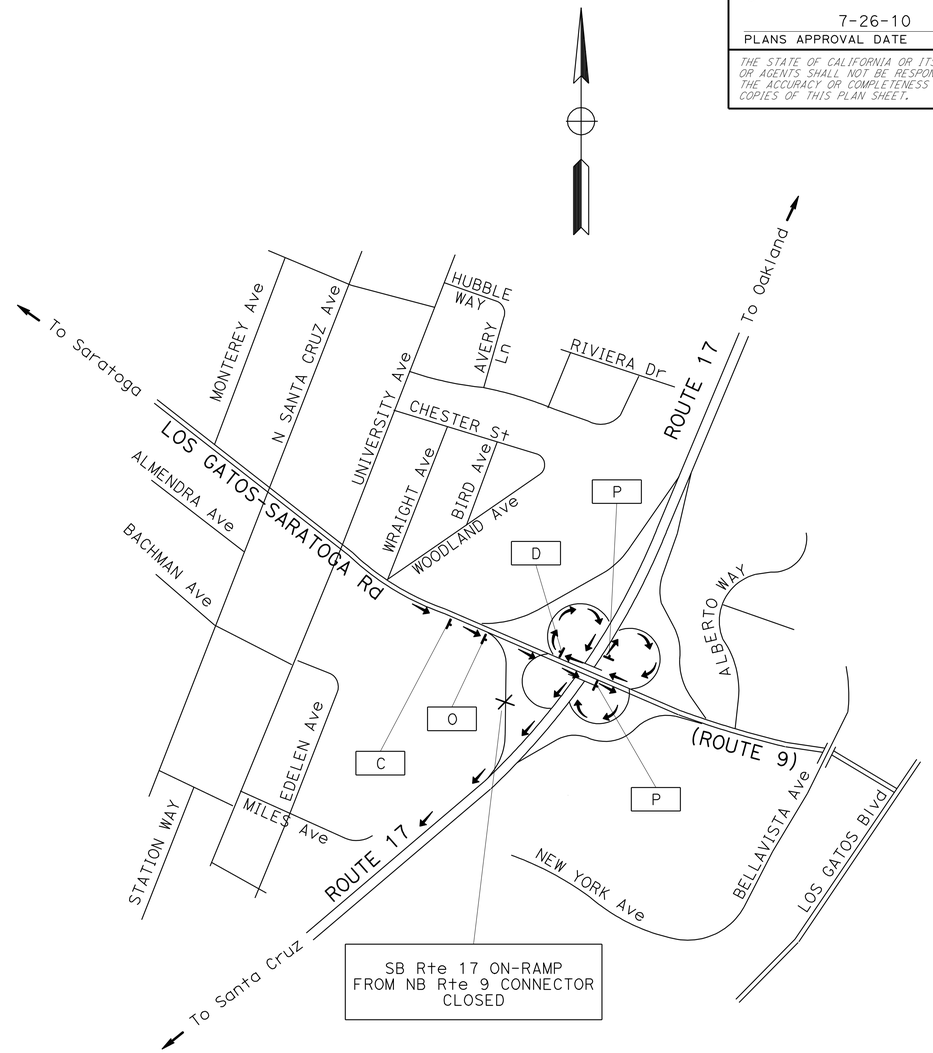

DETOUR PLAN No. 4

DETOUR
VIA
NB Rte 9; LOOP ON-RAMP TO NB Rte 17; FROM NB Rte 17 LOOP OFF-RAMP TO SB Rte 9; FROM SB Rte 9 LOOP ON-RAMP TO SB Rte 17

CONSTRUCTION AREA SIGNS
DETOUR PLAN
NO SCALE

FOR NOTES, ABBREVIATIONS AND LEGEND, SEE SHEET CS-1

THIS PLAN ACCURATE FOR CONSTRUCTION AREA SIGN WORK ONLY

CS-3

STATE OF CALIFORNIA - DEPARTMENT OF TRANSPORTATION
Caltrans
TRAFFIC

FUNCTIONAL SUPERVISOR: ROLAND AU-YEUNG
CALCULATED-DESIGNED BY: HENRY TAM
CHECKED BY: JERILYN STRUVEN
REVISED BY: HT
DATE REVISED: 7/12/10

LAST REVISION 07-22-10 | DATE PLOTTED => 09-SEP-2010 | TIME PLOTTED => 09:48

Dist	COUNTY	ROUTE	POST MILES TOTAL PROJECT	SHEET No.	TOTAL SHEETS
04	SCI	17	6.9/9.1	10	39

REGISTERED CIVIL ENGINEER 7-21-10 DATE

7-26-10
PLANS APPROVAL DATE

REGISTERED PROFESSIONAL ENGINEER Jerilyn L. Struven No. 49964 Exp. 12-31-10 CIVIL STATE OF CALIFORNIA

THE STATE OF CALIFORNIA OR ITS OFFICERS OR AGENTS SHALL NOT BE RESPONSIBLE FOR THE ACCURACY OR COMPLETENESS OF SCANNED COPIES OF THIS PLAN SHEET.

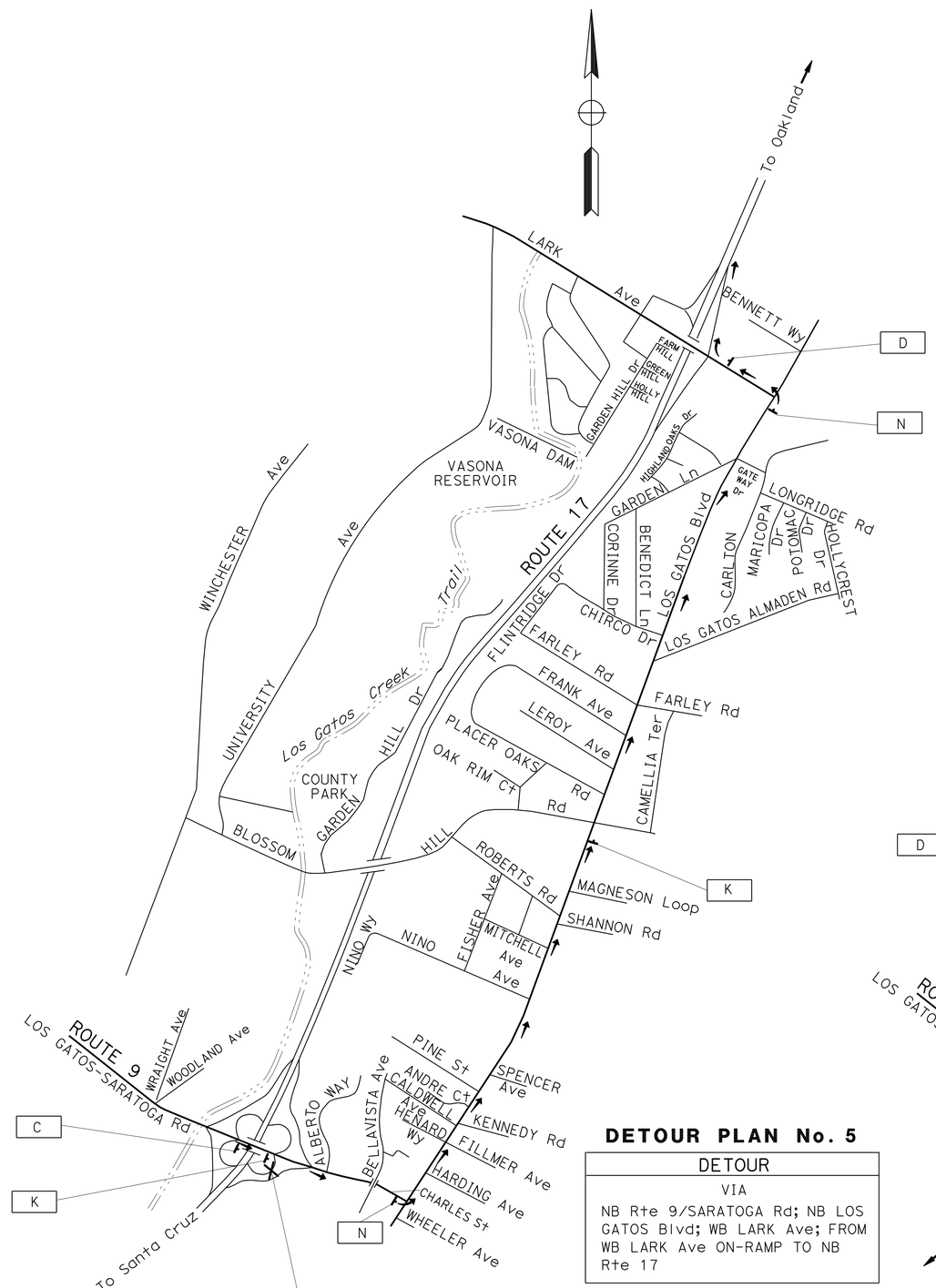

DETOUR PLAN No. 5

DETOUR
VIA NB Rte 9/SARATOGA Rd; NB LOS GATOS Blvd; WB LARK Ave; FROM WB LARK Ave ON-RAMP TO NB Rte 17

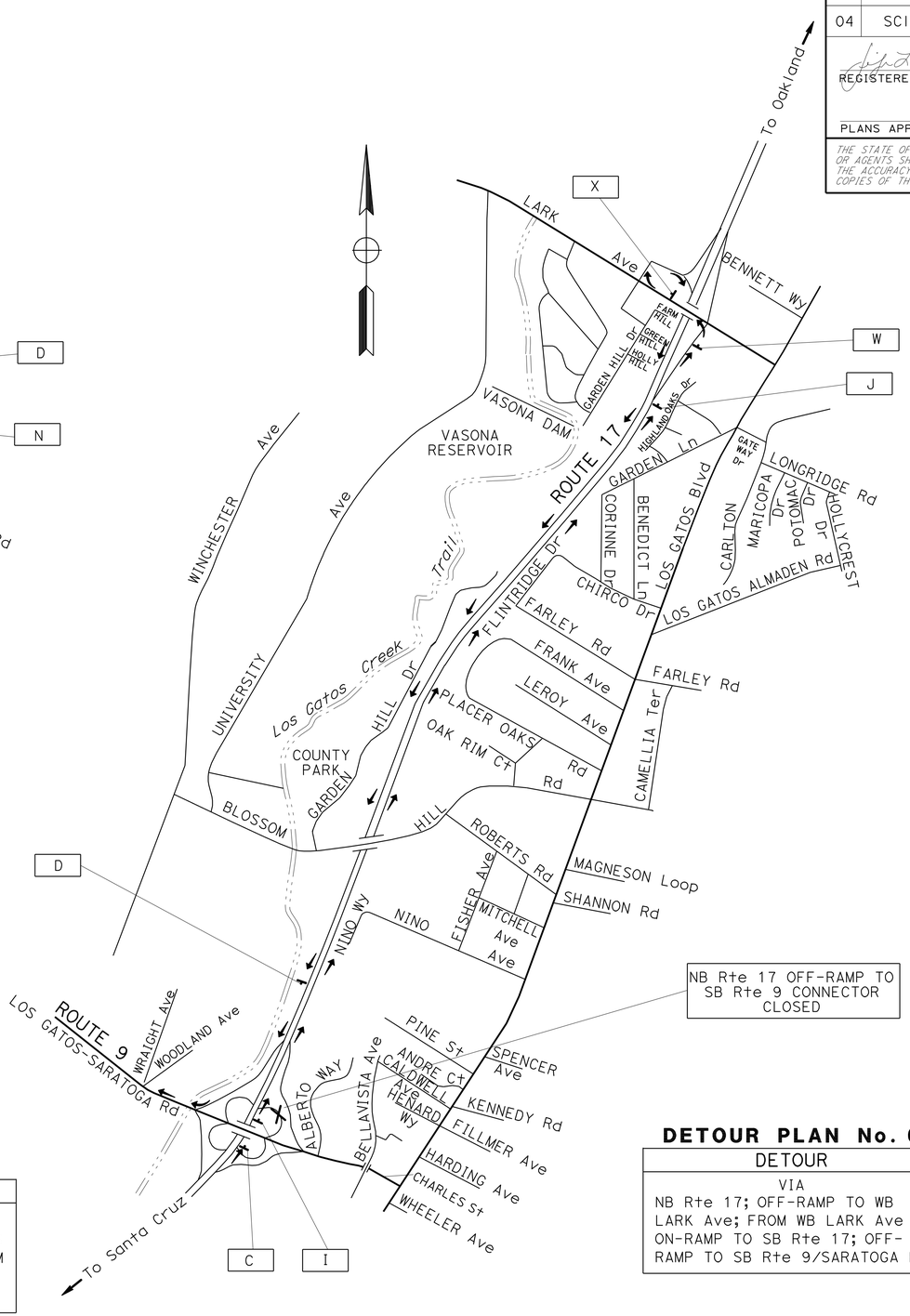

DETOUR PLAN No. 6

DETOUR
VIA NB Rte 17; OFF-RAMP TO WB LARK Ave; FROM WB LARK Ave ON-RAMP TO SB Rte 17; OFF-RAMP TO SB Rte 9/SARATOGA Rd

CONSTRUCTION AREA SIGNS
DETOUR PLAN
NO SCALE

FOR NOTES, ABBREVIATIONS AND LEGEND, SEE SHEET CS-1

THIS PLAN ACCURATE FOR CONSTRUCTION AREA SIGN WORK ONLY

CS-4

STATE OF CALIFORNIA - DEPARTMENT OF TRANSPORTATION
Caltrans®
TRAFFIC

FUNCTIONAL SUPERVISOR: ROLAND AU-YEUNG
CALCULATED-DESIGNED BY: HENRY TAM
CHECKED BY: JERILYN STRUVEN
REVISED BY: HT
DATE REVISED: 7/12/10

LAST REVISION 07-22-10
DATE PLOTTED => 09-SEP-2010
TIME PLOTTED => 09:48

Dist	COUNTY	ROUTE	POST MILES TOTAL PROJECT	SHEET No.	TOTAL SHEETS
04	SCI	17	6.9/9.1	11	39

REGISTERED CIVIL ENGINEER 7-21-10 DATE

7-26-10
PLANS APPROVAL DATE

REGISTERED PROFESSIONAL ENGINEER Jerilyn L. Struven No. 49964 Exp. 12-31-10 CIVIL STATE OF CALIFORNIA

THE STATE OF CALIFORNIA OR ITS OFFICERS OR AGENTS SHALL NOT BE RESPONSIBLE FOR THE ACCURACY OR COMPLETENESS OF SCANNED COPIES OF THIS PLAN SHEET.

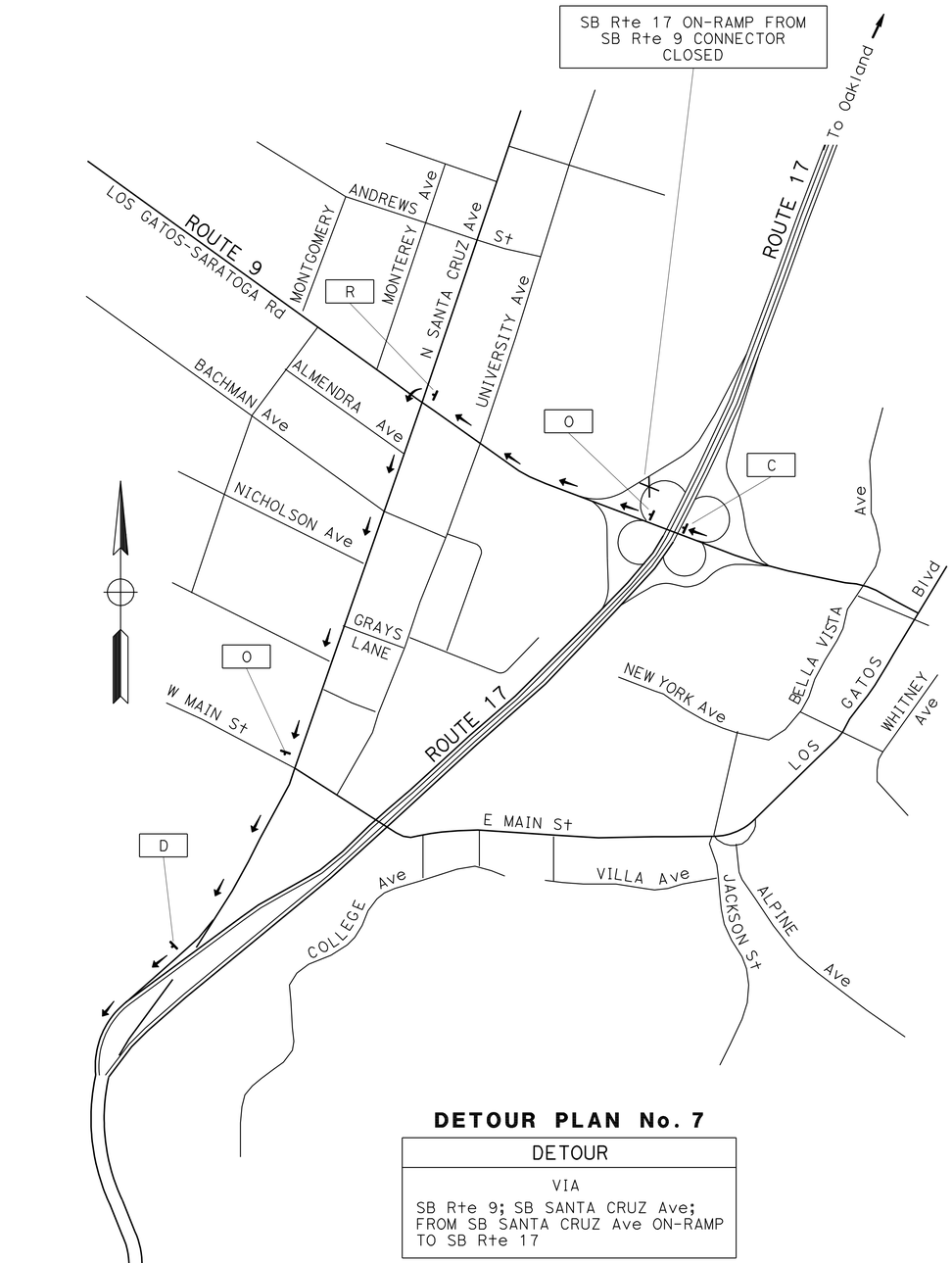

DETOUR PLAN No. 7

DETOUR
VIA SB Rte 9; SB SANTA CRUZ Ave; FROM SB SANTA CRUZ Ave ON-RAMP TO SB Rte 17

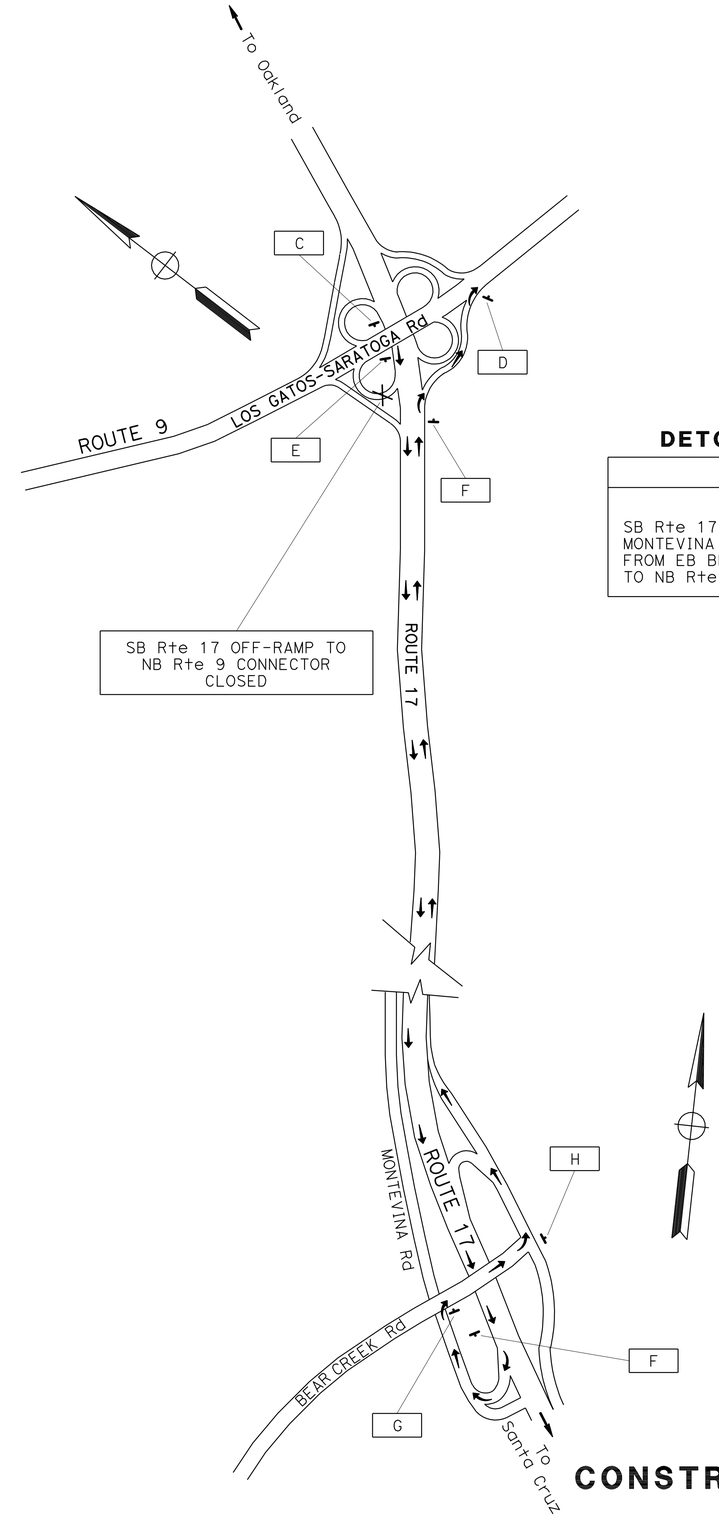

DETOUR PLAN No. 8

DETOUR
VIA SB Rte 17; OFF-RAMP TO NB MONTEVINA Rd; EB BEAR CREEK Rd; FROM EB BEAR CREEK Rd ON-RAMP TO NB Rte 17; OFF-RAMP TO NB Rte 9

FOR NOTES, ABBREVIATIONS AND LEGEND, SEE SHEET CS-1

THIS PLAN ACCURATE FOR CONSTRUCTION AREA SIGN WORK ONLY

CONSTRUCTION AREA SIGNS
DETOUR PLAN

NO SCALE

CS-5

REVISED BY	HT
DATE REVISED	7/12/10
CALCULATED-DESIGNED BY	HENRY TAM
CHECKED BY	JERILYN STRUVEN
FUNCTIONAL SUPERVISOR	ROLAND AU-YEUNG

STATE OF CALIFORNIA - DEPARTMENT OF TRANSPORTATION
Caltrans
TRAFFIC

LAST REVISION 07-22-10
DATE PLOTTED => 09-SEP-2010
TIME PLOTTED => 09:49

Dist	COUNTY	ROUTE	POST MILES TOTAL PROJECT	SHEET No.	TOTAL SHEETS
04	SCI	17	6.9/9.1	12	39

REGISTERED CIVIL ENGINEER 7-21-10 DATE

7-26-10
PLANS APPROVAL DATE

REGISTERED PROFESSIONAL ENGINEER Jerilyn L. Struven No. 49964 Exp. 12-31-10 CIVIL STATE OF CALIFORNIA

THE STATE OF CALIFORNIA OR ITS OFFICERS OR AGENTS SHALL NOT BE RESPONSIBLE FOR THE ACCURACY OR COMPLETENESS OF SCANNED COPIES OF THIS PLAN SHEET.

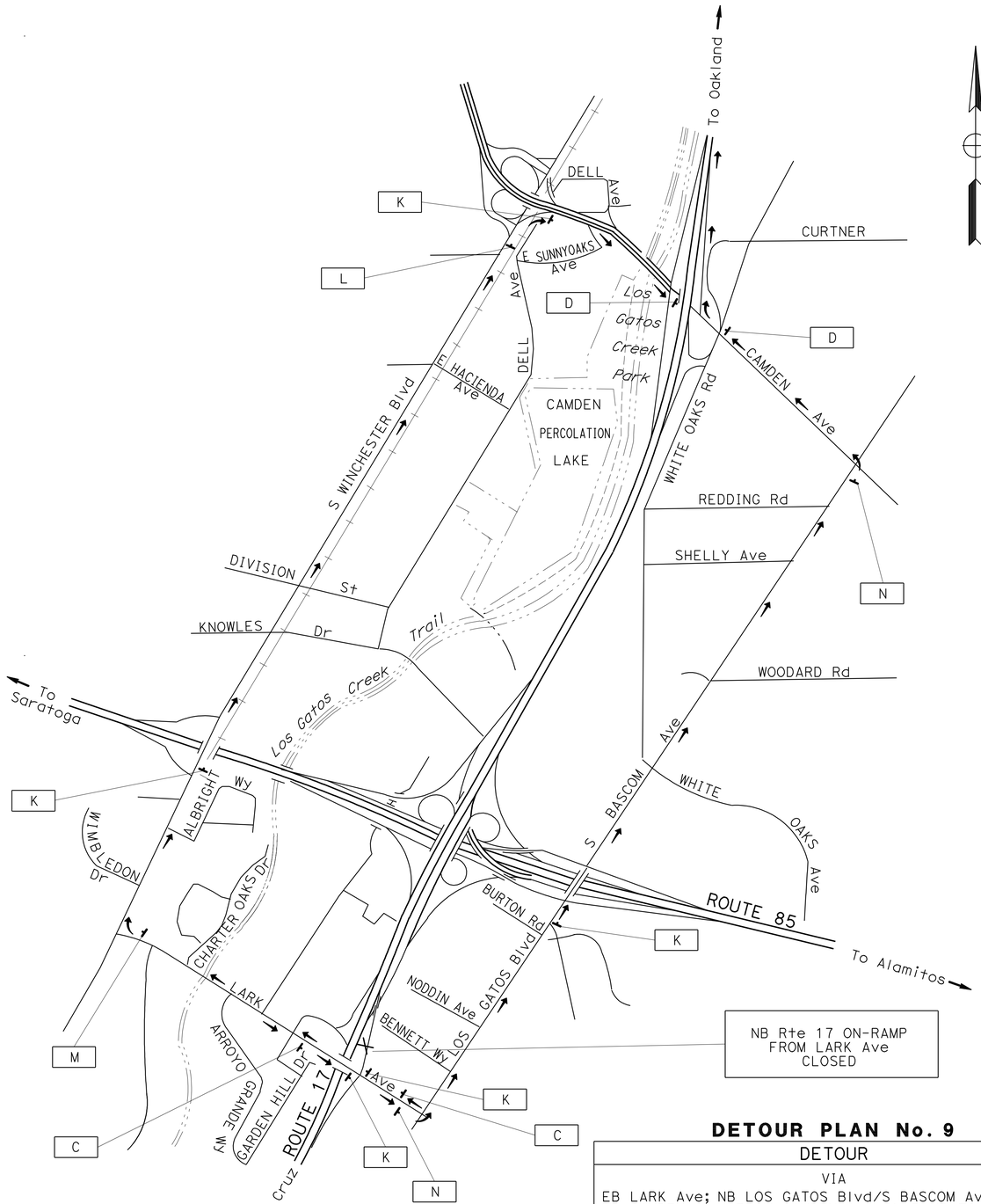

DETOUR PLAN No. 9

DETOUR
VIA
EB LARK Ave; NB LOS GATOS Blvd/S BASCOM Ave; WB CAMDEN Ave; FROM CAMDEN Ave ON-RAMP TO NB Rte 17
WB LARK Ave; NB S WINCHESTER Blvd; EB SAN TOMAS Expwy/CAMDEN Ave; FROM EB CAMDEN Ave LOOP ON-RAMP TO NB Rte 17

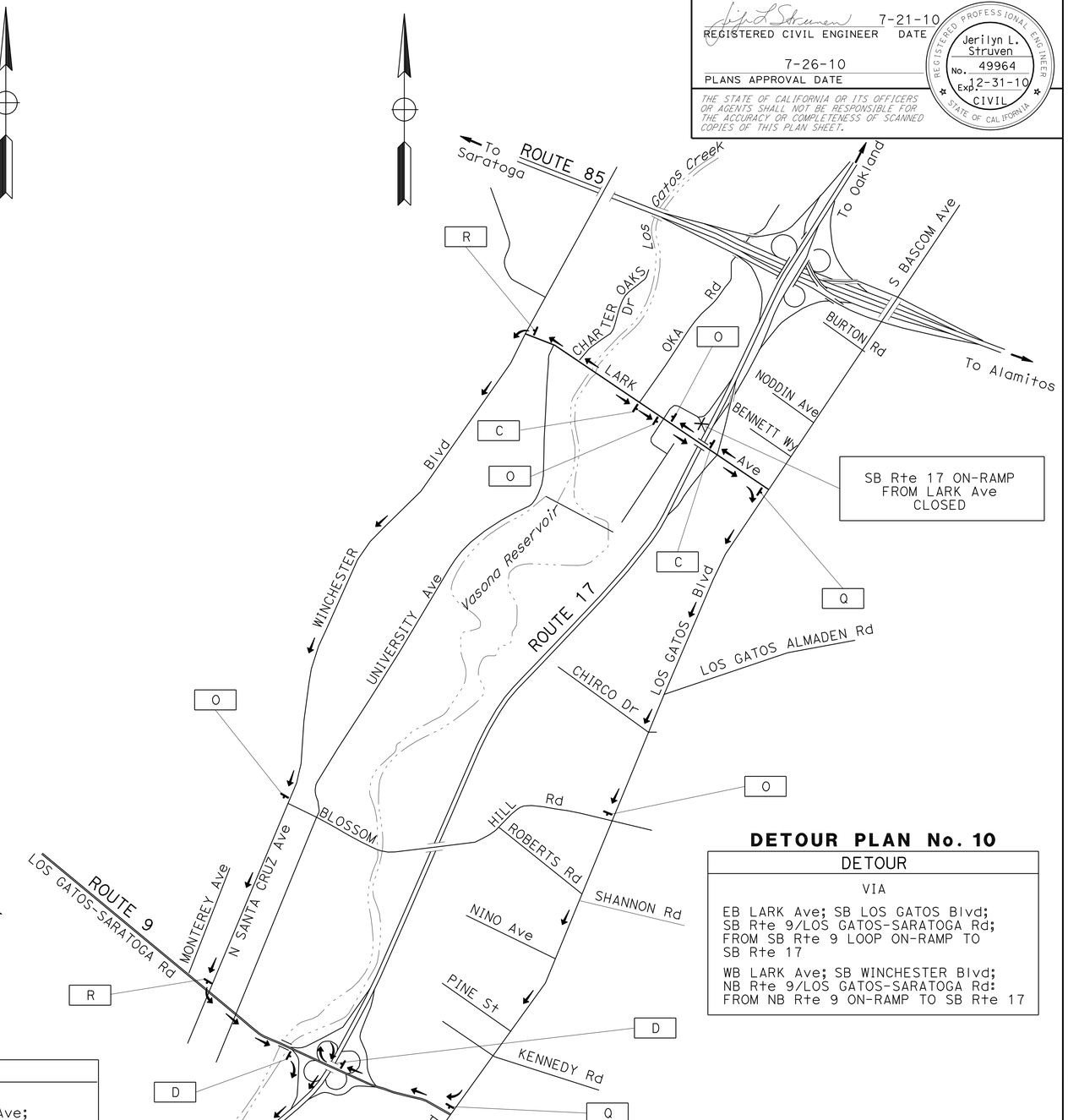

DETOUR PLAN No. 10

DETOUR
VIA
EB LARK Ave; SB LOS GATOS Blvd; SB Rte 9/LOS GATOS-SARATOGA Rd; FROM SB Rte 9 LOOP ON-RAMP TO SB Rte 17
WB LARK Ave; SB WINCHESTER Blvd; NB Rte 9/LOS GATOS-SARATOGA Rd: FROM NB Rte 9 ON-RAMP TO SB Rte 17

FOR NOTES, ABBREVIATIONS AND LEGEND, SEE SHEET CS-1

THIS PLAN ACCURATE FOR CONSTRUCTION AREA SIGN WORK ONLY

CONSTRUCTION AREA SIGNS
DETOUR PLAN
NO SCALE

CS-6

REVISED BY	DATE REVISED
HT	7/12/10

CALCULATED-DESIGNED BY: HENRY TAM
CHECKED BY: JERILYN STRUVEN
FUNCTIONAL SUPERVISOR: ROLAND AU-YEUNG

STATE OF CALIFORNIA - DEPARTMENT OF TRANSPORTATION
Caltrans
TRAFFIC

LAST REVISION: DATE PLOTTED => 09-SEP-2010 TIME PLOTTED => 09:49
07-22-10

Dist	COUNTY	ROUTE	POST MILES TOTAL PROJECT	SHEET No.	TOTAL SHEETS
04	SCI	17	6.9/9.1	13	39

REGISTERED CIVIL ENGINEER 7-21-10 DATE

7-26-10
PLANS APPROVAL DATE

REGISTERED PROFESSIONAL ENGINEER Jerilyn L. Struven No. 49964 Exp. 12-31-10 CIVIL STATE OF CALIFORNIA

THE STATE OF CALIFORNIA OR ITS OFFICERS OR AGENTS SHALL NOT BE RESPONSIBLE FOR THE ACCURACY OR COMPLETENESS OF SCANNED COPIES OF THIS PLAN SHEET.

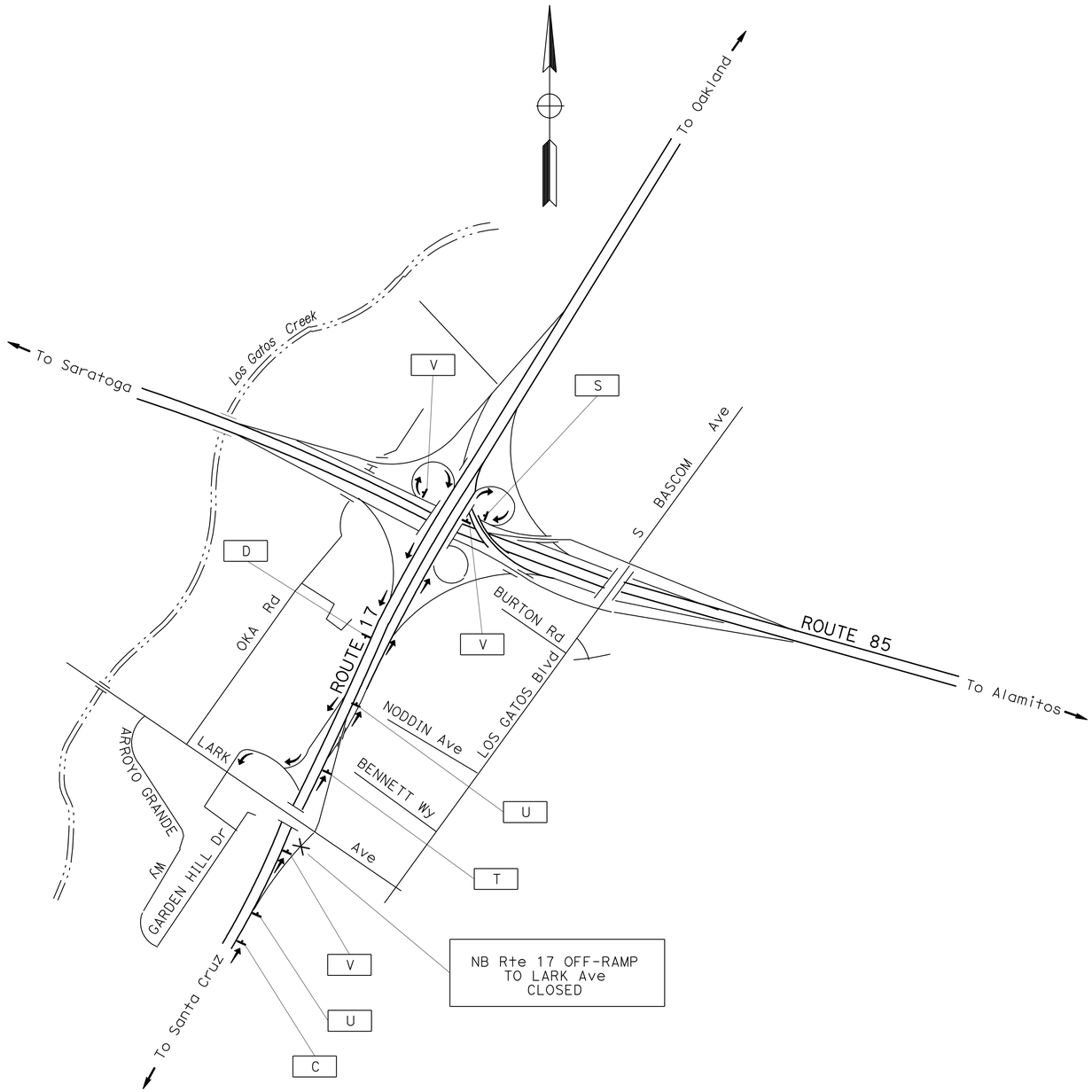

DETOUR PLAN No. 11

DETOUR
VIA
NB Rte 17; LOOP OFF-RAMP TO NB Rte 85; FROM NB Rte 85 LOOP OFF-RAMP TO SB Rte 17; SB Rte 17 OFF-RAMP TO LARK Ave

FOR NOTES, ABBREVIATIONS AND LEGEND, SEE SHEET CS-1

THIS PLAN ACCURATE FOR CONSTRUCTION AREA SIGN WORK ONLY

CONSTRUCTION AREA SIGNS
DETOUR PLAN
NO SCALE

CS-7

HENRY TAM	REVISED BY: HT
JERILYN STRUVEN	DATE REVISED: 7/12/10
CALCULATED-DESIGNED BY	
CHECKED BY	
FUNCTIONAL SUPERVISOR: ROLAND AU-YEUNG	

STATE OF CALIFORNIA - DEPARTMENT OF TRANSPORTATION
Caltrans
TRAFFIC

LAST REVISION 07-22-10 | DATE PLOTTED => 09-SEP-2010 | TIME PLOTTED => 09:49

Dist	COUNTY	ROUTE	POST MILES TOTAL PROJECT	SHEET No.	TOTAL SHEETS
04	SCI	17	6.9/9.1	14	39

REGISTERED CIVIL ENGINEER 7-21-10 DATE

7-26-10
PLANS APPROVAL DATE

REGISTERED PROFESSIONAL ENGINEER Jerilyn L. Struven No. 49964 Exp. 12-31-10 CIVIL STATE OF CALIFORNIA

THE STATE OF CALIFORNIA OR ITS OFFICERS OR AGENTS SHALL NOT BE RESPONSIBLE FOR THE ACCURACY OR COMPLETENESS OF SCANNED COPIES OF THIS PLAN SHEET.

CONSTRUCTION AREA SIGNS

SIGN LETTER	MUTCD CODE	MESSAGE	PANEL SIZE	NUMBER OF POST AND SIZE	QUANTITY
A	W20-1	ROAD WORK AHEAD	48'' x 48''	(ONE) 4'' x 6''	6
B	G20-2	END ROAD WORK	36'' x 18''	(ONE) 4'' x 6''	6
C	W20-2	DETOUR AHEAD	48'' x 48''	(ONE) 4'' x 6''	13
D	M4-8a	END DETOUR	24'' x 18''	(ONE) 4'' x 4''	13
E	M4-8	DETOUR	30'' x 15''	(ONE) 4'' x 6''	2
	G28-2(9)(CA)	ROUTE SHIELD 9	24'' x 25''		
	M3-1	NORTH	24'' x 12''		
	M6-3(↑)	UP ARROW	21'' x 15''		
F	M4-8	DETOUR	30'' x 15''	(ONE) 4'' x 6''	5
	G28-2(9)(CA)	ROUTE SHIELD 9	24'' x 25''		
	M3-1	NORTH	24'' x 12''		
	M6-2(↗)	UP RIGHT ARROW	21'' x 15''		
G	M4-8	DETOUR	30'' x 15''	(ONE) 4'' x 6''	1
	G28-2(9)(CA)	ROUTE SHIELD 9	24'' x 25''		
	M3-1	NORTH	24'' x 12''		
	M6-1(→)	RIGHT ARROW	21'' x 15''		
H	M4-8	DETOUR	30'' x 15''	(ONE) 4'' x 6''	1
	G28-2(9)(CA)	ROUTE SHIELD 9	24'' x 25''		
	M3-1	NORTH	24'' x 12''		
	M6-1(←)	LEFT ARROW	21'' x 15''		
I	M4-8	DETOUR	30'' x 15''	(ONE) 4'' x 6''	2
	G28-2(9)(CA)	ROUTE SHIELD 9	24'' x 25''		
	M3-3	SOUTH	24'' x 12''		
	M6-3(↑)	UP ARROW	21'' x 15''		
J	M4-8	DETOUR	30'' x 15''	(ONE) 4'' x 6''	3
	G28-2(9)(CA)	ROUTE SHIELD 9	24'' x 25''		
	M3-3	SOUTH	24'' x 12''		
	M6-2(↗)	UP RIGHT ARROW	21'' x 15''		
K	M4-8	DETOUR	30'' x 15''	(ONE) 4'' x 6''	8
	G28-2(17)(CA)	ROUTE SHIELD 17	24'' x 25''		
	M3-1	NORTH	24'' x 12''		
	M6-3(↑)	UP ARROW	21'' x 15''		
L	M4-8	DETOUR	30'' x 15''	(ONE) 4'' x 6''	3
	G28-2(17)(CA)	ROUTE SHIELD 17	24'' x 25''		
	M3-1	NORTH	24'' x 12''		
	M6-2(↗)	UP RIGHT ARROW	21'' x 15''		

CONSTRUCTION AREA SIGNS

SIGN LETTER	MUTCD CODE	MESSAGE	PANEL SIZE	NUMBER OF POST AND SIZE	QUANTITY
M	M4-8	DETOUR	30'' x 15''	(ONE) 4'' x 6''	1
	G28-2(17)(CA)	ROUTE SHIELD 17	24'' x 25''		
	M3-1	NORTH	24'' x 12''		
	M6-1(→)	RIGHT ARROW	21'' x 15''		
N	M4-8	DETOUR	30'' x 15''	(ONE) 4'' x 6''	4
	G28-2(17)(CA)	ROUTE SHIELD 17	24'' x 25''		
	M3-1	NORTH	24'' x 12''		
	M6-1(←)	LEFT ARROW	21'' x 15''		
O	M4-8	DETOUR	30'' x 15''	(ONE) 4'' x 6''	6
	G28-2(17)(CA)	ROUTE SHIELD 17	24'' x 25''		
	M3-3	SOUTH	24'' x 12''		
	M6-3(↑)	UP ARROW	21'' x 15''		
P	M4-8	DETOUR	30'' x 15''	(ONE) 4'' x 6''	2
	G28-2(17)(CA)	ROUTE SHIELD 17	24'' x 25''		
	M3-3	SOUTH	24'' x 12''		
	M6-2(↗)	UP RIGHT ARROW	21'' x 15''		
Q	M4-8	DETOUR	30'' x 15''	(ONE) 4'' x 6''	3
	G28-2(17)(CA)	ROUTE SHIELD 17	24'' x 25''		
	M3-3	SOUTH	24'' x 12''		
	M6-1(→)	RIGHT ARROW	21'' x 15''		
R	M4-8	DETOUR	30'' x 15''	(ONE) 4'' x 6''	3
	G28-2(17)(CA)	ROUTE SHIELD 17	24'' x 25''		
	M3-3	SOUTH	24'' x 12''		
	M6-1(←)	LEFT ARROW	21'' x 15''		
S	M4-8	DETOUR	30'' x 15''	(ONE) 4'' x 6''	1
	SPECIAL	LARK Ave	48'' x 12''		
	G58(CA)	RIGHT LANE	30'' x 24''		

FOR NOTES, ABBREVIATIONS AND LEGEND, SEE SHEET CS-1

THIS PLAN ACCURATE FOR CONSTRUCTION AREA SIGN WORK ONLY

CONSTRUCTION AREA SIGNS

NO SCALE

CS-8

REVISED BY	DATE REVISED
HT	7/12/10

CALCULATED-DESIGNED BY: HENRY TAM
CHECKED BY: JERILYN STRUVEN
FUNCTIONAL SUPERVISOR: ROLAND AU-YEUNG

STATE OF CALIFORNIA - DEPARTMENT OF TRANSPORTATION
Caltrans
TRAFFIC

LAST REVISION 07-22-10 | DATE PLOTTED => 09-SEP-2010 | TIME PLOTTED => 09:49

Dist	COUNTY	ROUTE	POST MILES TOTAL PROJECT	SHEET No.	TOTAL SHEETS
04	SCI	17	6.9/9.1	15	39

REGISTERED CIVIL ENGINEER 7-21-10 DATE

7-26-10
PLANS APPROVAL DATE

REGISTERED PROFESSIONAL ENGINEER Jerilyn L. Struven No. 49964 Exp. 12-31-10 CIVIL STATE OF CALIFORNIA

THE STATE OF CALIFORNIA OR ITS OFFICERS OR AGENTS SHALL NOT BE RESPONSIBLE FOR THE ACCURACY OR COMPLETENESS OF SCANNED COPIES OF THIS PLAN SHEET.

CONSTRUCTION AREA SIGNS

SIGN LETTER	MUTCD CODE	MESSAGE	PANEL SIZE	NUMBER OF POST AND SIZE	QUANTITY
T	M4-8	DETOUR	30'' x 15''	(ONE) 4'' x 6''	1
	SPECIAL	LARK Ave	48'' x 12''		
	G58(CA)	LEFT LANE	30'' x 24''		
U	M4-8	DETOUR	30'' x 15''	(ONE) 4'' x 6''	2
	SPECIAL	LARK Ave	48'' x 12''		
	M6-3(↑)	UP ARROW	21'' x 15''		
V	M4-8	DETOUR	30'' x 15''	(ONE) 4'' x 6''	3
	SPECIAL	LARK Ave	48'' x 12''		
	M6-2(↗)	UP RIGHT ARROW	21'' x 15''		
W	M4-8	DETOUR	30'' x 15''	(ONE) 4'' x 6''	1
	G28-2(9)(CA)	ROUTE SHIELD 9	24'' x 25''		
	M3-3	SOUTH	24'' x 12''		
	M6-1(←)	LEFT ARROW	21'' x 15''		
X	M4-8	DETOUR	30'' x 15''	(ONE) 4'' x 6''	1
	G28-2(9)(CA)	ROUTE SHIELD 9	24'' x 25''		
	M3-3	SOUTH	24'' x 12''		
	M6-1(→)	RIGHT ARROW	21'' x 15''		

SPECIAL 6'' & 4.5''

Lark Ave 48'' x 12''

BLACK/ORANGE

SPECIAL SIGN

FOR NOTES, ABBREVIATIONS AND LEGEND, SEE SHEET CS-1

THIS PLAN ACCURATE FOR CONSTRUCTION AREA SIGN WORK ONLY

CONSTRUCTION AREA SIGNS

NO SCALE

CS-9

LAST REVISION 07-22-10 | DATE PLOTTED => 09-SEP-2010 | TIME PLOTTED => 09:49

STATE OF CALIFORNIA - DEPARTMENT OF TRANSPORTATION

Caltrans® TRAFFIC

FUNCTIONAL SUPERVISOR: ROLAND AU-YEUNG

CALCULATED-DESIGNED BY: HENRY TAM | CHECKED BY: JERILYN STRUVEN

REVISED BY: HT | DATE REVISED: 7/12/10

Dist	COUNTY	ROUTE	POST MILES TOTAL PROJECT	SHEET No.	TOTAL SHEETS
04	SCI	17	6.9/9.1	16	39

REGISTERED CIVIL ENGINEER 7-21-10 DATE

7-26-10
PLANS APPROVAL DATE

REGISTERED PROFESSIONAL ENGINEER Robert Camargo No. 34402 Exp. 9-30-11 CIVIL STATE OF CALIFORNIA

THE STATE OF CALIFORNIA OR ITS OFFICERS OR AGENTS SHALL NOT BE RESPONSIBLE FOR THE ACCURACY OR COMPLETENESS OF SCANNED COPIES OF THIS PLAN SHEET.

LEGEND:

- TYPE A WHITE NON-REFLECTIVE MARKER
- TYPE G ONE-WAY CLEAR RETROREFLECTIVE MARKER
- 4'' WHITE
- DIRECTION OF TRAVEL

NOTE:
INSTALL 4" WHITE AFTER INSTALLING PAVEMENT MARKERS

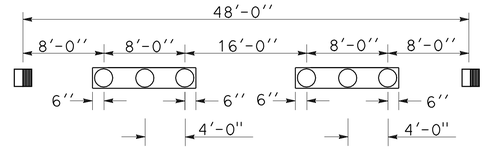

DETAIL 10M

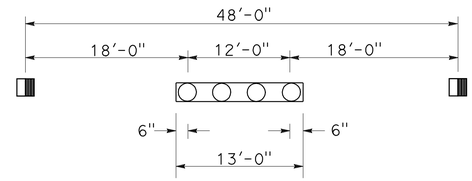

DETAIL 13M

PAVEMENT DELINEATION DETAIL
NO SCALE

TRAFFIC STRIPES, PAVEMENT MARKING AND PAVEMENT MARKERS

DIRECTION	LOCATION	PM	DETAIL No.	REMOVE PAVEMENT MARKER	THERMOPLASTIC TRAFFIC STRIPE: 4'' WHITE	4'' YELLOW	4'' WHITE (BROKEN 15-9)	4'' WHITE (BROKEN 35-13)	8'' WHITE	8'' WHITE (BROKEN 12-3)	PAVEMENT MARKER: NON-REFLECTIVE TYPE A	RETROREFLECTIVE: TYPE C	TYPE D	TYPE G	TYPE H	THERMOPLASTIC PAVEMENT MARKING: LIMIT LINE	ARROW	WORDS
				EA	LF						EA					SQFT		
NB MAINLINE	BEGIN CONSTRUCTION TO ROUTE 9	6.9-7.1	13M	111				1056			88			23				
			25	23		1056									23			
			27B		1056													
	ROUTE 9 TO BLOSSOM HILL ROAD	7.1-7.7	13M	331				3168			264			67				
			25	67		3168									67			
			27B		3168													
	BLOSSOM HILL ROAD TO LARK Ave	7.7-8.9	13M	661				6336			528			133				
			25	133		6336									133			
			27B		6336													
			36	18					392					18				
			37	134						1980		134						
			38B	48					550					48				
	LARK Ave TO END CONSTRUCTION	8.9-9.1	13M	111				1056			88			23				
			25	23		1056									23			
			27B		1056													
NB RAMPS	@ ROUTE 9	7.1	25A	112		2580									112			
			27B		2860													
			36	28					592					28				
			36A	10					178					10				
			37	16						190		16						
			LIMIT LINES													52		
			TYPE I (24'-0'') ARROW (2 EA)														62	
			TYPE V ARROW (4 EA)														132	
			SIGNAL AHEAD (1 EA)															63
			PED XING (1 EA)															39
	@ LARK Ave	8.9	10M	44			260				36			8				
			25A	57		1293									57			
			27B		1293													
			36	30					628					30				
			36A	9					180					9				
			38	14					314					14				
			TYPE V ARROW (1 EA)														33	
			LIMIT LINES													246		
			TYPE III(R) ARROW (2 EA)														84	
			TYPE II(L) ARROW (2 EA)														90	
SUBTOTAL FOR NB				1980	15769	15489	260	11616	2834	2170	1004	150		411	415	298	401	102

NOTE:
ALL EXISTING PAVEMENT DELINEATIONS SHALL BE REPLACED IN KIND OR AS DIRECTED BY THE ENGINEER.

PAVEMENT DELINEATION QUANTITIES

PDQ-1

REVISED BY	DATE REVISED
SH	7/12/10

CALCULATED-DESIGNED BY: SHERRY HUANG
CHECKED BY: ROBERT CAMARGO
FUNCTIONAL SUPERVISOR: RAMSES SARGISS

STATE OF CALIFORNIA - DEPARTMENT OF TRANSPORTATION
Caltrans® DESIGN

LAST REVISION 07-26-10 | DATE PLOTTED => 09-SEP-2010 | TIME PLOTTED => 09:49

Dist	COUNTY	ROUTE	POST MILES TOTAL PROJECT	SHEET No.	TOTAL SHEETS
04	SCI	17	6.9/9.1	17	39

Robert Camargo 7-21-10
REGISTERED CIVIL ENGINEER DATE

7-26-10
PLANS APPROVAL DATE

REGISTERED PROFESSIONAL ENGINEER Robert Camargo No. 34402 Exp. 9-30-11 CIVIL STATE OF CALIFORNIA

THE STATE OF CALIFORNIA OR ITS OFFICERS OR AGENTS SHALL NOT BE RESPONSIBLE FOR THE ACCURACY OR COMPLETENESS OF SCANNED COPIES OF THIS PLAN SHEET.

TRAFFIC STRIPES, PAVEMENT MARKING AND PAVEMENT MARKERS

DIRECTION	LOCATION	PM	DETAIL No.	REMOVE PAVEMENT MARKER	THERMOPLASTIC TRAFFIC STRIPE						PAVEMENT MARKER					THERMOPLASTIC PAVEMENT MARKING		
					4'' WHITE	4'' YELLOW	4'' WHITE (BROKEN 15-9)	4'' WHITE (BROKEN 35-13)	8'' WHITE	8'' WHITE (BROKEN 12-3)	NON-REFLECTIVE TYPE A	RETROREFLECTIVE TYPE C	RETROREFLECTIVE TYPE D	RETROREFLECTIVE TYPE G	RETROREFLECTIVE TYPE H	LIMIT LINE	ARROW	WORDS
				EA	LF						EA					SQFT		
SB MAINLINE	BEGIN CONSTRUCTION TO ROUTE 9	6.9-7.1	10M	155			1056				132			23				
			25	23		1056									23			
			27B		1056													
	ROUTE 9 TO BLOSSOM HILL ROAD	7.1-7.7	13M	331				3168			264			67				
			25	67		3168									67			
			27B		3168													
	BLOSSOM HILL ROAD TO LARK AVENUE	7.7-8.9	13M	817				7816			652			165				
			25	133		6336									133			
			27B		6336													
			TYPE VI ARROW (3 EA)														126	
	LARK AVENUE TO END CONSTRUCTION	8.9-9.1	13M	222				2112			176			46				
			25	23		1056									23			
			27B		1056													
			37	12						158		12						
			38B	24					260					24				
SB RAMPS	@ ROUTE 9	7.1	10M	22			110				18			4				
			25A	115		2668									115			
			27B		3030													
			36	28					648					28				
			36A	12					218					12				
			37	18						226		18						
			LIMIT LINES													36		
			TYPE I (24'-0'') ARROW (1 EA)														31	
			TYPE V ARROW (2 EA)														66	
	@ LARK AVENUE	8.9	10M	149			1016				126			23				
			22	46		504							46					
			25A	20		418									20			
			27B		1844													
			36	24					500					24				
			36A	11					232					11				
			38	27					554					27				
			LIMIT LINES													197		
			TYPE V ARROW (2 EA)														66	
			TYPE II(B) ARROW (1 EA)														59	
			TYPE III(L) ARROW (4 EA)														168	
			TYPE III(R) ARROW (3 EA)														126	
			TYPE II(L) ARROW (3 EA)														135	
			TYPE I (18'-0'') ARROW (1 EA)														25	
SUBTOTAL FOR SB				2279	16490	15206	2182	13096	2412	384	1368	30	46	454	381	233	802	
SUBTOTAL FOR NB				1980	15769	15489	260	11616	2834	2170	1004	150		411	415	298	401	102
TOTAL				4259	62954		2442	24712	5246	2554	2372	1887				1836		

PAVEMENT DELINEATION QUANTITIES

PDQ-2

STATE OF CALIFORNIA - DEPARTMENT OF TRANSPORTATION
Caltrans DESIGN

FUNCTIONAL SUPERVISOR: RAMSES SARGISS
CALCULATED-DESIGNED BY: SHERRY HUANG
CHECKED BY: ROBERT CAMARGO
REVISED BY: SH
DATE REVISED: 7/12/10

LAST REVISION: DATE PLOTTED => 09-SEP-2010 TIME PLOTTED => 09:50
07-26-10

Dist	COUNTY	ROUTE	POST MILES TOTAL PROJECT	SHEET No.	TOTAL SHEETS
04	SCI	17	6.9/9.1	18	39

Robert Camargo 7-21-10
REGISTERED CIVIL ENGINEER DATE

7-26-10
PLANS APPROVAL DATE

REGISTERED PROFESSIONAL ENGINEER Robert Camargo No. 34402 Exp. 9-30-11 CIVIL STATE OF CALIFORNIA

THE STATE OF CALIFORNIA OR ITS OFFICERS OR AGENTS SHALL NOT BE RESPONSIBLE FOR THE ACCURACY OR COMPLETENESS OF SCANNED COPIES OF THIS PLAN SHEET.

CRACK EXISTING CONCRETE PAVEMENT

DIRECTION	PM	WIDTH	LENGTH	CRACK Exist Conc PAVEMENT
		LF		SQYD
NB	7.1-7.9	24	3900	10400
SB	7.1-7.9	24	3900	10400
TOTAL				20800

ABBREVIATIONS:

HMA (OGFC)	HOT MIX ASPHALT OPEN GRADED FRICTION COARSES
RHMA (G)	RUBBERIZED HOT MIX ASPHALT

ROADWAY QUANTITIES

DIRECTION	LOCATION	PM	COLD PLANE AC PAVEMENT	PRF	HMA (LEVELING)	HMA (A)	RHMA (G)	HMA (OGFC)	TACK COAT	IMPORTED MATERIAL (SHOULDER BACKING)
			SQYD		TON					
NB	MAINLINE	6.9-7.1	6151				632	407	5	
		7.1-7.9	16649	12203	1141	1141	1711	1101	38	184
		7.9-8.9	25972				2669	1718	22	172
		8.9-9.1	4341				446	287	4	34
	RAMPS @ ROUTE 9	7.1	4449	63273			457		2	
	RAMPS @ LARK Ave	8.9	5711				587		2	
SUBTOTAL FOR NB			63274	12203	1141	1141	6503	3514	73	390
SB	MAINLINE	6.9-7.1	5744				590	380	5	
		7.1-7.7	4003	9152	853	853	1280	824	29	310
		7.7-7.9	1525	3051	297	297	446	287	10	103
		7.9-8.91	24614				2530	1628	21	174
		8.91-8.96	1437				148	95	1	9
		8.96-9.1	4872	52380			501	323	4	24
	RAMPS @ ROUTE 9	7.1	4713				484		2	
	RAMPS @ LARK Ave	8.9	5472				562		2	
SUBTOTAL FOR SB			52381	12203	1150	1150	6541	3536	73	620
SUBTOTAL FROM COLD PLANE AC PAVEMENT (CONFORM) SHEET Q-2			4330							
SUBTOTAL FROM HMA DIKE (SHEET Q-2)						487				
TOTAL			119985	24406	2291	2778	13043	7051	146	1010

REPLACE CONCRETE PAVEMENT

DIRECTION	LOCATION	PM	No. OF SLABS (LANE No. 1)	No. OF SLABS (LANE No. 2)	TOTAL No. OF SLABS	REPLACE CONCRETE PAVEMENT (RAPID STRENGTH CONCRETE)
						CY
NB		7.2		2	2	9
		7.3		2	2	9
		7.4		1	1	4
		7.8		1	1	4
SUBTOTAL FOR NB					6	27
SB		7.2	2		2	9
		7.3	1	3	4	18
		7.4	4		4	18
		7.5	2	2	4	18
	BLOSSOM HILL	7.6	8	11	19	85
		7.7	2		2	9
		7.8	1	1	2	9
		7.9		9	9	40
	LARK Ave	8.9	10	14	24	107
SUBTOTAL FOR SB					70	313
TOTAL					76	340

NOTE: EXACT LOCATION OF REPLACE ASPHALT CONCRETE SURFACING TO BE DETERMINED BY THE ENGINEER.

METAL BEAM GUARD RAILING

DIRECTION	PM	REMOVE MBGR	MBGR (WOOD POST)	ALTERNATIVE FLARED TERMINAL SYSTEM	ALTERNATIVE IN-LINE TERMINAL SYSTEM	END ANCHOR ASSEMBLY (TYPE SFT)	VEGETATION CONTROL (MINOR CONCRETE)
		LF		EA			SQYD
NB	6.9	65	27	1		1	19
	7.0	96	58	1			50
	7.3	105	67	1		1	54
	7.6	58	20	1			30
	8.3	2026	1988	1			1051
	9.0	697	659	1			284
SUBTOTAL FOR NB		3047	2819	6		2	1488
SB	7.1	82	44	1			43
	7.3	65	27		1	1	19
	7.4	488	450	1		1	145
	7.7	65	27	1			34
	7.9	1348	1310	1		1	399
	8.9	284	208	1	1	1	147
	9.0	153	115	1			45
SUBTOTAL FOR SB		2485	2181	6	2	4	832
TOTAL		5532	5000	12	2	6	2320

GRIND EXISTING CONCRETE PAVEMENT (CONFORM)

DIRECTION	LOCATION	WIDTH	LENGTH	GRIND Exist Conc PAVEMENT (CONFORM)
		LF		SQYD
NB	BLOSSOM HILL Rd (APPROACH)	24	90	240
NB	BLOSSOM HILL Rd (DEPARTURE)	24	90	240
SUBTOTAL FOR NB				480
SB	BLOSSOM HILL Rd (APPROACH)	24	90	240
SB	BLOSSOM HILL Rd (DEPARTURE)	24	90	240
SUBTOTAL FOR SB				480
TOTAL				960

SUMMARY OF QUANTITIES

Q-1

STATE OF CALIFORNIA - DEPARTMENT OF TRANSPORTATION
Caltrans DESIGN

FUNCTIONAL SUPERVISOR: RAMSES SARGISS
CALCULATED-DESIGNED BY: SHERRY HUANG
CHECKED BY: ROBERT CAMARGO
REVISED BY: SH
DATE REVISED: 7/12/10

LAST REVISION 07-26-10 | DATE PLOTTED => 09-SEP-2010 | TIME PLOTTED => 09:50

Dist	COUNTY	ROUTE	POST MILES TOTAL PROJECT	SHEET No.	TOTAL SHEETS
04	SCl	17	6.9/9.1	19	39

Robert Camargo 7-21-10
REGISTERED CIVIL ENGINEER DATE

7-26-10
PLANS APPROVAL DATE

REGISTERED PROFESSIONAL ENGINEER Robert Camargo No. 34402 Exp. 9-30-11 CIVIL STATE OF CALIFORNIA

THE STATE OF CALIFORNIA OR ITS OFFICERS OR AGENTS SHALL NOT BE RESPONSIBLE FOR THE ACCURACY OR COMPLETENESS OF SCANNED COPIES OF THIS PLAN SHEET.

COLD PLANE AC PAVEMENT (CONFORM)

DIRECTION	PM	LOCATION	COLD PLANE AC PAVEMENT (CONFORM) (N)
			SQYD
NB	6.9	BEGIN CONSTRUCTION	113
	7.1	ROUTE 9 RAMPS	698
	7.7	BLOSSOM HILL Rd	378
	8.9	LARK Ave RAMPS	621
	9.1	END CONSTRUCTION	197
SUBTOTAL FOR NB			1629
SB	6.9	BEGIN CONSTRUCTION	153
	7.0	ROUTE 9 RAMPS	651
	7.1	BEGIN Exist PCC SECTION	510
	7.9	END Exist PCC SECTION	370
	8.9	LARK Ave RAMPS	627
	9.1	END CONSTRUCTION	203
SUBTOTAL FOR SB			2514
CONFORM AT DI			187
SUBTOTAL FOR DI			187
TOTAL			4330

REPLACE ASPHALT CONCRETE SURFACING

DIRECTION	PM	LANE 1		LANE 2		REPLACE ASPHALT Conc SURFACING
		LENGTH	WIDTH	LENGTH	WIDTH	
		LF				CY
NB	7.0	40	8			4
	7.1			50	12	9
	8.7			280	8	29
	8.9			120	12	19
SUBTOTAL FOR NB						61
SB	7.1			286	100	83
	8.3			115	12	33
	8.6			150	12	23
	8.6			80	8	8
	8.7	30	12	120	12	23
	8.7			70	12	11
	8.8			70	8	7
	8.9			40	12	6
	9.0			100	12	16
	9.1			190	12	30
SUBTOTAL FOR SB						241
TOTAL						302

EXACT LOCATION OF REPLACE ASPHALT CONCRETE SURFACING TO BE DETERMINED BY THE ENGINEER.

HMA DIKE

DIRECTION	LOCATION PM	REMOVE AC DIKE	AC DIKE TYPE D	AC DIKE TYPE E	AC DIKE TYPE F	HMA (A) (N)
			LF			TON
NB	6.9	130		130		4.6
	7.3	848		743	105	27.8
	7.8	2744		2480	264	91.4
	8.7	580		580		20.4
	8.9	790		790		27.7
	OFF-RAMP @ LARK Ave	1505		1505		52.8
	ON-RAMP @ LARK Ave	814		120	694	15.7
SUBTOTAL FOR NB		7411		6348	1063	240.3
SB	7.3	65			65	1.1
	7.3	316		316		11.1
	7.4	422			422	7.0
	7.8	580	580			42.4
	7.9	1314			1314	21.7
	8.2	422		422		14.8
	8.4	475		475		16.7
	8.5	787		787		27.6
	8.8	1437		1437		50.4
	8.9	206		206		7.2
	ON-RAMP @ LARK Ave	590		590		20.7
	OFF-RAMP @ LARK Ave	348		348		12.2
	9.0	500		290	210	13.7
SUBTOTAL FOR SB		7462	580	4871	2011	246.6
TOTAL		14873	580	11219	3074	487

(N) FOR INFORMATION ONLY. QUANTITIES ARE INCLUDED IN ROADWAY QUANTITIES SHEET Q-1.

SUMMARY OF QUANTITIES

Q-2

REVISED BY	DATE REVISED
SH	7/12/10

SHERRY HUANG — ROBERT CAMARGO — CALCULATED-DESIGNED BY — CHECKED BY

FUNCTIONAL SUPERVISOR: RAMSES SARGISS

STATE OF CALIFORNIA - DEPARTMENT OF TRANSPORTATION — Caltrans — DESIGN

LAST REVISION 07-26-10 | DATE PLOTTED => 09-SEP-2010 | TIME PLOTTED => 09:50

Dist	COUNTY	ROUTE	POST MILES TOTAL PROJECT	SHEET No.	TOTAL SHEETS
04	SCI	17	6.9/9.1	20	39

Kenneth Y. Xu 6-1-10
REGISTERED ELECTRICAL ENGINEER DATE

7-26-10
PLANS APPROVAL DATE

REGISTERED PROFESSIONAL ENGINEER Kenneth Y. Xu No. 15219 Exp. 6-30-12 ELECT STATE OF CALIFORNIA

THE STATE OF CALIFORNIA OR ITS OFFICERS OR AGENTS SHALL NOT BE RESPONSIBLE FOR THE ACCURACY OR COMPLETENESS OF SCANNED COPIES OF THIS PLAN SHEET.

FOR ACCURATE RIGHT OF WAY AND ACCESS DATA, CONTACT RIGHT OF WAY ENGINEERING AT THE DISTRICT OFFICE.

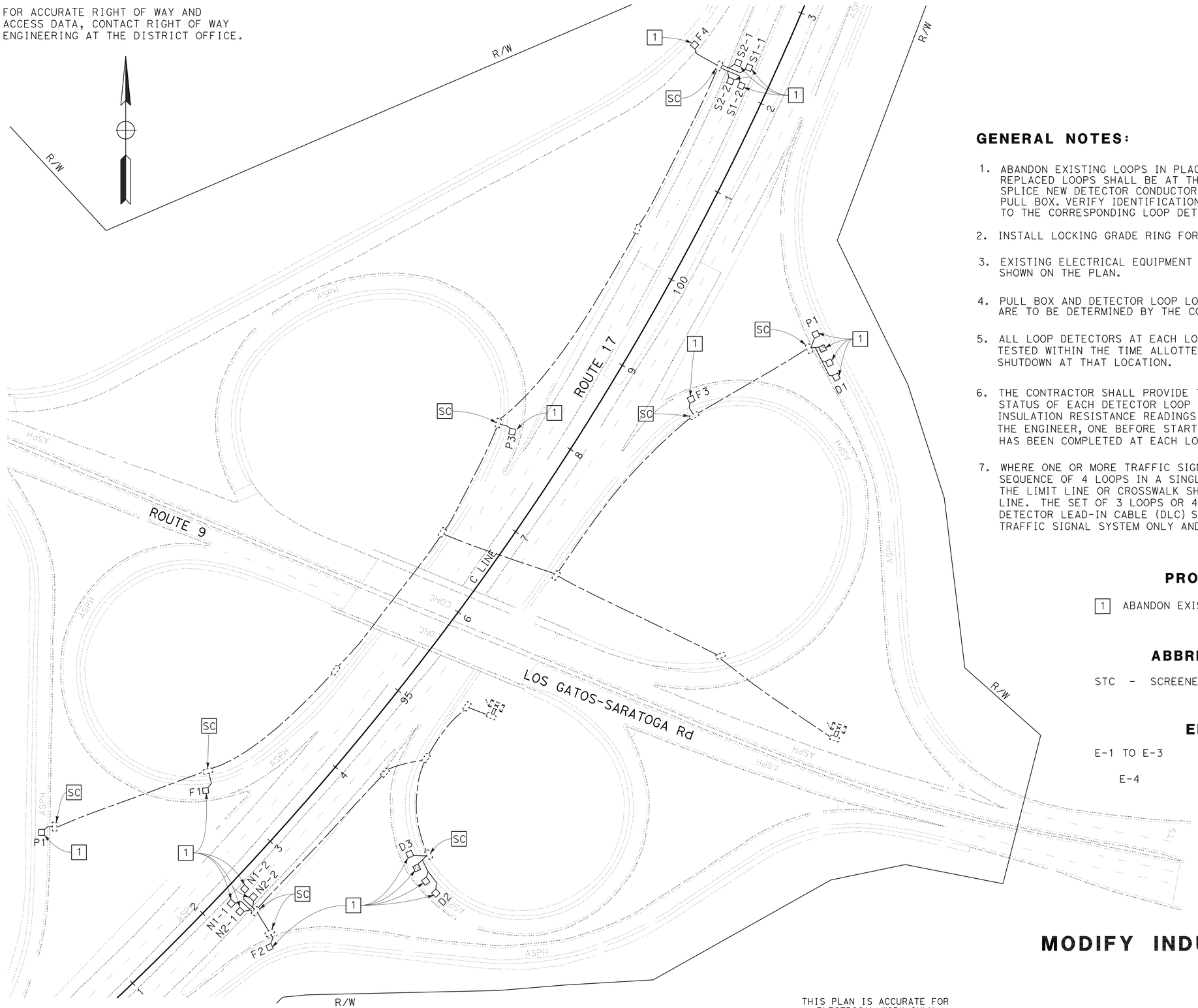

GENERAL NOTES:

1. ABANDON EXISTING LOOPS IN PLACE WHEN CUTTING NEW REPLACEMENT LOOPS. REPLACED LOOPS SHALL BE AT THE SAME VICINITY OF THE EXISTING LOOPS. SPLICE NEW DETECTOR CONDUCTORS TO CORRESPONDING dlc IN TERMINATION PULL BOX. VERIFY IDENTIFICATION OF EXISTING dlc BEFORE CONNECTING TO THE CORRESPONDING LOOP DETECTORS.
2. INSTALL LOCKING GRADE RING FOR EXISTING DETECTOR HANDHOLE AS NEEDED.
3. EXISTING ELECTRICAL EQUIPMENT SHALL REMAIN IN PLACE EXCEPT OTHERWISE SHOWN ON THE PLAN.
4. PULL BOX AND DETECTOR LOOP LOCATIONS ARE APPROXIMATE. EXACT LOCATIONS ARE TO BE DETERMINED BY THE CONTRACTOR.
5. ALL LOOP DETECTORS AT EACH LOCATION SHALL BE REPLACED AND TESTED WITHIN THE TIME ALLOTTED FOR TRAFFIC SIGNAL SYSTEM SHUTDOWN AT THAT LOCATION.
6. THE CONTRACTOR SHALL PROVIDE TWO REPORTS PER LOCATION ON THE STATUS OF EACH DETECTOR LOOP REPLACEMENT SHOWING CONTINUITY AND INSULATION RESISTANCE READINGS. THE REPORTS SHALL BE SUBMITTED TO THE ENGINEER, ONE BEFORE STARTING WORK AND THE OTHER AFTER WORK HAS BEEN COMPLETED AT EACH LOCATION.
7. WHERE ONE OR MORE TRAFFIC SIGNAL DETECTOR(S) CONSIST OF A SEQUENCE OF 4 LOOPS IN A SINGLE LANE, THE FRONT LOOP CLOSEST TO THE LIMIT LINE OR CROSSWALK SHALL BE LOCATED 1 FOOT FROM THE LINE. THE SET OF 3 LOOPS OR 4 LOOPS ASSIGNED TO THE SAME LOOP DETECTOR LEAD-IN CABLE (DLC) SHALL BE CONNECTED IN SERIES FOR TRAFFIC SIGNAL SYSTEM ONLY AND NOT FOR RAMP METERING SYSTEM.

PROJECT NOTE:

1 ABANDON EXISTING LOOP AND INSTALL NEW LOOP.

ABBREVIATION:

STC - SCREENED TRANSMISSION CABLE

ELECTRICAL INDEX

E-1 TO E-3	MODIFY INDUCTIVE LOOP DETECTOR (REPLACE)
E-4	ELECTRICAL DETAILS

THIS PLAN IS ACCURATE FOR ELECTRICAL WORK ONLY

MODIFY INDUCTIVE LOOP DETECTOR (REPLACE)

NO SCALE

E-1

REVISED BY	DY
DATE REVISED	5/10/10
CALCULATED-DESIGNED BY	DORIS YANG
CHECKED BY	KENNETH XU
FUNCTIONAL SUPERVISOR	LAI HONG CHIU

STATE OF CALIFORNIA - DEPARTMENT OF TRANSPORTATION
Caltrans
ELECTRICAL

LAST REVISION 07-22-10
DATE PLOTTED => 09-SEP-2010
TIME PLOTTED => 09:50

Dist	COUNTY	ROUTE	POST MILES TOTAL PROJECT	SHEET No.	TOTAL SHEETS
04	SCI	17	6.9/9.1	21	39

REGISTERED ELECTRICAL ENGINEER 6-1-10 DATE

7-26-10
PLANS APPROVAL DATE

REGISTERED PROFESSIONAL ENGINEER Kenneth Y. Xu No. 15219 Exp. 6-30-12 ELECT STATE OF CALIFORNIA

THE STATE OF CALIFORNIA OR ITS OFFICERS OR AGENTS SHALL NOT BE RESPONSIBLE FOR THE ACCURACY OR COMPLETENESS OF SCANNED COPIES OF THIS PLAN SHEET.

FOR ACCURATE RIGHT OF WAY AND ACCESS DATA, CONTACT RIGHT OF WAY ENGINEERING AT THE DISTRICT OFFICE.

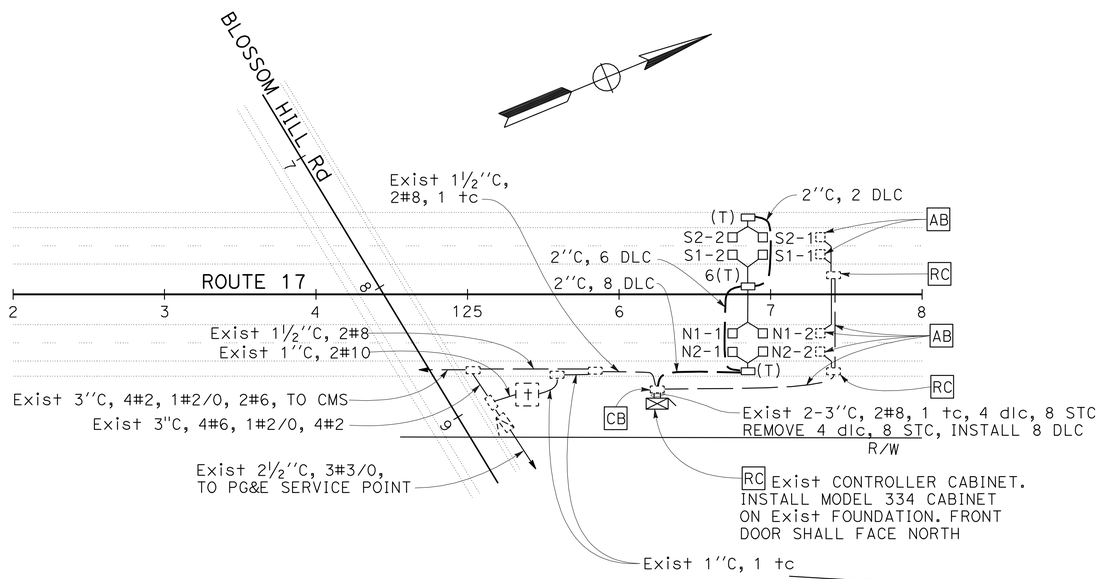

PM 7.68

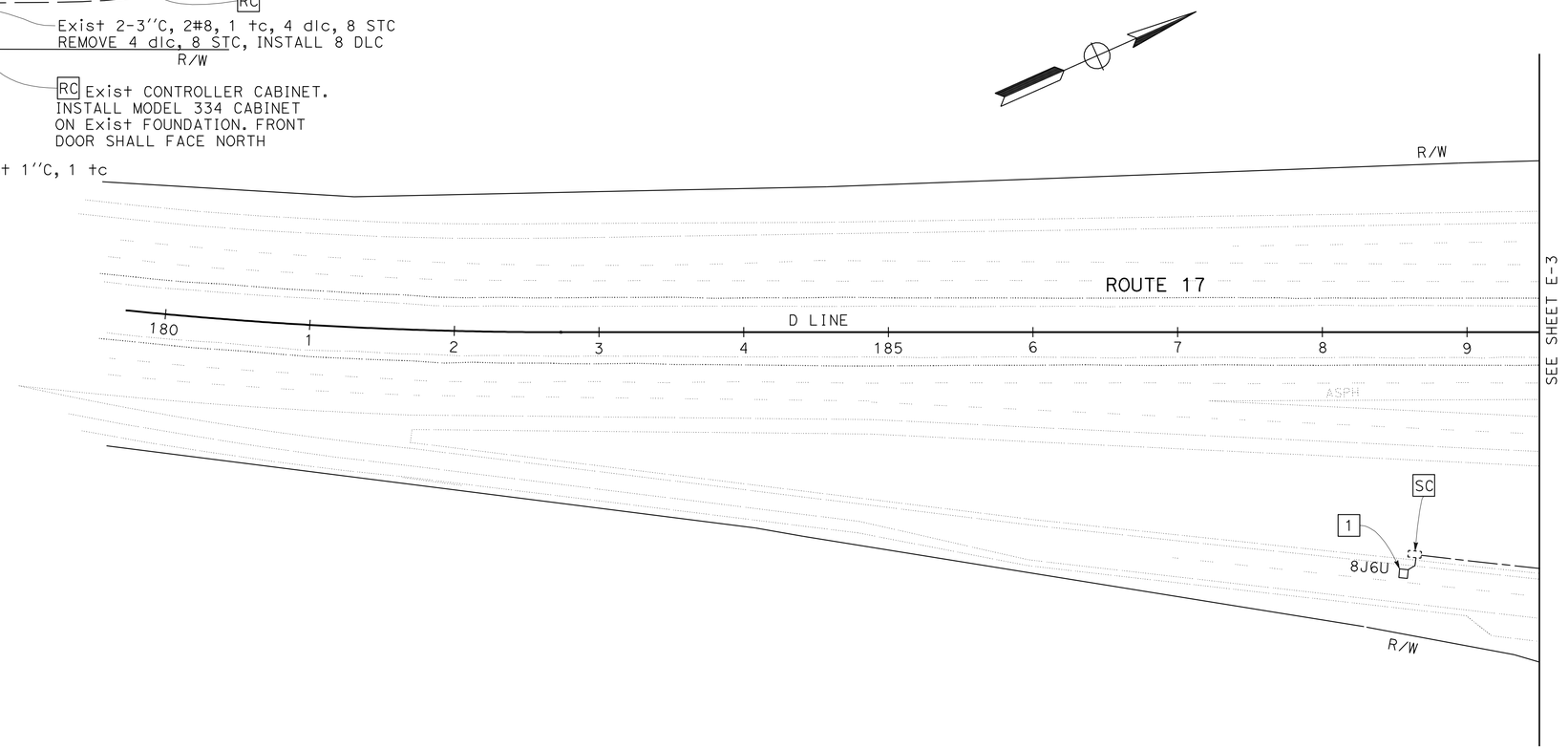

MODIFY INDUCTIVE LOOP DETECTOR
(REPLACE)

NO SCALE

FOR NOTES, ABBREVIATIONS AND LEGEND, SEE SHEET E-1

THIS PLAN IS ACCURATE FOR ELECTRICAL WORK ONLY

E-2

REVISED BY	DATE REVISED
DY	5/10/10

CALCULATED-DESIGNED BY: DORIS YANG
CHECKED BY: KENNETH XU
FUNCTIONAL SUPERVISOR: LAI HONG CHIU

STATE OF CALIFORNIA - DEPARTMENT OF TRANSPORTATION
Caltrans
ELECTRICAL

LAST REVISION 07-22-10
DATE PLOTTED => 09-SEP-2010
TIME PLOTTED => 09:50

Dist	COUNTY	ROUTE	POST MILES TOTAL PROJECT	SHEET No.	TOTAL SHEETS
04	SCI	17	6.9/9.1	22	39

REGISTERED ELECTRICAL ENGINEER Kenneth Y. Xu DATE 6-1-10

PLANS APPROVAL DATE 7-26-10

REGISTERED PROFESSIONAL ENGINEER Kenneth Y. Xu No. 15219 Exp. 6-30-12 ELECT STATE OF CALIFORNIA

THE STATE OF CALIFORNIA OR ITS OFFICERS OR AGENTS SHALL NOT BE RESPONSIBLE FOR THE ACCURACY OR COMPLETENESS OF SCANNED COPIES OF THIS PLAN SHEET.

FOR ACCURATE RIGHT OF WAY AND ACCESS DATA, CONTACT RIGHT OF WAY ENGINEERING AT THE DISTRICT OFFICE.

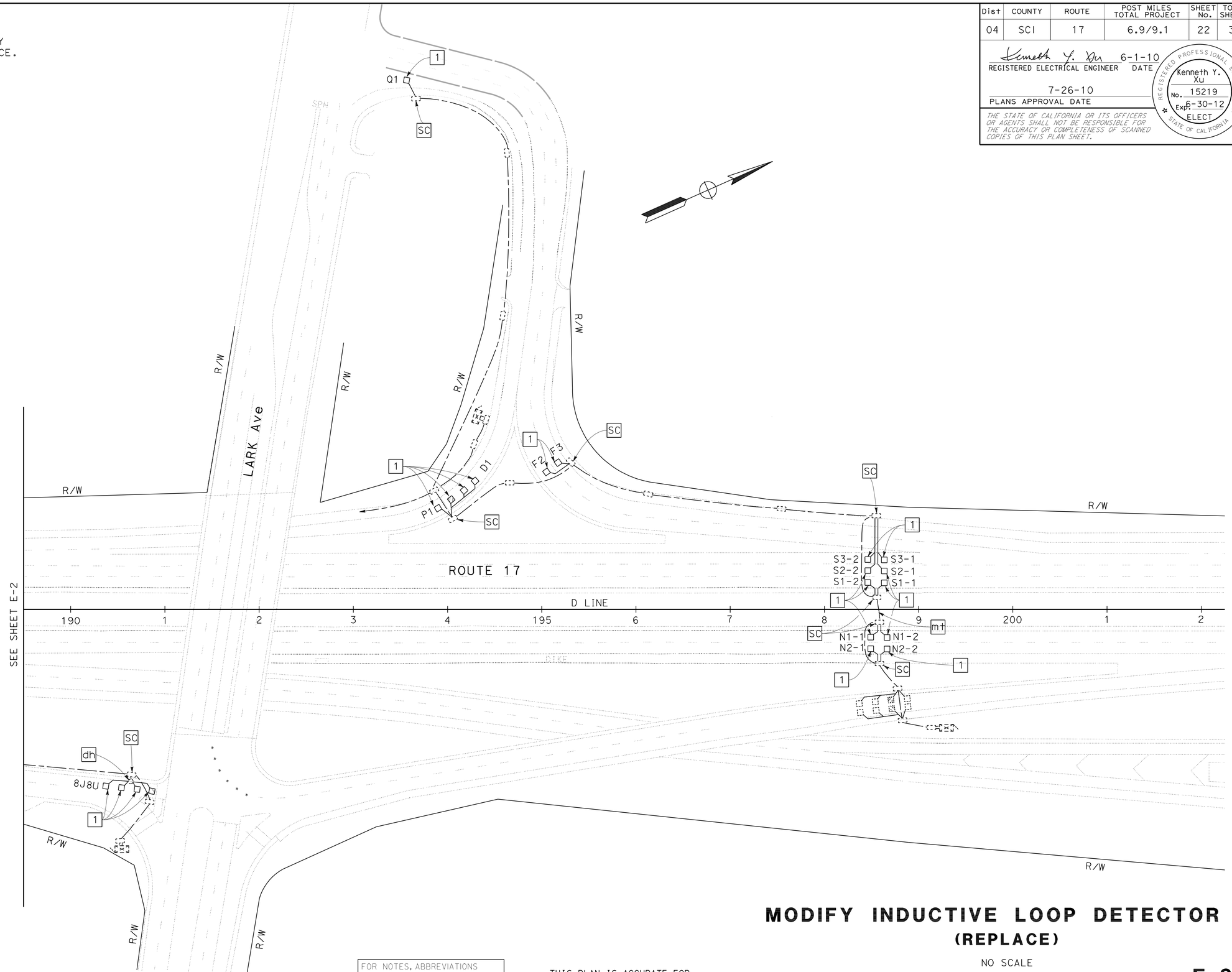

MODIFY INDUCTIVE LOOP DETECTOR
(REPLACE)

NO SCALE

FOR NOTES, ABBREVIATIONS AND LEGEND, SEE SHEET E-1

THIS PLAN IS ACCURATE FOR ELECTRICAL WORK ONLY

E-3

REVISED BY	DY
DATE REVISED	5/10/10
DORIS YANG	KENNETH XU
CALCULATED-DESIGNED BY	CHECKED BY
FUNCTIONAL SUPERVISOR	LAI HONG CHIU

STATE OF CALIFORNIA - DEPARTMENT OF TRANSPORTATION

Caltrans

ELECTRICAL

LAST REVISION 07-22-10 | DATE PLOTTED => 09-SEP-2010 | TIME PLOTTED => 09:50

Dist	COUNTY	ROUTE	POST MILES TOTAL PROJECT	SHEET No.	TOTAL SHEETS
04	SCI	17	6.9/9.1	23	39

REGISTERED ELECTRICAL ENGINEER 6-3-10 DATE

7-26-10
PLANS APPROVAL DATE

REGISTERED PROFESSIONAL ENGINEER Ray C. Duschane No. 14758 Exp. 6-30-11 ELECT STATE OF CALIFORNIA

THE STATE OF CALIFORNIA OR ITS OFFICERS OR AGENTS SHALL NOT BE RESPONSIBLE FOR THE ACCURACY OR COMPLETENESS OF SCANNED COPIES OF THIS PLAN SHEET.

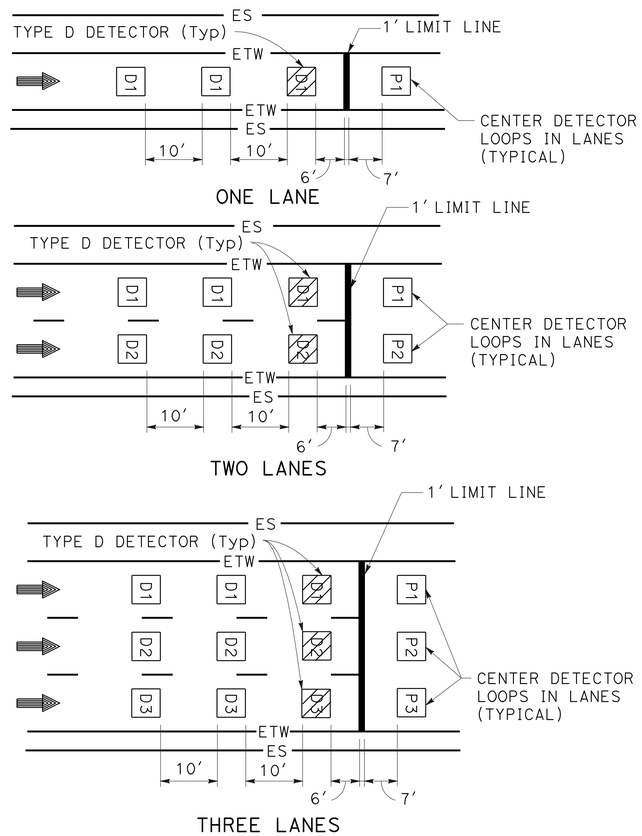

DETAIL RM
RAMP METERING STATION

RAMP METERING STATION NOTES:

1. SEE ES-5A, ES-5B, AND ES-13A FOR ADDITIONAL DETAILS.
2. DLC CONDUCTORS SHALL BE SPLICED TO THE LOOP CONDUCTORS IN THE NEAREST PULL BOX.
3. ALL SPLICES SHALL BE TYPE "S" OR TYPE "ST" AS REQUIRED.

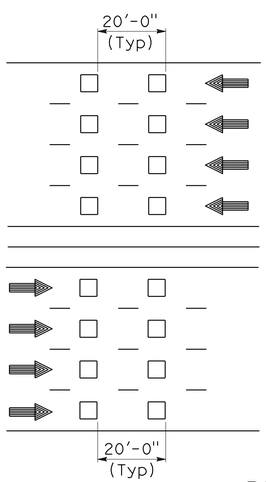

TRAFFIC MONITORING STATION NOTES

FREEWAY MAINLINE DETECTOR DESIGNATION:

N=NORTHBOUND LANES (NB)
S=SOUTHBOUND LANES (SB)
E=EASTBOUND LANES (EB)
W=WESTBOUND LANES (WB)

NUMBER OF LANES FROM LEFT WITH RESPECT TO DIRECTION OF TRAFFIC:

1=FIRST LANE FROM LEFT
2=SECOND LANE FROM LEFT
3=THIRD LANE FROM LEFT
4=FOURTH LANE FROM LEFT

NUMBER OF DETECTOR IN THE SAME LANE:

1=ENTERING DETECTOR
2=LEAVING DETECTOR

N 3-2

DETAIL TM
TRAFFIC MONITORING STATION

RAMP DETECTOR DESIGNATION:

D=DEMAND DETECTOR
P=PASSAGE DETECTOR
Q=QUEUE DETECTOR
F=OFFRAMP DETECTOR

1=FIRST LANE FROM LEFT
2=SECOND LANE FROM LEFT

D-2

ELECTRICAL DETAILS
(RAMP METERING AND TRAFFIC MONITORING DETECTOR SPACING AND DESIGNATION)

NO SCALE

FOR NOTES, ABBREVIATIONS AND LEGEND, SEE SHEET E-1

THIS PLAN IS ACCURATE FOR ELECTRICAL WORK ONLY

E-4

REVISED BY	DY
DATE REVISED	5/10/10
CALCULATED-DESIGNED BY	DORIS YANG
CHECKED BY	RAY DUSCHANE
FUNCTIONAL SUPERVISOR	CHARLES PRICE

STATE OF CALIFORNIA - DEPARTMENT OF TRANSPORTATION
Caltrans
ELECTRICAL

LAST REVISION DATE PLOTTED => 09-SEP-2010
07-22-10 TIME PLOTTED => 09:51

DIST	COUNTY	ROUTE	POST MILES TOTAL PROJECT	SHEET NO.	TOTAL SHEETS
04	SCI	17	6.9/9.1	24	39

Randell D. Hiatt
REGISTERED CIVIL ENGINEER

June 6, 2008
PLANS APPROVAL DATE

REGISTERED PROFESSIONAL ENGINEER
Randell D. Hiatt
No. C50200
Exp. 6-30-09
CIVIL
STATE OF CALIFORNIA

The State of California or its officers or agents shall not be responsible for the accuracy or completeness of electronic copies of this plan sheet.

To accompany plans dated 7-26-10

NOTES:

1. When necessary to place dike in front of face of guard railing, only Type C dike may be used. For dike details, see Standard Plan A87B.
2. For standard railing post embedment, see Standard Plans A77C3.
3. Guard railing delineation to be used where shown on the Project Plans.
4. When dike or curb is placed under guard railing, the maximum height of the dike or curb shall be 4". Mountable dike should not be used. For dike and curb details, see Revised Standard Plans RSP A87A and Standard Plan A87B.
5. For details of typical distance between the face of rail and hinge point, see Standard Plan A77C3.

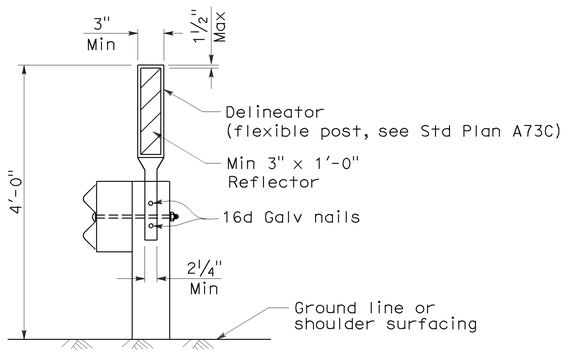

GUARD RAILING DELINEATION

See Note 3

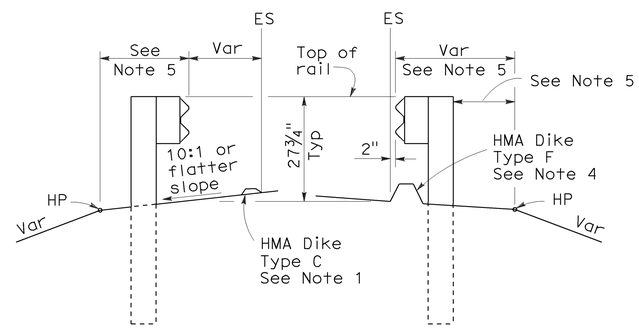

DIKE POSITIONING

See Note 1

STATE OF CALIFORNIA
DEPARTMENT OF TRANSPORTATION

METAL BEAM GUARD RAILING TYPICAL RAILING DELINEATION AND DIKE POSITIONING DETAILS

NO SCALE

RSP A77C4 DATED JUNE 6, 2008 SUPERSEDES STANDARD PLAN A77C4
DATED MAY 1, 2006 - PAGE 47 OF THE STANDARD PLANS BOOK DATED MAY 2006.

REVISED STANDARD PLAN RSP A77C4

2006 REVISED STANDARD PLAN RSP A77C4

12-10-07

DIST	COUNTY	ROUTE	POST MILES TOTAL PROJECT	SHEET NO.	TOTAL SHEETS
04	SCI	17	6.9/9.1	25	39

REGISTERED CIVIL ENGINEER

May 15, 2009
PLANS APPROVAL DATE

REGISTERED PROFESSIONAL ENGINEER William K. Farnbach No. C49042 Exp. 9-30-10 CIVIL STATE OF CALIFORNIA

The State of California or its officers or agents shall not be responsible for the accuracy or completeness of electronic copies of this plan sheet.

To accompany plans dated 7-26-10

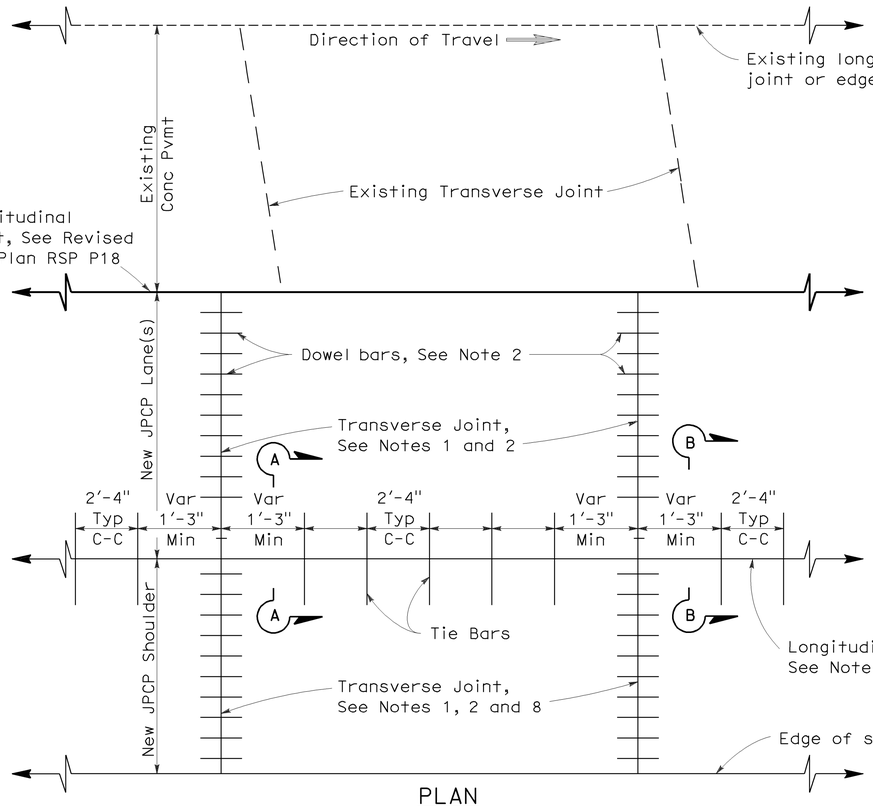

PLAN

LANE/SHOULDER ADDITION OR RECONSTRUCTION

See Notes 6 and 7

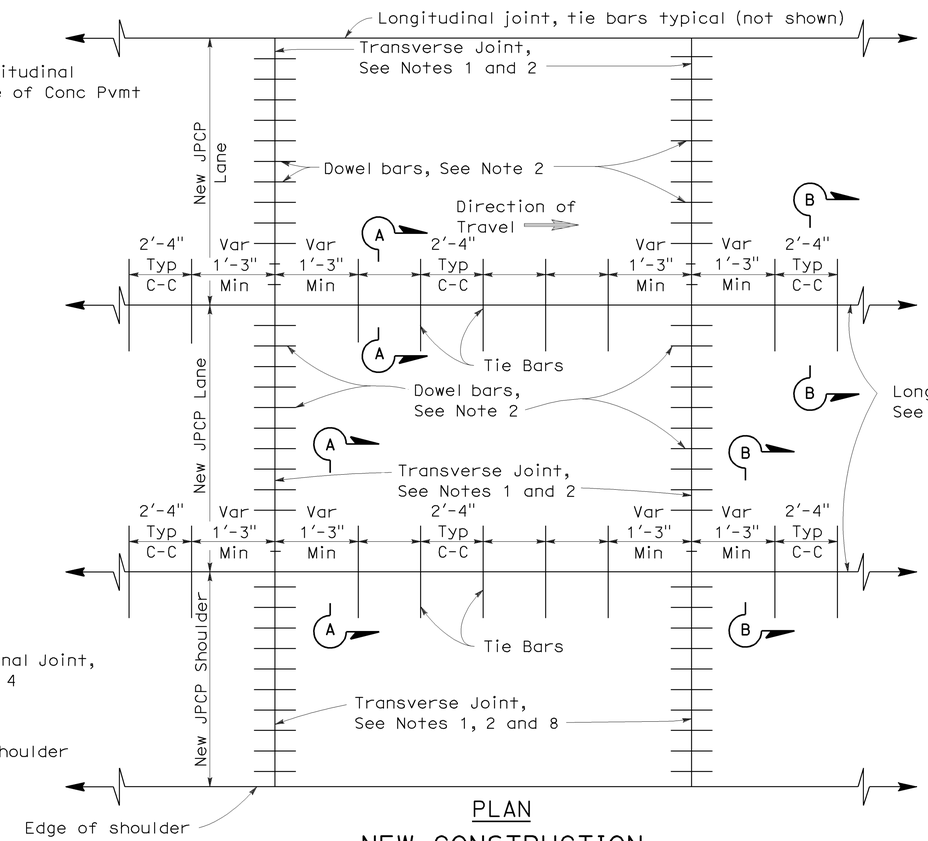

PLAN

NEW CONSTRUCTION

See Notes 6 and 7

NOTES:

1. Transverse joints shall be constructed at right angles to the longitudinal pavement joints in new jointed plain concrete pavement and spaced at successive repeated intervals of 12', 15', 13' and 14'.
2. For transverse joint and dowel bar details not shown, See Revised Standard Plan RSP P10.
3. Construct longitudinal contraction joints as shown in Section A-A when more than one lane or shoulder widths are placed at one time. If constructing one lane at a time, use longitudinal construction joint, as shown in Section B-B.
4. For additional longitudinal joint details, see Revised Standard Plan RSP P18.
5. If fresh concrete is placed adjacent to existing concrete, the top corner of the new hardened concrete does not need to be rounded to the 1/4" radius as shown.
6. Joint spacing patterns do not apply to intersections.
7. Details can also apply to inside widening.
8. Dowel bars may be omitted from shoulders when the shoulder cross slope is not the same as the adjacent traffic lane.

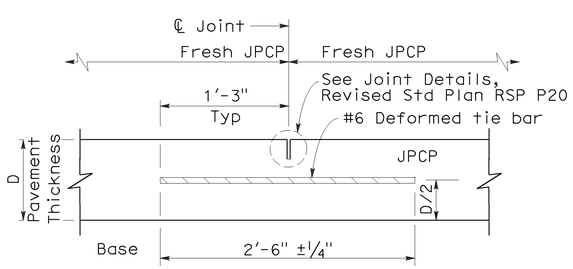

SECTION A-A

LONGITUDINAL CONTRACTION JOINT

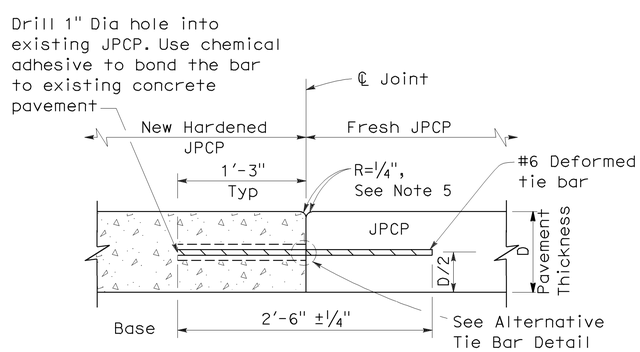

SECTION B-B

LONGITUDINAL CONSTRUCTION JOINT

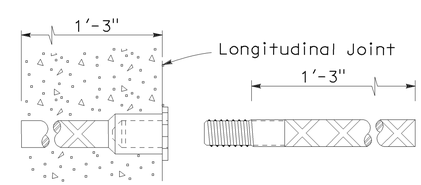

ALTERNATIVE TIE BAR SPLICE DETAIL

(Splice Coupler)

TIE BAR DETAILS

STATE OF CALIFORNIA
DEPARTMENT OF TRANSPORTATION

JOINTED PLAIN CONCRETE PAVEMENT

NO SCALE

RSP P1 DATED MAY 15, 2009 SUPERSEDES STANDARD PLAN P1
DATED MAY 1, 2006 - PAGE 119 OF THE STANDARD PLANS BOOK DATED MAY 2006.

REVISED STANDARD PLAN RSP P1

2006 REVISED STANDARD PLAN RSP P1

119

5-8-09

DIST	COUNTY	ROUTE	POST MILES TOTAL PROJECT	SHEET NO.	TOTAL SHEETS
04	SCI	17	6.9/9.1	26	39

William K. Farnbach
REGISTERED CIVIL ENGINEER

May 15, 2009
PLANS APPROVAL DATE

REGISTERED PROFESSIONAL ENGINEER William K. Farnbach No. C49042 Exp. 9-30-10 CIVIL STATE OF CALIFORNIA

The State of California or its officers or agents shall not be responsible for the accuracy or completeness of electronic copies of this plan sheet.

To accompany plans dated 7-26-10

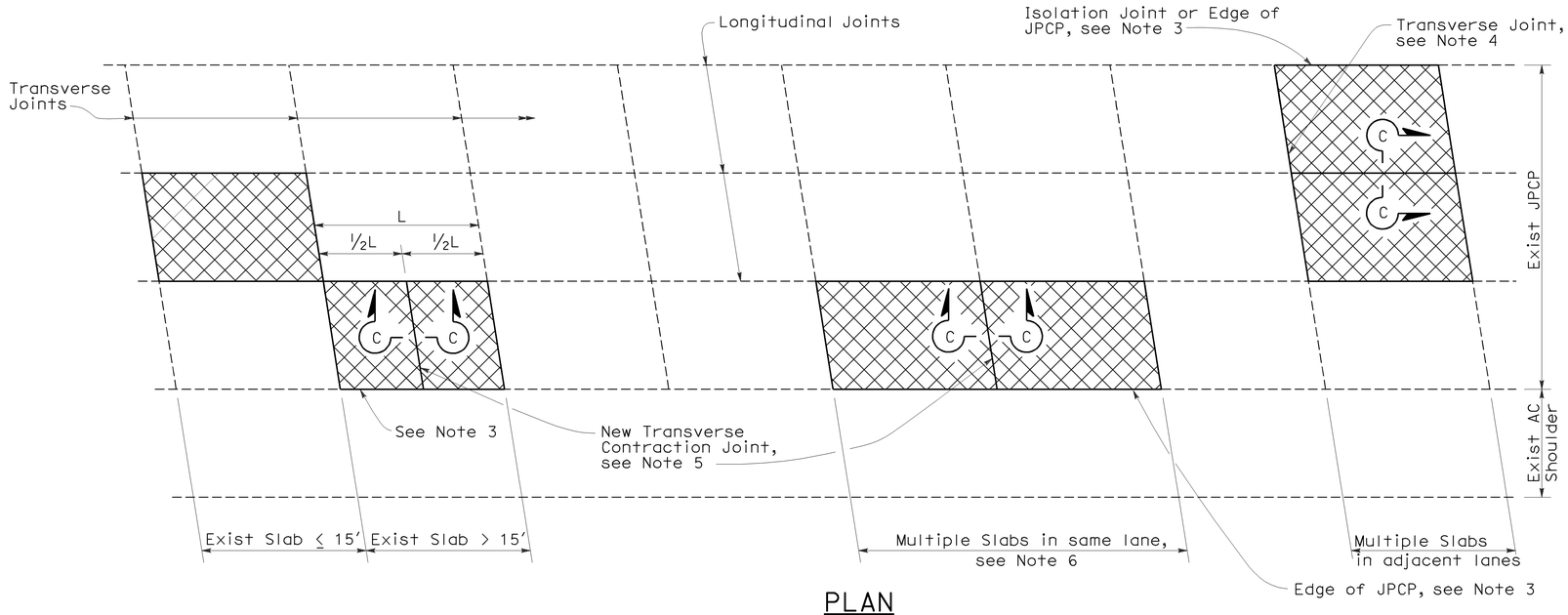

PLAN

NOTES:

1. For details not shown, see Revised Standard Plan RSP P10.
2. Where the existing outer shoulder pavement is asphalt concrete pavement, the "a" dimension shall be 1′-0" and the "b" dimension shall be 2′-0".
3. Side forms shall be used where edge of pavement is adjacent to asphalt concrete.
4. For detail, see Transverse Construction Joint for existing concrete pavement detail on Revised Standard Plan RSP P10.
5. Transverse joint to match skew of existing joint. Omit dowel bars.
6. This Standard Plan only applicable when replacing multiple slabs in the same lane is less than 100′.

LEGEND

Replace Concrete Pavement (See Slab Layout Detail)

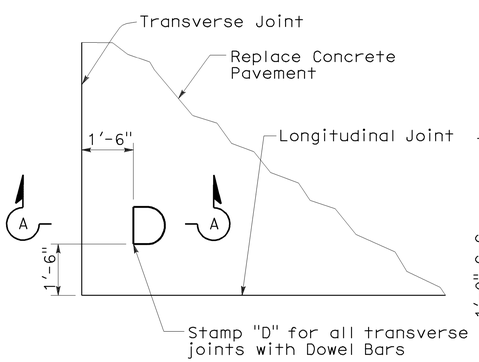

DOWEL STAMP DETAIL

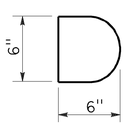

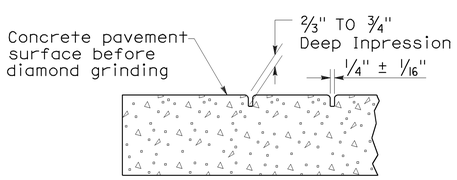

SECTION A-A

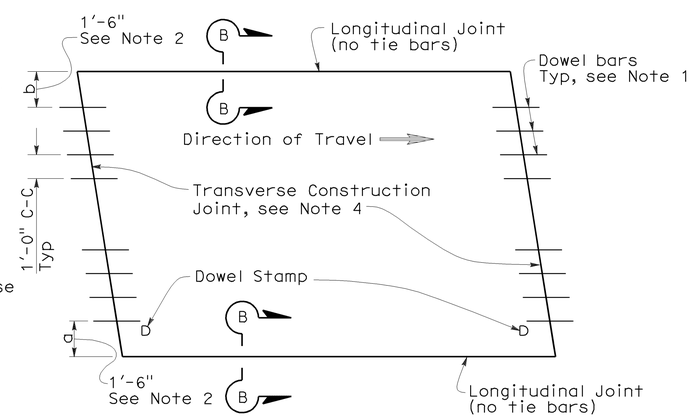

TYPE I
(traffic lane lines match longitudinal joints)

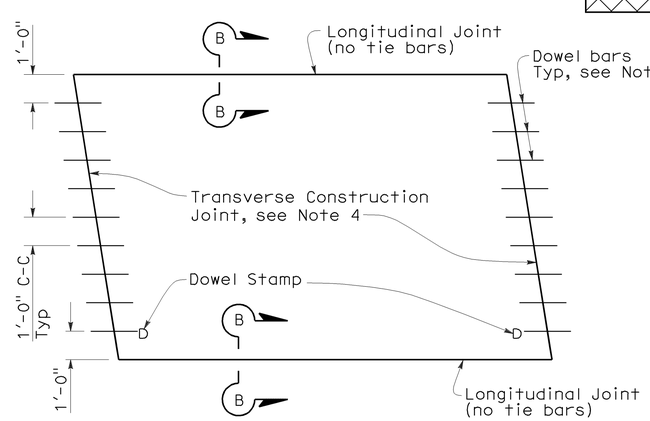

TYPE II
(traffic lane lines do not match longitudinal joints)

SLAB LAYOUT

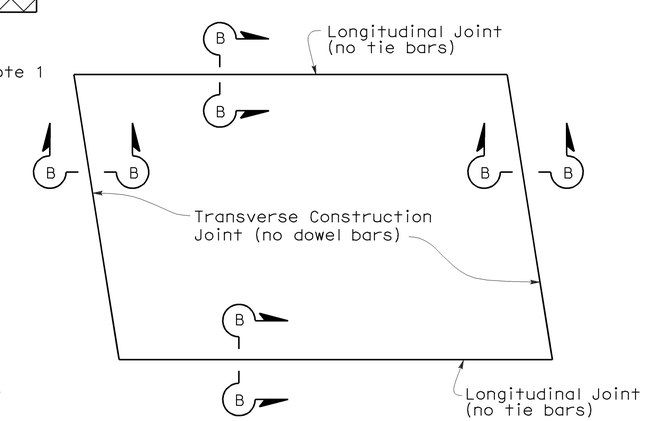

TYPE III
(for short term repairs < 5 yrs design life or for slab replacements with a cracking and seating operation)

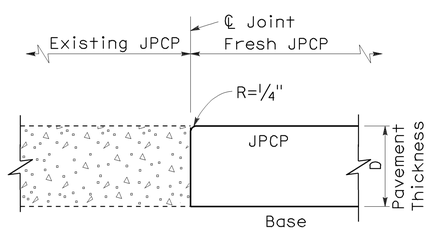

SECTION B-B

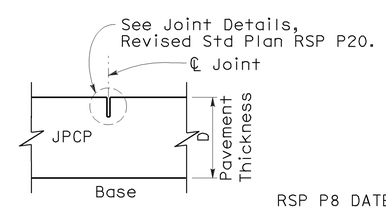

SECTION C-C

STATE OF CALIFORNIA
DEPARTMENT OF TRANSPORTATION

JOINTED PLAIN CONCRETE PAVEMENT-INDIVIDUAL SLAB REPLACEMENT

NO SCALE

RSP P8 DATED MAY 15, 2009 SUPERSEDES RSP P8 DATED SEPTEMBER 1, 2006 AND STANDARD PLAN P8 DATED MAY 1, 2006 - PAGE 123 OF THE STANDARD PLANS BOOK DATED MAY 2006.

REVISED STANDARD PLAN RSP P8

2006 REVISED STANDARD PLAN RSP P8

5-8-09

DIST	COUNTY	ROUTE	POST MILES TOTAL PROJECT	SHEET NO.	TOTAL SHEETS
04	SCI	17	6.9/9.1	27	39

William K. Farnbach
REGISTERED CIVIL ENGINEER

May 15, 2009
PLANS APPROVAL DATE

REGISTERED PROFESSIONAL ENGINEER — William K. Farnbach — No. C49042 — Exp. 9-30-10 — CIVIL — STATE OF CALIFORNIA

The State of California or its officers or agents shall not be responsible for the accuracy or completeness of electronic copies of this plan sheet.

To accompany plans dated 7-26-10

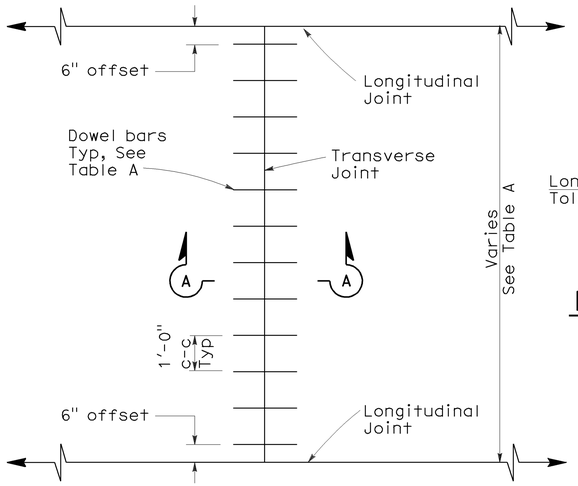

TRANSVERSE JOINT DOWEL BAR LAYOUT

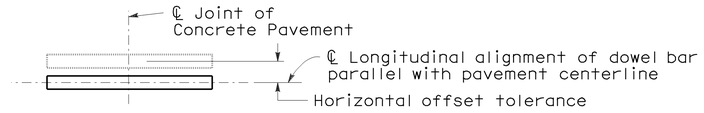

PLAN

HORIZONTAL OFFSET TOLERANCE

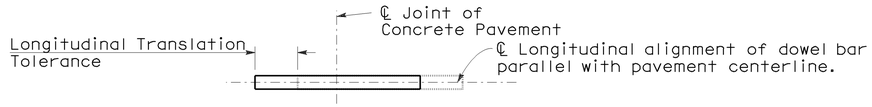

PLAN

LONGITUDINAL TRANSLATION TOLERANCE

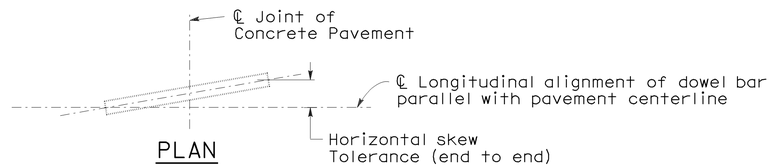

PLAN

HORIZONTAL SKEW TOLERANCE

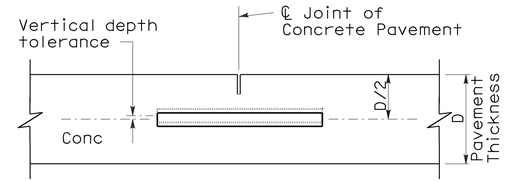

ELEVATION

VERTICAL DEPTH TOLERANCE

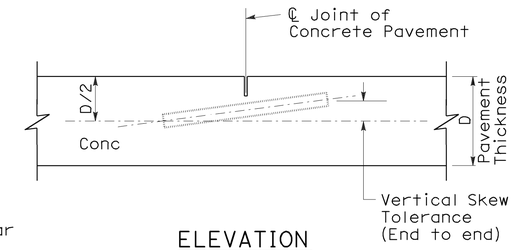

ELEVATION

VERTICAL SKEW TOLERANCE

NOTES:

1. See Revised Standard Plan RSP P1 for typical dowel bar placement and locations.
2. 1½" Dia smooth dowel bars are to be used with a pavement thickness, D, equal to or greater than 0.70 feet. For pavement thickness, D, less than 0.70 feet, use 1¼" Dia smooth dowel bars.
3. For widths not shown, see Project Plans.
4. If fresh concrete pavement is placed adjacent to existing concrete pavement, the top corner of the existing concrete pavement does not need to be rounded to the ¼" radius, as shown.

TABLE A (See Note 3)

Dowel Bar Transverse Spacing Table	
Width between Longitudinal Joints	Number of Dowels between Longitudinal Joints
14'-0"	14
13'-0"	13
12'-0"	12
11'-0"	11
10'-0"	10
8'-0"	8
5'-0"	5
4'-0"	4

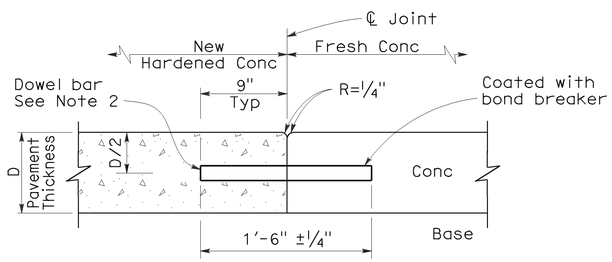

SECTION A-A

TRANSVERSE CONSTRUCTION JOINT DETAIL

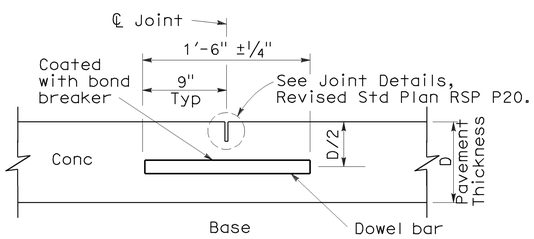

TRANSVERSE CONTRACTION JOINT

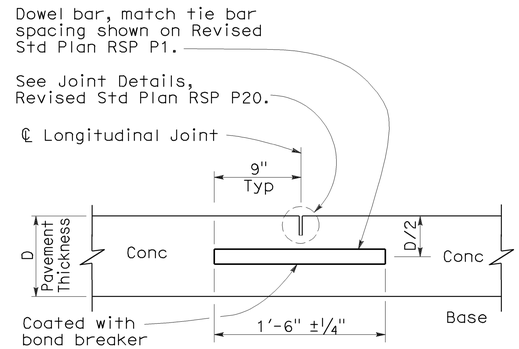

LONGITUDINAL CONTRACTION JOINT WITH DOWEL BARS

(See Revised Std Plan RSP P18)

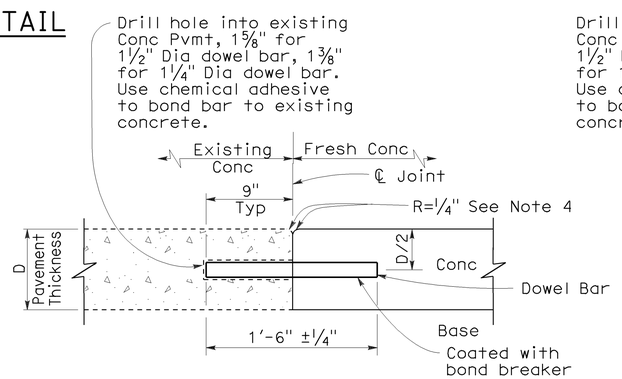

TRANSVERSE CONSTRUCTION JOINT FOR EXISTING CONCRETE PAVEMENT

(Drill and bond locations)

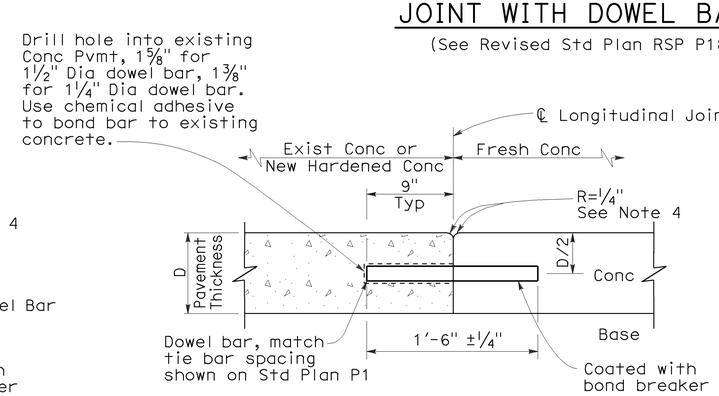

LONGITUDINAL CONSTRUCTION JOINT WITH DOWEL BARS

(See Revised Std Plan RSP P18)

STATE OF CALIFORNIA
DEPARTMENT OF TRANSPORTATION

CONCRETE PAVEMENT-DOWEL BAR DETAILS

NO SCALE

RSP P10 DATED MAY 15, 2009 SUPERSEDES STANDARD PLAN P10 DATED MAY 1, 2006 - PAGE 124 OF THE STANDARD PLANS BOOK DATED MAY 2006.

REVISED STANDARD PLAN RSP P10

2006 REVISED STANDARD PLAN RSP P10

5-8-09

DIST	COUNTY	ROUTE	POST MILES TOTAL PROJECT	SHEET NO.	TOTAL SHEETS
04	SCI	17	6.9/9.1	28	39

Randell D. Hiatt
REGISTERED CIVIL ENGINEER

June 6, 2008
PLANS APPROVAL DATE

REGISTERED PROFESSIONAL ENGINEER
Randell D. Hiatt
No. C50200
Exp. 6-30-09
CIVIL
STATE OF CALIFORNIA

The State of California or its officers or agents shall not be responsible for the accuracy or completeness of electronic copies of this plan sheet.

To accompany plans dated 7-26-10

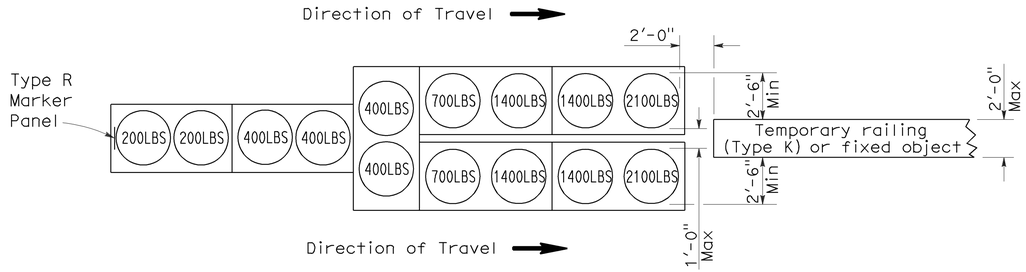

ARRAY 'TU14'

Approach speed 45 mph or more

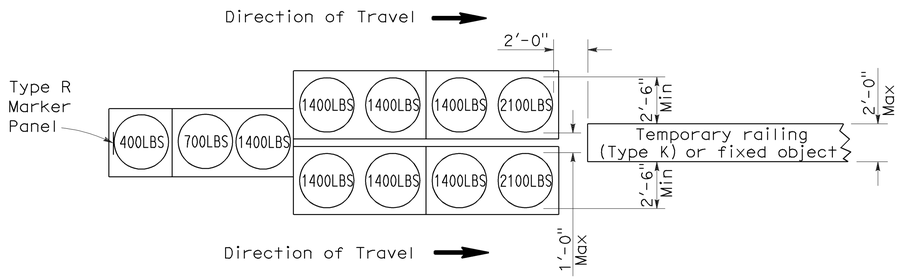

ARRAY 'TU11'

Approach speed less than 45 mph

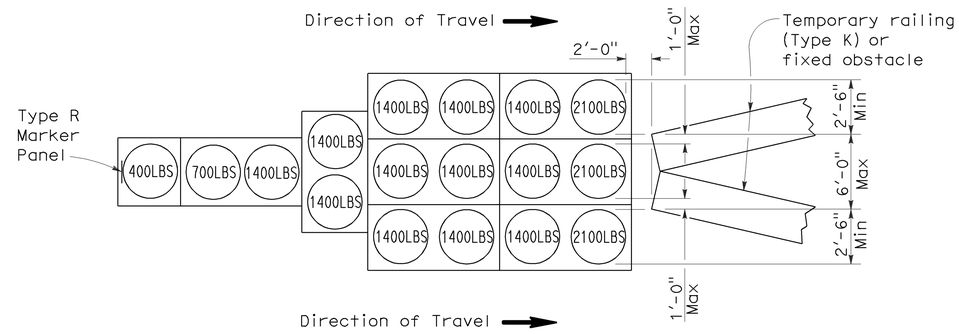

ARRAY 'TU17'

Approach speed less than 45 mph

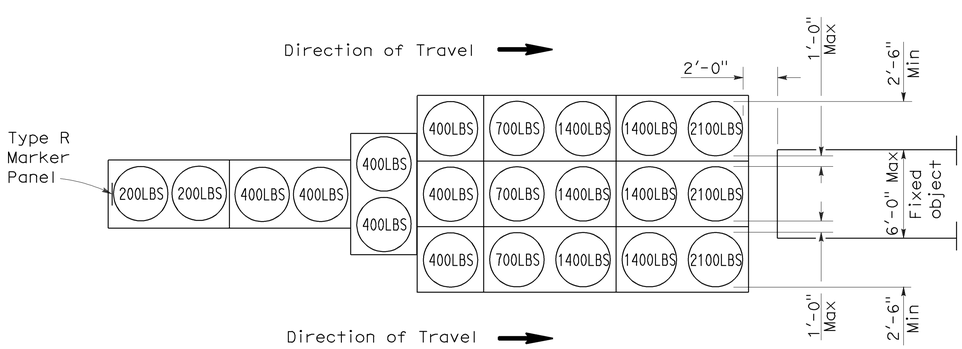

ARRAY 'TU21'

Approach speed 45 mph or more

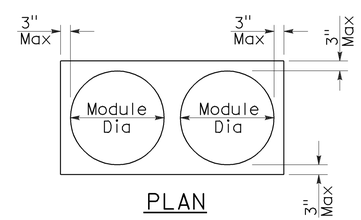

PLAN

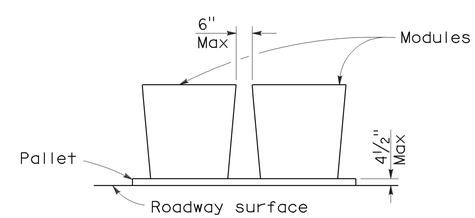

ELEVATION

CRASH CUSHION PALLET DETAIL

See Note 7

NOTES:

1. (XXX) Indicates sand filled module location and weight of sand in pounds for each module. Module spacing is based on the greater diameter of the module.
2. All sand weights are nominal.
3. Temporary crash cushion arrays shall not encroach on the traveled way.
4. Place the top of Type R marker panel 1" below the module lid.
5. Refer to Standard Plan A73B for marker details.
6. Approach speeds indicated conform to NCHRP 350 Report criteria.
7. Use of pallets is optional.

STATE OF CALIFORNIA
DEPARTMENT OF TRANSPORTATION

TEMPORARY CRASH CUSHION, SAND FILLED (UNIDIRECTIONAL)

NO SCALE

RSP T1A DATED JUNE 6, 2008 SUPERSEDES STANDARD PLAN T1A
DATED MAY 1, 2006 - PAGE 211 OF THE STANDARD PLANS BOOK DATED MAY 2006.

REVISED STANDARD PLAN RSP T1A

2006 REVISED STANDARD PLAN RSP T1A

DIST	COUNTY	ROUTE	POST MILES TOTAL PROJECT	SHEET NO.	TOTAL SHEETS
04	SCI	17	6.9/9.1	29	39

Randell D. Hiatt
REGISTERED CIVIL ENGINEER

June 6, 2008
PLANS APPROVAL DATE

REGISTERED PROFESSIONAL ENGINEER
Randell D. Hiatt
No. C50200
Exp. 6-30-09
CIVIL
STATE OF CALIFORNIA

The State of California or its officers or agents shall not be responsible for the accuracy or completeness of electronic copies of this plan sheet.

To accompany plans dated 7-26-10

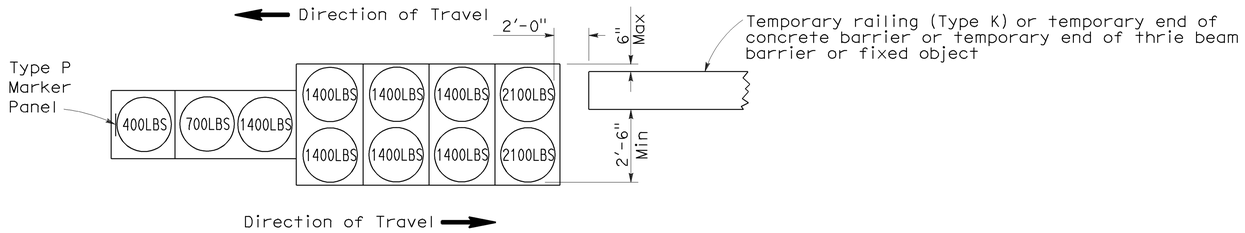

ARRAY 'TB11'

Approach speed less than 45 mph

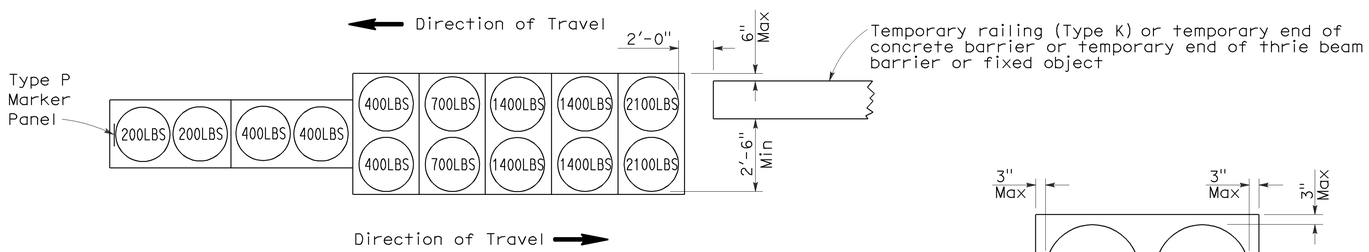

ARRAY 'TB14'

Approach speed 45 mph or more

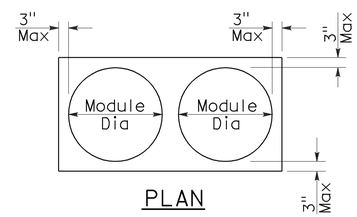

PLAN

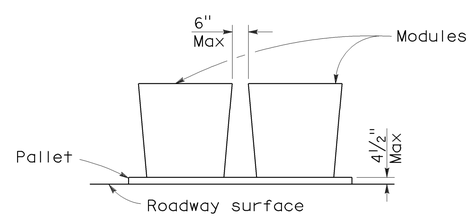

ELEVATION

CRASH CUSHION PALLET DETAIL

See Note 7

NOTES:

1. (XXX) Indicates sand filled module location and weight of sand in pounds for each module. Module spacing is based on the greater diameter of the module.
2. All sand weights are nominal.
3. Temporary crash cushion arrays shall not encroach on the traveled way.
4. Place the Type P marker panel so that the bottom of the panel rests upon the pallet.
5. Refer to Standard Plan A73B for marker details.
6. Approach speeds indicated conform to NCHRP 350 Report criteria.
7. Use of pallets is optional.

STATE OF CALIFORNIA
DEPARTMENT OF TRANSPORTATION

TEMPORARY CRASH CUSHION, SAND FILLED (BIDIRECTIONAL)

NO SCALE

RSP T1B DATED JUNE 6, 2008 SUPERSEDES STANDARD PLAN T1B
DATED MAY 1, 2006 - PAGE 212 OF THE STANDARD PLANS BOOK DATED MAY 2006.

REVISED STANDARD PLAN RSP T1B

2006 REVISED STANDARD PLAN RSP T1B

5-15-08

DIST	COUNTY	ROUTE	POST MILES TOTAL PROJECT	SHEET NO.	TOTAL SHEETS
04	SCI	17	6.9/9.1	30	39

Randell D. Hiatt
REGISTERED CIVIL ENGINEER

June 6, 2008
PLANS APPROVAL DATE

REGISTERED PROFESSIONAL ENGINEER
Randell D. Hiatt
No. C50200
Exp. 6-30-09
CIVIL
STATE OF CALIFORNIA

The State of California or its officers or agents shall not be responsible for the accuracy or completeness of electronic copies of this plan sheet.

To accompany plans dated 7-26-10

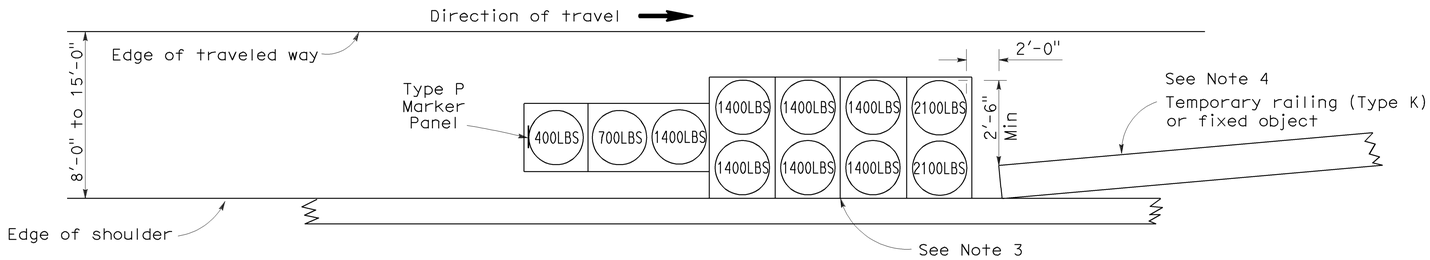

ARRAY 'TS11'

Approach speed less than 45 mph
See Note 9

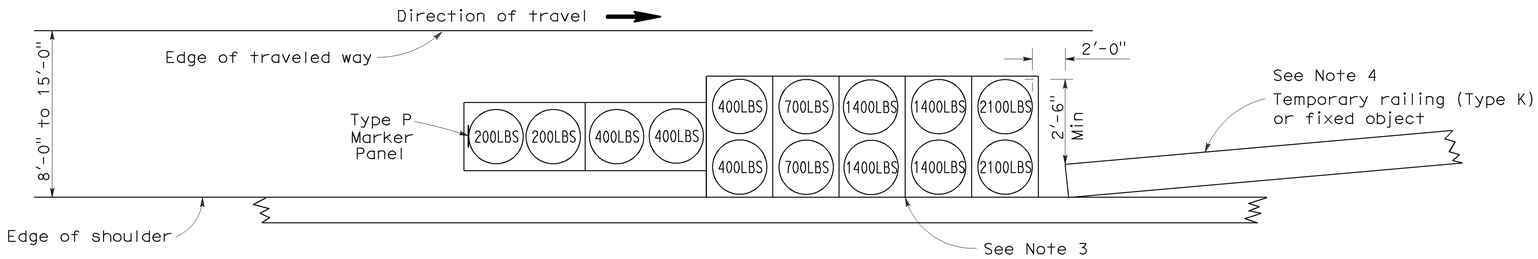

ARRAY 'TS14'

Approach speed 45 mph or more
See Note 9

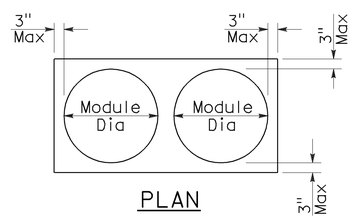

PLAN

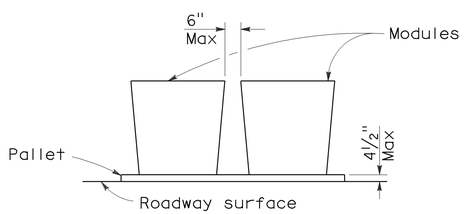

ELEVATION

CRASH CUSHION PALLET DETAIL

See Note 11

NOTES:

1. (XXX) Indicates sand filled module location and weight of sand in pounds for each module. Module spacing is based on the greater diameter of the module.
2. All sand weights are nominal.
3. The temporary crash cushion arrays shown on this plan shall be used only in locations where there will be traffic on one side of the temporary crash cushion array.
4. If the fixed object or approach end of the temporary railing is less than 15'-0" from the edge of traveled way, a temporary crash cushion is required in a construction or work zone.
5. Temporary crash cushion arrays shall not encroach on the traveled way.
6. Arrays for median shoulders shall conform to details shown on this plan for outside shoulders.
7. Place the Type P marker panel so that the bottom of the panel rests upon the pallet and faces traffic.
8. Refer to Standard Plan A73B for marker details.
9. For shoulder widths less than 8'-0", appropriate approved crash cushion protection, other than sand filled modules, shall be provided at fixed objects and at approach ends of temporary railing. The specific type of crash cushion shall be as shown on the project plans or as specified in the Special Provisions, or if not shown on the project plans or specified in the Special Provisions, shall be as approved by the Engineer.
10. Approach speeds indicated conform to NCHRP 350 Report criteria.
11. Use of pallets is optional.

STATE OF CALIFORNIA
DEPARTMENT OF TRANSPORTATION

TEMPORARY CRASH CUSHION, SAND FILLED (SHOULDER INSTALLATIONS)

NO SCALE

RSP T2 DATED JUNE 6, 2008 SUPERSEDES STANDARD PLAN T2
DATED MAY 1, 2006 - PAGE 213 OF THE STANDARD PLANS BOOK DATED MAY 2006.

REVISED STANDARD PLAN RSP T2

2006 REVISED STANDARD PLAN RSP T2

5-15-08

DIST	COUNTY	ROUTE	POST MILES TOTAL PROJECT	SHEET NO.	TOTAL SHEETS
04	SCI	17	6.9/9.1	31	39

REGISTERED ELECTRICAL ENGINEER

October 5, 2007
PLANS APPROVAL DATE

REGISTERED PROFESSIONAL ENGINEER Jeffery G. McRae No. E14512 Exp. 6-30-08 ELECTRICAL STATE OF CALIFORNIA

The State of California or its officers or agents shall not be responsible for the accuracy or completeness of electronic copies of this plan sheet.

To accompany plans dated 7-26-10

ELECTROLIERS

STANDARD TYPES
15, 15D
15 STRUCTURE
21, 21D STRUCTURE
30
31
32
35
36-20A

High mast light pole

Double Arm lighting standard

Existing electrolier

Electrolier foundation (Future installation)

NOTES:

1. Luminaires shall be 310 W HPS when installed on Type 21, 21D, 30, 31, 32, 35 and 36-20A Standards, unless otherwise specified. Luminaires shall be 200 W HPS when installed on other type standards or poles, unless otherwise specified.
2. Luminaires shall be the cutoff type, ANSI Type Ⅲ medium cutoff lighting distribution, unless otherwise specified.
3. Variations noted adjacent to symbol on project plans.

Electrolier (see project notes or project plans)

Luminaire on wood pole

STANDARD NOTES:

- AB — Abandon. If applied to conduit, remove conductors.
- BC — Install pull box in existing conduit run.
- BP — Pedestrian barricade, type as indicated on plan.
- CB — Install conduit into existing pull box.
- CC — Connect new and existing conduit. Remove existing conductors and install conductors as indicated.
- CF — Conduit to remain for future use. Remove conductors. Install pull wire or rope.
- DH — Detector handhole.
- FA — Foundation to be abandoned.
- IS — Install sign on signal mast arm.
- NS — No slip base on standard.
- PEC — Photoelectric control.
- PEU — Photoelectric unit.
- RC — Equipment or material to be removed and become the property of the Contractor.
- RE — Remove electrolier, fuses and ballast. Tape ends of conductors.
- RL — Relocate equipment.
- RR — Remove and reuse equipment.
- RS — Remove and salvage equipment.
- SC — Splice new to existing conductors.
- SD — Service disconnect.
- SF — Standard to remain for future use. Remove luminaire, pole conductors, fuses and ballast.
- TSP — Telephone service point.

ABBREVIATIONS AND EQUIPMENT DESIGNATIONS

PROPOSED	EXISTING	
BBS	bbs	Battery backup system
BC	bc	Bolt circle
C	C	Conduit
CCTV	cctv	Closed circuit television
CKT	ckt	Circuit
CMS	cms	Changeable message sign
DLC	dlc	Loop detector lead-in cable
EMS	ems	Extinguishable message sign
EVC	evc	Emergency vehicle cable
EVD	evd	Emergency vehicle detector
FB	fb	Flashing beacon
FBCA	fbca	Flashing beacon control assembly
FBS	fbs	Flashing beacon with slip base
FO	fo	Fiber optic
G	G	Ground (Equipment Grounding Conductor)
GFCI	GFCI	Ground fault circuit interrupt
HAR	har	Highway advisory radio
HEX	hex	Hexagonal
HPS	hps	High pressure sodium
IISNS	iisns	Internally illuminated street name sign
ISL	isl	Induction sign lighting
LED	led	Light emitting diode
LMA	lma	Luminaire mast arm
LPS	lps	Low pressure sodium
LTG	ltg	Lighting
LUM	lum	Luminaire
MAT	mat	Mast arm mounting vehicle signal faces, top attachment
MAS	mas	Mast arm mounting vehicle signal faces, side attachment
MAS-4A	mas-4A	Mast arm mounting vehicle signal faces, side attachment - 4 signal section
MAS-4B	mas-4B	
MAS-4C	mas-4C	
MAS-5A	mas-5A	Mast arm mounting vehicle signal faces, side attachment - 5 signal section
MAS-5B	mas-5B	
MC	mc	Mercury contactor
M/M	m/m	Multiple to multiple transformer
MT	mt	Conduit with pull wire or rope only
MTG	mtg	Mounting
	mv	Mercury vapor lighting fixture
N	N	Neutral (Grounded Conductor)
NC	NC	Normally closed
NO	NO	Normally open
PB	pb	Pull box
PEC	pec	Photoelectric control (Type Ⅰ, Ⅱ, Ⅲ, Ⅳ or Ⅴ as shown)
PED	ped	Pedestrian
PEU	peu	Photoelectric unit
PPB	ppb	Pedestrian push button
RL		Relocated equipment
RM	rm	Ramp metering
SB	sb	Slip base
SIC	sic	Signal interconnect cable
SIG	sig	Signal
SMA	sma	Signal mast arm
SNS	sns	Street name sign
SP	sp	Service point
TDC	tdc	Telephone demarcation cabinet
TMS	tms	Traffic monitoring station
TOS	tos	Traffic Operations System
VEH	veh	Vehicle
XFMR	xfmr	Transformer
COMM	comm	Communication
RWIS	rwis	Roadway weather information system

SOFFIT AND WALL MOUNTED LUMINAIRES

Pendant, 70 W HPS unless otherwise specified.

Flush, 70 W HPS unless otherwise specified.

Wall surface, 70 W HPS unless otherwise specified.

Existing soffit or wall luminaire to remain unmodified.

Existing soffit or wall luminaire to be modified as specified.

NOTE:

Arrow indicates "street side" of luminaire.

STATE OF CALIFORNIA
DEPARTMENT OF TRANSPORTATION

ELECTRICAL SYSTEMS (SYMBOLS AND ABBREVIATIONS)

NO SCALE

RSP ES-1A DATED OCTOBER 5, 2007 SUPERSEDES STANDARD PLAN ES-1A DATED MAY 1, 2006 - PAGE 400 OF THE STANDARD PLANS BOOK DATED MAY 2006.

REVISED STANDARD PLAN RSP ES-1A

2006 REVISED STANDARD PLAN RSP ES-1A

DIST	COUNTY	ROUTE	POST MILES TOTAL PROJECT	SHEET NO.	TOTAL SHEETS
04	SCI	17	6.9/9.1	32	39

REGISTERED ELECTRICAL ENGINEER

October 5, 2007
PLANS APPROVAL DATE

REGISTERED PROFESSIONAL ENGINEER Jeffery G. McRae No. E14512 Exp. 6-30-08 ELECTRICAL STATE OF CALIFORNIA

The State of California or its officers or agents shall not be responsible for the accuracy or completeness of electronic copies of this plan sheet.

To accompany plans dated 7-26-10

EQUIPMENT IDENTIFICATION

ILLUMINATED SIGN IDENTIFICATION NUMBER:

Sign No. 12345 — Sign number - Place on post or structure

10 ISL SCI 1.0

- 1.0 — Transformer rating (kVA)
- SCI — Lighting control type
- ISL — Number and type of fixtures

Do NOT place on standard or structure

ELECTROLIER OR EQUIPMENT IDENTIFICATION NUMBER:

12345 - 15'-0"

- 15'-0" — Mast arm length, if shown. Do not place on standard or structure.
- 12345 — Equipment number - Place on standard or structure. Existing equipment numbers are shown in parenthesis

CONDUIT AND CONDUCTOR IDENTIFICATION:

1½"C, 2#10, 15#14, 2 DLC

- 2#10, 15#14, 2 DLC — Number and size of conductors and cables
- 1½"C — Size of conduit in inches

Ø1, Ø2, Ø2P, etc.	Traffic phase identification for signal faces, detectors and phase diagrams
1 2 3	Project note numbers
A B C	Equipment description, installation or item numbers
1 2 3	Conduit run numbers

SIGNAL AND LIGHTING STANDARD (TYPICAL DESIGNATION):

19A - 3 - 100

- 100 — Wind velocity = 100 mph
- 3 — Case 3 arm loading
- 19A — Standard type
- Standard Plan sheet number
- Detail number or letter

MISCELLANEOUS EQUIPMENT

PROPOSED	EXISTING	
CMS	cms	Changeable message sign
		Closed circuit television camera
		Highway advisory radio pole and antenna
EMS	ems	Extinguishable message sign
M V	m v	Detection device M = Microwave sensor V = Video image sensor

WIRING DIAGRAM LEGEND

P	Pole
CB	Circuit breaker
A	Ampere
V	Volt
M	Metered
UM	Unmetered
NB	Neutral bus
GB	Ground bus
G	Equipment grounding conductor
N	Grounded conductor (Neutral)

External conductor
Conductor or bus
Tie point
Contactor coil
Contactor, Contact NO
Terminal blocks
Contactor, Contact NC
Enclosure bond
Grounding electrode
Circuit breaker
Receptacle

PULL BOXES

PROPOSED EXISTING

Pull box-No. 5 unless otherwise indicated or noted.

3 — 9A(21)

Pull box-Additional designations or descriptions

- 3 = No. 3½ pull box
- 5 = No. 5 pull box
- 6 = No. 6 pull box
- 7 = No. 7 (Ceiling pull box)
- 8 = No. 8 (Pendant soffit pull box)
- 9 = No. 9 pull box
- 9A = No. 9A pull box

- (C) = Communications pull box
- (E) = Pull box with extension
- (S) = Sprinkler control pull box
- (21) = Anchor bolts and conduit for future installation of Type 21 Standard
- (T) = Traffic pull box

VEHICLE DETECTORS

5 J 9 U

- U = Upper
- L = Lower
- Slot number in input file
- Input file (I or J)
- Phase

PROPOSED	EXISTING	
		Type A detector loop. Outline of sawcut shown.
		Type B detector loop. Outline of sawcut shown.
		Type C detector loop. Outline of sawcut shown.
		Type D detector loop. Outline of sawcut shown.
		Type E detector loop. Outline of sawcut shown.
		Type Q detector loop. Outline of sawcut shown.
		Magnetic detector
DH	dh	Detector handhole
		Microwave or video detection zone

STATE OF CALIFORNIA
DEPARTMENT OF TRANSPORTATION

ELECTRICAL SYSTEMS (SYMBOLS AND ABBREVIATIONS)

NO SCALE

RSP ES-1C DATED OCTOBER 5, 2007 SUPERCEDES STANDARD PLAN ES-1C DATED MAY 1, 2006 - PAGE 402 OF THE STANDARD PLANS BOOK DATED MAY 2006.

REVISED STANDARD PLAN RSP ES-1C

2006 REVISED STANDARD PLAN RSP ES-1C

DIST	COUNTY	ROUTE	POST MILES TOTAL PROJECT	SHEET NO.	TOTAL SHEETS
04	SCI	17	6.9/9.1	33	39

REGISTERED ELECTRICAL ENGINEER

October 5, 2007
PLANS APPROVAL DATE

REGISTERED PROFESSIONAL ENGINEER Jeffery G. McRae No. E14512 Exp. 6-30-08 ELECTRICAL STATE OF CALIFORNIA

The State of California or its officers or agents shall not be responsible for the accuracy or completeness of electronic copies of this plan sheet.

To accompany plans dated 7-26-10

LOOP INSTALLATION PROCEDURE

1. Loops shall be centered in lanes.
2. Saw slots in pavement for loop conductors as shown in details.
3. Distance between side of loop and a lead-in saw cut from adjacent detectors shall be 2'-0" minimum. Distance between lead-in saw cuts shall be 6" minimum.
4. Bottom of saw slot shall be smooth with no sharp edges.
5. Slots shall be washed until clean, blown out and thoroughly dried before installing loop conductors.
6. Adjacent loops on the same sensor unit channel shall be wound in opposite directions.
7. Identify and tag loop circuit pairs in the pull box with loop number, start (S) and finish (F) of conductor. Identify and tag lead-in-cable with sensor number and phase.
8. Install loop conductor in slot using a 3/16" to 1/4" thick wood paddle. Hold loop conductors with wood paddles (at the bottom of the sawed slot) during sealant placement.
9. No more than 2 twisted pairs shall be installed in one sawed slot.
10. Allow additional 5'-0" of slack length of conductor for the lead-in run to pull box.
11. The additional length of each conductor for each loop shall be twisted together into a pair (6 turns per 3'-4" minimum) before being placed in the slot and conduit leading to pull box.
12. Test each loop circuit for continuity, circuit resistance and insulation resistance at the pull box before filling slots.
13. Fill slots as shown in details.
14. Splice loop conductors to lead-in-cable. Splices shall be soldered.
15. End of lead-in-cable and Type 2 loop conductor shall be waterproofed prior to installing in conduit to prevent moisture from entering the cable.
16. Lead-in-cable shall not be spliced between the pull box and the controller cabinet terminals.
17. Test each loop circuit for continuity, circuit resistance and insulation resistance at the controller cabinet location.
18. Where loop conductors are not to be spliced to a lead-in-cable, the ends of the conductors shall be taped and waterproofed with electrical insulating coating.

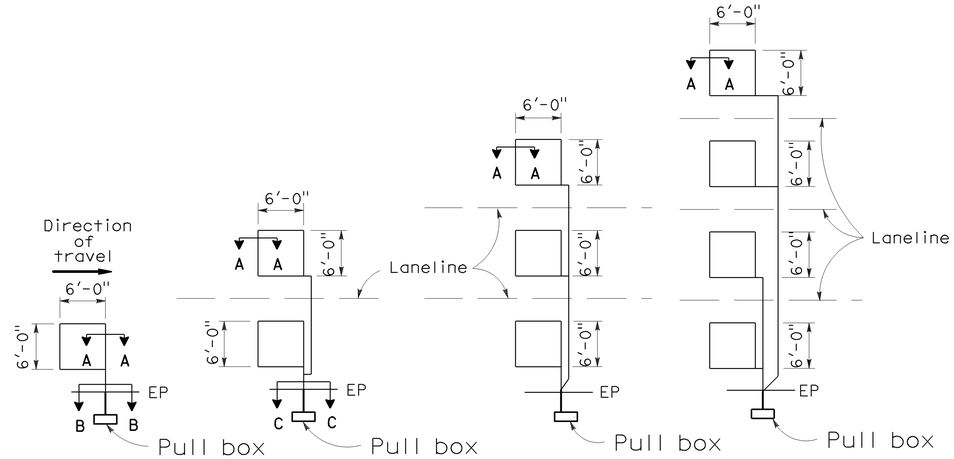

TYPE 1A INSTALLATION | TYPE 2A INSTALLATION | TYPE 3A INSTALLATION | TYPE 4A INSTALLATION

SAWCUT DETAILS

(Type A loop detector configurations illustrated)

1. 1A thru 4A = 1 Type A loop configuration in each lane.
2. 1B thru 4B = 1 Type B loop configuration in each lane.
3. 1C = 1 Type C loop configuration entering lanes as required.
4. 1D thru 4D = 1 Type D loop configuration in each lane.
5. 1E thru 4E = 1 Type E loop configuration in each lane.
6. 1Q thru 4Q = 1 Type Q loop configuration in each lane. (Use Type A, B, C, D, E or Q loop detector configurations only when specified or shown on plans)

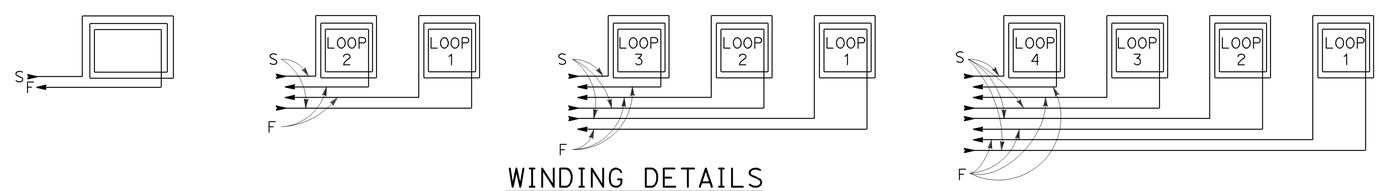

WINDING DETAILS

See Notes 6 and 7

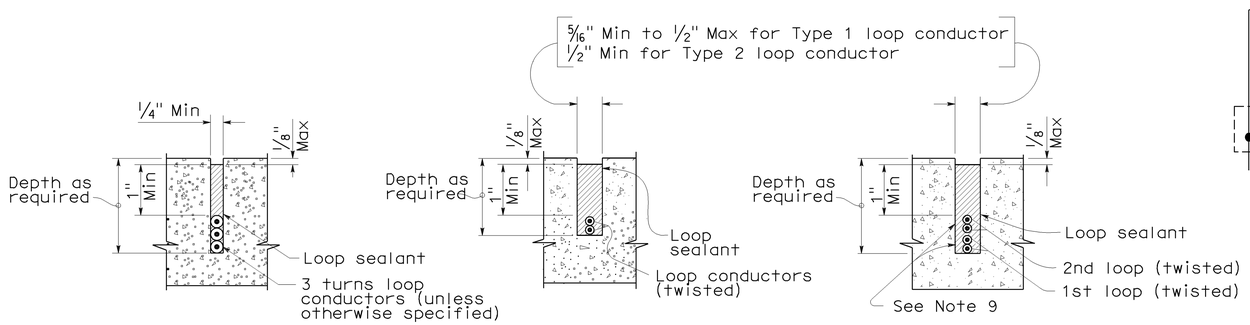

SECTION A-A | SECTION B-B | SECTION C-C

SLOT DETAILS - TYPE 1 AND TYPE 2 LOOP CONDUCTOR

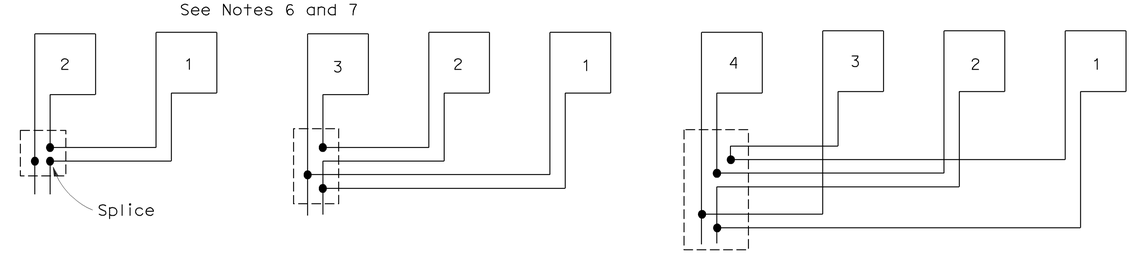

TYPICAL LOOP CONNECTIONS

(Dashed lines represent the pull box)

STATE OF CALIFORNIA
DEPARTMENT OF TRANSPORTATION

ELECTRICAL SYSTEMS (DETECTORS)

NO SCALE

RSP ES-5A DATED OCTOBER 5, 2007 SUPERCEDES STANDARD PLAN ES-5A DATED MAY 1, 2006 - PAGE 423 OF THE STANDARD PLANS BOOK DATED MAY 2006.

REVISED STANDARD PLAN RSP ES-5A

2006 REVISED STANDARD PLAN RSP ES-5A

8-17-07

DIST	COUNTY	ROUTE	POST MILES TOTAL PROJECT	SHEET NO.	TOTAL SHEETS
04	SCI	17	6.9/9.1	34	39

Randell D. Hiatt
REGISTERED CIVIL ENGINEER

October 20, 2006
PLANS APPROVAL DATE

REGISTERED PROFESSIONAL ENGINEER
Randell D. Hiatt
No. C50200
Exp. 6-30-07
CIVIL
STATE OF CALIFORNIA

The State of California or its officers or agents shall not be responsible for the accuracy or completeness of electronic copies of this plan sheet.

To accompany plans dated 7-26-10

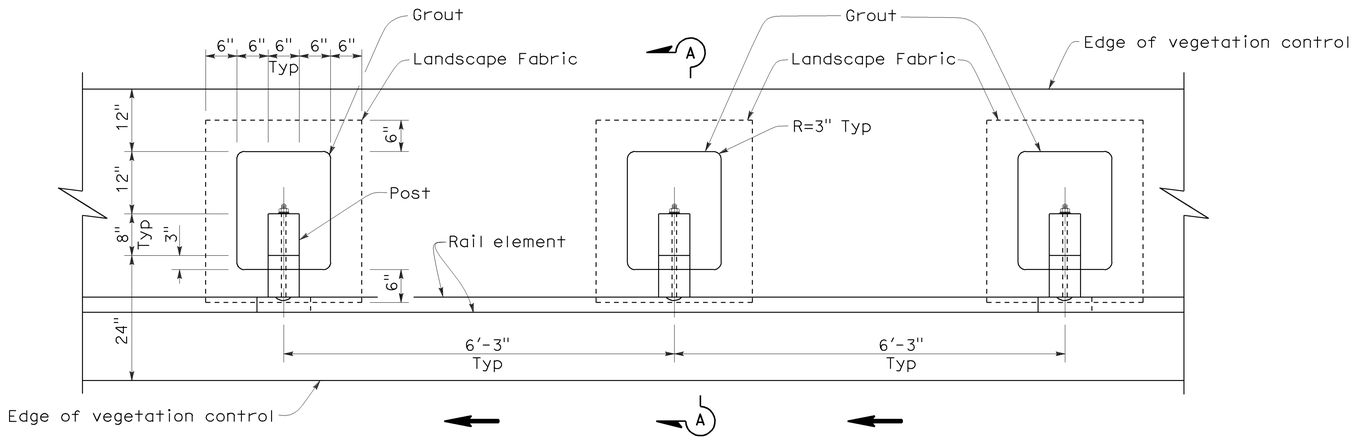

PLAN

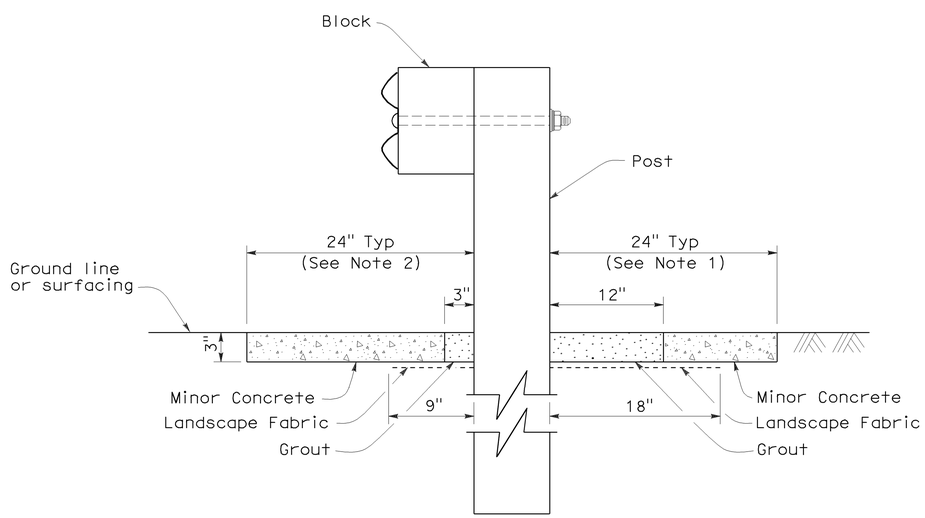

SECTION A-A

NOTES:

1. Where the distance between back of post and hinge point is less than 24", vegetation control to be constructed flush with the back edge of the post.
2. Where dike is constructed under railing, construct vegetation control to back edge of dike. Where paved shoulder is constructed within 24" in front of the post, construct vegetation control to the edge of paved shoulder.
3. Direction of adjacent traffic indicated by ← .

STATE OF CALIFORNIA
DEPARTMENT OF TRANSPORTATION

METAL BEAM GUARD RAILING TYPICAL VEGETATION CONTROL STANDARD RAILING SECTION

NO SCALE

NSP A77C5 DATED OCTOBER 20, 2006 SUPPLEMENTS THE STANDARD PLANS BOOK DATED MAY 2006.

NEW STANDARD PLAN NSP A77C5

2006 NEW STANDARD PLAN NSP A77C5

DIST	COUNTY	ROUTE	POST MILES TOTAL PROJECT	SHEET NO.	TOTAL SHEETS
04	SCI	17	6.9/9.1	35	39

Randell D. Hiatt
REGISTERED CIVIL ENGINEER

October 20, 2006
PLANS APPROVAL DATE

REGISTERED PROFESSIONAL ENGINEER
Randell D. Hiatt
No. C50200
Exp. 6-30-07
CIVIL
STATE OF CALIFORNIA

The State of California or its officers or agents shall not be responsible for the accuracy or completeness of electronic copies of this plan sheet.

To accompany plans dated 7-26-10

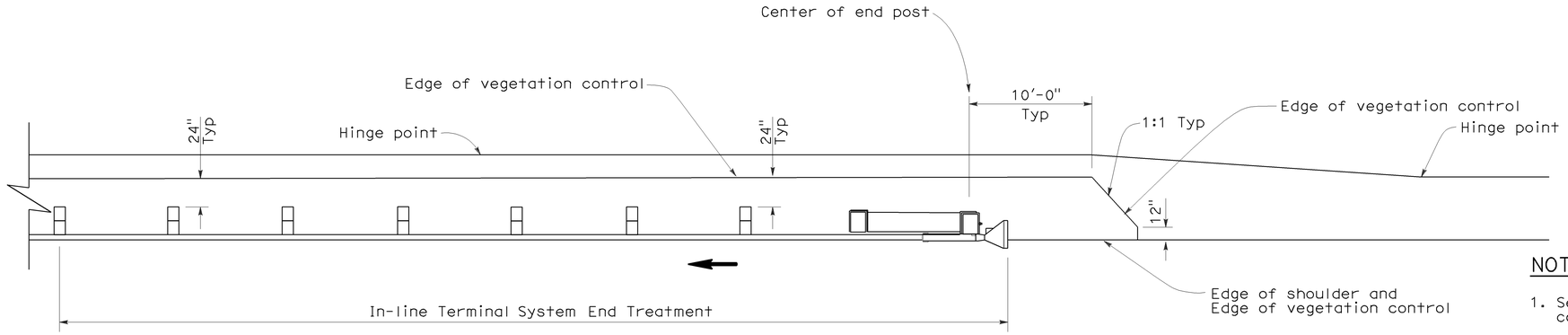

PLAN

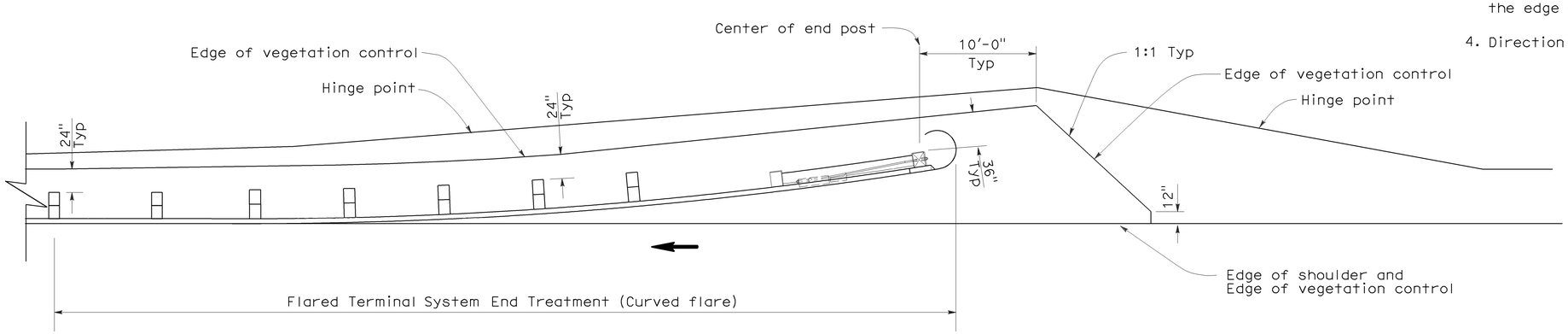

PLAN

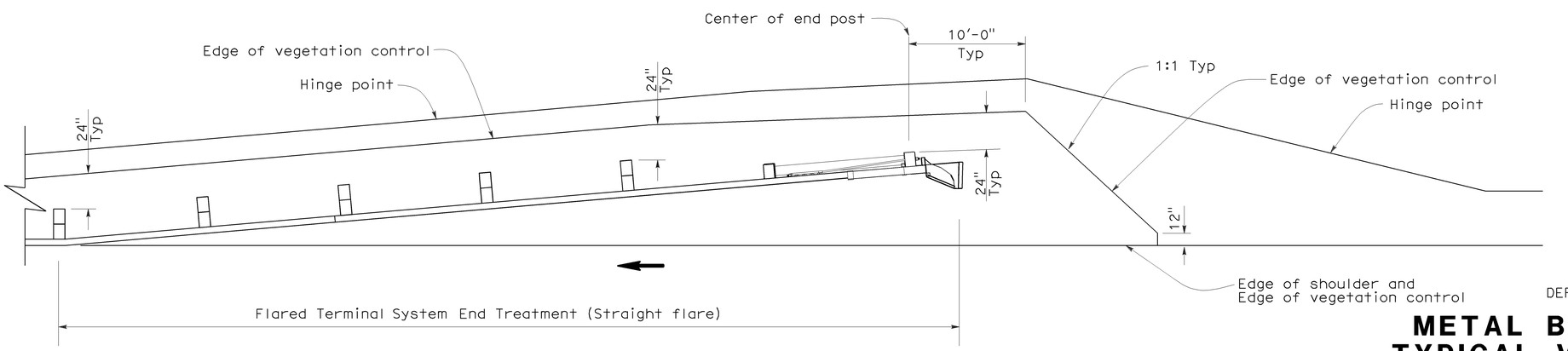

PLAN

NOTES:

1. See New Standard Plan NSP A77C5 for additional vegetation control details.
2. Where the distance between back of post and hinge point is less than 24", vegetation control to be constructed flush with the back edge of the post.
3. Where dike is constructed under railing, construct vegetation control to back edge of dike. Where paved shoulder is constructed within 24" in front of the post, construct vegetation control to the edge of paved shoulder.
4. Direction of adjacent traffic indicated by ←.

STATE OF CALIFORNIA
DEPARTMENT OF TRANSPORTATION

METAL BEAM GUARD RAILING TYPICAL VEGETATION CONTROL FOR TERMINAL SYSTEM END TREATMENTS

NO SCALE

NSP A77C6 DATED OCTOBER 20, 2006 SUPPLEMENTS THE STANDARD PLANS BOOK DATED MAY 2006.

NEW STANDARD PLAN NSP A77C6

2006 NEW STANDARD PLAN NSP A77C6

7-17-06

DIST	COUNTY	ROUTE	POST MILES TOTAL PROJECT	SHEET NO.	TOTAL SHEETS
04	SCI	17	6.9/9.1	36	39

Randell D. Hiatt
REGISTERED CIVIL ENGINEER

October 20, 2006
PLANS APPROVAL DATE

REGISTERED PROFESSIONAL ENGINEER
Randell D. Hiatt
No. C50200
Exp. 6-30-07
CIVIL
STATE OF CALIFORNIA

The State of California or its officers or agents shall not be responsible for the accuracy or completeness of electronic copies of this plan sheet.

To accompany plans dated 7-26-10

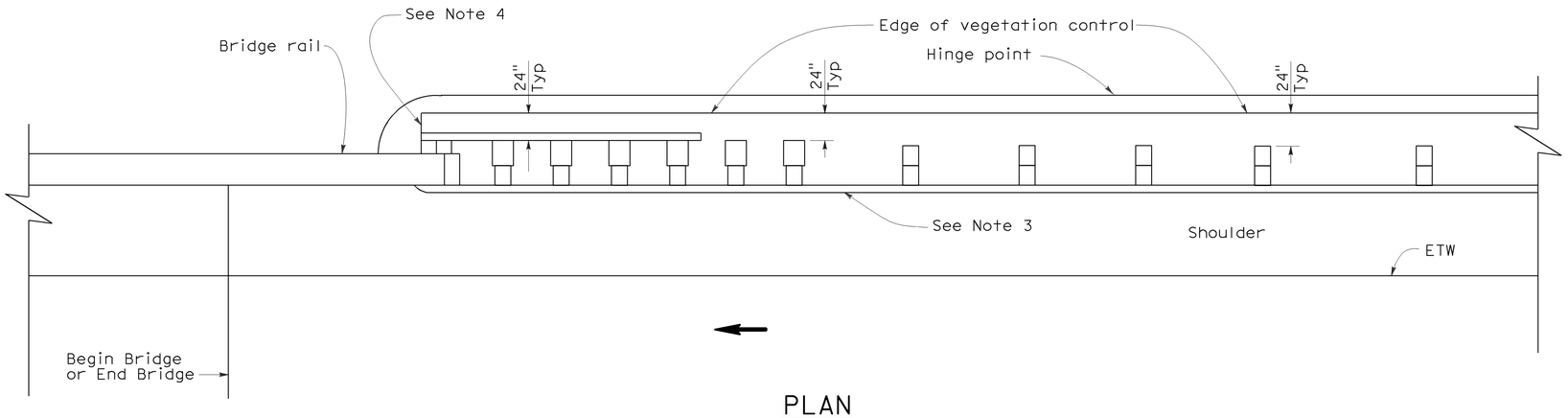

PLAN

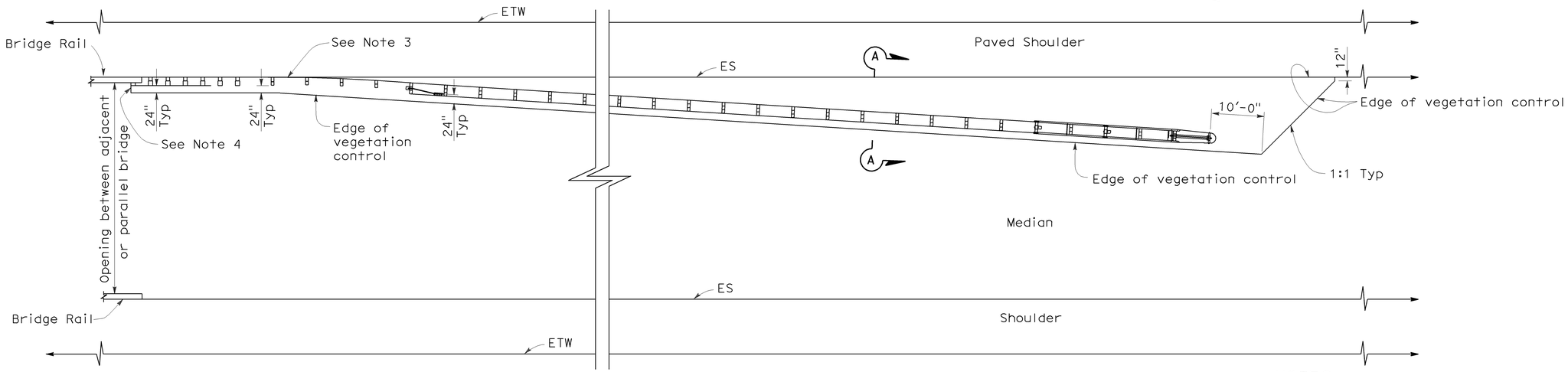

PLAN

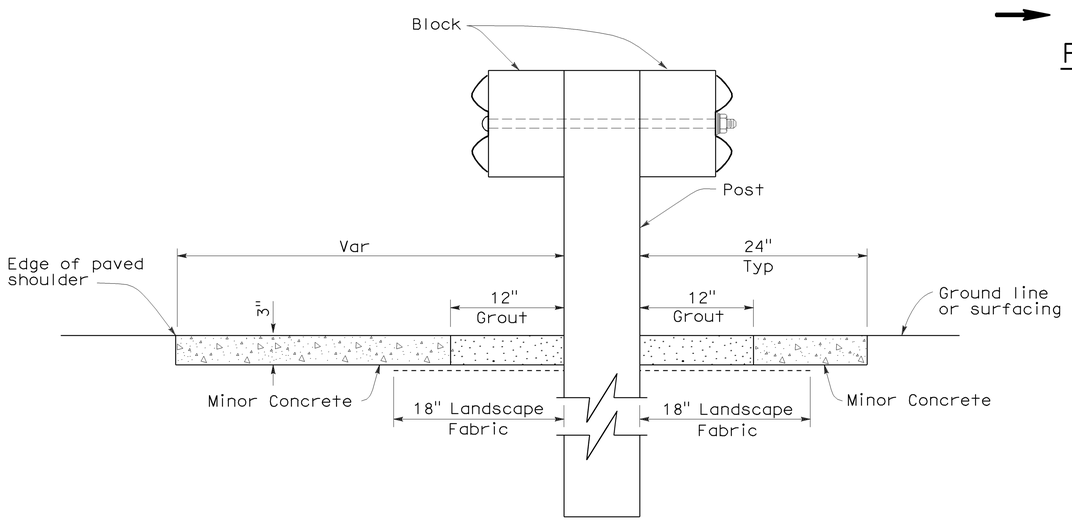

SECTION A-A

NOTES:

1. See New Standard Plan NSP A77C5 for additional vegetation control details.
2. Where the distance between back of post and hinge point is less than 24", vegetation control to be constructed flush with the back edge of the post.
3. Where dike is constructed under railing, construct vegetation control to back edge of dike. Where paved shoulder is constructed within 24" in front of the post, construct vegetation control to the edge of paved shoulder.
4. End vegetation control at end of backside rail element.
5. Direction of adjacent traffic indicated by ←.

STATE OF CALIFORNIA
DEPARTMENT OF TRANSPORTATION

METAL BEAM GUARD RAILING TYPICAL VEGETATION CONTROL AT STRUCTURE APPROACH AND DEPARTURE

NO SCALE

NSP A77C7 DATED OCTOBER 20, 2006 SUPPLEMENTS THE STANDARD PLANS BOOK DATED MAY 2006.

NEW STANDARD PLAN NSP A77C7

2006 NEW STANDARD PLAN NSP A77C7

7-17-06

DIST	COUNTY	ROUTE	POST MILES TOTAL PROJECT	SHEET NO.	TOTAL SHEETS
04	SCI	17	6.9/9.1	37	39

Randell D. Hiatt
REGISTERED CIVIL ENGINEER

October 20, 2006
PLANS APPROVAL DATE

REGISTERED PROFESSIONAL ENGINEER
Randell D. Hiatt
No. C50200
Exp. 6-30-07
CIVIL
STATE OF CALIFORNIA

The State of California or its officers or agents shall not be responsible for the accuracy or completeness of electronic copies of this plan sheet.

To accompany plans dated 7-26-10

NOTES:

1. See New Standard Plan NSP A77C5 for additional vegetation control details.
2. Where the distance between back of post and hinge point is less than 24", vegetation control to be constructed flush with the back edge of the post.
3. Where dike is constructed under railing, construct vegetation control to back edge of dike. Where paved shoulder is constructed within 24" in front of the post, construct vegetation control to the edge of paved shoulder.
4. Direction of adjacent traffic indicated by ←.

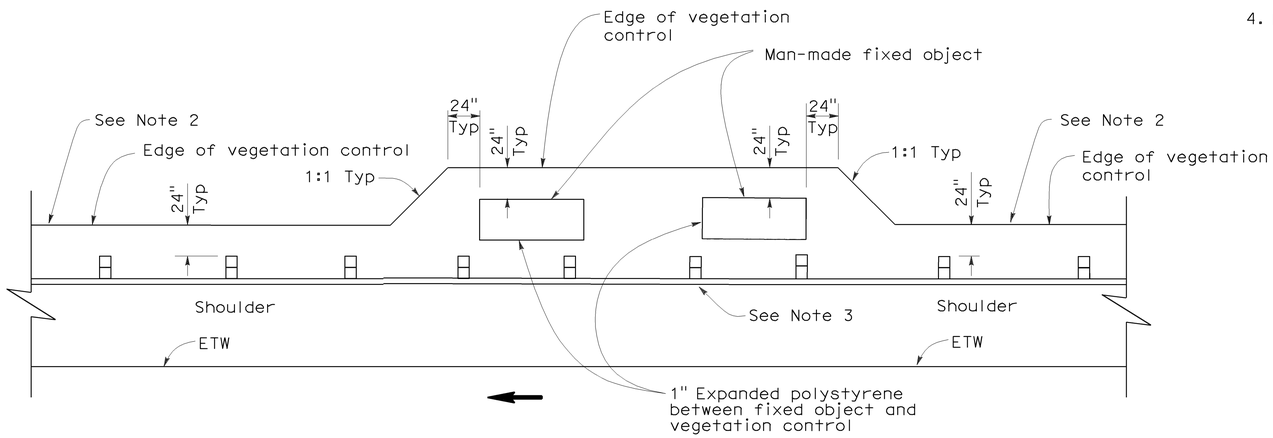

PLAN

FIXED OBJECT(S) ON SHOULDER

STATE OF CALIFORNIA
DEPARTMENT OF TRANSPORTATION

METAL BEAM GUARD RAILING TYPICAL VEGETATION CONTROL AT FIXED OBJECT

NO SCALE

NSP A77C8 DATED OCTOBER 20, 2006 SUPPLEMENTS THE STANDARD PLANS BOOK DATED MAY 2006.

NEW STANDARD PLAN NSP A77C8

2006 NEW STANDARD PLAN NSP A77C8

7-17-06

DIST	COUNTY	ROUTE	POST MILES TOTAL PROJECT	SHEET NO.	TOTAL SHEETS
04	SCI	17	6.9/9.1	38	39

Randell D. Hiatt
REGISTERED CIVIL ENGINEER

October 20, 2006
PLANS APPROVAL DATE

REGISTERED PROFESSIONAL ENGINEER
Randell D. Hiatt
No. C50200
Exp. 6-30-07
CIVIL
STATE OF CALIFORNIA

The State of California or its officers or agents shall not be responsible for the accuracy or completeness of electronic copies of this plan sheet.

To accompany plans dated 7-26-10

NOTES:

1. See New Standard Plan NSP A77C5 for additional vegetation control details.
2. Where dike is constructed under railing, construct vegetation control to back edge of dike. Where paved shoulder is constructed within 24" in front of the post, construct vegetation control to the edge of paved shoulder.
3. Direction of adjacent traffic indicated by ← .

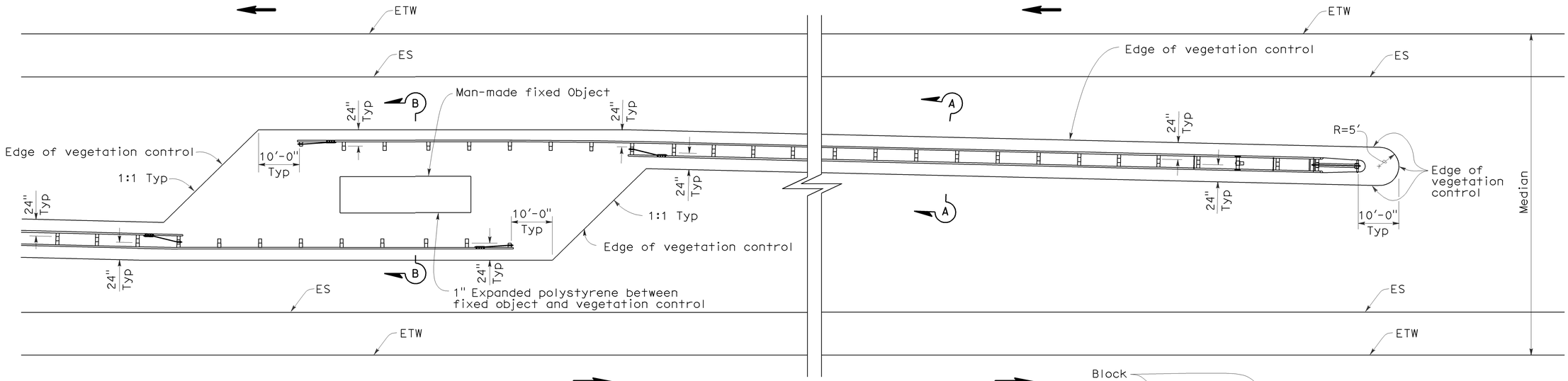

PLAN

FIXED OBJECT(S) IN MEDIAN

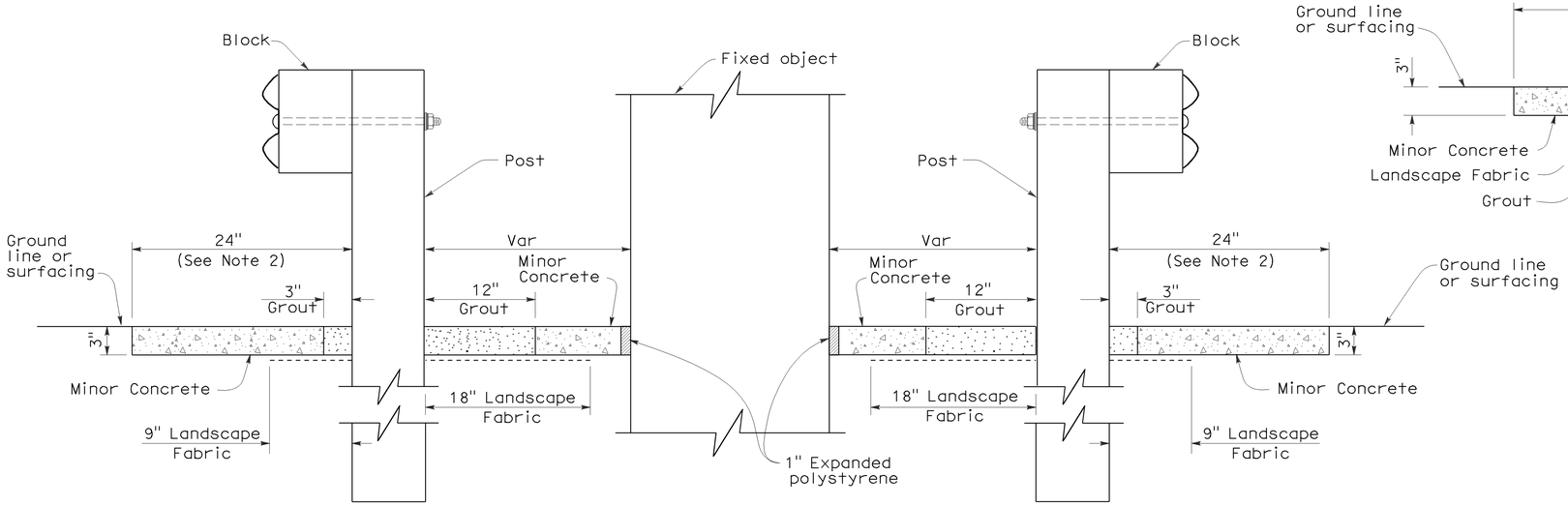

SECTION B-B

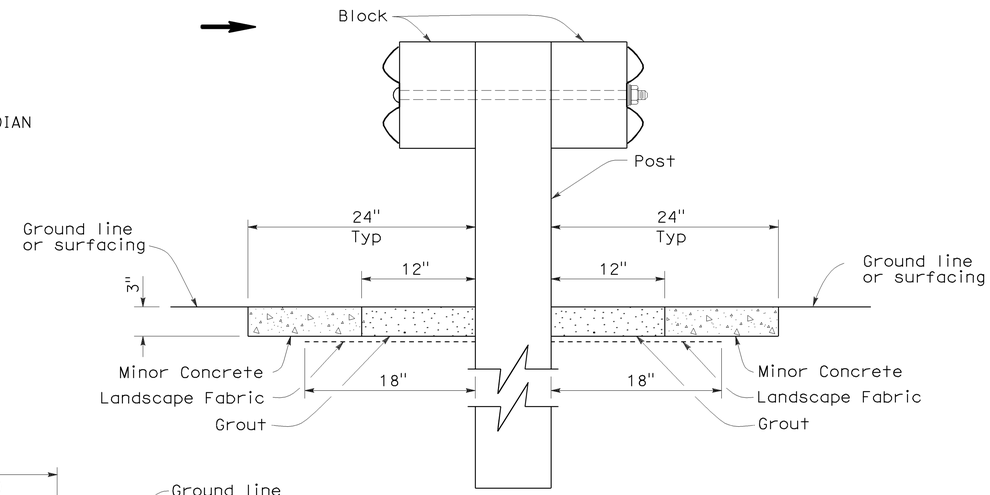

SECTION A-A

STATE OF CALIFORNIA
DEPARTMENT OF TRANSPORTATION

METAL BEAM GUARD RAILING TYPICAL VEGETATION CONTROL AT FIXED OBJECT

NO SCALE

NSP A77C9 DATED OCTOBER 20, 2006 SUPPLEMENTS THE STANDARD PLANS BOOK DATED MAY 2006.

NEW STANDARD PLAN NSP A77C9

2006 NEW STANDARD PLAN NSP A77C9

7-17-06

DIST	COUNTY	ROUTE	POST MILES TOTAL PROJECT	SHEET NO.	TOTAL SHEETS
04	SCI	17	6.9/9.1	39	39

Randell D. Hiatt
REGISTERED CIVIL ENGINEER

October 20, 2006
PLANS APPROVAL DATE

REGISTERED PROFESSIONAL ENGINEER
Randell D. Hiatt
No. C50200
Exp. 6-30-07
CIVIL
STATE OF CALIFORNIA

The State of California or its officers or agents shall not be responsible for the accuracy or completeness of electronic copies of this plan sheet.

To accompany plans dated 7-26-10

NOTES:

1. See New Standard Plan NSP A77C5 for additional vegetation control details.
2. Where dike is constructed under railing, construct vegetation control to back edge of dike. Where paved shoulder is constructed within 24" in front of the post, construct vegetation control to the edge of paved shoulder.
3. Direction of adjacent traffic indicated by ←.

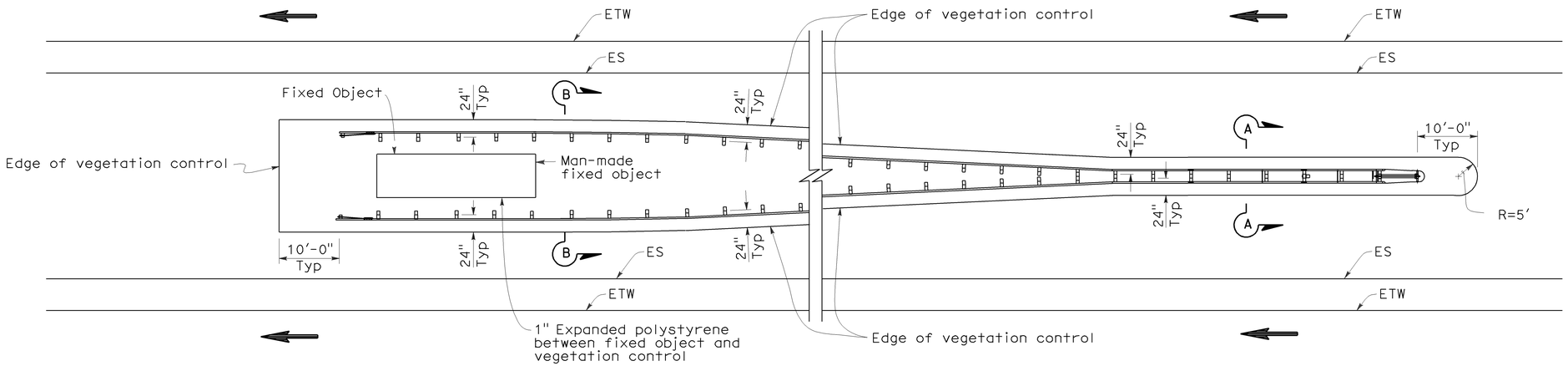

PLAN

FIXED OBJECT(S) BETWEEN SEPARATE ROADBEDS
(ONE-WAY TRAFFIC)

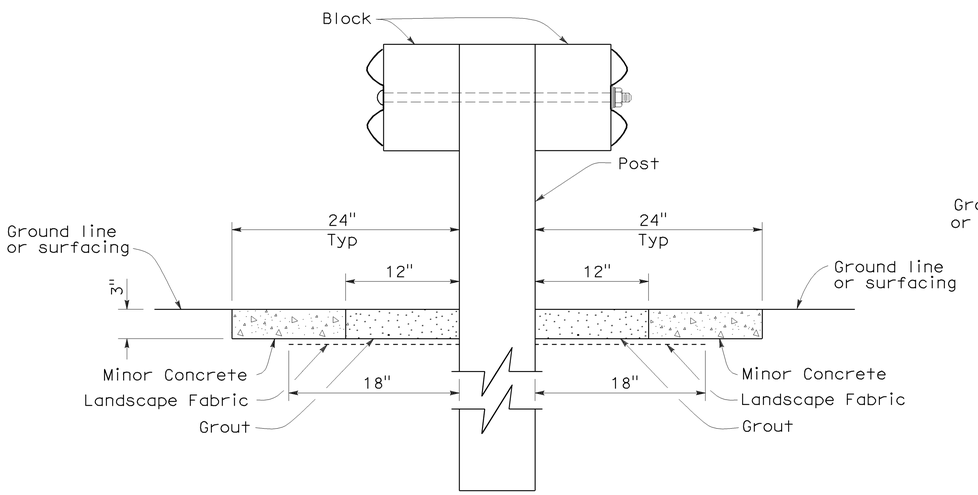

SECTION A-A

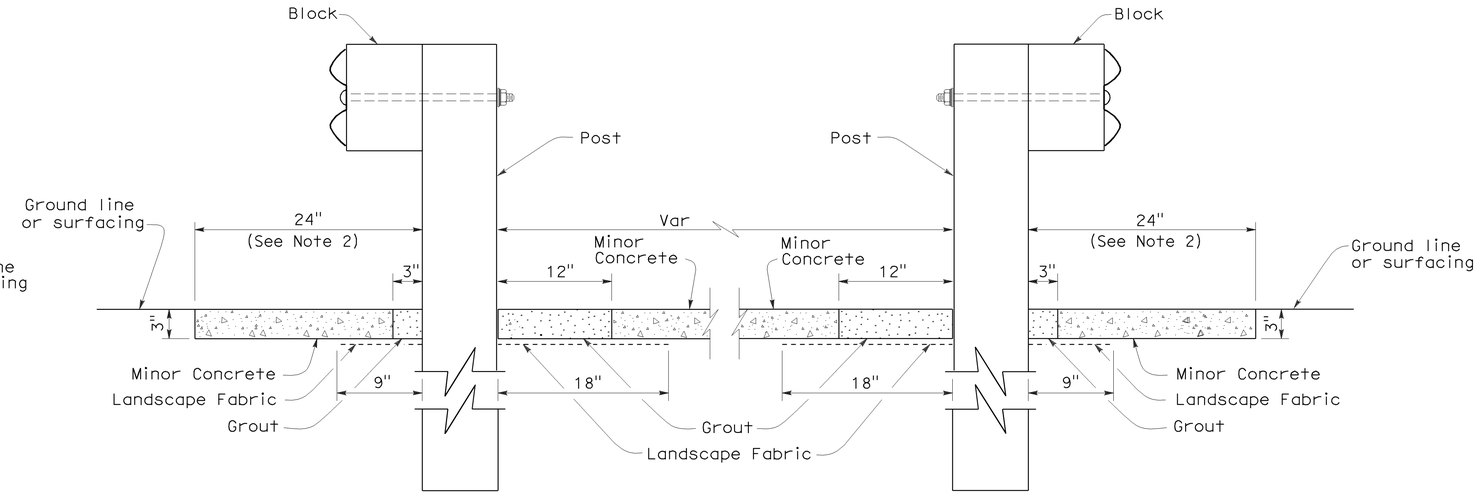

SECTION B-B

STATE OF CALIFORNIA
DEPARTMENT OF TRANSPORTATION

METAL BEAM GUARD RAILING TYPICAL VEGETATION CONTROL AT FIXED OBJECT

NO SCALE

NSP A77C10 DATED OCTOBER 20, 2006 SUPPLEMENTS THE STANDARD PLANS BOOK DATED MAY 2006.

NEW STANDARD PLAN NSP A77C10

2006 NEW STANDARD PLAN NSP A77C10

7-17-06