Dist	COUNTY	ROUTE	POST MILES TOTAL PROJECT	SHEET No.	TOTAL SHEETS
04	Ala,CC	24,260	R5.9/R6.2, R0.0/R0.5,R0.9/R1.9	1	100

INDEX OF PLANS

SHEET No.	DESCRIPTION
1	TITLE AND LOCATION MAP
2	CONSTRUCTION AREA SIGNS
3-5	REVISED STANDARD PLANS
STRUCTURE PLANS	
6	INDEX OF STRUCTURAL PLANS
7-12	STRUCTURAL PLANS
13-25	MECHANICAL PLANS
26-100	ELECTRICAL PLANS

THE STANDARD PLANS LIST APPLICABLE TO THIS CONTRACT IS INCLUDED IN THE NOTICE TO BIDDERS AND SPECIAL PROVISIONS BOOK.

STATE OF CALIFORNIA

DEPARTMENT OF TRANSPORTATION

PROJECT PLANS FOR CONSTRUCTION ON

STATE HIGHWAY

IN ALAMEDA AND CONTRA COSTA COUNTIES IN AND NEAR ALAMEDA AND OAKLAND ON ROUTE 24 AT CALDECOTT TUNNEL AND ON ROUTE 260 AT POSEY/WEBSTER STREET TUBES

TO BE SUPPLEMENTED BY STANDARD PLANS DATED MAY 2006

LOCATION MAP

LOCATION OF CONSTRUCTION
CALDECOTT TUNNEL
PM R6.2 (ALAMEDA COUNTY)
PM R0.0 (CONTRA COSTA COUNTY)

Begin Work
PM R5.9

End Work
PM R0.5

LOCATION OF CONSTRUCTION
POSEY/WEBSTER STREET TUBES
PM R1.5

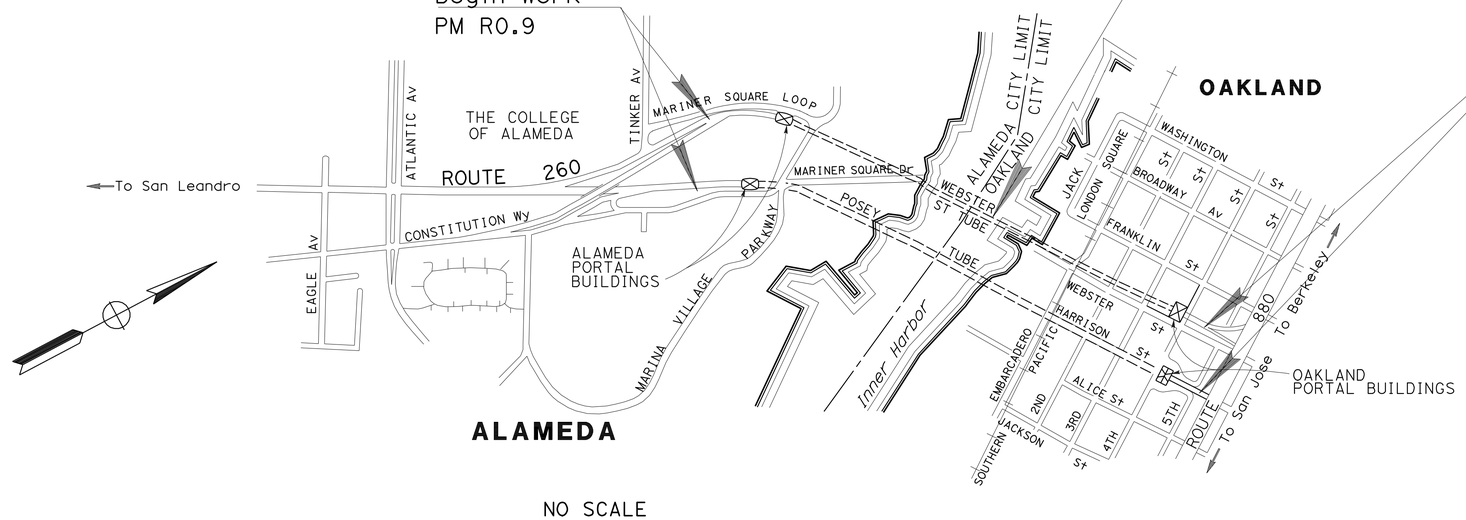

NO SCALE

THE CONTRACTOR SHALL POSSESS THE CLASS (OR CLASSES) OF LICENSE AS SPECIFIED IN THE "NOTICE TO BIDDERS."

PROJECT MANAGER: LAWRENCE JONES

DESIGN ENGINEER: ADRIAN CUSTODIO

Adrian S. Custodio 08-27-08
PROJECT ENGINEER — DATE
REGISTERED CIVIL ENGINEER

REGISTERED PROFESSIONAL ENGINEER — A.S. Custodio No. 46570 Exp. 6-30-09 CIVIL — STATE OF CALIFORNIA

November 24, 2008
PLANS APPROVAL DATE

THE STATE OF CALIFORNIA OR ITS OFFICERS OR AGENTS SHALL NOT BE RESPONSIBLE FOR THE ACCURACY OR COMPLETENESS OF SCANNED COPIES OF THIS PLAN SHEET.

CONTRACT No. **04-1A4604**

LAST REVISION 08-28-08 — DATE PLOTTED => 26-NOV-2008 TIME PLOTTED => 07:30

Dist	COUNTY	ROUTE	POST MILES TOTAL PROJECT	SHEET No.	TOTAL SHEETS
04	Ala,CC	24,260	R5.9/R6.2, R0.0/R0.5,R0.9/R1.9	2	100

REGISTERED CIVIL ENGINEER 8-28-08 DATE

11-24-08
PLANS APPROVAL DATE

REGISTERED PROFESSIONAL ENGINEER Florante P. Perez No. 41030 Exp. 3-31-09 CIVIL STATE OF CALIFORNIA

THE STATE OF CALIFORNIA OR ITS OFFICERS OR AGENTS SHALL NOT BE RESPONSIBLE FOR THE ACCURACY OR COMPLETENESS OF ELECTRONIC COPIES OF THIS PLAN SHEET.

NOTE:

LOCATION OF CONSTRUCTION AREA SIGNS SHOWN ARE APPROXIMATE, EXACT LOCATION TO BE DETERMINED BY THE ENGINEER.

LEGEND:

[ ] CONSTRUCTION AREA SIGN LETTER

(S) DENOTES STATIONARY MOUNTED SIGNS

CONSTRUCTION AREA SIGNS

SIGN No.	MUTCO CODE	MESSAGE	PANEL SIZE	NUMBER OF POST AND SIZE	QUANTITY	REMARKS
A	W20-1	ROAD WORK AHEAD	48" x 48"	(TWO) 4'' x 6''	4	(S)
B	G20-2	END ROAD WORK	36" x 18"	(TWO) 4'' x 4''	3	(S)

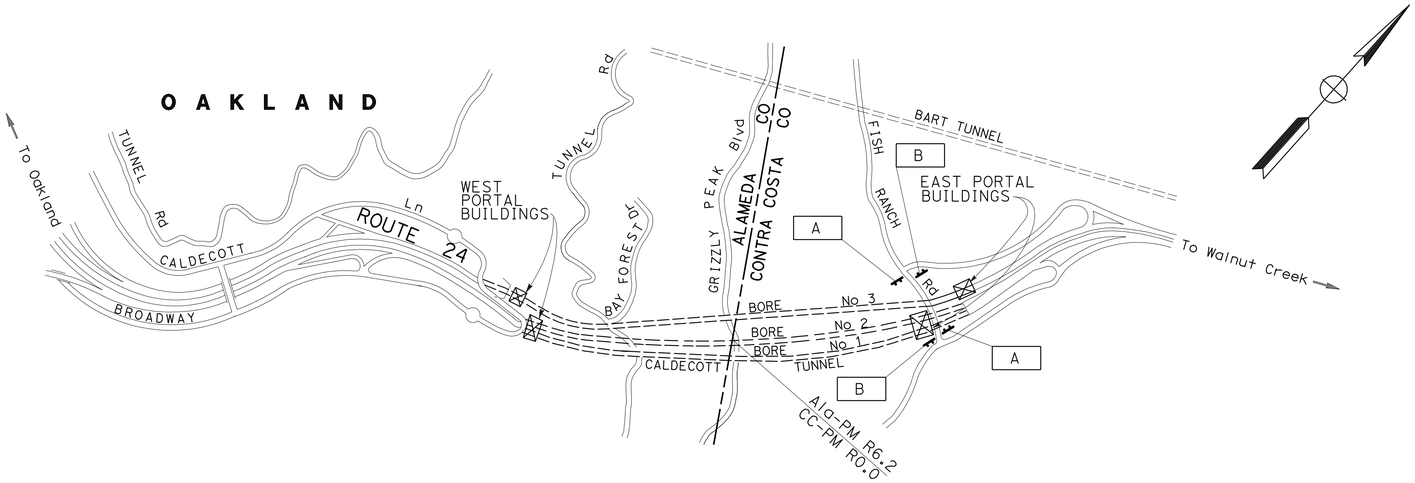

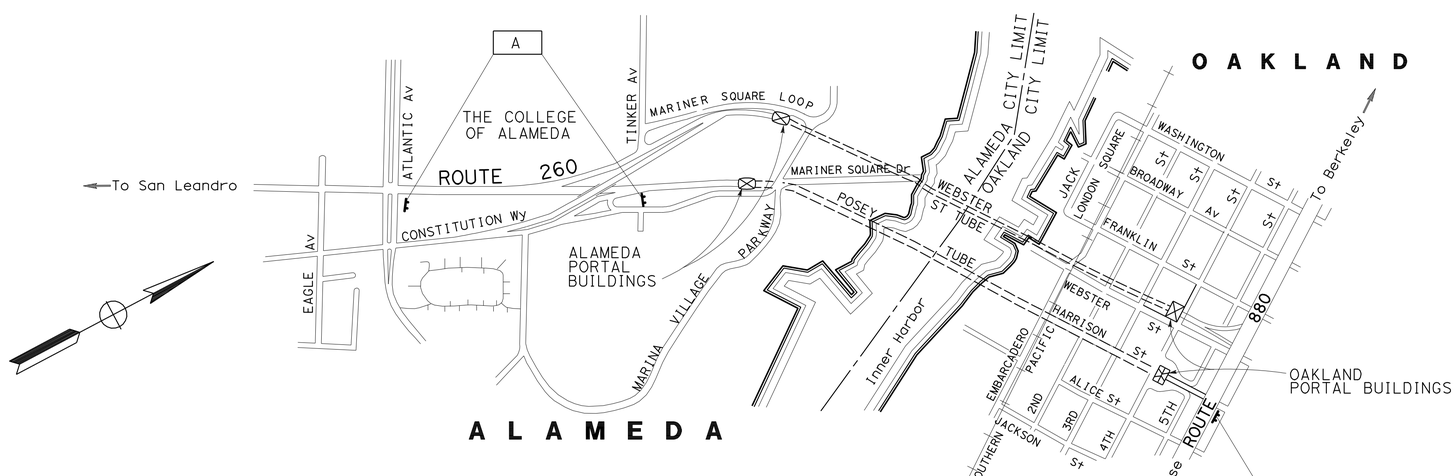

THIS PLAN ACCURATE FOR CONSTRUCTION AREA SIGN WORK ONLY

CONSTRUCTION AREA SIGNS

NO SCALE

CS-1

RN	8/28/08
REVISED BY	DATE REVISED
RAMON N. CRUZ	
FLOR PEREZ	
CALCULATED-DESIGNED BY	
CHECKED BY	
FUNCTIONAL SUPERVISOR	
LAWRENCE A JONES	

STATE OF CALIFORNIA - DEPARTMENT OF TRANSPORTATION

Caltrans TRAFFIC

LAST REVISION 08-28-08 | DATE PLOTTED => 26-NOV-2008 | TIME PLOTTED => 07:31

DIST	COUNTY	ROUTE	POST MILES TOTAL PROJECT	SHEET NO.	TOTAL SHEETS
04	Ala,CC	24,260	R5.9/R6.2, R0.0/R0.5,R0.9/R1.9	3	100

Randell D. Hiatt
REGISTERED CIVIL ENGINEER

June 6, 2008
PLANS APPROVAL DATE

REGISTERED PROFESSIONAL ENGINEER
Randell D. Hiatt
No. C50200
Exp. 6-30-09
CIVIL
STATE OF CALIFORNIA

The State of California or its officers or agents shall not be responsible for the accuracy or completeness of electronic copies of this plan sheet.

To accompany plans dated 11-24-08

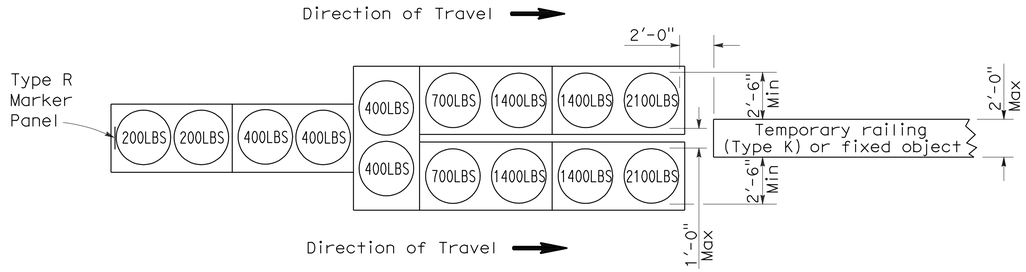

ARRAY `TU14'

Approach speed 45 mph or more

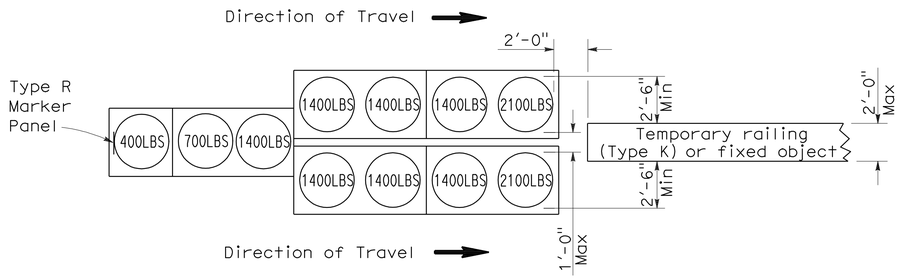

ARRAY `TU11'

Approach speed less than 45 mph

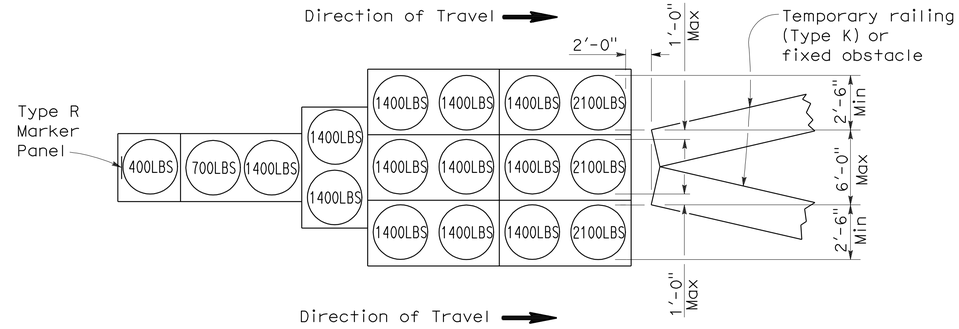

ARRAY `TU17'

Approach speed less than 45 mph

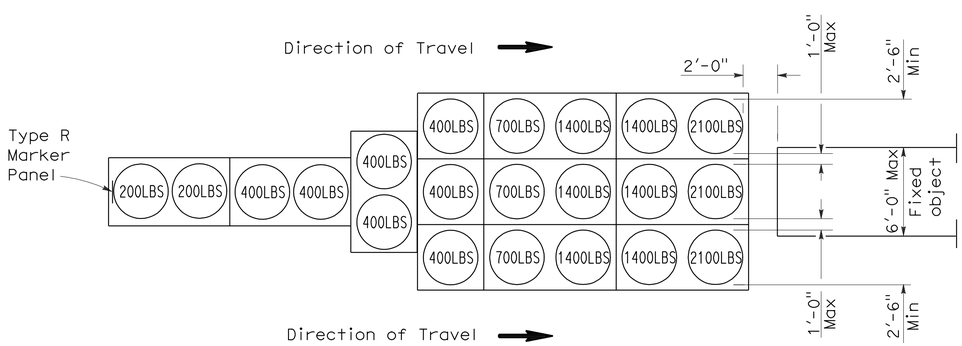

ARRAY `TU21'

Approach speed 45 mph or more

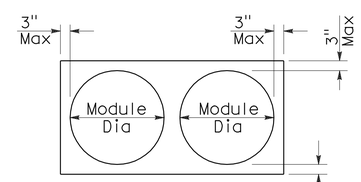

PLAN

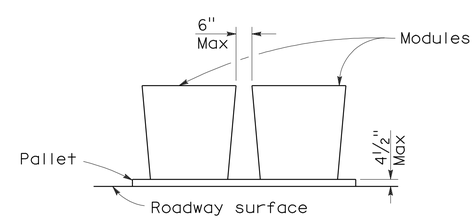

ELEVATION

CRASH CUSHION PALLET DETAIL

See Note 7

NOTES:

1. (XXX) Indicates sand filled module location and weight of sand in pounds for each module. Module spacing is based on the greater diameter of the module.
2. All sand weights are nominal.
3. Temporary crash cushion arrays shall not encroach on the traveled way.
4. Place the top of Type R marker panel 1" below the module lid.
5. Refer to Standard Plan A73B for marker details.
6. Approach speeds indicated conform to NCHRP 350 Report criteria.
7. Use of pallets is optional.

STATE OF CALIFORNIA
DEPARTMENT OF TRANSPORTATION

TEMPORARY CRASH CUSHION, SAND FILLED (UNIDIRECTIONAL)

NO SCALE

RSP T1A DATED JUNE 6, 2008 SUPERSEDES STANDARD PLAN T1A
DATED MAY 1, 2006 - PAGE 211 OF THE STANDARD PLANS BOOK DATED MAY 2006.

REVISED STANDARD PLAN RSP T1A

2006 REVISED STANDARD PLAN RSP T1A

DIST	COUNTY	ROUTE	POST MILES TOTAL PROJECT	SHEET NO.	TOTAL SHEETS
04	Ala,CC	24,260	R5.9/R6.2, R0.0/R0.5,R0.9/R1.9	4	100

Randell D. Hiatt
REGISTERED CIVIL ENGINEER

June 6, 2008
PLANS APPROVAL DATE

REGISTERED PROFESSIONAL ENGINEER
Randell D. Hiatt
No. C50200
Exp. 6-30-09
CIVIL
STATE OF CALIFORNIA

The State of California or its officers or agents shall not be responsible for the accuracy or completeness of electronic copies of this plan sheet.

To accompany plans dated 11-24-08

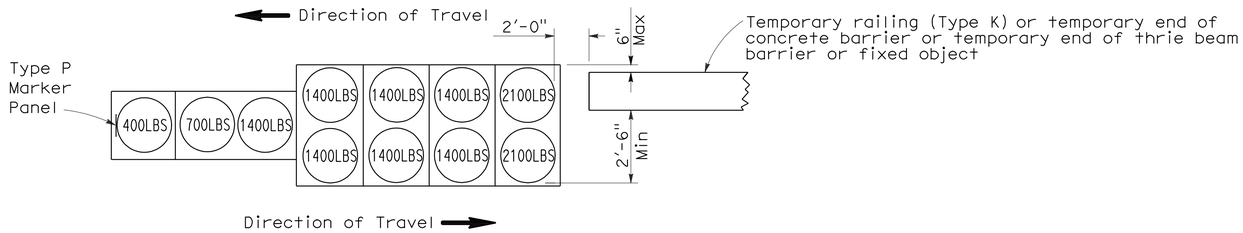

ARRAY 'TB11'

Approach speed less than 45 mph

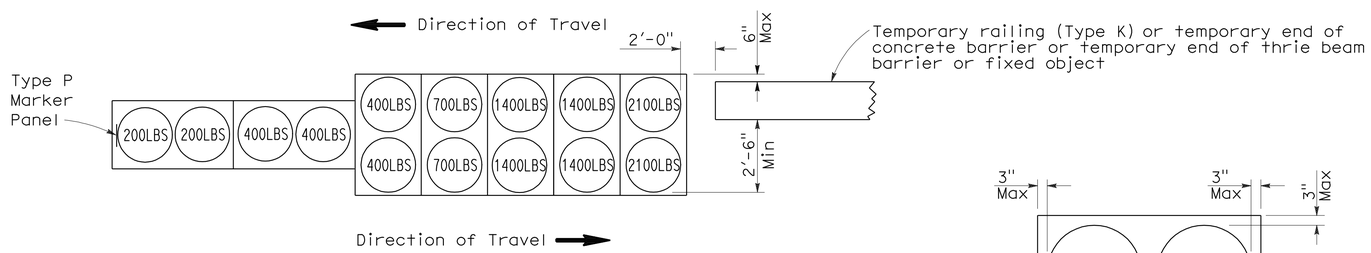

ARRAY 'TB14'

Approach speed 45 mph or more

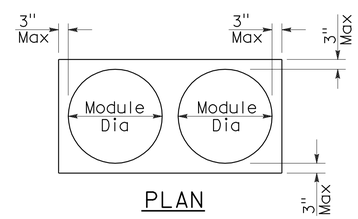

PLAN

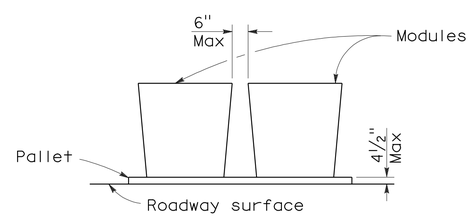

ELEVATION

CRASH CUSHION PALLET DETAIL

See Note 7

NOTES:

1. (XXX) Indicates sand filled module location and weight of sand in pounds for each module. Module spacing is based on the greater diameter of the module.
2. All sand weights are nominal.
3. Temporary crash cushion arrays shall not encroach on the traveled way.
4. Place the Type P marker panel so that the bottom of the panel rests upon the pallet.
5. Refer to Standard Plan A73B for marker details.
6. Approach speeds indicated conform to NCHRP 350 Report criteria.
7. Use of pallets is optional.

STATE OF CALIFORNIA
DEPARTMENT OF TRANSPORTATION

TEMPORARY CRASH CUSHION, SAND FILLED (BIDIRECTIONAL)

NO SCALE

RSP T1B DATED JUNE 6, 2008 SUPERSEDES STANDARD PLAN T1B
DATED MAY 1, 2006 - PAGE 212 OF THE STANDARD PLANS BOOK DATED MAY 2006.

REVISED STANDARD PLAN RSP T1B

2006 REVISED STANDARD PLAN RSP T1B

5-15-08

DIST	COUNTY	ROUTE	POST MILES TOTAL PROJECT	SHEET NO.	TOTAL SHEETS
04	Ala,CC	24,260	R5.9/R6.2, R0.0/R0.5,R0.9/R1.9	5	100

Randell D. Hiatt
REGISTERED CIVIL ENGINEER

June 6, 2008
PLANS APPROVAL DATE

REGISTERED PROFESSIONAL ENGINEER
Randell D. Hiatt
No. C50200
Exp. 6-30-09
CIVIL
STATE OF CALIFORNIA

The State of California or its officers or agents shall not be responsible for the accuracy or completeness of electronic copies of this plan sheet.

To accompany plans dated 11-24-08

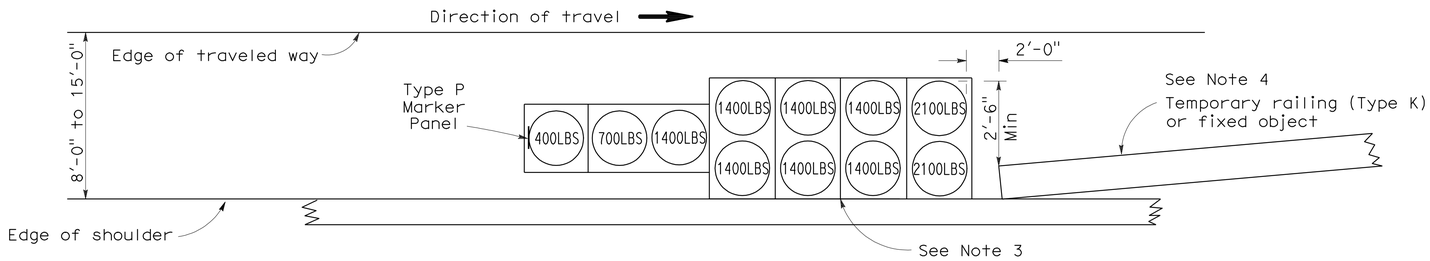

ARRAY 'TS11'

Approach speed less than 45 mph
See Note 9

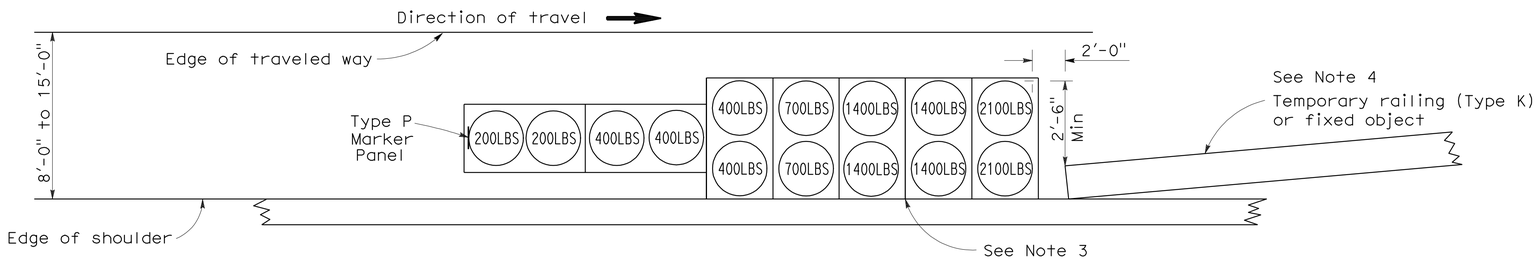

ARRAY 'TS14'

Approach speed 45 mph or more
See Note 9

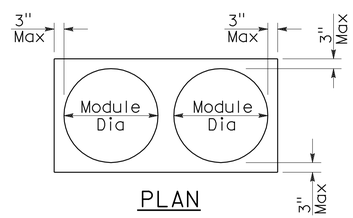

PLAN

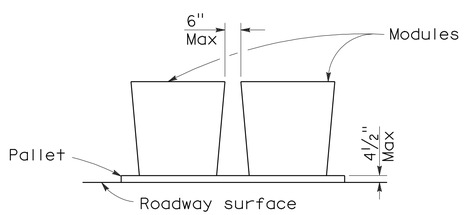

ELEVATION

CRASH CUSHION PALLET DETAIL

See Note 11

NOTES:

1. (XXX) Indicates sand filled module location and weight of sand in pounds for each module. Module spacing is based on the greater diameter of the module.
2. All sand weights are nominal.
3. The temporary crash cushion arrays shown on this plan shall be used only in locations where there will be traffic on one side of the temporary crash cushion array.
4. If the fixed object or approach end of the temporary railing is less than 15'-0" from the edge of traveled way, a temporary crash cushion is required in a construction or work zone.
5. Temporary crash cushion arrays shall not encroach on the traveled way.
6. Arrays for median shoulders shall conform to details shown on this plan for outside shoulders.
7. Place the Type P marker panel so that the bottom of the panel rests upon the pallet and faces traffic.
8. Refer to Standard Plan A73B for marker details.
9. For shoulder widths less than 8'-0", appropriate approved crash cushion protection, other than sand filled modules, shall be provided at fixed objects and at approach ends of temporary railing. The specific type of crash cushion shall be as shown on the project plans or as specified in the Special Provisions, or if not shown on the project plans or specified in the Special Provisions, shall be as approved by the Engineer.
10. Approach speeds indicated conform to NCHRP 350 Report criteria.
11. Use of pallets is optional.

STATE OF CALIFORNIA
DEPARTMENT OF TRANSPORTATION

TEMPORARY CRASH CUSHION, SAND FILLED (SHOULDER INSTALLATIONS)

NO SCALE

RSP T2 DATED JUNE 6, 2008 SUPERSEDES STANDARD PLAN T2
DATED MAY 1, 2006 - PAGE 213 OF THE STANDARD PLANS BOOK DATED MAY 2006.

REVISED STANDARD PLAN RSP T2

2006 REVISED STANDARD PLAN RSP T2

5-15-08

DIST.	COUNTY	ROUTE	POST MILES TOTAL PROJECT	SHEET NO.	TOTAL SHEETS
04	Ala,CC	24,260	R5.9/R6.2, R0.0/R0.5,R0.9/R1.9	6	100

REGISTERED ELECTRICAL ENGINEER — 02-26-08 DATE

REGISTERED PROFESSIONAL ENGINEER ROBERT J. FEE No. E-13014 Exp. 6/30/09 ELEC STATE OF CALIFORNIA

11-24-08
PLANS APPROVAL DATE

The State of California or its officers or agents shall not be responsible for the accuracy or completeness of electronic copies of this plan sheet.

STV Incorporated
9130 Anaheim Place, Suite 210
Rancho Cucamonga, CA 91730

INDEX OF DRAWINGS

SHEET No. DESCRIPTION

GENERAL

TITLE SHEET

GP-1 INDEX OF DRAWINGS

STRUCTURAL

S0-0 GENERAL NOTES

CALDECOTT TUNNEL BORESS 1, 2 & 3

S1-1 CALDECOTT BORES 1 & 2 EAST PORTAL BUILDING ROOF PLAN (OPTION #1)
S1-2 CALDECOTT BORES 1 & 2 WEST PORTAL BUILDING ROOF PLAN (OPTION #1)
S1-3 CALDECOTT BORES 1 & 2 EAST PORTAL BUILDING ROOF PLAN (OPTION #2)
S1-4 CALDECOTT BORES 1 & 2 WEST PORTAL BUILDING ROOF PLAN (OPTION #2)
S1-5 DETAILS AND SECTIONS

MECHANICAL

M0-0 LEGEND, ABBREVIATIONS & GENERAL NOTES
M0-1 EQUIPMENT SCHEDULE (OPTION #1) - HVAC
M0-2 EQUIPMENT SCHEDULE (OPTION #2) - HVAC

CALDECOTT TUNNEL BORESS 1, 2 & 3

M1-1 CALDECOTT BORES 1 & 2 EAST PORTAL BUILDING FAN ROOM PLAN - HVAC
M1-2 CALDECOTT BORES 1 & 2 EAST PORTAL BUILDING ROOF PLAN - HVAC
M1-3 CALDECOTT BORES 1 & 2 DAMPER ASSEMBLY IN EAST PORTAL BUILDING - HVAC
M1-4 CALDECOTT BORES 1 & 2 WEST PORTAL BUILDING FAN ROOM PLAN - HVAC
M1-5 CALDECOTT BORES 1 & 2 WEST PORTAL BUILDING ROOF PLAN - HVAC
M1-6 CALDECOTT BORES 1 & 2 DAMPER ASSEMBLY IN WEST PORTAL BUILDING - HVAC
M1-7 CALDECOTT BORES 1 & 2 EAST PORTAL BUILDING SECTION - HVAC
M1-8 CALDECOTT BORES 1 & 2 WEST PORTAL BUILDING SECTION - HVAC
M1-9 CALDECOTT BORES 1 & 2 EXHAUST DAMPER ASSEMBLY DETAILS (OPTION #1) - HVAC
M1-10 CALDECOTT BORES 1 & 2 EXHAUST DAMPER ASSEMBLY DETAILS (OPTION #2) - HVAC

ELECTRICAL

EE0-0 LEGEND

CALDECOTT TUNNEL BORES 1, 2 & 3

EE1-1 CALDECOTT BORES 1 & 2 EAST PORTAL FAN ROOM - POWER PLAN
EE1-2 CALDECOTT BORES 1 & 2 WEST PORTAL FAN ROOM - POWER PLAN
EE1-3 CALDECOTT BORES 1 & 2 EAST PORTAL ELECTRICAL ROOF PLAN
EE1-4 CALDECOTT BORES 1 & 2 WEST PORTAL ELECTRICAL ROOF PLAN
EE1-5 CALDECOTT BORE 3 WEST PORTAL BUILDING - POWER PLAN

POSEY TUBE OAKLAND PORTAL BUILDING

EE2-1 POSEY TUBE OAKLAND PORTAL BUILDING EXHAUST FAN ROOM - POWER PLAN
EE2-2 POSEY TUBE OAKLAND PORTAL BUILDING BASEMENT - POWER PLAN

POSEY TUBE ALAMEDA PORTAL BUILDING

EE2-3 POSEY TUBE ALAMEDA PORTAL BUILDING EXHAUST FAN ROOM - POWER PLAN
EE2-4 POSEY TUBE ALAMEDA PORTAL BUILDING BASEMENT - POWER PLAN

WEBSTER STREET TUBE OAKLAND PORTAL BUILDING

EE3-1 WEBSTER STREET TUBE OAKLAND PORTAL EXHAUST FAN ROOM - POWER PLAN
EE3-2 WEBSTER STREET TUBE OAKLAND PORTAL CONTROL ROOM - POWER PLAN
EE3-3 WEBSTER STREET TUBE OAKLAND PORTAL BLOWER FAN ROOM - POWER PLAN

WEBSTER STREET TUBE ALAMEDA PORTAL BUILDING

EE3-4 WEBSTER STREET TUBE ALAMEDA PORTAL EXHAUST FAN ROOM - POWER PLAN
EE3-5 WEBSTER STREET TUBE ALAMEDA PORTAL CONTROL ROOM - POWER PLAN
EE3-6 WEBSTER STREET TUBE ALAMEDA PORTAL BLOWER FAN ROOM - POWER PLAN

SHEET No. DESCRIPTION

ELECTRICAL (CONTINUATION)

EE4-0 SCADA HMI SYSTEM ARCHITECTURE
EE4-1 CALDECOTT BORE 3 PLCs
EE4-2 PLCs NOS. 3, 4, 7 & 8 ARRANGEMENT
EE4-3 POSEY TUBE PLCs
EE4-4 VFD CABINET LAYOUT
EE4-5 VFD/DAMPER/MOTOR SYSTEM OVERVIEW - CALDECOTT BORES 1 & 2 EAST/WEST
EE4-6 VFD/DAMPER/MOTOR SYSTEM OVERVIEW - CALDECOTT BORE 3 WEST
EE4-7 VFD/DAMPER/MOTOR SYSTEM OVERVIEW - WEBSTER STREET TUBE OAKLAND/ALAMEDA
EE4-8 VFD/DAMPER/MOTOR SYSTEM OVERVIEW - POSEY TUBE OAKLAND/ALAMEDA
EE4-9 CALDECOTT BORES 1 & 2 DAMPER STARTER ARRANGEMENT
EE4-10 TYPICAL PLC CABINET POWER & COMMUNICATION WIRING
EE4-11 MODBUS PLUS NETWORK CABLE ARRANGEMENT - TYPICAL
EE4-12-1 I/O POWER WIRING PLC 1
EE4-12-2 I/O POWER WIRING PLC 2
EE4-13 I/O POWER WIRING PLCs 3 & 4
EE4-14 I/O POWER WIRING PLC 5
EE4-15 I/O POWER WIRING PLC 6
EE4-16 I/O POWER WIRING PLCs 7 & 8
EE4-17 VFD FAN MOTOR STARTER 3-LINE & CONTROL DIAGRAM
EE4-18 CALDECOTT BORES 1 & 2 EAST/WEST SUPPLY DAMPER CONTROL WIRING
EE4-19 CALDECOTT BORES 1 & 2 EAST/WEST EXHAUST DAMPER CONTROL WIRING
EE4-20-1 CALDECOTT BORE 3 WEST PLC 1 TERMINATION SCHEDULE
EE4-20-2 CALDECOTT BORE 3 WEST PLC 1 TERMINATION SCHEDULE
EE4-20-3 CALDECOTT BORE 3 WEST PLC 1 TERMINATION SCHEDULE
EE4-21 CALDECOTT BORE 3 EAST PLC 2 TERMINATION SCHEDULE
EE4-22-1 CALDECOTT BORES 1 & 2 WEST PLC 3 TERMINATION SCHEDULE
EE4-22-2 CALDECOTT BORES 1 & 2 WEST PLC 3 TERMINATION SCHEDULE
EE4-22-3 CALDECOTT BORES 1 & 2 WEST PLC 3 TERMINATION SCHEDULE
EE4-23-1 CALDECOTT BORES 1 & 2 EAST PLC 4 TERMINATION SCHEDULE
EE4-23-2 CALDECOTT BORES 1 & 2 EAST PLC 4 TERMINATION SCHEDULE
EE4-23-3 CALDECOTT BORES 1 & 2 EAST PLC 4 TERMINATION SCHEDULE
EE4-24-1 POSEY TUBE OAKLAND PORTAL PLC 5 TERMINATION SCHEDULE
EE4-24-2 POSEY TUBE OAKLAND PORTAL PLC 5 TERMINATION SCHEDULE
EE4-24-3 POSEY TUBE OAKLAND PORTAL PLC 5 TERMINATION SCHEDULE
EE4-25-1 POSEY TUBE ALAMEDA PORTAL PLC 6 TERMINATION SCHEDULE
EE4-25-2 POSEY TUBE ALAMEDA PORTAL PLC 6 TERMINATION SCHEDULE
EE4-25-3 POSEY TUBE ALAMEDA PORTAL PLC 6 TERMINATION SCHEDULE
EE4-26-1 WEBSTER STREET TUBE OAKLAND PORTAL PLC 7 TERMINATION SCHEDULE
EE4-26-2 WEBSTER STREET TUBE OAKLAND PORTAL PLC 7 TERMINATION SCHEDULE
EE4-26-3 WEBSTER STREET TUBE OAKLAND PORTAL PLC 7 TERMINATION SCHEDULE
EE4-27-1 WEBSTER STREET TUBE ALAMEDA PORTAL PLC 8 TERMINATION SCHEDULE
EE4-27-2 WEBSTER STREET TUBE ALAMEDA PORTAL PLC 8 TERMINATION SCHEDULE
EE4-27-3 WEBSTER STREET TUBE ALAMEDA PORTAL PLC 8 TERMINATION SCHEDULE
EE4-28-1 CALDECOTT 1 & 2 EAST BLOWER ROOM WONDERWARE SCREEN
EE4-28-2 CALDECOTT 1 & 2 EAST EXHAUSTER ROOM WONDERWARE SCREEN
EE4-28-3 CALDECOTT 1 & 2 WEST BLOWER ROOM WONDERWARE SCREEN
EE4-28-4 CALDECOTT 1 & 2 WEST EXHAUSTER ROOM WONDERWARE SCREEN
EE4-28-5 CALDECOTT 3 WEST BLOWER/EXHAUSTER ROOM WONDERWARE SCREEN
EE4-28-6 CALDECOTT FAN CONFIGURATION WONDERWARE SCREEN
EE4-28-7 POSEY ALAMEDA BLOWER ROOM WONDERWARE SCREEN
EE4-28-8 POSEY ALAMEDA EXHAUSTER ROOM WONDERWARE SCREEN
EE4-28-9 POSEY OAKLAND BLOWER ROOM WONDERWARE SCREEN
EE4-28-10 POSEY OAKLAND EXHAUSTER ROOM WONDERWARE SCREEN
EE4-28-11 POSEY TUBE FAN CONFIGURATION WONDERWARE SCREEN
EE4-28-12 WEBSTER STREET TUBE ALAMEDA BLOWER ROOM WONDERWARE SCREEN
EE4-28-13 WEBSTER STREET TUBE ALAMEDA EXHAUSTER ROOM WONDERWARE SCREEN
EE4-28-14 WEBSTER STREET TUBE OAKLAND BLOWER ROOM WONDERWARE SCREEN
EE4-28-15 WEBSTER STREET TUBE OAKLAND EXHAUSTER ROOM WONDERWARE SCREEN
EE4-28-16 WEBSTER STREET TUBE FAN CONFIGURATION WONDERWARE SCREEN

	BY	CHECKED
DESIGN	G. MARAVILLA	R. FEE
DETAILS	G. MARAVILLA	R. FEE
QUANTITIES	G. MARAVILLA	R. FEE

PREPARED FOR THE STATE OF CALIFORNIA DEPARTMENT OF TRANSPORTATION

DIVISION OF ENGINEERING SERVICES ELECTRICAL-MECHANICAL-WATER AND WASTEWATER DESIGN

BRIDGE NO. VARIES
POST MILE VARIES

SCADA SYSTEM UPGRADE: POSEY/WEBSTER STREET TUBES AND CALDECOTT TUNNEL

INDEX OF DRAWINGS

SHEET **GP-1**

DOES SD Imperial Rev.1/07

ORIGINAL SCALE IN INCHES FOR REDUCED PLANS 0 1 2 3

CU 04220
EA 1A4604

DISREGARD PRINTS BEARING EARLIER REVISION DATES →

REVISION DATES (PRELIMINARY STAGE ONLY) | SHEET 1 | OF 95

26-NOV-2008 07:27

GP-1.dgn

DIST.	COUNTY	ROUTE	POST MILES TOTAL PROJECT	SHEET NO.	TOTAL SHEETS
04	Ala,CC	24,260	R5.9/R6.2, R0.0/R0.5,R0.9/R1.9	7	100

REGISTERED STRUCTURAL ENGINEER — 02-26-08 DATE

REGISTERED PROFESSIONAL ENGINEER ARIF H. SHAMIM No. S-4711 Exp. 12/31/08 STRUC STATE OF CALIFORNIA

11-24-08
PLANS APPROVAL DATE

The State of California or its officers or agents shall not be responsible for the accuracy or completeness of electronic copies of this plan sheet.

STV Incorporated
9130 Anaheim Place, Suite 210
Rancho Cucamonga, CA 91730

GENERAL NOTES

STRUCTURAL STEEL

1. STRUCTURAL STEEL SHALL BE DETAILED, FABRICATED AND ERECTED BY AN APPROVED AND LICENSED FABRICATOR IN ACCORDANCE WITH THE AISC SPECIFICATION FOR THE DESIGN, FABRICATION AND ERECTION OF STRUCTURAL STEEL FOR BUILDINGS (LATEST EDITION), AND WITH CHAPTER 22A OF THE CODE.
2. ALL STRUCTURAL STEEL SHALL CONFORM TO THE ASTM DESIGNATION AS INDICATED BELOW (UNO):

ANGLES, CHANNELS	A-36
CONNECTION PLATES, AND MISC STEEL (UNO)	A-36
TUBE SECTIONS	A-500, GRADE B
HIGH STRENGTH BOLTS	A-325
ANCHOR BOLTS IN CONCRETE	A-36/A-307 U.N.O.

3. THE STRUCTURAL STEEL FABRICATOR SHALL FURNISH SHOP DRAWINGS TO THE ENGINEER OF ALL STEEL FOR STRUCTURAL ENGINEERS REVIEW AND APPROVAL BEFORE FABRICATION.
4. BOLT HOLES USED IN STEEL SHALL BE 1/16" LARGER IN DIAMETER THAN NOMINAL SIZE OF BOLT USED, EXCEPT AS NOTED.
5. ALL WELDING IS TO BE DONE BY CERTIFIED WELDERS USING E70XX ELECTRODES (UNO). ALL WELDS SHALL BE IN CONFORMITY WITH THE PROJECT SPECIFICATIONS AND THE CODE FOR WELDING IN BUILDING CONSTRUCTION (AWS D1.1 LATEST REVISION) OF THE AMERICAN WELDING SOCIETY. SEE SPECIAL INSPECTIONS SECTION FOR WELDING INSPECTION REQUIREMENTS.
6. WELD LENGTHS CALLED FOR ON PLANS ARE THE NET EFFECTIVE LENGTH REQUIRED. WHERE FILLET WELD SYMBOL IS GIVEN WITHOUT INDICATION OF SIZE, USE MINIMUM SIZE WELDS AS SPECIFIED IN AISC MANUAL OF STEEL CONSTRUCTION 9TH EDITION, SECTION 1.17.2.
7. ALL STRUCTURAL STEEL AND MISCELLANEOUS METAL EXPOSED TO THE WEATHER AND NOT RECEIVING INTUMESCENT PAINT SHALL BE HOT DIP GALVANIZED AFTER FABRICATION.
8. THE USE OF E70T-4 WELDING WIRE IS NOT ALLOWED FOR ANY APPLICATION.
9. WRITTEN WELDING PROCEDURE SPECIFICATIONS (WPS) PER THE RECOMMENDATIONS OF THE AMERICAN WELDING SOCIETY (AWS) SHALL BE DEVELOPED BY THE FABRICATOR/ERECTOR AND SUBMITTED FOR REVIEW TO THE ENGINEER PRIOR TO ANY WELDING OF THE STRUCTURAL STEEL. THE WELDING PROCEDURES SHALL INCLUDE ALL THE WELDED JOINTS AND CONFIGURATIONS TO BE USED ON THIS PROJECT-ONLY WPS WHICH ARE RELEVANT TO THIS PROJECT SHALL BE SUBMITTED. ALL WELDED JOINTS SHALL BE PRE-QUALIFIED PER AWS OR BE QUALIFIED BY TEST PER AWS. A PROCEDURE QUALIFICATION RECORD (PQR) SHALL BE INCLUDED WITH THE WPS IF THE WELDING PROCEDURE OR JOINT IS QUALIFIED BY TESTING. THE ELECTRODE MANUFACTURER AND PRODUCT/TRADE NAME SHALL BE IDENTIFIED IN THE WPS IN ADDITION TO THE AWS ELECTRODE CLASSIFICATION NAME. A COPY OF THE ELECTRODE MANUFACTURER'S TECHNICAL DATA SHEETS WITH THE RECOMMENDED WELDING PARAMETERS SHALL BE SUBMITTED WITH THE WPS.
10. ALL WELD FILLER MATERIALS SHALL HAVE A MINIMUM CHARPY V-NOTCH (CVN) VALUE OF 20 FT-LBS AT A TEMPERATURE OF MINUS 20°F.
11. 100% ULTRASONIC TESTING FOR ALL COMPLETE PENETRATION GROOVE WELDS.

TYPICAL ABBREVIATIONS:

A.B. ANCHOR BOLTS
(E) EXISTING
HSS HIGH STRENGTH STEEL (TUBE)
MTL. METAL
SIM. SIMILAR
TYP. TYPICAL

GENERAL

1. THE CONTRACTOR SHALL VERIFY ALL DIMENSIONS PRIOR TO STARTING CONSTRUCTION. THE ARCHITECT SHALL BE NOTIFIED OF ANY DISCREPANCIES OR INCONSISTENCIES.
2. ALL DRAWINGS ARE CONSIDERED TO BE A PART OF THE CONTRACT DOCUMENTS. THE CONTRACTOR SHALL BE RESPONSIBLE FOR THE REVIEW AND COORDINATION OF ALL DRAWINGS AND SPECIFICATIONS PRIOR TO THE START OF CONSTRUCTION. ANY DISCREPANCIES THAT OCCUR SHALL BE BROUGHT TO THE ATTENTION OF THE ENGINEER PRIOR TO START OF CONSTRUCTION SO THAT A CLARIFICATION CAN BE ISSUED. ANY WORK PERFORMED IN CONFLICT WITH THE CONTRACT DOCUMENTS OR ANY CODE REQUIREMENTS SHALL BE CORRECTED BY THE CONTRACTOR AT THEIR OWN EXPENSE AND AT NO EXPENSE TO THE OWNER OR ARCHITECT.
3. NOTES AND DETAILS ON DRAWINGS SHALL TAKE PRECEDENCE OVER GENERAL NOTES AND TYPICAL DETAILS. WHERE NO DETAILS ARE GIVEN, CONSTRUCTION SHALL BE AS SHOWN FOR SIMILAR WORK.
4. ALL WORK SHALL CONFORM TO THE MINIMUM STANDARDS OF THE FOLLOWING CODES:
   CALIFORNIA BUILDING CODE 2007, CODE OF REGULATIONS, TITLE 8, DIVISION OF INDUSTRIAL RELATIONS. WORK SHALL CONFORM TO ALL LOCAL, STATE AND FEDERAL CODES AND ORDINANCE IN EFFECT.
5. ANY SUBSTITUTIONS TO MATERIALS, PROCEDURES, OR OTHER REQUIREMENT SPECIFIED ON THE CONSTRUCTION DOCUMENTS SHALL BE CONSIDERED AS A CHANGE ORDER.
6. SEE MECHANICAL AND ELECTRICAL DRAWINGS FOR THE FOLLOWING:
   SIZE AND LOCATION OF MACHINE OR EQUIPMENT BASES, ANCHOR BOLTS FOR MOTOR MOUNTS.
7. THE CONTRACT STRUCTURAL DRAWINGS AND SPECIFICATIONS REPRESENT THE FINISHED STRUCTURE. THEY DO NOT INDICATE THE METHOD OF CONSTRUCTION. THE CONTRACTOR SHALL PROVIDE ALL MEASURES NECESSARY TO PROTECT THE STRUCTURE DURING CONSTRUCTION. SUCH MEASURES SHALL INCLUDE, BUT NOT BE LIMITED TO, BRACING, SHORING FOR LOADS DUE TO CONSTRUCTION EQUIPMENT, ETC. OBSERVATION VISITS TO THE SITE BY THE STRUCTURAL ENGINEER SHALL NOT INCLUDE INSPECTION OF THE ABOVE ITEMS.
8. ASTM SPECIFICATIONS AND OTHER TECHNICAL REFERENCES ON THE DRAWINGS SHALL BE OF THE LATEST REVISION, U.N.O.
9. CONSTRUCTION MATERIAL SHALL BE SPREAD OUT IF PLACED ON FRAMED ROOF OR FLOOR. LOAD SHALL NOT EXCEED THE DESIGN LIVE LOAD PER SQUARE FOOT. PROVIDE ADEQUATE SHORING AND/OR BRACING WHERE STRUCTURE HAS NOT ATTAINED DESIGN STRENGTH.
10. THE CONTRACTOR SHALL VERIFY THE EXTENT AND LOCATIONS OF SITE UTILITIES PRIOR TO EXCAVATION OR SHORING. SINCE THE SURVEY WAS BASED PRIMARILY ON PUBLIC RECORDS, THERE MAY BE DISCREPANCIES BETWEEN THE LOCATION INDICATED ON THE SITE SURVEY AND ACTUAL VERIFIED LOCATIONS. IF THE ACTUAL FIELD VERIFIED LOCATION OF UTILITIES COULD RESULT IN A CONFLICT WITH THE SHORING, THE ENGINEER SHALL BE NOTIFIED IMMEDIATELY.

DIST.	COUNTY	ROUTE	POST MILES TOTAL PROJECT	SHEET NO.	TOTAL SHEETS
04	Ala,CC	24,260	R5.9/R6.2, R0.0/R0.5,R0.9/R1.9	8	100

REGISTERED STRUCTURAL ENGINEER — 02-26-08 DATE

REGISTERED PROFESSIONAL ENGINEER
ARIF H. SHAMIM
No. S-4711
Exp. 12/31/08
STRUC
STATE OF CALIFORNIA

11-24-08
PLANS APPROVAL DATE

The State of California or its officers or agents shall not be responsible for the accuracy or completeness of electronic copies of this plan sheet.

STV Incorporated
9130 Anaheim Place, Suite 210
Rancho Cucamonga, CA 91730

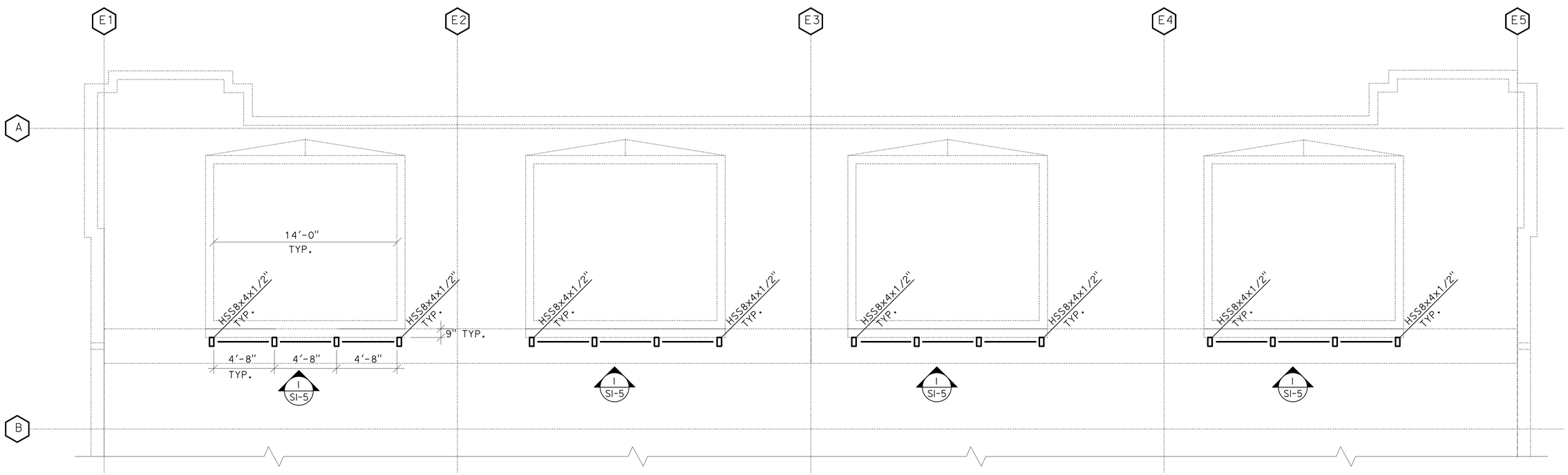

1 S1-1 ROOF PLAN (OPTION #1)

EAST PORTAL BUILDING

SCALE 1/4" = 1'-0
4' 0 4' 8'

DESIGN	BY R. NAFAR	CHECKED A. SHAMIM	
DETAILS	BY R. NAFAR	CHECKED A. SHAMIM	
QUANTITIES	BY	CHECKED	

PREPARED FOR THE STATE OF CALIFORNIA DEPARTMENT OF TRANSPORTATION

DIVISION OF ENGINEERING SERVICES
ELECTRICAL-MECHANICAL-WATER AND WASTEWATER DESIGN

BRIDGE NO. VARIES
POST MILE VARIES

SCADA SYSTEM UPGRADE: POSEY/WEBSTER STREET TUBES AND CALDECOTT TUNNEL
CALDECOTT BORES 1 & 2
EAST PORTAL BUILDING ROOF PLAN (OPTION #1)

SHEET **S1-1**

DOES SD Imperial Rev. 1/07

ORIGINAL SCALE IN INCHES FOR REDUCED PLANS 0 1 2 3

CU 04220
EA 1A4604

DISREGARD PRINTS BEARING EARLIER REVISION DATES →
REVISION DATES (PRELIMINARY STAGE ONLY)

SHEET 3 OF 95

26-NOV-2008 07:35
S1-1.dgn

DIST.	COUNTY	ROUTE	POST MILES TOTAL PROJECT	SHEET NO.	TOTAL SHEETS
04	Ala,CC	24,260	R5.9/R6.2, R0.0/R0.5,R0.9/R1.9	9	100

REGISTERED STRUCTURAL ENGINEER — 02-26-08 DATE

REGISTERED PROFESSIONAL ENGINEER ARIF H. SHAMIM No. S-4711 Exp. 12/31/08 STRUC STATE OF CALIFORNIA

11-24-08
PLANS APPROVAL DATE

The State of California or its officers or agents shall not be responsible for the accuracy or completeness of electronic copies of this plan sheet.

STV Incorporated
9130 Anaheim Place, Suite 210
Rancho Cucamonga, CA 91730

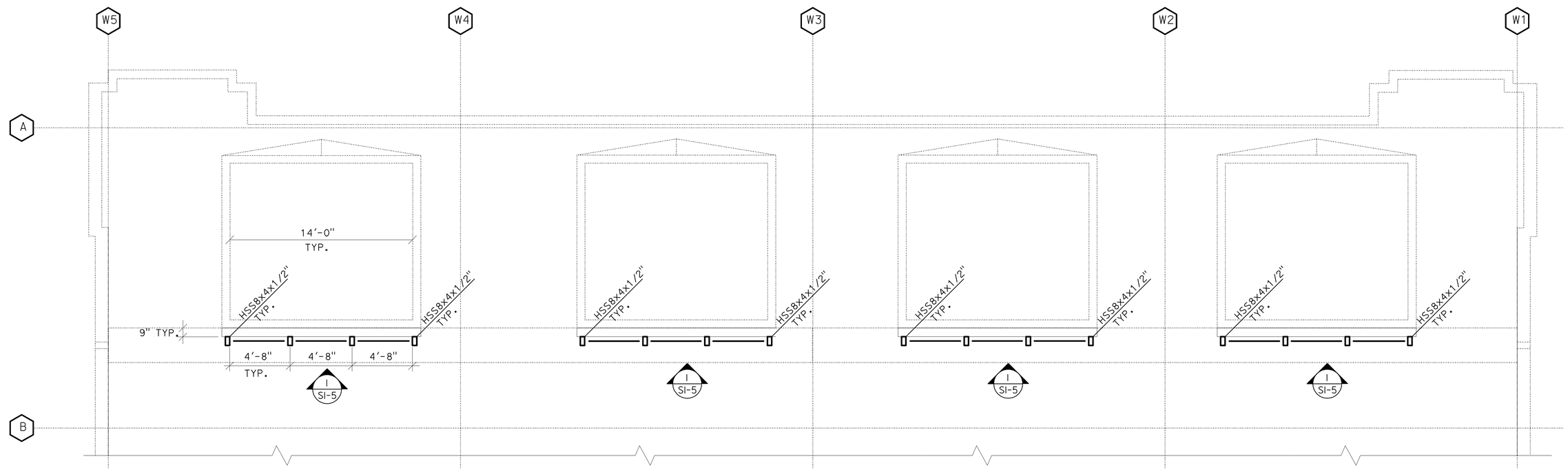

1 S1-2 ROOF PLAN (OPTION #1)

WEST PORTAL BUILDING

SCALE 1/4" = 1'-0
4' 0 4' 8'

DESIGN	BY R.NAFAR	CHECKED A.SHAMIM	
DETAILS	BY R.NAFAR	CHECKED A.SHAMIM	
QUANTITIES	BY	CHECKED	

PREPARED FOR THE STATE OF CALIFORNIA DEPARTMENT OF TRANSPORTATION

DIVISION OF ENGINEERING SERVICES ELECTRICAL-MECHANICAL-WATER AND WASTEWATER DESIGN

BRIDGE NO. VARIES
POST MILE VARIES

SCADA SYSTEM UPGRADE: POSEY/WEBSTER STREET TUBES AND CALDECOTT TUNNEL
CALDECOTT BORES 1 & 2
WEST PORTAL BUILDING ROOF PLAN (OPTION #1)

SHEET **S1-2**

DOES SD Imperial Rev.1/07

ORIGINAL SCALE IN INCHES FOR REDUCED PLANS 0 1 2 3

CU 04220
EA 1A4604

DISREGARD PRINTS BEARING EARLIER REVISION DATES →
REVISION DATES (PRELIMINARY STAGE ONLY)

SHEET 4 OF 95

26-NOV-2008 07:35
S1-2.dgn

DIST.	COUNTY	ROUTE	POST MILES TOTAL PROJECT	SHEET NO.	TOTAL SHEETS
04	Ala,CC	24,260	R5.9/R6.2, R0.0/R0.5,R0.9/R1.9	10	100

REGISTERED STRUCTURAL ENGINEER — 02-26-08 DATE

REGISTERED PROFESSIONAL ENGINEER ARIF H. SHAMIM No. S-4711 Exp. 12/31/08 STRUC STATE OF CALIFORNIA

11-24-08
PLANS APPROVAL DATE

The State of California or its officers or agents shall not be responsible for the accuracy or completeness of electronic copies of this plan sheet.

STV Incorporated
9130 Anaheim Place, Suite 210
Rancho Cucamonga, CA 91730

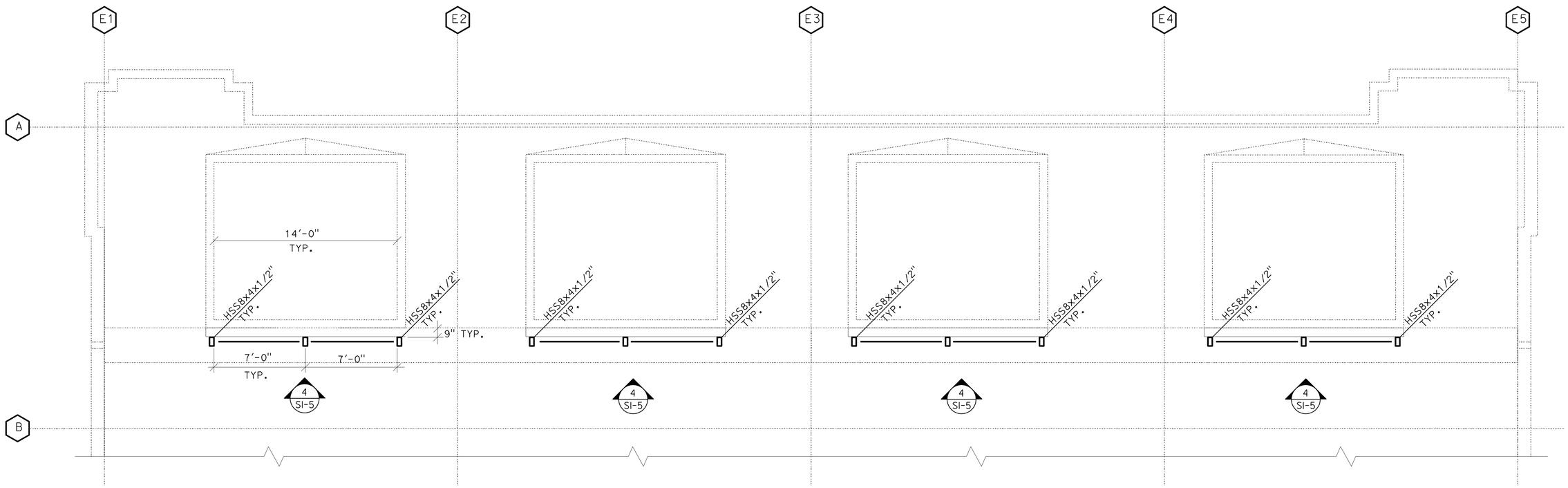

1 S1-3 **ROOF PLAN (OPTION #2)**

EAST PORTAL BUILDING

SCALE 1/4" = 1'-0
4' 0 4' 8'

DESIGN	BY R.NAFAR	CHECKED A.SHAMIM	
DETAILS	BY R.NAFAR	CHECKED A.SHAMIM	
QUANTITIES	BY	CHECKED	

PREPARED FOR THE STATE OF CALIFORNIA DEPARTMENT OF TRANSPORTATION

DIVISION OF ENGINEERING SERVICES
ELECTRICAL-MECHANICAL-WATER AND WASTEWATER DESIGN

BRIDGE NO. VARIES
POST MILE VARIES

SCADA SYSTEM UPGRADE: POSEY/WEBSTER STREET TUBES AND CALDECOTT TUNNEL
CALDECOTT BORES 1 & 2
EAST PORTAL BUILDING ROOF PLAN (OPTION #2)

SHEET **S1-3**

DOES SD Imperial Rev. 1/07

ORIGINAL SCALE IN INCHES FOR REDUCED PLANS 0 1 2 3

CU 04220
EA 1A4604

DISREGARD PRINTS BEARING EARLIER REVISION DATES → REVISION DATES (PRELIMINARY STAGE ONLY)

SHEET 5 OF 95

26-NOV-2008 07:35
S1-3.dgn

DIST.	COUNTY	ROUTE	POST MILES TOTAL PROJECT	SHEET NO.	TOTAL SHEETS
04	Ala,CC	24,260	R5.9/R6.2, R0.0/R0.5,R0.9/R1.9	11	100

REGISTERED STRUCTURAL ENGINEER — 02-26-08 DATE

REGISTERED PROFESSIONAL ENGINEER ARIF H. SHAMIM No. S-4711 Exp. 12/31/08 STRUC STATE OF CALIFORNIA

11-24-08
PLANS APPROVAL DATE

The State of California or its officers or agents shall not be responsible for the accuracy or completeness of electronic copies of this plan sheet.

STV Incorporated
9130 Anaheim Place, Suite 210
Rancho Cucamonga, CA 91730

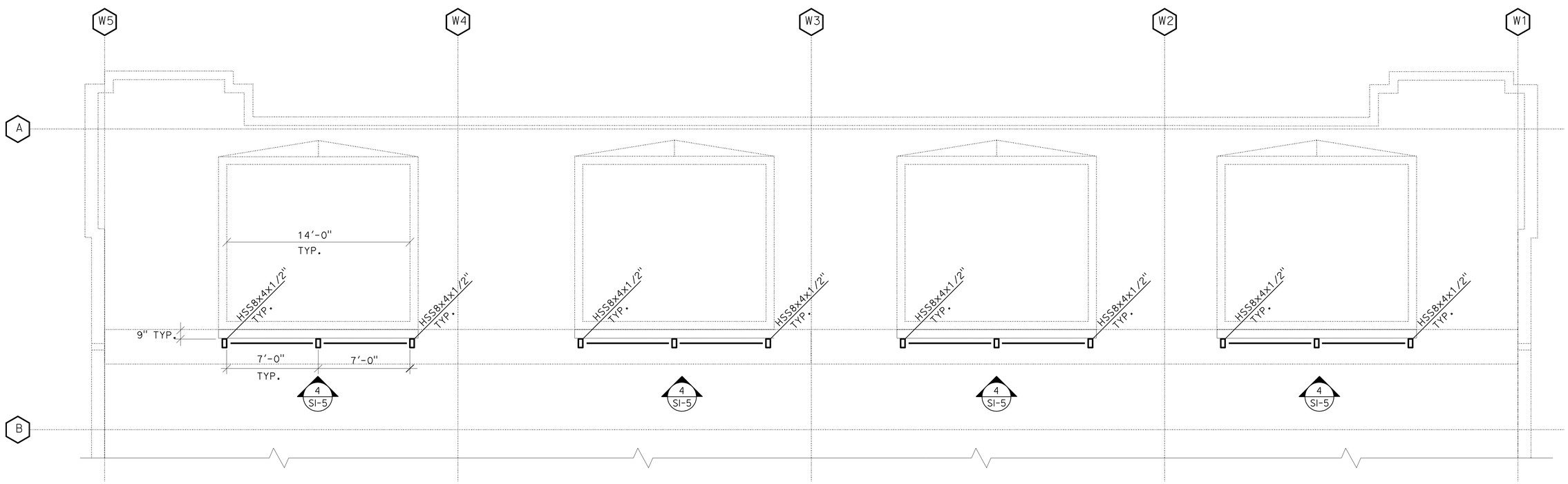

1 S1-4 **ROOF PLAN (OPTION #2)**

WEST PORTAL BUILDING

SCALE 1/4" = 1'-0
4' 0 4' 8'

DESIGN	BY R. NAFAR	CHECKED A. SHAMIM	
DETAILS	BY R. NAFAR	CHECKED A. SHAMIM	
QUANTITIES	BY	CHECKED	

PREPARED FOR THE STATE OF CALIFORNIA DEPARTMENT OF TRANSPORTATION

DIVISION OF ENGINEERING SERVICES
ELECTRICAL-MECHANICAL-WATER AND WASTEWATER DESIGN

BRIDGE NO. VARIES
POST MILE VARIES

SCADA SYSTEM UPGRADE: POSEY/WEBSTER STREET TUBES AND CALDECOTT TUNNEL
CALDECOTT BORES 1 & 2
WEST PORTAL BUILDING ROOF PLAN (OPTION #2)

SHEET **S1-4**

DOES SD Imperial Rev. 1/07

ORIGINAL SCALE IN INCHES FOR REDUCED PLANS 0 1 2 3

CU 04220
EA 1A4604

DISREGARD PRINTS BEARING EARLIER REVISION DATES →
REVISION DATES (PRELIMINARY STAGE ONLY)

SHEET 6 OF 95

26-NOV-2008 07:35
S1-4.dgn

DIST.	COUNTY	ROUTE	POST MILES TOTAL PROJECT	SHEET NO.	TOTAL SHEETS
04	Ala,CC	24,260	R5.9/R6.2, R0.0/R0.5,R0.9/R1.9	12	100

REGISTERED STRUCTURAL ENGINEER — DATE 02-26-08

REGISTERED PROFESSIONAL ENGINEER ARIF H. SHAMIM No. S-4711 Exp. 12/31/08 STRUC STATE OF CALIFORNIA

11-24-08
PLANS APPROVAL DATE

The State of California or its officers or agents shall not be responsible for the accuracy or completeness of electronic copies of this plan sheet.

STV Incorporated
9130 Anaheim Place, Suite 210
Rancho Cucamonga, CA 91730

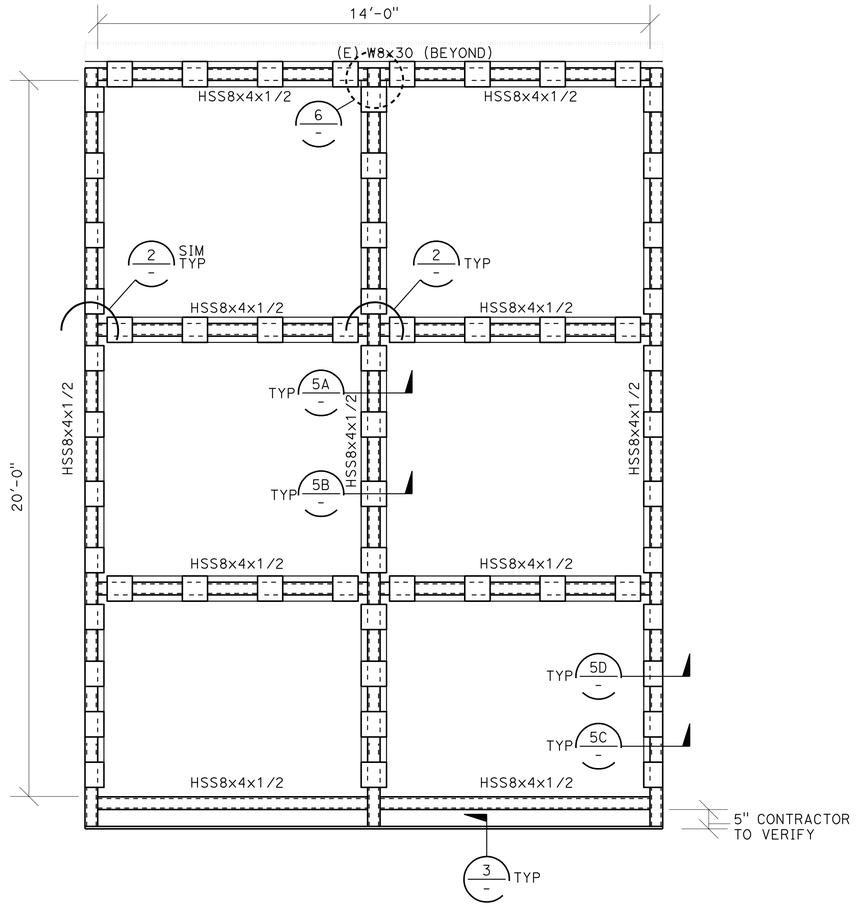

4 SI-5 SECTION AT OPENING FOR DAMPER (OPTION #2)
Scale 1/2" = 1'-0"

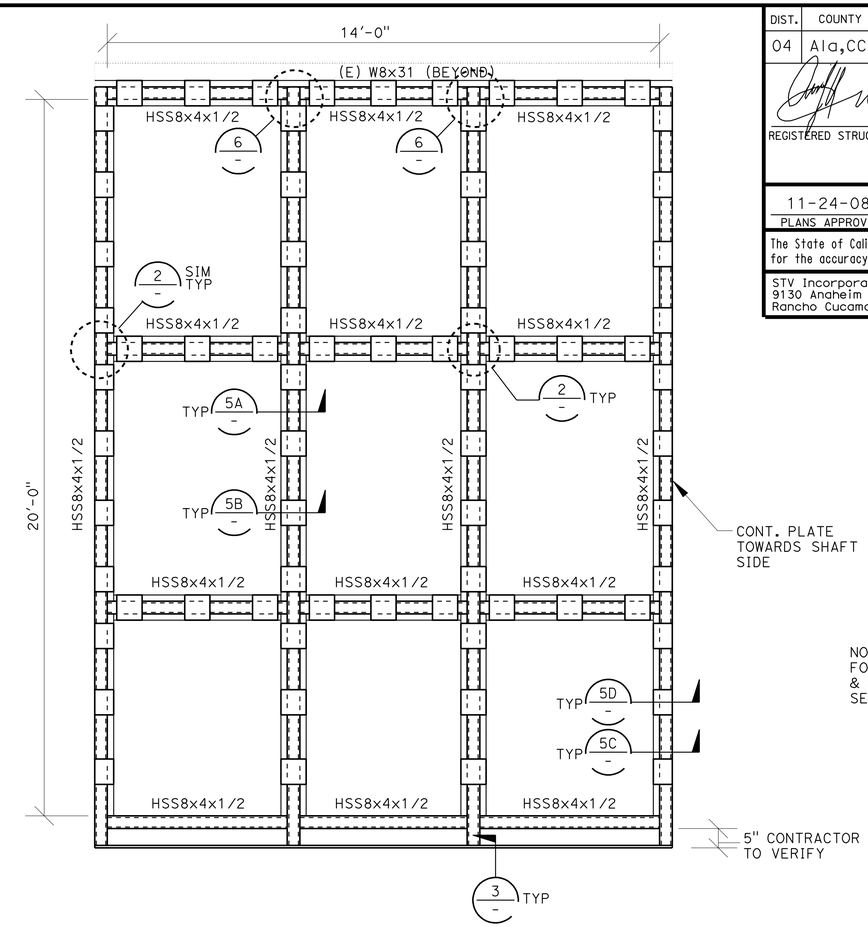

NOTE:
FOR MECH. DAMPER & OPENING SIZE SEE MECH. DWG.

1 SI-5 SECTION AT OPENING FOR DAMPER (OPTION #1)
Scale 1/2" = 1'-0"

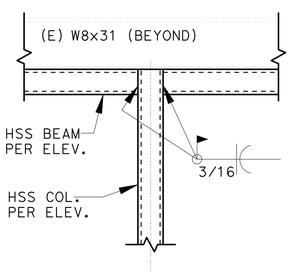

ELEVATION

6 SI-5 HSS BEAM TO HSS COL. CONN.
Scale 1" = 1'-0"

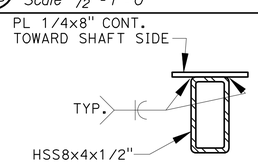

5A MECH. DAMPER CHANNEL TO COL. CONNECTION (SHAFT SIDE)

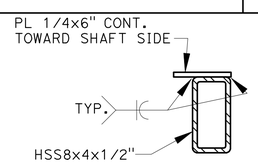

5C MECH. DAMPER CHANNEL TO COL. CONNECTION (SHAFT SIDE)

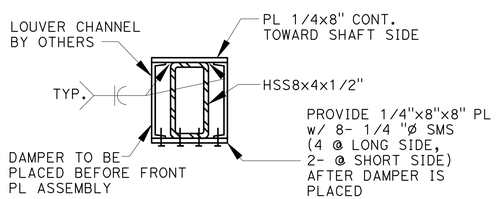

5B MECH. DAMPER CHANNEL TO COL. CONNECTION (FRONT PL)

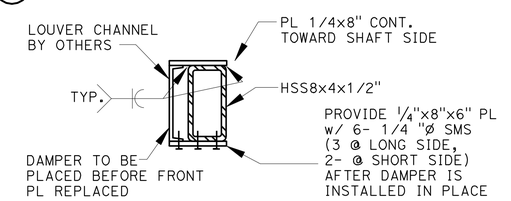

5D MECH. DAMPER CHANNEL TO COL. CONNECTION (FRONT PL)

5 SI-5 DAMPER TO STRUCT. MEMBER CONNECTION
Scale 1" = 1'-0"

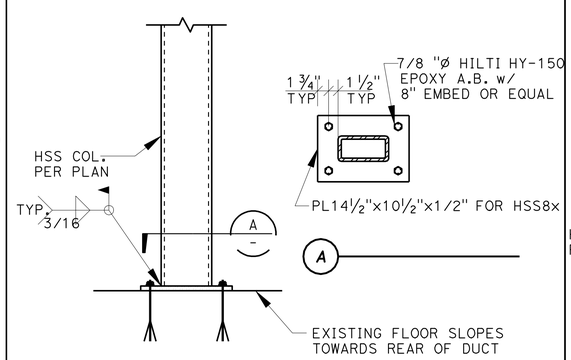

3 SI-5 COL. TO (E) CURB CONNECTION
Scale 1" = 1'-0"

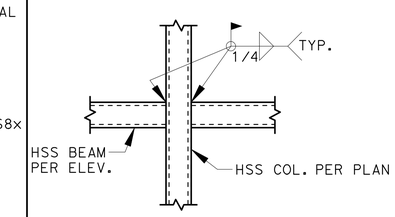

2 SI-5 BEAM TO COL. CONNECTION
Scale 1" = 1'-0"

DESIGN	BY R.NAFAR	CHECKED A.SHAMIM	
DETAILS	BY R.NAFAR	CHECKED A.SHAMIM	
QUANTITIES	BY	CHECKED	

PREPARED FOR THE STATE OF CALIFORNIA DEPARTMENT OF TRANSPORTATION

DIVISION OF ENGINEERING SERVICES
ELECTRICAL-MECHANICAL-WATER AND WASTEWATER DESIGN

BRIDGE NO. VARIES
POST MILE VARIES

SCADA SYSTEM UPGRADE: POSEY/WEBSTER STREET TUBES AND CALDECOTT TUNNEL
DETAILS & SECTIONS

SHEET S1-5

DOES SD Imperial Rev. 1/07

ORIGINAL SCALE IN INCHES FOR REDUCED PLANS 0 1 2 3

CU 04220
EA 1A4604

DISREGARD PRINTS BEARING EARLIER REVISION DATES →

REVISION DATES (PRELIMINARY STAGE ONLY)

SHEET 7 OF 95

26-NOV-2008 07:35

S1-5.dgn

DIST.	COUNTY	ROUTE	POST MILES TOTAL PROJECT	SHEET NO.	TOTAL SHEETS
04	Ala,CC	24,260	R5.9/R6.2, R0.0/R0.5,R0.9/R1.9	13	100

REGISTERED MECHANICAL ENGINEER — DATE

REGISTERED PROFESSIONAL ENGINEER
H. MOZAFFARI
No. M-22289
Exp. 12/31/09
MECH
STATE OF CALIFORNIA

11-24-08
PLANS APPROVAL DATE

The State of California or its officers or agents shall not be responsible for the accuracy or completeness of electronic copies of this plan sheet.

STV Incorporated
9130 Anaheim Place, Suite 210
Rancho Cucamonga, CA 91730

HEATING, VENTILATING AND AIR CONDITIONING

—ED— Exhaust Air Duct

—SD— Supply Air Duct

MISCELLANEOUS

L — Angle

℄ — Centerline

ø — Diameter

⌖ — Elevation

1 / M1-7 — Section / Elevation Number; Sheet Number

1 / M1-9 — Detail Number; Sheet Number

A — Column Line

ED / 1 — Exhaust Damper; Equipment Number

MD / 1-1 — Motorized Damper; ED Number-MD Number

MECHANICAL ABBREVIATIONS

BLDG	Building
CL	Center Line
DBC	Diameter Bolt Circle
DIA	Diameter
DN	Down
EA	Each
(E)	Existing
ED	Exhaust Air Duct/ Exhaust Damper
EF	Exhaust Fan/Exhauster
ELEV	Elevation
GA	Gauge
GALV	Galvanized
H	Height
HP	Horsepower
HVAC	Heating Ventilating and Air-Conditioning
HZ	Hertz
IN	Inch
IN-LB	Inch-Pounds
LBS	Pounds
LRA	Locked Rated Ampere
MAX	Maximum
MD	Motorized Damper/Damper Motor
MIN	Minimum
NLA	No Load Ampere
NTS	Not To Scale
#	Number
OSA	Outside Air
OC	On Center
OD	Outside Diameter
OG	Original Ground
PH	Phase
PSI	Pounds Per Square Inch
QTY	Quantity
RPM	Revolutions Per Minute
REQD	Required
SD	Supply Air Duct
SF	Supply Fan / Square feet
SS	Stainless Steel
Thru	Through
TYP	Typical
UNC	Unified National Coarse
V	Voltage
W	Width
WF	Wide Flange

	BY	CHECKED
DESIGN	C.CASTILLO	H.MOZAFFARI
DETAILS	C.CASTILLO	H.MOZAFFARI
QUANTITIES	C.CASTILLO	H.MOZAFFARI

PREPARED FOR THE STATE OF CALIFORNIA DEPARTMENT OF TRANSPORTATION

DIVISION OF ENGINEERING SERVICES
ELECTRICAL-MECHANICAL-WATER AND WASTEWATER DESIGN

BRIDGE NO. VARIES
POST MILE VARIES

SCADA SYSTEM UPGRADE: POSEY/WEBSTER STREET TUBES AND CALDECOTT TUNNEL
LEGEND, ABBREVIATIONS & GENERAL NOTES

SHEET M0-0

DOES SD Imperial Rev.1/07

ORIGINAL SCALE IN INCHES FOR REDUCED PLANS 0 1 2 3

CU 04220
EA 1A4604

DISREGARD PRINTS BEARING EARLIER REVISION DATES →
REVISION DATES (PRELIMINARY STAGE ONLY)

SHEET 8 OF 95

26-NOV-2008 13:26
M0-0.dgn

DIST.	COUNTY	ROUTE	POST MILES TOTAL PROJECT	SHEET NO.	TOTAL SHEETS
04	Ala,CC	24,260	R5.9/R6.2, R0.0/R0.5,R0.9/R1.9	14	100

REGISTERED MECHANICAL ENGINEER — DATE

REGISTERED PROFESSIONAL ENGINEER H. MOZAFFARI No. M-22289 Exp. 12/31/09 MECH STATE OF CALIFORNIA

11-24-08
PLANS APPROVAL DATE

The State of California or its officers or agents shall not be responsible for the accuracy or completeness of electronic copies of this plan sheet.

STV Incorporated
9130 Anaheim Place, Suite 210
Rancho Cucamonga, CA 91730

EXHAUST DAMPER MOTOR SCHEDULE (RCS SURE 100 USED AS DESIGN BASIS) - OPTION #1

SYMBOL	LOCATION	SERVING	EXHAUST DAMPER MOTOR DATA					ELECTRICAL DATA			OPERATING WEIGHT	WORK PHASE	REMARKS
			QTY	NLA	LRA	TORQUE (IN-LBS)	SPEED RANGE IN SECONDS	VOLTAGE	PHASE	HERTZ			
MD 1-1 THRU MD 1-3	WEST PORTAL BLDG ROOF	ED 1	3	0.65 EA	0.95 EA	1200	30	120	1	60	82 LBS EACH	PHASE 1	EACH DAMPER MOTOR SHALL BE OF THE OUTDOOR TYPE AND INCLUDE OPEN & CLOSED LIMIT SWITCHES AND SHALL BE INSTALLED UNDER INDICATED PHASE. EACH DAMPER MOTOR SHALL CONTROL 3 WIDE x 1 HIGH 53" x 77" EXHAUST DAMPERS LINKED TOGETHER.
MD 2-1 THRU MD 2-3		ED 2	3									PHASE 2	
MD 3-1 THRU MD 3-3		ED 3	3										
MD 4-1 THRU MD 4-3		ED 4	3									PHASE 1	
MD 5-1 THRU MD 5-3	EAST PORTAL BLDG ROOF	ED 5	3	0.65 EA	0.95 EA	1200	30	120	1	60	82 LBS EACH		
MD 6-1 THRU MD 6-3		ED 6	3									PHASE 2	
MD 7-1 THRU MD 7-3		ED 7	3										
MD 8-1 THRU MD 8-3		ED 8	3									PHASE 1	

EXHAUST DAMPER SCHEDULE (RUSKIN CD80AF3 USED AS DESIGN BASIS) - OPTION #1

SYMBOL	LOCATION	SERVING	EXHAUST DAMPER DATA					OPERATING WEIGHT	WORK PHASE	REMARKS
			QTY	SIZE	TYPE	NORMAL POSITION	FRAME			
ED 1	WEST PORTAL BLDG ROOF	EXHAUSTER NUMBER 1	9	53" WIDEx77" HIGH	8" WIDE AIR FOIL OPPOSED BLADE	**CLOSED**	8" X 2" X 12 GA GALVANIZED STEEL	10,000 LBS	PHASE 1	EXHAUST DAMPER SHALL INCLUDE 1¼" DIA JACKSHAFT AND SHALL BE INSTALLED UNDER INDICATED WORK PHASE. DAMPER SHALL OPEN WHEN EXHAUSTER IS ENERGIZED AND SHALL RETURN TO ITS NORMALLY CLOSED POSITION WHEN THE EXHAUSTER IS DE-ENERGIZED.
ED 2		EXHAUSTER NUMBER 2	9						PHASE 2	
ED 3		EXHAUSTER NUMBER 3	9							
ED 4		EXHAUSTER NUMBER 4	9						PHASE 1	
ED 5	EAST PORTAL BLDG ROOF	EXHAUSTER NUMBER 5	9	53" WIDEx77" HIGH	8" WIDE AIR FOIL OPPOSED BLADE	CLOSED	8" X 2" X 12 GA GALVANIZED STEEL	10,000 LBS		
ED 6		EXHAUSTER NUMBER 6	9						PHASE 2	
ED 7		EXHAUSTER NUMBER 7	9							
ED 8		EXHAUSTER NUMBER 8	9						PHASE 1	

NOTE:
ALL MATERIALS ARE GALVANIZED STEEL UNLESS OTHERWISE NOTED.

	BY	CHECKED
DESIGN	C.CASTILLO	H.MOZAFFARI
DETAILS	C.CASTILLO	H.MOZAFFARI
QUANTITIES	C.CASTILLO	H.MOZAFFARI

PREPARED FOR THE STATE OF CALIFORNIA DEPARTMENT OF TRANSPORTATION

DIVISION OF ENGINEERING SERVICES
ELECTRICAL-MECHANICAL-WATER AND WASTEWATER DESIGN

BRIDGE NO. VARIES
POST MILE VARIES

SCADA SYSTEM UPGRADE: POSEY/WEBSTER STREET TUBES AND CALDECOTT TUNNEL

EQUIPMENT SCHEDULE (OPTION #1) - HVAC

SHEET **M0-1**

DOES SD Imperial Rev.1/07

ORIGINAL SCALE IN INCHES FOR REDUCED PLANS 0 1 2 3

CU 04220
EA 1A4604

DISREGARD PRINTS BEARING EARLIER REVISION DATES →

REVISION DATES (PRELIMINARY STAGE ONLY)

SHEET 9 OF 95

26-NOV-2008 13:26
M0-1.dgn

DIST.	COUNTY	ROUTE	POST MILES TOTAL PROJECT	SHEET NO.	TOTAL SHEETS
04	Ala,CC	24,260	R5.9/R6.2, R0.0/R0.5,R0.9/R1.9	15	100

REGISTERED MECHANICAL ENGINEER — DATE

REGISTERED PROFESSIONAL ENGINEER H. MOZAFFARI No. M-22289 Exp. 12/31/09 MECH STATE OF CALIFORNIA

11-24-08
PLANS APPROVAL DATE

The State of California or its officers or agents shall not be responsible for the accuracy or completeness of electronic copies of this plan sheet.

STV Incorporated
9130 Anaheim Place, Suite 210
Rancho Cucamonga, CA 91730

EXHAUST DAMPER MOTOR SCHEDULE (RCS SURE 100 USED AS DESIGN BASIS) - OPTION #2

SYMBOL	LOCATION	SERVING	EXHAUST DAMPER MOTOR DATA					ELECTRICAL DATA			OPERATING WEIGHT	WORK PHASE	REMARKS
			QTY	NLA	LRA	TORQUE (IN-LBS)	SPEED RANGE IN SECONDS	VOLTAGE	PHASE	HERTZ			
MD 1-1 THRU MD 1-3	WEST PORTAL BLDG ROOF	ED 1	3	0.65 EA	0.95 EA	1200	30	120	1	60	82 LBS EACH	PHASE 1	EACH DAMPER MOTOR SHALL BE OF THE OUTDOOR TYPE AND INCLUDE OPEN & CLOSED LIMIT SWITCHES AND SHALL BE INSTALLED UNDER INDICATED WORK PHASE. EACH DAMPER MOTOR SHALL CONTROL 2 WIDE X 1 HIGH 82" X 77" EXHAUST DAMPERS LINKED TOGETHER.
MD 2-1 THRU MD 2-3		ED 2	3									PHASE 2	
MD 3-1 THRU MD 3-3		ED 3	3										
MD 4-1 THRU MD 4-3		ED 4	3									PHASE 1	
MD 5-1 THRU MD 5-3	EAST PORTAL BLDG ROOF	ED 5	3	0.65 EA	0.95 EA	1200	30	120	1	60	82 LBS EACH		
MD 6-1 THRU MD 6-3		ED 6	3									PHASE 2	
MD 7-1 THRU MD 7-3		ED 7	3										
MD 8-1 THRU MD 8-3		ED 8	3									PHASE 1	

EXHAUST DAMPER SCHEDULE (GREENHECK HTD-630 USED AS DESIGN BASIS) - OPTION #2

SYMBOL	LOCATION	SERVING	EXHAUST DAMPER DATA					OPERATING WEIGHT	WORK PHASE	REMARKS
			QTY	SIZE	TYPE	NORMAL POSITION	FRAME			
ED 1	WEST PORTAL BLDG ROOF	EXHAUSTER NUMBER 1	6	82" WIDEx77" HIGH	8" WIDE AIR FOIL OPPOSED BLADE	CLOSED	8" X 2" X 12 GA GALVANIZED STEEL	10,000 LBS	PHASE 1	EXHAUST DAMPER SHALL INCLUDE 1¼" DIA JACKSHAFT AND SHALL BE INSTALLED UNDER INDICATED WORK PHASE. DAMPER SHALL OPEN WHEN EXHAUSTER IS ENERGIZED AND SHALL RETURN TO ITS NORMALLY CLOSED POSITION WHEN THE EXHAUSTER IS DE-ENERGIZED.
ED 2		EXHAUSTER NUMBER 2	6						PHASE 2	
ED 3		EXHAUSTER NUMBER 3	6							
ED 4		EXHAUSTER NUMBER 4	6						PHASE 1	
ED 5	EAST PORTAL BLDG ROOF	EXHAUSTER NUMBER 5	6	82" WIDEx77" HIGH	8" WIDE AIR FOIL OPPOSED BLADE	CLOSED	8" X 2" X 12 GA GALVANIZED STEEL	10,000 LBS		
ED 6		EXHAUSTER NUMBER 6	6						PHASE 2	
ED 7		EXHAUSTER NUMBER 7	6							
ED 8		EXHAUSTER NUMBER 8	6						PHASE 1	

NOTE:
ALL MATERIALS ARE GALVANIZED STEEL UNLESS OTHERWISE NOTED.

	BY	CHECKED
DESIGN	C.CASTILLO	H.MOZAFFARI
DETAILS	C.CASTILLO	H.MOZAFFARI
QUANTITIES	C.CASTILLO	H.MOZAFFARI

PREPARED FOR THE STATE OF CALIFORNIA DEPARTMENT OF TRANSPORTATION

DIVISION OF ENGINEERING SERVICES
ELECTRICAL-MECHANICAL-WATER AND WASTEWATER DESIGN

BRIDGE NO. VARIES
POST MILE VARIES

SCADA SYSTEM UPGRADE: POSEY/WEBSTER STREET TUBES AND CALDECOTT TUNNEL

EQUIPMENT SCHEDULE (OPTION #2) - HVAC

SHEET **M0-2**

DOES SD Imperial Rev.1/07

ORIGINAL SCALE IN INCHES FOR REDUCED PLANS 0 1 2 3

CU 04220
EA 1A4604

DISREGARD PRINTS BEARING EARLIER REVISION DATES →

REVISION DATES (PRELIMINARY STAGE ONLY) | SHEET 10 | OF 95

26-NOV-2008 13:26

M0-2.dgn

DIST.	COUNTY	ROUTE	POST MILES TOTAL PROJECT	SHEET NO.	TOTAL SHEETS
04	Ala,CC	24,260	R5.9/R6.2, R0.0/R0.5,R0.9/R1.9	16	100

REGISTERED MECHANICAL ENGINEER — DATE

REGISTERED PROFESSIONAL ENGINEER H. MOZAFFARI No. M-22289 Exp. 12/31/09 MECH STATE OF CALIFORNIA

11-24-08
PLANS APPROVAL DATE

The State of California or its officers or agents shall not be responsible for the accuracy or completeness of electronic copies of this plan sheet.

STV Incorporated
9130 Anaheim Place, Suite 210
Rancho Cucamonga, CA 91730

KEYNOTES:

1. ALL WORK ASSOCIATED WITH EXISTING EXHAUSTERS #5 & #8 AND EXISTING BLOWERS #5 & #8 SHALL BE DONE UNDER PHASE 1.
2. ALL WORK ASSOCIATED WITH EXISTING EXHAUSTERS #6 & #7 AND EXISTING BLOWERS #6 & #7 SHALL BE DONE UNDER PHASE 2.
3. EXISTING EXHAUSTER IN FAN ROOM.
4. EXISTING BLOWER IN FAN ROOM.
5. EXISTING DAMPER DOOR ASSEMBLY DOWNSTREAM OF EXISTING BLOWER. SEE SHEET M1-3 FOR EXTENT OF WORK.
6. EXISTING STAIRS DOWN TO EXISTING TUNNEL AND SUPPLY DAMPER.
7. EXISTING LADDER ACCESS TO ROOF.

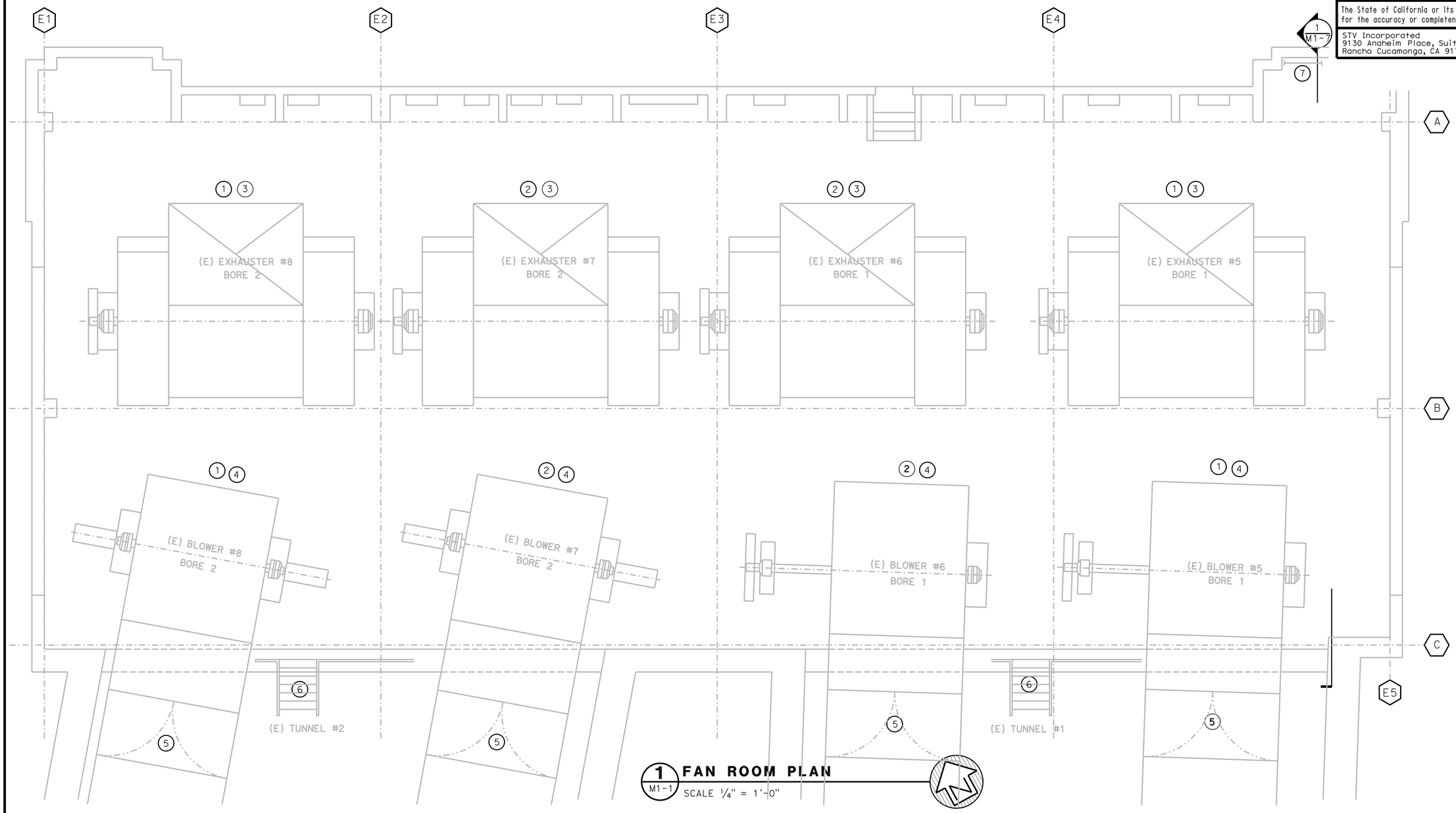

1 M1-1 **FAN ROOM PLAN**
SCALE 1/4" = 1'-0"

DESIGN	BY C.CASTILLO	CHECKED H.MOZAFFARI	
DETAILS	BY C.CASTILLO	CHECKED H.MOZAFFARI	
QUANTITIES	BY C.CASTILLO	CHECKED H.MOZAFFARI	

PREPARED FOR THE STATE OF CALIFORNIA DEPARTMENT OF TRANSPORTATION

DIVISION OF ENGINEERING SERVICES
ELECTRICAL-MECHANICAL-WATER AND WASTEWATER DESIGN

BRIDGE NO. VARIES
POST MILE VARIES

SCADA SYSTEM UPGRADE: POSEY/WEBSTER STREET TUBES AND CALDECOTT TUNNEL
CALDECOTT BORES 1 & 2
EAST PORTAL BUILDING FAN ROOM PLAN-HVAC

SHEET **M1-1**

DOES SD Imperial Rev.1/07

ORIGINAL SCALE IN INCHES FOR REDUCED PLANS 0 1 2 3

CU 04220
EA 1A4604

DISREGARD PRINTS BEARING EARLIER REVISION DATES → REVISION DATES (PRELIMINARY STAGE ONLY)

SHEET II OF 95

26-NOV-2008 13:26
M1-1.dgn

DIST.	COUNTY	ROUTE	POST MILES TOTAL PROJECT	SHEET NO.	TOTAL SHEETS
04	Ala,CC	24,260	R5.9/R6.2, R0.0/R0.5,R0.9/R1.9	17	100

REGISTERED MECHANICAL ENGINEER — DATE

REGISTERED PROFESSIONAL ENGINEER H. MOZAFFARI No. M-22289 Exp. 12/31/09 MECH STATE OF CALIFORNIA

11-24-08
PLANS APPROVAL DATE

The State of California or its officers or agents shall not be responsible for the accuracy or completeness of electronic copies of this plan sheet.

STV Incorporated
9130 Anaheim Place, Suite 210
Rancho Cucamonga, CA 91730

KEYNOTES:

1. ALL WORK ASSOCIATED WITH EXISTING EXHAUSTERS #5 & #8 IN FAN ROOM BELOW SHALL BE DONE UNDER PHASE 1.
2. ALL WORK ASSOCIATED WITH EXISTING EXHAUSTERS #6 & #7 IN FAN ROOM BELOW SHALL BE DONE UNDER PHASE 2.
3. REMOVE ALL EXISTING TIE RODS AND CABLES ON FACE OF EXISTING EXHAUST DUCT OPENING.
4. NEW 16 GAUGE MINIMUM SHEET METAL SEALING THE RESULTING OPENING BETWEEN THE EXISTING EXHAUST DUCT AND THE NEW EXHAUST DAMPER ASSEMBLY. SCREW SHEET METAL WITH SHEET METAL SCREW TO EXISTING GALVANIZED ANGLE AND NEW STRUCTURAL MEMBER @ 6" OC MAXIMUM. SEAL REMAINING AIR GAP AIRTIGHT WITH MASTIC OR APPROVED EQUAL.
5. FACTORY FURNISHED, FIELD INSTALLED JACKSHAFT SUPPORT WITH BALL BEARING (TYPICAL OF 5 FOR OPTION #1 AND TYPICAL OF 3 FOR OPTION #2).
6. FACTORY FURNISHED, FIELD INSTALLED EXHAUST DAMPER MOTOR SUPPORT BRACKET WELDED TO NEW EXHAUST DAMPER FRAME (TYPICAL OF 3).
7. NEW STRUCTURAL MEMBER. SEE STRUCTURAL DRAWING FOR SIZE AND DETAILS.

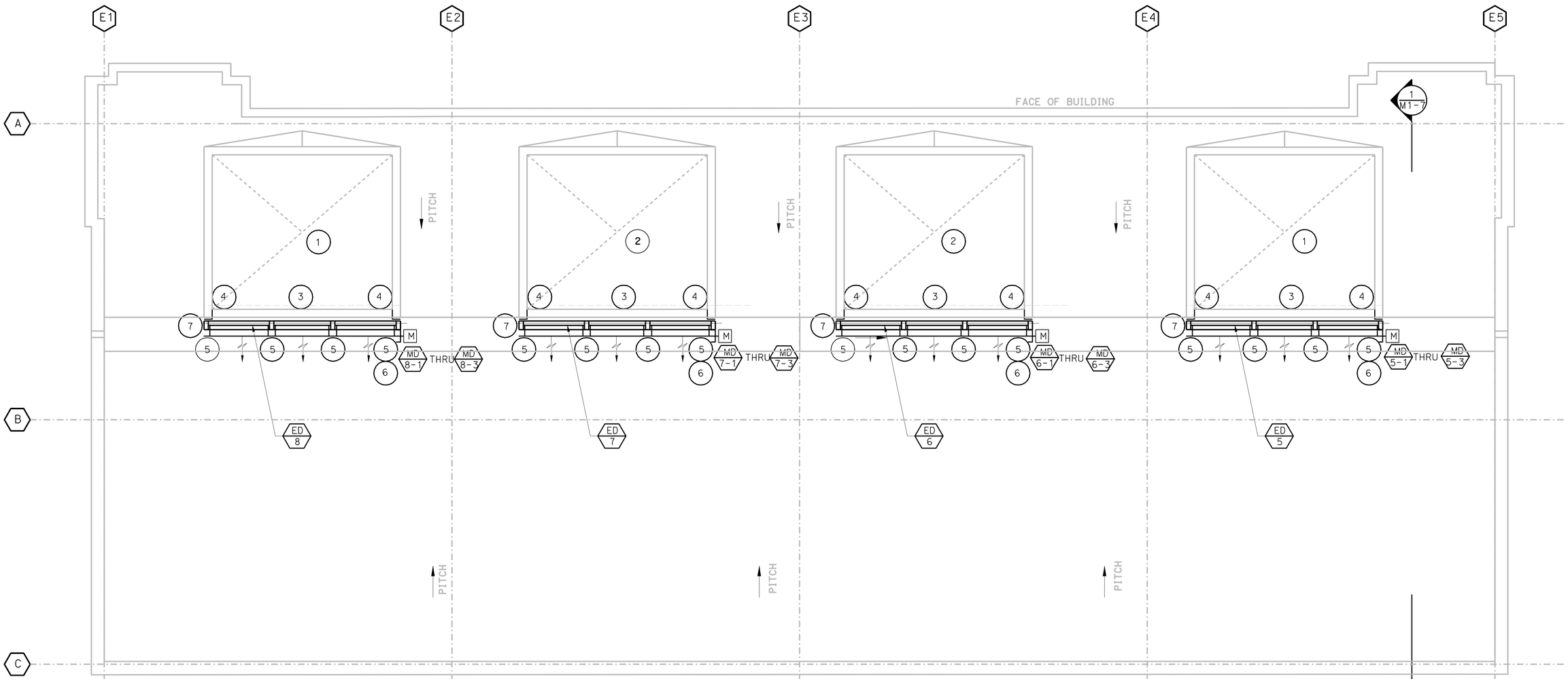

1 M1-2 ROOF PLAN
SCALE 1/4" = 1'-0"

DESIGN	BY C.CASTILLO	CHECKED H.MOZAFFARI	PREPARED FOR THE STATE OF CALIFORNIA DEPARTMENT OF TRANSPORTATION
DETAILS	BY C.CASTILLO	CHECKED H.MOZAFFARI	
QUANTITIES	BY C.CASTILLO	CHECKED H.MOZAFFARI	

DIVISION OF ENGINEERING SERVICES
ELECTRICAL-MECHANICAL-WATER AND WASTEWATER DESIGN

BRIDGE NO. VARIES
POST MILE VARIES

SCADA SYSTEM UPGRADE: POSEY/WEBSTER STREET TUBES AND CALDECOTT TUNNEL
CALDECOTT BORES 1 & 2
EAST PORTAL BUILDING ROOF PLAN - HVAC

SHEET **M1-2**

DOES SD Imperial Rev.1/07

ORIGINAL SCALE IN INCHES FOR REDUCED PLANS 0 1 2 3

CU 04220
EA 1A4604

DISREGARD PRINTS BEARING EARLIER REVISION DATES →
REVISION DATES (PRELIMINARY STAGE ONLY)

SHEET 12 OF 95

26-NOV-2008 13:27
M1-2.dgn

DIST.	COUNTY	ROUTE	POST MILES TOTAL PROJECT	SHEET NO.	TOTAL SHEETS
04	Ala,CC	24,260	R5.9/R6.2, R0.0/R0.5,R0.9/R1.9	18	100

REGISTERED MECHANICAL ENGINEER — DATE

REGISTERED PROFESSIONAL ENGINEER H. MOZAFFARI No. M-22289 Exp. 12/31/09 MECH STATE OF CALIFORNIA

11-24-08
PLANS APPROVAL DATE

The State of California or its officers or agents shall not be responsible for the accuracy or completeness of electronic copies of this plan sheet.

STV Incorporated
9130 Anaheim Place, Suite 210
Rancho Cucamonga, CA 91730

NOTES:

1. ALL WORK ASSOCIATED WITH BLOWERS #5 & #8 SHALL BE DONE UNDER PHASE 1.
2. ALL WORK ASSOCIATED WITH BLOWERS #6 & #7 SHALL BE DONE UNDER PHASE 2.

KEYNOTES:

1. LUBRICATE AND REWORK EXISTING 2" DIAMETER SHAFT DRIVING EXISTING DOOR TYPE DAMPERS TO PROVIDE FOR FREE SWINGING DOOR ASSEMBLY.
2. REMOVE EXISTING LINKAGE AND REPLACE WITH NEW LINKAGE TO MATCH EXISTING.
3. LUBRICATE EXISTING GEAR REDUCER AND MAKE IT OPERATIONAL.
4. REMOVE EXISTING 2 HP MOTOR AND REPLACE WITH NEW 2 HP MOTOR, 1,200 RPM, 480V/3PH/60HZ (FURNISHED & INSTALLED BY ELECTRICAL CONTRACTOR).
5. TIGHTEN AND LUBRICATE EXISTING FLANGE COUPLING AND MAKE IT OPERATIONAL.
6. PROVIDE NEW CHAIN TO OPEN AND CLOSE EXISTING DOOR TYPE DAMPER MANUALLY. TEST AND OPERATE EXISTING DOOR TYPE DAMPER WITH CHAIN MANUALLY PRIOR TO OPERATING ELECTRICALLY.
7. LUBRICATE EXISTING RIGHT-HAND WORM GEAR AND MAKE IT OPERATIONAL (TYPICAL FOR LEFT-HAND WORM GEAR).
8. LUBRICATE EXISTING WORM GEAR REDUCER AND BALL BEARING AND MAKE THEM OPERATIONAL.
9. TWO (2) EXISTING DOOR TYPE DAMPERS INSIDE FRESH AIR DUCT DOWNSTREAM OF EXISTING BLOWERS #5, #6, #7 AND #8. CLEAN, SAND AND PAINT TO MAKE IT OPERATIONAL. SEE DRAWING M1-1 FOR LOCATION.
10. REWORK BASE PLATE OF EXISTING 2 HP ELECTRIC MOTOR TO ACCOMMODATE PHYSICAL SIZE OF NEW 2 HP ELECTRIC MOTOR FOR PROPER OPERATION AND SHAFT ALIGNMENT.

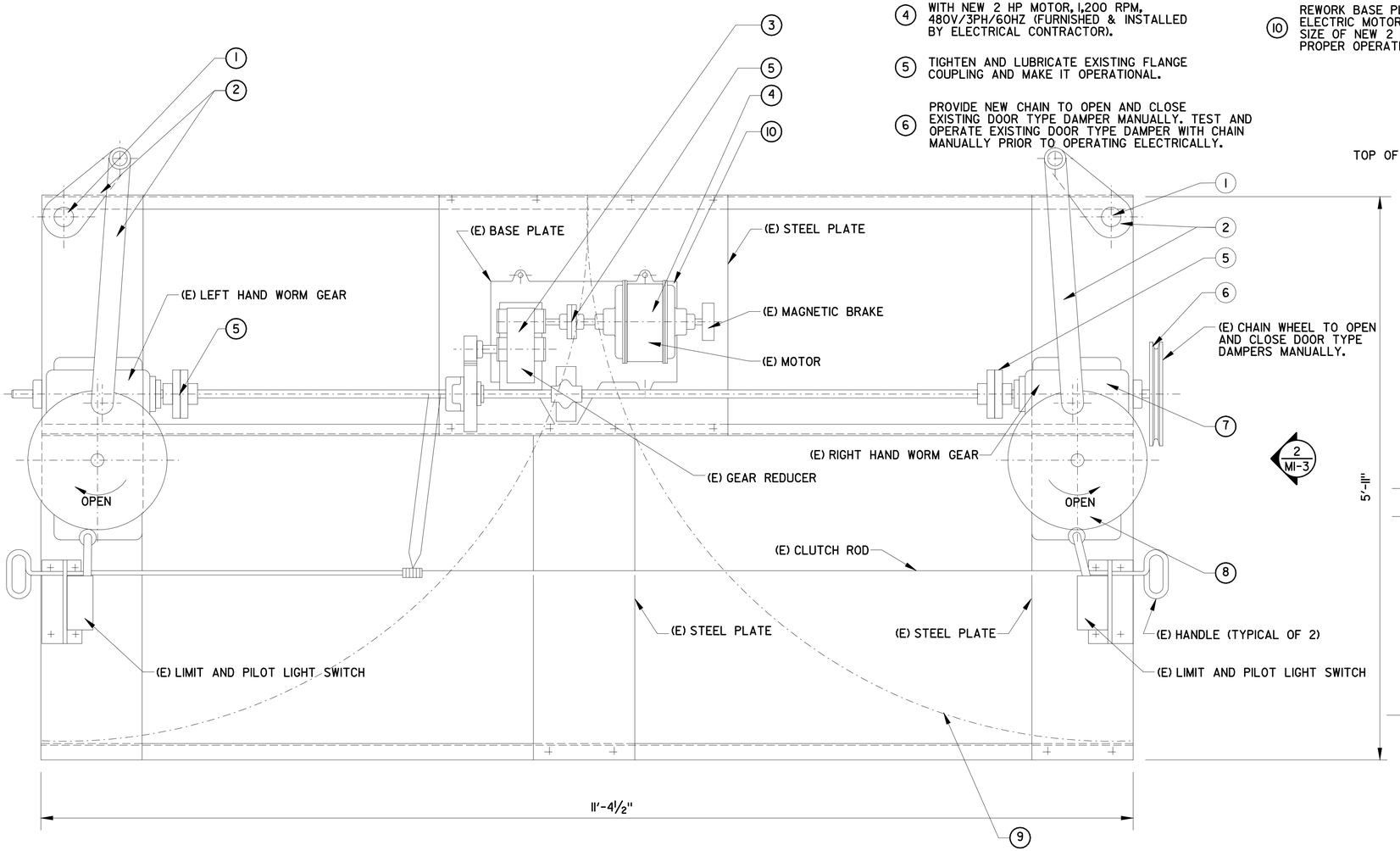

1 M1-3 DAMPER DOOR ASSEMBLY PLAN DOWNSTREAM OF BLOWER # 5 (SHOWN)

SCALE: 1½" = 1'-0"

(TYPICAL FOR BLOWERS #6, #7 AND #8 DAMPER DOOR ASSEMBLIES)

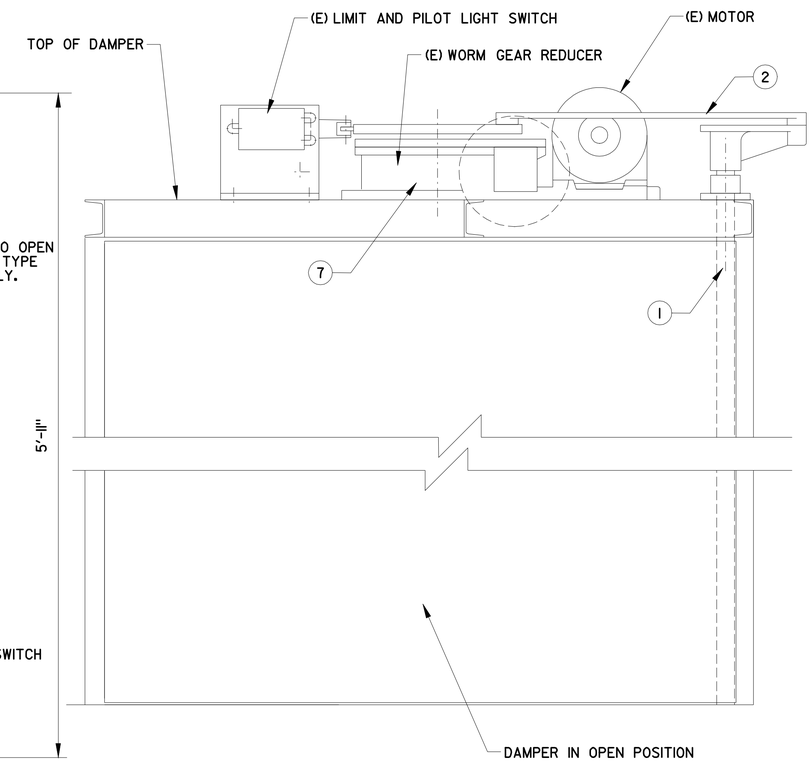

2 M1-3 SIDE ELEVATION

SCALE: 1½" = 1'-0"

DESIGN	BY C.CASTILLO	CHECKED H.MOZAFFARI	
DETAILS	BY C.CASTILLO	CHECKED H.MOZAFFARI	
QUANTITIES	BY C.CASTILLO	CHECKED H.MOZAFFARI	

PREPARED FOR THE STATE OF CALIFORNIA DEPARTMENT OF TRANSPORTATION

DIVISION OF ENGINEERING SERVICES ELECTRICAL-MECHANICAL-WATER AND WASTEWATER DESIGN

BRIDGE NO. VARIES
POST MILE VARIES

SCADA SYSTEM UPGRADE: POSEY/WEBSTER STREET TUBES AND CALDECOTT TUNNEL
CALDECOTT BORES 1 & 2 DAMPER ASSEMBLY IN EAST PORTAL BUILDING - HVAC

SHEET **M1-3**

DOES SD Imperial Rev.1/07

ORIGINAL SCALE IN INCHES FOR REDUCED PLANS 0 1 2 3

CU 04220
EA 1A4604

DISREGARD PRINTS BEARING EARLIER REVISION DATES →

REVISION DATES (PRELIMINARY STAGE ONLY)

SHEET 14 OF 96

26-NOV-2008 13:27
M1-03.dgn

DIST.	COUNTY	ROUTE	POST MILES TOTAL PROJECT	SHEET NO.	TOTAL SHEETS
04	Ala,CC	24,260	R5.9/R6.2, R0.0/R0.5,R0.9/R1.9	19	100

REGISTERED MECHANICAL ENGINEER — DATE

REGISTERED PROFESSIONAL ENGINEER H. MOZAFFARI No. M-22289 Exp. 12/31/09 MECH STATE OF CALIFORNIA

11-24-08
PLANS APPROVAL DATE

The State of California or its officers or agents shall not be responsible for the accuracy or completeness of electronic copies of this plan sheet.

STV Incorporated
9130 Anaheim Place, Suite 210
Rancho Cucamonga, CA 91730

KEYNOTES:

1. ALL WORK ASSOCIATED WITH EXISTING EXHAUSTERS #1 & #4 AND EXISTING BLOWERS #1 & #4 SHALL BE DONE UNDER PHASE 1.
2. ALL WORK ASSOCIATED WITH EXISTING EXHAUSTERS #2 & #3 AND EXISTING BLOWERS #2 & #3 SHALL BE DONE UNDER PHASE 2.
3. EXISTING EXHAUSTER IN FAN ROOM.
4. EXISTING BLOWER IN FAN ROOM.
5. EXISTING DAMPER ASSEMBLY DOWNSTREAM OF EXISTING BLOWER. SEE SHEET M1-6 FOR EXTENT OF WORK.
6. EXISTING STAIRS DOWN TO EXISTING TUNNEL AND SUPPLY DAMPER.
7. EXISTING LADDER ACCESS TO ROOF.

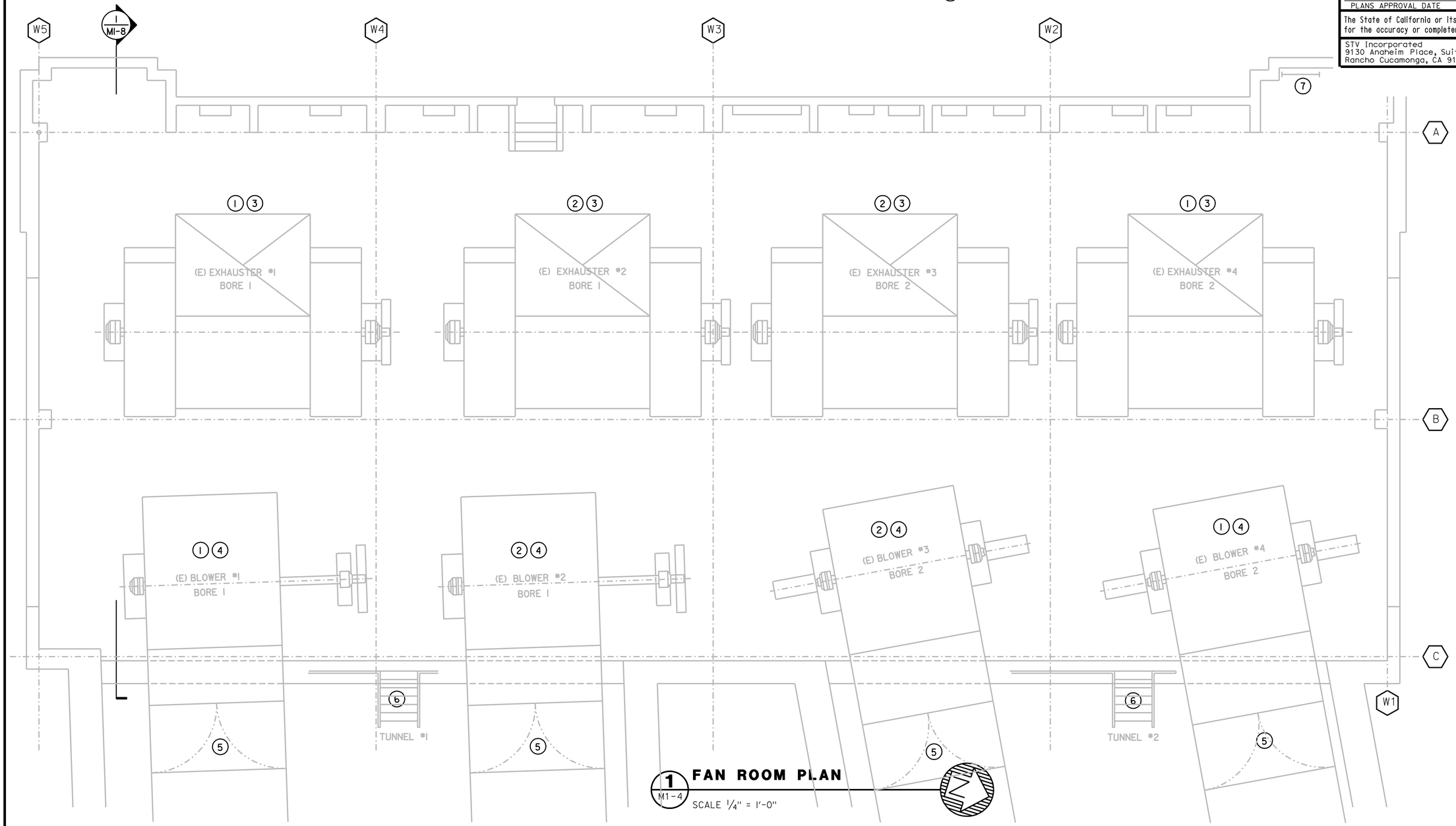

1 / M1-4 **FAN ROOM PLAN**

SCALE 1/4" = 1'-0"

DESIGN	BY C.CASTILLO	CHECKED H.MOZAFFARI	
DETAILS	BY C.CASTILLO	CHECKED H.MOZAFFARI	
QUANTITIES	BY C.CASTILLO	CHECKED H.MOZAFFARI	

PREPARED FOR THE STATE OF CALIFORNIA DEPARTMENT OF TRANSPORTATION

DIVISION OF ENGINEERING SERVICES
ELECTRICAL-MECHANICAL-WATER AND WASTEWATER DESIGN

BRIDGE NO. VARIES
POST MILE VARIES

SCADA SYSTEM UPGRADE: POSEY/WEBSTER STREET TUBES AND CALDECOTT TUNNEL
CALDECOTT BORES 1 & 2
WEST PORTAL BUILDING FAN ROOM PLAN-HVAC

SHEET **M1-4**

DOES SD Imperial Rev.1/07

ORIGINAL SCALE IN INCHES FOR REDUCED PLANS 0 1 2 3

CU 04220
EA 1A4604

DISREGARD PRINTS BEARING EARLIER REVISION DATES →

REVISION DATES (PRELIMINARY STAGE ONLY)

SHEET 15 OF 96

26-NOV-2008 13:27
M1-04.dgn

DIST.	COUNTY	ROUTE	POST MILES TOTAL PROJECT	SHEET NO.	TOTAL SHEETS
04	Ala,CC	24,260	R5.9/R6.2, R0.0/R0.5,R0.9/R1.9	20	100

REGISTERED MECHANICAL ENGINEER — DATE

REGISTERED PROFESSIONAL ENGINEER H. MOZAFFARI No. M-22289 Exp. 12/31/09 MECH STATE OF CALIFORNIA

11-24-08
PLANS APPROVAL DATE

The State of California or its officers or agents shall not be responsible for the accuracy or completeness of electronic copies of this plan sheet.

STV Incorporated
9130 Anaheim Place, Suite 210
Rancho Cucamonga, CA 91730

KEYNOTES:

1. ALL WORK ASSOCIATED WITH EXISTING EXHAUSTERS #1 & #4 SHALL BE DONE UNDER PHASE 1.
2. ALL WORK ASSOCIATED WITH EXISTING EXHAUSTERS #2 & #3 SHALL BE DONE UNDER PHASE 2.
3. REMOVE ALL EXISTING TIE RODS AND CABLES ON FACE OF EXISTING EXHAUST DUCT OPENING.
4. NEW 16 GAUGE MINIMUM SHEET METAL SEALING THE RESULTING OPENING BETWEEN THE EXISTING EXHAUST DUCT AND THE NEW EXHAUST DAMPER ASSEMBLY. SCREW SHEET METAL WITH SHEET METAL SCREW TO EXISTING GALVANIZED ANGLE AND NEW STRUCTURAL MEMBER @ 6" OC MAXIMUM. SEAL REMAINING AIR GAP AIRTIGHT WITH MASTIC OR APPROVED EQUAL.
5. FACTORY FURNISHED, FIELD INSTALLED JACKSHAFT SUPPORT WITH BALL BEARING (TYPICAL FOR 5 FOR OPTION # 1 AND TYPICAL FOR 3 FOR OPTION #2).
6. FACTORY FURNISHED, FIELD INSTALLED EXHAUST DAMPER MOTOR SUPPORT BRACKET WELDED TO NEW EXHAUST DAMPER FRAME (TYPICAL OF 3).
7. NEW STRUCTURAL MEMBER. SEE STRUCTURAL DRAWING FOR QUANTITY AND DETAILS.

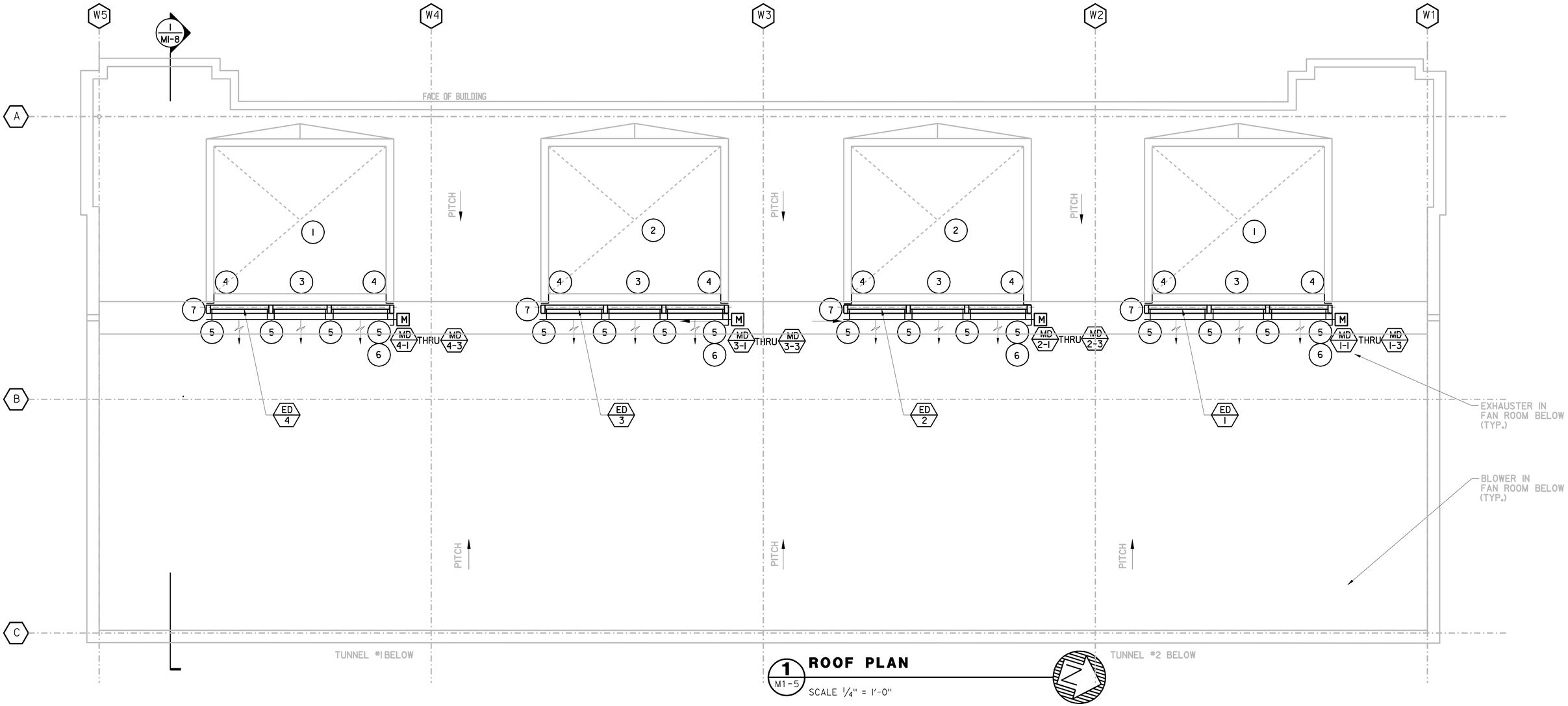

1 M1-5 **ROOF PLAN**
SCALE 1/4" = 1'-0"

DESIGN	BY C.CASTILLO	CHECKED H.MOZAFFARI	
DETAILS	BY C.CASTILLO	CHECKED H.MOZAFFARI	
QUANTITIES	BY C.CASTILLO	CHECKED H.MOZAFFARI	

PREPARED FOR THE STATE OF CALIFORNIA DEPARTMENT OF TRANSPORTATION

DIVISION OF ENGINEERING SERVICES
ELECTRICAL-MECHANICAL-WATER AND WASTEWATER DESIGN

BRIDGE NO. VARIES
POST MILE VARIES

SCADA SYSTEM UPGRADE: POSEY/WEBSTER STREET TUBES AND CALDECOTT TUNNEL
CALDECOTT BORES 1 & 2
WEST PORTAL BUILDING ROOF PLAN - HVAC

SHEET **M1-5**

DOES SD Imperial Rev.1/07

ORIGINAL SCALE IN INCHES FOR REDUCED PLANS 0 1 2 3

CU 04220
EA 1A4604

DISREGARD PRINTS BEARING EARLIER REVISION DATES →
REVISION DATES (PRELIMINARY STAGE ONLY)

SHEET 16 OF 96

26-NOV-2008 13:27
M1-05.dgn

DIST.	COUNTY	ROUTE	POST MILES TOTAL PROJECT	SHEET NO.	TOTAL SHEETS
04	Ala,CC	24,260	R5.9/R6.2, R0.0/R0.5,R0.9/R1.9	21	100

REGISTERED MECHANICAL ENGINEER — DATE

REGISTERED PROFESSIONAL ENGINEER H. MOZAFFARI No. M-22289 Exp. 12/31/09 MECH STATE OF CALIFORNIA

11-24-08
PLANS APPROVAL DATE

The State of California or its officers or agents shall not be responsible for the accuracy or completeness of electronic copies of this plan sheet.

STV Incorporated
9130 Anaheim Place, Suite 210
Rancho Cucamonga, CA 91730

NOTES:

1. ALL WORK ASSOCIATED WITH BLOWER #1 & #4 SHALL BE DONE UNDER PHASE 1.

2. ALL WORK ASSOCIATED WITH BLOWER #2 & #3 SHALL BE DONE UNDER PHASE 2.

KEYNOTES:

1. LUBRICATE AND REWORK EXISTING 2" DIAMETER DAMPER SHAFT DRIVING EXISTING DOOR TYPE DAMPERS TO PROVIDE FOR FREE SWINGING DOOR ASSEMBLY.
2. REMOVE EXISTING LINKAGES AND REPLACE WITH NEW LINKAGES TO MATCH EXISTING.
3. LUBRICATE EXISTING GEAR REDUCER AND MAKE IT OPERATIONAL.
4. REMOVE EXISTING 2 HP MOTOR AND REPLACE WITH NEW 2 HP MOTOR, 1200 RPM, 480V/3PH/60HZ (FURNISHED AND INSTALLED BY ELECTRICAL CONTRACTOR).
5. LUBRICATE AND TIGHTEN EXISTING FLANGE COUPLING AND MAKE IT OPERATIONAL.
6. PROVIDE NEW CHAIN TO OPEN AND CLOSE EXISTING DOOR TYPE DAMPERS MANUALLY. TEST AND OPERATE EXISTING DOOR TYPE DAMPERS MANUALLY WITH CHAIN PRIOR TO OPERATING ELECTRICALLY.
7. LUBRICATE EXISTING RIGHT-HAND WORM GEAR AND MAKE IT OPERATIONAL (TYPICAL FOR LEFT-HAND WORM GEAR).
8. LUBRICATE EXISTING WORM GEAR REDUCER AND BALL BEARING AND MAKE THEM OPERATIONAL.
9. TWO (2) EXISTING DOOR TYPE DAMPERS INSIDE FRESH AIR DUCT DOWNSTREAM OF EXISTING BLOWERS #1, #2, #3 AND #4 CLEAN, SAND, AND PAINT TO MAKE THEM OPERATIONAL. SEE DRAWING M1-4 FOR LOCATION.
10. REWORK BASE PLATE OF EXISTING 2 HP ELECTRIC MOTOR TO ACCOMMODATE PHYSICAL SIZE OF NEW 2 HP ELECTRIC MOTOR FOR PROPER OPERATION AND SHAFT ALIGNMENT.

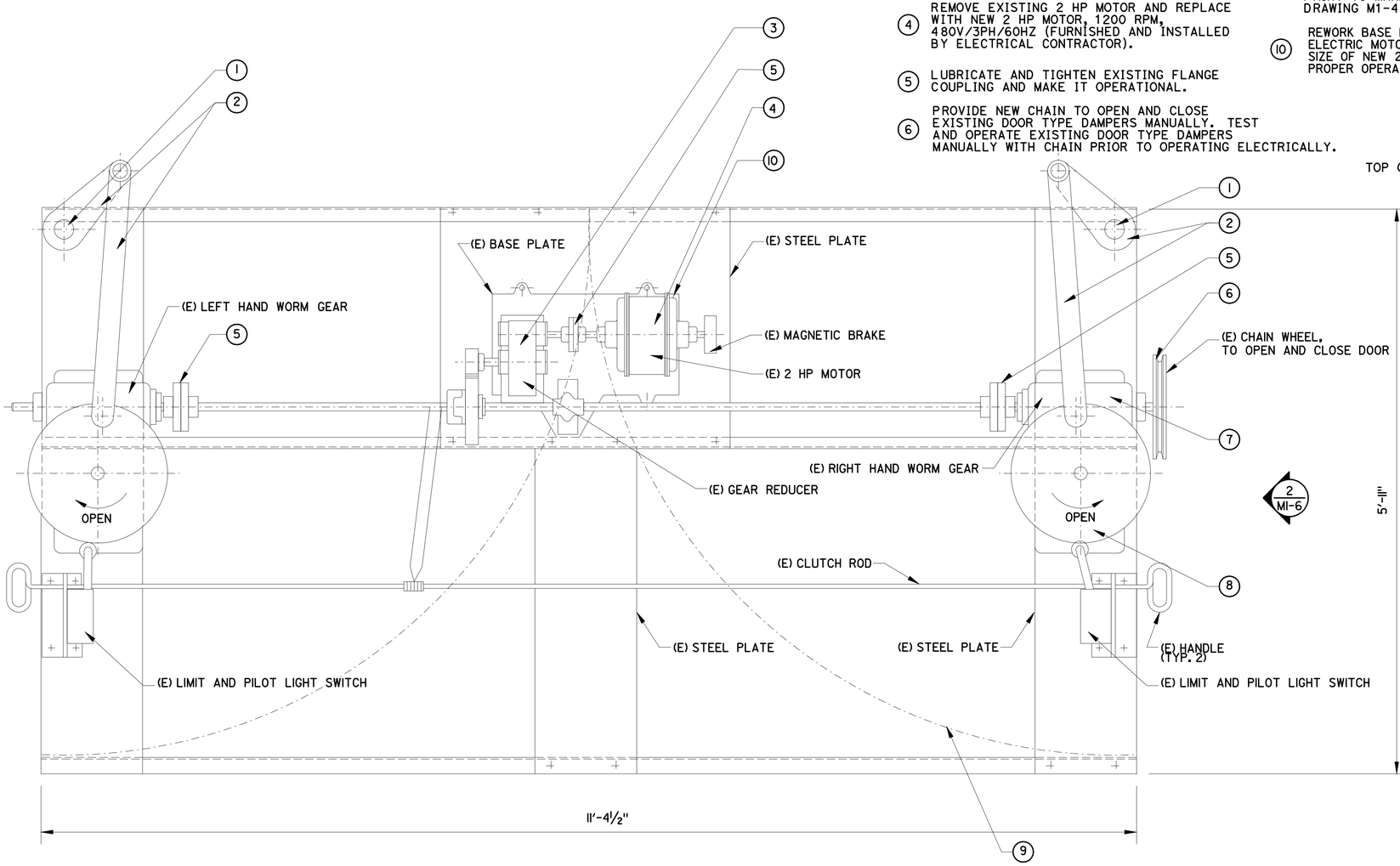

1 M1-6 DAMPER DOOR ASSEMBLY PLAN DOWNSTREAM OF BLOWER #4 (SHOWN)

SCALE: 1½" = 1'-0"

(TYPICAL FOR BLOWERS #1, #2 AND #3, DAMPER DOOR ASSEMBLIES)

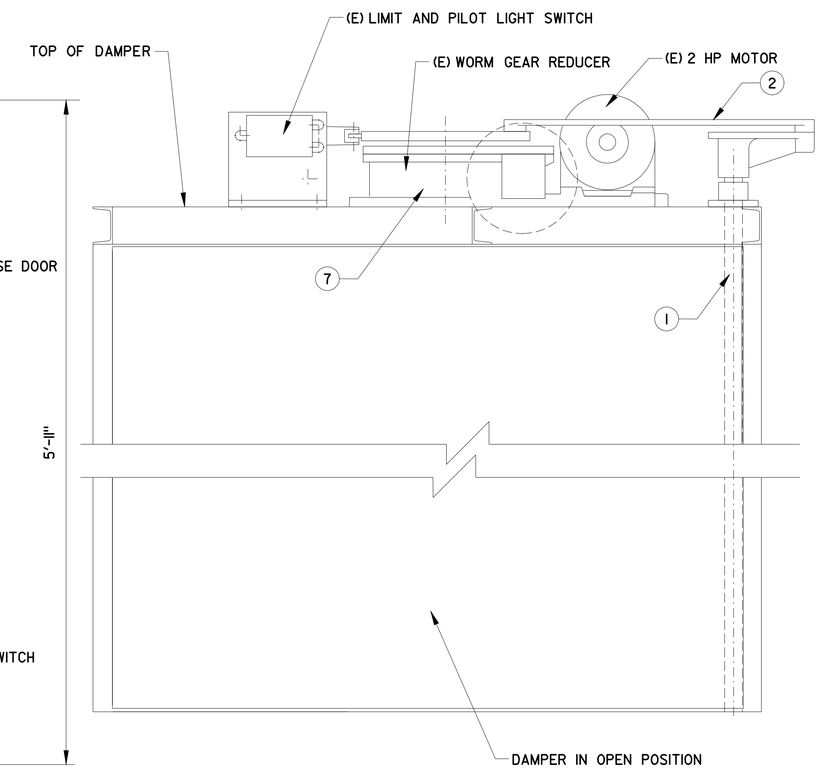

2 M1-6 SIDE ELEVATION

SCALE: 1½" = 1'-0"

DESIGN	BY C.CASTILLO	CHECKED H.MOZAFFARI	
DETAILS	BY C.CASTILLO	CHECKED H.MOZAFFARI	
QUANTITIES	BY C.CASTILLO	CHECKED H.MOZAFFARI	

PREPARED FOR THE STATE OF CALIFORNIA DEPARTMENT OF TRANSPORTATION

DIVISION OF ENGINEERING SERVICES ELECTRICAL-MECHANICAL-WATER AND WASTEWATER DESIGN

BRIDGE NO. VARIES
POST MILE VARIES

SCADA SYSTEM UPGRADE: POSEY/WEBSTER STREET TUBES AND CALDECOTT TUNNEL
CALDECOTT BORES 1 & 2 DAMPER ASSEMBLY IN WEST PORTAL BUILDING - HVAC

SHEET **M1-6**

DOES SD Imperial Rev.1/07

ORIGINAL SCALE IN INCHES FOR REDUCED PLANS 0 1 2 3

CU 04220
EA 1A4604

DISREGARD PRINTS BEARING EARLIER REVISION DATES →

REVISION DATES (PRELIMINARY STAGE ONLY)

SHEET 17 OF 96

26-NOV-2008 13:27

M1-06.dgn

DIST.	COUNTY	ROUTE	POST MILES TOTAL PROJECT	SHEET NO.	TOTAL SHEETS
04	Ala,CC	24,260	R5.9/R6.2, R0.0/R0.5,R0.9/R1.9	22	100

REGISTERED MECHANICAL ENGINEER — DATE

REGISTERED PROFESSIONAL ENGINEER H. MOZAFFARI No. M-22289 Exp. 12/31/09 MECH STATE OF CALIFORNIA

11-24-08
PLANS APPROVAL DATE

The State of California or its officers or agents shall not be responsible for the accuracy or completeness of electronic copies of this plan sheet.

STV Incorporated
9130 Anaheim Place, Suite 210
Rancho Cucamonga, CA 91730

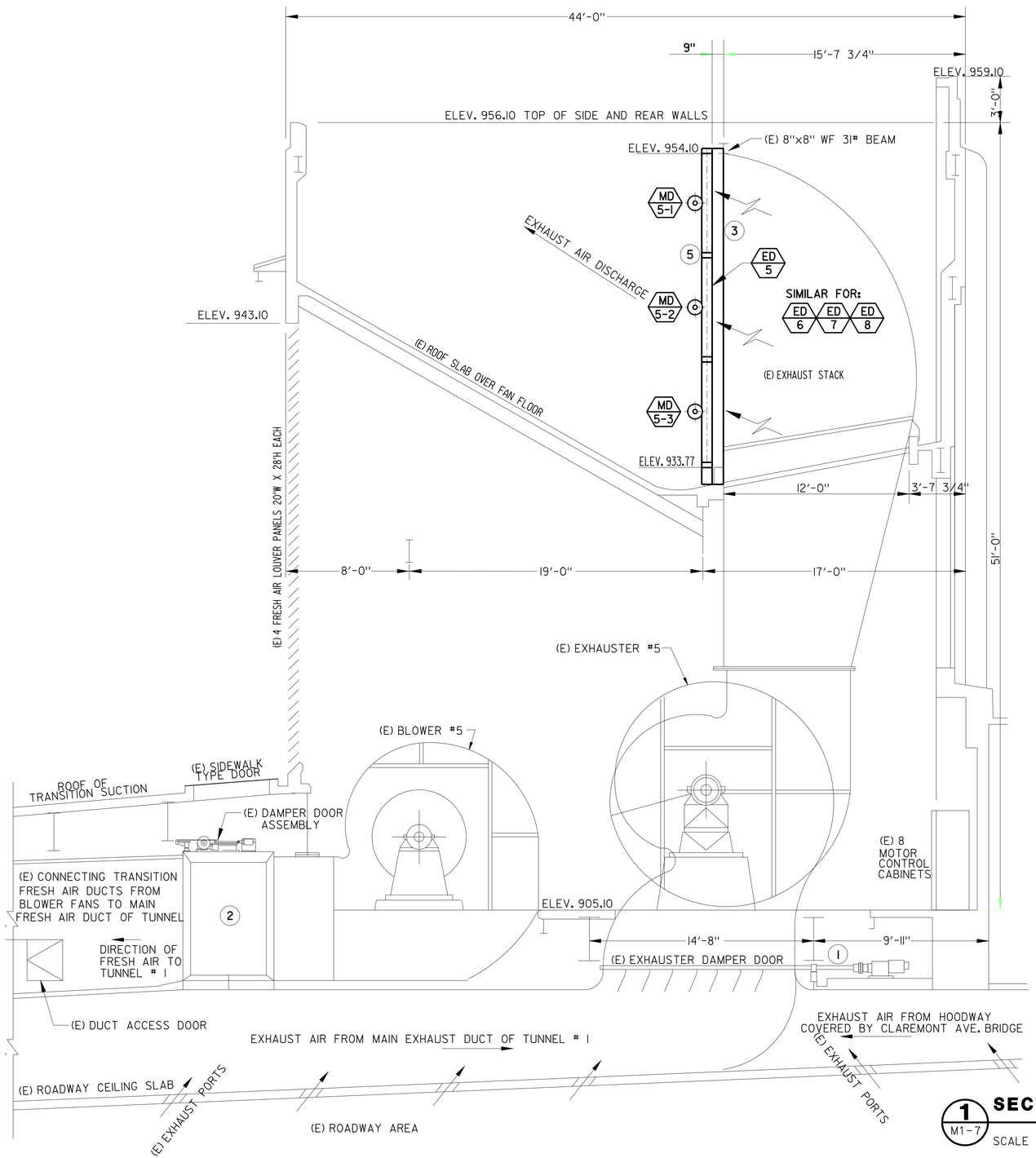

1 / M1-7 SECTION - EAST PORTAL BUILDING

SCALE 1/4" = 1'-0"

KEYNOTES:

1. DISCONNECT POWER FROM EXISTING DAMPER MOTOR AND THEN LOCK EXISTING EXHAUSTER DAMPER DOOR IN OPEN POSITION PERMANENTLY (TYPICAL FOR EXISTING EXHAUSTERS #6, #7 AND #8).
2. EXISTING BLOWER DAMPER DOOR ASSEMBLY DOWNSTREAM OF EXISTING FRESH AIR DUCT OF EXISTING BLOWER #5 (TYPICAL FOR EXISTING BLOWERS #6, #7 AND #8) SEE SHEET MI-3 FOR EXTENT OF WORK IN EAST PORTAL TUNNEL AND SHEET MI-6 FOR EXTENT OF WORK IN WEST PORTAL TUNNEL.
3. NEW 16 GAUGE MINIMUM SHEET METAL SEALING THE OPENING BETWEEN THE EXISTING EXHAUST DUCT AND NEW EXHAUST DAMPER ASSEMBLY. SCREW SHEET METAL WITH SHEET METAL SCREW TO EXISTING 3" x5" GALVANIZED ANGLE AND NEW STRUCTURAL MEMBER @ 6" OC MAXIMUM. SEAL REMAINING AIR GAP AIRTIGHT WITH MASTIC OR APPROVED EQUAL (TYPICAL FOR EXISTING EXHAUSTERS #6, #7 AND #8).
4. EXISTING EXHAUSTERS AND BLOWERS # 6, #7 AND #8 NOT SHOWN FOR CLARITY.
5. SEE DETAIL ON 1/MI-9 AND 1/MI-10.

DESIGN	BY C.CASTILLO	CHECKED H.MOZAFFARI	
DETAILS	BY C.CASTILLO	CHECKED H.MOZAFFARI	
QUANTITIES	BY C.CASTILLO	CHECKED H.MOZAFFARI	

PREPARED FOR THE STATE OF CALIFORNIA DEPARTMENT OF TRANSPORTATION

DIVISION OF ENGINEERING SERVICES ELECTRICAL-MECHANICAL-WATER AND WASTEWATER DESIGN

BRIDGE NO. VARIES | POST MILE VARIES

SCADA SYSTEM UPGRADE: POSEY/WEBSTER STREET TUBES AND CALDECOTT TUNNEL
CALDECOTT BORES 1 & 2
EAST PORTAL BUILDING SECTION - HVAC

SHEET **M1-7**

DOES SD Imperial Rev. 1/07

ORIGINAL SCALE IN INCHES FOR REDUCED PLANS 0 1 2 3

CU 04220
EA 1A4604

DISREGARD PRINTS BEARING EARLIER REVISION DATES → REVISION DATES (PRELIMINARY STAGE ONLY)

SHEET 18 OF 96

26-NOV-2008 13:27
M1-07.dgn

DIST.	COUNTY	ROUTE	POST MILES TOTAL PROJECT	SHEET NO.	TOTAL SHEETS
04	Ala,CC	24,260	R5.9/R6.2, R0.0/R0.5,R0.9/R1.9	23	100

REGISTERED MECHANICAL ENGINEER — DATE

REGISTERED PROFESSIONAL ENGINEER H. MOZAFFARI No. M-22289 Exp. 12/31/09 MECH STATE OF CALIFORNIA

11-24-08
PLANS APPROVAL DATE

The State of California or its officers or agents shall not be responsible for the accuracy or completeness of electronic copies of this plan sheet.

STV Incorporated
9130 Anaheim Place, Suite 210
Rancho Cucamonga, CA 91730

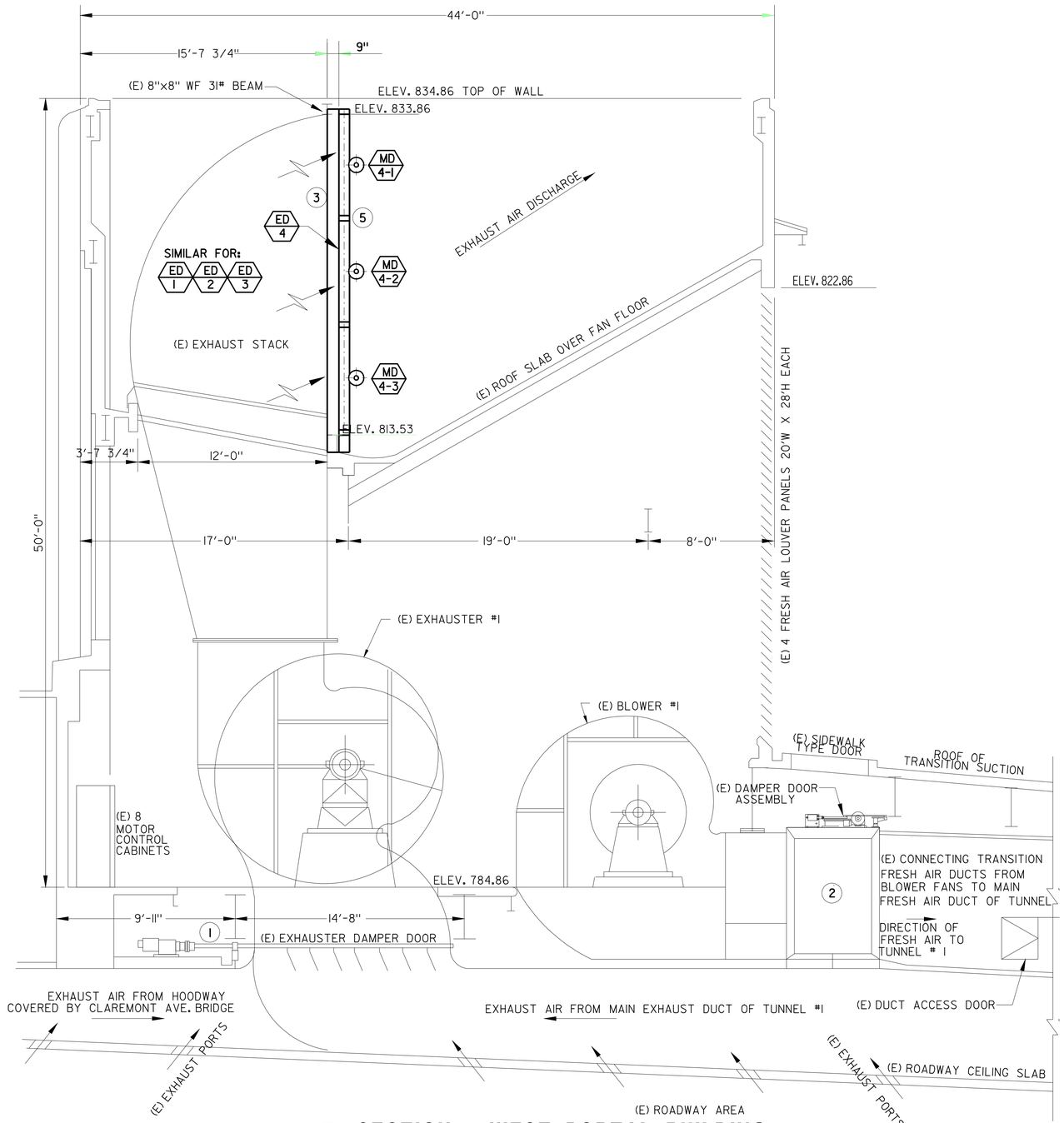

1 / M1-8 SECTION - WEST PORTAL BUILDING

SCALE 1/4" = 1'-0"

KEYNOTES:

1. DISCONNECT POWER FROM EXISTING DAMPER MOTOR AND THEN LOCK EXISTING EXHAUSTER DAMPER DOOR IN OPEN POSITION PERMANENTLY (TYPICAL FOR EXHAUSTERS #1, #2 AND #3).
2. EXISTING EXHAUST DAMPER DOOR ASSEMBLY DOWNSTREAM OF EXISTING FRESH AIR DUCT OF EXISTING BLOWER #4 (TYPICAL FOR EXISTING BLOWERS #1, #2 AND #3). SEE SHEET M1-3 FOR EXTENT OF WORK IN EAST PORTAL TUNNEL AND SHEET M1-6 FOR EXTENT OF WORK IN WEST PORTAL TUNNEL.
3. NEW 16 GAUGE MINIMUM SHEET METAL SEALING THE OPENING BETWEEN THE EXISTING EXHAUST DUCT AND THE NEW EXHAUST DAMPER ASSEMBLY. SCREW SHEET METAL WITH SHEET METAL SCREW TO EXISTING GALVANIZED ANGLE AND NEW EXHAUST DAMPER ASSEMBLY TO NEW TO NEW STRUCTURAL MEMBER @ 6" OC MAXIMUM. SEAL REMAINING AIR GAP AIRTIGHT WITH MASTIC OR APPROVED EQUAL (TYPICAL FOR EXISTING EXHAUSTERS #1, #2 AND #3).
4. EXISTING EXHAUSTERS AND EXISTING BLOWERS #1, #2 AND #3 NOT SHOWN FOR CLARITY.
5. SEE DETAIL ON 1/M1-9 AND 1/M1-10.

DESIGN	BY C.CASTILLO	CHECKED H.MOZAFFARI	PREPARED FOR THE STATE OF CALIFORNIA DEPARTMENT OF TRANSPORTATION
DETAILS	BY C.CASTILLO	CHECKED H.MOZAFFARI	
QUANTITIES	BY C.CASTILLO	CHECKED H.MOZAFFARI	

DIVISION OF ENGINEERING SERVICES
ELECTRICAL-MECHANICAL-WATER AND WASTEWATER DESIGN

BRIDGE NO. VARIES
POST MILE VARIES

SCADA SYSTEM UPGRADE: POSEY/WEBSTER STREET TUBES AND CALDECOTT TUNNEL
CALDECOTT BORES 1 & 2
WEST PORTAL BUILDING SECTION - HVAC

SHEET **M1-8**

DOES SD Imperial Rev.1/07

ORIGINAL SCALE IN INCHES FOR REDUCED PLANS 0 1 2 3

CU 04220
EA 1A4604

DISREGARD PRINTS BEARING EARLIER REVISION DATES → REVISION DATES (PRELIMINARY STAGE ONLY)

SHEET 19 OF 96

26-NOV-2008 13:28
M1-08.dgn

DIST.	COUNTY	ROUTE	POST MILES TOTAL PROJECT	SHEET NO.	TOTAL SHEETS
04	Ala,CC	24,260	R5.9/R6.2, R0.0/R0.5,R0.9/R1.9	24	100

REGISTERED MECHANICAL ENGINEER — DATE

REGISTERED PROFESSIONAL ENGINEER H. MOZAFFARI No. M-22289 Exp. 12/31/09 MECH STATE OF CALIFORNIA

11-24-08
PLANS APPROVAL DATE

The State of California or its officers or agents shall not be responsible for the accuracy or completeness of electronic copies of this plan sheet.

STV Incorporated
9130 Anaheim Place, Suite 210
Rancho Cucamonga, CA 91730

NOTE:

AFTER THE NEW EXHAUST DAMPER ASSEMBLY AND NEW 16 GAUGE SHEET METAL COVERING THE AIR GAP AROUND THE PERIMETER OF THE EXISTING EXHAUST DUCT OPENING ARE INSTALLED IN PLACE, ALL REMAINING AIR GAP BETWEEN THE NEW SHEET METAL DUCT OPENING AND NEW EXHAUST DAMPER ASSEMBLY SHALL BE SEALED AIRTIGHT WITH MASTIC OR APPROVED EQUAL

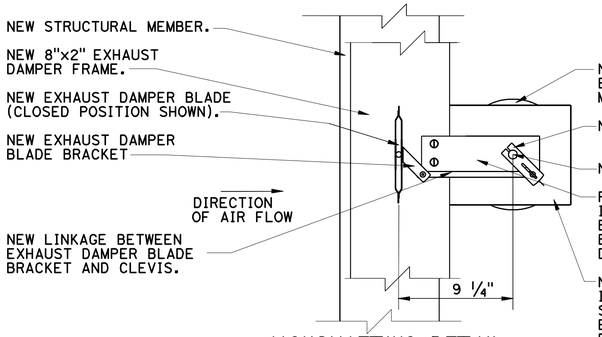

2 M1-9 JACKSHAFTING DETAIL

SCALE: NTS

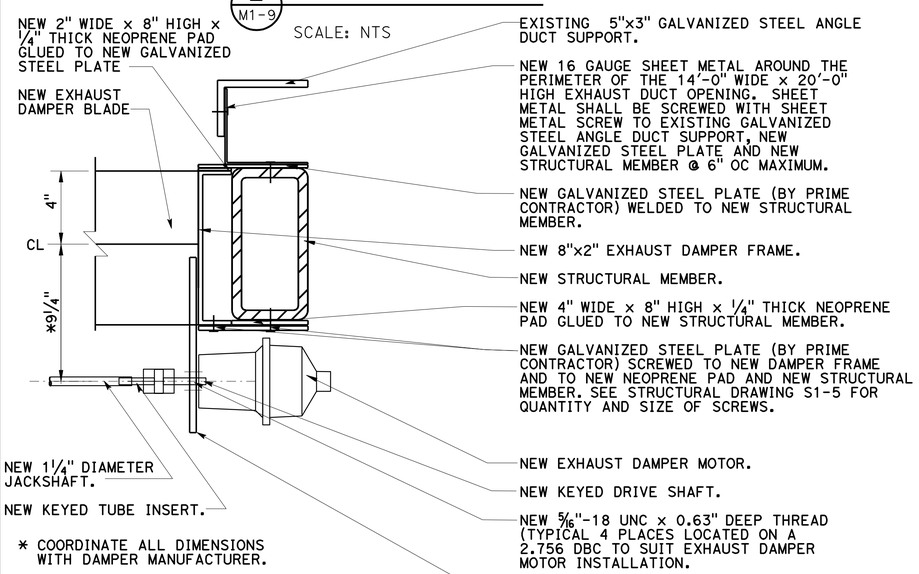

3 M1-9 DAMPER MOTOR ATTACHMENT DETAIL

SCALE: NTS

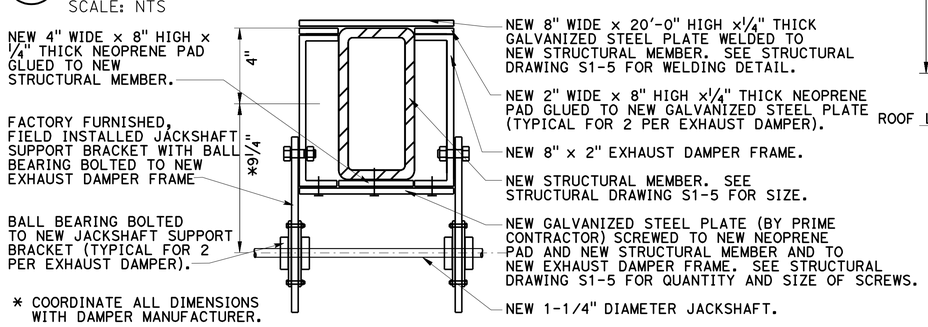

4 M1-9 JACKSHAFT SUPPORT DETAIL (TYP. 6)

SCALE: NTS

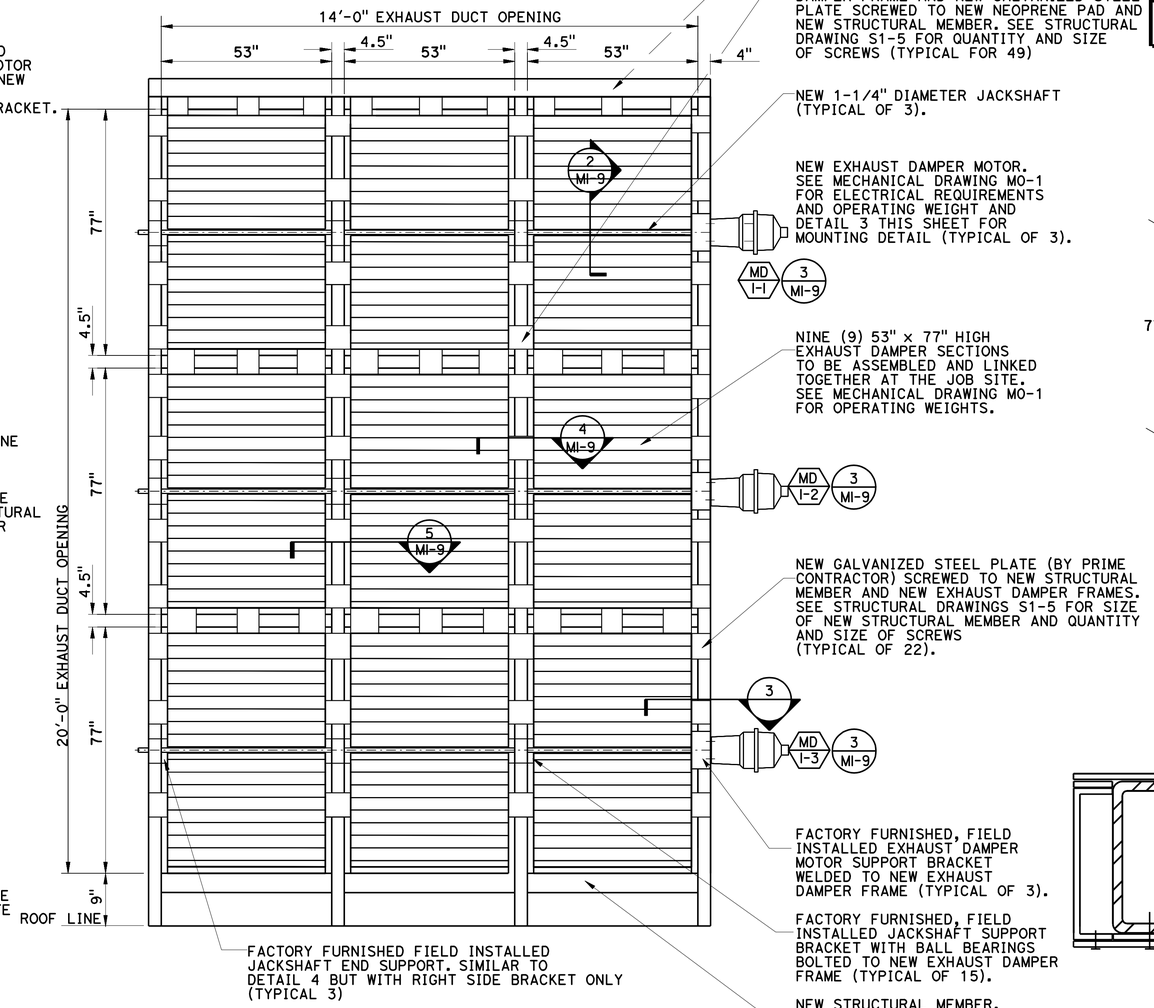

1 M1-9 ED-I EXHAUST DAMPER ASSEMBLY DETAIL (OPTION #I)

SCALE: NTS (TYP. FOR ED-2 THRU ED-8)

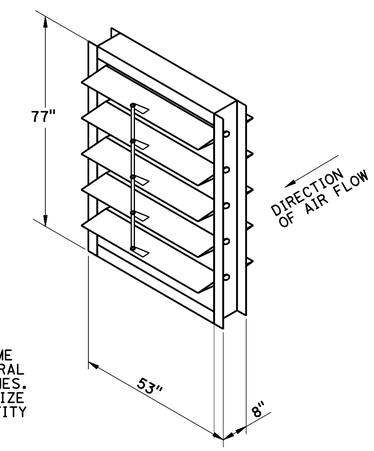

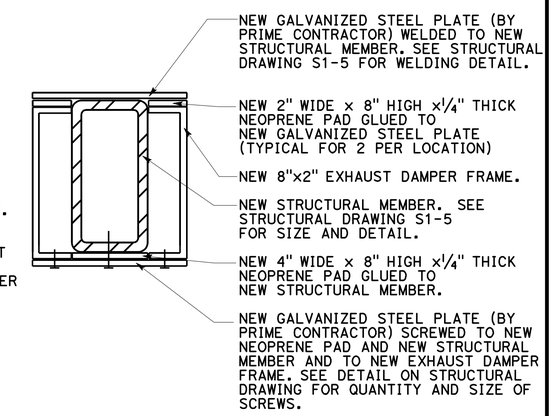

5 M1-9 GALVANIZED STEEL PLATE INSTALLATION DETAIL

SCALE: NTS

	BY	CHECKED
DESIGN	C.CASTILLO	H.MOZAFFARI
DETAILS	C.CASTILLO	H.MOZAFFARI
QUANTITIES	C.CASTILLO	H.MOZAFFARI

PREPARED FOR THE STATE OF CALIFORNIA DEPARTMENT OF TRANSPORTATION

DIVISION OF ENGINEERING SERVICES ELECTRICAL-MECHANICAL-WATER AND WASTEWATER DESIGN

BRIDGE NO. VARIES
POST MILE VARIES

SCADA SYSTEM UPGRADE: POSEY/WEBSTER STREET TUBES AND CALDECOTT TUNNEL
CALDECOTT BORES 1 & 2 EXHAUST DAMPER ASSEMBLY DETAILS (OPTION #I) -HVAC

SHEET **M1-9**

DOES SD Imperial Rev.1/07

ORIGINAL SCALE IN INCHES FOR REDUCED PLANS 0 1 2 3

CU 04220
EA 1A4604

DISREGARD PRINTS BEARING EARLIER REVISION DATES →

REVISION DATES (PRELIMINARY STAGE ONLY)

SHEET 20 OF 96

26-NOV-2008 08:48
m1-09.dgn

DIST.	COUNTY	ROUTE	POST MILES TOTAL PROJECT	SHEET NO.	TOTAL SHEETS
04	Ala,CC	24,260	R5.9/R6.2, R0.0/R0.5,R0.9/R1.9	25	100

REGISTERED MECHANICAL ENGINEER — DATE

REGISTERED PROFESSIONAL ENGINEER H. MOZAFFARI No. M-22289 Exp. 12/31/09 MECH STATE OF CALIFORNIA

11-24-08
PLANS APPROVAL DATE

The State of California or its officers or agents shall not be responsible for the accuracy or completeness of electronic copies of this plan sheet.

STV Incorporated
9130 Anaheim Place, Suite 210
Rancho Cucamonga, CA 91730

NOTE:

AFTER THE NEW EXHAUST DAMPER ASSEMBLY AND NEW 16 GAUGE SHEET METAL COVERING THE AIR GAP AROUND THE PERIMETER OF THE EXISTING EXHAUST DUCT OPENING ARE INSTALLED IN PLACE, ALL REMAINING AIR GAP BETWEEN THE NEW SHEET METAL DUCT OPENING AND NEW EXHAUST DAMPER ASSEMBLY SHALL BE SEALED AIRTIGHT WITH MASTIC OR APPROVED EQUAL.

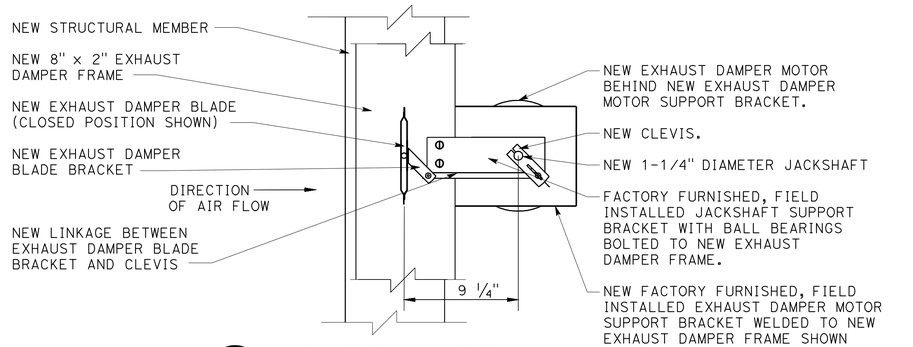

2 M1-10 JACKSHAFTING DETAIL

SCALE: NTS

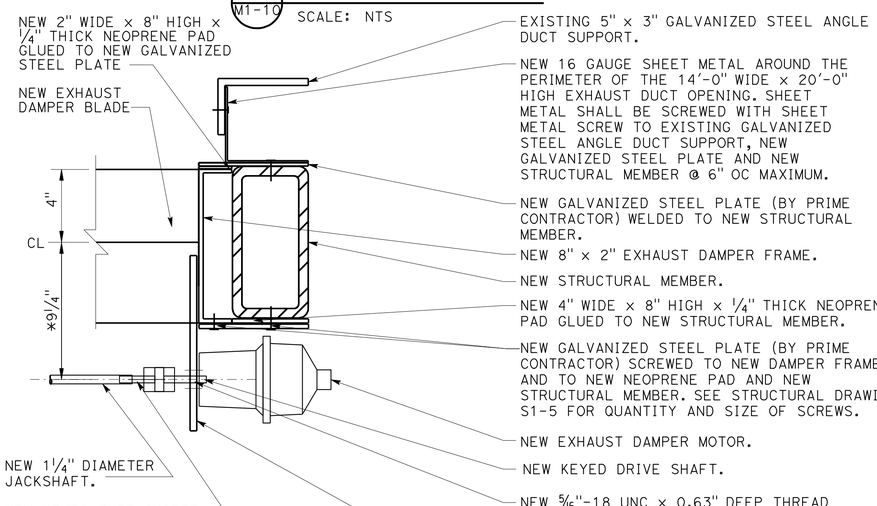

* COORDINATE ALL DIMENSIONS WITH DAMPER MANUFACTURER.

3 M1-10 DAMPER MOTOR ATTACHMENT DETAIL

SCALE: NTS

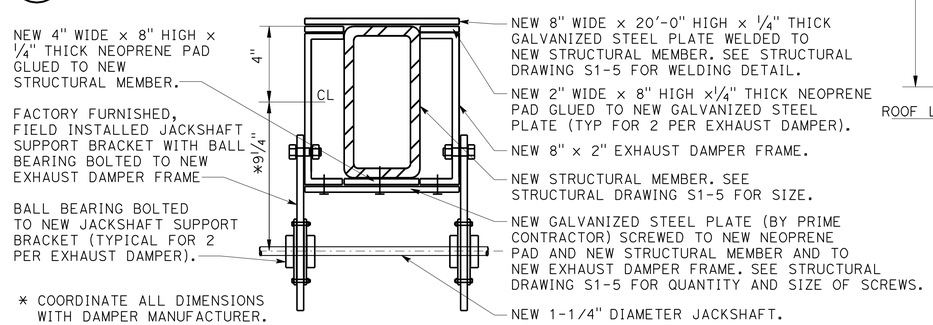

* COORDINATE ALL DIMENSIONS WITH DAMPER MANUFACTURER.

4 M1-10 JACKSHAFT SUPPORT DETAIL (TYP. 6)

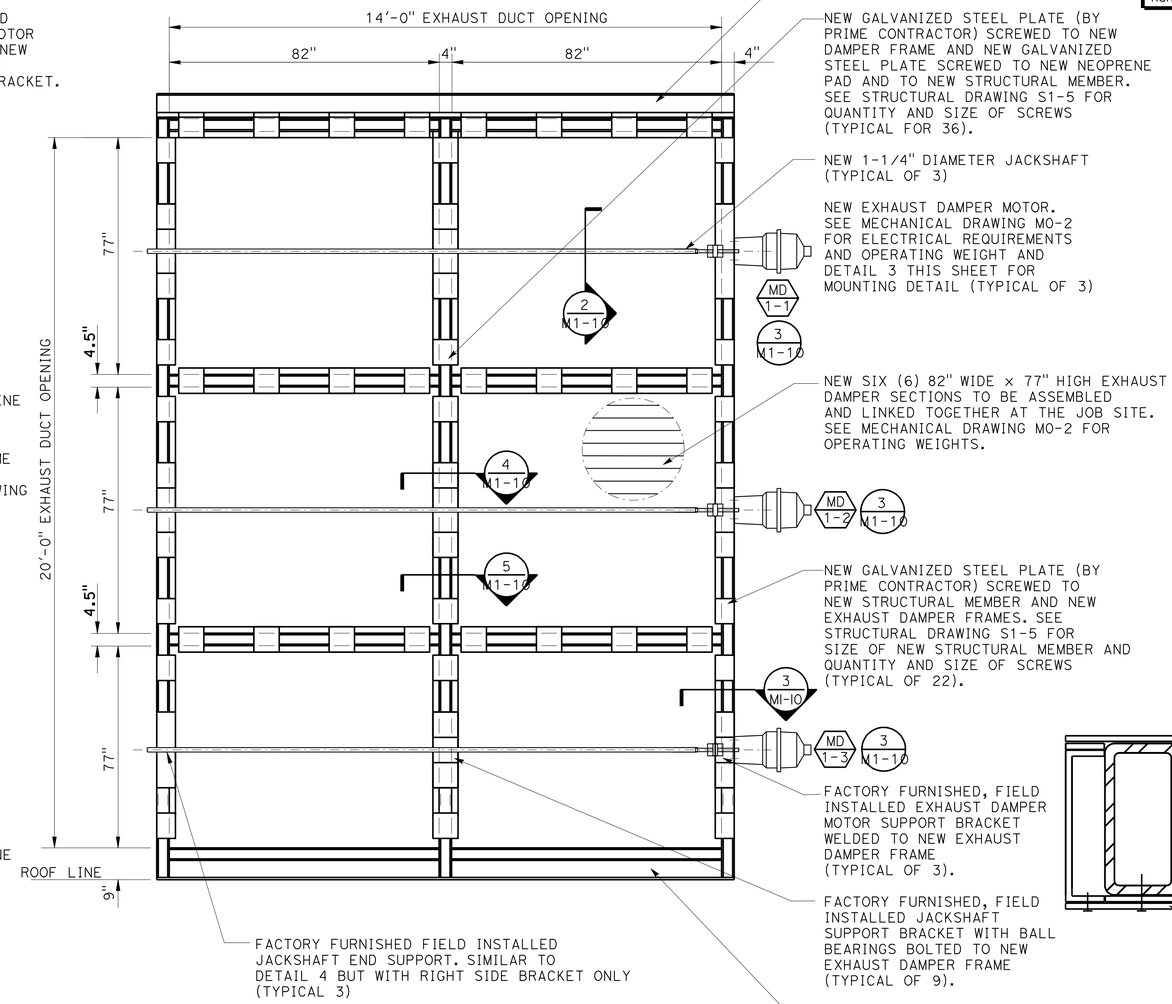

1 M1-10 ED-I EXHAUST DAMPER ASSEMBLY DETAIL (OPTION # 2)

SCALE: NTS (TYP FOR ED-2 THRU ED-8)

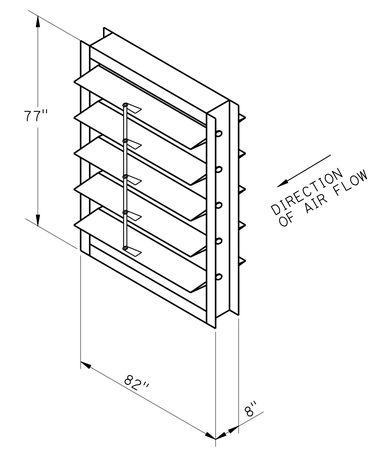

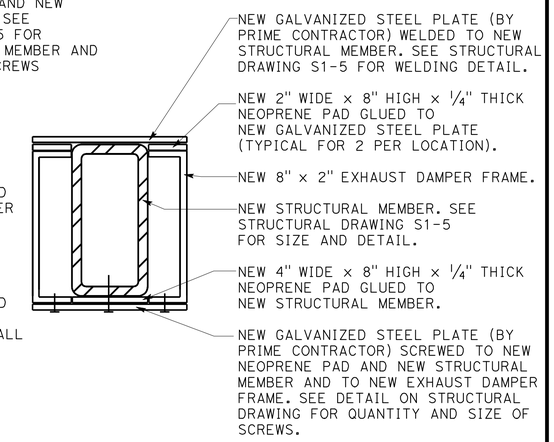

5 M1-10 GALVANIZED STEEL PLATE INSTALLATION DETAIL

SCALE: NTS

OPTION # 2

DESIGN	BY C.CASTILLO	CHECKED H.MOZAFFARI	
DETAILS	BY C.CASTILLO	CHECKED H.MOZAFFARI	
QUANTITIES	BY C.CASTILLO	CHECKED H.MOZAFFARI	

PREPARED FOR THE STATE OF CALIFORNIA DEPARTMENT OF TRANSPORTATION

DIVISION OF ENGINEERING SERVICES ELECTRICAL-MECHANICAL-WATER AND WASTEWATER DESIGN

BRIDGE NO. VARIES | POST MILE VARIES

SCADA SYSTEM UPGRADE: POSEY/WEBSTER STREET TUBES AND CALDECOTT TUNNEL
CALDECOTT BORES 1 & 2 EXHAUST DAMPER ASSEMBLY DETAILS (OPTION #2) - HVAC

SHEET **M1-10**

DOES SD Imperial Rev.1/07

ORIGINAL SCALE IN INCHES FOR REDUCED PLANS 0 1 2 3

CU 04220
EA 1A4604

DISREGARD PRINTS BEARING EARLIER REVISION DATES → REVISION DATES (PRELIMINARY STAGE ONLY)

SHEET 20 OF 95

26-NOV-2008 13:40
M1-10.dgn

DIST.	COUNTY	ROUTE	POST MILES TOTAL PROJECT	SHEET NO.	TOTAL SHEETS
04	Ala,CC	24,260	R5.9/R6.2,R0.0/R0.5, R0.9/R1.9	26	100

REGISTERED ELECTRICAL ENGINEER — 02-26-08 DATE

REGISTERED PROFESSIONAL ENGINEER ROBERT J. FEE No. E-13014 Exp. 6/30/09 ELEC STATE OF CALIFORNIA

11-24-08
PLANS APPROVAL DATE

The State of California or its officers or agents shall not be responsible for the accuracy or completeness of electronic copies of this plan sheet.

STV Incorporated
9130 Anaheim Place, Suite 210
Rancho Cucamonga, CA 91730

JDL Design, LLC
18582 Beach Blvd, Suite 229
Huntington Beach, CA 92647

GRAPHIC SYMBOLS FOR ELECTRICAL WIRING AND LAYOUT DIAGRAMS

SYMBOL CEILING	SYMBOL WALL	DESCRIPTION
(S)	-(S)	SURFACE INCANDESCENT, METAL HALIDE OR SODIUM VAPOR FIXTURE
(R)	-(R)	RECESSED INCANDESCENT, METAL HALIDE, OR SODIUM VAPOR FIXTURE
(B)	-(B)	BLANK OUTLET
(D)		DROP CORD
(J)	-(J)	JUNCTION BOX
(X)	-(X)	EXIT LIGHT
		SURFACE OR PENDANT INDIVIDUAL FLUORESCENT FIXTURE
(R)		RECESSED INDIVIDUAL FLUORESCENT FIXTURE
		SURFACE OR PENDANT CONTINUOUS ROW FLUORESCENT FIXTURES

NOTE: A LOWER CASE LETTER NEAR GRAPHIC LIGHTING FIXTURE SYMBOL DENOTES THAT FIXTURE IS CONTROLLED BY A SIMILARLY MARKED SWITCH, AN ALPHA-NUMERIC SYMBOL NEAR GRAPHIC LIGHTING FIXTURE SYMBOL DENOTES FIXTURE TYPE, (I=INCANDESCENT, F=FLUORESCENT, MH=METAL HALIDE, H=HIGH PRESSURE SODIUM VAPOR), DESIGN TYPE,NUMBER OF LAMPS AND WATTAGE.

EXAMPLE : (4) F 2 - 2 x 32
- 32 WATT LAMPS
- 2 LAMPS
- DESIGN TYPE
- FLUORESCENT
- NUMBER OF FIXTURES

SYMBOL	DESCRIPTION
	SINGLE RECEPTACLE OUTLET
	DUPLEX RECEPTACLE OUTLET
(GFCI)	DUPLEX RECEPTACLE OUTLET (WITH GFCI)
(GFCI) WP	DUPLEX RECEPTACLE OUTLET,WEATHERPROOF (WITH GFCI)
	SINGLE, SPECIAL PURPOSE RECEPTACLE OUTLET
	DUPLEX, SPECIAL PURPOSE RECEPTACLE OUTLET
R	RANGE OUTLET
	CLOCK HANGER RECEPTACLE
	FAN HANGER RECEPTACLE
	FLOOR SINGLE RECEPTACLE OUTLET
	FLOOR DUPLEX RECEPTACLE OUTLET
	FLOOR SPECIAL PURPOSE OUTLET
	FLOOR RADIO OUTLET
	FLOOR TELEPHONE OUTLET
	MULTI-FLOOR OUTLET, 2 OR MORE GANG
	MULTI-OUTLET ASSEMBLY
S	SINGLE POLE SWITCH
S_2	DOUBLE POLE SWITCH
S_3	THREE WAY SWITCH
S_4	FOUR WAY SWITCH
S_D	AUTOMATIC DOOR
S_K	KEY OPERATED SWITCH
S_P	SWITCH AND PILOT LIGHT
S_{MC}	MOMENTARY CONTACT SWITCH
S_{RC}	REMOTE CONTROL SWITCH
S_{WP}	WEATHERPROOF SWITCH
S_F	FAN SWITCH
S_L	LIGHT SWITCH
S_H	HEATER SWITCH
S_{VS}	VARIABLE SPEED MOTOR CONTROL SWITCH
S_{CHLF}	TWO SWITCHES, ONE SWITCH FOR LIGHT AND FAN AND TIMER SWITCH FOR HEAT LAMP

SYMBOL	DESCRIPTION
S_M	MOTION SENSOR SWITCH
ST	MANUAL MOTOR STARTING SWITCH, THERMAL OVERLOAD TYPE
S_{HP}	MANUAL MOTOR STARTING SWITCH, WITHOUT OVERLOAD ELEMENT
TS	TIMER SWITCH
S	SWITCH AND SINGLE RECEPTACLE
S	SWITCH AND DUPLEX RECEPTACLE
	HAND DRYER NOZZLE
H	HAND DRYER
	RADIO OUTLET
	TELEPHONE OUTLET
	SOUND SYSTEM LOUD SPEAKER OUTLET
	PUSHBUTTON
L	PUSHBUTTON STATION, NC, WITH LOCKING DEVICE FOR OPEN
	PUSHBUTTON STATION MOTOR CONTROL
	BUZZER
	BELL
	COMBINATION BELL-BUZZER
T	THERMOSTAT
PS	PRESSURE SWITCH
R	CONTROL RELAY
FS	FLOW SWITCH
PEC	PHOTOELECTRIC CELL
R	RADIO OUTLET
TV	TELEVISION OUTLET
M	MICROPHONE OUTLET
	FLUSH-MOUNTED PANELBOARD AND CABINET
	SURFACE-MOUNTED PANELBOARD AND CABINET
	LIGHTING PANEL
	POWER PANEL
	COMBINATION LIGHTING AND POWER
MC	MOTOR CONTROLLER
	DISCONNECT SWITCH
	CONDUIT CONCEALED IN CEILING OR WALL
	CONDUIT CONCEALED IN FLOOR
	CONDUIT EXPOSED
	CROSS-LINES INDICATE NUMBER OF #12 AWG CONDUCTORS. LONGER CROSS-LINE INDICATES 1#12 AWG (G) FOR EQUIPMENT GROUNDING CONDUCTOR. NO CROSS-LINE INDICATES 2#12 WITH 1#12 (G) UNLESS OTHERWISE NOTED. ALL CONDUIT 1/2'' UNLESS OTHERWISE NOTED.
A1, A2	HOMERUN TO PANELBOARD, ARROWS INDICATE NUMBER OF CIRCUITS, LETTER DENOTES PANEL-BOARD, NUMERAL DENOTES CIRCUIT.
SM	SURFACE METAL RACEWAY
(2)1/2''C, PVC,2#12	CONDUCTOR INFO (PER CONDUIT) CONDUIT TYPE CONDUIT SIZE NUMBER OF CONDUITS (NO NUMBER INDICATES ONE CONDUIT)
MC	CONDUIT, METALLIC UNDERGROUND
PVC	CONDUIT, POLYVINYL CHLORIDE, UNDERGROUND
	CONDUIT, FLEXIBLE
	CONDUIT, TURN UP
	CONDUIT, TURN DOWN
	CONDUIT SEAL, EXPLOSION-PROOF
X	CONDUIT, EXPANSION JOINT
	ADAPTER, ONE TYPE CONDUIT TO ANOTHER POLE
	POLE-TOP LUMINAIRE
	POLE-ARM LUMINAIRE

SYMBOL	DESCRIPTION
H	
S	SMOKE DETECTOR
P	MANUAL PULL STATION
AV	AUDIO/VISUAL ALARM DEVICE
G	GLASS BREAK DISCRIMINATOR
C	MAGNETIC CONTACT SWITCH-PEDESTRIAN DOOR
C	MAGNETIC CONTACT SWITCH-VEHICLE DOOR
K	KEYPAD FOR ALARM SYSTEM
W	COMBINATION DETECTOR (MICROWAVE/PASSIVE INFRARED)
	PULL BOX-LETTER INDICATES TYPE OF PULL BOX (E-ELECTRICAL, T-TELEPHONE, R-RADIO)
(T)	PULL BOX (TRAFFIC RATED)-LETTER INDICATES TYPE OF PULL BOX (E-ELECTRICAL, T-TELEPHONE, R-RADIO)
CHLF	COMBINATION HEAT, LIGHT AND FAN UNIT
A / EE-2	SECTION/ELEVATION LETTER SHEET NUMBER
1 / EE-2	DETAIL NUMBER SHEET NUMBER

REMODEL WORK

SYMBOL	DESCRIPTION
	EXISTING FLUORESCENT FIXTURE-TO REMAIN
	EXISTING FLUORESCENT FIXTURE-REMOVE
	EXISTING INCANDESCENT FIXTURE-TO REMAIN
	EXISTING INCANDESCENT FIXTURE-REMOVE
	EXISTING OUTLET-TO REMAIN
	EXISTING RECEPTACLE OUTLET-TO REMAIN
	EXISTING RECEPTACLE OUTLET-REMOVE
-E-E-	EXISTING CONDUIT AND CONDUCTORS-TO REMAIN UNLESS OTHERWISE NOTED
-*-*-	EXISTING CONDUIT AND CONDUCTORS-REMOVE
S	EXISTING SWITCH-TO REMAIN
	EXISTING SWITCH-REMOVE
J	EXISTING JUNCTION BOX-TO REMAIN
	EXISTING JUNCTION BOX-REMOVE

STANDARD NOTES

AB	ABANDON, IF APPLIED TO CONDUIT, REMOVE CONDUCTORS.
BC	INSTALL PULL BOX IN EXISTING CONDUIT RUN.
CB	INSTALL CONDUIT INTO EXISTING PULL BOX.
CC	CONNECT NEW AND EXISTING CONDUIT. REMOVE EXISTING CONDUCTORS AND INSTALL CONDUCTORS AS INDICATED.
CF	CONDUIT TO REMAIN FOR FUTURE USE. REMOVE CONDUCTORS, INSTALL PULL ROPE AND PLUG.
FA	REMOVE FOUNDATION ABOVE GRADE AND ABANDON FOUNDATION BELOW GRADE.
RL	RELOCATE EQUIPMENT.
RLD	RELOCATED EQUIPMENT.
SC	SPLICE NEW TO EXISTING CONDUCTORS.

PROJECT NOTES

A. SEPARATE GROUNDED (NEUTRAL) CONDUCTOR SHALL BE USED FOR EACH 120-VOLT CIRCUIT.

B. HOMERUNS TO PANELBOARDS SHALL BE INSTALLED AS SHOWN ON THE PLANS. HOMERUNS SHALL NOT BE COMBINED.

C. A SINGLE INSULATED EQUIPMENT GROUNDING CONDUCTOR (SIZED AS REQUIRED) SHALL BE INSTALLED IN EACH CONDUIT RUN.

GRAPHIC SYMBOLS FOR ELECTRICAL DIAGRAMS

SYMBOL	DESCRIPTION
	CIRCUIT BREAKER, SINGLE POLE
	CIRCUIT BREAKER, DOUBLE POLE
	CIRCUIT BREAKER, THREE POLE
GFCI	CIRCUIT BREAKER, WITH GROUND FAULT CIRCUIT INTERRUPTER
	CONTACT, NORMALLY OPEN
	CONTACT, NORMALLY CLOSED
	CONTACT, NORMALLY CLOSED, TIME DELAY CLOSING ON DE-ENERGIZING
	CONTACT, NORMALLY OPEN, TIME DELAY OPENING ON DE-ENERGIZING
	CONTACT,NORMALLY OPEN, TIME DELAY CLOSING ON ENERGIZING
	CONTACT, NORMALLY CLOSED, TIME DELAY OPENING ON ENERGIZING
	CONTACT, SINGLE POLE DOUBLE-THROW
	OPERATING COIL
	LIQUID LEVEL ACTUATED SWITCH, NORMALLY CLOSED
	LIQUID LEVEL ACTUATED SWITCH, NORMALLY OPEN
	PRESSURE ACTUATED SWITCH, NORMALLY CLOSED
	PRESSURE ACTUATED SWITCH, NORMALLY OPEN
	FLOW ACTUATED SWITCH, NORMALLY CLOSED
	FLOW ACTUATED SWITCH, NORMALLY OPEN
	TEMPERATURE ACTUATED SWITCH, NORMALLY CLOSED
	TEMPERATURE ACTUATED SWITCH, NORMALLY OPEN
	LIMIT SWITCH, NORMALLY CLOSED
	LIMIT SWITCH, NORMALLY OPEN
	PUSHBUTTON SWITCH, NORMALLY CLOSED
	PUSHBUTTON SWITCH, NORMALLY OPEN
	SWITCH, SINGLE-POLE
	SWITCH, SINGLE-POLE, DOUBLE-THROW
	SWITCH, DOUBLE-POLE
	SWITCH, DOUBLE-POLE, DOUBLE-THROW
	SWITCH, SINGLE-POLE, 3-POSITION
	THERMAL OVERLOAD
	FUSE
	RESISTOR
	VARIABLE RESISTOR
	TRANSFORMER WINDING
	GROUNDING ELECTRODE
	ENCLOSURE BOND
A	PILOT LIGHT (A=AMBER, G=GREEN, R=RED)
G	GENERATOR
M	MOTOR
F	FAN MOTOR

ABBREVIATIONS

A	AMPERES
A/C	AIR CONDITIONING UNIT
ACS	AIR COMPRESSOR STARTER
AFF	ABOVE FINISHED FLOOR
AI	ANALOG INPUT
AL	ALARM LIGHT
AO	ANALOG OUTPUT
AVC	AIR VOLUME CONTROLLER
BD	BUILDING DISCONNECT
BRK	BREAKER
C	CONDUIT
CB	CIRCUIT BREAKER
CKT	CIRCUIT
CR	CONTROL RELAY
CSW	CURRENT SWITCH
DO	DIGITAL OUTPUT
DP	DUPLEX PLUG RECEPTACLE
(E)	EXISTING
DS	DOOR SWITCH
EF	EXHAUST FAN
F	FUSE
FL	FAILURE LIGHT
FLA	FLASHER
FLEX	FLEXIBLE CONDUIT
FLS	FLOW SWITCH
FR	FAILURE RESET
FS	FLOAT SWITCH
G	GROUND
GFCI	GROUND FAULT CIRCUIT INTERRUPTER
GRS	GALVANIZED RIGID STEEL
IR	INDUCTION RELAY
JB	JUNCTION BOX
L	LIGHT
LC	LIGHTING CONTACTOR
LCP	LIGHTING CONTROL PANEL
LD	LIGHT DISCONNECT
LL	LIQUID LEVEL RELAY
LLC	LIQUID LEVEL CONTROLLER
LP	LIGHT PANEL
LS	LIGHT SWITCH
LT	LIGHT TRANSFORMER
LTO	LIGHT TRANSFORMER OVERLOAD
MB	MAIN BREAKER
MC	METALLIC CONDUIT
MCP	MOTOR CIRCUIT PROTECTOR
MCC	MOTOR CONTROL CENTER
MSB	MAIN SWITCHBOARD
MT	EMPTY CONDUIT
(N)	NEW
NC	NORMALLY CLOSED
NO	NORMALLY OPEN
NSW	NEUTRAL SWITCHING BREAKER
OL	OVERLOAD
P	POLE
PB	PULL BOX
PB	PUSHBUTTON
PFR	PHASE FAILURE RELAY
PFRD	PHASE FAILURE RELAY DISCONNECT
PEC	PHOTOELECTRIC CELL
PL	PILOT LIGHT
PS	PRESSURE SWITCH
PTS	POWER TRANSFER SWITCH
PVC	POLYVINYL CHLORIDE
RES	RESISTOR
RTB	RADIO TERMINAL BOARD
S	STARTER COIL
SD	SERVICE DISCONNECT
SFR	SEAL FAILURE RELAY
SL	SUMP LIGHT
SPR	STANDBY POWER RECEPTACLE
SS	SELECTOR SWITCH
ST	STARTER
SV	SOLENOID VALVE
T	TRANSFORMER
TB	TERMINAL BLOCK
TDR	TIME DELAY RELAY
TGLS	TOGGLE SWITCH
TM	TIME METER
TOT	TOTAL
TS	TIMER SWITCH
TSW	TEST SWITCH
TTB	TELEPHONE TERMINAL BOARD
TYP	TYPICAL
UPS	UNINTERRUPTIBLE POWER SUPPLY
VFD	VARIABLE FREQUENCY DRIVE
WLS	WATER LEVEL SWITCH
WP	WEATHERPROOF

	BY	CHECKED
DESIGN	G.MARAVILLA	R.FEE
DETAILS	G.MARAVILLA	R.FEE
QUANTITIES	G.MARAVILLA	R.FEE

PREPARED FOR THE STATE OF CALIFORNIA DEPARTMENT OF TRANSPORTATION

DIVISION OF ENGINEERING SERVICES ELECTRICAL-MECHANICAL-WATER AND WASTEWATER DESIGN

BRIDGE NO. VARIES
POST MILE VARIES

SCADA SYSTEM UPGRADE: POSEY, WEBSTER AND CALDECOTT TUNNELS

LEGEND

SHEET EE0-0

DOES SD Imperial Rev.1/07

ORIGINAL SCALE IN INCHES FOR REDUCED PLANS 0 1 2 3

CU 04607
EA 1A4604

DISREGARD PRINTS BEARING EARLIER REVISION DATES →

REVISION DATES (PRELIMINARY STAGE ONLY)

SHEET 21 OF 95

26-NOV-2008 10:50

ee0-0.dgn

DIST.	COUNTY	ROUTE	POST MILES TOTAL PROJECT	SHEET NO.	TOTAL SHEETS
04	Ala,CC	24,260	R5.9/R6.2,R0.0/R0.5, R0.9/R1.9	27	100

REGISTERED ELECTRICAL ENGINEER — 02-26-08 DATE

REGISTERED PROFESSIONAL ENGINEER ROBERT J. FEE No. E-13014 Exp. 6/30/09 ELEC STATE OF CALIFORNIA

11-24-08
PLANS APPROVAL DATE

The State of California or its officers or agents shall not be responsible for the accuracy or completeness of electronic copies of this plan sheet.

STV Incorporated
9130 Anaheim Place, Suite 210
Rancho Cucamonga, CA 91730

JDL Design, LLC
18582 Beach Blvd, Suite 229
Huntington Beach, CA 92647

CALDECOTT 1 & 2 - SHEET NOTES:

1. Replace the existing 60 Hp, 2-speed Exhaust Fan Starter with VFD.
2. Replace the existing 60 Hp, 2-speed Exhaust Fan Motor with new 404 frame, 60 Hp, 460 V, 3 Phase, 1800 RPM base, inverter rated motor.
3. Replace existing feeder with new 3 #1 and 1 #6 Ground in existing conduit.
4. Replace the existing 40 Hp, 2-speed Blower Fan Motor with new 324 frame, 40 Hp, 460 V, 3 Phase, 1800 RPM base, inverter rated motor.
5. Replace the existing 40 Hp, 2-speed Blower Fan Starter with VFD.
6. Replace existing feeder with new 3 #2 and 1 #6 Ground in existing conduit.
7. Provide new couplings for all new motors.
8. Align new motors in existing bases to coupling manufacturer's specification.
9. Provide new liquid tight flex for final connection to new motor.
10. Provide adjustable base similar to Detail No.2 Drawing EE2-2 for new 324 frame motor, except with C5x9 Channel and 2½" adjustment base. Align motor per Note 8.
11. Existing 480 volt, 3 phase distribution board. Disconnect and remove feeder to existing capacitors, replace breaker with new 40 A, 3 pole unit to feed panel board, see note 12 and sheet EE1-3.
12. New 1" conduit with 4 #8 up to new MPZEX1 on roof.
13. Run new 4 #12 conductors in existing conduit to feed new starter from 20 A, 3 pole breaker in VFD for damper power.
14. Run 10 #14 (includes spares) in existing conduits to PLC cabinet via VFD for damper control and limit switch connections.
15. Replace existing damper starter cabinet with new NEMA size 0, 460 V, 3 Phase, reversing combination starter in NEMA 12 enclosure.
16. Replace existing motor with new 2 Hp, 1200 RPM, 480 volt, 3 phase brake motor, match existing frame and mounting configuration.
17. ¾"C with Modbus Plus cable as recommended by Modicon.

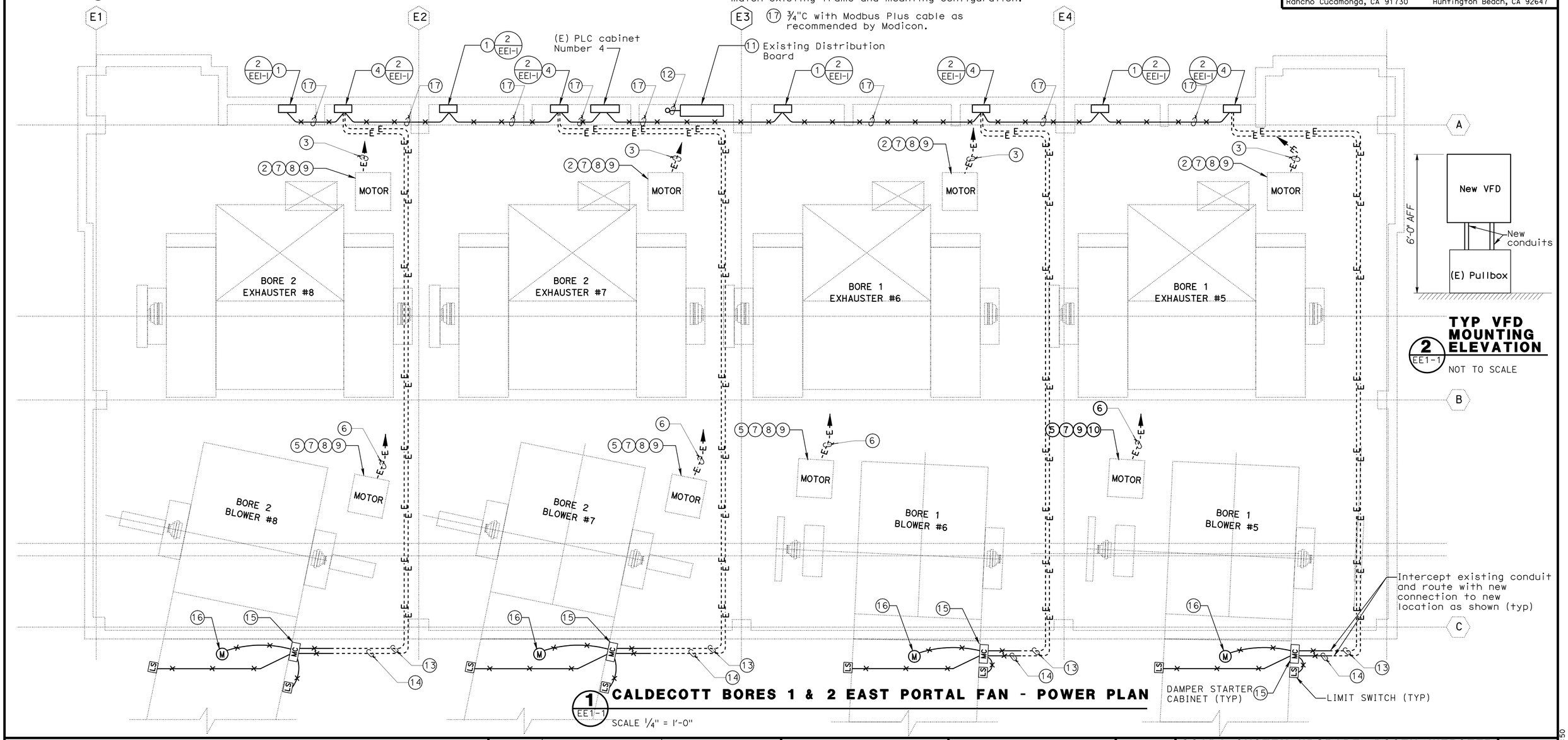

2 EE1-1 **TYP VFD MOUNTING ELEVATION**
NOT TO SCALE

1 EE1-1 **CALDECOTT BORES 1 & 2 EAST PORTAL FAN - POWER PLAN**
SCALE ¼" = 1'-0"

	BY	CHECKED
DESIGN	G. MARAVILLA	R. FEE
DETAILS	G. MARAVILLA	R. FEE
QUANTITIES	G. MARAVILLA	R. FEE

PREPARED FOR THE STATE OF CALIFORNIA DEPARTMENT OF TRANSPORTATION

DIVISION OF ENGINEERING SERVICES
ELECTRICAL-MECHANICAL-WATER AND WASTEWATER DESIGN

CU 04220
EA 1A4604

BRIDGE NO. VARIES
POST MILE VARIES

SCADA SYSTEM UPGRADE: POSEY/WEBSTER STREET TUBES AND CALDECOTT TUNNEL
CALDECOTT BORES 1 & 2
EAST PORTAL FAN ROOM - POWER PLAN

SHEET **EE1-1**

DOES SD Imperial Rev. 1/07

ORIGINAL SCALE IN INCHES FOR REDUCED PLANS 0 1 2 3

DISREGARD PRINTS BEARING EARLIER REVISION DATES →

REVISION DATES (PRELIMINARY STAGE ONLY)

SHEET 22 OF 95

26-NOV-2008 10:50

ee1-1.dgn

DIST.	COUNTY	ROUTE	POST MILES TOTAL PROJECT	SHEET NO.	TOTAL SHEETS
04	Ala,CC	24,260	R5.9/R6.2,R0.0/R0.5, R0.9/R1.9	28	100

REGISTERED ELECTRICAL ENGINEER — 02-26-08 DATE

REGISTERED PROFESSIONAL ENGINEER ROBERT J. FEE No. E-13014 Exp. 6/30/09 ELEC STATE OF CALIFORNIA

11-24-08
PLANS APPROVAL DATE

The State of California or its officers or agents shall not be responsible for the accuracy or completeness of electronic copies of this plan sheet.

STV Incorporated
9130 Anaheim Place, Suite 210
Rancho Cucamonga, CA 91730

JDL Design, LLC
18582 Beach Blvd, Suite 229
Huntington Beach, CA 92647

CALDECOTT 1 & 2 - SHEET NOTES:

1. Replace the existing 60 Hp, 2-speed Exhaust Fan Starter with VFD.
2. Replace the existing 60 Hp, 2-speed Exhaust Fan Motor with new 404 frame, 60 Hp, 460 V, 3 Phase, 1800 RPM base, inverter rated motor.
3. Replace existing feeder with new 3 #1 and 1 #6 Ground in existing conduit.
4. Replace the existing 40 Hp, 2-speed Blower Fan Starter with VFD.
5. Replace the existing 40 Hp, 2-speed Blower Fan Motor with new 324 frame, 40 Hp, 460 V, 3 Phase, 1800 RPM base, inverter rated motor.
6. Replace existing feeder with new 3 #2 and 1 #6 Ground in existing conduit.
7. Provide new couplings for all new motors.
8. Align new motors in existing bases to coupling manufacturer's specification.
9. Provide new liquid tight flex for final connection to new motor.
10. ¾"C with Modbus Plus cable as recommended by Modicon.
11. Existing 480 volt, 3 phase distribution board. Disconnect and remove feeder to existing capacitors, replace breaker with new 40 A, 3 pole unit to feed mini-power zone, panel board see note 12 and sheet EE1-4.
12. New 1" conduit with 4 #8 up to new MPZEX2 on roof.
13. Run new 4 #12 conductors in existing conduit to feed new starter from 20 A, 3 pole breaker in VFD for damper power.
14. Run 10 #14 (includes spares) in existing conduits to PLC cabinet via VFD for damper control and limit switch connections.
15. Replace existing damper operator starter with new NEMA size 0, 460 V, 3 Phase, reversing combination starter in NEMA 12 enclosure.
16. Replace existing motor with new 2 Hp, 1200 RPM, 480 volt, 3 phase brake motor, match existing frame and mounting configuration.

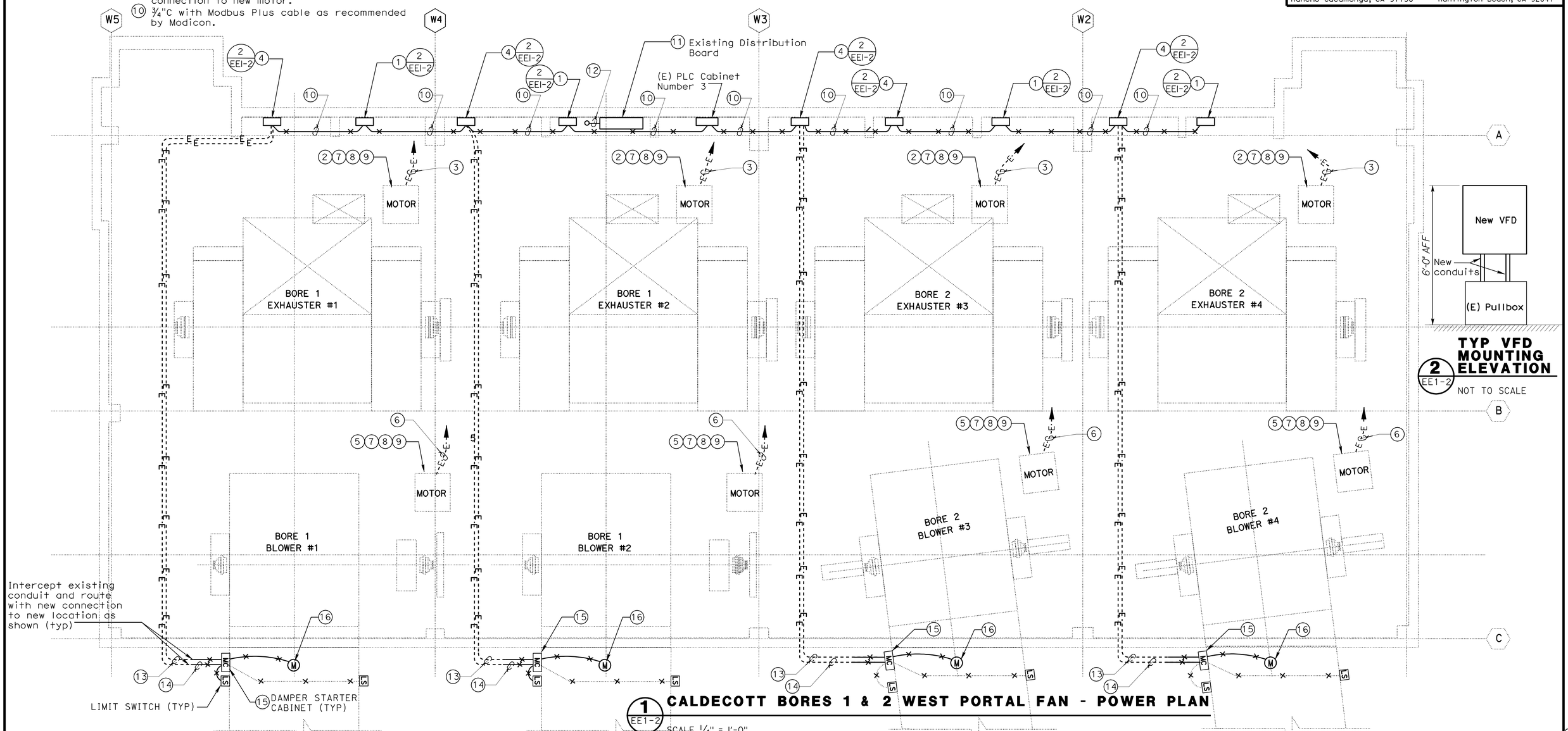

1 EE1-2 CALDECOTT BORES 1 & 2 WEST PORTAL FAN - POWER PLAN

SCALE 1/4" = 1'-0"

	BY	CHECKED
DESIGN	G. MARAVILLA	R. FEE
DETAILS	G. MARAVILLA	R. FEE
QUANTITIES	G. MARAVILLA	R. FEE

PREPARED FOR THE STATE OF CALIFORNIA DEPARTMENT OF TRANSPORTATION

DIVISION OF ENGINEERING SERVICES ELECTRICAL-MECHANICAL-WATER AND WASTEWATER DESIGN

BRIDGE NO. VARIES
POST MILE VARIES

SCADA SYSTEM UPGRADE: POSEY/WEBSTER STREET TUBES AND CALDECOTT TUNNEL
CALDECOTT BORES 1 & 2
WEST PORTAL FAN ROOM - POWER PLAN

SHEET EE1-2

DOES SD Imperial Rev.1/07

ORIGINAL SCALE IN INCHES FOR REDUCED PLANS 0 1 2 3

CU 04220
EA 1A4604

DISREGARD PRINTS BEARING EARLIER REVISION DATES

REVISION DATES (PRELIMINARY STAGE ONLY)

SHEET 23 OF 95

26-NOV-2008 10:50

ee1-2.dgn

DIST.	COUNTY	ROUTE	POST MILES TOTAL PROJECT	SHEET NO.	TOTAL SHEETS
04	Ala,CC	24,260	R5.9/R6.2,R0.0/R0.5, R0.9/R1.9	29	100

REGISTERED ELECTRICAL ENGINEER — 02-26-08 DATE

REGISTERED PROFESSIONAL ENGINEER ROBERT J. FEE No. E-13014 Exp. 6/30/09 ELEC STATE OF CALIFORNIA

11-24-08
PLANS APPROVAL DATE

The State of California or its officers or agents shall not be responsible for the accuracy or completeness of electronic copies of this plan sheet.

STV Incorporated
9130 Anaheim Place, Suite 210
Rancho Cucamonga, CA 91730

JDL Design, LLC
18582 Beach Blvd, Suite 229
Huntington Beach, CA 92647

CALDECOTT 1 & 2 - SHEET NOTES:

1. New 15 KVA Mini-Power zone; with 40 A, 3 pole main CB, 15 KVA 480: 208/120 volt transformer, and 4 each 20 A, 3 pole secondary breakers all in Nema 3R common enclosure with marine coating. One 3 pole secondary breaker for each damper, see control diagram detail 2. Mini-Power zone to be Square D Class 7440 PN MPZ-15T2F or equal by Cutler-Hammer or Siemens.
2. New ¾"C with 6 #14 to PLC cabinet, see drawing EE1-1, typical.
3. New 1 "C with 4 #8 down to existing Distribution Board, see drawing EE1-1.

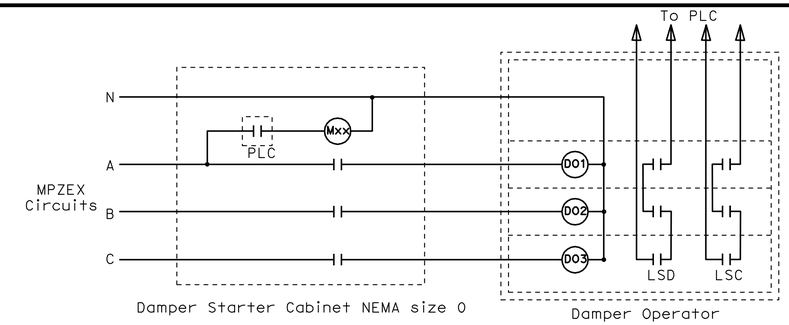

2 EE1-3 DAMPER OPERATOR CONTROL (TYPICAL OF 4)

NOT TO SCALE Ref. EE4-19

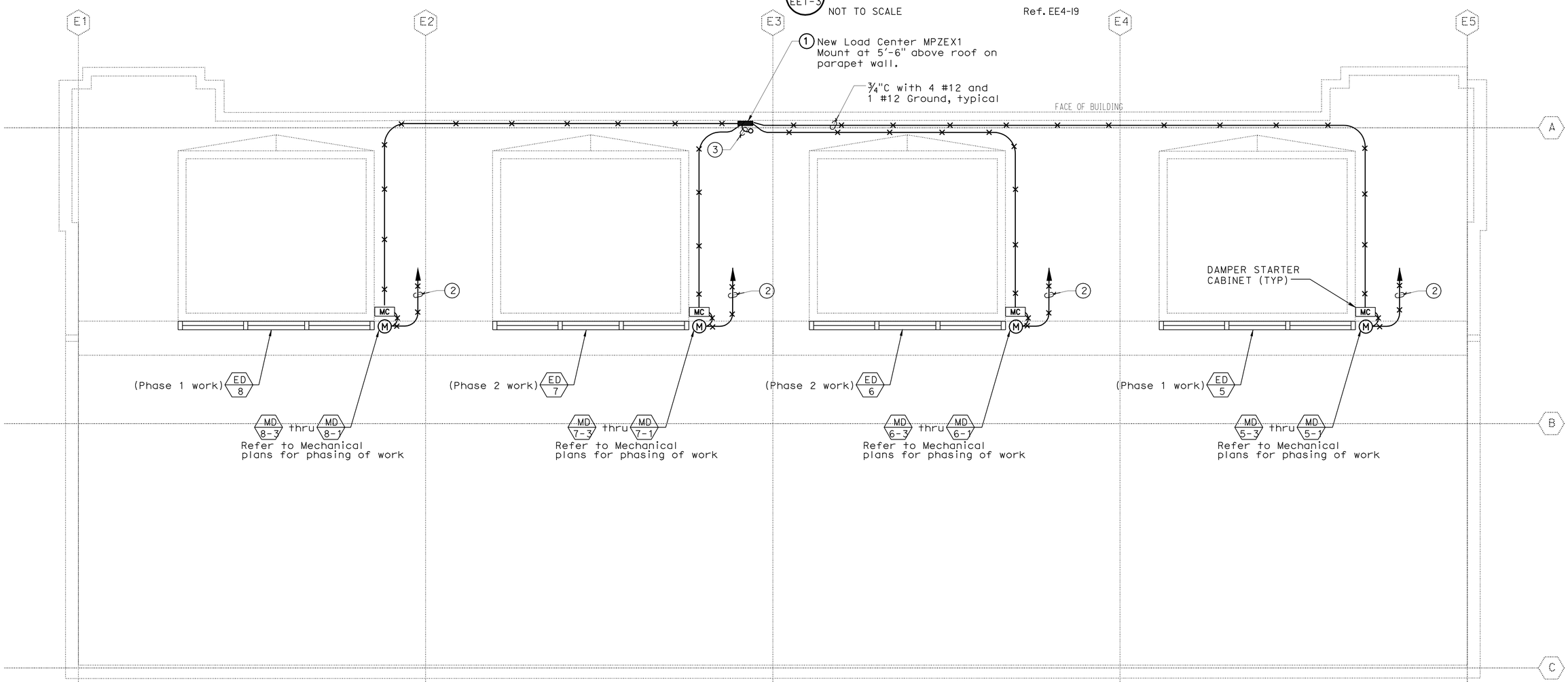

1 EE1-3 CALDECOTT TUNNEL EAST PORTAL ELECTRICAL ROOF PLAN

SCALE ¼" = 1'-0"

	BY	CHECKED
DESIGN	G. MARAVILLA	R. FEE
DETAILS	G. MARAVILLA	R. FEE
QUANTITIES	G. MARAVILLA	R. FEE

PREPARED FOR THE STATE OF CALIFORNIA DEPARTMENT OF TRANSPORTATION

DIVISION OF ENGINEERING SERVICES
ELECTRICAL-MECHANICAL-WATER AND WASTEWATER DESIGN

CU 04220
EA 1A4604

BRIDGE NO. VARIES
POST MILE VARIES

SCADA SYSTEM UPGRADE: POSEY/WEBSTER STREET TUBES AND CALDECOTT TUNNEL
CALDECOTT BORES 1 & 2 EAST PORTAL ELECTRICAL ROOF PLAN

SHEET **EE1-3**

DOES SD Imperial Rev. 1/07

ORIGINAL SCALE IN INCHES FOR REDUCED PLANS 0 1 2 3

DISREGARD PRINTS BEARING EARLIER REVISION DATES →

REVISION DATES (PRELIMINARY STAGE ONLY)

SHEET 24 OF 95

26-NOV-2008 10:50

ee1-3.dgn

DIST.	COUNTY	ROUTE	POST MILES TOTAL PROJECT	SHEET NO.	TOTAL SHEETS
04	Ala,CC	24,260	R5.9/R6.2,R0.0/R0.5, R0.9/R1.9	30	100

REGISTERED ELECTRICAL ENGINEER — 02-26-08 DATE

REGISTERED PROFESSIONAL ENGINEER ROBERT J. FEE No. E-13014 Exp. 6/30/09 ELEC STATE OF CALIFORNIA

11-24-08
PLANS APPROVAL DATE

The State of California or its officers or agents shall not be responsible for the accuracy or completeness of electronic copies of this plan sheet.

STV Incorporated
9130 Anaheim Place, Suite 210
Rancho Cucamonga, CA 91730

JDL Design, LLC
18582 Beach Blvd, Suite 229
Huntington Beach, CA 92647

CALDECOTT 1 & 2 - SHEET NOTES:

1. New 15 KVA Mini-Power zone; with 40 A, 3 pole main CB, 15 KVA 480: 208/120 volt transformer, and 4 each 20 A, 3 pole secondary breakers all in Nema 3R common enclosure with marine coating. One 3 pole secondary breaker for each damper, see control diagram detail 2. Mini-Power zone to be Square D Class 7440 PN MPZ-15T2F or equal by Cutler-Hammer or Siemens.
2. New ¾"C with 6 #14 to PLC cabinet, see drawing EE1-1, typical.
3. New 1 "C with 4 #8 down to existing Distribution Board, see drawing EE1-1.

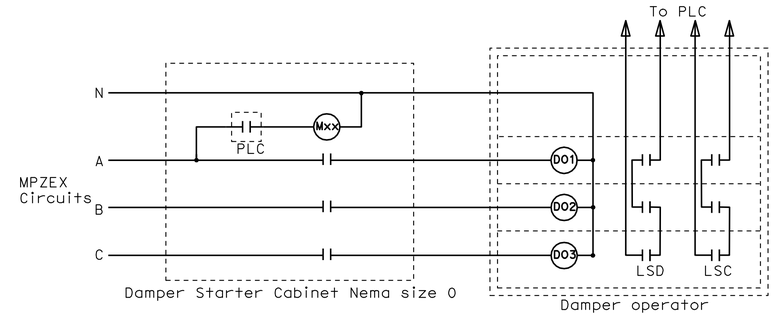

2 EE1-4 **DAMPER OPERATOR CONTROL (TYPICAL OF 4)**

NOT TO SCALE

Ref. EE4-19

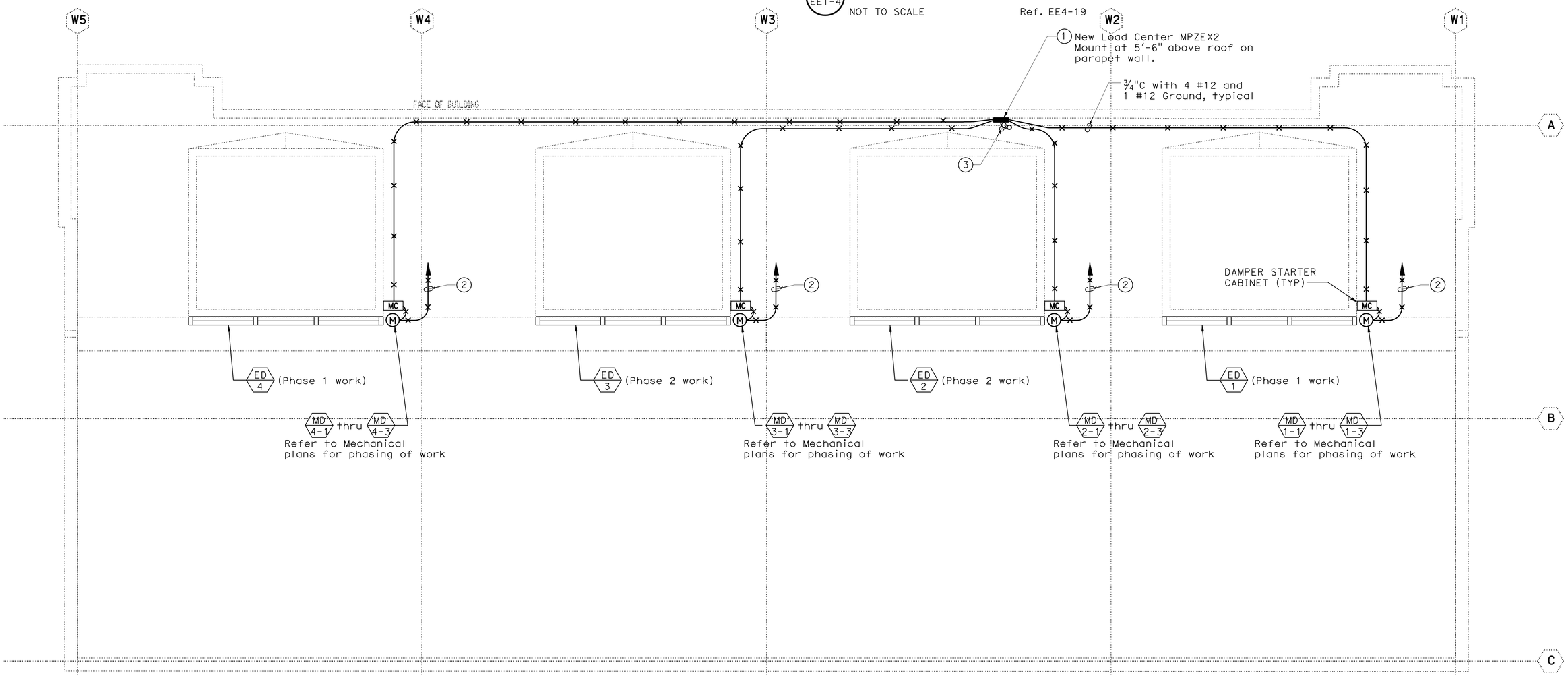

1 EE1-4 **CALDECOTT TUNNEL WEST PORTAL ELECTRICAL ROOF PLAN**

SCALE 1/8" = 1'-0"

DESIGN	BY G.MARAVILLA	CHECKED R.FEE	
DETAILS	BY G.MARAVILLA	CHECKED R.FEE	
QUANTITIES	BY G.MARAVILLA	CHECKED R.FEE	

PREPARED FOR THE STATE OF CALIFORNIA DEPARTMENT OF TRANSPORTATION

DIVISION OF ENGINEERING SERVICES
ELECTRICAL-MECHANICAL-WATER AND WASTEWATER DESIGN

BRIDGE NO. VARIES
POST MILE VARIES

SCADA SYSTEM UPGRADE: POSEY/WEBSTER STREET TUBES AND CALDECOTT TUNNEL
CALDECOTT BORES 1 & 2 WEST PORTAL
ELECTRICAL ROOF PLAN

SHEET **EE1-4**

DOES SD Imperial Rev.1/07

ORIGINAL SCALE IN INCHES FOR REDUCED PLANS 0 1 2 3

CU 04220
EA 1A4604

DISREGARD PRINTS BEARING EARLIER REVISION DATES →

REVISION DATES (PRELIMINARY STAGE ONLY)

SHEET 25 OF 95

26-NOV-2008 10:50

ee1-4.dgn

DIST.	COUNTY	ROUTE	POST MILES TOTAL PROJECT	SHEET NO.	TOTAL SHEETS
04	Ala,CC	24,260	R5.9/R6.2, R0.0/R0.5,R0.9/R1.9	31	100

REGISTERED ELECTRICAL ENGINEER — 02-26-08 DATE

REGISTERED PROFESSIONAL ENGINEER ROBERT J. FEE No. E-13014 Exp. 6/30/09 ELEC STATE OF CALIFORNIA

11-24-08
PLANS APPROVAL DATE

The State of California or its officers or agents shall not be responsible for the accuracy or completeness of electronic copies of this plan sheet.

STV Incorporated
9130 Anaheim Place, Suite 210
Rancho Cucamonga, CA 91730

1 EE1-5 CALDECOTT BORE 3 WEST PORTAL FAN - POWER PLAN

SCALE 1/8" = 1'-0"

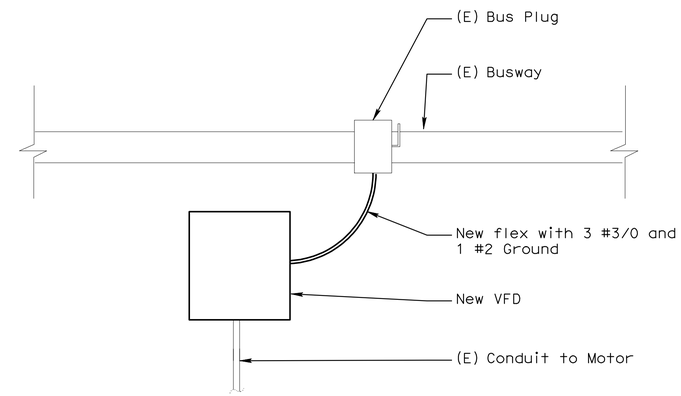

2 EE1-5 TYPICAL VFD MOUNTING ELEVATION

NOT TO SCALE

CALDECOTT 3 - SHEET NOTES:

1. Replace the existing duplex Exhaust Fan Starter with VFD.
2. Replace the existing duplex Blower Fan Starter with VFD.
3. Feed new VFD with 3 #3/0 and 1 #2 Ground from existing bus plug.
4. Replace the existing 5/100 Hp, dual motors with new 100 Hp, 444 frame, 460 V, 3 Phase, 1800 RPM base, inverter rated motor.
5. Replace existing feeder with new 3 #1/0 and 1 #2 Ground in existing conduit.
6. Re-use existing sheave and existing belt drive from existing motor.
7. Align new motors on existing bases for proper sheave alignment and belt tension.
8. Provide new liquid tight flex for final connection to new motor.
9. 3/4"C with Modbus Plus cable as recommended by Modicon.

DESIGN	BY G.MARAVILLA	CHECKED R.FEE	
DETAILS	BY G.MARAVILLA	CHECKED R.FEE	
QUANTITIES	BY G.MARAVILLA	CHECKED R.FEE	

PREPARED FOR THE STATE OF CALIFORNIA DEPARTMENT OF TRANSPORTATION

DIVISION OF ENGINEERING SERVICES
ELECTRICAL-MECHANICAL-WATER AND WASTEWATER DESIGN

CU 04220
EA 1A4604

BRIDGE NO. VARIES
POST MILE VARIES

SCADA SYSTEM UPGRADE: POSEY/WEBSTER STREET TUBES AND CALDECOTT TUNNEL
CALDECOTT BORE 3
WEST PORTAL BUILDING - POWER PLAN

SHEET **EE1-5**

DOES SD Imperial Rev.1/07

ORIGINAL SCALE IN INCHES FOR REDUCED PLANS 0 1 2 3

DISREGARD PRINTS BEARING EARLIER REVISION DATES →

REVISION DATES (PRELIMINARY STAGE ONLY)

SHEET 26 OF 95

26-NOV-2008 10:51

ee1-5.dgn

DIST.	COUNTY	ROUTE	POST MILES TOTAL PROJECT	SHEET NO.	TOTAL SHEETS
04	Ala,CC	24,260	R5.9/R6.2, R0.0/R0.5,R0.9/R1.9	32	100

REGISTERED ELECTRICAL ENGINEER — 02-26-08 DATE

REGISTERED PROFESSIONAL ENGINEER ROBERT J. FEE No. E-13014 Exp. 6/30/09 ELEC STATE OF CALIFORNIA

11-24-08
PLANS APPROVAL DATE

The State of California or its officers or agents shall not be responsible for the accuracy or completeness of electronic copies of this plan sheet.

STV Incorporated
9130 Anaheim Place, Suite 210
Rancho Cucamonga, CA 91730

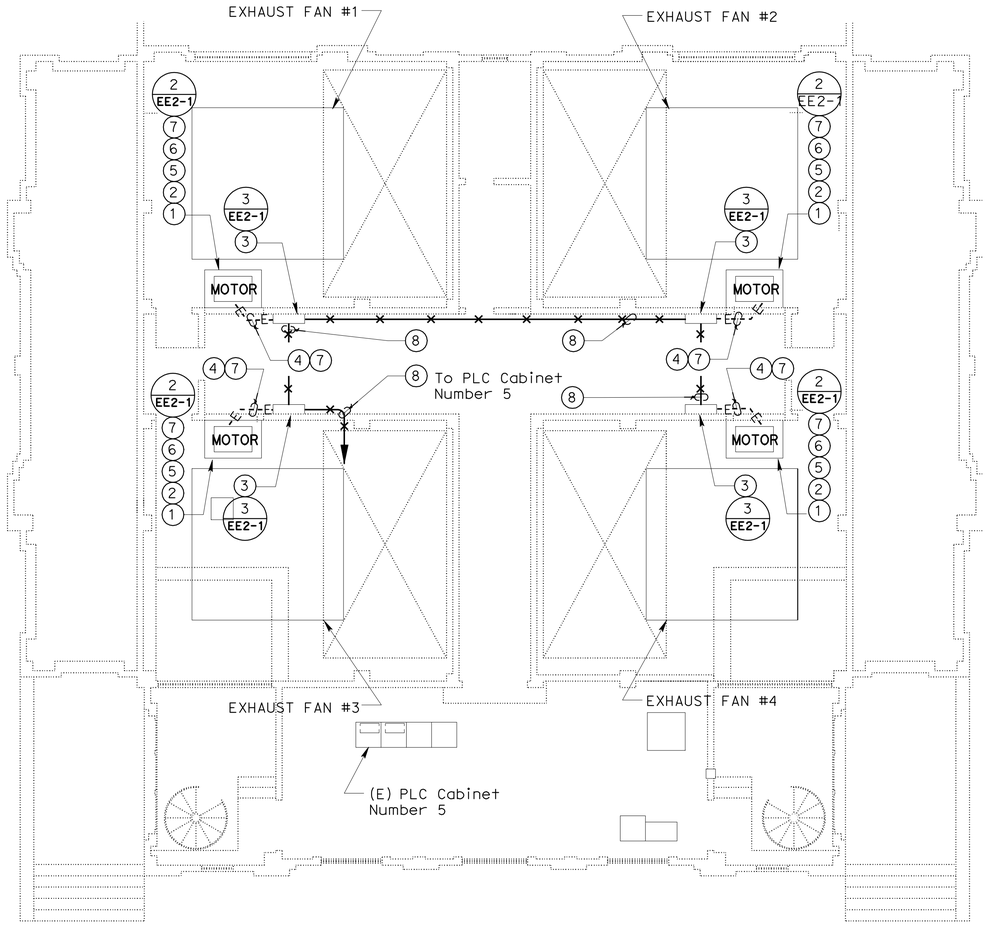

POSEY UPPER LEVEL - NOTES:

1. Replace the existing 75 Hp, 2-speed Exhauster Fan Motor with new 405 frame, 75 Hp, 460 V, 3 Phase, 1800 RPM base, inverter rated motor.
2. Remove existing motor adjustment base and replace with new. See detail this sheet for new 405 frame motor.
3. Replace the existing 75 Hp, 2-speed Exhauster Fan Starter with VFD.
4. Replace existing feeder with new 3 #1/0 and 1 #2 Ground in existing conduit.
5. Re-use existing sheave and existing belt drive from existing motor.
6. Align new motors on new bases for proper sheave alignment and belt tension.
7. Provide new liquid tight flex for final connection to new motor.
8. ¾"C with Modbus Plus cable as recommended by Modicon.

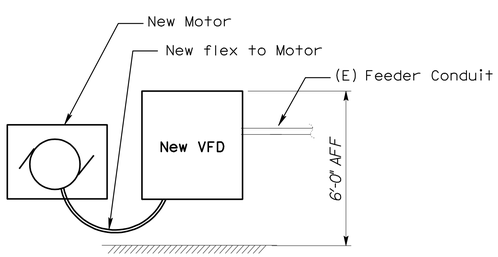

3 EE2-1 TYPICAL VFD MOUNTING DETAIL

NOT TO SCALE

1 EE2-1 POSEY TUBE OAKLAND PORTAL BUILDING EXHAUST FAN ROOM - POWER PLAN

SCALE 1/8" = 1'-0"

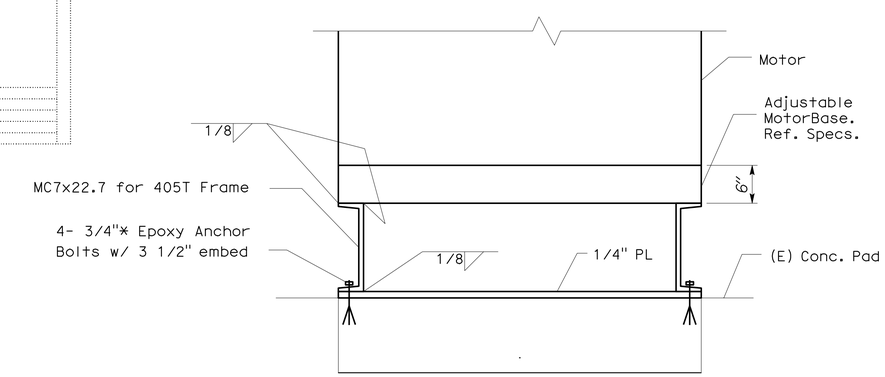

2 EE2-1 ELECTRIC MOTOR CONNECTION TO (E) CONCRETE

NOT TO SCALE

DESIGN	BY G.MARAVILLA	CHECKED R.FEE	PREPARED FOR THE STATE OF CALIFORNIA DEPARTMENT OF TRANSPORTATION
DETAILS	BY G.MARAVILLA	CHECKED R.FEE	
QUANTITIES	BY G.MARAVILLA	CHECKED R.FEE	

DIVISION OF ENGINEERING SERVICES
ELECTRICAL-MECHANICAL-WATER AND WASTEWATER DESIGN

BRIDGE NO. VARIES
POST MILE VARIES

SCADA SYSTEM UPGRADE: POSEY/WEBSTER STREET TUBES AND CALDECOTT TUNNEL
POSEY TUBE OAKLAND PORTAL BUILDING
EXHAUST FAN ROOM - POWER PLAN

SHEET EE2-1

DOES SD Imperial Rev.1/07

ORIGINAL SCALE IN INCHES FOR REDUCED PLANS 0 1 2 3

CU 04220
EA 1A4604

DISREGARD PRINTS BEARING EARLIER REVISION DATES →
REVISION DATES (PRELIMINARY STAGE ONLY)

SHEET 27 OF 95

26-NOV-2008 10:51
ee2-1.dgn

DIST.	COUNTY	ROUTE	POST MILES TOTAL PROJECT	SHEET NO.	TOTAL SHEETS
04	Ala,CC	24,260	R5.9/R6.2, R0.0/R0.5,R0.9/R1.9	33	100

REGISTERED ELECTRICAL ENGINEER — 02-26-08 DATE

REGISTERED PROFESSIONAL ENGINEER ROBERT J. FEE No. E-13014 Exp. 6/30/09 ELEC STATE OF CALIFORNIA

11-24-08
PLANS APPROVAL DATE

The State of California or its officers or agents shall not be responsible for the accuracy or completeness of electronic copies of this plan sheet.

STV Incorporated
9130 Anaheim Place, Suite 210
Rancho Cucamonga, CA 91730

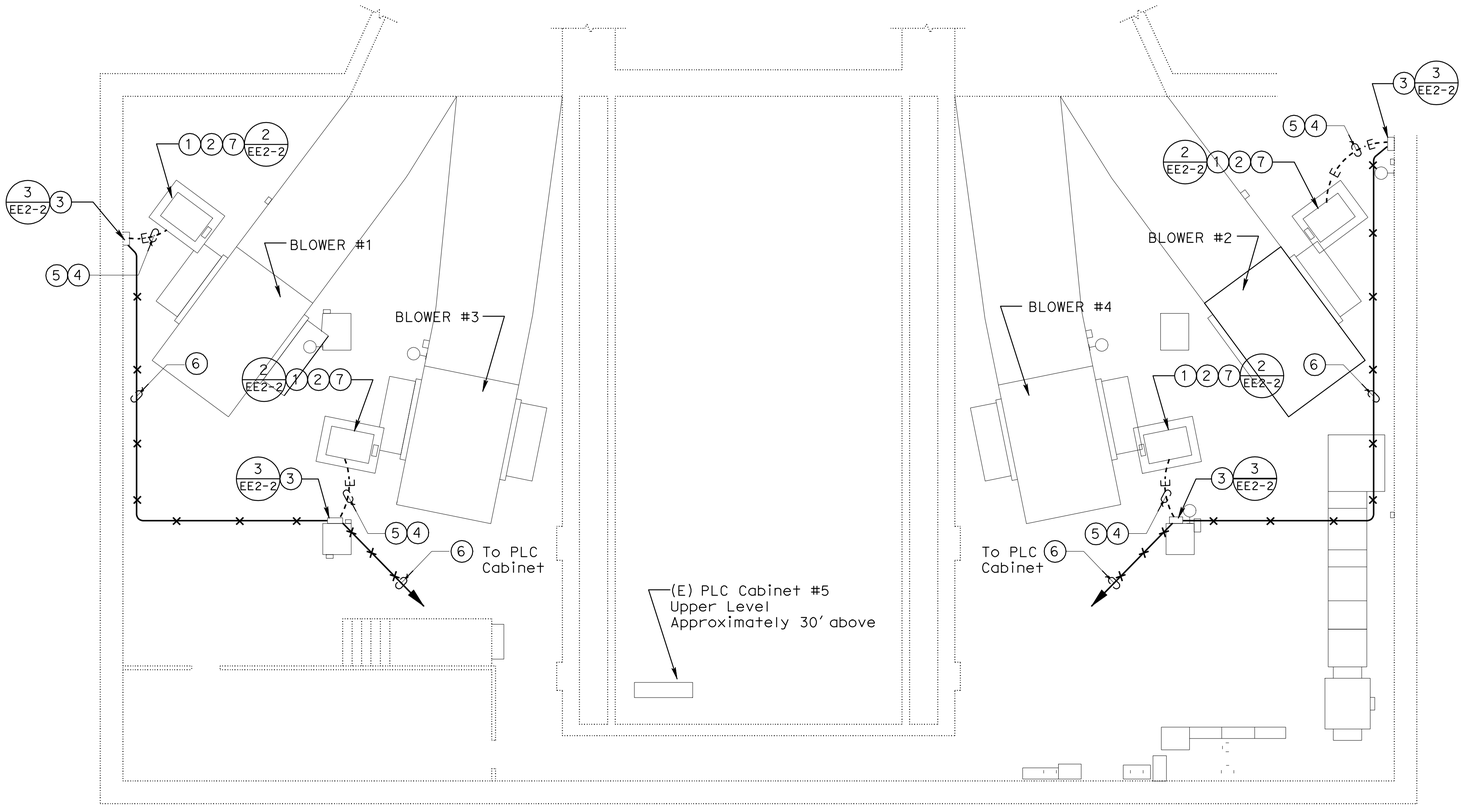

1 EE2-2 POSEY TUBE OAKLAND PORTAL BUILDING BASEMENT - POWER PLAN

SCALE 1/8" = 1'-0"

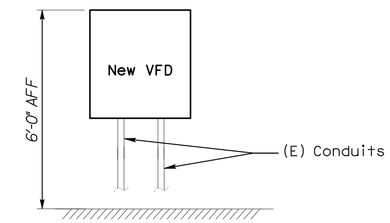

3 EE2-2 TYPICAL VFD MOUNTING ELEVATION

NOT TO SCALE

POSEY LOWER LEVEL - NOTES:

1. Replace the existing 75 Hp, 2-speed Blower Fan Motor with new 405 frame, 75 Hp, 460 V, 3 Phase, 1800 RPM base, inverter rated motor.
2. Remove existing motor supports down to concrete and replace with new motor adjustment base per detail this sheet, for new 405 frame motor.
3. Replace (E) 75 Hp, 2 speed Blower Starter with new VFD on slotted channel framing or equal, adjacent to existing motor base.
4. Replace existing feeder with new 3 #1/0 and 1 #2 Ground in existing conduit.
5. Provide new liquid tight flex for final connection to new motor.
6. 3/4"C with Modbus Plus cable as recommended by Modicon.
7. Align new motors on new bases for proper sheave alignment and belt tension.

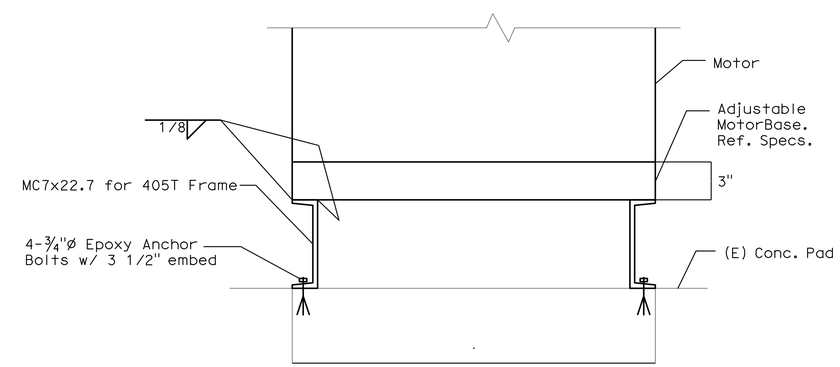

2 EE2-2 ELECTRIC MOTOR CONNECTION TO (E) CONCRETE

NOT TO SCALE

DESIGN	BY G. MARAVILLA	CHECKED R. FEE	PREPARED FOR THE STATE OF CALIFORNIA DEPARTMENT OF TRANSPORTATION
DETAILS	BY G. MARAVILLA	CHECKED R. FEE	
QUANTITIES	BY G. MARAVILLA	CHECKED R. FEE	

DIVISION OF ENGINEERING SERVICES
ELECTRICAL-MECHANICAL-WATER AND WASTEWATER DESIGN

BRIDGE NO. VARIES
POST MILE VARIES

SCADA SYSTEM UPGRADE: POSEY/WEBSTER STREET TUBES AND CALDECOTT TUNNEL
POSEY TUBE OAKLAND PORTAL BUILDING BASEMENT - POWER PLAN

SHEET **EE2-2**

DOES SD Imperial Rev.1/07

ORIGINAL SCALE IN INCHES FOR REDUCED PLANS 0 1 2 3

CU 04220
EA 1A4604

DISREGARD PRINTS BEARING EARLIER REVISION DATES → REVISION DATES (PRELIMINARY STAGE ONLY)

SHEET 28 OF 95

26-NOV-2008 10:51
ee2-2.dgn

DIST.	COUNTY	ROUTE	POST MILES TOTAL PROJECT	SHEET NO.	TOTAL SHEETS
04	Ala,CC	24,260	R5.9/R6.2, R0.0/R0.5,R0.9/R1.9	34	100

REGISTERED ELECTRICAL ENGINEER — 02-26-08 DATE

REGISTERED PROFESSIONAL ENGINEER ROBERT J. FEE No. E-13014 Exp. 6/30/09 ELEC STATE OF CALIFORNIA

11-24-08
PLANS APPROVAL DATE

The State of California or its officers or agents shall not be responsible for the accuracy or completeness of electronic copies of this plan sheet.

STV Incorporated
9130 Anaheim Place, Suite 210
Rancho Cucamonga, CA 91730

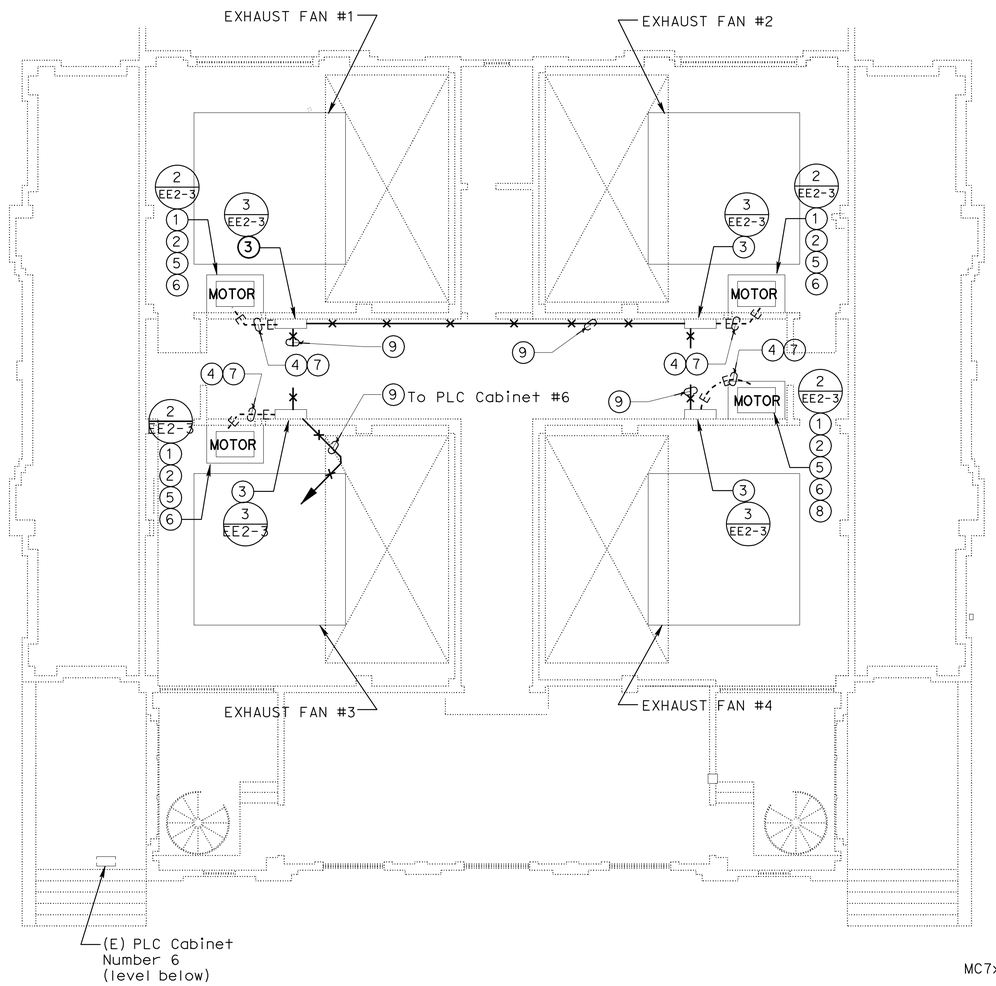

POSEY UPPER LEVEL - NOTES:

1. Replace the existing 75 Hp, 2-speed Exhauster Fan Motor with new 405 frame, 75 Hp, 460 V, 3 Phase, 1800 RPM base, inverter rated motor.
2. Remove existing motor supports down to concrete and replace with new motor adjustment base per detail this sheet, for new 405 frame motor.
3. Replace the existing 75 Hp, 2-speed Blower Fan Starter with VFD.
4. Replace existing feeder with new 3 #1/0 and 1 #2 Ground in existing conduit.
5. Re-use existing sheave from existing motor.
6. Align new motors on new bases for proper sheave alignment and belt tension.
7. Provide new liquid tight flex for final connection to new motor.
8. Motor #4 has been reversed, install new motor in same configuration as existing.
9. ¾"C with Modbus Plus cable recommended by Modicon.

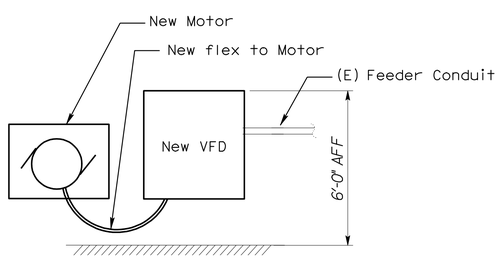

3 EE2-3 TYPICAL VFD MOUNTING DETAIL

NOT TO SCALE

1 EE2-3 POSEY TUBE ALAMEDA PORTAL BUILDING EXHAUST FAN ROOM - POWER PLAN

SCALE 1/8" = 1'-0"

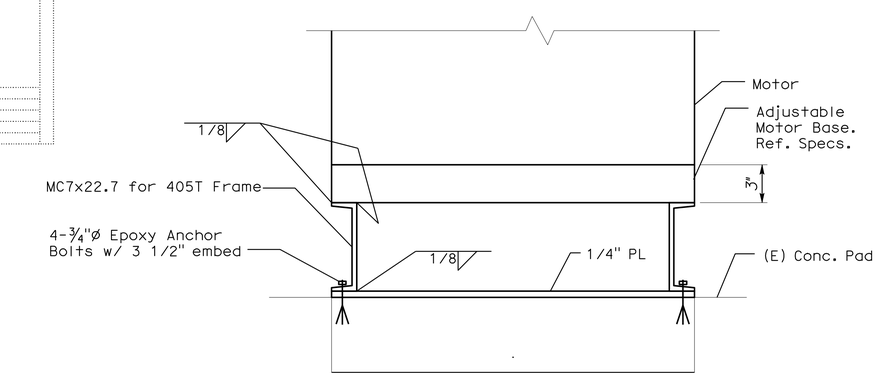

2 EE2-3 ELECTRIC MOTOR CONNECTION TO (E) CONCRETE

NOT TO SCALE

DESIGN	BY G.MARAVILLA	CHECKED R.FEE	PREPARED FOR THE STATE OF CALIFORNIA DEPARTMENT OF TRANSPORTATION
DETAILS	BY G.MARAVILLA	CHECKED R.FEE	
QUANTITIES	BY G.MARAVILLA	CHECKED R.FEE	

DIVISION OF ENGINEERING SERVICES
ELECTRICAL-MECHANICAL-WATER AND WASTEWATER DESIGN

BRIDGE NO. VARIES
POST MILE VARIES

SCADA SYSTEM UPGRADE: POSEY/WEBSTER STREET TUBES AND CALDECOTT TUNNEL
POSEY TUBE ALAMEDA PORTAL BUILDING
EXHAUST FAN ROOM - POWER PLAN

SHEET EE2-3

DOES SD Imperial Rev.1/07

ORIGINAL SCALE IN INCHES FOR REDUCED PLANS 0 1 2 3

CU 04220
EA 1A4604

DISREGARD PRINTS BEARING EARLIER REVISION DATES →
REVISION DATES (PRELIMINARY STAGE ONLY)

SHEET 29 OF 95

26-NOV-2008 10:51
ee2-3.dgn

DIST.	COUNTY	ROUTE	POST MILES TOTAL PROJECT	SHEET NO.	TOTAL SHEETS
04	Ala,CC	24,260	R5.9/R6.2, R0.0/R0.5,R0.9/R1.9	35	100

REGISTERED ELECTRICAL ENGINEER — 02-26-08 DATE

REGISTERED PROFESSIONAL ENGINEER ROBERT J. FEE No. E-13014 Exp. 6/30/09 ELEC STATE OF CALIFORNIA

11-24-08
PLANS APPROVAL DATE

The State of California or its officers or agents shall not be responsible for the accuracy or completeness of electronic copies of this plan sheet.

STV Incorporated
9130 Anaheim Place, Suite 210
Rancho Cucamonga, CA 91730

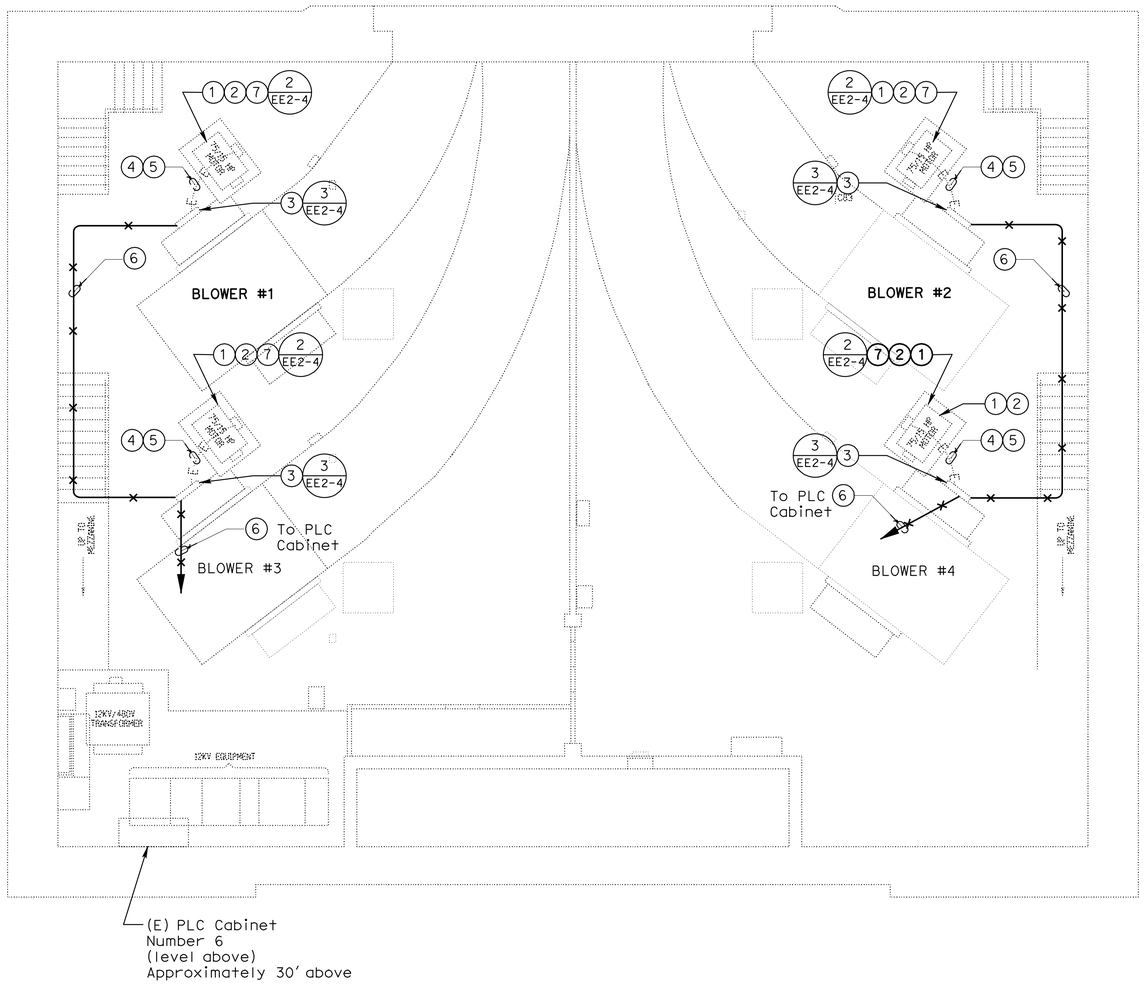

1 EE2-4 POSEY TUBE ALAMEDA PORTAL BUILDING BASEMENT - POWER PLAN

SCALE 1/8" = 1'-0"

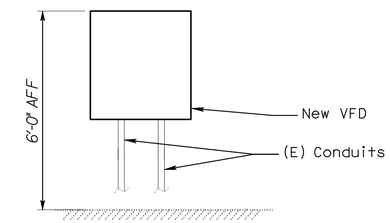

3 EE2-4 TYPICAL VFD MOUNTING ELEVATION

NOT TO SCALE

POSEY LOWER LEVEL - NOTES:

1. Replace the existing 75 Hp, 2-speed Blower Fan Motor with new 405 frame, 75 Hp, 460 V 3 Phase, 1800 RPM base, inverter rated motor.
2. Remove existing motor supports down to concrete and replace with new motor adjustment base per detail this sheet, for new 405 frame motor.
3. Replace (E) 75 Hp, 2 speed Blower Starter with new VFD on slotted channel framing or equal, adjacent to existing motor base.
4. Replace existing feeder with new 3 #1/0 and 1 #2 Ground in existing conduit.
5. Provide new liquid tight flex for final connection to new motor.
6. 3/4"C with Modbus Plus cable as recommended by Modicon.
7. Align new motors on new bases for proper sheave alignment and belt tension.

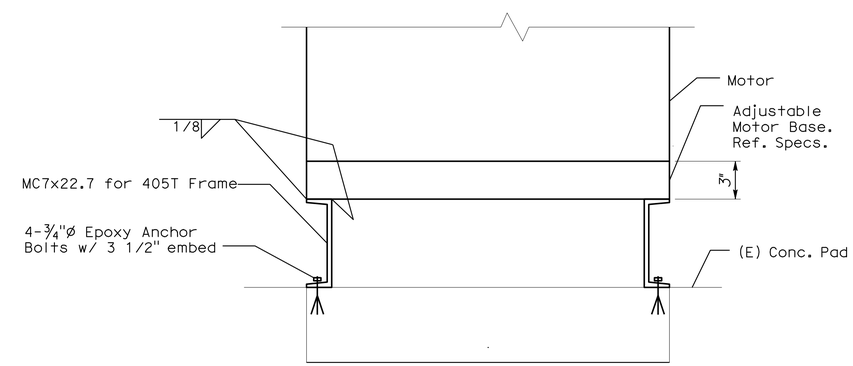

2 EE2-4 ELECTRIC MOTOR CONNECTION TO (E) CONCRETE

NOT TO SCALE

DESIGN	BY G.MARAVILLA	CHECKED R.FEE	PREPARED FOR THE STATE OF CALIFORNIA DEPARTMENT OF TRANSPORTATION
DETAILS	BY G.MARAVILLA	CHECKED R.FEE	
QUANTITIES	BY G.MARAVILLA	CHECKED R.FEE	

DIVISION OF ENGINEERING SERVICES
ELECTRICAL-MECHANICAL-WATER AND WASTEWATER DESIGN

BRIDGE NO. VARIES
POST MILE VARIES

SCADA SYSTEM UPGRADE: POSEY/WEBSTER STREET TUBES AND CALDECOTT TUNNEL
POSEY TUBE ALAMEDA PORTAL BUILDING BASEMENT - POWER PLAN

SHEET **EE2-4**

DOES SD Imperial Rev.1/07

ORIGINAL SCALE IN INCHES FOR REDUCED PLANS 0 1 2 3

CU 04220
EA 1A4604

DISREGARD PRINTS BEARING EARLIER REVISION DATES →
REVISION DATES (PRELIMINARY STAGE ONLY)

SHEET 30 OF 95

26-NOV-2008 10:51
ee2-4.dgn

DIST.	COUNTY	ROUTE	POST MILES TOTAL PROJECT	SHEET NO.	TOTAL SHEETS
04	Ala,CC	24,260	R5.9/R6.2, R0.0/R0.5,R0.9/R1.9	36	100

REGISTERED ELECTRICAL ENGINEER — 02-26-08 DATE

REGISTERED PROFESSIONAL ENGINEER ROBERT J. FEE No. E-13014 Exp. 6/30/09 ELEC STATE OF CALIFORNIA

11-24-08
PLANS APPROVAL DATE

The State of California or its officers or agents shall not be responsible for the accuracy or completeness of electronic copies of this plan sheet.

STV Incorporated
9130 Anaheim Place, Suite 210
Rancho Cucamonga, CA 91730

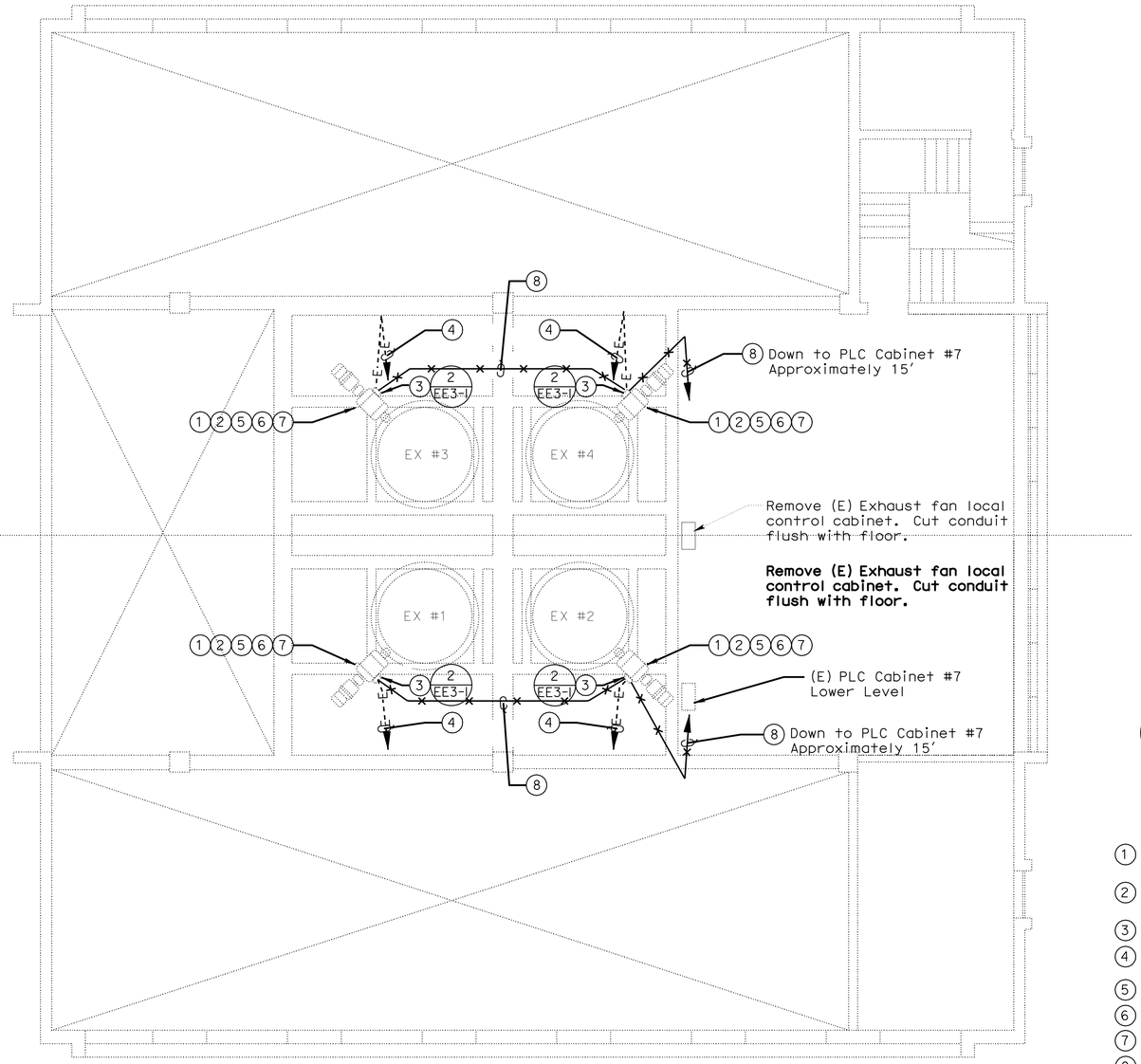

1 EE3-1 WEBSTER STREET TUBE OAKLAND - BLOWER FAN ROOM POWER PLAN

SCALE 1/8" = 1'-0"

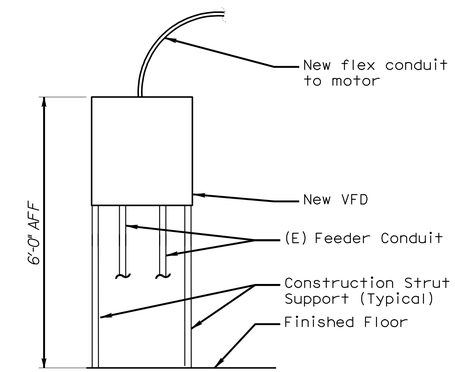

2 EE3-1 TYPICAL VFD MOUNTING ELEVATION

NOT TO SCALE

WEBSTER OAKLAND - SHEET NOTES:

1. Replace the existing 30 Hp, 2-speed Exhauster Fan Motor with new 324 frame, 30 Hp, 460 V, 3 Phase, 1800 RPM base, inverter rated motor.
2. Provide 2" lift plate under new motor to retain shaft vertical alignment with smaller frame motor.
3. Install new VFD on unistrut frame adjacent to existing motor base.
4. Replace existing feeder with new 3 #4 and 1 #6 ground in existing conduit.
5. Provide new couplings for all new motors.
6. Align new motors on existing bases to coupling manufacturer's specification.
7. Provide new liquid tight flex for final connection to new motor.
8. 3/4"C with Modbus Plus cable as recommended by Modicon. Channel floor as required to install conduit, repair to match existing.

	BY	CHECKED
DESIGN	G. MARAVILLA	R. FEE
DETAILS	G. MARAVILLA	R. FEE
QUANTITIES	G. MARAVILLA	R. FEE

PREPARED FOR THE STATE OF CALIFORNIA DEPARTMENT OF TRANSPORTATION

DIVISION OF ENGINEERING SERVICES
ELECTRICAL-MECHANICAL-WATER AND WASTEWATER DESIGN

BRIDGE NO. VARIES
POST MILE VARIES

SCADA SYSTEM UPGRADE: POSEY/WEBSTER STREET TUBES AND CALDECOTT TUNNEL
WEBSTER STREET TUBE OAKLAND PORTAL EXHAUST FAN ROOM - POWER PLAN

SHEET EE3-1

DOES SD Imperial Rev. 1/07

ORIGINAL SCALE IN INCHES FOR REDUCED PLANS 0 1 2 3

CU 04220
EA 1A4604

DISREGARD PRINTS BEARING EARLIER REVISION DATES →
REVISION DATES (PRELIMINARY STAGE ONLY)

SHEET 31 OF 95

26-NOV-2008 10:52

ee3-1.dgn

DIST.	COUNTY	ROUTE	POST MILES TOTAL PROJECT	SHEET NO.	TOTAL SHEETS
04	Ala,CC	24,260	R5.9/R6.2, R0.0/R0.5,R0.9/R1.9	37	100

REGISTERED ELECTRICAL ENGINEER — 02-26-08 DATE

REGISTERED PROFESSIONAL ENGINEER ROBERT J. FEE No. E-13014 Exp. 6/30/09 ELEC STATE OF CALIFORNIA

11-24-08
PLANS APPROVAL DATE

The State of California or its officers or agents shall not be responsible for the accuracy or completeness of electronic copies of this plan sheet.

STV Incorporated
9130 Anaheim Place, Suite 210
Rancho Cucamonga, CA 91730

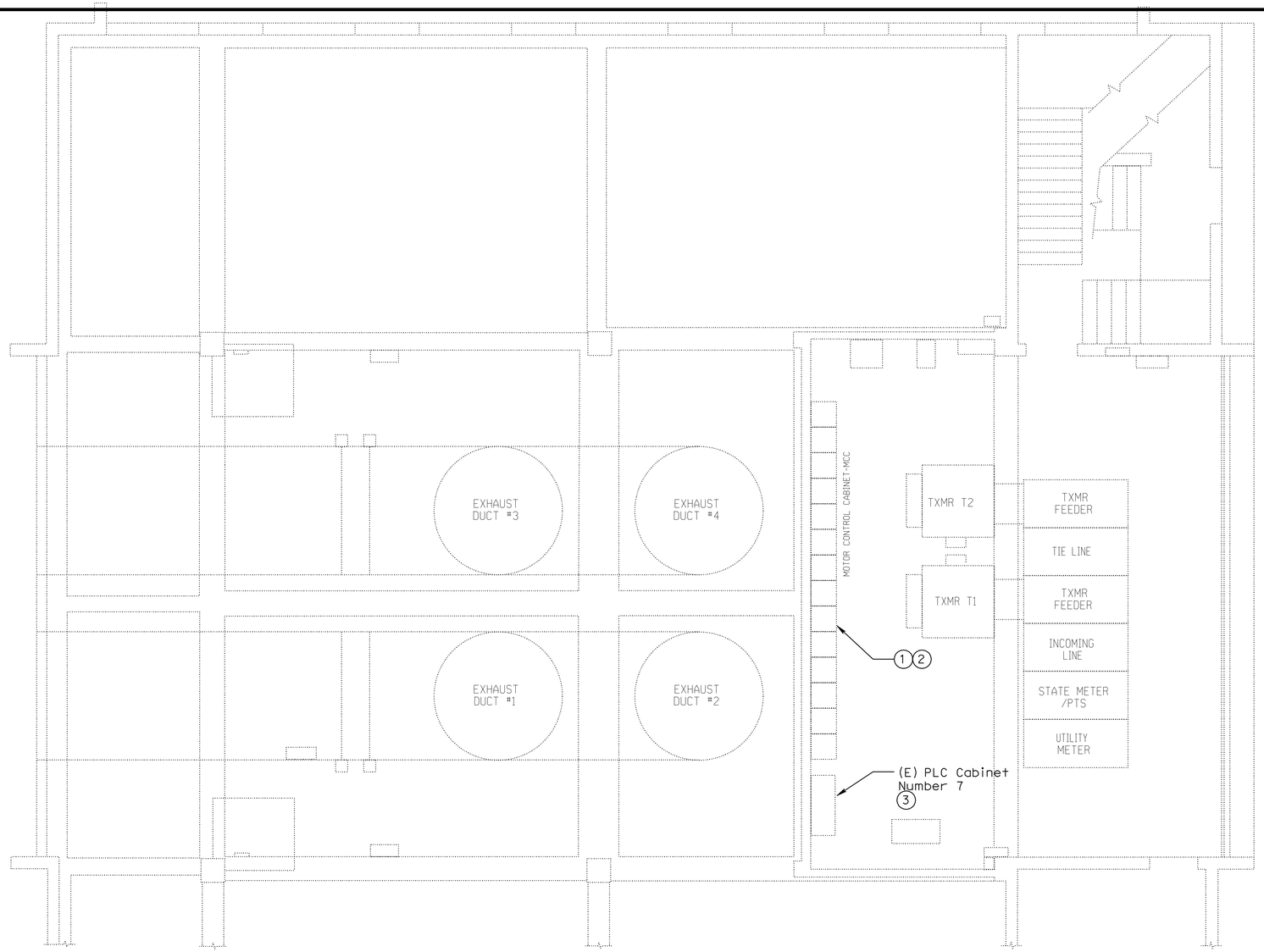

WEBSTER OAKLAND - SHEET NOTES:

1. Remove existing starters and controls from MCC. Retain disconnect switch.
2. Replace existing feeders fron (E) disconnect switches to new VFD cabinets for all 8 motors with new 3 #4 and 1 #6 Ground in existing conduits.
3. Install ¾" control conduit from existing PLC to new VFD's at motor locations. Refer to EE3-1 and EE3-3.

1 EE3-2 WEBSTER STREET TUBE OAKLAND - CONTROL ROOM POWER PLAN

SCALE 1/8" = 1'-0"

	BY	CHECKED
DESIGN	G. MARAVILLA	R. FEE
DETAILS	G. MARAVILLA	R. FEE
QUANTITIES	G. MARAVILLA	R. FEE

PREPARED FOR THE STATE OF CALIFORNIA DEPARTMENT OF TRANSPORTATION

DIVISION OF ENGINEERING SERVICES
ELECTRICAL-MECHANICAL-WATER AND WASTEWATER DESIGN

BRIDGE NO. VARIES
POST MILE VARIES

SCADA SYSTEM UPGRADE: POSEY/WEBSTER STREET TUBES AND CALDECOTT TUNNEL
WEBSTER STREET TUBE OAKLAND PORTAL CONTROL ROOM - POWER PLAN

SHEET **EE3-2**

DOES SD Imperial Rev. 1/07

ORIGINAL SCALE IN INCHES FOR REDUCED PLANS 0 1 2 3

CU 04220
EA 1A4604

DISREGARD PRINTS BEARING EARLIER REVISION DATES →

REVISION DATES (PRELIMINARY STAGE ONLY)

SHEET 32 OF 95

26-NOV-2008 10:52

ee3-2.dgn

DIST.	COUNTY	ROUTE	POST MILES TOTAL PROJECT	SHEET NO.	TOTAL SHEETS
04	Ala,CC	24,260	R5.9/R6.2, R0.0/R0.5,R0.9/R1.9	38	100

REGISTERED ELECTRICAL ENGINEER — 02-26-08 DATE

REGISTERED PROFESSIONAL ENGINEER ROBERT J. FEE No. E-13014 Exp. 6/30/09 ELEC STATE OF CALIFORNIA

11-24-08
PLANS APPROVAL DATE

The State of California or its officers or agents shall not be responsible for the accuracy or completeness of electronic copies of this plan sheet.

STV Incorporated
9130 Anaheim Place, Suite 210
Rancho Cucamonga, CA 91730

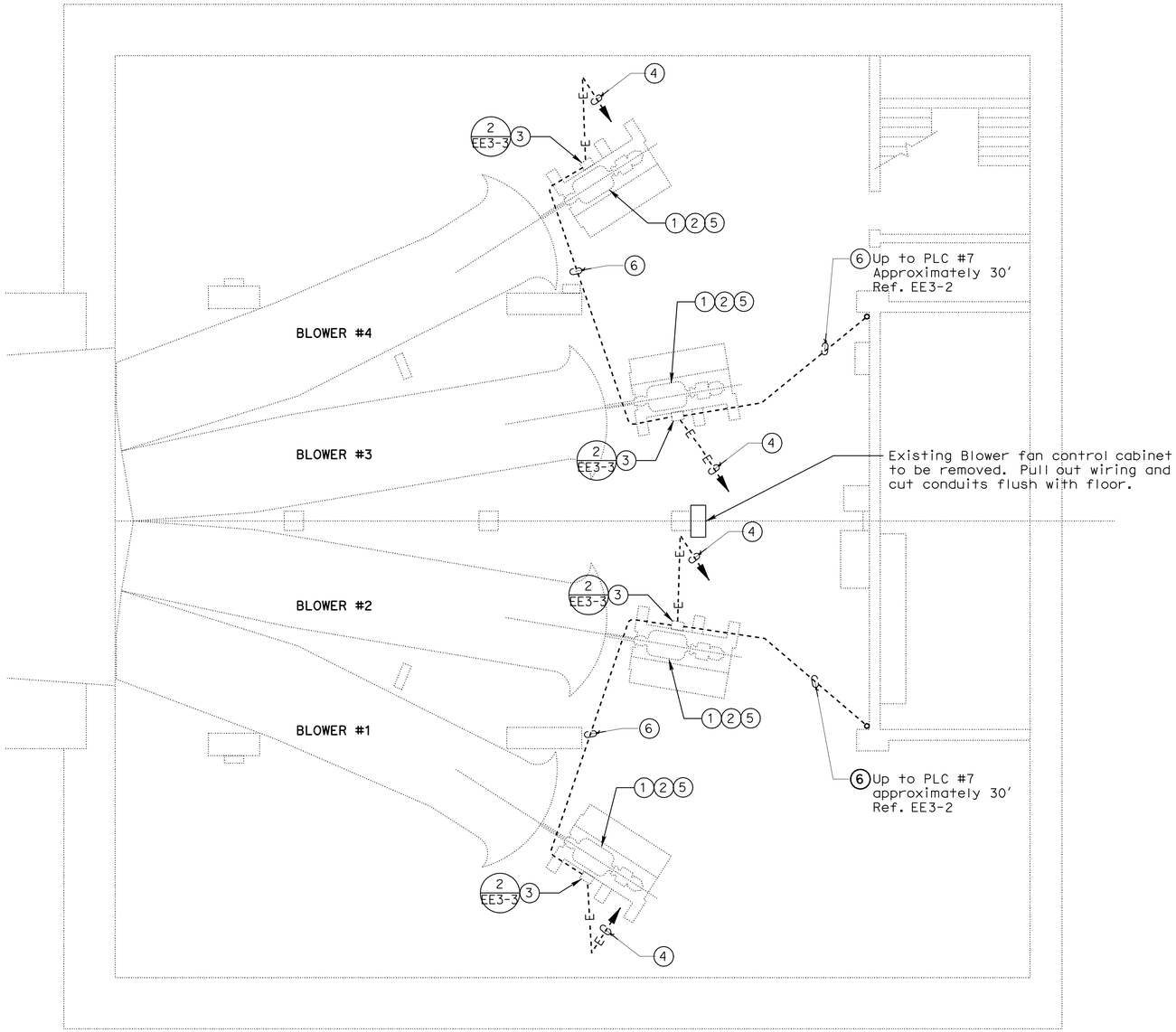

1 EE3-3 WEBSTER STREET TUBE OAKLAND - BLOWER FAN ROOM POWER PLAN

SCALE 1/8" = 1'-0"

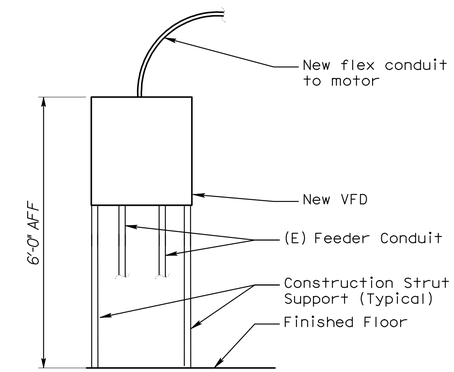

2 EE3-3 TYPICAL VFD MOUNTING ELEVATION

NOT TO SCALE

WEBSTER OAKLAND - SHEET NOTES:

1. Replace the existing 30 Hp, 2-speed Blower Fan Motor with new 324 frame, 30 Hp, 460 v, 3 Phase, 1800 RPM base, inverter rated motor.
2. Not Used
3. Install new VFD on unistrut frame adjacent to existing motor base.
4. Replace existing feeder with new 3 #4 and 1 #6 Ground in existing conduit.
5. Provide new liquid tight flex for final connection to new motor.
6. 3/4"C with Modbus Plus cable as recommended by Modicon. Channel floor as required to install conduit, repair to match existing.

DESIGN	BY G.MARAVILLA	CHECKED R.FEE	
DETAILS	BY G.MARAVILLA	CHECKED R.FEE	
QUANTITIES	BY G.MARAVILLA	CHECKED R.FEE	

PREPARED FOR THE STATE OF CALIFORNIA DEPARTMENT OF TRANSPORTATION

DIVISION OF ENGINEERING SERVICES ELECTRICAL-MECHANICAL-WATER AND WASTEWATER DESIGN

BRIDGE NO. VARIES | POST MILE VARIES

SCADA SYSTEM UPGRADE: POSEY/WEBSTER STREET TUBES AND CALDECOTT TUNNEL
WEBSTER STREET TUBE OAKLAND PORTAL BLOWER FAN ROOM - POWER PLAN

SHEET **EE3-3**

DOES SD Imperial Rev.1/07

ORIGINAL SCALE IN INCHES FOR REDUCED PLANS 0 1 2 3

CU 04220
EA 1A4604

DISREGARD PRINTS BEARING EARLIER REVISION DATES → REVISION DATES (PRELIMINARY STAGE ONLY)

SHEET 33 OF 95

26-NOV-2008 10:52
ee3-3.dgn

DIST.	COUNTY	ROUTE	POST MILES TOTAL PROJECT	SHEET NO.	TOTAL SHEETS
04	Ala,CC	24,260	R5.9/R6.2, R0.0/R0.5,R0.9/R1.9	39	100

REGISTERED ELECTRICAL ENGINEER — 02-26-08 DATE

REGISTERED PROFESSIONAL ENGINEER ROBERT J. FEE No. E-13014 Exp. 6/30/09 ELEC STATE OF CALIFORNIA

11-24-08
PLANS APPROVAL DATE

The State of California or its officers or agents shall not be responsible for the accuracy or completeness of electronic copies of this plan sheet.

STV Incorporated
9130 Anaheim Place, Suite 210
Rancho Cucamonga, CA 91730

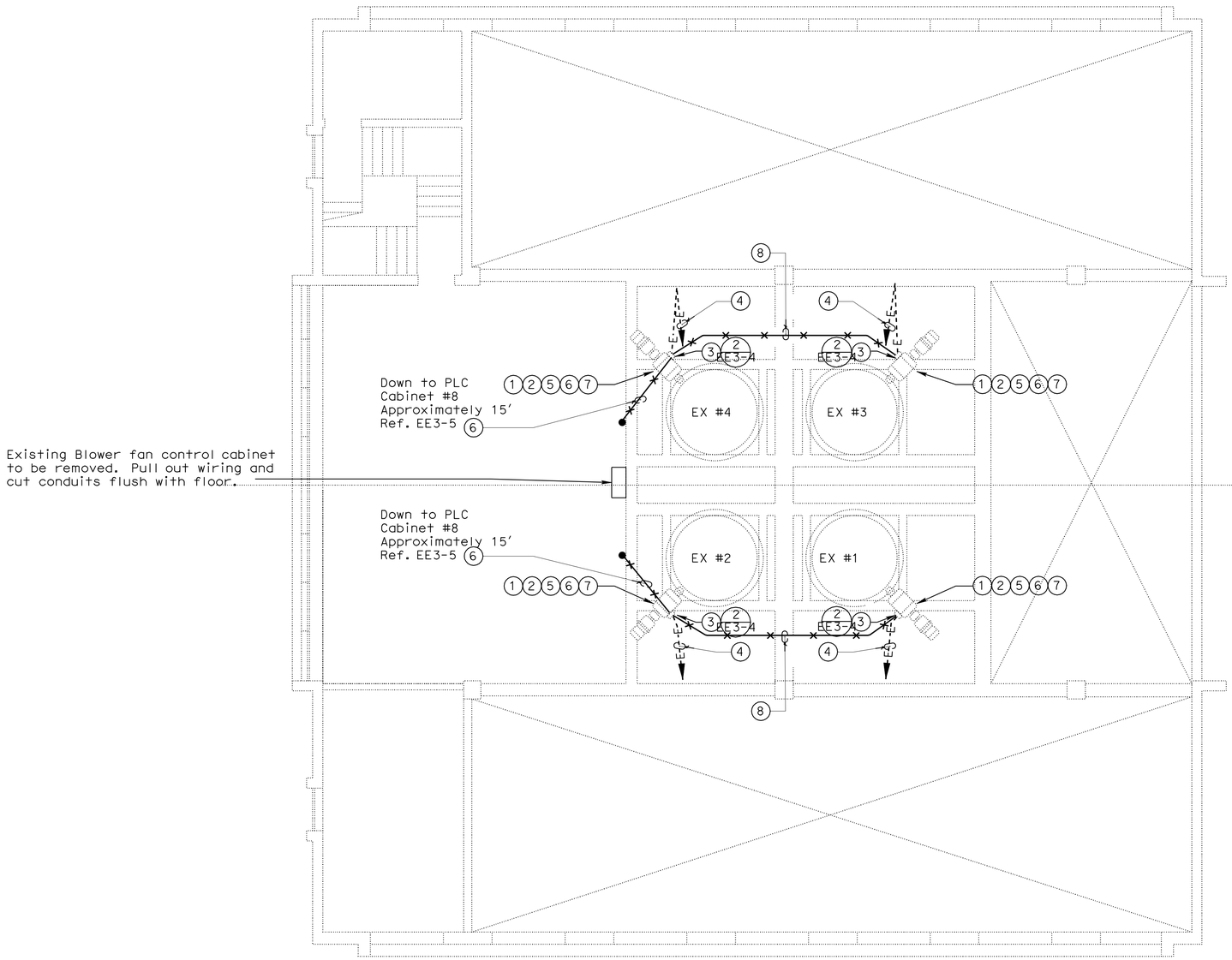

1 EE3-4 WEBSTER STREET TUBE ALAMEDA - EXHAUST FAN ROOM POWER PLAN

SCALE 1/8" = 1'-0"

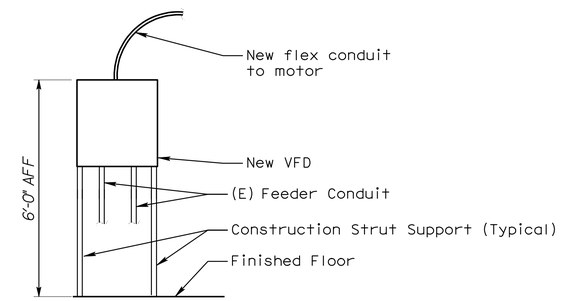

2 EE3-4 TYPICAL VFD MOUNTING ELEVATION

NOT TO SCALE

WEBSTER ALAMEDA - SHEET NOTES:

1. Replace the existing 30 Hp, 2-speed Exhauster Fan Motor with new 324 frame, 30 Hp, 460 V, 3 Phase, 1800 RPM base, inverter rated motor.
2. Provide 2" lift plate under new motor to retain shaft vertical alignment with smaller frame motor.
3. Install new VFD on unistrut frame adjacent to existing motor base.
4. Replace existing feeder with new 3 #4 and 1 #6 Ground in existing conduit.
5. Provide new couplings for all new motors.
6. Align new motors on existing bases to coupling manufacturer's specification.
7. Provide new liquid tight flex for final connection to new motor.
8. 3/4"C with Modbus Plus cable as recommended by Modicon. Channel floor as required to install conduit, repair to match existing.

	BY	CHECKED
DESIGN	G. MARAVILLA	R. FEE
DETAILS	G. MARAVILLA	R. FEE
QUANTITIES	G. MARAVILLA	R. FEE

PREPARED FOR THE STATE OF CALIFORNIA DEPARTMENT OF TRANSPORTATION

DIVISION OF ENGINEERING SERVICES
ELECTRICAL-MECHANICAL-WATER AND WASTEWATER DESIGN

BRIDGE NO. VARIES
POST MILE VARIES

SCADA SYSTEM UPGRADE: POSEY/WEBSTER STREET TUBES AND CALDECOTT TUNNEL
WEBSTER STREET TUBE ALAMEDA PORTAL EXHAUST FAN ROOM - POWER PLAN

SHEET EE3-4

DOES SD Imperial Rev. 1/07

ORIGINAL SCALE IN INCHES FOR REDUCED PLANS 0 1 2 3

CU 04220
EA 1A4604

DISREGARD PRINTS BEARING EARLIER REVISION DATES →
REVISION DATES (PRELIMINARY STAGE ONLY)

SHEET 34 OF 95

26-NOV-2008 10:52
ee3-4.dgn

DIST.	COUNTY	ROUTE	POST MILES TOTAL PROJECT	SHEET NO.	TOTAL SHEETS
04	Ala,CC	24,260	R5.9/R6.2, R0.0/R0.5,R0.9/R1.9	40	100

REGISTERED ELECTRICAL ENGINEER — 02-26-08 DATE

REGISTERED PROFESSIONAL ENGINEER ROBERT J. FEE No. E-13014 Exp. 6/30/09 ELEC STATE OF CALIFORNIA

11-24-08
PLANS APPROVAL DATE

The State of California or its officers or agents shall not be responsible for the accuracy or completeness of electronic copies of this plan sheet.

STV Incorporated
9130 Anaheim Place, Suite 210
Rancho Cucamonga, CA 91730

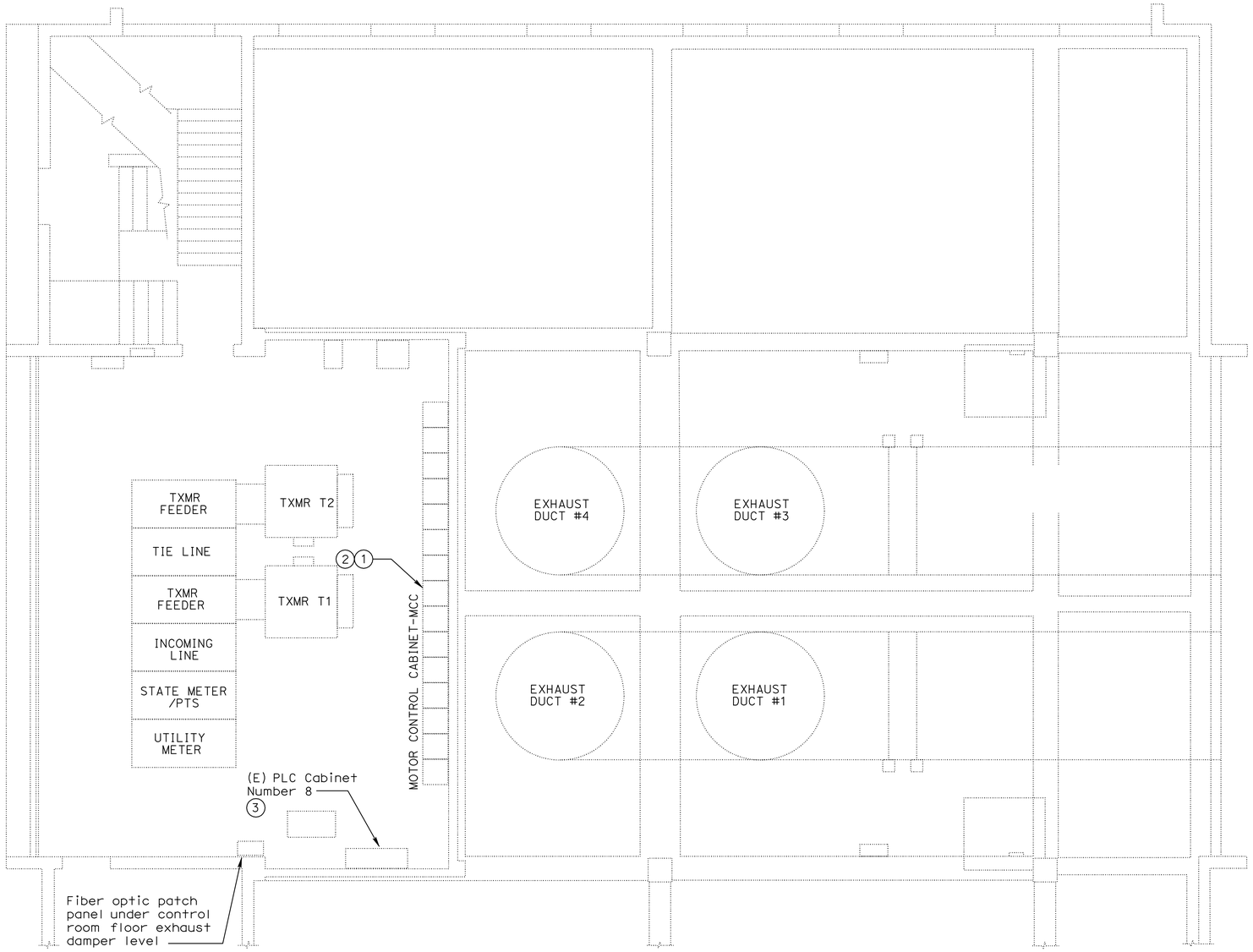

WEBSTER ALAMEDA - SHEET NOTES:

1. Remove existing starters and controls from MCC. Retain disconnect switch.
2. Replace existing feeders from (E) disconnect switches to new VFD cabinets for all 8 motors with new 3 #4 and 1 #6 Ground in existing conduits.
3. Install ¾" control conduit from existing PLC to new VFD's at motor locations. Refer to EE3-4 and EE3-6.

1 EE3-5 WEBSTER STREET TUBE ALAMEDA - CONTROL ROOM POWER PLAN

SCALE ⅛" = 1'-0"

	BY	CHECKED
DESIGN	G. MARAVILLA	R. FEE
DETAILS	G. MARAVILLA	R. FEE
QUANTITIES	G. MARAVILLA	R. FEE

PREPARED FOR THE STATE OF CALIFORNIA DEPARTMENT OF TRANSPORTATION

DIVISION OF ENGINEERING SERVICES
ELECTRICAL-MECHANICAL-WATER AND WASTEWATER DESIGN

BRIDGE NO. VARIES
POST MILE VARIES

SCADA SYSTEM UPGRADE: POSEY/WEBSTER STREET TUBES AND CALDECOTT TUNNEL
WEBSTER STREET TUBE ALAMEDA PORTAL CONTROL ROOM - POWER PLAN

SHEET **EE3-5**

DOES SD Imperial Rev. 1/07

ORIGINAL SCALE IN INCHES FOR REDUCED PLANS 0 1 2 3

CU 04220
EA 1A4604

DISREGARD PRINTS BEARING EARLIER REVISION DATES →
REVISION DATES (PRELIMINARY STAGE ONLY)

SHEET 35 OF 95

26-NOV-2008 10:52
ee3-5.dgn

DIST.	COUNTY	ROUTE	POST MILES TOTAL PROJECT	SHEET NO.	TOTAL SHEETS
04	Ala,CC	24,260	R5.9/R6.2, R0.0/R0.5,R0.9/R1.9	41	100

REGISTERED ELECTRICAL ENGINEER — 02-26-08 DATE

REGISTERED PROFESSIONAL ENGINEER ROBERT J. FEE No. E-13014 Exp. 6/30/09 ELEC STATE OF CALIFORNIA

11-24-08
PLANS APPROVAL DATE

The State of California or its officers or agents shall not be responsible for the accuracy or completeness of electronic copies of this plan sheet.

STV Incorporated
9130 Anaheim Place, Suite 210
Rancho Cucamonga, CA 91730

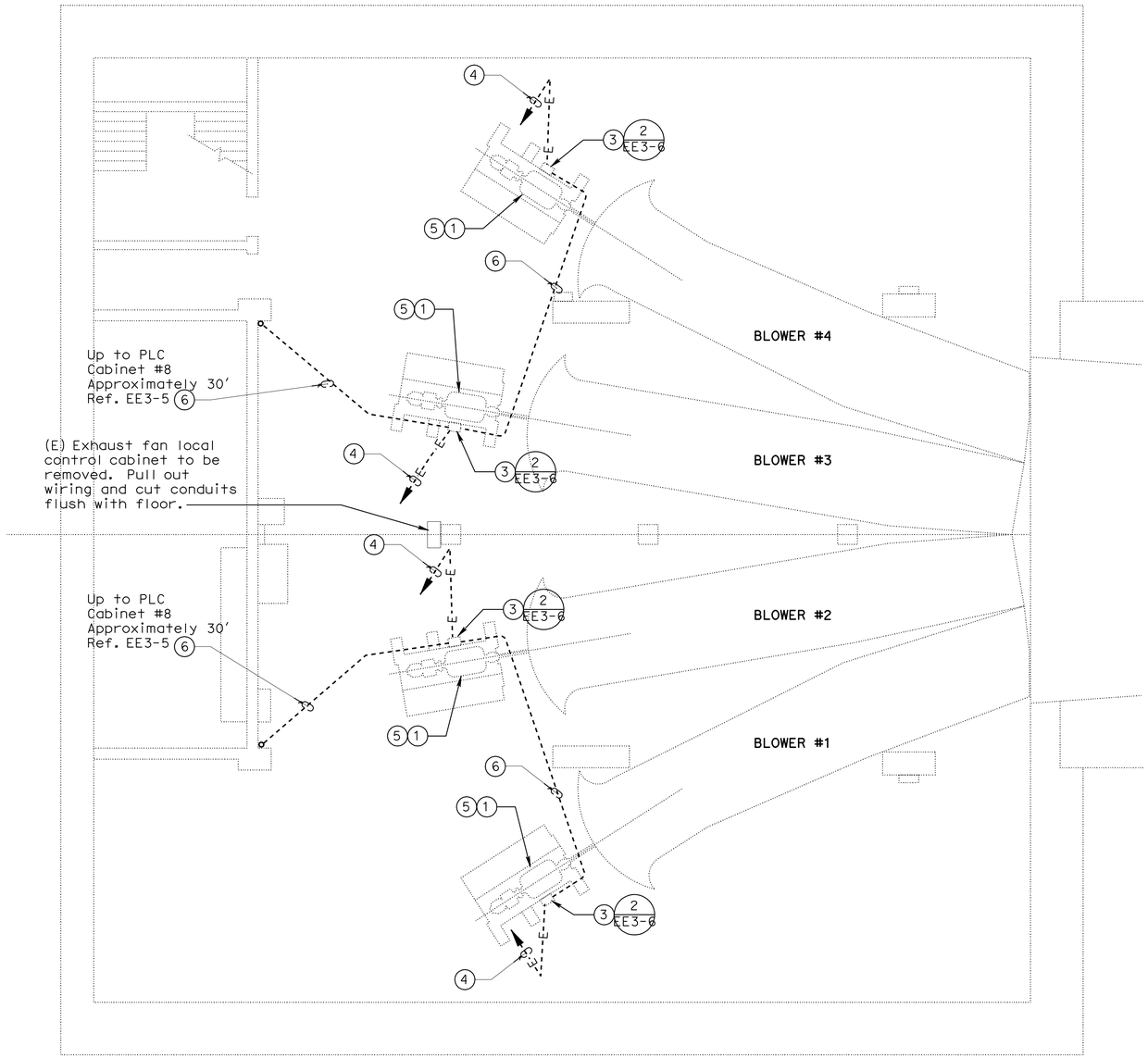

1 EE3-6 WEBSTER STREET TUBE ALAMEDA - BLOWER FAN ROOM POWER PLAN

SCALE 1/8" = 1'-0"

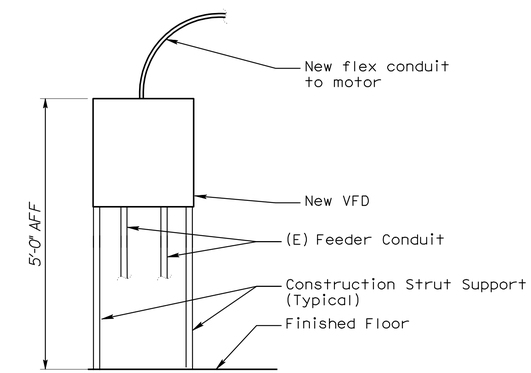

2 EE3-6 TYPICAL VFD MOUNTING ELEVATION

NOT TO SCALE

WEBSTER ALAMEDA - SHEET NOTES:

1. Replace the existing 30 Hp, 2-speed Blower Fan Motor with new 324 frame, 30 Hp, 460 V, 3 Phase, 1800 RPM base, inverter rated motor.
2. Not Used
3. Install new VFD on unistrut frame adjacent to existing motor base.
4. Replace existing feeder with new 3 #4 and 1 #6 Ground in existing conduit.
5. Provide new liquid tight flex for final connection to new motor.
6. 3/4"C with Modbus Plus cable as recommended by Modicon. Channel floor as required to install conduit, repair to match existing.

DESIGN	BY G.MARAVILLA	CHECKED R.FEE	
DETAILS	BY G.MARAVILLA	CHECKED R.FEE	
QUANTITIES	BY G.MARAVILLA	CHECKED R.FEE	

PREPARED FOR THE STATE OF CALIFORNIA DEPARTMENT OF TRANSPORTATION

DIVISION OF ENGINEERING SERVICES ELECTRICAL-MECHANICAL-WATER AND WASTEWATER DESIGN

BRIDGE NO. VARIES
POST MILE VARIES

SCADA SYSTEM UPGRADE: POSEY/WEBSTER STREET TUBES AND CALDECOTT TUNNEL
WEBSTER STREET TUBE ALAMEDA PORTAL BLOWER FAN ROOM - POWER PLAN

SHEET EE3-6

DOES SD Imperial Rev.1/07

ORIGINAL SCALE IN INCHES FOR REDUCED PLANS 0 1 2 3

CU 04220
EA 1A4604

DISREGARD PRINTS BEARING EARLIER REVISION DATES → REVISION DATES (PRELIMINARY STAGE ONLY)

SHEET 36 OF 95

26-NOV-2008 10:52
ee3-6.dgn

DIST.	COUNTY	ROUTE	POST MILES TOTAL PROJECT	SHEET NO.	TOTAL SHEETS
04	Ala,CC	24,260	R5.9/R6.2, R0.0/R0.5,R0.9/R1.9	42	100

REGISTERED ELECTRICAL ENGINEER — 02-26-08 DATE

REGISTERED PROFESSIONAL ENGINEER — ROBERT J. FEE — No. E-13014 — Exp. 6/30/09 — ELEC — STATE OF CALIFORNIA

11-24-08
PLANS APPROVAL DATE

The State of California or its officers or agents shall not be responsible for the accuracy or completeness of electronic copies of this plan sheet.

STV Incorporated
9130 Anaheim Place, Suite 210
Rancho Cucamonga, CA 91730

JDL Design, LLC
18582 Beach Blvd, Suite 229
Huntington Beach, CA 92647

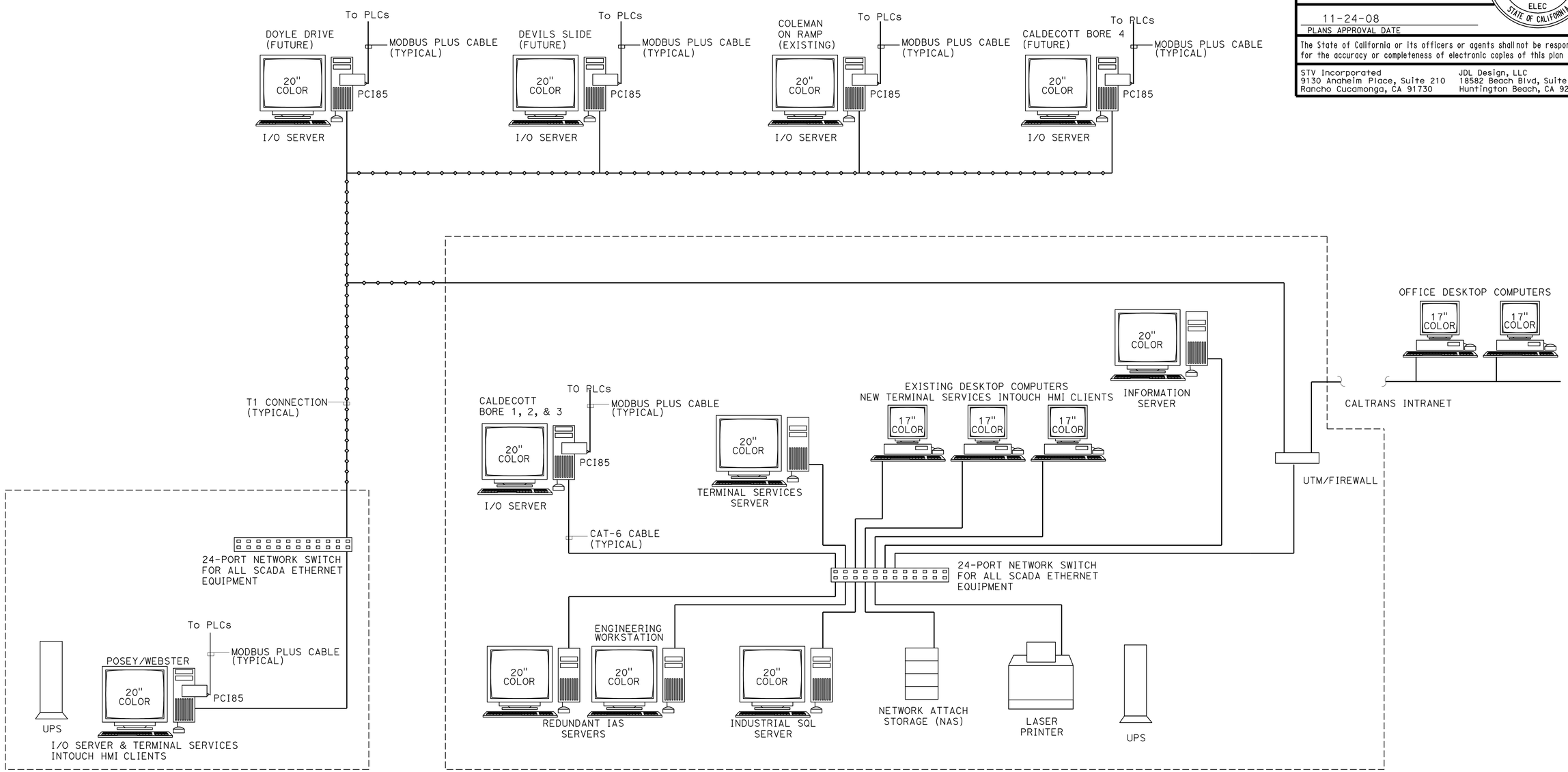

WEBSTER ST/POSEY TUBES CONTROL CENTER

CALDECOTT CONTROL CENTER

DESIGN	BY G.RUSSELL	CHECKED D.LE	
DETAILS	BY D.LE	CHECKED S.LO	
QUANTITIES	BY	CHECKED	

PREPARED FOR THE STATE OF CALIFORNIA DEPARTMENT OF TRANSPORTATION

DIVISION OF ENGINEERING SERVICES
ELECTRICAL-MECHANICAL-WATER AND WASTEWATER DESIGN

BRIDGE NO. VARIES
POST MILE VARIES

SCADA SYSTEM UPGRADE: POSEY/WEBSTER STREET TUBES AND CALDECOTT TUNNEL
SCADA HMI
SYSTEM ARCHITECTURE

SHEET **EE4-0**

DOES SD Imperial Rev.1/07

ORIGINAL SCALE IN INCHES FOR REDUCED PLANS 0 1 2 3

CU 04220
EA 1A4604

DISREGARD PRINTS BEARING EARLIER REVISION DATES →
REVISION DATES (PRELIMINARY STAGE ONLY)

SHEET 37 OF 95

26-NOV-2008 10:53
ee4-0.dgn

DIST.	COUNTY	ROUTE	POST MILES TOTAL PROJECT	SHEET NO.	TOTAL SHEETS
04	Ala,CC	24,260	R5.9/R6.2, R0.0/R0.5,R0.9/R1.9	43	100

REGISTERED ELECTRICAL ENGINEER — 02-26-08 DATE

REGISTERED PROFESSIONAL ENGINEER — ROBERT J. FEE — No. E-13014 — Exp. 6/30/09 — ELEC — STATE OF CALIFORNIA

11-24-08
PLANS APPROVAL DATE

The State of California or its officers or agents shall not be responsible for the accuracy or completeness of electronic copies of this plan sheet.

STV Incorporated
9130 Anaheim Place, Suite 210
Rancho Cucamonga, CA 91730

JDL Design, LLC
18582 Beach Blvd, Suite 229
Huntington Beach, CA 92647

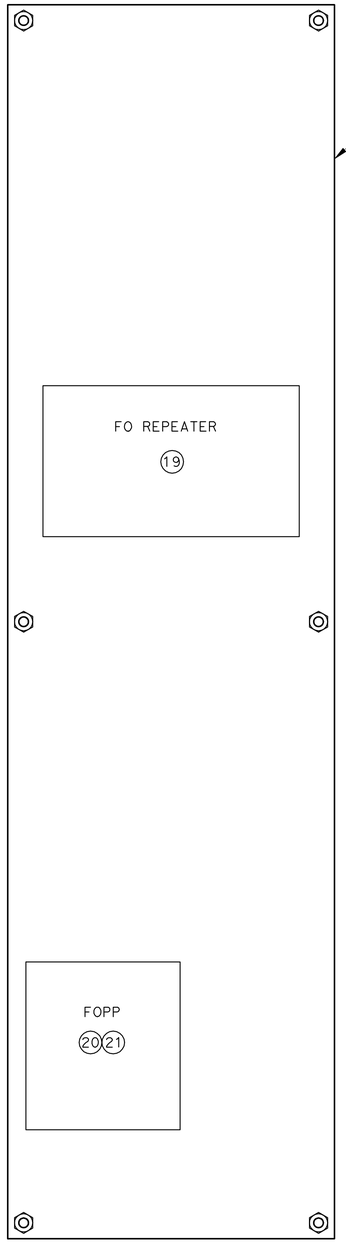

PLC1 COMMUNICATION INTERFACE PANEL

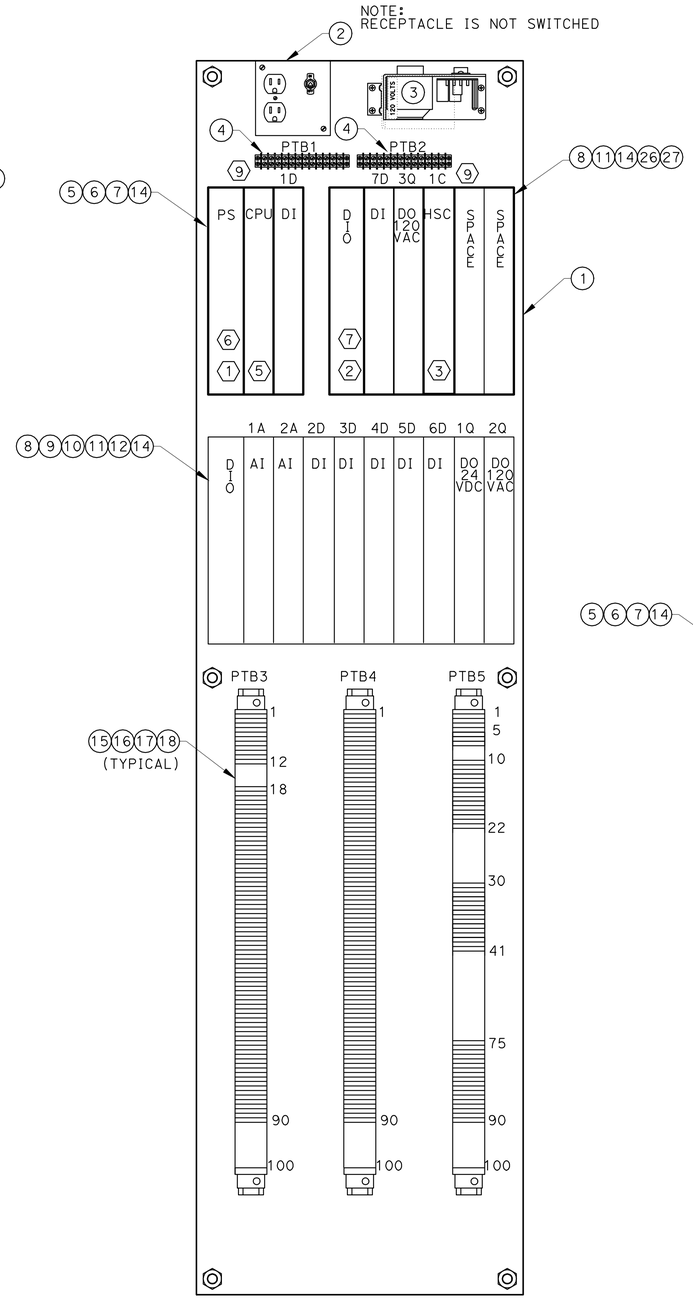

* EXISTING PANEL

PLC No. 1
(WEST PORTAL BUILDING)

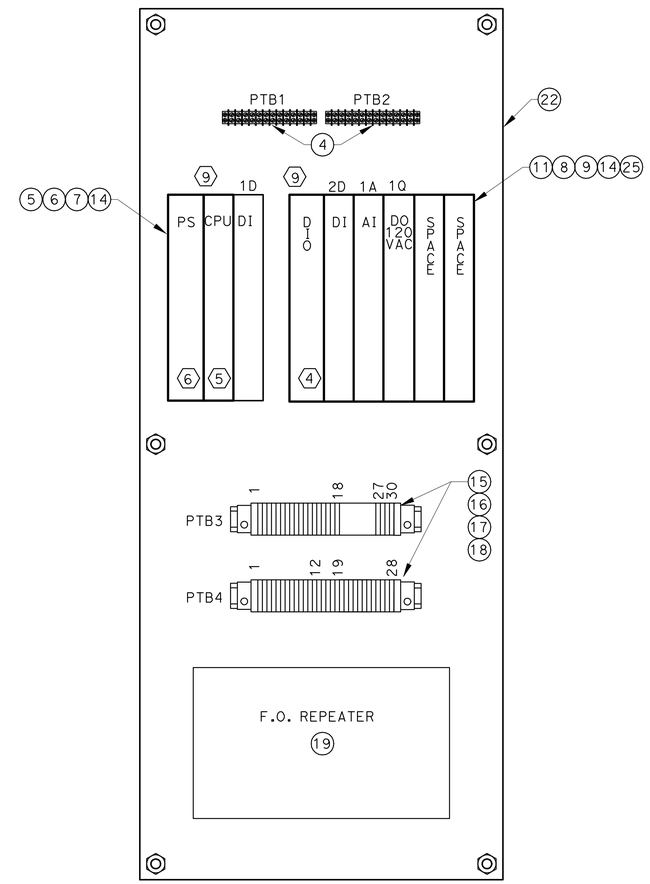

* EXISTING PANEL

PLC No. 2
(EAST PORTAL BUILDING)

BILL OF MATERIAL

⟨8⟩	ITEM	QTY	DESCRIPTION	MFG./PART No.
E	1	2	ALUMINUM PANEL, 18" x 68" x 1/8"	HSQ,
E	2	1	POWER RECEPTACLE/SWITCH HOUSING	HSQ,
E	3	1	24VDC POWER SUPPLY, 2.4A	POWER ONE, HC24-2.4A
E	4	4	TERMINAL BLOCK, 12 POSITION	CURTIS, 1212W
E	5	1	BACKPLANE, 3 SLOT	MODICON, 140XBP00300
	5	1	BACKPLANE, 3 SLOT	
	6	2	POWER SUPPLY, 115VAC	
	7	2	QUANTUM CPU CARD	
	8	1	DISTRIBUTED I/O DROP ADAPTER & P.S.	
E	8	2	DISTRIBUTED I/O DROP ADAPTER & P.S.	MODICON, 140CRA21110
E	9	3	ANALOG INPUT MODULE	MODICON, 140AV103000
E	10	1	DISCRETE DC OUTPUT MODULE	MODICON, 140DD084300
E	11	1	DISCRETE AC OUTPUT MODULE	MODICON, 140DAC84210
E	12	1	BACKPLANE, 10 SLOT	MODICON, 140XBP001000
E	14	7	DISCRETE DC INPUT MODULE	MODICON, 140DDI35300
E	15	A/R	DIN RAIL	ENTRELEC, PR122
E	16	14	END ANCHOR	ENTRELEC, BAM
E	17	A/R	TERMINAL BLOCK	ENTRELEC, M4/6:ADO
E	18	7	END BARRIER	ENTRELEC, FEMADI
E	19	2	FIBER OPTIC REPEATER	MODICON, 490NRP25400
E	20	1	FIBER OPTIC PATCH PANEL, 24 FIBER	SIECOR, WIC024
E	21	4	CONNECTOR PANEL	SIECOR, WIC-CPI-25
E	22	1	ALUMINUM PANEL, 20" x 48" x 1/8"	HSQ,
E	25	1	BACKPLANE, 6 SLOT	MODICON, 140XBP00600
	26	1	BACKPLANE, 6 SLOT	
	27	1	HIGH SPEED COUNTER MODULE	

NOTES:

⟨1⟩ REPLACE 6-SLOT WITH 3-SLOT BACKPLANE

⟨2⟩ INSTALL NEW 6-SLOT BACKPLANE

⟨3⟩ INSTALL NEW HIGH SPEED COUNTER MODULE

⟨4⟩ REPLACE 4-SLOT WITH 6-SLOT BACKPLANE

⟨5⟩ REPLACE EXISTING CPU WITH NEW CPU LATEST MODEL

⟨6⟩ REPLACE EXISTING POWER SUPPLY WITH THE LATEST MODEL AND SUFFICIENT AMPERAGE

⟨7⟩ INSTALL NEW DISTRIBUTED I/O DROP ADAPTER & P.S.

⟨8⟩ "E" DENOTES EXISTING EQUIPMENT.

⟨9⟩ BOLD FACE OR HIGHLIGHTED INDICATES NEW EQUIPMENT.

	BY	CHECKED
DESIGN	G.RUSSELL	D.LE
DETAILS	D.LE	D.LE
QUANTITIES	D.LE	S.LO

PREPARED FOR THE STATE OF CALIFORNIA DEPARTMENT OF TRANSPORTATION

DIVISION OF ENGINEERING SERVICES
ELECTRICAL-MECHANICAL-WATER AND WASTEWATER DESIGN

BRIDGE NO. VARIES
POST MILE VARIES

SCADA SYSTEM UPGRADE: POSEY/WEBSTER STREET TUBES AND CALDECOTT TUNNEL

CALDECOTT BORE 3 PLCs

SHEET **EE4-1**

DOES SD Imperial Rev.1/07

ORIGINAL SCALE IN INCHES FOR REDUCED PLANS 0 1 2 3

CU 04220
EA 1A4604

DISREGARD PRINTS BEARING EARLIER REVISION DATES →

REVISION DATES (PRELIMINARY STAGE ONLY)

SHEET 39 OF 96

26-NOV-2008 12:52
EE4-01.dgn

DIST.	COUNTY	ROUTE	POST MILES TOTAL PROJECT	SHEET NO.	TOTAL SHEETS
04	Ala,CC	24,260	R5.9/R6.2, R0.0/R0.5,R0.9/R1.9	44	100

REGISTERED ELECTRICAL ENGINEER — 02-26-08 DATE

REGISTERED PROFESSIONAL ENGINEER ROBERT J. FEE No. E-13014 Exp. 6/30/09 ELEC STATE OF CALIFORNIA

11-24-08
PLANS APPROVAL DATE

The State of California or its officers or agents shall not be responsible for the accuracy or completeness of electronic copies of this plan sheet.

STV Incorporated
9130 Anaheim Place, Suite 210
Rancho Cucamonga, CA 91730

JDL Design, LLC
18582 Beach Blvd, Suite 229
Huntington Beach, CA 92647

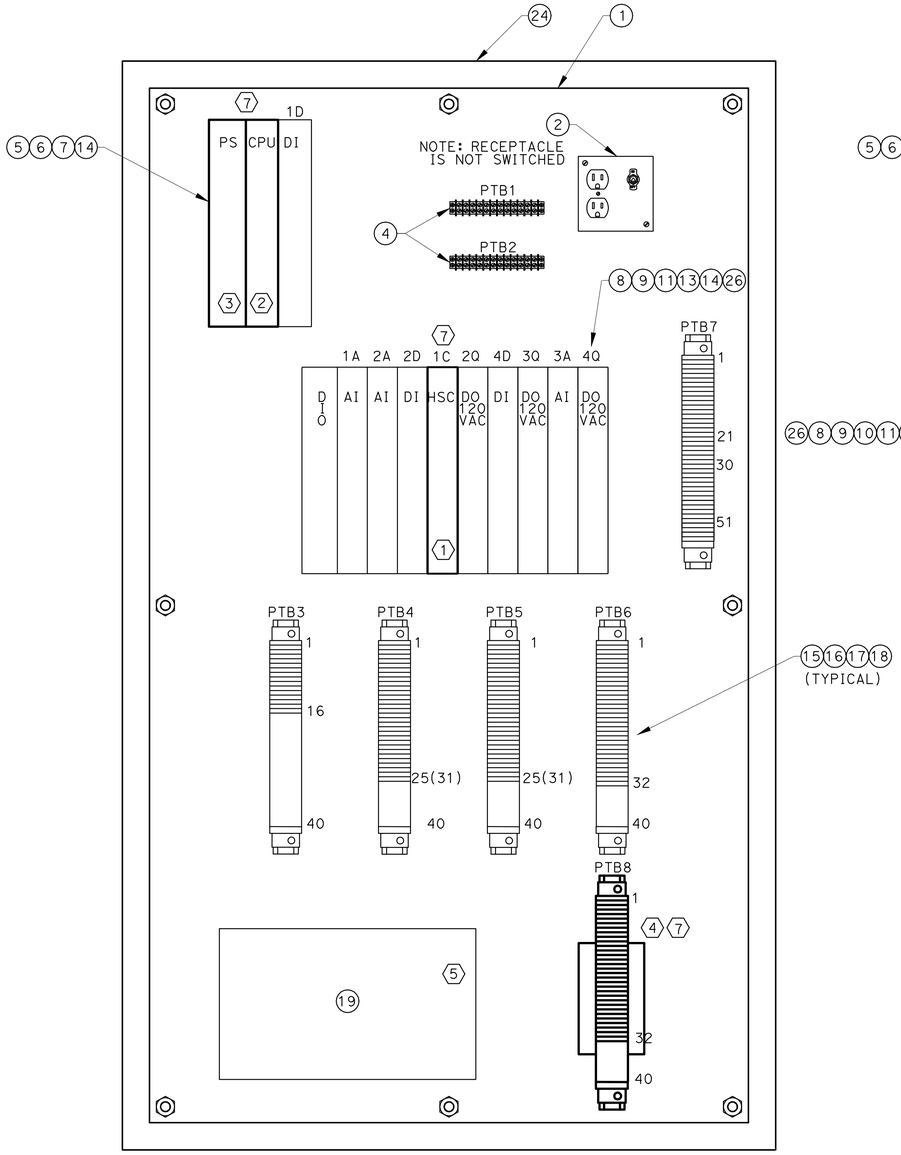

* EXISTING PANEL

PLC No. 3 (4)

CALDECOTT BORE 1&2

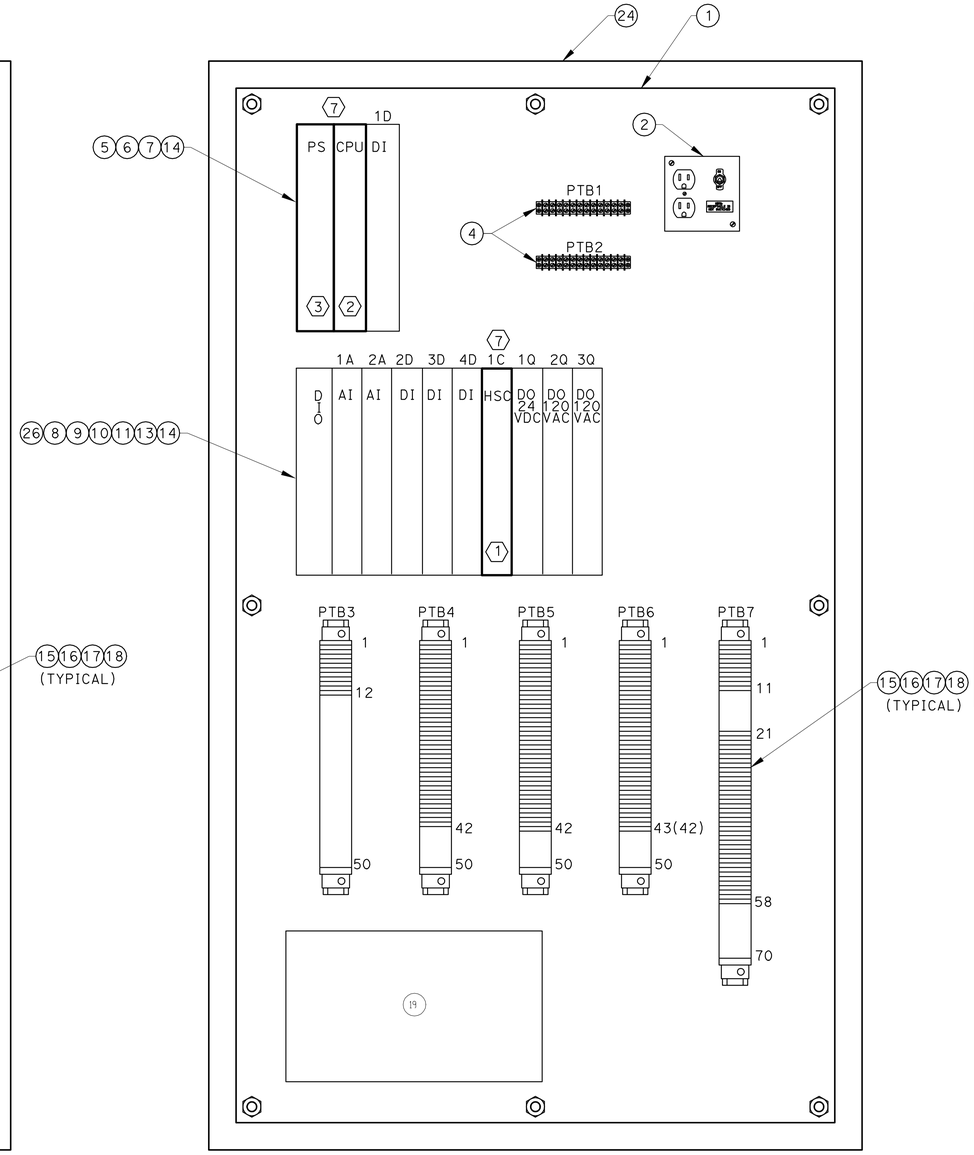

* EXISTING PANEL

PLC No. 7 (8)

WEBSTER ST. TUBE

BILL OF MATERIAL

⟨6⟩	ITEM	QTY	DESCRIPTION	MFG./PART No.
E	1	4	ALUMINUM PANEL, 33" x 57" x 1/8"	HSQ,
E	2	4	POWER RECEPTACLE/SWITCH HOUSING	HSQ,
E	4	8	TERMINAL BLOCK, 12 POSITION	CURTIS, 1212W
E	5	2	BACKPLANE, 3 SLOT	MODICON, 140XBP00300
	6	4	POWER SUPPLY, 115VAC	
	7	4	QUANTUM CPU CARD	
E	8	4	DISTRIBUTED I/O DROP ADAPTER & P.S.	MODICON, 140CRA21110
E	9	5	ANALOG INPUT MODULE	MODICON, 140AVI03000
E	10	2	DISCRETE DC OUTPUT MODULE	MODICON, 140DDO84300
E	11	8	DISCRETE AC OUTPUT MODULE	MODICON, 140DAC84210
E	12	0	BACKPLANE, 6 SLOT	MODICON, 140XBP00600
E	13	2	BACKPLANE, 10 SLOT	MODICON, 140XBP01000
E	14	14	DISCRETE DC INPUT MODULE	MODICON, 140DDI35300
E	15	A/R	DIN RAIL	ENTRELEC, PR122
E	16	22	END ANCHOR	ENTRELEC, BAM
E	17	A/R	TERMINAL BLOCK	ENTRELEC, M4/6:ADO
E	18	11	END BARRIER	ENTRELEC, FEMADI
E	19	4	FIBER OPTIC REPEATER	MODICON, 490NRP25400
E	24	4	ENCLOSURE, 36" x 60" x 12"	HOFFMAN,
	26	4	HIGH SPEED COUNTER MODULE	

NOTES:

⟨1⟩ INSTALL NEW HIGH SPEED COUNTER MODULE.

⟨2⟩ REPLACE EXISTING CPU WITH NEW CPU LATEST MODEL.

⟨3⟩ REPLACE EXISTING POWER SUPPLY WITH THE LATEST MODEL AND SUFFICIENT AMPERAGE.

⟨4⟩ REMOVE OLD HSQ RPM COUNTER, INSTALL NEW TERMINAL BLOCKS, RAILS & ANCHORS.

⟨5⟩ RELOCATE TO SUPPORT INSTALLATION OF NEW PTB8.

⟨6⟩ "E" DENOTES EXISTING EQUIPMENT.

⟨7⟩ BOLD FACE OR HIGHLIGHTED INDICATES NEW EQUIPMENT.

	BY	CHECKED
DESIGN	G.RUSSELL	D.LE
DETAILS	D.LE	S.LO
QUANTITIES	D.LE	S.LO

PREPARED FOR THE STATE OF CALIFORNIA DEPARTMENT OF TRANSPORTATION

DIVISION OF ENGINEERING SERVICES ELECTRICAL-MECHANICAL-WATER AND WASTEWATER DESIGN

BRIDGE NO. VARIES
POST MILE VARIES

SCADA SYSTEM UPGRADE: POSEY/WEBSTER STREET TUBES AND CALDECOTT TUNNEL

PLCs NOs. 3, 4, 7 & 8 ARRANGEMENT

SHEET **EE4-2**

DOES SD Imperial Rev.1/07

ORIGINAL SCALE IN INCHES FOR REDUCED PLANS 0 1 2 3

CU 04220
EA 1A4604

DISREGARD PRINTS BEARING EARLIER REVISION DATES ⟶

REVISION DATES (PRELIMINARY STAGE ONLY)

SHEET 40 OF 96

26-NOV-2008 12:53

EE4-02.dgn

DIST.	COUNTY	ROUTE	POST MILES TOTAL PROJECT	SHEET NO.	TOTAL SHEETS
04	Ala,CC	24,260	R5.9/R6.2, R0.0/R0.5,R0.9/R1.9	45	100

REGISTERED ELECTRICAL ENGINEER — 02-26-08 DATE

REGISTERED PROFESSIONAL ENGINEER ROBERT J. FEE No. E-13014 Exp. 6/30/09 ELEC STATE OF CALIFORNIA

11-24-08
PLANS APPROVAL DATE

The State of California or its officers or agents shall not be responsible for the accuracy or completeness of electronic copies of this plan sheet.

STV Incorporated
9130 Anaheim Place, Suite 210
Rancho Cucamonga, CA 91730

JDL Design, LLC
18582 Beach Blvd, Suite 229
Huntington Beach, CA 92647

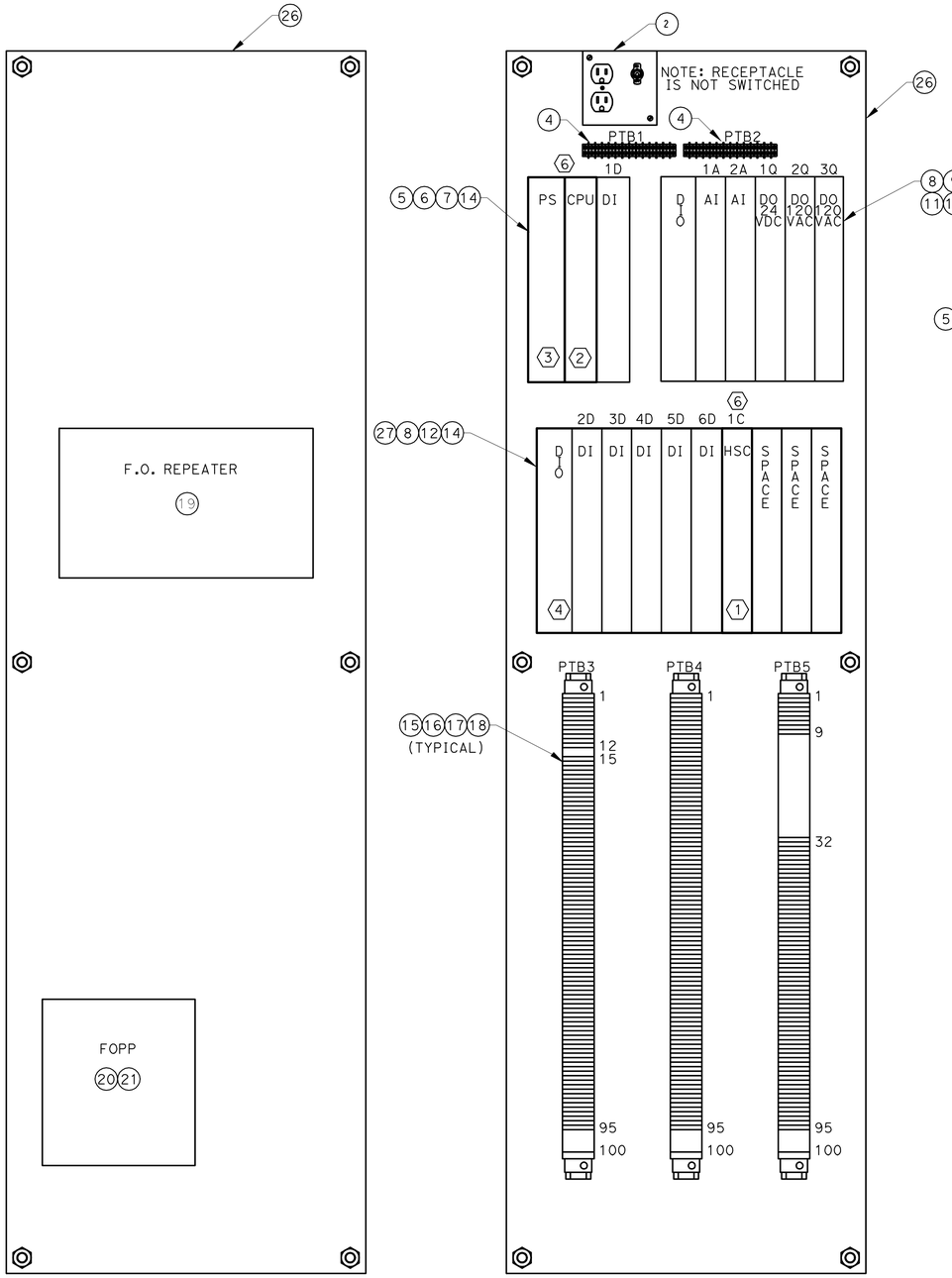

* EXISTING PANEL

PLC 5 COMMUNICATION INTERFACE PANEL **PLC No. 5**

OAKLAND PORTAL BLDG.

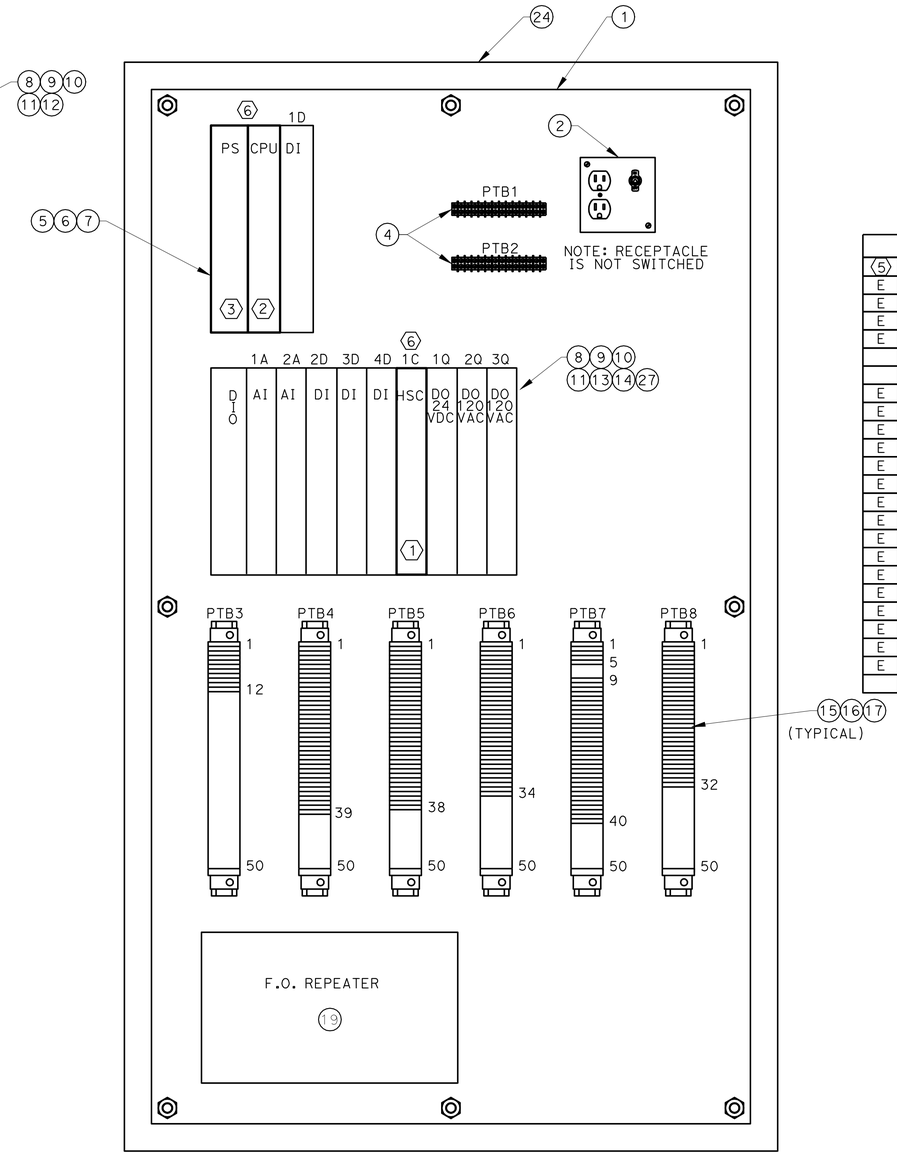

* EXISTING PANEL

PLC No. 6

ALAMEDA PORTAL BLDG.

BILL OF MATERIAL				
⟨5⟩	ITEM	QTY	DESCRIPTION	MFG./PART NO.
E	1	1	ALUMINUM PANEL, 33"x57"x1/8"	HSQ,
E	2	2	POWER RECEPTACLE/SWITCH HOUSING	HSQ,
E	4	4	TERMINAL BLOCK, 12 POSITION	CURTIS, 1212W
E	5	2	BACKPLANE, 3 SLOT	MODICON, 140XBP00300
	6	2	POWER SUPPLY, 115VAC	
	7	2	QUANTUM CPU CARD	
E	8	3	DISTRIBUTED I/O DROP ADAPTER & P.S.	MODICON, 140CRA21110
E	9	4	ANALOG INPUT MODULE	MODICON, 140AV103000
E	10	2	DISCRETE DC OUTPUT MODULE	MODICON, 140DDO84300
E	11	4	DISCRETE AC OUTPUT MODULE	MODICON, 140DAC84210
E	12	1	BACKPLANE, 6 SLOT	MODICON, 140XBP00600
E	13	2	BACKPLANE, 10 SLOT	MODICON, 140XBP01000
E	14	10	DISCRETE DC INPUT MODULE	MODICON, 140DDI135300
E	15	A/R	DIN RAIL	ENTRELEC, PR122
E	16	24	END ANCHOR	ENTRELEC, BAM
E	17	A/R	TERMINAL BLOCK	ENTRELEC, M4/6:ADO
E	18	12	END BARRIER	ENTRELEC, FEMADI
E	19	2	FIBER OPTIC REPEATER	MODICON, 490NRP25400
E	20	1	FIBER OPTIC PATCH PANEL, 24 FIBER	SIECOR, WIC024
E	21	4	CONNECTOR PANEL	SIECOR, WIC-CPI-25
E	24	1	ENCLOSURE 36"x60x12"	HOFFMAN
E	26	2	ALUMINUM PANEL 20"x68"x1/8"	HSQ
	27	2	HIGH SPEED COUNTER MODULE	

NOTES:

⟨1⟩ INSTALL NEW HIGH SPEED COUNTER MODULE.

⟨2⟩ REPLACE EXISTING CPU WITH NEW CPU LATEST MODEL.

⟨3⟩ REPLACE EXISTING POWER SUPPLY WITH THE LATEST MODEL AND SUFFICIENT AMPERAGE.

⟨4⟩ REPLACE 6-SLOT WITH 10-SLOT BACKPLANE.

⟨5⟩ "E" DENOTES EXISTING EQUIPMENT.

⟨6⟩ BOLD FACE OR HIGHLIGHTED INDICATES NEW EQUIPMENT.

	BY	CHECKED
DESIGN	G.RUSSELL	D.LE
DETAILS	D.LE	S.LO
QUANTITIES	D.LE	S.LO

PREPARED FOR THE STATE OF CALIFORNIA DEPARTMENT OF TRANSPORTATION

DIVISION OF ENGINEERING SERVICES ELECTRICAL-MECHANICAL-WATER AND WASTEWATER DESIGN

BRIDGE NO. VARIES
POST MILE VARIES

SCADA SYSTEM UPGRADE: POSEY/WEBSTER STREET TUBES AND CALDECOTT TUNNEL

POSEY TUBE PLCs

SHEET **EE4-3**

DOES SD Imperial Rev.1/07

ORIGINAL SCALE IN INCHES FOR REDUCED PLANS 0 1 2 3

CU 04220
EA 1A4604

DISREGARD PRINTS BEARING EARLIER REVISION DATES →

REVISION DATES (PRELIMINARY STAGE ONLY)

SHEET 40 OF 95

26-NOV-2008 12:53
EE4-3.dgn

DIST.	COUNTY	ROUTE	POST MILES TOTAL PROJECT	SHEET NO.	TOTAL SHEETS
04	Ala,CC	24,260	R5.9/R6.2, R0.0/R0.5,R0.9/R1.9	46	100

REGISTERED ELECTRICAL ENGINEER — 02-26-08 DATE

REGISTERED PROFESSIONAL ENGINEER ROBERT J. FEE No. E-13014 Exp. 6/30/09 ELEC STATE OF CALIFORNIA

11-24-08
PLANS APPROVAL DATE

The State of California or its officers or agents shall not be responsible for the accuracy or completeness of electronic copies of this plan sheet.

STV Incorporated
9130 Anaheim Place, Suite 210
Rancho Cucamonga, CA 91730

JDL Design, LLC
18582 Beach Blvd, Suite 229
Huntington Beach, CA 92647

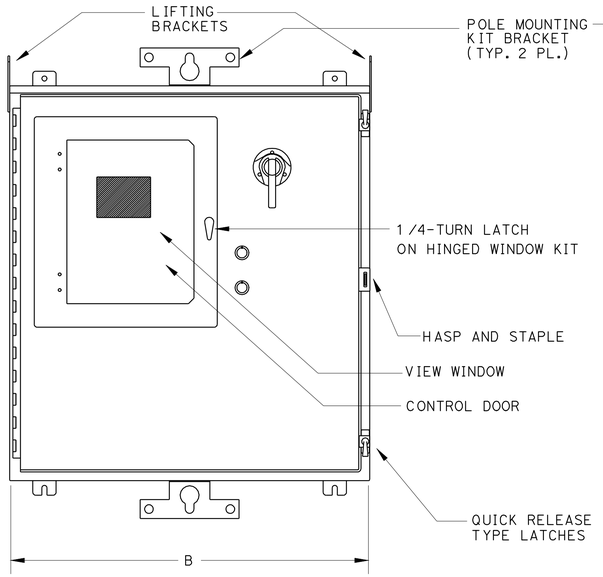

FRONT VIEW

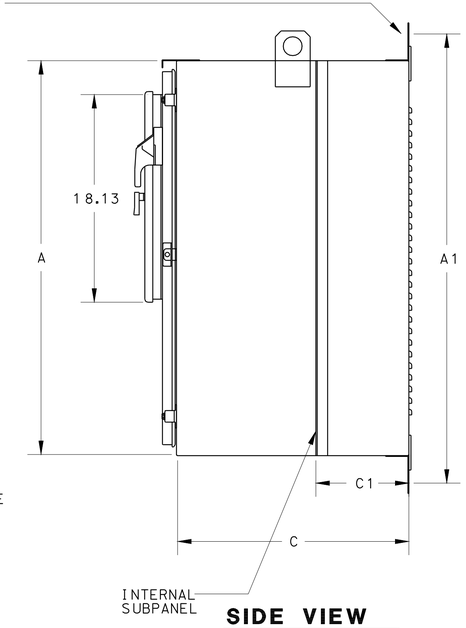

SIDE VIEW

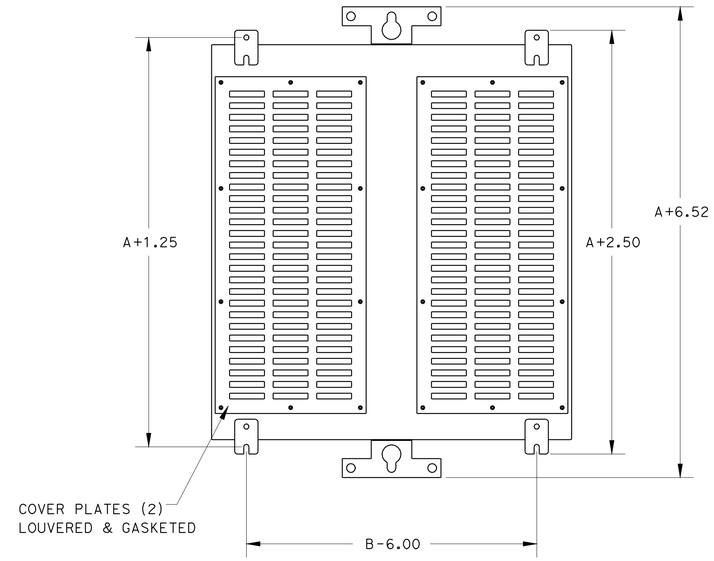

REAR VIEW

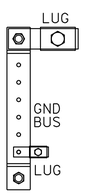

GND BUS/LUG DETAIL

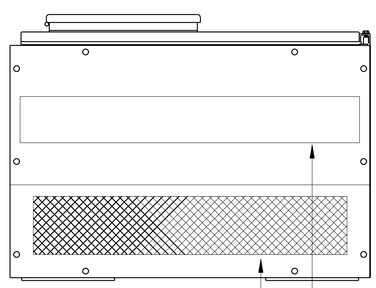

BOTTOM VIEW

CONDUIT ENTRY

EXPANDED METAL AREA

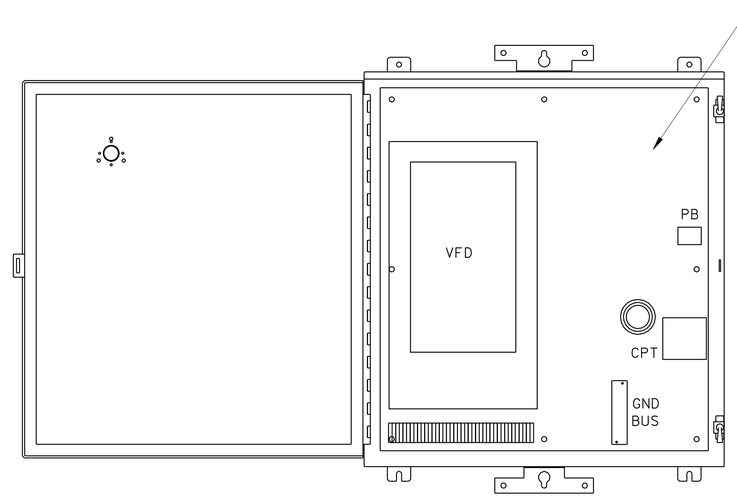

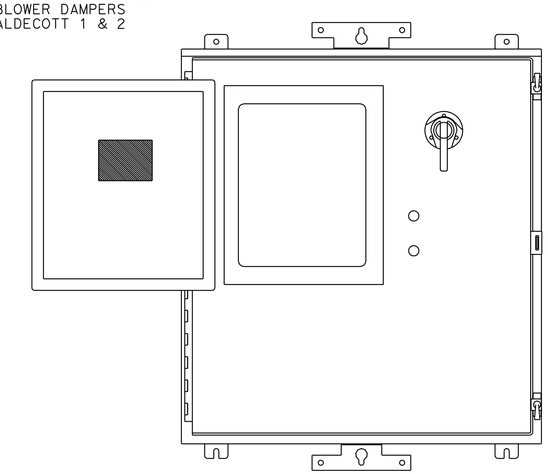

FRONT VIEW W/ ENCL DOOR OPEN

COMPONENT LAYOUT VIEW

DESCRIPTION OF ENCLOSURE	FOR 460V	DIMENSIONS (INCHES) A	B	C	A1	C1
TYPE 3R	50HP	46	34	22	50.56	9.5
	75HP	46	34	24	50.56	9.5
	100HP	46	34	24	50.56	9.5

	BY	CHECKED
DESIGN	G.RUSSELL	D.LE
DETAILS	D.LE	S.LO
QUANTITIES	D.LE	S.LO

PREPARED FOR THE STATE OF CALIFORNIA DEPARTMENT OF TRANSPORTATION

DIVISION OF ENGINEERING SERVICES
ELECTRICAL-MECHANICAL-WATER AND WASTEWATER DESIGN

BRIDGE NO. VARIES
POST MILE VARIES

SCADA SYSTEM UPGRADE: POSEY/WEBSTER STREET TUBES AND CALDECOTT TUNNEL

VFD CABINET LAYOUT

SHEET **EE4-4**

DOES SD Imperial Rev.1/07

ORIGINAL SCALE IN INCHES FOR REDUCED PLANS 0 1 2 3

CU 04220
EA 1A4604

DISREGARD PRINTS BEARING EARLIER REVISION DATES →

REVISION DATES (PRELIMINARY STAGE ONLY)

SHEET 41 OF 95

26-NOV-2008 12:53
EE4-4.dgn

DIST.	COUNTY	ROUTE	POST MILES TOTAL PROJECT	SHEET NO.	TOTAL SHEETS
04	Ala,CC	24,260	R5.9/R6.2, R0.0/R0.5,R0.9/R1.9	47	100

REGISTERED ELECTRICAL ENGINEER — 02-26-08 DATE

REGISTERED PROFESSIONAL ENGINEER ROBERT J. FEE No. E-13014 Exp. 6/30/09 ELEC STATE OF CALIFORNIA

11-24-08
PLANS APPROVAL DATE

The State of California or its officers or agents shall not be responsible for the accuracy or completeness of electronic copies of this plan sheet.

STV Incorporated
9130 Anaheim Place, Suite 210
Rancho Cucamonga, CA 91730

JDL Design, LLC
18582 Beach Blvd, Suite 229
Huntington Beach, CA 92647

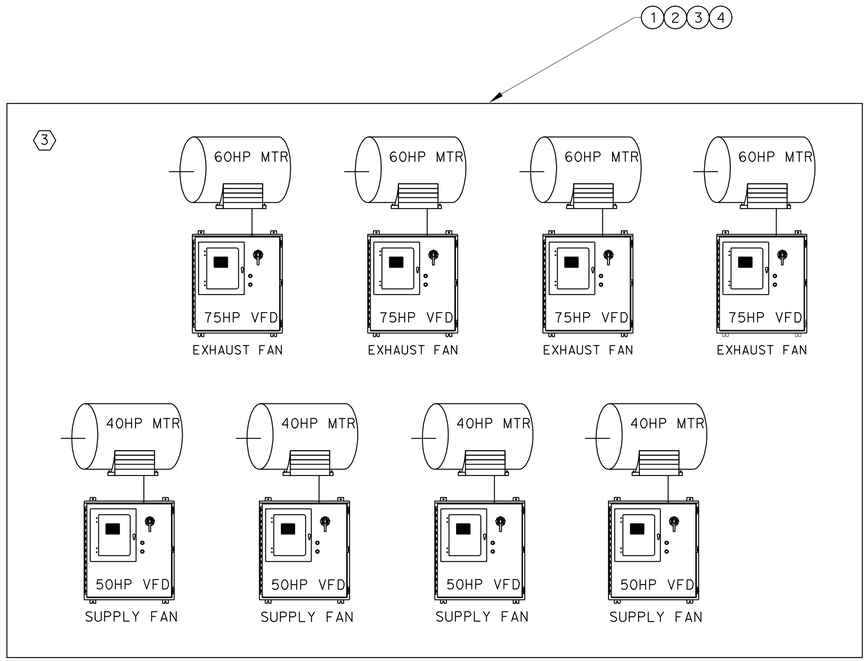

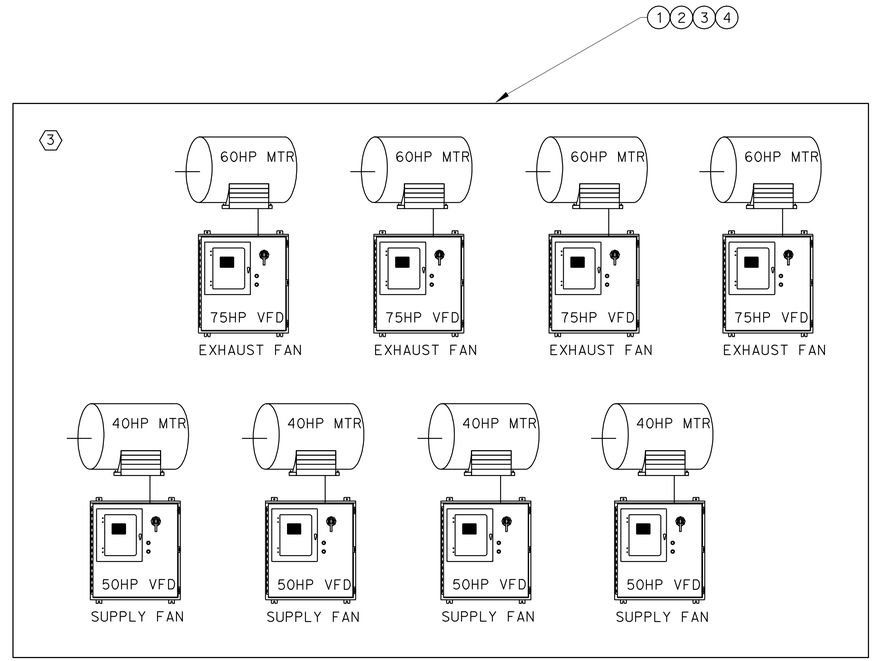

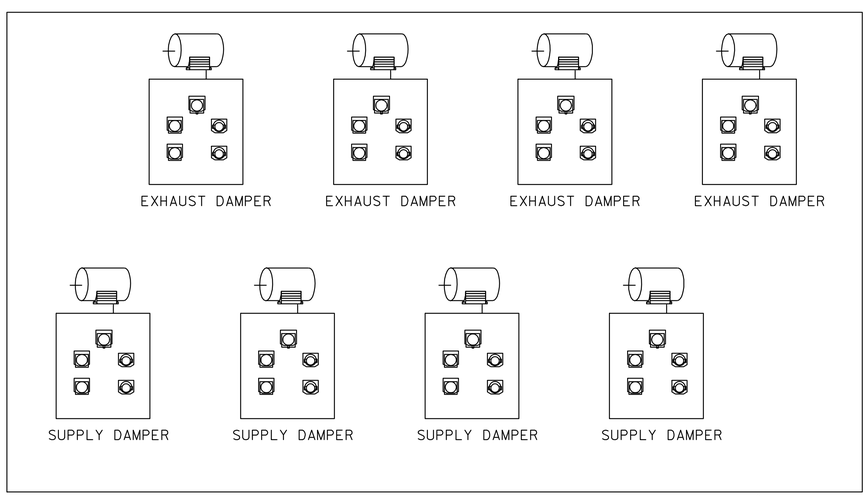

CALDECOTT BORE 1 & 2 WEST (@ PLC 3)

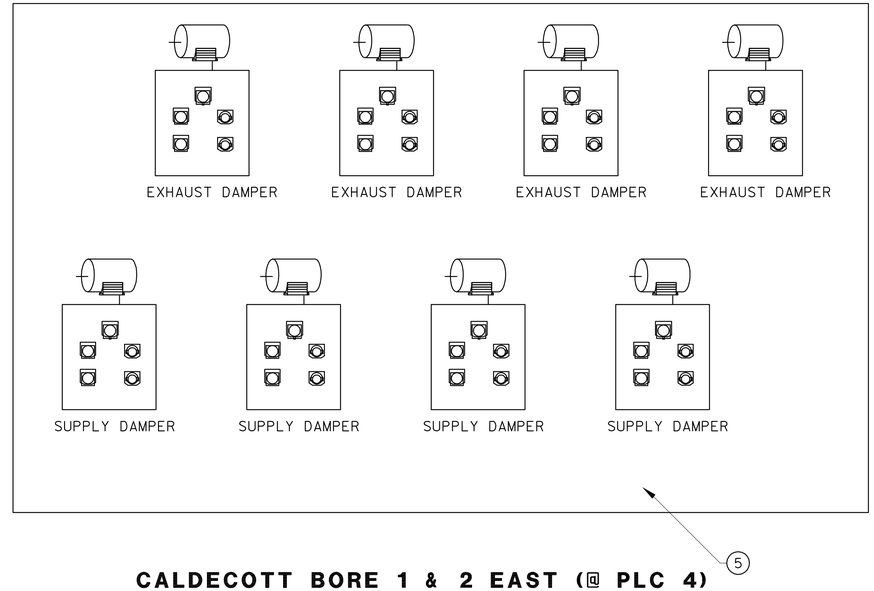

CALDECOTT BORE 1 & 2 EAST (@ PLC 4)

BILL OF MATERIALS

ITEM	QTY	DESCRIPTION	MFG./PART NO.
1	8	VARIABLE FREQUENCY DRIVE - 50HP	SEE NOTE 1
2	8	VARIABLE FREQUENCY DRIVE - 75HP	SEE NOTE 1
3	8	TEFC INVERTER DUTY MOTOR - 40HP	SEE NOTE 2
4	8	TEFC INVERTER DUTY MOTOR - 60HP	SEE NOTE 2
5	16	COMPLETE DAMPER CONTROL CABINET	SEE DWG. EE4-9 & 10

NOTES:

1. TOSHIBA AS-1 SERIES, ALLEN BRADLEY POWERFLEX 400, ABB ACS800 SERIES OR APPROVED EQUAL.
2. TOSHIBA TEFC PREMIUM EQPIII, TECO-WESTINGHOUSE MAX-E1 NEMA PREMIUM TEFC, RELIANCE V*S MASTER INVERTER DUTY AC MOTOR OR APPROVED EQUAL.
3. MOTOR RATING: 460VAC, 3-PHASE, 1800 RPM.

	BY	CHECKED
DESIGN	G.RUSSELL	D.LE
DETAILS	D.LE	S.LO
QUANTITIES	D.LE	S.LO

PREPARED FOR THE STATE OF CALIFORNIA DEPARTMENT OF TRANSPORTATION

DIVISION OF ENGINEERING SERVICES
ELECTRICAL-MECHANICAL-WATER AND WASTEWATER DESIGN

BRIDGE NO. VARIES
POST MILE VARIES

SCADA SYSTEM UPGRADE: POSEY/WEBSTER STREET TUBES AND CALDECOTT TUNNEL
VFD/DAMPER/MOTOR SYSTEM OVERVIEW-CALDECOTT BORES 1 & 2 EAST/WEST

SHEET **EE4-5**

DOES SD Imperial Rev.1/07

ORIGINAL SCALE IN INCHES FOR REDUCED PLANS 0 1 2 3

CU 04220
EA 1A4604

DISREGARD PRINTS BEARING EARLIER REVISION DATES →
REVISION DATES (PRELIMINARY STAGE ONLY)

SHEET 42 OF 95

26-NOV-2008 12:54
EE4-5.dgn

DIST.	COUNTY	ROUTE	POST MILES TOTAL PROJECT	SHEET NO.	TOTAL SHEETS
04	Ala,CC	24,260	R5.9/R6.2, R0.0/R0.5,R0.9/R1.9	48	100

REGISTERED ELECTRICAL ENGINEER — 02-26-08 DATE

REGISTERED PROFESSIONAL ENGINEER ROBERT J. FEE No. E-13014 Exp. 6/30/09 ELEC STATE OF CALIFORNIA

11-24-08
PLANS APPROVAL DATE

The State of California or its officers or agents shall not be responsible for the accuracy or completeness of electronic copies of this plan sheet.

STV Incorporated
9130 Anaheim Place, Suite 210
Rancho Cucamonga, CA 91730

JDL Design, LLC
18582 Beach Blvd, Suite 229
Huntington Beach, CA 92647

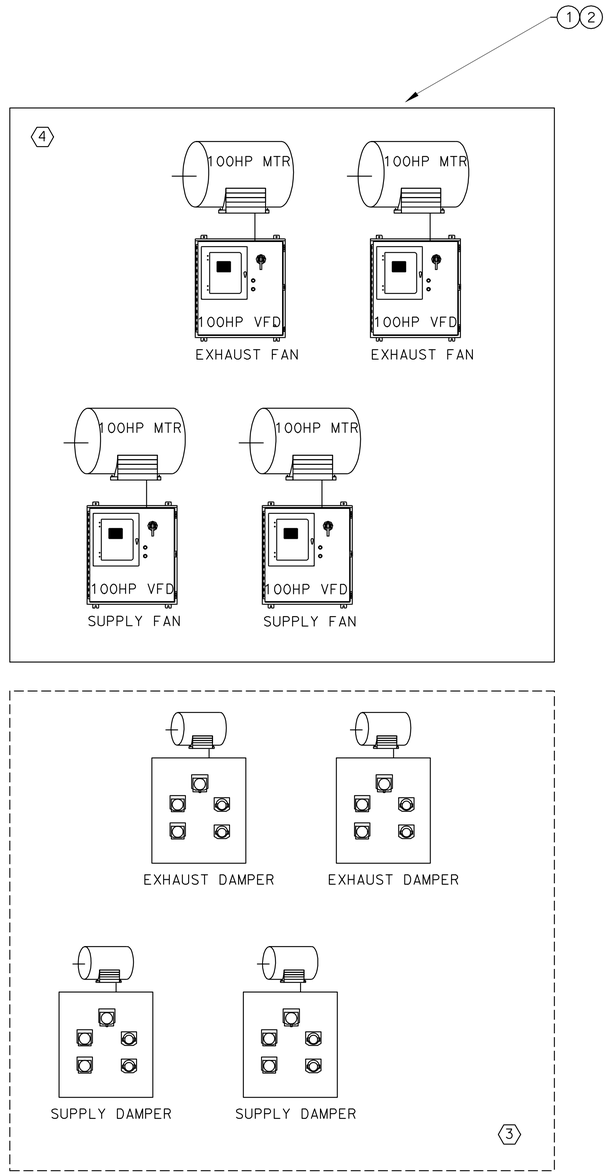

CALDECOTT BORE 3 WEST (@ PLC 1)

BILL OF MATERIALS

ITEM	QTY	DESCRIPTION	MFG./PART No.
1	4	VARIABLE FREQUENCY DRIVE - 100HP	SEE NOTE 1
2	4	TEFC INVERTER DUTY MOTOR - 100HP	SEE NOTE 2

NOTES:

1. TOSHIBA AS-1 SERIES, ALLEN BRADLEY POWERFLEX 400, ABB ACS800 SERIES OR APPROVED EQUAL.
2. TOSHIBA TEFC PREMIUM EQPIII, TECO-WESTINGHOUSE MAX-E1 NEMA PREMIUM TEFC, RELIANCE V*S MASTER INVERTER DUTY AC MOTOR, OR APPROVED EQUAL.
3. EXISTING DAMPERS/MOTORS/STARTERS.
4. MOTOR RATING: 460VAC, 3-PHASE, 1800 RPM.

	BY	CHECKED
DESIGN	G.RUSSELL	D.LE
DETAILS	D.LE	S.LO
QUANTITIES	D.LE	S.LO

PREPARED FOR THE STATE OF CALIFORNIA DEPARTMENT OF TRANSPORTATION

DIVISION OF ENGINEERING SERVICES
ELECTRICAL-MECHANICAL-WATER AND WASTEWATER DESIGN

BRIDGE NO. VARIES
POST MILE VARIES

SCADA SYSTEM UPGRADE: POSEY/WEBSTER STREET TUBES AND CALDECOTT TUNNEL
VFD/DAMPER/MOTOR SYSTEM OVERVI EW-CALDECOTT BORE 3 WEST

SHEET **EE4-6**

DOES SD Imperial Rev.1/07

ORIGINAL SCALE IN INCHES FOR REDUCED PLANS 0 1 2 3

CU 04220
EA 1A4604

DISREGARD PRINTS BEARING EARLIER REVISION DATES →
REVISION DATES (PRELIMINARY STAGE ONLY)

SHEET 43 OF 95

26-NOV-2008 12:54
EE4-6.dgn

DIST.	COUNTY	ROUTE	POST MILES TOTAL PROJECT	SHEET NO.	TOTAL SHEETS
04	Ala,CC	24,260	R5.9/R6.2, R0.0/R0.5,R0.9/R1.9	49	100

REGISTERED ELECTRICAL ENGINEER — 02-26-08 DATE

REGISTERED PROFESSIONAL ENGINEER — ROBERT J. FEE — No. E-13014 — Exp. 6/30/09 — ELEC — STATE OF CALIFORNIA

11-24-08
PLANS APPROVAL DATE

The State of California or its officers or agents shall not be responsible for the accuracy or completeness of electronic copies of this plan sheet.

STV Incorporated
9130 Anaheim Place, Suite 210
Rancho Cucamonga, CA 91730

JDL Design, LLC
18582 Beach Blvd, Suite 229
Huntington Beach, CA 92647

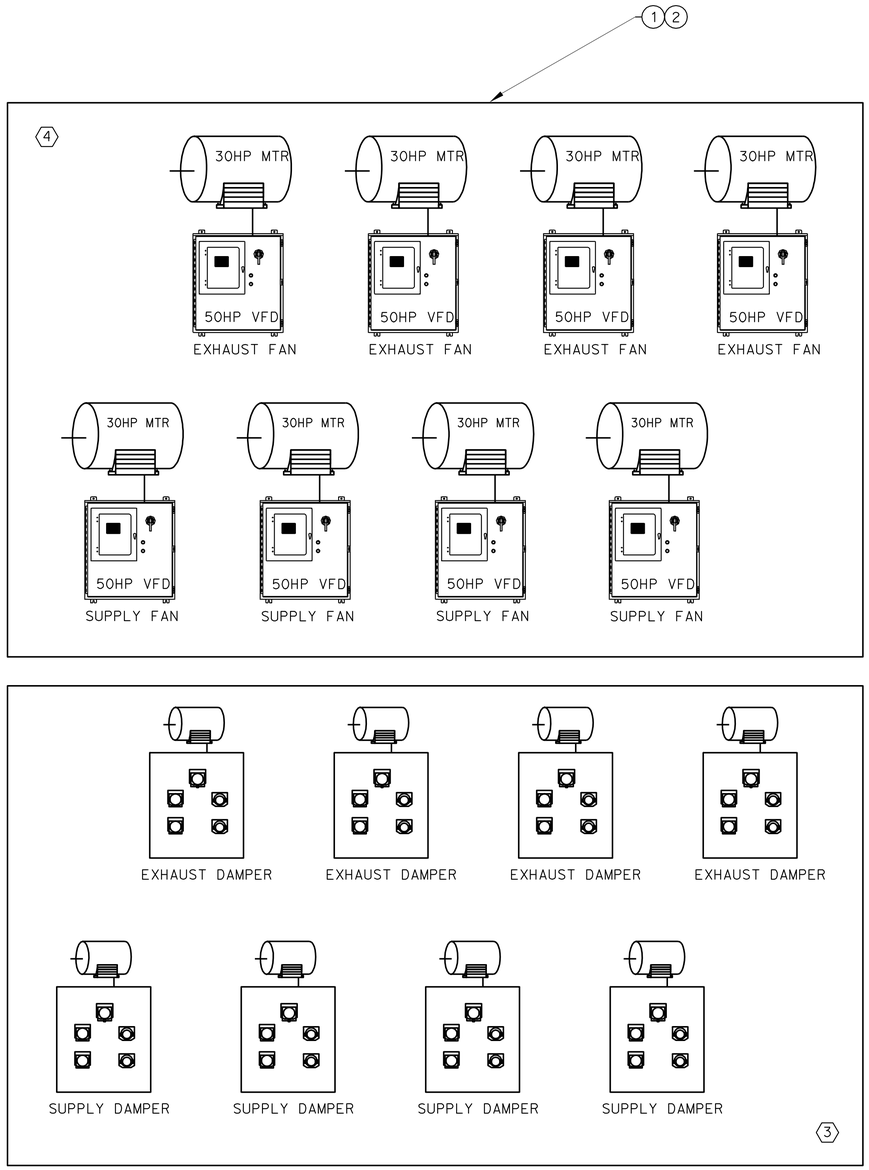

WEBSTER TUBE OAKLAND (@ PLC 7)

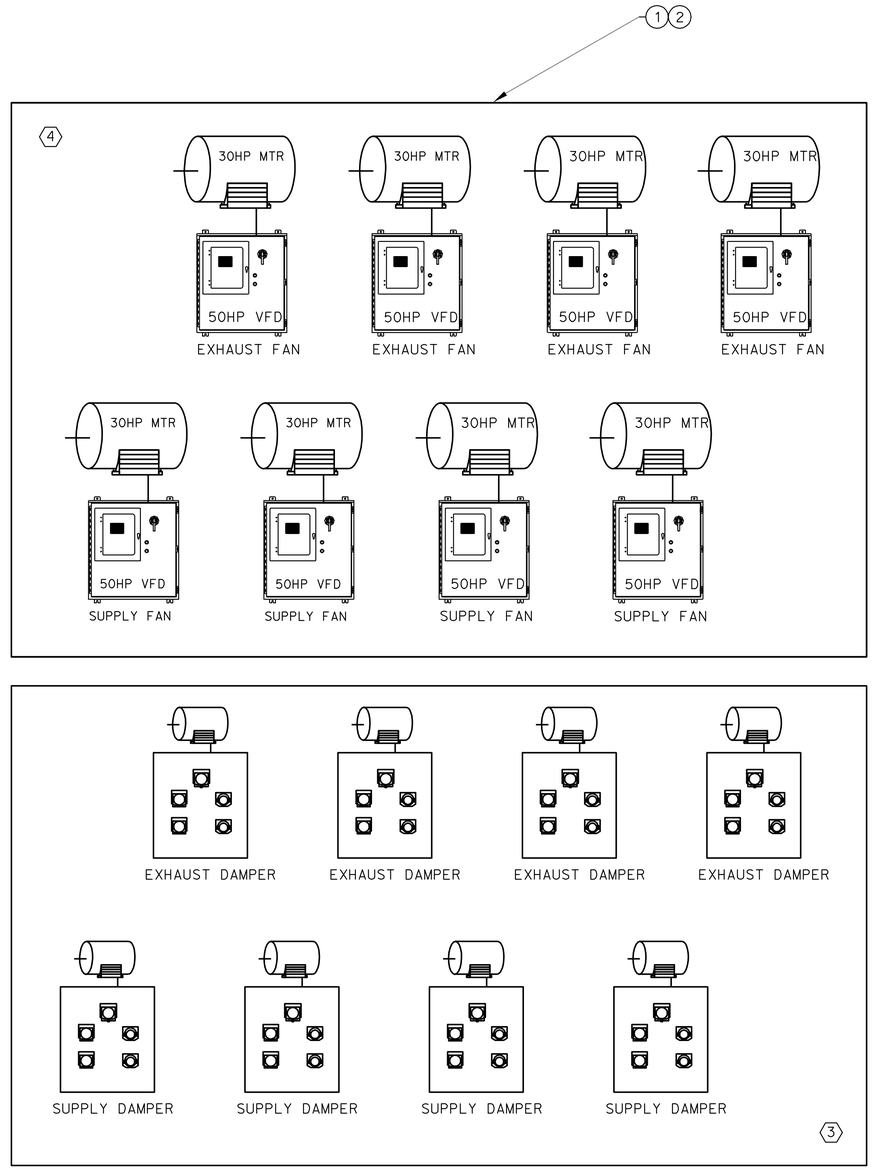

WEBSTER TUBE ALAMEDA (@ PLC 8)

BILL OF MATERIALS

ITEM	QTY	DESCRIPTION	MFG./PART No.
1	16	VARIABLE FREQUENCY DRIVE - 50HP	SEE NOTE 1
2	16	TEFC INVERTER DUTY MOTOR - 30HP	SEE NOTE 2

NOTES:

1. TOSHIBA AS-1 SERIES, ALLEN BRADLEY POWERFLEX 400, ABB ACS800 SERIES OR APPROVED EQUAL.
2. TOSHIBA TEFC PREMIUM EQPIII, TECO-WESTINGHOUSE MAX-E1 NEMA PREMIUM TEFC, RELIANCE V*S MASTER INVERTER DUTY AC MOTOR, OR APPROVED EQUAL.
3. EXISTING DAMPERS/MOTORS/STARTERS.
4. MOTOR RATING: 460VAC, 3-PHASE, 1800 RPM.

	BY	CHECKED
DESIGN	G.RUSSELL	D.LE
DETAILS	D.LE	S.LO
QUANTITIES	D.LE	S.LO

PREPARED FOR THE STATE OF CALIFORNIA DEPARTMENT OF TRANSPORTATION

DIVISION OF ENGINEERING SERVICES
ELECTRICAL-MECHANICAL-WATER AND WASTEWATER DESIGN

BRIDGE NO. VARIES
POST MILE VARIES

SCADA SYSTEM UPGRADE: POSEY/WEBSTER STREET TUBES AND CALDECOTT TUNNEL
VFD/DAMPER/MOTOR SYSTEM OVERVIEW -WEBSTER STREET TUBE OAKLAND/ALAMEDA

SHEET **EE4-7**

DOES SD Imperial Rev.1/07

ORIGINAL SCALE IN INCHES FOR REDUCED PLANS 0 1 2 3

CU 04220
EA 1A4604

DISREGARD PRINTS BEARING EARLIER REVISION DATES →
REVISION DATES (PRELIMINARY STAGE ONLY)

SHEET 44 OF 95

26-NOV-2008 12:55
EE4-7.dgn

DIST.	COUNTY	ROUTE	POST MILES TOTAL PROJECT	SHEET NO.	TOTAL SHEETS
04	Ala,CC	24,260	R5.9/R6.2, R0.0/R0.5,R0.9/R1.9	50	100

REGISTERED ELECTRICAL ENGINEER — 02-26-08 DATE

REGISTERED PROFESSIONAL ENGINEER — ROBERT J. FEE — No. E-13014 — Exp. 6/30/09 — ELEC — STATE OF CALIFORNIA

11-24-08
PLANS APPROVAL DATE

The State of California or its officers or agents shall not be responsible for the accuracy or completeness of electronic copies of this plan sheet.

STV Incorporated
9130 Anaheim Place, Suite 210
Rancho Cucamonga, CA 91730

JDL Design, LLC
18582 Beach Blvd, Suite 229
Huntington Beach, CA 92647

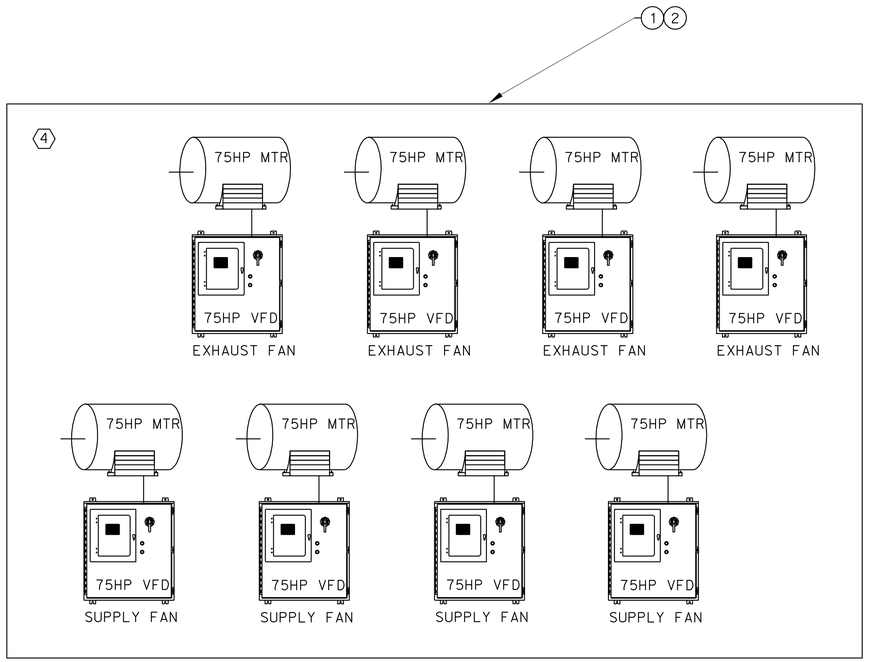

POSEY TUBE OAKLAND (@ PLC 5)

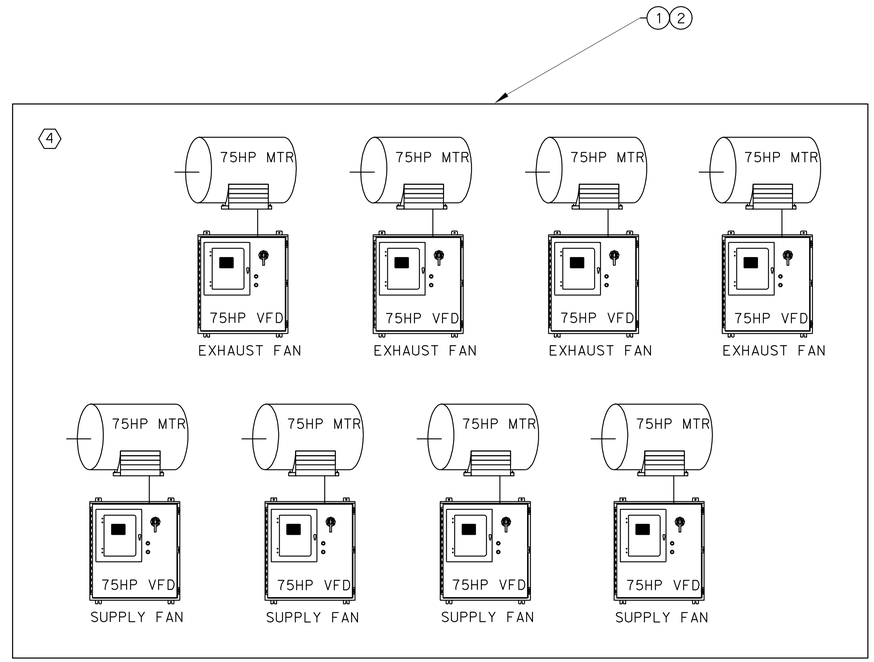

POSEY TUBE ALAMEDA (@ PLC 6)

BILL OF MATERIALS			
ITEM	QTY	DESCRIPTION	MFG./PART No.
1	16	VARIABLE FREQUENCY DRIVE - 75HP	SEE NOTE 1
2	16	TEFC INVERTER DUTY MOTOR - 75HP	SEE NOTE 2

NOTES:

1. TOSHIBA AS-1 SERIES, ALLEN BRADLEY POWERFLEX 400, ABB ACS800 SERIES OR APPROVED EQUAL.
2. TOSHIBA TEFC PREMIUM EQPIII, TECO-WESTINGHOUSE MAX-E1 NEMA PREMIUM TEFC, RELIANCE V*S MASTER INVERTER DUTY AC MOTOR, OR APPROVED EQUAL.
3. EXISTING DAMPERS/MOTORS/STARTERS.
4. MOTOR RATING: 460VAC, 3-PHASE, 1800 RPM.

	BY	CHECKED
DESIGN	G. RUSSELL	D. LE
DETAILS	D. LE	S. LO
QUANTITIES	D. LE	S. LO

PREPARED FOR THE STATE OF CALIFORNIA DEPARTMENT OF TRANSPORTATION

DIVISION OF ENGINEERING SERVICES
ELECTRICAL-MECHANICAL-WATER AND WASTEWATER DESIGN

BRIDGE NO. VARIES
POST MILE VARIES

SCADA SYSTEM UPGRADE: POSEY/WEBSTER STREET TUBES AND CALDECOTT TUNNEL
VFD/DAMPER/MOTOR SYSTEM OVERVIEW
-POSEY TUBE OAKLAND/ALAMEDA

SHEET **EE4-8**

DOES SD Imperial Rev. 1/07

ORIGINAL SCALE IN INCHES FOR REDUCED PLANS 0 1 2 3

CU 04220
EA 1A4604

DISREGARD PRINTS BEARING EARLIER REVISION DATES →
REVISION DATES (PRELIMINARY STAGE ONLY)

SHEET 45 OF 95

26-NOV-2008 12:55
EE4-8.dgn

DIST.	COUNTY	ROUTE	POST MILES TOTAL PROJECT	SHEET NO.	TOTAL SHEETS
04	Ala,CC	24,260	R5.9/R6.2, R0.0/R0.5,R0.9/R1.9	51	100

REGISTERED ELECTRICAL ENGINEER — 02-26-08 DATE

REGISTERED PROFESSIONAL ENGINEER ROBERT J. FEE No. E-13014 Exp. 6/30/09 ELEC STATE OF CALIFORNIA

11-24-08
PLANS APPROVAL DATE

The State of California or its officers or agents shall not be responsible for the accuracy or completeness of electronic copies of this plan sheet.

To get to the Caltrans web site go to http://www.dot.ca.gov

STV Incorporated
9130 Anaheim Place, Suite 210
Rancho Cucamonga, CA 91730

JDL Design, LLC
18582 Beach Blvd, Suite 229
Huntington Beach, CA 92647

BILL OF MATERIALS

ITEM	QTY	DESCRIPTION
1	1	ENCLOSURE, 16" x 20"
2	1	BACKPANEL, 13" x 17"
3	1	NEMA SIZE 0 REVERSING STARTER
4	A/R	END ANCHOR
5	A/R	TERMINAL BLOCK
6	A/R	END BARRIER
7	A/R	MOUNTING RAIL
8	3	2 POSITION SELECTOR SWITCH
9	2	PUSHBUTTON - GREEN (RED)
10	4	PILOT LIGHTS - LED, RED (GREEN)
11	9	LEGEND PLATES
12	1	ENCLOSURE, 20" x 22"
13	1	BACKPANEL, 17" x 17"
14	1	CIRCUIT BREAKER OPERATING MECHANISM
15	1	CIRCUIT BREAKER, 15A-3P
16	1	DOOR INTERLOCK
17	1	NEMA SIZE 0 NON-REVERSING STARTER

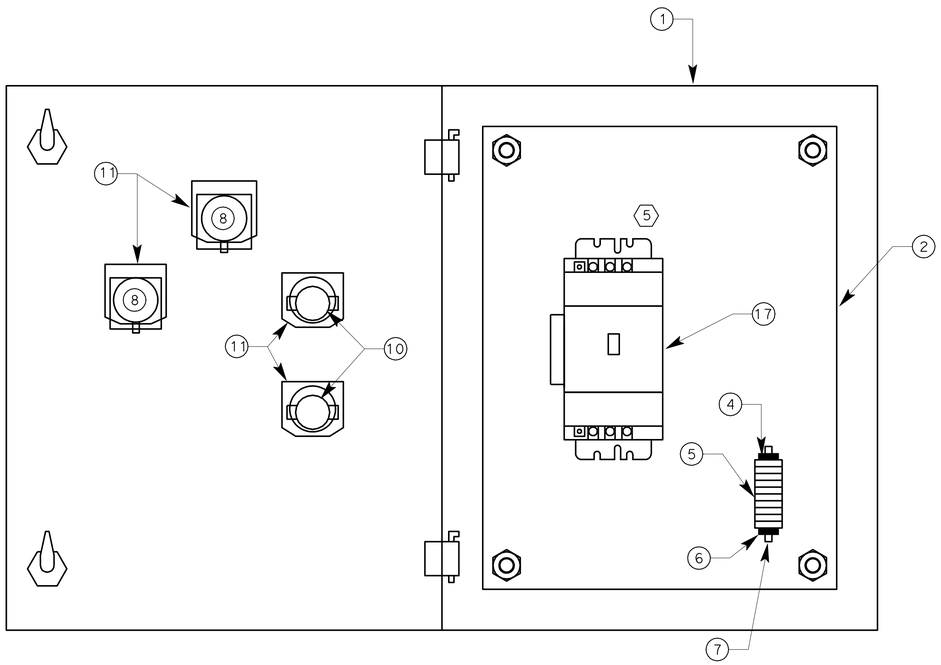

CALDECOTT BORE 1 & 2
EXHAUSTER DAMPER COMBINATION STARTER ARRANGEMENT
(2)

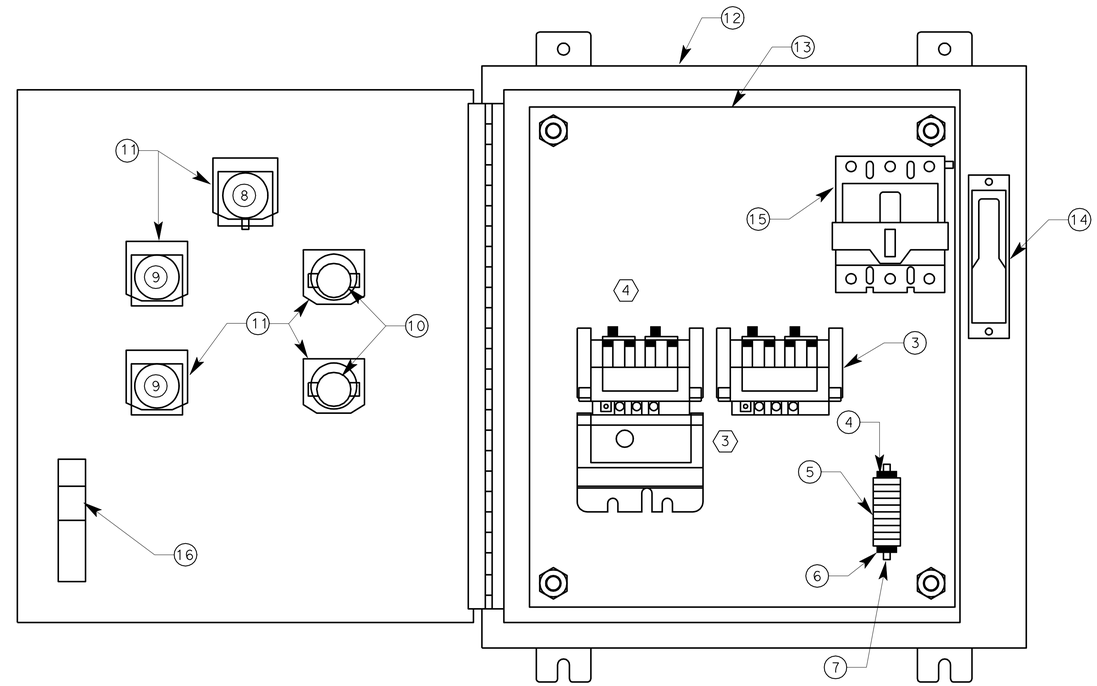

CALDECOTT BORE 1 & 2
BLOWER DAMPER COMBINATION STARTER ARRANGEMENT
(1)

NOTES:

(1) FURNISH 8 NEW BLOWER DAMPER STARTER CABINETS FOR CALDECOTT 1&2

(2) FURNISH 8 NEW EXHAUSTER DAMPER STARTER CABINETS FOR CALDECOTT 1&2

(3) MECHANICALLY INTERLOCKED.

(4) SEE DWG. EE4-18 FOR WIRING.

(5) SEE DWG. EE4-19 FOR WIRING.

	BY	CHECKED
DESIGN	G.RUSSELL	D.LE
DETAILS	D.LE	S.LO
QUANTITIES	D.LE	S.LO

PREPARED FOR THE STATE OF CALIFORNIA DEPARTMENT OF TRANSPORTATION

DIVISION OF ENGINEERING SERVICES
ELECTRICAL-MECHANICAL-WATER AND WASTEWATER DESIGN

BRIDGE NO. VARIES
POST MILE VARIES

SCADA SYSTEM UPGRADE: POSEY/WEBSTER STREET TUBES AND CALDECOTT TUNNEL
CALDECOTT BORES 1 & 2
DAMPER STARTER ARRANGEMENT

SHEET **EE4-9**

DOES SD Imperial Rev.1/07

ORIGINAL SCALE IN INCHES FOR REDUCED PLANS 0 1 2 3

CU 04220
EA 1A4604

DISREGARD PRINTS BEARING EARLIER REVISION DATES →
REVISION DATES (PRELIMINARY STAGE ONLY)

SHEET 46 OF 95

26-NOV-2008 13:33
EE4-9.dgn

DIST.	COUNTY	ROUTE	POST MILES TOTAL PROJECT	SHEET NO.	TOTAL SHEETS
04	Ala,CC	24,260	R5.9/R6.2, R0.0/R0.5,R0.9/R1.9	52	100

REGISTERED ELECTRICAL ENGINEER — 02-26-08 DATE

REGISTERED PROFESSIONAL ENGINEER — ROBERT J. FEE — No. E-13014 — Exp. 6/30/09 — ELEC — STATE OF CALIFORNIA

11-24-08
PLANS APPROVAL DATE

The State of California or its officers or agents shall not be responsible for the accuracy or completeness of electronic copies of this plan sheet.

To get to the Caltrans web site go to http://www.dot.ca.gov

STV Incorporated
9130 Anaheim Place, Suite 210
Rancho Cucamonga, CA 91730

JDL Design, LLC
18582 Beach Blvd, Suite 229
Huntington Beach, CA 92647

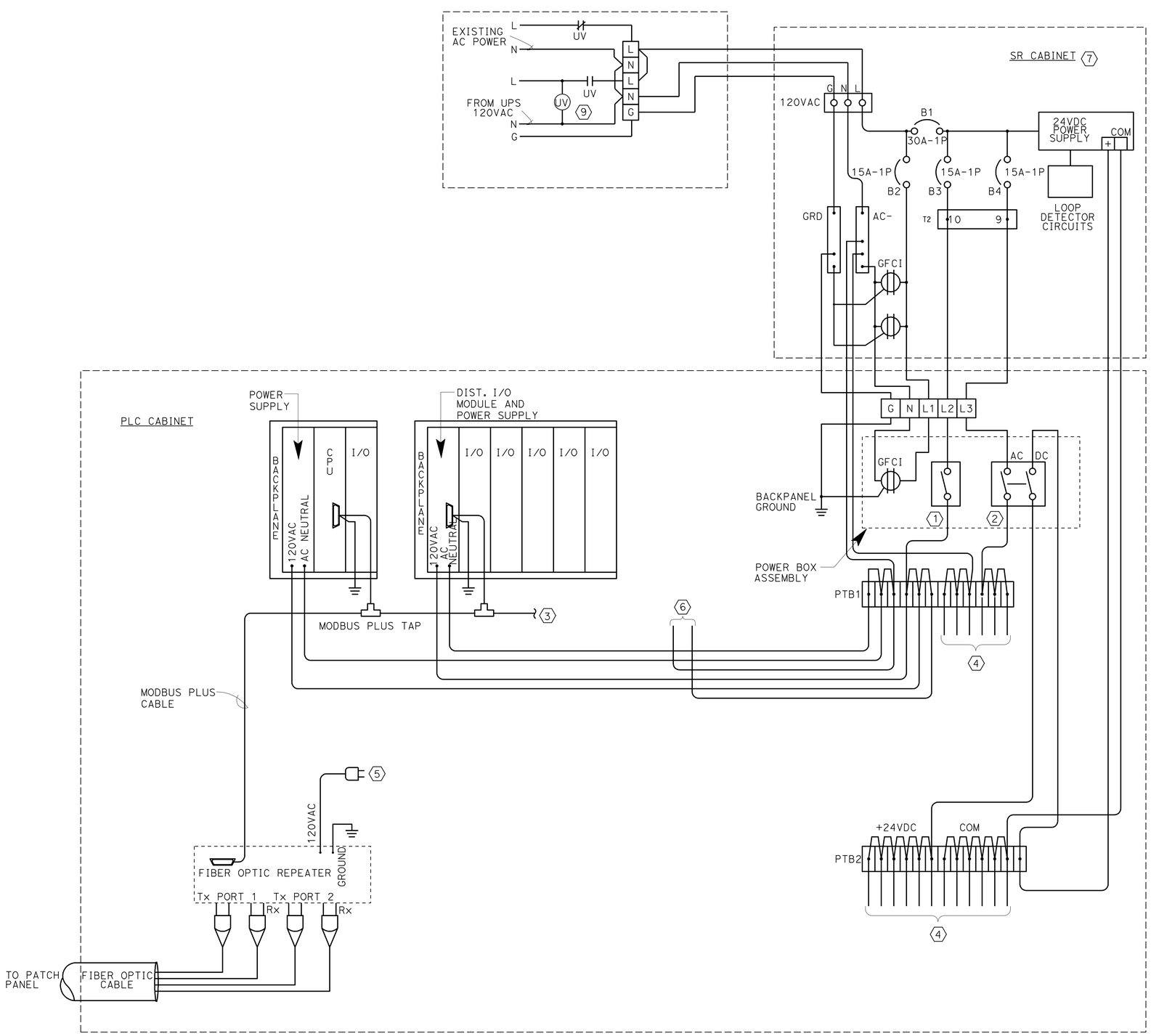

NOTES:

1. 120VAC POWER FEED FOR PLC BACKPLANE AND COMMUNICATIONS POWER.
2. 120VAC AND 24VDC POWER FEEDS FOR I/O INDICATION & CONTROL
3. AN ADDITIONAL MODBUS PLUS TAP AND DIO CABLE DROP IS ADDED HERE IF AN ADDITIONAL BACKPLANE WITH DIO MODULE & I/O ARE REQUIRED.
4. SEE DRAWINGS EE4-12 THRU EE4-16 FOR DETAILS.
5. POWER CORD FOR FIBER OPTIC REPEATER PLUGS INTO PLC GFCI RECEPTACLE.
6. TO ADDITIONAL PLC BACKPLANE POWER SUPPLY IF REQUIRED.
7. THIS DIAGRAM IS TRUE FOR PLC'S 2 THROUGH 8. 24VDC POWER SUPPLY FOR PLC 1 IS LOCATED ON THE PLC BACKPANEL. 120VAC POWER FOR PLC 1 IS FROM DISTRIBUTION PANEL CIRCUITS.
9. UNDERVOLTAGE RELAY, UV, DPDT, 120VAC, 10Amp RELEASE TIME 4~10ms OR SHORTER.

	BY	CHECKED
DESIGN	G.RUSSELL	D.LE
DETAILS	D.LE	S.LO
QUANTITIES	D.LE	S.LO

PREPARED FOR THE STATE OF CALIFORNIA DEPARTMENT OF TRANSPORTATION

DIVISION OF ENGINEERING SERVICES
ELECTRICAL-MECHANICAL-WATER AND WASTEWATER DESIGN

BRIDGE NO. VARIES
POST MILE VARIES

SCADA SYSTEM UPGRADE: POSEY/WEBSTER STREET TUBES AND CALDECOTT TUNNEL

TYPICAL PLC CABINET
POWER & COMMUNICATION WIRING

SHEET **EE4-10**

DOES SD Imperial Rev.1/07

ORIGINAL SCALE IN INCHES FOR REDUCED PLANS 0 1 2 3

CU 04220
EA 1A4604

DISREGARD PRINTS BEARING EARLIER REVISION DATES →

REVISION DATES (PRELIMINARY STAGE ONLY)

SHEET 47 OF 95

26-NOV-2008 13:33

EE4-10.dgn

DIST.	COUNTY	ROUTE	POST MILES TOTAL PROJECT	SHEET NO.	TOTAL SHEETS
04	Ala,CC	24,260	R5.9/R6.2, R0.0/R0.5,R0.9/R1.9	53	100

REGISTERED ELECTRICAL ENGINEER — 02-26-08 DATE

REGISTERED PROFESSIONAL ENGINEER ROBERT J. FEE No. E-13014 Exp. 6/30/09 ELEC STATE OF CALIFORNIA

11-24-08
PLANS APPROVAL DATE

The State of California or its officers or agents shall not be responsible for the accuracy or completeness of electronic copies of this plan sheet.

To get to the Caltrans web site go to http://www.dot.ca.gov

STV Incorporated
9130 Anaheim Place, Suite 210
Rancho Cucamonga, CA 91730

JDL Design, LLC
18582 Beach Blvd, Suite 229
Huntington Beach, CA 92647

BILL OF MATERIALS

(3)	ITEM	QTY	DESCRIPTION	MFG./PART NO.
E	1	A/R	MODBUS + TAP	MODICON, 990NAD23000
E	2	A/R	MODBUS + DROP CABLE W/ CONNECTOR	MODICON, 990NAD2110
E	3	A/R	MODBUS + CABLE	BELDEN, YC39000
E	4	1	FIBER OPTIC REPEATER	MODICON, 490NRP25400
E	5	1	MB + NETWORK ADAPTER	MODICON, AM-SA85-000
E	6	A/R	DISTRIBUTED I/O MODULE	MODICON, 140CRA21110
E	7	1	QUANTUM CPU MODULE	MODICON, 140CPU11302
E	8	1	MODBUS + CONNECTOR	MODICON, AS-MBKT-185
	9	A/R	VARIABLE FREQUENCY DRIVE (VFD)	SEE DWG. EE4-5

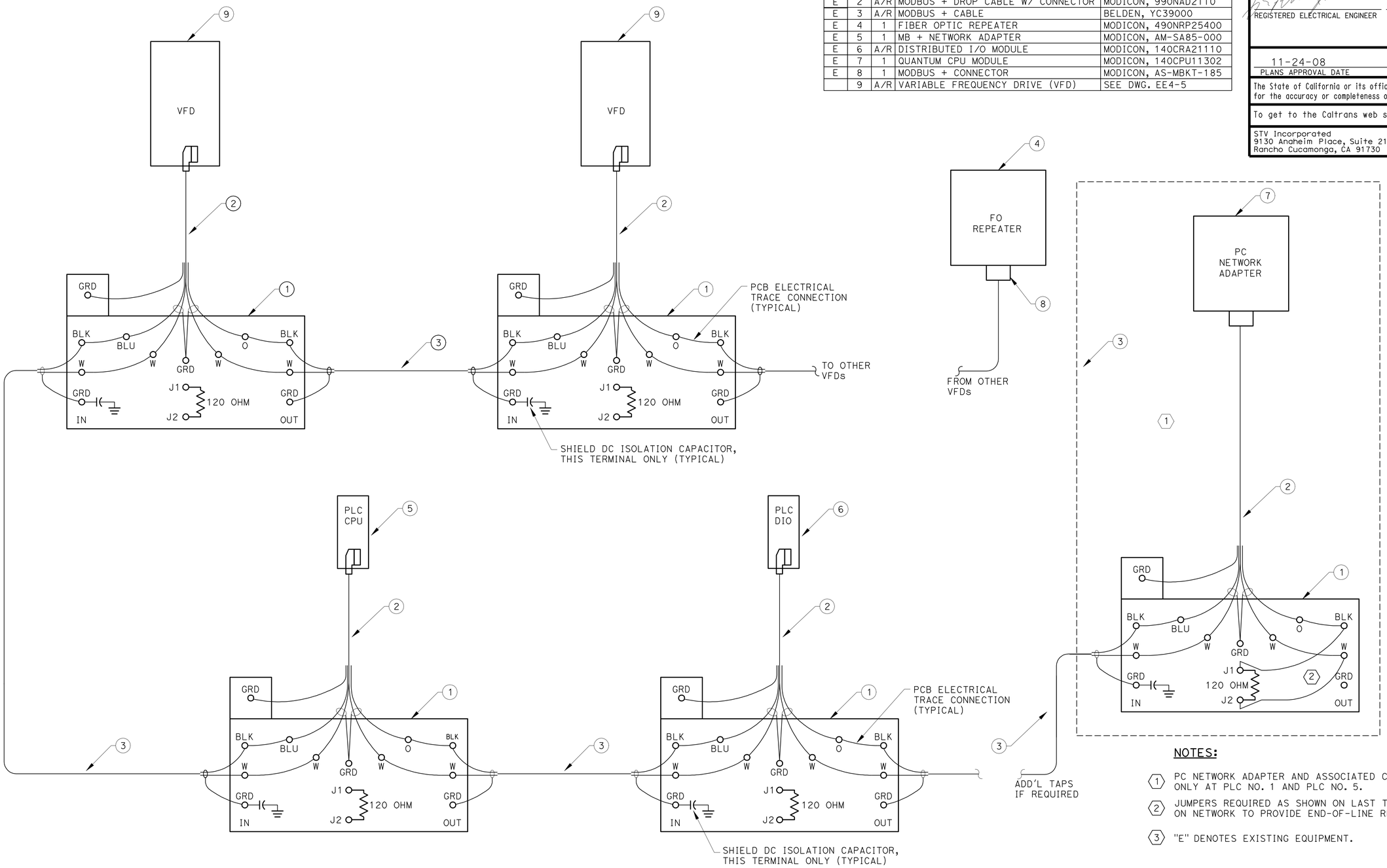

NOTES:

(1) PC NETWORK ADAPTER AND ASSOCIATED CABLING ONLY AT PLC NO. 1 AND PLC NO. 5.

(2) JUMPERS REQUIRED AS SHOWN ON LAST TAP(S) ON NETWORK TO PROVIDE END-OF-LINE RESISTOR.

(3) "E" DENOTES EXISTING EQUIPMENT.

	BY	CHECKED
DESIGN	G.RUSSELL	D.LE
DETAILS	D.LE	S.LO
QUANTITIES	D.LE	S.LO

PREPARED FOR THE STATE OF CALIFORNIA DEPARTMENT OF TRANSPORTATION

DIVISION OF ENGINEERING SERVICES ELECTRICAL-MECHANICAL-WATER AND WASTEWATER DESIGN

BRIDGE NO. VARIES
POST MILE VARIES

SCADA SYSTEM UPGRADE: POSEY/WEBSTER STREET TUBES AND CALDECOTT TUNNEL

MODBUS PLUS NETWORK
CABLE ARRANGEMENT - TYPICAL

SHEET **EE4-11**

DOES SD Imperial Rev.1/07

ORIGINAL SCALE IN INCHES FOR REDUCED PLANS 0 1 2 3

CU 04220
EA 1A4604

DISREGARD PRINTS BEARING EARLIER REVISION DATES →

REVISION DATES (PRELIMINARY STAGE ONLY)

SHEET 48 OF 95

26-NOV-2008 13:33

EE4-11.dgn

DIST.	COUNTY	ROUTE	POST MILES TOTAL PROJECT	SHEET NO.	TOTAL SHEETS
04	Ala,CC	24,260	R5.9/R6.2, R0.0/R0.5,R0.9/R1.9	54	100

REGISTERED ELECTRICAL ENGINEER — 02-26-08 DATE

REGISTERED PROFESSIONAL ENGINEER — ROBERT J. FEE — No. E-13014 — Exp. 6/30/09 — ELEC — STATE OF CALIFORNIA

11-24-08
PLANS APPROVAL DATE

The State of California or its officers or agents shall not be responsible for the accuracy or completeness of electronic copies of this plan sheet.

To get to the Caltrans web site go to http://www.dot.ca.gov

STV Incorporated
9130 Anaheim Place, Suite 210
Rancho Cucamonga, CA 91730

JDL Design, LLC
18582 Beach Blvd, Suite 229
Huntington Beach, CA 92647

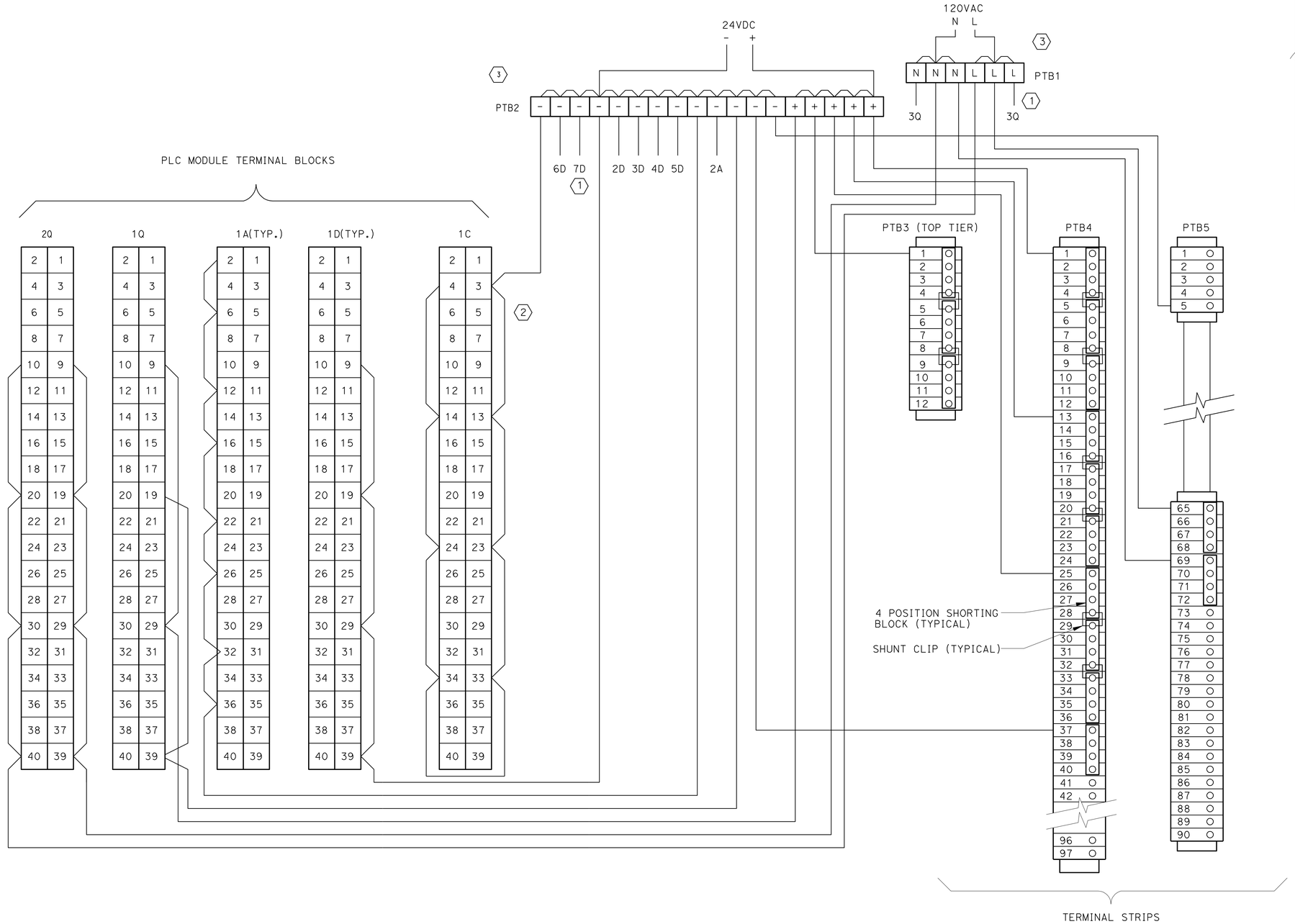

NOTES:

1. LIGHTING CONTROLS.
2. NEW HIGH SPEED COUNTER MODULE.
3. SEE DWG. EE4-10 FOR DETAILS ON POWER SUPPLIES.

PLC 1

	BY	CHECKED
DESIGN	G. RUSSELL	D. LE
DETAILS	D. LE	S. LO
QUANTITIES	D. LE	S. LO

PREPARED FOR THE STATE OF CALIFORNIA DEPARTMENT OF TRANSPORTATION

DIVISION OF ENGINEERING SERVICES
ELECTRICAL-MECHANICAL-WATER AND WASTEWATER DESIGN

BRIDGE NO. VARIES
POST MILE VARIES

SCADA SYSTEM UPGRADE: POSEY/WEBSTER STREET TUBES AND CALDECOTT TUNNEL

I/O POWER WIRING PLC I

SHEET **EE4-12-1**

DOES SD Imperial Rev. 1/07

ORIGINAL SCALE IN INCHES FOR REDUCED PLANS 0 1 2 3

CU 04220
EA 1A4604

DISREGARD PRINTS BEARING EARLIER REVISION DATES →

REVISION DATES (PRELIMINARY STAGE ONLY)

SHEET 49 OF 95

26-NOV-2008 13:34

EE4-12-1.dgn

DIST.	COUNTY	ROUTE	POST MILES TOTAL PROJECT	SHEET NO.	TOTAL SHEETS
04	Ala,CC	24,260	R5.9/R6.2, R0.0/R0.5,R0.9/R1.9	55	100

REGISTERED ELECTRICAL ENGINEER — 02-26-08 DATE

REGISTERED PROFESSIONAL ENGINEER ROBERT J. FEE No. E-13014 Exp. 6/30/09 ELEC STATE OF CALIFORNIA

11-24-08
PLANS APPROVAL DATE

The State of California or its officers or agents shall not be responsible for the accuracy or completeness of electronic copies of this plan sheet.

To get to the Caltrans web site go to http://www.dot.ca.gov

STV Incorporated
9130 Anaheim Place, Suite 210
Rancho Cucamonga, CA 91730

JDL Design, LLC
18582 Beach Blvd, Suite 229
Huntington Beach, CA 92647

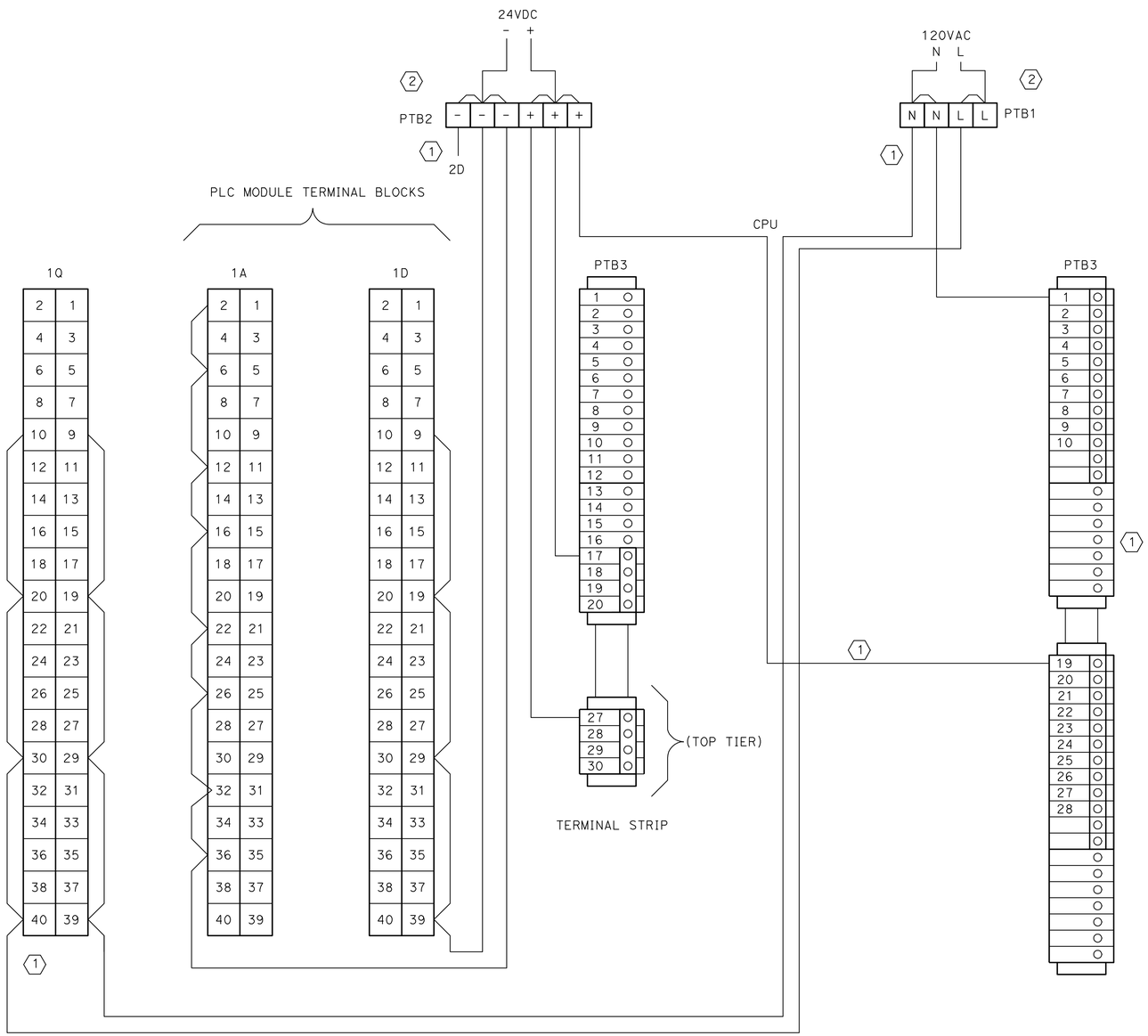

NOTES:

1. LIGHTING CONTROLS
2. SEE DWG. EE4-10 FOR DETAILS ON POWER SUPPLIES.

* ALL EXISTING EQUIPMENT

PLC 2

	BY		CHECKED
DESIGN	G.RUSSELL		D.LE
DETAILS	D.LE		S.LO
QUANTITIES	D.LE		S.LO

PREPARED FOR THE STATE OF CALIFORNIA DEPARTMENT OF TRANSPORTATION

DIVISION OF ENGINEERING SERVICES
ELECTRICAL-MECHANICAL-WATER AND WASTEWATER DESIGN

BRIDGE NO. VARIES
POST MILE VARIES

SCADA SYSTEM UPGRADE: POSEY/WEBSTER STREET TUBES AND CALDECOTT TUNNEL

I/O POWER WIRING PLC 2

SHEET **EE4-12-2**

DOES SD Imperial Rev.1/07

ORIGINAL SCALE IN INCHES FOR REDUCED PLANS 0 1 2 3

CU 04220
EA 1A4604

DISREGARD PRINTS BEARING EARLIER REVISION DATES →

REVISION DATES (PRELIMINARY STAGE ONLY)

SHEET 50 OF 95

26-NOV-2008 13:34
EE4-12-2.dgn

DIST.	COUNTY	ROUTE	POST MILES TOTAL PROJECT	SHEET NO.	TOTAL SHEETS
04	Ala,CC	24,260	R5.9/R6.2, R0.0/R0.5,R0.9/R1.9	56	100

REGISTERED ELECTRICAL ENGINEER — 02-26-08 DATE

REGISTERED PROFESSIONAL ENGINEER ROBERT J. FEE No. E-13014 Exp. 6/30/09 ELEC STATE OF CALIFORNIA

11-24-08
PLANS APPROVAL DATE

The State of California or its officers or agents shall not be responsible for the accuracy or completeness of electronic copies of this plan sheet.

To get to the Caltrans web site go to http://www.dot.ca.gov

STV Incorporated
9130 Anaheim Place, Suite 210
Rancho Cucamonga, CA 91730

JDL Design, LLC
18582 Beach Blvd, Suite 229
Huntington Beach, CA 92647

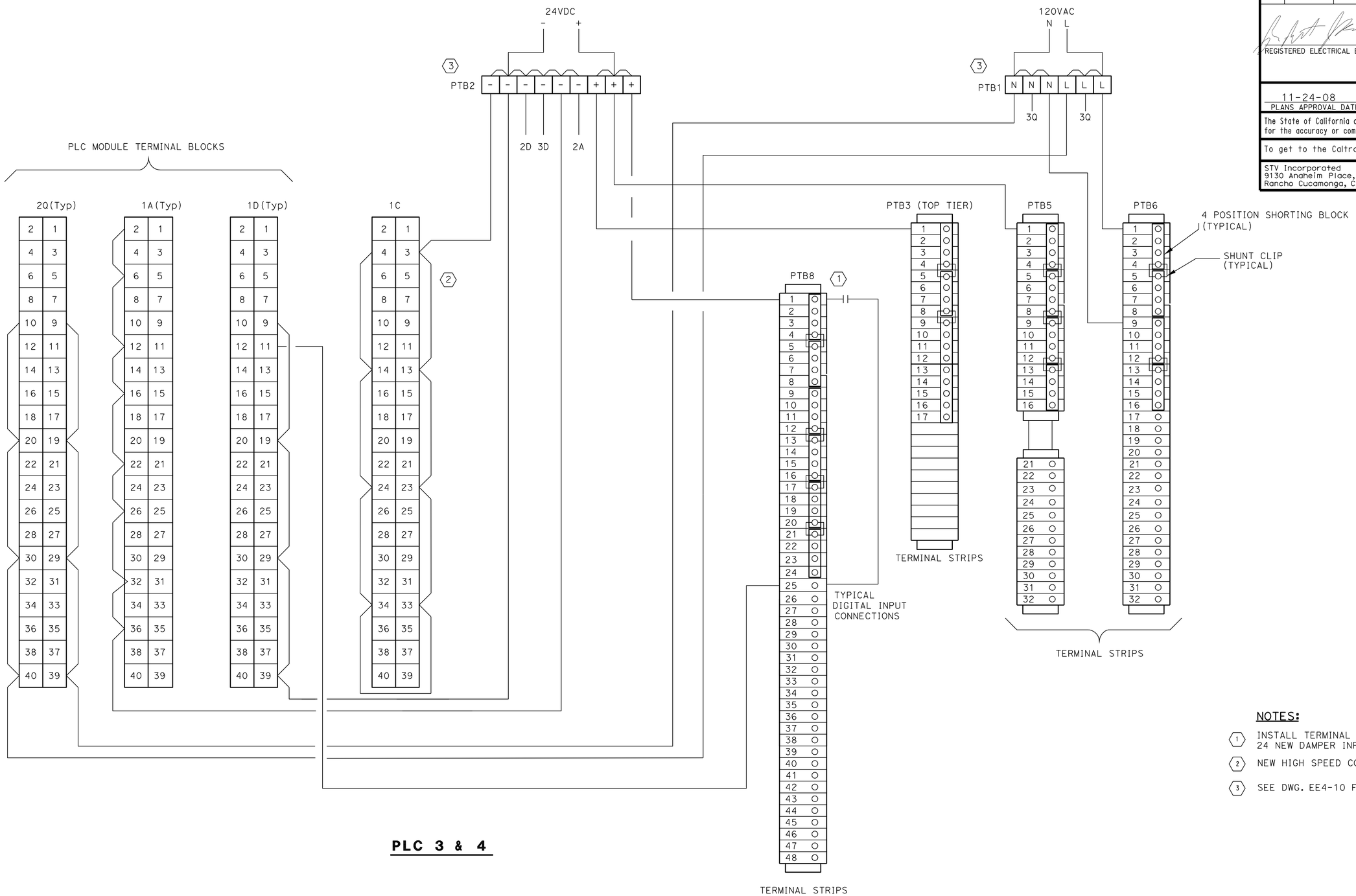

PLC 3 & 4

NOTES:

1. INSTALL TERMINAL BLOCKS FOR 24 NEW DAMPER INPUT SIGNALS.
2. NEW HIGH SPEED COUNTER MODULE.
3. SEE DWG. EE4-10 FOR DETAILS ON POWER SUPPLIES.

	BY	CHECKED
DESIGN	G.RUSSELL	D.LE
DETAILS	D.LE	S.LO
QUANTITIES	D.LE	S.LO

PREPARED FOR THE STATE OF CALIFORNIA DEPARTMENT OF TRANSPORTATION

DIVISION OF ENGINEERING SERVICES ELECTRICAL-MECHANICAL-WATER AND WASTEWATER DESIGN

BRIDGE NO. VARIES
POST MILE VARIES

SCADA SYSTEM UPGRADE: POSEY/WEBSTER STREET TUBES AND CALDECOTT TUNNEL

I/O POWER WIRING PLCs 3 & 4

SHEET **EE4-13**

DOES SD Imperial Rev.1/07

ORIGINAL SCALE IN INCHES FOR REDUCED PLANS 0 1 2 3

CU 04220
EA 1A4604

DISREGARD PRINTS BEARING EARLIER REVISION DATES →

REVISION DATES (PRELIMINARY STAGE ONLY)

SHEET 51 OF 95

26-NOV-2008 13:34
EE4-13.dgn

DIST.	COUNTY	ROUTE	POST MILES TOTAL PROJECT	SHEET NO.	TOTAL SHEETS
04	Ala,CC	24,260	R5.9/R6.2, R0.0/R0.5,R0.9/R1.9	57	100

REGISTERED ELECTRICAL ENGINEER — 02-26-08 DATE

REGISTERED PROFESSIONAL ENGINEER ROBERT J. FEE No. E-13014 Exp. 6/30/09 ELEC STATE OF CALIFORNIA

11-24-08
PLANS APPROVAL DATE

The State of California or its officers or agents shall not be responsible for the accuracy or completeness of electronic copies of this plan sheet.

To get to the Caltrans web site go to http://www.dot.ca.gov

STV Incorporated
9130 Anaheim Place, Suite 210
Rancho Cucamonga, CA 91730

JDL Design, LLC
18582 Beach Blvd, Suite 229
Huntington Beach, CA 92647

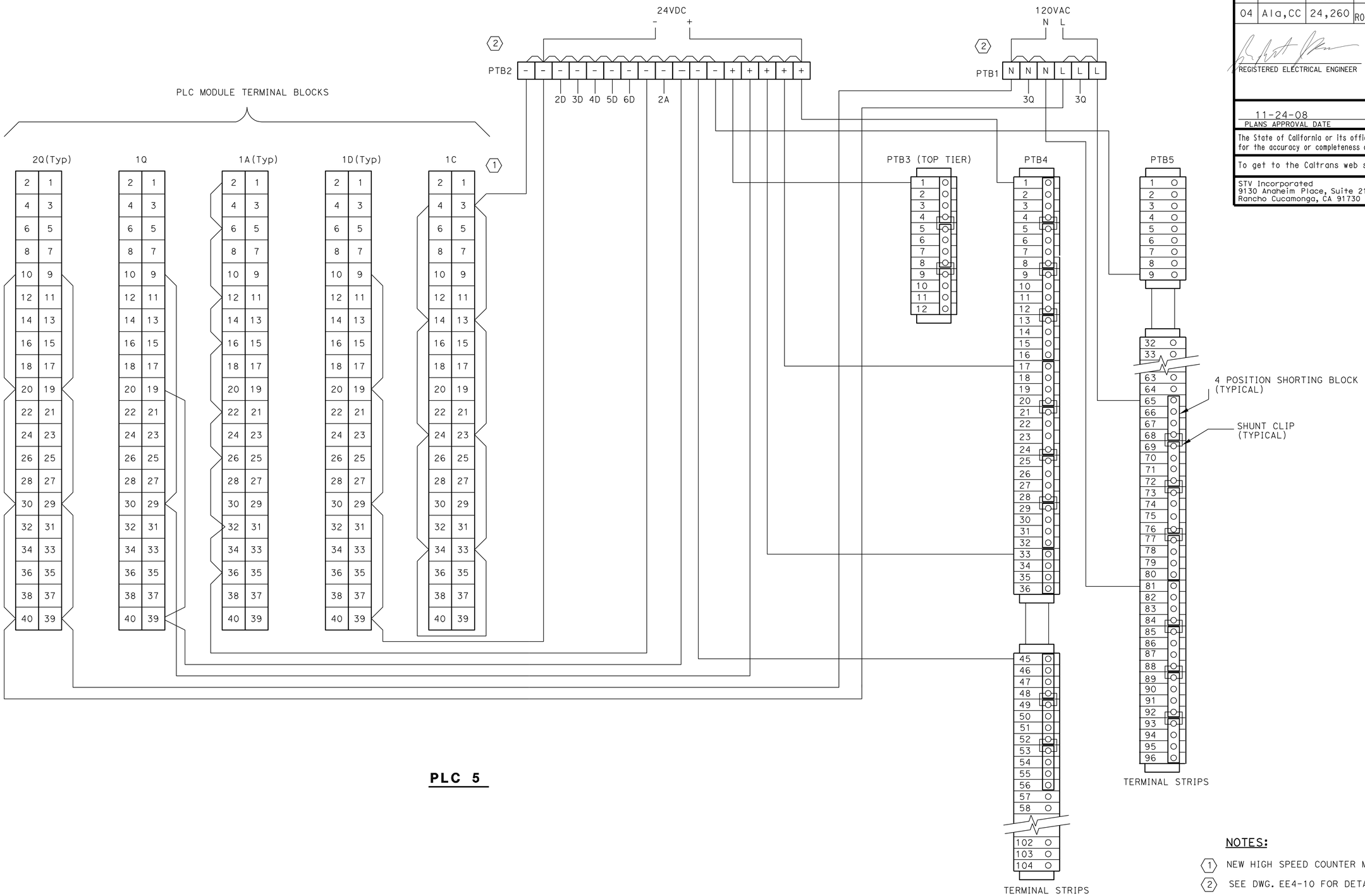

NOTES:

1. NEW HIGH SPEED COUNTER MODULE.
2. SEE DWG. EE4-10 FOR DETAILS ON POWER SUPPLIES.

DESIGN	BY G.RUSSELL	CHECKED D.LE	
DETAILS	BY D.LE	CHECKED S.LO	
QUANTITIES	BY D.LE	CHECKED S.LO	

PREPARED FOR THE STATE OF CALIFORNIA DEPARTMENT OF TRANSPORTATION

DIVISION OF ENGINEERING SERVICES
ELECTRICAL-MECHANICAL-WATER AND WASTEWATER DESIGN

BRIDGE NO. VARIES
POST MILE VARIES

SCADA SYSTEM UPGRADE: POSEY/WEBSTER STREET TUBES AND CALDECOTT TUNNEL

I/O POWER WIRING PLC 5

SHEET EE4-14

DOES SD Imperial Rev.1/07

ORIGINAL SCALE IN INCHES FOR REDUCED PLANS 0 1 2 3

CU 04220
EA 1A4604

DISREGARD PRINTS BEARING EARLIER REVISION DATES →

REVISION DATES (PRELIMINARY STAGE ONLY)

SHEET 52 OF 95

26-NOV-2008 13:34

EE4-14.dgn

DIST.	COUNTY	ROUTE	POST MILES TOTAL PROJECT	SHEET NO.	TOTAL SHEETS
04	Ala,CC	24,260	R5.9/R6.2, R0.0/R0.5,R0.9/R1.9	58	100

REGISTERED ELECTRICAL ENGINEER — 02-26-08 DATE

REGISTERED PROFESSIONAL ENGINEER ROBERT J. FEE No. E-13014 Exp. 6/30/09 ELEC STATE OF CALIFORNIA

11-24-08
PLANS APPROVAL DATE

The State of California or its officers or agents shall not be responsible for the accuracy or completeness of electronic copies of this plan sheet.

STV Incorporated
9130 Anaheim Place, Suite 210
Rancho Cucamonga, CA 91730

JDL Design, LLC
18582 Beach Blvd, Suite 229
Huntington Beach, CA 92647

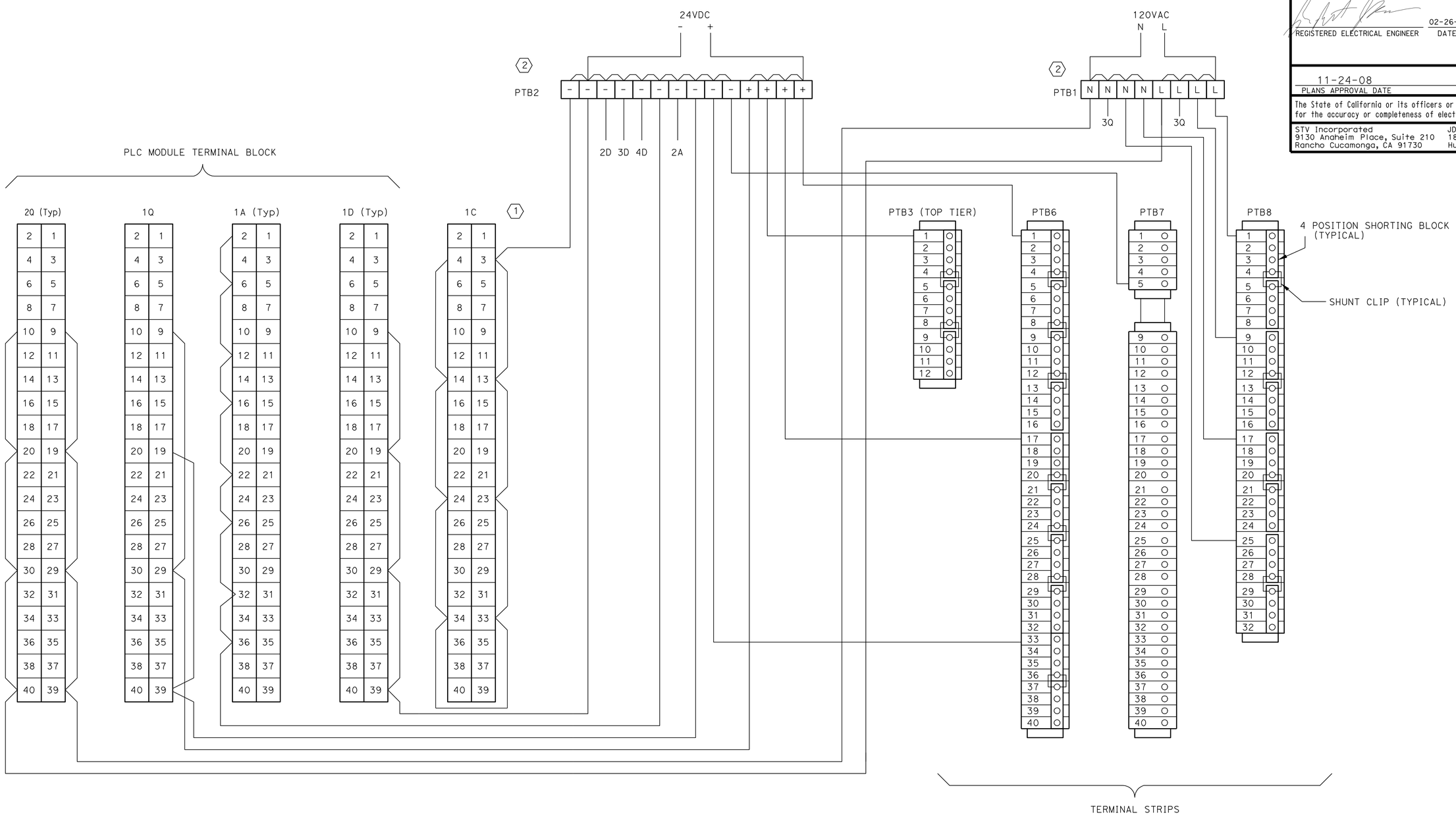

PLC 6

NOTES:

(1) NEW HIGH SPEED COUNTER MODULE.

(2) SEE DWG. EE4-10 FOR DETAILS ON POWER SUPPLIES.

DESIGN	BY G.RUSSELL	CHECKED D.LE	
DETAILS	BY D.LE	CHECKED S.LO	
QUANTITIES	BY D.LE	CHECKED S.LO	

PREPARED FOR THE STATE OF CALIFORNIA DEPARTMENT OF TRANSPORTATION

DIVISION OF ENGINEERING SERVICES
ELECTRICAL-MECHANICAL-WATER AND WASTEWATER DESIGN

BRIDGE NO. VARIES
POST MILE VARIES

SCADA SYSTEM UPGRADE: POSEY/WEBSTER STREET TUBES AND CALDECOTT TUNNEL

I/O POWER WIRING PLC 6

SHEET **EE4-15**

DOES SD Imperial Rev.1/07

ORIGINAL SCALE IN INCHES FOR REDUCED PLANS 0 1 2 3

CU 04220
EA 1A4604

DISREGARD PRINTS BEARING EARLIER REVISION DATES →

REVISION DATES (PRELIMINARY STAGE ONLY)

SHEET 53 OF 95

26-NOV-2008 13:34

EE4-15.dgn

DIST.	COUNTY	ROUTE	POST MILES TOTAL PROJECT	SHEET NO.	TOTAL SHEETS
04	Ala,CC	24,260	R5.9/R6.2, R0.0/R0.5,R0.9/R1.9	59	100

REGISTERED ELECTRICAL ENGINEER — 02-26-08 DATE

REGISTERED PROFESSIONAL ENGINEER ROBERT J. FEE No. E-13014 Exp. 6/30/09 ELEC STATE OF CALIFORNIA

11-24-08
PLANS APPROVAL DATE

The State of California or its officers or agents shall not be responsible for the accuracy or completeness of electronic copies of this plan sheet.

STV Incorporated
9130 Anaheim Place, Suite 210
Rancho Cucamonga, CA 91730

JDL Design, LLC
18582 Beach Blvd, Suite 229
Huntington Beach, CA 92647

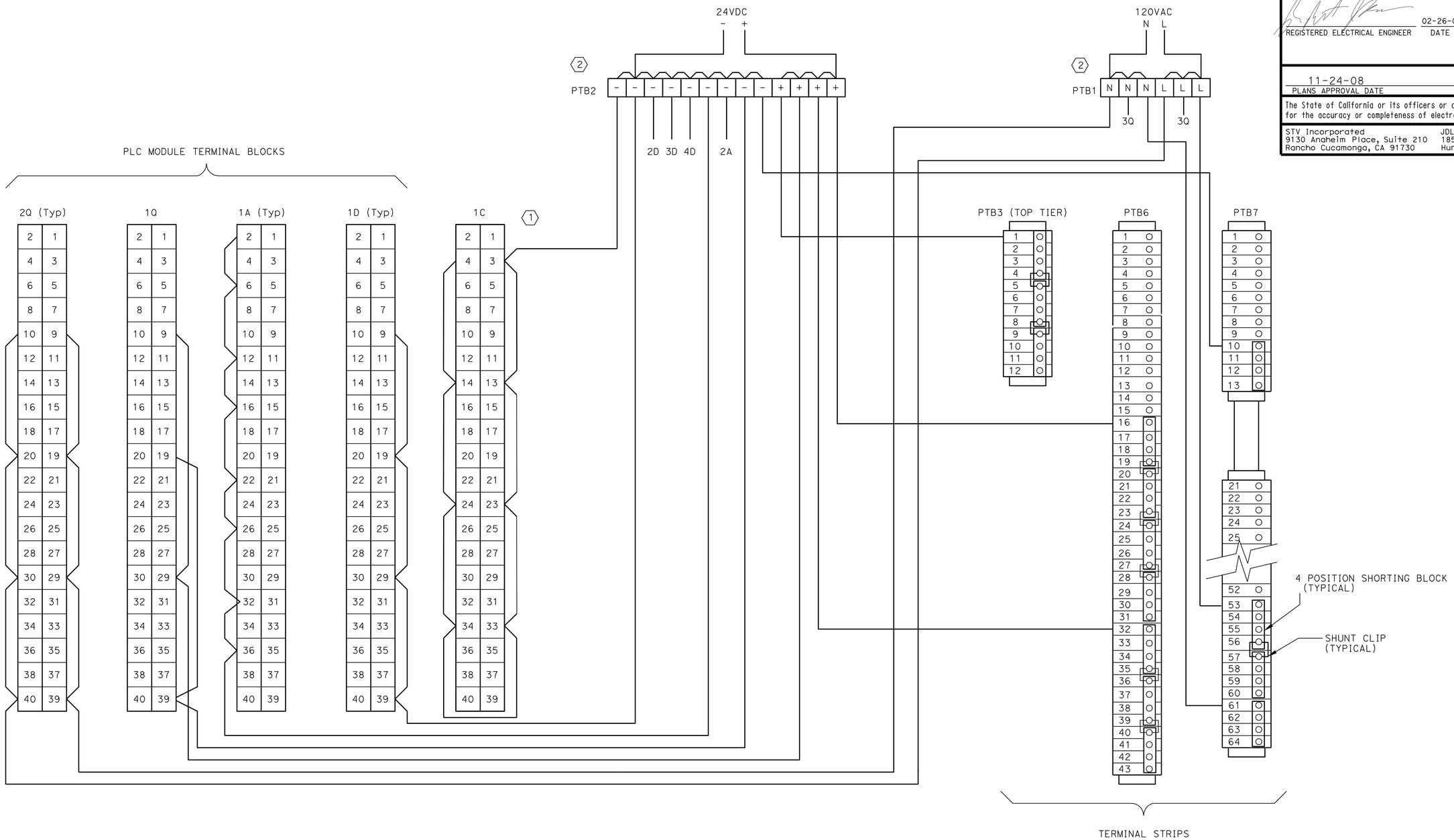

PLC 7 & 8

NOTES:

1. NEW HIGH SPEED COUNTER MODULE.
2. SEE DWG. EE4-10 FOR DETAILS ON POWER SUPPLIES.

	BY	CHECKED
DESIGN	G.RUSSELL	D.LE
DETAILS	D.LE	S.LO
QUANTITIES	D.LE	S.LO

PREPARED FOR THE STATE OF CALIFORNIA DEPARTMENT OF TRANSPORTATION

DIVISION OF ENGINEERING SERVICES
ELECTRICAL-MECHANICAL-WATER AND WASTEWATER DESIGN

BRIDGE NO. VARIES
POST MILE VARIES

SCADA SYSTEM UPGRADE: POSEY/WEBSTER STREET TUBES AND CALDECOTT TUNNEL

I/O POWER WIRING PLCs 7 & 8

SHEET EE4-16

DOES SD Imperial Rev.1/07

ORIGINAL SCALE IN INCHES FOR REDUCED PLANS 0 1 2 3

CU 04220
EA 1A4604

DISREGARD PRINTS BEARING EARLIER REVISION DATES →

REVISION DATES (PRELIMINARY STAGE ONLY)

SHEET 54 OF 95

26-NOV-2008 13:34

EE4-16.dgn

DIST.	COUNTY	ROUTE	POST MILES TOTAL PROJECT	SHEET NO.	TOTAL SHEETS
04	Ala,CC	24,260	R5.9/R6.2, R0.0/R0.5,R0.9/R1.9	60	100

REGISTERED ELECTRICAL ENGINEER — 02-26-08 DATE

REGISTERED PROFESSIONAL ENGINEER — ROBERT J. FEE — No. E-13014 — Exp. 6/30/09 — ELEC — STATE OF CALIFORNIA

11-24-08
PLANS APPROVAL DATE

The State of California or its officers or agents shall not be responsible for the accuracy or completeness of electronic copies of this plan sheet.

STV Incorporated
9130 Anaheim Place, Suite 210
Rancho Cucamonga, CA 91730

JDL Design, LLC
18582 Beach Blvd, Suite 229
Huntington Beach, CA 92647

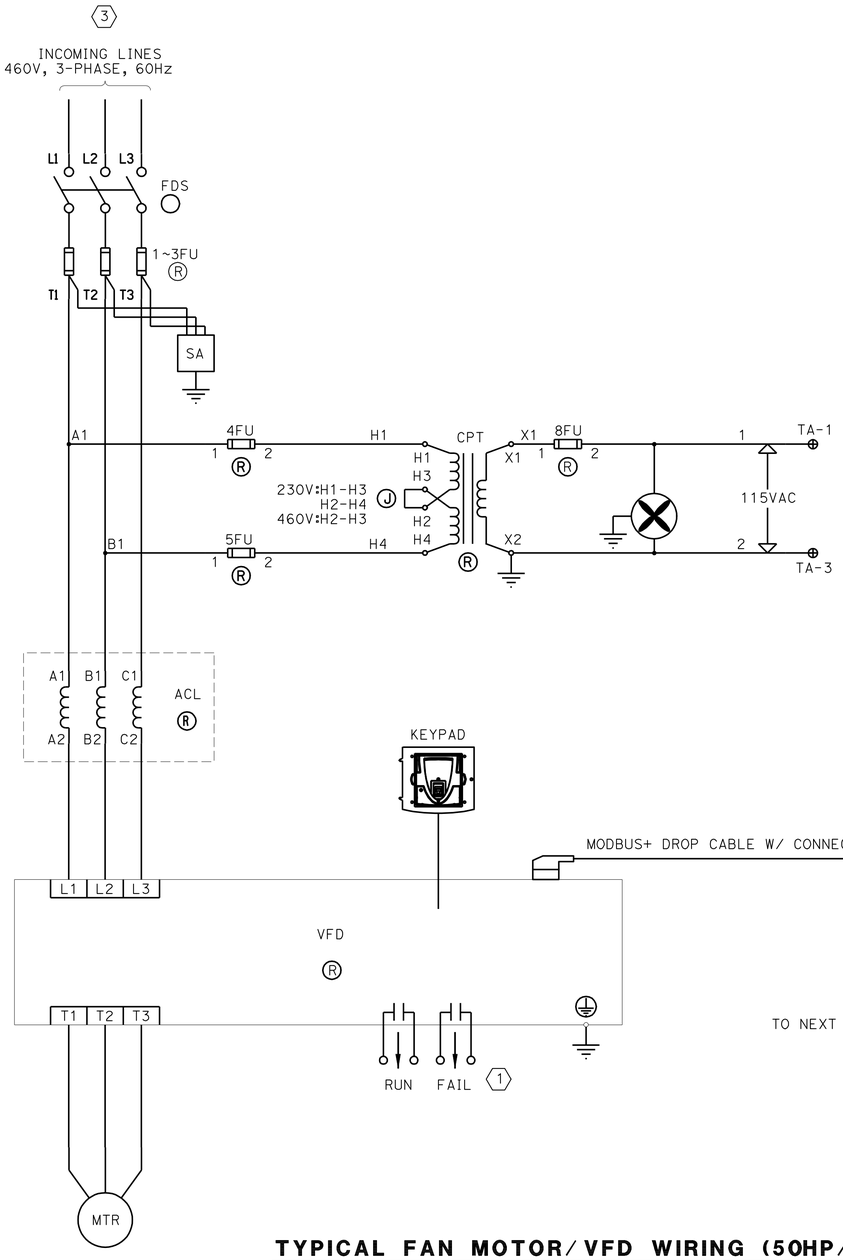

TYPICAL FAN MOTOR/VFD WIRING (50HP/ 75HP/ 100HP)

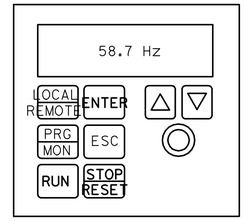

KEYPAD DETAILS

2

GENERAL OPERATING INSTRUCTIONS

PRESS [LOCAL/REMOTE] TO PLACE VFD IN LOCAL MODE.
PRESS [RUN] TO MANUALLY START MOTOR.
USE POTENTIOMETER TO ADJUST FREQUENCY.
PRESS [STOP/RESET] TO MANUALLY STOP MOTOR.
PRESS [LOCAL/REMOTE] TO RETURN VFD TO PLC CONTROL.

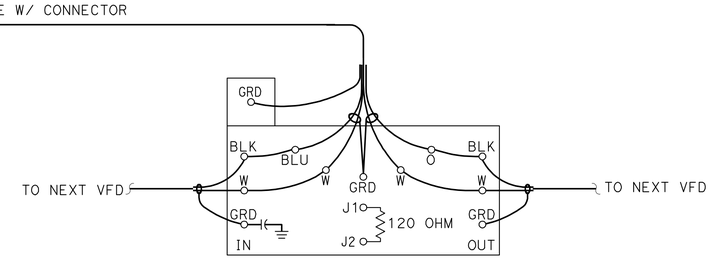

MODBUS PLUS TAP

TYPICAL MODBUS PLUS REGISTERS

REGISTER	MODE	DESCRIPTION
40001	READ/WRITE	LOCAL/REMOTE
40002	READ/WRITE	RUN/STOP COMMAND
40003	READ-ONLY	VFD COMMON FAULT
40004	READ-ONLY	VFD RUNNING
40005	READ-ONLY	VFD SPEED INDICATOR (0-60Hz)
40006	READ/WRITE	VFD SPEED REFERENCE (0-60Hz)

LEGEND

R — VERIFY RATING (50HP/75HP/100HP), USE DRIVE MANUFACTURER'S RECOMMENDATION.
CPT — CONTROL POWER TRANSFORMER
FDS — FUSIBLE DISCONNECT SWITCH
FU — FUSE
SA — SURGE ARRESTOR
ACL — AC LINE REACTOR

NOTES:

1. FOR WEBSTER TUBE OIL PRESSURE SWITCH CONTROLS.
2. DAMPER DOORS MUST BE IN POSITION (USING MANUAL CONTROL STATION) PRIOR TO LOCAL VFD OPERATION.
3. EXISTING POWER, REFER TO PLAN SHEETS EE1-1 & 2.

	BY	CHECKED
DESIGN	G.RUSSELL	D.LE
DETAILS	D.LE	S.LO
QUANTITIES	D.LE	S.LO

PREPARED FOR THE STATE OF CALIFORNIA DEPARTMENT OF TRANSPORTATION

DIVISION OF ENGINEERING SERVICES
ELECTRICAL-MECHANICAL-WATER AND WASTEWATER DESIGN

BRIDGE NO. VARIES
POST MILE VARIES

SCADA SYSTEM UPGRADE: POSEY/WEBSTER STREET TUBES AND CALDECOTT TUNNEL
VFD FAN MOTOR STARTER 3-LINE & CONTROL DIAGRAM

SHEET EE4-17

DOES SD Imperial Rev.1/07

ORIGINAL SCALE IN INCHES FOR REDUCED PLANS 0 1 2 3

CU 04220
EA 1A4604

DISREGARD PRINTS BEARING EARLIER REVISION DATES

REVISION DATES (PRELIMINARY STAGE ONLY)

SHEET 55 OF 95

26-NOV-2008 13:35
EE4-17.dgn

DIST.	COUNTY	ROUTE	POST MILES TOTAL PROJECT	SHEET NO.	TOTAL SHEETS
04	Ala,CC	24,260	R5.9/R6.2, R0.0/R0.5,R0.9/R1.9	61	100

REGISTERED ELECTRICAL ENGINEER — 02-26-08 DATE

REGISTERED PROFESSIONAL ENGINEER — ROBERT J. FEE — No. E-13014 — Exp. 6/30/09 — ELEC — STATE OF CALIFORNIA

11-24-08
PLANS APPROVAL DATE

The State of California or its officers or agents shall not be responsible for the accuracy or completeness of electronic copies of this plan sheet.

STV Incorporated
9130 Anaheim Place, Suite 210
Rancho Cucamonga, CA 91730

JDL Design, LLC
18582 Beach Blvd, Suite 229
Huntington Beach, CA 92647

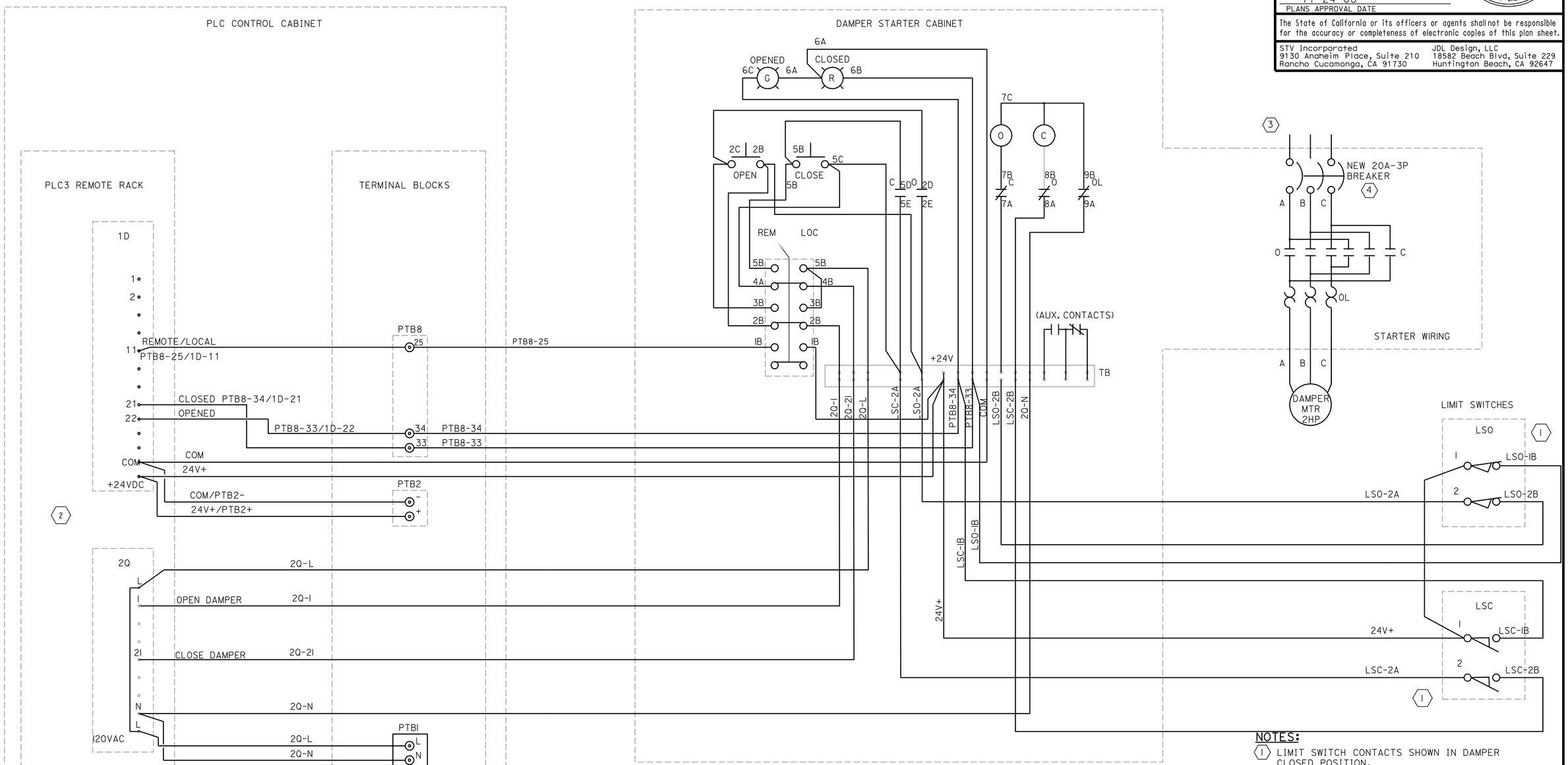

CALDECOTT 1 & 2 EAST/WEST SUPPLY DAMPER CONTROL WIRING

TYPICAL FOR ALL SUPPLY DAMPERS AT CALDECOTT BORES 1-2

NOTES:

1. LIMIT SWITCH CONTACTS SHOWN IN DAMPER CLOSED POSITION.
2. SEE DWG. EE4-13 FOR POWER WIRING DETAILS.
3. EXISTING POWER, REFER TO PLAN SHEETS EE1-1 & 2.
4. IN VFD, SEE PLAN SHEET EE4-4.

	BY	CHECKED
DESIGN	G.RUSSELL	D.LE
DETAILS	D.LE	S.LO
QUANTITIES	D.LE	S.LO

PREPARED FOR THE STATE OF CALIFORNIA DEPARTMENT OF TRANSPORTATION

DIVISION OF ENGINEERING SERVICES
ELECTRICAL-MECHANICAL-WATER AND WASTEWATER DESIGN

BRIDGE NO. VARIES
POST MILE VARIES

SCADA SYSTEM UPGRADE: POSEY/WEBSTER STREET TUBES AND CALDECOTT TUNNEL
CALDECOTT BORES 1 & 2 EAST/WEST SUPPLY DAMPER CONTROL WIRING

SHEET **EE4-18**

DOES SD Imperial Rev.1/07

ORIGINAL SCALE IN INCHES FOR REDUCED PLANS 0 1 2 3

CU 04220
EA 1A4604

DISREGARD PRINTS BEARING EARLIER REVISION DATES →

REVISION DATES (PRELIMINARY STAGE ONLY)

SHEET 56 OF 95

26-NOV-2008 13:35

EE4-18.dgn

DIST.	COUNTY	ROUTE	POST MILES TOTAL PROJECT	SHEET NO.	TOTAL SHEETS
04	Ala,CC	24,260	R5.9/R6.2, R0.0/R0.5,R0.9/R1.9	62	100

REGISTERED ELECTRICAL ENGINEER — 02-26-08 DATE

REGISTERED PROFESSIONAL ENGINEER ROBERT J. FEE No. E-13014 Exp. 6/30/09 ELEC STATE OF CALIFORNIA

11-24-08
PLANS APPROVAL DATE

The State of California or its officers or agents shall not be responsible for the accuracy or completeness of electronic copies of this plan sheet.

STV Incorporated
9130 Anaheim Place, Suite 210
Rancho Cucamonga, CA 91730

JDL Design, LLC
18582 Beach Blvd, Suite 229
Huntington Beach, CA 92647

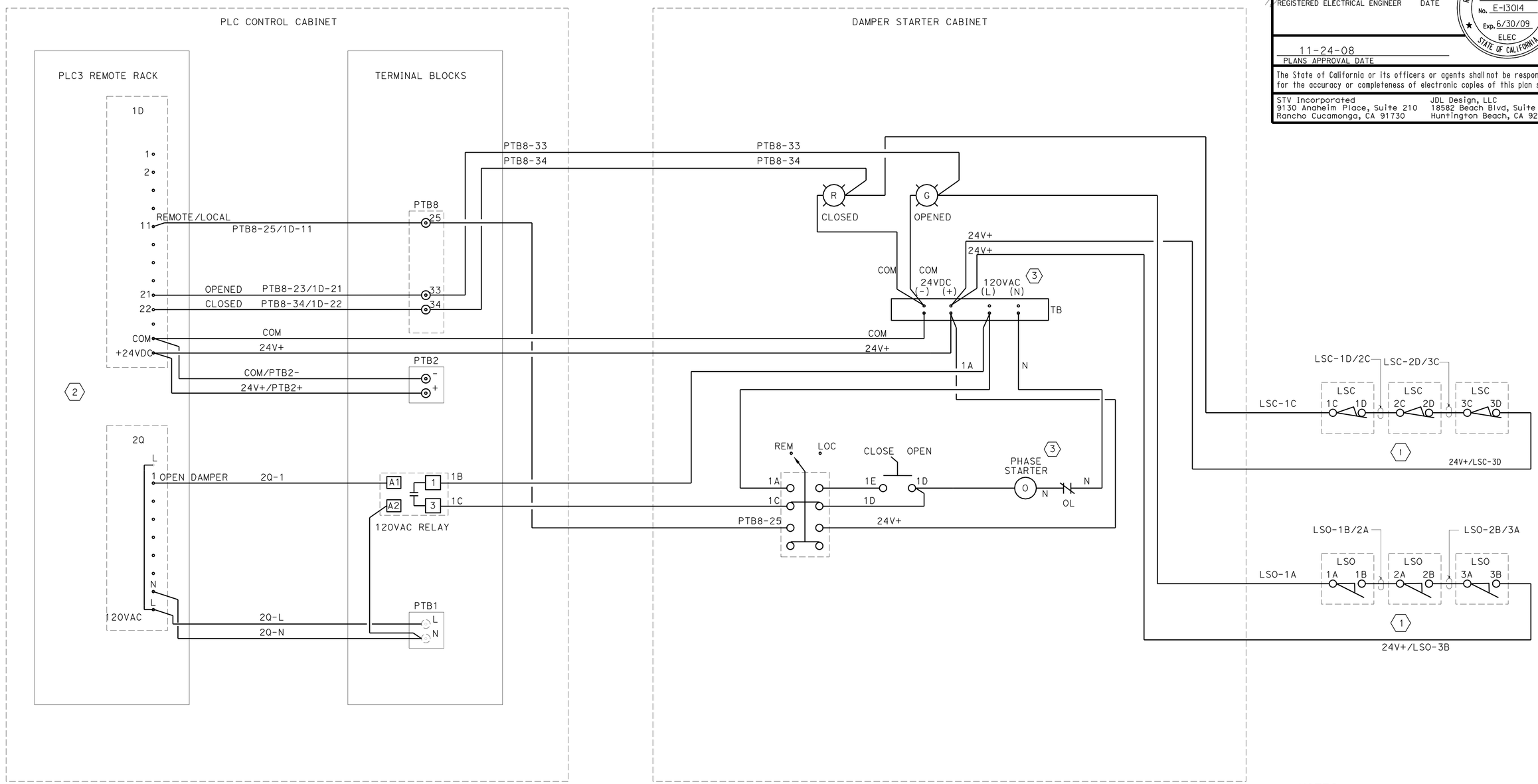

CALDECOTT 1 & 2 EAST/WEST
EXHAUST DAMPER CONTROL WIRING

TYPICAL FOR ALL EXHAUST DAMPERS AT CALDECOTT BORES 1-2

NOTES:

1. LIMIT SWITCH CONTACTS SHOWN IN DAMPER CLOSED OPTION.
2. SEE DWG. EE4-13 FOR POWER WIRING DETAILS.
3. REFER TO PLAN SHEETS EE1-1, EE1-2, EE1-3 & EE1-4.

DESIGN	BY G.RUSSELL	CHECKED D.LE	PREPARED FOR THE STATE OF CALIFORNIA DEPARTMENT OF TRANSPORTATION
DETAILS	BY D.LE	CHECKED S.LO	
QUANTITIES	BY D.LE	CHECKED S.LO	

DIVISION OF ENGINEERING SERVICES
ELECTRICAL-MECHANICAL-WATER AND WASTEWATER DESIGN

BRIDGE NO. VARIES
POST MILE VARIES

SCADA SYSTEM UPGRADE: POSEY/WEBSTER STREET TUBES AND CALDECOTT TUNNEL
CALDECOTT BORES 1 & 2 EAST/WEST
EXHAUST DAMPER CONTROL WIRING

SHEET **EE4-19**

DOES SD Imperial Rev.1/07

ORIGINAL SCALE IN INCHES FOR REDUCED PLANS 0 1 2 3

CU 04220
EA 1A4604

DISREGARD PRINTS BEARING EARLIER REVISION DATES →

REVISION DATES (PRELIMINARY STAGE ONLY)

SHEET 57 OF 95

26-NOV-2008 13:35

EE4-19.dgn

DIST.	COUNTY	ROUTE	POST MILES TOTAL PROJECT	SHEET NO.	TOTAL SHEETS
04	Ala,CC	24,260	R5.9/R6.2, R0.0/R0.5,R0.9/R1.9	63	100

REGISTERED ELECTRICAL ENGINEER — 02-26-08 DATE

REGISTERED PROFESSIONAL ENGINEER ROBERT J. FEE No. E-13014 Exp. 6/30/09 ELEC STATE OF CALIFORNIA

11-24-08
PLANS APPROVAL DATE

The State of California or its officers or agents shall not be responsible for the accuracy or completeness of electronic copies of this plan sheet.

STV Incorporated
9130 Anaheim Place, Suite 210
Rancho Cucamonga, CA 91730

JDL Design, LLC
18582 Beach Blvd, Suite 229
Huntington Beach, CA 92647

ACRONYM	LABEL	1D	LABEL	ACRONYM
CW3-LN1E-VCT	PTB4-87/1D-2	2 1	PTB4-86/1D-1	CW3-LN1W-VCT
CW3-LN2E-VCT	PTB4-89/1D-4	4 3	PTB4-88/1D-3	CW3-LN2W-VCT
	N/C	6 5	N/C	
	N/C	8 7	N/C	
	N/C	10 9	COM	
	N/C	12 11	N/C	
	N/C	14 13	N/C	
	N/C	16 15	N/C	
	N/C	18 17	N/C	
	N/C	20 19	N/C	
	N/C	22 21	N/C	
	N/C	24 23	N/C	
	N/C	26 25	N/C	
	N/C	28 27	N/C	
	N/C	30 29	N/C	
	N/C	32 31	N/C	
	N/C	34 33	N/C	
	N/C	36 35	N/C	
	N/C	38 37	N/C	
	N/C	40 39	N/C	

ACRONYM	LABEL	2D	LABEL	ACRONYM	ACRONYM	LABEL	3D	LABEL	ACRONYM
CW-TX7BKR-IV	PTB3-19/2D-2	2 1	PTB3-18/2D-1	CW3-GENBKR-IV	CW3-GENBKR-IC	PTB3-51/3D-2	2 1	PTB3-50/3D-1	CW3-D4-IV
CW3-ENGRAD-IV	PTB3-21/2D-4	4 3	PTB3-20/2D-3	CW3-GENFLD-IV	CW3-GENFLD-IC	PTB3-53/3D-4	4 3	PTB3-52/3D-3	CW3-TX7BKR-IC
CW3-BKR3-IV	PTB3-23/2D-6	6 5	PTB3-22/2D-5	CW3-BKR2-IV	CW3-BKR60-1C	PTB3-55/3D-6	6 5	PTB3-54/3D-5	CW3-ENGRAD-IC
CW3-TX4BKR-IV	PTB3-25/2D-8	8 7	PTB3-24/2D-7	CW3-BKR35-IV	CW3-BKR35-1C	PTB3-57/3D-8	8 7	PTB3-56/3D-7	CW3-BKR3-IC
	N/C	10 9	COM			N/C	10 9	COM	
CW3-APPRSBY-IV	PTB3-27/2D-12	12 11	PTB3-26/2D-11	CW3-ACMOTOR-IV	CW3-TX4BKR-IC	PTB3-59/3D-12	12 11	PTB3-58/3D-11	CW3-BKR61-IC
CW3-TSIGNAL-IV	PTB3-29/2D-14	14 13	PTB3-28/2D-13	CW3-SERVLT-IV	CW3-APPRSBY-IC	PTB3-61/3D-14	14 13	PTB3-60/3D-13	CW3-ACMOTOR-1C
CW3-BKR61-IV	PTB3-31/2D-16	16 15	PTB3-30/2D-15	CW3-OFFICE-IV	CW3-TSIGNAL-IC	PTB3-63/3D-16	16 15	PTB3-62/3D-15	CW3-SERVLT-IC
CW3-HTR2-IV	PTB3-33/2D-18	18 17	PTB3-32/2D-17	CW3-BKR62-IV	CW3-HTR2-IC	PTB3-65/3D-18	18 17	PTB3-64/3D-17	CW3-OFFICE-IC
	N/C	20 19	COM			N/C	20 19	COM	
CW3-DUCTLT-IV	PTB3-35/2D-22	22 21	PTB3-34/2D-21	CW3-HTR1-IV	CW3-SHOPHTR-IC	PTB3-67/3D-22	22 21	PTB3-66/3D-21	CW3-HTR1-IC
CW3-UPS-IV	PTB3-37/2D-24	24 23	PTB3-36/2D-23	CW3-ROADLT-IV	CW3-SROADLT-1C	PTB3-69/3D-24	24 23	PTB3-68/3D-23	CW3-DUCTLT-IC
~~CW3-E1H-IV~~	~~PTB3-39/2D-26~~	26 25	PTB3-38/2D-25	CW3-SHOPHTR-IV	CW1-BKR62-IC	PTB3-71/3D-26	26 25	PTB3-70/3D-25	CW3-UPS-IC
~~CW3-B1H-IV~~	~~PTB3-41/2D-28~~	28 27	~~PTB3-40/2D-27~~	~~CW3-E2H-IV~~	CW3-SS-REM	PTB3-73/3D-28	28 27	PTB3-72/3D-27	CW3-SS-LOC
2 3 4	N/C	30 29	COM			N/C	30 29	COM	
~~CW3-E1L-IV~~	~~PTB3-43/2D-32~~	32 31	~~PTB3-42/2D-31~~	~~CW3-B2H-IV~~	CW3-XFMR-LIQT	PTB3-75/3D-32	32 31	PTB3-74/3D-31	CW3-INTRPR-IK
~~CW3-D1L-IV~~	~~PTB3-45/2D-34~~	34 33	~~PTB3-44/2D-33~~	~~CW3-E2L-IV~~	CW3-XFMR-OILL	PTB3-77/3D-34	34 33	PTB3-76/3D-33	CW3-XFMR-WINT
CW3-D1-IV	PTB3-47/2D-36	36 35	~~PTB3-46/2D-35~~	~~CW3-D2L-IV~~	CW3-RELAYPH-IK	PTB3-79/3D-36	36 35	PTB3-78/3D-35	CW3-XMFR-SUDP
CW3-D3-IV	PTB3-49/2D-38	38 37	PTB3-48/2D-37	CW3-D2-IV	C1-PHONE2-ACT	PTB3-81/3D-38	38 37	PTB3-80/3D-37	C1-PHONE1-ACT
	N/C	40 39	COM			N/C	40 39	COM	

ACRONYM	LABEL	4D	LABEL	ACRONYM	ACRONYM	LABEL	5D	LABEL	ACRONYM	ACRONYM	LABEL	6D	LABEL	ACRONYM
C1-PHONE4-ACT	PTB3-83/4D-2	2 1	PTB3-82/4D-1	C1-PHONE3-ACT	C3-PHONE10-ACT	PTB4-69/5D-2	2 1	PTB4-68/5D-1	C3-PHONE9-ACT	CW3-BAR-UP	PTB3-98	2 1	PTB3-97	CW3-BAR-DOWN
C1-PHONE6-ACT	PTB3-85/4D-4	4 3	PTB3-84/4D-3	C1-PHONE5-ACT	C3-PHONE12-ACT	PTB4-71/5D-4	4 3	PTB4-70/5D-3	C3-PHONE11-ACT	CE3-BAR-UP	PTB3-100	4 3	PTB3-99	CE3-BAR-DOWN
C1-PHONE8-ACT	PTB3-87/4D-6	6 5	PTB3-86/4D-5	C1-PHONE7-ACT	C3-PHONE14-ACT	PTB4-73/5D-6	6 5	PTB4-72/5D-5	C3-PHONE13-ACT	CW3-NROADLT-IC	PTB4-99	6 5	PTB4-98	CW3-NROADLT-IV
C1-PHONE10-ACT	PTB3-89/4D-8	8 7	PTB3-88/4D-7	C1-PHONE9-ACT	C-PHONEB-ACT	PTB4-75/5D-8	8 7	PTB4-74/5D-7	C-PHONEA-ACT		N/C	8 7	N/C	
	N/C	10 9	COM			N/C	10 9	COM			N/C	10 9	COM	
C1-PHONE12-ACT	PTB4-45/4D-12	12 11	PTB3-90/4D-11	C1-PHONE11-ACT	C-PHONED-ACT	PTB4-77/5D-12	12 11	PTB4-76/5D-11	C-PHONEC-ACT		N/C	12 11	N/C	
C2-PHONE1-ACT	PTB4-47/4D-14	14 13	PTB4-46/4D-13	C1-PHONE13-ACT	C-PHONEF-ACT	PTB4-79/5D-14	14 13	PTB4-78/5D-13	C-PHONEE-ACT		N/C	14 13	N/C	
C2-PHONE3-ACT	PTB4-49/4D-16	16 15	PTB4-48/4D-15	C2-PHONE2-ACT	C-PHONEH-ACT	PTB4-81/5D-16	16 15	PTB4-80/5D-15	C-PHONEG-ACT		N/C	16 15	N/C	
C2-PHONE5-ACT	PTB4-51/4D-18	18 17	PTB4-50/4D-17	C2-PHONE4-ACT	~~CW3-E2-RPM~~	~~PTB4-83/5D-18~~	18 17	~~PTB4-82/5D-17~~	~~CW3-E1-RPM~~		N/C	18 17	N/C	
	N/C	20 19	COM		1 3	N/C	20 19	COM	1 3		N/C	20 19	COM	
C2-PHONE7-ACT	PTB4-53/4D-22	22 21	PTB4-52/4D-21	C2-PHONE6-ACT	~~CW3-B2-RPM~~	~~PTB4-85/5D-22~~	22 21	~~PTB4-84/5D-21~~	~~CW3-D1-RPM~~		N/C	22 21	N/C	
C2-PHONE9-ACT	PTB4-55/4D-24	24 23	PTB4-54/4D-23	C2-PHONE8-ACT	CW3-D2LS-OP	PTB4-91/5D-24	24 23	PTB4-90/5D-23	CW3-D1LS-OP		N/C	24 23	N/C	
C2-PHONE11-ACT	PTB4-57/4D-26	26 25	PTB4-56/4D-25	C2-PHONE10-ACT	CW3-D4LS-OP	PTB4-94/5D-26	26 25	PTB4-92/5D-25	CW3-D3LS-OP		N/C	26 25	N/C	
C2-PHONE13-ACT	PTB4-59/4D-28	28 27	PTB4-58/4D-27	C2-PHONE12-ACT	CW3-D2LS-CL	PTB4-95/5D-28	28 27	PTB4-94/5D-27	CW3-D1LS-CL		N/C	28 27	N/C	
	N/C	30 29	COM			N/C	30 29	COM			N/C	30 29	COM	
C3-PHONE2-ACT	PTB4-61/4D-32	32 31	PTB4-60/4D-31	C3-PHONE1-ACT	CW3-D4LS-CL	PTB4-97/5D-32	32 31	PTB4-96/5D-31	CW3-D3LS-CL		N/C	32 31	N/C	
C3-PHONE4-ACT	PTB4-63/4D-34	34 33	PTB4-62/4D-33	C3-PHONE3-ACT	CW3-BD2SS-LOC	PTB4-35/5D-34	34 33	PTB4-34/5D-33	CW3-BD1SS-LOC		N/C	34 33	N/C	
C3-PHONE6-ACT	PTB4-65/4D-36	36 35	PTB4-64/4D-35	C3-PHONE5-ACT	CW3-ED2SS-LOC	PTB3-94/5D-36	36 35	PTB4-36/5D-35	CW3-ED1SS-LOC		N/C	36 35	N/C	
C3-PHONE8-ACT	PTB4-67/4D-38	38 37	PTB4-66/4D-37	C3-PHONE7-ACT	CE3-AIRPS-LOW	PTB3-96/5D-38	38 37	PTB3-95/5D-37	CW3-AIRPS-LOW		N/C	38 37	N/C	
	N/C	40 39	COM			N/C	40 39	COM			N/C	40 39	COM	

NOTES:

1. RE-ROUTE FIELD RPM SIGNALS TO NEW HIGH SPEED COUNTER MODULE xC.
2. REMOVE, COIL & STOW FIELD WIRING AT TERMINAL BLOCKS (PTBx).
3. PRESERVE PLC WIRING BETWEEN EXISTING TERMINALS (PTBx AND DIGITAL INPUT MODULE xD FOR FUTURE USE.
4. REPLACED BY MODBUS PLUS DATALINK.

DESIGN	BY G.RUSSELL	CHECKED D.LE	
DETAILS	BY D.LE	CHECKED S.LO	
QUANTITIES	BY D.LE	CHECKED S.LO	

PREPARED FOR THE STATE OF CALIFORNIA DEPARTMENT OF TRANSPORTATION

DIVISION OF ENGINEERING SERVICES
ELECTRICAL-MECHANICAL-WATER AND WASTEWATER DESIGN

BRIDGE NO. VARIES
POST MILE VARIES

SCADA SYSTEM UPGRADE: POSEY/WEBSTER STREET TUBES AND CALDECOTT TUNNEL
CALDECOTT BORE 3 WEST
PLC I TERMINATION SCHEDULE

SHEET EE4-20 -1

DOES SD Imperial Rev.1/07

ORIGINAL SCALE IN INCHES FOR REDUCED PLANS 0 1 2 3

CU 04220
EA 1A4604

DISREGARD PRINTS BEARING EARLIER REVISION DATES →
REVISION DATES (PRELIMINARY STAGE ONLY)

SHEET 58 OF 95

26-NOV-2008 13:35
EE4-20-1.dgn

DIST.	COUNTY	ROUTE	POST MILES TOTAL PROJECT	SHEET NO.	TOTAL SHEETS
04	Ala,CC	24,260	R5.9/R6.2, R0.0/R0.5,R0.9/R1.9	64	100

REGISTERED ELECTRICAL ENGINEER — 02-26-08 DATE

REGISTERED PROFESSIONAL ENGINEER ROBERT J. FEE No. E-13014 Exp. 6/30/09 ELEC STATE OF CALIFORNIA

11-24-08
PLANS APPROVAL DATE

The State of California or its officers or agents shall not be responsible for the accuracy or completeness of electronic copies of this plan sheet.

STV Incorporated
9130 Anaheim Place, Suite 210
Rancho Cucamonga, CA 91730

JDL Design, LLC
18582 Beach Blvd, Suite 229
Huntington Beach, CA 92647

LABEL	1A	LABEL	ACRONYM
COM	2 1	PTB3-1/1A-1	CW3-CSB1L-AMPS
N/C	4 3		
COM	6 5	PTB3-2/1A-5	CW3-CSB1H-AMPS
N/C	8 7		
N/C	10 9	N/C	
COM	12 11	PTB3-3/1A-11	CW3-CSE1L-AMPS
N/C	14 13		
COM	16 15	PTB3-4/1A-15	CW3-CSE1H-AMPS
N/C	18 17		
N/C	20 19	N/C	
COM	22 21	PTB3-5/1A-21	CW3-CSB2L-AMPS
N/C	24 23		
COM	26 25	PTB3-6/1A-25	CW3-CSB2H-AMPS
N/C	28 27		
N/C	30 29	N/C	
COM	32 31	PTB3-7/1A-31	CW3-CSE2L-AMPS
N/C	34 33		
COM	36 35	PTB3-8/1A-35	CW3-CSE2H-AMPS
N/C	38 37		
N/C	40 39	N/C	

LABEL	2A	LABEL	ACRONYM
COM	2 1	PTB3-9/2A-1	CW3-CO211-PPM
N/C	4 3		
COM	6 5	PTB3-10/2A-5	CW3-NO211-PPM
N/C	8 7		
N/C	10 9	N/C	
COM	12 11	PTB3-11/2A-11	CW3-CO218-PPM
N/C	14 13		
COM	16 15	PTB3-12/2A-15	CW3-NO218-PPM
N/C	18 17		
N/C	20 19	N/C	
N/C	22 21	N/C	
N/C	24 23	N/C	
N/C	26 25	N/C	
N/C	28 27	N/C	
N/C	30 29	N/C	
N/C	32 31	N/C	
N/C	34 33	N/C	
N/C	36 35	N/C	
N/C	38 37	N/C	
N/C	40 39	N/C	

LABEL	1Q	LABEL	ACRONYM
N/C	2 1	PTB5-1/1Q-1	CW3-INTRPR-TRP
N/C	4 3	PTB5-3/1Q-3	CW3-BKR-TRP
N/C	6 5	PTB5-2/1Q-5	CW3-INTRPR-CL
N/C	8 7	PTB5-4/1Q-7	CW3-BKR-CL
N/C	10 9	24V+	
N/C	12 11	N/C	
N/C	14 13	N/C	
N/C	16 15	N/C	
N/C	18 17	N/C	
N/C	20 19	PTB5-5/COM	
N/C	22 21	N/C	
N/C	24 23	N/C	
N/C	26 25	N/C	
N/C	28 27	N/C	
N/C	30 29	N/C	
N/C	32 31	N/C	
N/C	34 33	N/C	
N/C	36 35	N/C	
N/C	38 37	N/C	
N/C	40 39	N/C	

NOTES:

1. NEW LIGHTING CONTROLS.
2. REMOVE, COIL & STOW FIELD WIRING AT TERMINAL BLOCKS (PTBX).
3. PRESERVE PLC WIRING BETWEEN EXISTING BETWEEN TERMINALS (PTBX) AND DIGITAL INPUT MODULE FOR FUTURE USE.
4. REPLACED BY MODBUS PLUS DATALINK.

LABEL	2Q	LABEL	ACRONYM
N/C	2 1	~~PTB5-73/2Q-1~~	~~CW3-BS1-HIGH~~
N/C	4 3	~~PTB5-74/2Q-3~~	~~CW3-ES1-HIGH~~
N/C	6 5	~~PTB5-75/2Q-5~~	~~CW3-BS2-HIGH~~
N/C	8 7	~~PTB5-76/2Q-7~~	~~CW3-ES2-HIGH~~
L	10 9	N	2 3 4
N/C	12 11	~~PTB5-77/2Q-11~~	~~CW3-BS1-LOW~~
N/C	14 13	~~PTB5-78/2Q-13~~	~~CW3-ES1-LOW~~
N/C	16 15	~~PTB5-79/2Q-15~~	~~CW3-BS2-LOW~~
N/C	18 17	~~PTB5-80/2Q-17~~	~~CW3-ES2-LOW~~
L	20 19	N	
N/C	22 21	PTB5-81/2Q-21	CW3-D1-OP
N/C	24 23	PTB5-82/2Q-23	CW3-D3-OP
N/C	26 25	PTB5-83/2Q-25	CW3-D2-OP
N/C	28 27	PTB5-84/2Q-27	CW3-D4-OP
L	30 29	N	
N/C	32 31	PTB5-85/2Q-31	CW3-D1-CL
N/C	34 33	PTB5-86/2Q-33	CW3-D3-CL
N/C	36 35	PTB5-87/2Q-35	CW3-D2-CL
N/C	38 37	PTB5-88/2Q-37	CW3-D4-CL
L	40 39	N	

LABEL	3Q	LABEL	ACRONYM
N/C	2 1	PTB5-30/3Q-1	CW3-TL-CKT3A
N/C	4 3	PTB5-31/3Q-3	CW3-TL-CKT3B
N/C	6 5	PTB5-32/3Q-5	CW3-TL-CKT3C
N/C	8 7	PTB5-33/3Q-7	CW3-TL-CKT3D
PTB1-L	10 9	N	
N/C	12 11	PTB5-34/3Q-11	CW3-TL-CKT3E
N/C	14 13	PTB5-35/3Q-13	CW3-TL-CKT3F
N/C	16 15	NC	
N/C	18 17	PTB5-37/3Q-17	CW3-HIS-CKT
PTB1-L	20 19	N	
N/C	22 21	PTB5-38/3Q-21	CW3-TL-CKT3X
N/C	24 23	PTB5-39/3Q-23	CW3-TL-CKT3Y
N/C	26 25	PTB5-40/3Q-25	CW3-TL-CKT3Z
N/C	28 27		
PTB1-L	30 29	N	
N/C	32 31		
N/C	34 33		
N/C	36 35		
N/C	38 37		
PTB1-L	40 39	N	

1

LABEL	7D	LABEL	ACRONYM
N/C	2 1	PTB5-10/7D-1	CW3-TL-CKT3A
N/C	4 3	PTB5-11/7D-3	CW3-TL-CKT3B
N/C	6 5	PTB5-12/7D-5	CW3-TL-CKT3C
N/C	8 7	PTB5-13/7D-7	CW3-TL-CKT3D
N/C	10 9	P/COM	
N/C	12 11	PTB5-14/7D-11	CW3-TL-CKT3E
N/C	14 13	PTB5-15/7D-13	CW3-TL-CKT3F
N/C	16 15	PTB5-16/7D-15	CW3-TL-CKT3X
N/C	18 17	PTB5-17/7D-17	CW3-TL-CKT3Y
N/C	20 19	P/COM	
N/C	22 21	PTB5-18/7D-21	CW3-TL-CKT3Z
N/C	24 23	PTB5-19/7D-23	CW3-TL-AUTO
N/C	26 25	PTB5-20/7D-25	CW3-UPS-ALR
N/C	28 27	PTB5-21/7D-27	CW3-UPS-BAT
N/C	30 29	P/COM	
N/C	32 31	PTB5-22/7D-31	CW3-UPS-PWR
N/C	34 33	N/C	
N/C	36 35	N/C	
N/C	38 37	N/C	
N/C	40 39	P/COM	

1

DESIGN	BY G.RUSSELL	CHECKED D.LE	
DETAILS	BY D.LE	CHECKED S.LO	
QUANTITIES	BY D.LE	CHECKED S.LO	

PREPARED FOR THE STATE OF CALIFORNIA DEPARTMENT OF TRANSPORTATION

DIVISION OF ENGINEERING SERVICES
ELECTRICAL-MECHANICAL-WATER AND WASTEWATER DESIGN

BRIDGE NO. VARIES
POST MILE VARIES

SCADA SYSTEM UPGRADE: POSEY/WEBSTER STREET TUBES AND CALDECOTT TUNNEL
CALDECOTT BORE 3 WEST
PLC I TERMINATION SCHEDULE

SHEET EE4-20-2

DOES SD Imperial Rev.1/07

ORIGINAL SCALE IN INCHES FOR REDUCED PLANS 0 1 2 3

CU 04220
EA 1A4604

DISREGARD PRINTS BEARING EARLIER REVISION DATES →

REVISION DATES (PRELIMINARY STAGE ONLY)

SHEET 59 OF 95

26-NOV-2008 13:35

EE4-20-2.dgn

DIST.	COUNTY	ROUTE	POST MILES TOTAL PROJECT	SHEET NO.	TOTAL SHEETS
04	Ala,CC	24,260	R5.9/R6.2, R0.0/R0.5,R0.9/R1.9	65	100

REGISTERED ELECTRICAL ENGINEER — 02-26-08 DATE

REGISTERED PROFESSIONAL ENGINEER — ROBERT J. FEE — No. E-13014 — Exp. 6/30/09 — ELEC — STATE OF CALIFORNIA

11-24-08
PLANS APPROVAL DATE

The State of California or its officers or agents shall not be responsible for the accuracy or completeness of electronic copies of this plan sheet.

STV Incorporated
9130 Anaheim Place, Suite 210
Rancho Cucamonga, CA 91730

JDL Design, LLC
18582 Beach Blvd, Suite 229
Huntington Beach, CA 92647

ACRONYM	LABEL	1C	LABEL	ACRONYM
CW3-E2-RPM	PTB4-83/1C-2	2 1	PTB4-82/1C-1	CW3-E1-RPM
	DC COM	4 3	DC COM	
	N/C	6 5	N/C	
	N/C	8 7	N/C	
	N/C	10 9	N/C	
CW3-B2-RPM	PTB4-85/1C-12	12 11	PTB4-84/1C-11	CW3-B1-RPM
	DC COM	14 13	DC COM	
	N/C	16 15	N/C	
	N/C	18 17	N/C	
	N/C	20 19	N/C	
	N/C	22 21	N/C	
	N/C	24 23	N/C	
	N/C	26 25	N/C	
	N/C	28 27	N/C	
	N/C	30 29	N/C	
	N/C	32 31	N/C	1
	N/C	34 33	N/C	
	N/C	36 35	N/C	
	N/C	38 37	N/C	
	N/C	40 39	N/C	

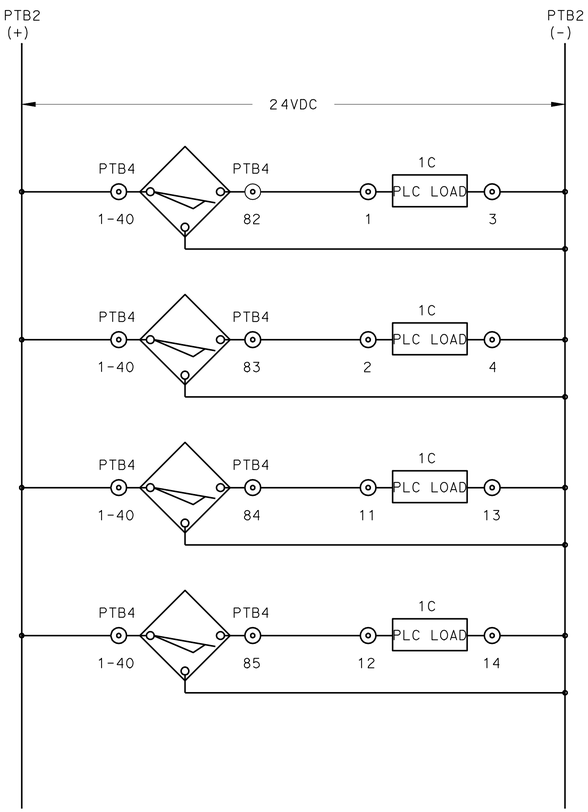

PROXIMITY SWITCH SCHEMATICS

NOTE:

1. RE-ROUTE EXISTING PROXIMITY SWITCHES (RPM) TO NEW HIGH SPEED COUNTER MODULE.

	BY	CHECKED
DESIGN	G.RUSSELL	D.LE
DETAILS	D.LE	S.LO
QUANTITIES	D.LE	S.LO

PREPARED FOR THE STATE OF CALIFORNIA DEPARTMENT OF TRANSPORTATION

DIVISION OF ENGINEERING SERVICES
ELECTRICAL-MECHANICAL-WATER AND WASTEWATER DESIGN

BRIDGE NO. VARIES
POST MILE VARIES

SCADA SYSTEM UPGRADE: POSEY/WEBSTER STREET TUBES AND CALDECOTT TUNNEL
CALDECOTT BORE 3 WEST
PLC I TERMINATION SCHEDULE

SHEET EE4-20-3

DOES SD Imperial Rev.1/07

ORIGINAL SCALE IN INCHES FOR REDUCED PLANS 0 1 2 3

CU 04220
EA 1A4604

DISREGARD PRINTS BEARING EARLIER REVISION DATES →
REVISION DATES (PRELIMINARY STAGE ONLY)

SHEET 60 OF 95

26-NOV-2008 13:35
EE4-20-3.dgn

DIST.	COUNTY	ROUTE	POST MILES TOTAL PROJECT	SHEET NO.	TOTAL SHEETS
04	Ala,CC	24,260	R5.9/R6.2, R0.0/R0.5,R0.9/R1.9	66	100

REGISTERED ELECTRICAL ENGINEER — 02-26-08 DATE

REGISTERED PROFESSIONAL ENGINEER ROBERT J. FEE No. E-13014 Exp. 6/30/09 ELEC STATE OF CALIFORNIA

11-24-08
PLANS APPROVAL DATE

The State of California or its officers or agents shall not be responsible for the accuracy or completeness of electronic copies of this plan sheet.

STV Incorporated
9130 Anaheim Place, Suite 210
Rancho Cucamonga, CA 91730

JDL Design, LLC
18582 Beach Blvd, Suite 229
Huntington Beach, CA 92647

ACRONYM	LABEL	1D	LABEL	ACRONYM
CE3-LN1E-VCT	PTB3-13/1D-2	2 1	PTB3-12/1D-1	CE3-LN1W-VCT
CE3-LN2E-VCT	PTB3-15/1D-4	4 3	PTB3-14/1D-3	CE3-LN2W-VCT
	N/C	6 5	N/C	
	N/C	8 7	N/C	
	N/C	10 9	COM	
	N/C	12 11	N/C	
	N/C	14 13	N/C	
	N/C	16 15	N/C	
	N/C	18 17	N/C	
	N/C	20 19	N/C	
	N/C	22 21	N/C	
	N/C	24 23	N/C	
	N/C	26 25	N/C	
	N/C	28 27	N/C	
	N/C	30 29	N/C	
	N/C	32 31	N/C	
	N/C	34 33	N/C	
	N/C	36 35	N/C	
	N/C	38 37	N/C	
	N/C	40 39	N/C	

ACRONYM	LABEL	2D	LABEL	ACRONYM
CE3-APPRS-IV	PTB3-2/2D-2	2 1	PTB3-1/2D-1	CE3-APPRN-IV
CE3-BKR55-IV	PTB3-4/2D-4	4 3	PTB3-3/2D-3	CE3-TSIGNAL-IV
CE3-LTLEFT-IV	PTB3-6/2D-6	6 5	PTB3-5/2D-5	CE3-LTRIGHT-IV
CE3-APPRS-IC	PTB3-8/2D-8	8 7	PTB3-7/2D-7	CE3-APPRN-IC
	N/C	10 9	COM	
CE3-LTRIGHT-IC	PTB3-10/2D-12	12 11	PTB3-9/2D-11	CE3-TSIGNAL-IC
	N/C	14 13	PTB3-11/2D-13	CE3-LTLEFT-IC
	N/C	16 15	PTB4-19/2D-15	CE3-TL-AUTO
	N/C	18 17	PTB4-20/2D-17	CE3-TL-CKT6A
	N/C	20 19	COM	
	N/C	22 21	PTB4-21/2D-21	CE3-TL-CKT6B
	N/C	24 23	PTB4-22/2D-23	CE3-TL-CKT6C
	N/C	26 25	PTB4-23/2D-25	CE3-TL-CKT6D
	N/C	28 27	PTB4-24/2D-27	CE3-TL-CKT6E
	N/C	30 29	COM	
	N/C	32 31	PTB4-25/2D-31	CE3-TL-CKT6F
	N/C	34 33	PTB4-26/2D-33	CE3-TL-CKT6X
	N/C	36 35	PTB4-27/2D-35	CE3-TL-CKT6Y
	N/C	38 37	PTB4-28/2D-37	CE3-TL-CKT6Z
	N/C	40 39	COM	

1

LABEL	1A	LABEL	ACRONYM
COM	2 1	PTB3-27/1A-1	CE3-CO226-PPM
N/C	4 3		
COM	6 5	PTB3-28/1A-5	CE3-NO226-PPM
N/C	8 7		
N/C	10 9	N/C	
COM	12 11	PTB3-29/1A-11	CE3-CO234-PPM
N/C	14 13		
COM	16 15	PTB3-30/1A-15	CE3-NO234-PPM
N/C	18 17		
N/C	20 19	N/C	
N/C	22 21	N/C	
N/C	24 23	N/C	
N/C	26 25	N/C	
N/C	28 27	N/C	
N/C	30 29	N/C	
N/C	32 31	N/C	
N/C	34 33	N/C	
N/C	36 35	N/C	
N/C	38 37	N/C	
N/C	40 39	N/C	

LABEL	1Q*	LABEL	ACRONYM
N/C	2 1	PTB4-1/1Q-1	CE3-TL-CKT6A
N/C	4 3	PTB4-2/1Q-3	CE3-TL-CKT6B
N/C	6 5	PTB4-3/1Q-5	CE3-TL-CKT6C
N/C	8 7	PTB4-4/1Q-7	CE3-TL-CKT6D
N/C	10 9	COM	
N/C	12 11	PTB4-5/1Q-11	CE3-TL-CKT6E
N/C	14 13	PTB4-6/1Q-13	CE3-TL-CKT6F
N/C	16 15	PTB4-7/1Q-15	CE3-TL-CKT6X
N/C	18 17	PTB4-8/1Q-17	CE3-TL-CKT6Y
N/C	20 19	COM	
N/C	22 21	PTB4-9/1Q-21	CE3-TL-CKT6Z
N/C	24 23	N/C	
N/C	26 25	N/C	
N/C	28 27	N/C	
N/C	30 29	N/C	
N/C	32 31	N/C	
N/C	34 33	N/C	
N/C	36 35	N/C	
N/C	38 37	N/C	
N/C	40 39	N/C	

1

NOTE:

1 LIGHTING CONTROLS

* ALL EXISTING EQUIPMENT

	BY	CHECKED
DESIGN	G.RUSSELL	D.LE
DETAILS	D.LE	S.LO
QUANTITIES	D.LE	S.LO

PREPARED FOR THE STATE OF CALIFORNIA DEPARTMENT OF TRANSPORTATION

DIVISION OF ENGINEERING SERVICES
ELECTRICAL-MECHANICAL-WATER AND WASTEWATER DESIGN

BRIDGE NO. VARIES
POST MILE VARIES

SCADA SYSTEM UPGRADE: POSEY/WEBSTER STREET TUBES AND CALDECOTT TUNNEL
CALDECOTT BORE 3 EAST
PLC 2 TERMINATION SCHEDULE

SHEET **EE4-21**

DOES SD Imperial Rev.1/07

ORIGINAL SCALE IN INCHES FOR REDUCED PLANS 0 1 2 3

CU 04220
EA 1A4604

DISREGARD PRINTS BEARING EARLIER REVISION DATES →
REVISION DATES (PRELIMINARY STAGE ONLY)

SHEET 61 OF 95

26-NOV-2008 13:36
EE4-21.dgn

DIST.	COUNTY	ROUTE	POST MILES TOTAL PROJECT	SHEET NO.	TOTAL SHEETS
04	Ala,CC	24,260	R5.9/R6.2, R0.0/R0.5,R0.9/R1.9	67	100

REGISTERED ELECTRICAL ENGINEER — 02-26-08 DATE

REGISTERED PROFESSIONAL ENGINEER — ROBERT J. FEE — No. E-13014 — Exp. 6/30/09 — ELEC — STATE OF CALIFORNIA

11-24-08
PLANS APPROVAL DATE

The State of California or its officers or agents shall not be responsible for the accuracy or completeness of electronic copies of this plan sheet.

STV Incorporated
9130 Anaheim Place, Suite 210
Rancho Cucamonga, CA 91730

JDL Design, LLC
18582 Beach Blvd, Suite 229
Huntington Beach, CA 92647

1D

ACRONYM	LABEL	1D	LABEL	ACRONYM
CW1-LN1E-VCT	PTB5-26/1D-2	2 1	PTB5-25/1D-1	CW1-LN1W-VCT
CW1-LN2E-VCT	PTB5-28/1D-4	4 3	PTB5-27/1D-3	CW1-LN2W-VCT
CW2-LN1E-VCT	PTB5-30/1D-6	6 5	PTB5-29/1D-5	CW2-LN1W-VCT
CW2-LN2E-VCT	PTB5-32/1D-8	8 7	PTB5-31/1D-7	CW2-LN2W-VCT
	N/C	10 9	COM	
CW1-BD1SS-LOC	*PTB8-26/1D-12*	12 11	*PTB8-25/1D-11*	*CW1-ED1SS-LOC*
CW1-BD2SS-LOC	*PTB8-28/1D-14*	14 13	*PTB8-27/1D-13*	*CW1-ED2SS-LOC*
CW2-BD3SS-LOC	*PTB8-30/1D-16*	16 15	*PTB8-29/1D-15*	*CW2-ED3SS-LOC*
CW2-BD4SS-LOC	*PTB8-32/1D-18*	18 17	*PTB8-31/1D-17*	*CW2-ED4SS-LOC*
	N/C	20 19	COM	
CW1-ED1LS-CL	*PTB8-34/1D-22*	22 21	*PTB8-33/1D-21*	*CW1-ED1LS-OP*
CW1-BD1LS-CL	*PTB8-36/1D-24*	24 23	*PTB8-35/1D-23*	*CW1-BD1LS-OP*
CW1-ED2LS-CL	*PTB8-38/1D-26*	26 25	*PTB8-37/1D-25*	*CW1-ED2LS-OP*
CW1-BD2LS-CL	*PTB8-40/1D-28*	28 27	*PTB8-39/1D-27*	*CW1-BD2LS-OP*
	N/C	30 29	COM	
CW2-ED3LS-CL	*PTB8-42/1D-32*	32 31	*PTB8-41/1D-31*	*CW2-ED3LS-OP*
CW2-BD3LS-CL	*PTB8-44/1D-34*	34 33	*PTB8-43/1D-33*	*CW2-BD3LS-OP*
CW2-ED4LS-CL	*PTB8-46/1D-36*	36 35	*PTB8-45/1D-35*	*CW2-ED4LS-OP*
CW2-BD4LS-CL	*PTB8-48/1D-38*	38 37	*PTB8-47/1D-37*	*CW2-BD4LS-OP*
3 7	N/C	40 39	COM	3 7

2D

ACRONYM	LABEL	2D	LABEL	ACRONYM
CW1-CAPACIT-IV	PTB4-2/2D-2	2 1	PTB4-1/2D-1	CW1-SHOPHTR-IV
~~CW1-E2-IV~~	~~PTB4-4/2D-4~~	4 3	~~PTB4-3/2D-3~~	~~CW1-E1-IV~~
~~CW1-B2-IV~~	~~PTB4-6/2D-6~~	6 5	~~PTB4-5/2D-5~~	~~CW1-B1-IV~~
~~CW2-E4-IV~~	~~PTB4-8/2D-8~~	8 7	~~PTB4-7/2D-7~~	~~CW2-E3-IV~~
4 5 6	N/C	10 9	COM	4 5 6
~~CW2-B4-IV~~	~~PTB4-10/2D-12~~	12 11	~~PTB4-9/2D-11~~	~~CW2-B3-IV~~
CW1-ADUCT2-IC	PTB4-12/2D-14	14 13	PTB4-11/2D-13	CW1-PBD1&2-IC
CW1-ROADLT2-IC	PTB4-14/2D-16	16 15	PTB4-13/2D-15	CW1-ADUCT1-IC
CW1-SHOPHTR-IC	PTB4-16/2D-18	18 17	PTB4-15/2D-17	CW1-ROADLT1-IC
	N/C	20 19	COM	
CW1-PBD1&2-IV	PTB4-18/2D-22	22 21	PTB4-17/2D-21	CW1-CAPACIT-IC
CW1-ADUCT1-IV	PTB4-20/2D-24	24 23	PTB4-19/2D-23	CW1-ADUCT2-IV
CW1-ROADLT1-IV	PTB4-22/2D-26	26 25	PTB4-21/2D-25	CW1-ROADLT2-IV
~~CW1-E2-RPM~~	~~PTB4-24/2D-28~~	28 27	~~PTB4-23/2D-27~~	~~CW1-E1-RPM~~
1 5	N/C	30 29	COM	1 5
~~CW1-B2-RPM~~	~~PTB4-26/2D-32~~	32 31	~~PTB4-25/2D-31~~	~~CW1-B1-RPM~~
~~CW2-E4-RPM~~	~~PTB5-22/2D-34~~	34 33	~~PTB5-21/2D-33~~	~~CW2-E3-RPM~~
~~CW2-B4-RPM~~	~~PTB5-24/2D-36~~	36 35	~~PTB5-23/2D-35~~	~~CW2-B3-RPM~~
	N/C	38 37	N/C	
	N/C	40 39	COM	

1A

LABEL	1A	LABEL	ACRONYM
COM	2 1	PTB3-1/1A-1	CW1-CSE1-AMPS
N/C	4 3		
COM	6 5	PTB3-2/1A-5	CW1-CSE2-AMPS
N/C	8 7		
N/C	10 9	N/C	
COM	12 11	PTB3-3/1A-11	CW1-CSB1-AMPS
N/C	14 13		
COM	16 15	PTB3-4/1A-15	CW1-CSB2-AMPS
N/C	18 17		
N/C	20 19	N/C	
COM	22 21	PTB3-5/1A-21	CW2-CSE3-AMPS
N/C	24 23		
COM	26 25	PTB3-6/1A-25	CW2-CSE4-AMPS
N/C	28 27		
N/C	30 29	N/C	
COM	32 31	PTB3-7/1A-31	CW2-CSB3-AMPS
N/C	34 33		
COM	36 35	PTB3-8/1A-35	CW2-CSB4-AMPS
N/C	38 37		
N/C	40 39	N/C	

2A

LABEL	2A	LABEL	ACRONYM
COM	2 1	PTB3-9/2A-1	CW1-CO118-PPM
N/C	4 3		
COM	6 5	PTB3-10/2A-5	CW1-NO118-PPM
N/C	8 7		
N/C	10 9	N/C	
COM	12 11	PTB3-11/2A-11	CW1-CO124-PPM
N/C	14 13		
COM	16 15	PTB3-12/2A-15	CW1-NO124-PPM
N/C	18 17		
N/C	20 19	N/C	
COM	22 21	PTB3-13/2A-21	CW2-CO115-PPM
N/C	24 23		
COM	26 25	PTB3-14/2A-25	CW2-NO115-PPM
N/C	28 27		
N/C	30 29	N/C	
COM	32 31	PTB3-15/2A-31	CW2-CO122-PPM
N/C	34 33		
COM	36 35	PTB3-16/2A-35	CW2-NO122-PPM
N/C	38 37		
N/C	40 39	N/C	

2Q

LABEL	2Q	LABEL	*ACRONYM*	*ACRONYM*
N/C	2 1	PTB6-17/2Q-1	CW1-ED1-OP	~~CW1-ES1-HIGH~~
N/C	4 3	PTB6-18/2Q-3	CW1-BD1-OP	~~CW1-BS1-HIGH~~
N/C	6 5	PTB6-19/2Q-5	CW1-ED2-OP	~~CW1-ES2-HIGH~~
N/C	8 7	PTB6-20/2Q-7	CW1-BD2-OP	~~CW1-BS2-HIGH~~
L	10 9	N		
N/C	12 11	PTB6-21/2Q-11	CW2-ED3-OP	~~CW2-ES3-HIGH~~
N/C	14 13	PTB6-22/2Q-13	CW2-BD3-OP	~~CW2-BS3-HIGH~~
N/C	16 15	PTB6-23/2Q-15	CW2-ED4-OP	~~CW2-ES4-HIGH~~
N/C	18 17	PTB6-24/2Q-17	CW2-BD4-OP	~~CW2-BS4-HIGH~~
L	20 19	N		2 7
N/C	22 21	PTB6-25/2Q-21	CW1-ED1-CL	~~CW1-ES1-LOW~~
N/C	24 23	PTB6-26/2Q-23	CW1-BD1-CL	~~CW1-BS1-LOW~~
N/C	26 25	PTB6-27/2Q-25	CW1-ED2-CL	~~CW1-ES2-LOW~~
N/C	28 27	PTB6-28/2Q-27	CW1-BD2-CL	~~CW1-BS2-LOW~~
L	30 29	N		
N/C	32 31	PTB6-29/2Q-31	CW2-ED3-CL	~~CW2-ES3-LOW~~
N/C	34 33	PTB6-30/2Q-33	CW2-BD3-CL	~~CW2-BS3-LOW~~
N/C	36 35	PTB6-31/2Q-35	CW2-ED4-CL	~~CW2-ES4-LOW~~
N/C	38 37	PTB6-32/2Q-37	CW2-BD4-CL	~~CW2-BS4-LOW~~
L	40 39	N		

NOTES:

1. RE-ROUTE FIELD RPM SIGNALS TO NEW HIGH SPEED COUNTER MODULE xC.
2. REMOVE BLOWER STARTER WIRING AT TERMINAL BLOCKS REUSE TERMINATIONS FOR NEW DAMPER STARTER CONTROLS.
3. TERMINATIONS FOR NEW DAMPER INPUT SIGNALS.
4. REMOVE, COIL & STOW FIELD WIRING AT TERMINAL BLOCKS (PTBx).
5. PRESERVE PLC WIRING BETWEEN EXISTING TERMINALS (PTBx AND DIGITAL INPUT MODULE xD FOR FUTURE USE.
6. REPLACED BY MODBUS PLUS DATALINK.
7. SEE DWG. EE4-18 & 19 FOR DETAILS.

	BY	CHECKED
DESIGN	G.RUSSELL	D.LE
DETAILS	D.LE	S.LO
QUANTITIES	D.LE	S.LO

PREPARED FOR THE STATE OF CALIFORNIA DEPARTMENT OF TRANSPORTATION

DIVISION OF ENGINEERING SERVICES ELECTRICAL-MECHANICAL-WATER AND WASTEWATER DESIGN

BRIDGE NO. VARIES
POST MILE VARIES

SCADA SYSTEM UPGRADE: POSEY/WEBSTER STREET TUBES AND CALDECOTT TUNNEL
CALDECOTT BORES 1 & 2 WEST
PLC 3 TERMINATION SCHEDULE

SHEET EE4-22-1

DOES SD Imperial Rev.1/07

ORIGINAL SCALE IN INCHES FOR REDUCED PLANS 0 1 2 3

CU 04220
EA 1A4604

DISREGARD PRINTS BEARING EARLIER REVISION DATES →
REVISION DATES (PRELIMINARY STAGE ONLY)

SHEET 62 OF 95

26-NOV-2008 13:36
EE4-22-1.dgn

DIST.	COUNTY	ROUTE	POST MILES TOTAL PROJECT	SHEET NO.	TOTAL SHEETS
04	Ala,CC	24,260	R5.9/R6.2, R0.0/R0.5,R0.9/R1.9	68	100

REGISTERED ELECTRICAL ENGINEER — 02-26-08 DATE

REGISTERED PROFESSIONAL ENGINEER ROBERT J. FEE No. E-13014 Exp. 6/30/09 ELEC STATE OF CALIFORNIA

11-24-08
PLANS APPROVAL DATE

The State of California or its officers or agents shall not be responsible for the accuracy or completeness of electronic copies of this plan sheet.

STV Incorporated
9130 Anaheim Place, Suite 210
Rancho Cucamonga, CA 91730

JDL Design, LLC
18582 Beach Blvd, Suite 229
Huntington Beach, CA 92647

ACRONYM	LABEL	4D	LABEL	ACRONYM
CW2-UPS-ALR	PTB7-17/4D-2	2 1	PTB7-1/4D-1	CW2-TL-CKT2A
CW2-UPS-BAT	PTB7-18/4D-4	4 3	PTB7-2/4D-3	CW2-TL-CKT2B
CW2-TL-AUTO	PTB7-19/4D-6	6 5	PTB7-3/4D-5	CW2-TL-CKT2C
CW1-TL-AUTO	PTB7-20/4D-8	8 7	PTB7-4/4D-7	CW2-TL-CKT2D
	N/C	10 9	COM	
CW2-UPS-PWR	PTB7-21/4D-12	12 11	PTB7-5/4D-11	CW2-TL-CKT2V
	N/C	14 13	PTB7-6/4D-13	CW2-TL-CKT2X
	N/C	16 15	PTB7-7/4D-15	CW2-TL-CKT2Y
	N/C	18 17	PTB7-8/4D-17	CW2-TL-CKT2Z
	N/C	20 19	COM	
	N/C	22 21	PTB7-9/4D-21	CW1-TL-CKT1A
	N/C	24 23	PTB7-10/4D-23	CW1-TL-CKT1B
	N/C	26 25	PTB7-11/4D-25	CW1-TL-CKT1C
	N/C	28 27	PTB7-12/4D-27	CW1-TL-CKT1D
	N/C	30 29	COM	
	N/C	32 31	PTB7-13/4D-31	CW1-TL-CKT1X
	N/C	34 33	PTB7-14/4D-33	CW1-TL-CKT1Y
	N/C	36 35	PTB7-15/4D-35	CW1-TL-CKT1Z
	N/C	38 37	PTB7-16/4D-37	CW1-TL-CKT1W
	N/C	40 39	COM	

1

LABEL	3A	LABEL	ACRONYM
COM	2 1	PTB3-17/3A-1	CW1-SEN-AMP
N/C	4 3		
N/C	6 5	N/C	
N/C	8 7	N/C	
N/C	10 9	N/C	
N/C	12 11	N/C	
N/C	14 13	N/C	
N/C	16 15	N/C	
N/C	18 17	N/C	
N/C	20 19	N/C	
N/C	22 21	N/C	
N/C	24 23	N/C	
N/C	26 25	N/C	
N/C	28 27	N/C	
N/C	30 29	N/C	
N/C	32 31	N/C	
N/C	34 33	N/C	
N/C	36 35	N/C	
N/C	38 37	N/C	
N/C	40 39	N/C	

1

LABEL	3Q	LABEL	ACRONYM
N/C	2 1	PTB7-30/3Q-1	CW2-TL-CKT2A
N/C	4 3	PTB7-31/3Q-3	CW2-TL-CKT2B
N/C	6 5	PTB7-32/3Q-5	CW2-TL-CKT2C
N/C	8 7	PTB7-33/3Q-7	CW2-TL-CKT2D
L	10 9	N	
N/C	12 11	PTB7-34/3Q-11	CW2-TL-CKT2V
N/C	14 13	PTB7-35/3Q-13	CW2-TL-CKT2X
N/C	16 15	PTB7-36/3Q-15	CW2-TL-CKT2Y
N/C	18 17	PTB7-37/3Q-17	CW2-TL-CKT2Z
L	20 19	N	
N/C	22 21	PTB7-38/3Q-21	CW1-TL-CKT1A
N/C	24 23	PTB7-39/3Q-23	CW1-TL-CKT1B
N/C	26 25	PTB7-40/3Q-25	CW1-TL-CKT1C
N/C	28 27	PTB7-41/3Q-27	CW1-TL-CKT1D
L	30 29	N	
N/C	32 31	PTB7-42/3Q-31	CW1-TL-CKT1X
N/C	34 33	PTB7-43/3Q-33	CW1-TL-CKT1Y
N/C	36 35	PTB7-44/3Q-35	CW1-TL-CKT1Z
N/C	38 37	PTB7-45/3Q-37	CW1-TL-CKT1W
L	40 39	N	

1

LABEL	4Q	LABEL	ACRONYM
N/C	2 1	PTB7-46/4Q-1	CW2-UPS-CKT2X
N/C	4 3	PTB7-47/4Q-3	CW2-UPS-CKT2Y
N/C	6 5	PTB7-48/4Q-5	CW2-UPS-CKT2Z
N/C	8 7	PTB7-49/4Q-7	CW1-UPS-CKT1X
L	10 9	N	
N/C	12 11	PTB7-50/4Q-11	CW1-UPS-CKT1Y
N/C	14 13	PTB7-51/4Q-13	CW1-UPS-CKT1Z
N/C	16 15		
N/C	18 17		
L	20 19	N	
N/C	22 21		
N/C	24 23		
N/C	26 25		
N/C	28 27		
L	30 29	N	
N/C	32 31		
N/C	34 33		
N/C	36 35		
N/C	38 37		
L	40 39	N	

1

NOTE:

1 LIGHTING CONTROLS

	BY	CHECKED
DESIGN	G.RUSSELL	D.LE
DETAILS	D.LE	S.LO
QUANTITIES	D.LE	S.LO

PREPARED FOR THE STATE OF CALIFORNIA DEPARTMENT OF TRANSPORTATION

DIVISION OF ENGINEERING SERVICES ELECTRICAL-MECHANICAL-WATER AND WASTEWATER DESIGN

BRIDGE NO. VARIES
POST MILE VARIES

SCADA SYSTEM UPGRADE: POSEY/WEBSTER STREET TUBES AND CALDECOTT TUNNEL
CALDECOTT BORES 1 & 2 WEST
PLC 3 TERMINATION SCHEDULE

SHEET EE4-22-2

DOES SD Imperial Rev.1/07

ORIGINAL SCALE IN INCHES FOR REDUCED PLANS 0 1 2 3

CU 04220
EA 1A4604

DISREGARD PRINTS BEARING EARLIER REVISION DATES →

REVISION DATES (PRELIMINARY STAGE ONLY)

SHEET 63 OF 95

26-NOV-2008 13:36
EE4-22-2.dgn

DIST.	COUNTY	ROUTE	POST MILES TOTAL PROJECT	SHEET NO.	TOTAL SHEETS
04	Ala,CC	24,260	R5.9/R6.2, R0.0/R0.5,R0.9/R1.9	69	100

REGISTERED ELECTRICAL ENGINEER — 02-26-08 DATE

REGISTERED PROFESSIONAL ENGINEER — ROBERT J. FEE — No. E-13014 — Exp. 6/30/09 — ELEC — STATE OF CALIFORNIA

11-24-08
PLANS APPROVAL DATE

The State of California or its officers or agents shall not be responsible for the accuracy or completeness of electronic copies of this plan sheet.

STV Incorporated
9130 Anaheim Place, Suite 210
Rancho Cucamonga, CA 91730

JDL Design, LLC
18582 Beach Blvd, Suite 229
Huntington Beach, CA 92647

ACRONYM	LABEL	1C	LABEL	ACRONYM
CW1-E2-RPM	PTB4-24/1C-2	2 1	PTB4-23/1C-1	CW1-E1-RPM
	DC COM	4 3	DC COM	
	N/C	6 5	N/C	
	N/C	8 7	N/C	
	N/C	10 9	N/C	
CW1-B2-RPM	PTB4-26/1C-12	12 11	PTB4-25/1C-11	CW1-B1-RPM
	DC COM	14 13	DC COM	
	N/C	16 15	N/C	
	N/C	18 17	N/C	
	N/C	20 19	N/C	
CW2-E4-RPM	PTB5-22/1C-22	22 21	PTB5-21/1C-21	CW2-E3-RPM
	DC COM	24 23	DC COM	
	N/C	26 25	N/C	
	N/C	28 27	N/C	
	N/C	30 29	N/C	
CW2-B4-RPM	PTB5-24/1C-32	32 31	PTB5-23/1C-31	CW2-B3-RPM
	DC COM	34 33	DC COM	
	N/C	36 35	N/C	
	N/C	38 37	N/C	
	N/C	40 39	N/C	

1

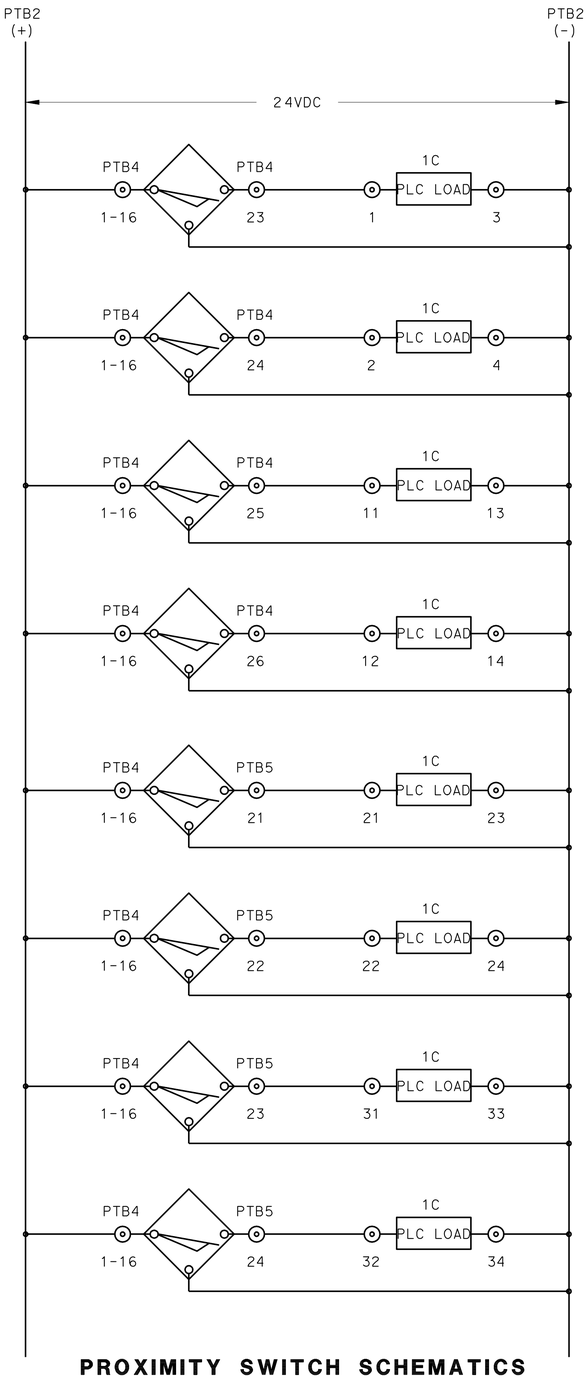

PROXIMITY SWITCH SCHEMATICS

NOTE:

1. RE-ROUTE EXISITNG PROXIMITY SWITCHES (RPM) TO NEW HIGH SPEED COUNTER MODULE.

DESIGN	BY G.RUSSELL	CHECKED D.LE	
DETAILS	BY D.LE	CHECKED S.LO	
QUANTITIES	BY D.LE	CHECKED S.LO	

PREPARED FOR THE STATE OF CALIFORNIA DEPARTMENT OF TRANSPORTATION

DIVISION OF ENGINEERING SERVICES
ELECTRICAL-MECHANICAL-WATER AND WASTEWATER DESIGN

BRIDGE NO. VARIES
POST MILE VARIES

SCADA SYSTEM UPGRADE: POSEY/WEBSTER STREET TUBES AND CALDECOTT TUNNEL
CALDECOTT BORES 1 & 2 WEST
PLC 3 TERMINATION SCHEDULE

SHEET EE4-22 -3

DOES SD Imperial Rev.1/07

ORIGINAL SCALE IN INCHES FOR REDUCED PLANS 0 1 2 3

CU 04220
EA 1A4604

DISREGARD PRINTS BEARING EARLIER REVISION DATES →
REVISION DATES (PRELIMINARY STAGE ONLY)

SHEET 64 OF 95

26-NOV-2008 13:36
EE4-22-3.dgn

DIST.	COUNTY	ROUTE	POST MILES TOTAL PROJECT	SHEET NO.	TOTAL SHEETS
04	Ala,CC	24,260	R5.9/R6.2, R0.0/R0.5,R0.9/R1.9	70	100

REGISTERED ELECTRICAL ENGINEER — 02-26-08 DATE

REGISTERED PROFESSIONAL ENGINEER ROBERT J. FEE No. E-13014 Exp. 6/30/09 ELEC STATE OF CALIFORNIA

11-24-08
PLANS APPROVAL DATE

The State of California or its officers or agents shall not be responsible for the accuracy or completeness of electronic copies of this plan sheet.

STV Incorporated
9130 Anaheim Place, Suite 210
Rancho Cucamonga, CA 91730

JDL Design, LLC
18582 Beach Blvd, Suite 229
Huntington Beach, CA 92647

ACRONYM	LABEL	1D	LABEL	ACRONYM
CE1-LN1E-VCT	PTB5-29/1D-2	2 1	PTB5-28/1D-1	CE1-LN1W-VCT
CE1-LN2E-VCT	PTB5-31/1D-4	4 3	PTB5-30/1D-3	CE1-LN2W-VCT
CE2-LN1E-VCT	PTB5-33/1D-6	6 5	PTB5-32/1D-5	CE2-LN1W-VCT
CE2-LN2E-VCT	PTB5-35/1D-8	8 7	PTB5-34/1D-7	CE2-LN2W-VCT
	N/C	10 9	COM	
CE1-BD5SS-LOC	PTB8-26/1D-12	12 11	PTB8-25/1D-11	CE1-ED5SS-LOC
CE1-BD6SS-LOC	PTB8-28/1D-14	14 13	PTB8-27/1D-13	CE1-ED6SS-LOC
CE2-BD7SS-LOC	PTB8-30/1D-16	16 15	PTB8-29/1D-15	CE2-ED7SS-LOC
CE2-BD8SS-LOC	PTB8-32/1D-18	18 17	PTB8-31/1D-17	CE2-ED8SS-LOC
	N/C	20 19	COM	
CE1-ED5LS-CL	PTB8-34/1D-22	22 21	PTB8-33/1D-21	CE1-ED5LS-OP
CE1-BD5LS-CL	PTB8-36/1D-24	24 23	PTB8-35/1D-23	CE1-BD5LS-OP
CE1-ED6LS-CL	PTB8-38/1D-26	26 25	PTB8-37/1D-25	CE1-ED6LS-OP
CE1-BD6LS-CL	PTB8-40/1D-28	28 27	PTB8-39/1D-27	CE1-BD6LS-OP
	N/C	30 29	COM	
CE2-ED7LS-CL	PTB8-42/1D-32	32 31	PTB8-41/1D-31	CE2-ED7LS-OP
CE2-BD7LS-CL	PTB8-44/1D-34	34 33	PTB8-43/1D-33	CE2-BD7SS-OP
CE2-ED8LS-CL	PTB8-46/1D-36	36 35	PTB8-45/1D-35	CE2-ED8LS-OP
CE2-BD8LS-CL	PTB8-48/1D-38	38 37	PTB8-47/1D-37	CE2-BD8LS-OP
	3 7 N/C	40 39	COM	3 7

ACRONYM	LABEL	2D	LABEL	ACRONYM
CE1-ADUCT2-IV	PTB4-2/2D-2	2 1	PTB4-1/2D-1	CE1-PBD1&2-IV
CE1-ROADLT2-IV	PTB4-4/2D-4	4 3	PTB4-3/2D-3	CE1-ADUCT1-IV
CE1-BKR67-IV	PTB4-6/2D-6	6 5	PTB4-5/2D-5	CE1-ROADLT1-IV
CE3-BKR34-IV	PTB4-8/2D-8	8 7	PTB4-7/2D-7	CE1-BKR68-IV
	N/C	10 9	COM	
~~CE1-E6-IV~~	~~PTB4-10/2D-12~~	12 11	~~PTB4-9/2D-11~~	~~CE1-E5-IV~~
~~CE1-B6-IV~~	~~PTB4-12/2D-14~~	14 13	~~PTB4-11/2D-13~~	~~CE1-B5-IV~~
~~CE2-E8-IV~~	~~PTB4-14/2D-16~~	16 15	~~PTB4-13/2D-15~~	~~CE2-E7-IV~~
~~CE2-B8-IV~~	~~PTB4-16/2D-18~~	18 17	~~PTB4-15/2D-17~~	~~CE2-B7-IV~~
4 5 6	N/C	20 19	COM	4 5 6
CE1-PBD1&2-IC	PTB4-18/2D-22	22 21	PTB4-17/2D-21	CE2-CAPACIT-IV
CE1-ADUCT1-IC	PTB4-20/2D-24	24 23	PTB4-19/2D-23	CE1-ADUCT2-IC
CE1-ROADLT1-IC	PTB4-22/2D-26	26 25	PTB4-21/2D-25	CE1-ROADLT2-IC
CE1-BKR67-IC	PTB4-24/2D-28	28 27	PTB4-23/2D-27	CE2-CAPACIT-IC
	N/C	30 29	COM	
CE3-BKR34-IC	PTB4-26/2D-32	32 31	PTB4-25/2D-31	CE1-BKR68-IC
CE1-XFMR-WINT	PTB4-28/2D-34	34 33	PTB4-27/2D-33	CE1-XFMR-LIQT
CE1-XFMR-SUDP	PTB4-30/2D-36	36 35	PTB4-29/2D-35	CE1-XFMR-OILL
~~CE1-E6-RPM~~	~~PTB5-21/2D-38~~	38 37	~~PTB4-31/2D-37~~	~~CE1-E5-RPM~~
1 5	N/C	40 39	COM	1 5

ACRONYM	LABEL	3D	LABEL	ACRONYM
~~CE1-B6-RPM~~	~~PTB5-23/3D-2~~	2 1	~~PTB5-22/3D-1~~	~~CE1-B5-RPM~~
~~CE2-E8-RPM~~	~~PTB5-25/3D-4~~	4 3	~~PTB5-24/3D-3~~	~~CE2-E7-RPM~~
~~CE2-B8-RPM~~	~~PTB5-27/3D-6~~	6 5	~~PTB5-26/3D-5~~	~~CE2-B7-RPM~~
1 5	N/C	8 7	N/C	1 5
	N/C	10 9	COM	
	N/C	12 11	N/C	
	N/C	14 13	N/C	
	N/C	16 15	N/C	
	N/C	18 17	N/C	
	N/C	20 19	N/C	
	N/C	22 21	N/C	
	N/C	24 23	N/C	
	N/C	26 25	N/C	
	N/C	28 27	N/C	
	N/C	30 29	N/C	
	N/C	32 31	N/C	
	N/C	34 33	N/C	
	N/C	36 35	N/C	
	N/C	38 37	N/C	
	N/C	40 39	N/C	

LABEL	1A	LABEL	ACRONYM
COM	2 1	PTB3-1/1A-1	CE1-CSE5-AMPS
N/C	4 3		
COM	6 5	PTB3-2/1A-5	CE1-CSE6-AMPS
N/C	8 7		
N/C	10 9	N/C	
COM	12 11	PTB3-3/1A-11	CE1-CSB5-AMPS
N/C	14 13		
COM	16 15	PTB3-4/1A-15	CE1-CSB6-AMPS
N/C	18 17		
N/C	20 19	N/C	
COM	22 21	PTB3-5/1A-21	CE2-CSE7-AMPS
N/C	24 23		
COM	26 25	PTB3-6/1A-25	CE2-CSE8-AMPS
N/C	28 27		
N/C	30 29	N/C	
COM	32 31	PTB3-7/1A-31	CE2-CSB7-AMPS
N/C	34 33		
COM	36 35	PTB3-8/1A-35	CE2-CSB8-AMPS
N/C	38 37		
N/C	40 39	N/C	

LABEL	2A	LABEL	ACRONYM
COM	2 1	PTB3-9/2A-1	CE1-CO131-PPM
N/C	4 3		
COM	6 5	PTB3-10/2A-5	CE1-NO131-PPM
N/C	8 7		
N/C	10 9	N/C	
COM	12 11	PTB3-11/2A-11	CE1-CO138-PPM
N/C	14 13		
COM	16 15	PTB3-12/2A-15	CE1-NO138-PPM
N/C	18 17		
N/C	20 19	N/C	
COM	22 21	PTB3-13/2A-21	CE2-CO130-PPM
N/C	24 23		
COM	26 25	PTB3-14/2A-25	CE2-NO130-PPM
N/C	28 27		
N/C	30 29	N/C	
COM	32 31	PTB3-15/2A-31	CE2-CO137-PPM
N/C	34 33		
COM	36 35	PTB3-16/2A-35	CE2-NO137-PPM
N/C	38 37		
N/C	40 39	N/C	

NOTES:

1. RE-ROUTE FIELD RPM SIGNALS TO NEW HIGH SPEED COUNTER MODULE xC.
3. TERMINATIONS FOR NEW DAMPER INPUT SIGNALS.
4. REMOVE, COIL & STOW FIELD WIRING AT TERMINAL BLOCKS (PTBx).
5. PRESERVE PLC WIRING BETWEEN EXISTING TERMINALS (PTBx AND DIGITAL INPUT MODULE xD FOR FUTURE USE.
6. REPLACED BY MODBUS PLUS DATALINK.
7. SEE DWG. 2524-1 FOR DETAILS.

	BY	CHECKED
DESIGN	G.RUSSELL	D.LE
DETAILS	D.LE	S.LO
QUANTITIES	D.LE	S.LO

PREPARED FOR THE STATE OF CALIFORNIA DEPARTMENT OF TRANSPORTATION

DIVISION OF ENGINEERING SERVICES ELECTRICAL-MECHANICAL-WATER AND WASTEWATER DESIGN

BRIDGE NO. VARIES
POST MILE VARIES

SCADA SYSTEM UPGRADE: POSEY/WEBSTER STREET TUBES AND CALDECOTT TUNNEL
CALDECOTT BORES 1 & 2 EAST
PLC 4 TERMINATION SCHEDULE

SHEET EE4-23-1

DOES SD Imperial Rev.1/07

ORIGINAL SCALE IN INCHES FOR REDUCED PLANS 0 1 2 3

CU 04220
EA 1A4604

DISREGARD PRINTS BEARING EARLIER REVISION DATES →
REVISION DATES (PRELIMINARY STAGE ONLY)

SHEET 65 OF 95

26-NOV-2008 11:17

EE4-23-1.dgn

DIST.	COUNTY	ROUTE	POST MILES TOTAL PROJECT	SHEET NO.	TOTAL SHEETS
04	Ala,CC	24,260	R5.9/R6.2, R0.0/R0.5,R0.9/R1.9	71	100

REGISTERED ELECTRICAL ENGINEER — 02-26-08 DATE

REGISTERED PROFESSIONAL ENGINEER ROBERT J. FEE No. E-13014 Exp. 6/30/09 ELEC STATE OF CALIFORNIA

11-24-08
PLANS APPROVAL DATE

The State of California or its officers or agents shall not be responsible for the accuracy or completeness of electronic copies of this plan sheet.

STV Incorporated
9130 Anaheim Place, Suite 210
Rancho Cucamonga, CA 91730

JDL Design, LLC
18582 Beach Blvd, Suite 229
Huntington Beach, CA 92647

ACRONYM	LABEL	4D	LABEL	ACRONYM
CE2-UPS-ALR	PTB7-17/4D-2	2 1	PTB7-1/4D-1	CE2-TL-CKT5A
CE2-UPS-BAT	PTB7-18/4D-4	4 3	PTB7-2/4D-3	CE2-TL-CKT5B
CE2-TL-AUTO	PTB7-19/4D-6	6 5	PTB7-3/4D-5	CE2-TL-CKT5C
CE1-TL-AUTO	PTB7-20/4D-8	8 7	PTB7-4/4D-7	CE2-TL-CKT5D
	N/C	10 9	COM	
CE2-UPS-PWR	PTB7-21/4D-12	12 11	PTB7-5/4D-11	CE2-TL-CKT5V
	N/C	14 13	PTB7-6/4D-13	CE2-TL-CKT5X
	N/C	16 15	PTB7-7/4D-15	CE2-TL-CKT5Y
	N/C	18 17	PTB7-8/4D-17	CE2-TL-CKT5Z
	N/C	20 19	COM	
	N/C	22 21	PTB7-9/4D-21	CE1-TL-CKT4X
	N/C	24 23	PTB7-10/4D-23	CE1-TL-CKT4Y
	N/C	26 25	PTB7-11/4D-25	CE1-TL-CKT4Z
	N/C	28 27	PTB7-12/4D-27	CE1-TL-CKT4W
	N/C	30 29	COM	
	N/C	32 31	N/C	
	N/C	34 33	N/C	
	N/C	36 35	N/C	
	N/C	38 37	N/C	
	N/C	40 39	COM	

1

LABEL	3Q	LABEL	ACRONYM
N/C	2 1	PTB7-30/3Q-1	CE2-TL-CKT5A
N/C	4 3	PTB7-31/3Q-3	CE2-TL-CKT5B
N/C	6 5	PTB7-32/3Q-5	CE2-TL-CKT5C
N/C	8 7	PTB7-33/3Q-7	CE2-TL-CKT5D
L	10 9	N	
N/C	12 11	PTB7-34/3Q-11	CE2-TL-CKT5V
N/C	14 13	PTB7-35/3Q-13	CE2-TL-CKT5X
N/C	16 15	PTB7-36/3Q-15	CE2-TL-CKT5Y
N/C	18 17	PTB7-37/3Q-17	CE2-TL-CKT5Z
L	20 19	N	
N/C	22 21	PTB7-38/3Q-21	CE1-TL-CKT4X
N/C	24 23	PTB7-39/3Q-23	CE1-TL-CKT4Y
N/C	26 25	PTB7-40/3Q-25	CE1-TL-CKT4Z
N/C	28 27	PTB7-41/3Q-27	CE1-TL-CKT4W
L	30 29	N	
N/C	32 31	N/C	
N/C	34 33	N/C	
N/C	36 35	N/C	
N/C	38 37	N/C	
L	40 39	N	

1

LABEL	4Q	LABEL	ACRONYM
N/C	2 1	PTB7-46/4Q-1	CE2-UPS-CKT5X
N/C	4 3	PTB7-47/4Q-3	CE2-UPS-CKT5Y
N/C	6 5	PTB7-48/4Q-5	CE2-UPS-CKT5Z
N/C	8 7	PTB7-49/4Q-7	CE1-UPS-CKT4X
L	10 9	N	
N/C	12 11	PTB7-50/4Q-11	CE1-UPS-CKT4Y
N/C	14 13	PTB7-51/4Q-13	CE1-UPS-CKT4Z
N/C	16 15		
N/C	18 17		
L	20 19	N	
N/C	22 21		
N/C	24 23		
N/C	26 25		
N/C	28 27		
L	30 29	N	
N/C	32 31		
N/C	34 33		
N/C	36 35		
N/C	38 37		
L	40 39	N	

1

LABEL	2Q	LABEL	ACRONYM	LABEL	ACRONYM
N/C	2 1	*PTB6-17/2Q-1*	*CE1-ED5-OP*	~~PTB6-1/2Q-1~~	~~CE1-ES5-HIGH~~
N/C	4 3	*PTB6-18/2Q-3*	*CE1-BD5-OP*	~~PTB6-2/2Q-3~~	~~CE1-BS5-HIGH~~
N/C	6 5	*PTB6-19/2Q-5*	*CE1-ED6-OP*	~~PTB6-3/2Q-5~~	~~CE1-ES6-HIGH~~
N/C	8 7	*PTB6-20/2Q-7*	*CE1-BD6-OP*	~~PTB6-4/2Q-7~~	~~CE1-BS6-HIGH~~
L	10 9	N			
N/C	12 11	*PTB6-21/2Q-11*	*CE2-ED7-OP*	~~PTB6-5/2Q-11~~	~~CE2-ES7-HIGH~~
N/C	14 13	*PTB6-22/2Q-13*	*CE2-BD7-OP*	~~PTB6-6/2Q-13~~	~~CE2-BS7-HIGH~~
N/C	16 15	*PTB6-23/2Q-15*	*CE2-ED8-OP*	~~PTB6-7/2Q-15~~	~~CE2-ES8-HIGH~~
N/C	18 17	*PTB6-24/2Q-17*	*CE2-BD8-OP*	~~PTB6-8/2Q-17~~	~~CE2-BS8-HIGH~~
L	20 19	N			
N/C	22 21	*PTB6-25/2Q-21*	*CE1-ED5-OP*	~~PTB6-9/2Q-21~~	~~CE1-ES5-LOW~~
N/C	24 23	*PTB6-26/2Q-23*	*CE1-BD5-OP*	~~PTB6-10/2Q-23~~	~~CE1-BS5-LOW~~
N/C	26 25	*PTB6-27/2Q-25*	*CE1-ED6-OP*	~~PTB6-11/2Q-25~~	~~CE1-ES6-LOW~~
N/C	28 27	*PTB6-28/2Q-27*	*CE1-BD6-OP*	~~PTB6-12/2Q-27~~	~~CE1-BS6-LOW~~
L	30 29	N			
N/C	32 31	*PTB6-29/2Q-31*	*CE2-ED7-OP*	~~PTB6-13/2Q-31~~	~~CE2-ES7-LOW~~
N/C	34 33	*PTB6-30/2Q-33*	*CE2-BD7-OP*	~~PTB6-14/2Q-33~~	~~CE2-BS7-LOW~~
N/C	36 35	*PTB6-31/2Q-35*	*CE2-ED8-OP*	~~PTB6-15/2Q-35~~	~~CE2-ES8-LOW~~
N/C	38 37	*PTB6-32/2Q-37*	*CE2-BD8-OP*	~~PTB6-16/2Q-37~~	~~CE2-BS8-LOW~~
	40 39	N			

2 3

NOTES:

1. NEW LIGHTING CONTROLS.
2. REMOVE BLOWER STARTER WIRING AT TERMINAL BLOCKS REUSE TERMINATIONS FOR NEW DAMPER STARTER CONTROLS.
3. SEE DWG. EE4-18 & 19 FOR DETAILS.

DESIGN	BY G.RUSSELL	CHECKED D.LE	
DETAILS	BY D.LE	CHECKED S.LO	
QUANTITIES	BY D.LE	CHECKED S.LO	

PREPARED FOR THE STATE OF CALIFORNIA DEPARTMENT OF TRANSPORTATION

DIVISION OF ENGINEERING SERVICES ELECTRICAL-MECHANICAL-WATER AND WASTEWATER DESIGN

BRIDGE NO. VARIES
POST MILE VARIES

SCADA SYSTEM UPGRADE: POSEY/WEBSTER STREET TUBES AND CALDECOTT TUNNEL

CALDECOTT BORES 1 & 2 EAST
PLC 4 TERMINATION SCHEDULE

SHEET EE4-23 -2

DOES SD Imperial Rev.1/07

ORIGINAL SCALE IN INCHES FOR REDUCED PLANS 0 1 2 3

CU 04220
EA 1A4604

DISREGARD PRINTS BEARING EARLIER REVISION DATES →

REVISION DATES (PRELIMINARY STAGE ONLY)

SHEET 66 OF 95

26-NOV-2008 11:17

EE4-23-2.dgn

DIST.	COUNTY	ROUTE	POST MILES TOTAL PROJECT	SHEET NO.	TOTAL SHEETS
04	Ala,CC	24,260	R5.9/R6.2, R0.0/R0.5,R0.9/R1.9	72	100

REGISTERED ELECTRICAL ENGINEER — 02-26-08 DATE

REGISTERED PROFESSIONAL ENGINEER — ROBERT J. FEE — No. E-13014 — Exp. 6/30/09 — ELEC — STATE OF CALIFORNIA

11-24-08
PLANS APPROVAL DATE

The State of California or its officers or agents shall not be responsible for the accuracy or completeness of electronic copies of this plan sheet.

STV Incorporated
9130 Anaheim Place, Suite 210
Rancho Cucamonga, CA 91730

JDL Design, LLC
18582 Beach Blvd, Suite 229
Huntington Beach, CA 92647

LABEL	1C	LABEL	ACRONYM
PTB5-21/1C-2	2 1	PTB4-31/1C-1	CE1-E5-RPM
DC COM	4 3	DC COM	
N/C	6 5	N/C	
N/C	8 7	N/C	
N/C	10 9	N/C	
PTB5-23/1C-12	12 11	PTB5-22/1C-11	CE1-B5-RPM
DC COM	14 13	DC COM	
N/C	16 15	N/C	
N/C	18 17	N/C	
N/C	20 19	N/C	
PTB5-25/1C-22	22 21	PTB5-24/1C-21	CE2-E7-RPM
DC COM	24 23	DC COM	
N/C	26 25	N/C	
N/C	28 27	N/C	
N/C	30 29	N/C	
PTB5-27/1C-32	32 31	PTB5-26/1C-31	CE2-B7-RPM
DC COM	34 33	DC COM	
N/C	36 35	N/C	
N/C	38 37	N/C	
N/C	40 39	N/C	

1

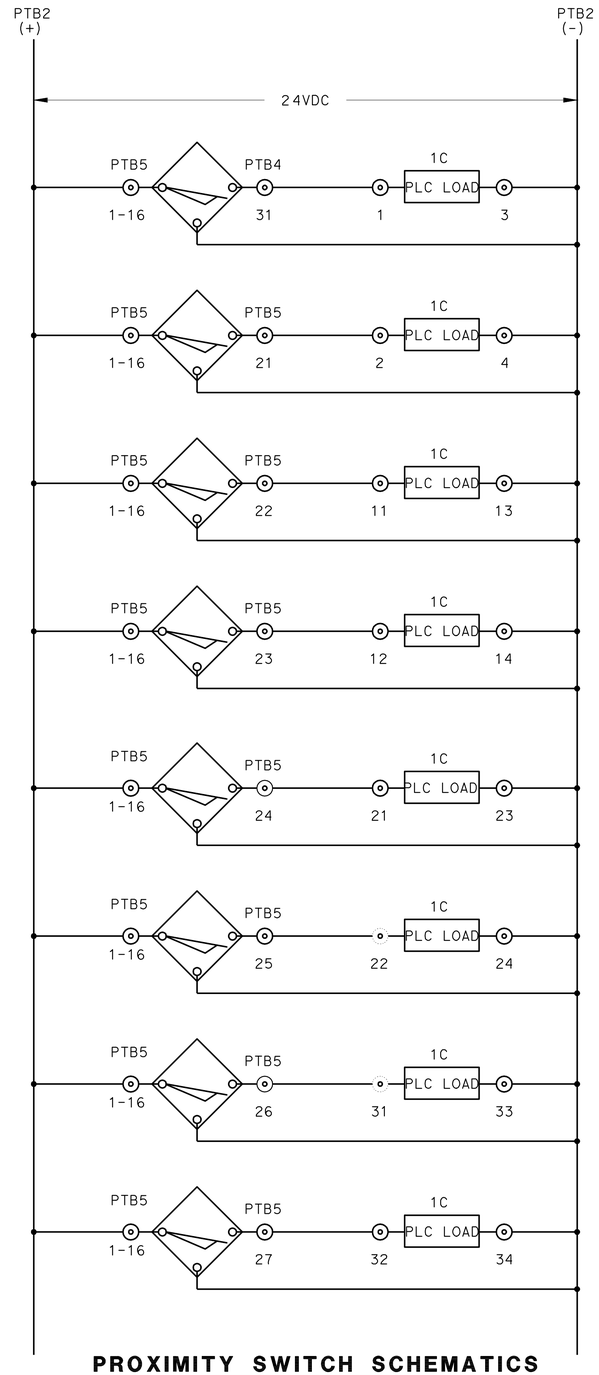

PROXIMITY SWITCH SCHEMATICS

NOTE:

1 RE-ROUTE EXISTING PROXIMITY SWITCHES (RPM) TO NEW HIGH SPEED COUNTER MODULE.

	BY	CHECKED
DESIGN	G.RUSSELL	D.LE
DETAILS	D.LE	S.LO
QUANTITIES	D.LE	S.LO

PREPARED FOR THE STATE OF CALIFORNIA DEPARTMENT OF TRANSPORTATION

DIVISION OF ENGINEERING SERVICES ELECTRICAL-MECHANICAL-WATER AND WASTEWATER DESIGN

BRIDGE NO. VARIES
POST MILE VARIES

SCADA SYSTEM UPGRADE: POSEY/WEBSTER STREET TUBES AND CALDECOTT TUNNEL

CALDECOTT BORES 1 & 2 EAST
PLC 4 TERMINATION SCHEDULE

SHEET EE4-23-3

DOES SD Imperial Rev.1/07

ORIGINAL SCALE IN INCHES FOR REDUCED PLANS 0 1 2 3

CU 04220
EA 1A4604

DISREGARD PRINTS BEARING EARLIER REVISION DATES →

REVISION DATES (PRELIMINARY STAGE ONLY)

SHEET 67 OF 95

26-NOV-2008 11:17

EE4-23-3.dgn

DIST.	COUNTY	ROUTE	POST MILES TOTAL PROJECT	SHEET NO.	TOTAL SHEETS
04	Ala,CC	24,260	R5.9/R6.2, R0.0/R0.5,R0.9/R1.9	73	100

REGISTERED ELECTRICAL ENGINEER — 02-26-08 DATE

REGISTERED PROFESSIONAL ENGINEER ROBERT J. FEE No. E-13014 Exp. 6/30/09 ELEC STATE OF CALIFORNIA

11-24-08
PLANS APPROVAL DATE

The State of California or its officers or agents shall not be responsible for the accuracy or completeness of electronic copies of this plan sheet.

STV Incorporated
9130 Anaheim Place, Suite 210
Rancho Cucamonga, CA 91730

JDL Design, LLC
18582 Beach Blvd, Suite 229
Huntington Beach, CA 92647

ACRONYM	LABEL	1D	LABEL	ACRONYM	ACRONYM	LABEL	2D	LABEL	ACRONYM	ACRONYM	LABEL	3D	LABEL	ACRONYM
PO-LN1E-VCT	PTB4-90/1D-2	2 1	PTB4-89/1D-1	PO-LN1W-VCT	PO-BLDGPM2-IV	PTB3-16/2D-2	2 1	PTB3-15/2D-1	PO-BLDGPM1-IV	PO-27A2-UV	PTB3-48/3D-2	2 1	PTB3-47/3D-1	PO-27P1-UV
PO-LN2E-VCT	PTB4-92/1D-4	4 3	PTB4-91/1D-3	PO-LN2W-VCT	PO-TUBEPM1-IV	PTB3-18/2D-4	4 3	PTB3-17/2D-3	PO-BLDGPM3-IV	PO-PJC1-OC	PTB3-50/3D-4	4 3	PTB3-49/3D-3	PO-27P2-UV
	N/C	6 5	N/C		PO-EXHTDUCT-IC	PTB3-20/2D-6	6 5	PTB3-19/2D-5	PO-TUBEPM2-IV	PO-86-LOCKOUT	PTB3-52/3D-6	6 5	PTB3-51/3D-5	PO-83P-TRANSFR
	N/C	8 7	N/C		PO-ROOMHTR2-IC	PTB3-22/2D-8	8 7	PTB3-21/2D-7	PO-ROOMHTR1-IC	~~PO-B1-IV~~	~~PTB3-54/3D-8~~	8 7	PTB3-53/3D-7	PO-MAINBKR-IV
	N/C	10 9	COM			N/C	10 9	COM		2 3 4	N/C	10 9	COM	
	N/C	12 11	N/C		PO-BLDGLT-IC	PTB3-24/2D-12	12 11	PTB3-23/2D-11	PO-PUMPS-IC	~~PO-B2-IV~~	~~PTB3-56/3D-12~~	12 11	~~PTB3-55/3D-11~~	~~PO-E1-IV~~
	N/C	14 13	N/C		PO-TUBEPM1-IC	PTB3-26/2D-14	14 13	PTB3-25/2D-13	PO-PUMPCTRL-IC	~~PO-B3-IV~~	~~PTB3-58/3D-14~~	14 13	~~PTB3-57/3D-13~~	~~PO-E2-IV~~
	N/C	16 15	N/C		PO-EROADLT-IC	PTB3-28/2D-16	16 15	PTB3-27/2D-15	PO-TUBEPM2-IC	~~PO-B4-IV~~	~~PTB3-60/3D-16~~	16 15	~~PTB3-59/3D-15~~	~~PO-E3-IV~~ 2 3 4
	N/C	18 17	N/C		PO-WROADLT-IC	PTB3-30/2D-18	18 17	PTB3-29/2D-17	PO-EROADLTC-IC	PO-BD-IV	PTB3-62/3D-18	18 17	~~PTB3-61/3D-17~~	~~PO-E4-IV~~
	N/C	20 19	N/C			N/C	20 19	COM			N/C	20 19	COM	
	N/C	22 21	N/C		PO-480VCTRL-IC	PTB3-32/2D-22	22 21	PTB3-31/2D-21	PO-WROADLTC-IC	PO-EXHTDUCT-IV	PTB3-64/3D-22	22 21	PTB3-63/3D-21	PO-ED-IV
	N/C	24 23	N/C		PO-SHOWRHTR-IC	PTB3-34/2D-24	24 23	PTB3-33/2D-23	PO-240VCTRL-IC	PO-ROOMHTR2-IV	PTB3-66/3D-24	24 23	PTB3-65/3D-22	PO-ROOMHTR1-IV
	N/C	26 25	N/C		PO-DUCTLT-IC	PTB3-36/2D-26	26 25	PTB3-35/2D-25	PO-TSIGNAL-IC	PO-BLDGLT-IV	PTB3-68/3D-26	26 25	PTB3-67/3D-25	PO-PUMPS-IV
	N/C	28 27	N/C		PO-INTRPR3-IK	PTB3-38/2D-28	28 27	PTB3-37/2D-27	PO-INTRPR1-IK	PO-TUBEPM1-IV	PTB3-70/3D-28	28 27	PTB3-69/3D-27	PO-PUMPCTRL-IV
	N/C	30 29	N/C			N/C	30 29	COM			N/C	30 29	COM	
	N/C	32 31	N/C		PO-SS1-LOC	PTB3-40/2D-32	32 31	PTB3-39/2D-31	PO-INTRPR5-IK	PO-EROADLT-IV	PTB3-72/3D-32	32 31	PTB3-71/3D-31	PO-TUBEPM2-IV
	N/C	34 33	N/C		PO-SS3-LOC	PTB3-42/2D-34	34 33	PTB3-41/2D-33	PO-SS1-REM	PO-WROADLT-IV	PTB3-74/3D-34	34 33	PTB3-73/3D-33	PO-EROADLTC-IV
	N/C	36 35	N/C		PO-SS5-LOC	PTB3-44/2D-36	36 35	PTB3-43/2D-35	PO-SS3-REM	PO-480VCTRL-IV	PTB3-76/3D-36	36 35	PTB3-75/3D-35	PO-WROADLTC-IV
	N/C	38 37	N/C		PO-27A1-UV	PTB3-46/2D-38	38 37	PTB3-45/2D-37	PO-SS5-REM	PO-SHOWRHTR-IV	PTB3-78/3D-38	38 37	PTB3-77/3D-37	PO-240VCTRL-IV
	N/C	40 39	N/C			N/C	40 39	COM			N/C	40 39	COM	

ACRONYM	LABEL	4D	LABEL	ACRONYM	ACRONYM	LABEL	5D	LABEL	ACRONYM	LABEL	6D	LABEL	ACRONYM
PO-FIRE-ACT	PTB3-80/4D-2	2 1	PTB3-79/4D-1	PO-TSIGNAL-IV	W-PHONE10-ACT	PTB4-73/5D-2	2 1	PTB4-72/5D-1	W-PHONE9-ACT	N/C	2 1	PTB4-108/6D-1	PO-ED4LS-CL
PO-XFMR-WINT	PTB3-82/4D-4	4 3	PTB3-81/4D-3	PO-XFMR-LIQT	W-PHONE12-ACT	PTB4-75/5D-4	4 3	PTB4-74/5D-3	W-PHONE11-ACT	N/C	4 3	N/C	
PO-XFMR-OILL	PTB3-84/4D-6	6 5	PTB3-83/4D-5	PO-XFMR-SUDP	W-PHONE14-ACT	PTB4-77/5D-6	6 5	PTB4-76/5D-5	W-PHONE13-ACT	N/C	6 5	N/C	
P- PHONE1-ACT	PTB3-86/4D-8	8 7	PTB3-85/4D-7	PO-TUBWTR-HIGH	W-PHONE16-ACT	PTB4-79/5D-8	8 7	PTB4-78/5D-7	W-PHONE15-ACT	N/C	8 7	N/C	
	N/C	10 9	COM			N/C	10 9	COM		N/C	10 9	COM	
P-PHONE3-ACT	PTB3-88/4D-12	12 11	PTB3-87/4D-11	P-PHONE2-ACT	~~PO-B1-RPM~~	~~PTB4-81/5D-12~~	12 11	PTB4-80/5D-11	W-PHONE17-ACT	N/C	12 11	N/C	
P-PHONE5-ACT	PTB3-90/4D-14	14 13	PTB3-89/4D-13	P-PHONE4-ACT	~~PO-B3-RPM~~	~~PTB4-83/5D-14~~	14 13	~~PTB4-82/5D-13~~	~~PO-B2-RPM~~	N/C	14 13	N/C	
P-PHONE7-ACT	PTB3-92/4D-16	16 15	PTB3-91/4D-15	P-PHONE6-ACT	~~PO-E1-RPM~~	~~PTB4-85/5D-16~~	16 15	~~PTB4-84/5D-15~~	~~PO-B4-RPM~~	N/C	16 15	N/C	
P-PHONE9-ACT	PTB3-94/4D-18	18 17	PTB3-93/4D-17	P-PHONE8-ACT	~~PO-E3-RPM~~	~~PTB4-87/5D-18~~	18 17	~~PTB4-86/5D-17~~	~~PO-E2-RPM~~ 1 3	N/C	18 17	N/C	
	N/C	20 19	COM		1 3	N/C	20 19	COM		N/C	20 19	N/C	
P-PHONE11-ACT	PTB4-57/4D-22	22 21	PTB3-95/4D-21	P-PHONE10-ACT	PO-BD1LS-OP	PTB4-93/5D-22	22 21	~~PTB4-88/5D-21~~	~~PO-E4-RPM~~	N/C	22 21	N/C	
P-PHONE13-ACT	PTB4-59/4D-24	24 23	PTB4-58/4D-23	P-PHONE12-ACT	PO-BD3LS-OP	PTB4-95/5D-24	24 23	PTB4-94/5D-23	PO-BD2LS-OP	N/C	24 23	N/C	
P-PHONE15-ACT	PTB4-61/4D-26	26 25	PTB4-60/4D-25	P-PHONE14-ACT	PO-ED1LS-OP	PTB4-97/5D-26	26 25	PTB4-96/5D-25	PO-BD4LS-OP	N/C	26 25	N/C	
P-PHONE17-ACT	PTB4-63/4D-28	28 27	PTB4-62/4D-27	P-PHONE16-ACT	PO-ED3LS-OP	PTB4-99/5D-28	28 27	PTB4-98/5D-27	PO-ED2LS-OP	N/C	28 27	N/C	
	N/C	30 29	COM			N/C	30 29	COM		N/C	30 29	N/C	
W-PHONE2-ACT	PTB4-65/4D-32	32 31	PTB4-64/4D-31	W-PHONE1-ACT	PO-BD1LS-CL	PTB4-101/5D-32	32 31	PTB4-100/5D-31	PO-ED4LS-OP	N/C	32 31	N/C	
W-PHONE4-ACT	PTB4-67/4D-34	34 33	PTB4-66/4D-33	W-PHONE3-ACT	PO-BD3LS-CL	PTB4-103/5D-34	34 33	PTB4-102/5D-33	PO-BD2LS-CL	N/C	34 33	N/C	
W-PHONE6-ACT	PTB4-69/4D-36	36 35	PTB4-68/4D-35	W-PHONE5-ACT	PO-ED1LS-CL	PTB4-105/5D-36	36 35	PTB4-104/5D-35	PO-BD4LS-CL	N/C	36 35	N/C	
W-PHONE8-ACT	PTB4-71/4D-38	38 37	PTB4-70/4D-37	W-PHONE7-ACT	PO-ED3LS-CL	PTB4-107/5D-38	38 37	PTB4-106/5D-37	PO-ED2LS-CL	N/C	38 37	N/C	
	N/C	40 39	COM			N/C	40 39	COM		N/C	40 39	N/C	

NOTES:

1. RE-ROUTE FIELD RPM SIGNALS TO NEW HIGH SPEED COUNTER MODULE xC.
2. REMOVE, COIL & STOW FIELD WIRING AT TERMINAL BLOCKS (PTBx).
3. PRESERVE PLC WIRING BETWEEN EXISTING TERMINALS (PTBx) AND DIGITAL INPUT MODULE xD FOR FUTURE USE.
4. REPLACED BY MODBUS PLUS DATALINK.

	BY	CHECKED
DESIGN	G.RUSSELL	D.LE
DETAILS	D.LE	S.LO
QUANTITIES	D.LE	S.LO

PREPARED FOR THE STATE OF CALIFORNIA DEPARTMENT OF TRANSPORTATION

DIVISION OF ENGINEERING SERVICES ELECTRICAL-MECHANICAL-WATER AND WASTEWATER DESIGN

BRIDGE NO. VARIES
POST MILE VARIES

SCADA SYSTEM UPGRADE: POSEY/WEBSTER STREET TUBES AND CALDECOTT TUNNEL

POSEY TUBE OAKLAND PORTAL
PLC 5 TERMINATION SCHEDULE

SHEET EE4-24 -1

DOES SD Imperial Rev.1/07

ORIGINAL SCALE IN INCHES FOR REDUCED PLANS 0 1 2 3

CU 04220
EA 1A4604

DISREGARD PRINTS BEARING EARLIER REVISION DATES →

REVISION DATES (PRELIMINARY STAGE ONLY)

SHEET 68 OF 95

26-NOV-2008 11:18

EE4-24-1.dgn

DIST.	COUNTY	ROUTE	POST MILES TOTAL PROJECT	SHEET NO.	TOTAL SHEETS
04	Ala,CC	24,260	R5.9/R6.2, R0.0/R0.5,R0.9/R1.9	74	100

REGISTERED ELECTRICAL ENGINEER — 02-26-08 DATE

REGISTERED PROFESSIONAL ENGINEER ROBERT J. FEE No. E-13014 Exp. 6/30/09 ELEC STATE OF CALIFORNIA

11-24-08
PLANS APPROVAL DATE

The State of California or its officers or agents shall not be responsible for the accuracy or completeness of electronic copies of this plan sheet.

STV Incorporated
9130 Anaheim Place, Suite 210
Rancho Cucamonga, CA 91730

JDL Design, LLC
18582 Beach Blvd, Suite 229
Huntington Beach, CA 92647

LABEL	1A	LABEL	ACRONYM
COM	2 1	PTB3-1/1A-1	PO-CSB1-AMPS
N/C	4 3		
COM	6 5	PTB3-2/1A-5	PO-CSB2-AMPS
N/C	8 7		
N/C	10 9	N/C	
COM	12 11	PTB3-3/1A-11	PO-CSB3-AMPS
N/C	14 13		
COM	16 15	PTB3-4/1A-15	PO-CSB4-AMPS
N/C	18 17		
N/C	20 19	N/C	
COM	22 21	PTB3-5/1A-21	PO-CSE1-AMPS
N/C	24 23		
COM	26 25	PTB3-6/1A-25	PO-CSE2-AMPS
N/C	28 27		
N/C	30 29	N/C	
COM	32 31	PTB3-7/1A-31	PO-CSE3-AMPS
N/C	34 33		
COM	36 35	PTB3-8/1A-35	PO-CSE4-AMPS
N/C	38 37		
N/C	40 39	N/C	

LABEL	2A	LABEL	ACRONYM
COM	2 1	PTB3-9/2A-1	PO-CO8-PPM
N/C	4 3		
COM	6 5	PTB3-10/2A-5	PO-NO8-PPM
N/C	8 7		
N/C	10 9	N/C	
COM	12 11	PTB3-11/2A-11	PO-CO18-PPM
N/C	14 13		
COM	16 15	PTB3-12/2A-15	PO-NO18-PPM
N/C	18 17		
N/C	20 19	N/C	
N/C	22 21	N/C	
N/C	24 23	N/C	
N/C	26 25	N/C	
N/C	28 27	N/C	
N/C	30 29	N/C	
N/C	32 31	N/C	
N/C	34 33	N/C	
N/C	36 35	N/C	
N/C	38 37	N/C	
N/C	40 39	N/C	

LABEL	1Q	LABEL	ACRONYM
N/C	2 1	PTB5-1/1Q-1	PO-INTRPR1-TRP
N/C	4 3	PTB5-2/1Q-3	PO-INTRPR2-TRP
N/C	6 5	PTB5-3/1Q-5	PO-INTRPR3-TRP
N/C	8 7	PTB5-4/1Q-7	PO-INTRPR5-TRP
N/C	10 9	24V+	
N/C	12 11	PTB5-5/1Q-11	PO-INTRPR1-CL
N/C	14 13	PTB5-6/1Q-13	PO-INTRPR2-CL
N/C	16 15	PTB5-7/1Q-15	PO-INTRPR3-CL
N/C	18 17	PTB5-8/1Q-17	PO-INTRPR5-CL
N/C	20 19	PTB5-9/COM	
N/C	22 21	N/C	
N/C	24 23	N/C	
N/C	26 25	N/C	
N/C	28 27	N/C	
N/C	30 29	N/C	
N/C	32 31	N/C	
N/C	34 33	N/C	
N/C	36 35	N/C	
N/C	38 37	N/C	
N/C	40 39	N/C	

LABEL	2Q	LABEL	ACRONYM
N/C	2 1	~~PTB5-32/2Q-1~~	~~PO-BS1-HIGH~~
N/C	4 3	~~PTB5-33/2Q-3~~	~~PO-BS3-HIGH~~
N/C	6 5	~~PTB5-34/2Q-5~~	~~PO-BS2-HIGH~~
N/C	8 7	~~PTB5-35/2Q-7~~	~~PO-BS4-HIGH~~
L	10 9	N	1 2 3
N/C	12 11	~~PTB5-36/2Q-11~~	~~PO-ES1-HIGH~~
N/C	14 13	~~PTB5-37/2Q-13~~	~~PO-ES2-HIGH~~
N/C	16 15	~~PTB5-38/2Q-15~~	~~PO-ES3-HIGH~~
N/C	18 17	~~PTB5-39/2Q-17~~	~~PO-ES4-HIGH~~
L	20 19	N	
N/C	22 21	~~PTB5-40/2Q-21~~	~~PO-ES1-LOW~~
N/C	24 23	~~PTB5-41/2Q-23~~	~~PO-ES2-LOW~~
N/C	26 25	~~PTB5-42/2Q-25~~	~~PO-ES3-LOW~~
N/C	28 27	~~PTB5-43/2Q-27~~	~~PO-ES4-LOW~~
L	30 29	N	
N/C	32 31	~~PTB5-44/2Q-31~~	~~PO-BS1-LOW~~
N/C	34 33	~~PTB5-45/2Q-33~~	~~PO-BS3-LOW~~
N/C	36 35	~~PTB5-46/2Q-35~~	~~PO-BS2-LOW~~
N/C	38 37	~~PTB5-47/2Q-37~~	~~PO-BS4-LOW~~
L	40 39	N	

LABEL	3Q	LABEL	ACRONYM
N/C	2 1	PTB5-48/3Q-1	PO-BD1-OP
N/C	4 3	PTB5-49/3Q-3	PO-BD3-OP
N/C	6 5	PTB5-50/3Q-5	PO-BD2-OP
N/C	8 7	PTB5-51/3Q-7	PO-BD4-OP
L	10 9	N	
N/C	12 11	PTB5-52/3Q-11	PO-ED1-OP
N/C	14 13	PTB5-53/3Q-13	PO-ED2-OP
N/C	16 15	PTB5-54/3Q-15	PO-ED3-OP
N/C	18 17	PTB5-55/3Q-17	PO-ED4-OP
L	20 19	N	
N/C	22 21	PTB5-56/3Q-21	PO-ED1-CL
N/C	24 23	PTB5-57/3Q-23	PO-ED2-CL
N/C	26 25	PTB5-58/3Q-25	PO-ED3-CL
N/C	28 27	PTB5-59/3Q-27	PO-ED4-CL
L	30 29	N	
N/C	32 31	PTB5-60/3Q-31	PO-BD1-CL
N/C	34 33	PTB5-61/3Q-33	PO-BD3-CL
N/C	36 35	PTB5-62/3Q-35	PO-BD2-CL
N/C	38 37	PTB5-63/3Q-37	PO-BD4-CL
L	40 39	N	

NOTES:

1. REMOVE, COIL & STOW FIELD WIRING AT TERMINAL BLOCKS (PTBx).
2. PRESERVE PLC WIRING BETWEEN EXISTING TERMINALS (PTBx) AND DIGITAL OUTPUT MODULE xD FOR FUTURE USE.
3. REPLACED BY MODBUS PLUS DATALINK.

DESIGN	BY G.RUSSELL	CHECKED D.LE	
DETAILS	BY D.LE	CHECKED S.LO	
QUANTITIES	BY D.LE	CHECKED S.LO	

PREPARED FOR THE STATE OF CALIFORNIA DEPARTMENT OF TRANSPORTATION

DIVISION OF ENGINEERING SERVICES ELECTRICAL-MECHANICAL-WATER AND WASTEWATER DESIGN

BRIDGE NO. VARIES
POST MILE VARIES

SCADA SYSTEM UPGRADE: POSEY/WEBSTER STREET TUBES AND CALDECOTT TUNNEL
POSEY TUBE OAKLAND PORTAL
PLC 5 TERMINATION SCHEDULE

SHEET EE4-24 -2

DOES SD Imperial Rev.1/07

ORIGINAL SCALE IN INCHES FOR REDUCED PLANS 0 1 2 3

CU 04220
EA 1A4604

DISREGARD PRINTS BEARING EARLIER REVISION DATES →
REVISION DATES (PRELIMINARY STAGE ONLY)

SHEET 69 OF 95

26-NOV-2008 11:18
EE4-24-2.dgn

DIST.	COUNTY	ROUTE	POST MILES TOTAL PROJECT	SHEET NO.	TOTAL SHEETS
04	Ala,CC	24,260	R5.9/R6.2, R0.0/R0.5,R0.9/R1.9	75	100

REGISTERED ELECTRICAL ENGINEER — 02-26-08 DATE

REGISTERED PROFESSIONAL ENGINEER ROBERT J. FEE No. E-13014 Exp. 6/30/09 ELEC STATE OF CALIFORNIA

11-24-08
PLANS APPROVAL DATE

The State of California or its officers or agents shall not be responsible for the accuracy or completeness of electronic copies of this plan sheet.

STV Incorporated
9130 Anaheim Place, Suite 210
Rancho Cucamonga, CA 91730

JDL Design, LLC
18582 Beach Blvd, Suite 229
Huntington Beach, CA 92647

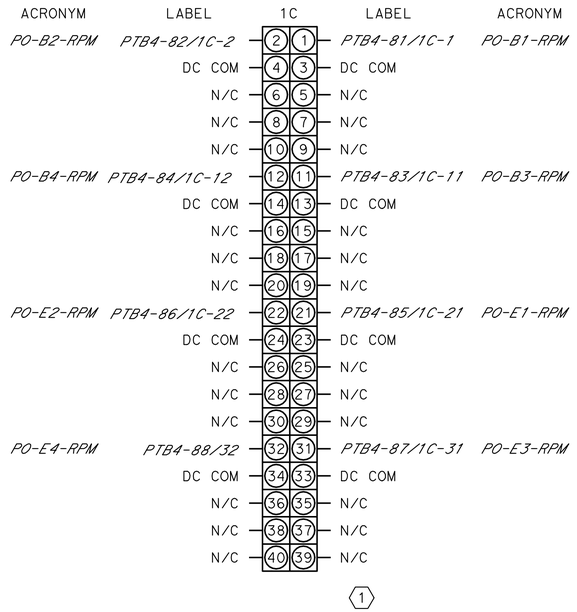

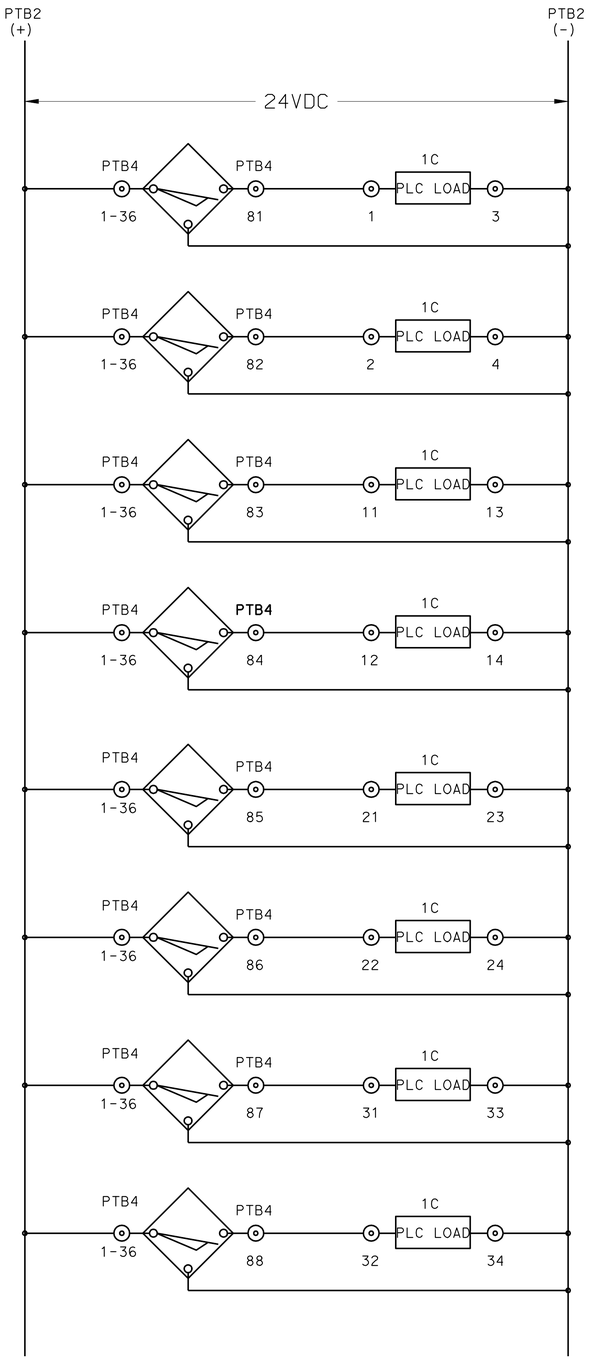

PROXIMITY SWITCH SCHEMATICS

NOTE:

1. RE-ROUTE EXISTING PROXIMITY SWITCHES (RPM) TO NEW HIGH SPEED COUNTER MODULE.

DESIGN	BY G.RUSSELL	CHECKED D.LE	
DETAILS	BY D.LE	CHECKED S.LO	
QUANTITIES	BY D.LE	CHECKED S.LO	

PREPARED FOR THE STATE OF CALIFORNIA DEPARTMENT OF TRANSPORTATION

DIVISION OF ENGINEERING SERVICES ELECTRICAL-MECHANICAL-WATER AND WASTEWATER DESIGN

BRIDGE NO. VARIES
POST MILE VARIES

SCADA SYSTEM UPGRADE: POSEY/WEBSTER STREET TUBES AND CALDECOTT TUNNEL

POSEY TUBE OAKLAND PORTAL
PLC 5 TERMINATION SCHEDULE

SHEET EE4-24-3

DOES SD Imperial Rev.1/07

ORIGINAL SCALE IN INCHES FOR REDUCED PLANS 0 1 2 3

CU 04220
EA 1A4604

DISREGARD PRINTS BEARING EARLIER REVISION DATES →

REVISION DATES (PRELIMINARY STAGE ONLY)

SHEET 70 OF 95

26-NOV-2008 11:18

EE4-24-3.dgn

DIST.	COUNTY	ROUTE	POST MILES TOTAL PROJECT	SHEET NO.	TOTAL SHEETS
04	Ala,CC	24,260	R5.9/R6.2, R0.0/R0.5,R0.9/R1.9	76	100

REGISTERED ELECTRICAL ENGINEER — 02-26-08 DATE

REGISTERED PROFESSIONAL ENGINEER ROBERT J. FEE No. E-13014 Exp. 6/30/09 ELEC STATE OF CALIFORNIA

11-24-08
PLANS APPROVAL DATE

The State of California or its officers or agents shall not be responsible for the accuracy or completeness of electronic copies of this plan sheet.

STV Incorporated
9130 Anaheim Place, Suite 210
Rancho Cucamonga, CA 91730

JDL Design, LLC
18582 Beach Blvd, Suite 229
Huntington Beach, CA 92647

ACRONYM	LABEL	1D	LABEL	ACRONYM
PA-LN1E-VCT	PTB5-20/1D-2	2 1	PTB5-19/1D-1	PA-LN1W-VCT
PA-LN2E-VCT	PTB5-22/1D-4	4 3	PTB5-21/1D-3	PA-LN2W-VCT
	N/C	6 5	N/C	
	N/C	8 7	N/C	
	N/C	10 9	COM	
	N/C	12 11	N/C	
	N/C	14 13	N/C	
	N/C	16 15	N/C	
	N/C	18 17	N/C	
	N/C	20 19	N/C	
	N/C	22 21	N/C	
	N/C	24 23	N/C	
	N/C	26 25	N/C	
	N/C	28 27	N/C	
	N/C	30 29	N/C	
	N/C	32 31	N/C	
	N/C	34 33	N/C	
	N/C	36 35	N/C	
	N/C	38 37	N/C	
	N/C	40 39	N/C	

ACRONYM	LABEL	2D	LABEL	ACRONYM
PA-BLDGPM5-IV	PTB4-2/2D-2	2 1	PTB4-1/2D-1	PA-BLDGPM4-IV
PA-EXHTDUCT-IC	PTB4-4/2D-4	4 3	PTB4-3/2D-3	PA-BLDGPM6-IV
PA-ROOMHTR2-IC	PTB4-6/2D-6	6 5	PTB4-5/2D-5	PA-ROOMHTR1-IC
PA-BLDGLT-IC	PTB4-8/2D-8	8 7	PTB4-7/2D-7	PA-BLDGPM-IC
	N/C	10 9	COM	
PA-EROADLTC-IC	PTB4-10/2D-12	12 11	PTB4-9/2D-11	PA-EROADLT-IC
PA-WROADLTC-IC	PTB4-12/2D-14	14 13	PTB4-11/2D-13	PA-WROADLT-IC
PA-TSIGNAL-IC	PTB4-14/2D-16	16 15	PTB4-13/2D-15	PA-CTRLBKR-IC
PA-INTRPR2-IK	PTB4-16/2D-18	18 17	PTB4-15/2D-17	PA-DUCTLT-IC
	N/C	20 19	COM	
PA-INTRPR6-IK	PTB4-18/2D-22	22 21	PTB4-17/2D-21	PA-INTRPR4-IK
PA-SS4-REM	PTB4-20/2D-24	24 23	PTB4-19/2D-23	PA-SS4-LOC
PA-SS6-REM	PTB4-22/2D-26	26 25	PTB4-21/2D-25	PA-SS6-LOC
PA-MAINBKR1-IV	PTB4-24/2D-28	28 27	PTB4-23/2D-27	PA-PJC2-OC
	N/C	30 29	COM	
~~PA-E1-IV~~	~~PTB4-26/2D-32~~	32 31	~~PTB4-25/2D-31~~	~~PA-B1-IV~~
~~PA-E2-IV~~	~~PTB4-28/2D-34~~	34 33	~~PTB4-27/2D-33~~	~~PA-B2-IV~~
~~PA-E3-IV~~	~~PTB4-30/2D-36~~	36 35	~~PTB4-29/2D-35~~	~~PA-B3-IV~~
~~PA-E4-IV~~	~~PTB4-32/2D-38~~	38 37	~~PTB4-31/2D-37~~	~~PA-B4-IV~~
2 3 4	N/C	40 39	COM	2 3 4

ACRONYM	LABEL	3D	LABEL	ACRONYM
PA-ED-IV	PTB4-34/3D-2	2 1	PTB4-33/3D-1	PA-BD-IV
PA-ROOMHTR1-IV	PTB4-36/3D-4	4 3	PTB4-35/3D-3	PA-EXHTDUCT-IV
PA-BLDGPM-IV	PTB4-38/3D-6	6 5	PTB4-37/3D-5	PA-ROOMHTR2-IV
PA-EROADLT-IV	PTB5-1/3D-8	8 7	PTB4-39/3D-7	PA-BLDGLT-IV
	N/C	10 9	COM	
PA-WROADLT-IV	PTB5-3/3D-12	12 11	PTB5-2/3D-11	PA-EROADLTC-IV
PA-CTRLBKR-IV	PTB5-5/3D-14	14 13	PTB5-4/3D-13	PA-WROADLTC-IV
PA-XFMR-LIQT	PTB5-7/3D-16	16 15	PTB5-6/3D-15	PA-TSIGNAL-IV
PA-XFMR-SUDP	PTB5-9/3D-18	18 17	PTB5-8/3D-17	PA-XFMR-WINT
	N/C	20 19	COM	
~~PA-B1-RPM~~	~~PTB5-11/3D-22~~	22 21	PTB5-10/3D-21	PA-XFMR-OILL
~~PA-B3-RPM~~	~~PTB5-13/3D-24~~	24 23	~~PTB5-12/3D-23~~	~~PA-B2-RPM~~
~~PA-E1-RPM~~	~~PTB5-15/3D-26~~	26 25	~~PTB5-14/3D-25~~	~~PA-B4-RPM~~
~~PA-E3-RPM~~	~~PTB5-17/3D-28~~	28 27	~~PTB5-16/3D-27~~	~~PA-E2-RPM~~
1 3	N/C	30 29	COM	1 3
PA-BD1LS-OP	PTB5-23/3D-32	32 31	~~PTB5-18/3D-31~~	~~PA-E4-RPM~~
PA-BD3LS-OP	PTB5-25/3D-34	34 33	PTB5-24/3D-33	PA-BD2LS-OP
PA-ED1LS-OP	PTB5-27/3D-36	36 35	PTB5-26/3D-35	PA-BD4LS-OP
PA-ED3LS-OP	PTB5-29/3D-38	38 37	PTB5-28/3D-37	PA-ED2LS-OP
	N/C	40 39	COM	

ACRONYM	LABEL	4D	LABEL	ACRONYM
PA-BD1LS-CL	PTB5-31/4D-2	2 1	PTB5-30/4D-1	PA-ED4LS-OP
PA-BD3LS-CL	PTB5-33/4D-4	4 3	PTB5-32/4D-3	PA-BD2LS-CL
PA-ED1LS-CL	PTB5-35/4D-6	6 5	PTB5-34/4D-5	PA-BD4LS-CL
PA-ED3LS-CL	PTB5-37/4D-8	8 7	PTB5-36/4D-7	PA-ED2LS-CL
	N/C	10 9	COM	
	N/C	12 11	PTB5-38/4D-11	PA-ED4LS-CL
	N/C	14 13	N/C	
	N/C	16 15	N/C	
	N/C	18 17	N/C	
	N/C	20 19	COM	
	N/C	22 21	N/C	
	N/C	24 23	N/C	
	N/C	26 25	N/C	
	N/C	28 27	N/C	
	N/C	30 29	N/C	
	N/C	32 31	N/C	
	N/C	34 33	N/C	
	N/C	36 35	N/C	
	N/C	38 37	N/C	
	N/C	40 39	N/C	

NOTES:

1. RE-ROUTE FIELD RPM SIGNALS TO NEW HIGH SPEED COUNTER MODULE xC.
2. REMOVE, COIL & STOW FIELD WIRING AT TERMINAL BLOCKS (PTBx).
3. PRESERVE PLC WIRING BETWEEN EXISTING TERMINALS (PTBx) AND DIGITAL INPUT MODULE xD FOR FUTURE USE.

	BY	CHECKED
DESIGN	G.RUSSELL	D.LE
DETAILS	D.LE	S.LO
QUANTITIES	D.LE	S.LO

PREPARED FOR THE STATE OF CALIFORNIA DEPARTMENT OF TRANSPORTATION

DIVISION OF ENGINEERING SERVICES ELECTRICAL-MECHANICAL-WATER AND WASTEWATER DESIGN

BRIDGE NO. VARIES
POST MILE VARIES

SCADA SYSTEM UPGRADE: POSEY/WEBSTER STREET TUBES AND CALDECOTT TUNNEL

POSEY TUBE ALAMEDA PORTAL
PLC 6 TERMINATION SCHEDULE

SHEET EE4-25-1

DOES SD Imperial Rev.1/07

ORIGINAL SCALE IN INCHES FOR REDUCED PLANS 0 1 2 3

CU 04220
EA 1A4604

DISREGARD PRINTS BEARING EARLIER REVISION DATES →

REVISION DATES (PRELIMINARY STAGE ONLY)

SHEET 71 OF 95

26-NOV-2008 11:18

EE4-25-1.dgn

DIST.	COUNTY	ROUTE	POST MILES TOTAL PROJECT	SHEET NO.	TOTAL SHEETS
04	Ala,CC	24,260	R5.9/R6.2, R0.0/R0.5,R0.9/R1.9	77	100

REGISTERED ELECTRICAL ENGINEER — 02-26-08 DATE

REGISTERED PROFESSIONAL ENGINEER ROBERT J. FEE No. E-13014 Exp. 6/30/09 ELEC STATE OF CALIFORNIA

11-24-08
PLANS APPROVAL DATE

The State of California or its officers or agents shall not be responsible for the accuracy or completeness of electronic copies of this plan sheet.

STV Incorporated
9130 Anaheim Place, Suite 210
Rancho Cucamonga, CA 91730

JDL Design, LLC
18582 Beach Blvd, Suite 229
Huntington Beach, CA 92647

LABEL	1A	LABEL	ACRONYM
COM	2 1	PTB3-1/1A-1	PA-CSB1-AMPS
N/C	4 3		
COM	6 5	PTB3-2/1A-5	PA-CSB2-AMPS
N/C	8 7		
N/C	10 9	N/C	
COM	12 11	PTB3-3/1A-11	PA-CSB3-AMPS
N/C	14 13		
COM	16 15	PTB3-4/1A-15	PA-CSB4-AMPS
N/C	18 17		
N/C	20 19	N/C	
COM	22 21	PTB3-5/1A-21	PA-CSE1-AMPS
N/C	24 23		
COM	26 25	PTB3-6/1A-25	PA-CSE2-AMPS
N/C	28 27		
N/C	30 29	N/C	
COM	32 31	PTB3-7/1A-31	PA-CSE3-AMPS
N/C	34 33		
COM	36 35	PTB3-8/1A-35	PA-CSE4-AMPS
N/C	38 37		
N/C	40 39	N/C	

LABEL	2A	LABEL	ACRONYM
COM	2 1	PTB3-9/2A-1	PA-CO26-PPM
N/C	4 3		
COM	6 5	PTB3-10/2A-5	PA-NO26-PPM
N/C	8 7		
N/C	10 9	N/C	
COM	12 11	PTB3-11/2A-11	PA-CO35-PPM
N/C	14 13		
COM	16 15	PTB3-12/2A-15	PA-NO35-PPM
N/C	18 17		
N/C	20 19	N/C	
N/C	22 21	N/C	
N/C	24 23	N/C	
N/C	26 25	N/C	
N/C	28 27	N/C	
N/C	30 29	N/C	
N/C	32 31	N/C	
N/C	34 33	N/C	
N/C	36 35	N/C	
N/C	38 37	N/C	
N/C	40 39	N/C	

LABEL	1Q	LABEL	ACRONYM
N/C	2 1	TB7-1/1Q-1	PA-INTRPR4-TRP
N/C	4 3	TB7-3/1Q-3	PA-INTRPR6-TRP
N/C	6 5	TB7-2/1Q-5	PA-INTRPR4-CL
N/C	8 7	TB7-4/1Q-7	PA-INTRPR6-CL
N/C	10 9	24V+	
N/C	12 11	N/C	
N/C	14 13	N/C	
N/C	16 15	N/C	
N/C	18 17	N/C	
N/C	20 19	COM	
N/C	22 21	N/C	
N/C	24 23	N/C	
N/C	26 25	N/C	
N/C	28 27	N/C	
N/C	30 29	N/C	
N/C	32 31	N/C	
N/C	34 33	N/C	
N/C	36 35	N/C	
N/C	38 37	N/C	
N/C	40 39	N/C	

LABEL	2Q	LABEL	ACRONYM
N/C	2 1	~~TB7-9/2Q-1~~	~~PA-DS1-HIGH~~
N/C	4 3	~~TB7-10/2Q-3~~	~~PA-DS3-HIGH~~
N/C	6 5	~~TB7-11/2Q-5~~	~~PA-DS2-HIGH~~
N/C	8 7	~~TB7-12/2Q-7~~	~~PA-DS4-HIGH~~
L	10 9	N	1 2 3
N/C	12 11	~~TB7-13/2Q-11~~	~~PA-ES1-HIGH~~
N/C	14 13	~~TB7-14/2Q-13~~	~~PA-ES2-HIGH~~
N/C	16 15	~~TB7-15/2Q-15~~	~~PA-ES3-HIGH~~
N/C	18 17	~~TB7-16/2Q-17~~	~~PA-ES4-HIGH~~
L	20 19	N	
N/C	22 21	~~TB7-17/2Q-21~~	~~PA-ES1-LOW~~
N/C	24 23	~~TB7-18/2Q-23~~	~~PA-ES2-LOW~~
N/C	26 25	~~TB7-19/2Q-25~~	~~PA-ES3-LOW~~
N/C	28 27	~~TB7-20/2Q-27~~	~~PA-ES4-LOW~~
L	30 29	N	
N/C	32 31	~~TB7-21/2Q-31~~	~~PA-DS1-LOW~~
N/C	34 33	~~TB7-22/2Q-33~~	~~PA-DS3-LOW~~
N/C	36 35	~~TB7-23/2Q-35~~	~~PA-DS2-LOW~~
N/C	38 37	~~TB7-24/2Q-37~~	~~PA-DS4-LOW~~
L	40 39	N	

LABEL	3Q	LABEL	ACRONYM
N/C	2 1	TB7-25/3Q-1	PA-BD1-OP
N/C	4 3	TB7-26/3Q-3	PA-BD3-OP
N/C	6 5	TB7-27/3Q-5	PA-BD2-OP
N/C	8 7	TB7-28/3Q-7	PA-BD4-OP
L	10 9	N	
N/C	12 11	TB7-29/3Q-11	PA-ED1-OP
N/C	14 13	TB7-30/3Q-13	PA-ED2-OP
N/C	16 15	TB7-31/3Q-15	PA-ED3-OP
N/C	18 17	TB7-32/3Q-17	PA-ED4-OP
L	20 19	N	
N/C	22 21	TB7-33/3Q-21	PA-ED1-CL
N/C	24 23	TB7-34/3Q-23	PA-ED2-CL
N/C	26 25	TB7-35/3Q-25	PA-ED3-CL
N/C	28 27	TB7-36/3Q-27	PA-ED4-CL
L	30 29	N	
N/C	32 31	TB7-37/3Q-31	PA-BD1-CL
N/C	34 33	TB7-38/3Q-33	PA-BD3-CL
N/C	36 35	TB7-39/3Q-35	PA-BD2-CL
N/C	38 37	TB7-40/3Q-37	PA-BD4-CL
L	40 39	N	

NOTES:

1. REMOVE, COIL & STOW FIELD WIRING AT TERMINAL BLOCKS (PTBx).
2. PRESERVE PLC WIRING BETWEEN EXISTING TERMINALS (PTBx) AND DIGITAL OUTPUT MODULE xD FOR FUTURE USE.
3. REPLACED BY MODBUS+ DATALINK.

	BY	CHECKED
DESIGN	G.RUSSELL	D.LE
DETAILS	D.LE	S.LO
QUANTITIES	D.LE	S.LO

PREPARED FOR THE STATE OF CALIFORNIA DEPARTMENT OF TRANSPORTATION

DIVISION OF ENGINEERING SERVICES ELECTRICAL-MECHANICAL-WATER AND WASTEWATER DESIGN

BRIDGE NO. VARIES
POST MILE VARIES

SCADA SYSTEM UPGRADE: POSEY/WEBSTER STREET TUBES AND CALDECOTT TUNNEL
POSEY TUBE ALAMEDA PORTAL
PLC 6 TERMINATION SCHEDULE

SHEET EE4-25-2

DOES SD Imperial Rev.1/07

ORIGINAL SCALE IN INCHES FOR REDUCED PLANS 0 1 2 3

CU 04220
EA 1A4604

DISREGARD PRINTS BEARING EARLIER REVISION DATES →
REVISION DATES (PRELIMINARY STAGE ONLY)

SHEET 72 OF 95

26-NOV-2008 11:18
EE4-25-2.dgn

DIST.	COUNTY	ROUTE	POST MILES TOTAL PROJECT	SHEET NO.	TOTAL SHEETS
04	Ala,CC	24,260	R5.9/R6.2, R0.0/R0.5,R0.9/R1.9	78	100

REGISTERED ELECTRICAL ENGINEER — 02-26-08 DATE

REGISTERED PROFESSIONAL ENGINEER ROBERT J. FEE No. E-13014 Exp. 6/30/09 ELEC STATE OF CALIFORNIA

11-24-08
PLANS APPROVAL DATE

The State of California or its officers or agents shall not be responsible for the accuracy or completeness of electronic copies of this plan sheet.

STV Incorporated
9130 Anaheim Place, Suite 210
Rancho Cucamonga, CA 91730

JDL Design, LLC
18582 Beach Blvd, Suite 229
Huntington Beach, CA 92647

ACRONYM	LABEL	1C	LABEL	ACRONYM
PA-B2-RPM	PTB5-12/1C-2	2 1	PTB5-11/1C-1	PA-B1-RPM
	DC COM	4 3	DC COM	
	N/C	6 5	N/C	
	N/C	8 7	N/C	
	N/C	10 9	N/C	
PA-B4-RPM	*PTB5-14/1C-12*	12 11	*PTB5-13/1C-11*	*PA-B3-RPM*
	DC COM	14 13	DC COM	
	N/C	16 15	N/C	
	N/C	18 17	N/C	
	N/C	20 19	N/C	
PA-E2-RPM	*PTB5-16/1C-22*	22 21	*PTB5-15/1C-21*	*PA-E1-RPM*
	DC COM	24 23	DC COM	
	N/C	26 25	N/C	
	N/C	28 27	N/C	
	N/C	30 29	N/C	
PA-E4-RPM	*PTB5-18/1C-32*	32 31	*PTB5-17/1C-31*	*PA-E3-RPM*
	DC COM	34 33	DC COM	
	N/C	36 35	N/C	
	N/C	38 37	N/C	
	N/C	40 39	N/C	

(1)

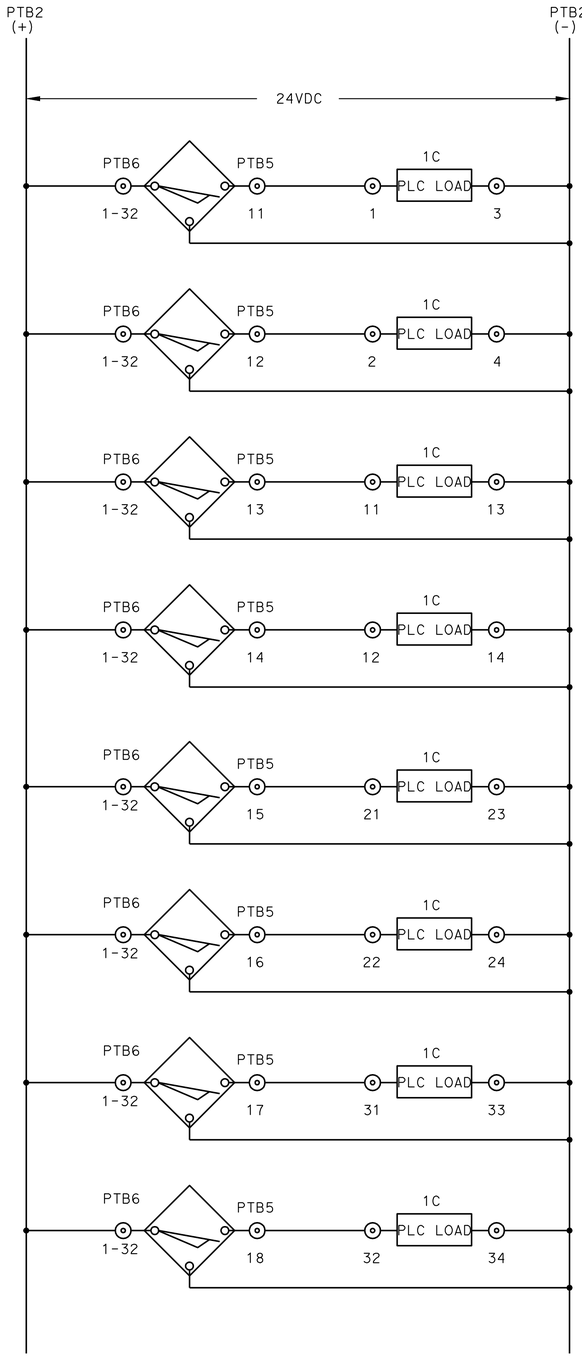

PROXIMITY SWITCH SCHEMATICS

NOTE:

(1) RE-ROUTE EXISITNG PROXIMITY SWITCHES (RPM) TO NEW HIGH SPEED COUNTER MODULE.

	BY	CHECKED
DESIGN	G. RUSSELL	D. LE
DETAILS	D. LE	S. LO
QUANTITIES	D. LE	S. LO

PREPARED FOR THE STATE OF CALIFORNIA DEPARTMENT OF TRANSPORTATION

DIVISION OF ENGINEERING SERVICES
ELECTRICAL-MECHANICAL-WATER AND WASTEWATER DESIGN

BRIDGE NO. VARIES
POST MILE VARIES

SCADA SYSTEM UPGRADE: POSEY/WEBSTER STREET TUBES AND CALDECOTT TUNNEL
POSEY TUBE ALAMEDA PORTAL
PLC 6 TERMINATION SCHEDULE

SHEET EE4-25-3

DOES SD Imperial Rev. 1/07

ORIGINAL SCALE IN INCHES FOR REDUCED PLANS 0 1 2 3

CU 04220
EA 1A4604

DISREGARD PRINTS BEARING EARLIER REVISION DATES → REVISION DATES (PRELIMINARY STAGE ONLY)

SHEET 73 OF 95

26-NOV-2008 11:19
EE4-25-3.dgn

DIST.	COUNTY	ROUTE	POST MILES TOTAL PROJECT	SHEET NO.	TOTAL SHEETS
04	Ala,CC	24,260	R5.9/R6.2, R0.0/R0.5,R0.9/R1.9	79	100

REGISTERED ELECTRICAL ENGINEER — 02-26-08 DATE

REGISTERED PROFESSIONAL ENGINEER ROBERT J. FEE No. E-13014 Exp. 6/30/09 ELEC STATE OF CALIFORNIA

11-24-08
PLANS APPROVAL DATE

The State of California or its officers or agents shall not be responsible for the accuracy or completeness of electronic copies of this plan sheet.

STV Incorporated
9130 Anaheim Place, Suite 210
Rancho Cucamonga, CA 91730

JDL Design, LLC
18582 Beach Blvd, Suite 229
Huntington Beach, CA 92647

1D

ACRONYM	LABEL	1D	LABEL	ACRONYM
WO-LN1E-VCT	PTB5-39/1D-2	2 1	PTB5-38/1D-1	WO-LN1W-VCT
WO-LN2E-VCT	PTB5-41/1D-4	4 3	PTB5-40/1D-3	WO-LN2W-VCT
	N/C	6 5	N/C	
	N/C	8 7	N/C	
	N/C	10 9	COM	
	N/C	12 11	N/C	
	N/C	14 13	N/C	
	N/C	16 15	N/C	
	N/C	18 17	N/C	
	N/C	20 19	N/C	
	N/C	22 21	N/C	
	N/C	24 23	N/C	
	N/C	26 25	N/C	
	N/C	28 27	N/C	
	N/C	30 29	N/C	
	N/C	32 31	N/C	
	N/C	34 33	N/C	
	N/C	36 35	N/C	
	N/C	38 37	N/C	
	N/C	40 39	N/C	

2D

ACRONYM	LABEL	2D	LABEL	ACRONYM
WO-BLDGLT-IV	PTB4-2/2D-2	2 1	PTB4-1/2D-1	WO-ROADLT1-IV
(2)(3)(4) ~~WO-E1-IV~~	~~PTB4-4/2D-4~~	4 3	~~PTB4-3/2D-3~~	~~WO-D1-IV~~ (2)(3)(4)
~~WO-E2-IV~~	~~PTB4-6/2D-6~~	6 5	~~PTB4-5/2D-5~~	~~WO-D2-IV~~
WO-COVER1&2-IV	PTB4-8/2D-8	8 7	PTB4-7/2D-7	WO-DUCTLT-IV
	N/C	10 9	COM	
WO-CTRLCKT1-IV	PTB4-10/2D-12	12 11	PTB4-9/2D-11	WO-CRANE1-IV
WO-TIELINE2-IV	PTB4-12/2D-14	14 13	PTB4-11/2D-13	WO-TIELINE1-IV
WO-CRANE2-IV	PTB4-14/2D-16	16 15	PTB4-13/2D-15	WO-CTRLCKT2-IV
~~WO-D3-IV~~	~~PTB4-16/2D-18~~	18 17	PTB4-15/2D-17	WO-COVER3&4-IV
(2)(3)(4)	N/C	20 19	COM	
~~WO-D4-IV~~	~~PTB4-18/2D-22~~	22 21	~~PTB4-17/2D-21~~	~~WO-E3-IV~~ (2)(3)(4)
WO-PUMPS-IV	PTB4-20/2D-24	24 23	~~PTB4-19/2D-23~~	~~WO-E4-IV~~
WO-B&E-IV	PTB4-22/2D-26	26 25	PTB4-21/2D-25	WO-ROADLT2-IV
WO-ROADLT1-IC	PTB4-24/2D-28	28 27	PTB4-23/2D-27	WO-CTRLDESK-IV
	N/C	30 29	COM	
WO-DUCTLT-IC	PTB4-26/2D-32	32 31	PTB4-25/2D-31	WO-BLDGLT-IC
WO-CRANE1-IC	PTB4-28/2D-34	34 33	PTB4-27/2D-33	WO-COVER1&2-IC
WO-TIELINE1-IC	PTB4-30/2D-36	36 35	PTB4-29/2D-35	WO-CTRLCKT1-IC
WO-CTRLCKT2-IC	PTB4-32/2D-38	38 37	PTB4-31/2D-37	WO-TIELINE2-IC
	N/C	40 39	COM	

NOTES:

(1) RE-ROUTE FIELD RPM SIGNALS TO NEW HIGH SPEED COUNTER MODULE xC.

(2) REMOVE, COIL & STOW FIELD WIRING AT TERMINAL BLOCKS (PTBx).

(3) PRESERVE PLC WIRING BETWEEN EXISTING TERMINALS (PTBx) AND DIGITAL INPUT MODULE xD FOR FUTURE USE.

(4) REPLACED BY MODBUS PLUS DATALINK.

4D

ACRONYM	LABEL	4D	LABEL	ACRONYM
WO-XFMR2-OILL	PTB5-24/4D-2	2 1	PTB5-23/4D-1	WO-XFMR2-WINT
WO-SUMPPM1-IV	PTB5-26/4D-4	4 3	PTB5-25/4D-3	WO-XFMR2-SUDP
WO-BLDWTR-HIGH	PTB5-28/4D-6	6 5	PTB5-27/4D-5	WO-SUMPPM2-IV
~~WO-B1-RPM~~	~~PTB5-30/4D-8~~	8 7	PTB5-29/4D-7	WO-FIRE-ACT
	N/C	10 9	COM	
~~WO-B3-RPM~~	~~PTB5-32/4D-12~~	12 11	~~PTB5-31/4D-11~~	~~WO-B2-RPM~~
~~WO-E1-RPM~~	~~PTB5-34/4D-14~~	14 13	~~PTB5-33/4D-13~~	~~WO-B4-RPM~~
~~WO-E3-RPM~~	~~PTB5-36/4D-16~~	16 15	~~PTB5-35/4D-15~~	~~WO-E2-RPM~~
WO-BDILS-OP	PTB5-42/4D-18	18 17	~~PTB5-37/4D-17~~	~~WO-E4-RPM~~
	N/C	20 19	COM	(1)(3)
WO-BD3LS-OP	PTB6-2/4D-22	22 21	PTB6-1/4D-21	WO-BD2LS-OP
WO-ED1LS-OP	PTB6-4/4D-24	24 23	PTB6-3/4D-23	WO-BD4LS-OP
WO-ED3LS-OP	PTB6-6/4D-26	26 25	PTB6-5/4D-25	WO-ED2LS-OP
WO-BD1LS-CL	PTB6-8/4D-28	28 27	PTB6-7/4D-27	WO-ED4LS-OP
	N/C	30 29	COM	
WO-BD3LS-CL	PTB6-10/4D-32	32 31	PTB6-9/4D-31	WO-BD2LS-CL
WO-ED1LS-CL	PTB6-12/4D-34	34 33	PTB6-11/4D-33	WO-BD4LS-CL
WO-ED3LS-CL	PTB6-14/4D-36	36 35	PTB6-13/4D-35	WO-ED2LS-CL
WO-FLSUMP-HIGH	PTB6-41/4D-38	38 37	PTB6-15/4D-37	WO-ED4LS-CL
	N/C	40 39	COM	

5D

ACRONYM	LABEL	5D	LABEL	ACRONYM
WO-E201LP-LOW	PTB4-44/5D-2	2 1	PTB4-43/5D-1	WO-E101LP-LOW
WO-E401LP-LOW	PTB4-46/5D-4	4 3	PTB4-45/5D-3	WO-E301LP-LOW
WO-BD2SS-LOC	PTB5-44/5D-6	6 5	PTB5-43/5D-5	WO-BD1SS-LOC
WO-BD4SS-LOC	PTB5-46/5D-8	8 7	PTB5-45/5D-7	WO-BD3SS-LOC
	N/C	10 9	COM	
WO-ED2SS-LOC	PTB5-48/5D-12	12 11	PTB5-47/5D-11	WO-ED1SS-LOC
WO-ED4SS-LOC	PTB5-50/5D-14	14 13	PTB5-49/5D-13	WO-ED3SS-LOC
	N/C	16 15	N/C	
	N/C	18 17	N/C	
	N/C	20 19	COM	
	N/C	22 21	N/C	
	N/C	24 23	N/C	
	N/C	26 25	N/C	
	N/C	28 27	N/C	
	N/C	30 29	COM	
	N/C	32 31	N/C	
	N/C	34 33	N/C	
	N/C	36 35	N/C	
	N/C	38 37	N/C	
	N/C	40 39	COM	

3D

ACRONYM	LABEL	3D	LABEL	ACRONYM
WO-COVER3&4-IC	PTB4-34/3D-2	2 1	PTB4-33/3D-1	WO-CRANE2-IC
WO-ROADLT2-IC	PTB4-36/3D-4	4 3	PTB4-35/3D-3	WO-PUMPS-IC
WO-CTRLDESK-IC	PTB4-38/3D-6	6 5	PTB4-37/3D-5	WO-B&E-IC
WO-BKR6-IK	PTB4-40/3D-8	8 7	PTB4-39/3D-7	WO-BKR5-IK
	N/C	10 9	COM	
WO-BKR8-IK	PTB4-42/3D-12	12 11	PTB4-41/3D-11	WO-BKR7-IK
WO-SS6-LOC	PTB5-2/3D-14	14 13	PTB5-1/3D-13	WO-SS5-LOC
WO-SS8-LOC	PTB5-4/3D-16	16 15	PTB5-3/3D-15	WO-SS7-LOC
WO-50/51B5-OC	PTB5-6/3D-18	18 17	PTB5-5/3D-17	WO-50/51A5-OC
	N/C	20 19	COM	
WO-50/51A6-OC	PTB5-8/3D-22	22 21	PTB5-7/3D-21	WO-50N/51N5-OC
WO-50N/51N6-OC	PTB5-10/3D-24	24 23	PTB5-9/3D-23	WO-50/51B6-OC
WO-50/51B7-OC	PTB5-12/3D-26	26 25	PTB5-11/3D-25	WO-50/51A7-OC
WO-50/51A8-OC	PTB5-14/3D-28	28 27	PTB5-13/3D-27	WO-50N/51N7-OC
	N/C	30 29	COM	
WO-50N/51N8-OC	PTB5-16/3D-32	32 31	PTB5-15/3D-31	WO-50/51B8-OC
WO-XFMR1-LIQT	PTB5-18/3D-34	34 33	PTB5-17/3D-33	WO-27X6-UV
WO-XFMR1-OILL	PTB5-20/3D-36	36 35	PTB5-19/3D-35	WO-XFMR1-WINT
WO-XFMR2-LIQT	PTB5-22/3D-38	38 37	PTB5-21/3D-37	WO-XFMR1-SUDP
	N/C	40 39	COM	

	BY	CHECKED
DESIGN	G.RUSSELL	D.LE
DETAILS	D.LE	S.LO
QUANTITIES	D.LE	S.LO

PREPARED FOR THE STATE OF CALIFORNIA DEPARTMENT OF TRANSPORTATION

DIVISION OF ENGINEERING SERVICES ELECTRICAL-MECHANICAL-WATER AND WASTEWATER DESIGN

BRIDGE NO. VARIES
POST MILE VARIES

SCADA SYSTEM UPGRADE: POSEY/WEBSTER STREET TUBES AND CALDECOTT TUNNEL
WEBSTER STREET TUBE OAKLAND PORTAL
PLC 7 TERMINATION SCHEDULE

SHEET EE4-26 -1

DOES SD Imperial Rev.1/07

ORIGINAL SCALE IN INCHES FOR REDUCED PLANS 0 1 2 3

CU 04220
EA 1A4604

DISREGARD PRINTS BEARING EARLIER REVISION DATES →
REVISION DATES (PRELIMINARY STAGE ONLY)

SHEET 74 OF 95

26-NOV-2008 11:19

EE4-26-1.dgn

DIST.	COUNTY	ROUTE	POST MILES TOTAL PROJECT	SHEET NO.	TOTAL SHEETS
04	Ala,CC	24,260	R5.9/R6.2, R0.0/R0.5,R0.9/R1.9	80	100

REGISTERED ELECTRICAL ENGINEER — 02-26-08 DATE

REGISTERED PROFESSIONAL ENGINEER ROBERT J. FEE No. E-13014 Exp. 6/30/09 ELEC STATE OF CALIFORNIA

11-24-08
PLANS APPROVAL DATE

The State of California or its officers or agents shall not be responsible for the accuracy or completeness of electronic copies of this plan sheet.

STV Incorporated
9130 Anaheim Place, Suite 210
Rancho Cucamonga, CA 91730

JDL Design, LLC
18582 Beach Blvd, Suite 229
Huntington Beach, CA 92647

LABEL	1A	LABEL	ACRONYM
COM	2 1	PTB3-1/1A-1	WO-CSE1-AMPS
N/C	4 3		
COM	6 5	PTB3-2/1A-5	WO-CSE2-AMPS
N/C	8 7		
N/C	10 9	N/C	
COM	12 11	PTB3-3/1A-11	WO-CSE3-AMPS
N/C	14 13		
COM	16 15	PTB3-4/1A-15	WO-CSE4-AMPS
N/C	18 17		
N/C	20 19	N/C	
COM	22 21	PTB3-5/1A-21	WO-CSB1-AMPS
N/C	24 23		
COM	26 25	PTB3-6/1A-25	WO-CSB2-AMPS
N/C	28 27		
N/C	30 29	N/C	
COM	32 31	PTB3-7/1A-31	WO-CSB3-AMPS
N/C	34 33		
COM	36 35	PTB3-8/1A-35	WO-CSB4-AMPS
N/C	38 37		
N/C	40 39	N/C	

LABEL	2A	LABEL	ACRONYM
COM	2 1	PTB3-9/2A-1	WO-CO151-PPM
N/C	4 3		
COM	6 5	PTB3-10/2A-5	WO-NO151-PPM
N/C	8 7		
N/C	10 9	N/C	
COM	12 11	PTB3-11/2A-11	WO-CO159-PPM
N/C	14 13		
COM	16 15	PTB3-12/2A-15	WO-NO159-PPM
N/C	18 17		
N/C	20 19	N/C	
N/C	22 21	N/C	
N/C	24 23	N/C	
N/C	26 25	N/C	
N/C	28 27	N/C	
N/C	30 29	N/C	
N/C	32 31	N/C	
N/C	34 33	N/C	
N/C	36 35	N/C	
N/C	38 37	N/C	
N/C	40 39	N/C	

LABEL	1Q	LABEL	ACRONYM
N/C	2 1	PTB7-1/1Q-1	WO-BKR6-TRP
N/C	4 3	PTB7-2/1Q-3	WO-BKR7-TRP
N/C	6 5	PTB7-3/1Q-5	WO-BKR5-TRP
N/C	8 7	PTB7-4/1Q-7	WO-BKR8-TRP
N/C	10 9	24V+	
N/C	12 11	PTB7-5/1Q-11	WO-BKR6-RESET
N/C	14 13	PTB7-6/1Q-13	WO-BKR5-CL
N/C	16 15	PTB7-7/1Q-15	WO-BKR7-CL
N/C	18 17	PTB7-8/1Q-17	WO-BKR8-CL
N/C	20 19	PTB7-10/COM	
N/C	22 21	PTB7-9/1Q-21	WO-BKR6-CL
N/C	24 23	N/C	
N/C	26 25	N/C	
N/C	28 27	N/C	
N/C	30 29	24V+	
N/C	32 31	N/C	
N/C	34 33	N/C	
N/C	36 35	N/C	
N/C	38 37	N/C	
N/C	40 39	PTB7-11/COM	

LABEL	2Q	LABEL	ACRONYM
N/C	2 1	~~PTB7-21/2Q-1~~	~~WO-BS1-HIGH~~
N/C	4 3	~~PTB7-22/2Q-3~~	~~WO-BS2-HIGH~~
N/C	6 5	~~PTB7-23/2Q-5~~	~~WO-BS3-HIGH~~
N/C	8 7	~~PTB7-24/2Q-7~~	~~WO-BS4-HIGH~~
L	10 9	N	1 2 3
N/C	12 11	~~PTB7-25/2Q-11~~	~~WO-ES1-HIGH~~
N/C	14 13	~~PTB7-26/2Q-13~~	~~WO-ES2-HIGH~~
N/C	16 15	~~PTB7-27/2Q-15~~	~~WO-ES3-HIGH~~
N/C	18 17	~~PTB7-28/2Q-17~~	~~WO-ES4-HIGH~~
L	20 19	N	
N/C	22 21	~~PTB7-29/2Q-21~~	~~WO-BS1-LOW~~
N/C	24 23	~~PTB7-30/2Q-23~~	~~WO-BS2-LOW~~
N/C	26 25	~~PTB7-31/2Q-25~~	~~WO-BS3-LOW~~
N/C	28 27	~~PTB7-32/2Q-27~~	~~WO-BS4-LOW~~
L	30 29	N	
N/C	32 31	~~PTB7-33/2Q-31~~	~~WO-ES1-LOW~~
N/C	34 33	~~PTB7-34/2Q-33~~	~~WO-ES2-LOW~~
N/C	36 35	~~PTB7-35/2Q-35~~	~~WO-ES3-LOW~~
N/C	38 37	~~PTB7-36/2Q-37~~	~~WO-ES4-LOW~~
L	40 39	N	

LABEL	3Q	LABEL	ACRONYM
N/C	2 1	PTB7-37/3Q-1	WO-BD1-OP
N/C	4 3	PTB7-38/3Q-3	WO-BD2-OP
N/C	6 5	PTB7-39/3Q-5	WO-BD3-OP
N/C	8 7	PTB7-40/3Q-7	WO-BD4-OP
L	10 9	N	
N/C	12 11	PTB7-41/3Q-11	WO-ED1-OP
N/C	14 13	PTB7-42/3Q-13	WO-ED2-OP
N/C	16 15	PTB7-43/3Q-15	WO-ED3-OP
N/C	18 17	PTB7-44/3Q-17	WO-ED4-OP
L	20 19	N	
N/C	22 21	PTB7-45/3Q-21	WO-BD1-CL
N/C	24 23	PTB7-46/3Q-23	WO-BD2-CL
N/C	26 25	PTB7-47/3Q-25	WO-BD3-CL
N/C	28 27	PTB7-48/3Q-27	WO-BD4-CL
L	30 29	N	
N/C	32 31	PTB7-49/3Q-31	WO-ED1-CL
N/C	34 33	PTB7-50/3Q-33	WO-ED2-CL
N/C	36 35	PTB7-51/3Q-35	WO-ED3-CL
N/C	38 37	PTB7-52/3Q-37	WO-ED4-CL
L	40 39	N	

NOTES:

1. REMOVE, COIL & STOW FIELD WIRING AT TERMINAL BLOCKS (PTBx).
2. PRESERVE PLC WIRING BETWEEN EXISTING TERMINALS (PTBx) AND DIGITAL OUTPUT MODULE xQ FOR FUTURE USE.
3. REPLACED BY MODBUS PLUS DATALINK.

DESIGN	BY G.RUSSELL	CHECKED D.LE	
DETAILS	BY D.LE	CHECKED S.LO	
QUANTITIES	BY D.LE	CHECKED S.LO	

PREPARED FOR THE STATE OF CALIFORNIA DEPARTMENT OF TRANSPORTATION

DIVISION OF ENGINEERING SERVICES
ELECTRICAL-MECHANICAL-WATER AND WASTEWATER DESIGN

BRIDGE NO. VARIES
POST MILE VARIES

SCADA SYSTEM UPGRADE: POSEY/WEBSTER STREET TUBES AND CALDECOTT TUNNEL
WEBSTER STREET TUBE OAKLAND PORTAL
PLC 7 TERMINATION SCHEDULE

SHEET EE4-26 -2

DOES SD Imperial Rev.1/07

ORIGINAL SCALE IN INCHES FOR REDUCED PLANS 0 1 2 3

CU 04220
EA 1A4604

DISREGARD PRINTS BEARING EARLIER REVISION DATES →

REVISION DATES (PRELIMINARY STAGE ONLY)

SHEET 75 OF 95

26-NOV-2008 11:19

EE4-26-2.dgn

DIST.	COUNTY	ROUTE	POST MILES TOTAL PROJECT	SHEET NO.	TOTAL SHEETS
04	Ala,CC	24,260	R5.9/R6.2, R0.0/R0.5,R0.9/R1.9	81	100

REGISTERED ELECTRICAL ENGINEER — 02-26-08 DATE

REGISTERED PROFESSIONAL ENGINEER ROBERT J. FEE No. E-13014 Exp. 6/30/09 ELEC STATE OF CALIFORNIA

11-24-08
PLANS APPROVAL DATE

The State of California or its officers or agents shall not be responsible for the accuracy or completeness of electronic copies of this plan sheet.

STV Incorporated
9130 Anaheim Place, Suite 210
Rancho Cucamonga, CA 91730

JDL Design, LLC
18582 Beach Blvd, Suite 229
Huntington Beach, CA 92647

ACRONYM	LABEL	1C	LABEL	ACRONYM
WO-B2-RPM	PTB5-31/1C-2	2 1	PTB5-30/1C-1	WO-B1-RPM
	DC COM	4 3	DC COM	
	N/C	6 5	N/C	
	N/C	8 7	N/C	
	N/C	10 9	N/C	
WO-B4-RPM	PTB5-33/1C-12	12 11	PTB5-32/1C-11	WO-B3-RPM
	DC COM	14 13	DC COM	
	N/C	16 15	N/C	
	N/C	18 17	N/C	
	N/C	20 19	N/C	
WO-E2-RPM	PTB5-35/1C-22	22 21	PTB5-34/1C-21	WO-E1-RPM
	DC COM	24 23	DC COM	
	N/C	26 25	N/C	
	N/C	28 27	N/C	
	N/C	30 29	N/C	
WO-E4-RPM	PTB5-37/1C-32	32 31	PTB5-36/1C-31	WO-E3-RPM
	DC COM	34 33	DC COM	
	N/C	36 35	N/C	
	N/C	38 37	N/C	
	N/C	40 39	N/C	

1

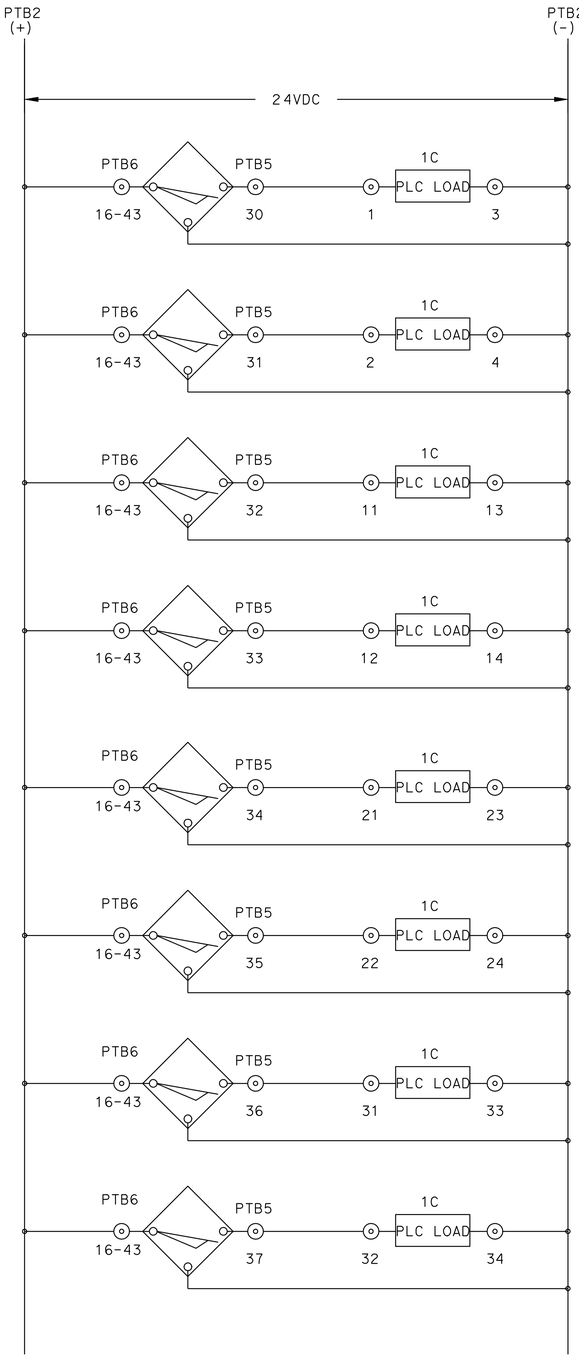

PROXIMITY SWITCH SCHEMATICS

NOTE:

1 RE-ROUTE EXISTING PROXIMITY SWITCHES (RPM) TO NEW HIGH SPEED COUNTER MODULE.

	BY		CHECKED
DESIGN	G.RUSSELL		D.LE
DETAILS	D.LE		S.LO
QUANTITIES	D.LE		S.LO

PREPARED FOR THE STATE OF CALIFORNIA DEPARTMENT OF TRANSPORTATION

DIVISION OF ENGINEERING SERVICES
ELECTRICAL-MECHANICAL-WATER AND WASTEWATER DESIGN

BRIDGE NO. VARIES
POST MILE VARIES

SCADA SYSTEM UPGRADE: POSEY/WEBSTER STREET TUBES AND CALDECOTT TUNNEL
WEBSTER STREET TUBE OAKLAND PORTAL
PLC 7 TERMINATION SCHEDULE

SHEET EE4-26-3

DOES SD Imperial Rev.1/07

ORIGINAL SCALE IN INCHES FOR REDUCED PLANS 0 1 2 3

CU 04220
EA 1A4604

DISREGARD PRINTS BEARING EARLIER REVISION DATES → REVISION DATES (PRELIMINARY STAGE ONLY)

SHEET 76 OF 95

26-NOV-2008 11:19
EE4-26-3.dgn

DIST.	COUNTY	ROUTE	POST MILES TOTAL PROJECT	SHEET NO.	TOTAL SHEETS
04	Ala,CC	24,260	R5.9/R6.2, R0.0/R0.5,R0.9/R1.9	82	100

REGISTERED ELECTRICAL ENGINEER — DATE: 02-26-08

REGISTERED PROFESSIONAL ENGINEER — ROBERT J. FEE — No. E-13014 — Exp. 6/30/09 — ELEC — STATE OF CALIFORNIA

11-24-08
PLANS APPROVAL DATE

The State of California or its officers or agents shall not be responsible for the accuracy or completeness of electronic copies of this plan sheet.

STV Incorporated
9130 Anaheim Place, Suite 210
Rancho Cucamonga, CA 91730

JDL Design, LLC
18582 Beach Blvd, Suite 229
Huntington Beach, CA 92647

ACRONYM	LABEL	1D	LABEL	ACRONYM
WA-LN1E-VCT	PTB5-39/1D-2	2 1	PTB5-38/1D-1	WA-LN1W-VCT
WA-LN2E-VCT	PTB5-41/1D-4	4 3	PTB5-40/1D-3	WA-LN2W-VCT
	N/C	6 5	N/C	
	N/C	8 7	N/C	
	N/C	10 9	COM	
	N/C	12 11	N/C	
	N/C	14 13	N/C	
	N/C	16 15	N/C	
	N/C	18 17	N/C	
	N/C	20 19	N/C	
	N/C	22 21	N/C	
	N/C	24 23	N/C	
	N/C	26 25	N/C	
	N/C	28 27	N/C	
	N/C	30 29	N/C	
	N/C	32 31	N/C	
	N/C	34 33	N/C	
	N/C	36 35	N/C	
	N/C	38 37	N/C	
	N/C	40 39	N/C	

ACRONYM	LABEL	2D	LABEL	ACRONYM
WA-BLDGLT-IV	PTB4-2/2D-2	2 1	PTB4-1/2D-1	WA-ROADLT1-IV
~~WA-E1-IV~~	~~PTB4-4/2D-4~~	4 3	~~PTB4-3/2D-3~~	~~WA-B1-IV~~
~~WA-E2-IV~~	~~PTB4-6/2D-6~~	6 5	~~PTB4-5/2D-5~~	~~WA-B2-IV~~
WA-COVER1&2-IV	PTB4-8/2D-8	8 7	PTB4-7/2D-7	WA-DUCTLT-IV
	N/C	10 9	COM	
WA-CTRLCKT1-IV	PTB4-10/2D-12	12 11	PTB4-9/2D-11	WA-CRANE1-IV
WA-TIELINE2-IV	PTB4-12/2D-14	14 13	PTB4-11/2D-13	WA-TIELINE1-IV
WA-CRANE2-IV	PTB4-14/2D-16	16 15	PTB4-13/2D-15	WA-CTRLCKT2-IV
~~WA-B3-IV~~	~~PTB4-16/2D-18~~	18 17	PTB4-15/2D-17	WA-COVER3&4-IV
	N/C	20 19	COM	
~~WA-B4-IV~~	~~PTB4-18/2D-22~~	22 21	~~PTB4-17/2D-21~~	~~WA-E3-IV~~
WA-PUMPS-IV	PTB4-20/2D-24	24 23	~~PTB4-19/2D-23~~	~~WA-E4-IV~~
WA-B&E-IV	PTB4-22/2D-26	26 25	PTB4-21/2D-25	WA-ROADLT2-IV
WA-BLDGLT-IC	PTB4-24/2D-28	28 27	PTB4-23/2D-27	WA-ROADLT1-IC
	N/C	30 29	COM	
WA-COVER1&2-IC	PTB4-26/2D-32	32 31	PTB4-25/2D-31	WA-DUCTLT-IC
WA-CTRLCKT1-IC	PTB4-28/2D-34	34 33	PTB4-27/2D-33	WA-CRANE1-IC
WA-TIELINE2-IC	PTB4-30/2D-36	36 35	PTB4-29/2D-35	WA-TIELINE1-IC
WA-CRANE2-IC	PTB4-32/2D-38	38 37	PTB4-31/2D-37	WA-CTRLCKT2-IC
	N/C	40 39	COM	

NOTES:

1. RE-ROUTE FIELD RPM SIGNALS TO NEW HIGH SPEED COUNTER MODULE xC.
2. DELETE FIELD WIRING AT TERMINAL BLOCKS (PTBx)
3. PRESERVE PLC WIRING BETWEEN EXISTING TERMINALS (PTBx) AND DIGITAL INPUT MODULE xD FOR FUTURE USE.
4. REPLACED BY MODBUS PLUS DATALINK.

ACRONYM	LABEL	4D	LABEL	ACRONYM
WA-SUMPPM1-IV	PTB5-24/4D-2	2 1	PTB5-23/4D-1	WA-XFMR2-SUDP
WA-BLDWTR-HIGH	PTB5-26/4D-4	4 3	PTB5-25/4D-3	WA-SUMPPM2-IV
WA-TUBEPM2-IV	PTB5-28/4D-6	6 5	PTB5-27/4D-5	WA-TUBEPM1-IV
~~WA-D1-RPM~~	~~PTB5-30/4D-8~~	8 7	PTB5-29/4D-7	WA-TUBWTR-HIGH
	N/C	10 9	COM	
~~WA-D3-RPM~~	~~PTB5-32/4D-12~~	12 11	~~PTB5-31/4D-11~~	~~WA-B2-RPM~~
~~WA-E1-RPM~~	~~PTB5-34/4D-14~~	14 13	~~PTB5-33/4D-13~~	~~WA-B4-RPM~~
~~WA-E3-RPM~~	~~PTB5-36/4D-16~~	16 15	~~PTB5-35/4D-15~~	~~WA-E2-RPM~~
WA-BD1LS-OP	PTB5-42/4D-18	18 17	~~PTB5-37/4D-17~~	~~WA-E4-RPM~~
	N/C	20 19	COM	
WA-BD3LS-OP	PTB6-2/4D-22	22 21	PTB6-1/4D-21	WA-BD2LS-OP
WA-ED1LS-OP	PTB6-4/4D-24	24 23	PTB6-3/4D-23	WA-BD4LS-OP
WA-ED3LS-OP	PTB6-6/4D-26	26 25	PTB6-5/4D-25	WA-ED2LS-OP
WA-BD1LS-CL	PTB6-8/4D-28	28 27	PTB6-7/4D-27	WA-ED4LS-OP
	N/C	30 29	COM	
WA-BD3LS-CL	PTB6-10/4D-32	32 31	PTB6-9/4D-31	WA-BD2LS-CL
WA-ED1LS-CL	PTB6-12/4D-34	34 33	PTB6-11/4D-33	WA-BD4LS-CL
WA-ED3LS-CL	PTB6-14/4D-36	36 35	PTB6-13/4D-35	WA-ED2LS-CL
WA-FLSUMP-HIGH	PTB6-40/4D-38	38 37	PTB6-15/4D-37	WA-ED4LS-CL
	N/C	40 39	COM	

ACRONYM	LABEL	5D	LABEL	ACRONYM
WA-E201LP-LOW	PTB4-44/5D-2	2 1	PTB4-43/5D-1	WA-E101LP-LOW
WA-E401LP-LOW	PTB4-46/5D-4	4 3	PTB4-45/5D-3	WA-E301LP-LOW
WA-BD2SS-LOC	PTB5-44/5D-6	6 5	PTB5-43/5D-5	WA-BD1SS-LOC
WA-BD4SS-LOC	PTB5-46/5D-8	8 7	PTB5-45/5D-7	WA-BD3SS-LOC
	N/C	10 9	COM	
WA-ED2SS-LOC	PTB5-48/5D-12	12 11	PTB5-47/5D-11	WA-ED1SS-LOC
WA-ED4SS-LOC	PTB5-50/5D-14	14 13	PTB5-49/5D-13	WA-ED3SS-LOC
	N/C	16 15	N/C	
	N/C	18 17	N/C	
	N/C	20 19	COM	
	N/C	22 21	N/C	
	N/C	24 23	N/C	
	N/C	26 25	N/C	
	N/C	28 27	N/C	
	N/C	30 29	COM	
	N/C	32 31	N/C	
	N/C	34 33	N/C	
	N/C	36 35	N/C	
	N/C	38 37	N/C	
	N/C	40 39	COM	

ACRONYM	LABEL	3D	LABEL	ACRONYM
WA-PUMPS-IC	PTB4-34/3D-2	2 1	PTB4-33/3D-1	WA-COVER3&4-IC
WA-B&E-IC	PTB4-36/3D-4	4 3	PTB4-35/3D-3	WA-ROADLT2-IC
WA-BKR2-IK	PTB4-38/3D-6	6 5	PTB4-37/3D-5	WA-BKR1-IK
WA-BKR4-IK	PTB4-40/3D-8	8 7	PTB4-39/3D-7	WA-BKR3-IK
	N/C	10 9	COM	
WA-SS2-LOC	PTB4-42/3D-12	12 11	PTB4-41/3D-11	WA-SS1-LOC
WA-SS4-LOC	PTB5-2/3D-14	14 13	PTB5-1/3D-13	WA-SS3-LOC
WA-50/51B1-OC	PTB5-4/3D-16	16 15	PTB5-3/3D-15	WA-50/51A1-OC
WA-50/51A2-OC	PTB5-6/3D-18	18 17	PTB5-5/3D-17	WA-50N/51N1-OC
	N/C	20 19	COM	
WA-50N/51N2-OC	PTB5-8/3D-22	22 21	PTB5-7/3D-21	WA-50/51B2-OC
WA-50/51B3-OC	PTB5-10/3D-24	24 23	PTB5-9/3D-23	WA-50/51A3-OC
WA-50/51A4-OC	PTB5-12/3D-26	26 25	PTB5-11/3D-25	WA-50N/51N3-OC
WA-50N/51N4-OC	PTB5-14/3D-28	28 27	PTB5-13/3D-27	WA-50/51B4-OC
	N/C	30 29	COM	
WA-XFMR1-LIQT	PTB5-16/3D-32	32 31	PTB5-15/3D-31	WA-27X1-UV
WA-XFMR1-OILL	PTB5-18/3D-34	34 33	PTB5-17/3D-33	WA-XFMR1-WINT
WA-XFMR2-LIQT	PTB5-20/3D-36	36 35	PTB5-19/3D-35	WA-XFMR1-SUDP
WA-XFMR2-OILL	PTB5-22/3D-38	38 37	PTB5-21/3D-37	WA-XFMR2-WINT
	N/C	40 39	COM	

	BY	CHECKED
DESIGN	G.RUSSELL	D.LE
DETAILS	D.LE	S.LO
QUANTITIES	D.LE	S.LO

PREPARED FOR THE STATE OF CALIFORNIA DEPARTMENT OF TRANSPORTATION

DIVISION OF ENGINEERING SERVICES
ELECTRICAL-MECHANICAL-WATER AND WASTEWATER DESIGN

BRIDGE NO. VARIES
POST MILE VARIES

SCADA SYSTEM UPGRADE: POSEY/WEBSTER STREET TUBES AND CALDECOTT TUNNEL

WEBSTER STREET TUBE ALAMEDA PORTAL PLC #8 TERMINATION SCHEDULE

SHEET EE4-27-1

DOES SD Imperial Rev.1/07

ORIGINAL SCALE IN INCHES FOR REDUCED PLANS 0 1 2 3

CU 04220
EA 1A4604

DISREGARD PRINTS BEARING EARLIER REVISION DATES →

REVISION DATES (PRELIMINARY STAGE ONLY)

SHEET 77 OF 95

26-NOV-2008 11:19

EE4-27-1.dgn

DIST.	COUNTY	ROUTE	POST MILES TOTAL PROJECT	SHEET NO.	TOTAL SHEETS
04	Ala,CC	24,260	R5.9/R6.2, R0.0/R0.5,R0.9/R1.9	83	100

REGISTERED ELECTRICAL ENGINEER — 02-26-08 DATE

REGISTERED PROFESSIONAL ENGINEER — ROBERT J. FEE — No. E-13014 — Exp. 6/30/09 — ELEC — STATE OF CALIFORNIA

11-24-08
PLANS APPROVAL DATE

The State of California or its officers or agents shall not be responsible for the accuracy or completeness of electronic copies of this plan sheet.

STV Incorporated
9130 Anaheim Place, Suite 210
Rancho Cucamonga, CA 91730

JDL Design, LLC
18582 Beach Blvd, Suite 229
Huntington Beach, CA 92647

LABEL	1A	LABEL	ACRONYM
COM	2 1	PTB3-1/1A-1	WA-CSE1-AMPS
N/C	4 3		
COM	6 5	PTB3-2/1A-5	WA-CSE2-AMPS
N/C	8 7		
N/C	10 9	N/C	
COM	12 11	PTB3-3/1A-11	WA-CSE3-AMPS
N/C	14 13		
COM	16 15	PTB3-4/1A-15	WA-CSE4-AMPS
N/C	18 17		
N/C	20 19	N/C	
COM	22 21	PTB3-5/1A-21	WA-CSB1-AMPS
N/C	24 23		
COM	26 25	PTB3-6/1A-25	WA-CSB2-AMPS
N/C	28 27		
N/C	30 29	N/C	
COM	32 31	PTB3-7/1A-31	WA-CSB3-AMPS
N/C	34 33		
COM	36 35	PTB3-8/1A-35	WA-CSB4-AMPS
N/C	38 37		
N/C	40 39	N/C	

LABEL	2A	LABEL	ACRONYM
COM	2 1	PTB3-9/2A-1	WA-CO134-PPM
N/C	4 3		
COM	6 5	PTB3-10/2A-5	WA-NO134-PPM
N/C	8 7		
N/C	10 9	N/C	
COM	12 11	PTB3-11/2A-11	WA-CO142-PPM
N/C	14 13		
COM	16 15	PTB3-12/2A-15	WA-NO142-PPM
N/C	18 17		
N/C	20 19	N/C	
N/C	22 21	N/C	
N/C	24 23	N/C	
N/C	26 25	N/C	
N/C	28 27	N/C	
N/C	30 29	N/C	
N/C	32 31	N/C	
N/C	34 33	N/C	
N/C	36 35	N/C	
N/C	38 37	N/C	
N/C	40 39	N/C	

LABEL	1Q	LABEL	ACRONYM
N/C	2 1	PTB7-1/1Q-1	WA-BKR1-TRP
N/C	4 3	PTB7-2/1Q-3	WA-BKR2-TRP
N/C	6 5	PTB7-3/1Q-5	WA-BKR3-TRP
N/C	8 7	PTB7-4/1Q-7	WA-BKR4-TRP
N/C	10 9	24V+	
N/C	12 11	PTB7-5/1Q-11	WA-BKR1-RESET
N/C	14 13	PTB7-6/1Q-13	WA-BKR2-CL
N/C	16 15	PTB7-7/1Q-15	WA-BKR3-CL
N/C	18 17	PTB7-8/1Q-17	WA-BKR4-CL
N/C	20 19	PTB7-10/COM	
N/C	22 21	PTB7-9/1Q-21	WA-BKR1-CL
N/C	24 23	N/C	
N/C	26 25	N/C	
N/C	28 27	N/C	
N/C	30 29	24V+	
N/C	32 31	N/C	
N/C	34 33	N/C	
N/C	36 35	N/C	
N/C	38 37	N/C	
N/C	40 39	PTB7-11/COM	

LABEL	2Q	LABEL	ACRONYM
N/C	2 1	~~PTB7-21/2Q-1~~	~~WA-BS1-HIGH~~
N/C	4 3	~~PTB7-22/2Q-3~~	~~WA-BS2-HIGH~~
N/C	6 5	~~PTB7-23/2Q-5~~	~~WA-BS3-HIGH~~
N/C	8 7	~~PTB7-24/2Q-7~~	~~WA-BS4-HIGH~~
L	10 9	~~N~~	1 2 3
N/C	12 11	~~PTB7-25/2Q-11~~	~~WA-ES1-HIGH~~
N/C	14 13	~~PTB7-26/2Q-13~~	~~WA-ES2-HIGH~~
N/C	16 15	~~PTB7-27/2Q-15~~	~~WA-ES3-HIGH~~
N/C	18 17	~~PTB7-28/2Q-17~~	~~WA-ES4-HIGH~~
L	20 19	~~N~~	
N/C	22 21	~~PTB7-29/2Q-21~~	~~WA-BS1-LOW~~
N/C	24 23	~~PTB7-30/2Q-23~~	~~WA-BS2-LOW~~
N/C	26 25	~~PTB7-31/2Q-25~~	~~WA-BS3-LOW~~
N/C	28 27	~~PTB7-32/2Q-27~~	~~WA-BS4-LOW~~
L	30 29	~~N~~	
N/C	32 31	~~PTB7-33/2Q-31~~	~~WA-ES1-LOW~~
N/C	34 33	~~PTB7-34/2Q-33~~	~~WA-ES2-LOW~~
N/C	36 35	~~PTB7-35/2Q-35~~	~~WA-ES3-LOW~~
N/C	38 37	~~PTB7-36/2Q-37~~	~~WA-ES4-LOW~~
L	40 39	~~N~~	

LABEL	3Q	LABEL	ACRONYM
N/C	2 1	PTB7-37/3Q-1	WA-BD1-OP
N/C	4 3	PTB7-38/3Q-3	WA-BD2-OP
N/C	6 5	PTB7-39/3Q-5	WA-BD3-OP
N/C	8 7	PTB7-40/3Q-7	WA-BD4-OP
L	10 9	N	
N/C	12 11	PTB7-41/3Q-11	WA-ED1-OP
N/C	14 13	PTB7-42/3Q-13	WA-ED2-OP
N/C	16 15	PTB7-43/3Q-15	WA-ED3-OP
N/C	18 17	PTB7-44/3Q-17	WA-ED4-OP
L	20 19	N	
N/C	22 21	PTB7-45/3Q-21	WA-BD1-CL
N/C	24 23	PTB7-46/3Q-23	WA-BD2-CL
N/C	26 25	PTB7-47/3Q-25	WA-BD3-CL
N/C	28 27	PTB7-48/3Q-27	WA-BD4-CL
L	30 29	N	
N/C	32 31	PTB7-49/3Q-31	WA-ED1-CL
N/C	34 33	PTB7-50/3Q-33	WA-ED2-CL
N/C	36 35	PTB7-51/3Q-35	WA-ED3-CL
N/C	38 37	PTB7-52/3Q-37	WA-ED4-CL
L	40 39	N	

NOTES:

1. REMOVE, COIL & STOW FIELD WIRING AT TERMINAL BLOCKS (PTBx).
2. PRESERVE PLC WIRING BETWEEN EXISTING TERMINALS (PTBx) AND DIGITAL OUTPUT MODULE xQ FOR FUTURE USE.
3. REPLACED BY MODBUS PLUS DATALINK.

	BY	CHECKED
DESIGN	G.RUSSELL	D.LEE
DETAILS	D.LEE	S.LO
QUANTITIES	D.LEE	S.LO

PREPARED FOR THE STATE OF CALIFORNIA DEPARTMENT OF TRANSPORTATION

DIVISION OF ENGINEERING SERVICES
ELECTRICAL-MECHANICAL-WATER AND WASTEWATER DESIGN

BRIDGE NO. VARIES
POST MILE VARIES

SCADA SYSTEM UPGRADE: POSEY/WEBSTER STREET TUBES AND CALDECOTT TUNNEL
WEBSTER STREET TUBE ALAMEDA PORTAL
PLC 8 TERMINATION SCHEDULE

SHEET EE4-27 -2

DOES SD Imperial Rev.1/07

ORIGINAL SCALE IN INCHES FOR REDUCED PLANS 0 1 2 3

CU 04220
EA 1A4604

DISREGARD PRINTS BEARING EARLIER REVISION DATES →
REVISION DATES (PRELIMINARY STAGE ONLY)

SHEET 78 OF 95

26-NOV-2008 11:20
EE4-27-2.dgn

DIST.	COUNTY	ROUTE	POST MILES TOTAL PROJECT	SHEET NO.	TOTAL SHEETS
04	Ala,CC	24,260	R5.9/R6.2, R0.0/R0.5,R0.9/R1.9	84	100

REGISTERED ELECTRICAL ENGINEER — 02-26-08 DATE

REGISTERED PROFESSIONAL ENGINEER ROBERT J. FEE No. E-13014 Exp. 6/30/09 ELEC STATE OF CALIFORNIA

11-24-08
PLANS APPROVAL DATE

The State of California or its officers or agents shall not be responsible for the accuracy or completeness of electronic copies of this plan sheet.

STV Incorporated
9130 Anaheim Place, Suite 210
Rancho Cucamonga, CA 91730

JDL Design, LLC
18582 Beach Blvd, Suite 229
Huntington Beach, CA 92647

ACRONYM	LABEL	1C	LABEL	ACRONYM
WA-B2-RPM	PTB5-31/1C-2	2 / 1	PTB5-30/1C-1	WA-B1-RPM
	DC COM	4 / 3	DC COM	
	N/C	6 / 5	N/C	
	N/C	8 / 7	N/C	
	N/C	10 / 9	N/C	
WA-B4-RPM	PTB5-33/1C-12	12 / 11	PTB5-32/1C-11	WA-B3-RPM
	DC COM	14 / 13	DC COM	
	N/C	16 / 15	N/C	
	N/C	18 / 17	N/C	
	N/C	20 / 19	N/C	
WA-E2-RPM	PTB5-35/1C-22	22 / 21	PTB5-34/1C-21	WA-E1-RPM
	DC COM	24 / 23	DC COM	
	N/C	26 / 25	N/C	
	N/C	28 / 27	N/C	
	N/C	30 / 29	N/C	
WA-E4-RPM	PTB5-37/1C-32	32 / 31	PTB5-36/1C-31	WA-E3-RPM
	DC COM	34 / 33	DC COM	
	N/C	36 / 35	N/C	
	N/C	38 / 37	N/C	
	N/C	40 / 39	N/C	

(1)

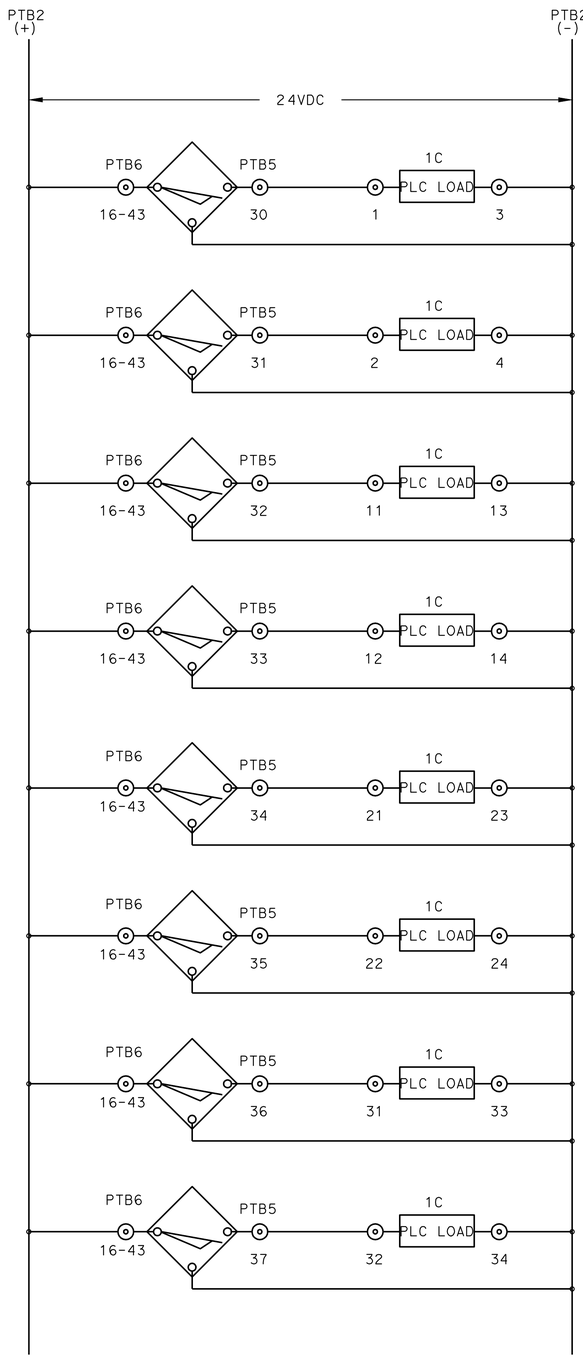

PROXIMITY SWITCH SCHEMATICS

NOTE:

(1) RE-ROUTE EXISITNG PROXIMITY SWITCHES (RPM) TO NEW HIGH SPEED COUNTER MODULE.

	BY	CHECKED
DESIGN	G.RUSSELL	D.LEE
DETAILS	D.LEE	S.LO
QUANTITIES	D.LEE	S.LO

PREPARED FOR THE STATE OF CALIFORNIA DEPARTMENT OF TRANSPORTATION

DIVISION OF ENGINEERING SERVICES ELECTRICAL-MECHANICAL-WATER AND WASTEWATER DESIGN

BRIDGE NO. VARIES
POST MILE VARIES

SCADA SYSTEM UPGRADE: POSEY/WEBSTER STREET TUBES AND CALDECOTT TUNNEL
WEBSTER STREET TUBE ALAMEDA PORTAL
PLC 8 TERMINATION SCHEDULE

SHEET EE4-27-3

DOES SD Imperial Rev.1/07

ORIGINAL SCALE IN INCHES FOR REDUCED PLANS 0 1 2 3

CU 04220
EA 1A4604

DISREGARD PRINTS BEARING EARLIER REVISION DATES →
REVISION DATES (PRELIMINARY STAGE ONLY)

SHEET 79 OF 95

26-NOV-2008 11:20

EE4-27-3.dgn

DIST.	COUNTY	ROUTE	POST MILES TOTAL PROJECT	SHEET NO.	TOTAL SHEETS
04	Ala,CC	24,260	R5.9/R6.2, R0.0/R0.5,R0.9/R1.9	85	100

REGISTERED ELECTRICAL ENGINEER — 02-26-08 DATE

REGISTERED PROFESSIONAL ENGINEER — ROBERT J. FEE — No. E-13014 — Exp. 6/30/09 — ELEC — STATE OF CALIFORNIA

11-24-08
PLANS APPROVAL DATE

The State of California or its officers or agents shall not be responsible for the accuracy or completeness of electronic copies of this plan sheet.

STV Incorporated
9130 Anaheim Place, Suite 210
Rancho Cucamonga, CA 91730

JDL Design, LLC
18582 Beach Blvd, Suite 229
Huntington Beach, CA 92647

Emergency Telephone & Fire | Webster 400 Volt Syst. Alameda | Alarm Manager | Ack. All Alarms
CO & NO Level Display | Webster 400 Volt Syst. Oakland | Historical Trends | User Log in/Log out

2/4/2003 11:02:57 AM

Caldecott 1&2 East Blower Room

BLOWER #1

SCADA CONTROL DAMPER
Man Auto
Open
Close
Damper In Remote
Opened
967 RPM
11326 Hrs
VFD In Remote

SCADA CONTROL BLOWER VFD
Man Auto
Run
Stop
58.7 Hz

BLOWER #2

SCADA CONTROL DAMPER
Man Auto
Open
Close
Damper In Remote
Closed
0 RPM
1656 Hrs
VFD In Remote

SCADA CONTROL BLOWER VFD
Man Auto
Run
Stop
00.0 Hz

BLOWER #3

SCADA CONTROL DAMPER
Man Auto
Open
Close
Damper In Remote
Opened
967 RPM
11326 Hrs
VFD In Remote

SCADA CONTROL BLOWER VFD
Man Auto
Run
Stop
52.5 Hz

BLOWER #4

SCADA CONTROL DAMPER
Man Auto
Open
Close
Damper In Remote
Opened
967 RPM
11326 Hrs
VFD In Remote

SCADA CONTROL BLOWER VFD
Man Auto
Run
Stop
55.9 Hz

Notes 1) Damper(s) must be in REM for SCADA control. 2) VFD must be in REM for SCADA control. 3) Fan will not operate with damper(s) in "Closed" position. 4) Local VFD operation requires damper(s) in "Opened" position.

MM/DD	HH:MM:SS	EVT	Type	Pri	Name	GroupName	Value/Limit
02/02	11:21:15	ALM	DISC	1	digon	$System	ON/ ON

Webster Exhauster Alameda | Webster Blower Alameda | Posey Exhauster Alameda | Posey Blower Alameda
Webster Exhauster Oakland | Webster Blower Oakland | Posey Exhauster Oakland | Posey Blower Oakland
Caldecott Exhst Bore 1&2W | Caldecott Blower Bore 1&2W | Caldecott Blwr/Exhst Bore 3W | Configure Posey Tube Fans
Caldecott Exhst Bore 1&2E | Caldecott Blower Bore 1&2E | Configure Caldecott Fans | Configure Webster Tube Fans

	BY	CHECKED
DESIGN	G.RUSSELL	D.LE
DETAILS	D.LE	S.LO
QUANTITIES		

PREPARED FOR THE STATE OF CALIFORNIA DEPARTMENT OF TRANSPORTATION

DIVISION OF ENGINEERING SERVICES
ELECTRICAL-MECHANICAL-WATER AND WASTEWATER DESIGN

BRIDGE NO. VARIES
POST MILE VARIES

SCADA SYSTEM UPGRADE: POSEY/WEBSTER STREET TUBES AND CALDECOTT TUNNEL
CALDECOTT 1 & 2 EAST BLOWER ROOM
WONDERWARE SCREEN

SHEET EE4-28-1

DOES SD Imperial Rev.1/07

ORIGINAL SCALE IN INCHES FOR REDUCED PLANS 0 1 2 3

CU 04220
EA 1A4604

DISREGARD PRINTS BEARING EARLIER REVISION DATES →
REVISION DATES (PRELIMINARY STAGE ONLY)

SHEET 80 OF 95

26-NOV-2008 11:20
EE4-28-1.dgn

DIST.	COUNTY	ROUTE	POST MILES TOTAL PROJECT	SHEET NO.	TOTAL SHEETS
04	Ala,CC	24,260	R5.9/R6.2, R0.0/R0.5,R0.9/R1.9	86	100

REGISTERED ELECTRICAL ENGINEER — 02-26-08 DATE

REGISTERED PROFESSIONAL ENGINEER — ROBERT J. FEE — No. E-13014 — Exp. 6/30/09 — ELEC — STATE OF CALIFORNIA

11-24-08
PLANS APPROVAL DATE

The State of California or its officers or agents shall not be responsible for the accuracy or completeness of electronic copies of this plan sheet.

STV Incorporated
9130 Anaheim Place, Suite 210
Rancho Cucamonga, CA 91730

JDL Design, LLC
18582 Beach Blvd, Suite 229
Huntington Beach, CA 92647

Emergency Telephone & Fire | Webster 400 Volt Syst. Alameda | Alarm Manager | Ack. All Alarms
CO & NO Level Display | Webster 400 Volt Syst. Oakland | Historical Trends | User Log in/Log out

2/4/2003 11:03:20 AM

Caldecott 1&2 East Exhauster Room

EXHAUSTER #1

SCADA CONTROL DAMPER
Man Auto
Open
Close
Damper In Remote
Opened
967 RPM
11326 Hrs
VFD In Remote
SCADA CONTROL EXHAUSTER VFD
Man Auto
Run
Stop
58.7 Hz

EXHAUSTER #2

SCADA CONTROL DAMPER
Man Auto
Open
Close
Damper In Remote
Closed
0 RPM
1656 Hrs
VFD In Remote
SCADA CONTROL EXHAUSTER VFD
Man Auto
Run
Stop
00.0 Hz

EXHAUSTER #3

SCADA CONTROL DAMPER
Man Auto
Open
Close
Damper In Remote
Opened
967 RPM
11326 Hrs
VFD In Remote
SCADA CONTROL EXHAUSTER VFD
Man Auto
Run
Stop
52.5 Hz

EXHAUSTER #4

SCADA CONTROL DAMPER
Man Auto
Open
Close
Damper In Remote
Opened
967 RPM
11326 Hrs
VFD In Remote
SCADA CONTROL EXHAUSTER VFD
Man Auto
Run
Stop
55.9 Hz

Notes 1) Damper(s) must be in REM for SCADA control. 2) VFD must be in REM for SCADA control. 3) Fan will not operate with damper(s) in "Closed" position. 4) Local VFD operation requires damper(s) in "Opened" position.

MM/DD	HH:MM:SS	EVT	Type	Pri	Name	GroupName	Value/Limit
02/02	11:21:15	ALM	DISC	1	digon	$System	ON/ ON

Webster Exhauster Alameda | Webster Blower Alameda | Posey Exhauster Alameda | Posey Blower Alameda
Webster Exhauster Oakland | Webster Blower Oakland | Posey Exhauster Oakland | Posey Blower Oakland
Caldecott Exhst Bore 1&2W | Caldecott Blower Bore 1&2W | Caldecott Blwr/Exhst Bore 3W | Configure Posey Tube Fans
Caldecott Exhst Bore 1&2E | Caldecott Blower Bore 1&2E | Configure Caldecott Fans | Configure Webster Tube Fans

	BY	CHECKED
DESIGN	G. RUSSELL	D. LE
DETAILS	D. LE	S. LO
QUANTITIES		

PREPARED FOR THE STATE OF CALIFORNIA DEPARTMENT OF TRANSPORTATION

DIVISION OF ENGINEERING SERVICES
ELECTRICAL-MECHANICAL-WATER AND WASTEWATER DESIGN

BRIDGE NO. VARIES
POST MILE VARIES

SCADA SYSTEM UPGRADE: POSEY/WEBSTER STREET TUBES AND CALDECOTT TUNNEL
CALDECOTT 1 & 2 EAST EXHAUSTER ROOM WONDERWARE SCREEN

SHEET EE4-28-2

DOES SD Imperial Rev. 1/07

ORIGINAL SCALE IN INCHES FOR REDUCED PLANS 0 1 2 3

CU 04220
EA 1A4604

DISREGARD PRINTS BEARING EARLIER REVISION DATES →
REVISION DATES (PRELIMINARY STAGE ONLY)

SHEET 81 OF 95

26-NOV-2008 11:09
EE4-28-2.dgn

DIST.	COUNTY	ROUTE	POST MILES TOTAL PROJECT	SHEET NO.	TOTAL SHEETS
04	Ala,CC	24,260	R5.9/R6.2, R0.0/R0.5,R0.9/R1.9	87	100

REGISTERED ELECTRICAL ENGINEER — 02-26-08 DATE

REGISTERED PROFESSIONAL ENGINEER — ROBERT J. FEE — No. E-13014 — Exp. 6/30/09 — ELEC — STATE OF CALIFORNIA

11-24-08
PLANS APPROVAL DATE

The State of California or its officers or agents shall not be responsible for the accuracy or completeness of electronic copies of this plan sheet.

STV Incorporated
9130 Anaheim Place, Suite 210
Rancho Cucamonga, CA 91730

JDL Design, LLC
18582 Beach Blvd, Suite 229
Huntington Beach, CA 92647

Emergency Telephone & Fire | Webster 400 Volt Syst. Alameda | Alarm Manager | Ack. All Alarms
CO & NO Level Display | Webster 400 Volt Syst. Oakland | Historical Trends | User Log in/Log out

2/4/2003 11:03:32 AM

Caldecott 1&2 West Blower Room

BLOWER #1

SCADA CONTROL DAMPER
Man Auto
Open
Close
Damper In Remote
Opened
967 RPM
11326 Hrs
VFD In Remote

SCADA CONTROL BLOWER VFD
Man Auto
Run
Stop
58.7 Hz

BLOWER #2

SCADA CONTROL DAMPER
Man Auto
Open
Close
Damper In Remote
Closed
0 RPM
1656 Hrs
VFD In Remote

SCADA CONTROL BLOWER VFD
Man Auto
Run
Stop
00.0 Hz

BLOWER #3

SCADA CONTROL DAMPER
Man Auto
Open
Close
Damper In Remote
Opened
967 RPM
11326 Hrs
VFD In Remote

SCADA CONTROL BLOWER VFD
Man Auto
Run
Stop
52.5 Hz

BLOWER #4

SCADA CONTROL DAMPER
Man Auto
Open
Close
Damper In Remote
Opened
967 RPM
11326 Hrs
VFD In Remote

SCADA CONTROL BLOWER VFD
Man Auto
Run
Stop
55.9 Hz

Notes 1) Damper(s) must be in REM for SCADA control. 2) VFD must be in REM for SCADA control. 3) Fan will not operate with damper(s) in "Closed" position. 4) Local VFD operation requires damper(s) in "Opened" position.

MM/DD	HH:MM:SS	EVT	Type	Pri	Name	GroupName	Value/Limit
02/02	11:21:15	ALM	DISC	1	digon	$System	ON/ ON

Webster Exhauster Alameda | Webster Blower Alameda | Posey Exhauster Alameda | Posey Blower Alameda
Webster Exhauster Oakland | Webster Blower Oakland | Posey Exhauster Oakland | Posey Blower Oakland
Caldecott Exhst Bore 1&2W | Caldecott Blower Bore 1&2W | Caldecott Blwr/Exhst Bore 3W | Configure Posey Tube Fans
Caldecott Exhst Bore 1&2E | Caldecott Blower Bore 1&2E | Configure Caldecott Fans | Configure Webster Tube Fans

	BY	CHECKED
DESIGN	G. RUSSELL	D. LE
DETAILS	D. LE	S. LO
QUANTITIES		

PREPARED FOR THE STATE OF CALIFORNIA DEPARTMENT OF TRANSPORTATION

DIVISION OF ENGINEERING SERVICES
ELECTRICAL-MECHANICAL-WATER AND WASTEWATER DESIGN

BRIDGE NO. VARIES
POST MILE VARIES

SCADA SYSTEM UPGRADE: POSEY/WEBSTER STREET TUBES AND CALDECOTT TUNNEL
CALDECOTT 1 & 2 WEST BLOWER ROOM
WONDERWARE SCREEN

SHEET EE4-28-3

DOES SD Imperial Rev. 1/07

ORIGINAL SCALE IN INCHES FOR REDUCED PLANS 0 1 2 3

CU 04220
EA 1A4604

DISREGARD PRINTS BEARING EARLIER REVISION DATES →
REVISION DATES (PRELIMINARY STAGE ONLY)

SHEET 82 OF 95

26-NOV-2008 11:10
EE4-28-3.dgn

DIST.	COUNTY	ROUTE	POST MILES TOTAL PROJECT	SHEET NO.	TOTAL SHEETS
04	Ala,CC	24,260	R5.9/R6.2, R0.0/R0.5,R0.9/R1.9	88	100

REGISTERED ELECTRICAL ENGINEER — 02-26-08 DATE

REGISTERED PROFESSIONAL ENGINEER — ROBERT J. FEE — No. E-13014 — Exp. 6/30/09 — ELEC — STATE OF CALIFORNIA

11-24-08
PLANS APPROVAL DATE

The State of California or its officers or agents shall not be responsible for the accuracy or completeness of electronic copies of this plan sheet.

STV Incorporated
9130 Anaheim Place, Suite 210
Rancho Cucamonga, CA 91730

JDL Design, LLC
18582 Beach Blvd, Suite 229
Huntington Beach, CA 92647

Emergency Telephone & Fire | Webster 400 Volt Syst. Alameda | Alarm Manager | Ack. All Alarms
CO & NO Level Display | Webster 400 Volt Syst. Oakland | Historical Trends | User Log in/Log out

2/4/2003 11:03:45 AM

Caldecott 1&2 West Exhauster Room

EXHAUSTER #1

SCADA CONTROL DAMPER
Man Auto
Open
Close
Damper In Remote
Opened
967 RPM
11326 Hrs
VFD In Remote
SCADA CONTROL EXHAUSTER VFD
Man Auto
Run
Stop
58.7 Hz

EXHAUSTER #2

SCADA CONTROL DAMPER
Man Auto
Open
Close
Damper In Remote
Closed
0 RPM
1656 Hrs
VFD In Remote
SCADA CONTROL EXHAUSTER VFD
Man Auto
Run
Stop
00.0 Hz

EXHAUSTER #3

SCADA CONTROL DAMPER
Man Auto
Open
Close
Damper In Remote
Opened
967 RPM
11326 Hrs
VFD In Remote
SCADA CONTROL EXHAUSTER VFD
Man Auto
Run
Stop
52.5 Hz

EXHAUSTER #4

SCADA CONTROL DAMPER
Man Auto
Open
Close
Damper In Remote
Opened
967 RPM
11326 Hrs
VFD In Remote
SCADA CONTROL EXHAUSTER VFD
Man Auto
Run
Stop
55.9 Hz

Notes 1) Damper(s) must be in REM for SCADA control. 2) VFD must be in REM for SCADA control. 3) Fan will not operate with damper(s) in "Closed" position. 4) Local VFD operation requires damper(s) in "Opened" position.

MM/DD HH:MM:SS	EVT	Type	Pri	Name	GroupName	Value/Limit
02/02 11:21:15	ALM	DISC	1	digon	$System	ON/ ON

Webster Exhauster Alameda | Webster Blower Alameda | Posey Exhauster Alameda | Posey Blower Alameda
Webster Exhauster Oakland | Webster Blower Oakland | Posey Exhauster Oakland | Posey Blower Oakland
Caldecott Exhst Bore 1&2W | Caldecott Blower Bore 1&2W | Caldecott Blwr/Exhst Bore 3W | Configure Posey Tube Fans
Caldecott Exhst Bore 1&2E | Caldecott Blower Bore 1&2E | Configure Caldecott Fans | Configure Webster Tube Fans

	BY	CHECKED
DESIGN	G.RUSSELL	D.LE
DETAILS	D.LE	S.LO
QUANTITIES		

PREPARED FOR THE STATE OF CALIFORNIA DEPARTMENT OF TRANSPORTATION

DIVISION OF ENGINEERING SERVICES
ELECTRICAL-MECHANICAL-WATER AND WASTEWATER DESIGN

BRIDGE NO. VARIES
POST MILE VARIES

SCADA SYSTEM UPGRADE: POSEY/WEBSTER STREET TUBES AND CALDECOTT TUNNEL
CALDECOTT 1 & 2 WEST EXHAUSTER ROOM
WONDERWARE SCREEN

SHEET EE4-28-4

DOES SD Imperial Rev.1/07

ORIGINAL SCALE IN INCHES FOR REDUCED PLANS 0 1 2 3

CU 04220
EA 1A4604

DISREGARD PRINTS BEARING EARLIER REVISION DATES →
REVISION DATES (PRELIMINARY STAGE ONLY)

SHEET 83 OF 95

26-NOV-2008 11:10
EE4-28-4.dgn

DIST.	COUNTY	ROUTE	POST MILES TOTAL PROJECT	SHEET NO.	TOTAL SHEETS
04	Ala,CC	24,260	R5.9/R6.2, R0.0/R0.5,R0.9/R1.9	89	100

REGISTERED ELECTRICAL ENGINEER — 02-26-08 DATE

REGISTERED PROFESSIONAL ENGINEER — ROBERT J. FEE — No. E-13014 — Exp. 6/30/09 — ELEC — STATE OF CALIFORNIA

11-24-08
PLANS APPROVAL DATE

The State of California or its officers or agents shall not be responsible for the accuracy or completeness of electronic copies of this plan sheet.

STV Incorporated
9130 Anaheim Place, Suite 210
Rancho Cucamonga, CA 91730

JDL Design, LLC
18582 Beach Blvd, Suite 229
Huntington Beach, CA 92647

Emergency Telephone & Fire | Webster 400 Volt Syst. Alameda | Alarm Manager | Ack. All Alarms
CO & NO Level Display | Webster 400 Volt Syst. Oakland | Historical Trends | User Log in/Log out

2/4/2003 11:12:12 AM

Caldecott 3 West Blower/Exhauster Room

BLOWER #1

SCADA CONTROL DAMPER
Man Auto
Open
Close
Damper In Remote
Opened
967 RPM
11326 Hrs
VFD In Remote

SCADA CONTROL BLOWER VFD
Man Auto
Run
Stop
58.7 Hz

BLOWER #2

SCADA CONTROL DAMPER
Man Auto
Open
Close
Damper In Remote
Closed
0 RPM
1656 Hrs
VFD In Remote

SCADA CONTROL BLOWER VFD
Man Auto
Run
Stop
00.0 Hz

EXHAUSTER #1

SCADA CONTROL DAMPER
Man Auto
Open
Close
Damper In Remote
Opened
967 RPM
11326 Hrs
VFD In Remote

SCADA CONTROL EXHAUSTER VFD
Man Auto
Run
Stop
52.5 Hz

EXHAUSTER #2

SCADA CONTROL DAMPER
Man Auto
Open
Close
Damper In Remote
Opened
967 RPM
11326 Hrs
VFD In Remote

SCADA CONTROL EXHAUSTER VFD
Man Auto
Run
Stop
55.9 Hz

Notes 1) Damper(s) must be in REM for SCADA control. 2) VFD must be in REM for SCADA control. 3) Fan will not operate with damper(s) in "Closed" position. 4) Local VFD operation requires damper(s) in "Opened" position.

MM/DD HH:MM:SS	EVT	Type	Pri	Name	GroupName	Value/Limit
02/02 11:21:15	ALM	DISC	1	digon	$System	ON/ ON

Webster Exhauster Alameda | Webster Blower Alameda | Posey Exhauster Alameda | Posey Blower Alameda
Webster Exhauster Oakland | Webster Blower Oakland | Posey Exhauster Oakland | Posey Blower Oakland
Caldecott Exhst Bore 1&2W | Caldecott Blower Bore 1&2W | Caldecott Blwr/Exhst Bore 3W | Configure Posey Tube Fans
Caldecott Exhst Bore 1&2E | Caldecott Blower Bore 1&2E | Configure Caldecott Fans | Configure Webster Tube Fans

	BY	CHECKED
DESIGN	G.RUSSELL	D.LE
DETAILS	D.LE	S.LO
QUANTITIES		

PREPARED FOR THE STATE OF CALIFORNIA DEPARTMENT OF TRANSPORTATION

DIVISION OF ENGINEERING SERVICES
ELECTRICAL-MECHANICAL-WATER AND WASTEWATER DESIGN

BRIDGE NO. VARIES
POST MILE VARIES

SCADA SYSTEM UPGRADE: POSEY/WEBSTER STREET TUBES AND CALDECOTT TUNNEL
CALDECOTT 3 WEST BLOWER/ EXHAUSTER ROOM WONDERWARE SCREEN

SHEET EE4-28-5

DOES SD Imperial Rev.1/07

ORIGINAL SCALE IN INCHES FOR REDUCED PLANS 0 1 2 3

CU 04220
EA 1A4604

DISREGARD PRINTS BEARING EARLIER REVISION DATES →
REVISION DATES (PRELIMINARY STAGE ONLY)

SHEET 84 OF 95

26-NOV-2008 11:10
EE4-28-5.dgn

DIST.	COUNTY	ROUTE	POST MILES TOTAL PROJECT	SHEET NO.	TOTAL SHEETS
04	Ala,CC	24,260	R5.9/R6.2, R0.0/R0.5,R0.9/R1.9	90	100

REGISTERED ELECTRICAL ENGINEER — 02-26-08 DATE

REGISTERED PROFESSIONAL ENGINEER — ROBERT J. FEE — No. E-13014 — Exp. 6/30/09 — ELEC — STATE OF CALIFORNIA

11-24-08
PLANS APPROVAL DATE

The State of California or its officers or agents shall not be responsible for the accuracy or completeness of electronic copies of this plan sheet.

STV Incorporated
9130 Anaheim Place, Suite 210
Rancho Cucamonga, CA 91730

JDL Design, LLC
18582 Beach Blvd, Suite 229
Huntington Beach, CA 92647

Emergency Telephone & Fire | Webster 400 Volt Syst. Alameda | Alarm Manager | Ack. All Alarms
CO & NO Level Display | Webster 400 Volt Syst. Oakland | Historical Trends | User Log in/Log out

2/2/2003 12:17:53 PM

Bore 1 East — Exhausters: TOTAL # OF FANS 1 (L, H), 2 (L, H); Blowers: TOTAL # OF FANS 1 (L, H), 2 (L, H)
Bore 1 West — Exhausters: TOTAL # OF FANS 1 (L, H), 2 (L, H); Blowers: TOTAL # OF FANS 1 (L, H), 2 (L, H)
Bore 2 East — Exhausters: TOTAL # OF FANS 1 (L, H), 2 (L, H); Blowers: TOTAL # OF FANS 1 (L, H), 2 (L, H)
Bore 2 West — Exhausters: TOTAL # OF FANS 1 (L, H), 2 (L, H); Blowers: TOTAL # OF FANS 1 (L, H), 2 (L, H)

CO LEVEL	FAN LEVEL	Bore 1 East Exhausters 1 L	1 H	2 L	2 H	Bore 1 East Blowers 1 L	1 H	2 L	2 H	Bore 1 West Exhausters 1 L	1 H	2 L	2 H	Bore 1 West Blowers 1 L	1 H	2 L	2 H	Bore 2 East Exhausters 1 L	1 H	2 L	2 H	Bore 2 East Blowers 1 L	1 H	2 L	2 H	Bore 2 West Exhausters 1 L	1 H	2 L	2 H	Bore 2 West Blowers 1 L	1 H	2 L	2 H
10	1	■	□	□	□	■	□	□	□	■	□	□	□	■	□	□	□	■	□	□	□	■	□	□	□	■	□	□	□	■	□	□	□
20	2	■	□	□	□	■	□	□	□	■	□	□	□	■	□	□	□	■	□	□	□	■	□	□	□	■	□	□	□	■	□	□	□
30	3	□	□	■	■	□	□	■	■	□	□	■	■	□	□	■	■	□	□	■	■	□	□	■	■	□	□	■	■	□	□	■	■
40	4	□	□	■	■	□	□	■	■	□	□	■	■	□	□	■	■	□	□	■	■	□	□	■	■	□	□	■	■	□	□	■	■
50	5	■	■	□	□	■	■	□	□	■	■	□	□	■	■	□	□	■	■	□	□	■	■	□	□	■	■	□	□	■	■	□	□
70	6	■	■	□	□	■	■	□	□	■	■	□	□	■	■	□	□	■	■	□	□	■	■	□	□	■	■	□	□	■	■	□	□
90	7	□	□	□	■	□	□	□	■	□	□	□	■	□	□	□	■	□	□	□	■	□	□	□	■	□	□	□	■	□	□	□	■
110	8	□	□	□	■	□	□	□	■	□	□	□	■	□	□	□	■	□	□	□	■	□	□	□	■	□	□	□	■	□	□	□	■

Caldecott Fan Configuration

VFD Speed Setpoints

Low 52 Hz

High 59 Hz

Bore 3 — Exhausters: TOTAL # OF FANS 1 (L, H), 2 (L, H); Blowers: TOTAL # OF FANS 1 (L, H), 2 (L, H)

CO LEVEL	FAN LEVEL	Exhausters 1 L	1 H	2 L	2 H	Blowers 1 L	1 H	2 L	2 H
10	1	■	□	□	□	■	□	□	□
20	2	■	□	□	□	■	□	□	□
30	3	□	□	■	■	□	□	■	■
40	4	□	□	■	■	□	□	■	■
50	5	■	■	□	□	■	■	□	□
70	6	■	■	□	□	■	■	□	□
90	7	□	□	□	■	□	□	□	■
110	8	□	□	□	■	□	□	□	■

MM/DD	HH:MM:SS	EVT	Type	Pri	Name	GroupName	Value/Limit	
02/02	12:17:26	ALM	DISC	1	dig15	$System	ON/	ON
02/02	12:17:26	ALM	DISC	1	dig16	$System	ON/	ON
02/02	12:17:27	ALM	DISC	1	dig35	$System	ON/	ON

Webster Exhauster Alameda | Webster Blower Alameda | Posey Exhauster Alameda | Posey Blower Alameda
Webster Exhauster Oakland | Webster Blower Oakland | Posey Exhauster Oakland | Posey Blower Oakland
Caldecott Exhst Bore 1&2W | Caldecott Blower Bore 1&2W | Caldecott Blwr/Exhst Bore 3W | Configure Posey Tube Fans
Caldecott Exhst Bore 1&2E | Caldecott Blower Bore 1&2E | Configure Caldecott Fans | Configure Webster Tube Fans

	BY	CHECKED
DESIGN	G.RUSSELL	D.LE
DETAILS	D.LE	S.LO
QUANTITIES		

PREPARED FOR THE STATE OF CALIFORNIA DEPARTMENT OF TRANSPORTATION

DIVISION OF ENGINEERING SERVICES
ELECTRICAL-MECHANICAL-WATER AND WASTEWATER DESIGN

BRIDGE NO. VARIES
POST MILE VARIES

SCADA SYSTEM UPGRADE: POSEY/WEBSTER STREET TUBES AND CALDECOTT TUNNEL
CALDECOTT FAN CONFIGURATION
WONDERWARE SCREEN

SHEET EE4-28-6

DOES SD Imperial Rev.1/07

ORIGINAL SCALE IN INCHES FOR REDUCED PLANS 0 1 2 3

CU 04220
EA 1A4604

DISREGARD PRINTS BEARING EARLIER REVISION DATES →
REVISION DATES (PRELIMINARY STAGE ONLY)

SHEET 85 OF 95

26-NOV-2008 11:10
EE4-28-6.dgn

DIST.	COUNTY	ROUTE	POST MILES TOTAL PROJECT	SHEET NO.	TOTAL SHEETS
04	Ala,CC	24,260	R5.9/R6.2, R0.0/0.5, R0.9/R1.9	91	100

REGISTERED ELECTRICAL ENGINEER — 02-26-08 DATE

REGISTERED PROFESSIONAL ENGINEER — ROBERT J. FEE — No. E-13014 — Exp. 6/30/09 — ELEC — STATE OF CALIFORNIA

11-24-08
PLANS APPROVAL DATE

The State of California or its officers or agents shall not be responsible for the accuracy or completeness of electronic copies of this plan sheet.

STV Incorporated
9130 Anaheim Place, Suite 210
Rancho Cucamonga, CA 91730

JDL Design, LLC
18582 Beach Blvd, Suite 229
Huntington Beach, CA 92647

Emergency Telephone & Fire | Webster 400 Volt Syst. Alameda | Alarm Manager | Ack. All Alarms
CO & NO Level Display | Webster 400 Volt Syst. Oakland | Historical Trends | User Log in/Log out

2/4/2003 11:04:10 AM

Posey Alameda Blower Room

BLOWER #1

SCADA CONTROL DAMPER
Man Auto
Open
Close
Damper In Remote
Opened
967 RPM
11326 Hrs
VFD In Remote

SCADA CONTROL BLOWER VFD
Man Auto
Run
Stop
58.7 Hz

BLOWER #2

SCADA CONTROL DAMPER
Man Auto
Open
Close
Damper In Remote
Closed
0 RPM
1656 Hrs
VFD In Remote

SCADA CONTROL BLOWER VFD
Man Auto
Run
Stop
00.0 Hz

BLOWER #3

SCADA CONTROL DAMPER
Man Auto
Open
Close
Damper In Remote
Opened
967 RPM
11326 Hrs
VFD In Remote

SCADA CONTROL BLOWER VFD
Man Auto
Run
Stop
52.5 Hz

BLOWER #4

SCADA CONTROL DAMPER
Man Auto
Open
Close
Damper In Remote
Opened
967 RPM
11326 Hrs
VFD In Remote

SCADA CONTROL BLOWER VFD
Man Auto
Run
Stop
55.9 Hz

Notes 1) Damper(s) must be in REM for SCADA control. 2) VFD must be in REM for SCADA control. 3) Fan will not operate with damper(s) in "Closed" position. 4) Local VFD operation requires damper(s) in "Opened" position.

MM/DD HH:MM:SS	EVT	Type	Pri	Name	GroupName	Value/Limit
02/02 11:21:15	ALM	DISC	1	digon	$System	ON/ ON

Webster Exhauster Alameda | Webster Blower Alameda | Posey Exhauster Alameda | Posey Blower Alameda
Webster Exhauster Oakland | Webster Blower Oakland | Posey Exhauster Oakland | Posey Blower Oakland
Caldecott Exhst Bore 1&2W | Caldecott Blower Bore 1&2W | Caldecott Blwr/Exhst Bore 3W | Configure Posey Tube Fans
Caldecott Exhst Bore 1&2E | Caldecott Blower Bore 1&2E | Configure Caldecott Fans | Configure Webster Tube Fans

	BY	CHECKED
DESIGN	G.RUSSELL	D.LE
DETAILS	D.LE	S.LO
QUANTITIES		

PREPARED FOR THE STATE OF CALIFORNIA DEPARTMENT OF TRANSPORTATION

DIVISION OF ENGINEERING SERVICES
ELECTRICAL-MECHANICAL-WATER AND WASTEWATER DESIGN

BRIDGE NO. VARIES
POST MILE VARIES

SCADA SYSTEM UPGRADE: POSEY/WEBSTER STREET TUBES AND CALDECOTT TUNNEL
POSEY ALAMEDA BLOWER ROOM
WONDERWARE SCREEN

SHEET EE4-28-7

DOES SD Imperial Rev.1/07

ORIGINAL SCALE IN INCHES FOR REDUCED PLANS 0 1 2 3

CU 04220
EA 1A4604

DISREGARD PRINTS BEARING EARLIER REVISION DATES ⟶
REVISION DATES (PRELIMINARY STAGE ONLY)

SHEET 87 OF 96

26-NOV-2008 11:11
EE4-28-07.dgn

DIST.	COUNTY	ROUTE	POST MILES TOTAL PROJECT	SHEET NO.	TOTAL SHEETS
04	Ala,CC	24,260	R5.9/R6.2, R0.0/0.5, R0.9/R1.9	92	100

REGISTERED ELECTRICAL ENGINEER — 02-26-08 DATE

REGISTERED PROFESSIONAL ENGINEER ROBERT J. FEE No. E-13014 Exp. 6/30/09 ELEC STATE OF CALIFORNIA

11-24-08
PLANS APPROVAL DATE

The State of California or its officers or agents shall not be responsible for the accuracy or completeness of electronic copies of this plan sheet.

STV Incorporated
9130 Anaheim Place, Suite 210
Rancho Cucamonga, CA 91730

JDL Design, LLC
18582 Beach Blvd, Suite 229
Huntington Beach, CA 92647

Emergency Telephone & Fire | Webster 400 Volt Syst. Alameda | Alarm Manager | Ack. All Alarms
CO & NO Level Display | Webster 400 Volt Syst. Oakland | Historical Trends | User Log in/Log out

2/4/2003 11:04:21 AM

Posey Alameda Exhauster Room

EXHAUSTER #1

SCADA CONTROL DAMPER
Man Auto
Open
Close
Damper In Remote
Opened
967 RPM
11326 Hrs
VFD In Remote
SCADA CONTROL EXHAUSTER VFD
Man Auto
Run
Stop
58.7 Hz

EXHAUSTER #2

SCADA CONTROL DAMPER
Man Auto
Open
Close
Damper In Remote
Closed
0 RPM
1656 Hrs
VFD In Remote
SCADA CONTROL EXHAUSTER VFD
Man Auto
Run
Stop
00.0 Hz

EXHAUSTER #3

SCADA CONTROL DAMPER
Man Auto
Open
Close
Damper In Remote
Opened
967 RPM
11326 Hrs
VFD In Remote
SCADA CONTROL EXHAUSTER VFD
Man Auto
Run
Stop
52.5 Hz

EXHAUSTER #4

SCADA CONTROL DAMPER
Man Auto
Open
Close
Damper In Remote
Opened
967 RPM
11326 Hrs
VFD In Remote
SCADA CONTROL EXHAUSTER VFD
Man Auto
Run
Stop
55.9 Hz

Notes 1) Damper(s) must be in REM for SCADA control. 2) VFD must be in REM for SCADA control. 3) Fan will not operate with damper(s) in "Closed" position. 4) Local VFD operation requires damper(s) in "Opened" position.

MM/DD HH:MM:SS	EVT	Type	Pri	Name	GroupName	Value/Limit
02/02 11:21:15	ALM	DISC	1	digon	$System	ON/ ON

Webster Exhauster Alameda | Webster Blower Alameda | Posey Exhauster Alameda | Posey Blower Alameda
Webster Exhauster Oakland | Webster Blower Oakland | Posey Exhauster Oakland | Posey Blower Oakland
Caldecott Exhst Bore 1&2W | Caldecott Blower Bore 1&2W | Caldecott Blwr/Exhst Bore 3W | Configure Posey Tube Fans
Caldecott Exhst Bore 1&2E | Caldecott Blower Bore 1&2E | Configure Caldecott Fans | Configure Webster Tube Fans

	BY	CHECKED
DESIGN	G.RUSSELL	D.LE
DETAILS	D.LE	S.LO
QUANTITIES		

PREPARED FOR THE STATE OF CALIFORNIA DEPARTMENT OF TRANSPORTATION

DIVISION OF ENGINEERING SERVICES
ELECTRICAL-MECHANICAL-WATER AND WASTEWATER DESIGN

BRIDGE NO. VARIES
POST MILE VARIES

SCADA SYSTEM UPGRADE: POSEY/WEBSTER STREET TUBES AND CALDECOTT TUNNEL
POSEY ALAMEDA EXHAUSTER ROOM
WONDERWARE SCREEN

SHEET EE4-28-8

DOES SD Imperial Rev.1/07

ORIGINAL SCALE IN INCHES FOR REDUCED PLANS 0 1 2 3

CU 04220
EA 1A4604

DISREGARD PRINTS BEARING EARLIER REVISION DATES →
REVISION DATES (PRELIMINARY STAGE ONLY)

SHEET 88 OF 96

26-NOV-2008 11:11
EE4-28-08.dgn

DIST.	COUNTY	ROUTE	POST MILES TOTAL PROJECT	SHEET NO.	TOTAL SHEETS
04	Ala,CC	24,260	R5.9/R6.2, R0.0/0.5, R0.9/R1.9	93	100

REGISTERED ELECTRICAL ENGINEER — 02-26-08 DATE

REGISTERED PROFESSIONAL ENGINEER — ROBERT J. FEE — No. E-13014 — Exp. 6/30/09 — ELEC — STATE OF CALIFORNIA

11-24-08
PLANS APPROVAL DATE

The State of California or its officers or agents shall not be responsible for the accuracy or completeness of electronic copies of this plan sheet.

STV Incorporated
9130 Anaheim Place, Suite 210
Rancho Cucamonga, CA 91730

JDL Design, LLC
18582 Beach Blvd, Suite 229
Huntington Beach, CA 92647

Emergency Telephone & Fire | Webster 400 Volt Syst. Alameda | Alarm Manager | Ack. All Alarms
CO & NO Level Display | Webster 400 Volt Syst. Oakland | Historical Trends | User Log in/Log out

2/4/2003 11:04:37 AM

Posey Oakland Blower Room

BLOWER #1

SCADA CONTROL DAMPER
Man Auto
Open
Close
Damper In Remote
Opened
967 RPM
11326 Hrs
VFD In Remote

SCADA CONTROL BLOWER VFD
Man Auto
Run
Stop
58.7 Hz

BLOWER #2

SCADA CONTROL DAMPER
Man Auto
Open
Close
Damper In Remote
Closed
0 RPM
1656 Hrs
VFD In Remote

SCADA CONTROL BLOWER VFD
Man Auto
Run
Stop
00.0 Hz

BLOWER #3

SCADA CONTROL DAMPER
Man Auto
Open
Close
Damper In Remote
Opened
967 RPM
11326 Hrs
VFD In Remote

SCADA CONTROL BLOWER VFD
Man Auto
Run
Stop
52.5 Hz

BLOWER #4

SCADA CONTROL DAMPER
Man Auto
Open
Close
Damper In Remote
Opened
967 RPM
11326 Hrs
VFD In Remote

SCADA CONTROL BLOWER VFD
Man Auto
Run
Stop
55.9 Hz

Notes 1) Damper(s) must be in REM for SCADA control. 2) VFD must be in REM for SCADA control. 3) Fan will not operate with damper(s) in "Closed" position. 4) Local VFD operation requires damper(s) in "Opened" position.

MM/DD HH:MM:SS	EVT	Type	Pri	Name	GroupName	Value/Limit
02/02 11:21:15	ALM	DISC	1	digon	$System	ON/ ON

Webster Exhauster Alameda | Webster Blower Alameda | Posey Exhauster Alameda | Posey Blower Alameda
Webster Exhauster Oakland | Webster Blower Oakland | Posey Exhauster Oakland | Posey Blower Oakland
Caldecott Exhst Bore 1&2W | Caldecott Blower Bore 1&2W | Caldecott Blwr/Exhst Bore 3W | Configure Posey Tube Fans
Caldecott Exhst Bore 1&2E | Caldecott Blower Bore 1&2E | Configure Caldecott Fans | Configure Webster Tube Fans

	BY	CHECKED
DESIGN	G.RUSSELL	D.LE
DETAILS	D.LE	S.LO
QUANTITIES		

PREPARED FOR THE STATE OF CALIFORNIA DEPARTMENT OF TRANSPORTATION

DIVISION OF ENGINEERING SERVICES
ELECTRICAL-MECHANICAL-WATER AND WASTEWATER DESIGN

BRIDGE NO. VARIES
POST MILE VARIES

SCADA SYSTEM UPGRADE: POSEY/WEBSTER STREET TUBES AND CALDECOTT TUNNEL
POSEY OAKLAND BLOWER ROOM
WONDERWARE SCREEN

SHEET EE4-28-9

DOES SD Imperial Rev.1/07

ORIGINAL SCALE IN INCHES FOR REDUCED PLANS 0 1 2 3

CU 04220
EA 1A4604

DISREGARD PRINTS BEARING EARLIER REVISION DATES →
REVISION DATES (PRELIMINARY STAGE ONLY)

SHEET 89 OF 96

26-NOV-2008 11:11
EE4-28-09.dgn

DIST.	COUNTY	ROUTE	POST MILES TOTAL PROJECT	SHEET NO.	TOTAL SHEETS
04	Ala,CC	24,260	R5.9/R6.2, R0.0/0.5, R0.9/R1.9	94	100

REGISTERED ELECTRICAL ENGINEER — 02-26-08 DATE

REGISTERED PROFESSIONAL ENGINEER — ROBERT J. FEE — No. E-13014 — Exp. 6/30/09 — ELEC — STATE OF CALIFORNIA

11-24-08
PLANS APPROVAL DATE

The State of California or its officers or agents shall not be responsible for the accuracy or completeness of electronic copies of this plan sheet.

STV Incorporated
9130 Anaheim Place, Suite 210
Rancho Cucamonga, CA 91730

JDL Design, LLC
18582 Beach Blvd, Suite 229
Huntington Beach, CA 92647

Emergency Telephone & Fire | Webster 400 Volt Syst. Alameda | Alarm Manager | Ack. All Alarms
CO & NO Level Display | Webster 400 Volt Syst. Oakland | Historical Trends | User Log in/Log out

2/4/2003 11:04:53 AM

Posey Oakland Exhauster Room

EXHAUSTER #1

SCADA CONTROL DAMPER
Man Auto
Open
Close
Damper In Remote
Opened
967 RPM
11326 Hrs
VFD In Remote
SCADA CONTROL EXHAUSTER VFD
Man Auto
Run
Stop
58.7 Hz

EXHAUSTER #2

SCADA CONTROL DAMPER
Man Auto
Open
Close
Damper In Remote
Closed
0 RPM
1656 Hrs
VFD In Remote
SCADA CONTROL EXHAUSTER VFD
Man Auto
Run
Stop
00.0 Hz

EXHAUSTER #3

SCADA CONTROL DAMPER
Man Auto
Open
Close
Damper In Remote
Opened
967 RPM
11326 Hrs
VFD In Remote
SCADA CONTROL EXHAUSTER VFD
Man Auto
Run
Stop
52.5 Hz

EXHAUSTER #4

SCADA CONTROL DAMPER
Man Auto
Open
Close
Damper In Remote
Opened
967 RPM
11326 Hrs
VFD In Remote
SCADA CONTROL EXHAUSTER VFD
Man Auto
Run
Stop
55.9 Hz

Notes 1) Damper(s) must be in REM for SCADA control. 2) VFD must be in REM for SCADA control. 3) Fan will not operate with damper(s) in "Closed" position. 4) Local VFD operation requires damper(s) in "Opened" position.

MM/DD	HH:MM:SS	EVT	Type	Pri	Name	GroupName	Value/Limit
02/02	11:21:15	ALM	DISC	1	digon	$System	ON/ ON

Webster Exhauster Alameda | Webster Blower Alameda | Posey Exhauster Alameda | Posey Blower Alameda
Webster Exhauster Oakland | Webster Blower Oakland | Posey Exhauster Oakland | Posey Blower Oakland
Caldecott Exhst Bore 1&2W | Caldecott Blower Bore 1&2W | Caldecott Blwr/Exhst Bore 3W | Configure Posey Tube Fans
Caldecott Exhst Bore 1&2E | Caldecott Blower Bore 1&2E | Configure Caldecott Fans | Configure Webster Tube Fans

	BY	CHECKED
DESIGN	G.RUSSELL	D.LE
DETAILS	D.LE	S.LO
QUANTITIES		

PREPARED FOR THE STATE OF CALIFORNIA DEPARTMENT OF TRANSPORTATION

DIVISION OF ENGINEERING SERVICES
ELECTRICAL-MECHANICAL-WATER AND WASTEWATER DESIGN

BRIDGE NO. VARIES
POST MILE VARIES

SCADA SYSTEM UPGRADE: POSEY/WEBSTER STREET TUBES AND CALDECOTT TUNNEL
POSEY OAKLAND EXHAUSTER ROOM WONDERWARE SCREEN

SHEET EE4-28 -10

DOES SD Imperial Rev.1/07

ORIGINAL SCALE IN INCHES FOR REDUCED PLANS 0 1 2 3

CU 04220
EA 1A4604

DISREGARD PRINTS BEARING EARLIER REVISION DATES →
REVISION DATES (PRELIMINARY STAGE ONLY)

SHEET 89 OF 95

26-NOV-2008 11:11
EE4-28-10.dgn

DIST.	COUNTY	ROUTE	POST MILES TOTAL PROJECT	SHEET NO.	TOTAL SHEETS
04	Ala,CC	24,260	R5.9/R6.2, R0.0/0.5, R0.9/R1.9	95	100

REGISTERED ELECTRICAL ENGINEER — 02-26-08 DATE

REGISTERED PROFESSIONAL ENGINEER — ROBERT J. FEE — No. E-13014 — Exp. 6/30/09 — ELEC — STATE OF CALIFORNIA

11-24-08
PLANS APPROVAL DATE

The State of California or its officers or agents shall not be responsible for the accuracy or completeness of electronic copies of this plan sheet.

STV Incorporated
9130 Anaheim Place, Suite 210
Rancho Cucamonga, CA 91730

JDL Design, LLC
18582 Beach Blvd, Suite 229
Huntington Beach, CA 92647

Emergency Telephone & Fire | Webster 400 Volt Syst. Alameda | Alarm Manager | Ack. All Alarms
CO & NO Level Display | Webster 400 Volt Syst. Oakland | Historical Trends | User Log in/Log out

2/1/2003 9:47:35 PM

Posey Tube Fan Configuration

Alameda — Exhausters / Blowers; Oakland — Exhausters / Blowers

TOTAL # OF FANS: 1, 2, 3, 4 (L, H)

CO LEVEL	FAN LEVEL	Alameda Exhausters	Alameda Blowers	Oakland Exhausters	Oakland Blowers
10	1	1 L	1 L	1 L	1 L
15	2	1 L	1 L	1 L	1 L
20	3	2 L	2 L	2 L	2 L
25	4	2 L	2 L	2 L	2 L
30	5	3 L	3 L	3 L	3 L
35	6	3 L	3 L	3 L	3 L
40	7	4 L	4 L	4 L	4 L
45	8	4 L	4 L	4 L	4 L
50	9	3 H	3 H	3 H	3 H
60	10	3 H	3 H	3 H	3 H
70	11	4 L, 3 L	4 L, 3 L	4 L, 3 L	4 L, 3 L
80	12	4 L, 3 L	4 L, 3 L	4 L, 3 L	4 L, 3 L
90	13	1 L, 4 H	1 L, 4 H	1 L, 4 H	1 L, 4 H
100	14	1 L, 4 H	1 L, 4 H	1 L, 4 H	1 L, 4 H
110	15	4 H	4 H	4 H	4 H
120	16	4 H	4 H	4 H	4 H

VFD Speed Setpoints

Low 52 Hz High 59 Hz

MM/DD	HH:MM:SS	EVT	Type	Pri	Name	GroupName	Value/Limit	
02/01	21:47:25	ALM	DISC	1	dig123	$System	ON/	ON
02/01	21:47:26	ALM	DISC	1	dig122	$System	ON/	ON
02/01	21:47:26	ALM	DISC	1	dig121	$System	ON/	ON

Webster Exhauster Alameda | Webster Blower Alameda | Posey Exhauster Alameda | Posey Blower Alameda
Webster Exhauster Oakland | Webster Blower Oakland | Posey Exhauster Oakland | Posey Blower Oakland
Caldecott Exhst Bore 1&2W | Caldecott Blower Bore 1&2W | Caldecott Blwr/Exhst Bore 3W | Configure Posey Tube Fans
Caldecott Exhst Bore 1&2E | Caldecott Blower Bore 1&2E | Configure Caldecott Fans | Configure Webster Tube Fans

	BY	CHECKED
DESIGN	G. RUSSELL	D. LE
DETAILS	D. LE	S. LO
QUANTITIES		

PREPARED FOR THE STATE OF CALIFORNIA DEPARTMENT OF TRANSPORTATION

DIVISION OF ENGINEERING SERVICES
ELECTRICAL-MECHANICAL-WATER AND WASTEWATER DESIGN

BRIDGE NO. VARIES
POST MILE VARIES

SCADA SYSTEM UPGRADE: POSEY/WEBSTER STREET TUBES AND CALDECOTT TUNNEL
POSEY TUBE FAN CONFIGURATION
WONDERWARE SCREEN

SHEET EE4-28-11

DOES SD Imperial Rev. 1/07

ORIGINAL SCALE IN INCHES FOR REDUCED PLANS 0 1 2 3

CU 04220
EA 1A4604

DISREGARD PRINTS BEARING EARLIER REVISION DATES → REVISION DATES (PRELIMINARY STAGE ONLY)

SHEET 90 OF 95

26-NOV-2008 11:12
EE4-28-11.dgn

DIST.	COUNTY	ROUTE	POST MILES TOTAL PROJECT	SHEET NO.	TOTAL SHEETS
04	Ala,CC	24,260	R5.9/R6.2, R0.0/R0.5,R0.9/R1.9	96	100

REGISTERED ELECTRICAL ENGINEER — 02-26-08 DATE

REGISTERED PROFESSIONAL ENGINEER ROBERT J. FEE No. E-13014 Exp. 6/30/09 ELEC STATE OF CALIFORNIA

11-24-08
PLANS APPROVAL DATE

The State of California or its officers or agents shall not be responsible for the accuracy or completeness of electronic copies of this plan sheet.

STV Incorporated
9130 Anaheim Place, Suite 210
Rancho Cucamonga, CA 91730

JDL Design, LLC
18582 Beach Blvd, Suite 229
Huntington Beach, CA 92647

Emergency Telephone & Fire | Webster 400 Volt Syst. Alameda | Alarm Manager | Ack. All Alarms
CO & NO Level Display | Webster 400 Volt Syst. Oakland | Historical Trends | User Log in/Log out

2/4/2003 11:05:34 AM

Webster Alameda Blower Room

BLOWER #1

SCADA CONTROL DAMPER
Man Auto
Open
Close
Damper In Remote
Opened
967 RPM
11326 Hrs
VFD In Remote
SCADA CONTROL BLOWER VFD
Man Auto
Run
Stop
58.7 Hz

BLOWER #2

SCADA CONTROL DAMPER
Man Auto
Open
Close
Damper In Remote
Closed
0 RPM
1656 Hrs
VFD In Remote
SCADA CONTROL BLOWER VFD
Man Auto
Run
Stop
00.0 Hz

BLOWER #3

SCADA CONTROL DAMPER
Man Auto
Open
Close
Damper In Remote
Opened
967 RPM
11326 Hrs
VFD In Remote
SCADA CONTROL BLOWER VFD
Man Auto
Run
Stop
52.5 Hz

BLOWER #4

SCADA CONTROL DAMPER
Man Auto
Open
Close
Damper In Remote
Opened
967 RPM
11326 Hrs
VFD In Remote
SCADA CONTROL BLOWER VFD
Man Auto
Run
Stop
55.9 Hz

Notes 1) Damper(s) must be in REM for SCADA control. 2) VFD must be in REM for SCADA control. 3) Fan will not operate with damper(s) in "Closed" position. 4) Local VFD operation requires damper(s) in "Opened" position.

MM/DD HH:MM:SS	EVT	Type	Pri	Name	GroupName	Value/Limit
02/02 11:21:15	ALM	DISC	1	digon	$System	ON/ ON

Webster Exhauster Alameda | Webster Blower Alameda | Posey Exhauster Alameda | Posey Blower Alameda
Webster Exhauster Oakland | Webster Blower Oakland | Posey Exhauster Oakland | Posey Blower Oakland
Caldecott Exhst Bore 1&2W | Caldecott Blower Bore 1&2W | Caldecott Blwr/Exhst Bore 3W | Configure Posey Tube Fans
Caldecott Exhst Bore 1&2E | Caldecott Blower Bore 1&2E | Configure Caldecott Fans | Configure Webster Tube Fans

	BY	CHECKED
DESIGN	G.RUSSELL	D.LE
DETAILS	D.LE	S.LO
QUANTITIES		

PREPARED FOR THE STATE OF CALIFORNIA DEPARTMENT OF TRANSPORTATION

DIVISION OF ENGINEERING SERVICES
ELECTRICAL-MECHANICAL-WATER AND WASTEWATER DESIGN

BRIDGE NO. VARIES
POST MILE VARIES

SCADA SYSTEM UPGRADE: POSEY/WEBSTER STREET TUBES AND CALDECOTT TUNNEL
WEBSTER STREET TUBE ALAMEDA
BLOWER ROOM WONDERWARE SCREEN

SHEET EE4-28-12

DOES SD Imperial Rev.1/07

ORIGINAL SCALE IN INCHES FOR REDUCED PLANS 0 1 2 3

CU 04220
EA 1A4604

DISREGARD PRINTS BEARING EARLIER REVISION DATES →
REVISION DATES (PRELIMINARY STAGE ONLY)

SHEET 91 OF 95

26-NOV-2008 11:12
EE4-28-12.dgn

DIST.	COUNTY	ROUTE	POST MILES TOTAL PROJECT	SHEET NO.	TOTAL SHEETS
04	Ala,CC	24,260	R5.9/R6.2, R0.0/R0.5,R0.9/R1.9	97	100

REGISTERED ELECTRICAL ENGINEER — 02-26-08 DATE

REGISTERED PROFESSIONAL ENGINEER ROBERT J. FEE No. E-13014 Exp. 6/30/09 ELEC STATE OF CALIFORNIA

11-24-08
PLANS APPROVAL DATE

The State of California or its officers or agents shall not be responsible for the accuracy or completeness of electronic copies of this plan sheet.

STV Incorporated
9130 Anaheim Place, Suite 210
Rancho Cucamonga, CA 91730

JDL Design, LLC
18582 Beach Blvd, Suite 229
Huntington Beach, CA 92647

Emergency Telephone & Fire | Webster 400 Volt Syst. Alameda | Alarm Manager | Ack. All Alarms
CO & NO Level Display | Webster 400 Volt Syst. Oakland | Historical Trends | User Log in/Log out

2/4/2003 11:05:45 AM

Webster Alameda Exhauster Room

EXHAUSTER #1

SCADA CONTROL DAMPER
Man Auto
Open
Close
Damper In Remote
Opened
967 RPM
11326 Hrs
VFD In Remote

SCADA CONTROL EXHAUSTER VFD
Man Auto
Run
Stop
58.7 Hz

EXHAUSTER #2

SCADA CONTROL DAMPER
Man Auto
Open
Close
Damper In Remote
Closed
0 RPM
1656 Hrs
VFD In Remote

SCADA CONTROL EXHAUSTER VFD
Man Auto
Run
Stop
00.0 Hz

EXHAUSTER #3

SCADA CONTROL DAMPER
Man Auto
Open
Close
Damper In Remote
Opened
967 RPM
11326 Hrs
VFD In Remote

SCADA CONTROL EXHAUSTER VFD
Man Auto
Run
Stop
52.5 Hz

EXHAUSTER #4

SCADA CONTROL DAMPER
Man Auto
Open
Close
Damper In Remote
Opened
967 RPM
11326 Hrs
VFD In Remote

SCADA CONTROL EXHAUSTER VFD
Man Auto
Run
Stop
55.9 Hz

Notes 1) Damper(s) must be in REM for SCADA control. 2) VFD must be in REM for SCADA control. 3) Fan will not operate with damper(s) in "Closed" position. 4) Local VFD operation requires damper(s) in "Opened" position.

MM/DD HH:MM:SS	EVT	Type	Pri	Name	GroupName	Value/Limit
02/02 11:21:15	ALM	DISC	1	digon	$System	ON/ ON

Webster Exhauster Alameda | Webster Blower Alameda | Posey Exhauster Alameda | Posey Blower Alameda
Webster Exhauster Oakland | Webster Blower Oakland | Posey Exhauster Oakland | Posey Blower Oakland
Caldecott Exhst Bore 1&2W | Caldecott Blower Bore 1&2W | Caldecott Blwr/Exhst Bore 3W | Configure Posey Tube Fans
Caldecott Exhst Bore 1&2E | Caldecott Blower Bore 1&2E | Configure Caldecott Fans | Configure Webster Tube Fans

	BY	CHECKED
DESIGN	G.RUSSELL	D.LE
DETAILS	D.LE	S.LO
QUANTITIES		

PREPARED FOR THE STATE OF CALIFORNIA DEPARTMENT OF TRANSPORTATION

DIVISION OF ENGINEERING SERVICES
ELECTRICAL-MECHANICAL-WATER AND WASTEWATER DESIGN

BRIDGE NO. VARIES
POST MILE VARIES

SCADA SYSTEM UPGRADE: POSEY/WEBSTER STREET TUBES AND CALDECOTT TUNNEL
WEBSTER STREET TUBE ALAMEDA EXHAUSTER ROOM WONDERWARE SCREEN

SHEET EE4-28-13

DOES SD Imperial Rev.1/07

ORIGINAL SCALE IN INCHES FOR REDUCED PLANS 0 1 2 3

CU 04220
EA 1A4604

DISREGARD PRINTS BEARING EARLIER REVISION DATES →
REVISION DATES (PRELIMINARY STAGE ONLY)

SHEET 92 OF 95

26-NOV-2008 11:12
EE4-28-13.dgn

DIST.	COUNTY	ROUTE	POST MILES TOTAL PROJECT	SHEET NO.	TOTAL SHEETS
04	Ala,CC	24,260	R5.9/R6.2, R0.0/R0.5,R0.9/R1.9	98	100

REGISTERED ELECTRICAL ENGINEER — 02-26-08 DATE

REGISTERED PROFESSIONAL ENGINEER — ROBERT J. FEE — No. E-13014 — Exp. 6/30/09 — ELEC — STATE OF CALIFORNIA

11-24-08
PLANS APPROVAL DATE

The State of California or its officers or agents shall not be responsible for the accuracy or completeness of electronic copies of this plan sheet.

STV Incorporated
9130 Anaheim Place, Suite 210
Rancho Cucamonga, CA 91730

JDL Design, LLC
18582 Beach Blvd, Suite 229
Huntington Beach, CA 92647

Emergency Telephone & Fire | Webster 400 Volt Syst. Alameda | Alarm Manager | Ack. All Alarms
CO & NO Level Display | Webster 400 Volt Syst. Oakland | Historical Trends | User Log in/Log out

2/4/2003 11:06:02 AM

Webster Oakland Blower Room

BLOWER #1

SCADA CONTROL DAMPER
Man Auto
Open
Close
Damper In Remote
Opened
967 RPM
11326 Hrs
VFD In Remote
SCADA CONTROL BLOWER VFD
Man Auto
Run
Stop
58.7 Hz

BLOWER #2

SCADA CONTROL DAMPER
Man Auto
Open
Close
Damper In Remote
Closed
0 RPM
1656 Hrs
VFD In Remote
SCADA CONTROL BLOWER VFD
Man Auto
Run
Stop
00.0 Hz

BLOWER #3

SCADA CONTROL DAMPER
Man Auto
Open
Close
Damper In Remote
Opened
967 RPM
11326 Hrs
VFD In Remote
SCADA CONTROL BLOWER VFD
Man Auto
Run
Stop
52.5 Hz

BLOWER #4

SCADA CONTROL DAMPER
Man Auto
Open
Close
Damper In Remote
Opened
967 RPM
11326 Hrs
VFD In Remote
SCADA CONTROL BLOWER VFD
Man Auto
Run
Stop
55.9 Hz

Notes 1) Damper(s) must be in REM for SCADA control. 2) VFD must be in REM for SCADA control. 3) Fan will not operate with damper(s) in "Closed" position. 4) Local VFD operation requires damper(s) in "Opened" position.

MM/DD HH:MM:SS	EVT	Type	Pri	Name	GroupName	Value/Limit
02/02 11:21:15	ALM	DISC	1	digon	$System	ON/ ON

Webster Exhauster Alameda | Webster Blower Alameda | Posey Exhauster Alameda | Posey Blower Alameda
Webster Exhauster Oakland | Webster Blower Oakland | Posey Exhauster Oakland | Posey Blower Oakland
Caldecott Exhst Bore 1&2W | Caldecott Blower Bore 1&2W | Caldecott Blwr/Exhst Bore 3W | Configure Posey Tube Fans
Caldecott Exhst Bore 1&2E | Caldecott Blower Bore 1&2E | Configure Caldecott Fans | Configure Webster Tube Fans

	BY	CHECKED
DESIGN	G.RUSSELL	D.LE
DETAILS	D.LE	S.LO
QUANTITIES		

PREPARED FOR THE STATE OF CALIFORNIA DEPARTMENT OF TRANSPORTATION

DIVISION OF ENGINEERING SERVICES
ELECTRICAL-MECHANICAL-WATER AND WASTEWATER DESIGN

BRIDGE NO. VARIES
POST MILE VARIES

SCADA SYSTEM UPGRADE: POSEY/WEBSTER STREET TUBES AND CALDECOTT TUNNEL
WEBSTER STREET TUBE OAKLAND
BLOWER ROOM WONDERWARE SCREEN

SHEET EE4-28-14

DOES SD Imperial Rev.1/07

ORIGINAL SCALE IN INCHES FOR REDUCED PLANS 0 1 2 3

CU 04220
EA 1A4604

DISREGARD PRINTS BEARING EARLIER REVISION DATES →
REVISION DATES (PRELIMINARY STAGE ONLY)
SHEET 93 OF 95

26-NOV-2008 11:12
EE4-28-14.dgn

DIST.	COUNTY	ROUTE	POST MILES TOTAL PROJECT	SHEET NO.	TOTAL SHEETS
04	Ala,CC	24,260	R5.9/R6.2, R0.0/R0.5,R0.9/R1.9	99	100

REGISTERED ELECTRICAL ENGINEER — 02-26-08 DATE

REGISTERED PROFESSIONAL ENGINEER — ROBERT J. FEE — No. E-13014 — Exp. 6/30/09 — ELEC — STATE OF CALIFORNIA

11-24-08
PLANS APPROVAL DATE

The State of California or its officers or agents shall not be responsible for the accuracy or completeness of electronic copies of this plan sheet.

STV Incorporated
9130 Anaheim Place, Suite 210
Rancho Cucamonga, CA 91730

JDL Design, LLC
18582 Beach Blvd, Suite 229
Huntington Beach, CA 92647

Emergency Telephone & Fire | Webster 400 Volt Syst. Alameda | Alarm Manager | Ack. All Alarms
CO & NO Level Display | Webster 400 Volt Syst. Oakland | Historical Trends | User Log in/Log out

2/4/2003 11:06:15 AM

Webster Oakland Exhauster Room

EXHAUSTER #1

SCADA CONTROL DAMPER
Man Auto
Open
Close
Damper In Remote
Opened
967 RPM
11326 Hrs
VFD In Remote

SCADA CONTROL EXHAUSTER VFD
Man Auto
Run
Stop
58.7 Hz

EXHAUSTER #2

SCADA CONTROL DAMPER
Man Auto
Open
Close
Damper In Remote
Closed
0 RPM
1656 Hrs
VFD In Remote

SCADA CONTROL EXHAUSTER VFD
Man Auto
Run
Stop
00.0 Hz

EXHAUSTER #3

SCADA CONTROL DAMPER
Man Auto
Open
Close
Damper In Remote
Opened
967 RPM
11326 Hrs
VFD In Remote

SCADA CONTROL EXHAUSTER VFD
Man Auto
Run
Stop
52.5 Hz

EXHAUSTER #4

SCADA CONTROL DAMPER
Man Auto
Open
Close
Damper In Remote
Opened
967 RPM
11326 Hrs
VFD In Remote

SCADA CONTROL EXHAUSTER VFD
Man Auto
Run
Stop
55.9 Hz

Notes 1) Damper(s) must be in REM for SCADA control. 2) VFD must be in REM for SCADA control. 3) Fan will not operate with damper(s) in "Closed" position. 4) Local VFD operation requires damper(s) in "Opened" position.

MM/DD HH:MM:SS	EVT	Type	Pri	Name	GroupName	Value/Limit
02/02 11:21:15	ALM	DISC	1	digon	$System	ON/ ON

Webster Exhauster Alameda | Webster Blower Alameda | Posey Exhauster Alameda | Posey Blower Alameda
Webster Exhauster Oakland | Webster Blower Oakland | Posey Exhauster Oakland | Posey Blower Oakland
Caldecott Exhst Bore 1&2W | Caldecott Blower Bore 1&2W | Caldecott Blwr/Exhst Bore 3W | Configure Posey Tube Fans
Caldecott Exhst Bore 1&2E | Caldecott Blower Bore 1&2E | Configure Caldecott Fans | Configure Webster Tube Fans

	BY	CHECKED
DESIGN	G.RUSSELL	D.LE
DETAILS	D.LE	S.LO
QUANTITIES		

PREPARED FOR THE STATE OF CALIFORNIA DEPARTMENT OF TRANSPORTATION

DIVISION OF ENGINEERING SERVICES
ELECTRICAL-MECHANICAL-WATER AND WASTEWATER DESIGN

BRIDGE NO. VARIES
POST MILE VARIES

SCADA SYSTEM UPGRADE: POSEY/WEBSTER STREET TUBES AND CALDECOTT TUNNEL
WEBSTER STREET TUBE OAKLAND
EXHAUSTER ROOM WONDERWARE SCREEN

SHEET EE4-28-15

DOES SD Imperial Rev.1/07

ORIGINAL SCALE IN INCHES FOR REDUCED PLANS 0 1 2 3

CU 04220
EA 1A4604

DISREGARD PRINTS BEARING EARLIER REVISION DATES → REVISION DATES (PRELIMINARY STAGE ONLY)

SHEET 94 OF 95

26-NOV-2008 11:13
EE4-28-15.dgn

DIST.	COUNTY	ROUTE	POST MILES TOTAL PROJECT	SHEET NO.	TOTAL SHEETS
04	Ala,CC	24,260	R5.9/R6.2, R0.0/R0.5,R0.9/R1.9	100	100

REGISTERED ELECTRICAL ENGINEER — 02-26-08 DATE

REGISTERED PROFESSIONAL ENGINEER — ROBERT J. FEE — No. E-13014 — Exp. 6/30/09 — ELEC — STATE OF CALIFORNIA

11-24-08
PLANS APPROVAL DATE

The State of California or its officers or agents shall not be responsible for the accuracy or completeness of electronic copies of this plan sheet.

STV Incorporated
9130 Anaheim Place, Suite 210
Rancho Cucamonga, CA 91730

JDL Design, LLC
18582 Beach Blvd, Suite 229
Huntington Beach, CA 92647

Emergency Telephone & Fire | Webster 400 Volt Syst. Alameda | Alarm Manager | Ack. All Alarms
CO & NO Level Display | Webster 400 Volt Syst. Oakland | Historical Trends | User Log in/Log out

2/1/2003 9:50:29 PM

Webster Tube Fan Configuration

CO LEVEL	FAN LEVEL	Alameda Exhausters TOTAL # OF FANS 1 L	1 H	2 L	2 H	3 L	3 H	4 L	4 H	Alameda Blowers TOTAL # OF FANS 1 L	1 H	2 L	2 H	3 L	3 H	4 L	4 H	Oakland Exhausters TOTAL # OF FANS 1 L	1 H	2 L	2 H	3 L	3 H	4 L	4 H	Oakland Blowers TOTAL # OF FANS 1 L	1 H	2 L	2 H	3 L	3 H	4 L	4 H
10	1	■	□	□	□	□	□	□	□	■	□	□	□	□	□	□	□	■	□	□	□	□	□	□	□	■	□	□	□	□	□	□	□
15	2	■	□	□	□	□	□	□	□	■	□	□	□	□	□	□	□	■	□	□	□	□	□	□	□	■	□	□	□	□	□	□	□
20	3	□	□	■	□	□	□	□	□	□	□	■	□	□	□	□	□	□	□	■	□	□	□	□	□	□	□	■	□	□	□	□	□
25	4	□	□	■	□	□	□	□	□	□	□	■	□	□	□	□	□	□	□	■	□	□	□	□	□	□	□	■	□	□	□	□	□
30	5	□	□	□	□	■	□	□	□	□	□	□	□	■	□	□	□	□	□	□	□	■	□	□	□	□	□	□	□	■	□	□	□
35	6	□	□	□	□	■	□	□	□	□	□	□	□	■	□	□	□	□	□	□	□	■	□	□	□	□	□	□	□	■	□	□	□
40	7	□	□	□	□	□	□	■	□	□	□	□	□	□	□	■	□	□	□	□	□	□	□	■	□	□	□	□	□	□	□	■	□
45	8	□	□	□	□	□	□	■	□	□	□	□	□	□	□	■	□	□	□	□	□	□	□	■	□	□	□	□	□	□	□	■	□
50	9	□	■	□	□	■	□	□	□	□	■	□	□	■	□	□	□	□	■	□	□	■	□	□	□	□	■	□	□	■	□	□	□
60	10	□	■	□	□	■	□	□	□	□	■	□	□	■	□	□	□	□	■	□	□	■	□	□	□	□	■	□	□	■	□	□	□
70	11	□	□	□	■	■	□	□	□	□	□	□	■	■	□	□	□	□	□	□	■	■	□	□	□	□	□	□	■	■	□	□	□
80	12	□	□	□	■	■	□	□	□	□	□	□	■	■	□	□	□	□	□	□	■	■	□	□	□	□	□	□	■	■	□	□	□
90	13	■	□	□	□	□	■	□	□	■	□	□	□	□	■	□	□	■	□	□	□	□	■	□	□	■	□	□	□	□	■	□	□
100	14	■	□	□	□	□	■	□	□	■	□	□	□	□	■	□	□	■	□	□	□	□	■	□	□	■	□	□	□	□	■	□	□
110	15	□	□	□	□	□	□	□	■	□	□	□	□	□	□	□	■	□	□	□	□	□	□	□	■	□	□	□	□	□	□	□	■
120	16	□	□	□	□	□	□	□	■	□	□	□	□	□	□	□	■	□	□	□	□	□	□	□	■	□	□	□	□	□	□	□	■

VFD Speed Setpoints

Low 52 Hz High 59 Hz

MM/DD	HH:MM:SS	EVT	Type	Pri	Name	GroupName	Value/Limit	
02/01	21:47:25	ALM	DISC	1	dig123	$System	ON/	ON
02/01	21:47:26	ALM	DISC	1	dig122	$System	ON/	ON
02/01	21:47:26	ALM	DISC	1	dig121	$System	ON/	ON

Webster Exhauster Alameda | Webster Blower Alameda | Posey Exhauster Alameda | Posey Blower Alameda
Webster Exhauster Oakland | Webster Blower Oakland | Posey Exhauster Oakland | Posey Blower Oakland
Caldecott Exhst Bore 1&2W | Caldecott Blower Bore 1&2W | Caldecott Blwr/Exhst Bore 3W | Configure Posey Tube Fans
Caldecott Exhst Bore 1&2E | Caldecott Blower Bore 1&2E | Configure Caldecott Fans | Configure Webster Tube Fans

	BY	CHECKED
DESIGN	G.RUSSELL	D.LE
DETAILS	D.LE	S.LO
QUANTITIES		

PREPARED FOR THE STATE OF CALIFORNIA DEPARTMENT OF TRANSPORTATION

DIVISION OF ENGINEERING SERVICES
ELECTRICAL-MECHANICAL-WATER AND WASTEWATER DESIGN

BRIDGE NO. VARIES
POST MILE VARIES

SCADA SYSTEM UPGRADE: POSEY/WEBSTER STREET TUBES AND CALDECOTT TUNNEL
WEBSTER STREET TUBE FAN CONFIGURATION WONDERWARE SCREEN

SHEET EE4-28-16

DOES SD Imperial Rev.1/07

ORIGINAL SCALE IN INCHES FOR REDUCED PLANS 0 1 2 3

CU 04220
EA 1A4604

DISREGARD PRINTS BEARING EARLIER REVISION DATES →
REVISION DATES (PRELIMINARY STAGE ONLY)

SHEET 95 OF 95

26-NOV-2008 11:13
EE4-28-16.dgn