Dist	COUNTY	ROUTE	POST MILES TOTAL PROJECT	SHEET No.	TOTAL SHEETS
04	Ala	580	R8.3	1	19

IM-580-1(048)E

STATE OF CALIFORNIA
DEPARTMENT OF TRANSPORTATION

PROJECT PLANS FOR CONSTRUCTION NEAR
STATE HIGHWAY

IN ALAMEDA COUNTY
NEAR LIVERMORE
EAST OF CROSS ROAD
2.2 MILES SOUTHEAST OF ROUTE 580/
GREENVILLE ROAD UNDERCROSSING

TO BE SUPPLEMENTED BY STANDARD PLANS DATED MAY 2006

INDEX OF PLANS

SHEET No.	DESCRIPTION
1	TITLE SHEET AND LOCATION MAP
2 & 3	LAYOUT
4 - 6	PROFILE
7 - 9	EROSION CONTROL PLAN, DETAILS
10 - 13	DRAINAGE PLAN, DETAILS AND QUANTITIES
14	SUMMARY OF QUANTITIES
15 - 19	REVISED & NEW STANDARD PLAN

THE STANDARD PLANS LIST APPLICABLE TO THIS CONTRACT IS INCLUDED IN THE NOTICE TO BIDDERS AND SPECIAL PROVISIONS BOOK.

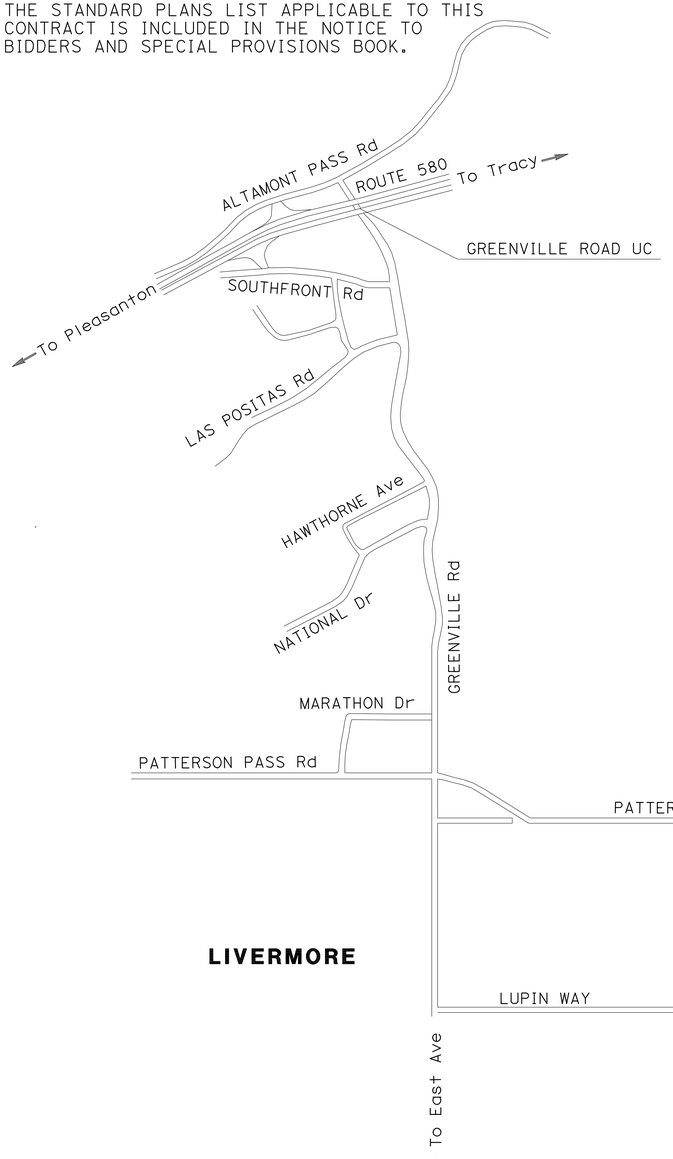

NO SCALE

THE CONTRACTOR SHALL POSSESS THE CLASS (OR CLASSES) OF LICENSE AS SPECIFIED IN THE "NOTICE TO BIDDERS."

Hillal Hamdan 4-23-10
PROJECT ENGINEER DATE
REGISTERED CIVIL ENGINEER

May 10, 2010
PLANS APPROVAL DATE

REGISTERED PROFESSIONAL ENGINEER Hillal Hamdan No. 67129 Exp. 9-30-10 CIVIL STATE OF CALIFORNIA

THE STATE OF CALIFORNIA OR ITS OFFICERS OR AGENTS SHALL NOT BE RESPONSIBLE FOR THE ACCURACY OR COMPLETENESS OF SCANNED COPIES OF THIS PLAN SHEET.

CONTRACT No.	04-172424
PROJECT ID	0400020197

PROJECT MANAGER: RON KIAAINA
DESIGN ENGINEER: HILLAL HAMDAN

LAST REVISION 05-10-10 | DATE PLOTTED => 02-AUG-2010 | TIME PLOTTED => 16:09

Dist	COUNTY	ROUTE	POST MILES TOTAL PROJECT	SHEET No.	TOTAL SHEETS
04	Ala	580	R8.3	2	19

REGISTERED CIVIL ENGINEER 2/19/10 DATE

5-10-10
PLANS APPROVAL DATE

REGISTERED PROFESSIONAL ENGINEER HAN-BIN LIANG No. C 48404 Exp. 6/30/12 CIVIL STATE OF CALIFORNIA

THE STATE OF CALIFORNIA OR ITS OFFICERS OR AGENTS SHALL NOT BE RESPONSIBLE FOR THE ACCURACY OR COMPLETENESS OF SCANNED COPIES OF THIS PLAN SHEET.

WRECO
1814 FRANKLIN STREET
SUITE 608
OAKLAND, CA 94612

CALTRANS
111 GRAND AVENUE
OAKLAND, CA 94612

RIGHT OF WAY LIMITS ARE INDETERMINATE, AND ARE NOT SHOWN. THE CONTRACTOR MUST CONTACT RIGHT OF WAY ENGINEERING AT THE DISTRICT OFFICE FOR CONDITIONS OF USE PRIOR TO COMMENCING WORK.

NOTE:

1. COORDINATE VALUES SHOWN ARE CCS 83, ZONE 3.

ABBREVIATIONS:

ESA ENVIRONMENTALLY SENSITIVE AREA
GCL GEOSYNTHETIC CLAY LINER
R/W RIGHT OF WAY (CONSERVATION EASEMENT)

LEGEND:

GCL LIMIT
TFESA TEMPORARY FENCE (ESA)
LIMIT OF GRADING

TYPICAL SECTION

A4 0+46.09 TO 4+64.64

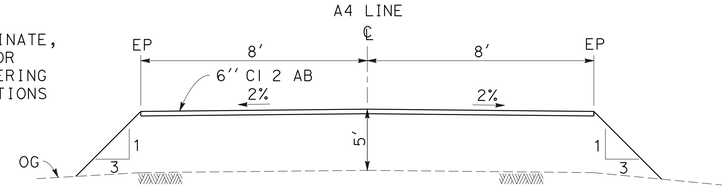

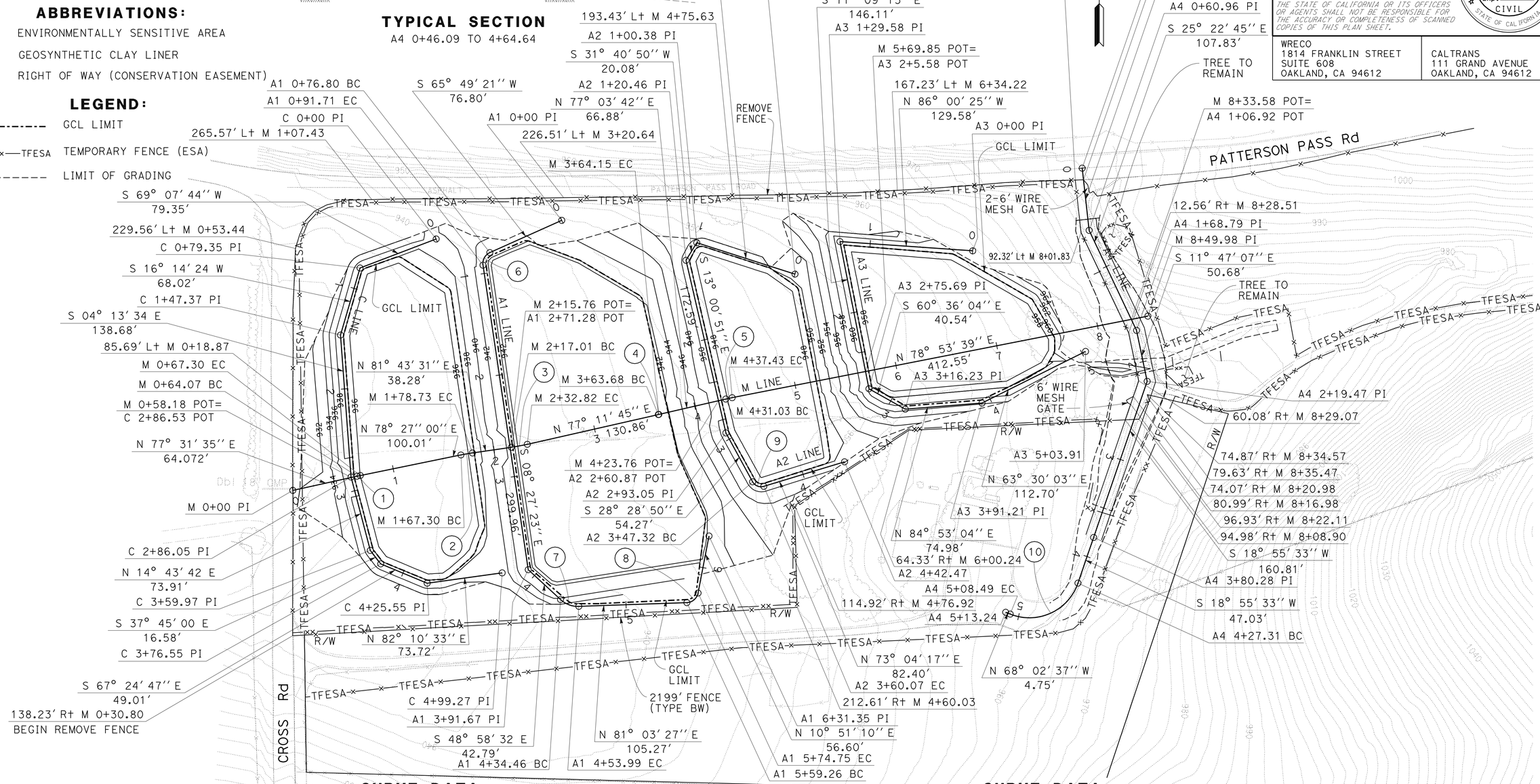

CURVE DATA

No.	R	Δ	T	L	N-COORDINATE	E-COORDINATE
1	200'	00° 55' 26"	1.61'	3.22'	2073813.78	6226199.61
2	200'	03° 16' 30"	5.72'	11.43'	2073833.81	6226297.59
3	200'	04° 31' 46"	7.91'	15.81'	2074235.15	6226277.90
4	200'	00° 08' 03"	0.23'	0.47'	2074264.15	6226405.51
5	200'	01° 49' 57"	3.20'	6.40'	2073889.28	6226560.26

CURVE DATA

No.	R	Δ	T	L	N-COORDINATE	E-COORDINATE
6	11.50'	74° 16' 43"	8.71'	14.91'	2074216.36	6226290.41
7	25'	44° 45' 49"	10.29'	19.53'	2073907.24	6226371.54
8	11.50'	77° 10' 19"	9.18'	15.49'	2073897.38	6226477.22
9	9.33'	78° 16' 23"	7.59'	12.75'	2074008.08	6226549.82
10	50'	93° 01' 50"	52.72'	81.18'	2073921.12	6226811.18

LAYOUT LOCATION 1

SCALE: 1" = 50'

L-1

REVISED BY	DATE REVISED
HL	2/25/10

HAN-BIN LIANG — HILLAL HAMDAN — CALCULATED-DESIGNED BY — CHECKED BY — DAVID YAM — CONSULTANT FUNCTIONAL SUPERVISOR

STATE OF CALIFORNIA - DEPARTMENT OF TRANSPORTATION

Caltrans

LAST REVISION 05-10-10 | DATE PLOTTED => 02-AUG-2010 | TIME PLOTTED => 16:09

Dist	COUNTY	ROUTE	POST MILES TOTAL PROJECT	SHEET No.	TOTAL SHEETS
04	Ala	580	R8.3	3	19

Han-Bin Liang 2/19/10
REGISTERED CIVIL ENGINEER DATE

5-10-10
PLANS APPROVAL DATE

REGISTERED PROFESSIONAL ENGINEER HAN-BIN LIANG No. C 48404 Exp. 6/30/12 CIVIL STATE OF CALIFORNIA

THE STATE OF CALIFORNIA OR ITS OFFICERS OR AGENTS SHALL NOT BE RESPONSIBLE FOR THE ACCURACY OR COMPLETENESS OF SCANNED COPIES OF THIS PLAN SHEET.

WRECO
1814 FRANKLIN STREET
SUITE 608
OAKLAND, CA 94612

CALTRANS
111 GRAND AVENUE
OAKLAND, CA 94612

RIGHT OF WAY LIMITS ARE INDETERMINATE, AND ARE NOT SHOWN. THE CONTRACTOR MUST CONTACT RIGHT OF WAY ENGINEERING AT THE DISTRICT OFFICE FOR CONDITIONS OF USE PRIOR TO COMMENCING WORK.

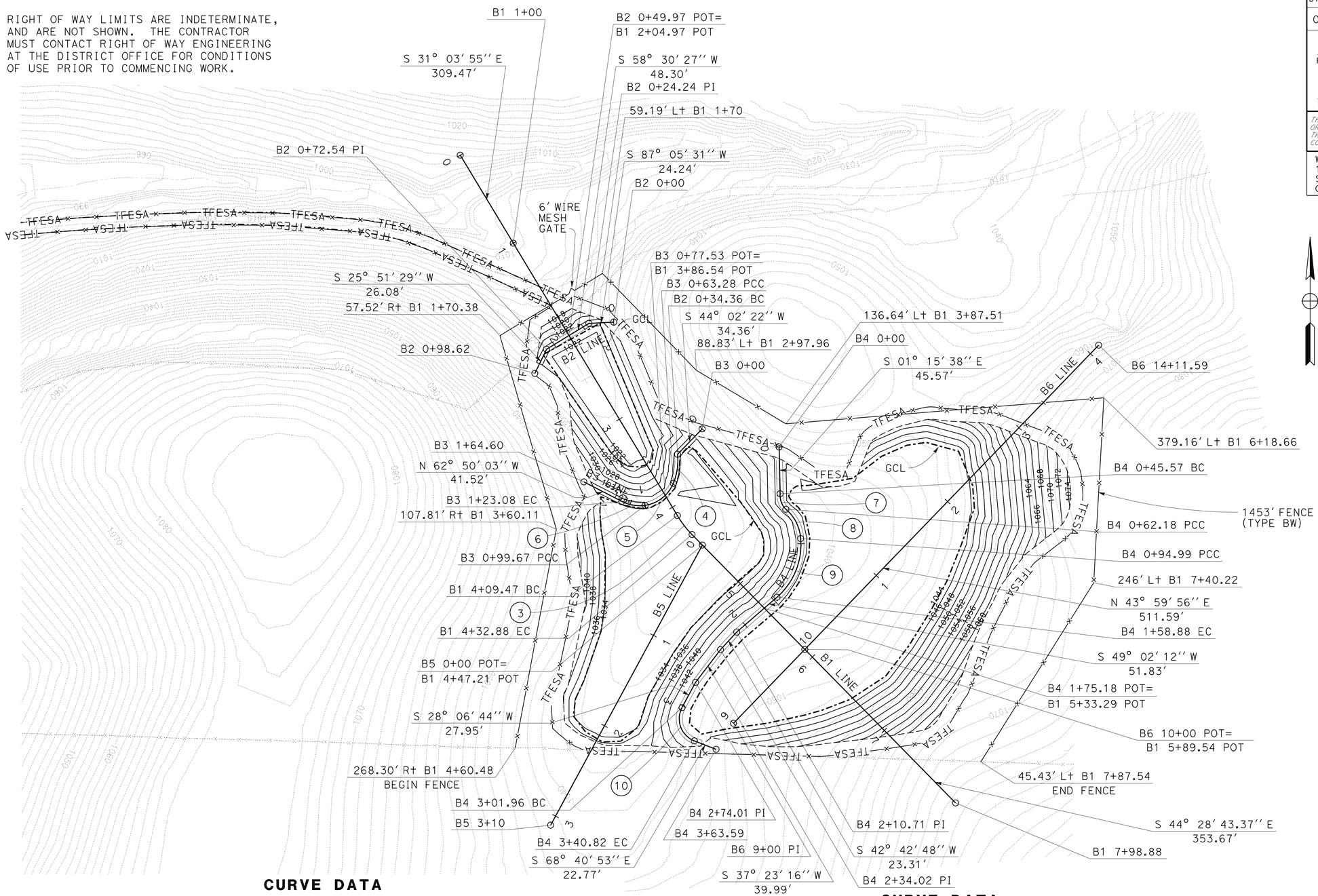

CURVE DATA

No.	R	Δ	T	L	N-COORDINATE	E-COORDINATE
3	100′	13° 24′ 48.09″	11.76′	23.41′	2073949.01	6227996.23
4	58.13′	28° 30′ 11.20″	14.77′	28.92′	2073951.04	6227852.96
5	35.37′	58° 57′ 49.13″	19.99′	36.39′	2073942.32	6227873.99
6	38.35′	34° 58′ 22.11″	12.08′	23.41′	2073945.34	6227874.02
7	18.84′	50° 31′ 16.95″	8.89′	16.61′	2073916.99	6228029.35

CURVE DATA

No.	R	Δ	T	L	N-COORDINATE	E-COORDINATE
8	40.17′	46° 47′ 29.90″	17.38′	32.81′	2073872.68	6227990.44
9	67.57′	54° 10′ 19.63″	34.56′	63.89′	2073869.02	6227963.23
10	23′	96° 47′ 37.26″	25.90′	38.86′	2073699.62	6227935.42

FOR NOTES, ABBREVIATIONS AND LEGEND, SEE SHEET L-1

LAYOUT
LOCATION 2
SCALE: 1″ = 50′

L-2

REVISED BY	DATE REVISED
HL	2/25/10

HAN-BIN LIANG — HILLAL HAMDAN — CALCULATED-DESIGNED BY — CHECKED BY — DAVID YAM — CONSULTANT FUNCTIONAL SUPERVISOR

STATE OF CALIFORNIA - DEPARTMENT OF TRANSPORTATION — Caltrans

LAST REVISION 05-10-10 | DATE PLOTTED => 02-AUG-2010 | TIME PLOTTED => 16:10

Dist	COUNTY	ROUTE	POST MILES TOTAL PROJECT	SHEET No.	TOTAL SHEETS
04	Ala	580	R8.3	4	19

2/18/10
REGISTERED CIVIL ENGINEER DATE

5-10-10
PLANS APPROVAL DATE

REGISTERED PROFESSIONAL ENGINEER
HAN-BIN LIANG
No. C 48404
Exp. 6/30/12
CIVIL
STATE OF CALIFORNIA

THE STATE OF CALIFORNIA OR ITS OFFICERS OR AGENTS SHALL NOT BE RESPONSIBLE FOR THE ACCURACY OR COMPLETENESS OF SCANNED COPIES OF THIS PLAN SHEET.

WRECO
1814 FRANKLIN STREET
SUITE 608
OAKLAND, CA 94612

CALTRANS
111 GRAND AVENUE
OAKLAND, CA 94612

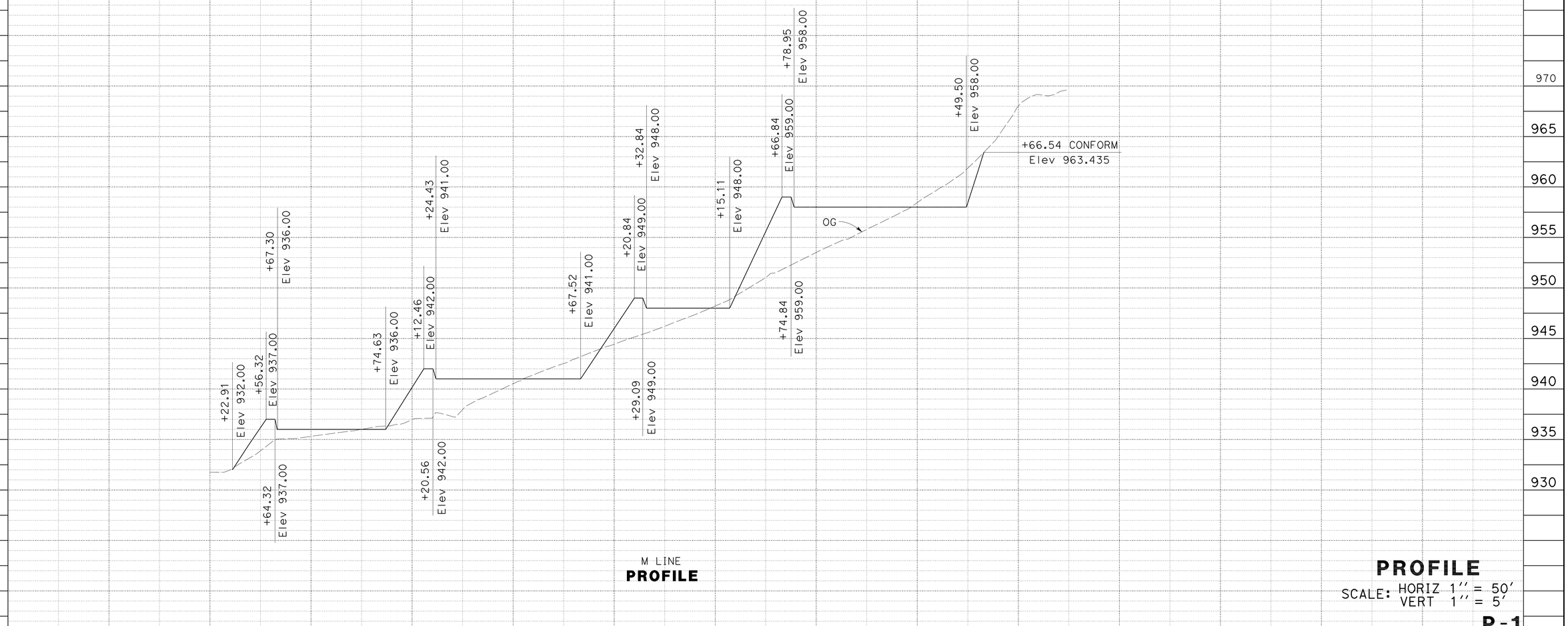

M LINE
PROFILE

PROFILE
SCALE: HORIZ 1'' = 50'
VERT 1'' = 5'

P-1

STATION		0	1	2	3	4	5	6	7	TOTAL
CY	Exc	3015								
	Emb	11826								

STATE OF CALIFORNIA - DEPARTMENT OF TRANSPORTATION
Caltrans

CONSULTANT FUNCTIONAL SUPERVISOR: DAVID YAM
CALCULATED-DESIGNED BY: HAN-BIN LIANG
CHECKED BY: HILLAL HAMDAN
REVISED BY: HL
DATE REVISED: 2/25/10

LAST REVISION 05-10-10
DATE PLOTTED => 02-AUG-2010
TIME PLOTTED => 16:10

Dist	COUNTY	ROUTE	POST MILES TOTAL PROJECT	SHEET No.	TOTAL SHEETS
04	Ala	580	R8.3	5	19

REGISTERED CIVIL ENGINEER DATE 2/18/10

PLANS APPROVAL DATE 5-10-10

REGISTERED PROFESSIONAL ENGINEER HAN-BIN LIANG No. C 48404 Exp. 6/30/12 CIVIL STATE OF CALIFORNIA

THE STATE OF CALIFORNIA OR ITS OFFICERS OR AGENTS SHALL NOT BE RESPONSIBLE FOR THE ACCURACY OR COMPLETENESS OF SCANNED COPIES OF THIS PLAN SHEET.

WRECO
1814 FRANKLIN STREET
SUITE 608
OAKLAND, CA 94612

CALTRANS
111 GRAND AVENUE
OAKLAND, CA 94612

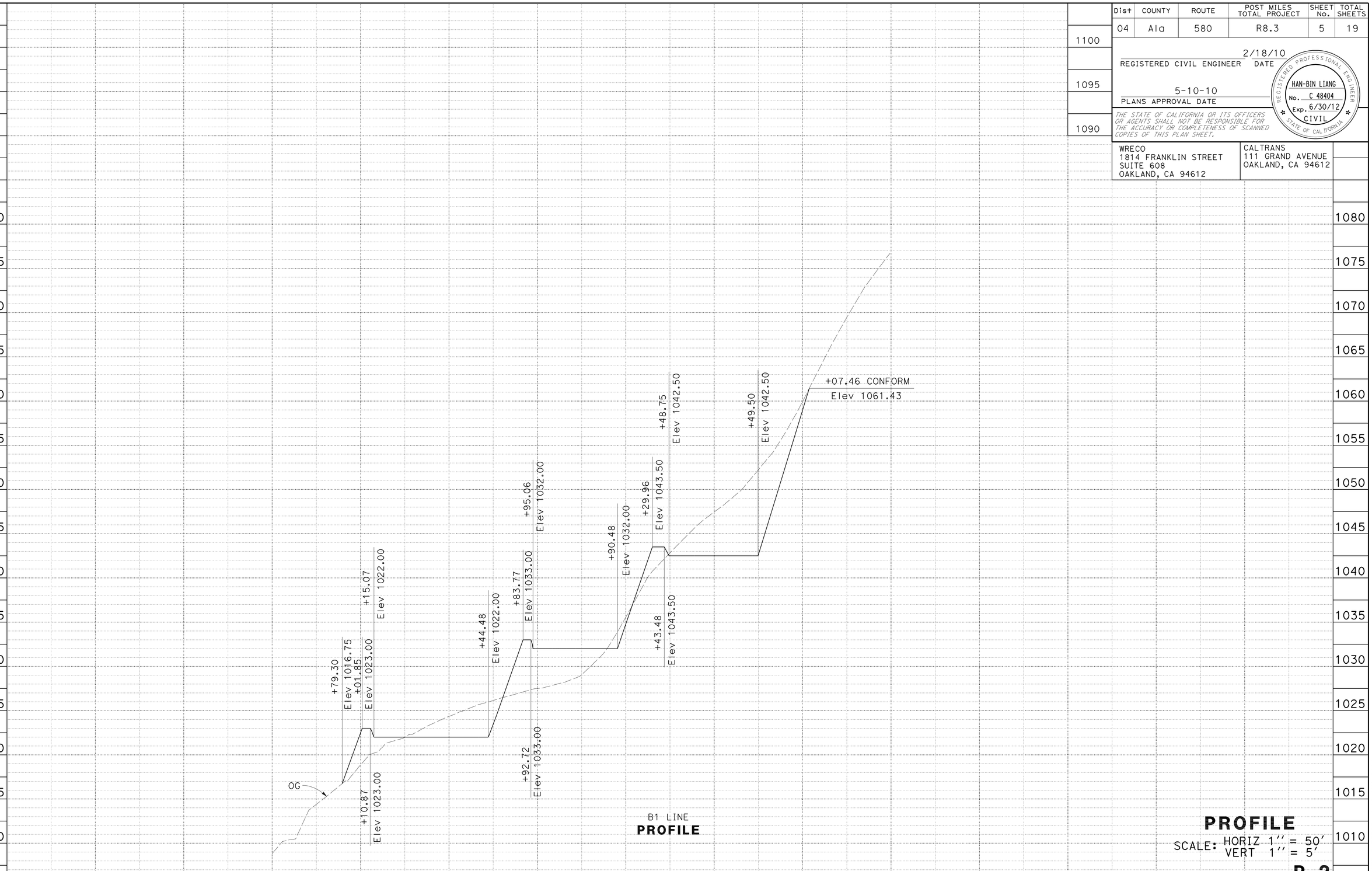

STATE OF CALIFORNIA - DEPARTMENT OF TRANSPORTATION

Caltrans

CONSULTANT FUNCTIONAL SUPERVISOR: DAVID YAM

CALCULATED-DESIGNED BY: HAN-BIN LIANG

CHECKED BY: HILLAL HAMDAN

REVISED BY: HL

DATE REVISED: 2/25/10

LAST REVISION DATE PLOTTED => 02-AUG-2010
TIME PLOTTED => 16:10
05-10-10

Dist	COUNTY	ROUTE	POST MILES TOTAL PROJECT	SHEET No.	TOTAL SHEETS
04	Ala	580	R8.3	6	19

Han-Bin Liang 2/18/10
REGISTERED CIVIL ENGINEER DATE

5-10-10
PLANS APPROVAL DATE

REGISTERED PROFESSIONAL ENGINEER
HAN-BIN LIANG
No. C 48404
Exp. 6/30/12
CIVIL
STATE OF CALIFORNIA

THE STATE OF CALIFORNIA OR ITS OFFICERS OR AGENTS SHALL NOT BE RESPONSIBLE FOR THE ACCURACY OR COMPLETENESS OF SCANNED COPIES OF THIS PLAN SHEET.

WRECO
1814 FRANKLIN STREET
SUITE 608
OAKLAND, CA 94612

CALTRANS
111 GRAND AVENUE
OAKLAND, CA 94612

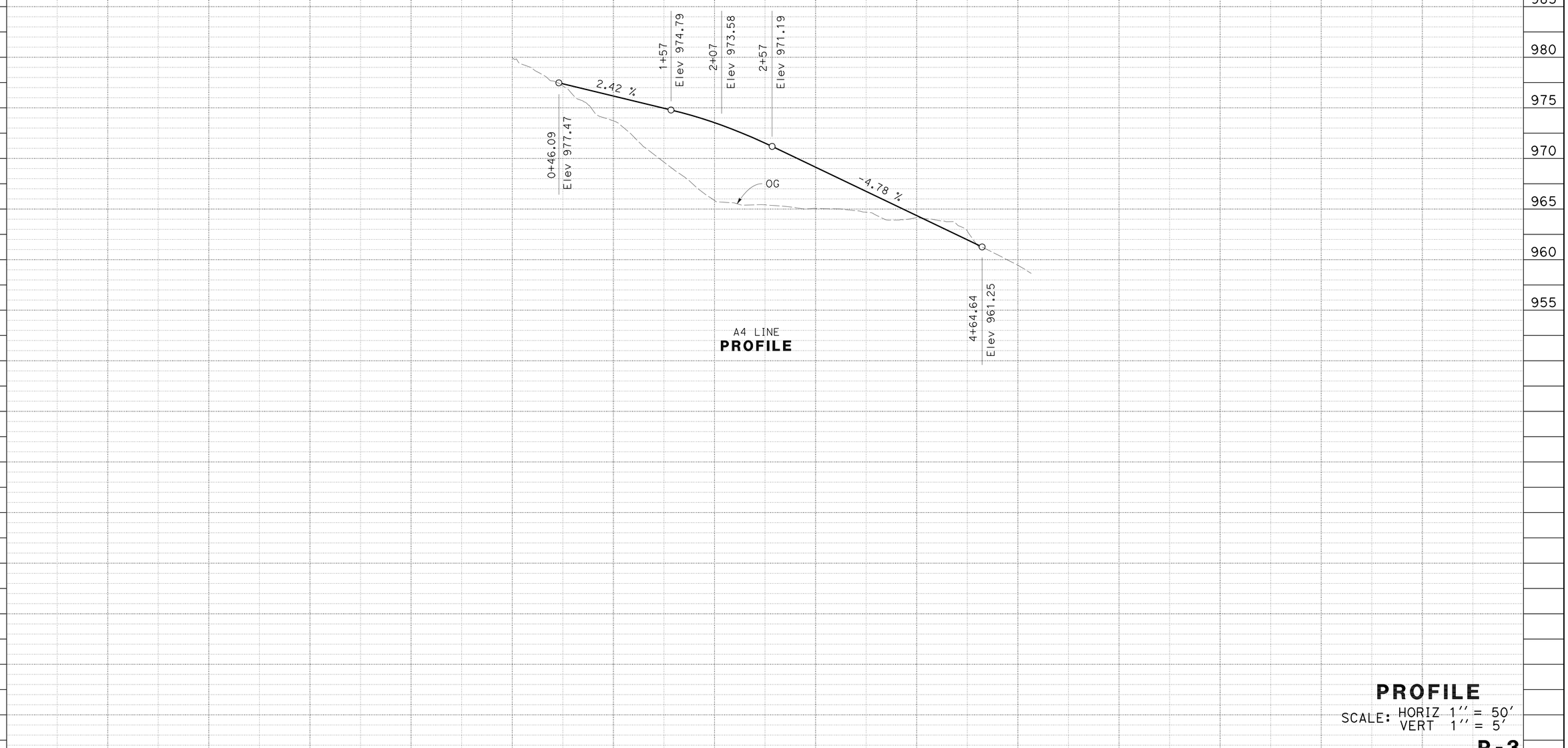

PROFILE
SCALE: HORIZ 1'' = 50'
VERT 1'' = 5'

P-3

REVISED BY	DATE REVISED
HL	2/25/10

HAN-BIN LIANG — CALCULATED-DESIGNED BY
HILLAL HAMDAN — CHECKED BY
DAVID YAM — CONSULTANT FUNCTIONAL SUPERVISOR

STATE OF CALIFORNIA - DEPARTMENT OF TRANSPORTATION
Caltrans

LAST REVISION 05-10-10 | DATE PLOTTED => 02-AUG-2010 | TIME PLOTTED => 16:10

Dist	COUNTY	ROUTE	POST MILES TOTAL PROJECT	SHEET No.	TOTAL SHEETS
04	Ala	580	R8.3	7	19

LICENSED LANDSCAPE ARCHITECT

5-10-10

PLANS APPROVAL DATE

THE STATE OF CALIFORNIA OR ITS OFFICERS OR AGENTS SHALL NOT BE RESPONSIBLE FOR THE ACCURACY OR COMPLETENESS OF SCANNED COPIES OF THIS PLAN SHEET.

LICENSED LANDSCAPE ARCHITECT JENNIFER EGAWA No. 5266 Signature 7-31-12 Renewal Date 3-1-10 Date STATE OF CALIFORNIA

RIGHT OF WAY LIMITS ARE INDETERMINATE, AND ARE NOT SHOWN. THE CONTRACTOR MUST CONTACT RIGHT OF WAY ENGINEERING AT THE DISTRICT OFFICE FOR CONDITIONS OF USE PRIOR TO COMMENCING WORK.

LEGEND:

EROSION CONTROL (TYPE 1)

EROSION CONTROL (COMPOST BLANKET)
EROSION CONTROL (HYDROSEED) (SEED TYPE 1)

EROSION CONTROL (TYPE 2)

EROSION CONTROL (COMPOST BLANKET)
EROSION CONTROL (HYDROSEED) (SEED TYPE 2)

FIBER ROLLS TYPE 2

—xx—TFESA— TEMPORARY FENCE (TYPE ESA)

NOTE:

1. EROSION CONTROL LOCATIONS ARE DIAGRAMATIC ONLY.

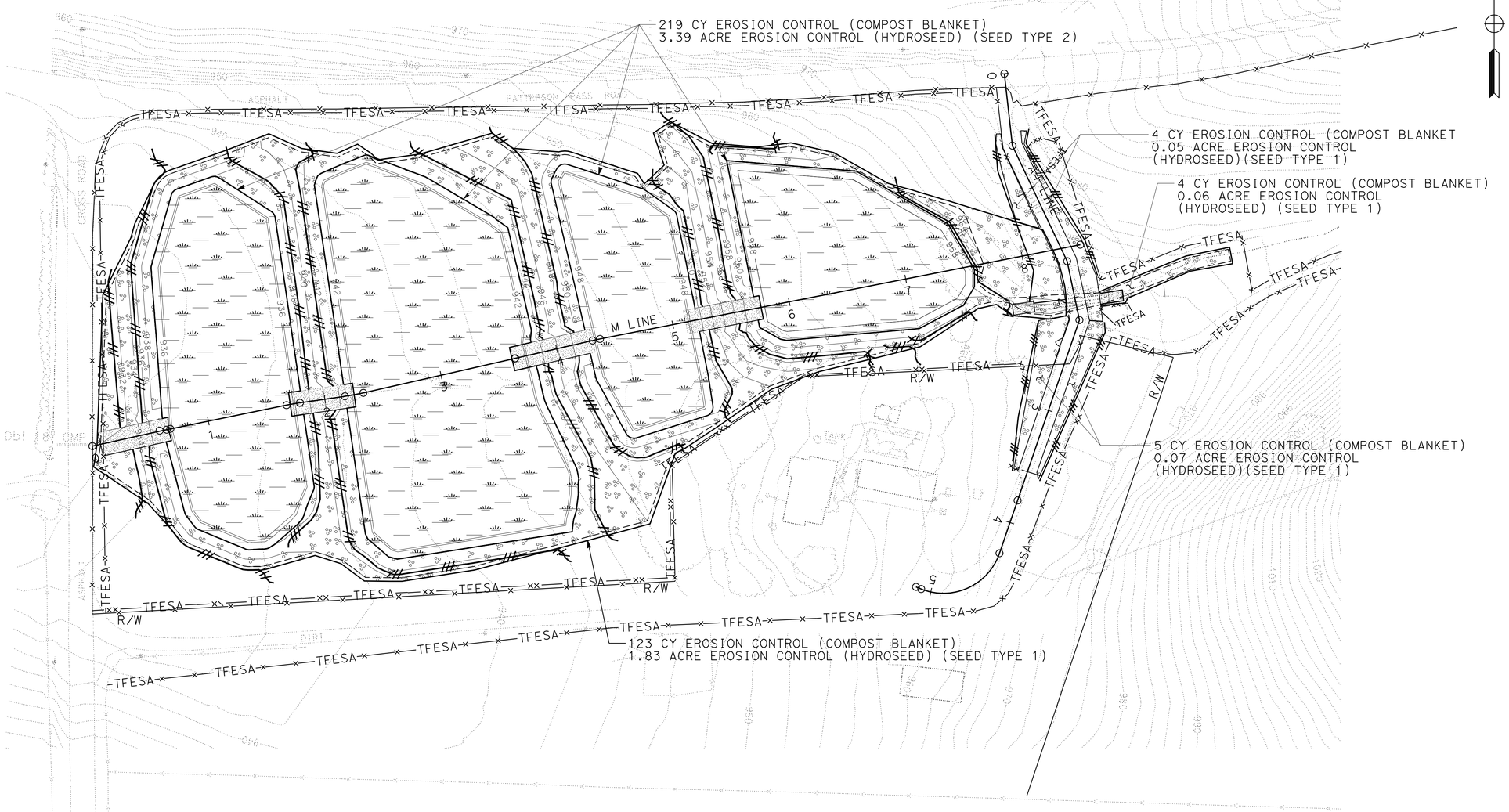

EROSION CONTROL PLAN
LOCATION 1

SCALE: 1'' = 50'

THIS PLAN ACCURATE FOR EROSION CONTROL WORK ONLY

EC-1

STATE OF CALIFORNIA - DEPARTMENT OF TRANSPORTATION
Caltrans® WATER QUALITY

SENIOR LANDSCAPE ARCHITECT: DAVID W. YAM

CALCULATED-DESIGNED BY: JENNIFER EGAWA
CHECKED BY: ALEX McDONALD

REVISED BY: JE
DATE REVISED: 4/14/10

LAST REVISION 05-10-10
DATE PLOTTED => 02-AUG-2010
TIME PLOTTED => 16:10

RIGHT OF WAY LIMITS ARE INDETERMINATE, AND ARE NOT SHOWN. THE CONTRACTOR MUST CONTACT RIGHT OF WAY ENGINEERING AT THE DISTRICT OFFICE FOR CONDITIONS OF USE PRIOR TO COMMENCING WORK.

Dist	COUNTY	ROUTE	POST MILES TOTAL PROJECT	SHEET No.	TOTAL SHEETS
04	Ala	580	R8.3	8	19

REGISTERED LANDSCAPE ARCHITECT

5-10-10
PLANS APPROVAL DATE

REGISTERED PROFESSIONAL ENGINEER
JENNIFER EGAWA No. 7-31-12
Exp. 3-1-10
CIVIL
STATE OF CALIFORNIA

THE STATE OF CALIFORNIA OR ITS OFFICERS OR AGENTS SHALL NOT BE RESPONSIBLE FOR THE ACCURACY OR COMPLETENESS OF SCANNED COPIES OF THIS PLAN SHEET.

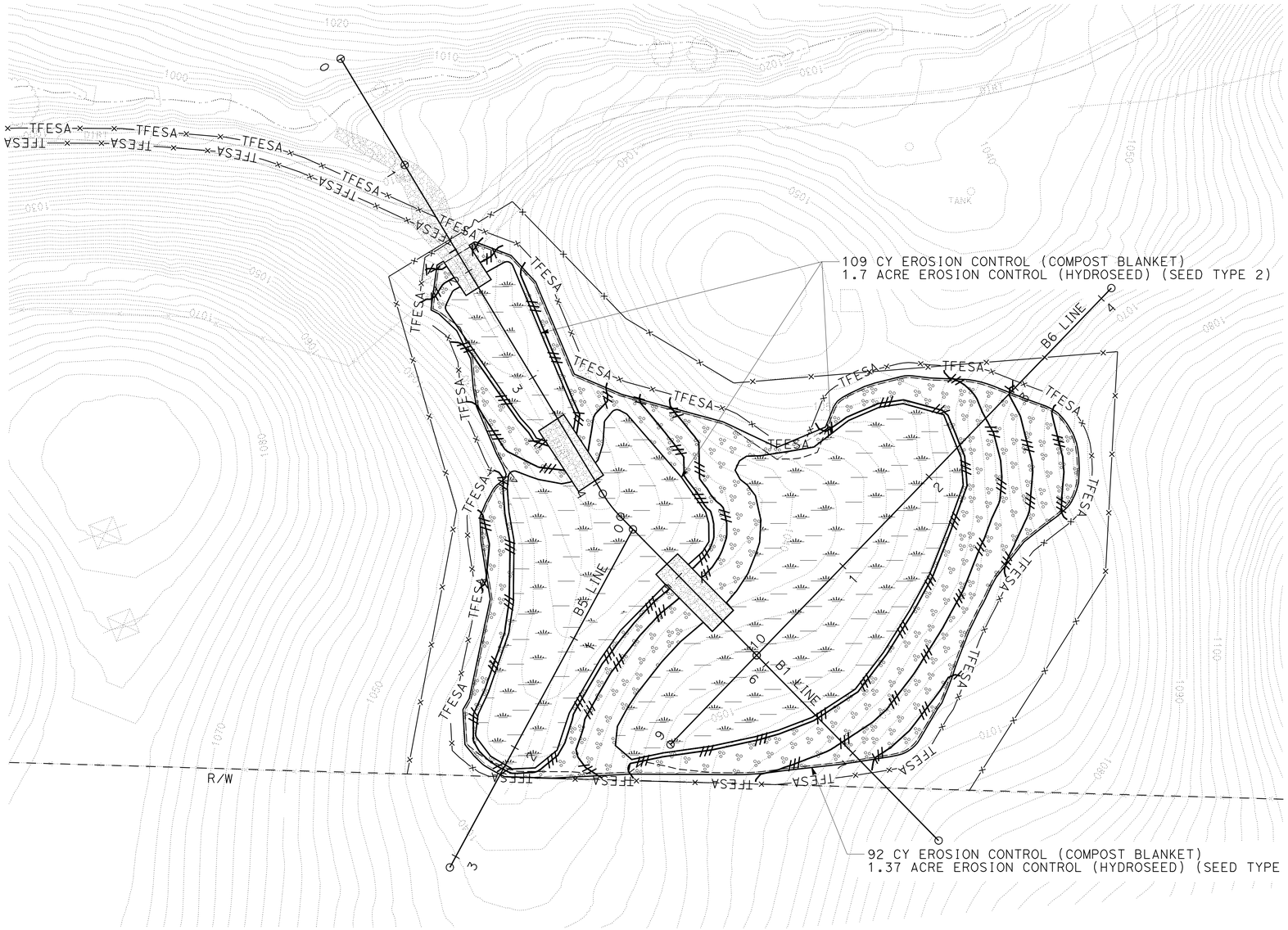

EROSION CONTROL PLAN
LOCATION 2
SCALE: 1'' = 50'

FOR NOTES, ABBREVIATIONS AND LEGEND, SEE SHEET EC-1

THIS PLAN ACCURATE FOR EROSION CONTROL WORK ONLY

EC-2

REVISED BY	DATE REVISED
JE	4/14/10

CALCULATED-DESIGNED BY: JENNIFER EGAWA
CHECKED BY: ALEX McDONALD
FUNCTIONAL SUPERVISOR: DAVID W. YAM

STATE OF CALIFORNIA - DEPARTMENT OF TRANSPORTATION
Caltrans
WATER QUALITY

LAST REVISION 05-03-10
DATE PLOTTED => 02-AUG-2010
TIME PLOTTED => 16:11

Dist	COUNTY	ROUTE	POST MILES TOTAL PROJECT	SHEET No.	TOTAL SHEETS
04	Ala	580	R8.3	9	19

LICENSED LANDSCAPE ARCHITECT

5-10-10
PLANS APPROVAL DATE

LICENSED LANDSCAPE ARCHITECT
JENNIFER EGAWA No. 5066
Signature
7-31-12
Renewal Date
3-1-10
Date
STATE OF CALIFORNIA

THE STATE OF CALIFORNIA OR ITS OFFICERS OR AGENTS SHALL NOT BE RESPONSIBLE FOR THE ACCURACY OR COMPLETENESS OF SCANNED COPIES OF THIS PLAN SHEET.

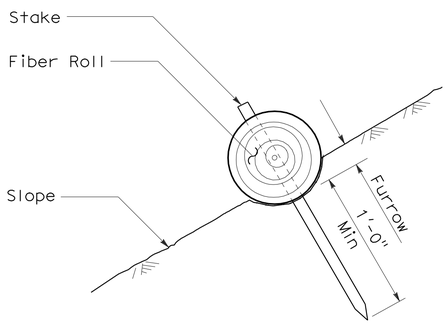

SECTION

FIBER ROLL (TYPE 1)

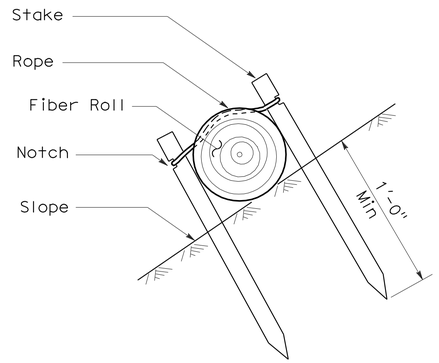

SECTION

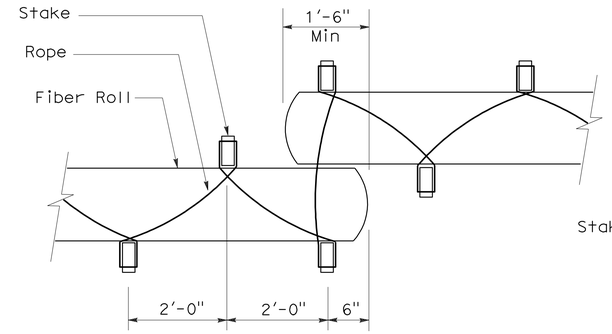

PLAN

FIBER ROLL (TYPE 2)

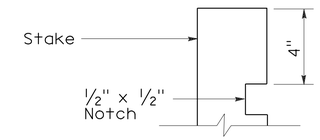

ELEVATION

STAKE NOTCH DETAIL

NOTES:

1. Fiber roll spacing varies depending upon slope inclination.
2. Installations shown in the perspectives are for slope inclination of 10:1 and steeper.

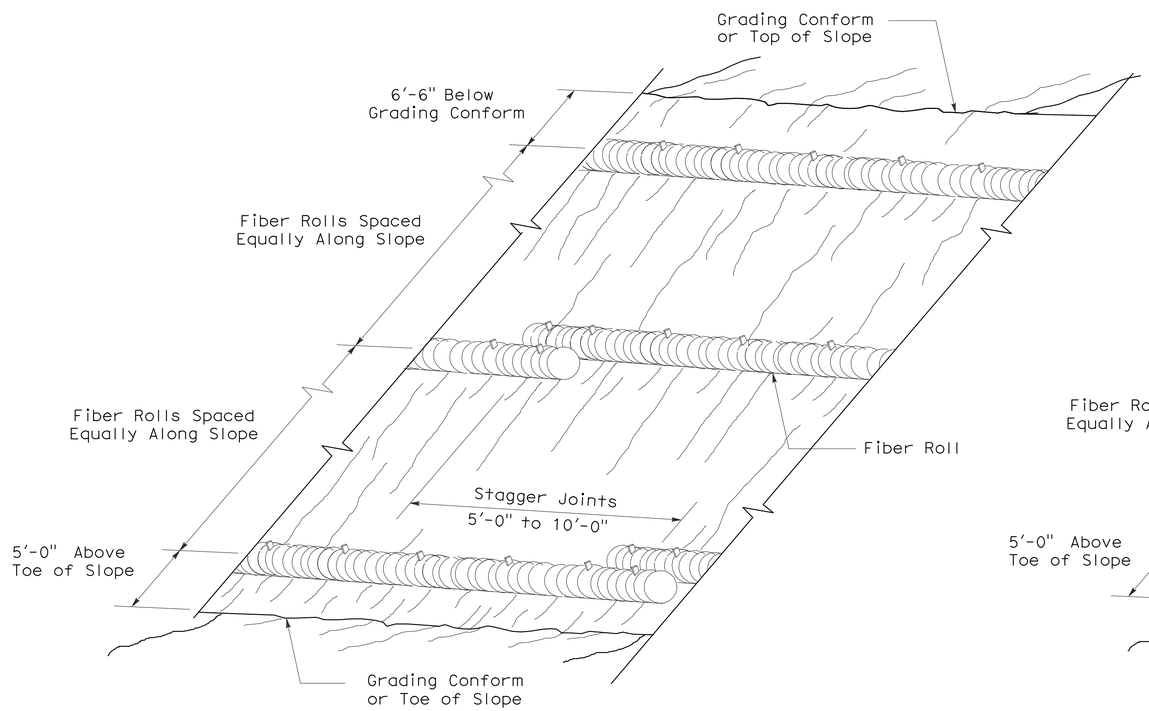

PERSPECTIVE

FIBER ROLL (TYPE 1)

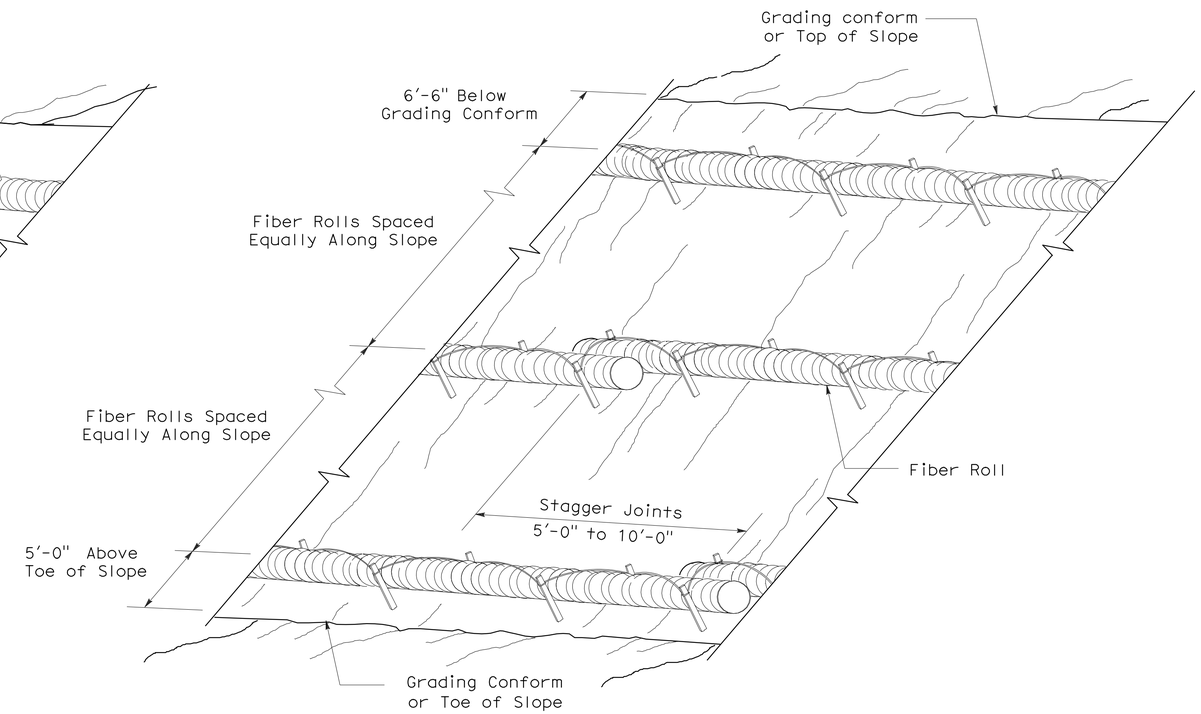

PERSPECTIVE

FIBER ROLL (TYPE 2)

EROSION CONTROL DETAILS

NO SCALE

ECD-1

STATE OF CALIFORNIA - DEPARTMENT OF TRANSPORTATION
Caltrans®
WATER QUALITY

SENIOR LANDSCAPE ARCHITECT: DAVID W. YAM

CALCULATED-DESIGNED BY: Jennifer Egawa
CHECKED BY: Alex McDonald

REVISED BY
DATE REVISED

LAST REVISION 05-03-10
DATE PLOTTED => 02-AUG-2010
TIME PLOTTED => 16:11

RIGHT OF WAY LIMITS ARE INDETERMINATE, AND ARE NOT SHOWN. THE CONTRACTOR MUST CONTACT RIGHT OF WAY ENGINEERING AT THE DISTRICT OFFICE FOR CONDITIONS OF USE PRIOR TO COMMENCING WORK.

Dist	COUNTY	ROUTE	POST MILES TOTAL PROJECT	SHEET No.	TOTAL SHEETS
04	Ala	580	R8.3	10	19

Han-Bin Liang 2/19/10
REGISTERED CIVIL ENGINEER DATE

5-10-10
PLANS APPROVAL DATE

REGISTERED PROFESSIONAL ENGINEER
HAN-BIN LIANG
No. C 48404
Exp. 6/30/12
CIVIL
STATE OF CALIFORNIA

THE STATE OF CALIFORNIA OR ITS OFFICERS OR AGENTS SHALL NOT BE RESPONSIBLE FOR THE ACCURACY OR COMPLETENESS OF SCANNED COPIES OF THIS PLAN SHEET.

WRECO
1814 FRANKLIN STREET
SUITE 608
OAKLAND, CA 94612

CALTRANS
111 GRAND AVENUE
OAKLAND, CA 94612

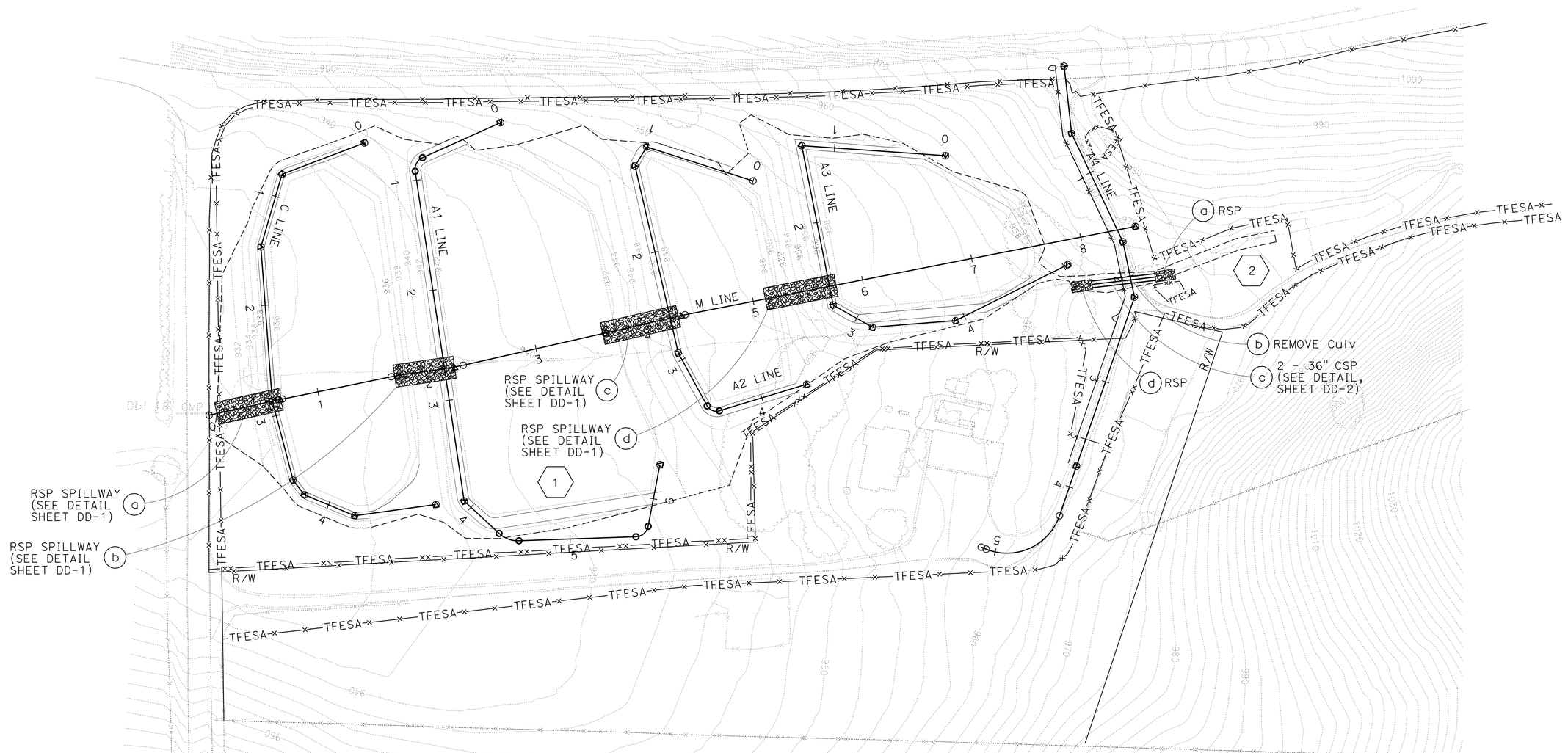

DRAINAGE PLAN
LOCATION 1
SCALE: 1'' = 50'

THIS PLAN ACCURATE FOR DRAINAGE WORK ONLY

D-1

REVISED BY	DATE REVISED
HL	2/26/10

CALCULATED-DESIGNED BY: HAN-BIN LIANG
CHECKED BY: HILLAL HAMDAN
CONSULTANT FUNCTIONAL SUPERVISOR: DAVID YAM

STATE OF CALIFORNIA - DEPARTMENT OF TRANSPORTATION
Caltrans

LAST REVISION 05-10-10 | DATE PLOTTED => 02-AUG-2010 | TIME PLOTTED => 16:11

BORDER LAST REVISED 4/11/2008 | RELATIVE BORDER SCALE IS IN INCHES 0 1 2 3 | USERNAME => s126849 | DGN FILE => 417242ia001.dgn | CU 04256 | EA 172421

RIGHT OF WAY LIMITS ARE INDETERMINATE, AND ARE NOT SHOWN. THE CONTRACTOR MUST CONTACT RIGHT OF WAY ENGINEERING AT THE DISTRICT OFFICE FOR CONDITIONS OF USE PRIOR TO COMMENCING WORK.

Dist	COUNTY	ROUTE	POST MILES TOTAL PROJECT	SHEET No.	TOTAL SHEETS
04	Ala	580	R8.3	11	19

REGISTERED CIVIL ENGINEER 2/19/10 DATE

5-10-10
PLANS APPROVAL DATE

REGISTERED PROFESSIONAL ENGINEER HAN-BIN LIANG No. C 48404 Exp. 6/30/12 CIVIL STATE OF CALIFORNIA

THE STATE OF CALIFORNIA OR ITS OFFICERS OR AGENTS SHALL NOT BE RESPONSIBLE FOR THE ACCURACY OR COMPLETENESS OF SCANNED COPIES OF THIS PLAN SHEET.

WRECO
1814 FRANKLIN STREET
SUITE 608
OAKLAND, CA 94612

CALTRANS
111 GRAND AVENUE
OAKLAND, CA 94612

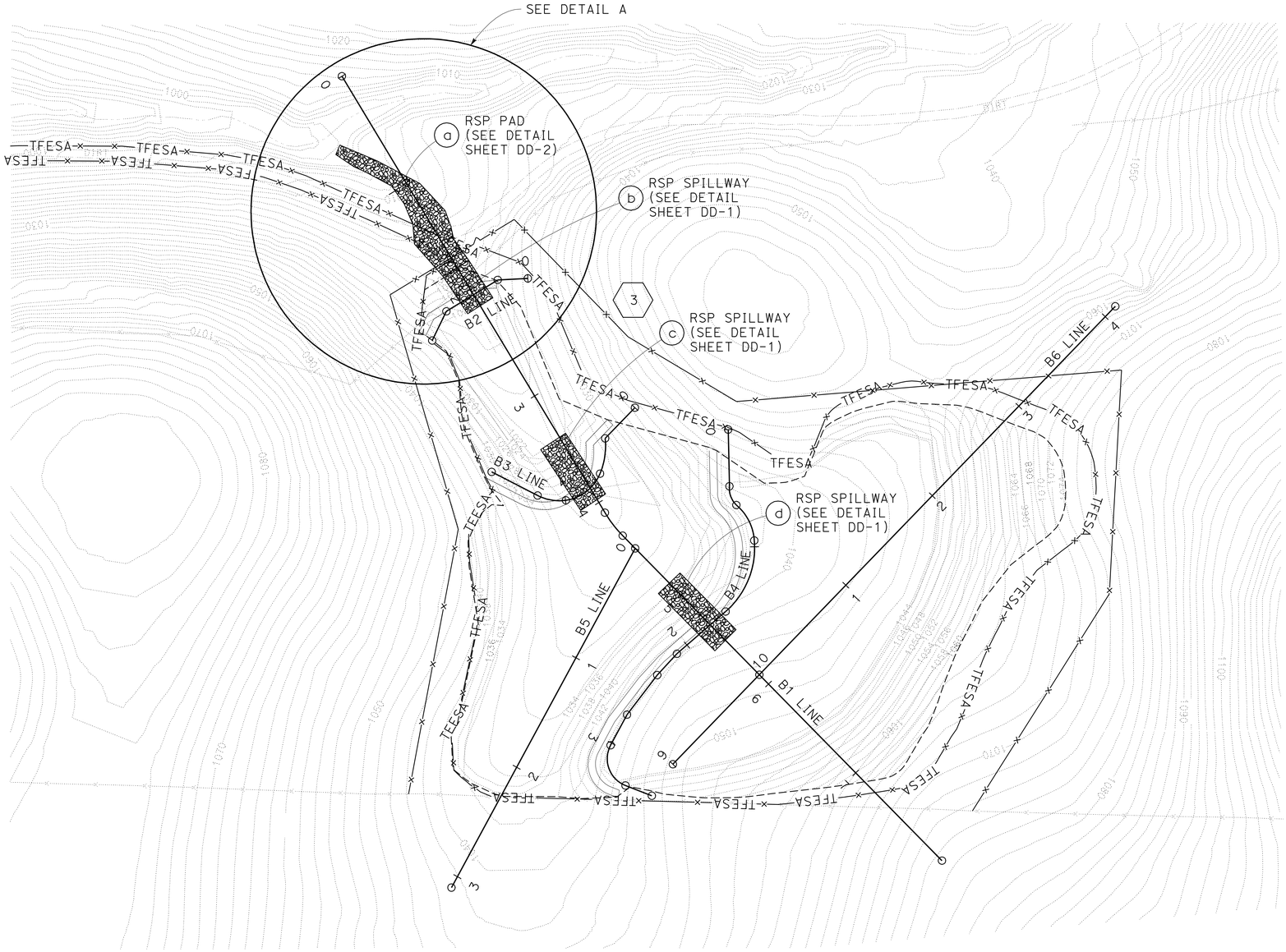

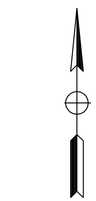

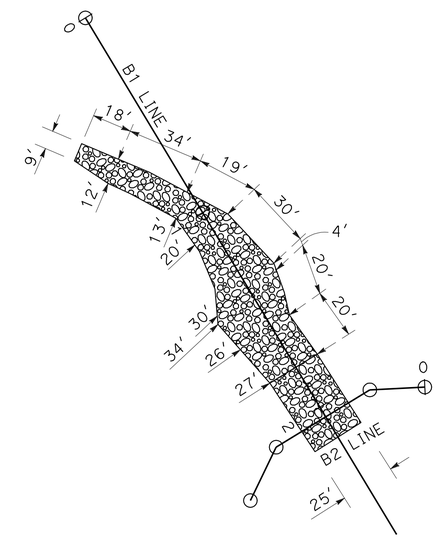

DETAIL A
NO SCALE

DRAINAGE PLAN
LOCATION 2
SCALE: 1'' = 50'

FOR NOTES, ABBREVIATIONS AND LEGEND, SEE SHEET D-1

THIS PLAN ACCURATE FOR DRAINAGE WORK ONLY

D-2

STATE OF CALIFORNIA - DEPARTMENT OF TRANSPORTATION
Caltrans

CONSULTANT FUNCTIONAL SUPERVISOR: DAVID YAM
CALCULATED-DESIGNED BY: HAN-BIN LIANG
CHECKED BY: HILLAL HAMDAN
REVISED BY: HL
DATE REVISED: 2/26/10

LAST REVISION 05-10-10
DATE PLOTTED => 02-AUG-2010
TIME PLOTTED => 16:12

BORDER LAST REVISED 4/11/2008
RELATIVE BORDER SCALE IS IN INCHES 0 1 2 3
USERNAME => s126849
DGN FILE => 417242ia002.dgn
CU 04256
EA 172421

Dist	COUNTY	ROUTE	POST MILES TOTAL PROJECT	SHEET No.	TOTAL SHEETS
04	Ala	580	R8.3	12	19

REGISTERED CIVIL ENGINEER 2/19/10 DATE

5-10-10
PLANS APPROVAL DATE

REGISTERED PROFESSIONAL ENGINEER HAN-BIN LIANG No. C 48404 Exp. 6/30/12 CIVIL STATE OF CALIFORNIA

THE STATE OF CALIFORNIA OR ITS OFFICERS OR AGENTS SHALL NOT BE RESPONSIBLE FOR THE ACCURACY OR COMPLETENESS OF SCANNED COPIES OF THIS PLAN SHEET.

WRECO
1814 FRANKLIN STREET
SUITE 608
OAKLAND, CA 94612

CALTRANS
111 GRAND AVENUE
OAKLAND, CA 94612

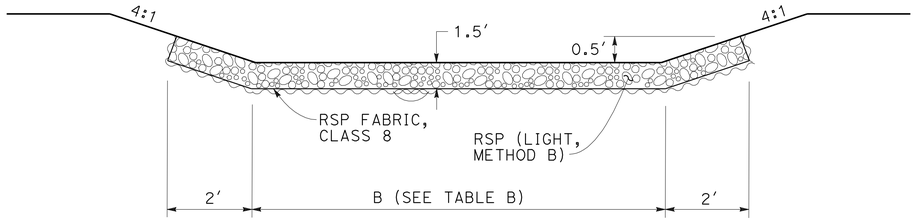

SECTION B-B

TABLE A

STATION	W FT
C 0+00 TO 4+99.22	8
A1 0+00 TO 6+31.347	10
A2 0+00 TO 4+42.46	8
A3 0+00 TO 4+90.95	8
B2 0+00 TO 0+98.62	6
B3 0+00 TO 1+64.60	6
B4 0+00 TO 3+63.58	6

TABLE B

STATION	A FT	B FT
M 0+09 TO 0+70	60	20
M 1+68 TO 2+25	56	20
M 3+60 TO 4+33	68	20
M 5+10 TO 5+80	68	20
B1 1+75 TO 2+10	34	16
B1 3+35 TO 3+95	57	16
B1 4+85 TO 5+50	60	16

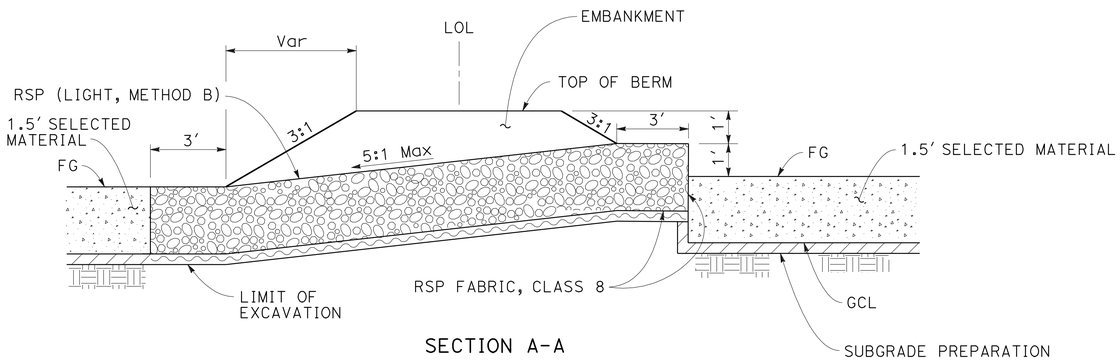

SECTION A-A

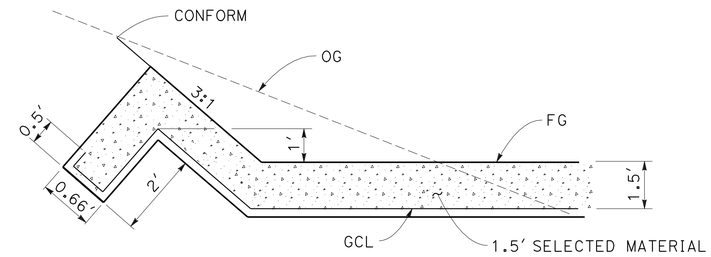

DETAIL A
GCL KEY TRENCH ON SLOPE

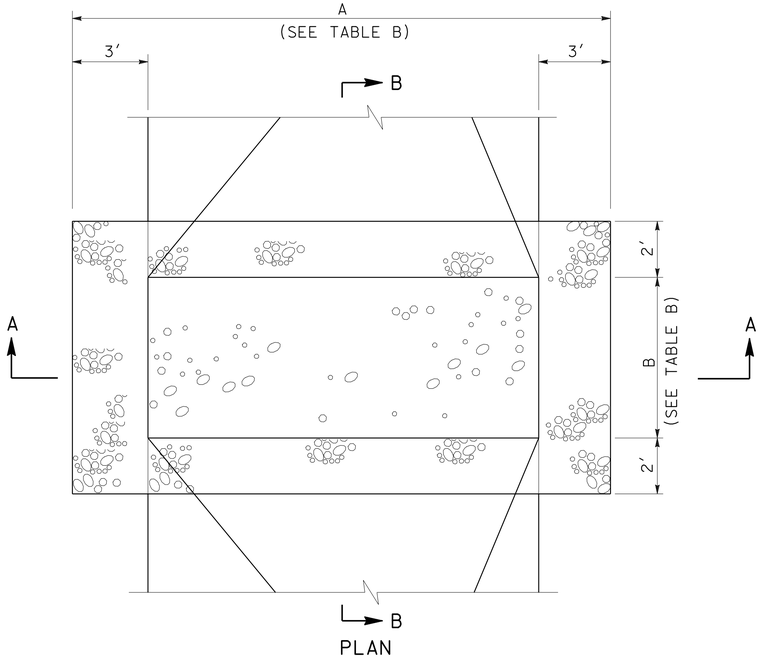

PLAN

RSP SPILLWAY DETAIL

1 a b c d

3 b c d

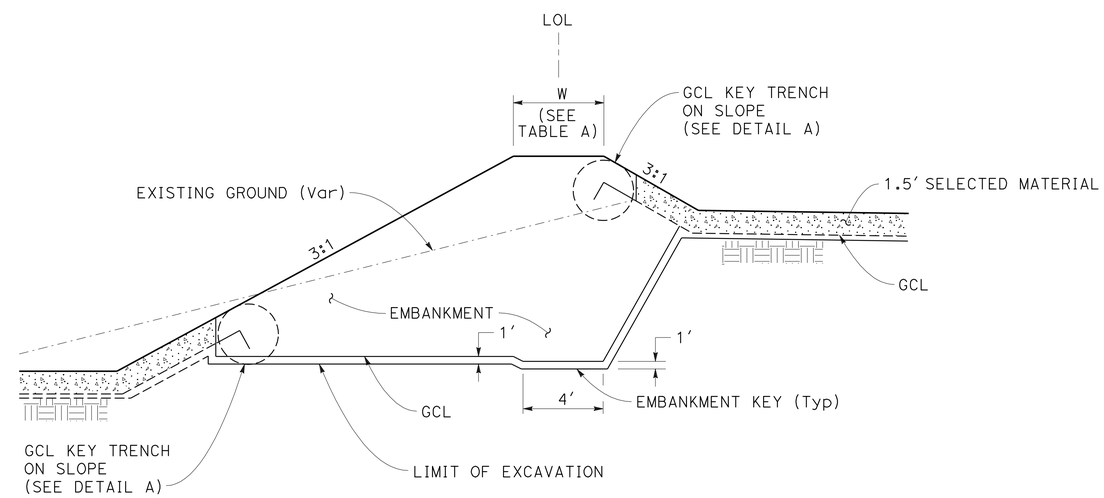

TYPICAL BERM SECTION

DRAINAGE DETAILS

NO SCALE

DD-1

STATE OF CALIFORNIA - DEPARTMENT OF TRANSPORTATION

Caltrans

CONSULTANT FUNCTIONAL SUPERVISOR: DAVID YAM

CALCULATED-DESIGNED BY: HAN-BIN LIANG

CHECKED BY: HILLAL HAMDAN

REVISED BY: HL

DATE REVISED: 2/26/10

LAST REVISION 05-10-10

DATE PLOTTED => 02-AUG-2010
TIME PLOTTED => 16:12

Dist	COUNTY	ROUTE	POST MILES TOTAL PROJECT	SHEET No.	TOTAL SHEETS
04	Ala	580	R8.3	13	19

Han-Bin Liang 2/19/10
REGISTERED CIVIL ENGINEER DATE

5-10-10
PLANS APPROVAL DATE

REGISTERED PROFESSIONAL ENGINEER HAN-BIN LIANG No. C 48404 Exp. 6/30/12 CIVIL STATE OF CALIFORNIA

THE STATE OF CALIFORNIA OR ITS OFFICERS OR AGENTS SHALL NOT BE RESPONSIBLE FOR THE ACCURACY OR COMPLETENESS OF SCANNED COPIES OF THIS PLAN SHEET.

WRECO
1814 FRANKLIN STREET
SUITE 608
OAKLAND, CA 94612

CALTRANS
111 GRAND AVENUE
OAKLAND, CA 94612

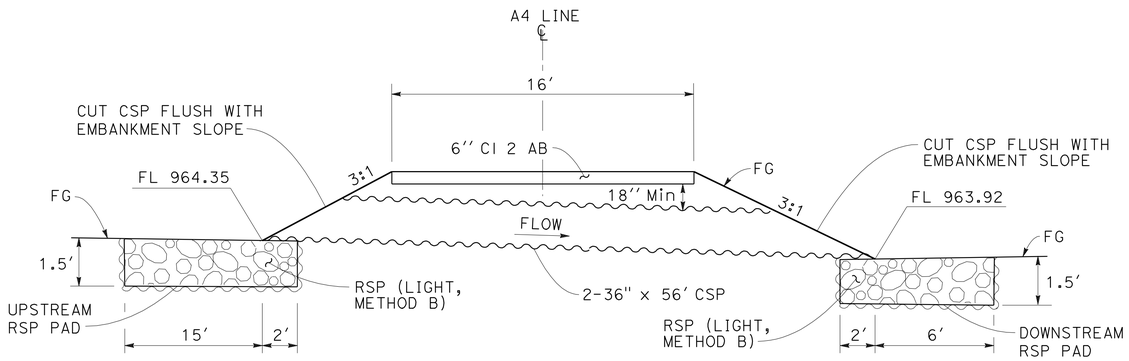

SECTION C-C

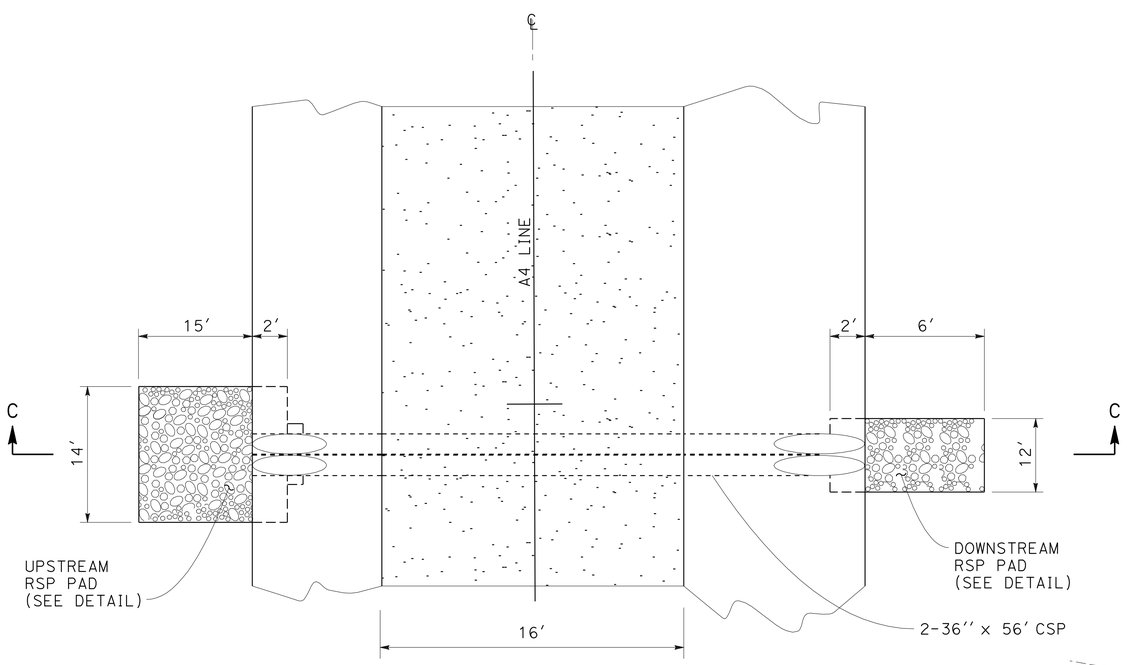

PLAN

CULVERT REPLACEMENT

Sta A4 2+00

2 a c d

DRAINAGE QUANTITIES

DRAINAGE SYSTEM No.	DRAINAGE UNIT	RSP (LIGHT METHOD B) CY	REMOVE CULVERT LF	36″ CSP (0.109″ THICK) LF	RSP FABRIC (CLASS 8) SQYD	DESCRIPTION	STATION	DRAINAGE PLAN SHEET No.	DRAINAGE SYSTEM No.	DRAINAGE UNIT
1	a	105			265	RSP SPILLWAY	M 0+09 TO 0+70	1	1	a
	b	98			200	RSP SPILLWAY	M 1+68 TO 2+25			b
	c	126			285	RSP SPILLWAY	M 3+60 TO 4+33			c
	d	117			309	RSP SPILLWAY	M 5+10 TO 5+80			d
2	a	9				RSP PAD	A4 2+00	1	2	a
	b		43			REMOVE CULVERT	A4 2+00			b
	c			114		36″ CSP	A4 2+00			c
	d	4				RSP PAD	A4 2+00			d
3	a	152			265	RSP PAD	B1 0+45 TO 1+75	2	3	a
	b	57			105	RSP SPILLWAY	B1 1+75 TO 2+10			b
	c	92			155	RSP SPILLWAY	B1 3+35 TO 3+95			c
	d	101			176	RSP SPILLWAY	B1 4+85 TO 5+50			d
SHEET TOTAL		861	43	114	1760	SHEET TOTAL				

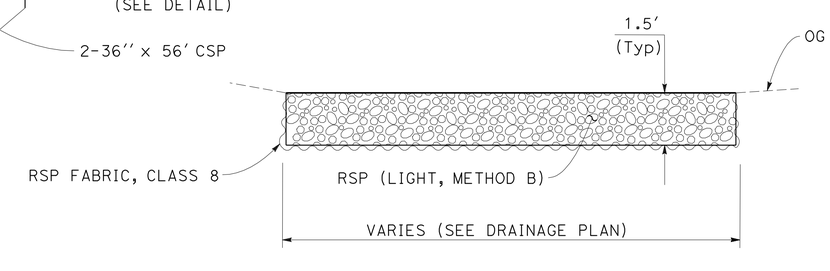

RSP PAD SECTION (TYPICAL)

3 a

DRAINAGE DETAILS AND DRAINAGE QUANTITIES

NO SCALE

DD-2

STATE OF CALIFORNIA - DEPARTMENT OF TRANSPORTATION
Caltrans

CONSULTANT FUNCTIONAL SUPERVISOR: DAVID YAM
CALCULATED-DESIGNED BY: HAN-BIN LIANG
CHECKED BY: HILLAL HAMDAN
REVISED BY: HL
DATE REVISED: 2/26/10

LAST REVISION 05-10-10 | DATE PLOTTED => 02-AUG-2010 | TIME PLOTTED => 16:12

Dist	COUNTY	ROUTE	POST MILES TOTAL PROJECT	SHEET No.	TOTAL SHEETS
04	Ala	580	R8.3	14	19

Han-Bin Liang 2/22/10
REGISTERED CIVIL ENGINEER DATE

5-10-10
PLANS APPROVAL DATE

REGISTERED PROFESSIONAL ENGINEER
HAN-BIN LIANG
No. C 48404
Exp. 6/30/12
CIVIL
STATE OF CALIFORNIA

THE STATE OF CALIFORNIA OR ITS OFFICERS OR AGENTS SHALL NOT BE RESPONSIBLE FOR THE ACCURACY OR COMPLETENESS OF SCANNED COPIES OF THIS PLAN SHEET.

WRECO
1814 FRANKLIN STREET
SUITE 608
OAKLAND, CA 94612

CALTRANS
111 GRAND AVENUE
OAKLAND, CA 94612

ROADWAY QUANTITIES

DESCRIPTION	ROADWAY EXCAVATION	GEOSYNTHETIC CLAY LINER EXCAVATION (N)	CHANNEL EXCAVATION (N)	EMBANKMENT (N)	EMBANKMENT (DRIVEWAY) (N)	SELECTED MATERIAL (N)	OVER-EXCAVATION FOR BERMS	CLASS 2 AGGREGATE BASE	GEOSYNTHETIC CLAY LINER	TEMPORARY FENCE (TYPE ESA)	FENCE (TYPE BW)	6' WIRE MESH GATE	REMOVE FENCE
	CY								SQYD	LF			
LOCATION 1	16876	238	369	10598	1228	6566	7294	113	16254	2575	2199	4	1200
LOCATION 2	21653	169		3544		3805	5312		8746	1810	1453	1	
TOTAL	38529	407 ✳	369 ✳	14142	1228	10371 ✳	12606 ✳	113	25000	4385	3652	5	1200

(N) NOT A SEPARATE PAY ITEM. FOR INFORMATION ONLY.

✳ QUANTITIY INCLUDED IN ROADWAY EXCAVATION.

EROSION CONTROL QUANTITIES

DESCRIPTION	EROSION CONTROL (COMPOST BLANKET)	EROSION CONTROL (HYDROSEED)	FIBER ROLLS
	CY	ACRE	LF
LOCATION 1	355	5.4	3672
LOCATION 2	201	3.0	2978
TOTAL	556	8.4	6650

WATER POLLUTION QUANTITIES

DESCRIPTION	TEMPORARY CONSTRUCTION ENTRANCE	TEMPORARY SILT FENCE	TEMPORARY COVER	TEMPORARY HYDRAULIC MULCH (BONDED FIBER MATRIX)	TEMPORARY FIBER ROLL
	EA	LF	SQYD		LF
LOCATION 1	1	1600	552	5975	2000
LOCATION 2		400	658	3705	1700
TOTAL	1	2000	1210	9680	3700

SUMMARY OF QUANTITIES

Q-1

STATE OF CALIFORNIA - DEPARTMENT OF TRANSPORTATION
Caltrans

CONSULTAINT FUNCTIONAL SUPERVISOR: DAVID YAM
CALCULATED-DESIGNED BY: HAN-BIN LIANG
CHECKED BY: HILLAL HAMDAN
REVISED BY: HL
DATE REVISED: 3/04/10

LAST REVISION 05-10-10
DATE PLOTTED => 02-AUG-2010
TIME PLOTTED => 16:12

DIST	COUNTY	ROUTE	POST MILES TOTAL PROJECT	SHEET NO.	TOTAL SHEETS
04	Ala	580	R8.3	15	19

Raymond Don Tsztoo
REGISTERED CIVIL ENGINEER

June 6, 2008
PLANS APPROVAL DATE

REGISTERED PROFESSIONAL ENGINEER
Raymond Don Tsztoo
No. C37332
Exp. 6-30-08
CIVIL
STATE OF CALIFORNIA

The State of California or its officers or agents shall not be responsible for the accuracy or completeness of electronic copies of this plan sheet.

To accompany plans dated 5-10-10

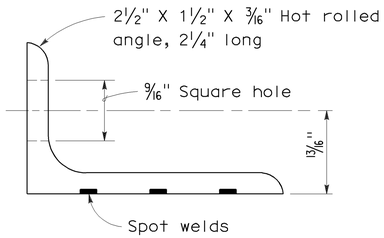

ANGLE

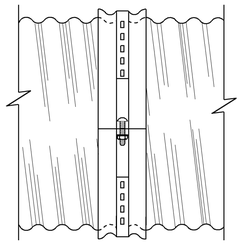

SIDE VIEW
ANGLE

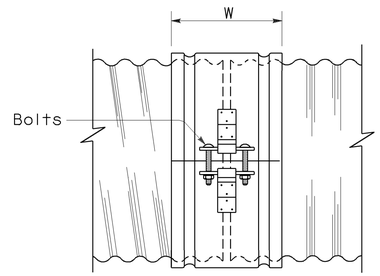

SIDE VIEW
SINGLE BAR AND STRAP

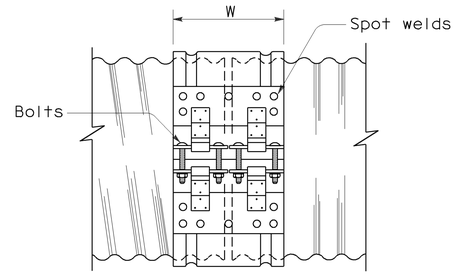

SIDE VIEW
DOUBLE BAR AND STRAP

NOTES:

1. All ferrous metal coupling band connection hardware shall be galvanized or electroplated in accordance with the Standard Specifications.
2. Dimensions and thicknesses shown are minimum.
3. Spot welds shall develop minimum required strength of strap.
4. Fillet welds of equivalent strength may be substituted for spot welds or rivets.
5. Dimension depends upon whether end condition is lips up or lips down.

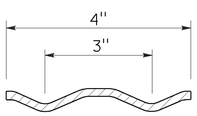

SECTION

H-4 HUGGER BAND

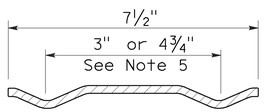

SECTION

H-7 HUGGER BAND

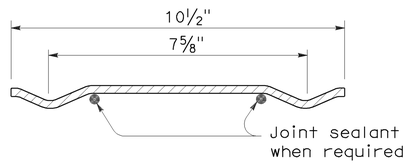

SECTION

H-10 HUGGER BAND

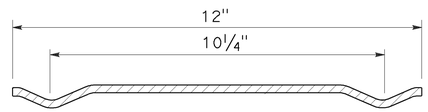

SECTION

H-12 HUGGER BAND

HUGGER COUPLING BANDS

STATE OF CALIFORNIA
DEPARTMENT OF TRANSPORTATION

CORRUGATED METAL PIPE COUPLING DETAILS No. 4 HUGGER COUPLING BANDS

NO SCALE

RSP D97D DATED JUNE 6, 2008 SUPERSEDES STANDARD PLAN D97D
DATED MAY 1, 2006 - PAGE 186 OF THE STANDARD PLANS BOOK DATED MAY 2006.

REVISED STANDARD PLAN RSP D97D

2006 REVISED STANDARD PLAN RSP D97D

3-24-08

DIST	COUNTY	ROUTE	POST MILES TOTAL PROJECT	SHEET NO.	TOTAL SHEETS
04	Ala	580	R8.3	16	19

Robert B Schott
LICENSED LANDSCAPE ARCHITECT

April 3, 2009
PLANS APPROVAL DATE

LICENSED LANDSCAPE ARCHITECT — Robert B. Schott 3635 — 11-30-10 Renewal Date — 2-25-09 Date — STATE OF CALIFORNIA

The State of California or its officers or agents shall not be responsible for the accuracy or completeness of electronic copies of this plan sheet.

To accompany plans dated 5-10-10

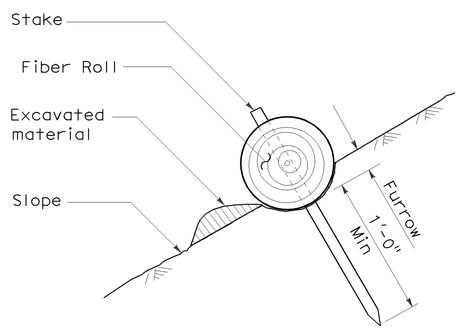

SECTION

TEMPORARY FIBER ROLL (TYPE 1)

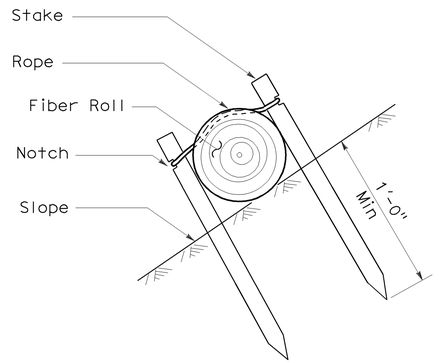

SECTION

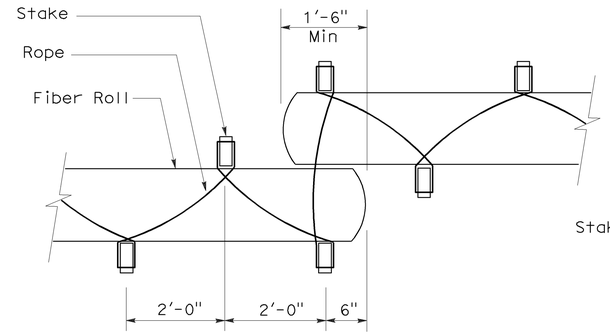

PLAN

TEMPORARY FIBER ROLL (TYPE 2)

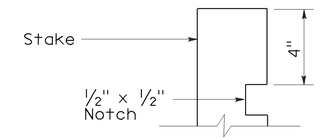

ELEVATION

STAKE NOTCH DETAIL

NOTES:

1. Temporary fiber roll spacing varies depending upon slope inclination.
2. Installations shown in the perspectives are for slope inclination of 10:1 and steeper.

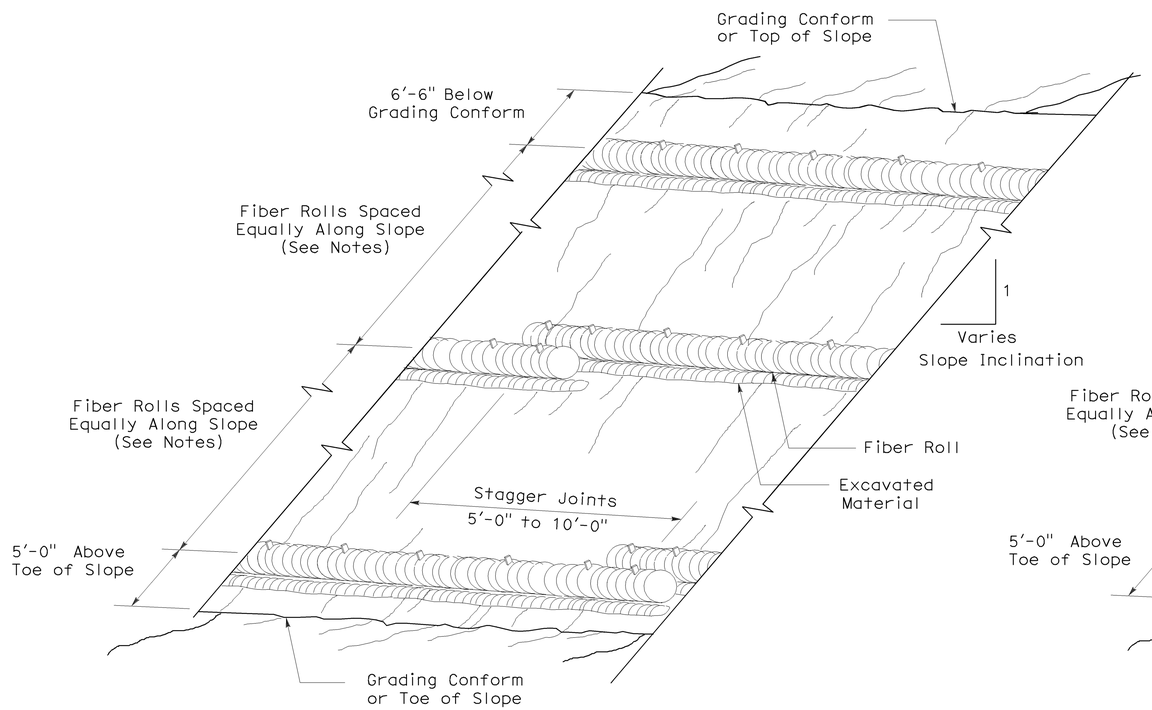

PERSPECTIVE

TEMPORARY FIBER ROLL (TYPE 1)

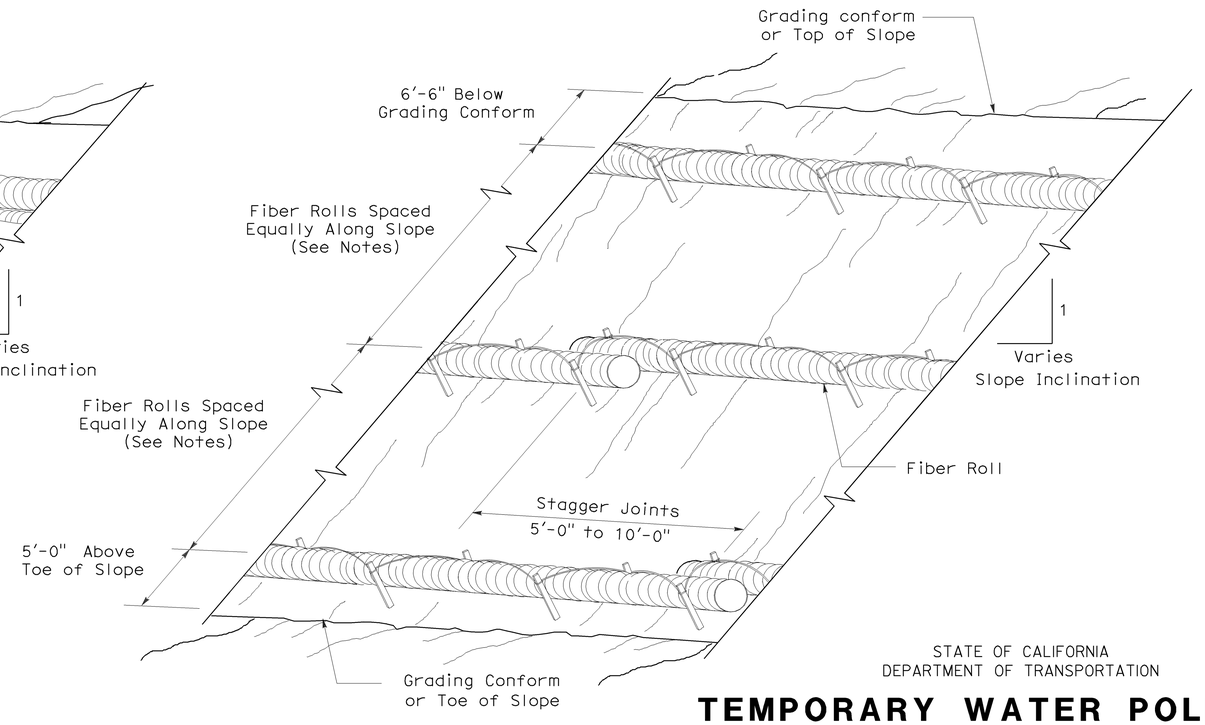

PERSPECTIVE

TEMPORARY FIBER ROLL (TYPE 2)

STATE OF CALIFORNIA
DEPARTMENT OF TRANSPORTATION

TEMPORARY WATER POLLUTION CONTROL DETAILS (TEMPORARY FIBER ROLL)

NO SCALE

RSP T56 DATED APRIL 3, 2009 SUPERSEDES STANDARD PLAN T56
DATED MAY 1, 2006 - PAGE 232 OF THE STANDARD PLANS BOOK DATED MAY 2006.

REVISED STANDARD PLAN RSP T56

2006 REVISED STANDARD PLAN RSP T56

2-23-09

DIST	COUNTY	ROUTE	POST MILES TOTAL PROJECT	SHEET NO.	TOTAL SHEETS
04	Ala	580	R8.3	17	19

REGISTERED CIVIL ENGINEER

June 5, 2009
PLANS APPROVAL DATE

REGISTERED PROFESSIONAL ENGINEER Glenn DeCou No. C34547 Exp. 9-30-09 CIVIL STATE OF CALIFORNIA

The State of California or its officers or agents shall not be responsible for the accuracy or completeness of electronic copies of this plan sheet.

To accompany plans dated 5-10-10

NOTES:

1. Offset to be 2'-0" at monument locations, measured at right angles to R/W lines. Taper to achieve offset to be at least 20'-0" long.
2. Line post spacing for wood post equals 12'-0" maximum. Line post spacing for metal post equals 10'-0" maximum.
3. See Standard Plan A86 for Barbed Wire and Wire Mesh dimensions and for steel post and wood post dimensions and weight.
4. Use wood posts when specified in the Special Provisions or shown on the Project Plans.

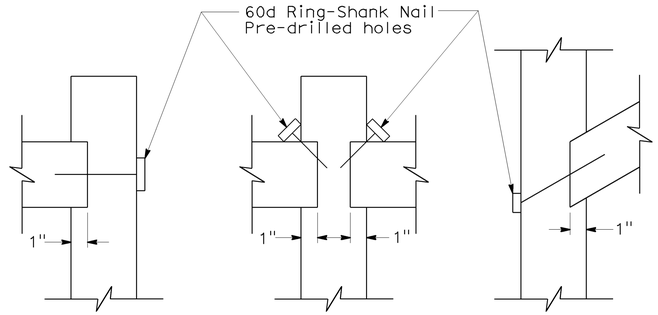

WOOD MORTISE DETAIL

See Note 4

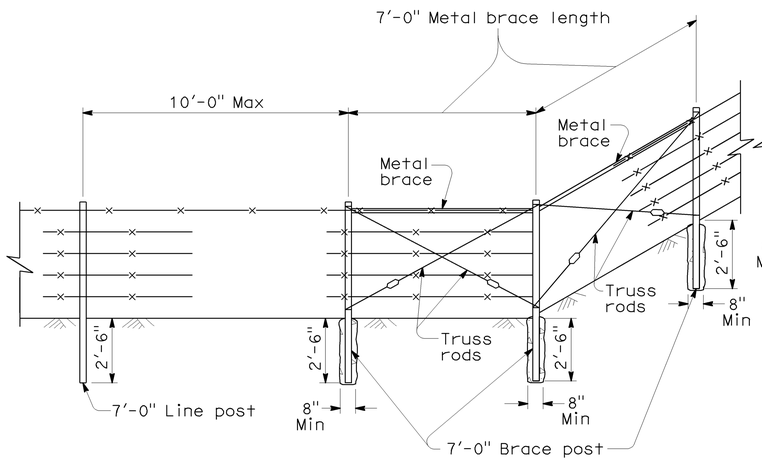

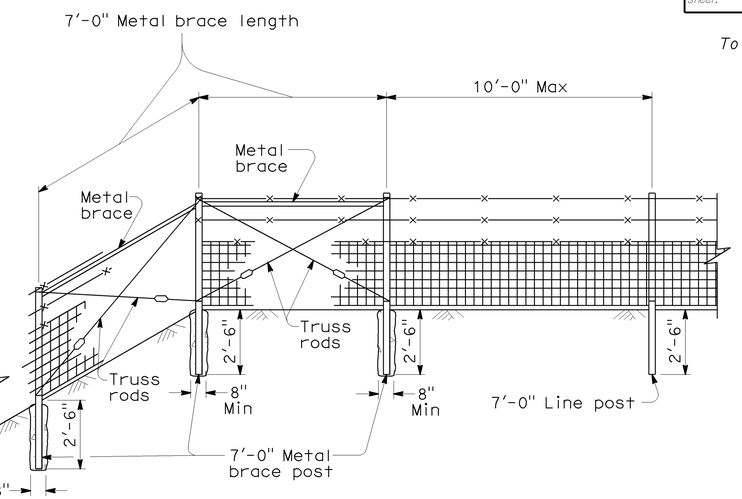

METAL POST

LEGEND

Wire Mesh fencing

Barbed Wire fencing

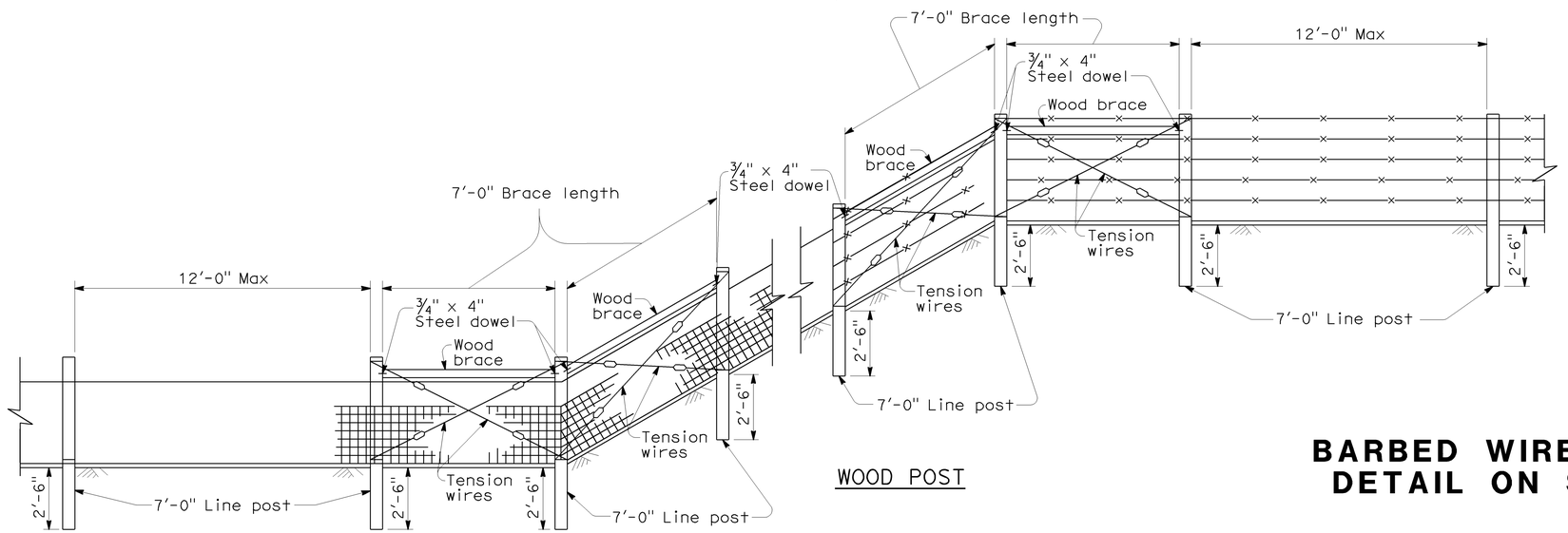

WOOD POST

FENCE ON SHARP BREAK IN GRADE

STATE OF CALIFORNIA
DEPARTMENT OF TRANSPORTATION

BARBED WIRE AND WIRE MESH FENCE DETAIL ON SHARP BREAK IN GRADE

NO SCALE

NSP A86A DATED JUNE 5, 2009 SUPPLEMENTS THE STANDARD PLANS BOOK DATED MAY 2006.

NEW STANDARD PLAN NSP A86A

2006 NEW STANDARD PLAN NSP A86A

5-12-09

DIST	COUNTY	ROUTE	POST MILES TOTAL PROJECT	SHEET NO.	TOTAL SHEETS
04	Ala	580	R8.3	18	19

REGISTERED CIVIL ENGINEER

June 5, 2009
PLANS APPROVAL DATE

REGISTERED PROFESSIONAL ENGINEER Glenn DeCou No. C34547 Exp. 9-30-09 CIVIL STATE OF CALIFORNIA

The State of California or its officers or agents shall not be responsible for the accuracy or completeness of electronic copies of this plan sheet.

To accompany plans dated 5-10-10

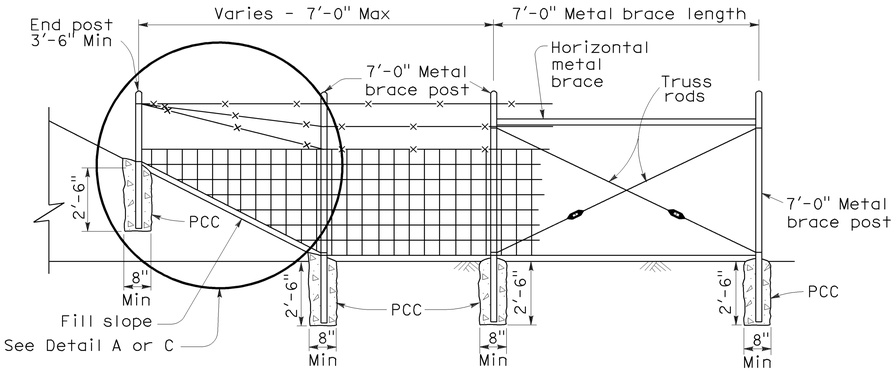

METAL POST

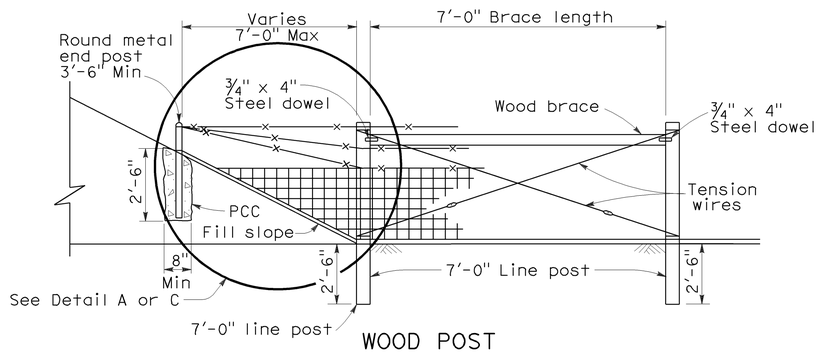

WOOD POST

METHOD OF ERECTING FENCE FOR FILL SLOPE

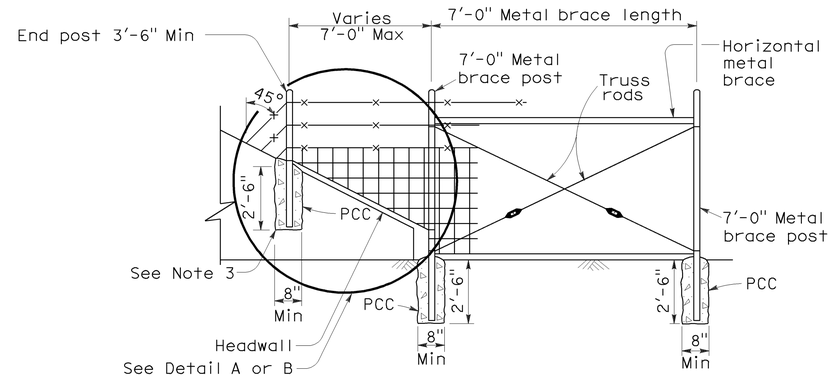

METAL POST

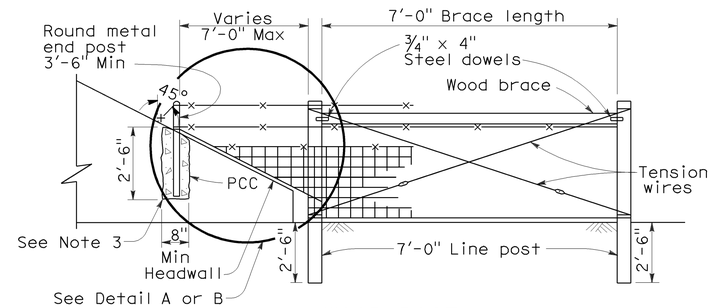

WOOD POST

METHOD OF TYING FENCE TO HEADWALL

NOTES:

1. Wire Mesh fencing shown, can also use Barbed Wire fencing.
2. See Standard Plan A86 for Wire Mesh and Barbed Wire fence dimensions.
3. See Standard Plan B11-7 Alternative Anchorage Detail for connection at headwall. Round metal post to be used for all fence types.

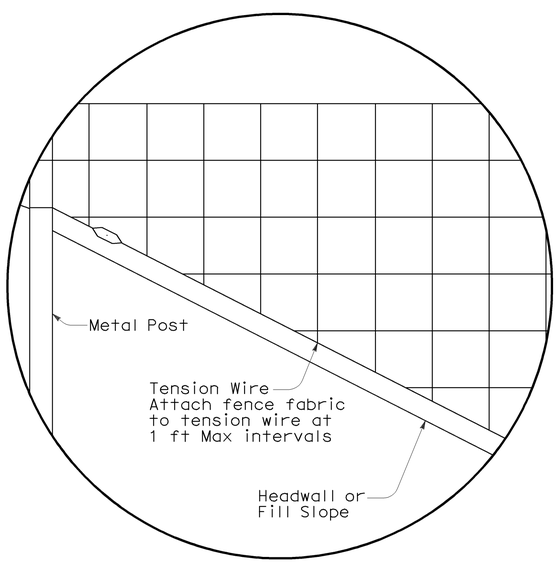

DETAIL A

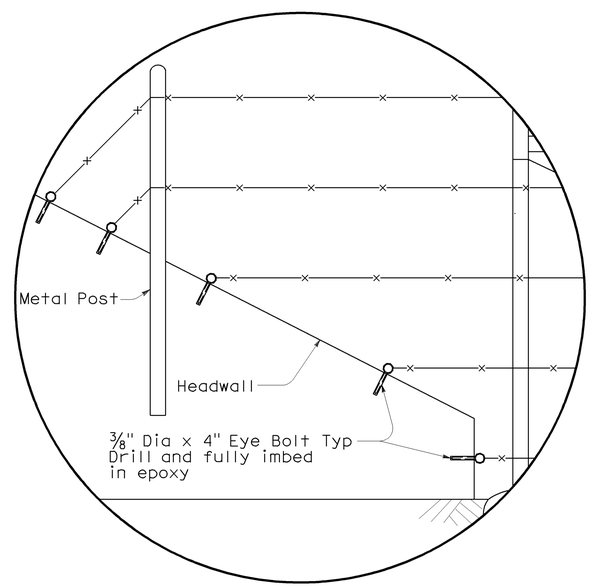

DETAIL B

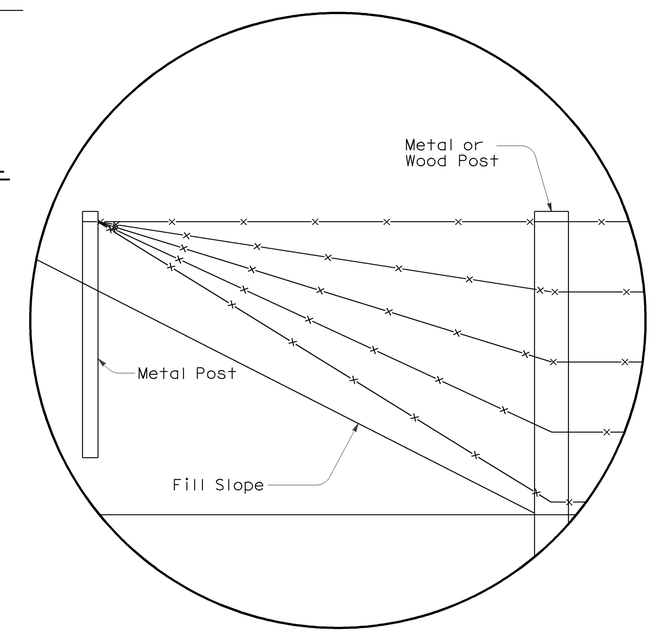

DETAIL C

STATE OF CALIFORNIA
DEPARTMENT OF TRANSPORTATION

BARBED WIRE AND WIRE MESH FENCE DETAILS

NSP A86B DATED JUNE 5, 2009 SUPPLEMENTS THE STANDARD PLANS BOOK DATED MAY 2006.

NEW STANDARD PLAN NSP A86B

2006 NEW STANDARD PLAN NSP A86B

5-12-09

DIST	COUNTY	ROUTE	POST MILES TOTAL PROJECT	SHEET NO.	TOTAL SHEETS
04	Ala	580	R8.3	19	19

LICENSED LANDSCAPE ARCHITECT

April 3, 2009
PLANS APPROVAL DATE

LICENSED LANDSCAPE ARCHITECT
Robert B. Schott 3695
Signature
11-30-10
Renewal Date
2-25-09
Date
STATE OF CALIFORNIA

The State of California or its officers or agents shall not be responsible for the accuracy or completeness of electronic copies of this plan sheet.

To accompany plans dated 5-10-10

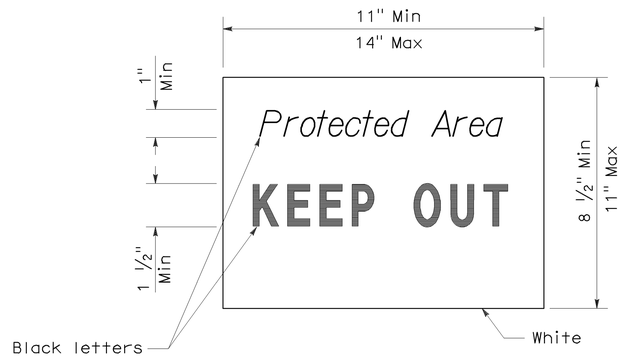

SIGN DETAIL

NOTE:

1. Temporary silt fence and temporary straw bale barrier shown for reference purposes only.

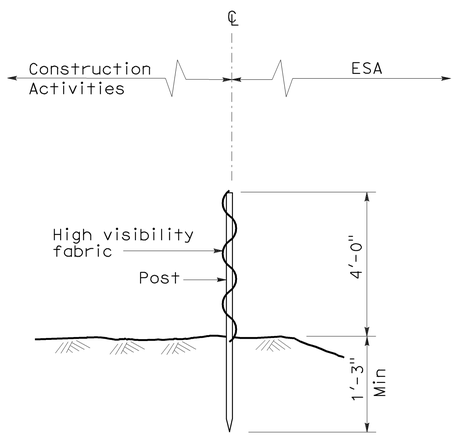

SECTION
TEMPORARY FENCE (TYPE ESA)

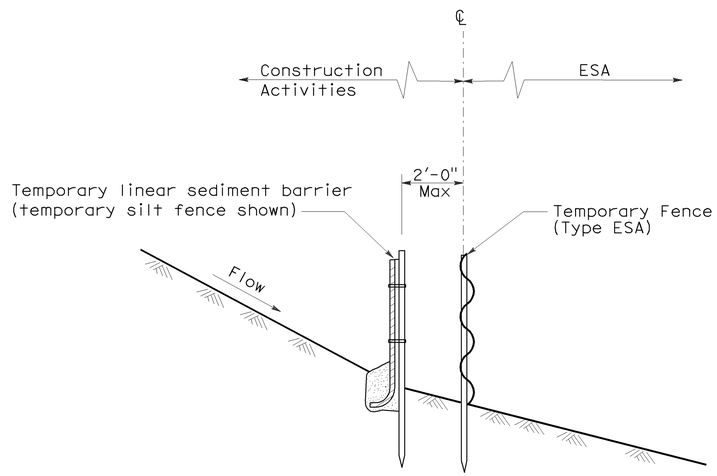

SECTION
PLACEMENT DETAIL
FOR TEMPORARY LINEAR SEDIMENT BARRIER
USED WITH TEMPORARY
FENCE (TYPE ESA)
(See Note 1)

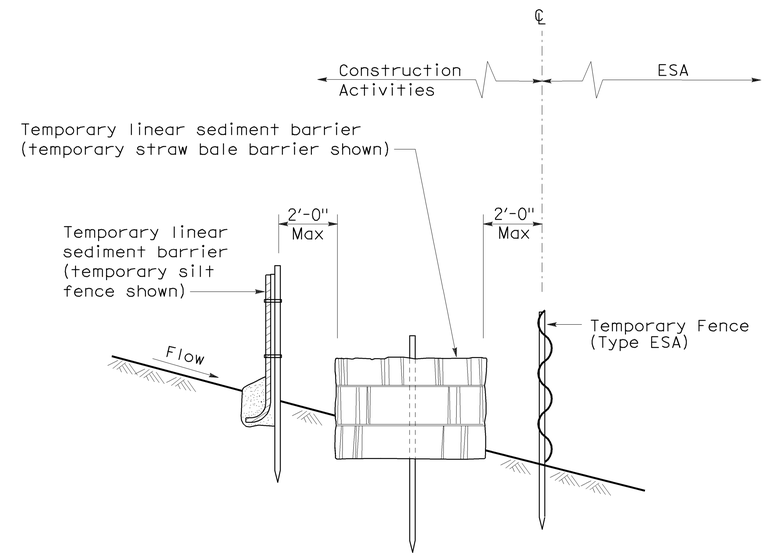

SECTION
PLACEMENT DETAIL
FOR TEMPORARY SILT FENCE
AND TEMPORARY STRAW BALE BARRIER
USED WITH TEMPORARY FENCE (TYPE ESA)
(See Note 1)

STATE OF CALIFORNIA
DEPARTMENT OF TRANSPORTATION

TEMPORARY WATER POLLUTION CONTROL DETAILS [TEMPORARY FENCE (TYPE ESA)]

NO SCALE

NSP T65 DATED APRIL 3, 2009 SUPPLEMENTS
THE STANDARD PLANS BOOK DATED MAY 2006.

NEW STANDARD PLAN NSP T65

2006 NEW STANDARD PLAN NSP T65