REFERENCE: CALTRANS SOIL & ROCK LOGGING, CLASSIFICATION, AND PRESENTATION MANUAL (2010)

DIST	COUNTY	ROUTE	POST MILES TOTAL PROJECT	SHEET No	TOTAL SHEETS
04	Ala	880	28.4/29.2	701	789

Lino Cheang
REGISTERED ENGINEER — DATE 6-25-12

4-8-13
PLANS APPROVAL DATE

REGISTERED PROFESSIONAL ENGINEER — L. CHEANG — NO. GE 2345 — EXP. 9-30-13 — GEOTECHNICAL — STATE OF CALIFORNIA

The State of California or its officers or agents shall not be responsible for the accuracy or completeness of electronic copies of this plan sheet.

ALAMEDA COUNTY TRANSPORTATION COMMISSION
1333 BROADWAY, SUITE 220
OAKLAND, CA 94612

EARTH MECHANICS, INC.
17800 NEWHOPE STREET, SUITE B
FOUNTAIN VALLEY, CA 92708

GROUP SYMBOLS AND NAMES

Graphic/Symbol	Group Names	Graphic/Symbol	Group Names
GW	Well-graded GRAVEL Well-graded GRAVEL with SAND	CL	Lean CLAY Lean CLAY with SAND Lean CLAY with GRAVEL SANDY lean CLAY SANDY lean CLAY with GRAVEL GRAVELLY lean CLAY GRAVELLY lean CLAY with SAND
GP	Poorly-graded GRAVEL Poorly-graded GRAVEL with SAND		
GW-GM	Well-graded GRAVEL with SILT Well-graded GRAVEL with SILT and SAND	CL-ML	SILTY CLAY SILTY CLAY with SAND SILTY CLAY with GRAVEL SANDY SILTY CLAY SANDY SILTY CLAY with GRAVEL GRAVELLY SILTY CLAY GRAVELLY SILTY CLAY with SAND
GW-GC	Well-graded GRAVEL with CLAY (or SILTY CLAY) Well-graded GRAVEL with CLAY and SAND (or SILTY CLAY and SAND)		
GP-GM	Poorly-graded GRAVEL with SILT Poorly-graded GRAVEL with SILT and SAND	ML	SILT SILT with SAND SILT with GRAVEL SANDY SILT SANDY SILT with GRAVEL GRAVELLY SILT GRAVELLY SILT with SAND
GP-GC	Poorly-graded GRAVEL with CLAY (or SILTY CLAY) Poorly-graded GRAVEL with CLAY and SAND (or SILTY CLAY and SAND)		
GM	SILTY GRAVEL SILTY GRAVEL with SAND	OL	ORGANIC lean CLAY ORGANIC lean CLAY with SAND ORGANIC lean CLAY with GRAVEL SANDY ORGANIC lean CLAY SANDY ORGANIC lean CLAY with GRAVEL GRAVELLY ORGANIC lean CLAY GRAVELLY ORGANIC lean CLAY with SAND
GC	CLAYEY GRAVEL CLAYEY GRAVEL with SAND		
GC-GM	SILTY, CLAYEY GRAVEL SILTY, CLAYEY GRAVEL with SAND	OL	ORGANIC SILT ORGANIC SILT with SAND ORGANIC SILT with GRAVEL SANDY ORGANIC SILT SANDY ORGANIC SILT with GRAVEL GRAVELLY ORGANIC SILT GRAVELLY ORGANIC SILT with SAND
SW	Well-graded SAND Well-graded SAND with GRAVEL		
SP	Poorly-graded SAND Poorly-graded SAND with GRAVEL	CH	Fat CLAY Fat CLAY with SAND Fat CLAY with GRAVEL SANDY fat CLAY SANDY fat CLAY with GRAVEL GRAVELLY fat CLAY GRAVELLY fat CLAY with SAND
SW-SM	Well-graded SAND with SILT Well-graded SAND with SILT and GRAVEL		
SW-SC	Well-graded SAND with CLAY (or SILTY CLAY) Well-graded SAND with CLAY and GRAVEL (or SILTY CLAY and GRAVEL)	MH	Elastic SILT Elastic SILT with SAND Elastic SILT with GRAVEL SANDY elastic SILT SANDY elastic SILT with GRAVEL GRAVELLY elastic SILT GRAVELLY elastic SILT with SAND
SP-SM	Poorly-graded SAND with SILT Poorly-graded SAND with SILT and GRAVEL		
SP-SC	Poorly-graded SAND with CLAY (or SILTY CLAY) Poorly-graded SAND with CLAY and GRAVEL (or SILTY CLAY and GRAVEL)	OH	ORGANIC fat CLAY ORGANIC fat CLAY with SAND ORGANIC fat CLAY with GRAVEL SANDY ORGANIC fat CLAY SANDY ORGANIC fat CLAY with GRAVEL GRAVELLY ORGANIC fat CLAY GRAVELLY ORGANIC fat CLAY with SAND
SM	SILTY SAND SILTY SAND with GRAVEL		
SC	CLAYEY SAND CLAYEY SAND with GRAVEL	OH	ORGANIC elastic SILT ORGANIC elastic SILT with SAND ORGANIC elastic SILT with GRAVEL SANDY ORGANIC elastic SILT SANDY ORGANIC elastic SILT with GRAVEL GRAVELLY ORGANIC elastic SILT GRAVELLY ORGANIC elastic SILT with SAND
SC-SM	SILTY, CLAYEY SAND SILTY, CLAYEY SAND with GRAVEL		
PT	PEAT	OL/OH	ORGANIC SOIL ORGANIC SOIL with SAND ORGANIC SOIL with GRAVEL SANDY ORGANIC SOIL SANDY ORGANIC SOIL with GRAVEL GRAVELLY ORGANIC SOIL GRAVELLY ORGANIC SOIL with SAND
	COBBLES COBBLES and BOULDERS BOULDERS		

FIELD AND LABORATORY TESTING

- (C) Consolidation (ASTM D 2435)
- (CL) Collapse Potential (ASTM D 5333)
- (CP) Compaction Curve (CTM 216)
- (CR) Corrosivity Testing (CTM 643, CTM 422, CTM 417)
- (CU) Consolidated Undrained Triaxial (ASTM D 4767)
- (DS) Direct Shear (ASTM D 3080)
- (EI) Expansion Index (ASTM D 4829)
- (M) Moisture Content (ASTM D 2216)
- (OC) Organic Content-% (ASTM D 2974)
- (P) Permeability (CTM 220)
- (PA) Particle Size Analysis (ASTM D 422)
- (PI) Plasticity Index (AASHTO T 90) Liquid Limit (AASHTO T 89)
- (PL) Point Load Index (ASTM D 5731)
- (PM) Pressure Meter
- (R) R-Value (CTM 301)
- (SE) Sand Equivalent (CTM 217)
- (SG) Specific Gravity (AASHTO T 100)
- (SL) Shrinkage Limit (ASTM D 427)
- (SW) Swell Potential (ASTM D 4546)
- (UC) Unconfined Compression-Soil (ASTM D 2166) Unconfined Compression-Rock (ASTM D 2938)
- (UU) Unconsolidated Undrained Triaxial (ASTM D 2850)
- (UW) Unit Weight (ASTM D 4767)

APPARENT DENSITY OF COHESIONLESS SOILS

Description	SPT N_{60} (Blows / 12 in.)
Very Loose	0 - 5
Loose	5 - 10
Medium Dense	10 - 30
Dense	30 - 50
Very Dense	Greater than 50

MOISTURE

Description	Criteria
Dry	No discernable moisture
Moist	Moisture present, but no free water
Wet	Visible free water

PERCENT OR PROPORTION OF SOILS

Description	Criteria
Trace	Particles are present but estimated to be less than 5%
Few	5% - 10%
Little	15% - 25%
Some	30% - 45%
Mostly	50% - 100%

PARTICLE SIZE

Description		Size (in.)
Boulder		Greater than 12
Cobble		3 - 12
Gravel	Coarse	3/4 - 3
	Fine	1/5 - 3/4
Sand	Coarse	1/16 - 1/5
	Medium	1/64 - 1/16
	Fine	1/300 - 1/64
Silt and Clay		Less than 1/300

Paul Cotter
DESIGN OVERSIGHT Paul Cotter
7-16-12
SIGN OFF DATE

DRAWN BY J. Fang
CHECKED BY G. J. Gunaranjan

K. Thant
FIELD INVESTIGATION BY:
DATE: 3/2011, 4/2011

PREPARED FOR THE STATE OF CALIFORNIA DEPARTMENT OF TRANSPORTATION

L. Cheang
PROJECT ENGINEER

BRIDGE NO. 33E0112
POST MILES 28.9

RETAINING WALL No. 26
LOG OF TEST BORINGS 4 OF 4

GS GEOTECHNICAL LOG OF TEST BORINGS SHEET (ENGLISH) (REV. 7/16/10)

ORIGINAL SCALE IN INCHES FOR REDUCED PLANS 0 1 2 3

UNIT: 0724
PROJECT NUMBER & PHASE: 04000001601

DISREGARD PRINTS BEARING EARLIER REVISION DATES

REVISION DATES

SHEET 12 OF 12

FILE => 33-E0112-z-soil legend-ltb2.dgn

CONTRACT NO.:04-0A7101 PROJECT ID:

USERNAME => s124496 DATE PLOTTED => 10-APR-2013 TIME PLOTTED => 08:49

DIST	COUNTY	ROUTE	POST MILES TOTAL PROJECT	SHEET No	TOTAL SHEETS
04	Ala	880	28.4/29.2	702	789

REGISTERED CIVIL ENGINEER — DATE 3/29/13

4-8-13
PLANS APPROVAL DATE

REGISTERED PROFESSIONAL ENGINEER S.McCauley No. 71495 Exp. 12-31-13 CIVIL STATE OF CALIFORNIA

The State of California or its officers or agents shall not be responsible for the accuracy or completeness of electronic copies of this plan sheet.

ALAMEDA COUNTY TRANSPORTATION COMMISSION
1333 BROADWAY, SUITE 220
OAKLAND, CA 94612

RBF CONSULTING
ONE KAISER PLAZA, SUITE 1150
OAKLAND, CA 94612

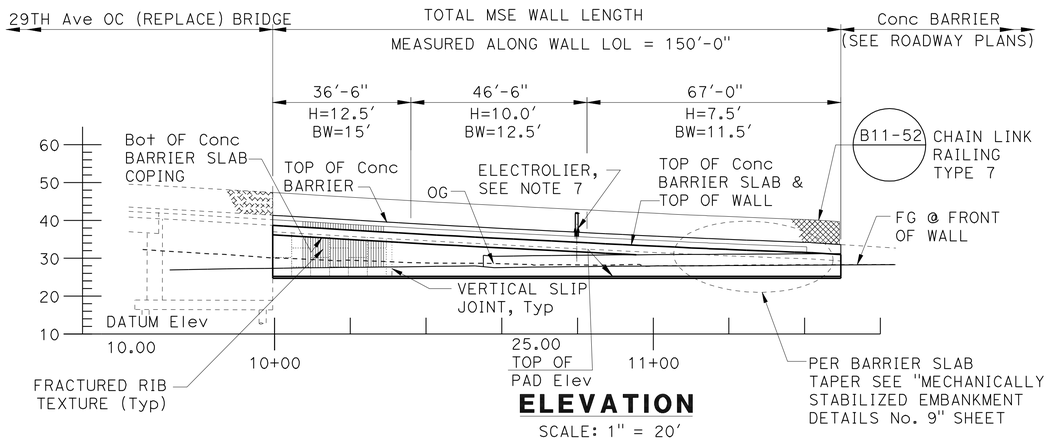

ELEVATION

SCALE: 1" = 20'

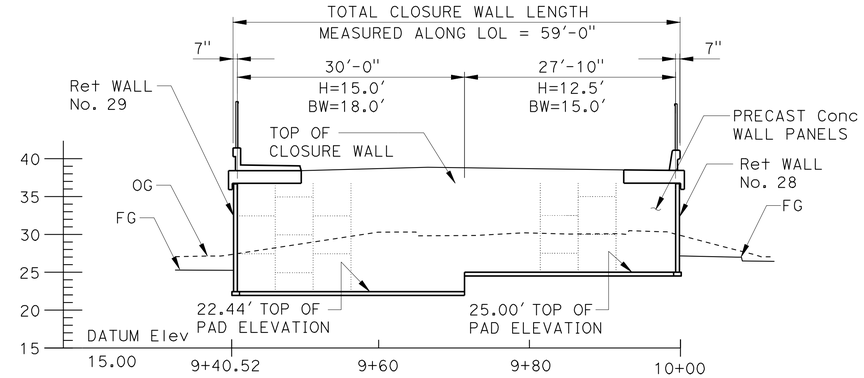

CLOSURE WALL ELEVATION

SCALE: 1" = 10'

UTILITIES:

1. Exist 20" Water (EBMUD)
2. Exist 18" Sewer (City of Oakland)
3. Exist 6" Water (EBMUD)

CURVE DATA

CURVE No.	R	△	T	L
①	500.00'	11°06'24"	48.61'	96.92'
②	394.58'	01°43'45"	5.96'	12.00'
③	552.00'	06°26'11"	31.04'	62.01'
④	120.00'	54°07'09"	61.30'	113.35'

TANGENT DATA

1. N37°40'35"E
2. N48°46'59"E
3. N46°00'25"E
4. N39°34'15"E
5. N46°00'25"E
6. S52°02'44"W

RETAINING WALL 28

QUANTITIES

MECHANICALLY STABILIZED EMBANKMENT	1,944	SQFT
STRUCTURAL CONCRETE, BARRIER SLAB	77	CY
CHAIN LINK RAILING (TYPE 7)	150	LF
CONCRETE BARRIER (TYPE 732 MODIFIED)	150	LF

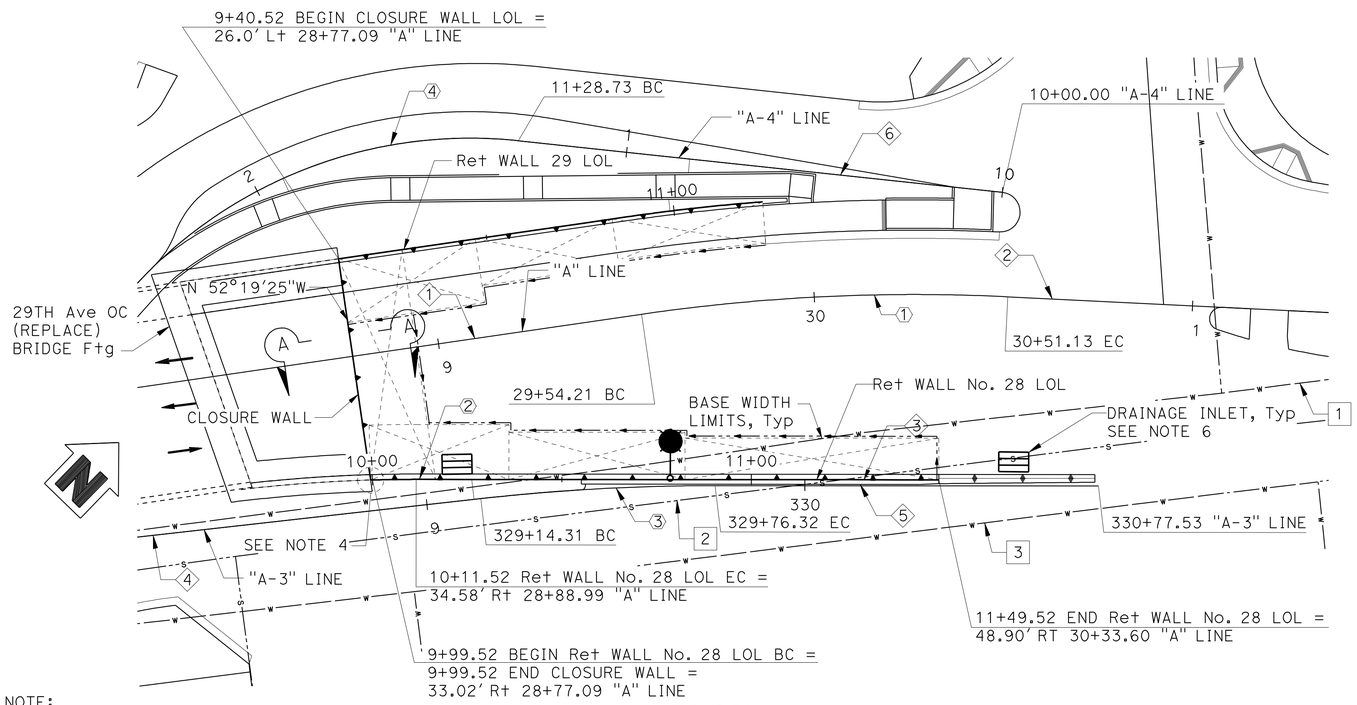

PLAN

SCALE: 1" = 20'

NOTE:
THE CONTRACTOR SHALL VERIFY ALL CONTROLLING FIELD DIMENSIONS BEFORE ORDERING OR FABRICATING ANY MATERIAL.

LEGEND:

- Indicates Direction of Traffic
- Drainage Inlet, See NOTE 6
- Electrolier, See NOTE 7
- Underdrain Pipe Flow Line See Note 5

NOTES:

1. "BW" indicates Base Width. "H" Indicates Design Height.
2. For Utility Information not Shown, See ROADWAY PLANS.
3. For the Typical Section And Section A-A, See "GENERAL PLAN No. 2" Sheet.
4. For Corner Details, see "MECHANICALLY STABILIZED EMBANKMENT DETAILS No. 3" Sheet.
5. For Wall Drainage Details "MECHANICALLY STABILIZED EMBANKMENT DETAILS NO. 4" Sheet.
6. For Location of Drainage Inlets, See DRAINAGE PLANS.
7. For Electrolier on MSE Wall Details, See "MECHANICALLY STABILIZED EMBANKMENT DETAILS No. 8" Sheet.

DESIGN OVERSIGHT — Paul Cotter
4-3-13
SIGN OFF DATE

	BY	CHECKED
DESIGN	S. McCauley	C. Cho
DETAILS	J. Saldana	S. McCauley
QUANTITIES	C. Cho	S. McCauley

LOAD & RESISTANCE FACTOR DESIGN — LIVE LOADING: HL93 W/"LOW-BOY"; PERMIT DESIGN VEHICLE

	BY	CHECKED
LAYOUT	J. Saldana	S. McCauley
SPECIFICATIONS	C. Harden	PLANS AND SPECS COMPARED S. Sheikh

PREPARED FOR THE STATE OF CALIFORNIA DEPARTMENT OF TRANSPORTATION

Chad Harden
PROJECT ENGINEER

BRIDGE NO. 33E0113
POST MILES 28.6

RETAINING WALL No. 28
GENERAL PLAN No. 1

DESIGN GENERAL PLAN SHEET (ENGLISH) (REV.7/16/10)

ORIGINAL SCALE IN INCHES FOR REDUCED PLANS 0 1 2 3

UNIT: 0724
PROJECT NUMBER & PHASE: 04000001601
CONTRACT NO.: 04-0A7101

DISREGARD PRINTS BEARING EARLIER REVISION DATES

REVISION DATES 2/04/11 3/30/12 6/26/12 3/29/13 — SHEET 1 OF 16

FILE => 33-E0113-a-gp01.dgn

USERNAME => s124436 DATE PLOTTED => 10-APR-2013 TIME PLOTTED => 08:49

DIST	COUNTY	ROUTE	POST MILES TOTAL PROJECT	SHEET No	TOTAL SHEETS
04	Ala	880	28.4/29.2	703	789

REGISTERED CIVIL ENGINEER — DATE 3/29/13

4-8-13
PLANS APPROVAL DATE

REGISTERED PROFESSIONAL ENGINEER S.McCauley No. 71495 Exp. 12-31-13 CIVIL STATE OF CALIFORNIA

The State of California or its officers or agents shall not be responsible for the accuracy or completeness of electronic copies of this plan sheet.

ALAMEDA COUNTY TRANSPORTATION COMMISSION
1333 BROADWAY, SUITE 220
OAKLAND, CA 94612

RBF CONSULTING
ONE KAISER PLAZA, SUITE 1150
OAKLAND, CA 94612

TOP OF WALL ELEVATION TABLE

	WALL LOL STATION	TOP OF WALL Elev (Ft)
Beg CLOSURE WALL	9+40.52	37.10
END CLOSURE WALL	9+99.52	36.81
Beg Ret WALL No. 28	9+99.52	38.48
	10+00.00	38.45
	+10	37.85
	+20	37.25
	+30	36.66
	+40	36.09
	+50	35.54
	+60	35.01
	+70	34.50
	+80	34.00
	+90	33.49
	11+00.00	33.00
	+10	32.54
	+20	32.11
	+30	31.71
	+40	31.33
END Ret WALL No. 28	11+49.52	30.75

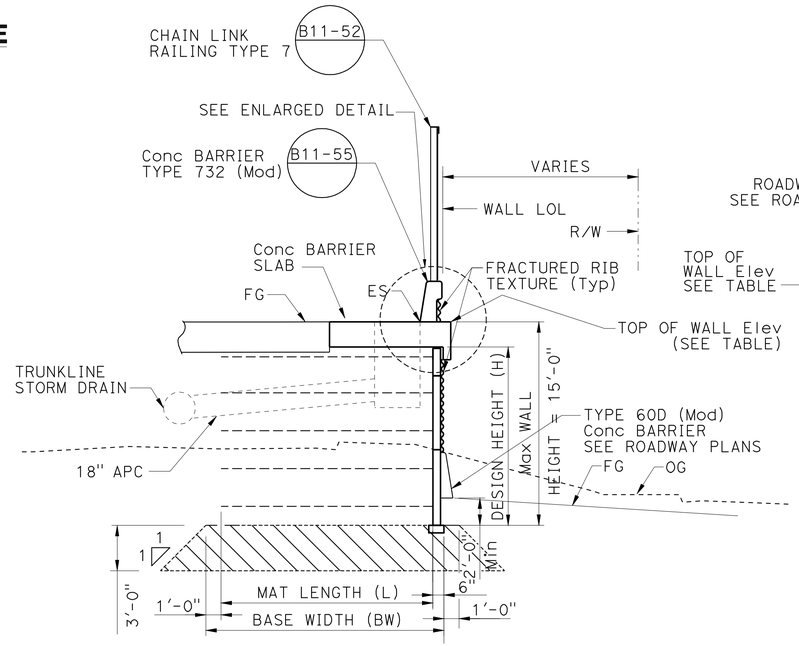

TYPICAL SECTION

NO SCALE

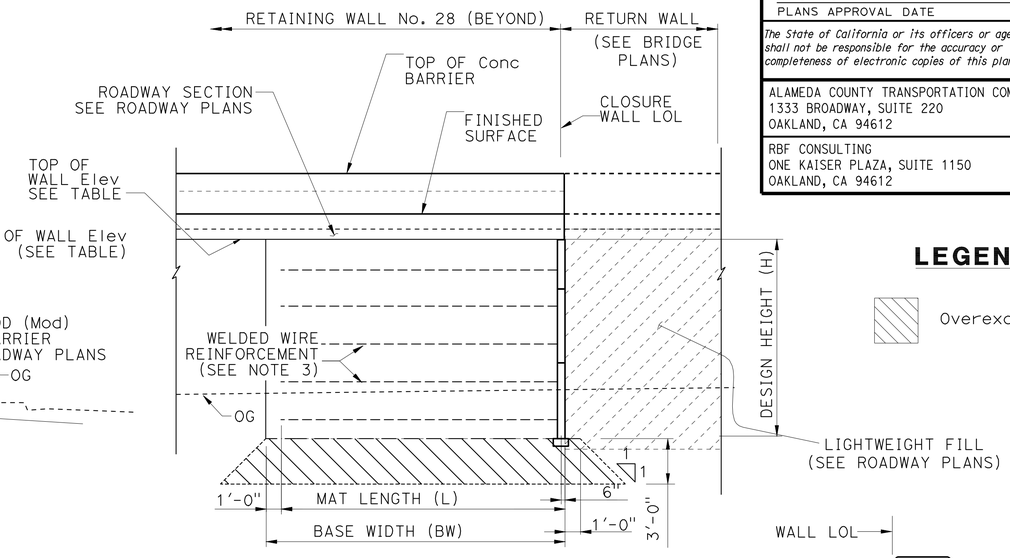

CLOSURE WALL TYPICAL SECTION
SECTION A-A

NO SCALE

LEGEND:

Overexcavation Depth

INDEX TO PLANS

SHEET NO.	TITLE
1	GENERAL PLAN No. 1
2	GENERAL PLAN No. 2
3	LAYOUT
4	MECHANICALLY STABILIZED EMBANKMENT - DETAILS NO. 1
5	MECHANICALLY STABILIZED EMBANKMENT - DETAILS NO. 2
6	MECHANICALLY STABILIZED EMBANKMENT - DETAILS NO. 3
7	MECHANICALLY STABILIZED EMBANKMENT - DETAILS NO. 4
8	MECHANICALLY STABILIZED EMBANKMENT - DETAILS NO. 5
9	MECHANICALLY STABILIZED EMBANKMENT - DETAILS NO. 6
10	MECHANICALLY STABILIZED EMBANKMENT - DETAILS NO. 7
11	MECHANICALLY STABILIZED EMBANKMENT - DETAILS NO. 8
12	MECHANICALLY STABILIZED EMBANKMENT - DETAILS NO. 9
13	LOG OF TEST BORING 1 OF 2
14	LOG OF TEST BORING 2 OF 2
15	SOIL LEGEND LOG OF TEST BORINGS 1 OF 2
16	SOIL LEGEND LOG OF TEST BORINGS 2 OF 2

STANDARD PLANS DATED MAY 2006

A10A	ACRONYMS AND ABBREVIATIONS (SHEET 1 OF 2)
A10B	ACRONYMS AND ABBREVIATIONS (SHEET 2 OF 2)
A10C	SYMBOLS (SHEET 1 OF 2)
A10D	SYMBOLS (SHEET 2 OF 2)
A62B	LIMITS OF PAYMENT FOR EXCAVATION AND BACKFILL BRIDGE SURCHARGE AND WALL
BO-3	BRIDGE DETAILS
B11-52	CHAIN LINK RAILING TYPE 7
B11-55	CONCRETE BARRIER TYPE 732

STANDARD PLAN SHEET No.

DETAIL No.

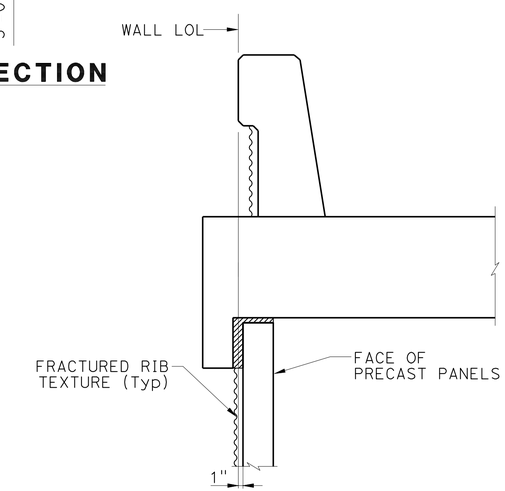

ENLARGED DETAIL

NO SCALE

NOTES:

1. For All Pipes and Drainage Inlet and Outlet Locations, See ROADWAY PLANS.
2. For Existing Pipes and Utilities, See ROADWAY PLANS.
3. Stagger Lifts per Notes and Details on "MECHANICALLY STABILIZED EMBANKMENT DETAILS No. 3" Sheet.

NOTE:
THE CONTRACTOR SHALL VERIFY ALL CONTROLLING FIELD DIMENSIONS BEFORE ORDERING OR FABRICATING ANY MATERIAL.

DESIGN OVERSIGHT Paul Cotter	DESIGN	BY S. McCauley	CHECKED C. Cho	LOAD & RESISTANCE FACTOR DESIGN	LIVE LOADING: HL93 W/"LOW-BOY"; PERMIT DESIGN VEHICLE
4-3-13 SIGN OFF DATE	DETAILS	BY J. Saldana	CHECKED S. McCauley	LAYOUT BY J. Saldana	CHECKED S. McCauley
	QUANTITIES	BY C. Cho	CHECKED S. McCauley	SPECIFICATIONS BY C. Harden	PLANS AND SPECS COMPARED S. Sheikh

PREPARED FOR THE STATE OF CALIFORNIA DEPARTMENT OF TRANSPORTATION

Chad Harden
PROJECT ENGINEER

BRIDGE NO. 33E0113
POST MILES 28.6

RETAINING WALL No. 28
GENERAL PLAN No. 2

DESIGN GENERAL PLAN SHEET (ENGLISH) (REV.7/16/10)

ORIGINAL SCALE IN INCHES FOR REDUCED PLANS 0 1 2 3

UNIT: 0724
PROJECT NUMBER & PHASE: 04000001601 CONTRACT NO.: 04-0A7101

DISREGARD PRINTS BEARING EARLIER REVISION DATES — REVISION DATES 2/04/11 3/30/12 6/26/12 3/29/13

SHEET 2 OF 16

FILE => 33-E0113-a-gp02.dgn

USERNAME => s124496 DATE PLOTTED => 10-APR-2013 TIME PLOTTED => 08:49

DIST	COUNTY	ROUTE	POST MILES TOTAL PROJECT	SHEET No	TOTAL SHEETS
04	Ala	880	28.4/29.2	704	789

REGISTERED CIVIL ENGINEER — DATE 6/26/12

4-8-13
PLANS APPROVAL DATE

REGISTERED PROFESSIONAL ENGINEER S.McCauley No. 71495 Exp. 12-31-13 CIVIL STATE OF CALIFORNIA

The State of California or its officers or agents shall not be responsible for the accuracy or completeness of electronic copies of this plan sheet.

ALAMEDA COUNTY TRANSPORTATION COMMISSION
1333 BROADWAY, SUITE 220
OAKLAND, CA 94612

RBF CONSULTING
ONE KAISER PLAZA, SUITE 1150
OAKLAND, CA 94612

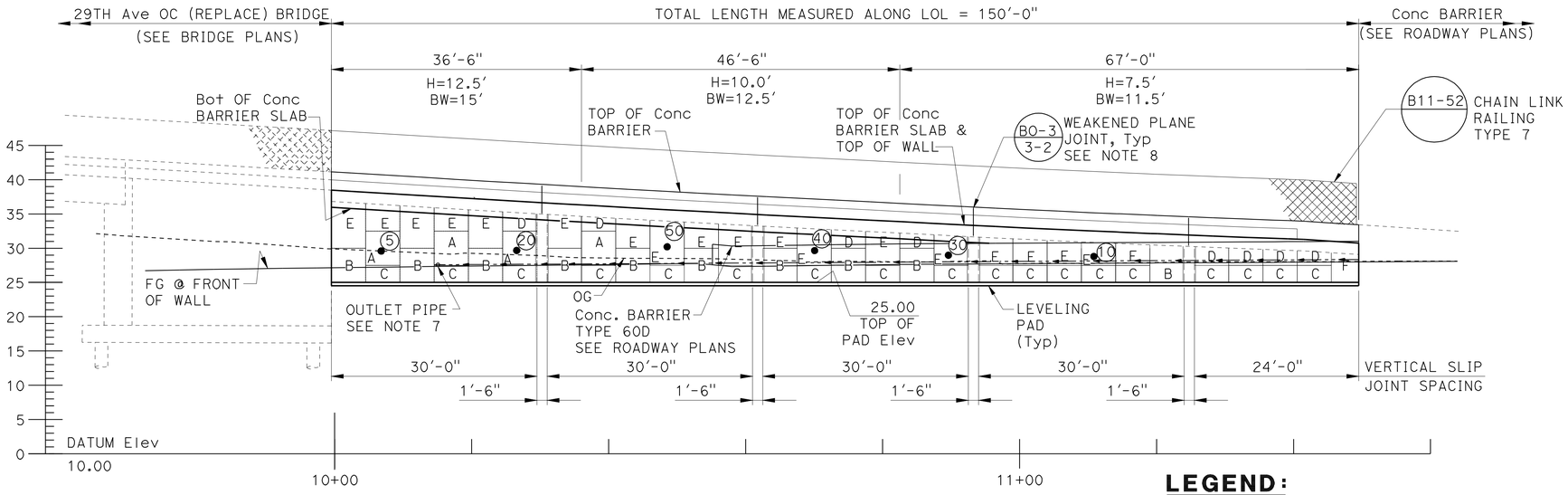

ELEVATION

SCALE: 1" = 10'

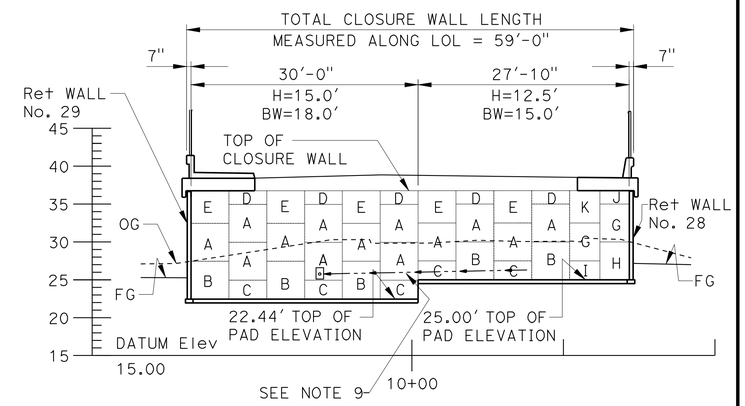

PANEL	DESCRIPTION
A	INTERMEDIATE PANEL
B	BOTTOM PANEL
C	BOTTOM HALF PANEL
D	TOP HALF PANEL
E	TOP PANEL WITH MULTIPLE MATS
F	SPECIAL DESIGN PANEL
G	SPECIAL DESIGN INTERMEDIATE PANEL
H	SPECIAL DESIGN BOTTOM PANEL
I	SPECIAL DESIGN BOTTOM HALF PANEL
J	SPECIAL DESIGN TOP PANEL
K	SPECIAL DESIGN TOP PANEL WITH MULTPLE MATS

LEGEND:

- Indicates Interval in Years from Time of Construction to Time of Removal of Inspection Wire
- Indicates Inspection Wire Panel (See Note 6)
- Indicates Panel Type (See Note 4)
- Underdrain Pipe Flow Line

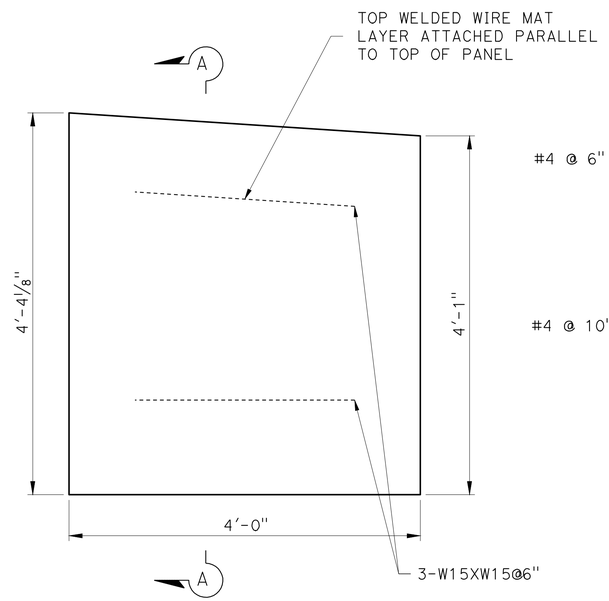

SPECIAL DESIGN PANEL

NO SCALE

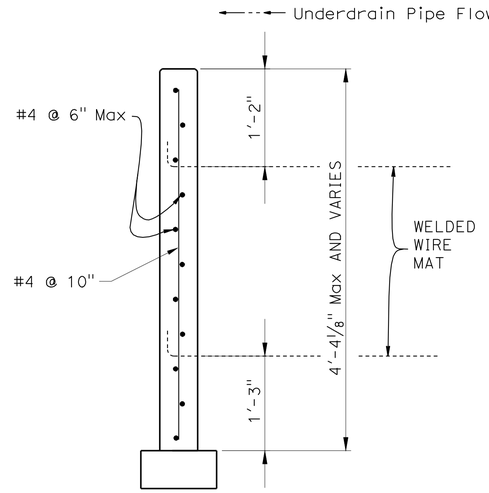

SECTION A-A

NOTES:

1. "BW" Indicates Base Width. "H" Indicates Design Height.
2. MSE Indicates "MECHANICALLY STABILIZED EMBANKMENT".
3. For General Notes, see "MECHANICALLY STABILIZED EMBANKMENT DETAILS No. 2" Sheet.
4. For Precast Panel Detail and Reinforcing not shown, See "MECHANICALLY STABILIZED EMBANKMENT DETAILS No. 1" and "MECHANICALLY STABILIZED EMBANKMENT DETAILS No. 2" Sheets.
5. For Vertical Slip Joint Details, See "MECHANICALLY STABILIZED EMBANKMENT DETAILS No. 6" Sheet.
6. For Inspection Wire Details, See "MECHANICALLY STABILIZED EMBANKMENT DETAILS No. 3" Sheet.
7. For Outlet Pipe and Wall Drainage Details, See "MECHANICALLY STABILIZED EMBANKMENT DETAILS No. 4" Sheet.
8. Provide Weakened Plane Joints in Concrete Barrier and Concrete Barrier Slab at Centerline of each Vertical Slip Joint.
9. Connect Underdrain for Closure Wall to Underdrain System for Retaining Wall 28.

NOTE:
THE CONTRACTOR SHALL VERIFY ALL CONTROLLING FIELD DIMENSIONS BEFORE ORDERING OR FABRICATING ANY MATERIAL.

DESIGN OVERSIGHT Paul Cotter
7-16-12
SIGN OFF DATE

	BY	CHECKED
DESIGN	S McCauley	C. Cho
DETAILS	J Saldana	S. McCauley
QUANTITIES	C. Cho	S. McCauley

PREPARED FOR THE STATE OF CALIFORNIA DEPARTMENT OF TRANSPORTATION

Chad Harden
PROJECT ENGINEER

BRIDGE NO. 33E0113
POST MILES 28.6

RETAINING WALL No. 28
LAYOUT

DESIGN DETAIL SHEET (ENGLISH) (REV.7/16/10)

ORIGINAL SCALE IN INCHES FOR REDUCED PLANS 0 1 2 3

UNIT: 0724
PROJECT NUMBER & PHASE: 04000001601 CONTRACT NO.: 04-0A7101

DISREGARD PRINTS BEARING EARLIER REVISION DATES

REVISION DATES 2/24/11 3/30/12 6/26/12

SHEET 3 OF 16

FILE => 33-E0113-g-rw_lo01.dgn

USERNAME => s124496 DATE PLOTTED => 10-APR-2013 TIME PLOTTED => 08:50

DIST	COUNTY	ROUTE	POST MILES TOTAL PROJECT	SHEET No.	TOTAL SHEETS
04	Ala	880	28.4/29.2	705	789

REGISTERED CIVIL ENGINEER — DATE 6/26/12

4-8-13
PLANS APPROVAL DATE

REGISTERED PROFESSIONAL ENGINEER — S.McCauley — No. 71495 — Exp. 12-31-13 — CIVIL — STATE OF CALIFORNIA

The State of California or its officers or agents shall not be responsible for the accuracy or completeness of electronic copies of this plan sheet.

ALAMEDA COUNTY TRANSPORTATION COMMISSION
1333 BROADWAY, SUITE 220
OAKLAND, CA 94612

RBF CONSULTING
ONE KAISER PLAZA, SUITE 1150
OAKLAND, CA 94612

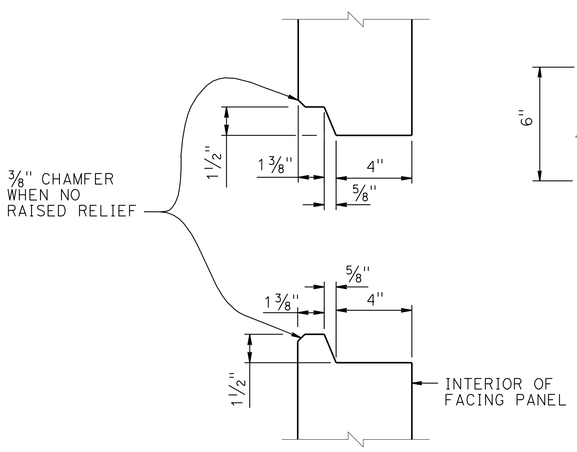

HORIZONTAL JOINT DETAIL

3" = 1'-0"

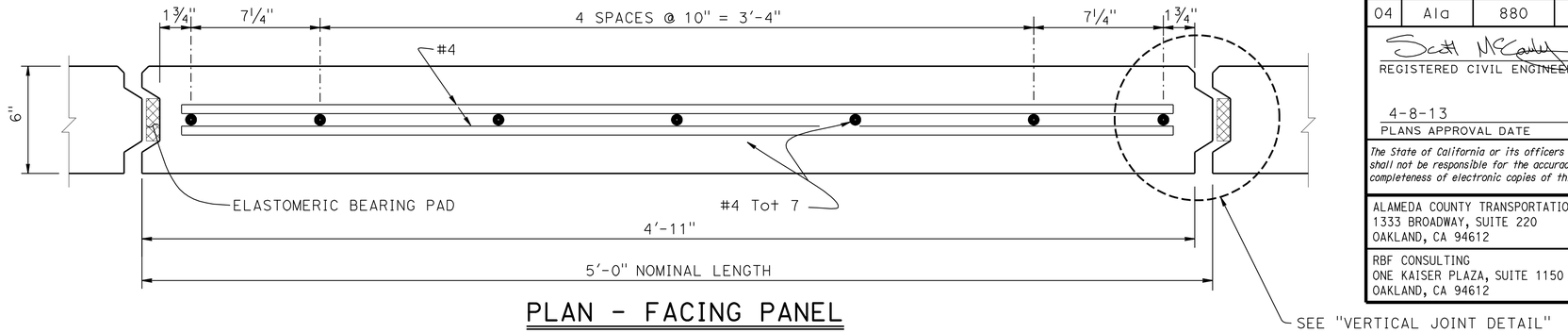

PLAN - FACING PANEL

3" = 1'-0"

NOTES:

1. Architectural Treatment Not Shown.
2. Place Reinforced Elastomeric Bearing Pads in All of the Panel Joints Between the Panels. Place One in Each Vertical Joint where the Horizontal Joints Intersect. Place Two per Panel in each Horizontal Joint:
   3/4" x 2 3/8" x 6" for Vertical Joints
   3/4" x 4" x 6" for Horizontal Joints
3. Bond a Strip of Filter Fabric, 1'-0" Wide, Cover the Full Length of all Panel Joints.
4. Top Layer of Welded Wire Mats Attached Parallel to Top of Panel when Top of Wall is Angled or Curved as Shown Elsewhere in "STRUCTURE PLANS".
5. Eliminate Mid Level Mat when Closer than 6" to Top Mat, Continue Variable Dimension Between Remaining Mats.

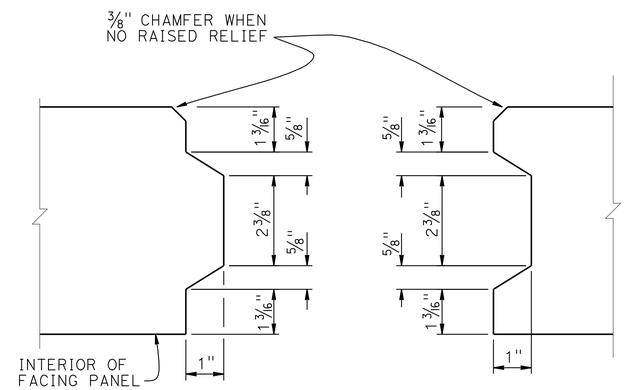

VERTICAL JOINT DETAIL

6" = 1'-0"

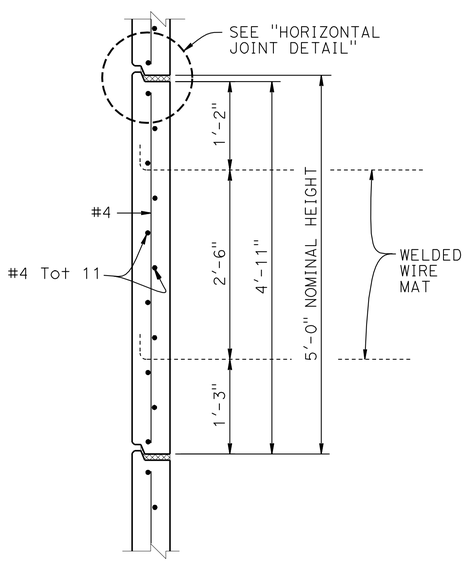

INTERMEDIATE PANEL

1" = 1'-0"

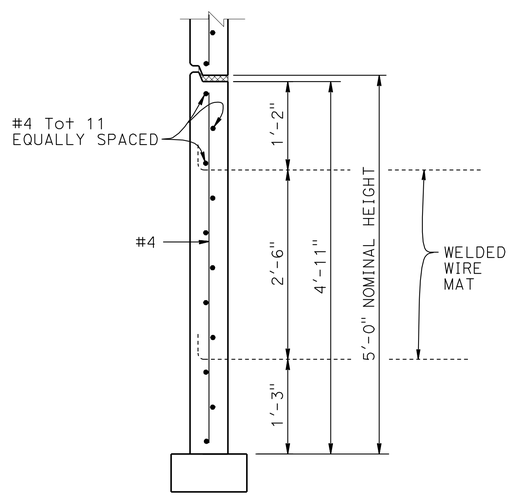

BOTTOM PANEL

1" = 1'-0"

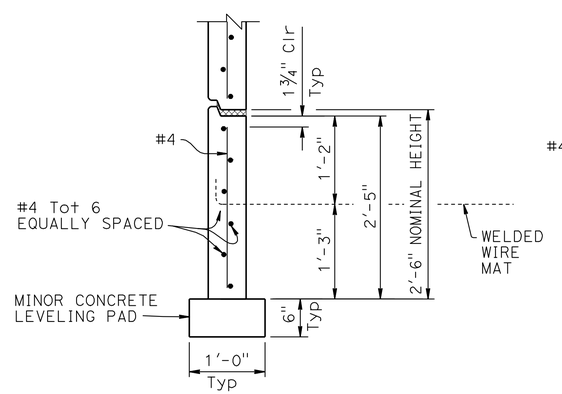

BOTTOM HALF PANEL

1" = 1'-0"

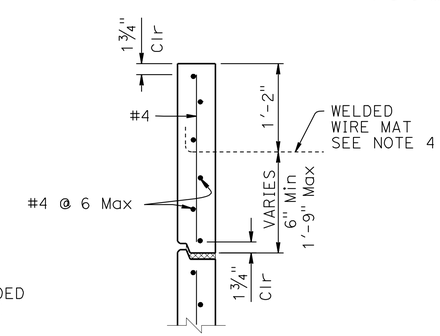

TOP HALF PANEL

1" = 1'-0"

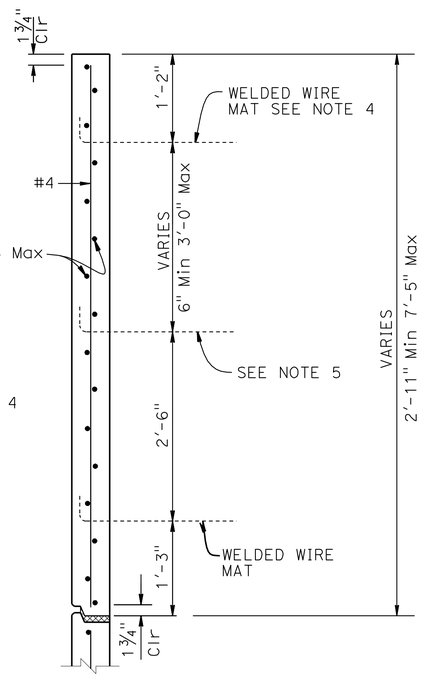

TOP PANEL WITH MULTIPLE MATS

1" = 1'-0"

STANDARD DRAWING

FILE NO. xs13-020-1

APPROVAL DATE January 2012

DS OSD 2147A (ENGLISH STANDARD DRAWING "XS" BORDER REV. (02-02-11)

ORIGINAL SCALE IN INCHES FOR REDUCED PLANS 0 1 2 3

STATE OF CALIFORNIA
DEPARTMENT OF TRANSPORTATION

DIVISION OF ENGINEERING SERVICES

BRIDGE NO. 33E0113
POST MILE 28.6

RETAINING WALL No. 28
MECHANICALLY STABILIZED EMBANKMENT
DETAILS NO. 1

UNIT: 0724
PROJECT NUMBER & PHASE: 04000001601
CONTRACT NO.: 04-0A7101

DISREGARD PRINTS BEARING EARLIER REVISION DATES

REVISION DATES: 2/04/11 3/30/12 6/26/12

SHEET 4 OF 16

FILE => 33-E0113-u-miscdt01.dgn

USERNAME => s124496 DATE PLOTTED => 10-APR-2013 TIME PLOTTED => 08:50

DIST	COUNTY	ROUTE	POST MILES TOTAL PROJECT	SHEET No.	TOTAL SHEETS
04	Ala	880	28.4/29.2	706	789

Scott McCauley 6/26/12
REGISTERED CIVIL ENGINEER DATE

4-8-13
PLANS APPROVAL DATE

REGISTERED PROFESSIONAL ENGINEER S.McCauley No. 71495 Exp. 12-31-13 CIVIL STATE OF CALIFORNIA

The State of California or its officers or agents shall not be responsible for the accuracy or completeness of electronic copies of this plan sheet.

ALAMEDA COUNTY TRANSPORTATION COMMISSION
1333 BROADWAY, SUITE 220
OAKLAND, CA 94612

RBF CONSULTING
ONE KAISER PLAZA, SUITE 1150
OAKLAND, CA 94612

GENERAL NOTES
LOAD & RESISTANCE FACTOR DESIGN

DESIGN: AASHTO LRFD Bridge Design Specifications, 4th Edition with California Amendments
FHWA Design and Construction of Mechanically Stabilized Earth Walls and Reinforced Slopes, dated November 2009
Publication No. FHWA-NHI 10-024

COLLISION FORCE: F_t = 54 kips on barriers

LIVE LOAD: Surcharge = 240 lb/ft^3

SOIL PARAMETERS:

Internal design ϕ(Reinforced Backfill) = 34°, γ = 120 lb/ft^3, kh = 0.36 ◇1

External design ϕ(Retained Backfill) = 30°, γ = 120 lb/ft^3
Coefficient of friction, μ = 0.35
K_h = 0.24

PRECAST CONCRETE PANELS:

f'c = 4,000 psi (Concrete compressive strength at 28 days)
fy = 60,000 psi (Yield strength of reinforcement)

SOIL REINFORCEMENT:

Welded wire mats: fy = 65,000 psi (Yield strength)
Coupler: fy = 36,000 psi (Yield strength)
Corrosion rate = 1.1 mils/year

REINFORCED CONCRETE:

f'c = 3,600 psi, except as noted
(Concrete compressive strength at 28 days)
fy = 60,000 psi (Yield strength of reinforcement)

MSE = Mechanically Stabilized Embankment

NOTES:

(A) Distance as required to permit coupler to be swaged

(B) Place #4 x 3'-2", centered on connector mat, but not welded to it

(C) All transverse wires size W15 at various spacing as shown elsewhere in plans

(D) Size of longitudinal wires shown elsewhere in plans

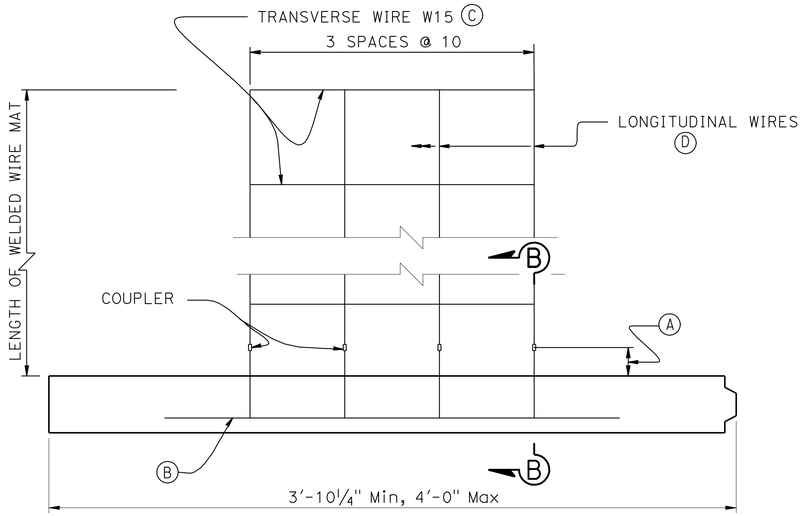

◇2 ◇3 PLAN OF SPECIAL DESIGN PANELS G, H, I & J K
1½" = 1'-0"

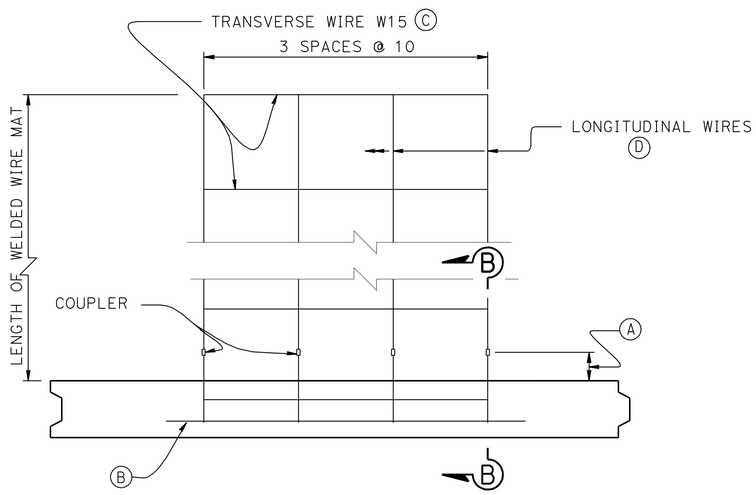

PLAN OF PANEL WITH FOUR WIRE MAT
1½" = 1'-0"

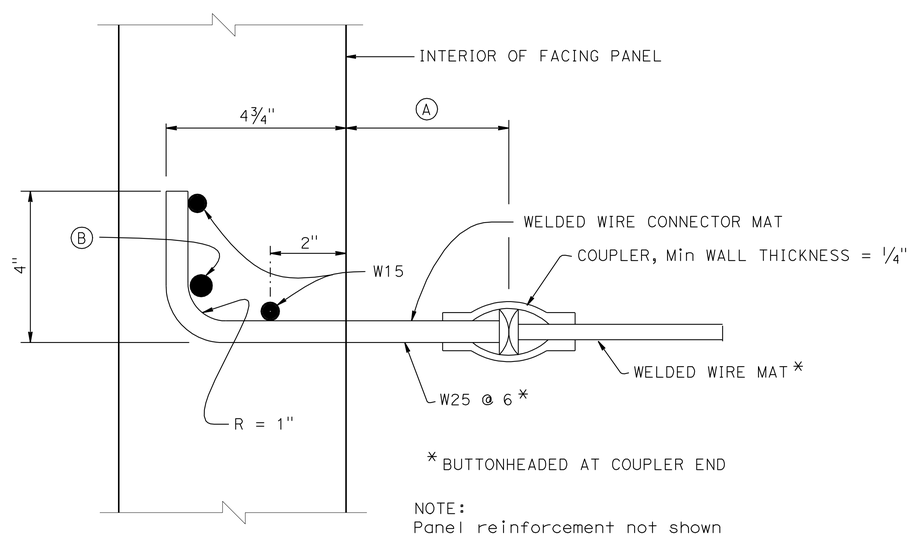

SECTION B-B
6" = 1'-0"

SPECIAL DETAILS

STANDARD DRAWING		
FILE NO. xs13-020-2	APPROVAL DATE January 2012	◇1 Soil Parameters Modified ◇3 Detail Added ◇2 Detail Removed

STATE OF CALIFORNIA
DEPARTMENT OF TRANSPORTATION

DIVISION OF ENGINEERING SERVICES

BRIDGE NO. 33E0113
POST MILE 28.6

RETAINING WALL No. 28
MECHANICALLY STABILIZED EMBANKMENT
DETAILS NO. 2

DS OSD 2147A (ENGLISH STANDARD DRAWING "XS" BORDER REV. (02-02-11)

ORIGINAL SCALE IN INCHES FOR REDUCED PLANS 0 1 2 3

UNIT: 0724
PROJECT NUMBER & PHASE: 04000001601
CONTRACT NO.: 04-0A7101

DISREGARD PRINTS BEARING EARLIER REVISION DATES

REVISION DATES: 2/04/11 3/30/12 6/26/12

SHEET 5 OF 16

FILE => 33-E0113-u-mlscdt02.dgn

USERNAME => s124436 DATE PLOTTED => 10-APR-2013 TIME PLOTTED => 08:50

DIST	COUNTY	ROUTE	POST MILES TOTAL PROJECT	SHEET No.	TOTAL SHEETS
04	Ala	880	28.4/29.2	707	789

REGISTERED CIVIL ENGINEER 3/29/13 DATE

4-8-13
PLANS APPROVAL DATE

REGISTERED PROFESSIONAL ENGINEER S.McCauley No. 71495 Exp. 12-31-13 CIVIL STATE OF CALIFORNIA

The State of California or its officers or agents shall not be responsible for the accuracy or completeness of electronic copies of this plan sheet.

ALAMEDA COUNTY TRANSPORTATION COMMISSION
1333 BROADWAY, SUITE 220
OAKLAND, CA 94612

RBF CONSULTING
ONE KAISER PLAZA, SUITE 1150
OAKLAND, CA 94612

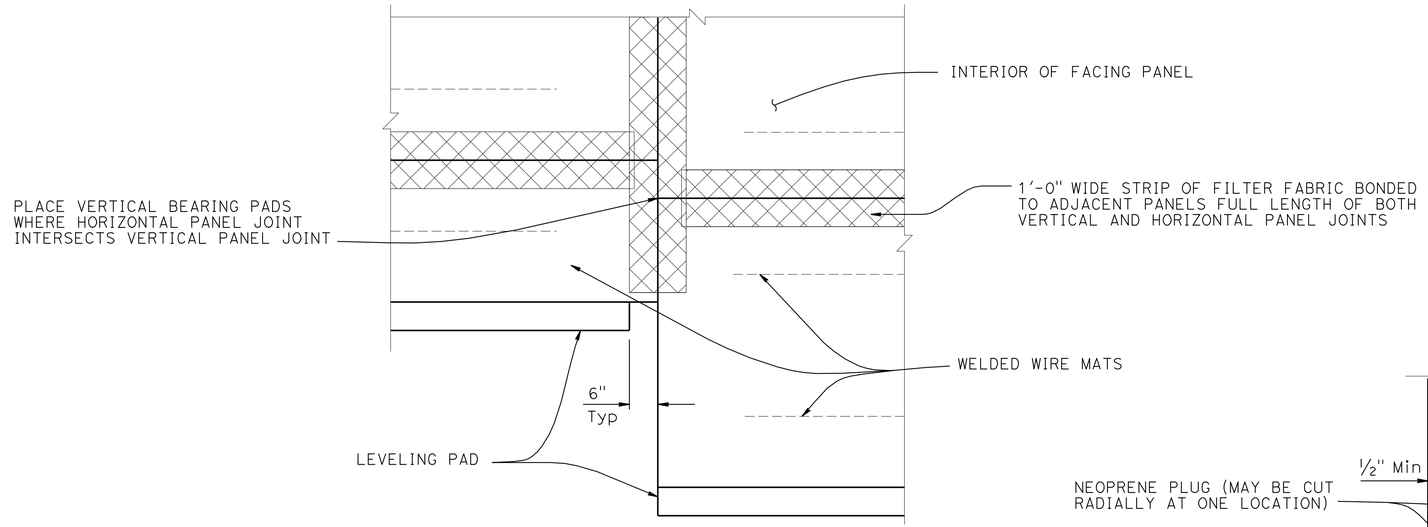

PART ELEVATION

¾" = 1'-0"

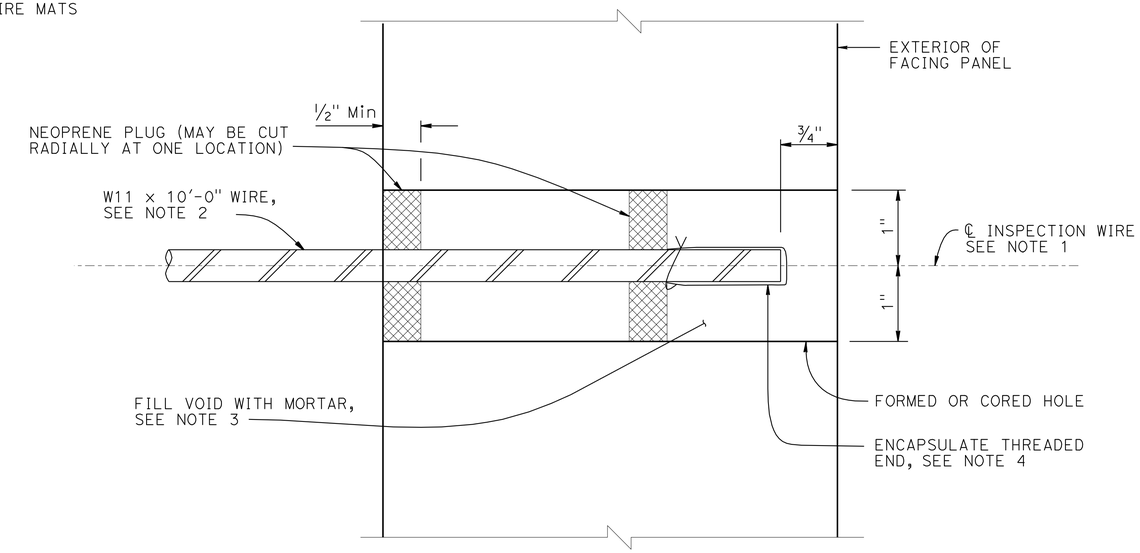

SECTION THRU INSPECTION WIRE

NO SCALE

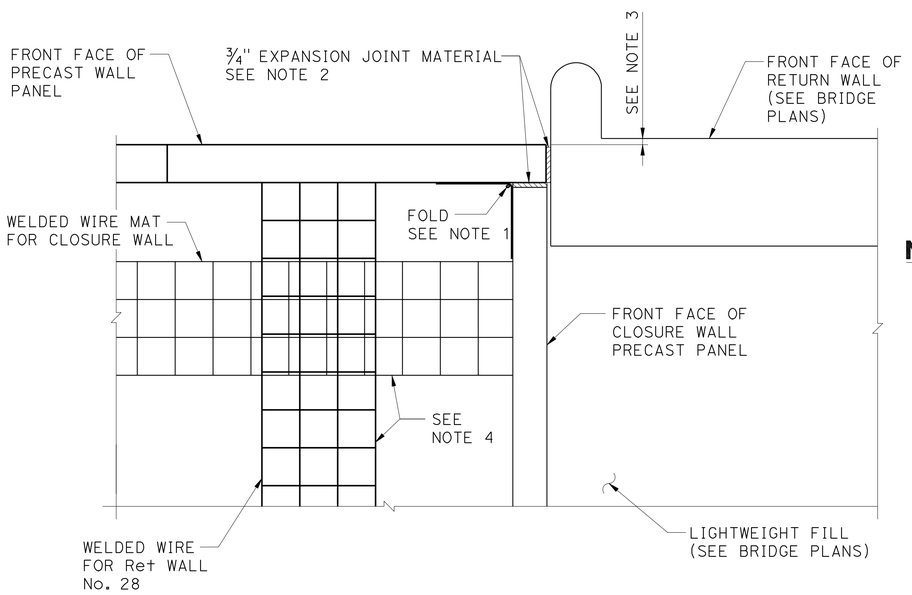

NOTES:

1. Bond a strip of filter fabric, 1'-6" wide, to back of adjacent MSE panels for entire length of vertical joint
2. Bond expansion joint material to concrete wall
3. Offset between face of MSE facing panel and face of the concrete wall as directed by location of layout lines elsewhere in "STRUCTURE PLANS"
4. Stagger Lifts between Closure Wall and Wall No. 28 such that Overlapping Layers are Separated Vertically by at least 4".

1 2 CORNER DETAIL AT CLOSURE WALL - PLAN

NO SCALE

SPECIAL DETAILS

RETAINING WALL No. 28

STANDARD DRAWING

FILE NO. xs13-020-3

APPROVAL DATE January 2012

1 Detail Removed

2 Detail Added

STATE OF CALIFORNIA DEPARTMENT OF TRANSPORTATION

DIVISION OF ENGINEERING SERVICES

BRIDGE NO. 33E0113

POST MILE 28.6

MECHANICALLY STABILIZED EMBANKMENT

DETAILS NO. 3

DS OSD 2147A (ENGLISH STANDARD DRAWING "XS" BORDER REV. (02-02-11)

ORIGINAL SCALE IN INCHES FOR REDUCED PLANS 0 1 2 3

UNIT: 0724
PROJECT NUMBER & PHASE: 04000001601
CONTRACT NO.: 04-0A7101

DISREGARD PRINTS BEARING EARLIER REVISION DATES

REVISION DATES 2/24/11 3/30/12 6/28/12 3/29/13

SHEET 6 OF 16

FILE => 33-E0113-u-miscdt03.dgn

USERNAME => s124496 DATE PLOTTED => 10-APR-2013 TIME PLOTTED => 08:50

DIST	COUNTY	ROUTE	POST MILES TOTAL PROJECT	SHEET No.	TOTAL SHEETS
04	Ala	880	28.4/29.2	708	789

REGISTERED CIVIL ENGINEER — DATE 3/29/13

4-8-13
PLANS APPROVAL DATE

REGISTERED PROFESSIONAL ENGINEER S.McCauley No. 71495 Exp. 12-31-13 CIVIL STATE OF CALIFORNIA

The State of California or its officers or agents shall not be responsible for the accuracy or completeness of electronic copies of this plan sheet.

ALAMEDA COUNTY TRANSPORTATION COMMISSION
1333 BROADWAY, SUITE 220
OAKLAND, CA 94612

RBF CONSULTING
ONE KAISER PLAZA, SUITE 1150
OAKLAND, CA 94612

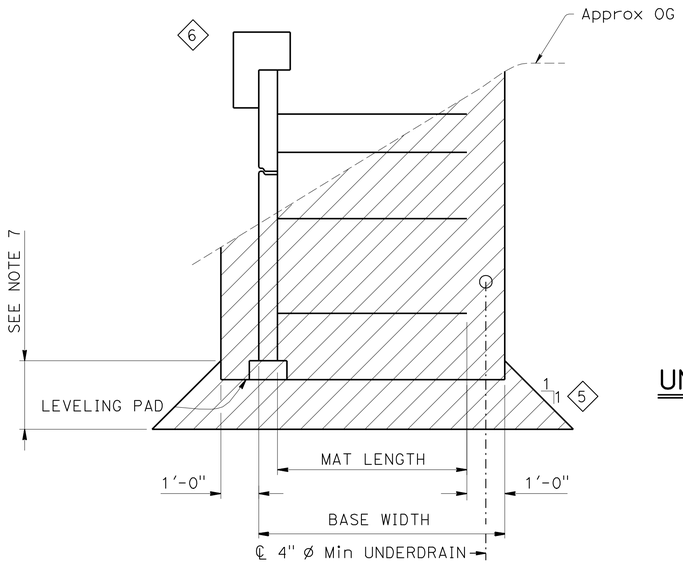

LIMITS OF EXCAVATION

½" = 1'-0"

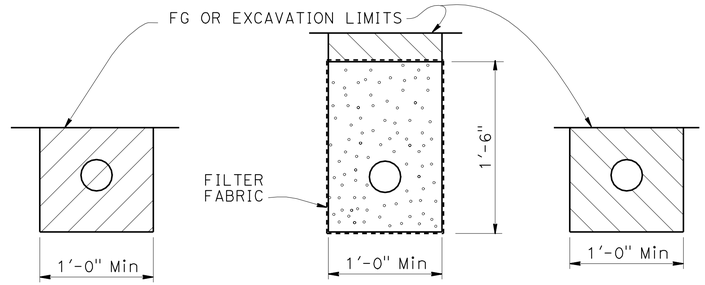

OUTLET PIPE — CLEANOUT PIPE

EXCAVATION — BACKFILL

UNPERFORATED OUTLET OR CLEAN OUT PIPE FOR UNDERDRAIN

NO SCALE

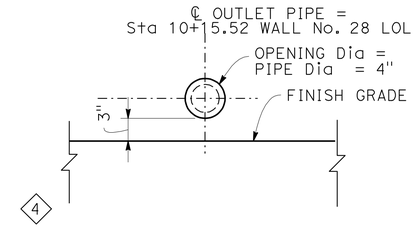

OUTLET PIPE OPENING

NO SCALE

NOTES:

1. Limits to FG except to GP when in roadway section
2. Locate underdrain behind bottom level of welded wire mats wherever possible, or at elevation needed to drain, as shown elsewhere on plans
3. Place perforated pipe underdrain of diameter shown elsewhere on plans or minimum 4" ø smoothed wall PVC or minimum 8" ø corrugated HDPE
4. Maximum spacing of outlet pipe is 200 feet
5. At sags in profile of underdrain, install outlet pipe for each direction of flow
6. For overexcavation depth see "GENERAL PLAN No. 2" sheet (5)

LEGEND:

- Limits of Structure Excavation
- Limits of Structure Backfill
- Limits of Permeable Material

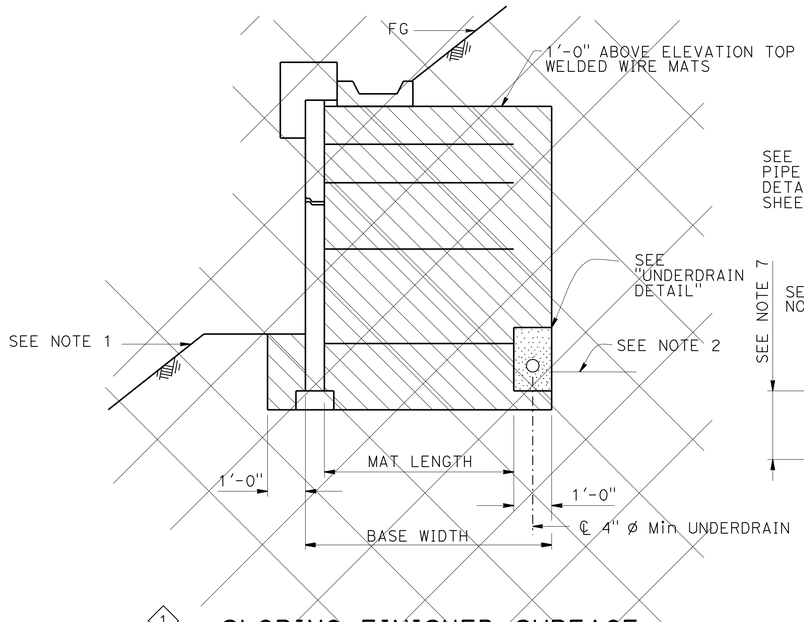

1

SLOPING FINISHED SURFACE

½" = 1'-0"

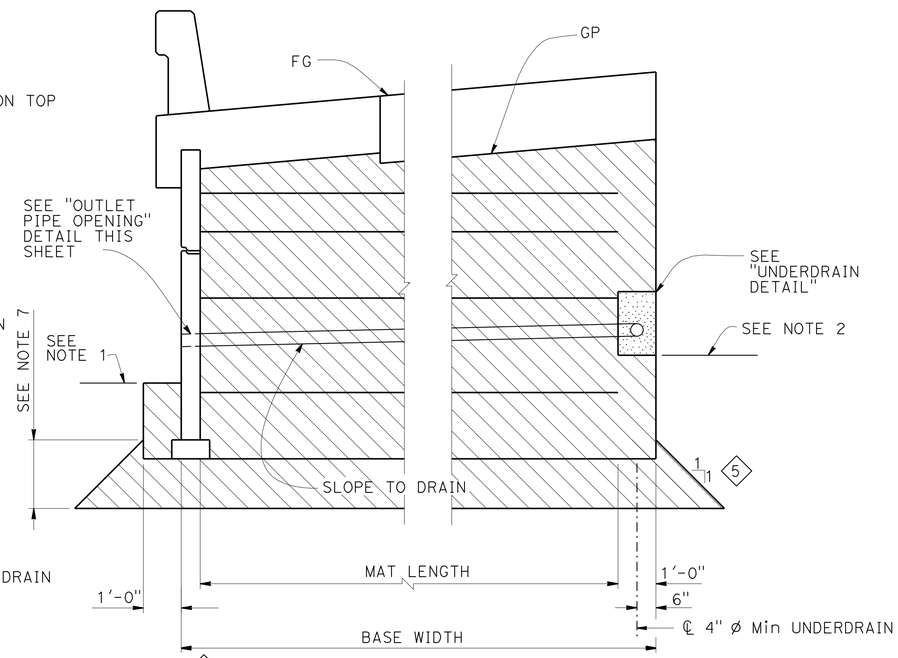

3

ROADWAY SECTION

½" = 1'-0"

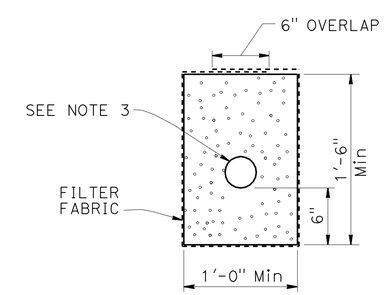

UNDERDRAIN DETAIL

LIMITS OF BACKFILL

SPECIAL DETAILS

RETAINING WALL No. 28

MECHANICALLY STABILIZED EMBANKMENT

DETAILS NO. 4 (3)

STANDARD DRAWING
FILE NO. xs13-020-6
APPROVAL DATE January 2012

(1) Does Not Apply (3) Changed Sheet Title (5) Added Overexcavation Limit
(2) Detail Modified (4) Detail Added (6) Revised "Limits of Excavation"

STATE OF CALIFORNIA
DEPARTMENT OF TRANSPORTATION

DIVISION OF ENGINEERING SERVICES

BRIDGE NO. 33E0113
POST MILE 28.6

DS OSD 2147A (ENGLISH STANDARD DRAWING "XS" BORDER REV. (02-02-11)

ORIGINAL SCALE IN INCHES FOR REDUCED PLANS 0 1 2 3

UNIT: 0724
PROJECT NUMBER & PHASE: 04000001601
CONTRACT NO.: 04-0A7101

DISREGARD PRINTS BEARING EARLIER REVISION DATES

REVISION DATES 2/24/11 3/30/12 6/28/12 3/29/13

SHEET 7 OF 16

FILE => 33-E0113-u-miscdt04.dgn

USERNAME => s124496 DATE PLOTTED => 10-APR-2013 TIME PLOTTED => 08:50

DIST	COUNTY	ROUTE	POST MILES TOTAL PROJECT	SHEET No	TOTAL SHEETS
04	Ala	880	28.4/29.2	709	789

REGISTERED CIVIL ENGINEER — DATE 6/26/12

4-8-13
PLANS APPROVAL DATE

REGISTERED PROFESSIONAL ENGINEER S.McCauley No. 71495 Exp. 12-31-13 CIVIL STATE OF CALIFORNIA

The State of California or its officers or agents shall not be responsible for the accuracy or completeness of electronic copies of this plan sheet.

ALAMEDA COUNTY TRANSPORTATION COMMISSION
1333 BROADWAY, SUITE 220
OAKLAND, CA 94612

RBF CONSULTING
ONE KAISER PLAZA, SUITE 1150
OAKLAND, CA 94612

NOTE: RAILING NOT SHOWN

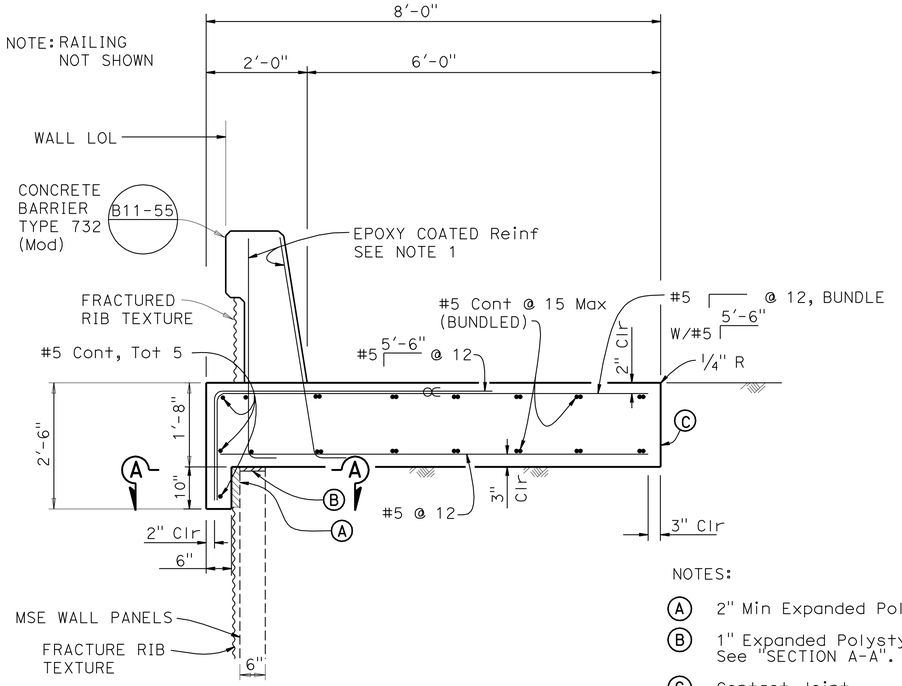

NOTES:

(A) 2" Min Expanded Polystyrene.

(B) 1" Expanded Polystyrene See "SECTION A-A".

(C) Contact Joint.

∝ Indicates Bundled Bars.

CONCRETE BARRIER SLAB

3/4" = 1'-0"

NOTES:

1. For dimensions and reinforcement not shown see, STANDARD PLAN B11-55
2. Minimum barrier slab length 40'-0"

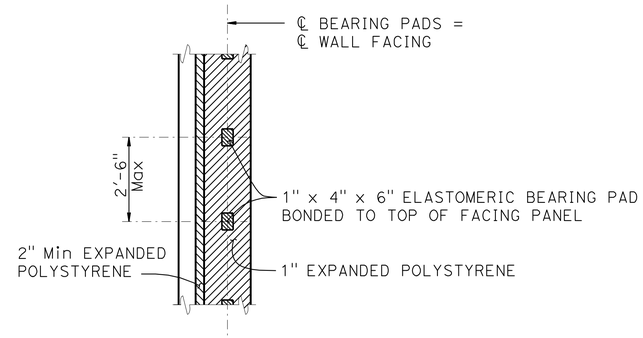

SECTION A-A

1/2" = 1'-0"

DESIGN HEIGHT, H (Ft)	7.5	10.0	12.5	15.0
Max. WALL HEIGHT (Ft)	9.17	11.67	14.17	16.67
MAT LENGTH, L (Ft)	10.0	11.0	13.5	16.5
BASE WIDTH, BW (Ft)	11.5	12.5	15.0	18.0
WELDED WIRE REINFORCING PER LEVEL	TOP 4-WI5xWI5@6" 1@ 4-WI5xWI5@6" Bot 4-WI5xWI5@6"	TOP 4-WI5xWI5@6" 2 @ 4-WI5xWI5@6" Bot 4-W20xWI5@9"	TOP 4-WI5xWI5@6" 3 @ 4-WI5xWI5@6" Bot 4-W20xWI5@9"	TOP 4-WI5xWI5@6" 3 @ 4-WI5xWI5@6" 1 @ 4-W20xWI5@9" Bot 4-W20xWI5@9"

NOTE:

Mesh Configuration is:

No. Longitudinal Wires - Longitudinal Wire Size x Transverse Wire Size @ Transverse Wire Spacing

MECHANICALLY STABILIZED EMBANKMENT WALL REINFORCEMENT

No Scale

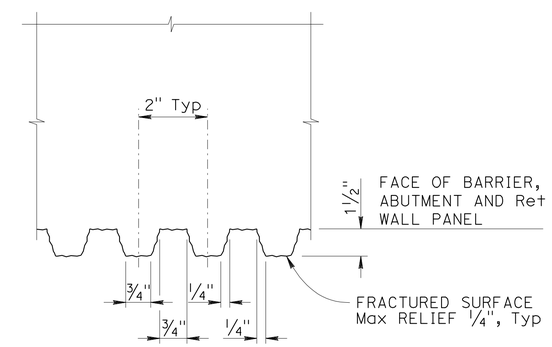

NOTES:

1. Vertical Joints in Form Liners will be at Center of Trough between Ribs. Min Spacing of Form Liner Vertical Joints will be 4'-0".
2. No Horizontal Joints will be Permitted in Form Liners.

FRACTURED RIB TEXTURE

NO SCALE

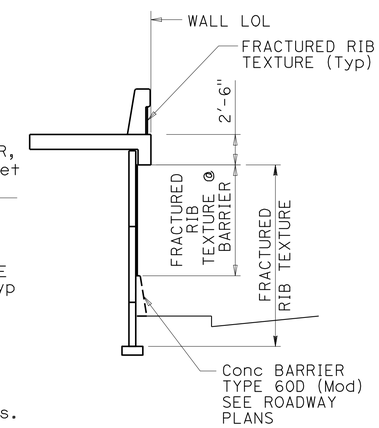

LIMITS OF PAYMENT

NOTE:
THE CONTRACTOR SHALL VERIFY ALL CONTROLLING FIELD DIMENSIONS BEFORE ORDERING OR FABRICATING ANY MATERIAL.

DESIGN OVERSIGHT Paul Cotter
7-16-12
SIGN OFF DATE

	BY	CHECKED
DESIGN	S McCauley	C. Cho
DETAILS	J Saldana	S. McCauley
QUANTITIES	C. Cho	S. McCauley

PREPARED FOR THE STATE OF CALIFORNIA DEPARTMENT OF TRANSPORTATION

Chad Harden
PROJECT ENGINEER

BRIDGE NO. 33E0113
POST MILES 28.6

RETAINING WALL No. 28
MECHANICALLY STABILIZED EMBANKMENT
DETAILS NO. 5

DESIGN DETAIL SHEET (ENGLISH) (REV.7/16/10)

ORIGINAL SCALE IN INCHES FOR REDUCED PLANS 0 1 2 3

UNIT: 0724
PROJECT NUMBER & PHASE: 04000001601 CONTRACT NO.: 04-0A7101

DISREGARD PRINTS BEARING EARLIER REVISION DATES → 2/24/11 3/30/12 6/26/12

SHEET 8 OF 16

FILE => 33-E0113-u-miscdt05.dgn

USERNAME => s124496 DATE PLOTTED => 10-APR-2013 TIME PLOTTED => 08:50

DIST	COUNTY	ROUTE	POST MILES TOTAL PROJECT	SHEET No	TOTAL SHEETS
04	Ala	880	28.4/29.2	710	789

REGISTERED CIVIL ENGINEER — DATE 6/26/12

4-8-13
PLANS APPROVAL DATE

REGISTERED PROFESSIONAL ENGINEER S.McCauley No. 71495 Exp. 12-31-13 CIVIL STATE OF CALIFORNIA

The State of California or its officers or agents shall not be responsible for the accuracy or completeness of electronic copies of this plan sheet.

ALAMEDA COUNTY TRANSPORTATION COMMISSION
1333 BROADWAY, SUITE 220
OAKLAND, CA 94612

RBF CONSULTING
ONE KAISER PLAZA, SUITE 1150
OAKLAND, CA 94612

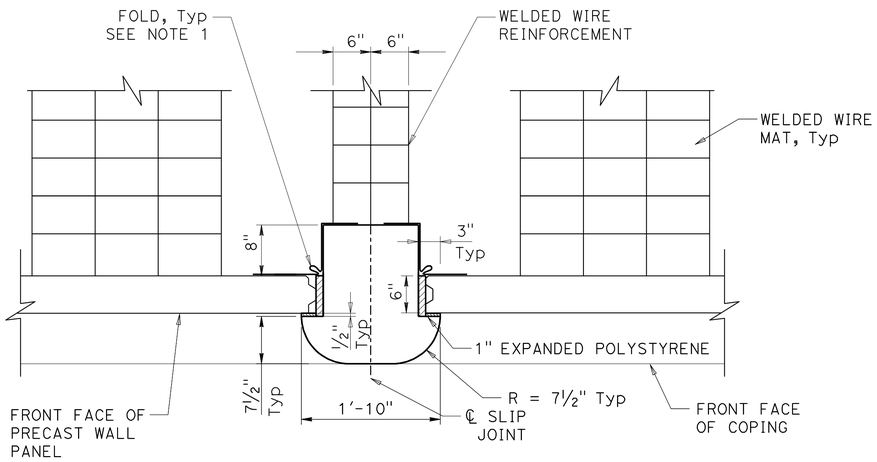

VERTICAL SLIP JOINT TYPICAL SECTION

NO SCALE

NOTES:

1. Bond a strip of Filter Fabric, 1'-6" wide to back of vertical slip joint and adjacent MSE panels for entire length of vertical joint.

NOTE: CONCRETE BARRIER NOT SHOWN

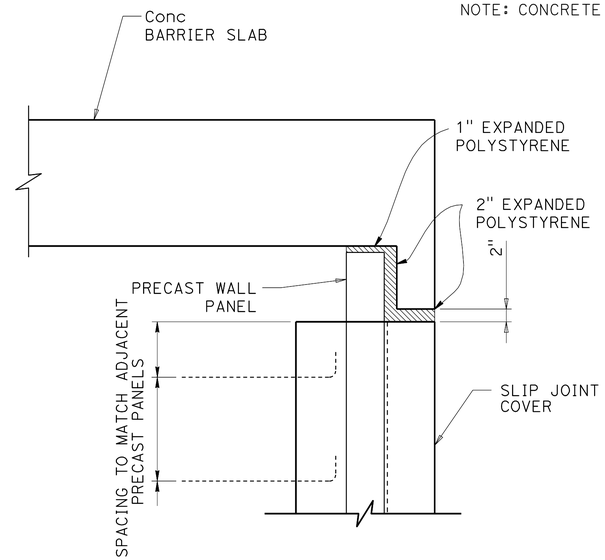

VERTICAL SLIP JOINT TOP DETAIL

NO SCALE

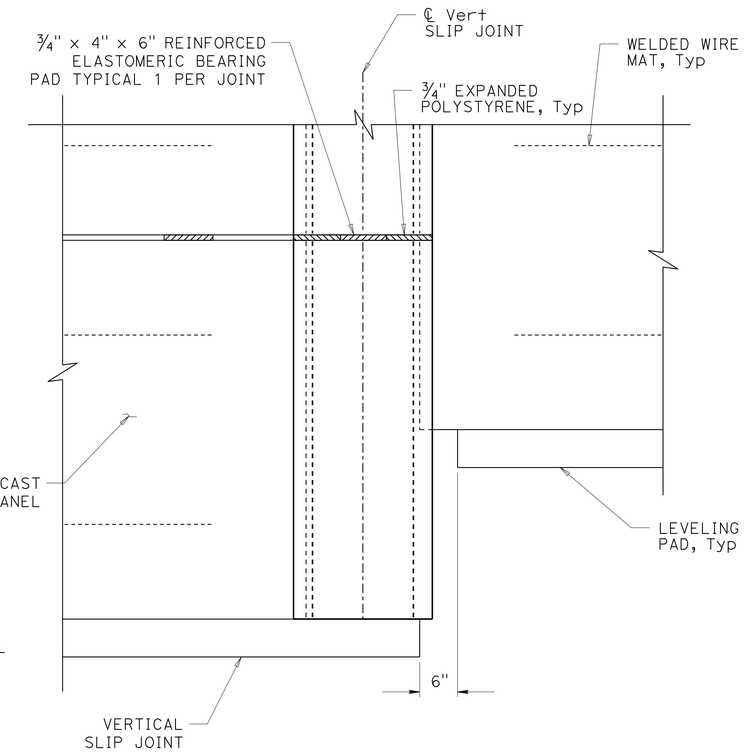

PARTIAL ELEVATION AT FOOTING STEP

NO SCALE

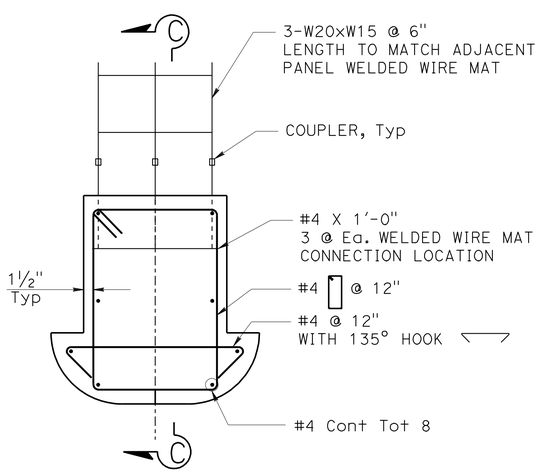

VERTICAL SLIP JOINT REINFORCING DETAIL

NO SCALE

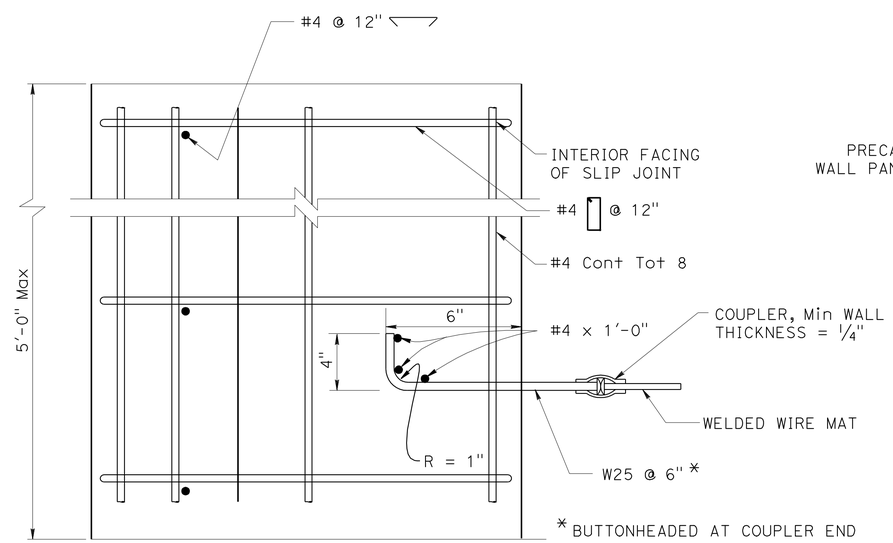

SECTION C-C

NO SCALE

NOTE:
THE CONTRACTOR SHALL VERIFY ALL CONTROLLING FIELD DIMENSIONS BEFORE ORDERING OR FABRICATING ANY MATERIAL.

DESIGN OVERSIGHT Paul Cotter
7-16-12
SIGN OFF DATE

	BY	CHECKED
DESIGN	S McCauley	C. Cho
DETAILS	J Saldana	S. McCauley
QUANTITIES	C. Cho	S. McCauley

PREPARED FOR THE STATE OF CALIFORNIA DEPARTMENT OF TRANSPORTATION

Chad Harden
PROJECT ENGINEER

BRIDGE NO. 33E0113
POST MILES 28.6

RETAINING WALL No. 28
MECHANICALLY STABILIZED EMBANKMENT
DETAILS NO. 6

DESIGN DETAIL SHEET (ENGLISH) (REV.7/16/10)

ORIGINAL SCALE IN INCHES FOR REDUCED PLANS 0 1 2 3

UNIT: 0724
PROJECT NUMBER & PHASE: 04000001601 CONTRACT NO.: 04-0A7101

DISREGARD PRINTS BEARING EARLIER REVISION DATES

REVISION DATES 2/04/11 3/30/12 6/26/12

SHEET 9 OF 16

FILE => 33-E0113-u-miscdt06.dgn

USERNAME => s124496 DATE PLOTTED => 10-APR-2013 TIME PLOTTED => 08:50

DIST	COUNTY	ROUTE	POST MILES TOTAL PROJECT	SHEET No	TOTAL SHEETS
04	Ala	880	28.4/29.2	711	789

REGISTERED CIVIL ENGINEER — DATE 6/26/12

4-8-13
PLANS APPROVAL DATE

REGISTERED PROFESSIONAL ENGINEER S.McCauley No. 71495 Exp. 12-31-13 CIVIL STATE OF CALIFORNIA

The State of California or its officers or agents shall not be responsible for the accuracy or completeness of electronic copies of this plan sheet.

ALAMEDA COUNTY TRANSPORTATION COMMISSION
1333 BROADWAY, SUITE 220
OAKLAND, CA 94612

RBF CONSULTING
ONE KAISER PLAZA, SUITE 1150
OAKLAND, CA 94612

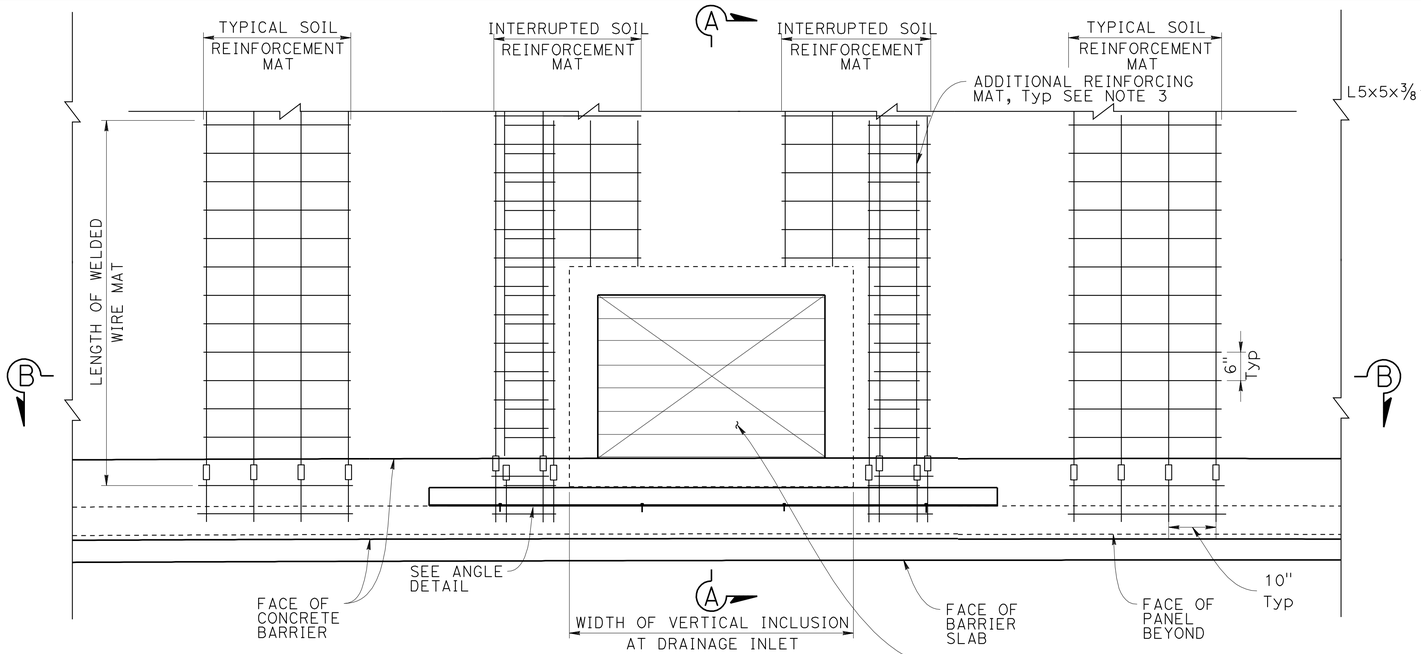

PLAN

¾" = 1'-0"

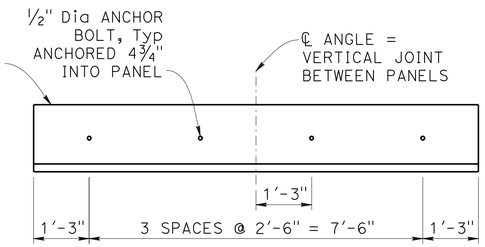

ANGLE DETAIL

NO SCALE

NOTES:

1. For Drainage Details not shown, Including Pipe Size and Type, See DRAINAGE PLANS.
2. Reinforcement Shown is in Addition to all other Reinforcement. See "MSE DETAILS No. 5" Sheet.
3. Adjacent to each side of the Vertical Inclusion, Place an additional Mat of Soil Reinforcement to half of the width of the Vertical Inclusion. Match wire size, wire spacing and length of additional Mats with Typical Soil Reinforcement Mats.

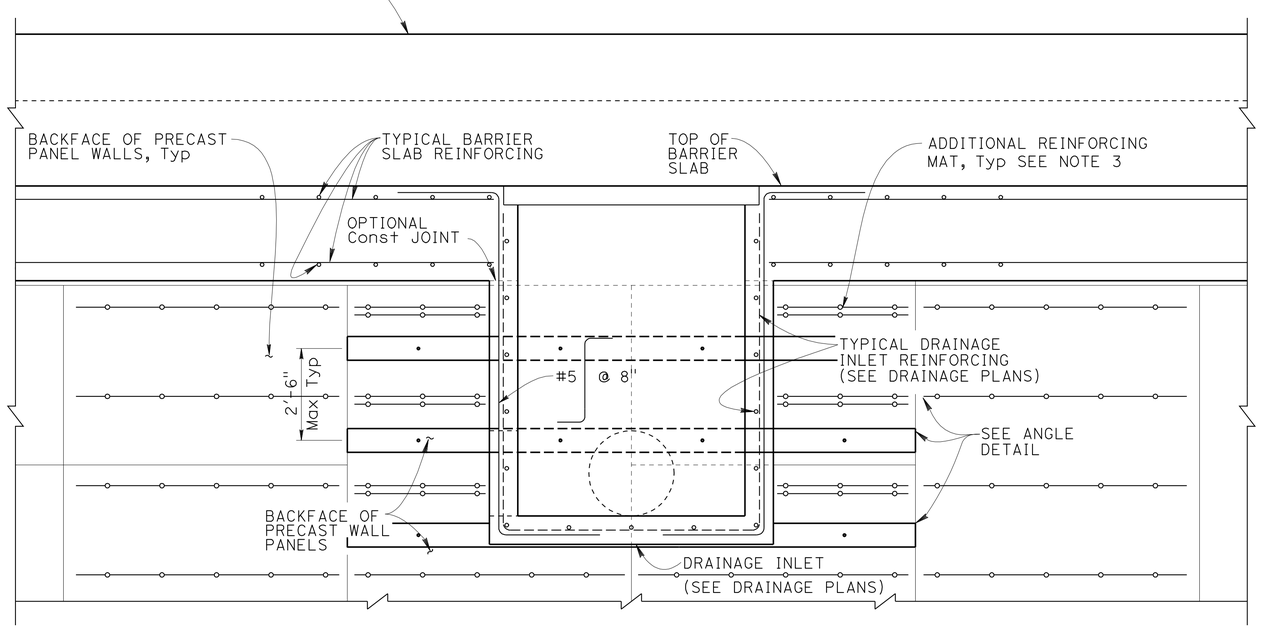

SECTION B-B

¾" = 1'-0"

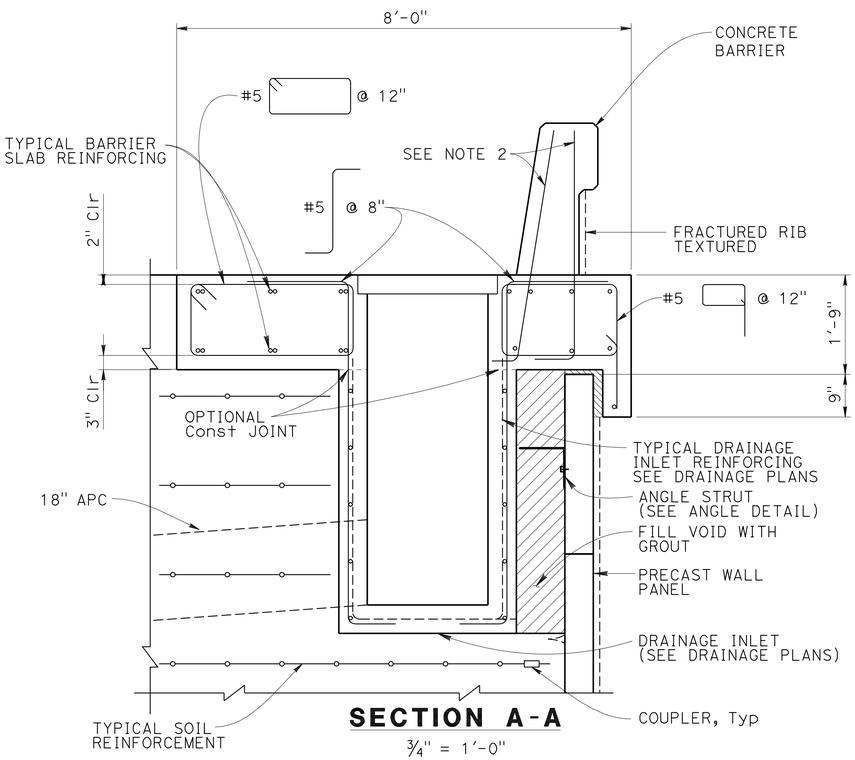

SECTION A-A

¾" = 1'-0"

NOTE:
THE CONTRACTOR SHALL VERIFY ALL CONTROLLING FIELD DIMENSIONS BEFORE ORDERING OR FABRICATING ANY MATERIAL.

RETAINING WALL No. 28

MECHANICALLY STABILIZED EMBANKMENT

DETAILS NO. 7

DESIGN OVERSIGHT — Paul Cotter
7-16-12
SIGN OFF DATE

	BY	CHECKED
DESIGN	S McCauley	C. Cho
DETAILS	J Saldana	S. McCauley
QUANTITIES	C. Cho	S. McCauley

PREPARED FOR THE STATE OF CALIFORNIA DEPARTMENT OF TRANSPORTATION

Chad Harden
PROJECT ENGINEER

BRIDGE NO. 33E0113
POST MILES 28.6

DESIGN DETAIL SHEET (ENGLISH) (REV.7/16/10)

ORIGINAL SCALE IN INCHES FOR REDUCED PLANS 0 1 2 3

UNIT: 0724
PROJECT NUMBER & PHASE: 04000001601
CONTRACT NO.: 04-0A7101

DISREGARD PRINTS BEARING EARLIER REVISION DATES

REVISION DATES: 2/04/11 3/30/12 6/26/12

SHEET 10 OF 16

FILE => 33-E0113-u-miscdt07.dgn

USERNAME => s124496 DATE PLOTTED => 10-APR-2013 TIME PLOTTED => 08:50

DIST	COUNTY	ROUTE	POST MILES TOTAL PROJECT	SHEET No	TOTAL SHEETS
04	Ala	880	28.4/29.2	712	789

Scott McCauley 6/26/12
REGISTERED CIVIL ENGINEER DATE

4-8-13
PLANS APPROVAL DATE

REGISTERED PROFESSIONAL ENGINEER
S.McCauley
No. 71495
Exp. 12-31-13
CIVIL
STATE OF CALIFORNIA

The State of California or its officers or agents shall not be responsible for the accuracy or completeness of electronic copies of this plan sheet.

ALAMEDA COUNTY TRANSPORTATION COMMISSION
1333 BROADWAY, SUITE 220
OAKLAND, CA 94612

RBF CONSULTING
ONE KAISER PLAZA, SUITE 1150
OAKLAND, CA 94612

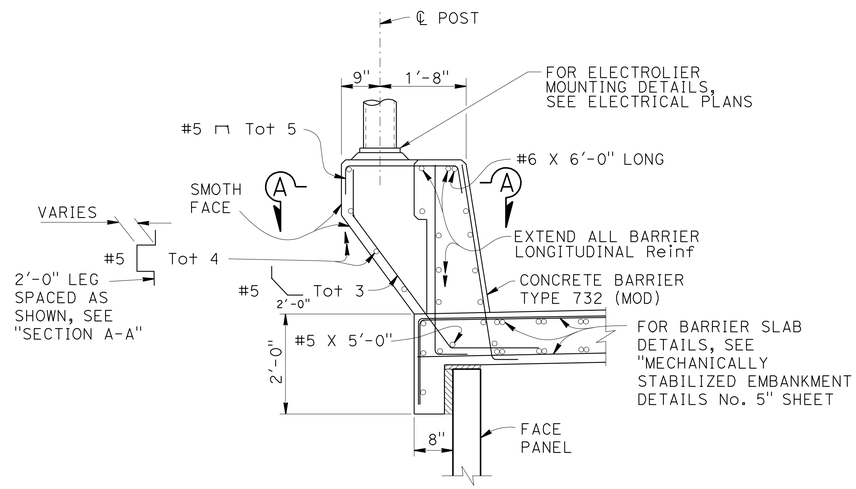

ELEVATION

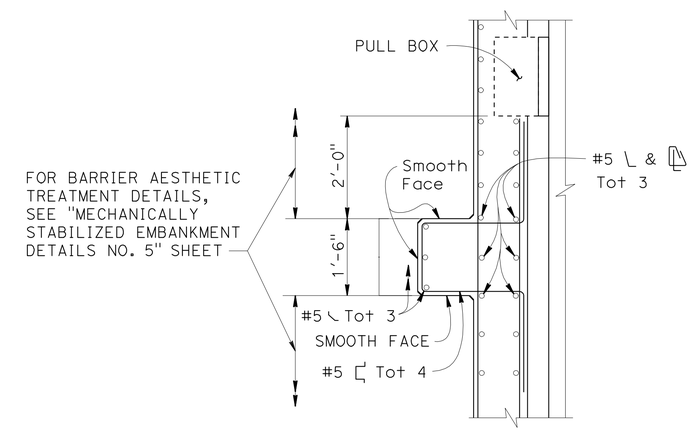

SECTION A-A

NOTE: This Special Detail Supercedes "PEDESTAL ELEVATION" on B11-55, Page 273, of the Standard Plans, Dated May 2006.

ELECTROLIER PEDESTAL ON MSE WALL

NO SCALE

NOTE:
THE CONTRACTOR SHALL VERIFY ALL CONTROLLING FIELD DIMENSIONS BEFORE ORDERING OR FABRICATING ANY MATERIAL.

Paul Cotter
DESIGN OVERSIGHT Paul Cotter
7-16-12
SIGN OFF DATE

	BY	CHECKED
DESIGN	S McCauley	C. Cho
DETAILS	J Saldana	S. McCauley
QUANTITIES	C. Cho	S. McCauley

PREPARED FOR THE
STATE OF CALIFORNIA
DEPARTMENT OF TRANSPORTATION

Chad Harden
PROJECT ENGINEER

BRIDGE NO. 33E0113
POST MILES 28.6

RETAINING WALL No. 28
MECHANICALLY STABILIZED EMBANKMENT DETAILS NO. 8

DESIGN DETAIL SHEET (ENGLISH) (REV.7/16/10)

ORIGINAL SCALE IN INCHES FOR REDUCED PLANS 0 1 2 3

UNIT: 0724
PROJECT NUMBER & PHASE: 04000001601 CONTRACT NO.: 04-0A7101

DISREGARD PRINTS BEARING EARLIER REVISION DATES
REVISION DATES 2/04/11 3/30/12 6/26/12
SHEET 11 OF 16

FILE => 33-E0113-u-miscdt08.dgn

USERNAME => s124936 DATE PLOTTED => 10-APR-2013 TIME PLOTTED => 08:50

DIST	COUNTY	ROUTE	POST MILES TOTAL PROJECT	SHEET No	TOTAL SHEETS
04	Ala	880	28.4/29.2	713	789

REGISTERED CIVIL ENGINEER — DATE 3/29/13

4-8-13
PLANS APPROVAL DATE

REGISTERED PROFESSIONAL ENGINEER S.McCauley No. 71495 Exp. 12-31-13 CIVIL STATE OF CALIFORNIA

The State of California or its officers or agents shall not be responsible for the accuracy or completeness of electronic copies of this plan sheet.

ALAMEDA COUNTY TRANSPORTATION COMMISSION
1333 BROADWAY, SUITE 220
OAKLAND, CA 94612

RBF CONSULTING
ONE KAISER PLAZA, SUITE 1150
OAKLAND, CA 94612

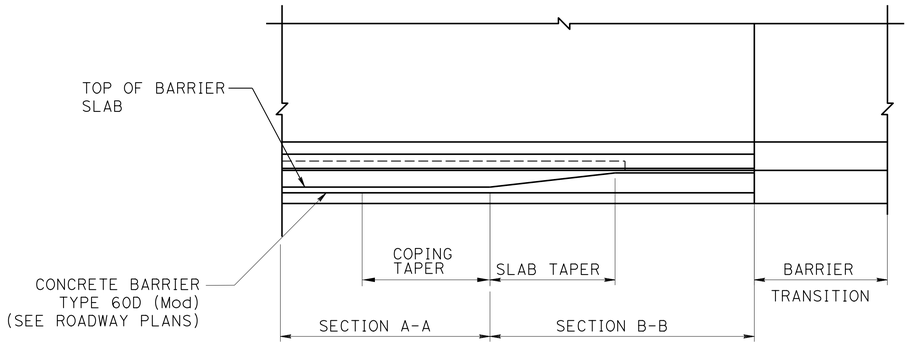

BARRIER SLAB TAPER DETAIL PLAN VIEW

NO SCALE

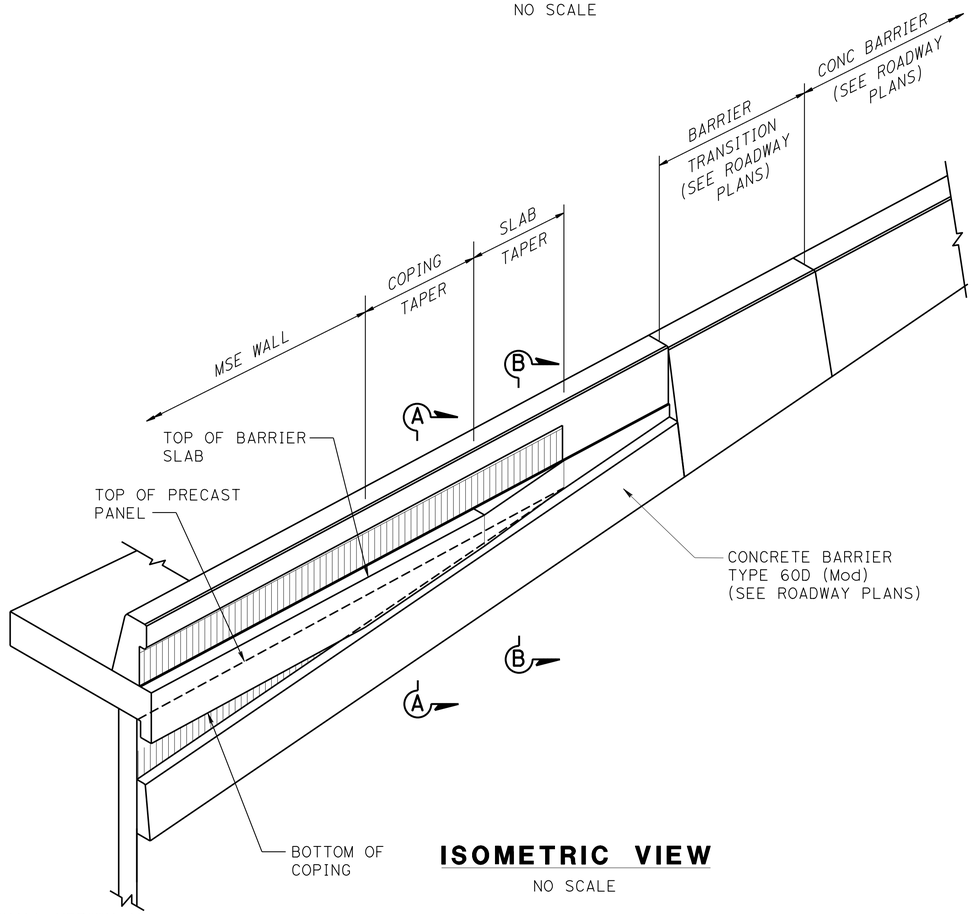

ISOMETRIC VIEW

NO SCALE

NOTE:
THE CONTRACTOR SHALL VERIFY ALL CONTROLLING FIELD DIMENSIONS BEFORE ORDERING OR FABRICATING ANY MATERIAL.

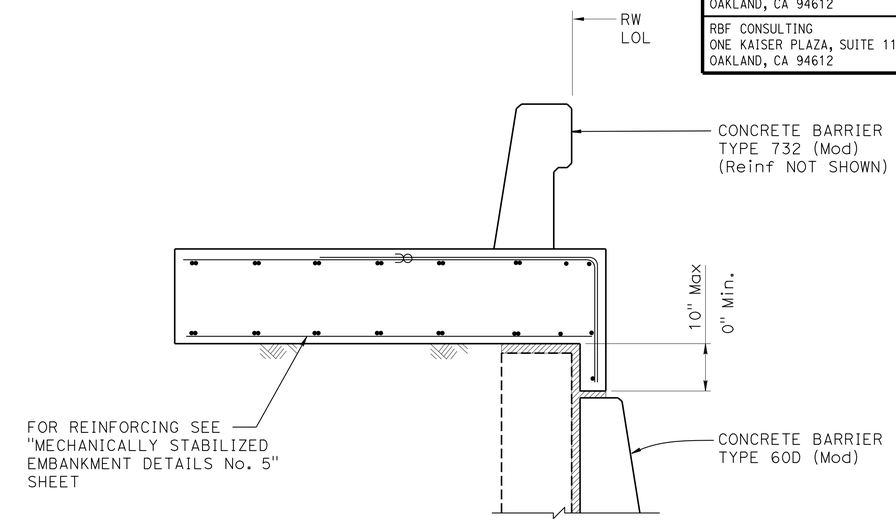

SECTION A-A

3/4" = 1'-0"

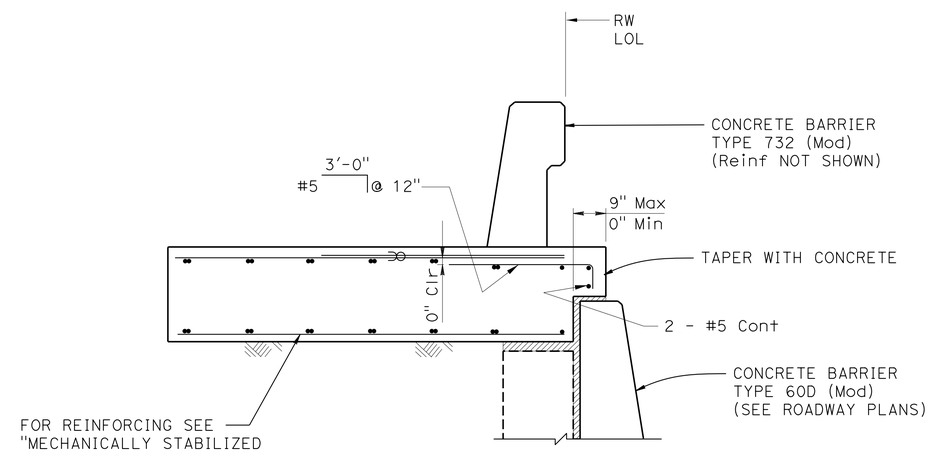

SECTION B-B

3/4" = 1'-0"

RETAINING WALL No. 28

MECHANICALLY STABILIZED EMBANKMENT DETAILS NO. 9

Paul Cotter
DESIGN OVERSIGHT — Paul Cotter
4-3-13
SIGN OFF DATE

	BY	CHECKED
DESIGN	S McCauley	C. Cho
DETAILS	J Saldana	S. McCauley
QUANTITIES	C. Cho	S. McCauley

PREPARED FOR THE STATE OF CALIFORNIA DEPARTMENT OF TRANSPORTATION

Chad Harden
PROJECT ENGINEER

BRIDGE NO. 33E0113
POST MILES 28.6

DESIGN DETAIL SHEET (ENGLISH) (REV.7/16/10)

ORIGINAL SCALE IN INCHES FOR REDUCED PLANS 0 1 2 3

UNIT: 0724
PROJECT NUMBER & PHASE: 04000001601 CONTRACT NO.: 04-0A7101

DISREGARD PRINTS BEARING EARLIER REVISION DATES → REVISION DATES 2/04/11 3/30/12 6/28/12 3/29/13

SHEET 12 OF 16

FILE => 33-E0113-u-miscdt09.dgn

USERNAME => s12614 DATE PLOTTED => 11-APR-2013 TIME PLOTTED => 13:06

DIST	COUNTY	ROUTE	POST MILES TOTAL PROJECT	SHEET No	TOTAL SHEETS
04	Ala	880	28.4/29.2	714	789

Lino Cheang 6-25-12
REGISTERED ENGINEER DATE

4-8-13
PLANS APPROVAL DATE

REGISTERED PROFESSIONAL ENGINEER L. CHEANG NO. GE 2345 EXP. 9-30-13 GEOTECHNICAL STATE OF CALIFORNIA

The State of California or its officers or agents shall not be responsible for the accuracy or completeness of electronic copies of this plan sheet.

ALAMEDA COUNTY TRANSPORTATION COMMISSION
1333 BROADWAY, SUITE 220
OAKLAND, CA 94612

EARTH MECHANICS, INC.
17800 NEWHOPE STREET, SUITE B
FOUNTAIN VALLEY, CA 92708

BENCH MARK:

DESIGNATION: ALA8 ELEV=14.521
FOUND BRASS DISK STAMPED "ALA8" IN THE SIDEWALK AT THE WEST CORNER OF EAST 8TH STREET AND 5TH AVENUE.

DESIGNATION: ALA7 ELEV=15.591
FOUND BRASS DISK STAMPED "ALA7" IN THE SIDEWALK AT THE WEST SIDE OF 7TH STREET ALONG THE NORTH SIDE OF LAKE MERRITT CHANNEL.

DESIGNATION: 8TH/37TH ELEV=20.262
FOUND A CITY OF OAKLAND PIN IN CONCRETE IN A MONUMENT WELL AT THE INTERSECTION OF EAST 8TH STREET AND 37TH AVENUE.

DESIGNATION: ALA13 ELEV=15.318
FOUND BRASS DISK STAMPED "ALA13" INSIDE A 1 INCH IRON PIPE WITH A CONCRETE COLLAR 24.6 FEET NORTH OF THE NORTH SIDE OF HIGH STREET,
56 FEET WEST OF THE WEST SIDE OF THE OFFRAMP FROM SOUTHBOUND STATE ROUTE 880 AND 4.99 FEET SOUTH OF THE SOUTH RAIL OF THE RAILROAD TRACKS.

DESIGNATION: KA121 ELEV=15.768
FOUND 1 INCH IRON PIPE WITH RED PLASTIC PLUG AND TACK STAMPED "CALTRANS" ALONG THE EAST SIDE OF OAKPORT STREET ABOUT 230 FEET SOUTH OF THE SOUTH SIDE OF HIGH STREET, ACROSS FROM 4401 OAKPORT STREET, 6.92 FEET NORTH OF THE FLOWLINE OF THE CURB.

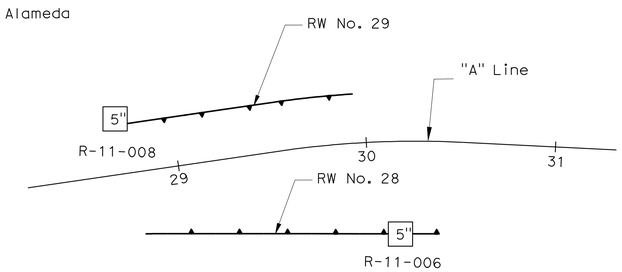

PLAN
1" = 40'

NOTES:

(1) This LOTB sheet was prepared in accordance with the Caltrans Soil and Rock Logging, Classification and Presentation Manual (June 2010).

(2) 2.4" samples were taken using a California Modified Sampler.

(3) An automatic trip hammer system consisting of a hammer weight of 140 lbs falling a distance of 30" was used to advance the drive sampler.

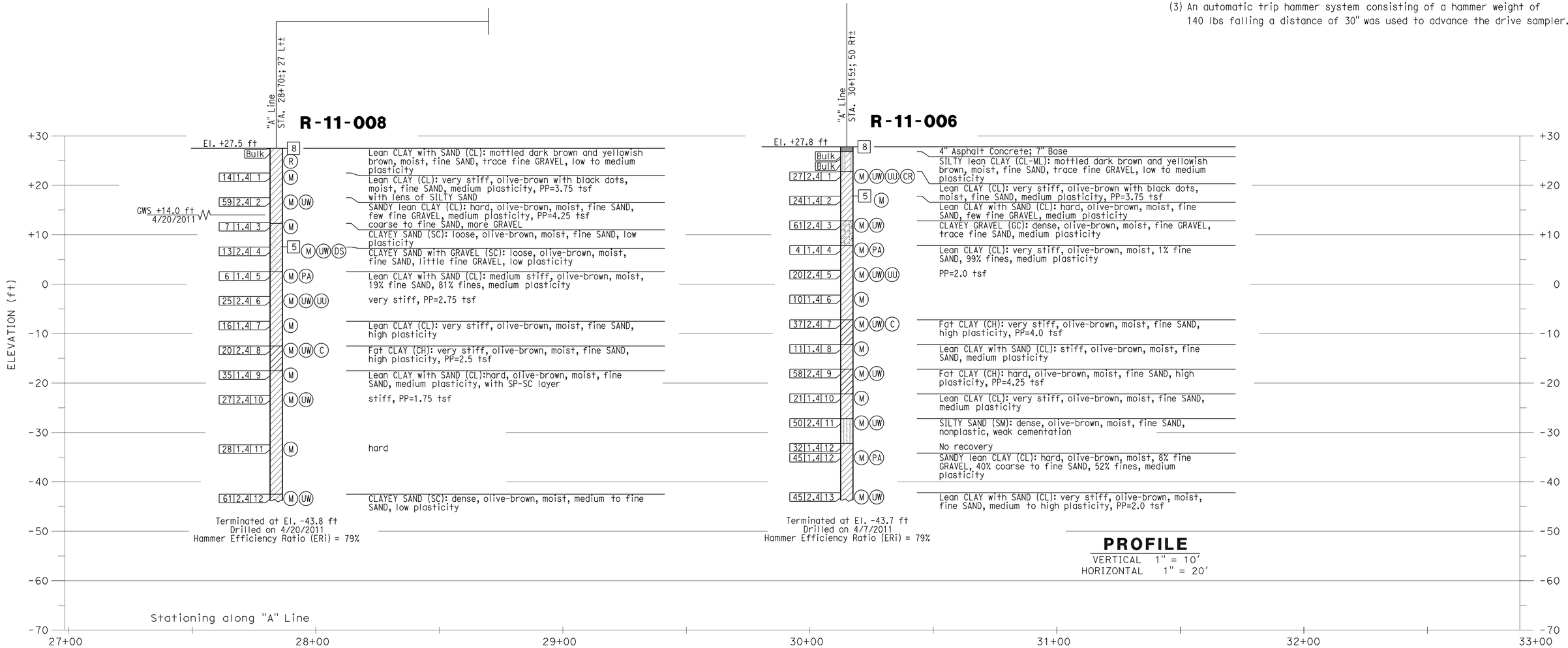

PROFILE
VERTICAL 1" = 10'
HORIZONTAL 1" = 20'

Paul Cotter
DESIGN OVERSIGHT Paul Cotter
7-16-12
SIGN OFF DATE

DRAWN BY J. Fang
CHECKED BY G. J. Gunaranjan

K. Thant
FIELD INVESTIGATION BY:
DATE: 3/2011, 4/2011

PREPARED FOR THE
STATE OF CALIFORNIA
DEPARTMENT OF TRANSPORTATION

L. Cheang
PROJECT ENGINEER

BRIDGE NO. 33E0113
POST MILES 28.6

RETAINING WALL No. 28
LOG OF TEST BORINGS 1 OF 4

GS GEOTECHNICAL LOG OF TEST BORINGS SHEET (ENGLISH) (REV. 7/16/10)

ORIGINAL SCALE IN INCHES FOR REDUCED PLANS 0 1 2 3

UNIT: 0724
PROJECT NUMBER & PHASE: 04000001601

DISREGARD PRINTS BEARING EARLIER REVISION DATES

REVISION DATES

SHEET 13 OF 16

FILE => 33-E0113-z-ltb1.dgn

CONTRACT NO.:04-0A7101 PROJECT ID:

USERNAME => s124496 DATE PLOTTED => 10-APR-2013 TIME PLOTTED => 08:50

DIST	COUNTY	ROUTE	POST MILES TOTAL PROJECT	SHEET No	TOTAL SHEETS
04	880	Ala			

REGISTERED CIVIL ENGINEER — DATE 6/25/12

PLANS APPROVAL DATE

The State of California or its officers or agents shall not be responsible for the accuracy or completeness of electronic copies of this plan sheet.

REGISTERED PROFESSIONAL ENGINEER — Philip Meymand — No. 2596 — Exp. 6/30/13 — GEOTECHNICAL — STATE OF CALIFORNIA

ALAMEDA COUNTY TRANSPORTATION
1333 BROADWAY
OAKLAND, CA 94612

URS CORPORATION
1333 BROADWAY, SUITE 800
OAKLAND, CA 94612

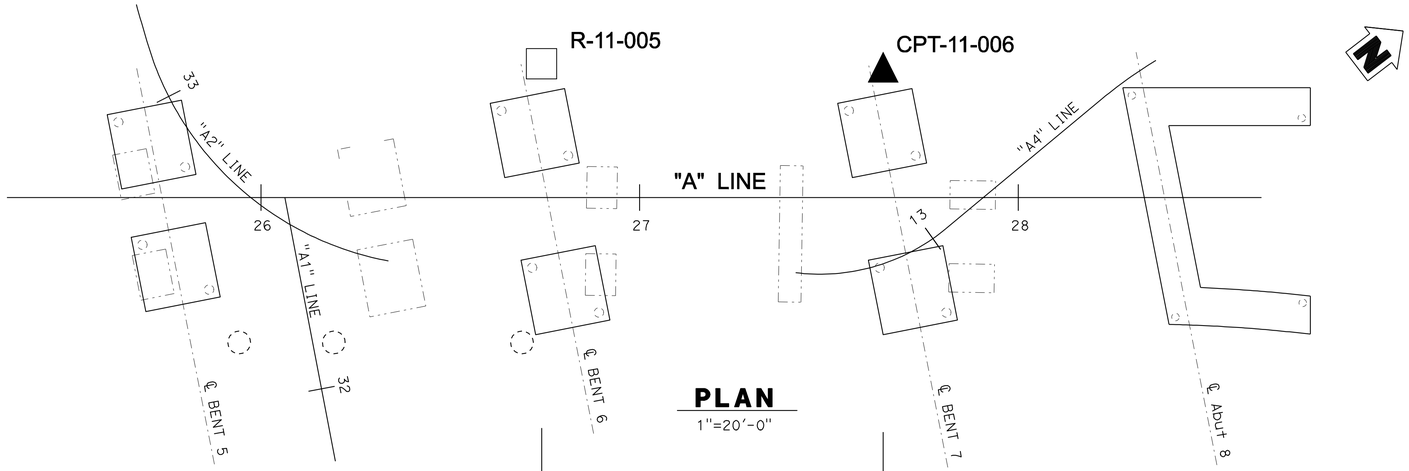

PLAN
1"=20'-0"

NOTES:

1. Ground water table was not measured in the borings due to rotary wash drilling.
2. Hammer energy ratio calibration not performed.
3. The borings were hand augered in the top 5 ft to check for the existence of underground utilities.

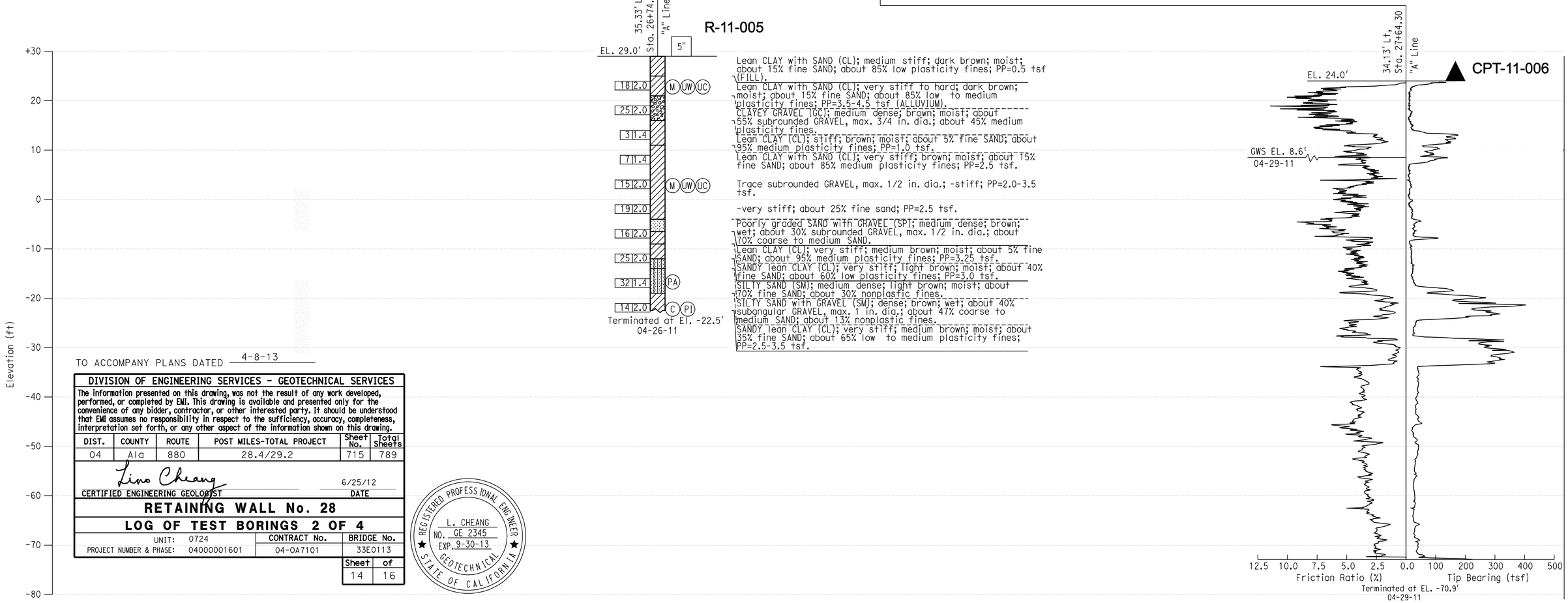

TO ACCOMPANY PLANS DATED 4-8-13

DIVISION OF ENGINEERING SERVICES - GEOTECHNICAL SERVICES

The information presented on this drawing, was not the result of any work developed, performed, or completed by EMI. This drawing is available and presented only for the convenience of any bidder, contractor, or other interested party. It should be understood that EMI assumes no responsibility in respect to the sufficiency, accuracy, completeness, interpretation set forth, or any other aspect of the information shown on this drawing.

DIST.	COUNTY	ROUTE	POST MILES-TOTAL PROJECT	Sheet No.	Total Sheets
04	Ala	880	28.4/29.2	715	789

CERTIFIED ENGINEERING GEOLOGIST — DATE 6/25/12

REGISTERED PROFESSIONAL ENGINEER — L. CHEANG — NO. GE 2345 — EXP. 9-30-13 — GEOTECHNICAL — STATE OF CALIFORNIA

RETAINING WALL No. 28

LOG OF TEST BORINGS 2 OF 4

UNIT: 0724	CONTRACT No.	BRIDGE No.
PROJECT NUMBER & PHASE: 04000001601	04-0A7101	33E0113
		Sheet 14 of 16

DESIGN OVERSIGHT

SIGN OFF DATE

DRAWN BY N. HUTTON

CHECKED BY C. TSAI

S. JANOWSKI
FIELD INVESTIGATION BY:

DATE: 04-25-11 TO 05-04-11

PREPARED FOR THE STATE OF CALIFORNIA DEPARTMENT OF TRANSPORTATION

Jan Hueser
PROJECT ENGINEER

BRIDGE NO. 33-0751
POST MILES 28.69

29TH AVENUE OC (REPLACE)

LOG OF TEST BORINGS 2 OF 2

GS CIVIL LOG OF TEST BORINGS SHEET (ENGLISH) (REV. 7/16/10)

ORIGINAL SCALE IN INCHES FOR REDUCED PLANS 0 1 2 3

UNIT: 0724
PROJECT NUMBER & PHASE: 04000001601 CONTRACT NO.: 04-0A7101

DISREGARD PRINTS BEARING EARLIER REVISION DATES

REVISION DATES 9-6-11 1-30-12 3-30-12 6-25-12

SHEET 59 OF 60

USERNAME => s124496 DATE PLOTTED => 10-APR-2013 TIME PLOTTED => 08:50

FILE => 33-E0113-z-ltb2.dgn

DIST	COUNTY	ROUTE	POST MILES TOTAL PROJECT	SHEET No	TOTAL SHEETS
04	Ala	880	28.4/29.2	716	789

Lino Cheang 6-25-12
REGISTERED ENGINEER DATE

4-8-13
PLANS APPROVAL DATE

REGISTERED PROFESSIONAL ENGINEER L. CHEANG NO. GE 2345 EXP. 9-30-13 GEOTECHNICAL STATE OF CALIFORNIA

The State of California or its officers or agents shall not be responsible for the accuracy or completeness of electronic copies of this plan sheet.

ALAMEDA COUNTY TRANSPORTATION COMMISSION
1333 BROADWAY, SUITE 220
OAKLAND, CA 94612

EARTH MECHANICS, INC.
17800 NEWHOPE STREET, SUITE B
FOUNTAIN VALLEY, CA 92708

REFERENCE: CALTRANS SOIL & ROCK LOGGING, CLASSIFICATION, AND PRESENTATION MANUAL (2010)

CEMENTATION

Description	Criteria
Weak	Crumbles or breaks with handling or little finger pressure.
Moderate	Crumbles or breaks with considerable finger pressure.
Strong	Will not crumble or break with finger pressure.

BOREHOLE IDENTIFICATION

Symbol	Hole Type	Description
Size	A	Auger Boring (hollow or solid stem bucket)
Size	R RW RC P	Rotary drilled boring (conventional) Rotary drilled with self-casing wire-line Rotary core with continuously-sampled, self-casing wire-line Rotary percussion boring (air)
Size	R	Rotary drilled diamond core
Size	HD HA	Hand driven (1-inch soil tube) Hand Auger
●	D	Dynamic Cone Penetration Boring
▲	CPT	Cone Penetration Test (ASTM D 5778)
⬚	O	Other (note on LOTB)

Note: Size in inches.

CONSISTENCY OF COHESIVE SOILS

Description	Shear Strength (tsf)	Pocket Penetrometer Measurement, PP, (tsf)	Torvane Measurement, TV, (tsf)	Vane Shear Measurement, VS, (tsf)
Very Soft	Less than 0.12	Less than 0.25	Less than 0.12	Less than 0.12
Soft	0.12 - 0.25	0.25 - 0.5	0.12 - 0.25	0.12 - 0.25
Medium Stiff	0.25 - 0.5	0.5 - 1	0.25 - 0.5	0.25 - 0.5
Stiff	0.5 - 1	1 - 2	0.5 - 1	0.5 - 1
Very Stiff	1 - 2	2 - 4	1 - 2	1 - 2
Hard	Greater than 2	Greater than 4	Greater than 2	Greater than 2

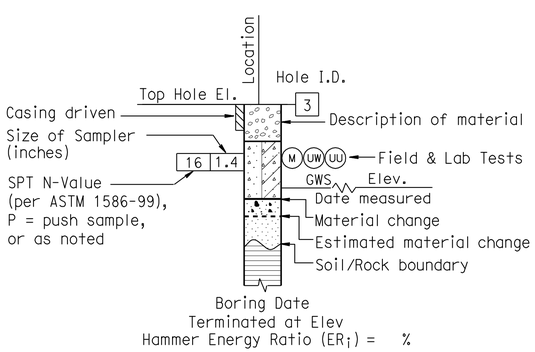

ROTARY BORING

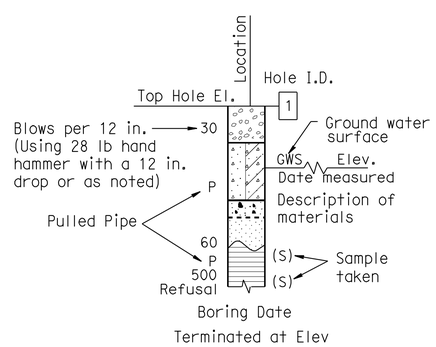

HAND BORING

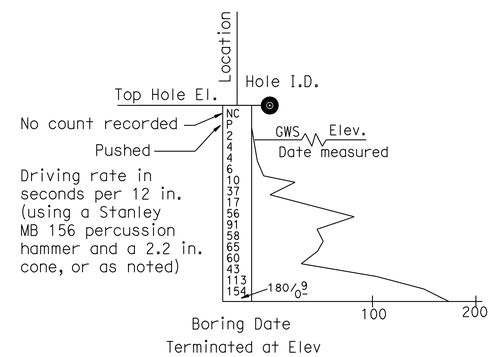

DYNAMIC CONE PENETRATION BORING

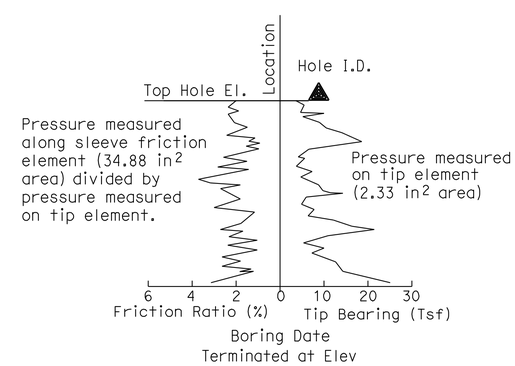

CONE PENETRATION TEST (CPT) BORING

Paul Cotter
DESIGN OVERSIGHT Paul Cotter
7-16-12
SIGN OFF DATE

DRAWN BY J. Fang
CHECKED BY G. J. Gunaranjan

K. Thant
FIELD INVESTIGATION BY:
DATE: 3/2011, 4/2011

PREPARED FOR THE STATE OF CALIFORNIA DEPARTMENT OF TRANSPORTATION

L. Cheang
PROJECT ENGINEER

BRIDGE NO. 33E0113
POST MILES 28.6

RETAINING WALL No. 28
LOG OF TEST BORINGS 3 OF 4

GS GEOTECHNICAL LOG OF TEST BORINGS SHEET (ENGLISH) (REV. 7/16/10)

ORIGINAL SCALE IN INCHES FOR REDUCED PLANS 0 1 2 3

UNIT: 0724
PROJECT NUMBER & PHASE: 04000001601

DISREGARD PRINTS BEARING EARLIER REVISION DATES

REVISION DATES

SHEET 15 OF 16

FILE => 33-E0113-z-soil legend-ltb1.dgn

CONTRACT NO.:04-0A7101 PROJECT ID:

USERNAME => s124496 DATE PLOTTED => 10-APR-2013 TIME PLOTTED => 08:51

REFERENCE: CALTRANS SOIL & ROCK LOGGING, CLASSIFICATION, AND PRESENTATION MANUAL (2010)

DIST	COUNTY	ROUTE	POST MILES TOTAL PROJECT	SHEET No	TOTAL SHEETS
04	Ala	880	28.4/29.2	717	789

Lino Cheang
REGISTERED ENGINEER — DATE 6-25-12

4-8-13
PLANS APPROVAL DATE

REGISTERED PROFESSIONAL ENGINEER — L. CHEANG — NO. GE 2345 — EXP. 9-30-13 — GEOTECHNICAL — STATE OF CALIFORNIA

The State of California or its officers or agents shall not be responsible for the accuracy or completeness of electronic copies of this plan sheet.

ALAMEDA COUNTY TRANSPORTATION COMMISSION
1333 BROADWAY, SUITE 220
OAKLAND, CA 94612

EARTH MECHANICS, INC.
17800 NEWHOPE STREET, SUITE B
FOUNTAIN VALLEY, CA 92708

GROUP SYMBOLS AND NAMES

Graphic/Symbol	Group Names	Graphic/Symbol	Group Names
GW	Well-graded GRAVEL Well-graded GRAVEL with SAND	CL	Lean CLAY Lean CLAY with SAND Lean CLAY with GRAVEL SANDY lean CLAY SANDY lean CLAY with GRAVEL GRAVELLY lean CLAY GRAVELLY lean CLAY with SAND
GP	Poorly-graded GRAVEL Poorly-graded GRAVEL with SAND		
GW-GM	Well-graded GRAVEL with SILT Well-graded GRAVEL with SILT and SAND	CL-ML	SILTY CLAY SILTY CLAY with SAND SILTY CLAY with GRAVEL SANDY SILTY CLAY SANDY SILTY CLAY with GRAVEL GRAVELLY SILTY CLAY GRAVELLY SILTY CLAY with SAND
GW-GC	Well-graded GRAVEL with CLAY (or SILTY CLAY) Well-graded GRAVEL with CLAY and SAND (or SILTY CLAY and SAND)		
GP-GM	Poorly-graded GRAVEL with SILT Poorly-graded GRAVEL with SILT and SAND	ML	SILT SILT with SAND SILT with GRAVEL SANDY SILT SANDY SILT with GRAVEL GRAVELLY SILT GRAVELLY SILT with SAND
GP-GC	Poorly-graded GRAVEL with CLAY (or SILTY CLAY) Poorly-graded GRAVEL with CLAY and SAND (or SILTY CLAY and SAND)		
GM	SILTY GRAVEL SILTY GRAVEL with SAND	OL	ORGANIC lean CLAY ORGANIC lean CLAY with SAND ORGANIC lean CLAY with GRAVEL SANDY ORGANIC lean CLAY SANDY ORGANIC lean CLAY with GRAVEL GRAVELLY ORGANIC lean CLAY GRAVELLY ORGANIC lean CLAY with SAND
GC	CLAYEY GRAVEL CLAYEY GRAVEL with SAND		
GC-GM	SILTY, CLAYEY GRAVEL SILTY, CLAYEY GRAVEL with SAND	OL	ORGANIC SILT ORGANIC SILT with SAND ORGANIC SILT with GRAVEL SANDY ORGANIC SILT SANDY ORGANIC SILT with GRAVEL GRAVELLY ORGANIC SILT GRAVELLY ORGANIC SILT with SAND
SW	Well-graded SAND Well-graded SAND with GRAVEL		
SP	Poorly-graded SAND Poorly-graded SAND with GRAVEL	CH	Fat CLAY Fat CLAY with SAND Fat CLAY with GRAVEL SANDY fat CLAY SANDY fat CLAY with GRAVEL GRAVELLY fat CLAY GRAVELLY fat CLAY with SAND
SW-SM	Well-graded SAND with SILT Well-graded SAND with SILT and GRAVEL		
SW-SC	Well-graded SAND with CLAY (or SILTY CLAY) Well-graded SAND with CLAY and GRAVEL (or SILTY CLAY and GRAVEL)	MH	Elastic SILT Elastic SILT with SAND Elastic SILT with GRAVEL SANDY elastic SILT SANDY elastic SILT with GRAVEL GRAVELLY elastic SILT GRAVELLY elastic SILT with SAND
SP-SM	Poorly-graded SAND with SILT Poorly-graded SAND with SILT and GRAVEL		
SP-SC	Poorly-graded SAND with CLAY (or SILTY CLAY) Poorly-graded SAND with CLAY and GRAVEL (or SILTY CLAY and GRAVEL)	OH	ORGANIC fat CLAY ORGANIC fat CLAY with SAND ORGANIC fat CLAY with GRAVEL SANDY ORGANIC fat CLAY SANDY ORGANIC fat CLAY with GRAVEL GRAVELLY ORGANIC fat CLAY GRAVELLY ORGANIC fat CLAY with SAND
SM	SILTY SAND SILTY SAND with GRAVEL		
SC	CLAYEY SAND CLAYEY SAND with GRAVEL	OH	ORGANIC elastic SILT ORGANIC elastic SILT with SAND ORGANIC elastic SILT with GRAVEL SANDY ORGANIC elastic SILT SANDY ORGANIC elastic SILT with GRAVEL GRAVELLY ORGANIC elastic SILT GRAVELLY ORGANIC elastic SILT with SAND
SC-SM	SILTY, CLAYEY SAND SILTY, CLAYEY SAND with GRAVEL		
PT	PEAT	OL/OH	ORGANIC SOIL ORGANIC SOIL with SAND ORGANIC SOIL with GRAVEL SANDY ORGANIC SOIL SANDY ORGANIC SOIL with GRAVEL GRAVELLY ORGANIC SOIL GRAVELLY ORGANIC SOIL with SAND
	COBBLES COBBLES and BOULDERS BOULDERS		

FIELD AND LABORATORY TESTING

- (C) Consolidation (ASTM D 2435)
- (CL) Collapse Potential (ASTM D 5333)
- (CP) Compaction Curve (CTM 216)
- (CR) Corrosivity Testing (CTM 643, CTM 422, CTM 417)
- (CU) Consolidated Undrained Triaxial (ASTM D 4767)
- (DS) Direct Shear (ASTM D 3080)
- (EI) Expansion Index (ASTM D 4829)
- (M) Moisture Content (ASTM D 2216)
- (OC) Organic Content-% (ASTM D 2974)
- (P) Permeability (CTM 220)
- (PA) Particle Size Analysis (ASTM D 422)
- (PI) Plasticity Index (AASHTO T 90) Liquid Limit (AASHTO T 89)
- (PL) Point Load Index (ASTM D 5731)
- (PM) Pressure Meter
- (R) R-Value (CTM 301)
- (SE) Sand Equivalent (CTM 217)
- (SG) Specific Gravity (AASHTO T 100)
- (SL) Shrinkage Limit (ASTM D 427)
- (SW) Swell Potential (ASTM D 4546)
- (UC) Unconfined Compression-Soil (ASTM D 2166) Unconfined Compression-Rock (ASTM D 2938)
- (UU) Unconsolidated Undrained Triaxial (ASTM D 2850)
- (UW) Unit Weight (ASTM D 4767)

APPARENT DENSITY OF COHESIONLESS SOILS

Description	SPT N_{60} (Blows / 12 in.)
Very Loose	0 - 5
Loose	5 - 10
Medium Dense	10 - 30
Dense	30 - 50
Very Dense	Greater than 50

MOISTURE

Description	Criteria
Dry	No discernable moisture
Moist	Moisture present, but no free water
Wet	Visible free water

PERCENT OR PROPORTION OF SOILS

Description	Criteria
Trace	Particles are present but estimated to be less than 5%
Few	5% - 10%
Little	15% - 25%
Some	30% - 45%
Mostly	50% - 100%

PARTICLE SIZE

Description		Size (in.)
Boulder		Greater than 12
Cobble		3 - 12
Gravel	Coarse	3/4 - 3
	Fine	1/5 - 3/4
Sand	Coarse	1/16 - 1/5
	Medium	1/64 - 1/16
	Fine	1/300 - 1/64
Silt and Clay		Less than 1/300

Paul Cotter
DESIGN OVERSIGHT Paul Cotter
7-16-12
SIGN OFF DATE

DRAWN BY J. Fang
CHECKED BY G. J. Gunaranjan

K. Thant
FIELD INVESTIGATION BY:
DATE: 3/2011, 4/2011

PREPARED FOR THE STATE OF CALIFORNIA DEPARTMENT OF TRANSPORTATION

L. Cheang
PROJECT ENGINEER

BRIDGE NO. 33E0113
POST MILES 28.6

RETAINING WALL No. 28
LOG OF TEST BORINGS 4 OF 4

GS GEOTECHNICAL LOG OF TEST BORINGS SHEET (ENGLISH) (REV. 7/16/10)

ORIGINAL SCALE IN INCHES FOR REDUCED PLANS 0 1 2 3

UNIT: 0724
PROJECT NUMBER & PHASE: 04000001601

DISREGARD PRINTS BEARING EARLIER REVISION DATES

REVISION DATES

SHEET 16 OF 16

FILE => 33-E0113-z-soil legend-ltb2.dgn

CONTRACT NO.:04-0A7101 PROJECT ID:

USERNAME => s124496 DATE PLOTTED => 10-APR-2013 TIME PLOTTED => 08:51

DIST	COUNTY	ROUTE	POST MILES TOTAL PROJECT	SHEET No	TOTAL SHEETS
04	Ala	880	28.4/29.2	718	789

REGISTERED CIVIL ENGINEER — DATE 6/26/12

4-8-13
PLANS APPROVAL DATE

REGISTERED PROFESSIONAL ENGINEER S.McCauley No. 71495 Exp. 12-31-13 CIVIL STATE OF CALIFORNIA

The State of California or its officers or agents shall not be responsible for the accuracy or completeness of electronic copies of this plan sheet.

ALAMEDA COUNTY TRANSPORTATION COMMISSION
1333 BROADWAY, SUITE 220
OAKLAND, CA 94612

RBF CONSULTING
ONE KAISER PLAZA, SUITE 1150
OAKLAND, CA 94612

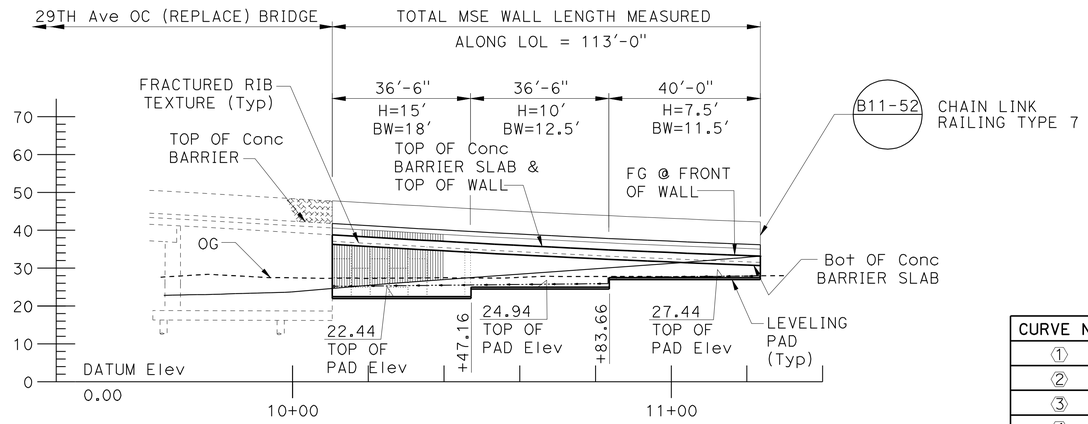

MIRRORED ELEVATION

SCALE: 1" = 20'

CURVE DATA

CURVE No.	R	△	T	L
①	500.00'	11°06'24"	48.61'	96.92'
②	526.00'	04°37'01"	21.20'	42.39'
③	552.00'	06°26'11"	31.04'	62.01'
④	120.00'	54°07'09"	61.30'	113.35'

TANGENT DATA

①	N37°40'35"E	④	N39°34'15"E
②	N48°46'59"E	⑤	N46°00'25"E
③	N37°40'35"E	⑥	S52°02'44"W

LEGEND:

- Indicates Direction of Traffic
- Drainage Inlet, See NOTE 7
- Underdrain Pipe Flow Line See Note 6

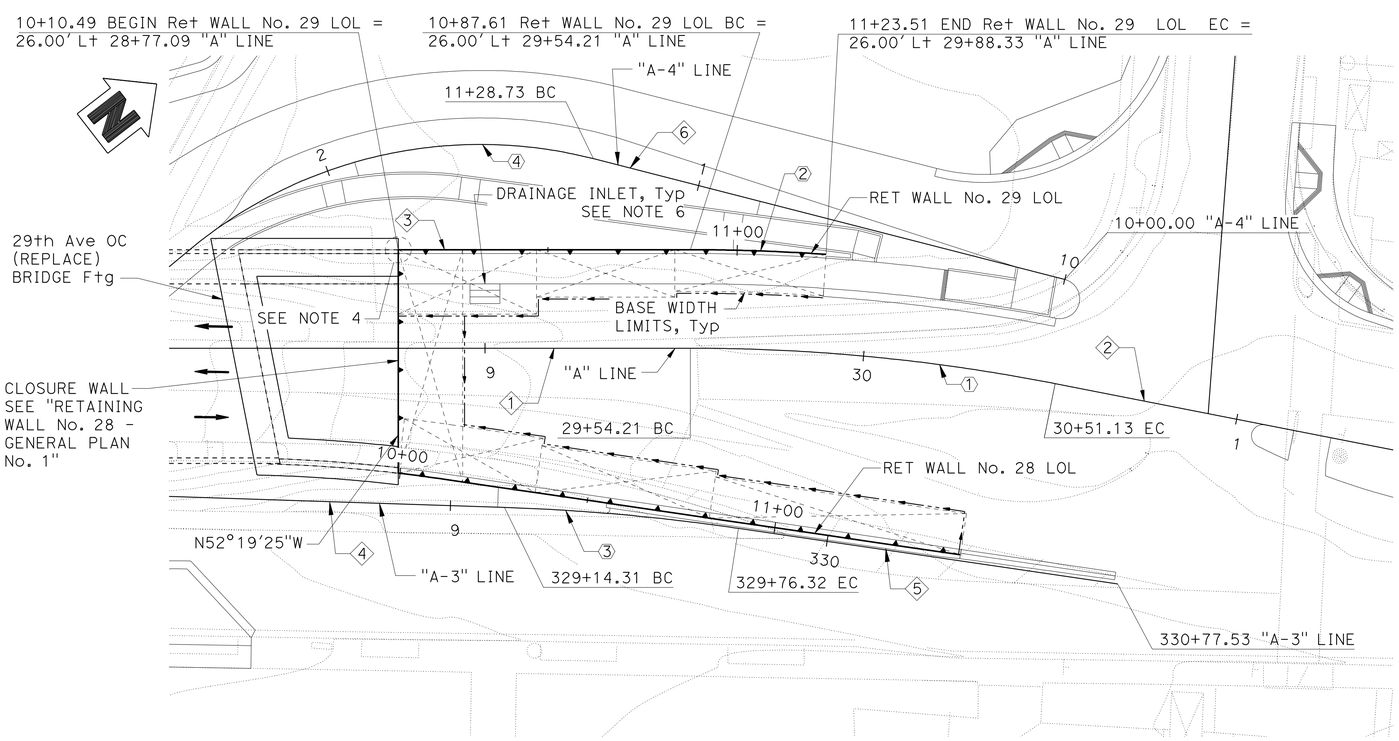

PLAN

SCALE: 1" = 20'

RETAINING WALL 29

QUANTITIES

MECHANICALLY STABILIZED EMBANKMENT	1,026	SQFT
STRUCTURAL CONCRETE, BARRIER SLAB	72	CY
CHAIN LINK RAILING (TYPE 7)	113	LF
CONCRETE BARRIER (TYPE 26 MODIFIED)	113	LF

NOTES:

1. "BW" indicates Base Width. "H" Indicates Design Height.
2. For Utility Information not Shown, See Roadway Plans.
3. For the Typical Section, See "GENERAL PLAN No. 2" Sheet.
4. For Corner Details, see "MSE EMBANKMENT DETAILS No. 3" Sheet.
5. Inspection Wire Layout, See "LAYOUT" Sheet.
6. For Wall Drainage Details, See "MECHANICALLY STABILIZED EMBANKMENT DETAILS No. 4" Sheet.

NOTE:
THE CONTRACTOR SHALL VERIFY ALL CONTROLLING FIELD DIMENSIONS BEFORE ORDERING OR FABRICATING ANY MATERIAL.

DESIGN OVERSIGHT Paul Cotter
7-16-12
SIGN OFF DATE

	BY	CHECKED
DESIGN	S. McCauley	C. Cho
DETAILS	J. Saldana	S. McCauley
QUANTITIES	C. Cho	S. McCauley

LOAD & RESISTANCE FACTOR DESIGN — LIVE LOADING: HL93 W/"LOW-BOY"; PERMIT DESIGN VEHICLE

	BY	CHECKED
LAYOUT	J. Saldana	S. McCauley
SPECIFICATIONS	C. Harden	PLANS AND SPECS COMPARED S. Sheikh

PREPARED FOR THE STATE OF CALIFORNIA DEPARTMENT OF TRANSPORTATION

Chad Harden
PROJECT ENGINEER

BRIDGE NO. 33E0114
POST MILES 28.6

RETAINING WALL No. 29
GENERAL PLAN No. 1

DESIGN GENERAL PLAN SHEET (ENGLISH) (REV.7/16/10)

ORIGINAL SCALE IN INCHES FOR REDUCED PLANS 0 1 2 3

UNIT: 0724
PROJECT NUMBER & PHASE: 04000001601 CONTRACT NO.: 04-0A7101

DISREGARD PRINTS BEARING EARLIER REVISION DATES → REVISION DATES 2/04/11 3/30/12 6/26/12

SHEET 1 OF 13

FILE => 33-E0114-a-gp01.dgn

USERNAME => s124496 DATE PLOTTED => 10-APR-2013 TIME PLOTTED => 08:51

DIST	COUNTY	ROUTE	POST MILES TOTAL PROJECT	SHEET No	TOTAL SHEETS
04	Ala	880	28.4/29.2	719	789

REGISTERED CIVIL ENGINEER — DATE 6/26/12

4-8-13
PLANS APPROVAL DATE

REGISTERED PROFESSIONAL ENGINEER S.McCauley No. 71495 Exp. 12-31-13 CIVIL STATE OF CALIFORNIA

The State of California or its officers or agents shall not be responsible for the accuracy or completeness of electronic copies of this plan sheet.

ALAMEDA COUNTY TRANSPORTATION COMMISSION
1333 BROADWAY, SUITE 220
OAKLAND, CA 94612

RBF CONSULTING
ONE KAISER PLAZA, SUITE 1150
OAKLAND, CA 94612

TOP OF WALL ELEVATION TABLE

	WALL LOL Station	TOP OF WALL Elev (Ft)
Beg Ret WALL No. 29	10+10.49	38.77
	+20	38.22
	+30	37.64
	+40	37.07
	+50	36.52
	+60	36.00
	+70	35.49
	+80	35.00
	+90	34.54
	11+00.00	34.12
	+10	33.71
	+20	33.32
END Ret WALL No. 29	11+23.51	33.19

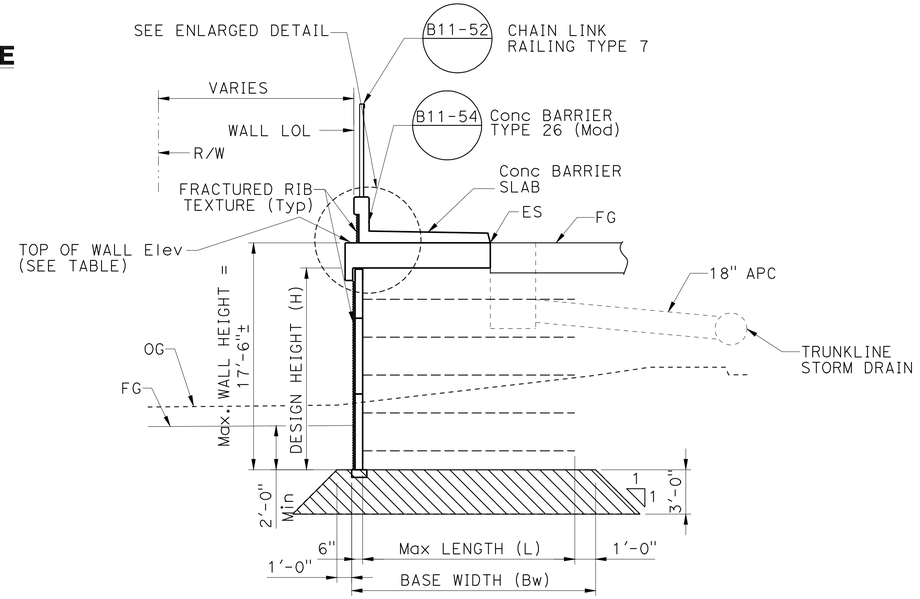

TYPICAL SECTION

NO SCALE

LEGEND:

Overexcavation depth

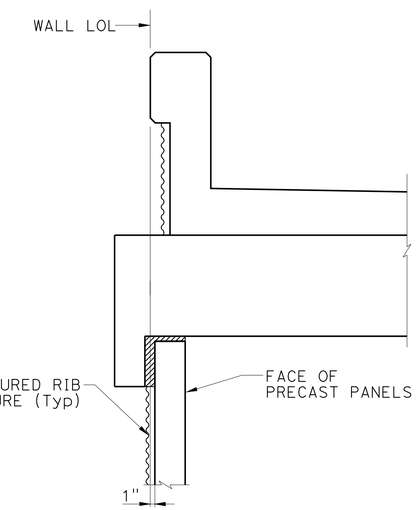

ENLARGED DETAIL

NO SCALE

SHEET NO.	TITLE
1	GENERAL PLAN NO. 1
2	GENERAL PLAN NO. 2
3	LAYOUT
4	MECHANICALLY STABILIZED EMBANKMENT - DETAILS NO. 1
5	MECHANICALLY STABILIZED EMBANKMENT - DETAILS NO. 2
6	MECHANICALLY STABILIZED EMBANKMENT - DETAILS NO. 3
7	MECHANICALLY STABILIZED EMBANKMENT - DETAILS NO. 4
8	MECHANICALLY STABILIZED EMBANKMENT - DETAILS NO. 5
9	MECHANICALLY STABILIZED EMBANKMENT - DETAILS NO. 6
10	LOG OF TEST BORING 1 OF 2
11	LOG OF TEST BORING 2 OF 2
12	SOIL LEGEND LOG OF TEST BORINGS 1 OF 2
13	SOIL LEGEND LOG OF TEST BORINGS 2 OF 2

STANDARD PLANS DATED MAY 2006

A10A	ACRONYMS AND ABBREVIATIONS (SHEET 1 OF 2)
A10B	ACRONYMS AND ABBREVIATIONS (SHEET 2 OF 2)
A10C	SYMBOLS (SHEET 1 OF 2)
A10D	SYMBOLS (SHEET 2 OF 2)
A62B	LIMITS OF PAYMENT FOR EXCAVATION AND BACKFILL BRIDGE SURCHARGE AND WALL
BO-3	BRIDGE DETAILS
B11-52	CHAIN LINK RAILING TYPE 7
B11-54	CONCRETE BARRIER TYPE 26

STANDARD PLAN SHEET No.

DETAIL No.

NOTE:
THE CONTRACTOR SHALL VERIFY ALL CONTROLLING FIELD DIMENSIONS BEFORE ORDERING OR FABRICATING ANY MATERIAL.

NOTES:

1. For All Pipes and Drainage Inlet and Outlet Locations, See ROADWAY PLANS.
2. For Existing Pipes and Utilities, See ROADWAY PLANS.

Paul Cotter
DESIGN OVERSIGHT — Paul Cotter
8-8-12
SIGN OFF DATE

	BY	CHECKED
DESIGN	S. McCauley	C. Cho
DETAILS	J. Saldana	S. McCauley
QUANTITIES	C. Cho	S. McCauley

LOAD & RESISTANCE FACTOR DESIGN — LIVE LOADING: HL93 W/"LOW-BOY"; PERMIT DESIGN VEHICLE

	BY	CHECKED
LAYOUT	J. Saldana	S. McCauley
SPECIFICATIONS	C. Harden	PLANS AND SPECS COMPARED S. Sheikh

PREPARED FOR THE STATE OF CALIFORNIA DEPARTMENT OF TRANSPORTATION

Chad Harden
PROJECT ENGINEER

BRIDGE NO. 33E0114
POST MILES 28.6

RETAINING WALL No. 29
GENERAL PLAN No. 2

DESIGN GENERAL PLAN SHEET (ENGLISH) (REV.7/16/10)

ORIGINAL SCALE IN INCHES FOR REDUCED PLANS 0 1 2 3

UNIT: 0724
PROJECT NUMBER & PHASE: 04000001601 CONTRACT NO.: 04-0A7101

DISREGARD PRINTS BEARING EARLIER REVISION DATES — REVISION DATES 2/24/11 3/30/12 6/26/12

SHEET 2 OF 13

FILE => 33-E0114-a-gp02.dgn

USERNAME => s124196 DATE PLOTTED => 10-APR-2013 TIME PLOTTED => 08:51

DIST	COUNTY	ROUTE	POST MILES TOTAL PROJECT	SHEET No	TOTAL SHEETS
04	Ala	880	28.4/29.2	720	789

REGISTERED CIVIL ENGINEER — DATE 6/26/12

4-8-13
PLANS APPROVAL DATE

REGISTERED PROFESSIONAL ENGINEER S.McCauley No. 71495 Exp. 12-31-13 CIVIL STATE OF CALIFORNIA

The State of California or its officers or agents shall not be responsible for the accuracy or completeness of electronic copies of this plan sheet.

ALAMEDA COUNTY TRANSPORTATION COMMISSION
1333 BROADWAY, SUITE 220
OAKLAND, CA 94612

RBF CONSULTING
ONE KAISER PLAZA, SUITE 1150
OAKLAND, CA 94612

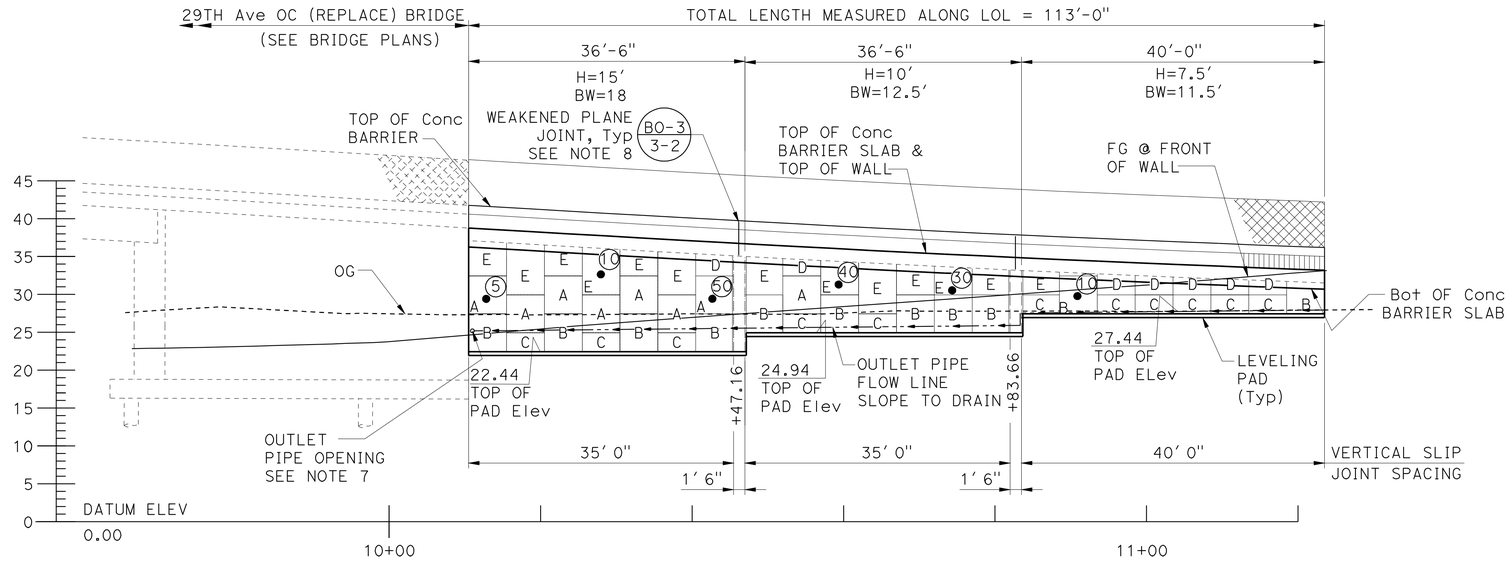

MIRRORED ELEVATION

SCALE: 1" = 10'

PANEL	DESCRIPTION
A	INTERMEDIATE PANEL
B	BOTTOM PANEL
C	BOTTOM HALF PANEL
D	TOP HALF PANEL
E	TOP PANEL WITH MULTIPLE MATS

LEGEND:

Indicates Interval in Years from Time of Construction to Time of Removal of Inspection Wire

Indicates Inspection Wire Panel (See Note 6)

Indicates Panel Type (See Note 4)

Underdrain Pipe Flow Line

NOTES:

1. "BW" Indicates Base Width. "H" Indicates Design Height.
2. MSE Indicates "MECHANICALLY STABILIZED EMBANKMENT".
3. For General Notes, see "MECHANICALLY STABILIZED EMBANKMENT DETAILS No. 2" Sheet.
4. For Precast Panel Detail and Reinforcing not shown, See "MECHANICALLY STABILIZED EMBANKMENT DETAILS No. 1" and "MECHANICALLY STABILIZED EMBANKMENT DETAILS No. 2" Sheets.
5. For Vertical Slip Joint Details, See "MECHANICALLY STABILIZED EMBANKMENT DETAILS No. 6" Sheet.
6. For Inspection Wire Details, See "MECHANICALLY STABILIZED EMBANKMENT DETAILS No. 3" Sheet.
7. For Outlet Pipe and Wall Drainage Details, See "MECHANICALLY STABILIZED EMBANKMENT DETAILS No. 4" Sheet.
8. Provide Weakened Plane Joints in Concrete Barrier and Concrete Barrier Slab at Centerline of each Vertical Slip Joint.

NOTE:
THE CONTRACTOR SHALL VERIFY ALL CONTROLLING FIELD DIMENSIONS BEFORE ORDERING OR FABRICATING ANY MATERIAL.

DESIGN OVERSIGHT Paul Cotter
7-16-12
SIGN OFF DATE

	BY	CHECKED
DESIGN	S McCauley	C. Cho
DETAILS	J Saldana	S. McCauley
QUANTITIES	C. Cho	S. McCauley

PREPARED FOR THE STATE OF CALIFORNIA DEPARTMENT OF TRANSPORTATION

Chad Harden
PROJECT ENGINEER

BRIDGE NO. 33E0114
POST MILES 28.6

RETAINING WALL No. 29
LAYOUT

DESIGN DETAIL SHEET (ENGLISH) (REV.7/16/10)

ORIGINAL SCALE IN INCHES FOR REDUCED PLANS 0 1 2 3

UNIT: 0724
PROJECT NUMBER & PHASE: 04000001601
CONTRACT NO.: 04-0A7101

DISREGARD PRINTS BEARING EARLIER REVISION DATES

REVISION DATES 2/04/11 3/30/12 6/26/12

SHEET 3 OF 13

FILE => 33-E0114-g-rw_1o01.dgn

USERNAME => s124496 DATE PLOTTED => 10-APR-2013 TIME PLOTTED => 08:51

DIST	COUNTY	ROUTE	POST MILES TOTAL PROJECT	SHEET No.	TOTAL SHEETS
04	Ala	880	28.4/29.2	721	789

REGISTERED CIVIL ENGINEER — DATE 6/26/12

4-8-13
PLANS APPROVAL DATE

REGISTERED PROFESSIONAL ENGINEER — S.McCauley No. 71495 Exp. 12-31-13 CIVIL — STATE OF CALIFORNIA

The State of California or its officers or agents shall not be responsible for the accuracy or completeness of electronic copies of this plan sheet.

ALAMEDA COUNTY TRANSPORTATION COMMISSION
1333 BROADWAY, SUITE 220
OAKLAND, CA 94612

RBF CONSULTING
ONE KAISER PLAZA, SUITE 1150
OAKLAND, CA 94612

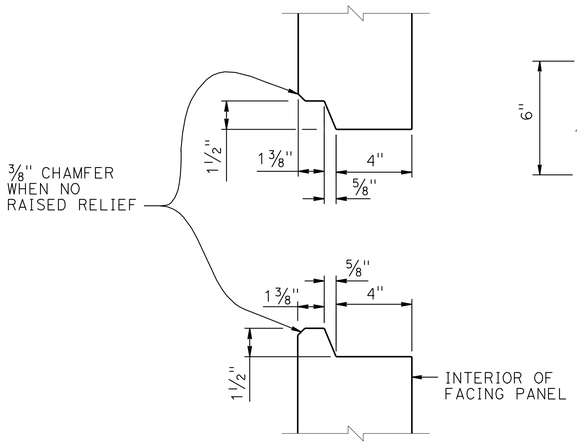

HORIZONTAL JOINT DETAIL

3" = 1'-0"

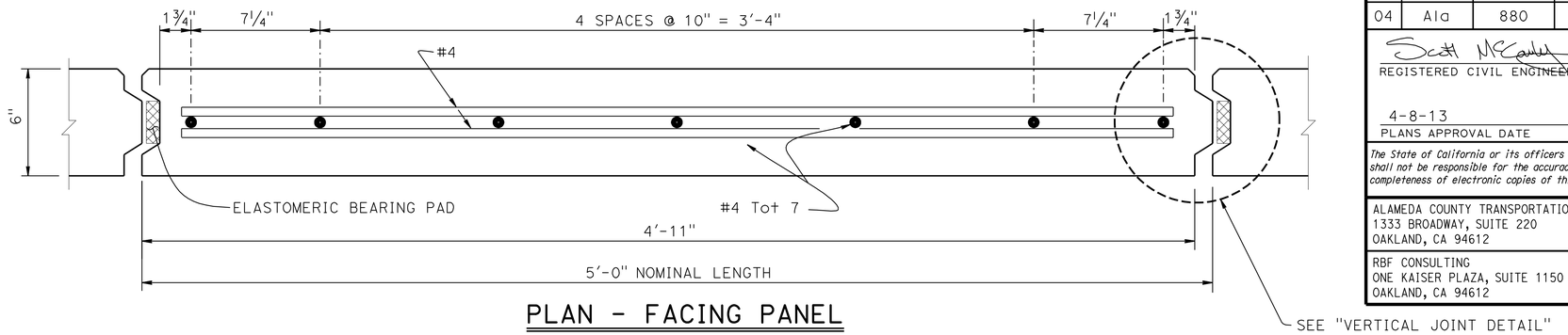

PLAN - FACING PANEL

3" = 1'-0"

NOTES:

1. Architectural Treatment Not Shown.
2. Place Reinforced Elastomeric Bearing Pads in All of the Panel Joints Between the Panels. Place One in Each Vertical Joint where the Horizontal Joints Intersect. Place Two per Panel in each Horizontal Joint:
   3/4" x 2 3/8" x 6" for Vertical Joints
   3/4" x 4" x 6" for Horizontal Joints
3. Bond a Strip of Filter Fabric, 1'-0" Wide, Cover the Full Length of all Panel Joints.
4. Top Layer of Welded Wire Mats Attached Parallel to Top of Panel when Top of Wall is Angled or Curved as Shown Elsewhere in "STRUCTURE PLANS".
5. Eliminate Mid Level Mat when Closer than 6" to Top Mat, Continue Variable Dimension Between Remaining Mats.

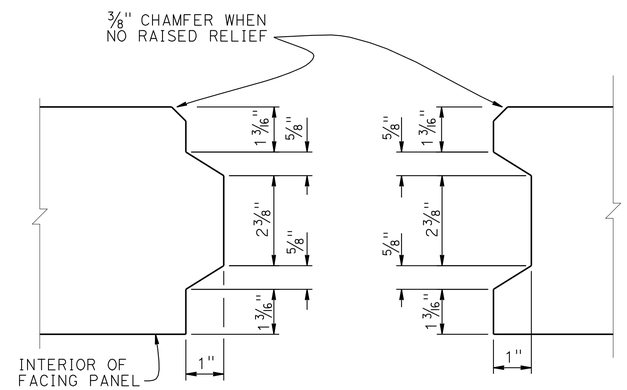

VERTICAL JOINT DETAIL

6" = 1'-0"

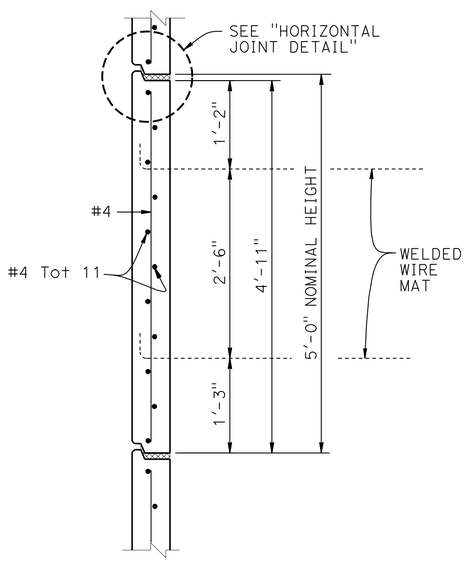

INTERMEDIATE PANEL

1" = 1'-0"

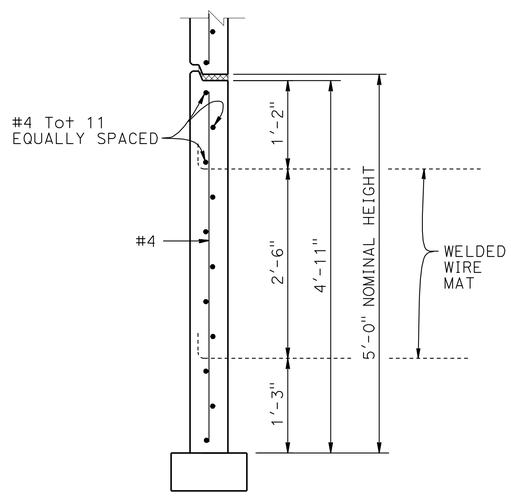

BOTTOM PANEL

1" = 1'-0"

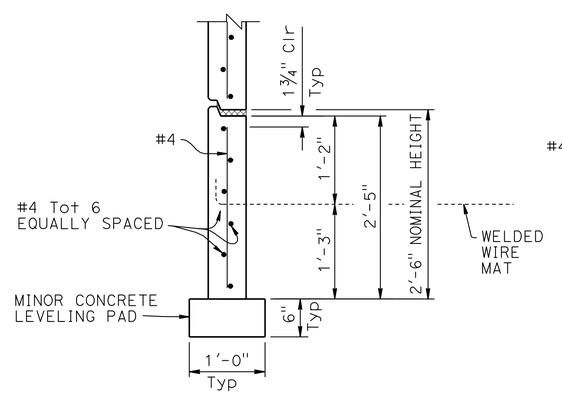

BOTTOM HALF PANEL

1" = 1'-0"

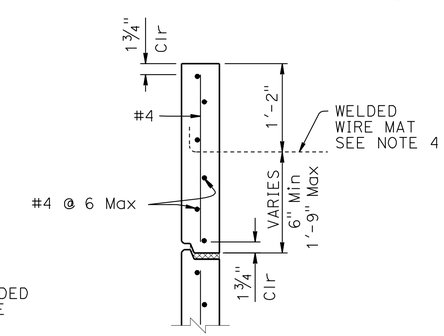

TOP HALF PANEL

1" = 1'-0"

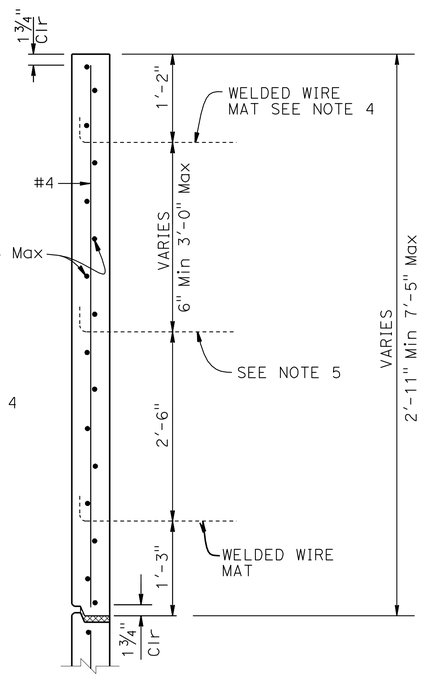

TOP PANEL WITH MULTIPLE MATS

1" = 1'-0"

STANDARD DRAWING

FILE NO. xs13-020-1

APPROVAL DATE January 2012

DS OSD 2147A (ENGLISH STANDARD DRAWING "XS" BORDER REV. (02-02-11)

ORIGINAL SCALE IN INCHES FOR REDUCED PLANS 0 1 2 3

STATE OF CALIFORNIA
DEPARTMENT OF TRANSPORTATION

DIVISION OF ENGINEERING SERVICES

BRIDGE NO. 33E0114
POST MILE 28.6

RETAINING WALL No. 29
MECHANICALLY STABILIZED EMBANKMENT
DETAILS NO. 1

UNIT: 0724
PROJECT NUMBER & PHASE: 04000001601
CONTRACT NO.: 04-0A7101

DISREGARD PRINTS BEARING EARLIER REVISION DATES

REVISION DATES: 2/04/11 3/30/12 6/26/12

SHEET 4 OF 13

FILE => 33-E0114-u-miscdt01.dgn

USERNAME => s124496 DATE PLOTTED => 10-APR-2013 TIME PLOTTED => 08:51

DIST	COUNTY	ROUTE	POST MILES TOTAL PROJECT	SHEET No.	TOTAL SHEETS
04	Ala	880	28.4/29.2	722	789

Scott McCauley 6/26/12
REGISTERED CIVIL ENGINEER DATE

4-8-13
PLANS APPROVAL DATE

REGISTERED PROFESSIONAL ENGINEER S.McCauley No. 71495 Exp. 12-31-13 CIVIL STATE OF CALIFORNIA

The State of California or its officers or agents shall not be responsible for the accuracy or completeness of electronic copies of this plan sheet.

ALAMEDA COUNTY TRANSPORTATION COMMISSION
1333 BROADWAY, SUITE 220
OAKLAND, CA 94612

RBF CONSULTING
ONE KAISER PLAZA, SUITE 1150
OAKLAND, CA 94612

GENERAL NOTES
LOAD & RESISTANCE FACTOR DESIGN

DESIGN: AASHTO LRFD Bridge Design Specifications, 4th Edition with California Amendments
FHWA Design and Construction of Mechanically Stabilized Earth Walls and Reinforced Slopes, dated November 2009
Publication No. FHWA-NHI 10-024

COLLISION FORCE: F_t = 54 kips on barriers

LIVE LOAD: Surcharge = 240 lb/ft^3

SOIL PARAMETERS:

Internal design ϕ(Reinforced Backfill) = 34°, γ = 120 lb/ft^3, kh = 0.36 ⟨1⟩
External design ϕ(Retained Backfill) = 30°, γ = 120 lb/ft^3
Coefficient of friction, μ = 0.35
K_h = 0.24

PRECAST CONCRETE PANELS:

f'c = 4,000 psi (Concrete compressive strength at 28 days)
fy = 60,000 psi (Yield strength of reinforcement)

SOIL REINFORCEMENT:

Welded wire mats: fy = 65,000 psi (Yield strength)
Coupler: fy = 36,000 psi (Yield strength)
Corrosion rate = 1.1 mils/year

REINFORCED CONCRETE:

f'c = 3,600 psi, except as noted
(Concrete compressive strength at 28 days)
fy = 60,000 psi (Yield strength of reinforcement)

MSE = Mechanically Stabilized Embankment

NOTES:

(A) Distance as required to permit coupler to be swaged
(B) Place #4 x 3'-2", centered on connector mat, but not welded to it
(C) All transverse wires size W15 at various spacing as shown elsewhere in plans
(D) Size of longitudinal wires shown elsewhere in plans

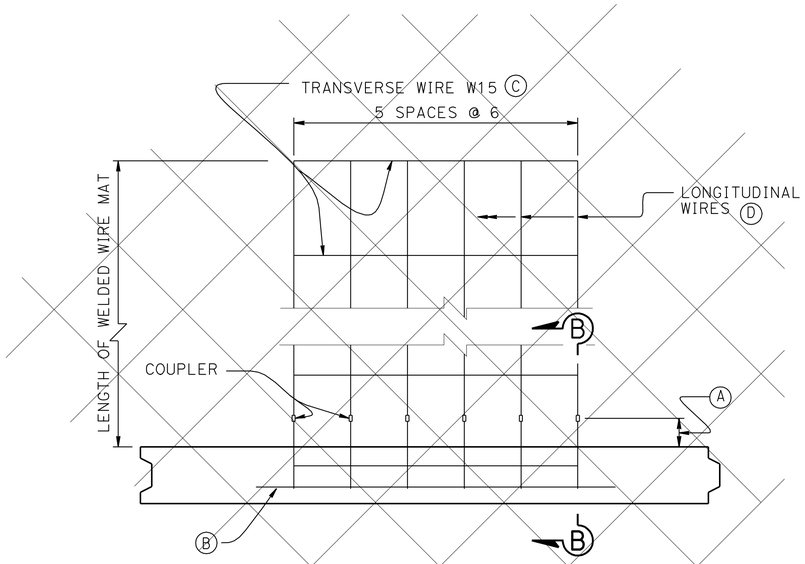

⟨2⟩ PLAN OF PANEL WITH SIX WIRE MAT
1½" = 1'-0"

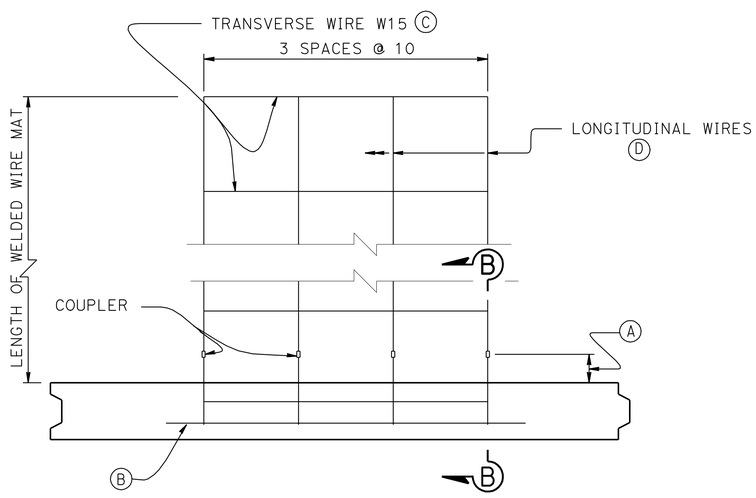

PLAN OF PANEL WITH FOUR WIRE MAT
1½" = 1'-0"

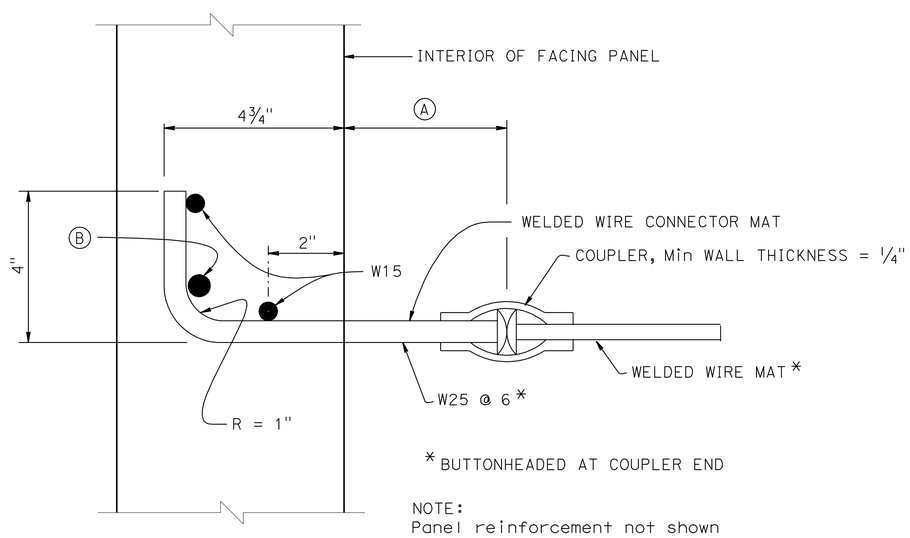

SECTION B-B
6" = 1'-0"

SPECIAL DETAILS

STANDARD DRAWING		
FILE NO. xs13-020-2	APPROVAL DATE January 2012	⟨1⟩ Soil Parameters Modified ⟨2⟩ Detail Removed

STATE OF CALIFORNIA
DEPARTMENT OF TRANSPORTATION

DIVISION OF ENGINEERING SERVICES

BRIDGE NO. 33E0114
POST MILE 28.6

RETAINING WALL No. 29
MECHANICALLY STABILIZED EMBANKMENT
DETAILS NO. 2

DS OSD 2147A (ENGLISH STANDARD DRAWING "XS" BORDER REV. (02-02-11)

ORIGINAL SCALE IN INCHES FOR REDUCED PLANS 0 1 2 3

UNIT: 0724
PROJECT NUMBER & PHASE: 04000001601
CONTRACT NO.: 04-0A7101

DISREGARD PRINTS BEARING EARLIER REVISION DATES

REVISION DATES: 3/04/11 3/28/12 6/26/12

SHEET 5 OF 13

FILE => 33-E0114-u-miscdt02.dgn

USERNAME => s124496 DATE PLOTTED => 10-APR-2013 TIME PLOTTED => 08:51

DIST	COUNTY	ROUTE	POST MILES TOTAL PROJECT	SHEET No.	TOTAL SHEETS
04	Ala	880	28.4/29.2	723	789

Scott McCauley 3/29/13
REGISTERED CIVIL ENGINEER DATE

4-8-13
PLANS APPROVAL DATE

REGISTERED PROFESSIONAL ENGINEER S.McCauley No. 71495 Exp. 12-31-13 CIVIL STATE OF CALIFORNIA

The State of California or its officers or agents shall not be responsible for the accuracy or completeness of electronic copies of this plan sheet.

ALAMEDA COUNTY TRANSPORTATION COMMISSION
1333 BROADWAY, SUITE 220
OAKLAND, CA 94612

RBF CONSULTING
ONE KAISER PLAZA, SUITE 1150
OAKLAND, CA 94612

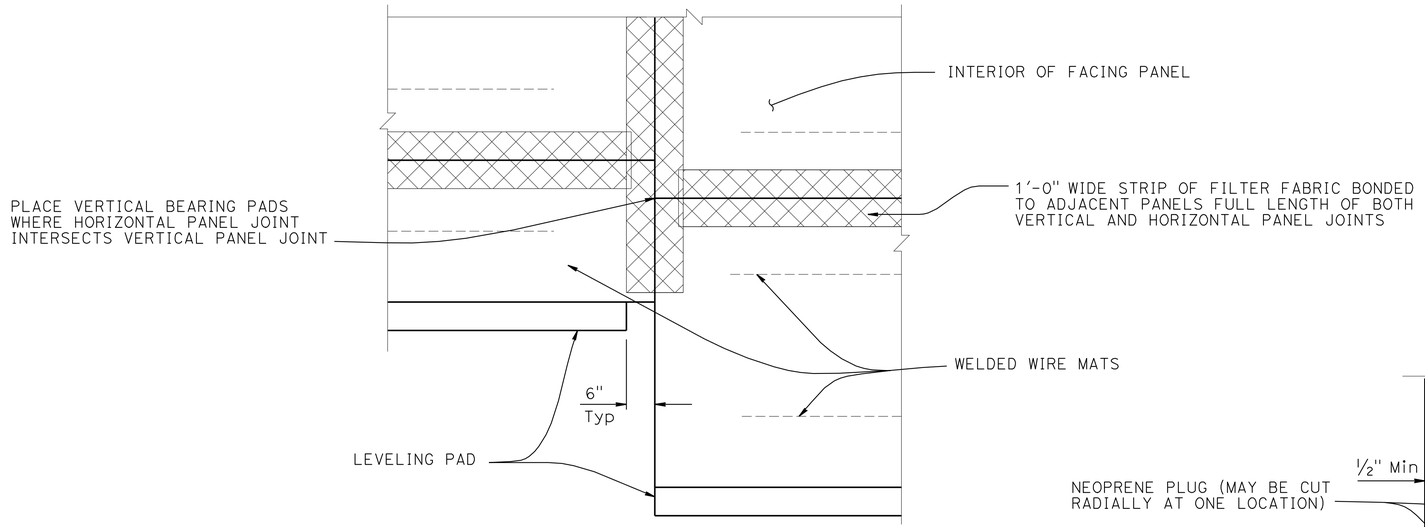

PART ELEVATION

¾" = 1'-0"

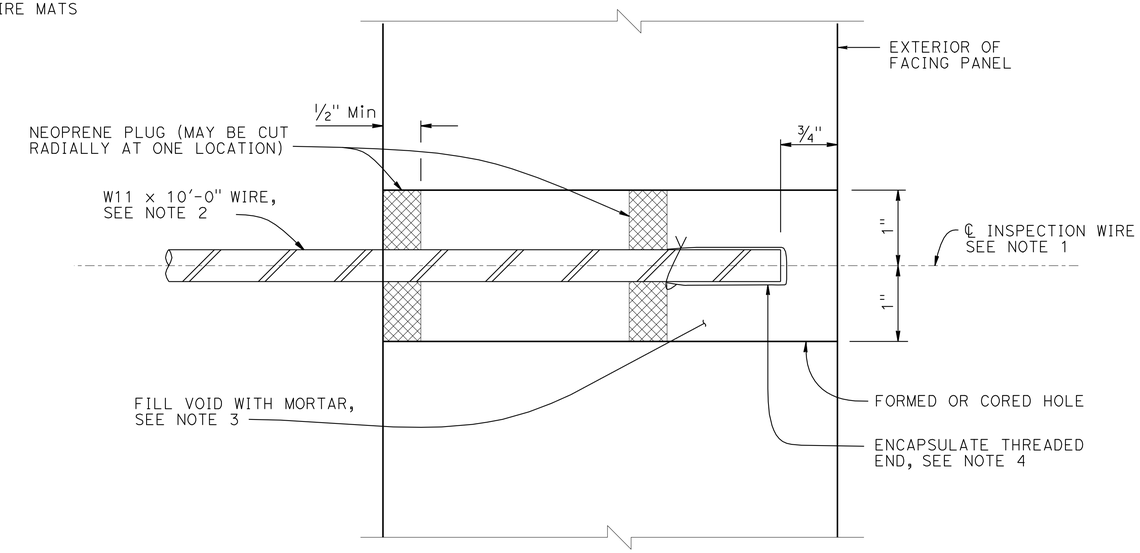

SECTION THRU INSPECTION WIRE

NO SCALE

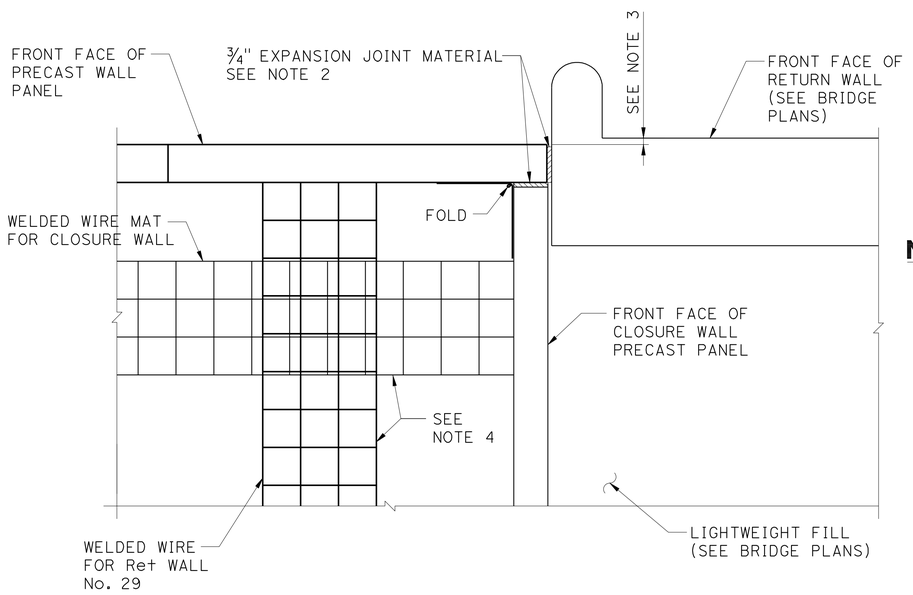

NOTES:

1. Bond a strip of filter fabric, 1'-6" wide, to back of adjacent MSE panels for entire length of vertical joint
2. Bond expansion joint material to concrete wall
3. Offset between face of MSE facing panel and face of the concrete wall as directed by location of layout lines elsewhere in "STRUCTURE PLANS"
4. Stagger Lifts between Closure Wall and Wall No. 29 such that Overlapping Layers are Separated Vertically by at least 4".

◇1 ◇2 CORNER DETAIL AT CLOSURE WALL - PLAN

NO SCALE

SPECIAL DETAILS

RETAINING WALL No. 29

MECHANICALLY STABILIZED EMBANKMENT

DETAILS NO. 3

STANDARD DRAWING
FILE NO. xs13-020-3
APPROVAL DATE January 2012

◇1 DETAIL REMOVED
◇2 DETAIL ADDED

STATE OF CALIFORNIA
DEPARTMENT OF TRANSPORTATION

DIVISION OF ENGINEERING SERVICES

BRIDGE NO. 33E0114
POST MILE 28.6

DS OSD 2147A (ENGLISH STANDARD DRAWING "XS" BORDER REV. (02-02-11)

ORIGINAL SCALE IN INCHES FOR REDUCED PLANS 0 1 2 3

UNIT: 0724
PROJECT NUMBER & PHASE: 04000001601
CONTRACT NO.: 04-0A7101

DISREGARD PRINTS BEARING EARLIER REVISION DATES

REVISION DATES 2/04/11 3/30/12 6/28/12 3/29/13

SHEET 6 OF 13

FILE => 33-E0114-u-miscdt03.dgn

USERNAME => s124496 DATE PLOTTED => 10-APR-2013 TIME PLOTTED => 08:51

DIST	COUNTY	ROUTE	POST MILES TOTAL PROJECT	SHEET No.	TOTAL SHEETS
04	Ala	880	28.4/29.2	724	789

REGISTERED CIVIL ENGINEER — DATE 3/29/13

4-8-13
PLANS APPROVAL DATE

REGISTERED PROFESSIONAL ENGINEER S.McCauley No. 71495 Exp. 12-31-13 CIVIL STATE OF CALIFORNIA

The State of California or its officers or agents shall not be responsible for the accuracy or completeness of electronic copies of this plan sheet.

ALAMEDA COUNTY TRANSPORTATION COMMISSION
1333 BROADWAY, SUITE 220
OAKLAND, CA 94612

RBF CONSULTING
ONE KAISER PLAZA, SUITE 1150
OAKLAND, CA 94612

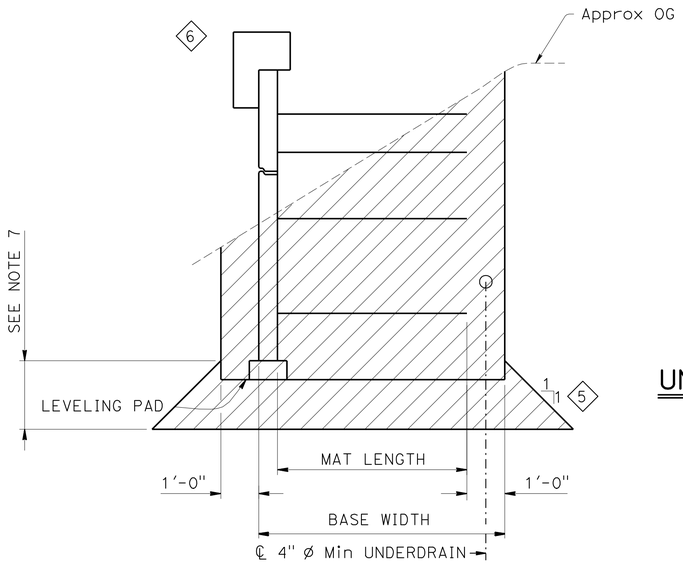

LIMITS OF EXCAVATION

½" = 1'-0"

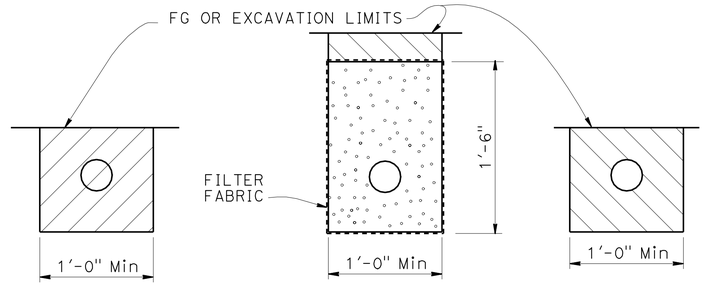

OUTLET PIPE — CLEANOUT PIPE

EXCAVATION — BACKFILL

UNPERFORATED OUTLET OR CLEAN OUT PIPE FOR UNDERDRAIN

NO SCALE

WALL No. 29 Sta 10+11.04

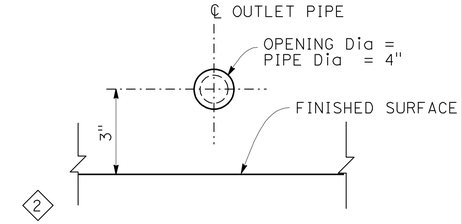

OUTLET PIPE OPENING

NO SCALE

NOTES:

1. Limits to FG except to GP when in roadway section
2. Locate underdrain behind bottom level of welded wire mats wherever possible, or at elevation needed to drain, as shown elsewhere on plans
3. Place perforated pipe underdrain of diameter shown elsewhere on plans or minimum 4" ø smoothed wall PVC or minimum 8" ø corrugated HDPE
4. Maximum spacing of outlet pipe is 200 feet
5. At sags in profile of underdrain, install outlet pipe for each direction of flow
6. For Drainage Inlet Location and Details, See "DRAINAGE PLANS"
7. (5) For overexcavation depth see "GENERAL PLAN No. 2" sheet

LEGEND:

- Limits of Structure Excavation
- Limits of Structure Backfill
- Limits of Permeable Material

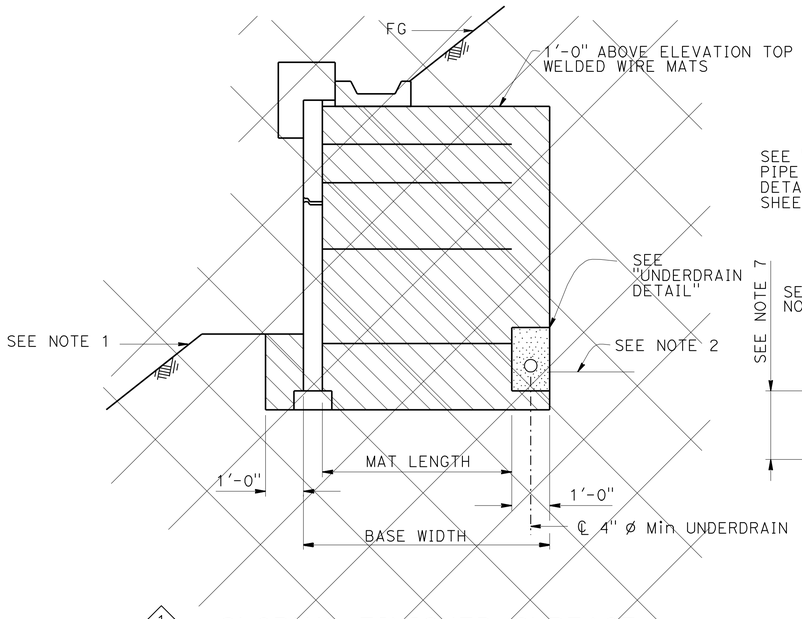

1 SLOPING FINISHED SURFACE

½" = 1'-0"

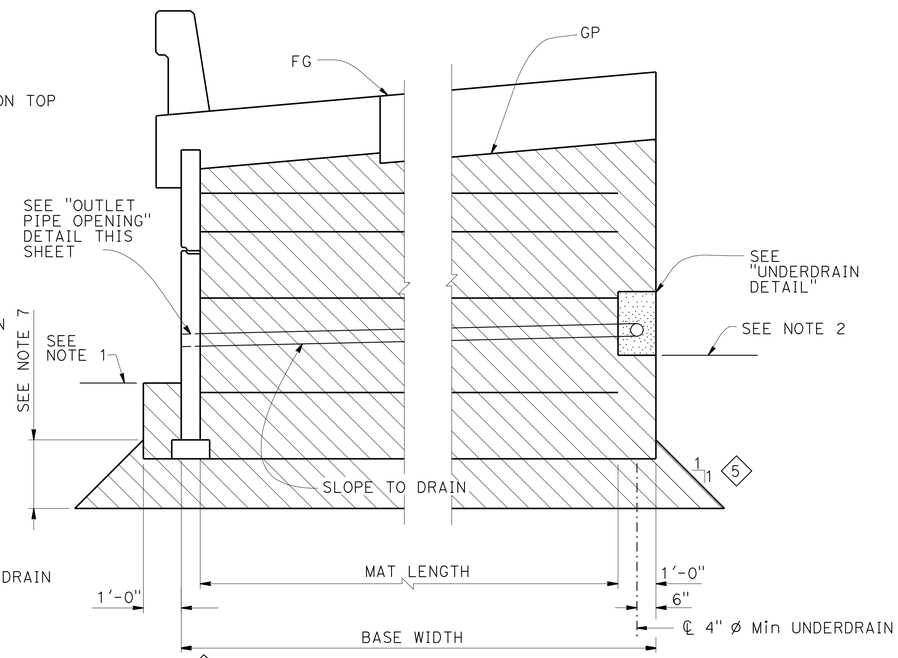

3 ROADWAY SECTION

½" = 1'-0"

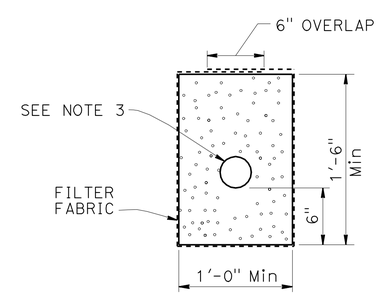

UNDERDRAIN DETAIL

LIMITS OF BACKFILL

SPECIAL DETAILS

STANDARD DRAWING					
FILE NO. xs13-020-6	APPROVAL DATE January 2012	(1) Does Not Apply	(3) Detail Modified	(5) Added Overexcavation Limit	
		(2) Detail Added	(4) Changed Sheet Title	(6) Revised "Limits of Excavation"	

STATE OF CALIFORNIA
DEPARTMENT OF TRANSPORTATION

DIVISION OF ENGINEERING SERVICES

BRIDGE NO. 33E0114
POST MILE 28.6

RETAINING WALL No. 29

MECHANICALLY STABILIZED EMBANKMENT

DETAILS NO. 4 (4)

DS OSD 2147A (ENGLISH STANDARD DRAWING "XS" BORDER REV. (02-02-11)

ORIGINAL SCALE IN INCHES FOR REDUCED PLANS 0 1 2 3

UNIT: 0724
PROJECT NUMBER & PHASE: 04000001601
CONTRACT NO.: 04-0A7101

DISREGARD PRINTS BEARING EARLIER REVISION DATES

REVISION DATES 2/24/11 3/30/12 6/28/12 3/29/13

SHEET 7 OF 13

FILE => 33-E0114-u-miscdt04.dgn

USERNAME => s124496 DATE PLOTTED => 10-APR-2013 TIME PLOTTED => 08:51

DIST	COUNTY	ROUTE	POST MILES TOTAL PROJECT	SHEET No	TOTAL SHEETS
04	Ala	880	28.4/29.2	725	789

REGISTERED CIVIL ENGINEER — DATE 6/26/12

4-8-13
PLANS APPROVAL DATE

REGISTERED PROFESSIONAL ENGINEER S.McCauley No. 71495 Exp. 12-31-13 CIVIL STATE OF CALIFORNIA

The State of California or its officers or agents shall not be responsible for the accuracy or completeness of electronic copies of this plan sheet.

ALAMEDA COUNTY TRANSPORTATION COMMISSION
1333 BROADWAY, SUITE 220
OAKLAND, CA 94612

RBF CONSULTING
ONE KAISER PLAZA, SUITE 1150
OAKLAND, CA 94612

NOTES:

1. For Dimensions and Reinforcement not shown see, Standard Plan B11-54.
2. For Dimensions and Locations of Drainage Inlet, See DRAINAGE PLANS.
3. Provide Double Mat of Reinforcementand Panel Connections on side of Drop Inlet at Interrupted Top Reinforcement Mat.
4. Minimum Barrier Length = 40'-0".

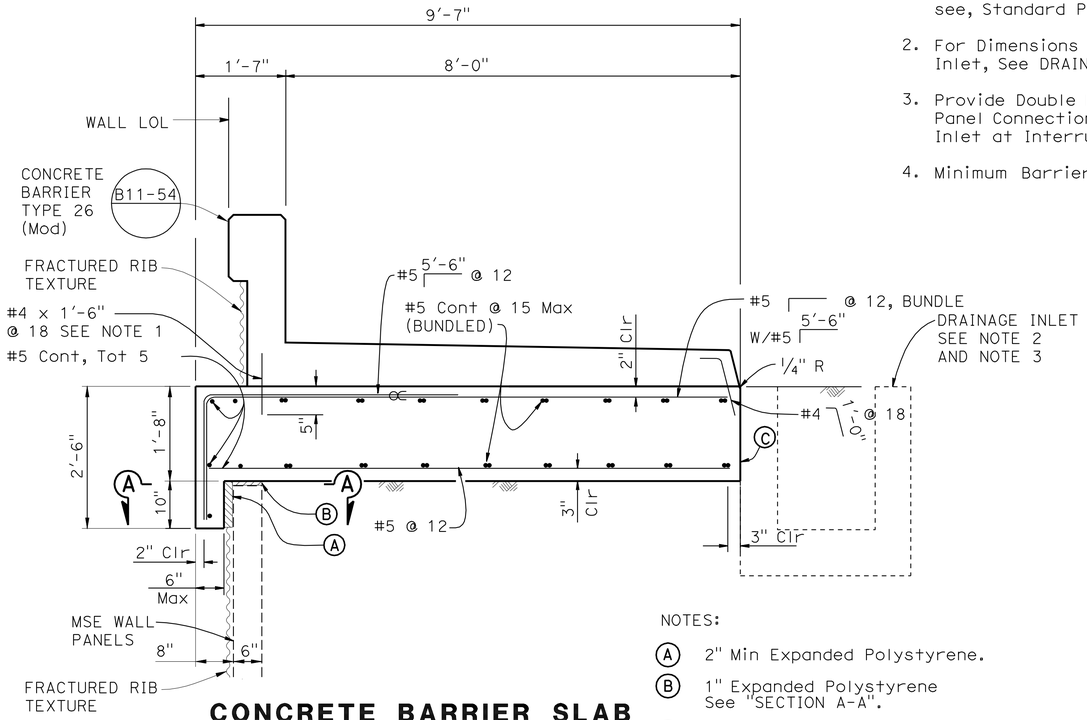

CONCRETE BARRIER SLAB

3/4" = 1'-0"

NOTES:

(A) 2" Min Expanded Polystyrene.

(B) 1" Expanded Polystyrene See "SECTION A-A".

(C) Contact Joint.

∝ Indicates Bundled Bars.

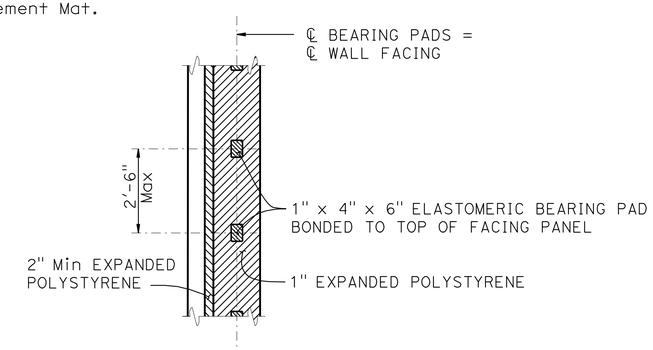

SECTION A-A

1/2" = 1'-0"

DESIGN HEIGHT, H (Ft)	7.5	10.0	15.0
Max. WALL HEIGHT (Ft)	9.17	11.67	16.67
MAT LENGTH, L (Ft)	10.0	11.0	16.5
BASE WIDTH, BW (Ft)	11.5	12.5	18.0
WELDED WIRE REINFORCING PER LEVEL	TOP 4-W15xW15@6" 1@ 4-W15xW15@6" Bot 4-W15xW15@6"	TOP 4-W15xW15@6" 2 @ 4-W15xW15@6" Bot 4-W20xW15@9"	TOP 4-W15xW15@6" 3 @ 4-W15xW15@6" 1@ 4-W20xW15@9" Bot 4-W20xW15@9"

NOTE:

Mesh Configuration is:

No. Longitudinal Wires - Longitudinal Wire Size x Transverse Wire Size @ Transverse Wire Spacing

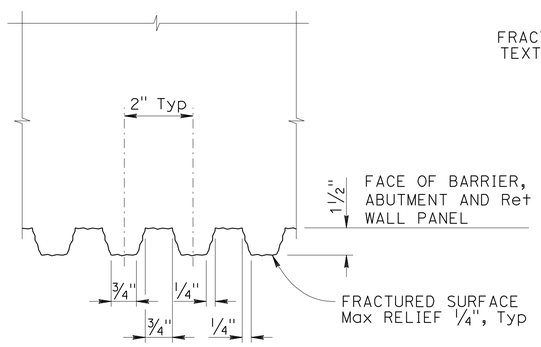

NOTES:

1. Vertical Joints in Form Liners will be at Center of Trough between Ribs. Min Spacing of Form Liner Vertical Joints will be 4'-0".
2. No Horizontal Joints will be Permitted in Form Liners.

FRACTURED RIB TEXTURE

NO SCALE

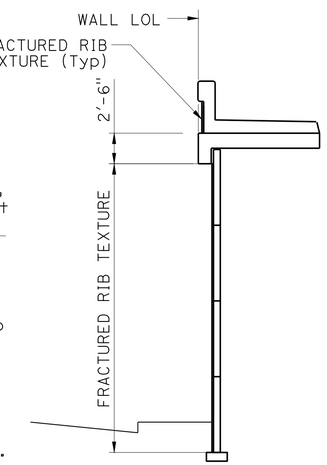

LIMITS OF PAYMENT

MECHANICALLY STABILIZED EMBANKMENT WALL REINFORCEMENT

No Scale

NOTE:
THE CONTRACTOR SHALL VERIFY ALL CONTROLLING FIELD DIMENSIONS BEFORE ORDERING OR FABRICATING ANY MATERIAL.

RETAINING WALL No. 29

MECHANICALLY STABILIZED EMBANKMENT

DETAILS NO. 5

DESIGN OVERSIGHT — Paul Cotter
7-16-12
SIGN OFF DATE

	BY	CHECKED
DESIGN	S McCauley	C. Cho
DETAILS	J Saldana	S. McCauley
QUANTITIES	C. Cho	S. McCauley

PREPARED FOR THE STATE OF CALIFORNIA DEPARTMENT OF TRANSPORTATION

Chad Harden
PROJECT ENGINEER

BRIDGE NO. 33E0114
POST MILES 28.6

DESIGN DETAIL SHEET (ENGLISH) (REV.7/16/10)

ORIGINAL SCALE IN INCHES FOR REDUCED PLANS 0 1 2 3

UNIT: 0724
PROJECT NUMBER & PHASE: 04000001601 CONTRACT NO.: 04-0A7101

DISREGARD PRINTS BEARING EARLIER REVISION DATES — REVISION DATES 2/04/11 3/30/12 6/26/12

SHEET 8 OF 13

FILE => 33-E0114-u-miscdt05.dgn

USERNAME => s124196 DATE PLOTTED => 10-APR-2013 TIME PLOTTED => 08:51

DIST	COUNTY	ROUTE	POST MILES TOTAL PROJECT	SHEET No	TOTAL SHEETS
04	Ala	880	28.4/29.2	726	789

REGISTERED CIVIL ENGINEER — DATE 6/26/12

4-8-13
PLANS APPROVAL DATE

REGISTERED PROFESSIONAL ENGINEER S.McCauley No. 71495 Exp. 12-31-13 CIVIL STATE OF CALIFORNIA

The State of California or its officers or agents shall not be responsible for the accuracy or completeness of electronic copies of this plan sheet.

ALAMEDA COUNTY TRANSPORTATION COMMISSION
1333 BROADWAY, SUITE 220
OAKLAND, CA 94612

RBF CONSULTING
ONE KAISER PLAZA, SUITE 1150
OAKLAND, CA 94612

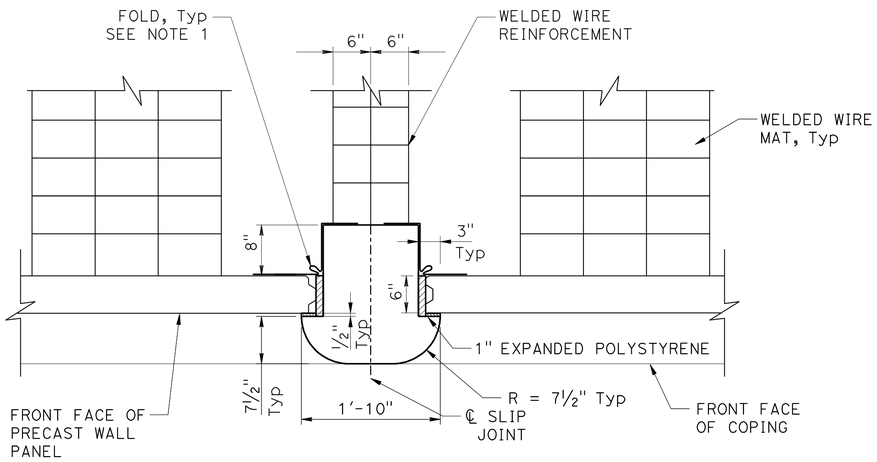

VERTICAL SLIP JOINT TYPICAL SECTION

NO SCALE

NOTES:

1. Bond a strip of Filter Fabric, 1'-6" wide to back of vertical slip joint and adjacent MSE panels for entire length of vertical joint.

NOTE: CONCRETE BARRIER NOT SHOWN

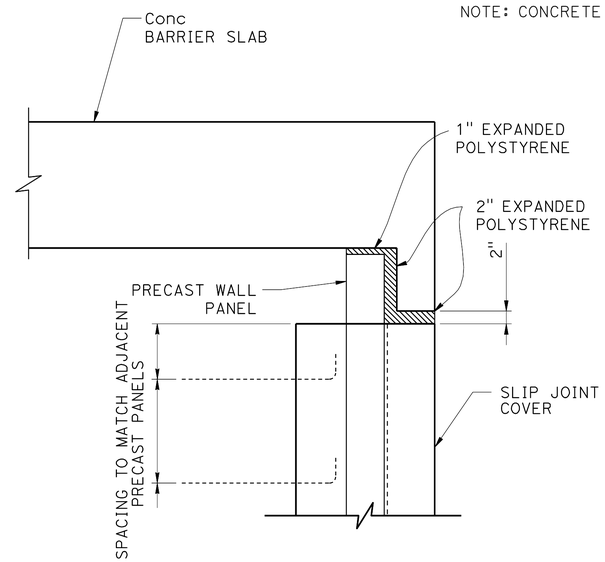

VERTICAL SLIP JOINT TOP DETAIL

NO SCALE

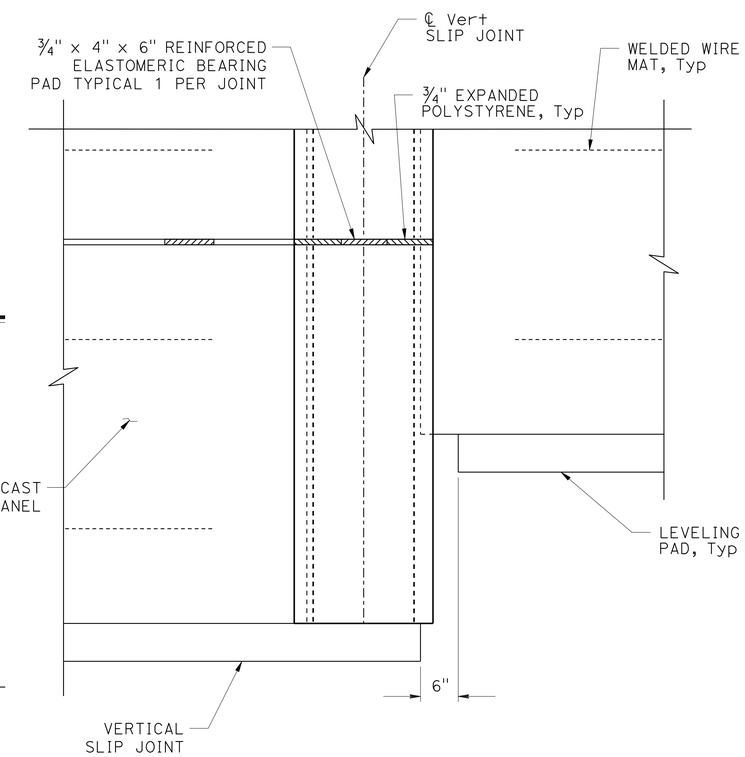

PARTIAL ELEVATION AT FOOTING STEP

NO SCALE

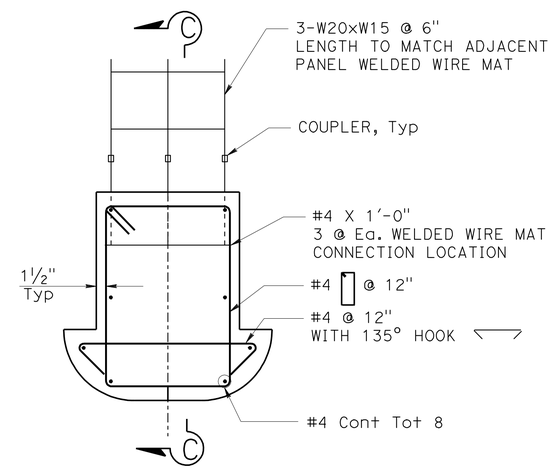

VERTICAL SLIP JOINT REINFORCING DETAIL

NO SCALE

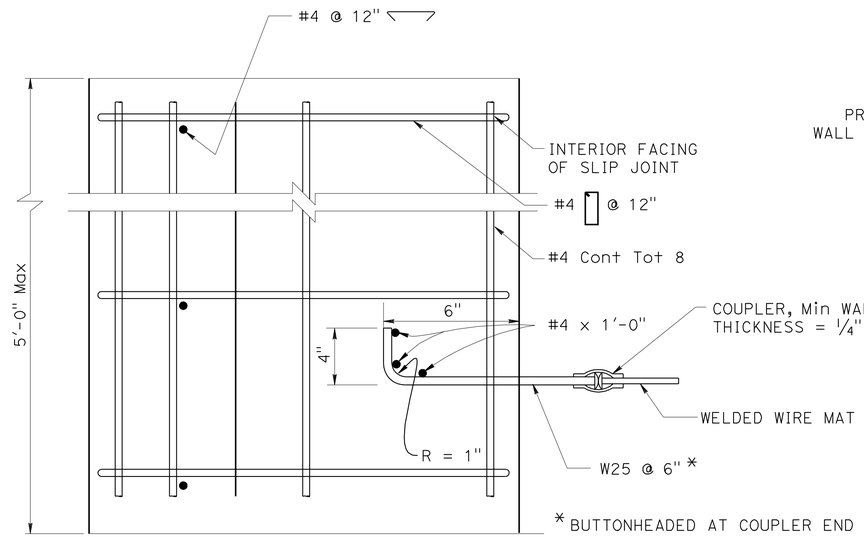

SECTION C-C

NO SCALE

NOTE:
THE CONTRACTOR SHALL VERIFY ALL CONTROLLING FIELD DIMENSIONS BEFORE ORDERING OR FABRICATING ANY MATERIAL.

RETAINING WALL No. 29

MECHANICALLY STABILIZED EMBANKMENT

DETAILS NO. 6

Paul Cotter
DESIGN OVERSIGHT — Paul Cotter
7-16-12
SIGN OFF DATE

	BY	CHECKED
DESIGN	S McCauley	C. Cho
DETAILS	J Saldana	S. McCauley
QUANTITIES	C. Cho	S. McCauley

PREPARED FOR THE STATE OF CALIFORNIA DEPARTMENT OF TRANSPORTATION

Chad Harden
PROJECT ENGINEER

BRIDGE NO. 33E0114
POST MILES 28.6

DESIGN DETAIL SHEET (ENGLISH) (REV.7/16/10)

ORIGINAL SCALE IN INCHES FOR REDUCED PLANS 0 1 2 3

UNIT: 0724
PROJECT NUMBER & PHASE: 04000001601 CONTRACT NO.: 04-0A7101

DISREGARD PRINTS BEARING EARLIER REVISION DATES — REVISION DATES 2/04/11 3/30/12 6/26/12

SHEET 9 OF 13

FILE => 33-E0114-u-miscdt06.dgn

USERNAME => s124496 DATE PLOTTED => 10-APR-2013 TIME PLOTTED => 08:51

DIST	COUNTY	ROUTE	POST MILES TOTAL PROJECT	SHEET No	TOTAL SHEETS
04	Ala	880	28.4/29.2	727	789

Lino Cheang 6-25-12
REGISTERED ENGINEER DATE

4-8-13
PLANS APPROVAL DATE

REGISTERED PROFESSIONAL ENGINEER L. CHEANG NO. GE 2345 EXP. 9-30-13 GEOTECHNICAL STATE OF CALIFORNIA

The State of California or its officers or agents shall not be responsible for the accuracy or completeness of electronic copies of this plan sheet.

ALAMEDA COUNTY TRANSPORTATION COMMISSION
1333 BROADWAY, SUITE 220
OAKLAND, CA 94612

EARTH MECHANICS, INC.
17800 NEWHOPE STREET, SUITE B
FOUNTAIN VALLEY, CA 92708

BENCH MARK:

DESIGNATION: ALA8 ELEV=14.521
FOUND BRASS DISK STAMPED "ALA8" IN THE SIDEWALK AT THE WEST CORNER OF EAST 8TH STREET AND 5TH AVENUE.

DESIGNATION: ALA7 ELEV=15.591
FOUND BRASS DISK STAMPED "ALA7" IN THE SIDEWALK AT THE WEST SIDE OF 7TH STREET ALONG THE NORTH SIDE OF LAKE MERRITT CHANNEL.

DESIGNATION: 8TH/37TH ELEV=20.262
FOUND A CITY OF OAKLAND PIN IN CONCRETE IN A MONUMENT WELL AT THE INTERSECTION OF EAST 8TH STREET AND 37TH AVENUE.

DESIGNATION: ALA13 ELEV=15.318
FOUND BRASS DISK STAMPED "ALA13" INSIDE A 1 INCH IRON PIPE WITH A CONCRETE COLLAR 24.6 FEET NORTH OF THE NORTH SIDE OF HIGH STREET,
56 FEET WEST OF THE WEST SIDE OF THE OFFRAMP FROM SOUTHBOUND STATE ROUTE 880 AND 4.99 FEET SOUTH OF THE SOUTH RAIL OF THE RAILROAD TRACKS.

DESIGNATION: KA121 ELEV=15.768
FOUND 1 INCH IRON PIPE WITH RED PLASTIC PLUG AND TACK STAMPED "CALTRANS" ALONG THE EAST SIDE OF OAKPORT STREET ABOUT 230 FEET SOUTH OF THE SOUTH SIDE OF HIGH STREET, ACROSS FROM 4401 OAKPORT STREET, 6.92 FEET NORTH OF THE FLOWLINE OF THE CURB.

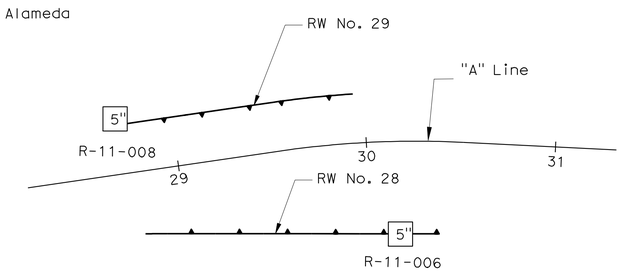

PLAN
1" = 40'

NOTES:

(1) This LOTB sheet was prepared in accordance with the Caltrans Soil and Rock Logging, Classification and Presentation Manual (June 2010).

(2) 2.4" samples were taken using a California Modified Sampler.

(3) An automatic trip hammer system consisting of a hammer weight of 140 lbs falling a distance of 30" was used to advance the drive sampler.

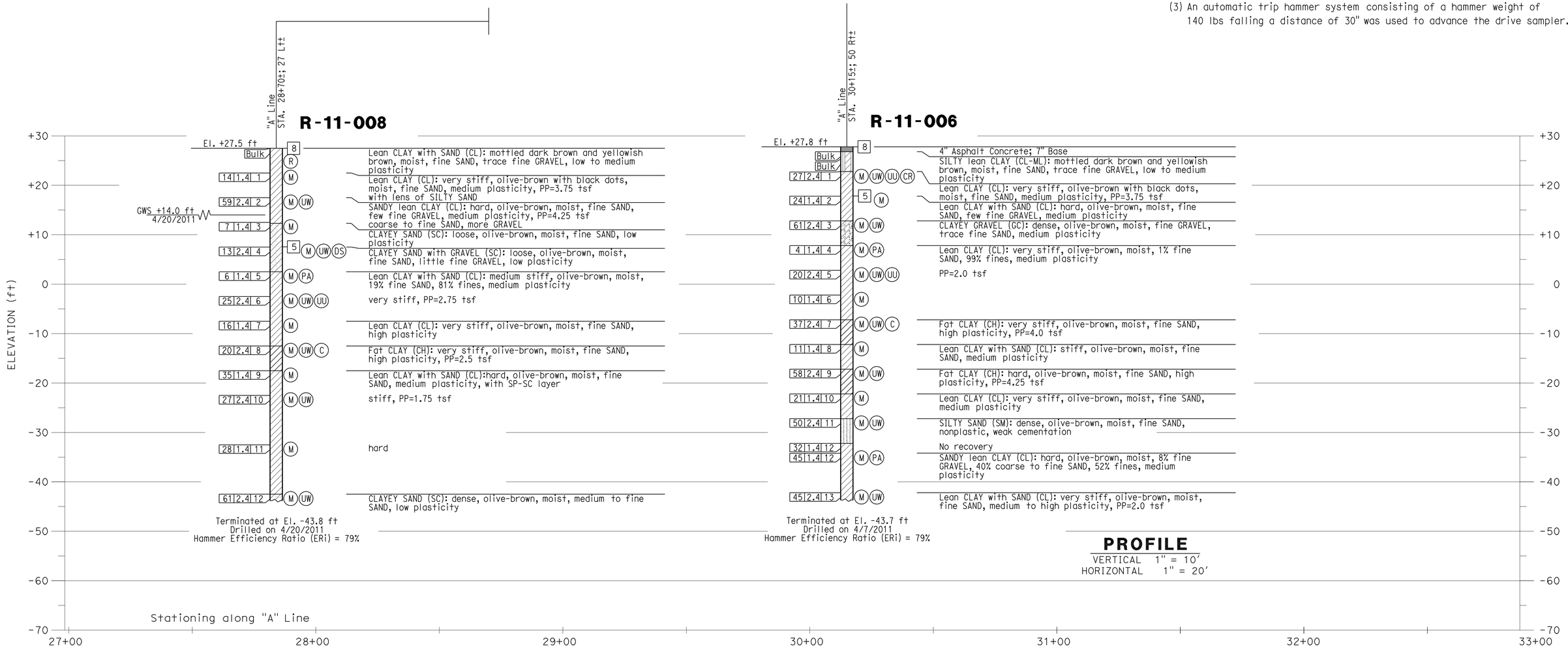

PROFILE
VERTICAL 1" = 10'
HORIZONTAL 1" = 20'

Paul Cotter DESIGN OVERSIGHT Paul Cotter	DRAWN BY	J. Fang	K. Thant FIELD INVESTIGATION BY:
7-16-12 SIGN OFF DATE	CHECKED BY	G. J. Gunaranjan	DATE: 3/2011, 4/2011

PREPARED FOR THE STATE OF CALIFORNIA DEPARTMENT OF TRANSPORTATION

L. Cheang
PROJECT ENGINEER

BRIDGE NO. 33E0114
POST MILES 28.6

RETAINING WALL No. 29
LOG OF TEST BORINGS 1 OF 4

GS GEOTECHNICAL LOG OF TEST BORINGS SHEET (ENGLISH) (REV. 7/16/10)

ORIGINAL SCALE IN INCHES FOR REDUCED PLANS 0 1 2 3

UNIT: 0724
PROJECT NUMBER & PHASE: 04000001601

DISREGARD PRINTS BEARING EARLIER REVISION DATES

REVISION DATES

SHEET 10 OF 13

CONTRACT NO.:04-0A7101 PROJECT ID:

FILE => 33-E0114-z-ltb1.dgn

USERNAME => s124496 DATE PLOTTED => 10-APR-2013 TIME PLOTTED => 08:52

DIST	COUNTY	ROUTE	POST MILES TOTAL PROJECT	SHEET No	TOTAL SHEETS
04	880	Ala			

REGISTERED CIVIL ENGINEER — DATE 6/25/12

PLANS APPROVAL DATE

Philip Meymand No. 2596 Exp. 6/30/13 GEOTECHNICAL — REGISTERED PROFESSIONAL ENGINEER — STATE OF CALIFORNIA

The State of California or its officers or agents shall not be responsible for the accuracy or completeness of electronic copies of this plan sheet.

ALAMEDA COUNTY TRANSPORTATION
1333 BROADWAY
OAKLAND, CA 94612

URS CORPORATION
1333 BROADWAY, SUITE 800
OAKLAND, CA 94612

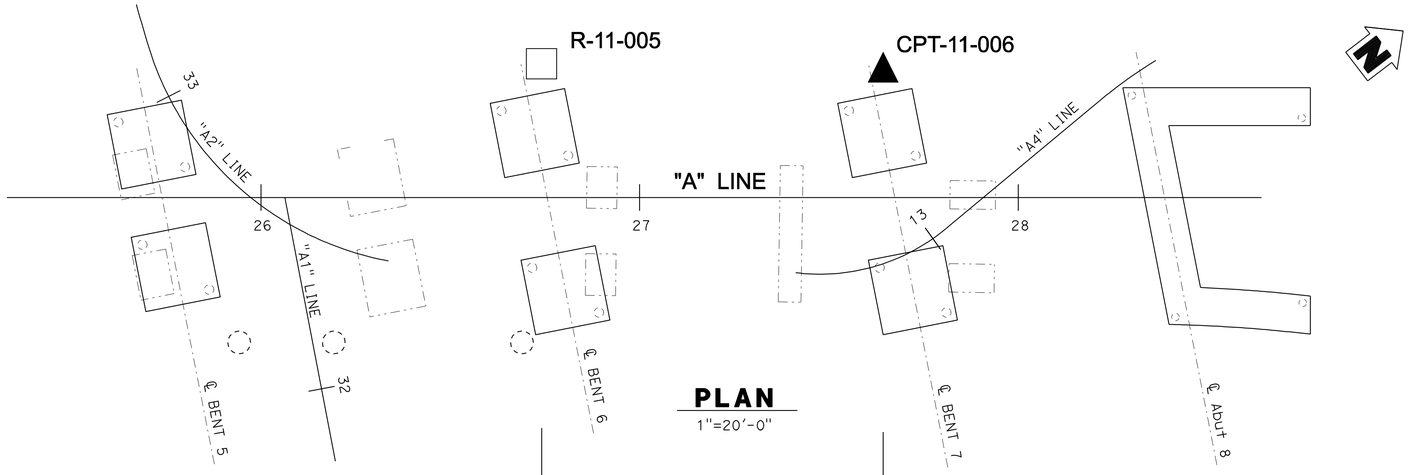

PLAN

1"=20'-0"

NOTES:

1. Ground water table was not measured in the borings due to rotary wash drilling.
2. Hammer energy ratio calibration not performed.
3. The borings were hand augered in the top 5 ft to check for the existence of underground utilities.

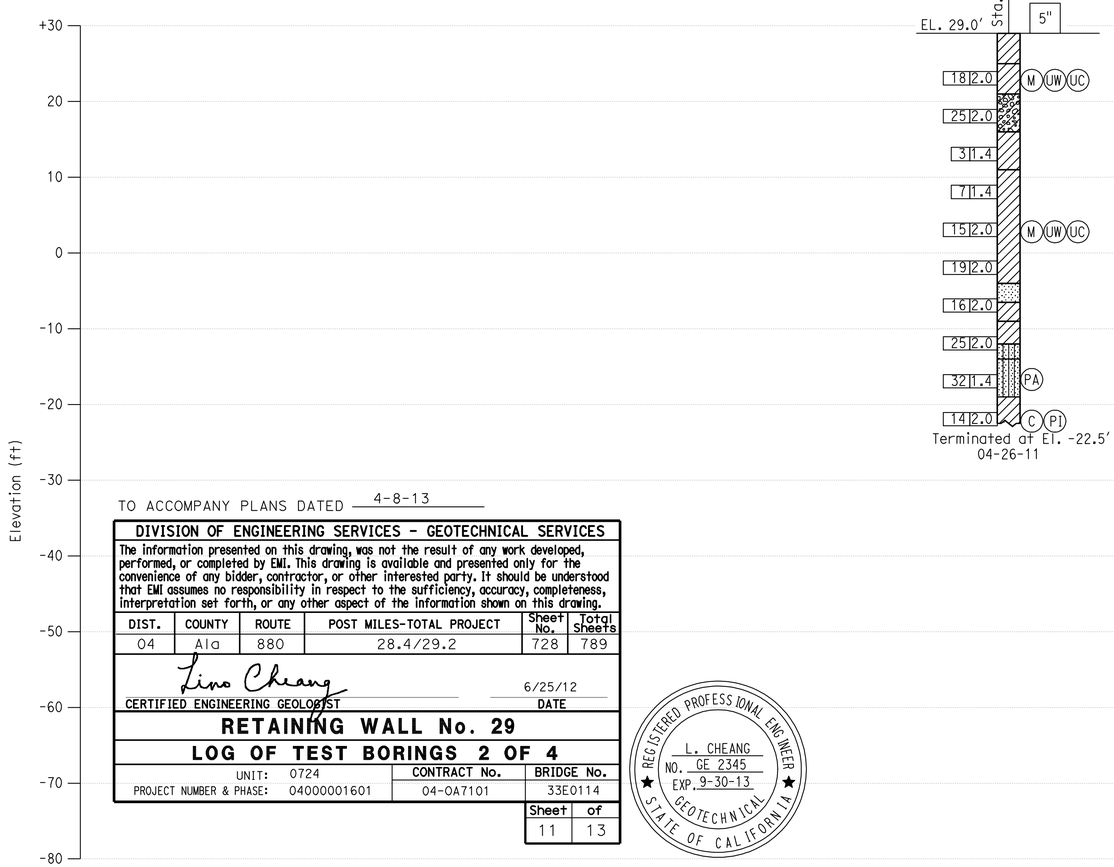

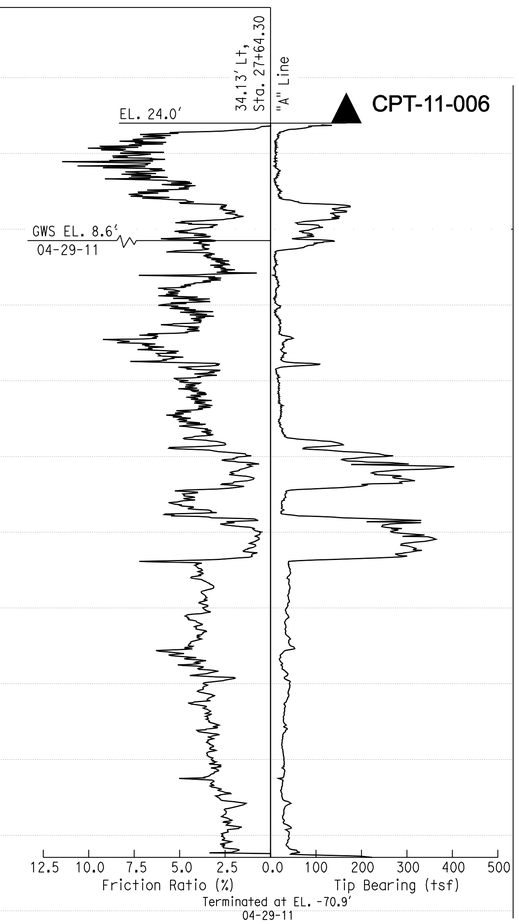

TO ACCOMPANY PLANS DATED 4-8-13

DIVISION OF ENGINEERING SERVICES - GEOTECHNICAL SERVICES

The information presented on this drawing, was not the result of any work developed, performed, or completed by EMI. This drawing is available and presented only for the convenience of any bidder, contractor, or other interested party. It should be understood that EMI assumes no responsibility in respect to the sufficiency, accuracy, completeness, interpretation set forth, or any other aspect of the information shown on this drawing.

DIST.	COUNTY	ROUTE	POST MILES-TOTAL PROJECT	Sheet No.	Total Sheets
04	Ala	880	28.4/29.2	728	789

Lino Cheang — CERTIFIED ENGINEERING GEOLOGIST — DATE 6/25/12

L. CHEANG NO. GE 2345 EXP. 9-30-13 GEOTECHNICAL — REGISTERED PROFESSIONAL ENGINEER — STATE OF CALIFORNIA

RETAINING WALL No. 29

LOG OF TEST BORINGS 2 OF 4

UNIT: 0724	CONTRACT No.	BRIDGE No.
PROJECT NUMBER & PHASE: 04000001601	04-0A7101	33E0114
		Sheet 11 of 13

Paul Cotter — DESIGN OVERSIGHT — Paul Cotter — 7-16-12 — SIGN OFF DATE

DRAWN BY: N. HUTTON
CHECKED BY: C. TSAI
S. JANOWSKI — FIELD INVESTIGATION BY:
DATE: 04-25-11 TO 05-04-11

PREPARED FOR THE STATE OF CALIFORNIA DEPARTMENT OF TRANSPORTATION

Jan Hueser — PROJECT ENGINEER

BRIDGE NO. 33-0751
POST MILES 28.69

29TH AVENUE OC (REPLACE)

LOG OF TEST BORINGS 2 OF 2

GS CIVIL LOG OF TEST BORINGS SHEET (ENGLISH) (REV. 7/16/10)

ORIGINAL SCALE IN INCHES FOR REDUCED PLANS 0 1 2 3

UNIT: 0724
PROJECT NUMBER & PHASE: 04000001601 CONTRACT NO.: 04-0A7101

DISREGARD PRINTS BEARING EARLIER REVISION DATES — REVISION DATES 9-6-11 1-30-12 3-30-12 6-25-12 — SHEET 56 OF 60

FILE => 33-E0114-z-ltb2.dgn

USERNAME => s124496 DATE PLOTTED => 10-APR-2013 TIME PLOTTED => 08:52

DIST	COUNTY	ROUTE	POST MILES TOTAL PROJECT	SHEET No	TOTAL SHEETS
04	Ala	880	28.4/29.2	729	789

Lino Cheang 6-25-12
REGISTERED ENGINEER DATE

4-8-13
PLANS APPROVAL DATE

REGISTERED PROFESSIONAL ENGINEER L. CHEANG NO. GE 2345 EXP. 9-30-13 GEOTECHNICAL STATE OF CALIFORNIA

The State of California or its officers or agents shall not be responsible for the accuracy or completeness of electronic copies of this plan sheet.

ALAMEDA COUNTY TRANSPORTATION COMMISSION
1333 BROADWAY, SUITE 220
OAKLAND, CA 94612

EARTH MECHANICS, INC.
17800 NEWHOPE STREET, SUITE B
FOUNTAIN VALLEY, CA 92708

REFERENCE: CALTRANS SOIL & ROCK LOGGING, CLASSIFICATION, AND PRESENTATION MANUAL (2010)

CEMENTATION

Description	Criteria
Weak	Crumbles or breaks with handling or little finger pressure.
Moderate	Crumbles or breaks with considerable finger pressure.
Strong	Will not crumble or break with finger pressure.

BOREHOLE IDENTIFICATION

Symbol	Hole Type	Description
Size	A	Auger Boring (hollow or solid stem bucket)
Size	R RW RC P	Rotary drilled boring (conventional) Rotary drilled with self-casing wire-line Rotary core with continuously-sampled, self-casing wire-line Rotary percussion boring (air)
Size	R	Rotary drilled diamond core
Size	HD HA	Hand driven (1-inch soil tube) Hand Auger
●	D	Dynamic Cone Penetration Boring
▲	CPT	Cone Penetration Test (ASTM D 5778)
⬚	O	Other (note on LOTB)

Note: Size in inches.

CONSISTENCY OF COHESIVE SOILS

Description	Shear Strength (tsf)	Pocket Penetrometer Measurement, PP, (tsf)	Torvane Measurement, TV, (tsf)	Vane Shear Measurement, VS, (tsf)
Very Soft	Less than 0.12	Less than 0.25	Less than 0.12	Less than 0.12
Soft	0.12 - 0.25	0.25 - 0.5	0.12 - 0.25	0.12 - 0.25
Medium Stiff	0.25 - 0.5	0.5 - 1	0.25 - 0.5	0.25 - 0.5
Stiff	0.5 - 1	1 - 2	0.5 - 1	0.5 - 1
Very Stiff	1 - 2	2 - 4	1 - 2	1 - 2
Hard	Greater than 2	Greater than 4	Greater than 2	Greater than 2

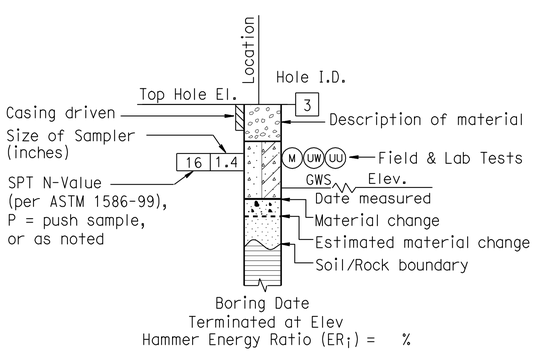

ROTARY BORING

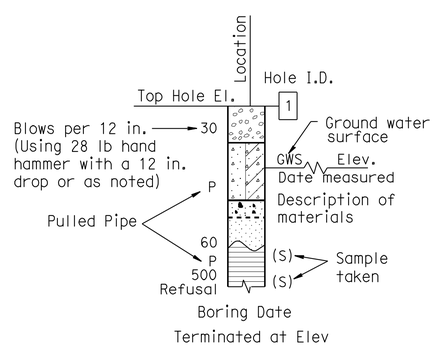

HAND BORING

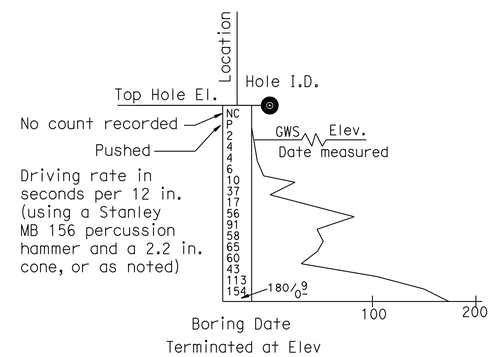

DYNAMIC CONE PENETRATION BORING

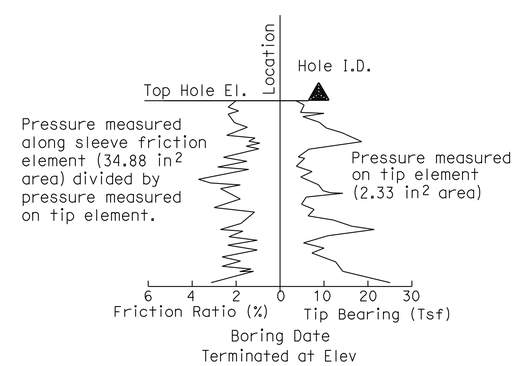

CONE PENETRATION TEST (CPT) BORING

Paul Cotter
DESIGN OVERSIGHT Paul Cotter
7-16-12
SIGN OFF DATE

DRAWN BY J. Fang
CHECKED BY G. J. Gunaranjan

K. Thant
FIELD INVESTIGATION BY:
DATE: 3/2011, 4/2011

PREPARED FOR THE STATE OF CALIFORNIA DEPARTMENT OF TRANSPORTATION

L. Cheang
PROJECT ENGINEER

BRIDGE NO. 33E0114
POST MILES 28.6

RETAINING WALL No. 29
LOG OF TEST BORINGS 3 OF 4

GS GEOTECHNICAL LOG OF TEST BORINGS SHEET (ENGLISH) (REV. 7/16/10)

ORIGINAL SCALE IN INCHES FOR REDUCED PLANS 0 1 2 3

UNIT: 0724
PROJECT NUMBER & PHASE: 04000001601

DISREGARD PRINTS BEARING EARLIER REVISION DATES

REVISION DATES

SHEET 12 OF 13

FILE => 33-E0114-z-soil legend-ltb1.dgn

CONTRACT NO.:04-0A7101 PROJECT ID:

USERNAME => s124496 DATE PLOTTED => 10-APR-2013 TIME PLOTTED => 08:52

REFERENCE: CALTRANS SOIL & ROCK LOGGING, CLASSIFICATION, AND PRESENTATION MANUAL (2010)

DIST	COUNTY	ROUTE	POST MILES TOTAL PROJECT	SHEET No	TOTAL SHEETS
04	Ala	880	28.4/29.2	730	789

Lino Cheang
REGISTERED ENGINEER — DATE 6-25-12

4-8-13
PLANS APPROVAL DATE

REGISTERED PROFESSIONAL ENGINEER — L. CHEANG — NO. GE 2345 — EXP. 9-30-13 — GEOTECHNICAL — STATE OF CALIFORNIA

The State of California or its officers or agents shall not be responsible for the accuracy or completeness of electronic copies of this plan sheet.

ALAMEDA COUNTY TRANSPORTATION COMMISSION
1333 BROADWAY, SUITE 220
OAKLAND, CA 94612

EARTH MECHANICS, INC.
17800 NEWHOPE STREET, SUITE B
FOUNTAIN VALLEY, CA 92708

GROUP SYMBOLS AND NAMES

Graphic/Symbol	Group Names	Graphic/Symbol	Group Names
GW	Well-graded GRAVEL Well-graded GRAVEL with SAND	CL	Lean CLAY Lean CLAY with SAND Lean CLAY with GRAVEL SANDY lean CLAY SANDY lean CLAY with GRAVEL GRAVELLY lean CLAY GRAVELLY lean CLAY with SAND
GP	Poorly-graded GRAVEL Poorly-graded GRAVEL with SAND		
GW-GM	Well-graded GRAVEL with SILT Well-graded GRAVEL with SILT and SAND	CL-ML	SILTY CLAY SILTY CLAY with SAND SILTY CLAY with GRAVEL SANDY SILTY CLAY SANDY SILTY CLAY with GRAVEL GRAVELLY SILTY CLAY GRAVELLY SILTY CLAY with SAND
GW-GC	Well-graded GRAVEL with CLAY (or SILTY CLAY) Well-graded GRAVEL with CLAY and SAND (or SILTY CLAY and SAND)		
GP-GM	Poorly-graded GRAVEL with SILT Poorly-graded GRAVEL with SILT and SAND	ML	SILT SILT with SAND SILT with GRAVEL SANDY SILT SANDY SILT with GRAVEL GRAVELLY SILT GRAVELLY SILT with SAND
GP-GC	Poorly-graded GRAVEL with CLAY (or SILTY CLAY) Poorly-graded GRAVEL with CLAY and SAND (or SILTY CLAY and SAND)		
GM	SILTY GRAVEL SILTY GRAVEL with SAND	OL	ORGANIC lean CLAY ORGANIC lean CLAY with SAND ORGANIC lean CLAY with GRAVEL SANDY ORGANIC lean CLAY SANDY ORGANIC lean CLAY with GRAVEL GRAVELLY ORGANIC lean CLAY GRAVELLY ORGANIC lean CLAY with SAND
GC	CLAYEY GRAVEL CLAYEY GRAVEL with SAND		
GC-GM	SILTY, CLAYEY GRAVEL SILTY, CLAYEY GRAVEL with SAND	OL	ORGANIC SILT ORGANIC SILT with SAND ORGANIC SILT with GRAVEL SANDY ORGANIC SILT SANDY ORGANIC SILT with GRAVEL GRAVELLY ORGANIC SILT GRAVELLY ORGANIC SILT with SAND
SW	Well-graded SAND Well-graded SAND with GRAVEL		
SP	Poorly-graded SAND Poorly-graded SAND with GRAVEL	CH	Fat CLAY Fat CLAY with SAND Fat CLAY with GRAVEL SANDY fat CLAY SANDY fat CLAY with GRAVEL GRAVELLY fat CLAY GRAVELLY fat CLAY with SAND
SW-SM	Well-graded SAND with SILT Well-graded SAND with SILT and GRAVEL		
SW-SC	Well-graded SAND with CLAY (or SILTY CLAY) Well-graded SAND with CLAY and GRAVEL (or SILTY CLAY and GRAVEL)	MH	Elastic SILT Elastic SILT with SAND Elastic SILT with GRAVEL SANDY elastic SILT SANDY elastic SILT with GRAVEL GRAVELLY elastic SILT GRAVELLY elastic SILT with SAND
SP-SM	Poorly-graded SAND with SILT Poorly-graded SAND with SILT and GRAVEL		
SP-SC	Poorly-graded SAND with CLAY (or SILTY CLAY) Poorly-graded SAND with CLAY and GRAVEL (or SILTY CLAY and GRAVEL)	OH	ORGANIC fat CLAY ORGANIC fat CLAY with SAND ORGANIC fat CLAY with GRAVEL SANDY ORGANIC fat CLAY SANDY ORGANIC fat CLAY with GRAVEL GRAVELLY ORGANIC fat CLAY GRAVELLY ORGANIC fat CLAY with SAND
SM	SILTY SAND SILTY SAND with GRAVEL		
SC	CLAYEY SAND CLAYEY SAND with GRAVEL	OH	ORGANIC elastic SILT ORGANIC elastic SILT with SAND ORGANIC elastic SILT with GRAVEL SANDY ORGANIC elastic SILT SANDY ORGANIC elastic SILT with GRAVEL GRAVELLY ORGANIC elastic SILT GRAVELLY ORGANIC elastic SILT with SAND
SC-SM	SILTY, CLAYEY SAND SILTY, CLAYEY SAND with GRAVEL		
PT	PEAT	OL/OH	ORGANIC SOIL ORGANIC SOIL with SAND ORGANIC SOIL with GRAVEL SANDY ORGANIC SOIL SANDY ORGANIC SOIL with GRAVEL GRAVELLY ORGANIC SOIL GRAVELLY ORGANIC SOIL with SAND
	COBBLES COBBLES and BOULDERS BOULDERS		

FIELD AND LABORATORY TESTING

- (C) Consolidation (ASTM D 2435)
- (CL) Collapse Potential (ASTM D 5333)
- (CP) Compaction Curve (CTM 216)
- (CR) Corrosivity Testing (CTM 643, CTM 422, CTM 417)
- (CU) Consolidated Undrained Triaxial (ASTM D 4767)
- (DS) Direct Shear (ASTM D 3080)
- (EI) Expansion Index (ASTM D 4829)
- (M) Moisture Content (ASTM D 2216)
- (OC) Organic Content-% (ASTM D 2974)
- (P) Permeability (CTM 220)
- (PA) Particle Size Analysis (ASTM D 422)
- (PI) Plasticity Index (AASHTO T 90) Liquid Limit (AASHTO T 89)
- (PL) Point Load Index (ASTM D 5731)
- (PM) Pressure Meter
- (R) R-Value (CTM 301)
- (SE) Sand Equivalent (CTM 217)
- (SG) Specific Gravity (AASHTO T 100)
- (SL) Shrinkage Limit (ASTM D 427)
- (SW) Swell Potential (ASTM D 4546)
- (UC) Unconfined Compression-Soil (ASTM D 2166) Unconfined Compression-Rock (ASTM D 2938)
- (UU) Unconsolidated Undrained Triaxial (ASTM D 2850)
- (UW) Unit Weight (ASTM D 4767)

APPARENT DENSITY OF COHESIONLESS SOILS

Description	SPT N_{60} (Blows / 12 in.)
Very Loose	0 - 5
Loose	5 - 10
Medium Dense	10 - 30
Dense	30 - 50
Very Dense	Greater than 50

MOISTURE

Description	Criteria
Dry	No discernable moisture
Moist	Moisture present, but no free water
Wet	Visible free water

PERCENT OR PROPORTION OF SOILS

Description	Criteria
Trace	Particles are present but estimated to be less than 5%
Few	5% - 10%
Little	15% - 25%
Some	30% - 45%
Mostly	50% - 100%

PARTICLE SIZE

Description		Size (in.)
Boulder		Greater than 12
Cobble		3 - 12
Gravel	Coarse	3/4 - 3
	Fine	1/5 - 3/4
Sand	Coarse	1/16 - 1/5
	Medium	1/64 - 1/16
	Fine	1/300 - 1/64
Silt and Clay		Less than 1/300

Paul Cotter
DESIGN OVERSIGHT Paul Cotter
7-16-12
SIGN OFF DATE

DRAWN BY J. Fang
CHECKED BY G. J. Gunaranjan

K. Thant
FIELD INVESTIGATION BY:
DATE: 3/2011, 4/2011

PREPARED FOR THE STATE OF CALIFORNIA DEPARTMENT OF TRANSPORTATION

L. Cheang
PROJECT ENGINEER

BRIDGE NO. 33E0114
POST MILES 28.6

RETAINING WALL No. 29
LOG OF TEST BORINGS 4 OF 4

GS GEOTECHNICAL LOG OF TEST BORINGS SHEET (ENGLISH) (REV. 7/16/10)

ORIGINAL SCALE IN INCHES FOR REDUCED PLANS 0 1 2 3

UNIT: 0724
PROJECT NUMBER & PHASE: 04000001601

DISREGARD PRINTS BEARING EARLIER REVISION DATES

REVISION DATES

SHEET 13 OF 13

FILE => 33-E0114-z-soil legend-ltb2.dgn

CONTRACT NO.:04-0A7101 PROJECT ID:

USERNAME => s124496 DATE PLOTTED => 10-APR-2013 TIME PLOTTED => 08:52

DIST	COUNTY	ROUTE	POST MILES TOTAL PROJECT	SHEET No	TOTAL SHEETS
04	Ala	880	28.4/29.2	731	789

Scott McCauley 3/29/13
REGISTERED CIVIL ENGINEER DATE

4-8-13
PLANS APPROVAL DATE

REGISTERED PROFESSIONAL ENGINEER S.McCauley No. 71495 Exp. 12-31-13 CIVIL STATE OF CALIFORNIA

The State of California or its officers or agents shall not be responsible for the accuracy or completeness of electronic copies of this plan sheet.

ALAMEDA COUNTY TRANSPORTATION COMMISSION
1333 BROADWAY, SUITE 220
OAKLAND, CA 94612

RBF CONSULTING
ONE KAISER PLAZA, SUITE 1150
OAKLAND, CA 94612

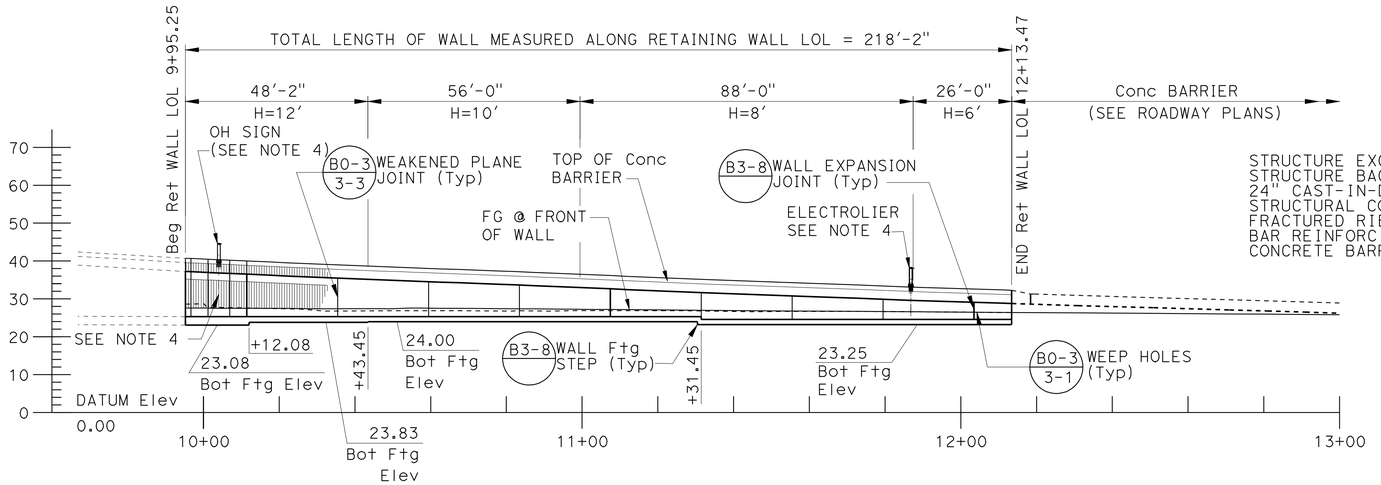

MIRRORED ELEVATION

SCALE: 1" = 20'

RETAINING WALL 224

QUANTITIES

STRUCTURE EXCAVATION (RETAINING WALL)	591	CY
STRUCTURE BACKFILL (RETAINING WALL)	584	CY
24" CAST-IN-DRILLED-HOLE CONCRETE PILING	242	LF
STRUCTURAL CONCRETE, RETAINING WALL	202	CY
FRACTURED RIB TEXTURE	845	SQFT
BAR REINFORCING STEEL (RETAINING WALL)	27,480	LB
CONCRETE BARRIER (TYPE 742A MODIFIED)	219	LF

TANGENT DATA

1. N66°10'35"W
2. N66°10'57"W
3. N60°40'27"W
4. N60°40'27"W

CURVE DATA

CURVE No.	R	△	T	L
1	1255.00'	05°30'29"	60.37'	120.65'
2	1986.00'	01°09'15"	20.00'	40.01'

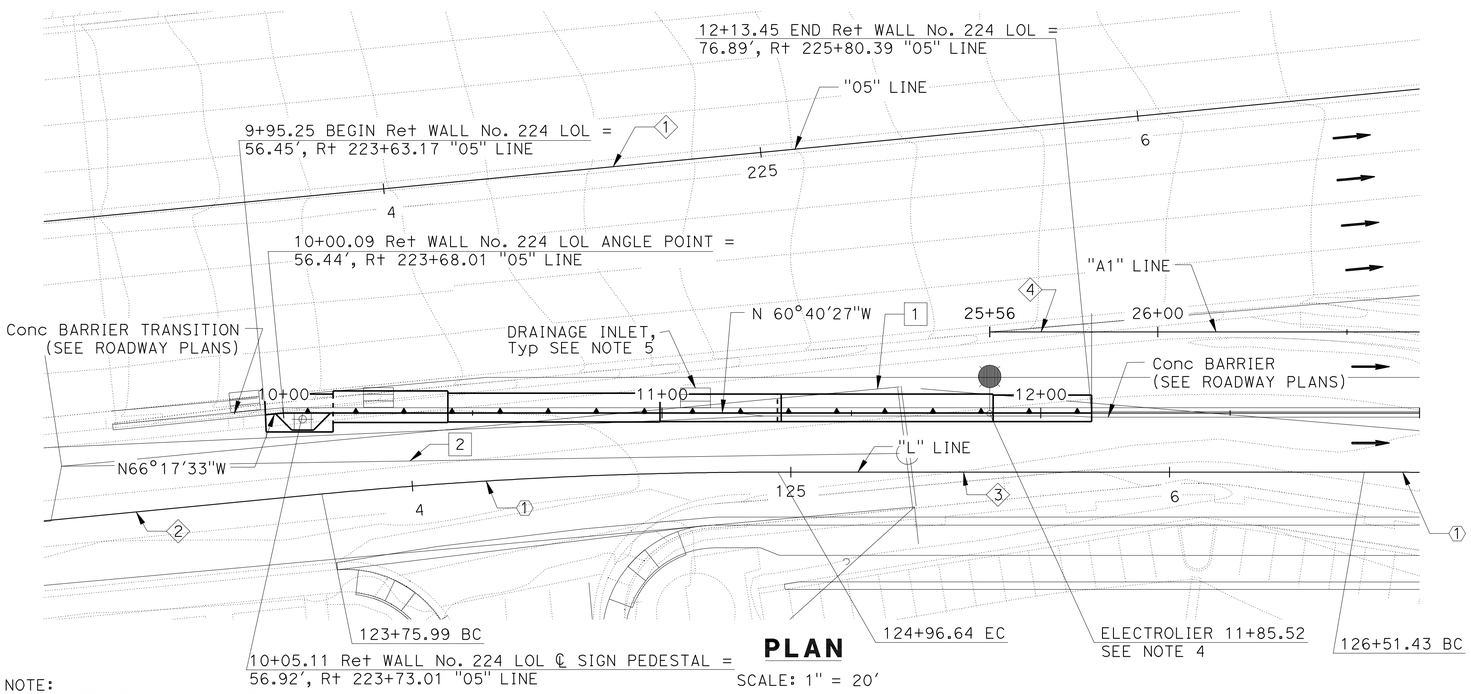

PLAN

SCALE: 1" = 20'

NOTE:
THE CONTRACTOR SHALL VERIFY ALL CONTROLLING FIELD DIMENSIONS BEFORE ORDERING OR FABRICATING ANY MATERIAL.

LEGEND:

- Indicates Direction of Traffic
- Electrolier, See NOTE 4
- Drainage Inlet, See NOTE 5

UTILITIES:

1. Exist 18" Sewer (City of Oakland) (To be relocated)
2. Prop (2) 12" Sewer (City of Oakland)

NOTES:

1. "H" Indicates Design Height.
2. For Utility Information not Shown, See ROADWAY PLANS.
3. For the Typical Section, See " GENERAL PLAN No. 2" Sheet.
4. For Lighting and Sign Locations and Details, See ROADWAY PLANS. For Electrolier Pedestal on Retaining Wall Details, See "MISCELLANEOUS DETAILS No. 2" Sheet.
5. For Location of Drainage Inlets, See DRAINAGE PLANS.

Paul Cotter
DESIGN OVERSIGHT Paul Cotter
4-3-13
SIGN OFF DATE

	BY	CHECKED			
DESIGN	S. McCauley	C. Cho	LOAD & RESISTANCE FACTOR DESIGN	LIVE LOADING: HL93 W/"LOW-BOY"; PERMIT DESIGN VEHICLE	
DETAILS	J. Saldana	S. McCauley	LAYOUT	J. Saldana	S. McCauley
QUANTITIES	C. Cho	S. McCauley	SPECIFICATIONS	C. Harden	PLANS AND SPECS COMPARED S. Sheikh

PREPARED FOR THE STATE OF CALIFORNIA DEPARTMENT OF TRANSPORTATION

Chad Harden
PROJECT ENGINEER

BRIDGE NO. 33E0115
POST MILES 28.4

RETAINING WALL No. 224
GENERAL PLAN No. 1

DESIGN GENERAL PLAN SHEET (ENGLISH) (REV.7/16/10)

ORIGINAL SCALE IN INCHES FOR REDUCED PLANS 0 1 2 3

UNIT: 0724
PROJECT NUMBER & PHASE: 04000001601 CONTRACT NO.: 04-0A7101

DISREGARD PRINTS BEARING EARLIER REVISION DATES

REVISION DATES 2/04/11 3/30/12 6/26/12 3/29/13

SHEET 1 OF 11

FILE => 33-E0115-a-gp01.dgn

USERNAME => s124436 DATE PLOTTED => 10-APR-2013 TIME PLOTTED => 08:52

DIST	COUNTY	ROUTE	POST MILES TOTAL PROJECT	SHEET No	TOTAL SHEETS
04	Ala	880	28.4/29.2	732	789

REGISTERED CIVIL ENGINEER — DATE 6/26/12

4-8-13
PLANS APPROVAL DATE

REGISTERED PROFESSIONAL ENGINEER S.McCauley No. 71495 Exp. 12-31-13 CIVIL STATE OF CALIFORNIA

The State of California or its officers or agents shall not be responsible for the accuracy or completeness of electronic copies of this plan sheet.

ALAMEDA COUNTY TRANSPORTATION COMMISSION
1333 BROADWAY, SUITE 220
OAKLAND, CA 94612

RBF CONSULTING
ONE KAISER PLAZA, SUITE 1150
OAKLAND, CA 94612

TOP OF WALL ELEVATION TABLE

	WALL LOL STATION	TOP OF WALL Elev (Ft)
Beg Ret WALL No. 224	9+95.25	37.24
	10+00.00	37.04
	+10	36.60
	+20	36.15
	+30	35.71
	+40	35.31
	+50	34.91
	+60	34.54
	+70	34.17
	+80	33.80
	+90	33.39
	11+00.00	32.97
	+10	32.55
	+20	32.13
	+30	31.72
	+40	31.34
	+50	30.99
	+60	30.64
	+70	30.29
	+80	29.90
	+90	29.53
	12+00.00	29.21
	+10	28.89
END Ret WALL No. 224	12+13.47	28.77

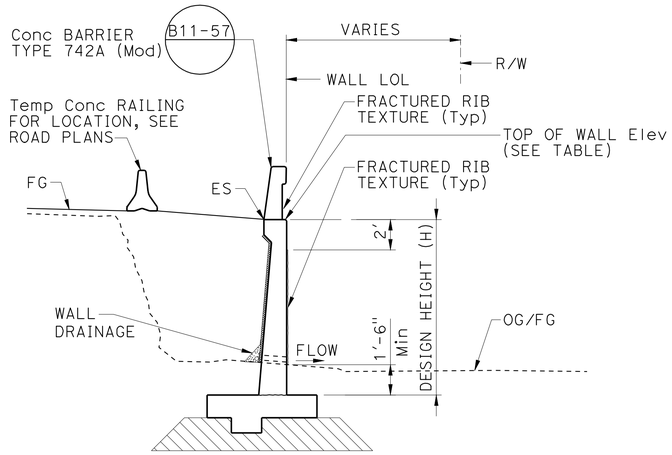

TYPICAL SECTION

NO SCALE

LEGEND:

Overexcavation Depth
See Note 4

INDEX TO PLANS

SHEET NO.	TITLE
1	GENERAL PLAN No. 1
2	GENERAL PLAN No. 2
3	RETAINING WALL DETAILS
4	MISCELLANEOUS DETAILS No. 1
5	MISCELLANEOUS DETAILS No. 2
6	MISCELLANEOUS DETAILS No. 3
7	LOG OF TEST BORING 1 OF 3
8	LOG OF TEST BORING 2 OF 3
9	LOG OF TEST BORING 3 OF 3
10	SOIL LEGEND LOG OF TEST BORINGS 1 OF 2
11	SOIL LEGEND LOG OF TEST BORINGS 2 OF 2

STANDARD PLANS DATED MAY 2006

A10A	ACRONYMS AND ABBREVIATIONS (SHEET 1 OF 2)
A10B	ACRONYMS AND ABBREVIATIONS (SHEET 2 OF 2)
A10C	SYMBOLS (SHEET 1 OF 2)
A10D	SYMBOLS (SHEET 2 OF 2)
A62B	LIMITS OF PAYMENT FOR EXCAVATION AND BACKFILL BRIDGE SURCHARGE AND WALL
B0-3	BRIDGE DETAILS
B3-8	RETAINING WALL DETAILS No. 1
B2-3	16" AND 24" CAST-IN-DRILLED HOLE CONCRETE PILE
B11-57	CONCRETE BARRIER TYPE 742

STANDARD PLAN SHEET No.

DETAIL No.

PILE DATA TABLE

LOCATION	PILE TYPE	NOMINAL RESISTANCE (Kips)		DESIGN TIP ELEVATIONS (FEET)	SPECIFIED TIP ELEVATIONS (FEET)
		COMPRESSION	TENSION		
SIGN PEDESTAL	24" CIDH	200	30	-17(a) -2(d) +15 (b)	-17

NOTES:

1. Design Tip Elevations are controlled by the following demands: (a) Compression, (b) Tension, (c) Settlement, and (d) Lateral Load.
2. There is no Design Tip Elevation for Tolerable Settlement.
3. The Specified Tip Elevation shall not be raised.

NOTES:

1. For Sign Pedestal Details, See "MISCELLANEOUS DETAILS No. 3" Sheet.
2. For All Pipes and Drainage Inlet and Outlet Locations, See ROADWAY PLANS.
3. For Existing Pipes and Utilities, See ROADWAY PLANS.
4. For Limits of Overexcavation, see "MISCELLANEOUS DETAILS No. 2" sheet.
5. For Pile layout, see "MISCELLANEOUS DETAILS No. 3" sheet.

NOTE:
THE CONTRACTOR SHALL VERIFY ALL CONTROLLING FIELD DIMENSIONS BEFORE ORDERING OR FABRICATING ANY MATERIAL.

DESIGN OVERSIGHT Paul Cotter
7-16-12
SIGN OFF DATE

	BY	CHECKED
DESIGN	S. McCauley	C. Cho
DETAILS	J. Saldana	S. McCauley
QUANTITIES	C. Cho	S. McCauley

LOAD & RESISTANCE FACTOR DESIGN — LIVE LOADING: HL93 W/"LOW-BOY"; PERMIT DESIGN VEHICLE

LAYOUT — BY J. Saldana — CHECKED S. McCauley
SPECIFICATIONS — BY C. Harden — PLANS AND SPECS COMPARED S. Sheikh

PREPARED FOR THE STATE OF CALIFORNIA DEPARTMENT OF TRANSPORTATION

Chad Harden
PROJECT ENGINEER

BRIDGE NO. 33E0115
POST MILES 28.4

RETAINING WALL No. 224
GENERAL PLAN No. 2

DESIGN GENERAL PLAN SHEET (ENGLISH) (REV.7/16/10)

ORIGINAL SCALE IN INCHES FOR REDUCED PLANS 0 1 2 3

UNIT: 0724
PROJECT NUMBER & PHASE: 04000001601 CONTRACT NO.: 04-0A7101

DISREGARD PRINTS BEARING EARLIER REVISION DATES — REVISION DATES 2/24/11 3/30/12 6/26/12

SHEET 2 OF 11

FILE => 33-E0115-a-gp02.dgn

USERNAME => s124936 DATE PLOTTED => 10-APR-2013 TIME PLOTTED => 08:52

DIST	COUNTY	ROUTE	POST MILES TOTAL PROJECT	SHEET No	TOTAL SHEETS
04	Ala	880	28.4/29.2	733	789

REGISTERED CIVIL ENGINEER — DATE 3/29/13

4-8-13
PLANS APPROVAL DATE

REGISTERED PROFESSIONAL ENGINEER S.McCauley No. 71495 Exp. 12-31-13 CIVIL STATE OF CALIFORNIA

The State of California or its officers or agents shall not be responsible for the accuracy or completeness of electronic copies of this plan sheet.

ALAMEDA COUNTY TRANSPORTATION COMMISSION
1333 BROADWAY, SUITE 220
OAKLAND, CA 94612

RBF CONSULTING
ONE KAISER PLAZA, SUITE 1150
OAKLAND, CA 94612

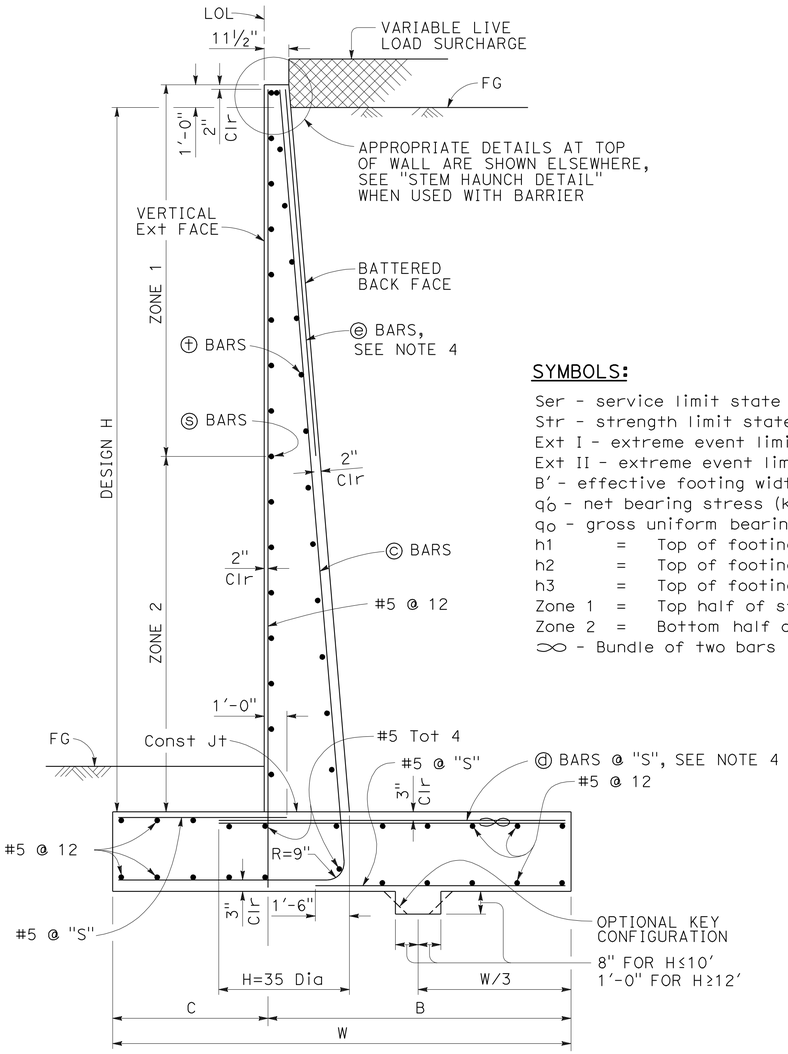

TYPICAL SECTION

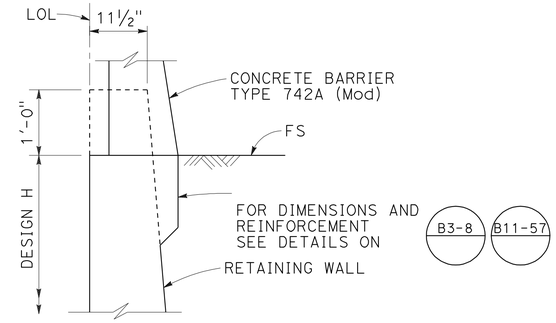

STEM HAUNCH DETAIL

SYMBOLS:

Ser - service limit state I
Str - strength limit state I
Ext I - extreme event limit state I
Ext II - extreme event limit state II
B' - effective footing width (ft)
q'o - net bearing stress (ksf), OG assumed to be FG at toe
qo - gross uniform bearing stress (ksf)
h1 = Top of footing to top of short ⓒ bar
h2 = Top of footing to top of ⓒ bar
h3 = Top of footing to top of ⓓ bar
Zone 1 = Top half of stem height
Zone 2 = Bottom half of stem height
∞ - Bundle of two bars

TABLE OF REINFORCING STEEL, DIMENSIONS AND DATA

DESIGN H	6'	8'	10'	12'
W	7'-0"	7'-3"	7'-7"	8'-9"
C	2'-3"	2'-3"	2'-4"	3'-0"
B	4'-9"	5'-0"	5'-3"	5'-9"
F	1'-4"	1'-4"	1'-4"	1'-6"
BATTER	½: 12	½: 12	½: 12	½: 12
SPACING "S"	9"	9"	9"	9"
ⓒ BARS	#6	#6	#6	#6
ⓓ BARS	#5	#6	#6	#6
ZONE 1 ⓢ BARS	#5 @ 18	#5 @ 18	#5 @ 18	#5 @ 18
ZONE 2 ⓢ BARS	#5 @ 18	#5 @ 18	#5 @ 18	#5 @ 18
ZONE 1 ⓣ BARS	#4 @ 18	#4 @ 18	#4 @ 18	#4 @ 18
ZONE 2 ⓣ BARS	#4 @ 18	#4 @ 18	#4 @ 18	#4 @ 18
Ser: B', q'o	6.8, 1.2	6.5, 1.6	6.2, 2.2	7.2, 2.4
Str: B', q'o	6.8, 1.6	6.4, 2.2	6.1, 3.0	6.9, 3.3
Ext I: B', qo	4.5, 1.9	3.5, 3.0	2.4, 5.4	2.4, 6.5
Ext II: B', qo	2.8, 3.1	2.9, 3.7	2.9, 4.4	4.4, 3.7

NOTES:

1. For details not shown and drainage notes see B3-8
2. For wall stem joint details see B0-3 3-3 and B0-3 3-4
3. At ⓒ bars:
   H = 6', no splices are allowed within 1'-8" above the top of footing.
   H > 6', no splices are allowed within H/4 above the top of footing.
4. Provide #6 @ 10" x 15'-0" ⓔ bars over a distance of 8'-0" measured from all expansion joints, begin wall and end wall locations. Hook e bar into footing and reduce bar length as needed to maintain Min Clr cover.

NOTE:
THE CONTRACTOR SHALL VERIFY ALL CONTROLLING FIELD DIMENSIONS BEFORE ORDERING OR FABRICATING ANY MATERIAL.

DESIGN NOTES:

DESIGN: AASHTO LRFD Bridge Design Specifications, 4th Edition with California Amendments

LS: Varied surcharge on level ground surface

DC: Stem Architectural Treatment of thickness up to 6" of concrete (75 psf) considered

CT: 54 kip transverse force applied at He = 32", distributed over 10 feet at the top of wall and 1 : 1 distribution down and outward. Distribution below footing taken no less than 40'.

SEISMIC: $k_h = 0.36$, $k_v = 0.0$

SOIL: $\phi = 34°$, $\gamma = 120$ pcf

COHEFFICIENT OF FRICTION:
Service and Strength Limit States $\mu = 0.45$
Extreme Limit States $\mu = 0.6$

REINFORCED CONCRETE:
f'c = 3,600 psi
fy = 60,000 psi

LOAD COMBINATIONS AND LIMIT STATES:

Service I	Q = 1.00DC+1.00EV+1.00EH+1.00LS
Strength I	Q = αDC+ØEV+ηEH+1.75LS
Extreme I	Q = 1.00DC+1.00EV+1.00EH+1.00EQD+1.00EQE
Extreme II	Q = 1.00DC+1.00EV+1.00EH+1.00CT

Where:

Q:	Force Effects
α:	1.25 or 0.90, Whichever Controls Design
ø:	1.35 or 1.00, Whichever Controls Design
η:	1.50 or 0.90, Whichever Controls Design
DC:	Dead Load of Structure Components
EH:	Horizontal Earth Fill Pressure
EV:	Vertical Earth Pressure from Earth Fill Weight
LS:	Live Load Surcharge
EQE:	Seismic Earth Pressure
EQD:	Soil and Structural and Nonstructural Components Inertia
CT:	Vehicular Collision Force

DESIGN OVERSIGHT — Paul Cotter
4-3-13
SIGN OFF DATE

	BY	CHECKED
DESIGN	S McCauley	C. Cho
DETAILS	J Saldana	S. McCauley
QUANTITIES	C. Cho	S. McCauley

PREPARED FOR THE STATE OF CALIFORNIA DEPARTMENT OF TRANSPORTATION

Chad Harden
PROJECT ENGINEER

BRIDGE NO. 33E0115
POST MILES 28.4

RETAINING WALL No. 224
RETAINING WALL DETAILS

DESIGN DETAIL SHEET (ENGLISH) (REV.7/16/10)

ORIGINAL SCALE IN INCHES FOR REDUCED PLANS 0 1 2 3

UNIT: 0724
PROJECT NUMBER & PHASE: 04000001601 CONTRACT NO.: 04-0A7101

DISREGARD PRINTS BEARING EARLIER REVISION DATES → 2/24/11 3/30/12 6/20/12 3/29/13

SHEET 3 OF 11

FILE => 33-E0115-u-miscdt01.dgn

USERNAME => s124496 DATE PLOTTED => 10-APR-2013 TIME PLOTTED => 08:52

DIST	COUNTY	ROUTE	POST MILES TOTAL PROJECT	SHEET No	TOTAL SHEETS
04	Ala	880	28.4/29.2	734	789

REGISTERED CIVIL ENGINEER — DATE 3/29/13

4-8-13
PLANS APPROVAL DATE

REGISTERED PROFESSIONAL ENGINEER S.McCauley No. 71495 Exp. 12-31-13 CIVIL STATE OF CALIFORNIA

The State of California or its officers or agents shall not be responsible for the accuracy or completeness of electronic copies of this plan sheet.

ALAMEDA COUNTY TRANSPORTATION COMMISSION
1333 BROADWAY, SUITE 220
OAKLAND, CA 94612

RBF CONSULTING
ONE KAISER PLAZA, SUITE 1150
OAKLAND, CA 94612

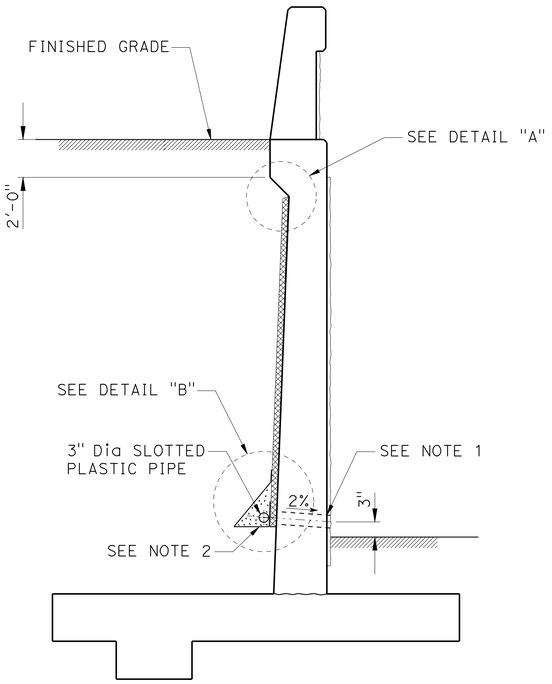

CANTILEVER RETAINING WALL WEEP HOLE AND GEOCOMPOSITE DRAIN

NO SCALE

ALTERNATIVE TO BRIDGE DETAIL B0-3

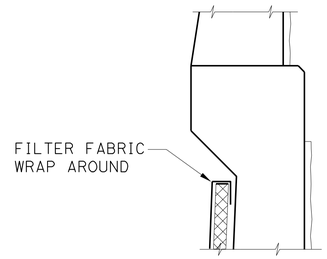

DETAIL "A"

NO SCALE

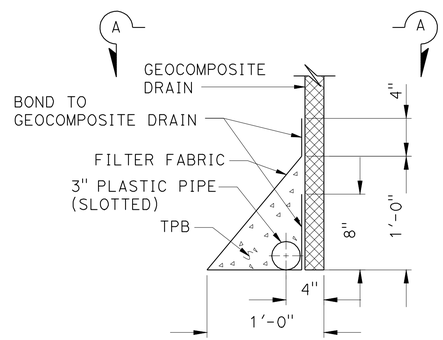

DETAIL "B"

NO SCALE

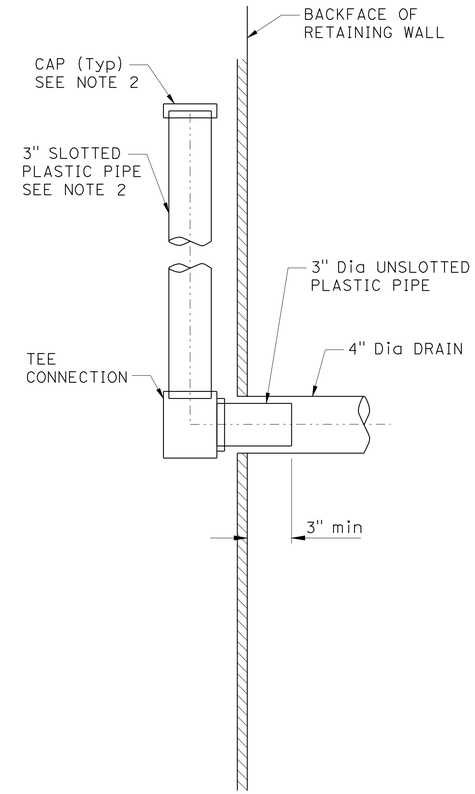

SECTION A-A

NO SCALE

NOTES:

1. 4" Dia Drains at Intermediate Sag Points and at 25' Max. Center to Center (9' c-c for Type 3 and 9'-3" c-c for Type 4 Retaining Walls). For Wall Adjacent to Side-Walks or Curbs, Provide 4" Plastic Pipe under the Sidewalk to Discharge through Curb Face. Exposed Wall Drains shall be Located 3"± above Finished Grade.

2. Geocomposite Drain, Cement Treated permeable base, and 3" dia slotted plastic pipe continuous behind retaining wall or abutment. Cap ends of pipe. Provide 'Tee' connection at each 4" dia drain.

3. Connect the low end of plastic pipe to the main outlet pipe as applicable.

NOTE:
THE CONTRACTOR SHALL VERIFY ALL CONTROLLING FIELD DIMENSIONS BEFORE ORDERING OR FABRICATING ANY MATERIAL.

DESIGN OVERSIGHT — Paul Cotter
4-3-13
SIGN OFF DATE

	BY	CHECKED
DESIGN	S McCauley	C. Cho
DETAILS	J Saldana	S. McCauley
QUANTITIES	C. Cho	S. McCauley

PREPARED FOR THE STATE OF CALIFORNIA DEPARTMENT OF TRANSPORTATION

Chad Harden
PROJECT ENGINEER

BRIDGE NO. 33E0115
POST MILES 28.4

RETAINING WALL No. 224
MISCELLANEOUS DETAILS No. 1

DESIGN DETAIL SHEET (ENGLISH) (REV.7/16/10)

ORIGINAL SCALE IN INCHES FOR REDUCED PLANS 0 1 2 3

UNIT: 0724
PROJECT NUMBER & PHASE: 04000001601
CONTRACT NO.: 04-0A7101

DISREGARD PRINTS BEARING EARLIER REVISION DATES

REVISION DATES 2/24/11 3/30/12 6/28/12 3/29/13

SHEET 4 OF 11

FILE => 33-E0115-u-miscdt02.dgn

USERNAME => s124436 DATE PLOTTED => 10-APR-2013 TIME PLOTTED => 08:52

DIST	COUNTY	ROUTE	POST MILES TOTAL PROJECT	SHEET No	TOTAL SHEETS
04	Ala	880	28.4/29.2	735	789

Scott McCauley 3/29/13
REGISTERED CIVIL ENGINEER DATE

4-8-13
PLANS APPROVAL DATE

REGISTERED PROFESSIONAL ENGINEER S.McCauley No. 71495 Exp. 12-31-13 CIVIL STATE OF CALIFORNIA

The State of California or its officers or agents shall not be responsible for the accuracy or completeness of electronic copies of this plan sheet.

ALAMEDA COUNTY TRANSPORTATION COMMISSION
1333 BROADWAY, SUITE 220
OAKLAND, CA 94612

RBF CONSULTING
ONE KAISER PLAZA, SUITE 1150
OAKLAND, CA 94612

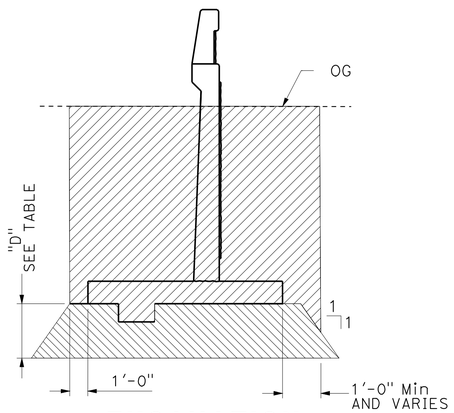

EXCAVATION
NO SCALE

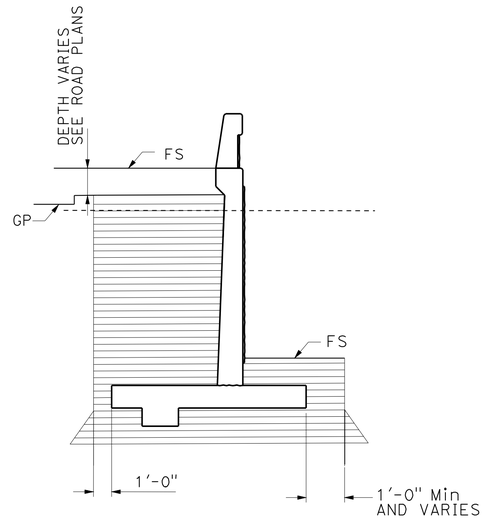

BACKFILL
NO SCALE

RETAINING WALL IN FILL AND CUT

LIMITS OF PAYMENT FOR RETAINING WALL EXCAVATION AND BACKFILL

LEGEND:

- Structure Excavation *
- Structure Backfill *
- Structure Overexcavation See Table

* In Addition to that Shown on Standard Plan A62B

OVEREXCAVATION DEPTH TABLE

DESIGN WALL HEIGHT (Ft)	MINIMUM OVEREXCAVATION DEPTH BELOW BOTTOM OF FOOTING, "D" (Ft)
6	2.0
8	2.5
10	3.5
12	3.5

Note: Overexcavation backfill shall be same material as Structure Backfill

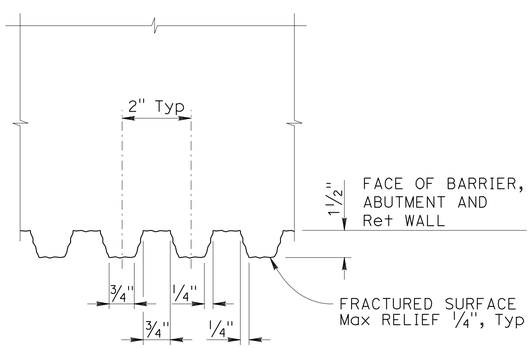

NOTES:

1. Vertical joints in form liners will be at center of trough between ribs. Min spacing of form liner vertical joints will be 4'-0".
2. No horizontal joints will be permitted in form liners.

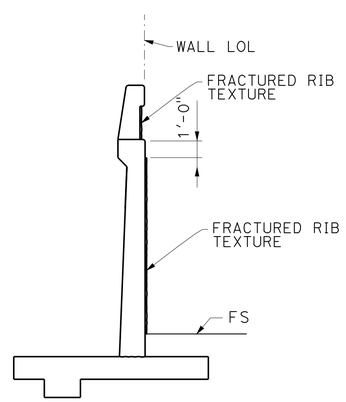

LIMITS OF PAYMENT

FRACTURED RIB TEXTURE

NO SCALE

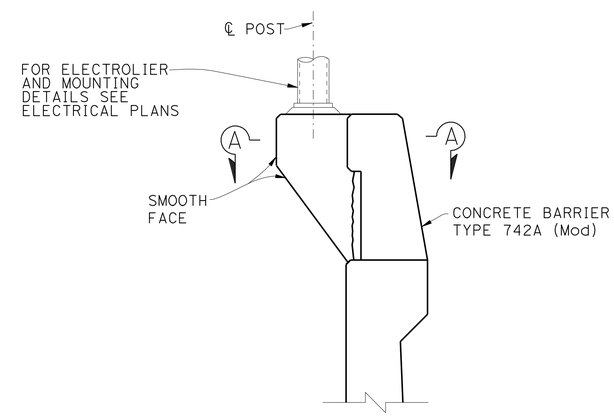

ELEVATION

NOTE: FOR ADDITIONAL DETAILS AND REINFORCEMENT NOT SHOWN, SEE B11-57

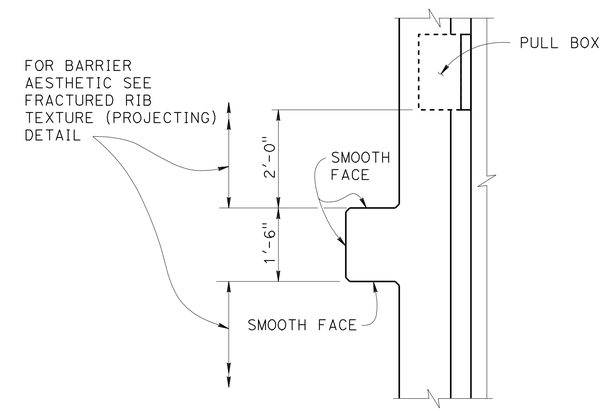

SECTION A-A
NO SCALE

ELECTROLIER PEDESTAL ON RETAINING WALL

NO SCALE

NOTE:
THE CONTRACTOR SHALL VERIFY ALL CONTROLLING FIELD DIMENSIONS BEFORE ORDERING OR FABRICATING ANY MATERIAL.

Paul Cotter
DESIGN OVERSIGHT Paul Cotter
4-3-13
SIGN OFF DATE

	BY	CHECKED
DESIGN	S McCauley	C. Cho
DETAILS	J Saldana	S. McCauley
QUANTITIES	C. Cho	S. McCauley

PREPARED FOR THE STATE OF CALIFORNIA DEPARTMENT OF TRANSPORTATION

Chad Harden
PROJECT ENGINEER

BRIDGE NO. 33E0115
POST MILES 28.4

RETAINING WALL No. 224
MISCELLANEOUS DETAILS No. 2

DESIGN DETAIL SHEET (ENGLISH) (REV.7/16/10)

ORIGINAL SCALE IN INCHES FOR REDUCED PLANS 0 1 2 3

UNIT: 0724
PROJECT NUMBER & PHASE: 04000001601 CONTRACT NO.: 04-0A7101

DISREGARD PRINTS BEARING EARLIER REVISION DATES

REVISION DATES: 2/24/11 3/30/12 6/28/12 3/29/13

SHEET 5 OF 11

FILE => 33-E0115-u-miscdt03.dgn

USERNAME => s124496 DATE PLOTTED => 10-APR-2013 TIME PLOTTED => 08:52

DIST	COUNTY	ROUTE	POST MILES TOTAL PROJECT	SHEET No	TOTAL SHEETS
04	Ala	880	28.4/29.2	736	789

REGISTERED CIVIL ENGINEER — DATE 6/26/12

4-8-13
PLANS APPROVAL DATE

REGISTERED PROFESSIONAL ENGINEER S.McCauley No. 71495 Exp. 12-31-13 CIVIL STATE OF CALIFORNIA

The State of California or its officers or agents shall not be responsible for the accuracy or completeness of electronic copies of this plan sheet.

ALAMEDA COUNTY TRANSPORTATION COMMISSION
1333 BROADWAY, SUITE 220
OAKLAND, CA 94612

RBF CONSULTING
ONE KAISER PLAZA, SUITE 1150
OAKLAND, CA 94612

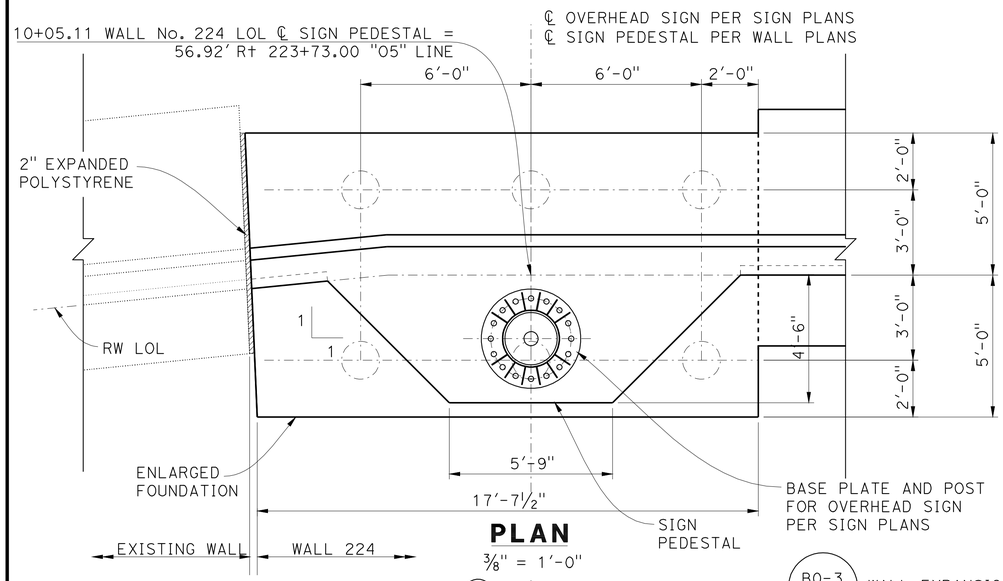

PLAN

⅜" = 1'-0"

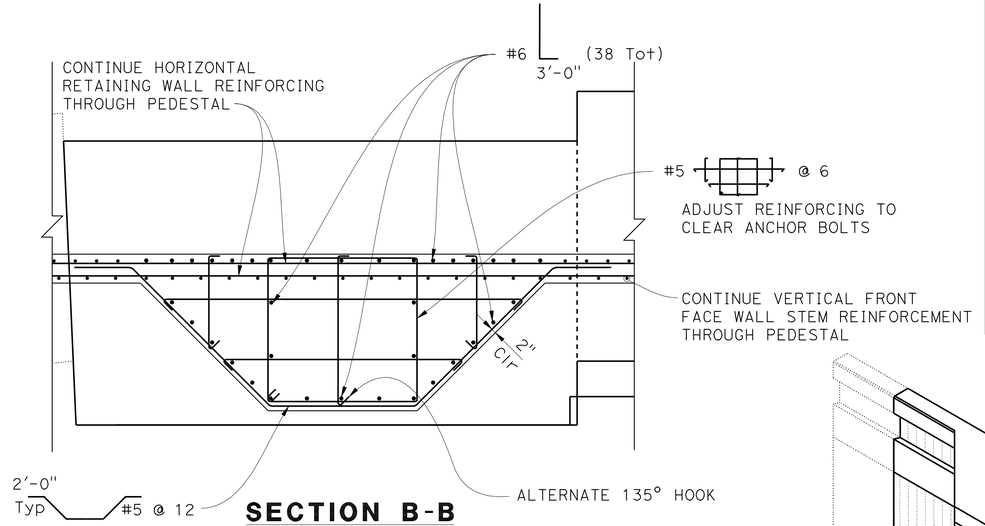

SECTION B-B

⅜" = 1'-0"

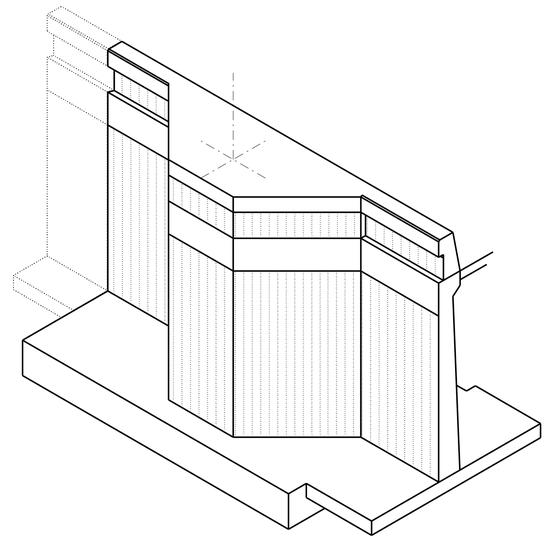

ISOMETRIC VIEW

NO SCALE

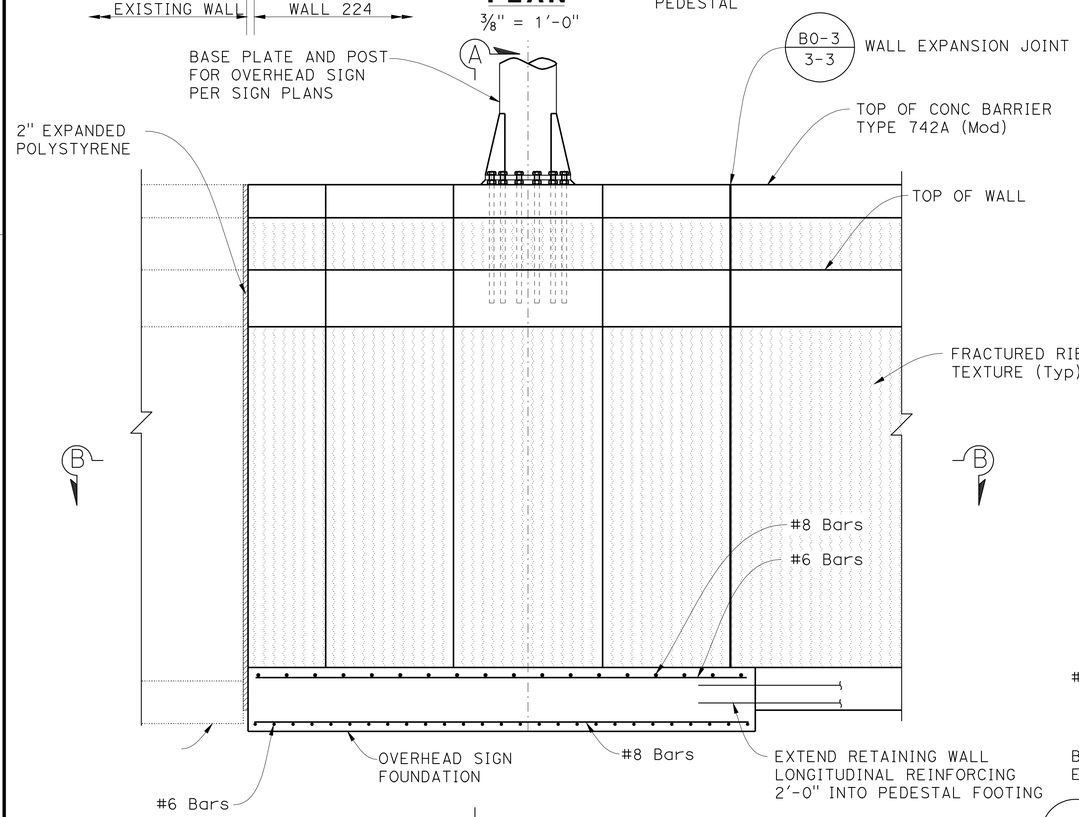

ELEVATION

⅜" = 1'-0"

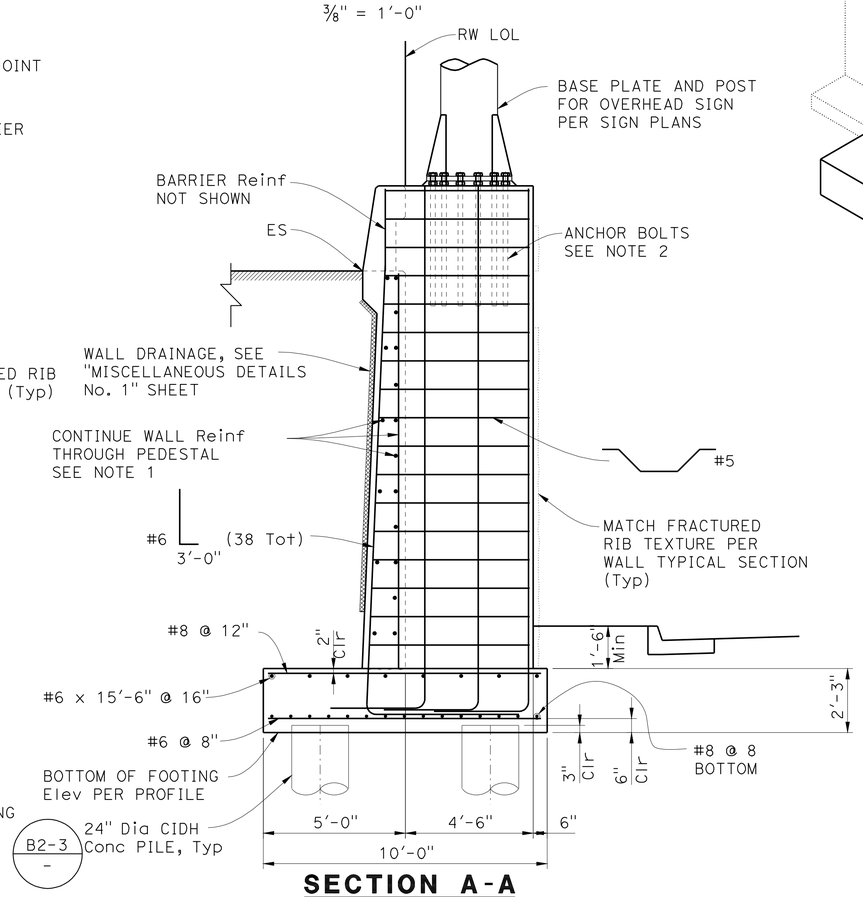

SECTION A-A

⅜" = 1'-0"

GENERAL NOTES:

DESIGN SPECIFICATIONS:
AASHTO LRFD BRIDGE DESIGN SPECIFICATIONS 4TH EDITION WITH CALIFORNIA AMENDMENTS AASHTO STANDARD SPECIFICATIONS FOR STRUCTURAL SUPPORTS FOR HIGHWAY SIGNS, LUMINAIRES AND TRAFFIC SIGNALS, 5TH EDITION 2009

NOTES

1. Reinforcement shown on Elevation and Sections is in Addition to all other Reinforcement. See "Retaining Wall Details" Sheets.
2. For Anchor Bolt size, Bolt Circle and Bolt Embedment, See Sign Plans.

NOTE:
THE CONTRACTOR SHALL VERIFY ALL CONTROLLING FIELD DIMENSIONS BEFORE ORDERING OR FABRICATING ANY MATERIAL.

DESIGN OVERSIGHT Paul Cotter
8-8-12
SIGN OFF DATE

	BY	CHECKED
DESIGN	S McCauley	C. Cho
DETAILS	J Saldana	S. McCauley
QUANTITIES	C. Cho	S. McCauley

PREPARED FOR THE STATE OF CALIFORNIA DEPARTMENT OF TRANSPORTATION

Chad Harden
PROJECT ENGINEER

BRIDGE NO. 33E0115
POST MILES 28.4

RETAINING WALL No. 224
MISCELLANEOUS DETAILS No. 3

DESIGN DETAIL SHEET (ENGLISH) (REV.7/16/10)

ORIGINAL SCALE IN INCHES FOR REDUCED PLANS 0 1 2 3

UNIT: 0724
PROJECT NUMBER & PHASE: 04000001601 CONTRACT NO.: 04-0A7101

DISREGARD PRINTS BEARING EARLIER REVISION DATES → 2/24/11 3/30/12 6/26/12

SHEET 6 OF 11

FILE => 33-E0115-u-miscdt04.dgn

USERNAME => s124496 DATE PLOTTED => 10-APR-2013 TIME PLOTTED => 08:52

BENCH MARK:

DESIGNATION: ALA8 ELEV=14.521
FOUND BRASS DISK STAMPED "ALA8" IN THE SIDEWALK AT THE WEST CORNER OF EAST 8TH STREET AND 5TH AVENUE.

DESIGNATION: ALA7 ELEV=15.591
FOUND BRASS DISK STAMPED "ALA7" IN THE SIDEWALK AT THE WEST SIDE OF 7TH STREET ALONG THE NORTH SIDE OF LAKE MERRITT CHANNEL.

DESIGNATION: 8TH/37TH ELEV=20.262
FOUND A CITY OF OAKLAND PIN IN CONCRETE IN A MONUMENT WELL AT THE INTERSECTION OF EAST 8TH STREET AND 37TH AVENUE.

DESIGNATION: ALA13 ELEV=15.318
FOUND BRASS DISK STAMPED "ALA13" INSIDE A 1 INCH IRON PIPE WITH A CONCRETE COLLAR 24.6 FEET NORTH OF THE NORTH SIDE OF HIGH STREET, 56 FEET WEST OF THE WEST SIDE OF THE OFFRAMP FROM SOUTHBOUND STATE

ROUTE 880 AND 4.99 FEET SOUTH OF THE SOUTH RAIL OF THE RAILROAD TRACKS.

DESIGNATION: KA121 ELEV=15.768
FOUND 1 INCH IRON PIPE WITH RED PLASTIC PLUG AND TACK STAMPED "CALTRANS" ALONG THE EAST SIDE OF OAKPORT STREET ABOUT 230 FEET SOUTH OF THE SOUTH SIDE OF HIGH STREET, ACROSS FROM 4401 OAKPORT STREET, 6.92 FEET NORTH OF THE FLOWLINE OF THE CURB.

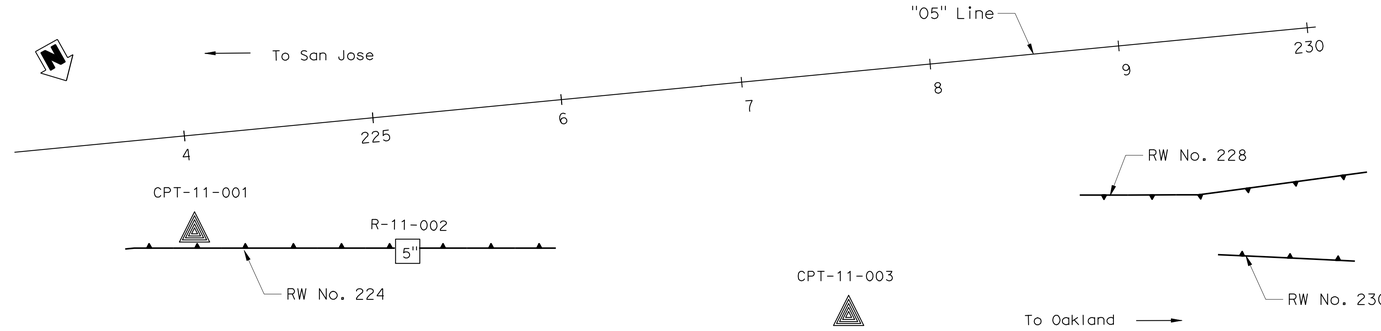

PLAN

1" = 40'

DIST	COUNTY	ROUTE	POST MILES TOTAL PROJECT	SHEET No	TOTAL SHEETS
04	Ala	880	28.4/29.2	737	789

REGISTERED ENGINEER — DATE 6-25-12

4-8-13
PLANS APPROVAL DATE

REGISTERED PROFESSIONAL ENGINEER L. CHEANG NO. GE 2345 EXP. 9-30-13 GEOTECHNICAL STATE OF CALIFORNIA

The State of California or its officers or agents shall not be responsible for the accuracy or completeness of electronic copies of this plan sheet.

ALAMEDA COUNTY TRANSPORTATION COMMISSION
1333 BROADWAY, SUITE 220
OAKLAND, CA 94612

EARTH MECHANICS, INC.
17800 NEWHOPE STREET, SUITE B
FOUNTAIN VALLEY, CA 92708

NOTES:

(1) This LOTB sheet was prepared in accordance with the Caltrans Soil and Rock Logging, Classification and Presentation Manual (June 2010).

(2) 2.4" samples were taken using a California Modified Sampler.

(3) An automatic trip hammer system consisting of a hammer weight of 140 lbs falling a distance of 30" was used to advance the drive sampler.

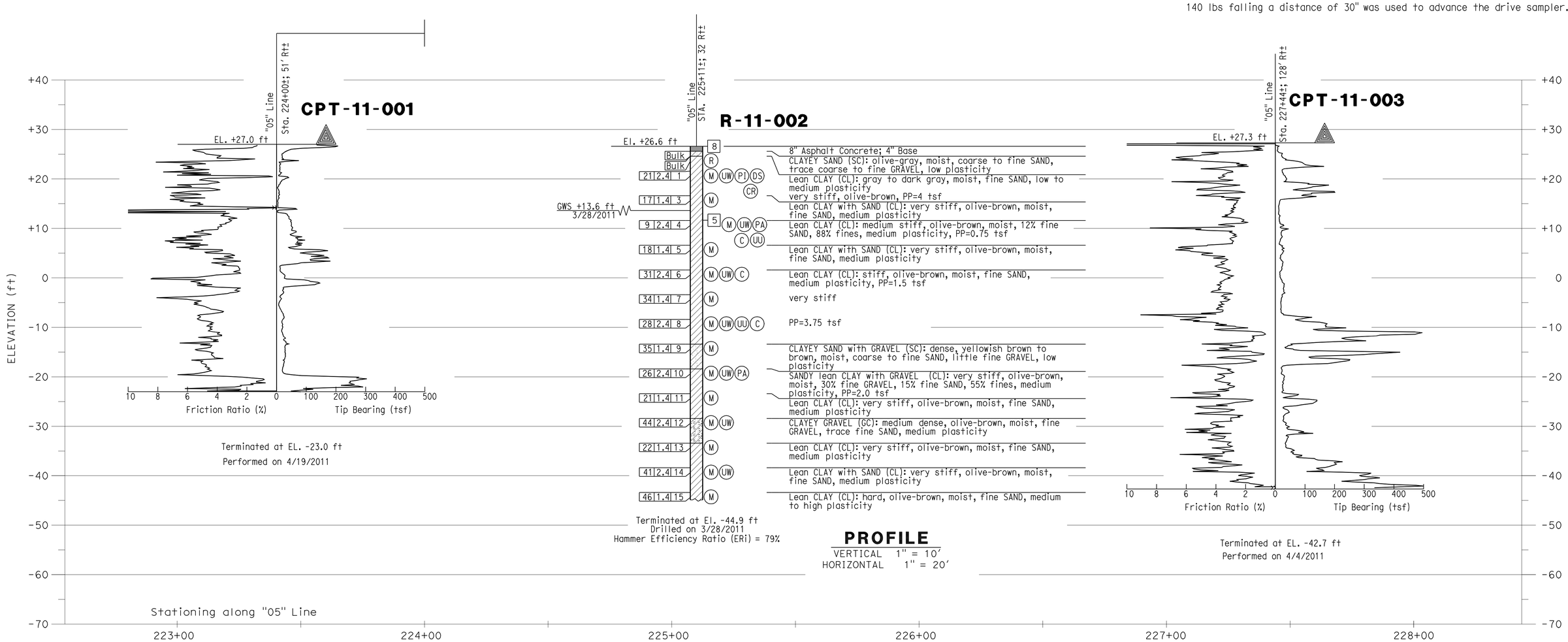

Paul Cotter DESIGN OVERSIGHT Paul Cotter	DRAWN BY	J. Fang	K. Thant FIELD INVESTIGATION BY:	PREPARED FOR THE STATE OF CALIFORNIA DEPARTMENT OF TRANSPORTATION	L. Cheang PROJECT ENGINEER
7-16-12 SIGN OFF DATE	CHECKED BY	G. J. Gunaranjan	DATE: 3/2011, 4/2011		

BRIDGE NO. 33E0115 — POST MILES 28.4

RETAINING WALL No. 224

LOG OF TEST BORINGS 1 OF 5

GS GEOTECHNICAL LOG OF TEST BORINGS SHEET (ENGLISH) (REV. 7/16/10)

ORIGINAL SCALE IN INCHES FOR REDUCED PLANS 0 1 2 3

UNIT: 0724
PROJECT NUMBER & PHASE: 04000001601

DISREGARD PRINTS BEARING EARLIER REVISION DATES

REVISION DATES

SHEET 7 OF 11

FILE => 33-E0115-z-ltb1.dgn

CONTRACT NO.:04-0A7101 PROJECT ID:

USERNAME => s124496 DATE PLOTTED => 10-APR-2013 TIME PLOTTED => 08:53

TO ACCOMPANY PLANS DATED 4-8-13

DIVISION OF ENGINEERING SERVICES - GEOTECHNICAL SERVICES

The information presented on this drawing, was not the result of any work developed, performed, or completed by EMI. This drawing is available and presented only for the convenience of any bidder, contractor, or other interested party. It should be understood that EMI assumes no responsibility in respect to the sufficiency, accuracy, completeness, interpretation set forth, or any other aspect of the information shown on this drawing.

DIST.	COUNTY	ROUTE	POST MILES-TOTAL PROJECT	Sheet No.	Total Sheets
04	Ala	880	28.4/29.2	738	789

Lino Cheang — CERTIFIED ENGINEERING GEOLOGIST — 6/25/12 DATE

RETAINING WALL No. 224

LOG OF TEST BORINGS 2 OF 5

UNIT: 0724	CONTRACT No.	BRIDGE No.
PROJECT NUMBER & PHASE: 04000001601	04-0A7101	33E0115

Sheet	of
8	11

REGISTERED PROFESSIONAL ENGINEER — L. CHEANG — NO. GE 2345 — EXP. 9-30-13 — GEOTECHNICAL — STATE OF CALIFORNIA

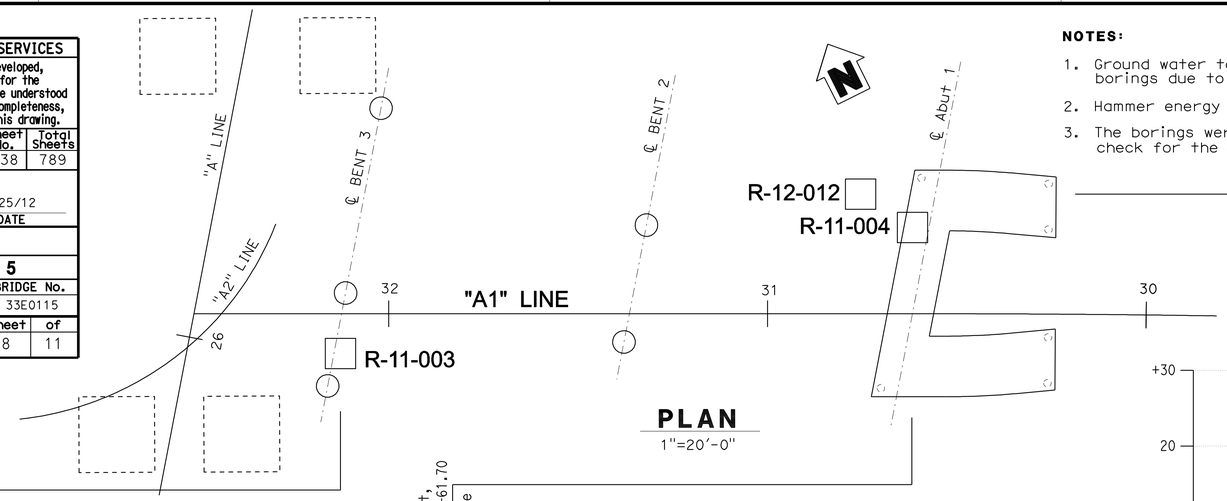

PLAN
1"=20'-0"

NOTES:

1. Ground water table was not measured in the borings due to rotary wash drilling.
2. Hammer energy ratio calibration not performed.
3. The borings were hand augered in the top 5 ft to check for the existence of underground utilities.

DIST	COUNTY	ROUTE	POST MILES TOTAL PROJECT	SHEET No	TOTAL SHEETS
04	880	Ala			

Philip J. Meymand — REGISTERED CIVIL ENGINEER — 6/25/12 DATE

PLANS APPROVAL DATE

REGISTERED PROFESSIONAL ENGINEER — Philip Meymand — No. 2596 — Exp. 6/30/13 — GEOTECHNICAL — STATE OF CALIFORNIA

The State of California or its officers or agents shall not be responsible for the accuracy or completeness of electronic copies of this plan sheet.

ALAMEDA COUNTY TRANSPORTATION
1333 BROADWAY
OAKLAND, CA 94612

URS CORPORATION
1333 BROADWAY, SUITE 800
OAKLAND, CA 94612

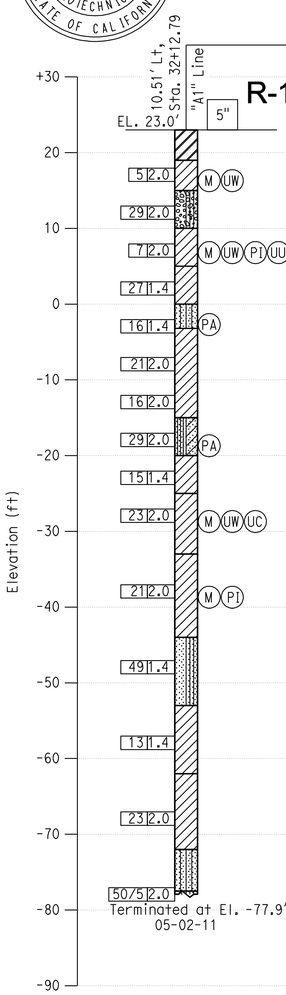

Fat CLAY (CH); very stiff; dark gray; dry to moist; about 10% fine SAND; about 90% medium to high plasticity, very high dry strength fines; (FILL).

Lean CLAY with SAND (CL); very stiff; medium brown; moist; about 20% fine SAND; about 80% medium plasticity fines; black mottles; PP=3.0 tsf (ALLUVIUM).

Poorly graded GRAVEL with SILT and SAND (GP-GM); medium dense; brown; moist; about 50% subangular GRAVEL, max. 3/4 in. dia.; about 40% coarse to medium SAND; about 10% low plasticity fines.

Lean CLAY with SAND (CL); medium stiff; medium brown; moist; about 20% fine SAND; about 80% low plasticity fines; PP=1.75 tsf.

SANDY lean CLAY (CL); very stiff; medium brown; moist; about 35% fine SAND; about 65% medium plasticity fines; with occasional gravelly zones; PP=3.25 tsf.

SILTY SAND (SM); medium dense; light brown; moist; about 5% fine, subrounded GRAVEL; about 76% medium to fine SAND; about 19% nonplastic fines.

Lean CLAY with SAND (CL); very stiff; brown; moist; trace fine GRAVEL; about 20% fine SAND; about 80% medium plasticity fines; PP=2.0 tsf.
PP=3.0 tsf.
PP=2.75 tsf.

SILTY, CLAYEY SAND (SC-SM); medium dense; brown and gray; moist; about 72% fine SAND; about 28% nonplastic to low plasticity fines.

Lean CLAY (CL); very stiff; gray; moist; trace subrounded GRAVEL, max. 1/2 in. dia.; about 10% fine SAND; about 90% medium plasticity fines; PP=3.75 tsf.

SANDY lean CLAY (CL); very stiff; brown and gray; moist; about 40% fine SAND; about 60% low plasticity fines; PP=2.5 tsf.

Lean CLAY (CL); very stiff; gray; moist; trace subrounded GRAVEL, max. 1/2 in. dia.; about 10% fine SAND; about 90% medium plasticity fines; PP=3.0 tsf.

Poorly graded SAND with SILT and GRAVEL (SP-SM); dense; brown; wet; about 30% subangular GRAVEL, max. 1/2 in. dia.; about 60% coarse to medium SAND; about 10% nonplastic fines.

Lean CLAY (CL); stiff; gray; moist; about 10% fine SAND; about 90% medium plasticity fines; PP=1.75 tsf.

Lean CLAY with SAND (CL); very stiff; dark gray; moist; about 25% fine SAND; about 75% medium plasticity fines; PP=3.75 tsf.

SILTY SAND (SM); very dense; light gray; moist; about 55% fine SAND; about 45% nonplastic fines.

Poorly graded SAND with SILT and GRAVEL (SP-SM); very dense; medium brown; moist; about 25% subangular GRAVEL, max. 1/2 in. dia.; about 65% coarse to medium SAND; about 10% nonplastic fines.

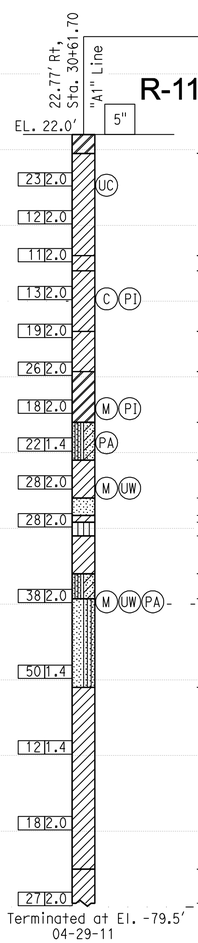

Fat CLAY with SAND (CH); dark brown; moist; high plasticity fines; (FILL).

Lean CLAY with SAND (CL); dark brown; moist; about 20% fine SAND; about 80% low plasticity fines; roots and organic detrius common (ALLUVIUM).
-medium brown; very stiff to hard; no roots or organic material; PP=4.5 tsf.
-very stiff; PP=2.0 tsf.

SANDY lean CLAY with GRAVEL (CL); very stiff; medium brown; moist; about 15% fine, subrounded GRAVEL; about 35% medium to fine SAND; about 50% low to medium plasticity fines; PP=2.5 tsf.

Lean CLAY with SAND (CL); very stiff; medium brown; moist; about 20% fine SAND; about 80% low plasticity fines; PP=3.0 tsf.
PP=3.0 tsf.

SANDY lean CLAY (CL); hard; medium brown; moist; about 5% fine GRAVEL; about 30% medium to fine SAND; about 65% low to medium plasticity fines; PP=4.5 tsf.
-about 40% sand; PP=4.0 tsf.

Fat CLAY (CH); very stiff; medium brown; moist; about 5% fine SAND; about 95% high plasticity, very high dry strength fines; PP=2.75 tsf.

SILTY, CLAYEY SAND (SC-SM); medium dense; brown and gray; moist; about 77% fine SAND; about 23% nonplastic to low plasticity fines.

Lean CLAY (CL); hard; brown and gray; moist; about 5 to 10% fine SAND; about 90 to 95% medium plasticity fines; PP=4.5 tsf.

Poorly graded SAND (SP); medium dense; dark brown; wet; trace GRAVEL; medium SAND.

Lean CLAY with SAND (CL); very stiff; light brown; moist; about 15% fine SAND; about 85% low plasticity fines; silty.

SANDY SILT (ML); medium dense; medium brown; moist; about 45% fine SAND; about 55% nonplastic to low plasticity fines.

Lean CLAY (CL); very stiff; gray; moist; about 10% fine SAND; medium plasticity fines; PP=3.25 tsf.

SILTY, CLAYEY SAND (SC-SM); medium dense; brown and gray; moist; about 74% fine SAND; about 26% nonplastic to low plasticity fines.

Poorly graded SAND with SILT and GRAVEL (SP-SM); medium dense; brown; moist; about 15 to 20% subangular GRAVEL, max. 1/2 in. dia.; about 70% coarse to medium SAND; about 5 to 10% nonplastic fines.
-very dense.

SANDY lean CLAY (CL); very stiff; brown and gray; moist; trace coarse, subrounded GRAVEL, max. 1 in. dia.; about 30% fine SAND; medium plasticity, high dry strength fines; PP=3.75 tsf.

-greenish-gray; high dry strength; PP=2.0-3.0 tsf.

SANDY lean CLAY with GRAVEL (CL); hard; brown and gray; moist; about 15% fine, subrounded GRAVEL, max. 1/2 in. dia.; about 15% coarse to fine SAND; about 70% low plasticity fines; PP=4.25 tsf.

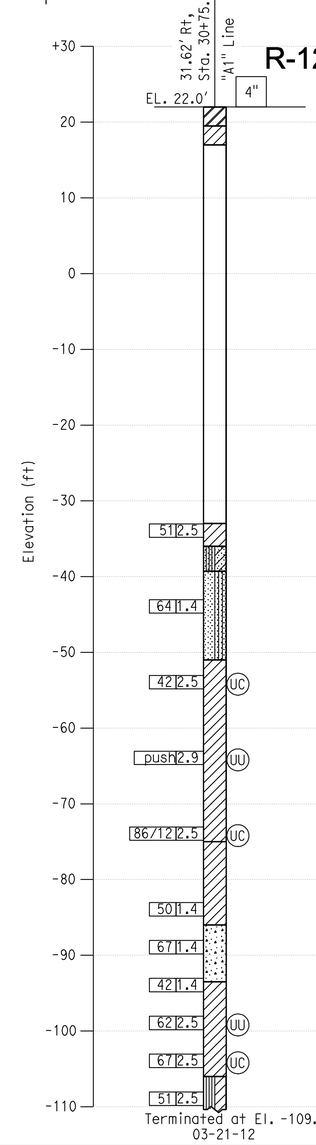

Fat CLAY with SAND (CH); stiff; dark brown; moist; about 15% fine SAND; about 85% medium to high plasticity fines; PP=1.25 tsf; (FILL).

Lean CLAY with SAND (CL); very stiff to hard; yellowish-brown; moist; about 20% fine SAND; about 80% medium plasticity fines; PP=2.0-4.5 tsf; (ALLUVIUM).

Lean CLAY (CL); very stiff; gray; moist; about 10% fine SAND; medium plasticity fines; PP=3.25 tsf.

SILTY, CLAYEY SAND (SC-SM); medium dense; brown and gray; moist; about 74% fine SAND; about 26% nonplastic to low plasticity fines.

Poorly graded SAND with SILT and GRAVEL (SP-SM); medium dense; brown; moist; about 15 to 20% subangular GRAVEL, max. 1/2 in. dia.; about 70% coarse to medium SAND; about 5 to 10% nonplastic fines.
-very dense.

-clay interbed 68.5' to 69'.

SANDY lean CLAY (CL); very stiff; brown and gray; moist; trace coarse, subrounded GRAVEL, max. 1 in. dia.; about 30% fine SAND; medium plasticity fines; PP=2.0 tsf.

-gray; very stiff; PP=1.75 tsf.

-very stiff; PP=>4.5 tsf.

SANDY lean CLAY with GRAVEL (CL); very stiff; brown and gray; moist; about 15% fine, subrounded GRAVEL, max. 1/2 in. dia.; about 15% coarse to fine SAND; about 70% low plasticity fines; PP=3.0 tsf.

Well-graded SAND with GRAVEL (SW); very dense; brown and gray; moist; about 35% fine GRAVEL, max. 3/4 in. dia.; about 60% coarse to fine SAND; about 5% fines.

Lean CLAY with SAND (CL); hard; gray; moist; about 20% fine SAND; about 80% medium plasticity fines; PP=3.25 tsf->4.5 tsf.

SANDY SILTY CLAY (CL-ML); hard; gray; moist; about 30% fine SAND; about 70% low plasticity fines; PP=2.75 tsf.

Paul Cotter — DESIGN OVERSIGHT — Paul Cotter	DRAWN BY	N. HUTTON	S. JANOWSKI — FIELD INVESTIGATION BY:
7-16-12 — SIGN OFF DATE	CHECKED BY	C. TSAI	DATE: 04-25-11 TO 05-04-11

PREPARED FOR THE STATE OF CALIFORNIA DEPARTMENT OF TRANSPORTATION

Jan Hueser — PROJECT ENGINEER

BRIDGE NO. 33-0751 — POST MILES 28.69

29TH AVENUE OC (REPLACE)

LOG OF TEST BORINGS 2 OF 3

GS CIVIL LOG OF TEST BORINGS SHEET (ENGLISH) (REV. 7/16/10)

ORIGINAL SCALE IN INCHES FOR REDUCED PLANS 0 1 2 3

UNIT: 0724
PROJECT NUMBER & PHASE: 04000001601 CONTRACT NO.: 04-0A7101

DISREGARD PRINTS BEARING EARLIER REVISION DATES → REVISION DATES 9-6-11 1-30-12 3-30-12 6-29-12

SHEET 57 OF 60

FILE => 33-E0115-z-ltb2.dgn

USERNAME => s124496 DATE PLOTTED => 10-APR-2013 TIME PLOTTED => 08:53

DIST	COUNTY	ROUTE	POST MILES TOTAL PROJECT	SHEET No	TOTAL SHEETS
04	Ala	880	28.4/29.2	739	789

Lino Cheang — REGISTERED ENGINEER — DATE 6-25-12

4-8-13 — PLANS APPROVAL DATE

REGISTERED PROFESSIONAL ENGINEER — L. CHEANG — NO. GE 2345 — EXP. 9-30-13 — GEOTECHNICAL — STATE OF CALIFORNIA

The State of California or its officers or agents shall not be responsible for the accuracy or completeness of electronic copies of this plan sheet.

ALAMEDA COUNTY TRANSPORTATION COMMISSION
1333 BROADWAY, SUITE 220
OAKLAND, CA 94612

EARTH MECHANICS, INC.
17800 NEWHOPE STREET, SUITE B
FOUNTAIN VALLEY, CA 92708

BENCH MARK:

DESIGNATION: ALA8 ELEV=14.521
FOUND BRASS DISK STAMPED "ALA8" IN THE SIDEWALK AT THE WEST CORNER OF EAST 8TH STREET AND 5TH AVENUE.

DESIGNATION: ALA7 ELEV=15.591
FOUND BRASS DISK STAMPED "ALA7" IN THE SIDEWALK AT THE WEST SIDE OF 7TH STREET ALONG THE NORTH SIDE OF LAKE MERRITT CHANNEL.

DESIGNATION: 8TH/37TH ELEV=20.262
FOUND A CITY OF OAKLAND PIN IN CONCRETE IN A MONUMENT WELL AT THE INTERSECTION OF EAST 8TH STREET AND 37TH AVENUE.

DESIGNATION: ALA13 ELEV=15.318
FOUND BRASS DISK STAMPED "ALA13" INSIDE A 1 INCH IRON PIPE WITH A CONCRETE COLLAR 24.6 FEET NORTH OF THE NORTH SIDE OF HIGH STREET, 56 FEET WEST OF THE WEST SIDE OF THE OFFRAMP FROM SOUTHBOUND STATE ROUTE 880 AND 4.99 FEET SOUTH OF THE SOUTH RAIL OF THE RAILROAD TRACKS.

DESIGNATION: KA121 ELEV=15.768
FOUND 1 INCH IRON PIPE WITH RED PLASTIC PLUG AND TACK STAMPED "CALTRANS" ALONG THE EAST SIDE OF OAKPORT STREET ABOUT 230 FEET SOUTH OF THE SOUTH SIDE OF HIGH STREET, ACROSS FROM 4401 OAKPORT STREET, 6.92 FEET NORTH OF THE FLOWLINE OF THE CURB.

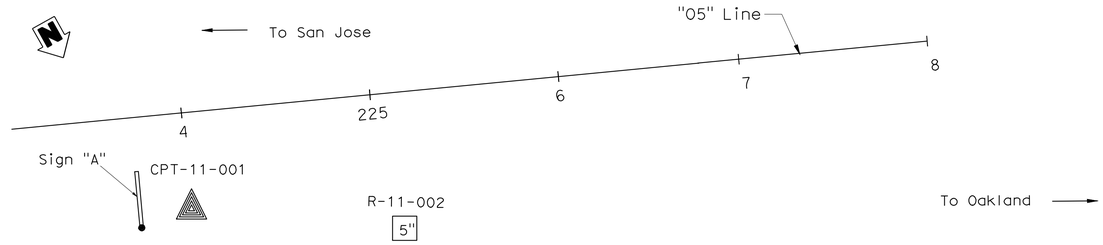

PLAN
1" = 40'

NOTES:

(1) This LOTB sheet was prepared in accordance with the Caltrans Soil and Rock Logging, Classification and Presentation Manual (June 2010).

(2) 2.4" samples were taken using a California Modified Sampler.

(3) An automatic trip hammer system consisting of a hammer weight of 140 lbs falling a distance of 30" was used to advance the drive sampler.

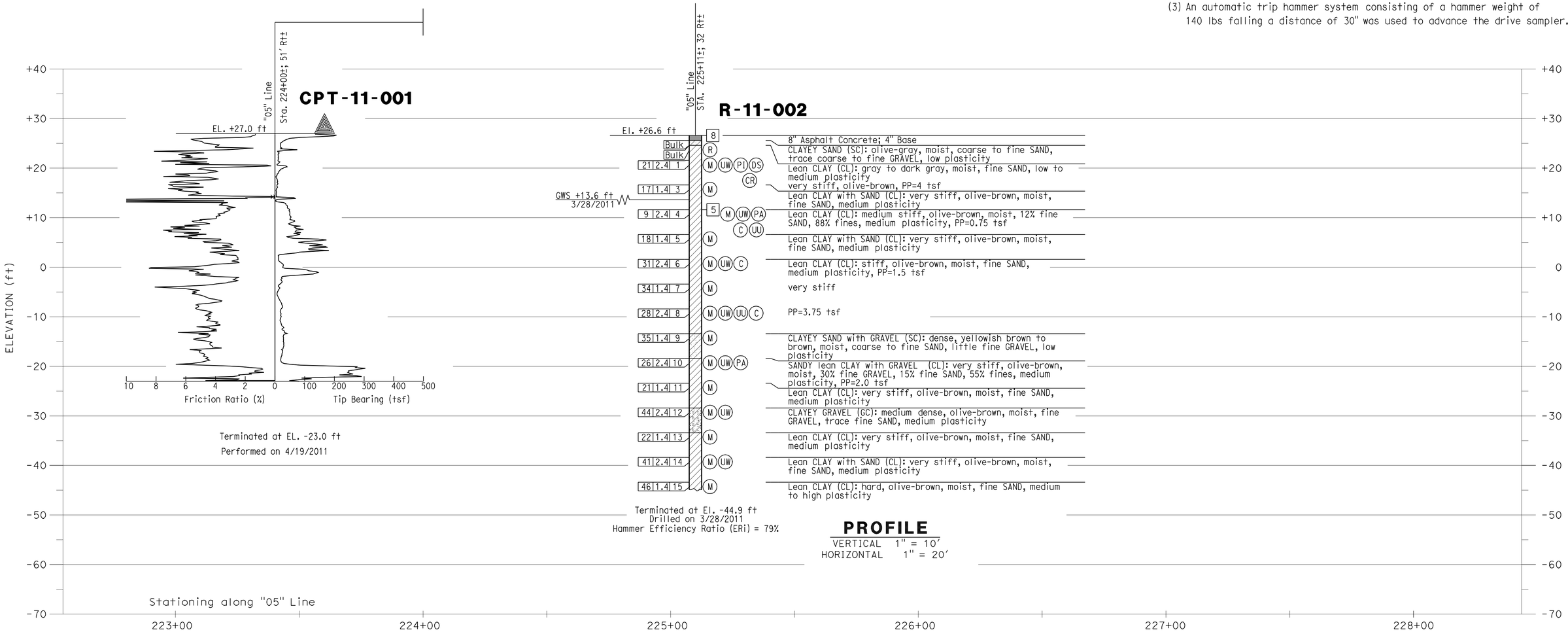

Paul Cotter — DESIGN OVERSIGHT Paul Cotter; 7-16-12 SIGN OFF DATE	DRAWN BY J. Fang; CHECKED BY G. J. Gunaranjan	K. Thant — FIELD INVESTIGATION BY: DATE: 3/2011, 4/2011	PREPARED FOR THE STATE OF CALIFORNIA DEPARTMENT OF TRANSPORTATION	L. Cheang — PROJECT ENGINEER	BRIDGE NO. 33E0115; POST MILES 28.4

RETAINING WALL No. 224
LOG OF TEST BORINGS 3 OF 5

GS GEOTECHNICAL LOG OF TEST BORINGS SHEET (ENGLISH) (REV. 7/16/10)

ORIGINAL SCALE IN INCHES FOR REDUCED PLANS 0 1 2 3

UNIT: 0247
PROJECT NUMBER & PHASE: 04000001601

DISREGARD PRINTS BEARING EARLIER REVISION DATES

REVISION DATES

SHEET 9 OF 11

FILE => 33-E0115-z-ltb3.dgn

CONTRACT NO.:04-0A7101 PROJECT ID:

USERNAME => s124496 DATE PLOTTED => 10-APR-2013 TIME PLOTTED => 08:53

DIST	COUNTY	ROUTE	POST MILES TOTAL PROJECT	SHEET No	TOTAL SHEETS
04	Ala	880	28.4/29.2	740	789

Lino Cheang 6-25-12
REGISTERED ENGINEER DATE

4-8-13
PLANS APPROVAL DATE

REGISTERED PROFESSIONAL ENGINEER L. CHEANG NO. GE 2345 EXP. 9-30-13 GEOTECHNICAL STATE OF CALIFORNIA

The State of California or its officers or agents shall not be responsible for the accuracy or completeness of electronic copies of this plan sheet.

ALAMEDA COUNTY TRANSPORTATION COMMISSION
1333 BROADWAY, SUITE 220
OAKLAND, CA 94612

EARTH MECHANICS, INC.
17800 NEWHOPE STREET, SUITE B
FOUNTAIN VALLEY, CA 92708

REFERENCE: CALTRANS SOIL & ROCK LOGGING, CLASSIFICATION, AND PRESENTATION MANUAL (2010)

CEMENTATION

Description	Criteria
Weak	Crumbles or breaks with handling or little finger pressure.
Moderate	Crumbles or breaks with considerable finger pressure.
Strong	Will not crumble or break with finger pressure.

BOREHOLE IDENTIFICATION

Symbol	Hole Type	Description
Size	A	Auger Boring (hollow or solid stem bucket)
Size	R RW RC P	Rotary drilled boring (conventional) Rotary drilled with self-casing wire-line Rotary core with continuously-sampled, self-casing wire-line Rotary percussion boring (air)
Size	R	Rotary drilled diamond core
Size	HD HA	Hand driven (1-inch soil tube) Hand Auger
●	D	Dynamic Cone Penetration Boring
▲	CPT	Cone Penetration Test (ASTM D 5778)
⬚	O	Other (note on LOTB)

Note: Size in inches.

CONSISTENCY OF COHESIVE SOILS

Description	Shear Strength (tsf)	Pocket Penetrometer Measurement, PP, (tsf)	Torvane Measurement, TV, (tsf)	Vane Shear Measurement, VS, (tsf)
Very Soft	Less than 0.12	Less than 0.25	Less than 0.12	Less than 0.12
Soft	0.12 - 0.25	0.25 - 0.5	0.12 - 0.25	0.12 - 0.25
Medium Stiff	0.25 - 0.5	0.5 - 1	0.25 - 0.5	0.25 - 0.5
Stiff	0.5 - 1	1 - 2	0.5 - 1	0.5 - 1
Very Stiff	1 - 2	2 - 4	1 - 2	1 - 2
Hard	Greater than 2	Greater than 4	Greater than 2	Greater than 2

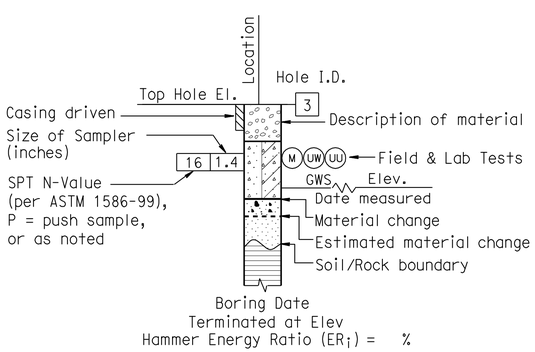

ROTARY BORING

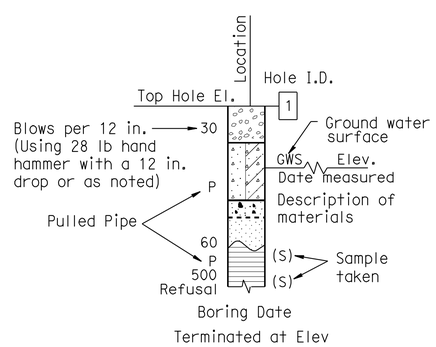

HAND BORING

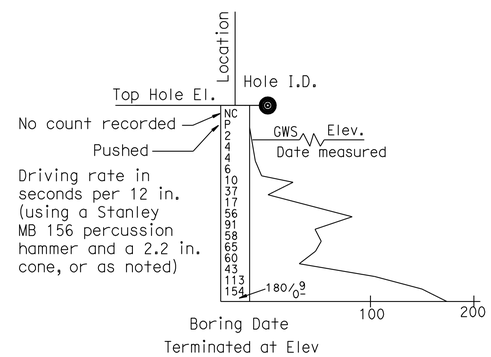

DYNAMIC CONE PENETRATION BORING

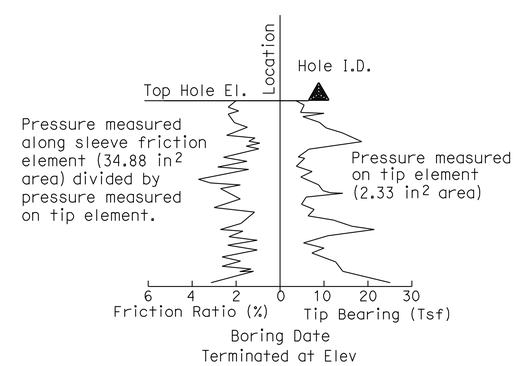

CONE PENETRATION TEST (CPT) BORING

Paul Cotter
DESIGN OVERSIGHT Paul Cotter
7-16-12
SIGN OFF DATE

DRAWN BY J. Fang
CHECKED BY G. J. Gunaranjan

K. Thant
FIELD INVESTIGATION BY:
DATE: 3/2011, 4/2011

PREPARED FOR THE STATE OF CALIFORNIA DEPARTMENT OF TRANSPORTATION

L. Cheang
PROJECT ENGINEER

BRIDGE NO. 33E0115
POST MILES 28.4

RETAINING WALL No. 224
LOG OF TEST BORINGS 4 OF 5

GS GEOTECHNICAL LOG OF TEST BORINGS SHEET (ENGLISH) (REV. 7/16/10)

ORIGINAL SCALE IN INCHES FOR REDUCED PLANS 0 1 2 3

UNIT: 0724
PROJECT NUMBER & PHASE: 04000001601

DISREGARD PRINTS BEARING EARLIER REVISION DATES

REVISION DATES

SHEET 10 OF 11

FILE => 33-E0115-z-soil legend-ltb1.dgn

CONTRACT NO.:04-0A7101 PROJECT ID:

USERNAME => s124496 DATE PLOTTED => 10-APR-2013 TIME PLOTTED => 08:53

REFERENCE: CALTRANS SOIL & ROCK LOGGING, CLASSIFICATION, AND PRESENTATION MANUAL (2010)

GROUP SYMBOLS AND NAMES

Graphic/Symbol	Group Names	Graphic/Symbol	Group Names
GW	Well-graded GRAVEL Well-graded GRAVEL with SAND	CL	Lean CLAY Lean CLAY with SAND Lean CLAY with GRAVEL SANDY lean CLAY SANDY lean CLAY with GRAVEL GRAVELLY lean CLAY GRAVELLY lean CLAY with SAND
GP	Poorly-graded GRAVEL Poorly-graded GRAVEL with SAND		
GW-GM	Well-graded GRAVEL with SILT Well-graded GRAVEL with SILT and SAND	CL-ML	SILTY CLAY SILTY CLAY with SAND SILTY CLAY with GRAVEL SANDY SILTY CLAY SANDY SILTY CLAY with GRAVEL GRAVELLY SILTY CLAY GRAVELLY SILTY CLAY with SAND
GW-GC	Well-graded GRAVEL with CLAY (or SILTY CLAY) Well-graded GRAVEL with CLAY and SAND (or SILTY CLAY and SAND)		
GP-GM	Poorly-graded GRAVEL with SILT Poorly-graded GRAVEL with SILT and SAND	ML	SILT SILT with SAND SILT with GRAVEL SANDY SILT SANDY SILT with GRAVEL GRAVELLY SILT GRAVELLY SILT with SAND
GP-GC	Poorly-graded GRAVEL with CLAY (or SILTY CLAY) Poorly-graded GRAVEL with CLAY and SAND (or SILTY CLAY and SAND)		
GM	SILTY GRAVEL SILTY GRAVEL with SAND	OL	ORGANIC lean CLAY ORGANIC lean CLAY with SAND ORGANIC lean CLAY with GRAVEL SANDY ORGANIC lean CLAY SANDY ORGANIC lean CLAY with GRAVEL GRAVELLY ORGANIC lean CLAY GRAVELLY ORGANIC lean CLAY with SAND
GC	CLAYEY GRAVEL CLAYEY GRAVEL with SAND		
GC-GM	SILTY, CLAYEY GRAVEL SILTY, CLAYEY GRAVEL with SAND	OL	ORGANIC SILT ORGANIC SILT with SAND ORGANIC SILT with GRAVEL SANDY ORGANIC SILT SANDY ORGANIC SILT with GRAVEL GRAVELLY ORGANIC SILT GRAVELLY ORGANIC SILT with SAND
SW	Well-graded SAND Well-graded SAND with GRAVEL		
SP	Poorly-graded SAND Poorly-graded SAND with GRAVEL	CH	Fat CLAY Fat CLAY with SAND Fat CLAY with GRAVEL SANDY fat CLAY SANDY fat CLAY with GRAVEL GRAVELLY fat CLAY GRAVELLY fat CLAY with SAND
SW-SM	Well-graded SAND with SILT Well-graded SAND with SILT and GRAVEL		
SW-SC	Well-graded SAND with CLAY (or SILTY CLAY) Well-graded SAND with CLAY and GRAVEL (or SILTY CLAY and GRAVEL)	MH	Elastic SILT Elastic SILT with SAND Elastic SILT with GRAVEL SANDY elastic SILT SANDY elastic SILT with GRAVEL GRAVELLY elastic SILT GRAVELLY elastic SILT with SAND
SP-SM	Poorly-graded SAND with SILT Poorly-graded SAND with SILT and GRAVEL		
SP-SC	Poorly-graded SAND with CLAY (or SILTY CLAY) Poorly-graded SAND with CLAY and GRAVEL (or SILTY CLAY and GRAVEL)	OH	ORGANIC fat CLAY ORGANIC fat CLAY with SAND ORGANIC fat CLAY with GRAVEL SANDY ORGANIC fat CLAY SANDY ORGANIC fat CLAY with GRAVEL GRAVELLY ORGANIC fat CLAY GRAVELLY ORGANIC fat CLAY with SAND
SM	SILTY SAND SILTY SAND with GRAVEL		
SC	CLAYEY SAND CLAYEY SAND with GRAVEL	OH	ORGANIC elastic SILT ORGANIC elastic SILT with SAND ORGANIC elastic SILT with GRAVEL SANDY ORGANIC elastic SILT SANDY ORGANIC elastic SILT with GRAVEL GRAVELLY ORGANIC elastic SILT GRAVELLY ORGANIC elastic SILT with SAND
SC-SM	SILTY, CLAYEY SAND SILTY, CLAYEY SAND with GRAVEL		
PT	PEAT	OL/OH	ORGANIC SOIL ORGANIC SOIL with SAND ORGANIC SOIL with GRAVEL SANDY ORGANIC SOIL SANDY ORGANIC SOIL with GRAVEL GRAVELLY ORGANIC SOIL GRAVELLY ORGANIC SOIL with SAND
	COBBLES COBBLES and BOULDERS BOULDERS		

FIELD AND LABORATORY TESTING

- (C) Consolidation (ASTM D 2435)
- (CL) Collapse Potential (ASTM D 5333)
- (CP) Compaction Curve (CTM 216)
- (CR) Corrosivity Testing (CTM 643, CTM 422, CTM 417)
- (CU) Consolidated Undrained Triaxial (ASTM D 4767)
- (DS) Direct Shear (ASTM D 3080)
- (EI) Expansion Index (ASTM D 4829)
- (M) Moisture Content (ASTM D 2216)
- (OC) Organic Content-% (ASTM D 2974)
- (P) Permeability (CTM 220)
- (PA) Particle Size Analysis (ASTM D 422)
- (PI) Plasticity Index (AASHTO T 90) Liquid Limit (AASHTO T 89)
- (PL) Point Load Index (ASTM D 5731)
- (PM) Pressure Meter
- (R) R-Value (CTM 301)
- (SE) Sand Equivalent (CTM 217)
- (SG) Specific Gravity (AASHTO T 100)
- (SL) Shrinkage Limit (ASTM D 427)
- (SW) Swell Potential (ASTM D 4546)
- (UC) Unconfined Compression-Soil (ASTM D 2166) Unconfined Compression-Rock (ASTM D 2938)
- (UU) Unconsolidated Undrained Triaxial (ASTM D 2850)
- (UW) Unit Weight (ASTM D 4767)

DIST	COUNTY	ROUTE	POST MILES TOTAL PROJECT	SHEET No	TOTAL SHEETS
04	Ala	880	28.4/29.2	741	789

Lino Cheang 6-25-12
REGISTERED ENGINEER DATE

4-8-13
PLANS APPROVAL DATE

REGISTERED PROFESSIONAL ENGINEER L. CHEANG NO. GE 2345 EXP. 9-30-13 GEOTECHNICAL STATE OF CALIFORNIA

The State of California or its officers or agents shall not be responsible for the accuracy or completeness of electronic copies of this plan sheet.

ALAMEDA COUNTY TRANSPORTATION COMMISSION
1333 BROADWAY, SUITE 220
OAKLAND, CA 94612

EARTH MECHANICS, INC.
17800 NEWHOPE STREET, SUITE B
FOUNTAIN VALLEY, CA 92708

APPARENT DENSITY OF COHESIONLESS SOILS

Description	SPT N_{60} (Blows / 12 in.)
Very Loose	0 - 5
Loose	5 - 10
Medium Dense	10 - 30
Dense	30 - 50
Very Dense	Greater than 50

MOISTURE

Description	Criteria
Dry	No discernable moisture
Moist	Moisture present, but no free water
Wet	Visible free water

PERCENT OR PROPORTION OF SOILS

Description	Criteria
Trace	Particles are present but estimated to be less than 5%
Few	5% - 10%
Little	15% - 25%
Some	30% - 45%
Mostly	50% - 100%

PARTICLE SIZE

Description		Size (in.)
Boulder		Greater than 12
Cobble		3 - 12
Gravel	Coarse	3/4 - 3
	Fine	1/5 - 3/4
Sand	Coarse	1/16 - 1/5
	Medium	1/64 - 1/16
	Fine	1/300 - 1/64
Silt and Clay		Less than 1/300

Paul Cotter
DESIGN OVERSIGHT Paul Cotter
7-16-12
SIGN OFF DATE

DRAWN BY J. Fang
CHECKED BY G. J. Gunaranjan

K. Thant
FIELD INVESTIGATION BY:
DATE: 3/2011, 4/2011

PREPARED FOR THE STATE OF CALIFORNIA DEPARTMENT OF TRANSPORTATION

L. Cheang
PROJECT ENGINEER

BRIDGE NO. 33E0115
POST MILES 28.4

RETAINING WALL No. 224
LOG OF TEST BORINGS 5 OF 5

GS GEOTECHNICAL LOG OF TEST BORINGS SHEET (ENGLISH) (REV. 7/16/10)

ORIGINAL SCALE IN INCHES FOR REDUCED PLANS 0 1 2 3

UNIT: 0724
PROJECT NUMBER & PHASE: 04000001601

DISREGARD PRINTS BEARING EARLIER REVISION DATES

REVISION DATES

SHEET 11 OF 11

FILE => 33-E0115-z-soil legend-ltb2.dgn

CONTRACT NO.:04-0A7101 PROJECT ID:

USERNAME => s124496 DATE PLOTTED => 10-APR-2013 TIME PLOTTED => 08:53

DIST	COUNTY	ROUTE	POST MILES TOTAL PROJECT	SHEET No	TOTAL SHEETS
04	Ala	880	28.4/29.2	742	789

Scott McCauley 6/26/12
REGISTERED CIVIL ENGINEER DATE

4-8-13
PLANS APPROVAL DATE

REGISTERED PROFESSIONAL ENGINEER S.McCauley No. 71495 Exp. 12-31-13 CIVIL STATE OF CALIFORNIA

The State of California or its officers or agents shall not be responsible for the accuracy or completeness of electronic copies of this plan sheet.

ALAMEDA COUNTY TRANSPORTATION COMMISSION
1333 BROADWAY, SUITE 220
OAKLAND, CA 94612

RBF CONSULTING
ONE KAISER PLAZA, SUITE 1150
OAKLAND, CA 94612

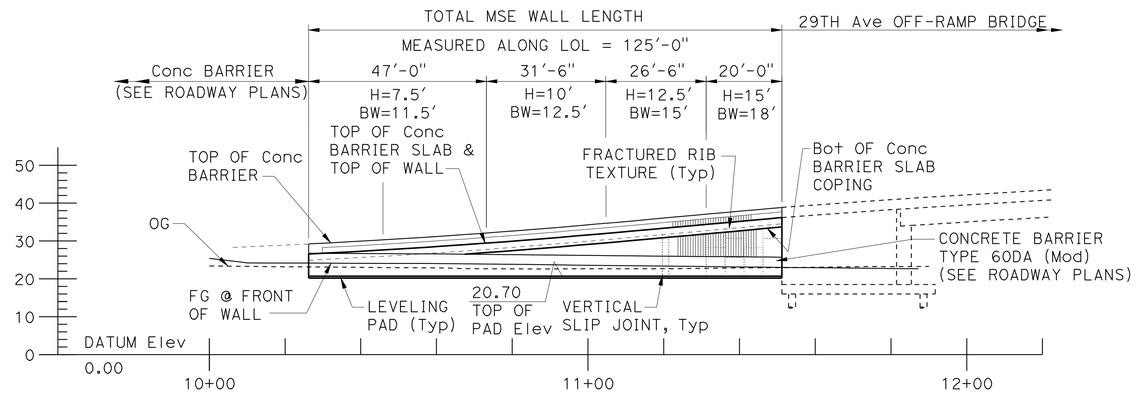

MIRRORED ELEVATION

SCALE: 1" = 20'

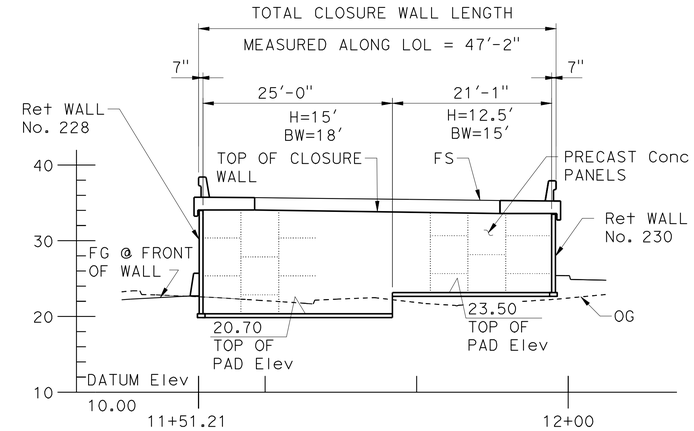

CLOSURE WALL MIRRORED ELEVATION

SCALE: 1" = 10'

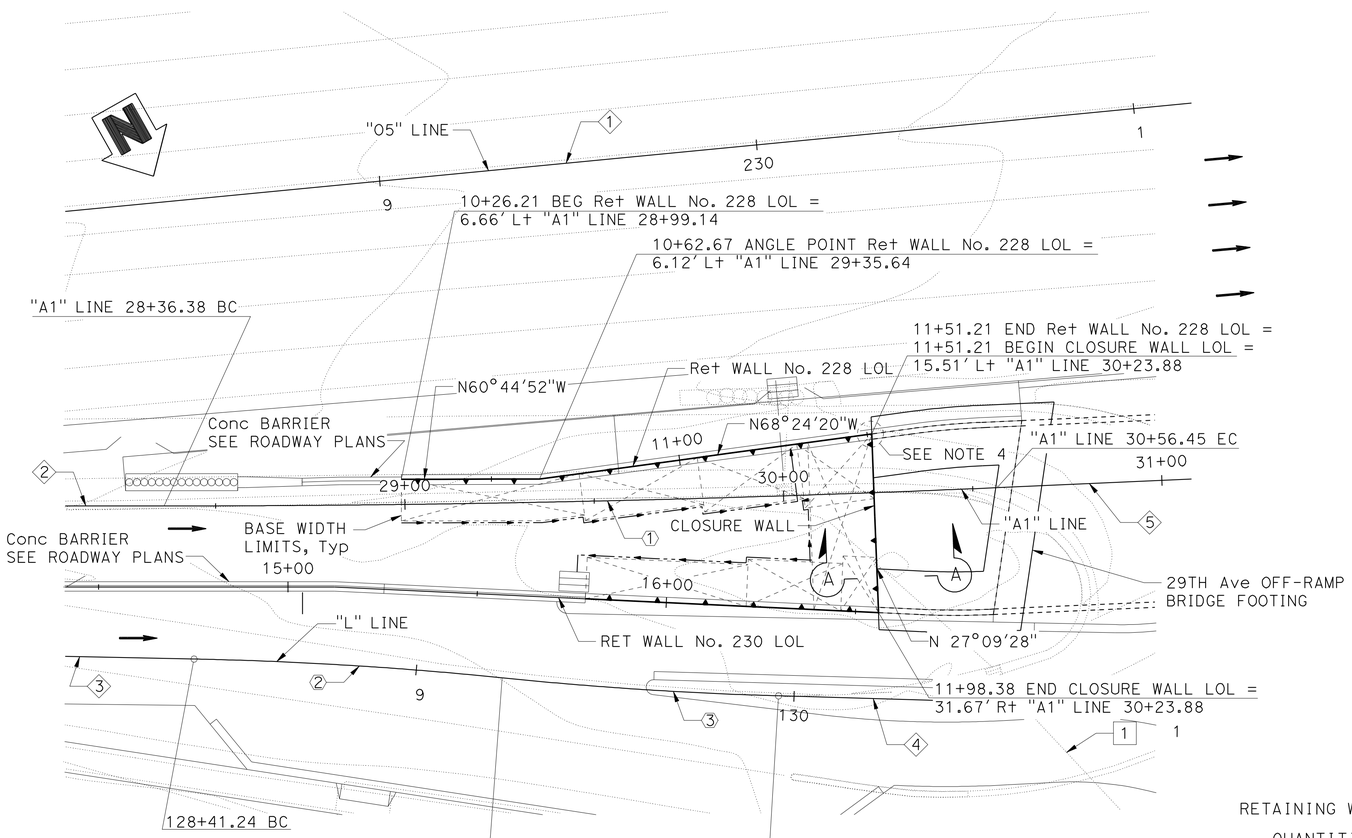

PLAN

SCALE: 1" = 20'

NOTE:
THE CONTRACTOR SHALL VERIFY ALL CONTROLLING FIELD DIMENSIONS BEFORE ORDERING OR FABRICATING ANY MATERIAL.

CURVE DATA

CURVE No.	R	△	T	L
1	5000.00'	02°31'19"	110.05'	220.07'
2	1000.00'	04°40'12"	40.78'	81.51'
3	1000.00'	04°11'34"	36.60'	73.18'

LEGEND:

- Indicates direction of traffic
- Drainage inlet, see Note 6
- Underdrain Pipe Flow Line See Note 5

UTILITIES:

1 Exist 12" RCP (To be abandonded)

TANGENT DATA

1. N66°10'35"W
2. N60°40'27"W
3. N59°31'12"W
4. N59°02'34"W
5. N68°11'46"W

NOTES:

1. "BW" Indicates Base Width. "H" Indicates Design Height.
2. For Utility Information not Shown, See ROADWAY PLANS.
3. For the Typical Section and Section A-A, See "GENERAL PLAN No. 2" Sheet.
4. For Corner Details, see "MECHANICALLY STABILIZED EMBANKMENT DETAILS No. 3" Sheet.
5. For Wall Drainage Details, see "MECHANICALLY STABILIZED EMBANKMENT DETAILS No. 4" Sheet.
6. For Location of Drainage Inlet, See DRAINAGE PLANS.

RETAINING WALL 228

QUANTITIES

MECHANICALLY STABILIZED EMBANKMENT	1,643	SQFT
STRUCTURAL CONCRETE, BARRIER SLAB	64	CY
CONCRETE BARRIER (TYPE 732 MODIFIED)	125	LF

Paul Cotter
DESIGN OVERSIGHT Paul Cotter
4-3-13
SIGN OFF DATE

	BY	CHECKED
DESIGN	S. McCauley	C. Cho
DETAILS	J. Saldana	S. McCauley
QUANTITIES	C. Cho	S. McCauley

LOAD & RESISTANCE FACTOR DESIGN — LIVE LOADING: HL93 W/"LOW-BOY"; PERMIT DESIGN VEHICLE

	BY	CHECKED
LAYOUT	J. Saldana	S. McCauley
SPECIFICATIONS	C. Harden	PLANS AND SPECS COMPARED S. Sheikh

PREPARED FOR THE STATE OF CALIFORNIA DEPARTMENT OF TRANSPORTATION

Chad Harden
PROJECT ENGINEER

BRIDGE NO. 33E0108
POST MILES 28.5

RETAINING WALL No. 228
GENERAL PLAN No. 1

DESIGN GENERAL PLAN SHEET (ENGLISH) (REV.7/16/10)

ORIGINAL SCALE IN INCHES FOR REDUCED PLANS 0 1 2 3

UNIT: 0724
PROJECT NUMBER & PHASE: 04000001601 CONTRACT NO.: 04-0A7101

DISREGARD PRINTS BEARING EARLIER REVISION DATES — REVISION DATES 2/04/11 3/30/12 6/26/12

SHEET 1 OF 14

FILE => 33-E0108-a-gp01.dgn

USERNAME => s124496 DATE PLOTTED => 10-APR-2013 TIME PLOTTED => 09:43

DIST	COUNTY	ROUTE	POST MILES TOTAL PROJECT	SHEET No	TOTAL SHEETS
04	Ala	880	28.4/29.2	743	789

REGISTERED CIVIL ENGINEER — DATE 3/29/13

4-8-13
PLANS APPROVAL DATE

REGISTERED PROFESSIONAL ENGINEER S.McCauley No. 71495 Exp. 12-31-13 CIVIL STATE OF CALIFORNIA

The State of California or its officers or agents shall not be responsible for the accuracy or completeness of electronic copies of this plan sheet.

ALAMEDA COUNTY TRANSPORTATION COMMISSION
1333 BROADWAY, SUITE 220
OAKLAND, CA 94612

RBF CONSULTING
ONE KAISER PLAZA, SUITE 1150
OAKLAND, CA 94612

TOP OF WALL ELEVATION TABLE

	WALL LOL STATION	TOP OF WALL Elev (Ft)
Beg Ret WALL No. 228	10+26.21	25.43
	+30	26.76
	+40	27.30
	+50	27.88
	+60	28.51
	+70	29.21
	+80	29.95
	+90	30.75
	11+00.00	31.59
	+10	32.47
	+20	33.38
	+30	34.28
	+40	35.18
	+50	36.09
END Ret WALL No. 228	11+51.21	36.19
Beg CLOSURE WALL	11+51.21	34.52
END CLOSURE WALL	11+98.38	33.64

INDEX TO PLANS

SHEET NO.	TITLE
1	GENERAL PLAN No. 1
2	GENERAL PLAN No. 2
3	LAYOUT
4	MECHANICALLY STABILIZED EMBANKMENT - DETAILS NO. 1
5	MECHANICALLY STABILIZED EMBANKMENT - DETAILS NO. 2
6	MECHANICALLY STABILIZED EMBANKMENT - DETAILS NO. 3
7	MECHANICALLY STABILIZED EMBANKMENT - DETAILS NO. 4
8	MECHANICALLY STABILIZED EMBANKMENT - DETAILS NO. 5
9	MECHANICALLY STABILIZED EMBANKMENT - DETAILS NO. 6
10	MECHANICALLY STABILIZED EMBANKMENT - DETAILS NO. 7
11	LOG OF TEST BORING 1 OF 2
12	LOG OF TEST BORING 2 OF 2
13	SOIL LEGEND LOG OF TEST BORINGS 1 OF 2
14	SOIL LEGEND LOG OF TEST BORINGS 2 OF 2

STANDARD PLANS DATED MAY 2006

A10A	ACRONYMS AND ABBREVIATIONS (SHEET 1 OF 2)
A10B	ACRONYMS AND ABBREVIATIONS (SHEET 2 OF 2)
A10C	SYMBOLS (SHEET 1 OF 2)
A10D	SYMBOLS (SHEET 2 OF 2)
A62B	LIMITS OF PAYMENT FOR EXCAVATION AND BACKFILL BRIDGE SURCHARGE AND WALL
BO-3	BRIDGE DETAILS
B11-55	CONCRETE BARRIER TYPE 732

STANDARD PLAN SHEET No.

DETAIL No.

NOTE:
THE CONTRACTOR SHALL VERIFY ALL CONTROLLING FIELD DIMENSIONS BEFORE ORDERING OR FABRICATING ANY MATERIAL.

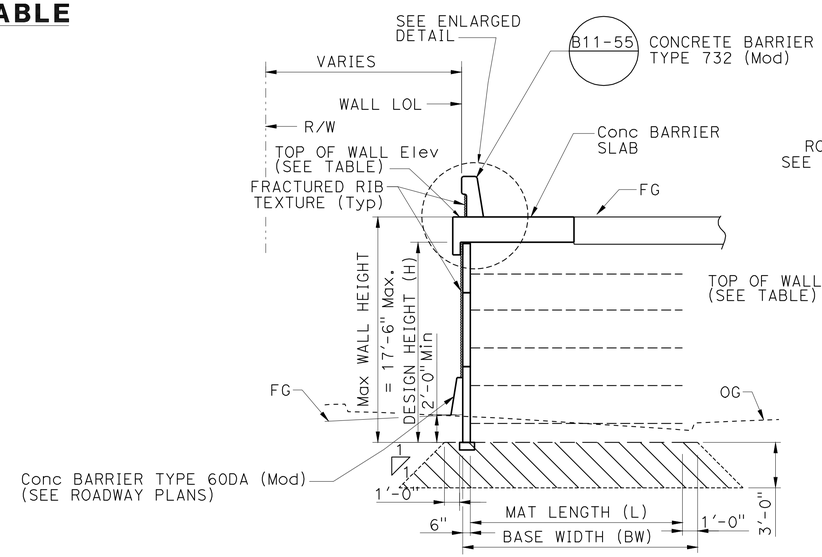

TYPICAL SECTION

NO SCALE

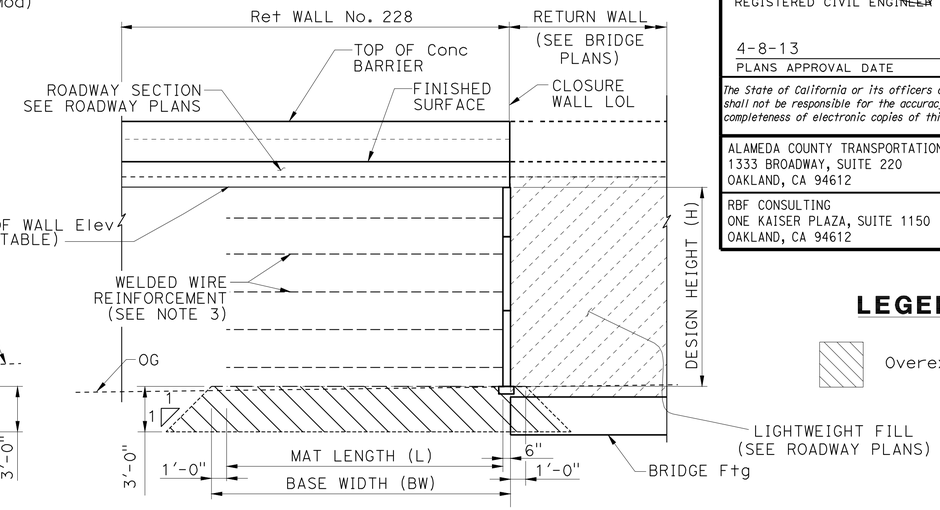

CLOSURE WALL TYPICAL SECTION
SECTION A-A

NO SCALE

LEGEND:

Overexcavation depth

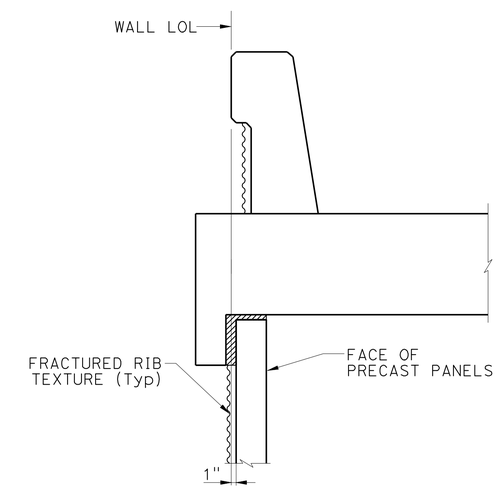

ENLARGED DETAIL

NO SCALE

NOTES:

1. For All Pipes and Drainage Inlet and Outlet Locations, See ROADWAY PLANS.
2. For Existing Pipes and Utilities, See ROADWAY PLANS.
3. Stagger Lifts per Notes and Details on "MECHANICALLY STABILIZED EMBANKMENT DETAILS No. 3" Sheet.

Paul Cotter
DESIGN OVERSIGHT — Paul Cotter
4-3-13
SIGN OFF DATE

	BY	CHECKED
DESIGN	S. McCauley	C. Cho
DETAILS	J. Saldana	S. McCauley
QUANTITIES	C. Cho	S. McCauley

LOAD & RESISTANCE FACTOR DESIGN — LIVE LOADING: HL93 W/"LOW-BOY"; PERMIT DESIGN VEHICLE

	BY	CHECKED
LAYOUT	J. Saldana	S. McCauley
SPECIFICATIONS	C. Harden	PLANS AND SPECS COMPARED S. Sheikh

PREPARED FOR THE STATE OF CALIFORNIA DEPARTMENT OF TRANSPORTATION

Chad Harden
PROJECT ENGINEER

BRIDGE NO. 33E0108
POST MILES 28.5

RETAINING WALL No. 228
GENERAL PLAN No. 2

DESIGN GENERAL PLAN SHEET (ENGLISH) (REV.7/16/10)

ORIGINAL SCALE IN INCHES FOR REDUCED PLANS 0 1 2 3

UNIT: 0724
PROJECT NUMBER & PHASE: 04000001601 CONTRACT NO.: 04-0A7101

DISREGARD PRINTS BEARING EARLIER REVISION DATES — REVISION DATES 2/04/11 3/30/12 6/26/12 3/29/13 — SHEET 2 OF 14

FILE => 33-E0108-a-gp02.dgn

USERNAME => s124436 DATE PLOTTED => 10-APR-2013 TIME PLOTTED => 09:43

DIST	COUNTY	ROUTE	POST MILES TOTAL PROJECT	SHEET No	TOTAL SHEETS
04	Ala	880	28.4/29.2	744	789

REGISTERED CIVIL ENGINEER — DATE 3/29/13

4-8-13
PLANS APPROVAL DATE

REGISTERED PROFESSIONAL ENGINEER S.McCauley No. 71495 Exp. 12-31-13 CIVIL STATE OF CALIFORNIA

The State of California or its officers or agents shall not be responsible for the accuracy or completeness of electronic copies of this plan sheet.

ALAMEDA COUNTY TRANSPORTATION COMMISSION
1333 BROADWAY, SUITE 220
OAKLAND, CA 94612

RBF CONSULTING
ONE KAISER PLAZA, SUITE 1150
OAKLAND, CA 94612

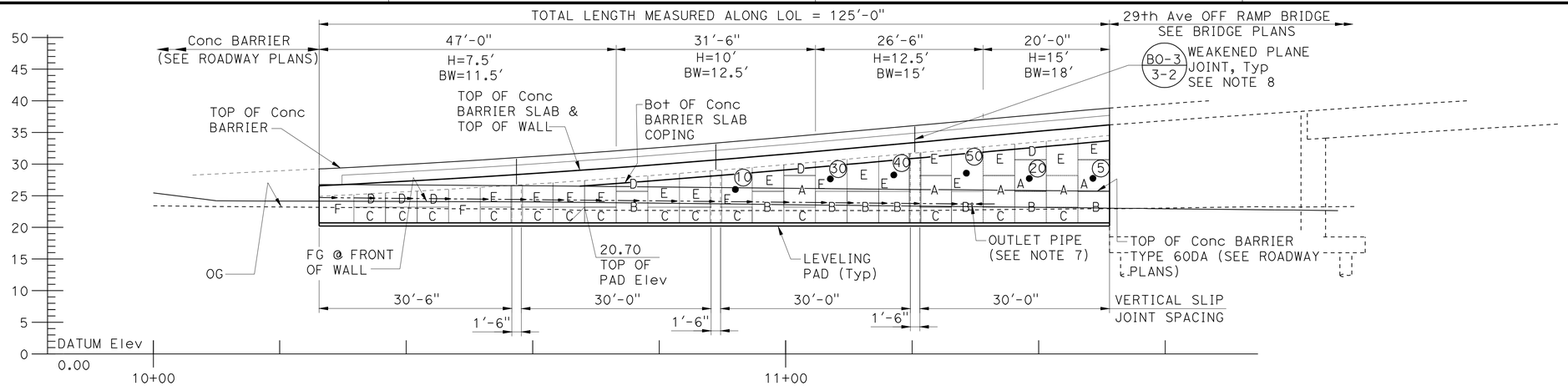

MIRRORED ELEVATION

SCALE: 1" = 10'

PANEL	DESCRIPTION
A	INTERMEDIATE PANEL
B	BOTTOM PANEL
C	BOTTOM HALF PANEL
D	TOP HALF PANEL
E	TOP PANEL WITH MULTIPLE MATS
F	SPECIAL DESIGN PANEL
G	SPECIAL DESIGN TOP PANEL WITH MULTIPLE MATS
H	SPECIAL DESIGN INTERMEDIATE PANEL
I	SPECIAL DESIGN BOTTOM HALF PANEL

LEGEND:

- Indicates Interval in Years from Time of Construction to Time of Removal of Inspection Wire
- Indicates Inspection Wire Panel (See Note 6)
- Indicates Panel Type (See Note 4)
- Underdrain Pipe Flow Line

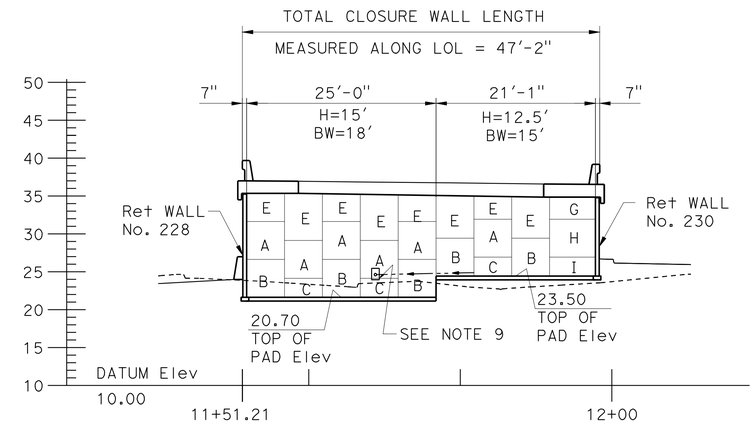

CLOSURE WALL ELEVATION

SCALE: 1" = 10'

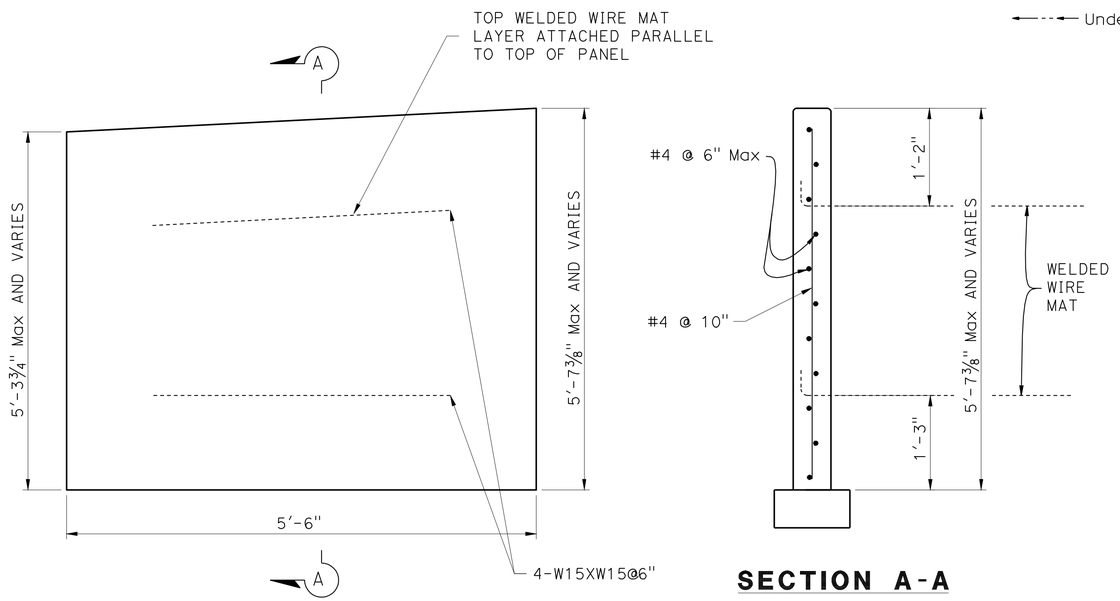

SECTION A-A

SPECIAL DESIGN PANEL F

NO SCALE

NOTES:

1. "BW" Indicates Base Width. "H" Indicates Design Height.
2. MSE Indicates "MECHANICALLY STABILIZED EMBANKMENT".
3. For General Notes, see "MECHANICALLY STABILIZED EMBANKMENT DETAILS No. 2" Sheet.
4. For Precast Panel Details and Reinforcing not shown, See "MECHANICALLY STABILIZED EMBANKMENT DETAILS No. 1" AND " MECHANICALLY STABILIZED EMBANKMENT DETAILS No. 2" Sheets.
5. For Vertical Slip Joint Details, See "MECHANICALLY STABILIZED EMBANKMENT DETAILS No. 6" Sheet.
6. For Inspection Wire Details, See "MECHANICALLY STABILIZED EMBANKMENT DETAILS No. 3" Sheet.
7. For Outlet Pipe and Wall Drainage Details, See "MECHANICALLY STABILIZED EMBANKMENT DETAILS No. 4" Sheet.
8. Provide Weakened Plane Joints in Concrete Barrier and Concrete Barrier Slab at Centerline of each Vertical Slip Joint.
9. Connect Underdrain for Closure Wall To Underdrain System for Retaining Wall No. 228.

NOTE:
THE CONTRACTOR SHALL VERIFY ALL CONTROLLING FIELD DIMENSIONS BEFORE ORDERING OR FABRICATING ANY MATERIAL.

DESIGN OVERSIGHT Paul Cotter
4-3-13
SIGN OFF DATE

	BY	CHECKED
DESIGN	S. McCauley	C. Cho
DETAILS	J. Saldana	S. McCauley
QUANTITIES	C. Cho	S. McCauley

LOAD & RESISTANCE FACTOR DESIGN — LIVE LOADING: HL93 W/"LOW-BOY"; PERMIT DESIGN VEHICLE

	BY	CHECKED
LAYOUT	J. Saldana	S. McCauley
SPECIFICATIONS	C. Harden	PLANS AND SPECS COMPARED S. Sheikh

PREPARED FOR THE STATE OF CALIFORNIA DEPARTMENT OF TRANSPORTATION

Chad Harden
PROJECT ENGINEER

BRIDGE NO. 33E0108
POST MILES 28.5

RETAINING WALL No. 228
LAYOUT

DESIGN GENERAL PLAN SHEET (ENGLISH) (REV.7/16/10)

ORIGINAL SCALE IN INCHES FOR REDUCED PLANS 0 1 2 3

UNIT: 0724
PROJECT NUMBER & PHASE: 04000001601 CONTRACT NO.: 04-0A7101

DISREGARD PRINTS BEARING EARLIER REVISION DATES — REVISION DATES 2/24/11 3/30/12 5/26/12 3/29/13

SHEET 3 OF 14

FILE => 33-E0108-g-rw_lo01.dgn

USERNAME => s124496 DATE PLOTTED => 10-APR-2013 TIME PLOTTED => 09:43

DIST	COUNTY	ROUTE	POST MILES TOTAL PROJECT	SHEET No.	TOTAL SHEETS
04	Ala	880	28.4/29.2	745	789

REGISTERED CIVIL ENGINEER — DATE 6/26/12

4-8-13
PLANS APPROVAL DATE

REGISTERED PROFESSIONAL ENGINEER S.McCauley No. 71495 Exp. 12-31-13 CIVIL STATE OF CALIFORNIA

The State of California or its officers or agents shall not be responsible for the accuracy or completeness of electronic copies of this plan sheet.

ALAMEDA COUNTY TRANSPORTATION COMMISSION
1333 BROADWAY, SUITE 220
OAKLAND, CA 94612

RBF CONSULTING
ONE KAISER PLAZA, SUITE 1150
OAKLAND, CA 94612

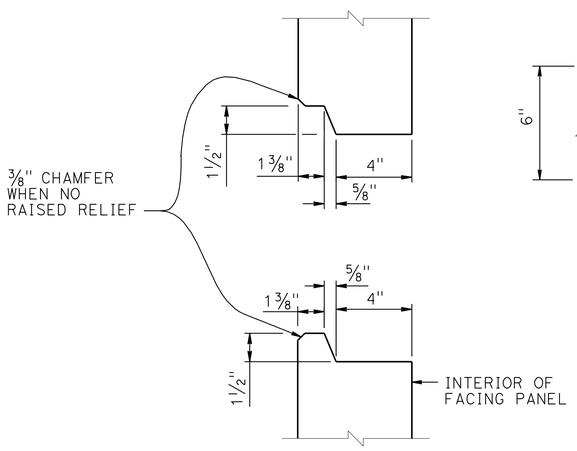

HORIZONTAL JOINT DETAIL

3" = 1'-0"

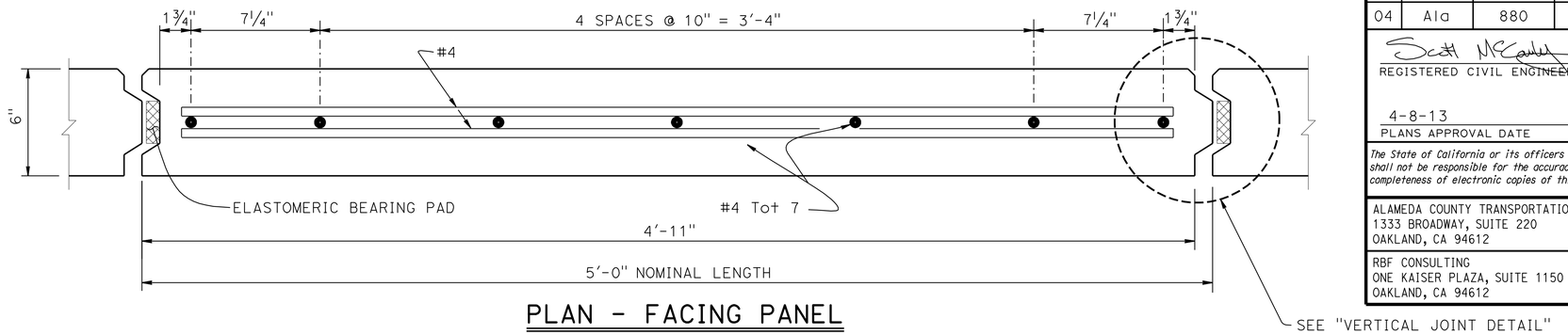

PLAN - FACING PANEL

3" = 1'-0"

NOTES:

1. Architectural Treatment Not Shown.
2. Place Reinforced Elastomeric Bearing Pads in All of the Panel Joints Between the Panels. Place One in Each Vertical Joint where the Horizontal Joints Intersect. Place Two per Panel in each Horizontal Joint:
   3/4" x 2 3/8" x 6" for Vertical Joints
   3/4" x 4" x 6" for Horizontal Joints
3. Bond a Strip of Filter Fabric, 1'-0" Wide, Cover the Full Length of all Panel Joints.
4. Top Layer of Welded Wire Mats Attached Parallel to Top of Panel when Top of Wall is Angled or Curved as Shown Elsewhere in "STRUCTURE PLANS".
5. Eliminate Mid Level Mat when Closer than 6" to Top Mat, Continue Variable Dimension Between Remaining Mats.

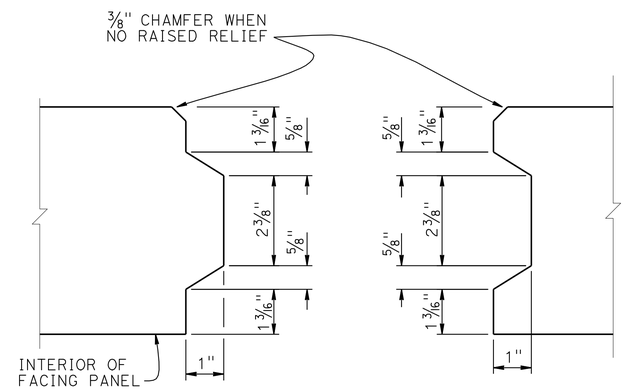

VERTICAL JOINT DETAIL

6" = 1'-0"

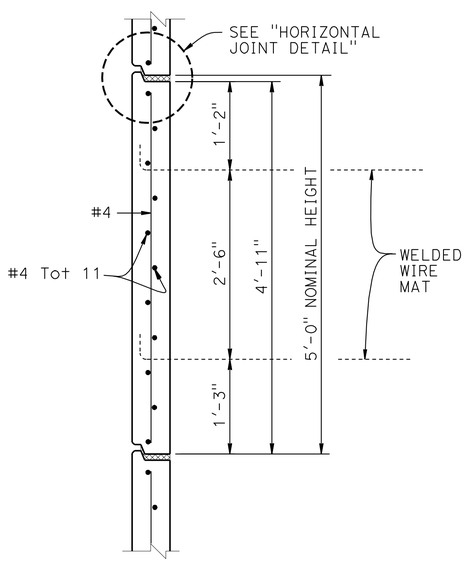

INTERMEDIATE PANEL

1" = 1'-0"

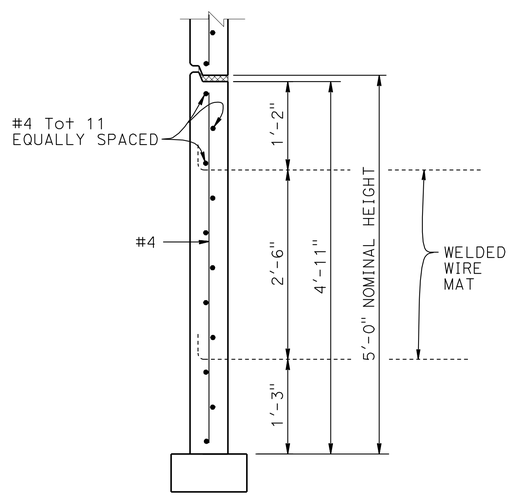

BOTTOM PANEL

1" = 1'-0"

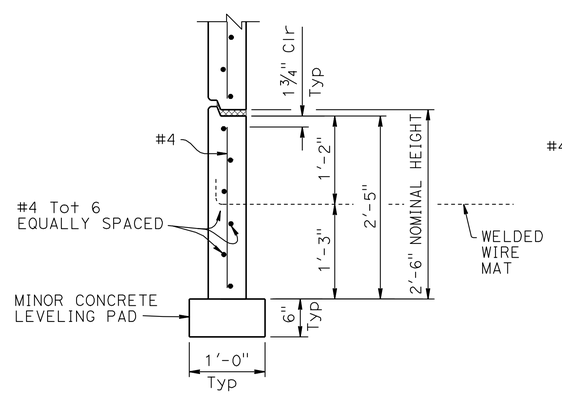

BOTTOM HALF PANEL

1" = 1'-0"

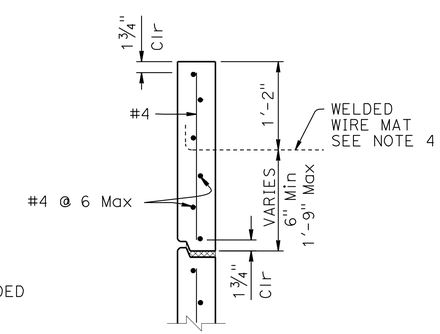

TOP HALF PANEL

1" = 1'-0"

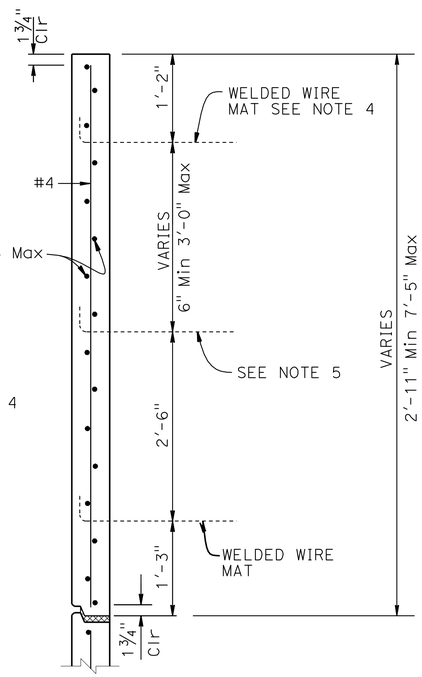

TOP PANEL WITH MULTIPLE MATS

1" = 1'-0"

STANDARD DRAWING

FILE NO. xs13-020-1

APPROVAL DATE January 2012

DS OSD 2147A (ENGLISH STANDARD DRAWING "XS" BORDER REV. (02-02-11)

ORIGINAL SCALE IN INCHES FOR REDUCED PLANS 0 1 2 3

STATE OF CALIFORNIA
DEPARTMENT OF TRANSPORTATION

DIVISION OF ENGINEERING SERVICES

BRIDGE NO. 33E0108
POST MILE 28.5

RETAINING WALL No. 228
MECHANICALLY STABILIZED EMBANKMENT
DETAILS NO. 1

UNIT: 0724
PROJECT NUMBER & PHASE: 04000001601
CONTRACT NO.: 04-0A7101

DISREGARD PRINTS BEARING EARLIER REVISION DATES

REVISION DATES 2/04/11 3/30/12 6/26/12

SHEET 4 OF 14

FILE => 33-E0108-u-miscdt01.dgn

USERNAME => s124496 DATE PLOTTED => 10-APR-2013 TIME PLOTTED => 09:44

DIST	COUNTY	ROUTE	POST MILES TOTAL PROJECT	SHEET No.	TOTAL SHEETS
04	Ala	880	28.4/29.2	746	789

Scott McCauley 6/26/12
REGISTERED CIVIL ENGINEER DATE

4-8-13
PLANS APPROVAL DATE

REGISTERED PROFESSIONAL ENGINEER S.McCauley No. 71495 Exp. 12-31-13 CIVIL STATE OF CALIFORNIA

The State of California or its officers or agents shall not be responsible for the accuracy or completeness of electronic copies of this plan sheet.

ALAMEDA COUNTY TRANSPORTATION COMMISSION
1333 BROADWAY, SUITE 220
OAKLAND, CA 94612

RBF CONSULTING
ONE KAISER PLAZA, SUITE 1150
OAKLAND, CA 94612

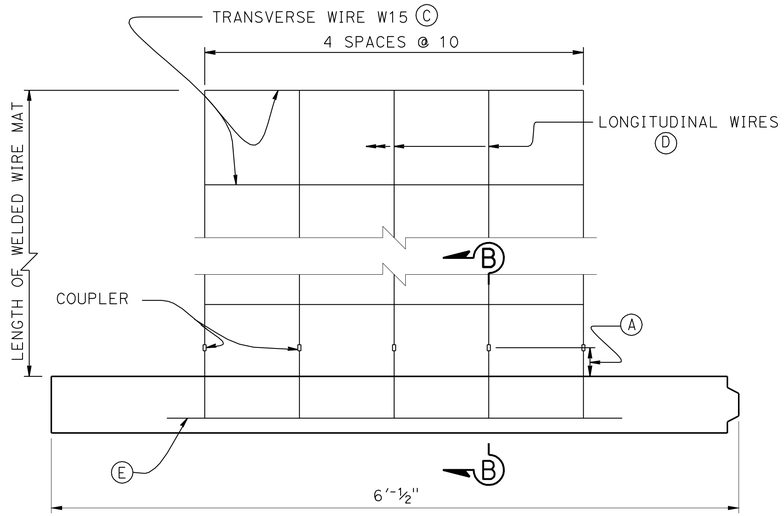

PLAN OF SPECIAL DESIGN PANELS G, H & I

◇2 ◇3

1½" = 1'-0"

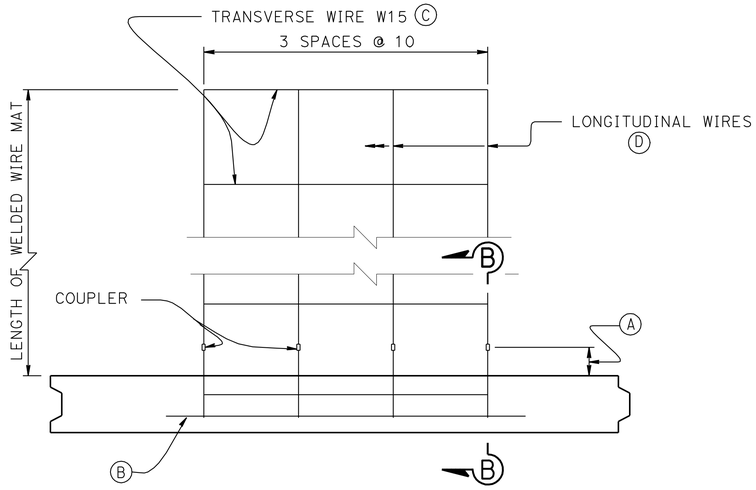

PLAN OF PANEL WITH FOUR WIRE MAT

1½" = 1'-0"

GENERAL NOTES
LOAD & RESISTANCE FACTOR DESIGN

DESIGN: AASHTO LRFD Bridge Design Specifications, 4th Edition with California Amendments
FHWA Design and Construction of Mechanically Stabilized Earth Walls and Reinforced Slopes, dated November 2009
Publication No. FHWA-NHI 10-024

COLLISION FORCE: F_t = 54 kips on barriers

LIVE LOAD: Surcharge = 240 lb/ft^3

SOIL PARAMETERS:

Internal design ϕ(Reinforced Backfill) = 34°, γ = 120 lb/ft^3, kh = 0.36 ◇1

External design ϕ(Retained Backfill) = 30°, γ = 120 lb/ft^3
Coefficient of friction, μ = 0.35
K_h = 0.24

PRECAST CONCRETE PANELS:

f'c = 4,000 psi (Concrete compressive strength at 28 days)
fy = 60,000 psi (Yield strength of reinforcement)

SOIL REINFORCEMENT:

Welded wire mats: fy = 65,000 psi (Yield strength)
Coupler: fy = 36,000 psi (Yield strength)
Corrosion rate = 1.1 mils/year

REINFORCED CONCRETE:

f'c = 3,600 psi, except as noted
(Concrete compressive strength at 28 days)
fy = 60,000 psi (Yield strength of reinforcement)

MSE = Mechanically Stabilized Embankment

NOTES:

(A) Distance as required to permit coupler to be swaged

(B) Place #4 x 3'-2", centered on connector mat, but not welded to it

(C) All transverse wires size W15 at various spacing as shown elsewhere in plans

(D) Size of longitudinal wires shown elsewhere in plans

◇4 (E) Place #4 x 4'-0", centered on connector mat, but not welded to it

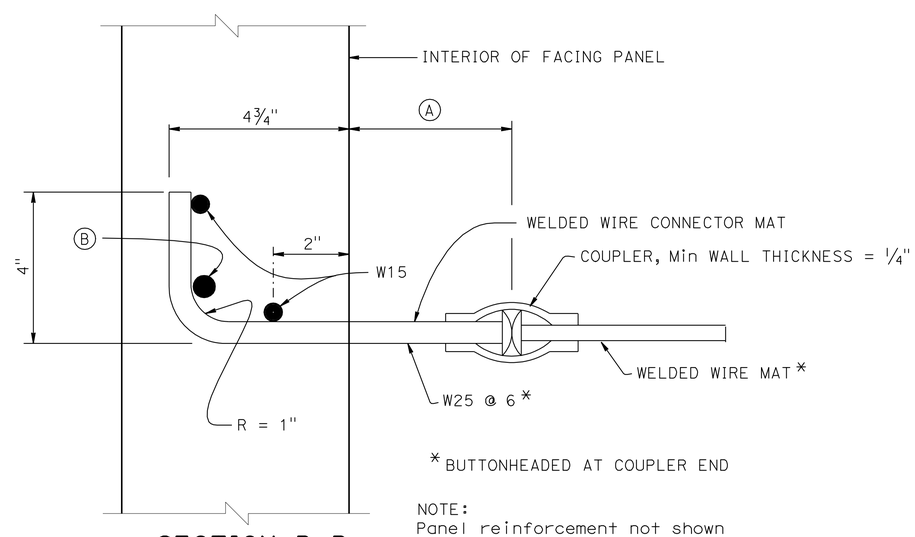

* BUTTONHEADED AT COUPLER END

NOTE:
Panel reinforcement not shown

SECTION B-B

6" = 1'-0"

SPECIAL DETAILS

RETAINING WALL No. 228

MECHANICALLY STABILIZED EMBANKMENT

DETAILS NO. 2

STANDARD DRAWING
FILE NO. xs13-020-2
APPROVAL DATE January 2012

◇1 Soil Parameters Modified ◇3 Detail Added
◇2 Detail Removed ◇4 Note Added

STATE OF CALIFORNIA
DEPARTMENT OF TRANSPORTATION

DIVISION OF ENGINEERING SERVICES

BRIDGE NO. 33E0108
POST MILE 28.5

DS OSD 2147A (ENGLISH STANDARD DRAWING "XS" BORDER REV. (02-02-11)

ORIGINAL SCALE IN INCHES FOR REDUCED PLANS 0 1 2 3

UNIT: 0724
PROJECT NUMBER & PHASE: 04000001601
CONTRACT NO.: 04-0A7101

DISREGARD PRINTS BEARING EARLIER REVISION DATES

REVISION DATES 2/04/11 3/30/12 6/26/12

SHEET 5 OF 14

FILE => 33-E0108-u-miscdt02.dgn

USERNAME => s124196 DATE PLOTTED => 10-APR-2013 TIME PLOTTED => 09:44

DIST	COUNTY	ROUTE	POST MILES TOTAL PROJECT	SHEET No.	TOTAL SHEETS
04	Ala	880	28.4/29.2	747	789

REGISTERED CIVIL ENGINEER 3/29/13 DATE

4-8-13
PLANS APPROVAL DATE

REGISTERED PROFESSIONAL ENGINEER S.McCauley No. 71495 Exp. 12-31-13 CIVIL STATE OF CALIFORNIA

The State of California or its officers or agents shall not be responsible for the accuracy or completeness of electronic copies of this plan sheet.

ALAMEDA COUNTY TRANSPORTATION COMMISSION
1333 BROADWAY, SUITE 220
OAKLAND, CA 94612

RBF CONSULTING
ONE KAISER PLAZA, SUITE 1150
OAKLAND, CA 94612

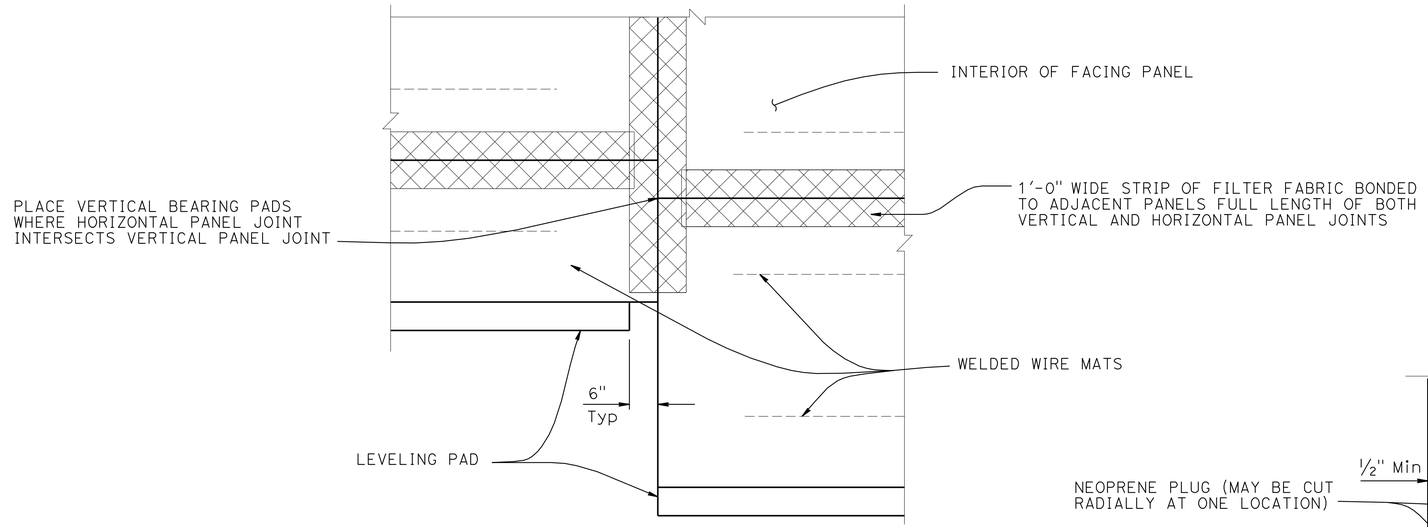

PART ELEVATION

3/4" = 1'-0"

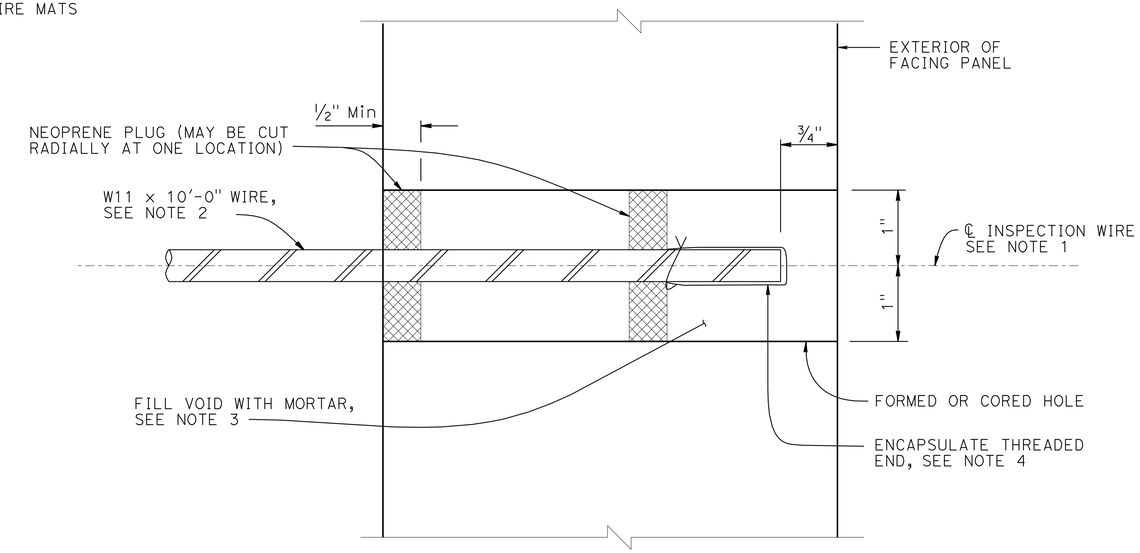

SECTION THRU INSPECTION WIRE

NO SCALE

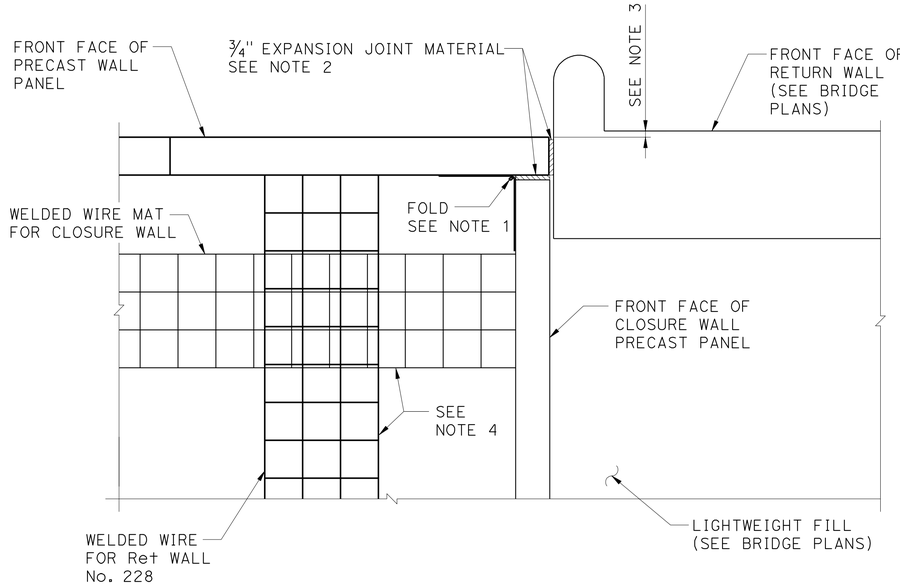

NOTES:

1. Bond a strip of filter fabric, 1'-6" wide, to back of adjacent MSE panels for entire length of vertical joint
2. Bond expansion joint material to concrete wall
3. Offset between face of MSE facing panel and face of the concrete wall as directed by location of layout lines elsewhere in "STRUCTURE PLANS"
4. Stagger Lifts between Closure Wall and Wall No. 228 such that the Overlapping Soil Reinforcement Layers are separated Vertically by at least 4".

① ② CORNER DETAIL AT CLOSURE WALL - PLAN

NO SCALE

SPECIAL DETAILS

RETAINING WALL No. 228

MECHANICALLY STABILIZED EMBANKMENT

DETAILS NO. 3

STANDARD DRAWING
FILE NO. xs13-020-3
APPROVAL DATE January 2012

① REMOVED DETAIL
② DETAIL ADDED

STATE OF CALIFORNIA DEPARTMENT OF TRANSPORTATION

DIVISION OF ENGINEERING SERVICES

BRIDGE NO. 33E0108
POST MILE 28.5

DS OSD 2147A (ENGLISH STANDARD DRAWING "XS" BORDER REV. (02-02-11)

ORIGINAL SCALE IN INCHES FOR REDUCED PLANS 0 1 2 3

UNIT: 0724
PROJECT NUMBER & PHASE: 04000001601
CONTRACT NO.: 04-0A7101

DISREGARD PRINTS BEARING EARLIER REVISION DATES

REVISION DATES 2/24/11 3/30/12 6/26/12 3/29/13

SHEET 6 OF 14

FILE => 33-E0108-u-miscdt03.dgn

USERNAME => s124496 DATE PLOTTED => 10-APR-2013 TIME PLOTTED => 08:44

DIST	COUNTY	ROUTE	POST MILES TOTAL PROJECT	SHEET No.	TOTAL SHEETS
04	Ala	880	28.4/29.2	748	789

REGISTERED CIVIL ENGINEER — DATE 3/29/13

4-8-13
PLANS APPROVAL DATE

REGISTERED PROFESSIONAL ENGINEER S.McCauley No. 71495 Exp. 12-31-13 CIVIL STATE OF CALIFORNIA

The State of California or its officers or agents shall not be responsible for the accuracy or completeness of electronic copies of this plan sheet.

ALAMEDA COUNTY TRANSPORTATION COMMISSION
1333 BROADWAY, SUITE 220
OAKLAND, CA 94612

RBF CONSULTING
ONE KAISER PLAZA, SUITE 1150
OAKLAND, CA 94612

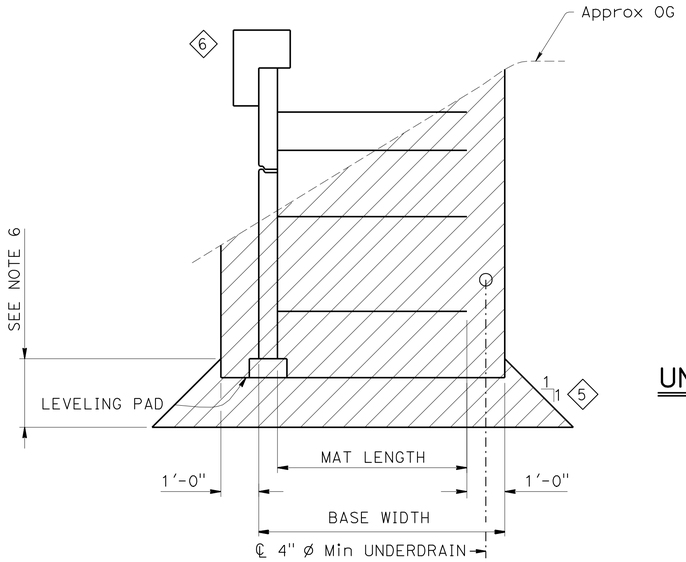

LIMITS OF EXCAVATION

½" = 1'-0"

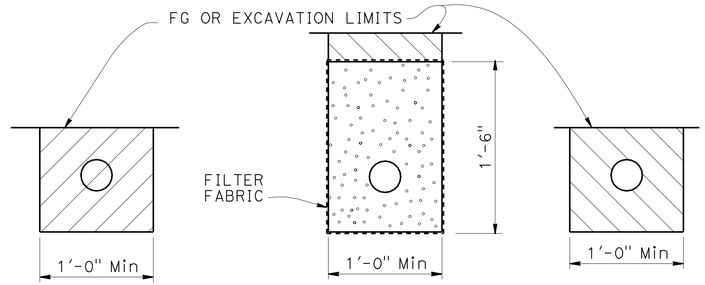

OUTLET PIPE — CLEANOUT PIPE

EXCAVATION — BACKFILL

UNPERFORATED OUTLET OR CLEAN OUT PIPE FOR UNDERDRAIN

NO SCALE

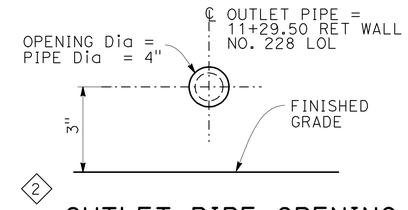

OUTLET PIPE OPENING

NO SCALE

NOTES:

1. Limits to FG except to GP when in roadway section
2. Locate underdrain behind bottom level of welded wire mats wherever possible, or at elevation needed to drain, as shown elsewhere on plans
3. Place perforated pipe underdrain of diameter shown elsewhere on plans or minimum 4" ø smoothed wall PVC or minimum 8" ø corrugated HDPE
4. Maximum spacing of outlet pipe is 200 feet
5. At sags in profile of underdrain, install outlet pipe for each direction of flow
6. For overexcavation depth see "GENERAL PLAN No. 2" sheet

LEGEND:

- Limits of Structure Excavation
- Limits of Structure Backfill
- Limits of Permeable Material

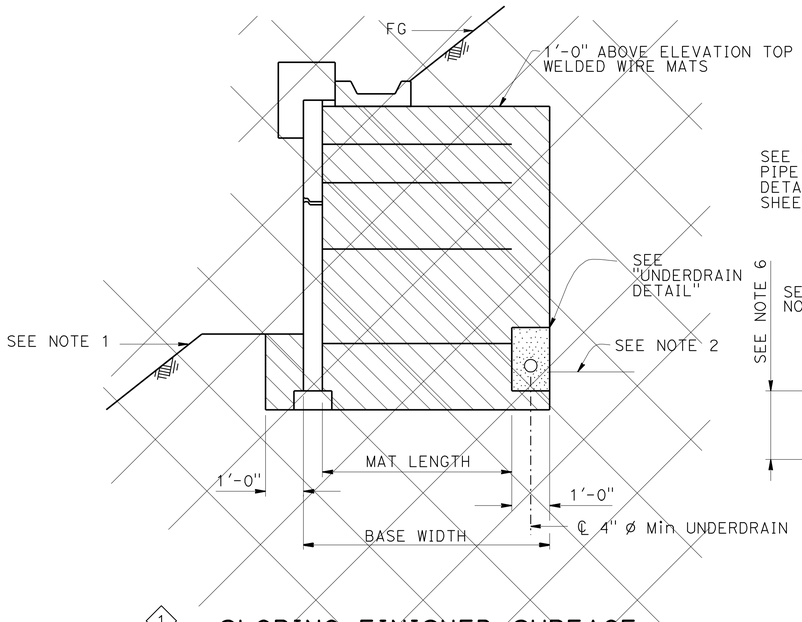

1

SLOPING FINISHED SURFACE

½" = 1'-0"

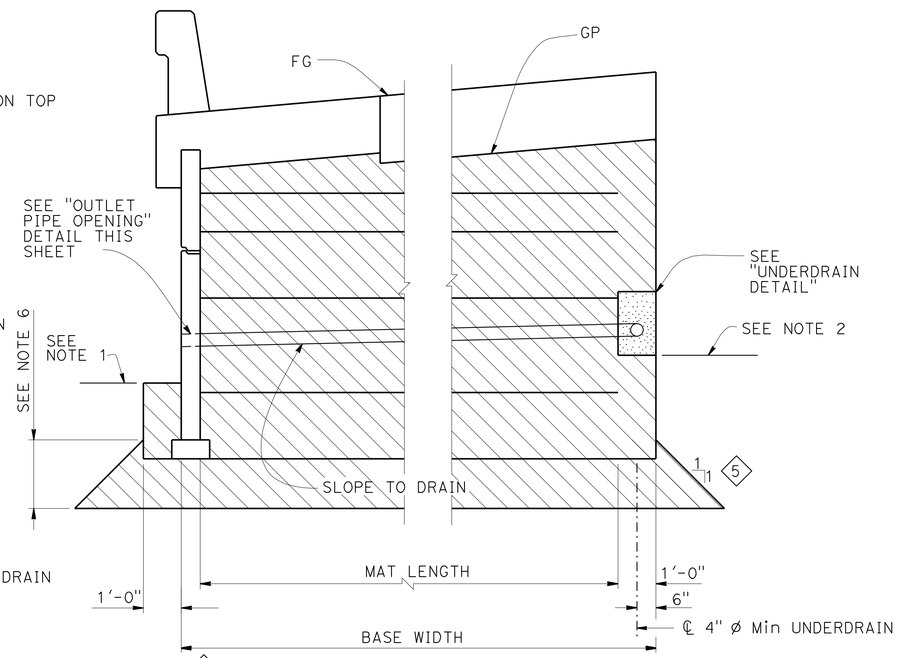

3

ROADWAY SECTION

½" = 1'-0"

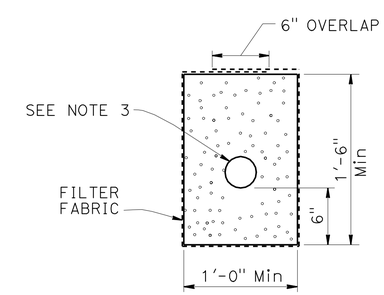

UNDERDRAIN DETAIL

LIMITS OF BACKFILL

SPECIAL DETAILS

STANDARD DRAWING

FILE NO. xs13-020-6 — APPROVAL DATE January 2012

1 Does Not Apply
2 Detail Added
3 Detail Modified
4 Changed Sheet Title
5 Added Overexcavation Limit
6 Revised "Limits of Excavation"

STATE OF CALIFORNIA
DEPARTMENT OF TRANSPORTATION

DIVISION OF ENGINEERING SERVICES

BRIDGE NO. 33E0108
POST MILE 28.5

RETAINING WALL No. 228

MECHANICALLY STABILIZED EMBANKMENT

DETAILS NO. 4 (4)

DS OSD 2147A (ENGLISH STANDARD DRAWING "XS" BORDER REV. (02-02-11)

ORIGINAL SCALE IN INCHES FOR REDUCED PLANS 0 1 2 3

UNIT: 0724
PROJECT NUMBER & PHASE: 04000001601
CONTRACT NO.: 04-0A7101

DISREGARD PRINTS BEARING EARLIER REVISION DATES

REVISION DATES 2/24/11 3/30/12 6/26/12 3/29/13

SHEET 7 OF 14

FILE => 33-E0108-u-miscdt04.dgn

USERNAME => s124496 DATE PLOTTED => 10-APR-2013 TIME PLOTTED => 09:44

DIST	COUNTY	ROUTE	POST MILES TOTAL PROJECT	SHEET No	TOTAL SHEETS
04	Ala	880	28.4/29.2	749	789

REGISTERED CIVIL ENGINEER 6/26/12 DATE

4-8-13
PLANS APPROVAL DATE

REGISTERED PROFESSIONAL ENGINEER S.McCauley No. 71495 Exp. 12-31-13 CIVIL STATE OF CALIFORNIA

The State of California or its officers or agents shall not be responsible for the accuracy or completeness of electronic copies of this plan sheet.

ALAMEDA COUNTY TRANSPORTATION COMMISSION
1333 BROADWAY, SUITE 220
OAKLAND, CA 94612

RBF CONSULTING
ONE KAISER PLAZA, SUITE 1150
OAKLAND, CA 94612

NOTES:

1. For dimensions and reinforcement not shown see, STANDARD PLAN B11-55
2. Minimum barrier slab length 40'-0"

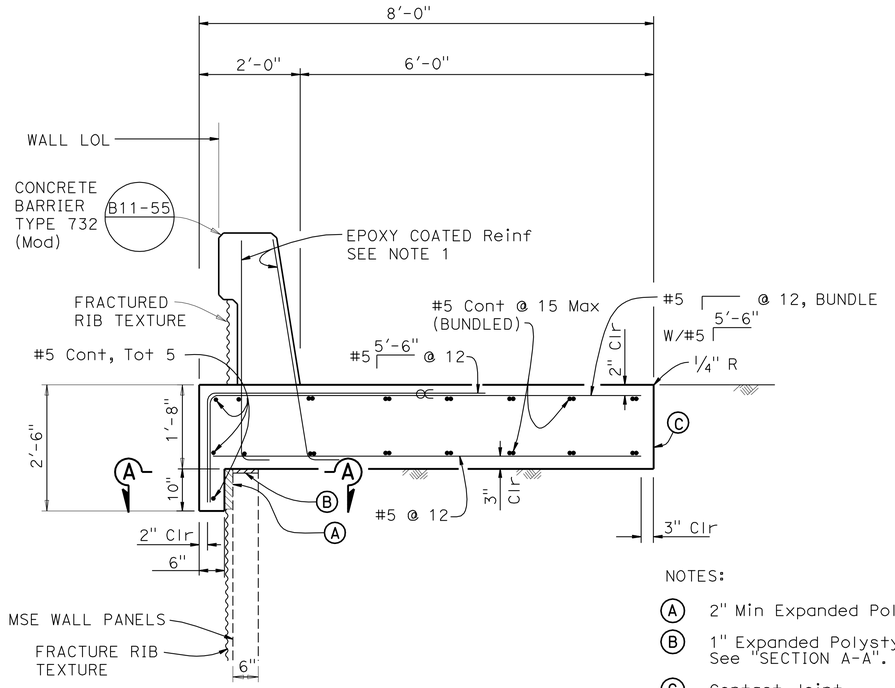

NOTES:

(A) 2" Min Expanded Polystyrene.

(B) 1" Expanded Polystyrene See "SECTION A-A".

(C) Contact Joint.

∝ Indicates Bundled Bars.

CONCRETE BARRIER SLAB

3/4" = 1'-0"

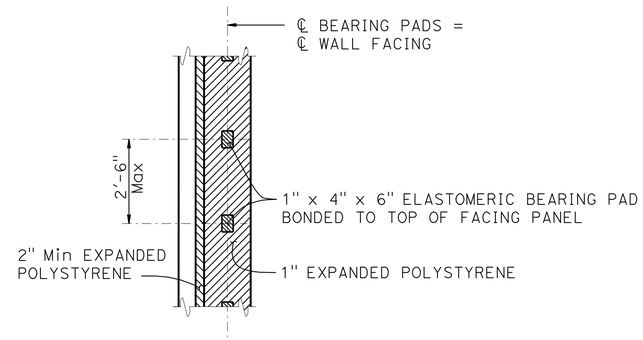

SECTION A-A

1/2" = 1'-0"

ONLY FOR CLOSURE WALL SPECIAL DESIGN PANELS G, H, & I

DESIGN HEIGHT, H (Ft)	7.5	10.0	12.5	15.0	12.5
Max. WALL HEIGHT (Ft)	9.17	11.67	14.17	16.67	14.17
MAT LENGTH, L (Ft)	10.0	11.0	13.5	16.5	13.5
BASE WIDTH, BW (Ft)	11.5	12.5	15.0	18.0	15.0
WELDED WIRE REINFORCING PER LEVEL	TOP 4-W15xW15@6" 1@ 4-W15xW15@6" Bot 4-W15xW15@6"	TOP 4-W15xW15@6" 2 @ 4-W15xW15@6" Bot 4-W20xW15@9"	TOP 4-W15xW15@6" 3 @ 4-W15xW15@6" Bot 4-W20xW15@9"	TOP 4-W15xW15@6" 3 @ 4-W15xW15@6" 1@ 4-W20xW15@9" Bot 4-W20xW15@9"	TOP 5-W15xW15@6" 3 @ 5-W15xW15@6" Bot 5-W20xW15@9"

NOTE:

Mesh Configuration is:

No. Longitudinal Wires - Longitudinal Wire Size x Transverse Wire Size @ Transverse Wire Spacing

MECHANICALLY STABILIZED EMBANKMENT WALL REINFORCEMENT

No Scale

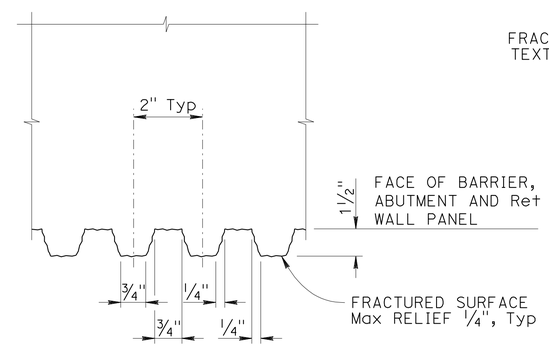

NOTES:

1. Vertical Joints in Form Liners will be at Center of Trough between Ribs. Min Spacing of Form Liner Vertical Joints will be 4'-0".
2. No Horizontal Joints will be Permitted in Form Liners.

FRACTURED RIB TEXTURE

NO SCALE

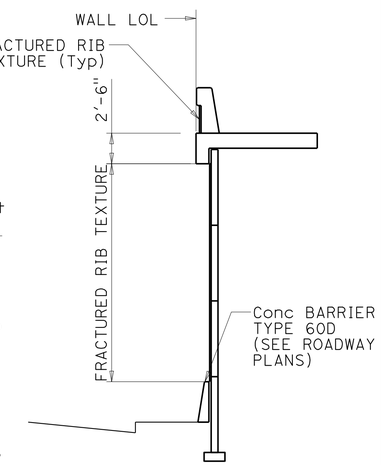

LIMITS OF PAYMENT

NOTE:
THE CONTRACTOR SHALL VERIFY ALL CONTROLLING FIELD DIMENSIONS BEFORE ORDERING OR FABRICATING ANY MATERIAL.

DESIGN OVERSIGHT Paul Cotter
8-8-12
SIGN OFF DATE

	BY	CHECKED
DESIGN	S McCauley	C. Cho
DETAILS	J Saldana	S. McCauley
QUANTITIES	C. Cho	S. McCauley

PREPARED FOR THE STATE OF CALIFORNIA DEPARTMENT OF TRANSPORTATION

Chad Harden
PROJECT ENGINEER

BRIDGE NO. 33E0108
POST MILES 28.5

RETAINING WALL No. 228
MECHANICALLY STABILIZED EMBANKMENT
DETAILS NO. 5

DESIGN DETAIL SHEET (ENGLISH) (REV.7/16/10)

ORIGINAL SCALE IN INCHES FOR REDUCED PLANS 0 1 2 3

UNIT: 0724
PROJECT NUMBER & PHASE: 04000001601 CONTRACT NO.: 04-0A7101

DISREGARD PRINTS BEARING EARLIER REVISION DATES → 2/24/11 3/30/12 6/26/12

SHEET 8 OF 14

FILE => 33-E0108-u-miscdt05.dgn

USERNAME => s124496 DATE PLOTTED => 10-APR-2013 TIME PLOTTED => 09:44

DIST	COUNTY	ROUTE	POST MILES TOTAL PROJECT	SHEET No	TOTAL SHEETS
04	Ala	880	28.4/29.2	750	789

REGISTERED CIVIL ENGINEER — DATE 6/26/12

4-8-13
PLANS APPROVAL DATE

REGISTERED PROFESSIONAL ENGINEER S.McCauley No. 71495 Exp. 12-31-13 CIVIL STATE OF CALIFORNIA

The State of California or its officers or agents shall not be responsible for the accuracy or completeness of electronic copies of this plan sheet.

ALAMEDA COUNTY TRANSPORTATION COMMISSION
1333 BROADWAY, SUITE 220
OAKLAND, CA 94612

RBF CONSULTING
ONE KAISER PLAZA, SUITE 1150
OAKLAND, CA 94612

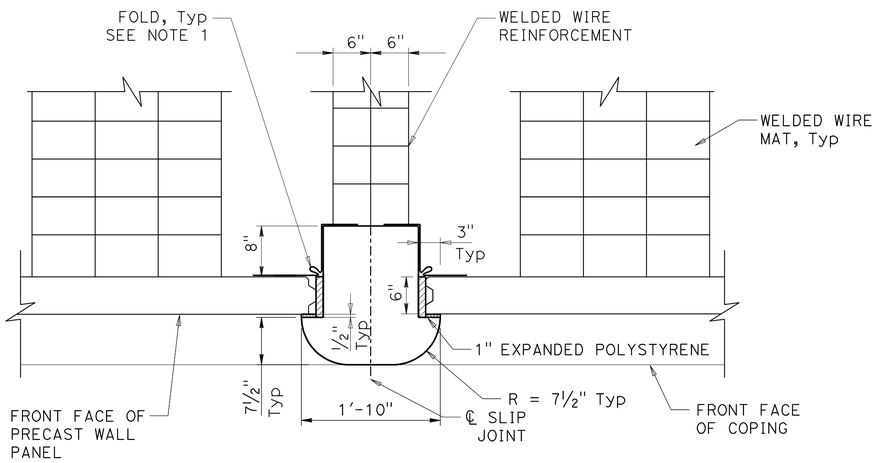

VERTICAL SLIP JOINT TYPICAL SECTION

NO SCALE

NOTES:

1. Bond a strip of Filter Fabric, 1'-6" wide to back of vertical slip joint and adjacent MSE panels for entire length of vertical joint.

NOTE: CONCRETE BARRIER NOT SHOWN

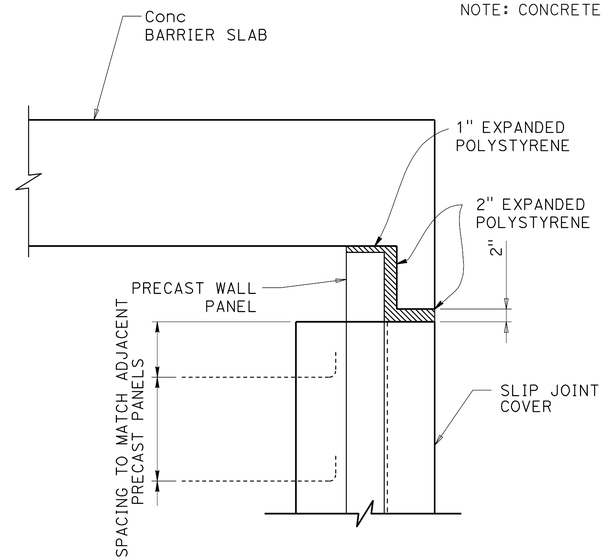

VERTICAL SLIP JOINT TOP DETAIL

NO SCALE

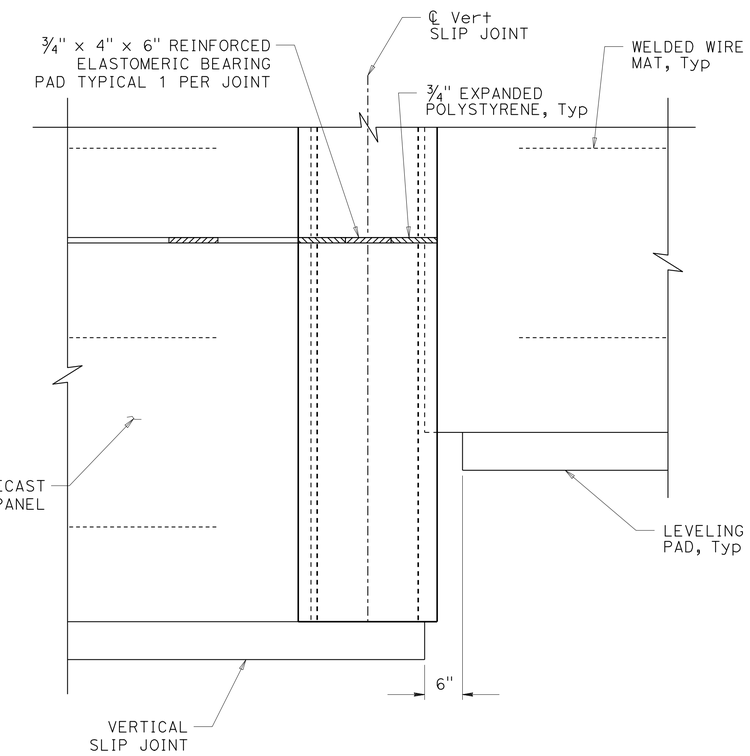

PARTIAL ELEVATION AT FOOTING STEP

NO SCALE

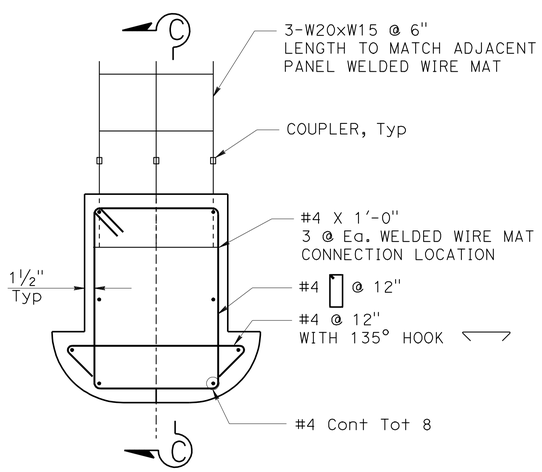

VERTICAL SLIP JOINT REINFORCING DETAIL

NO SCALE

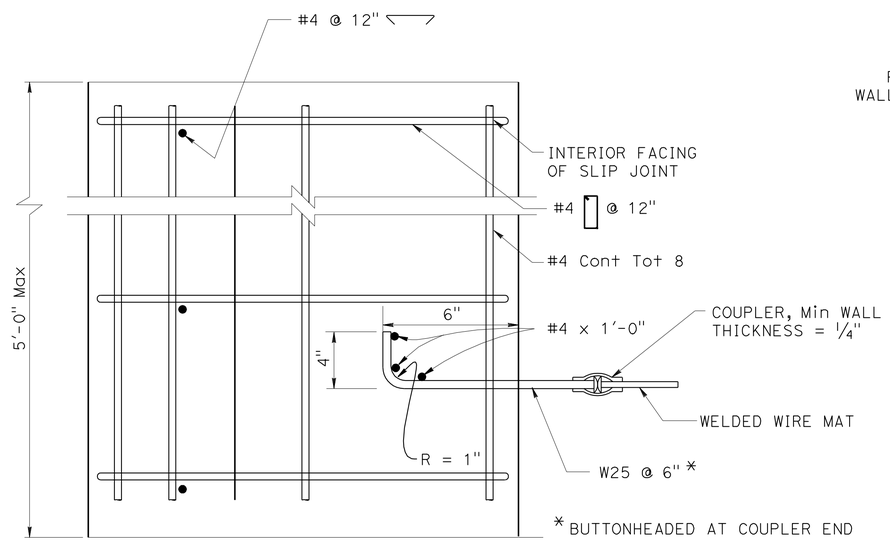

SECTION C-C

NO SCALE

NOTE:
THE CONTRACTOR SHALL VERIFY ALL CONTROLLING FIELD DIMENSIONS BEFORE ORDERING OR FABRICATING ANY MATERIAL.

RETAINING WALL No. 228

MECHANICALLY STABILIZED EMBANKMENT

DETAILS NO. 6

DESIGN OVERSIGHT — Paul Cotter
7-16-12
SIGN OFF DATE

	BY	CHECKED
DESIGN	S McCauley	C. Cho
DETAILS	J Saldana	S. McCauley
QUANTITIES	C. Cho	S. McCauley

PREPARED FOR THE STATE OF CALIFORNIA DEPARTMENT OF TRANSPORTATION

Chad Harden
PROJECT ENGINEER

BRIDGE NO. 33E0108
POST MILES 28.5

DESIGN DETAIL SHEET (ENGLISH) (REV.7/16/10)

ORIGINAL SCALE IN INCHES FOR REDUCED PLANS 0 1 2 3

UNIT: 0724
PROJECT NUMBER & PHASE: 04000001601 CONTRACT NO.: 04-0A7101

DISREGARD PRINTS BEARING EARLIER REVISION DATES — REVISION DATES 2/04/11 3/30/12 6/26/12

SHEET 9 OF 14

FILE => 33-E0108-u-miscdt06.dgn

USERNAME => s124496 DATE PLOTTED => 10-APR-2013 TIME PLOTTED => 09:44

DIST	COUNTY	ROUTE	POST MILES TOTAL PROJECT	SHEET No	TOTAL SHEETS
04	Ala	880	28.4/29.2	751	789

REGISTERED CIVIL ENGINEER — DATE 3/29/13

4-8-13
PLANS APPROVAL DATE

REGISTERED PROFESSIONAL ENGINEER S.McCauley No. 71495 Exp. 12-31-13 CIVIL STATE OF CALIFORNIA

The State of California or its officers or agents shall not be responsible for the accuracy or completeness of electronic copies of this plan sheet.

ALAMEDA COUNTY TRANSPORTATION COMMISSION
1333 BROADWAY, SUITE 220
OAKLAND, CA 94612

RBF CONSULTING
ONE KAISER PLAZA, SUITE 1150
OAKLAND, CA 94612

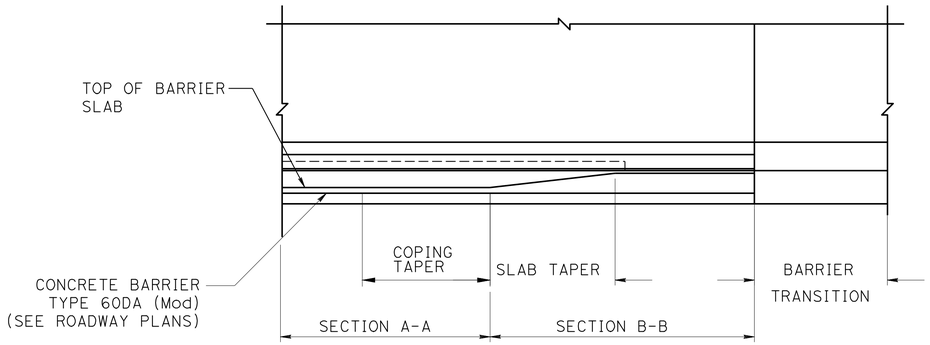

PLAN VIEW

NO SCALE

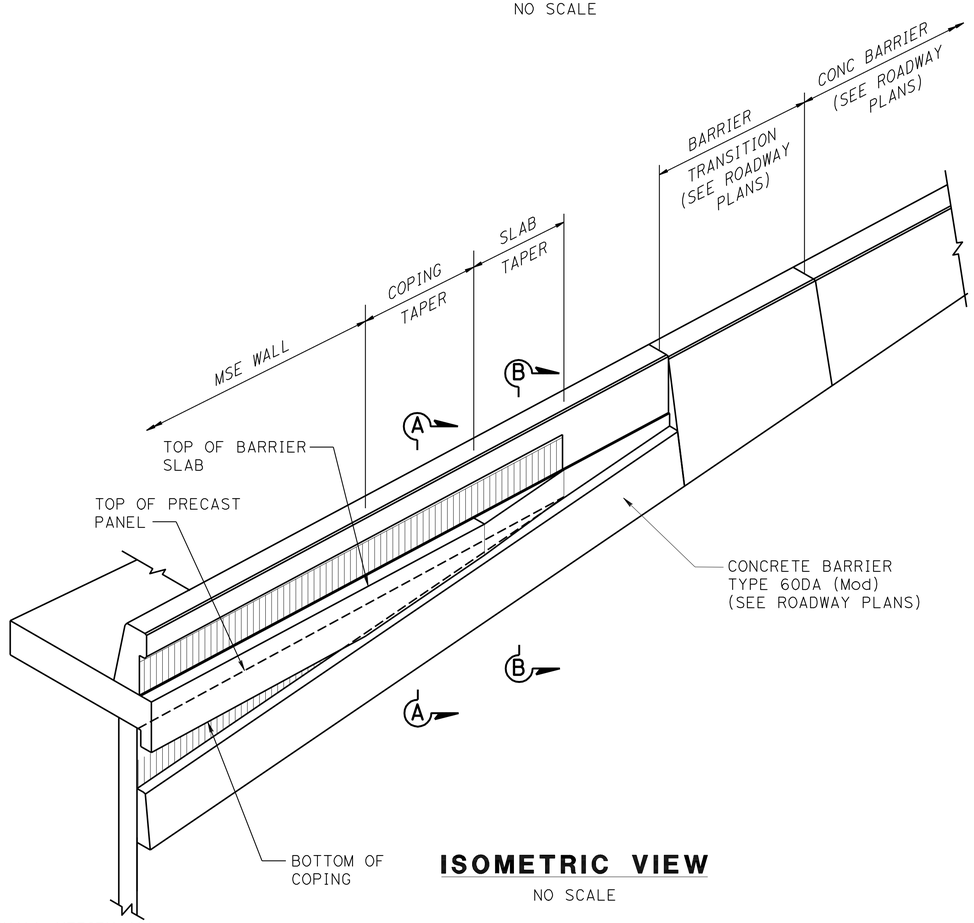

ISOMETRIC VIEW

NO SCALE

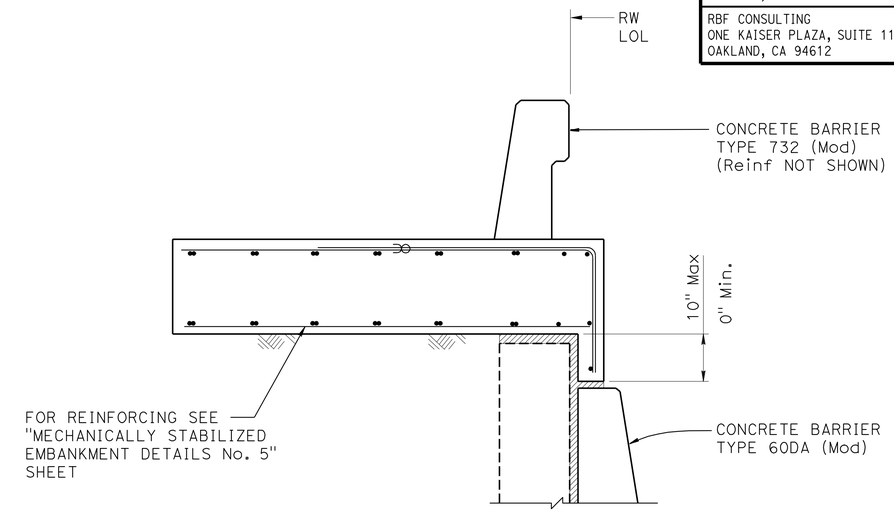

SECTION A-A

3/4" = 1'-0"

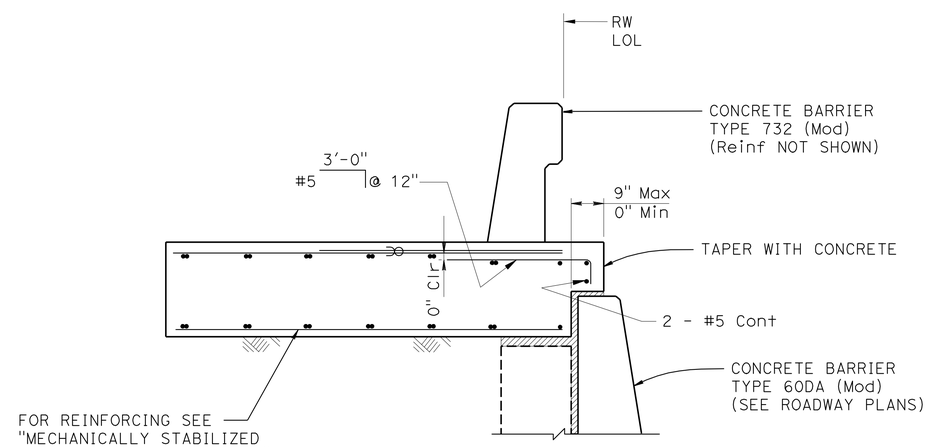

SECTION B-B

3/4" = 1'-0"

NOTE:
THE CONTRACTOR SHALL VERIFY ALL CONTROLLING FIELD DIMENSIONS BEFORE ORDERING OR FABRICATING ANY MATERIAL.

RETAINING WALL No. 228

MECHANICALLY STABILIZED EMBANKMENT DETAILS NO. 7

Paul Cotter
DESIGN OVERSIGHT — Paul Cotter
4-3-13
SIGN OFF DATE

	BY	CHECKED
DESIGN	S McCauley	C. Cho
DETAILS	J Saldana	S. McCauley
QUANTITIES	C. Cho	S. McCauley

PREPARED FOR THE STATE OF CALIFORNIA DEPARTMENT OF TRANSPORTATION

Chad Harden
PROJECT ENGINEER

BRIDGE NO. 33E0108
POST MILES 28.5

DESIGN DETAIL SHEET (ENGLISH) (REV.7/16/10)

ORIGINAL SCALE IN INCHES FOR REDUCED PLANS 0 1 2 3

UNIT: 0724
PROJECT NUMBER & PHASE: 04000001601 CONTRACT NO.: 04-0A7101

DISREGARD PRINTS BEARING EARLIER REVISION DATES — REVISION DATES 2/24/11 3/30/12 6/28/12 3/29/13

SHEET 10 OF 14

FILE => 33-E0108-u-miscdt07.dgn

USERNAME => s124896 DATE PLOTTED => 10-APR-2013 TIME PLOTTED => 09:44

BENCH MARK:

DESIGNATION: ALA8 ELEV=14.521
FOUND BRASS DISK STAMPED "ALA8" IN THE SIDEWALK AT THE WEST CORNER OF EAST 8TH STREET AND 5TH AVENUE.

DESIGNATION: ALA7 ELEV=15.591
FOUND BRASS DISK STAMPED "ALA7" IN THE SIDEWALK AT THE WEST SIDE OF 7TH STREET ALONG THE NORTH SIDE OF LAKE MERRITT CHANNEL.

DESIGNATION: 8TH/37TH ELEV=20.262
FOUND A CITY OF OAKLAND PIN IN CONCRETE IN A MONUMENT WELL AT THE INTERSECTION OF EAST 8TH STREET AND 37TH AVENUE.

DESIGNATION: ALA13 ELEV=15.318
FOUND BRASS DISK STAMPED "ALA13" INSIDE A 1 INCH IRON PIPE WITH A CONCRETE COLLAR 24.6 FEET NORTH OF THE NORTH SIDE OF HIGH STREET, 56 FEET WEST OF THE WEST SIDE OF THE OFFRAMP FROM SOUTHBOUND STATE ROUTE 880 AND 4.99 FEET SOUTH OF THE SOUTH RAIL OF THE RAILROAD TRACKS.

DESIGNATION: KA121 ELEV=15.768
FOUND 1 INCH IRON PIPE WITH RED PLASTIC PLUG AND TACK STAMPED "CALTRANS" ALONG THE EAST SIDE OF OAKPORT STREET ABOUT 230 FEET SOUTH OF THE SOUTH SIDE OF HIGH STREET, ACROSS FROM 4401 OAKPORT STREET, 6.92 FEET NORTH OF THE FLOWLINE OF THE CURB.

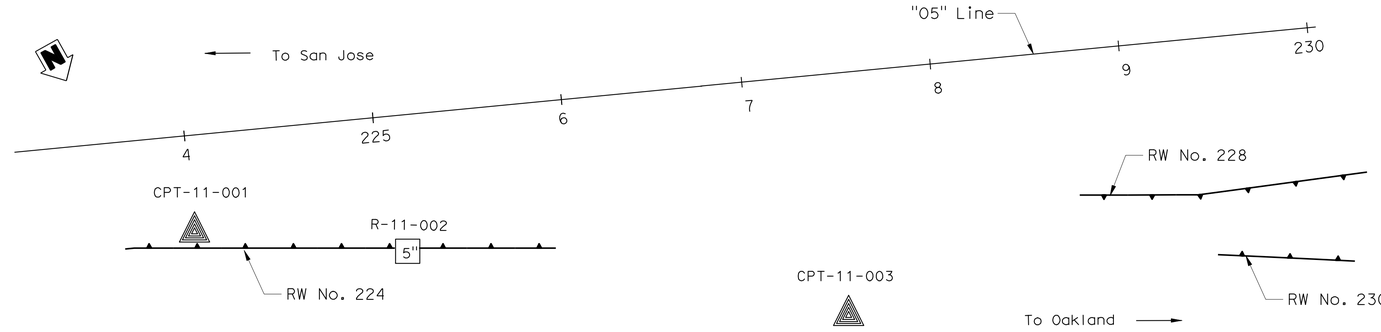

PLAN

1" = 40'

DIST	COUNTY	ROUTE	POST MILES TOTAL PROJECT	SHEET No	TOTAL SHEETS
04	Ala	880	28.4/29.2	752	789

Lino Cheang 6-25-12
REGISTERED ENGINEER DATE

4-8-13
PLANS APPROVAL DATE

REGISTERED PROFESSIONAL ENGINEER L. CHEANG NO. GE 2345 EXP. 9-30-13 GEOTECHNICAL STATE OF CALIFORNIA

The State of California or its officers or agents shall not be responsible for the accuracy or completeness of electronic copies of this plan sheet.

ALAMEDA COUNTY TRANSPORTATION COMMISSION
1333 BROADWAY, SUITE 220
OAKLAND, CA 94612

EARTH MECHANICS, INC.
17800 NEWHOPE STREET, SUITE B
FOUNTAIN VALLEY, CA 92708

NOTES:

(1) This LOTB sheet was prepared in accordance with the Caltrans Soil and Rock Logging, Classification and Presentation Manual (June 2010).

(2) 2.4" samples were taken using a California Modified Sampler.

(3) An automatic trip hammer system consisting of a hammer weight of 140 lbs falling a distance of 30" was used to advance the drive sampler.

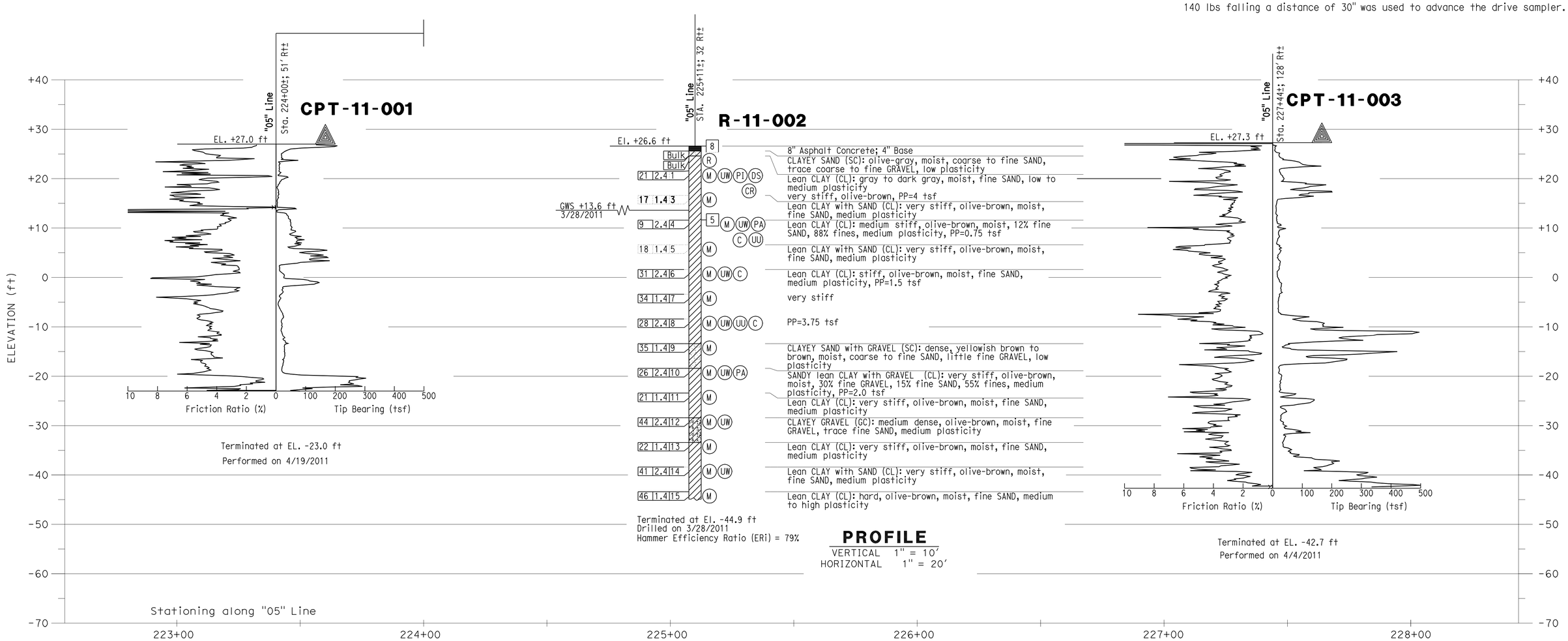

Paul Cotter DESIGN OVERSIGHT Paul Cotter	DRAWN BY	J. Fang	K. Thant FIELD INVESTIGATION BY:	PREPARED FOR THE STATE OF CALIFORNIA DEPARTMENT OF TRANSPORTATION	L. Cheang PROJECT ENGINEER
7-16-12 SIGN OFF DATE	CHECKED BY	G. J. Gunaranjan	DATE: 3/2011, 4/2011		

BRIDGE NO. 33E0108
POST MILES 28.5

RETAINING WALL No. 228
LOG OF TEST BORINGS 1 OF 4

GS GEOTECHNICAL LOG OF TEST BORINGS SHEET (ENGLISH) (REV. 7/16/10)

ORIGINAL SCALE IN INCHES FOR REDUCED PLANS 0 1 2 3

UNIT: 0724
PROJECT NUMBER & PHASE: 04000001601

DISREGARD PRINTS BEARING EARLIER REVISION DATES

REVISION DATES

SHEET 11 OF 14

FILE => 33-E0108-z-ltb1.dgn

CONTRACT NO.:04-0A7101 PROJECT ID:

USERNAME => s124496 DATE PLOTTED => 10-APR-2013 TIME PLOTTED => 09:44

TO ACCOMPANY PLANS DATED 4-8-13

DIVISION OF ENGINEERING SERVICES - GEOTECHNICAL SERVICES

The information presented on this drawing, was not the result of any work developed, performed, or completed by EMI. This drawing is available and presented only for the convenience of any bidder, contractor, or other interested party. It should be understood that EMI assumes no responsibility in respect to the sufficiency, accuracy, completeness, interpretation set forth, or any other aspect of the information shown on this drawing.

DIST.	COUNTY	ROUTE	POST MILES-TOTAL PROJECT	Sheet No.	Total Sheets
04	Ala	880	28.4/29.2	753	789

Lino Cheang — CERTIFIED ENGINEERING GEOLOGIST — 6/25/12 DATE

RETAINING WALL No. 228

LOG OF TEST BORINGS 2 OF 4

UNIT: 0724	CONTRACT No.	BRIDGE No.
PROJECT NUMBER & PHASE: 04000001601	04-0A7101	33E0108

Sheet	of
12	14

REGISTERED PROFESSIONAL ENGINEER — L. CHEANG — NO. GE 2345 — EXP. 9-30-13 — GEOTECHNICAL — STATE OF CALIFORNIA

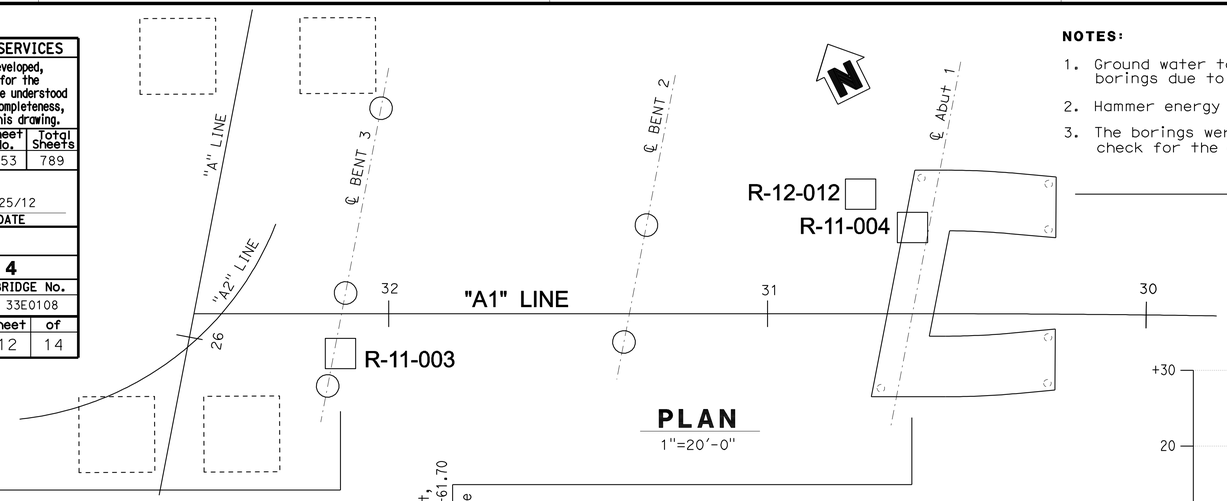

PLAN
1"=20'-0"

NOTES:

1. Ground water table was not measured in the borings due to rotary wash drilling.
2. Hammer energy ratio calibration not performed.
3. The borings were hand augered in the top 5 ft to check for the existence of underground utilities.

DIST	COUNTY	ROUTE	POST MILES TOTAL PROJECT	SHEET No	TOTAL SHEETS
04	880	Ala			

Philip J. Meymand — REGISTERED CIVIL ENGINEER — 6/25/12 DATE

PLANS APPROVAL DATE

REGISTERED PROFESSIONAL ENGINEER — Philip Meymand — No. 2596 — Exp. 6/30/13 — GEOTECHNICAL — STATE OF CALIFORNIA

The State of California or its officers or agents shall not be responsible for the accuracy or completeness of electronic copies of this plan sheet.

ALAMEDA COUNTY TRANSPORTATION
1333 BROADWAY
OAKLAND, CA 94612

URS CORPORATION
1333 BROADWAY, SUITE 800
OAKLAND, CA 94612

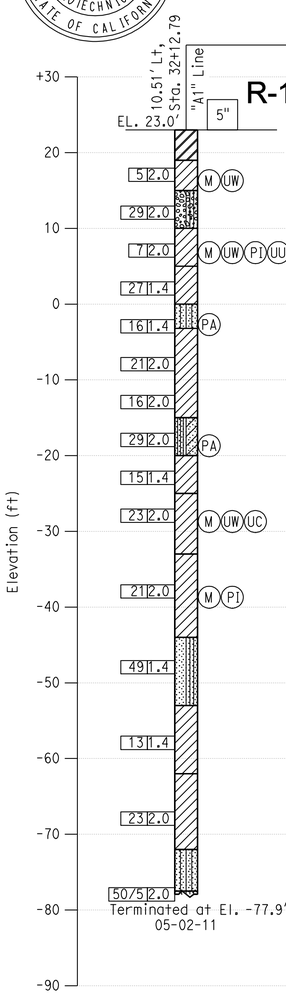

R-11-003

Fat CLAY (CH); very stiff; dark gray; dry to moist; about 10% fine SAND; about 90% medium to high plasticity, very high dry strength fines; (FILL).
Lean CLAY with SAND (CL); very stiff; medium brown; moist; about 20% fine SAND; about 80% medium plasticity fines; black mottles; PP=3.0 tsf (ALLUVIUM).
Poorly graded GRAVEL with SILT and SAND (GP-GM); medium dense; brown; moist; about 50% subangular GRAVEL, max. 3/4 in. dia.; about 40% coarse to medium SAND; about 10% low plasticity fines.
Lean CLAY with SAND (CL); medium stiff; medium brown; moist; about 20% fine SAND; about 80% low plasticity fines; PP=1.75 tsf.
SANDY lean CLAY (CL); very stiff; medium brown; moist; about 35% fine SAND; about 65% medium plasticity fines; with occasional gravelly zones; PP=3.25 tsf.
SILTY SAND (SM); medium dense; light brown; moist; about 5% fine, subrounded GRAVEL; about 76% medium to fine SAND; about 19% nonplastic fines.
Lean CLAY with SAND (CL); very stiff; brown; moist; trace fine GRAVEL; about 20% fine SAND; about 80% medium plasticity fines; PP=2.0 tsf.
PP=3.0 tsf.
PP=2.75 tsf.
SILTY, CLAYEY SAND (SC-SM); medium dense; brown and gray; moist; about 72% fine SAND; about 28% nonplastic to low plasticity fines.
Lean CLAY (CL); very stiff; gray; moist; trace subrounded GRAVEL, max. 1/2 in. dia.; about 10% fine SAND; about 90% medium plasticity fines; PP=3.75 tsf.
SANDY lean CLAY (CL); very stiff; brown and gray; moist; about 40% fine SAND; about 60% low plasticity fines; PP=2.5 tsf.
Lean CLAY (CL); very stiff; gray; moist; trace subrounded GRAVEL, max. 1/2 in. dia.; about 10% fine SAND; about 90% medium plasticity fines; PP=3.0 tsf.

Poorly graded SAND with SILT and GRAVEL (SP-SM); dense; brown; wet; about 30% subangular GRAVEL, max. 1/2 in. dia.; about 60% coarse to medium SAND; about 10% nonplastic fines.

Lean CLAY (CL); stiff; gray; moist; about 10% fine SAND; about 90% medium plasticity fines; PP=1.75 tsf.

Lean CLAY with SAND (CL); very stiff; dark gray; moist; about 25% fine SAND; about 75% medium plasticity fines; PP=3.75 tsf.

SILTY SAND (SM); very dense; light gray; moist; about 55% fine SAND; about 45% nonplastic fines.

Poorly graded SAND with SILT and GRAVEL (SP-SM); very dense; medium brown; moist; about 25% subangular GRAVEL, max. 1/2 in. dia.; about 65% coarse to medium SAND; about 10% nonplastic fines.

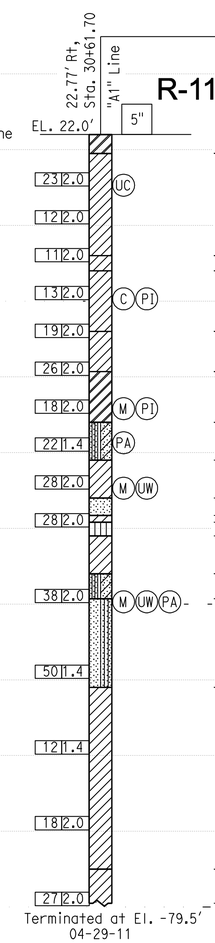

R-11-004

Fat CLAY with SAND (CH); dark brown; moist; high plasticity fines; (FILL).
Lean CLAY with SAND (CL); dark brown; moist; about 20% fine SAND; about 80% low plasticity fines; roots and organic detrius common (ALLUVIUM).
-medium brown; very stiff to hard; no roots or organic material; PP=4.5 tsf.
-very stiff; PP=2.0 tsf.

SANDY lean CLAY with GRAVEL (CL); very stiff; medium brown; moist; about 15% fine, subrounded GRAVEL; about 35% medium to fine SAND; about 50% low to medium plasticity fines; PP=2.5 tsf.
Lean CLAY with SAND (CL); very stiff; medium brown; moist; about 20% fine SAND; about 80% low plasticity fines; PP=3.0 tsf.
PP=3.0 tsf.
SANDY lean CLAY (CL); hard; medium brown; moist; about 5% fine GRAVEL; about 30% medium to fine SAND; about 65% low to medium plasticity fines; PP=4.5 tsf.
-about 40% sand; PP=4.0 tsf.
Fat CLAY (CH); very stiff; medium brown; moist; about 5% fine SAND; about 95% high plasticity, very high dry strength fines; PP=2.75 tsf.
SILTY, CLAYEY SAND (SC-SM); medium dense; brown and gray; moist; about 77% fine SAND; about 23% nonplastic to low plasticity fines.
Lean CLAY (CL); hard; brown and gray; moist; about 5 to 10% fine SAND; about 90 to 95% medium plasticity fines; PP=4.5 tsf.
Poorly graded SAND (SP); medium dense; dark brown; wet; trace GRAVEL; medium SAND.
Lean CLAY with SAND (CL); very stiff; light brown; moist; about 15% fine SAND; about 85% low plasticity fines; silty.
SANDY SILT (ML); medium dense; medium brown; moist; about 45% fine SAND; about 55% nonplastic to low plasticity fines.
Lean CLAY (CL); very stiff; gray; moist; about 10% fine SAND; medium plasticity fines; PP=3.25 tsf.
SILTY, CLAYEY SAND (SC-SM); medium dense; brown and gray; moist; about 74% fine SAND; about 26% nonplastic to low plasticity fines.
Poorly graded SAND with SILT and GRAVEL (SP-SM); medium dense; brown; moist; about 15 to 20% subangular GRAVEL, max. 1/2 in. dia.; about 70% coarse to medium SAND; about 5 to 10% nonplastic fines.
-very dense.
SANDY lean CLAY (CL); very stiff; brown and gray; moist; trace coarse, subrounded GRAVEL, max. 1 in. dia.; about 30% fine SAND; medium plasticity, high dry strength fines; PP=3.75 tsf.

-greenish-gray; high dry strength; PP=2.0-3.0 tsf.

SANDY lean CLAY with GRAVEL (CL); hard; brown and gray; moist; about 15% fine, subrounded GRAVEL, max. 1/2 in. dia.; about 15% coarse to fine SAND; about 70% low plasticity fines; PP=4.25 tsf.

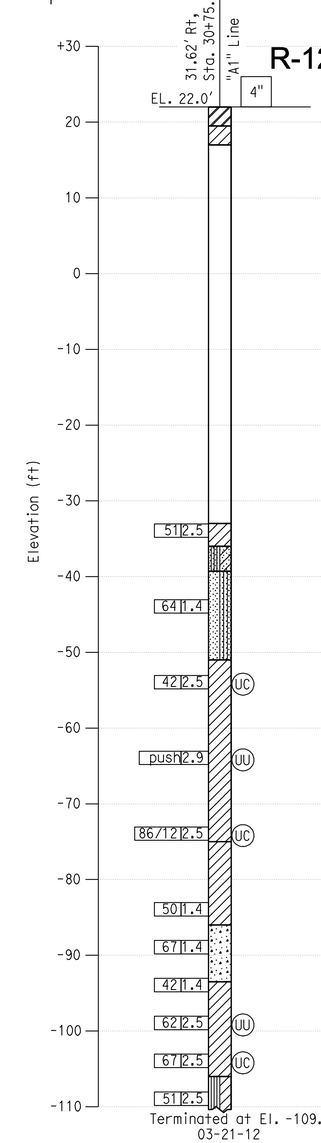

R-12-012

Fat CLAY with SAND (CH); stiff; dark brown; moist; about 15% fine SAND; about 85% medium to high plasticity fines; PP=1.25 tsf; (FILL).
Lean CLAY with SAND (CL); very stiff to hard; yellowish-brown; moist; about 20% fine SAND; about 80% medium plasticity fines; PP=2.0-4.5 tsf; (ALLUVIUM).

Lean CLAY (CL); very stiff; gray; moist; about 10% fine SAND; medium plasticity fines; PP=3.25 tsf.
SILTY, CLAYEY SAND (SC-SM); medium dense; brown and gray; moist; about 74% fine SAND; about 26% nonplastic to low plasticity fines.
Poorly graded SAND with SILT and GRAVEL (SP-SM); medium dense; brown; moist; about 15 to 20% subangular GRAVEL, max. 1/2 in. dia.; about 70% coarse to medium SAND; about 5 to 10% nonplastic fines.
-very dense.
-clay interbed 68.5' to 69'.
SANDY lean CLAY (CL); very stiff; brown and gray; moist; trace coarse, subrounded GRAVEL, max. 1 in. dia.; about 30% fine SAND; medium plasticity fines; PP=2.0 tsf.

-gray; very stiff; PP=1.75 tsf.

-very stiff; PP=>4.5 tsf.
SANDY lean CLAY with GRAVEL (CL); very stiff; brown and gray; moist; about 15% fine, subrounded GRAVEL, max. 1/2 in. dia.; about 15% coarse to fine SAND; about 70% low plasticity fines; PP=3.0 tsf.

Well-graded SAND with GRAVEL (SW); very dense; brown and gray; moist; about 35% fine GRAVEL, max. 3/4 in. dia.; about 60% coarse to fine SAND; about 5% fines.

Lean CLAY with SAND (CL); hard; gray; moist; about 20% fine SAND; about 80% medium plasticity fines; PP=3.25 tsf->4.5 tsf.

SANDY SILTY CLAY (CL-ML); hard; gray; moist; about 30% fine SAND; about 70% low plasticity fines; PP=2.75 tsf.

DESIGN OVERSIGHT: Paul Cotter	DRAWN BY: N. HUTTON	S. JANOWSKI — FIELD INVESTIGATION BY:	PREPARED FOR THE STATE OF CALIFORNIA DEPARTMENT OF TRANSPORTATION
7-16-12 — SIGN OFF DATE	CHECKED BY: C. TSAI	DATE: 04-25-11 TO 05-04-11	

Jan Hueser — PROJECT ENGINEER

BRIDGE NO. 33-0751 — POST MILES 28.69

29TH AVENUE OC (REPLACE)

LOG OF TEST BORINGS 2 OF 2

GS CIVIL LOG OF TEST BORINGS SHEET (ENGLISH) (REV. 7/16/10)

ORIGINAL SCALE IN INCHES FOR REDUCED PLANS 0 1 2 3

UNIT: 0724
PROJECT NUMBER & PHASE: 04000001601 CONTRACT NO.: 04-0A7101

DISREGARD PRINTS BEARING EARLIER REVISION DATES → REVISION DATES 9-6-11 1-30-12 3-30-12 6-25-12

SHEET 57 OF 60

FILE => 33-E0108-z-ltb2.dgn

USERNAME => s124496 DATE PLOTTED => 10-APR-2013 TIME PLOTTED => 09:44

DIST	COUNTY	ROUTE	POST MILES TOTAL PROJECT	SHEET No	TOTAL SHEETS
04	Ala	880	28.4/29.2	754	789

REGISTERED ENGINEER Lino Cheang DATE

4-8-13
PLANS APPROVAL DATE

REGISTERED PROFESSIONAL ENGINEER L. CHEANG NO. GE 2345 EXP. 9-30-13 GEOTECHNICAL STATE OF CALIFORNIA

The State of California or its officers or agents shall not be responsible for the accuracy or completeness of electronic copies of this plan sheet.

ALAMEDA COUNTY TRANSPORTATION COMMISSION
1333 BROADWAY, SUITE 220
OAKLAND, CA 94612

EARTH MECHANICS, INC.
17800 NEWHOPE STREET, SUITE B
FOUNTAIN VALLEY, CA 92708

REFERENCE: CALTRANS SOIL & ROCK LOGGING, CLASSIFICATION, AND PRESENTATION MANUAL (2010)

CEMENTATION

Description	Criteria
Weak	Crumbles or breaks with handling or little finger pressure.
Moderate	Crumbles or breaks with considerable finger pressure.
Strong	Will not crumble or break with finger pressure.

BOREHOLE IDENTIFICATION

Symbol	Hole Type	Description
Size	A	Auger Boring (hollow or solid stem bucket)
Size	R RW RC P	Rotary drilled boring (conventional) Rotary drilled with self-casing wire-line Rotary core with continuously-sampled, self-casing wire-line Rotary percussion boring (air)
Size	R	Rotary drilled diamond core
Size	HD HA	Hand driven (1-inch soil tube) Hand Auger
●	D	Dynamic Cone Penetration Boring
▲	CPT	Cone Penetration Test (ASTM D 5778)
⬚	O	Other (note on LOTB)

Note: Size in inches.

CONSISTENCY OF COHESIVE SOILS

Description	Shear Strength (tsf)	Pocket Penetrometer Measurement, PP, (tsf)	Torvane Measurement, TV, (tsf)	Vane Shear Measurement, VS, (tsf)
Very Soft	Less than 0.12	Less than 0.25	Less than 0.12	Less than 0.12
Soft	0.12 - 0.25	0.25 - 0.5	0.12 - 0.25	0.12 - 0.25
Medium Stiff	0.25 - 0.5	0.5 - 1	0.25 - 0.5	0.25 - 0.5
Stiff	0.5 - 1	1 - 2	0.5 - 1	0.5 - 1
Very Stiff	1 - 2	2 - 4	1 - 2	1 - 2
Hard	Greater than 2	Greater than 4	Greater than 2	Greater than 2

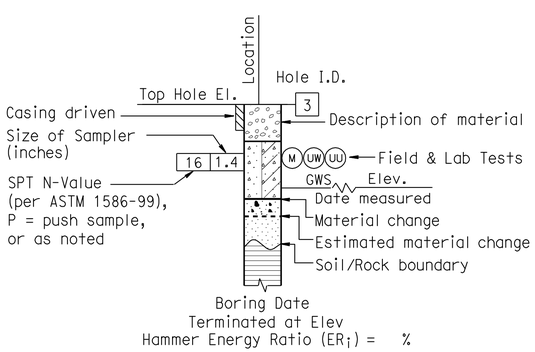

ROTARY BORING

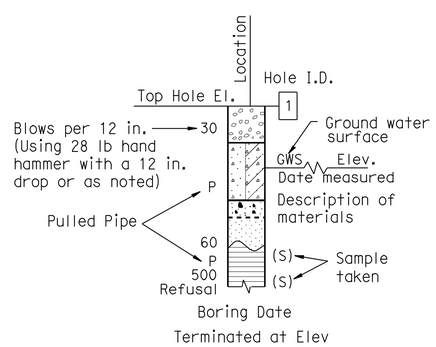

HAND BORING

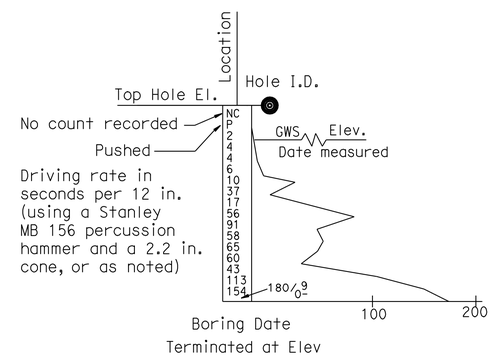

DYNAMIC CONE PENETRATION BORING

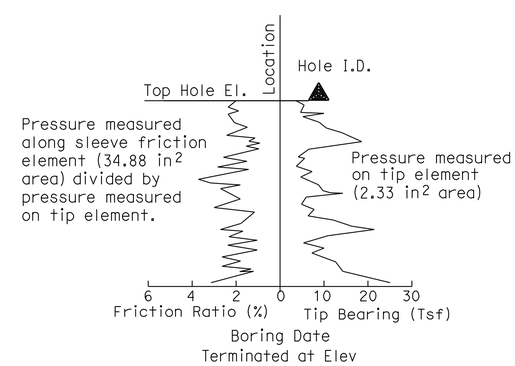

CONE PENETRATION TEST (CPT) BORING

Paul Cotter
DESIGN OVERSIGHT Paul Cotter
7-16-12
SIGN OFF DATE

DRAWN BY J. Fang
CHECKED BY G. J. Gunaranjan

K. Thant
FIELD INVESTIGATION BY:
DATE: 3/2011, 4/2011

PREPARED FOR THE STATE OF CALIFORNIA DEPARTMENT OF TRANSPORTATION

L. Cheang
PROJECT ENGINEER

BRIDGE NO. 33E0108
POST MILES 28.5

RETAINING WALL No. 228
LOG OF TEST BORINGS 3 OF 4

GS GEOTECHNICAL LOG OF TEST BORINGS SHEET (ENGLISH) (REV. 7/16/10)

ORIGINAL SCALE IN INCHES FOR REDUCED PLANS 0 1 2 3

UNIT: 0724
PROJECT NUMBER & PHASE: 04000001601

DISREGARD PRINTS BEARING EARLIER REVISION DATES

REVISION DATES

SHEET 13 OF 14

FILE => 33-E0108-z-soil legend-ltb1.dgn

CONTRACT NO.:04-0A7101 PROJECT ID:

USERNAME => s124496 DATE PLOTTED => 10-APR-2013 TIME PLOTTED => 09:44

REFERENCE: CALTRANS SOIL & ROCK LOGGING, CLASSIFICATION, AND PRESENTATION MANUAL (2010)

GROUP SYMBOLS AND NAMES

Graphic/Symbol	Group Names
GW	Well-graded GRAVEL Well-graded GRAVEL with SAND
GP	Poorly-graded GRAVEL Poorly-graded GRAVEL with SAND
GW-GM	Well-graded GRAVEL with SILT Well-graded GRAVEL with SILT and SAND
GW-GC	Well-graded GRAVEL with CLAY (or SILTY CLAY) Well-graded GRAVEL with CLAY and SAND (or SILTY CLAY and SAND)
GP-GM	Poorly-graded GRAVEL with SILT Poorly-graded GRAVEL with SILT and SAND
GP-GC	Poorly-graded GRAVEL with CLAY (or SILTY CLAY) Poorly-graded GRAVEL with CLAY and SAND (or SILTY CLAY and SAND)
GM	SILTY GRAVEL SILTY GRAVEL with SAND
GC	CLAYEY GRAVEL CLAYEY GRAVEL with SAND
GC-GM	SILTY, CLAYEY GRAVEL SILTY, CLAYEY GRAVEL with SAND
SW	Well-graded SAND Well-graded SAND with GRAVEL
SP	Poorly-graded SAND Poorly-graded SAND with GRAVEL
SW-SM	Well-graded SAND with SILT Well-graded SAND with SILT and GRAVEL
SW-SC	Well-graded SAND with CLAY (or SILTY CLAY) Well-graded SAND with CLAY and GRAVEL (or SILTY CLAY and GRAVEL)
SP-SM	Poorly-graded SAND with SILT Poorly-graded SAND with SILT and GRAVEL
SP-SC	Poorly-graded SAND with CLAY (or SILTY CLAY) Poorly-graded SAND with CLAY and GRAVEL (or SILTY CLAY and GRAVEL)
SM	SILTY SAND SILTY SAND with GRAVEL
SC	CLAYEY SAND CLAYEY SAND with GRAVEL
SC-SM	SILTY, CLAYEY SAND SILTY, CLAYEY SAND with GRAVEL
PT	PEAT
	COBBLES COBBLES and BOULDERS BOULDERS

Graphic/Symbol	Group Names
CL	Lean CLAY Lean CLAY with SAND Lean CLAY with GRAVEL SANDY lean CLAY SANDY lean CLAY with GRAVEL GRAVELLY lean CLAY GRAVELLY lean CLAY with SAND
CL-ML	SILTY CLAY SILTY CLAY with SAND SILTY CLAY with GRAVEL SANDY SILTY CLAY SANDY SILTY CLAY with GRAVEL GRAVELLY SILTY CLAY GRAVELLY SILTY CLAY with SAND
ML	SILT SILT with SAND SILT with GRAVEL SANDY SILT SANDY SILT with GRAVEL GRAVELLY SILT GRAVELLY SILT with SAND
OL	ORGANIC lean CLAY ORGANIC lean CLAY with SAND ORGANIC lean CLAY with GRAVEL SANDY ORGANIC lean CLAY SANDY ORGANIC lean CLAY with GRAVEL GRAVELLY ORGANIC lean CLAY GRAVELLY ORGANIC lean CLAY with SAND
OL	ORGANIC SILT ORGANIC SILT with SAND ORGANIC SILT with GRAVEL SANDY ORGANIC SILT SANDY ORGANIC SILT with GRAVEL GRAVELLY ORGANIC SILT GRAVELLY ORGANIC SILT with SAND
CH	Fat CLAY Fat CLAY with SAND Fat CLAY with GRAVEL SANDY fat CLAY SANDY fat CLAY with GRAVEL GRAVELLY fat CLAY GRAVELLY fat CLAY with SAND
MH	Elastic SILT Elastic SILT with SAND Elastic SILT with GRAVEL SANDY elastic SILT SANDY elastic SILT with GRAVEL GRAVELLY elastic SILT GRAVELLY elastic SILT with SAND
OH	ORGANIC fat CLAY ORGANIC fat CLAY with SAND ORGANIC fat CLAY with GRAVEL SANDY ORGANIC fat CLAY SANDY ORGANIC fat CLAY with GRAVEL GRAVELLY ORGANIC fat CLAY GRAVELLY ORGANIC fat CLAY with SAND
OH	ORGANIC elastic SILT ORGANIC elastic SILT with SAND ORGANIC elastic SILT with GRAVEL SANDY ORGANIC elastic SILT SANDY ORGANIC elastic SILT with GRAVEL GRAVELLY ORGANIC elastic SILT GRAVELLY ORGANIC elastic SILT with SAND
OL/OH	ORGANIC SOIL ORGANIC SOIL with SAND ORGANIC SOIL with GRAVEL SANDY ORGANIC SOIL SANDY ORGANIC SOIL with GRAVEL GRAVELLY ORGANIC SOIL GRAVELLY ORGANIC SOIL with SAND

FIELD AND LABORATORY TESTING

- (C) Consolidation (ASTM D 2435)
- (CL) Collapse Potential (ASTM D 5333)
- (CP) Compaction Curve (CTM 216)
- (CR) Corrosivity Testing (CTM 643, CTM 422, CTM 417)
- (CU) Consolidated Undrained Triaxial (ASTM D 4767)
- (DS) Direct Shear (ASTM D 3080)
- (EI) Expansion Index (ASTM D 4829)
- (M) Moisture Content (ASTM D 2216)
- (OC) Organic Content-% (ASTM D 2974)
- (P) Permeability (CTM 220)
- (PA) Particle Size Analysis (ASTM D 422)
- (PI) Plasticity Index (AASHTO T 90) Liquid Limit (AASHTO T 89)
- (PL) Point Load Index (ASTM D 5731)
- (PM) Pressure Meter
- (R) R-Value (CTM 301)
- (SE) Sand Equivalent (CTM 217)
- (SG) Specific Gravity (AASHTO T 100)
- (SL) Shrinkage Limit (ASTM D 427)
- (SW) Swell Potential (ASTM D 4546)
- (UC) Unconfined Compression-Soil (ASTM D 2166) Unconfined Compression-Rock (ASTM D 2938)
- (UU) Unconsolidated Undrained Triaxial (ASTM D 2850)
- (UW) Unit Weight (ASTM D 4767)

DIST	COUNTY	ROUTE	POST MILES TOTAL PROJECT	SHEET No	TOTAL SHEETS
04	Ala	880	28.4/29.2	755	789

REGISTERED ENGINEER — DATE

4-8-13
PLANS APPROVAL DATE

REGISTERED PROFESSIONAL ENGINEER L. CHEANG NO. GE 2345 EXP. 9-30-13 GEOTECHNICAL STATE OF CALIFORNIA

The State of California or its officers or agents shall not be responsible for the accuracy or completeness of electronic copies of this plan sheet.

ALAMEDA COUNTY TRANSPORTATION COMMISSION
1333 BROADWAY, SUITE 220
OAKLAND, CA 94612

EARTH MECHANICS, INC.
17800 NEWHOPE STREET, SUITE B
FOUNTAIN VALLEY, CA 92708

APPARENT DENSITY OF COHESIONLESS SOILS

Description	SPT N_{60} (Blows / 12 in.)
Very Loose	0 - 5
Loose	5 - 10
Medium Dense	10 - 30
Dense	30 - 50
Very Dense	Greater than 50

MOISTURE

Description	Criteria
Dry	No discernable moisture
Moist	Moisture present, but no free water
Wet	Visible free water

PERCENT OR PROPORTION OF SOILS

Description	Criteria
Trace	Particles are present but estimated to be less than 5%
Few	5% - 10%
Little	15% - 25%
Some	30% - 45%
Mostly	50% - 100%

PARTICLE SIZE

Description		Size (in.)
Boulder		Greater than 12
Cobble		3 - 12
Gravel	Coarse	3/4 - 3
	Fine	1/5 - 3/4
Sand	Coarse	1/16 - 1/5
	Medium	1/64 - 1/16
	Fine	1/300 - 1/64
Silt and Clay		Less than 1/300

Paul Cotter
DESIGN OVERSIGHT Paul Cotter
7-16-12
SIGN OFF DATE

DRAWN BY J. Fang
CHECKED BY G. J. Gunaranjan

K. Thant
FIELD INVESTIGATION BY:
DATE: 3/2011, 4/2011

PREPARED FOR THE STATE OF CALIFORNIA DEPARTMENT OF TRANSPORTATION

L. Cheang
PROJECT ENGINEER

BRIDGE NO. 33E0108
POST MILES 28.5

RETAINING WALL No. 228
LOG OF TEST BORINGS 4 OF 4

GS GEOTECHNICAL LOG OF TEST BORINGS SHEET (ENGLISH) (REV. 7/16/10)

ORIGINAL SCALE IN INCHES FOR REDUCED PLANS 0 1 2 3

UNIT: 0724
PROJECT NUMBER & PHASE: 04000001601

DISREGARD PRINTS BEARING EARLIER REVISION DATES

REVISION DATES

SHEET 14 OF 14

FILE => 33-E0108-z-soil legend-ltb2.dgn

CONTRACT NO.:04-0A7101 PROJECT ID:

USERNAME => s124496 DATE PLOTTED => 10-APR-2013 TIME PLOTTED => 09:44

DIST	COUNTY	ROUTE	POST MILES TOTAL PROJECT	SHEET No	TOTAL SHEETS
04	Ala	880	28.4/29.2	756	789

REGISTERED CIVIL ENGINEER — DATE 3/29/13

4-8-13
PLANS APPROVAL DATE

REGISTERED PROFESSIONAL ENGINEER S.McCauley No. 71495 Exp. 12-31-13 CIVIL STATE OF CALIFORNIA

The State of California or its officers or agents shall not be responsible for the accuracy or completeness of electronic copies of this plan sheet.

ALAMEDA COUNTY TRANSPORTATION COMMISSION
1333 BROADWAY, SUITE 220
OAKLAND, CA 94612

RBF CONSULTING
ONE KAISER PLAZA, SUITE 1150
OAKLAND, CA 94612

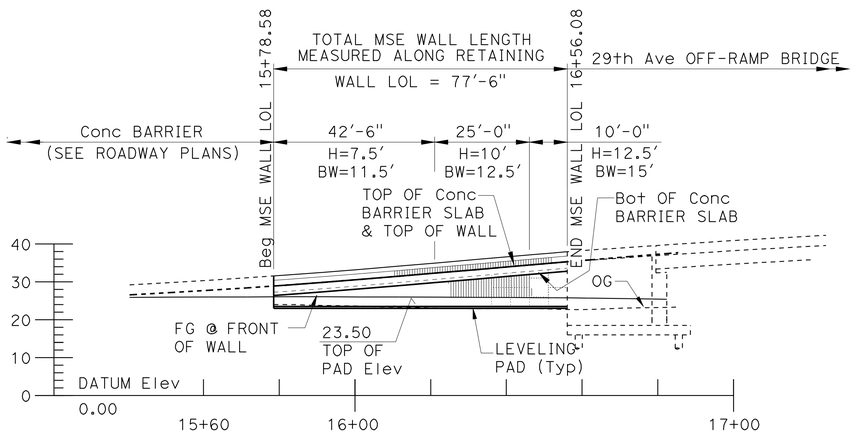

ELEVATION

SCALE 1" = 20'

CURVE DATA

CURVE No.	R	△	T	L
1	5000.00'	02°31'19"	110.05'	220.07'
2	1986.00'	01°09'15"	20.00'	40.01'
3	1000.00'	04°40'12"	40.78'	81.51'
4	1000.00'	04°11'34"	36.60'	73.18'

TANGENT DATA

1. N66°10'35"W
2. N60°40'27"W
3. N59°31'12"W
4. N59°02'34"W

TOP OF WALL ELEVATION TABLE

	WALL LOL STATION	TOP OF WALL Elev (Ft)
Beg Ret WALL No. 230	15+78.58	28.91
	+80	29.01
	+90	29.74
	16+00.00	30.52
	+10	31.35
	+20	32.21
	+30	33.07
	+40	33.93
	+50	34.79
END Ret WALL No. 230	16+56.08	35.31

STANDARD PLANS DATED MAY 2006

A10A	ACRONYMS AND ABBREVIATIONS (SHEET 1 OF 2)
A10B	ACRONYMS AND ABBREVIATIONS (SHEET 2 OF 2)
A10C	SYMBOLS (SHEET 1 OF 2)
A10D	SYMBOLS (SHEET 2 OF 2)
A62B	LIMITS OF PAYMENT FOR EXCAVATION AND BACKFILL BRIDGE SURCHARGE AND WALL
BO-3	BRIDGE DETAILS
B11-55	CONCRETE BARRIER TYPE 732

RETAINING WALL 230

QUANTITIES

MECHANICALLY STABILIZED EMBANKMENT	531	SQFT
STRUCTURAL CONCRETE, BARRIER SLAB	40	CY
CONCRETE BARRIER (TYPE 732 MODIFIED)	78	LF

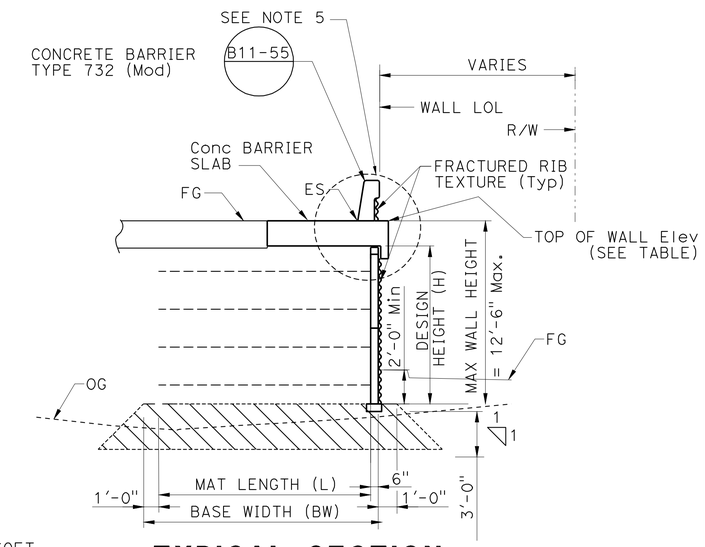

TYPICAL SECTION

NO SCALE

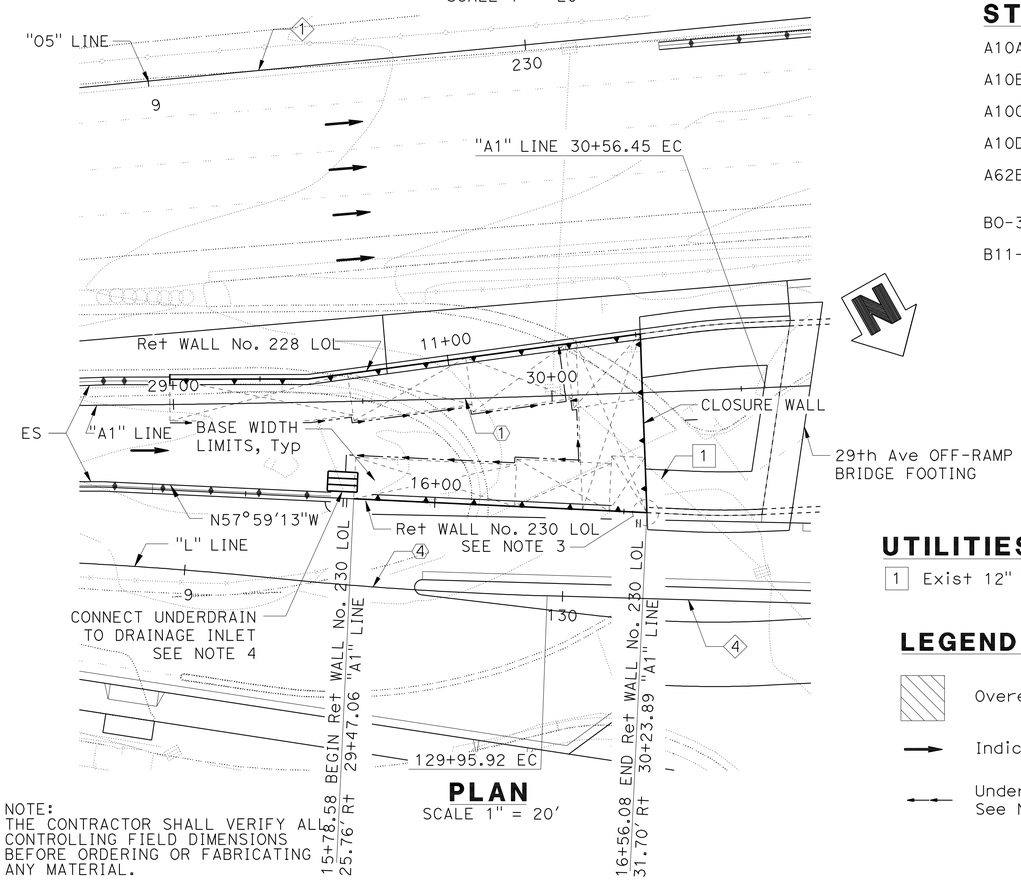

PLAN

SCALE 1" = 20'

NOTE:
THE CONTRACTOR SHALL VERIFY ALL CONTROLLING FIELD DIMENSIONS BEFORE ORDERING OR FABRICATING ANY MATERIAL.

UTILITIES:

1 Exist 12" RCP (To be removed)

LEGEND:

- Overexcavation depth
- Indicates direction of traffic
- Underdrain pipe flow line See Note 4

NOTES:

1. "BW" Indicates Base Width. "H" Indicates Design Height.
2. For Utility Information not Shown, See ROADWAY PLANS.
3. For Corner Details, see "MECHANICALLY STABILIZED EMBANKMENT DETAILS No. 3" sheet.
4. For Wall Drainage Details, See "MECHANICALLY STABILIZED DETAILS No. 4" sheet.
5. For Enlarged Detail, see "LAYOUT" sheet.

Paul Cotter
DESIGN OVERSIGHT Paul Cotter
4-3-13
SIGN OFF DATE

	BY	CHECKED
DESIGN	S. McCauley	C. Cho
DETAILS	J. Saldana	S. McCauley
QUANTITIES	C. Cho	S. McCauley

LOAD & RESISTANCE FACTOR DESIGN — LIVE LOADING: HL93 W/"LOW-BOY"; PERMIT DESIGN VEHICLE

	BY	CHECKED
LAYOUT	J. Saldana	S. McCauley
SPECIFICATIONS	C. Harden	PLANS AND SPECS COMPARED S. Sheikh

PREPARED FOR THE STATE OF CALIFORNIA DEPARTMENT OF TRANSPORTATION

Chad Harden
PROJECT ENGINEER

BRIDGE NO. 33E0116
POST MILES 28.5

RETAINING WALL No. 230
GENERAL PLAN

DESIGN GENERAL PLAN SHEET (ENGLISH) (REV.7/16/10)

ORIGINAL SCALE IN INCHES FOR REDUCED PLANS 0 1 2 3

UNIT: 0724
PROJECT NUMBER & PHASE: 04000001601 CONTRACT NO.: 04-0A7101

DISREGARD PRINTS BEARING EARLIER REVISION DATES — REVISION DATES 2/04/11 3/30/12 6/26/12 3/29/13

SHEET 1 OF 12

FILE => 33-E0116-a-gp01.dgn

USERNAME => s124496 DATE PLOTTED => 10-APR-2013 TIME PLOTTED => 09:45

DIST	COUNTY	ROUTE	POST MILES TOTAL PROJECT	SHEET No	TOTAL SHEETS
04	Ala	880	28.4/29.2	757	789

REGISTERED CIVIL ENGINEER — DATE 6/26/12

4-8-13
PLANS APPROVAL DATE

REGISTERED PROFESSIONAL ENGINEER S.McCauley No. 71495 Exp. 12-31-13 CIVIL STATE OF CALIFORNIA

The State of California or its officers or agents shall not be responsible for the accuracy or completeness of electronic copies of this plan sheet.

ALAMEDA COUNTY TRANSPORTATION COMMISSION
1333 BROADWAY, SUITE 220
OAKLAND, CA 94612

RBF CONSULTING
ONE KAISER PLAZA, SUITE 1150
OAKLAND, CA 94612

INDEX TO PLANS

SHEET NO.	TITLE
1	GENERAL PLAN
2	LAYOUT
3	MECHANICALLY STABILIZED EMBANKMENT - DETAILS NO. 1
4	MECHANICALLY STABILIZED EMBANKMENT - DETAILS NO. 2
5	MECHANICALLY STABILIZED EMBANKMENT - DETAILS NO. 3
6	MECHANICALLY STABILIZED EMBANKMENT - DETAILS NO. 4
7	MECHANICALLY STABILIZED EMBANKMENT - DETAILS NO. 5
8	MECHANICALLY STABILIZED EMBANKMENT - DETAILS NO. 6
9	LOG OF TEST BORING 1 OF 2
10	LOG OF TEST BORING 2 OF 2
11	SOIL LEGEND LOG OF TEST BORINGS 1 OF 2
12	SOIL LEGEND LOG OF TEST BORINGS 2 OF 2

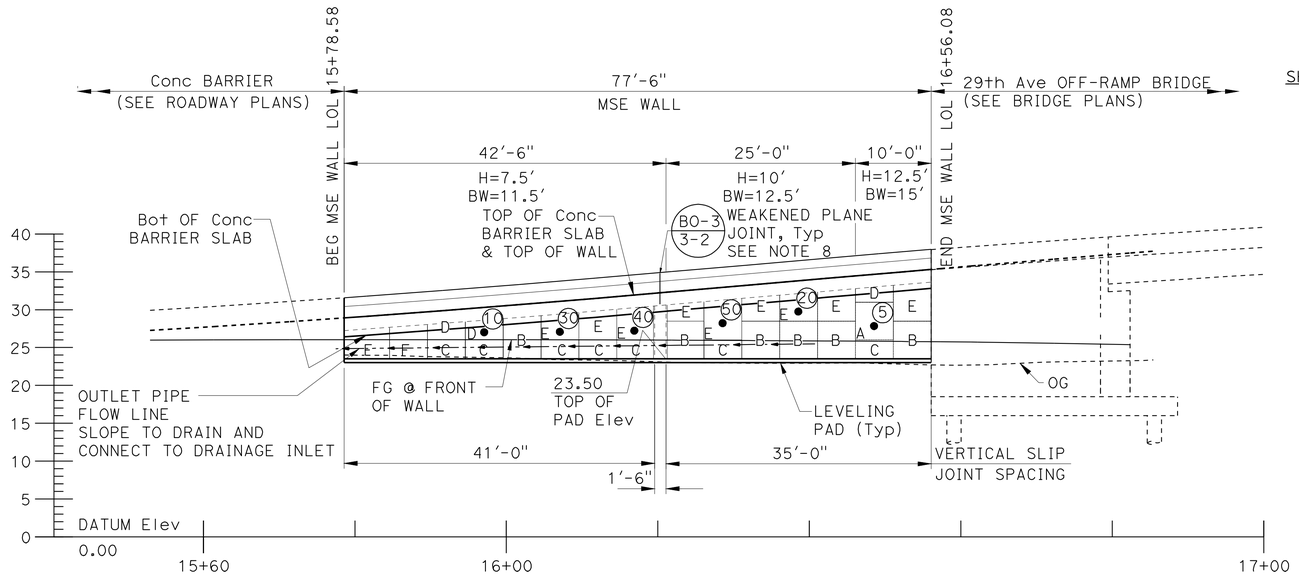

ELEVATION

SCALE: 1" = 10'

PANEL	DESCRIPTION
A	INTERMEDIATE PANEL
B	BOTTOM PANEL
C	BOTTOM HALF PANEL
D	TOP HALF PANEL
E	TOP PANEL WITH MULTIPLE MATS
F	SPECIAL DESIGN PANEL

LEGEND:

- Indicates Interval in Years from Time of Construction to Time of Removal of Inspection Wire
- Indicates Inspection Wire Panel (See Note 6)
- Indicates Panel Type (See Note 4)
- Underdrain Pipe Flow Line

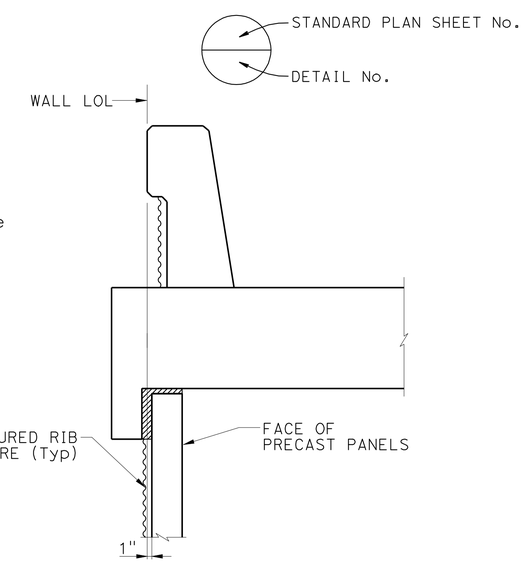

ENLARGED DETAIL

NO SCALE

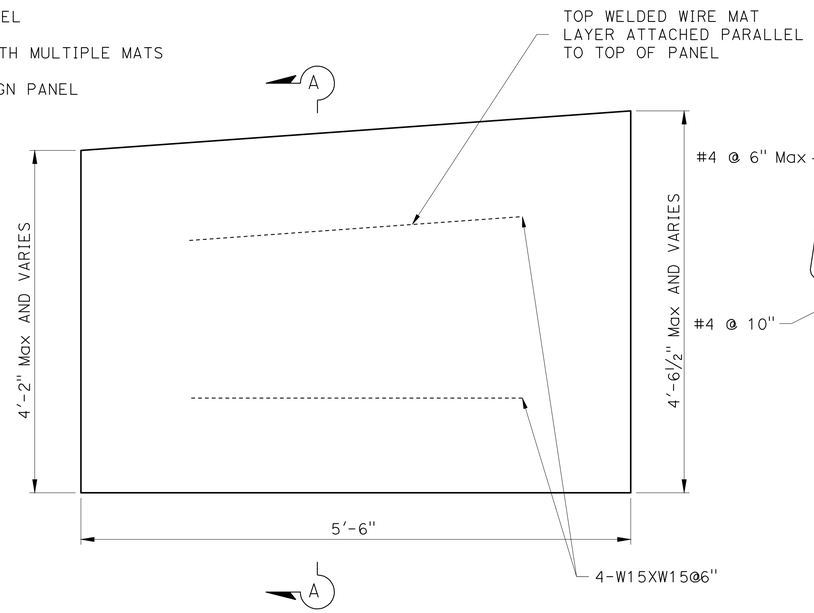

SPECIAL DESIGN PANEL

NO SCALE

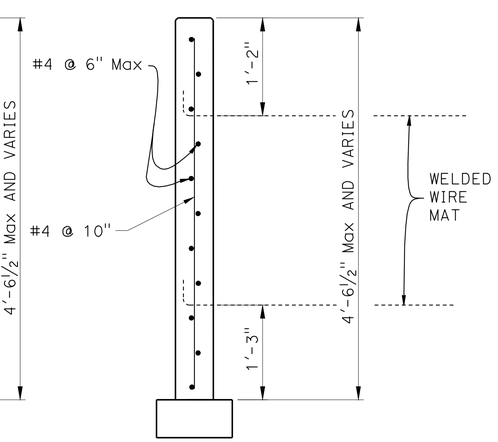

SECTION A-A

NOTES:

1. "BW" Indicates Base Width. "H" Indicates Design Height.
2. MSE Indicates "MECHANICALLY STABILIZED EMBANKMENT".
3. For General Notes, see "MECHANICALLY STABILIZED EMBANKMENT DETAILS No. 2" Sheet.
4. For Precast Panel Detail and Reinforcing not shown, See "MECHANICALLY STABILIZED EMBANKMENT DETAILS No. 1" Sheet and "MECHANICALLY STABILIZED EMBANKMENT DETAILS No. 2" Sheet.
5. For Vertical Slip Joint Details, See "MECHANICALLY STABILIZED EMBANKMENT DETAILS No. 6" Sheet.
6. For Inspection Wire Details, See "MECHANICALLY STABILIZED EMBANKMENT DETAILS No. 3" Sheet.
7. For Outlet Pipe and Wall Drainage Details, See "MECHANICALLY STABILIZED EMBANKMENT DETAILS No. 4" Sheet.
8. Provide Weakened Plane Joints in Concrete Barrier and Concrete Barrier Slab at Centerline of each Vertical Slip Joint.

NOTE:
THE CONTRACTOR SHALL VERIFY ALL CONTROLLING FIELD DIMENSIONS BEFORE ORDERING OR FABRICATING ANY MATERIAL.

DESIGN OVERSIGHT Paul Cotter
7-16-12
SIGN OFF DATE

	BY	CHECKED
DESIGN	S McCauley	C. Cho
DETAILS	J Saldana	S. McCauley
QUANTITIES	C. Cho	S. McCauley

PREPARED FOR THE STATE OF CALIFORNIA DEPARTMENT OF TRANSPORTATION

Chad Harden
PROJECT ENGINEER

BRIDGE NO. 33E0116
POST MILES 28.5

RETAINING WALL No. 230
LAYOUT

DESIGN DETAIL SHEET (ENGLISH) (REV.7/16/10)

ORIGINAL SCALE IN INCHES FOR REDUCED PLANS 0 1 2 3

UNIT: 0724
PROJECT NUMBER & PHASE: 04000001601 CONTRACT NO.: 04-0A7101

DISREGARD PRINTS BEARING EARLIER REVISION DATES

REVISION DATES 2/24/11 3/30/12 6/26/12

SHEET 2 OF 12

FILE => 33-E0116-g-rw_lo01.dgn

USERNAME => s124496 DATE PLOTTED => 10-APR-2013 TIME PLOTTED => 03:45

DIST	COUNTY	ROUTE	POST MILES TOTAL PROJECT	SHEET No.	TOTAL SHEETS
04	Ala	880	28.4/29.2	758	789

REGISTERED CIVIL ENGINEER — DATE 6/26/12

4-8-13
PLANS APPROVAL DATE

REGISTERED PROFESSIONAL ENGINEER — S.McCauley No. 71495 Exp. 12-31-13 CIVIL — STATE OF CALIFORNIA

The State of California or its officers or agents shall not be responsible for the accuracy or completeness of electronic copies of this plan sheet.

ALAMEDA COUNTY TRANSPORTATION COMMISSION
1333 BROADWAY, SUITE 220
OAKLAND, CA 94612

RBF CONSULTING
ONE KAISER PLAZA, SUITE 1150
OAKLAND, CA 94612

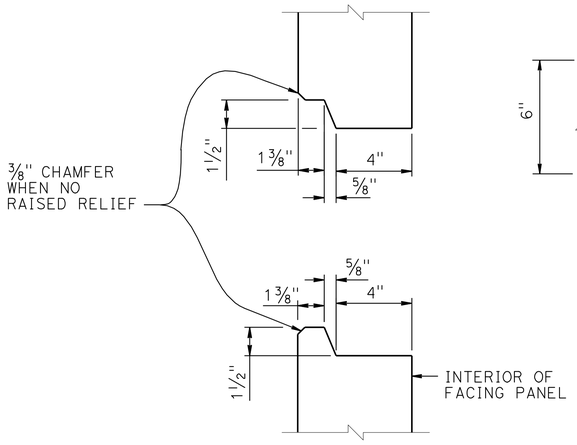

HORIZONTAL JOINT DETAIL

3" = 1'-0"

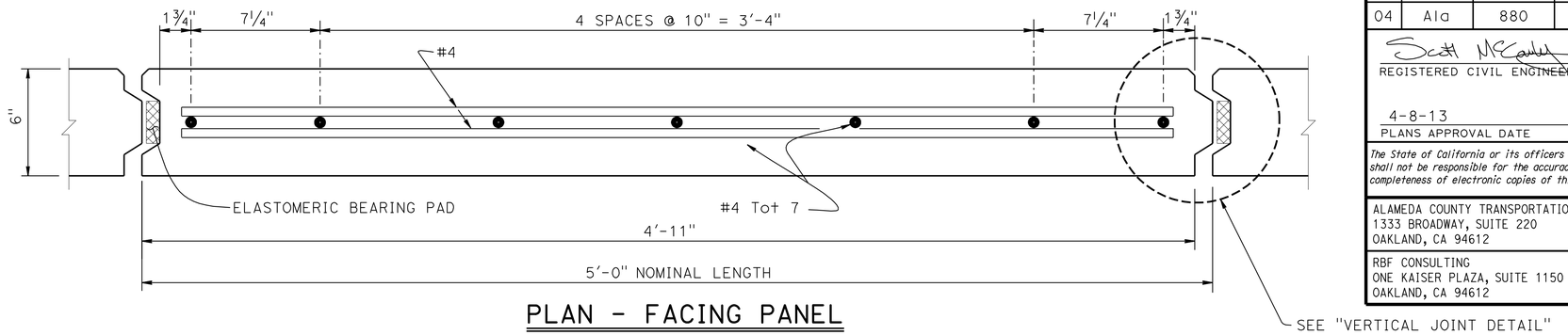

PLAN - FACING PANEL

3" = 1'-0"

NOTES:

1. Architectural Treatment Not Shown.
2. Place Reinforced Elastomeric Bearing Pads in All of the Panel Joints Between the Panels. Place One in Each Vertical Joint where the Horizontal Joints Intersect. Place Two per Panel in each Horizontal Joint:
   3/4" x 2 3/8" x 6" for Vertical Joints
   3/4" x 4" x 6" for Horizontal Joints
3. Bond a Strip of Filter Fabric, 1'-0" Wide, Cover the Full Length of all Panel Joints.
4. Top Layer of Welded Wire Mats Attached Parallel to Top of Panel when Top of Wall is Angled or Curved as Shown Elsewhere in "STRUCTURE PLANS".
5. Eliminate Mid Level Mat when Closer than 6" to Top Mat, Continue Variable Dimension Between Remaining Mats.

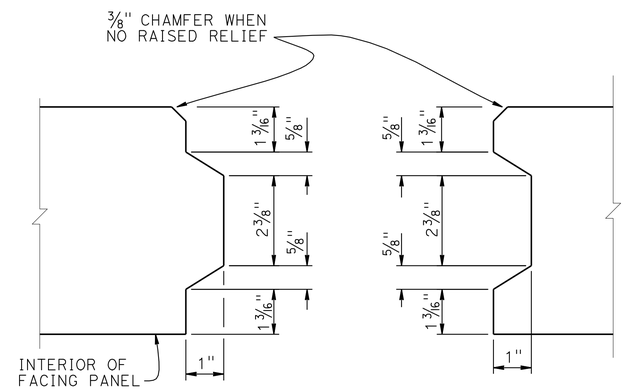

VERTICAL JOINT DETAIL

6" = 1'-0"

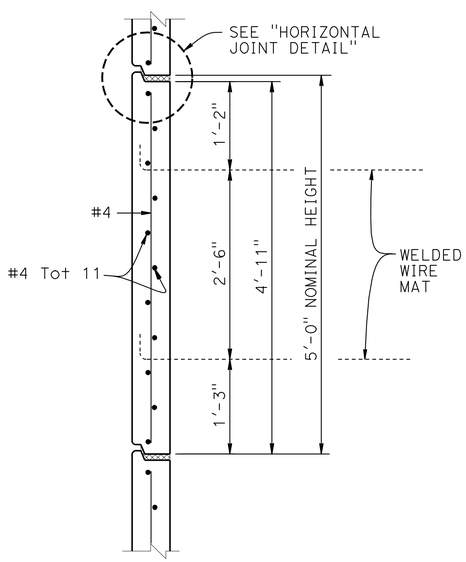

INTERMEDIATE PANEL

1" = 1'-0"

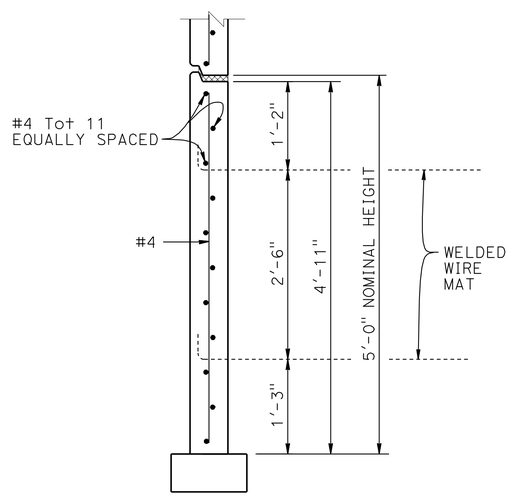

BOTTOM PANEL

1" = 1'-0"

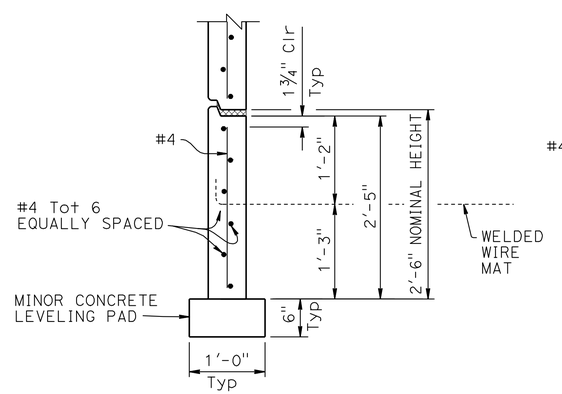

BOTTOM HALF PANEL

1" = 1'-0"

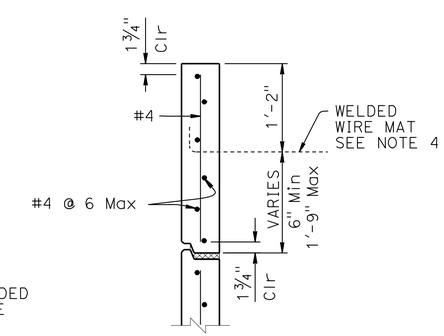

TOP HALF PANEL

1" = 1'-0"

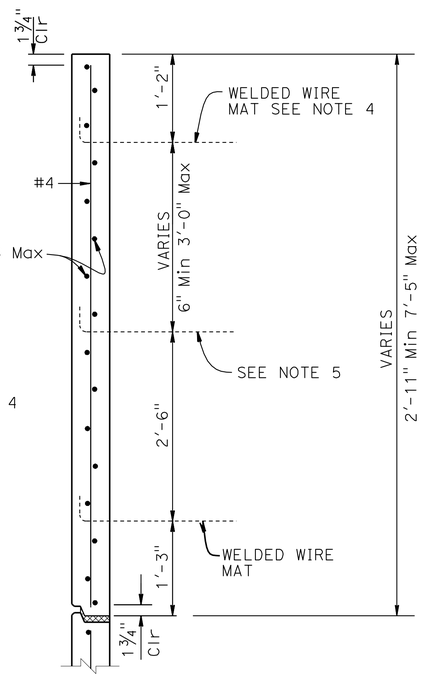

TOP PANEL WITH MULTIPLE MATS

1" = 1'-0"

STANDARD DRAWING

FILE NO. xs13-020-1

APPROVAL DATE January 2012

DS OSD 2147A (ENGLISH STANDARD DRAWING "XS" BORDER REV. (02-02-11)

ORIGINAL SCALE IN INCHES FOR REDUCED PLANS 0 1 2 3

STATE OF CALIFORNIA
DEPARTMENT OF TRANSPORTATION

DIVISION OF ENGINEERING SERVICES

BRIDGE NO. 33E0116
POST MILE 28.5

RETAINING WALL No. 230
MECHANICALLY STABILIZED EMBANKMENT
DETAILS NO. 1

UNIT: 0724
PROJECT NUMBER & PHASE: 04000001601
CONTRACT NO.: 04-0A7101

DISREGARD PRINTS BEARING EARLIER REVISION DATES

REVISION DATES: 2/04/11 3/30/12 6/26/12

SHEET 3 OF 12

FILE => 33-E0116-u-miscdt01.dgn

USERNAME => s124496 DATE PLOTTED => 10-APR-2013 TIME PLOTTED => 09:45

DIST	COUNTY	ROUTE	POST MILES TOTAL PROJECT	SHEET No.	TOTAL SHEETS
04	Ala	880	28.4/29.2	759	789

Scott McCauley 6/26/12
REGISTERED CIVIL ENGINEER DATE

4-8-13
PLANS APPROVAL DATE

REGISTERED PROFESSIONAL ENGINEER S.McCauley No. 71495 Exp. 12-31-13 CIVIL STATE OF CALIFORNIA

The State of California or its officers or agents shall not be responsible for the accuracy or completeness of electronic copies of this plan sheet.

ALAMEDA COUNTY TRANSPORTATION COMMISSION
1333 BROADWAY, SUITE 220
OAKLAND, CA 94612

RBF CONSULTING
ONE KAISER PLAZA, SUITE 1150
OAKLAND, CA 94612

GENERAL NOTES
LOAD & RESISTANCE FACTOR DESIGN

DESIGN: AASHTO LRFD Bridge Design Specifications, 4th Edition with California Amendments
FHWA Design and Construction of Mechanically Stabilized Earth Walls and Reinforced Slopes, dated November 2009
Publication No. FHWA-NHI 10-024

COLLISION FORCE: F_t = 54 kips on barriers

LIVE LOAD: Surcharge = 240 lb/ft^3

SOIL PARAMETERS:

Internal design ϕ(Reinforced Backfill) = 34°, γ = 120 lb/ft^3, kh = 0.36 ◇1

External design ϕ(Retained Backfill) = 30°, γ = 120 lb/ft^3
Coefficient of friction, μ = 0.35
K_h = 0.24

PRECAST CONCRETE PANELS:

f'c = 4,000 psi (Concrete compressive strength at 28 days)
fy = 60,000 psi (Yield strength of reinforcement)

SOIL REINFORCEMENT:

Welded wire mats: fy = 65,000 psi (Yield strength)
Coupler: fy = 36,000 psi (Yield strength)
Corrosion rate = 1.1 mils/year

REINFORCED CONCRETE:

f'c = 3,600 psi, except as noted
(Concrete compressive strength at 28 days)
fy = 60,000 psi (Yield strength of reinforcement)

MSE = Mechanically Stabilized Embankment

NOTES:

(A) Distance as required to permit coupler to be swaged

(B) Place #4 x 3'-2", centered on connector mat, but not welded to it

(C) All transverse wires size W15 at various spacing as shown elsewhere in plans

(D) Size of longitudinal wires shown elsewhere in plans

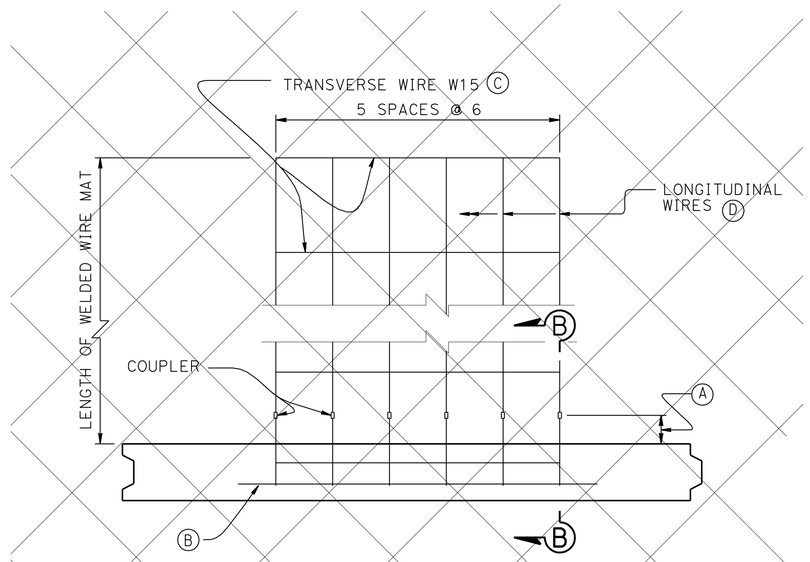

◇2 PLAN OF PANEL WITH SIX WIRE MAT
1½" = 1'-0"

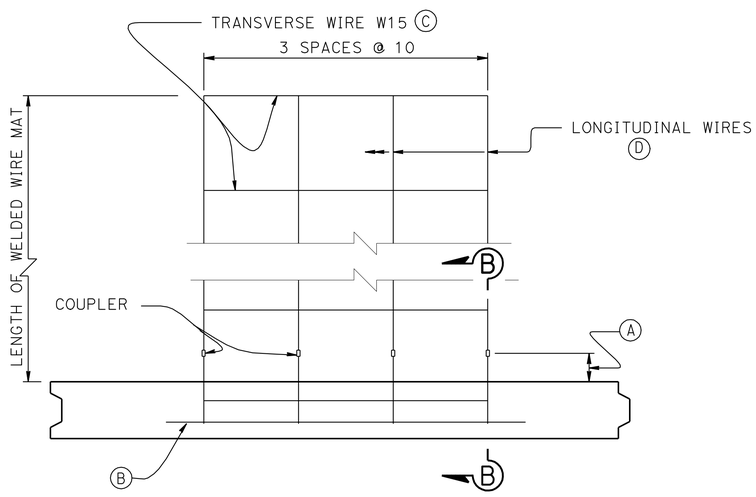

PLAN OF PANEL WITH FOUR WIRE MAT
1½" = 1'-0"

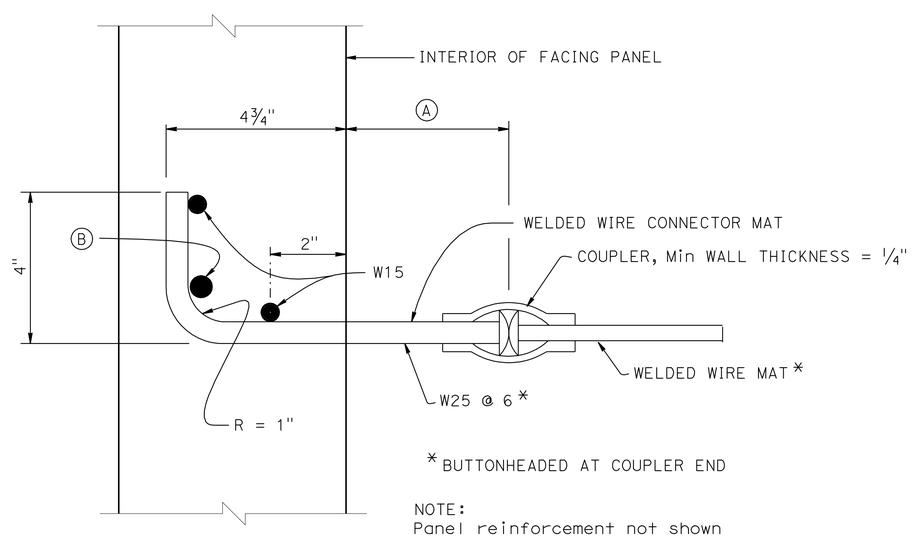

SECTION B-B
6" = 1'-0"

SPECIAL DETAILS

STANDARD DRAWING
FILE NO. xs13-020-2
APPROVAL DATE January 2012

◇1 Soil Parameters Modified
◇2 Detail Removed

STATE OF CALIFORNIA
DEPARTMENT OF TRANSPORTATION

DIVISION OF ENGINEERING SERVICES

BRIDGE NO. 33E0116
POST MILE 28.5

RETAINING WALL No. 230
MECHANICALLY STABILIZED EMBANKMENT
DETAILS NO. 2

DS OSD 2147A (ENGLISH STANDARD DRAWING "XS" BORDER REV. (02-02-11)

ORIGINAL SCALE IN INCHES FOR REDUCED PLANS 0 1 2 3

UNIT: 0724
PROJECT NUMBER & PHASE: 04000001601
CONTRACT NO.: 04-0A7101

DISREGARD PRINTS BEARING EARLIER REVISION DATES
REVISION DATES 2/04/11 3/28/12 6/26/12

SHEET 4 OF 12

FILE => 33-E0116-u-miscdt02.dgn

USERNAME => s124436 DATE PLOTTED => 10-APR-2013 TIME PLOTTED => 09:45

DIST	COUNTY	ROUTE	POST MILES TOTAL PROJECT	SHEET No.	TOTAL SHEETS
04	Ala	880	28.4/29.2	760	789

REGISTERED CIVIL ENGINEER — DATE 3/29/13

4-8-13
PLANS APPROVAL DATE

REGISTERED PROFESSIONAL ENGINEER S.McCauley No. 71495 Exp. 12-31-13 CIVIL STATE OF CALIFORNIA

The State of California or its officers or agents shall not be responsible for the accuracy or completeness of electronic copies of this plan sheet.

ALAMEDA COUNTY TRANSPORTATION COMMISSION
1333 BROADWAY, SUITE 220
OAKLAND, CA 94612

RBF CONSULTING
ONE KAISER PLAZA, SUITE 1150
OAKLAND, CA 94612

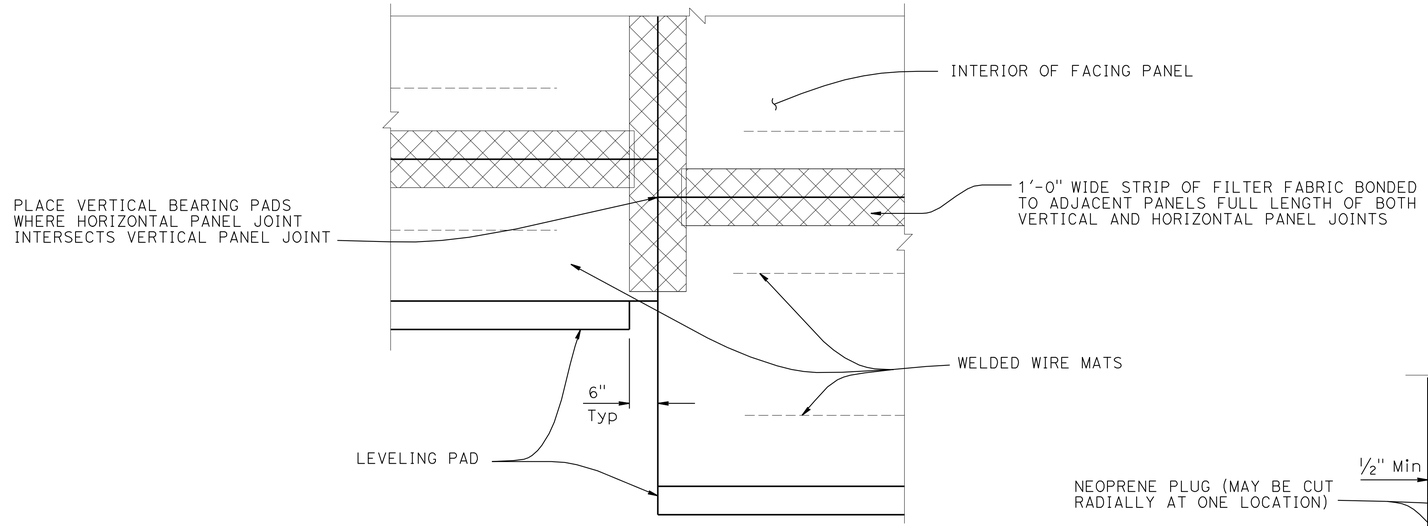

PART ELEVATION

3/4" = 1'-0"

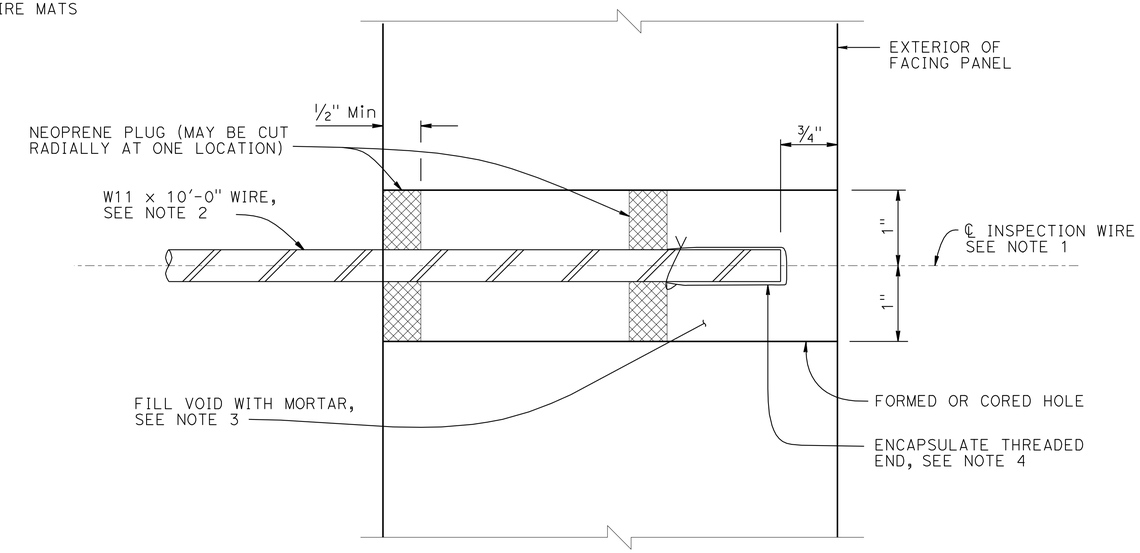

SECTION THRU INSPECTION WIRE

NO SCALE

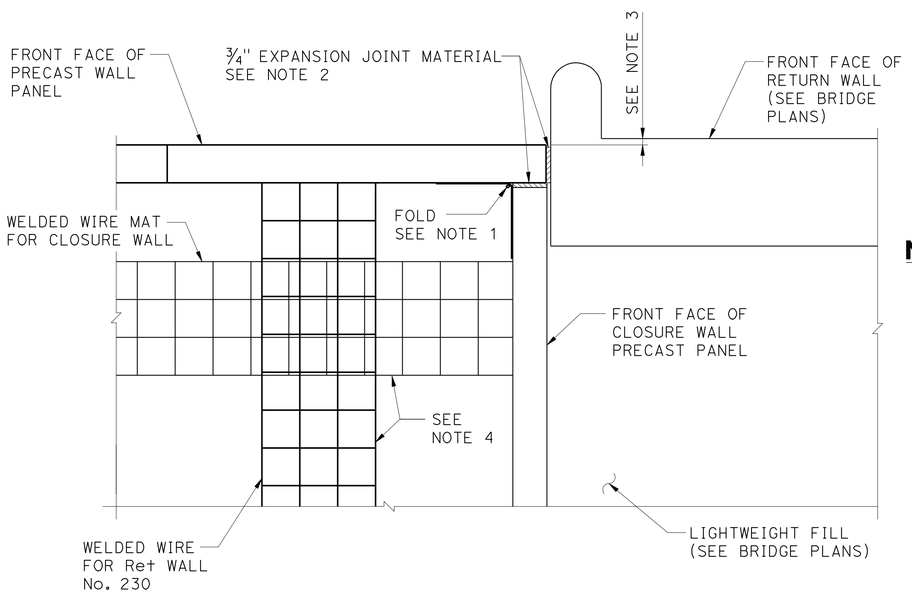

NOTES:

1. Bond a strip of filter fabric, 1'-6" wide, to back of adjacent MSE panels for entire length of vertical joint
2. Bond expansion joint material to concrete wall
3. Offset between face of MSE facing panel and face of the concrete wall as directed by location of layout lines elsewhere in "STRUCTURE PLANS"
4. Stagger Lifts between Closure Wall and Wall No. 230 such that Overlapping Layers are Separated Vertically by at least 4".

CORNER DETAIL AT CLOSURE WALL - PLAN

NO SCALE

1 2

SPECIAL DETAILS

RETAINING WALL No. 230

MECHANICALLY STABILIZED EMBANKMENT

DETAILS NO. 3

STANDARD DRAWING
FILE NO. xs13-020-3
APPROVAL DATE January 2012

1 DETAIL REMOVED
2 DETAIL ADDED

STATE OF CALIFORNIA
DEPARTMENT OF TRANSPORTATION

DIVISION OF ENGINEERING SERVICES

BRIDGE NO. 33E0116
POST MILE 28.5

DS OSD 2147A (ENGLISH STANDARD DRAWING "XS" BORDER REV. (02-02-11)

ORIGINAL SCALE IN INCHES FOR REDUCED PLANS 0 1 2 3

UNIT: 0724
PROJECT NUMBER & PHASE: 04000001601
CONTRACT NO.: 04-0A7101

DISREGARD PRINTS BEARING EARLIER REVISION DATES

REVISION DATES: 2/24/11 3/30/12 6/28/12 3/29/13

SHEET 5 OF 12

FILE => 33-E0116-u-miscdt03.dgn

USERNAME => s124136 DATE PLOTTED => 10-APR-2013 TIME PLOTTED => 09:45

DIST	COUNTY	ROUTE	POST MILES TOTAL PROJECT	SHEET No.	TOTAL SHEETS
04	Ala	880	28.4/29.2	761	789

REGISTERED CIVIL ENGINEER 3/29/13 DATE

4-8-13
PLANS APPROVAL DATE

REGISTERED PROFESSIONAL ENGINEER S.McCauley No. 71495 Exp. 12-31-13 CIVIL STATE OF CALIFORNIA

The State of California or its officers or agents shall not be responsible for the accuracy or completeness of electronic copies of this plan sheet.

ALAMEDA COUNTY TRANSPORTATION COMMISSION
1333 BROADWAY, SUITE 220
OAKLAND, CA 94612

RBF CONSULTING
ONE KAISER PLAZA, SUITE 1150
OAKLAND, CA 94612

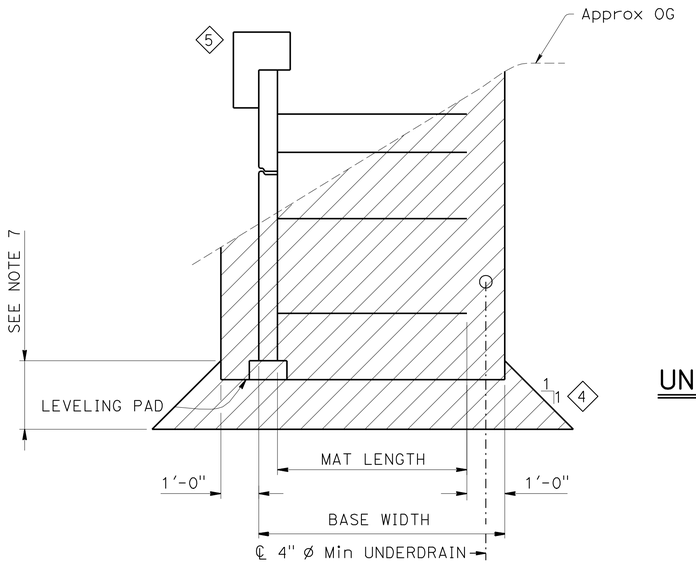

LIMITS OF EXCAVATION

½" = 1'-0"

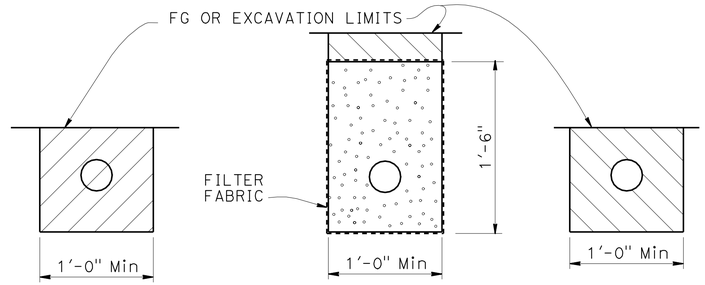

OUTLET PIPE CLEANOUT PIPE

EXCAVATION BACKFILL

UNPERFORATED OUTLET OR CLEAN OUT PIPE FOR UNDERDRAIN

NO SCALE

NOTES:

1. Limits to FG except to GP when in roadway section
2. Locate underdrain behind bottom level of welded wire mats wherever possible, or at elevation needed to drain, as shown elsewhere on plans
3. Place perforated pipe underdrain of diameter shown elsewhere on plans or minimum 4" ø smoothed wall PVC or minimum 8" ø corrugated HDPE
4. Maximum spacing of outlet pipe is 200 feet
5. At sags in profile of underdrain, install outlet pipe for each direction of flow
6. For Drainage Inlet Location and Details, See "DRAINAGE PLANS"
7. (4) For overexcavation depth see "GENERAL PLAN" sheet

LEGEND:

- Limits of Structure Excavation
- Limits of Structure Backfill
- Limits of Permeable Material

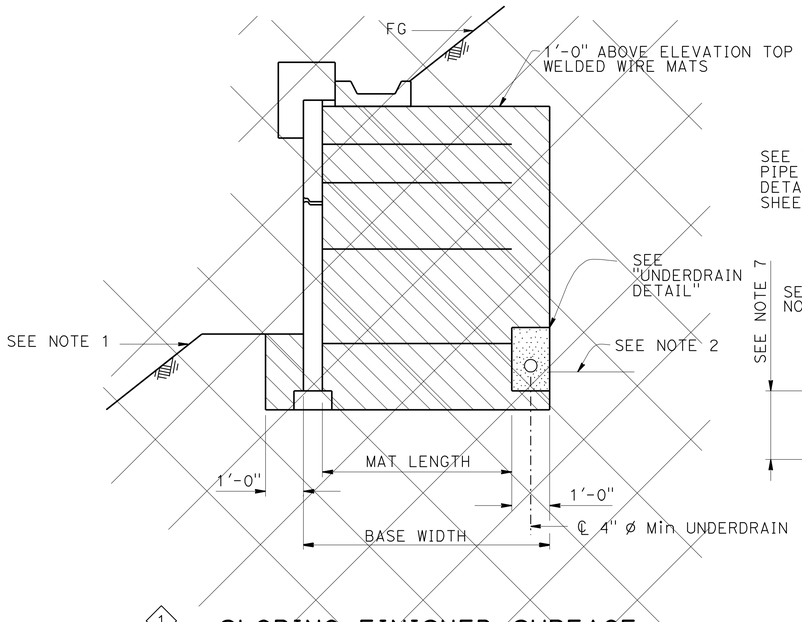

1 SLOPING FINISHED SURFACE

½" = 1'-0"

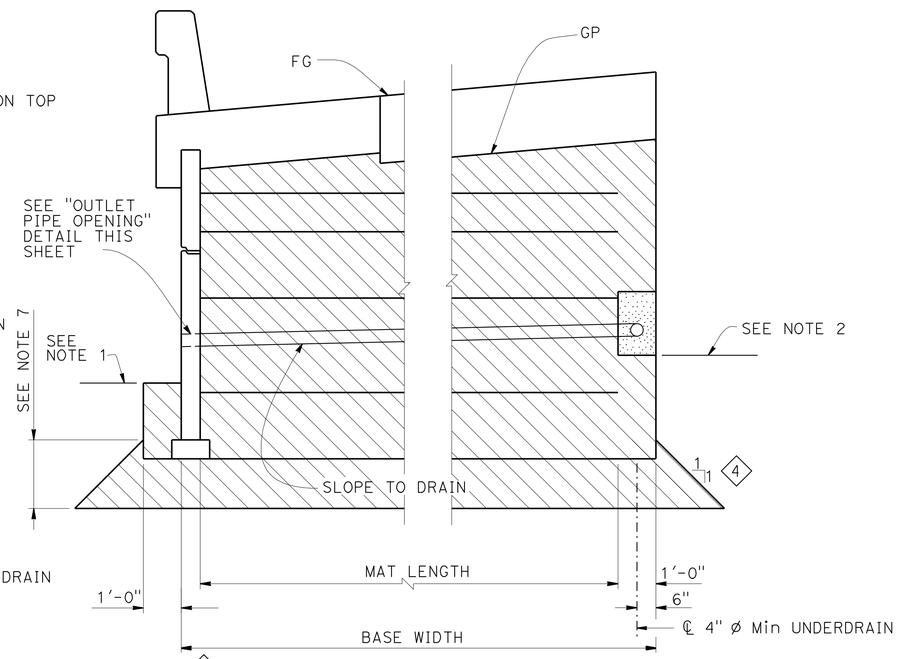

2 ROADWAY SECTION

½" = 1'-0"

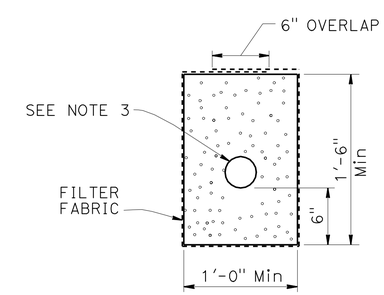

UNDERDRAIN DETAIL

LIMITS OF BACKFILL

SPECIAL DETAILS

STANDARD DRAWING

FILE NO. xs13-020-6

APPROVAL DATE January 2012

1 Does Not Apply
2 Detail Modified
3 Changed Sheet Title
4 Added Overexcavation Limit
5 Revised "Limits of Excavation"

STATE OF CALIFORNIA
DEPARTMENT OF TRANSPORTATION

DIVISION OF ENGINEERING SERVICES

BRIDGE NO. 33E0116
POST MILE 28.5

RETAINING WALL No. 230

MECHANICALLY STABILIZED EMBANKMENT

DETAILS NO. 4 (3)

DS OSD 2147A (ENGLISH STANDARD DRAWING "XS" BORDER REV. (02-02-11)

ORIGINAL SCALE IN INCHES FOR REDUCED PLANS 0 1 2 3

UNIT: 0724
PROJECT NUMBER & PHASE: 04000001601
CONTRACT NO.: 04-0A7101

DISREGARD PRINTS BEARING EARLIER REVISION DATES

REVISION DATES 2/24/11 3/30/12 6/28/12 3/29/13

SHEET 6 OF 12

FILE => 33-E0116-u-miscdt04.dgn

USERNAME => s124496 DATE PLOTTED => 10-APR-2013 TIME PLOTTED => 09:57

DIST	COUNTY	ROUTE	POST MILES TOTAL PROJECT	SHEET No	TOTAL SHEETS
04	Ala	880	28.4/29.2	762	789

Scott McCauley 6/26/12
REGISTERED CIVIL ENGINEER DATE

4-8-13
PLANS APPROVAL DATE

REGISTERED PROFESSIONAL ENGINEER S.McCauley No. 71495 Exp. 12-31-13 CIVIL STATE OF CALIFORNIA

The State of California or its officers or agents shall not be responsible for the accuracy or completeness of electronic copies of this plan sheet.

ALAMEDA COUNTY TRANSPORTATION COMMISSION
1333 BROADWAY, SUITE 220
OAKLAND, CA 94612

RBF CONSULTING
ONE KAISER PLAZA, SUITE 1150
OAKLAND, CA 94612

NOTES:

1. For dimensions and reinforcement not shown see, STANDARD PLAN B11-55
2. Minimum barrier slab length 40'-0"

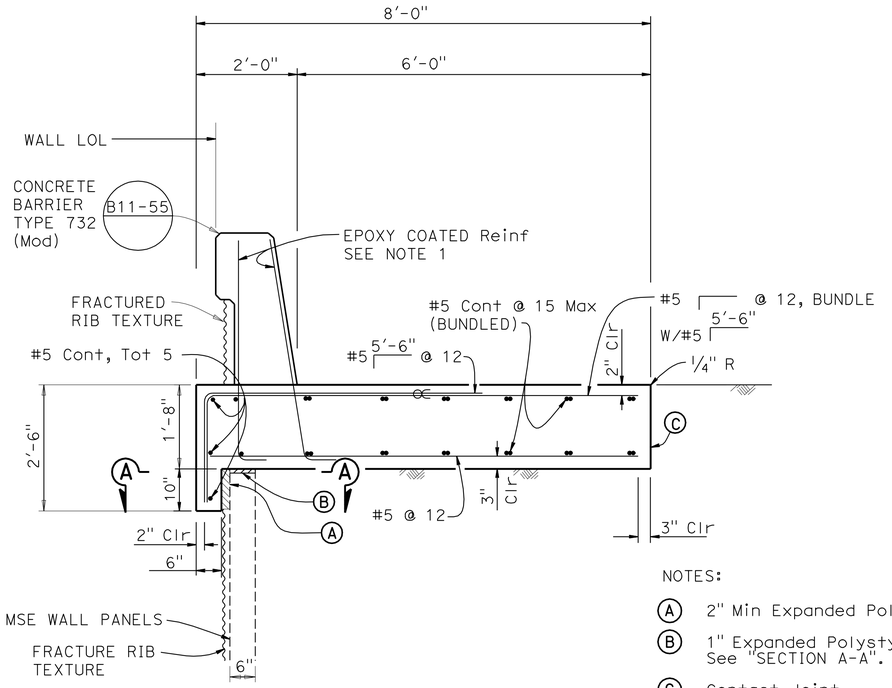

NOTES:

(A) 2" Min Expanded Polystyrene.

(B) 1" Expanded Polystyrene See "SECTION A-A".

(C) Contact Joint.

∝ Indicates Bundled Bars.

CONCRETE BARRIER SLAB

3/4" = 1'-0"

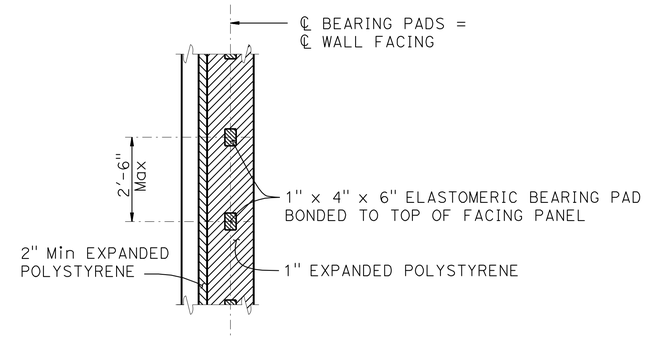

SECTION A-A

1/2" = 1'-0"

DESIGN HEIGHT, H (Ft)	7.5	10.0	12.5
Max. WALL HEIGHT (Ft)	9.17	11.67	14.17
MAT LENGTH, L (Ft)	10	11.0	13.5
BASE WIDTH, BW (Ft)	11.5	12.5	15.0
WELDED WIRE REINFORCING PER LEVEL	TOP 4-W15xW15@6" 1@ 4-W15xW15@6" Bot 4-W15xW15@6"	TOP 4-W15xW15@6" 2 @ 4-W15xW15@6" Bot 4-W20xW15@9"	TOP 4-W15xW15@6" 3 @ 4-W15xW15@6" Bot 4-W20xW15@9"

NOTE:

Mesh Configuration is:

No. Longitudinal Wires - Longitudinal Wire Size x Transverse Wire Size @ Transverse Wire Spacing

MECHANICALLY STABILIZED EMBANKMENT WALL REINFORCEMENT

No Scale

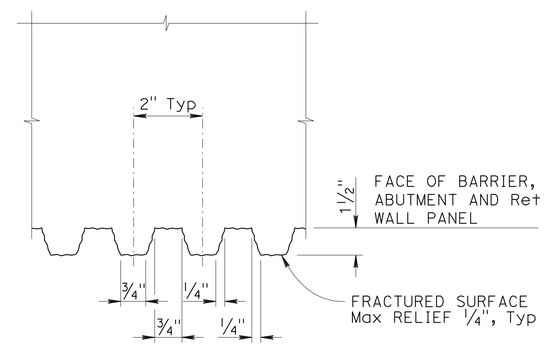

NOTES:

1. Vertical Joints in Form Liners will be at Center of Trough between Ribs. Min Spacing of Form Liner Vertical Joints will be 4'-0".
2. No Horizontal Joints will be Permitted in Form Liners.

FRACTURED RIB TEXTURE

NO SCALE

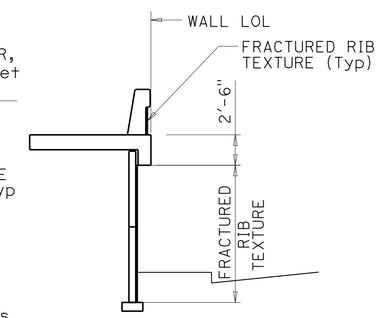

LIMITS OF PAYMENT

NOTE:
THE CONTRACTOR SHALL VERIFY ALL CONTROLLING FIELD DIMENSIONS BEFORE ORDERING OR FABRICATING ANY MATERIAL.

Paul Cotter
DESIGN OVERSIGHT Paul Cotter
7-16-12
SIGN OFF DATE

	BY	CHECKED
DESIGN	S McCauley	C. Cho
DETAILS	J Saldana	S. McCauley
QUANTITIES	C. Cho	S. McCauley

PREPARED FOR THE STATE OF CALIFORNIA DEPARTMENT OF TRANSPORTATION

Chad Harden
PROJECT ENGINEER

BRIDGE NO. 33E0116
POST MILES 28.5

RETAINING WALL No. 230
MECHANICALLY STABILIZED EMBANKMENT DETAILS NO. 5

DESIGN DETAIL SHEET (ENGLISH) (REV.7/16/10)

ORIGINAL SCALE IN INCHES FOR REDUCED PLANS 0 1 2 3

UNIT: 0724
PROJECT NUMBER & PHASE: 04000001601 CONTRACT NO.: 04-0A7101

DISREGARD PRINTS BEARING EARLIER REVISION DATES → 2/24/11 3/30/12 6/26/12

SHEET 7 OF 12

FILE => 33-E0116-u-miscdt05.dgn

USERNAME => s124496 DATE PLOTTED => 10-APR-2013 TIME PLOTTED => 09:57

DIST	COUNTY	ROUTE	POST MILES TOTAL PROJECT	SHEET No	TOTAL SHEETS
04	Ala	880	28.4/29.2	763	789

REGISTERED CIVIL ENGINEER — DATE 6/26/12

4-8-13
PLANS APPROVAL DATE

REGISTERED PROFESSIONAL ENGINEER S.McCauley No. 71495 Exp. 12-31-13 CIVIL STATE OF CALIFORNIA

The State of California or its officers or agents shall not be responsible for the accuracy or completeness of electronic copies of this plan sheet.

ALAMEDA COUNTY TRANSPORTATION COMMISSION
1333 BROADWAY, SUITE 220
OAKLAND, CA 94612

RBF CONSULTING
ONE KAISER PLAZA, SUITE 1150
OAKLAND, CA 94612

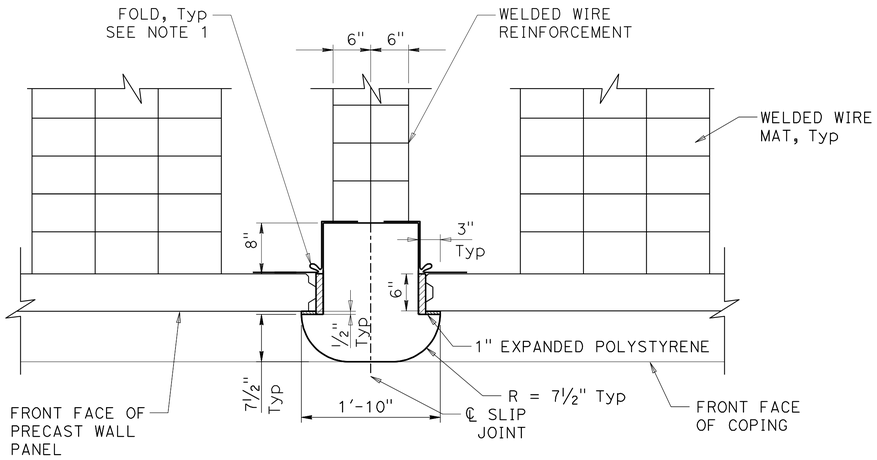

VERTICAL SLIP JOINT TYPICAL SECTION

NO SCALE

NOTES:

1. Bond a strip of Filter Fabric, 1'-6" wide to back of vertical slip joint and adjacent MSE panels for entire length of vertical joint.

NOTE: CONCRETE BARRIER NOT SHOWN

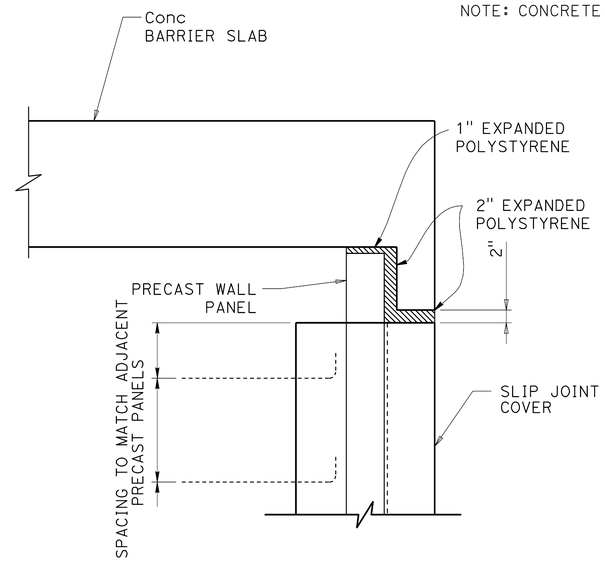

VERTICAL SLIP JOINT TOP DETAIL

NO SCALE

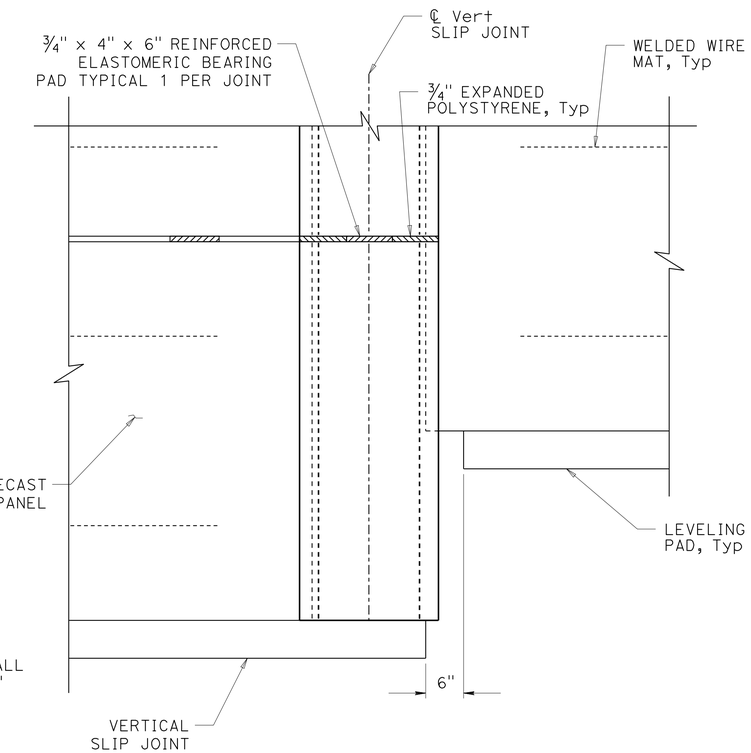

PARTIAL ELEVATION AT FOOTING STEP

NO SCALE

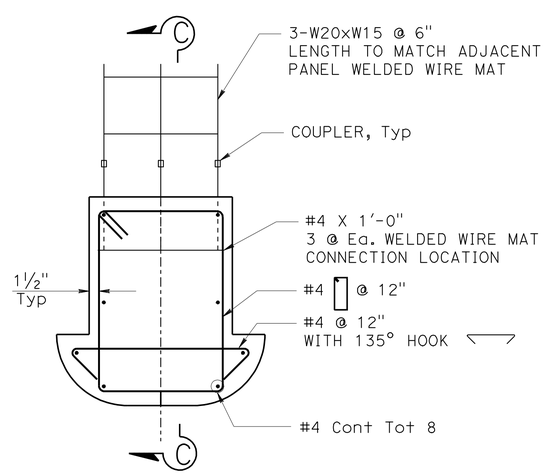

VERTICAL SLIP JOINT REINFORCING DETAIL

NO SCALE

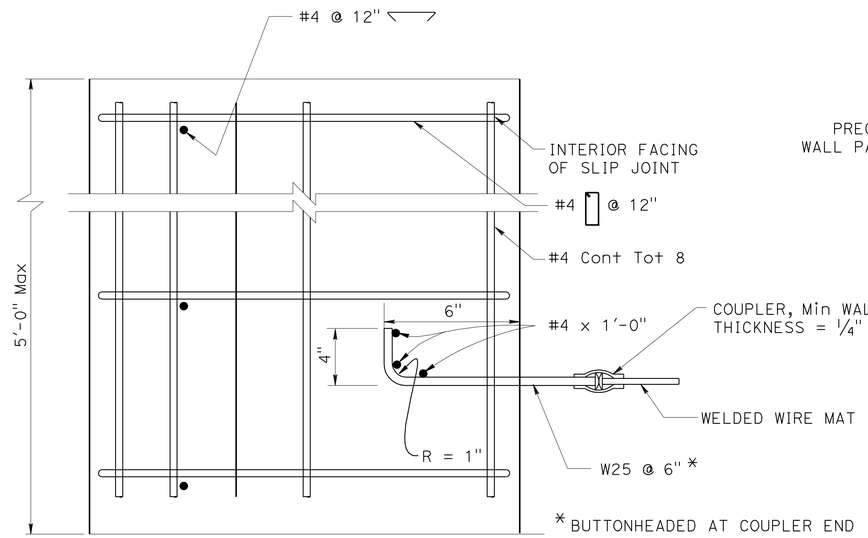

SECTION C-C

NO SCALE

NOTE:
THE CONTRACTOR SHALL VERIFY ALL CONTROLLING FIELD DIMENSIONS BEFORE ORDERING OR FABRICATING ANY MATERIAL.

DESIGN OVERSIGHT — Paul Cotter
7-16-12
SIGN OFF DATE

	BY	CHECKED
DESIGN	S McCauley	C. Cho
DETAILS	J Saldana	S. McCauley
QUANTITIES	C. Cho	S. McCauley

PREPARED FOR THE STATE OF CALIFORNIA DEPARTMENT OF TRANSPORTATION

Chad Harden
PROJECT ENGINEER

BRIDGE NO. 33E0116
POST MILES 28.5

RETAINING WALL No. 230
MECHANICALLY STABILIZED EMBANKMENT
DETAILS NO. 6

DESIGN DETAIL SHEET (ENGLISH) (REV.7/16/10)

ORIGINAL SCALE IN INCHES FOR REDUCED PLANS 0 1 2 3

UNIT: 0724
PROJECT NUMBER & PHASE: 04000001601
CONTRACT NO.: 04-0A7101

DISREGARD PRINTS BEARING EARLIER REVISION DATES

REVISION DATES: 2/04/11 3/30/12 6/26/12

SHEET 8 OF 12

FILE => 33-E0116-u-miscdt06.dgn

USERNAME => s124396 DATE PLOTTED => 10-APR-2013 TIME PLOTTED => 09:57

BENCH MARK:

DESIGNATION: ALA8 ELEV=14.521
FOUND BRASS DISK STAMPED "ALA8" IN THE SIDEWALK AT THE WEST CORNER OF EAST 8TH STREET AND 5TH AVENUE.

DESIGNATION: ALA7 ELEV=15.591
FOUND BRASS DISK STAMPED "ALA7" IN THE SIDEWALK AT THE WEST SIDE OF 7TH STREET ALONG THE NORTH SIDE OF LAKE MERRITT CHANNEL.

DESIGNATION: 8TH/37TH ELEV=20.262
FOUND A CITY OF OAKLAND PIN IN CONCRETE IN A MONUMENT WELL AT THE INTERSECTION OF EAST 8TH STREET AND 37TH AVENUE.

DESIGNATION: ALA13 ELEV=15.318
FOUND BRASS DISK STAMPED "ALA13" INSIDE A 1 INCH IRON PIPE WITH A CONCRETE COLLAR 24.6 FEET NORTH OF THE NORTH SIDE OF HIGH STREET, 56 FEET WEST OF THE WEST SIDE OF THE OFFRAMP FROM SOUTHBOUND STATE ROUTE 880 AND 4.99 FEET SOUTH OF THE SOUTH RAIL OF THE RAILROAD TRACKS.

DESIGNATION: KA121 ELEV=15.768
FOUND 1 INCH IRON PIPE WITH RED PLASTIC PLUG AND TACK STAMPED "CALTRANS" ALONG THE EAST SIDE OF OAKPORT STREET ABOUT 230 FEET SOUTH OF THE SOUTH SIDE OF HIGH STREET, ACROSS FROM 4401 OAKPORT STREET, 6.92 FEET NORTH OF THE FLOWLINE OF THE CURB.

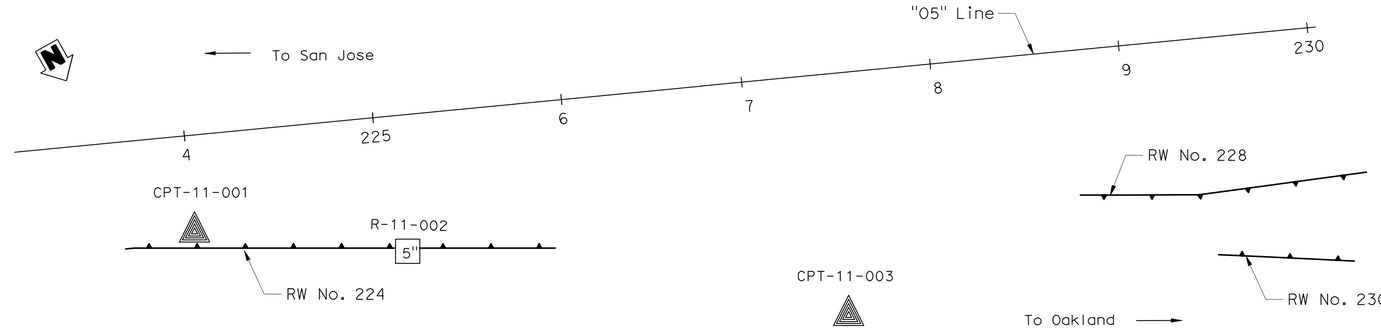

PLAN

1" = 40'

DIST	COUNTY	ROUTE	POST MILES TOTAL PROJECT	SHEET No	TOTAL SHEETS
04	Ala	880	28.4/29.2	764	789

Lino Cheang
REGISTERED ENGINEER — DATE 6-25-12

4-8-13
PLANS APPROVAL DATE

REGISTERED PROFESSIONAL ENGINEER — L. CHEANG — NO. GE 2345 — EXP. 9-30-13 — GEOTECHNICAL — STATE OF CALIFORNIA

The State of California or its officers or agents shall not be responsible for the accuracy or completeness of electronic copies of this plan sheet.

ALAMEDA COUNTY TRANSPORTATION COMMISSION
1333 BROADWAY, SUITE 220
OAKLAND, CA 94612

EARTH MECHANICS, INC.
17800 NEWHOPE STREET, SUITE B
FOUNTAIN VALLEY, CA 92708

NOTES:

(1) This LOTB sheet was prepared in accordance with the Caltrans Soil and Rock Logging, Classification and Presentation Manual (June 2010).

(2) 2.4" samples were taken using a California Modified Sampler.

(3) An automatic trip hammer system consisting of a hammer weight of 140 lbs falling a distance of 30" was used to advance the drive sampler.

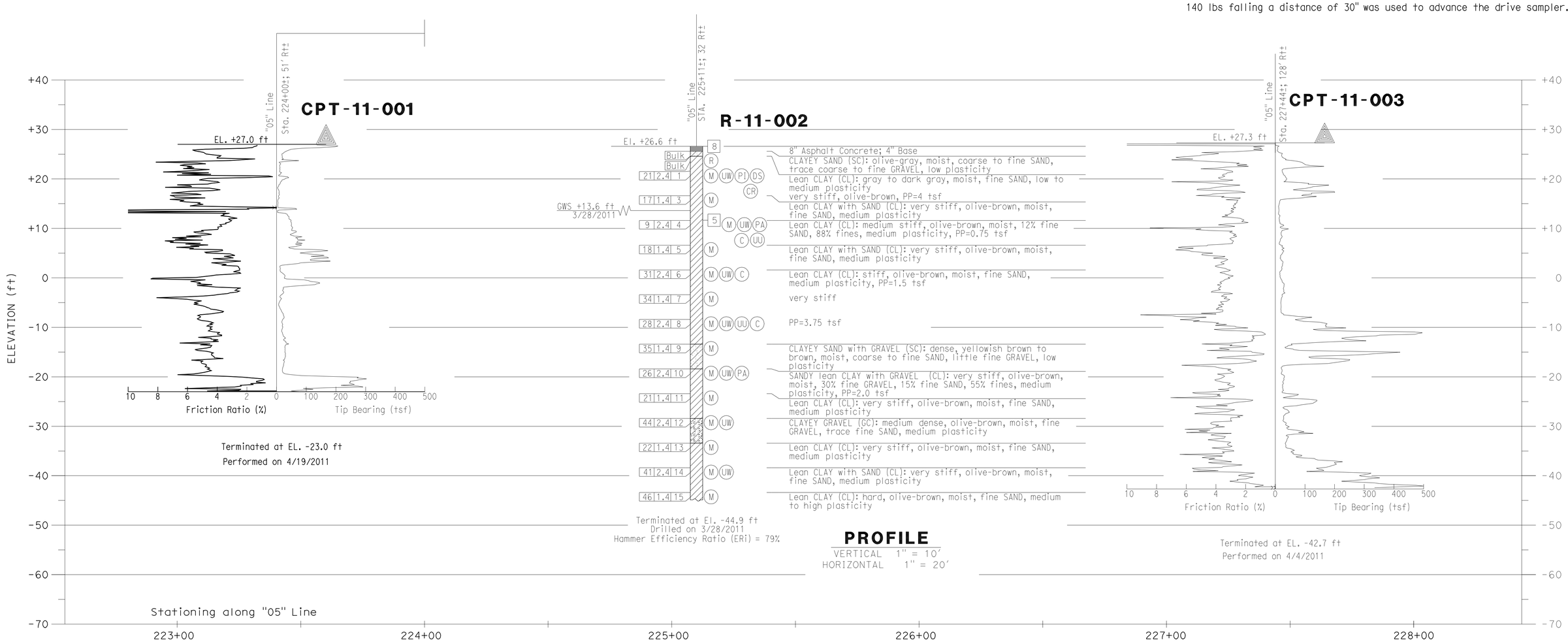

Paul Cotter — DESIGN OVERSIGHT Paul Cotter; 7-16-12 SIGN OFF DATE	DRAWN BY J. Fang	K. Thant — FIELD INVESTIGATION BY:	PREPARED FOR THE STATE OF CALIFORNIA DEPARTMENT OF TRANSPORTATION	L. Cheang — PROJECT ENGINEER	BRIDGE NO. 33E0116
	CHECKED BY G. J. Gunaranjan	DATE: 3/2011, 4/2011			POST MILES 28.5

RETAINING WALL No. 230

LOG OF TEST BORINGS 1 OF 4

GS GEOTECHNICAL LOG OF TEST BORINGS SHEET (ENGLISH) (REV. 7/16/10)

ORIGINAL SCALE IN INCHES FOR REDUCED PLANS 0 1 2 3

UNIT: 0724
PROJECT NUMBER & PHASE: 04000001601

DISREGARD PRINTS BEARING EARLIER REVISION DATES

REVISION DATES

SHEET 9 OF 12

FILE => 33-E0116-z-ltb1.dgn

CONTRACT NO.:04-0A7101 PROJECT ID:

USERNAME => s124496 DATE PLOTTED => 10-APR-2013 TIME PLOTTED => 09:58

TO ACCOMPANY PLANS DATED 4-8-13

DIVISION OF ENGINEERING SERVICES - GEOTECHNICAL SERVICES

The information presented on this drawing, was not the result of any work developed, performed, or completed by EMI. This drawing is available and presented only for the convenience of any bidder, contractor, or other interested party. It should be understood that EMI assumes no responsibility in respect to the sufficiency, accuracy, completeness, interpretation set forth, or any other aspect of the information shown on this drawing.

DIST.	COUNTY	ROUTE	POST MILES-TOTAL PROJECT	Sheet No.	Total Sheets
04	Ala	880	28.4/29.2	765	789

Lino Cheang — CERTIFIED ENGINEERING GEOLOGIST — 6/25/12 DATE

RETAINING WALL No. 230

LOG OF TEST BORINGS 2 OF 4

UNIT: 0724	CONTRACT No.	BRIDGE No.
PROJECT NUMBER & PHASE: 04000001601	04-0A7101	33E0116

Sheet	of
10	12

REGISTERED PROFESSIONAL ENGINEER — L. CHEANG — NO. GE 2345 — EXP. 9-30-13 — GEOTECHNICAL — STATE OF CALIFORNIA

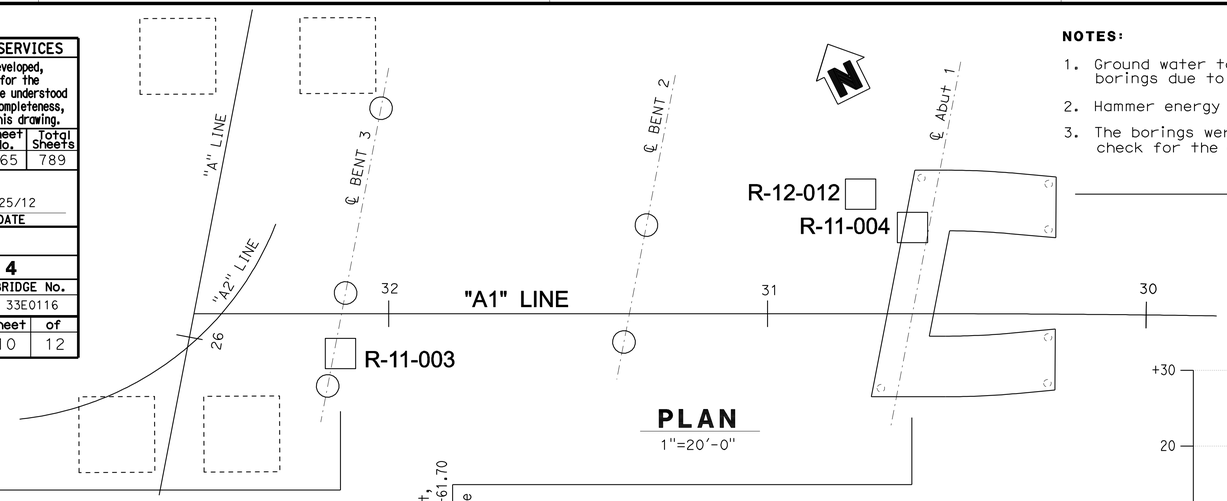

PLAN
1"=20'-0"

NOTES:

1. Ground water table was not measured in the borings due to rotary wash drilling.
2. Hammer energy ratio calibration not performed.
3. The borings were hand augered in the top 5 ft to check for the existence of underground utilities.

DIST	COUNTY	ROUTE	POST MILES TOTAL PROJECT	SHEET No	TOTAL SHEETS
04	880	Ala			

REGISTERED CIVIL ENGINEER — 6/25/12 DATE

PLANS APPROVAL DATE

REGISTERED PROFESSIONAL ENGINEER — Philip Meymand — No. 2596 — Exp. 6/30/13 — GEOTECHNICAL — STATE OF CALIFORNIA

The State of California or its officers or agents shall not be responsible for the accuracy or completeness of electronic copies of this plan sheet.

ALAMEDA COUNTY TRANSPORTATION
1333 BROADWAY
OAKLAND, CA 94612

URS CORPORATION
1333 BROADWAY, SUITE 800
OAKLAND, CA 94612

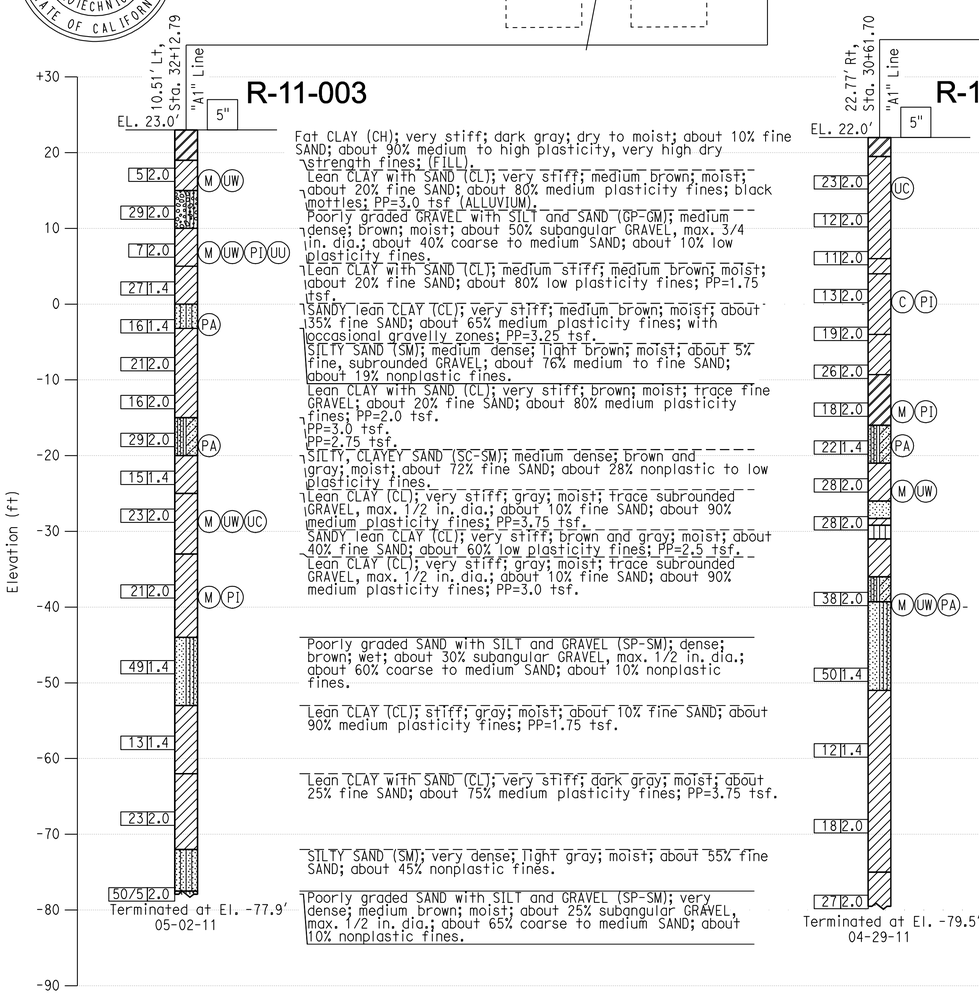

R-11-003

Fat CLAY (CH); very stiff; dark gray; dry to moist; about 10% fine SAND; about 90% medium to high plasticity, very high dry strength fines; (FILL).
Lean CLAY with SAND (CL); very stiff; medium brown; moist; about 20% fine SAND; about 80% medium plasticity fines; black mottles; PP=3.0 tsf (ALLUVIUM).
Poorly graded GRAVEL with SILT and SAND (GP-GM); medium dense; brown; moist; about 50% subangular GRAVEL, max. 3/4 in. dia.; about 40% coarse to medium SAND; about 10% low plasticity fines.
Lean CLAY with SAND (CL); medium stiff; medium brown; moist; about 20% fine SAND; about 80% low plasticity fines; PP=1.75 tsf.
SANDY lean CLAY (CL); very stiff; medium brown; moist; about 35% fine SAND; about 65% medium plasticity fines; with occasional gravelly zones; PP=3.25 tsf.
SILTY SAND (SM); medium dense; light brown; moist; about 5% fine, subrounded GRAVEL; about 76% medium to fine SAND; about 19% nonplastic fines.
Lean CLAY with SAND (CL); very stiff; brown; moist; trace fine GRAVEL; about 20% fine SAND; about 80% medium plasticity fines; PP=2.0 tsf.
PP=3.0 tsf.
PP=2.75 tsf.
SILTY, CLAYEY SAND (SC-SM); medium dense; brown and gray; moist; about 72% fine SAND; about 28% nonplastic to low plasticity fines.
Lean CLAY (CL); very stiff; gray; moist; trace subrounded GRAVEL, max. 1/2 in. dia.; about 10% fine SAND; about 90% medium plasticity fines; PP=3.75 tsf.
SANDY lean CLAY (CL); very stiff; brown and gray; moist; about 40% fine SAND; about 60% low plasticity fines; PP=2.5 tsf.
Lean CLAY (CL); very stiff; gray; moist; trace subrounded GRAVEL, max. 1/2 in. dia.; about 10% fine SAND; about 90% medium plasticity fines; PP=3.0 tsf.

Poorly graded SAND with SILT and GRAVEL (SP-SM); dense; brown; wet; about 30% subangular GRAVEL, max. 1/2 in. dia.; about 60% coarse to medium SAND; about 10% nonplastic fines.

Lean CLAY (CL); stiff; gray; moist; about 10% fine SAND; about 90% medium plasticity fines; PP=1.75 tsf.

Lean CLAY with SAND (CL); very stiff; dark gray; moist; about 25% fine SAND; about 75% medium plasticity fines; PP=3.75 tsf.

SILTY SAND (SM); very dense; light gray; moist; about 55% fine SAND; about 45% nonplastic fines.

Poorly graded SAND with SILT and GRAVEL (SP-SM); very dense; medium brown; moist; about 25% subangular GRAVEL, max. 1/2 in. dia.; about 65% coarse to medium SAND; about 10% nonplastic fines.

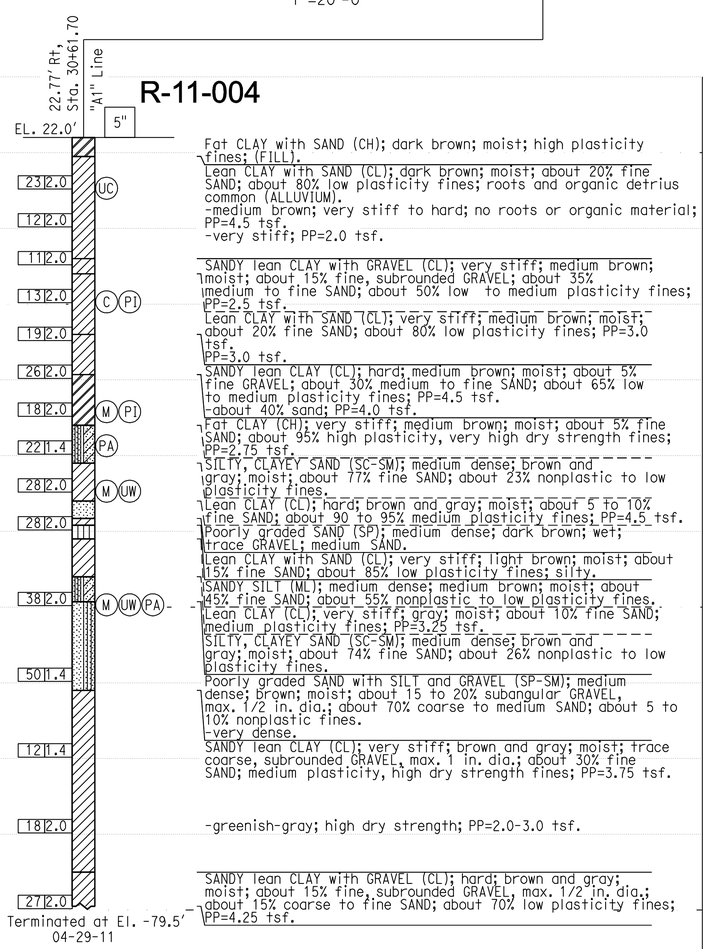

R-11-004

Fat CLAY with SAND (CH); dark brown; moist; high plasticity fines; (FILL).
Lean CLAY with SAND (CL); dark brown; moist; about 20% fine SAND; about 80% low plasticity fines; roots and organic detrius common (ALLUVIUM).
-medium brown; very stiff to hard; no roots or organic material; PP=4.5 tsf.
-very stiff; PP=2.0 tsf.

SANDY lean CLAY with GRAVEL (CL); very stiff; medium brown; moist; about 15% fine, subrounded GRAVEL; about 35% medium to fine SAND; about 50% low to medium plasticity fines; PP=2.5 tsf.
Lean CLAY with SAND (CL); very stiff; medium brown; moist; about 20% fine SAND; about 80% low plasticity fines; PP=3.0 tsf.
PP=3.0 tsf.
SANDY lean CLAY (CL); hard; medium brown; moist; about 5% fine GRAVEL; about 30% medium to fine SAND; about 65% low to medium plasticity fines; PP=4.5 tsf.
-about 40% sand; PP=4.0 tsf.
Fat CLAY (CH); very stiff; medium brown; moist; about 5% fine SAND; about 95% high plasticity, very high dry strength fines; PP=2.75 tsf.
SILTY, CLAYEY SAND (SC-SM); medium dense; brown and gray; moist; about 77% fine SAND; about 23% nonplastic to low plasticity fines.
Lean CLAY (CL); hard; brown and gray; moist; about 5 to 10% fine SAND; about 90 to 95% medium plasticity fines; PP=4.5 tsf.
Poorly graded SAND (SP); medium dense; dark brown; wet; trace GRAVEL; medium SAND.
Lean CLAY with SAND (CL); very stiff; light brown; moist; about 15% fine SAND; about 85% low plasticity fines; silty.
SANDY SILT (ML); medium dense; medium brown; moist; about 45% fine SAND; about 55% nonplastic to low plasticity fines.
Lean CLAY (CL); very stiff; gray; moist; about 10% fine SAND; medium plasticity fines; PP=3.25 tsf.
SILTY, CLAYEY SAND (SC-SM); medium dense; brown and gray; moist; about 74% fine SAND; about 26% nonplastic to low plasticity fines.
Poorly graded SAND with SILT and GRAVEL (SP-SM); medium dense; brown; moist; about 15 to 20% subangular GRAVEL, max. 1/2 in. dia.; about 70% coarse to medium SAND; about 5 to 10% nonplastic fines.
-very dense.
SANDY lean CLAY (CL); very stiff; brown and gray; moist; trace coarse, subrounded GRAVEL, max. 1 in. dia.; about 30% fine SAND; medium plasticity, high dry strength fines; PP=3.75 tsf.

-greenish-gray; high dry strength; PP=2.0-3.0 tsf.

SANDY lean CLAY with GRAVEL (CL); hard; brown and gray; moist; about 15% fine, subrounded GRAVEL, max. 1/2 in. dia.; about 15% coarse to fine SAND; about 70% low plasticity fines; PP=4.25 tsf.

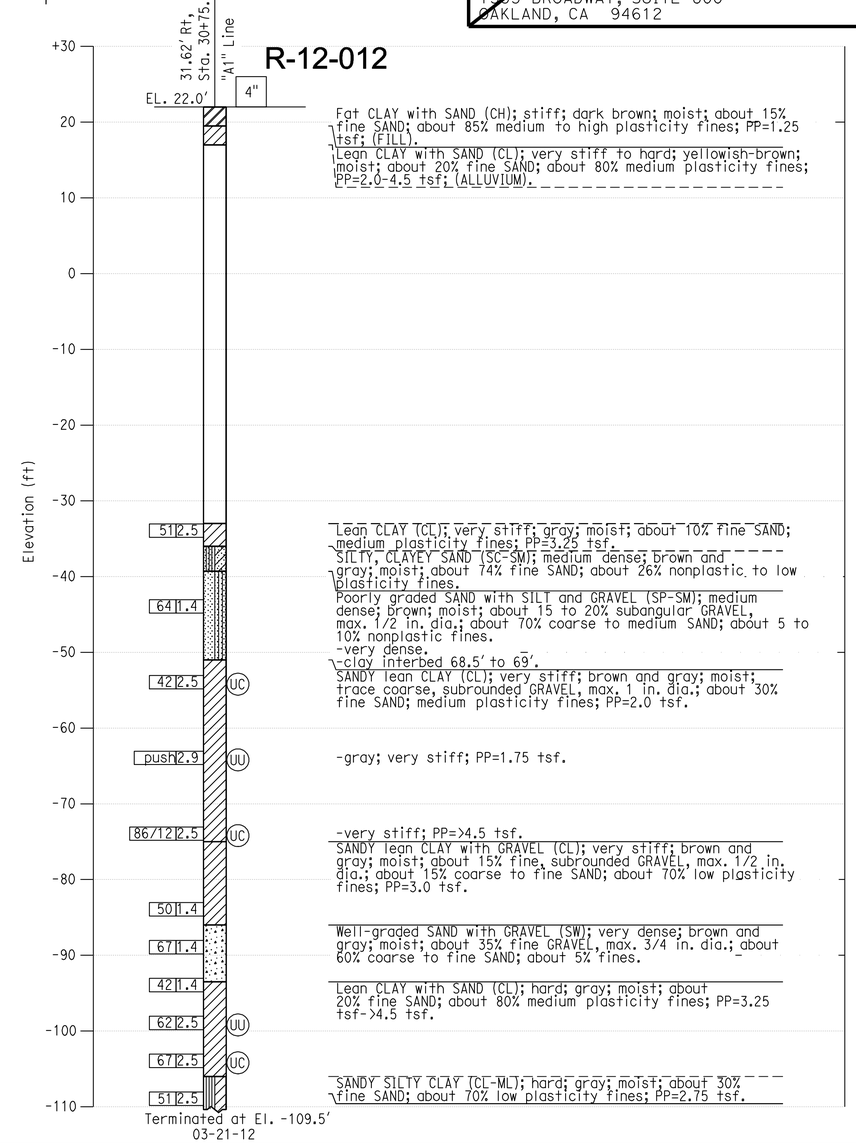

R-12-012

Fat CLAY with SAND (CH); stiff; dark brown; moist; about 15% fine SAND; about 85% medium to high plasticity fines; PP=1.25 tsf; (FILL).
Lean CLAY with SAND (CL); very stiff to hard; yellowish-brown; moist; about 20% fine SAND; about 80% medium plasticity fines; PP=2.0-4.5 tsf; (ALLUVIUM).

Lean CLAY (CL); very stiff; gray; moist; about 10% fine SAND; medium plasticity fines; PP=3.25 tsf.
SILTY, CLAYEY SAND (SC-SM); medium dense; brown and gray; moist; about 74% fine SAND; about 26% nonplastic to low plasticity fines.
Poorly graded SAND with SILT and GRAVEL (SP-SM); medium dense; brown; moist; about 15 to 20% subangular GRAVEL, max. 1/2 in. dia.; about 70% coarse to medium SAND; about 5 to 10% nonplastic fines.
-very dense.
-clay interbed 68.5' to 69'.
SANDY lean CLAY (CL); very stiff; brown and gray; moist; trace coarse, subrounded GRAVEL, max. 1 in. dia.; about 30% fine SAND; medium plasticity fines; PP=2.0 tsf.

-gray; very stiff; PP=1.75 tsf.

-very stiff; PP=>4.5 tsf.
SANDY lean CLAY with GRAVEL (CL); very stiff; brown and gray; moist; about 15% fine, subrounded GRAVEL, max. 1/2 in. dia.; about 15% coarse to fine SAND; about 70% low plasticity fines; PP=3.0 tsf.

Well-graded SAND with GRAVEL (SW); very dense; brown and gray; moist; about 35% fine GRAVEL, max. 3/4 in. dia.; about 60% coarse to fine SAND; about 5% fines.

Lean CLAY with SAND (CL); hard; gray; moist; about 20% fine SAND; about 80% medium plasticity fines; PP=3.25 tsf->4.5 tsf.

SANDY SILTY CLAY (CL-ML); hard; gray; moist; about 30% fine SAND; about 70% low plasticity fines; PP=2.75 tsf.

Paul Cotter — DESIGN OVERSIGHT — Paul Cotter	DRAWN BY	N. HUTTON	S. JANOWSKI — FIELD INVESTIGATION BY:
7-16-12 — SIGN OFF DATE	CHECKED BY	C. TSAI	DATE: 04-25-11 TO 05-04-11

PREPARED FOR THE STATE OF CALIFORNIA DEPARTMENT OF TRANSPORTATION

Jan Hueser — PROJECT ENGINEER

BRIDGE NO. 33-0751 — POST MILES 28.69

29TH AVENUE OC (REPLACE)

LOG OF TEST BORINGS 2 OF 2

GS CIVIL LOG OF TEST BORINGS SHEET (ENGLISH) (REV. 7/16/10)

ORIGINAL SCALE IN INCHES FOR REDUCED PLANS 0 1 2 3

UNIT: 0724
PROJECT NUMBER & PHASE: 04000001601 CONTRACT NO.: 04-0A7101

DISREGARD PRINTS BEARING EARLIER REVISION DATES → REVISION DATES 9-6-11 1-30-12 3-30-12 6-25-12 — SHEET 57 OF 60

FILE => 33-E0116-z-ltb2.dgn

USERNAME => s124496 DATE PLOTTED => 10-APR-2013 TIME PLOTTED => 09:58

DIST	COUNTY	ROUTE	POST MILES TOTAL PROJECT	SHEET No	TOTAL SHEETS
04	Ala	880	28.4/29.2	766	789

Lino Cheang 6/25/12
REGISTERED ENGINEER DATE

4-8-13
PLANS APPROVAL DATE

REGISTERED PROFESSIONAL ENGINEER L. CHEANG NO. GE 2345 EXP. 9-30-13 GEOTECHNICAL STATE OF CALIFORNIA

The State of California or its officers or agents shall not be responsible for the accuracy or completeness of electronic copies of this plan sheet.

ALAMEDA COUNTY TRANSPORTATION COMMISSION
1333 BROADWAY, SUITE 220
OAKLAND, CA 94612

EARTH MECHANICS, INC.
17800 NEWHOPE STREET, SUITE B
FOUNTAIN VALLEY, CA 92708

REFERENCE: CALTRANS SOIL & ROCK LOGGING, CLASSIFICATION, AND PRESENTATION MANUAL (2010)

CEMENTATION

Description	Criteria
Weak	Crumbles or breaks with handling or little finger pressure.
Moderate	Crumbles or breaks with considerable finger pressure.
Strong	Will not crumble or break with finger pressure.

BOREHOLE IDENTIFICATION

Symbol	Hole Type	Description
Size	A	Auger Boring (hollow or solid stem bucket)
Size	R RW RC P	Rotary drilled boring (conventional) Rotary drilled with self-casing wire-line Rotary core with continuously-sampled, self-casing wire-line Rotary percussion boring (air)
Size	R	Rotary drilled diamond core
Size	HD HA	Hand driven (1-inch soil tube) Hand Auger
●	D	Dynamic Cone Penetration Boring
▲	CPT	Cone Penetration Test (ASTM D 5778)
⬚	O	Other (note on LOTB)

Note: Size in inches.

CONSISTENCY OF COHESIVE SOILS

Description	Shear Strength (tsf)	Pocket Penetrometer Measurement, PP, (tsf)	Torvane Measurement, TV, (tsf)	Vane Shear Measurement, VS, (tsf)
Very Soft	Less than 0.12	Less than 0.25	Less than 0.12	Less than 0.12
Soft	0.12 - 0.25	0.25 - 0.5	0.12 - 0.25	0.12 - 0.25
Medium Stiff	0.25 - 0.5	0.5 - 1	0.25 - 0.5	0.25 - 0.5
Stiff	0.5 - 1	1 - 2	0.5 - 1	0.5 - 1
Very Stiff	1 - 2	2 - 4	1 - 2	1 - 2
Hard	Greater than 2	Greater than 4	Greater than 2	Greater than 2

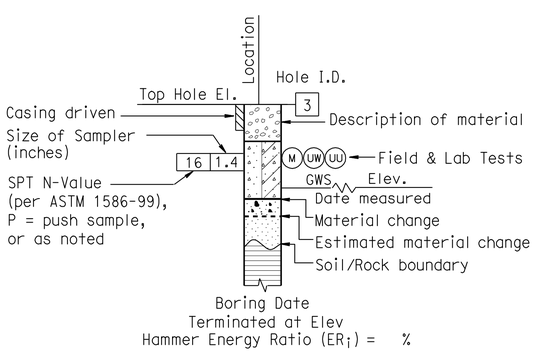

ROTARY BORING

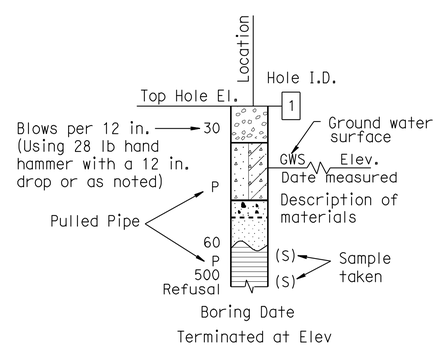

HAND BORING

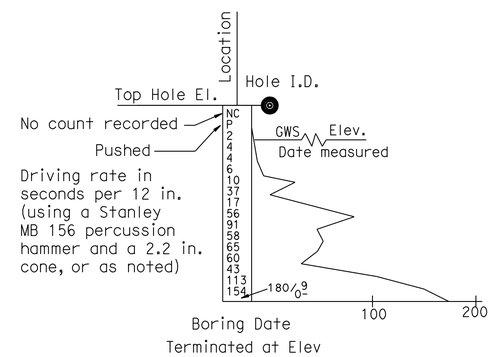

DYNAMIC CONE PENETRATION BORING

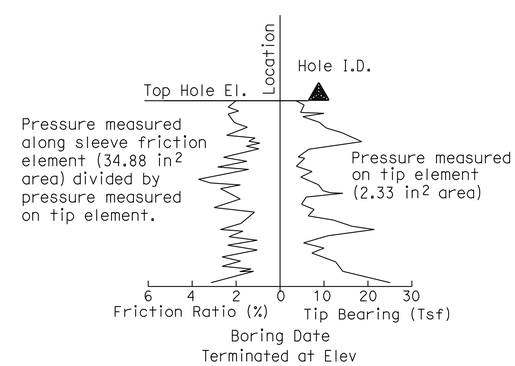

CONE PENETRATION TEST (CPT) BORING

Paul Cotter
DESIGN OVERSIGHT Paul Cotter
7-16-12
SIGN OFF DATE

DRAWN BY J. Fang
CHECKED BY G. J. Gunaranjan

K. Thant
FIELD INVESTIGATION BY:
DATE: 3/2011, 4/2011

PREPARED FOR THE STATE OF CALIFORNIA DEPARTMENT OF TRANSPORTATION

L. Cheang
PROJECT ENGINEER

BRIDGE NO. 33E0116
POST MILES 28.5

RETAINING WALL No. 230
LOG OF TEST BORINGS 3 OF 4

GS GEOTECHNICAL LOG OF TEST BORINGS SHEET (ENGLISH) (REV. 7/16/10)

ORIGINAL SCALE IN INCHES FOR REDUCED PLANS 0 1 2 3

UNIT: 0724
PROJECT NUMBER & PHASE: 04000001601

DISREGARD PRINTS BEARING EARLIER REVISION DATES

REVISION DATES

SHEET 11 OF 12

FILE => 33-E0116-z-soil legend-ltb1.dgn

CONTRACT NO.:04-0A7101 PROJECT ID:

USERNAME => s124496 DATE PLOTTED => 10-APR-2013 TIME PLOTTED => 09:58

REFERENCE: CALTRANS SOIL & ROCK LOGGING, CLASSIFICATION, AND PRESENTATION MANUAL (2010)

DIST	COUNTY	ROUTE	POST MILES TOTAL PROJECT	SHEET No	TOTAL SHEETS
04	Ala	880	28.4/29.2	767	789

Lino Cheang 6/25/12
REGISTERED ENGINEER DATE

4-8-13
PLANS APPROVAL DATE

REGISTERED PROFESSIONAL ENGINEER L. CHEANG NO. GE 2345 EXP. 9-30-13 GEOTECHNICAL STATE OF CALIFORNIA

The State of California or its officers or agents shall not be responsible for the accuracy or completeness of electronic copies of this plan sheet.

ALAMEDA COUNTY TRANSPORTATION COMMISSION
1333 BROADWAY, SUITE 220
OAKLAND, CA 94612

EARTH MECHANICS, INC.
17800 NEWHOPE STREET, SUITE B
FOUNTAIN VALLEY, CA 92708

GROUP SYMBOLS AND NAMES

Graphic/Symbol	Group Names	Graphic/Symbol	Group Names
GW	Well-graded GRAVEL Well-graded GRAVEL with SAND	CL	Lean CLAY Lean CLAY with SAND Lean CLAY with GRAVEL SANDY lean CLAY SANDY lean CLAY with GRAVEL GRAVELLY lean CLAY GRAVELLY lean CLAY with SAND
GP	Poorly-graded GRAVEL Poorly-graded GRAVEL with SAND		
GW-GM	Well-graded GRAVEL with SILT Well-graded GRAVEL with SILT and SAND	CL-ML	SILTY CLAY SILTY CLAY with SAND SILTY CLAY with GRAVEL SANDY SILTY CLAY SANDY SILTY CLAY with GRAVEL GRAVELLY SILTY CLAY GRAVELLY SILTY CLAY with SAND
GW-GC	Well-graded GRAVEL with CLAY (or SILTY CLAY) Well-graded GRAVEL with CLAY and SAND (or SILTY CLAY and SAND)		
GP-GM	Poorly-graded GRAVEL with SILT Poorly-graded GRAVEL with SILT and SAND	ML	SILT SILT with SAND SILT with GRAVEL SANDY SILT SANDY SILT with GRAVEL GRAVELLY SILT GRAVELLY SILT with SAND
GP-GC	Poorly-graded GRAVEL with CLAY (or SILTY CLAY) Poorly-graded GRAVEL with CLAY and SAND (or SILTY CLAY and SAND)		
GM	SILTY GRAVEL SILTY GRAVEL with SAND	OL	ORGANIC lean CLAY ORGANIC lean CLAY with SAND ORGANIC lean CLAY with GRAVEL SANDY ORGANIC lean CLAY SANDY ORGANIC lean CLAY with GRAVEL GRAVELLY ORGANIC lean CLAY GRAVELLY ORGANIC lean CLAY with SAND
GC	CLAYEY GRAVEL CLAYEY GRAVEL with SAND		
GC-GM	SILTY, CLAYEY GRAVEL SILTY, CLAYEY GRAVEL with SAND	OL	ORGANIC SILT ORGANIC SILT with SAND ORGANIC SILT with GRAVEL SANDY ORGANIC SILT SANDY ORGANIC SILT with GRAVEL GRAVELLY ORGANIC SILT GRAVELLY ORGANIC SILT with SAND
SW	Well-graded SAND Well-graded SAND with GRAVEL		
SP	Poorly-graded SAND Poorly-graded SAND with GRAVEL	CH	Fat CLAY Fat CLAY with SAND Fat CLAY with GRAVEL SANDY fat CLAY SANDY fat CLAY with GRAVEL GRAVELLY fat CLAY GRAVELLY fat CLAY with SAND
SW-SM	Well-graded SAND with SILT Well-graded SAND with SILT and GRAVEL		
SW-SC	Well-graded SAND with CLAY (or SILTY CLAY) Well-graded SAND with CLAY and GRAVEL (or SILTY CLAY and GRAVEL)	MH	Elastic SILT Elastic SILT with SAND Elastic SILT with GRAVEL SANDY elastic SILT SANDY elastic SILT with GRAVEL GRAVELLY elastic SILT GRAVELLY elastic SILT with SAND
SP-SM	Poorly-graded SAND with SILT Poorly-graded SAND with SILT and GRAVEL		
SP-SC	Poorly-graded SAND with CLAY (or SILTY CLAY) Poorly-graded SAND with CLAY and GRAVEL (or SILTY CLAY and GRAVEL)	OH	ORGANIC fat CLAY ORGANIC fat CLAY with SAND ORGANIC fat CLAY with GRAVEL SANDY ORGANIC fat CLAY SANDY ORGANIC fat CLAY with GRAVEL GRAVELLY ORGANIC fat CLAY GRAVELLY ORGANIC fat CLAY with SAND
SM	SILTY SAND SILTY SAND with GRAVEL		
SC	CLAYEY SAND CLAYEY SAND with GRAVEL	OH	ORGANIC elastic SILT ORGANIC elastic SILT with SAND ORGANIC elastic SILT with GRAVEL SANDY ORGANIC elastic SILT SANDY ORGANIC elastic SILT with GRAVEL GRAVELLY ORGANIC elastic SILT GRAVELLY ORGANIC elastic SILT with SAND
SC-SM	SILTY, CLAYEY SAND SILTY, CLAYEY SAND with GRAVEL		
PT	PEAT	OL/OH	ORGANIC SOIL ORGANIC SOIL with SAND ORGANIC SOIL with GRAVEL SANDY ORGANIC SOIL SANDY ORGANIC SOIL with GRAVEL GRAVELLY ORGANIC SOIL GRAVELLY ORGANIC SOIL with SAND
	COBBLES COBBLES and BOULDERS BOULDERS		

FIELD AND LABORATORY TESTING

- (C) Consolidation (ASTM D 2435)
- (CL) Collapse Potential (ASTM D 5333)
- (CP) Compaction Curve (CTM 216)
- (CR) Corrosivity Testing (CTM 643, CTM 422, CTM 417)
- (CU) Consolidated Undrained Triaxial (ASTM D 4767)
- (DS) Direct Shear (ASTM D 3080)
- (EI) Expansion Index (ASTM D 4829)
- (M) Moisture Content (ASTM D 2216)
- (OC) Organic Content-% (ASTM D 2974)
- (P) Permeability (CTM 220)
- (PA) Particle Size Analysis (ASTM D 422)
- (PI) Plasticity Index (AASHTO T 90) Liquid Limit (AASHTO T 89)
- (PL) Point Load Index (ASTM D 5731)
- (PM) Pressure Meter
- (R) R-Value (CTM 301)
- (SE) Sand Equivalent (CTM 217)
- (SG) Specific Gravity (AASHTO T 100)
- (SL) Shrinkage Limit (ASTM D 427)
- (SW) Swell Potential (ASTM D 4546)
- (UC) Unconfined Compression-Soil (ASTM D 2166) Unconfined Compression-Rock (ASTM D 2938)
- (UU) Unconsolidated Undrained Triaxial (ASTM D 2850)
- (UW) Unit Weight (ASTM D 4767)

APPARENT DENSITY OF COHESIONLESS SOILS

Description	SPT N_{60} (Blows / 12 in.)
Very Loose	0 - 5
Loose	5 - 10
Medium Dense	10 - 30
Dense	30 - 50
Very Dense	Greater than 50

MOISTURE

Description	Criteria
Dry	No discernable moisture
Moist	Moisture present, but no free water
Wet	Visible free water

PERCENT OR PROPORTION OF SOILS

Description	Criteria
Trace	Particles are present but estimated to be less than 5%
Few	5% - 10%
Little	15% - 25%
Some	30% - 45%
Mostly	50% - 100%

PARTICLE SIZE

Description		Size (in.)
Boulder		Greater than 12
Cobble		3 - 12
Gravel	Coarse	3/4 - 3
	Fine	1/5 - 3/4
Sand	Coarse	1/16 - 1/5
	Medium	1/64 - 1/16
	Fine	1/300 - 1/64
Silt and Clay		Less than 1/300

Paul Cotter
DESIGN OVERSIGHT Paul Cotter
7-16-12
SIGN OFF DATE

DRAWN BY J. Fang
CHECKED BY G. J. Gunaranjan

K. Thant
FIELD INVESTIGATION BY:
DATE: 3/2011, 4/2011

PREPARED FOR THE STATE OF CALIFORNIA DEPARTMENT OF TRANSPORTATION

L. Cheang
PROJECT ENGINEER

BRIDGE NO. 33E0116
POST MILES 28.5

RETAINING WALL No. 230
LOG OF TEST BORINGS 4 OF 4

GS GEOTECHNICAL LOG OF TEST BORINGS SHEET (ENGLISH) (REV. 7/16/10)

ORIGINAL SCALE IN INCHES FOR REDUCED PLANS 0 1 2 3

UNIT: 0724
PROJECT NUMBER & PHASE: 04000001601

DISREGARD PRINTS BEARING EARLIER REVISION DATES

REVISION DATES

SHEET 12 OF 12

FILE => 33-E0116-z-soil legend-ltb2.dgn

CONTRACT NO.:04-0A7101 PROJECT ID:

USERNAME => s124496 DATE PLOTTED => 10-APR-2013 TIME PLOTTED => 09:58

DIST	COUNTY	ROUTE	POST MILES TOTAL PROJECT	SHEET No	TOTAL SHEETS
04	Ala	880	28.4/29.2	768	789

REGISTERED CIVIL ENGINEER — DATE 3/29/13

4-8-13
PLANS APPROVAL DATE

REGISTERED PROFESSIONAL ENGINEER S.McCauley No. 71495 Exp. 12-31-13 CIVIL STATE OF CALIFORNIA

The State of California or its officers or agents shall not be responsible for the accuracy or completeness of electronic copies of this plan sheet.

ALAMEDA COUNTY TRANSPORTATION COMMISSION
1333 BROADWAY, SUITE 220
OAKLAND, CA 94612

RBF CONSULTING
ONE KAISER PLAZA, SUITE 1150
OAKLAND, CA 94612

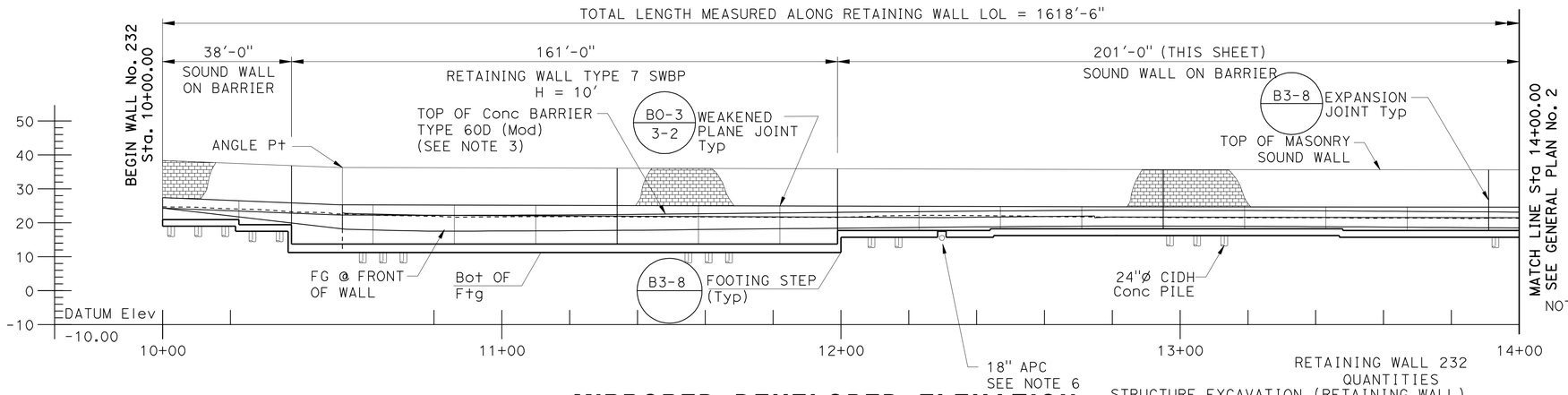

NOTE: NOT ALL PILES SHOWN

MIRRORED DEVELOPED ELEVATION

SCALE: 1" = 20'

RETAINING WALL 232 QUANTITIES

STRUCTURE EXCAVATION (RETAINING WALL)	3,377	CY
STRUCTURE BACKFILL (RETAINING WALL)	1,259	CY
24" CAST-IN-DRILLED-HOLE CONCRETE PILING	9,979	LF
STRUCTURAL CONCRETE, RETAINING WALL	1,085	CY
STRUCTURAL CONCRETE, SOUND WALL	140	CY
BAR REINFORCING STEEL (RETAINING WALL)	362,877	LB
SOUND WALL (MASONRY BLOCK)	18,338	SQFT
CONCRETE BARRIER (TYPE 736S MODIFIED)	861	LF
CONCRETE BARRIER (TYPE 736SV MODIFIED)	758	LF

CURVE DATA

CURVE No.	R	△	T	L
①	2485.00'	02°31'19"	110.05'	220.07'
②	230.00'	15°05'21"	30.46'	60.57'
③	1878.00'	14°13'47"	234.41'	466.41'
④	339.00'	11°02'30"	32.77'	65.33'
⑤	1855.00'	02°21'37"	38.21'	76.41'
⑥	45.50'	06°15'59"	2.49'	4.98'
⑦	2401.00'	03°27'28"	72.47'	144.90'

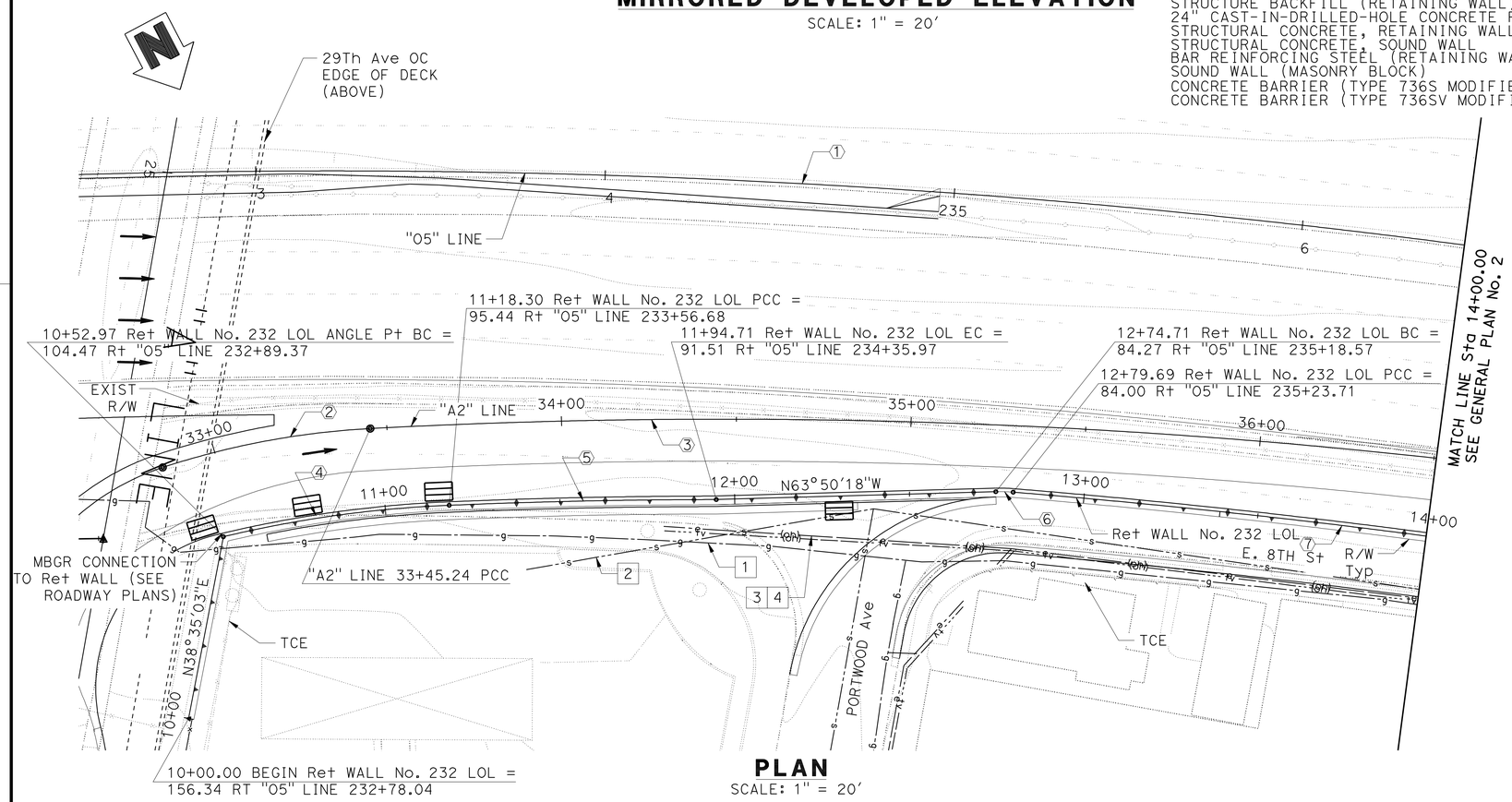

PLAN

SCALE: 1" = 20'

LEGEND:

→ Indicates direction of traffic

▤ Drainage inlet, see DRAINAGE PLANS

UTILITIES:

1. Exist 4" Gas (PG&E)
2. Exist 8" Sewer (City of Oakland)
3. Exist Electrical OH (PG&E)
4. Exist CATV

NOTES:

1. For Typical Sections, see "GENERAL PLAN No. 5" sheet
2. For utility information not shown, see ROADWAY PLANS
3. For limits of Concrete Barrier, see ROADWAY PLANS
4. For Lighting and Sign Information not shown, see ROADWAY PLANS
5. For Light Pole connection to wall, see "SOUND WALL ON RETAINING WALL DETAILS - MISCELLANEOUS DETAILS No. 4" sheet
6. For Pipe size and location, see Drainage Plans. For Retaining Wall Details around utility, see "UTILITY BRIDGE OVER DETAIL" on "SOUNDWALL ON RETAINING WALL DETAILS - MISCELLANEOUS DETAILS No. 3" sheet

NOTE:
THE CONTRACTOR SHALL VERIFY ALL CONTROLLING FIELD DIMENSIONS BEFORE ORDERING OR FABRICATING ANY MATERIAL.

DESIGN OVERSIGHT: Paul Cotter	DESIGN	BY S. McCauley	CHECKED C. Cho	LOAD & RESISTANCE FACTOR DESIGN — LIVE LOADING: HL93 W/"LOW-BOY"; PERMIT DESIGN VEHICLE
4-3-13 SIGN OFF DATE	DETAILS	BY J. Saldana	CHECKED S. McCauley	LAYOUT: BY J. Saldana — CHECKED S. McCauley
	QUANTITIES	BY C. Cho	CHECKED S. McCauley	SPECIFICATIONS: BY C. Harden — PLANS AND SPECS COMPARED S. Sheikh

PREPARED FOR THE STATE OF CALIFORNIA DEPARTMENT OF TRANSPORTATION

Chad Harden
PROJECT ENGINEER

BRIDGE NO. 33E0117
POST MILES 28.6

RETAINING WALL No. 232
GENERAL PLAN No. 1

DESIGN GENERAL PLAN SHEET (ENGLISH) (REV.7/16/10)

ORIGINAL SCALE IN INCHES FOR REDUCED PLANS 0 1 2 3

UNIT: 0724
PROJECT NUMBER & PHASE: 04000001601 CONTRACT NO.: 04-0A7101

DISREGARD PRINTS BEARING EARLIER REVISION DATES → REVISION DATES 2/24/11 3/30/12 6/26/12 3/29/13 SHEET 1 OF 22

FILE => 33-E0117-a-gp01.dgn

USERNAME => s124496 DATE PLOTTED => 10-APR-2013 TIME PLOTTED => 09:58

DIST	COUNTY	ROUTE	POST MILES TOTAL PROJECT	SHEET No	TOTAL SHEETS
04	Ala	880	28.4/29.2	769	789

REGISTERED CIVIL ENGINEER — DATE 3/29/13

4-8-13
PLANS APPROVAL DATE

REGISTERED PROFESSIONAL ENGINEER S.McCauley No. 71495 Exp. 12-31-13 CIVIL STATE OF CALIFORNIA

The State of California or its officers or agents shall not be responsible for the accuracy or completeness of electronic copies of this plan sheet.

ALAMEDA COUNTY TRANSPORTATION COMMISSION
1333 BROADWAY, SUITE 220
OAKLAND, CA 94612

RBF CONSULTING
ONE KAISER PLAZA, SUITE 1150
OAKLAND, CA 94612

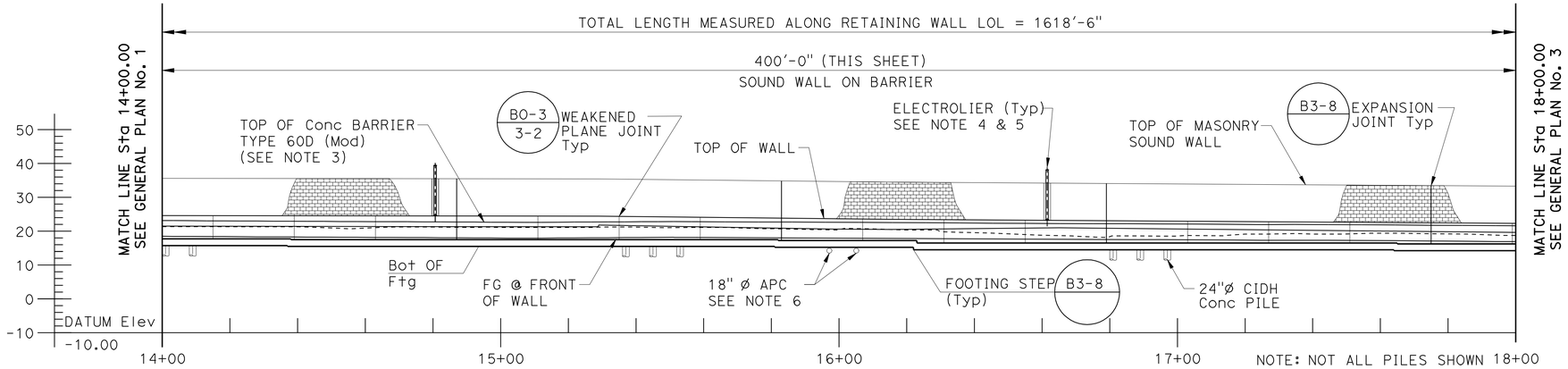

MIRRORED DEVELOPED ELEVATION

SCALE: 1" = 20'

CURVE DATA

CURVE No.	R	△	T	L
①	2485.00'	02°31'19"	110.05'	220.07'
②	1878.00'	14°13'47"	234.41'	466.41'
③	2401.00'	03°27'28"	72.47'	144.90'
④	1855.00'	04°07'12"	66.72'	133.39'
⑤	2406.00'	01°35'33"	33.44'	66.87'
⑥	2406.00'	08°07'27"	170.86'	341.16'

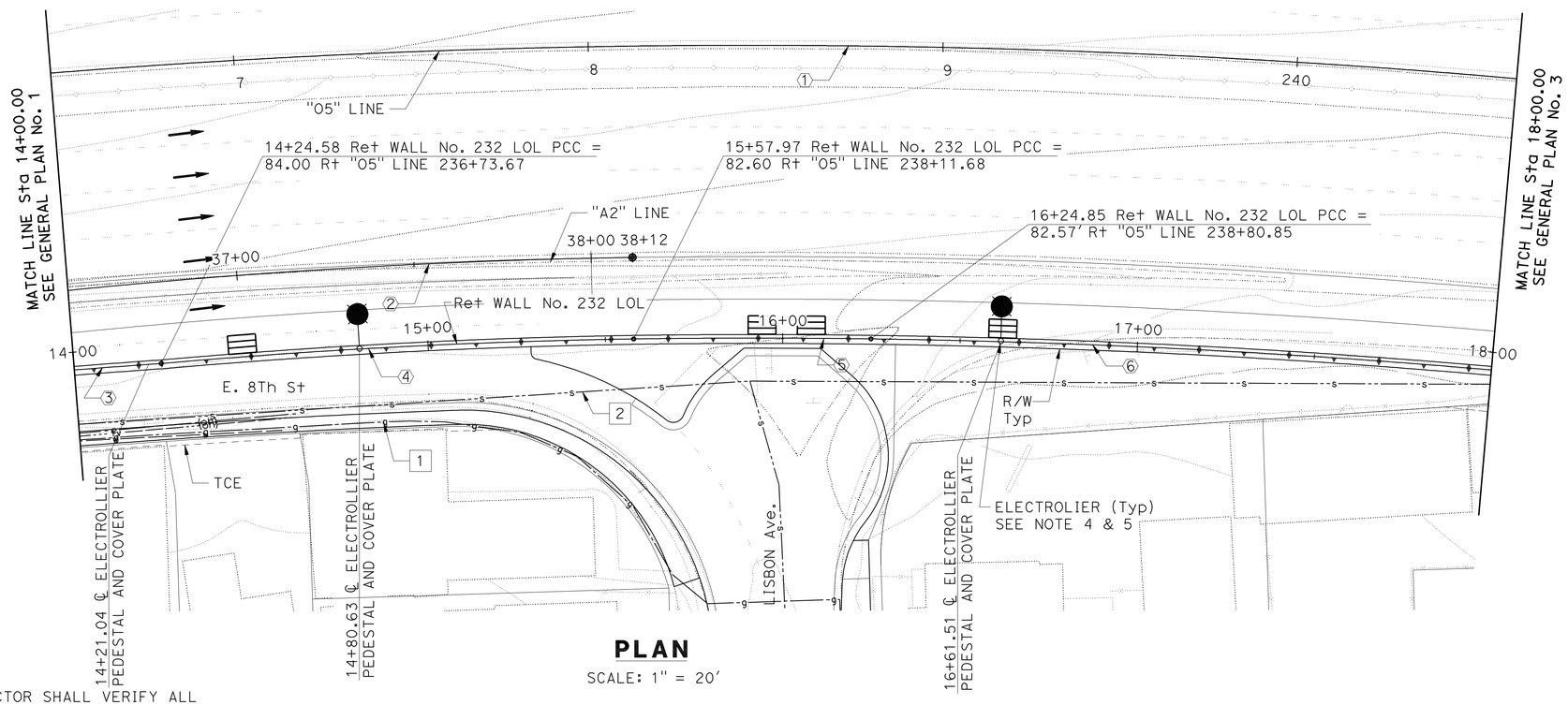

PLAN

SCALE: 1" = 20'

LEGEND:

- Indicates direction of traffic
- Electrolier, see ELECTRICAL PLANS
- Drainage inlet, see DRAINAGE PLANS

UTILITIES:

1. Exist 4" Gas (PG&E)
2. Exist 8" Sewer (City of Oakland)

NOTES:

1. For Typical Sections, see "GENERAL PLAN No. 5" sheet.
2. For utility information not shown, see ROADWAY PLANS.
3. For limits of Concrete Barrier, see ROADWAY PLANS.
4. For Lighting and Sign Locations, see ROADWAY PLANS.
5. For Light Pole connection to wall, see "SOUND WALL ON RETAINING WALL DETAILS - MISCELLANEOUS DETAILS No. 4" sheet.
6. For Pipe size and location, see DRAINAGE PLANS.

NOTE:
THE CONTRACTOR SHALL VERIFY ALL CONTROLLING FIELD DIMENSIONS BEFORE ORDERING OR FABRICATING ANY MATERIAL.

DESIGN OVERSIGHT Paul Cotter
4-3-13
SIGN OFF DATE

	BY	CHECKED
DESIGN	S. McCauley	C. Cho
DETAILS	J. Saldana	S. McCauley
QUANTITIES	C. Cho	S. McCauley

LOAD & RESISTANCE FACTOR DESIGN — LIVE LOADING: HL93 W/"LOW-BOY"; PERMIT DESIGN VEHICLE
LAYOUT: J. Saldana — CHECKED: S. McCauley
SPECIFICATIONS: C. Harden — PLANS AND SPECS COMPARED: S. Sheikh

PREPARED FOR THE STATE OF CALIFORNIA DEPARTMENT OF TRANSPORTATION

Chad Harden
PROJECT ENGINEER

BRIDGE NO. 33E0117
POST MILES 28.6

RETAINING WALL No. 232
GENERAL PLAN No. 2

DESIGN GENERAL PLAN SHEET (ENGLISH) (REV.7/16/10)

ORIGINAL SCALE IN INCHES FOR REDUCED PLANS 0 1 2 3

UNIT: 0724
PROJECT NUMBER & PHASE: 04000001601 CONTRACT NO.: 04-0A7101

DISREGARD PRINTS BEARING EARLIER REVISION DATES — REVISION DATES 2/24/11 3/30/12 6/26/12 3/29/13

SHEET 2 OF 22

FILE => 33-E0117-a-gp02.dgn

USERNAME => s124496 DATE PLOTTED => 10-APR-2013 TIME PLOTTED => 03:58

DIST	COUNTY	ROUTE	POST MILES TOTAL PROJECT	SHEET No	TOTAL SHEETS
04	Ala	880	28.4/29.2	770	789

Scott McCauley 3/29/13
REGISTERED CIVIL ENGINEER DATE

4-8-13
PLANS APPROVAL DATE

REGISTERED PROFESSIONAL ENGINEER S.McCauley No. 71495 Exp. 12-31-13 CIVIL STATE OF CALIFORNIA

The State of California or its officers or agents shall not be responsible for the accuracy or completeness of electronic copies of this plan sheet.

ALAMEDA COUNTY TRANSPORTATION COMMISSION
1333 BROADWAY, SUITE 220
OAKLAND, CA 94612

RBF CONSULTING
ONE KAISER PLAZA, SUITE 1150
OAKLAND, CA 94612

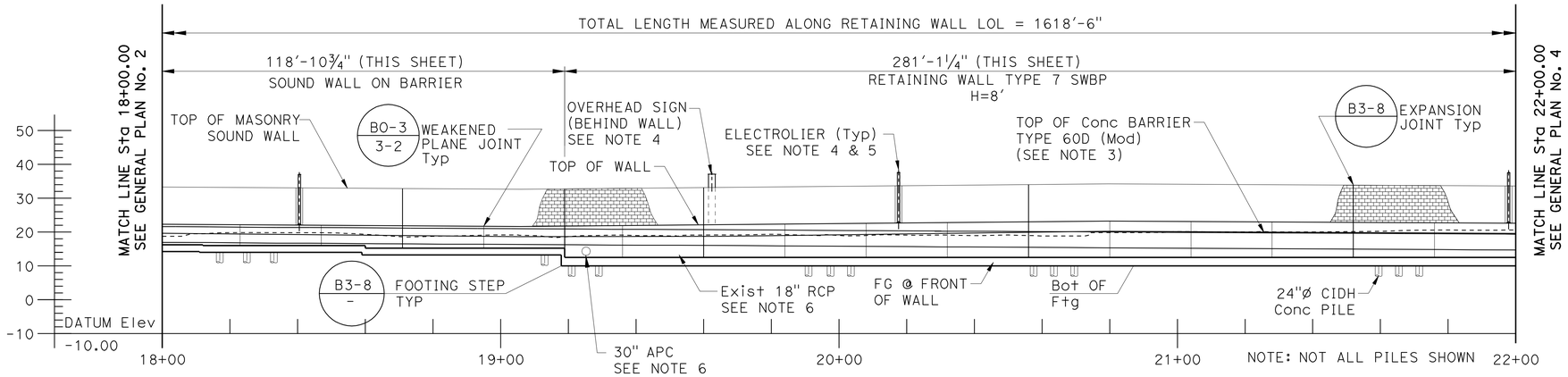

MIRRORED DEVELOPED ELEVATION

SCALE: 1" = 20'

CURVE DATA

CURVE No.	R	△	T	L
①	2485.00'	02°31'19"	110.05'	220.07'
②	2430.00'	06°21'33"	134.99'	269.70'
③	2406.00'	08°07'27"	170.86'	341.16'
④	2406.00'	02°03'25"	43.20'	86.38'
⑤	2409.00'	03°45'40"	79.09'	158.13'

UTILITIES:

2 Exist 8" Sewer (City of Oakland)
5 Exist 10" Sewer (City of Oakland)
6 Exist 24" Water (EBMUD)
7 Exist 6" Gas (PG&E)
8 Exist 12" Water (EBMUD)
9 Exist Electric OH (PG&E)
10 Exist 21" RCP

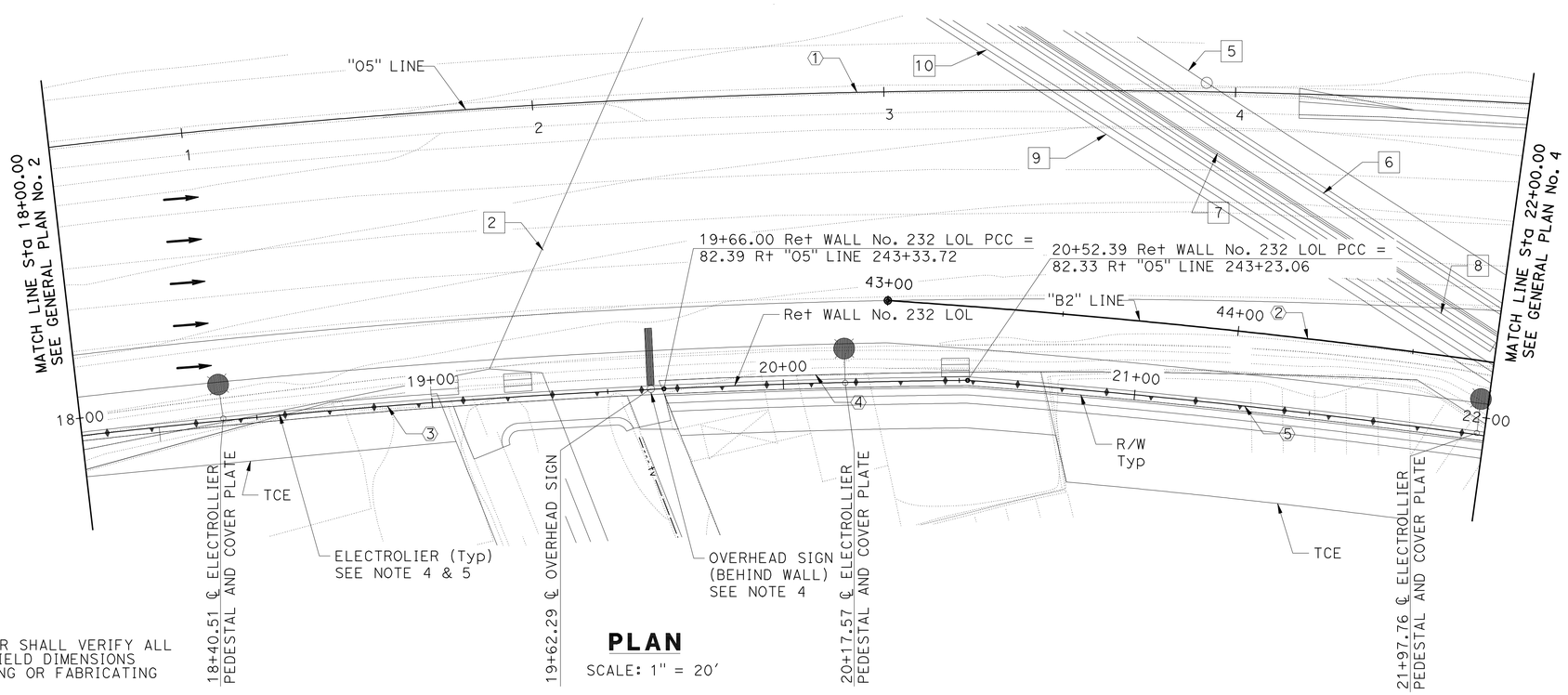

PLAN

SCALE: 1" = 20'

LEGEND:

→ Indicates direction of traffic
Electrolier, see ELECTRICAL PLANS
Drainage inlet, see DRAINAGE PLANS

NOTES:

1. For Typical Sections, see "GENERAL PLAN No. 5" sheet
2. For utility information not shown, see ROADWAY PLANS
3. For limits of Concrete Barrier, see ROADWAY PLANS
4. For Lighting and Sign Locations, see ROADWAY PLANS
5. For Light Pole connection to wall, see "SOUND WALL ON RETAINING WALL DETAILS - MISCELLANEOUS DETAILS No. 4" sheet
6. For Pipe size and location, see Drainage Plans. For Retaining Wall Details around utility, see "PIPE THROUGH WALL DETAIL" on "SOUNDWALL ON RETAINING WALL DETAILS - MISCELLANEOUS DETAILS No. 3" sheet

NOTE:
THE CONTRACTOR SHALL VERIFY ALL CONTROLLING FIELD DIMENSIONS BEFORE ORDERING OR FABRICATING ANY MATERIAL.

Paul Cotter
DESIGN OVERSIGHT Paul Cotter
4-3-13
SIGN OFF DATE

	BY	CHECKED
DESIGN	S. McCauley	C. Cho
DETAILS	J. Saldana	S. McCauley
QUANTITIES	C. Cho	S. McCauley

LOAD & RESISTANCE FACTOR DESIGN — LIVE LOADING: HL93 W/"LOW-BOY"; PERMIT DESIGN VEHICLE
LAYOUT — BY J. Saldana — CHECKED S. McCauley
SPECIFICATIONS — BY C. Harden — PLANS AND SPECS COMPARED S. Sheikh

PREPARED FOR THE STATE OF CALIFORNIA DEPARTMENT OF TRANSPORTATION

Chad Harden
PROJECT ENGINEER

BRIDGE NO. 33E0117
POST MILES 28.6

RETAINING WALL No. 232
GENERAL PLAN No. 3

DESIGN GENERAL PLAN SHEET (ENGLISH) (REV.7/16/10)

ORIGINAL SCALE IN INCHES FOR REDUCED PLANS 0 1 2 3

UNIT: 0724
PROJECT NUMBER & PHASE: 04000001601 CONTRACT NO.: 04-0A7101

DISREGARD PRINTS BEARING EARLIER REVISION DATES → 2/24/11 3/30/12 6/26/12 3/29/13

SHEET 3 OF 22

FILE => 33-E0117-a-gp03.dgn

USERNAME => s124196 DATE PLOTTED => 10-APR-2013 TIME PLOTTED => 09:58

DIST	COUNTY	ROUTE	POST MILES TOTAL PROJECT	SHEET No	TOTAL SHEETS
04	Ala	880	28.4/29.2	771	789

Scott McCauley 3/29/13
REGISTERED CIVIL ENGINEER DATE

4-8-13
PLANS APPROVAL DATE

REGISTERED PROFESSIONAL ENGINEER S.McCauley No. 71495 Exp. 12-31-13 CIVIL STATE OF CALIFORNIA

The State of California or its officers or agents shall not be responsible for the accuracy or completeness of electronic copies of this plan sheet.

ALAMEDA COUNTY TRANSPORTATION COMMISSION
1333 BROADWAY, SUITE 220
OAKLAND, CA 94612

RBF CONSULTING
ONE KAISER PLAZA, SUITE 1150
OAKLAND, CA 94612

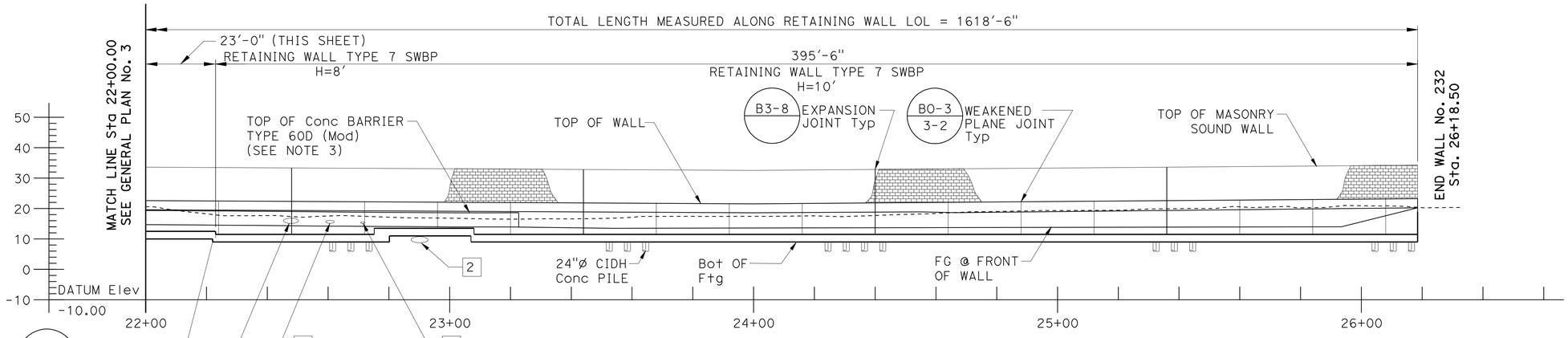

NOTE: NOT ALL PILES SHOWN

MIRRORED DEVELOPED ELEVATION

SCALE: 1" = 20'

CURVE DATA

CURVE No.	R	△	T	L
①	2485.00'	02°31'19"	110.05'	220.07'
②	2430.00'	06°21'33"	134.99'	269.70'
③	1000.00'	08°35'40"	75.14'	150.00'
④	670.00'	23°55'39"	141.97'	279.80'
⑤	2409.00'	03°45'40"	79.09'	158.13'

UTILITIES:

5 Exist 10" Sewer (City of Oakland)
6 Exist 24" Water (EBMUD)
7 Exist 6" Gas (PG&E)
8 Exist 12" Water (EBMUD)
9 Exist Electric OH (PG&E)
10 Exist 21" RCP
11 Exist 12" Sewer (City of Oakland)

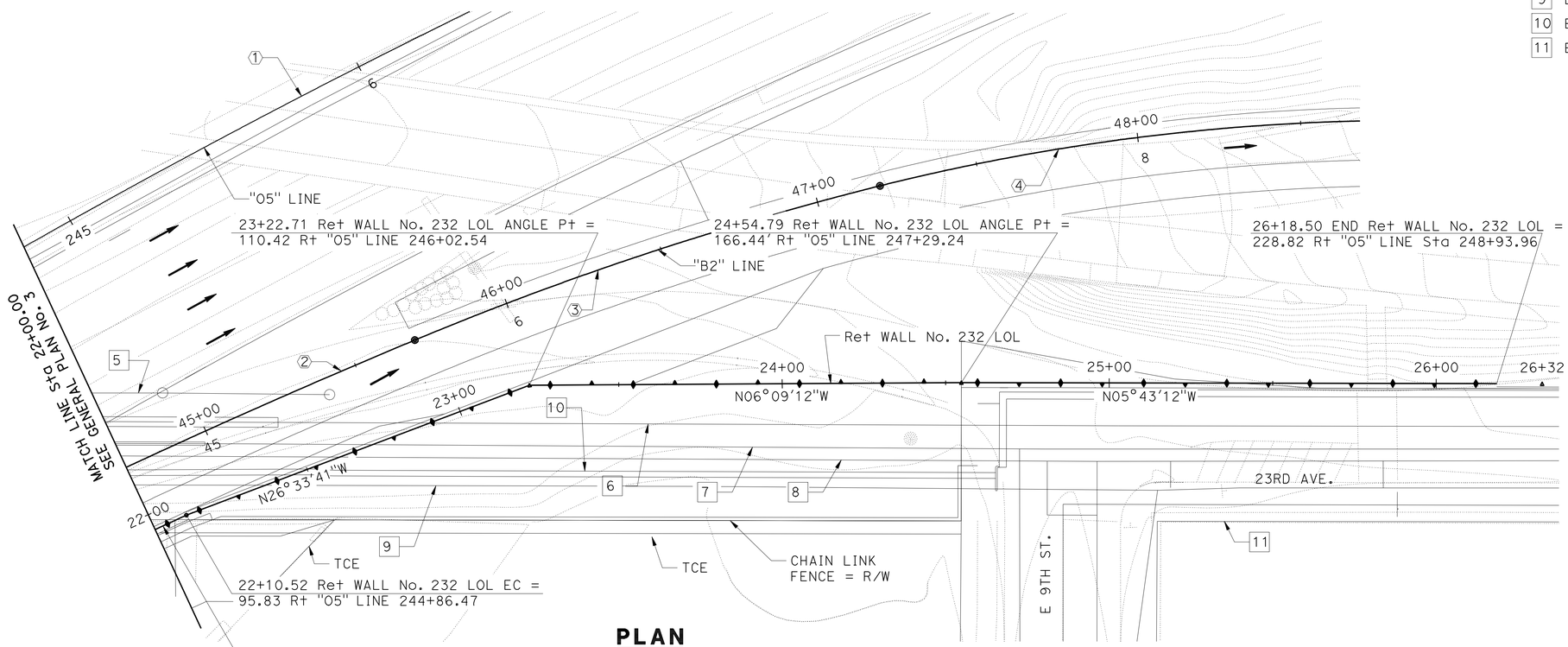

PLAN

SCALE: 1" = 20'

LEGEND:

→ Indicates direction of traffic

NOTES:

1. For Typical Sections, see "GENERAL PLAN No. 5" sheet
2. For utility information not shown, see ROADWAY PLANS
3. For limits of Concrete Barrier, see ROADWAY PLANS
4. For Lighting and Sign Locations, see ROADWAY PLANS
5. For Light Pole connection to wall, see "SOUND WALL ON RETAINING WALL DETAILS - MISCELLANEOUS DETAILS No. 4" sheet
6. For Pipe Size and location, see "DRAINAGE PLANS"
7. For Retaining Wall Details around Utility, see "PIPE THROUGH WALL DETAIL" on "SOUNDWALL on RETAINING WALL DETAILS - MISCELLANEOUS DETAIL No. 3" sheet

NOTE:
THE CONTRACTOR SHALL VERIFY ALL CONTROLLING FIELD DIMENSIONS BEFORE ORDERING OR FABRICATING ANY MATERIAL.

Paul Cotter
DESIGN OVERSIGHT Paul Cotter
4-3-13
SIGN OFF DATE

	BY	CHECKED
DESIGN	S. McCauley	C. Cho
DETAILS	J. Saldana	S. McCauley
QUANTITIES	C. Cho	S. McCauley

LOAD & RESISTANCE FACTOR DESIGN — LIVE LOADING: HL93 W/"LOW-BOY"; PERMIT DESIGN VEHICLE
LAYOUT: BY J. Saldana — CHECKED S. McCauley
SPECIFICATIONS: BY C. Harden — PLANS AND SPECS COMPARED S. Sheikh

PREPARED FOR THE STATE OF CALIFORNIA DEPARTMENT OF TRANSPORTATION

Chad Harden
PROJECT ENGINEER

BRIDGE NO. 33E0117
POST MILES 28.6

RETAINING WALL No. 232
GENERAL PLAN No. 4

DESIGN GENERAL PLAN SHEET (ENGLISH) (REV.7/16/10)

ORIGINAL SCALE IN INCHES FOR REDUCED PLANS 0 1 2 3

UNIT: 0724
PROJECT NUMBER & PHASE: 04000001601 CONTRACT NO.: 04-0A7101

DISREGARD PRINTS BEARING EARLIER REVISION DATES → 2/24/11 3/30/12 6/26/12 3/29/13

SHEET 4 OF 22

FILE => 33-E0117-a-gp04.dgn

USERNAME => s124496 DATE PLOTTED => 10-APR-2013 TIME PLOTTED => 03:58

DIST	COUNTY	ROUTE	POST MILES TOTAL PROJECT	SHEET No	TOTAL SHEETS
04	Ala	880	28.4/29.2	772	789

REGISTERED CIVIL ENGINEER — DATE 3/29/13

4-8-13
PLANS APPROVAL DATE

REGISTERED PROFESSIONAL ENGINEER S.McCauley No. 71495 Exp. 12-31-13 CIVIL STATE OF CALIFORNIA

The State of California or its officers or agents shall not be responsible for the accuracy or completeness of electronic copies of this plan sheet.

ALAMEDA COUNTY TRANSPORTATION COMMISSION
1333 BROADWAY, SUITE 220
OAKLAND, CA 94612

RBF CONSULTING
ONE KAISER PLAZA, SUITE 1150
OAKLAND, CA 94612

TOP OF WALL ELEVATION TABLE

	WALL LOL STATION	TOP OF WALL Elev (Ft)
Beg Ret WALL No. 232	10+00.00	27.39
	+10	26.99
	+20	26.59
	+30	26.18
	+40	25.78
	+50	25.38
	+60	25.28
	+70	25.26
	+80	25.23
	+90	25.21
	11+00.00	25.18
	+10	25.15
	+20	25.13
	+30	25.10
	+40	25.08
	+50	25.05
	+60	25.03
	+70	25.00
	+80	24.97
	+90	24.95
	12+00.00	24.92
	+10	24.90
	+20	24.87
	+30	24.84
	+40	24.82
	+50	24.79
	+60	24.77
	+70	24.74
	+80	24.72
	+90	24.71
	13+00.00	24.70
	+10	24.69
	+20	24.68
	+30	24.67
	+40	24.66
	+50	24.65
	+60	24.64
	+70	24.63
	+80	24.62
	+90	24.61
	14+00.00	24.60
	+10	24.59
	+20	24.58
	+30	24.57
	+40	24.56
	+50	24.55
	+60	24.55
	+70	24.54
	+80	24.53
	+90	24.52

WALL LOL STATION	TOP OF WALL Elev (Ft)
15+00.00	24.51
+10	24.50
+20	24.49
+30	24.47
+40	24.35
+50	24.24
+60	24.13
+70	24.01
+80	23.90
+90	23.78
16+00.00	23.67
+10	23.56
+20	23.47
+30	23.40
+40	23.34
+50	23.28
+60	23.21
+70	23.15
+80	23.08
+90	23.02
17+00.00	22.96
+10	22.89
+20	22.83
+30	22.76
+40	22.70
+50	22.64
+60	22.57
+70	22.51
+80	22.45
+90	22.38
18+00.00	22.32
+10	22.25
+20	22.19
+30	22.13
+40	22.06
+50	22.00
+60	21.93
+70	21.87
+80	21.81
+90	21.74
19+00.00	21.68
+10	21.68
+20	21.77
+30	21.86
+40	21.96
+50	22.05
+60	22.14
+70	22.23
+80	22.33
+90	22.42
20+00.00	22.51
+10	22.60
+20	22.70
+30	22.79
+40	22.88
+50	22.98
+60	23.07
+70	23.16
+80	23.25
+90	23.20

	WALL LOL STATION	TOP OF WALL Elev (Ft)
	21+00.00	23.14
	+10	23.09
	+20	23.04
	+30	22.99
	+40	22.94
	+50	22.88
	+60	22.83
	+70	22.78
	+80	22.73
	+90	22.68
	22+00.00	22.62
	+10	22.57
	+20	22.52
	+30	22.47
	+40	22.42
	+50	22.36
	+60	22.31
	+70	22.26
	+80	22.21
	+90	22.15
	23+00.00	22.10
	+10	22.05
	+20	22.00
	+30	21.95
	+40	21.89
	+50	21.84
	+60	21.79
	+70	21.74
	+80	21.69
	+90	21.63
	24+00.00	21.58
	+10	21.66
	+20	21.74
	+30	21.81
	+40	21.89
	+50	21.97
	+60	22.04
	+70	22.12
	+80	22.20
	+90	22.27
	25+00.00	22.35
	+10	22.43
	+20	22.50
	+30	22.58
	+40	22.66
	+50	22.73
	+60	22.81
	+70	22.89
	+80	22.96
	+90	23.04
	26+00.00	23.12
	+10	23.20
END Ret Wall No. 232	26+18.50	23.26

NOTE:
THE CONTRACTOR SHALL VERIFY ALL CONTROLLING FIELD DIMENSIONS BEFORE ORDERING OR FABRICATING ANY MATERIAL.

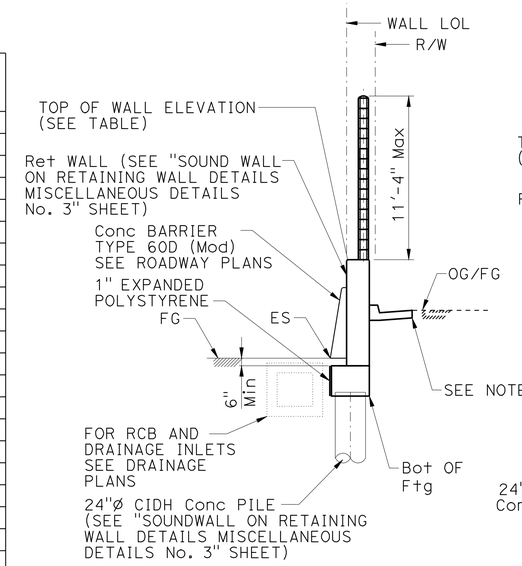

SOUND WALL ON BARRIER

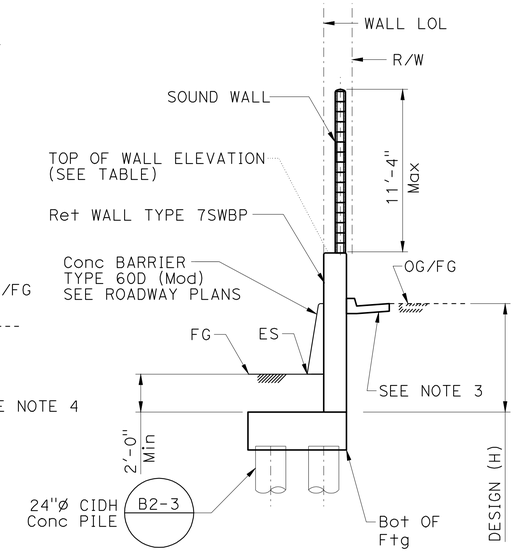

RETAINING WALL TYPE 7SWBP

TYPICAL SECTION

NO SCALE

NOTES:

1. See ROADWAY PLANS for All Pipes and Drainage Inlet and Outlet Locations
2. For Existing Pipes and Utilities, See ROADWAY PLANS
3. For Type and Limits of Curb and Gutter, See ROADWAY PLANS

STANDARD PLANS DATED MAY 2006

A10A	ACRONYMS AND ABBREVIATIONS (SHEET 1 OF 2)
A10B	ACRONYMS AND ABBREVIATIONS (SHEET 2 OF 2)
A10C	SYMBOLS (SHEET 1 OF 2)
A10D	SYMBOLS (SHEET 2 OF 2)
A62B	LIMITS OF PAYMENT FOR EXCAVATION AND BACKFILL BRIDGE SURCHARGE AND WALL
BO-3	BRIDGE DETAILS
B2-3	16" AND 24" CAST-IN DRILLED HOLE CONCRETE PILE
B3-8	RETAINING WALL DETAILS No. 1
B3-9	RETAINING WALL DETAILS No. 2
RSP B15-6	SOUND WALL MASONRY BLOCK ON TYPE 736S / SV BARRIER DETAILS (1)
B15-7	SOUND WALL MASONRY BLOCK ON TYPE 736S / SV BARRIER DETAILS (2)
RSP B15-15	SOUND WALL MASONRY BLOCK ON TYPE 736S / SV BARRIER ON PILE FOOTING FOR SPANNING UTILITIES

STANDARD PLAN SHEET No.
DETAIL No.

INDEX TO PLANS

SHEET NO.	TITLE
1	GENERAL PLAN No. 1
2	GENERAL PLAN No. 2
3	GENERAL PLAN No. 3
4	GENERAL PLAN No. 4
5	GENERAL PLAN No. 5
6	FOUNDATION PLAN No. 1
7	FOUNDATION PLAN No. 2
8	FOUNDATION PLAN No. 3
9	MASONRY BLOCK SOUND WALL WITH BARRIER ON RETAINING WALL - DETAILS No. 1
10	MASONRY BLOCK SOUND WALL WITH BARRIER ON RETAINING WALL - DETAILS No. 2
11	RETAINING WALL TYPE 7SWBP - DETAILS No. 1
12	RETAINING WALL TYPE 7SWBP - DETAILS No. 2
13	SOUND WALL ON RETAINING WALL DETAILS - DETAILS No. 1
14	SOUND WALL ON RETAINING WALL DETAILS - DETAILS No. 2
15	SOUND WALL ON RETAINING WALL DETAILS - DETAILS No. 3
16	SOUND WALL ON RETAINING WALL DETAILS - DETAILS No. 4
17	LOG OF TEST BORINGS 1 OF 4
18	LOG OF TEST BORINGS 2 OF 4
19	LOG OF TEST BORINGS 3 OF 4
20	LOG OF TEST BORINGS 4 OF 4
21	SOIL LEGEND LOG OF TEST BORINGS 1 OF 2
22	SOIL LEGEND LOG OF TEST BORINGS 2 OF 2

DESIGN OVERSIGHT Paul Cotter
4-3-13
SIGN OFF DATE

	BY	CHECKED
DESIGN	S. McCauley	C. Cho
DETAILS	J. Saldana	S. McCauley
QUANTITIES	C. Cho	S. McCauley

LOAD & RESISTANCE FACTOR DESIGN — LIVE LOADING: HL93 W/"LOW-BOY"; PERMIT DESIGN VEHICLE
LAYOUT — BY J. Saldana — CHECKED S. McCauley
SPECIFICATIONS — BY C. Harden — PLANS AND SPECS COMPARED S. Sheikh

PREPARED FOR THE STATE OF CALIFORNIA DEPARTMENT OF TRANSPORTATION

Chad Harden
PROJECT ENGINEER

BRIDGE NO. 33E0117
POST MILES 28.6

RETAINING WALL No. 232
GENERAL PLAN No. 5

DESIGN GENERAL PLAN SHEET (ENGLISH) (REV.7/16/10)

ORIGINAL SCALE IN INCHES FOR REDUCED PLANS 0 1 2 3

UNIT: 0724
PROJECT NUMBER & PHASE: 04000001601 CONTRACT NO.: 04-0A7101

DISREGARD PRINTS BEARING EARLIER REVISION DATES — REVISION DATES 2/04/11 3/30/12 6/26/12 3/29/13

SHEET 5 OF 22

FILE => 33-E0117-a-gp05.dgn

USERNAME => s124496 DATE PLOTTED => 10-APR-2013 TIME PLOTTED => 09:58

DIST	COUNTY	ROUTE	POST MILES TOTAL PROJECT	SHEET No	TOTAL SHEETS
04	Ala	880	28.4/29.2	773	789

REGISTERED CIVIL ENGINEER — DATE 3/29/13

4-8-13
PLANS APPROVAL DATE

REGISTERED PROFESSIONAL ENGINEER S.McCauley No. 71495 Exp. 12-31-13 CIVIL STATE OF CALIFORNIA

The State of California or its officers or agents shall not be responsible for the accuracy or completeness of electronic copies of this plan sheet.

ALAMEDA COUNTY TRANSPORTATION COMMISSION
1333 BROADWAY, SUITE 220
OAKLAND, CA 94612

RBF CONSULTING
ONE KAISER PLAZA, SUITE 1150
OAKLAND, CA 94612

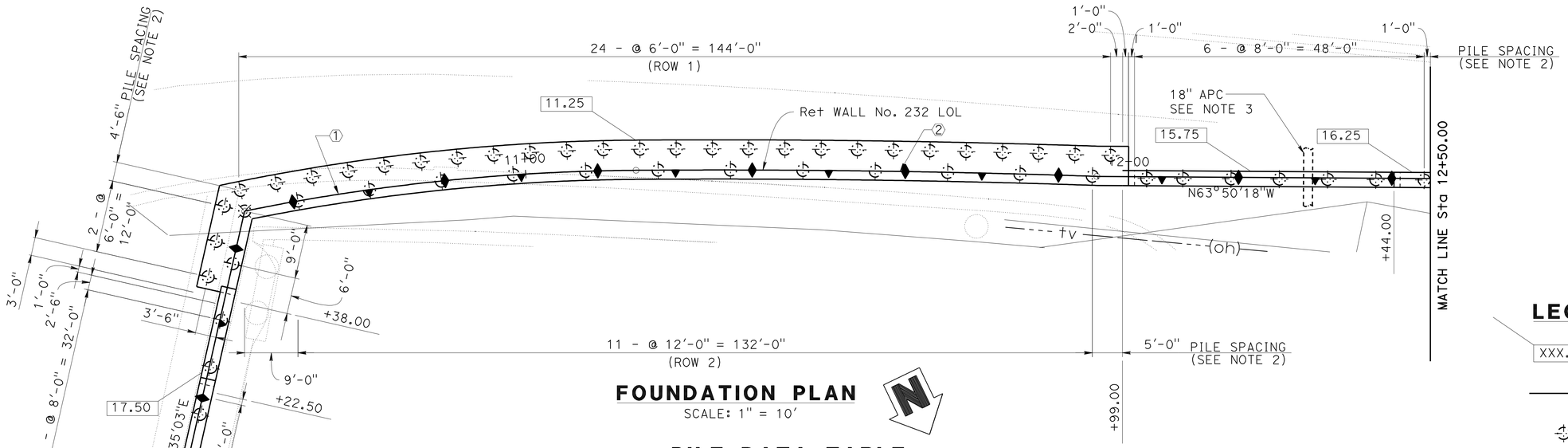

FOUNDATION PLAN

SCALE: 1" = 10'

LEGEND:

XXX.XX — Indicates Bottom of Footing Elevation

——— Indicates New Construction

Indicates 24" CIDH PILE

PILE DATA TABLE

WALL 232 LOL STATION	PILE TYPE	NOMINAL RESISTANCE (Kips)		DESIGN TIP ELEVATION (Ft)	SPECIFIED TIP ELEVATION (Ft)
		COMPRESSION	TENSION		
10+00 TO 10+38	24" CIDH	70	--	+1 (a) -4 (d)	-4
10+38 TO 11+99	24" CIDH	160	80	-20 (a) -14 (b) -9 (d)	-20
11+99 TO 19+19	24" CIDH	70	--	-2 (a) -7 (d)	-7
19+19 TO 22+20 23+10 TO 26+19	24" CIDH	160	80	-23 (a) -12 (d) -17 (b)	-23
22+20 TO 23+10	24" CIDH	280	30	-37.5 (a) -26 (c) -8.5 (b) -11(d)	-37.5

NOTES:

1. Design Tip Elevations are controlled by: (a) Compression, (b) Tension, (c) Settlement, and (d) Lateral Load.
2. For Design Section A-A, there are no Design Tip Elevations for Tension and Tolerable Settlement. For Design Section B-B and Section C-C, there are no Design Tip Elevations for Tolerable Settlement.
3. The Specified Tip Elevation shall not be raised.

CURVE DATA

CURVE No.	R	△	T	L
①	339.00'	11°02'30"	32.77'	65.33'
②	1855.00'	02°21'37"	38.21'	76.41'
③	45.50'	06°15'59"	2.49'	4.98'
④	2401.00'	03°27'28"	72.47'	144.90'
⑤	1878.00'	14°13'47"	234.41'	466.41'

NOTES:

1. For Location of Existing Utilities, See ROADWAY PLANS.
2. Pile Spacing Dimensions Measured Along Wall LOL.
3. For Pipe size and location, see DRAINAGE PLANS. For Retaining Wall Details around utility, see "UTILITY BRIDGE OVAL DETAIL" on SOUNDWALL ON RETAINING WALL DETAILS - MISCELLANEOUS DETAILS No. 3" Sheet.

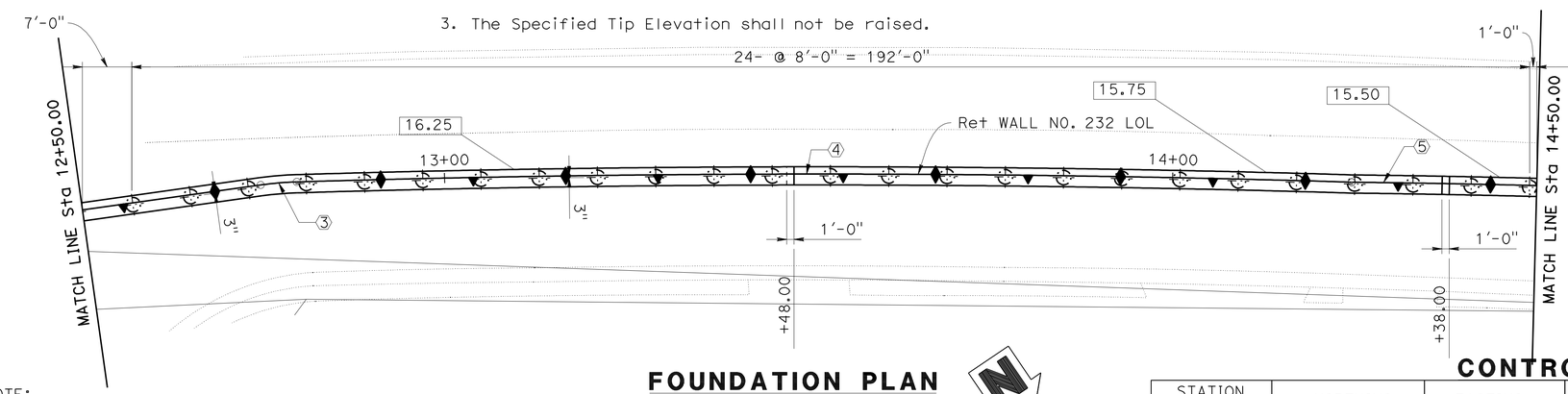

FOUNDATION PLAN

SCALE: 1" = 10'

BENCHMARKS:

Elevations as shown hereon are in terms of the North American Vertical Datum of 1988 (NAVD88), based locally upon the following Benchmarks as published by the County of Orange:

BASIS OF COORDINATES:

1. COORDINATES, BEARINGS, AND DISTANCES ARE IN TERMS OF THE CALIFORNIA COORDINATE SYSTEM OF 1983, ZONE 3, EPOCH 1991.35, BASED LOCALLY UPON THE RECORD OF SURVEY FILED IN BOOK 22 OF RECORD SURVEYS, PAGES 45-50, COUNTY OF ALAMEDA, ALL COORDINATES AND DISTANCES ARE GRID. MULTIPLY DISTANCES BY 1.00006668 TO OBTAIN GROUND DISTANCES.
2. ELEVATIONS ARE IN TERMS OF NAVD88 AND ARE BASED LOCALLY UPON ELEVATIONS SHOW ON THAT RECORD OF SURVEY FILED IN BOOK 22 OF THE RECORD SURVEYS, PAGES 45-50, COUNTY OF ALAMEDA.

CONTROL FOR DESIGN AND CONSTRUCTION

STATION DESIGNATION	NORTHING	EASTING	ELEVATION	DESCRIPTION
20454	2109691.916	6060265.628	21.04	2.25" BRONZE DISK CALIFORNIA DIVISION OF HIGHWAYS/LISBON & E 8th St

NOTE:
THE CONTRACTOR SHALL VERIFY ALL CONTROLLING FIELD DIMENSIONS BEFORE ORDERING OR FABRICATING ANY MATERIAL.

GEOTECHNICAL PROFESSIONAL APPROVAL DATE

Paul Cotter
DESIGN OVERSIGHT — Paul Cotter
4-3-13
SIGN OFF DATE

SCALE: 1"=10' | VERT.DATUM NAV88 | HORZ.DATUM CCS83
PHOTOGRAMMETRY AS OF: 9-04-08 | ALIGNMENT TIES
SURVEYED — BY D. Bustamante | DRAFTED — BY
FIELD CHECKED — BY D. Baumann | CHECKED — BY

	BY	CHECKED
DESIGN	S. McCauley	C. Cho
DETAILS	S. Nguyen	S. McCauley
QUANTITIES	C. Cho	S. McCauley

PREPARED FOR THE STATE OF CALIFORNIA DEPARTMENT OF TRANSPORTATION

Chad Harden
PROJECT ENGINEER

BRIDGE NO. 33E0117
POST MILES 28.6

RETAINING WALL No. 232
FOUNDATION PLAN No. 1

FOUNDATION PLAN SHEET (ENGLISH) (REV.7/16/10)

ORIGINAL SCALE IN INCHES FOR REDUCED PLANS 0 1 2 3

UNIT: 0724
PROJECT NUMBER & PHASE: 04000001601 CONTRACT NO.: 04-0A7101

DISREGARD PRINTS BEARING EARLIER REVISION DATES — REVISION DATES 2/24/11 3/30/12 6/26/12 3/29/13

SHEET 6 OF 22

FILE => 33-E0117-e-fp101.dgn

USERNAME => s124496 DATE PLOTTED => 10-APR-2013 TIME PLOTTED => 09:59

DIST	COUNTY	ROUTE	POST MILES TOTAL PROJECT	SHEET No	TOTAL SHEETS
04	Ala	880	28.4/29.2	774	789

REGISTERED CIVIL ENGINEER — DATE 3/29/13

4-8-13
PLANS APPROVAL DATE

REGISTERED PROFESSIONAL ENGINEER S.McCauley No. 71495 Exp. 12-31-13 CIVIL STATE OF CALIFORNIA

The State of California or its officers or agents shall not be responsible for the accuracy or completeness of electronic copies of this plan sheet.

ALAMEDA COUNTY TRANSPORTATION COMMISSION
1333 BROADWAY, SUITE 220
OAKLAND, CA 94612

RBF CONSULTING
ONE KAISER PLAZA, SUITE 1150
OAKLAND, CA 94612

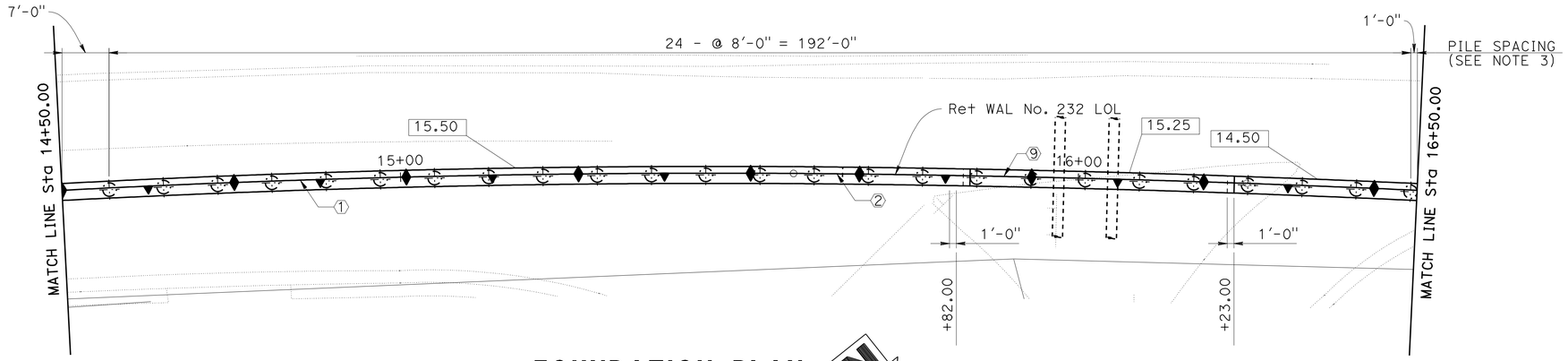

FOUNDATION PLAN
SCALE: 1" = 10'

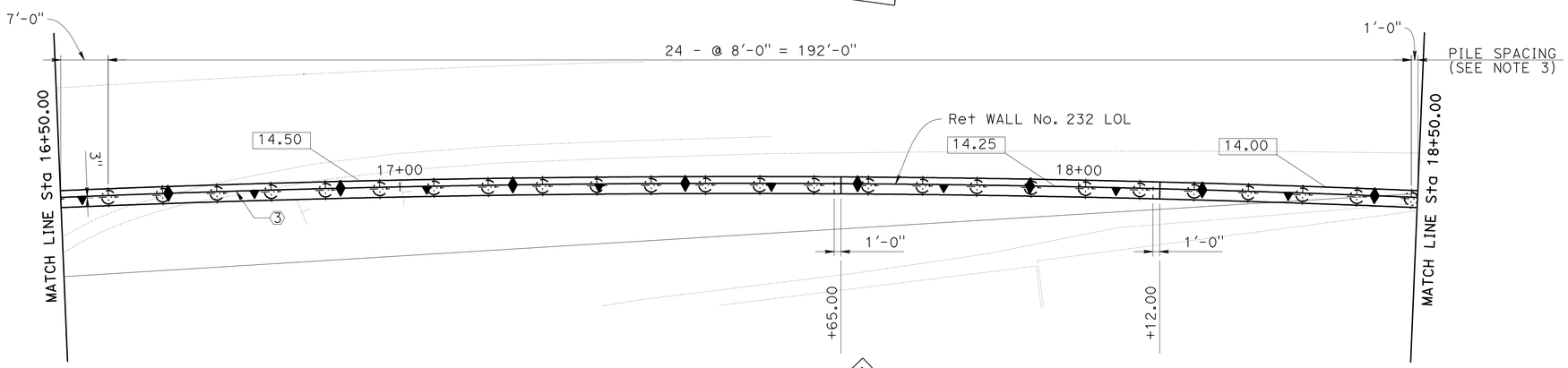

FOUNDATION PLAN
SCALE: 1" = 10'

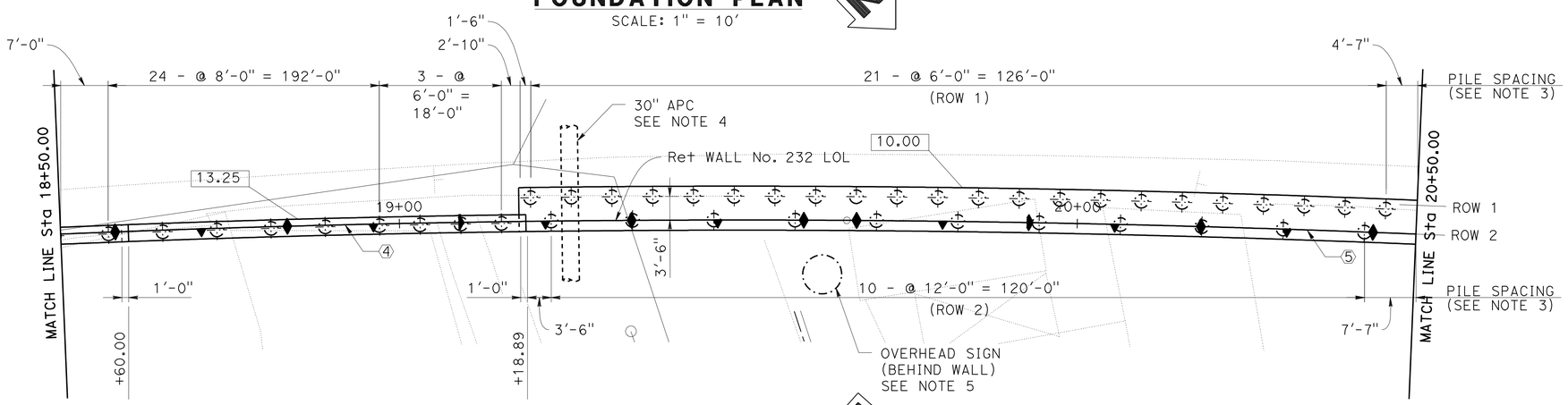

FOUNDATION PLAN
SCALE: 1" = 10'

NOTE:
THE CONTRACTOR SHALL VERIFY ALL CONTROLLING FIELD DIMENSIONS BEFORE ORDERING OR FABRICATING ANY MATERIAL.

LEGEND:

XXX.XX — Indicates Bottom of Footing Elevation

——— Indicates New Construction

Indicates 24" CIDH Pile

NOTES:

1. For Location of Existing Utilities, See ROAD PLANS.
2. For Pile Data Table and Basis of Coordinates, See "RETAINING WALL No. 232 FOUNDATION PLAN No. 1" sheet.
3. Pile Spacing Dimensions Measured Along Wall LOL.
4. For Pipe size and location, see Drainage Plans. For Retaining Wall Details around utility, see "UTILITY BRIDGE OVER DETAIL" on "SOUNDWALL ON RETAINING WALL DETAILS - MISCELLANEOUS DETAILS No. 3" sheet.
5. For Sign Location and Details, See ROAD PLANS.

CURVE DATA

CURVE No.	R	△	T	L
①	1855.00'	04°07'12"	66.72'	133.39'
②	2406.00'	01°35'33"	33.44'	66.87'
③	2406.00'	08°07'27"	170.86'	341.16'
④	2406.00'	08°07'27"	170.86'	341.16'
⑤	2406.00'	02°03'25"	43.20'	86.38'

GEOTECHNICAL PROFESSIONAL APPROVAL DATE

DESIGN OVERSIGHT Paul Cotter
4-3-13
SIGN OFF DATE

SCALE: 1"=10'	VERT.DATUM NAV88	HORZ.DATUM CCS83	
PHOTOGRAMMETRY AS OF: 9-04-08		ALIGNMENT TIES	
SURVEYED	BY D. Bustamante	DRAFTED	BY
FIELD CHECKED	BY D. Baumann	CHECKED	BY

	BY	CHECKED
DESIGN	S. McCauley	C. Cho
DETAILS	S. Nguyen	S. McCauley
QUANTITIES	C. Cho	S. McCauley

PREPARED FOR THE STATE OF CALIFORNIA DEPARTMENT OF TRANSPORTATION

Chad Harden
PROJECT ENGINEER

BRIDGE NO. 33E0117
POST MILES 28.6

RETAINING WALL No. 232
FOUNDATION PLAN No. 2

FOUNDATION PLAN SHEET (ENGLISH) (REV.7/16/10)

ORIGINAL SCALE IN INCHES FOR REDUCED PLANS 0 1 2 3

UNIT: 0724
PROJECT NUMBER & PHASE: 04000001601 CONTRACT NO.: 04-0A7101

DISREGARD PRINTS BEARING EARLIER REVISION DATES — REVISION DATES 2/04/11 3/30/12 6/26/12 3/29/13

SHEET 7 OF 22

FILE => 33-E0117-e-fp102.dgn

USERNAME => s124496 DATE PLOTTED => 10-APR-2013 TIME PLOTTED => 09:59

DIST	COUNTY	ROUTE	POST MILES TOTAL PROJECT	SHEET No	TOTAL SHEETS
04	Ala	880	28.4/29.2	775	789

REGISTERED CIVIL ENGINEER — DATE 3/29/13

4-8-13
PLANS APPROVAL DATE

REGISTERED PROFESSIONAL ENGINEER S.McCauley No. 71495 Exp. 12-31-13 CIVIL STATE OF CALIFORNIA

The State of California or its officers or agents shall not be responsible for the accuracy or completeness of electronic copies of this plan sheet.

ALAMEDA COUNTY TRANSPORTATION COMMISSION
1333 BROADWAY, SUITE 220
OAKLAND, CA 94612

RBF CONSULTING
ONE KAISER PLAZA, SUITE 1150
OAKLAND, CA 94612

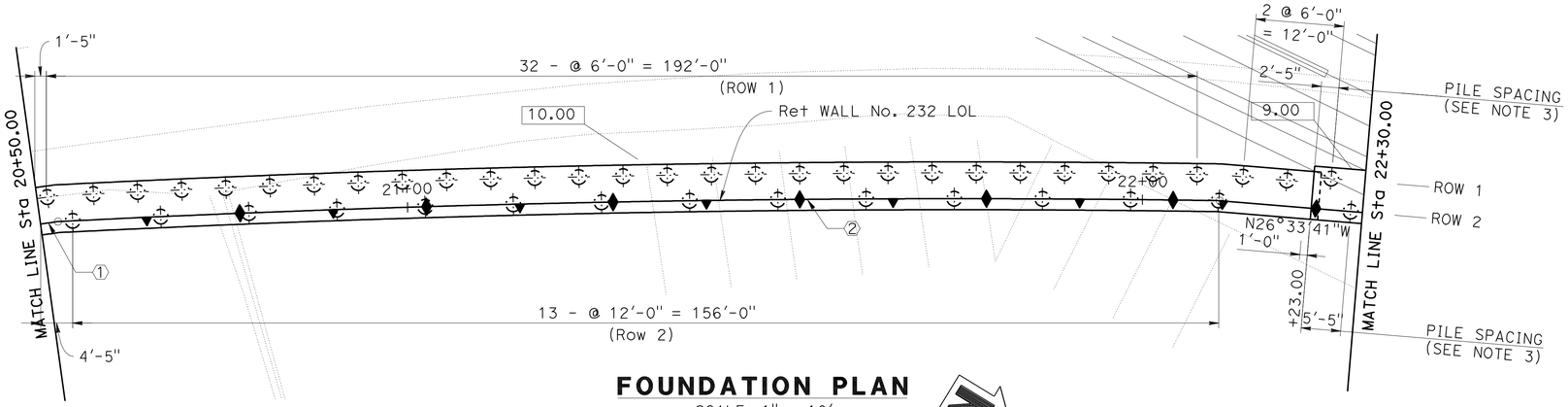

FOUNDATION PLAN
SCALE: 1" = 10'

CURVE DATA

CURVE No.	R	△	T	L
①	2406.00'	02°03'25"	43.20'	86.38'
②	2409.00'	03°45'40"	79.09'	158.13'

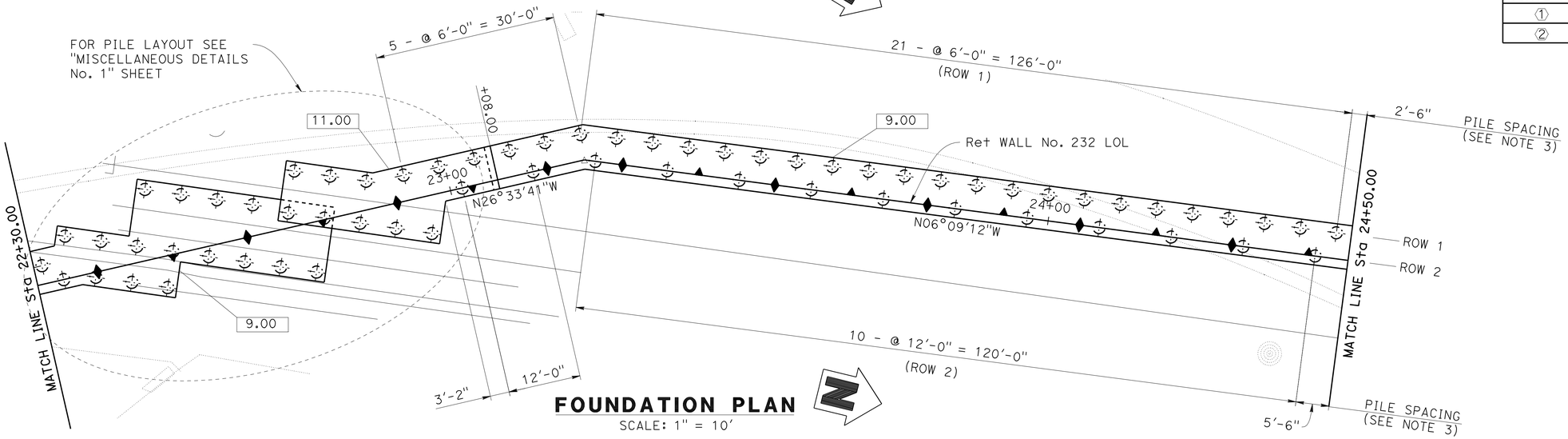

FOUNDATION PLAN
SCALE: 1" = 10'

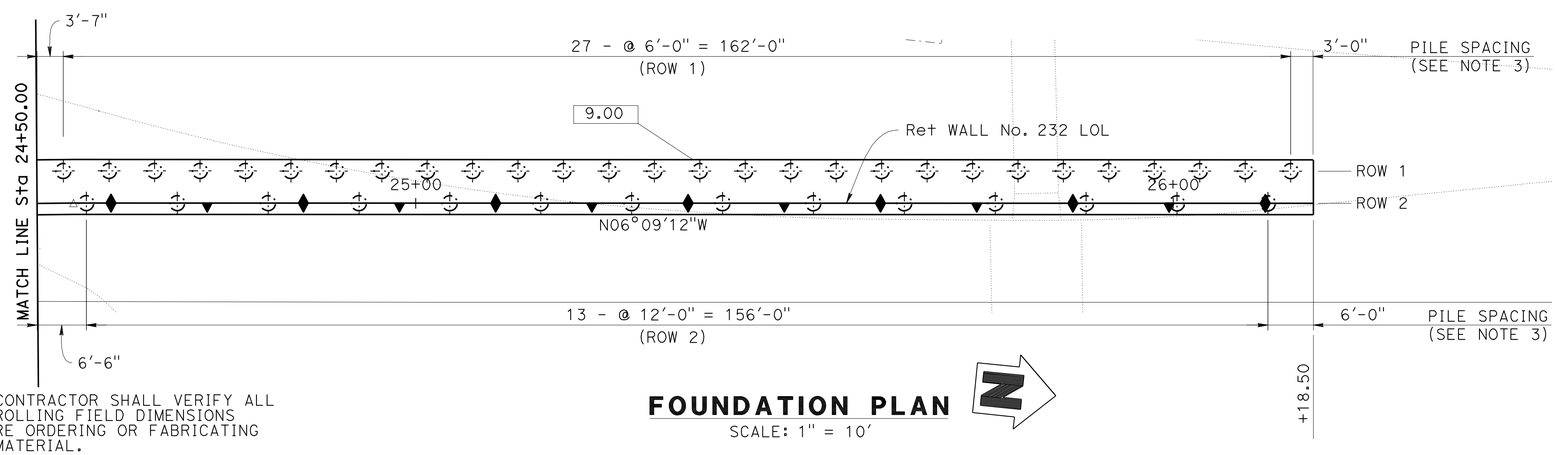

FOUNDATION PLAN
SCALE: 1" = 10'

NOTE:
THE CONTRACTOR SHALL VERIFY ALL CONTROLLING FIELD DIMENSIONS BEFORE ORDERING OR FABRICATING ANY MATERIAL.

LEGEND:

XXX.XX — Indicates Bottom of Footing Elevation

——— Indicates New Construction

Indicates 24" CIDH Pile

NOTES:

1. For Location of Existing Utilities, See ROAD PLANS.
2. For Pile Data Table and Basis of Coordinates, See "RETAINING WALL No. 232 FOUNDATION PLAN No. 1" sheet.
3. Pile Spacing Dimensions Measured Along Wall LOL.

GEOTECHNICAL PROFESSIONAL APPROVAL DATE

DESIGN OVERSIGHT Paul Cotter
4-3-13
SIGN OFF DATE

SCALE: 1"=10'	VERT.DATUM NAV88	HORZ.DATUM CCS83	
PHOTOGRAMMETRY AS OF: 9-04-08		ALIGNMENT TIES	
SURVEYED	BY D. Bustamante	DRAFTED	BY
FIELD CHECKED	BY D. Baumann	CHECKED	BY

	BY	CHECKED
DESIGN	S. McCauley	C. Cho
DETAILS	S. Nguyen	S. McCauley
QUANTITIES	C. Cho	S. McCauley

PREPARED FOR THE STATE OF CALIFORNIA DEPARTMENT OF TRANSPORTATION

Chad Harden
PROJECT ENGINEER

BRIDGE NO. 33E0117
POST MILES 28.6

RETAINING WALL No. 232
FOUNDATION PLAN No. 3

FOUNDATION PLAN SHEET (ENGLISH) (REV.7/16/10)

ORIGINAL SCALE IN INCHES FOR REDUCED PLANS 0 1 2 3

UNIT: 0724
PROJECT NUMBER & PHASE: 04000001601 CONTRACT NO.: 04-0A7101

DISREGARD PRINTS BEARING EARLIER REVISION DATES

REVISION DATES 2/24/11 3/30/12 5/26/12 3/29/13

SHEET 8 OF 22

FILE => 33-E0117-e-fp103.dgn

USERNAME => s124496 DATE PLOTTED => 10-APR-2013 TIME PLOTTED => 09:59

DIST	COUNTY	ROUTE	POST MILES TOTAL PROJECT	SHEET No.	TOTAL SHEETS
04	Ala	880	28.4/29.2	776	789

REGISTERED CIVIL ENGINEER — DATE 3/29/13

4-8-13
PLANS APPROVAL DATE

REGISTERED PROFESSIONAL ENGINEER — S.McCauley — No. 71495 — Exp. 12-31-13 — CIVIL — STATE OF CALIFORNIA

The State of California or its officers or agents shall not be responsible for the accuracy or completeness of electronic copies of this plan sheet.

ALAMEDA COUNTY TRANSPORTATION COMMISSION
1333 BROADWAY, SUITE 220
OAKLAND, CA 94612

RBF CONSULTING
ONE KAISER PLAZA, SUITE 1150
OAKLAND, CA 94612

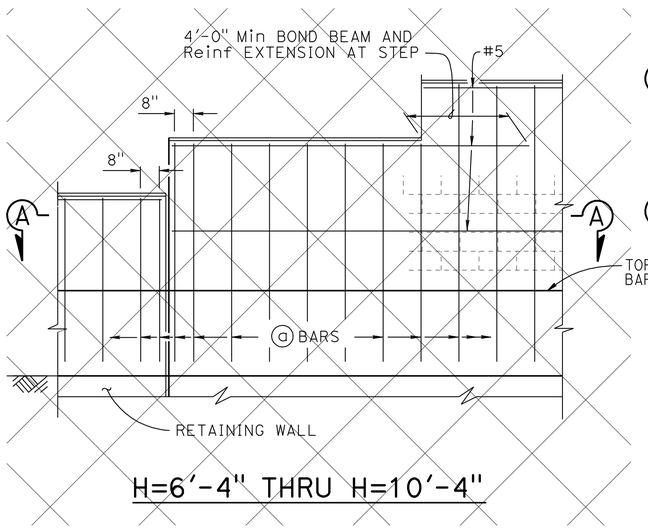

H=6'-4" THRU H=10'-4"

1

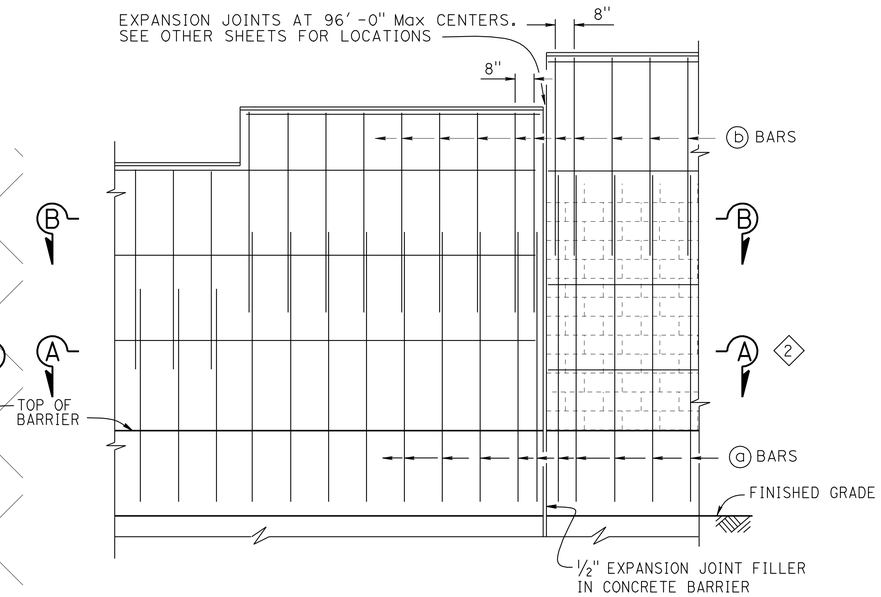

H=12'-4" THRU H=16'-4"

PART ELEVATION

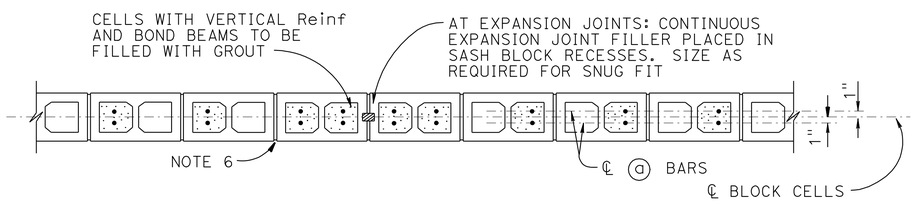

SECTION A-A

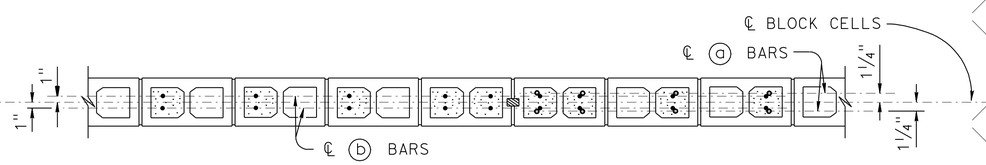

SECTION B-B

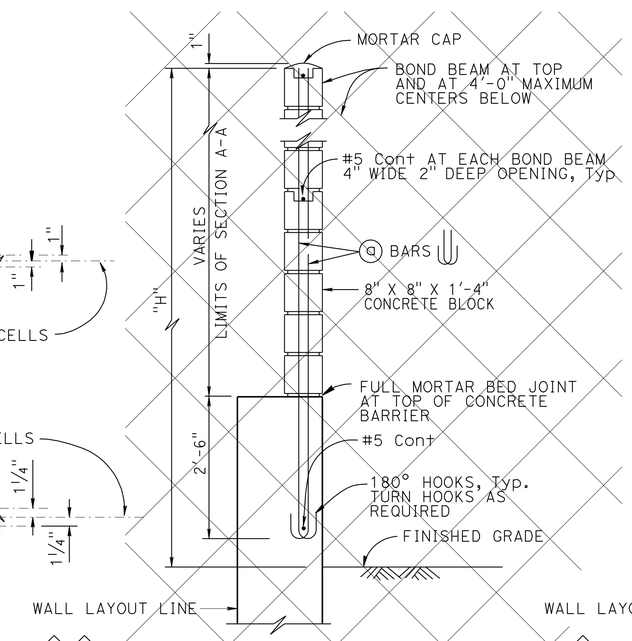

1 2

H=6'-4" THRU H=10'-4"

For details not shown, see H=12'-4" thru H=16'-4"

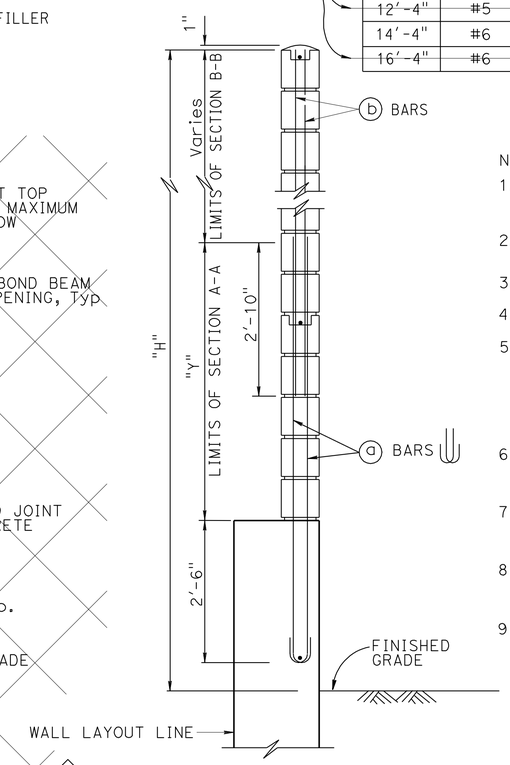

2

H=12'-4" THRU H=16'-4"

For details not shown, see H=6'-4" thru H=10'-4"

TYPICAL SECTION

SOUND WALL REINFORCEMENT TABLE

MAXIMUM "H"	ⓐ BARS @ 1'-4" Max	ⓑ BARS @ 1'-4" Max	"Y"	f'm (psi)	COMPRESSIVE STRENGTH OF CMU (psi)	MAXIMUM "H"
6'-4"	#4	——	——	1500	1900	6'-4"
8'-4"	#4	——	——	1500	1900	8'-4"
10'-4"	#4	——	——	1500	1900	10'-4"
12'-4"	#5	#4	5'-0"	1500	1900	12'-4"
14'-4"	#6	#4	7'-0"	1500	1900	14'-4"
16'-4"	#6	#4	9'-0"	2500	3700	16'-4"

1

NOTES:

1. For details not shown, see "SOUND WALL - MASONRY BLOCK WITH BARRIER ON RETAINING WALL - DETAILS NO. 2" sheet
2. Slope ground at traffic side of barrier to drain. Maximum slope ±10%
3. See STANDARD PLANS B15-9 for other details
4. For type of block and joint finish, see other sheets
5. When blocks are laid in stacked bond, ladder type, galvanized joint reinforcement shall be provided. A minimum of 2-9 gauge wire continuous at 4'-0" maximum to be used. Locate reinforcement in joints that are at the approximate midpoint between bond beams
6. Horizontal joints shall be tooled concave or may be weathered. Vertical joints shall be tooled concave or may be raked
7. For intermediate wall heights that are between the "H's" given, use the tabular information for the next higher "H"
8. Masonry strengths are listed in "SOUND WALL REINFORCEMENT TABLE"
9. Concrete to be used for the barrier shall contain not less than 590 pounds of cementitious material per cubic yard

NO SCALE

SPECIAL DETAILS

RETAINING WALL No. 232

MASONRY BLOCK SOUND WALL WITH BARRIER ON RETAINING WALL

DETAILS NO. 1

REVISED STANDARD DRAWING

FILE NO. **xs15-130-1**

APPROVAL DATE July 2011

1 Does Not Apply
2 Detail Modified

STATE OF CALIFORNIA
DEPARTMENT OF TRANSPORTATION

DIVISION OF ENGINEERING SERVICES

BRIDGE NO. 33E0117
POST MILE 28.6

DS OSD 2147A (ENGLISH STANDARD DRAWING "XS" BORDER REV. (02-02-11)

ORIGINAL SCALE IN INCHES FOR REDUCED PLANS 0 1 2 3

UNIT: 0724
PROJECT NUMBER & PHASE: 04000001601
CONTRACT NO.: 04-0A7101

DISREGARD PRINTS BEARING EARLIER REVISION DATES

REVISION DATES 2/24/11 3/30/12 6/29/12 3/29/13

SHEET 9 OF 22

FILE => 33-E0117-u-miscdt01.dgn

USERNAME => s124936 DATE PLOTTED => 10-APR-2013 TIME PLOTTED => 03:59

DIST	COUNTY	ROUTE	POST MILES TOTAL PROJECT	SHEET No.	TOTAL SHEETS
04	Ala	880	28.4/29.2	777	789

REGISTERED CIVIL ENGINEER — DATE 6/26/12

4-8-13
PLANS APPROVAL DATE

REGISTERED PROFESSIONAL ENGINEER S.McCauley No. 71495 Exp. 12-31-13 CIVIL STATE OF CALIFORNIA

The State of California or its officers or agents shall not be responsible for the accuracy or completeness of electronic copies of this plan sheet.

ALAMEDA COUNTY TRANSPORTATION COMMISSION
1333 BROADWAY, SUITE 220
OAKLAND, CA 94612

RBF CONSULTING
ONE KAISER PLAZA, SUITE 1150
OAKLAND, CA 94612

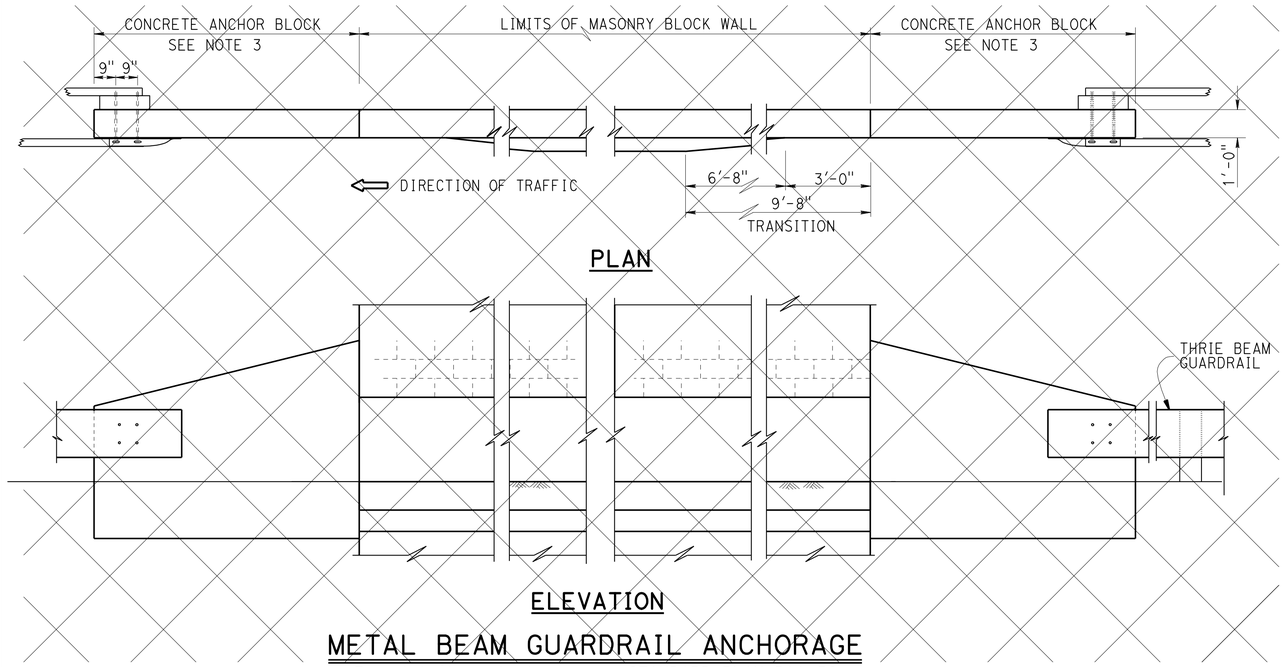

METAL BEAM GUARDRAIL ANCHORAGE

For details not shown, see STANDARD PLAN B11-56

1

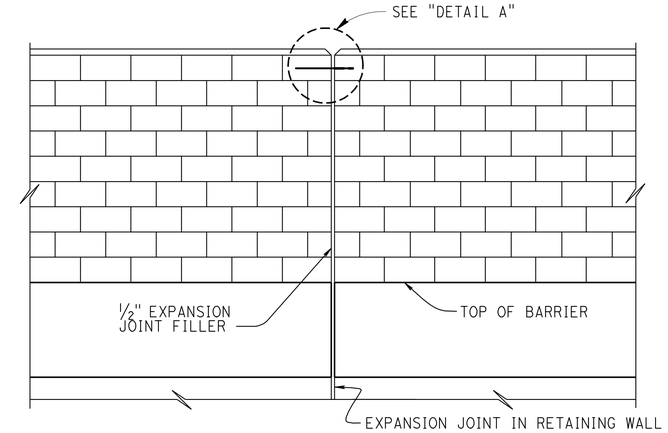

ALIGNMENT KEY DETAIL

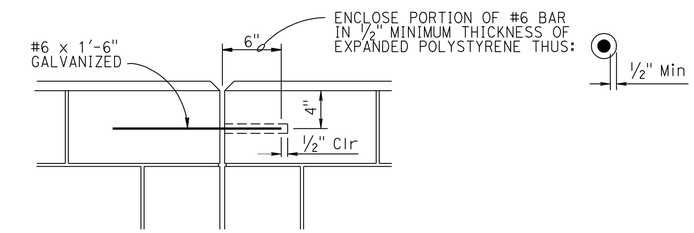

DETAIL A

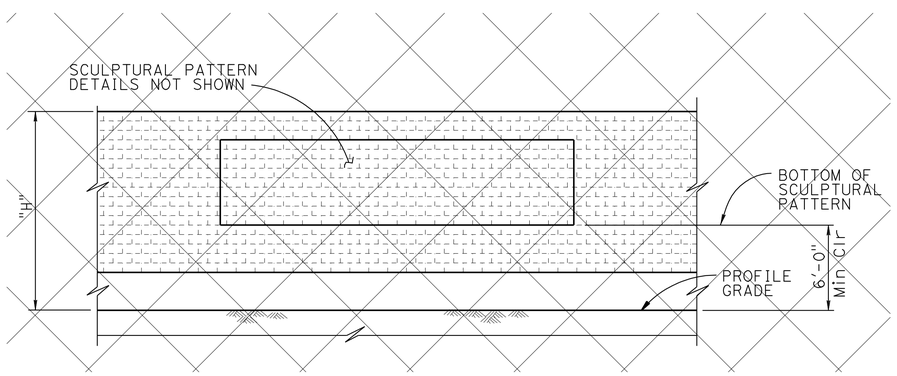

CLEARANCE DETAIL

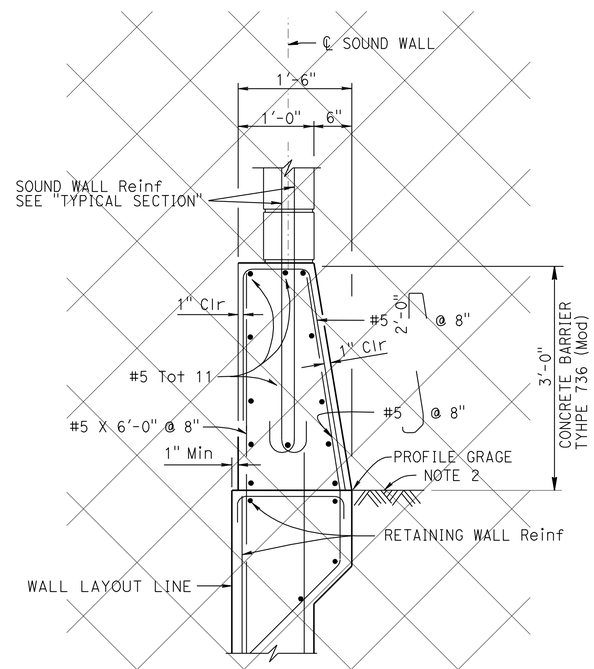

1

BARRIER SECTION

DESIGN NOTES

DESIGN
Uniform Building Code, 1997 Edition and the Bridge Design Specifications

DESIGN WIND LOAD
33 psf

DESIGN SEISMIC LOAD
0.57 Dead load

REINFORCED CONCRETE
f'c = 3600 psi
fy = 60 ksi

CONCRETE MASONRY

REGULAR STRENGTH	HIGH STRENGTH	
f'm = 1500 psi	f'm = 2000 psi	f'm = 2500 psi
fb = 495 psi	fb = 660 psi	fb = 830 psi
fs = 24,000 psi	fs = 24,000 psi	fs = 24,000 psi
n = 25.8	n = 19.3	n = 15.5

NOTES:
1. For details not shown, see STANDARD PLAN B15-6
2. Slope ground at traffic side of barrier to drain. Maximum slope ±10% See STANDARD PLAN B11-56, Note D
3. For Concrete Anchor Block and connection details, see "CONNNECTION DETAIL DD" on STANDARD PLAN A77J3

NO SCALE

SPECIAL DETAILS

RETAINING WALL No. 232

REVISED STANDARD DRAWING

FILE NO. xs15-130-2

APPROVAL DATE July 2011

1 Does Not Apply

STATE OF CALIFORNIA DEPARTMENT OF TRANSPORTATION

DIVISION OF ENGINEERING SERVICES

BRIDGE NO. 33E0117

POST MILE 28.6

MASONRY BLOCK SOUND WALL W/BARRIER ON RETAINING WALL

DETAILS NO. 2

DS OSD 2147A (ENGLISH STANDARD DRAWING "XS" BORDER REV. (02-02-11)

ORIGINAL SCALE IN INCHES FOR REDUCED PLANS 0 1 2 3

UNIT: 0724
PROJECT NUMBER & PHASE: 04000001601
CONTRACT NO.: 04-0A7101

DISREGARD PRINTS BEARING EARLIER REVISION DATES

REVISION DATES 2/24/11 3/28/12 6/26/12

SHEET 10 OF 22

FILE => 33-E0117-u-miscdt02.dgn

USERNAME => s124496 DATE PLOTTED => 10-APR-2013 TIME PLOTTED => 09:59

DIST	COUNTY	ROUTE	POST MILES TOTAL PROJECT	SHEET No.	TOTAL SHEETS
04	Ala	880	28.4/29.2	778	789

REGISTERED CIVIL ENGINEER — DATE 6/26/12

4-8-13
PLANS APPROVAL DATE

REGISTERED PROFESSIONAL ENGINEER — S.McCauley — No. 71495 — Exp. 12-31-13 — CIVIL — STATE OF CALIFORNIA

The State of California or its officers or agents shall not be responsible for the accuracy or completeness of electronic copies of this plan sheet.

ALAMEDA COUNTY TRANSPORTATION COMMISSION
1333 BROADWAY, SUITE 220
OAKLAND, CA 94612

RBF CONSULTING
ONE KAISER PLAZA, SUITE 1150
OAKLAND, CA 94612

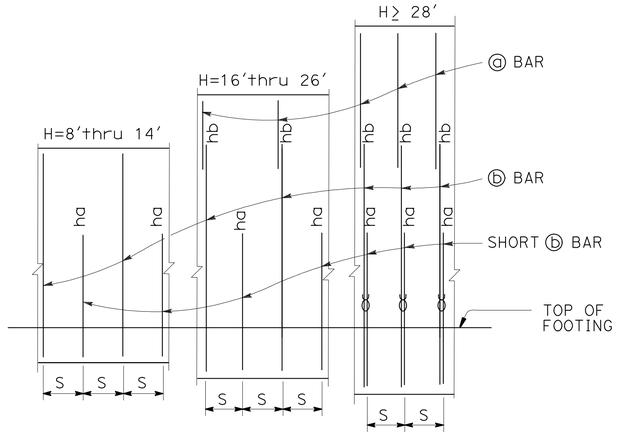

ELEVATION

NOTES:
"ha", "hb" above ⓑ bars indicate distance from top of footing to upper end of ⓑ bars, see table.
"S" is ⓑ bar spacing, see table.

DESIGN DATA

Design: AASHTO LRFD Bridge Design Specifications, 4th edition with California Amendments

WS: 33 psf on Sound wall and Barrier

LS: Varied surcharge on level ground surface

CT: 54 kip maximum traffic impact loading evenly distributed over 10 feet at top of the barrier and 1:1 distribution down and outward

3 EQE: Mononabe-Okabe Method
K_h = 0.36
K_v = 0.0

Soil: ϕ = 34°
γ = 120 pcf

Reinforced Concrete: f'c = 3600 psi
fy = 60,000 psi

Load Combinations and Limit States

Service I	Q=1.00DC+1.00EV+1.00EH+1.00LS+0.30WS
Service II	Q=1.00DC+1.00EV+1.00EH+1.00WS
Strength I	Q=αDC+βEV+1.50EH+1.75LS
Strength III	Q=αDC+βEV+1.50EH+1.40WS
Strength V	Q=αDC+βEV+1.50EH+1.35LS+0.40WS
Extreme I	Q=1.00DC+1.00EV+1.00EH+1.00EQD+1.00EQE
Extreme II	Q=1.00DC+1.00EV+1.00EH+1.00CT

Where:
Q: Force Effects
α: 1.25 or 0.90, Which ever Controls Design
β: 1.35 or 1.00, which ever Controls Design
DC: Dead Load of Structure Components
EV: Vertical Earth Fill Pressure
LS: Live Load Surcharge
EQE: Seismic Earth Pressure
EQD: Soil and Structure Components Inertia. Soil inertia ignored for stem design
WS: Wind Load on Sound wall and Barrier
CT: Vehicular Collision Force

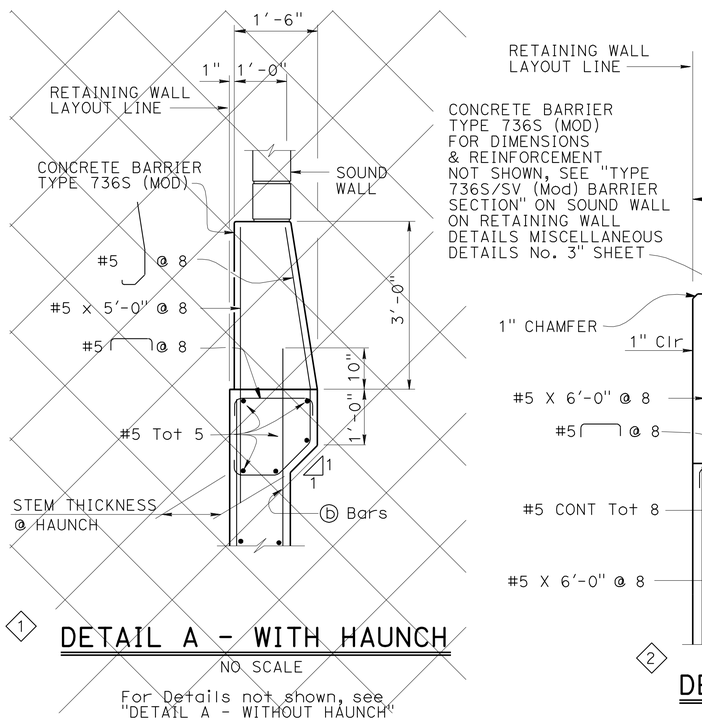

1 DETAIL A - WITH HAUNCH
NO SCALE
For Details not shown, see "DETAIL A - WITHOUT HAUNCH"

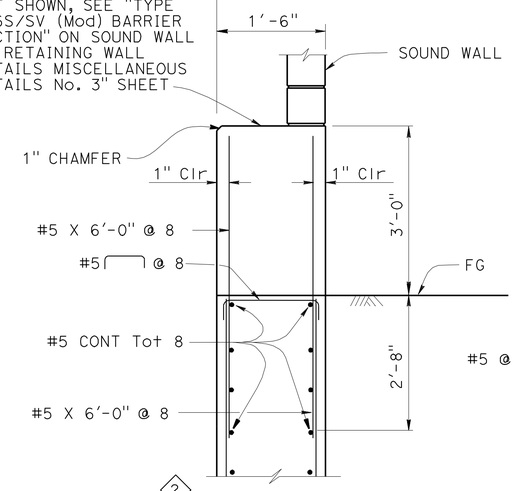

2 DETAIL A
NO SCALE

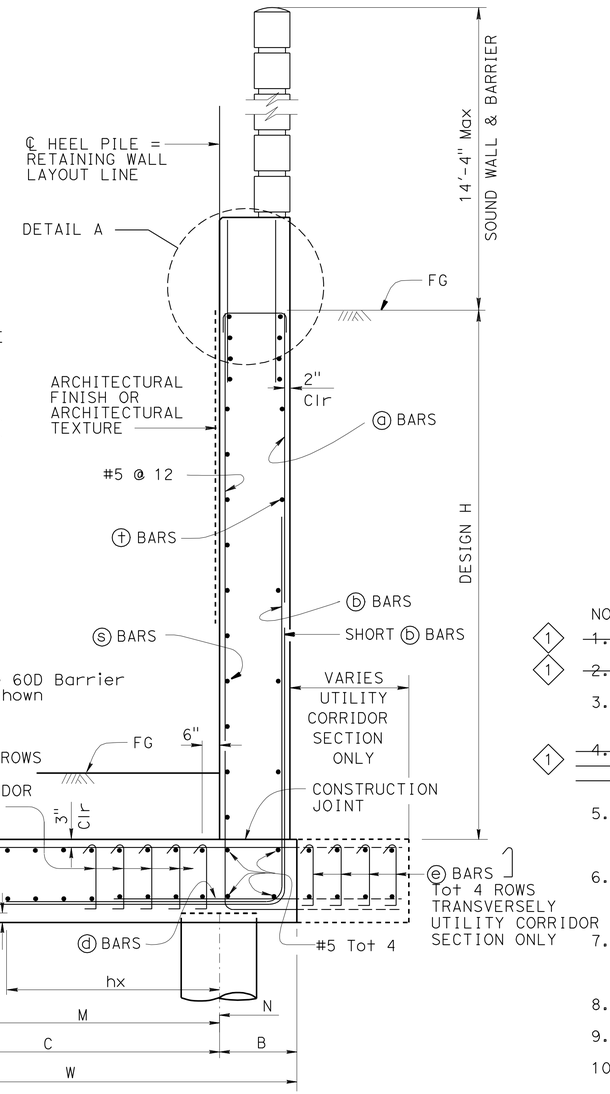

2 PILE FOOTING SECTION
NO SCALE

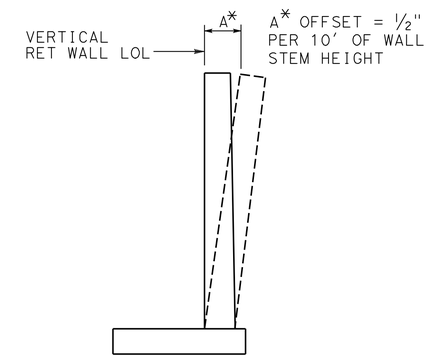

WALL OFFSET

NO SCALE
Values for offsetting forms to be determined by the engineer

NOTES:

1 ~~1. All piles are class 200 concrete piles.~~

1 ~~2. Pile batter shown are 1:3.~~

3. Minimum distance between center pile and edge of footing is 1'-6".

1 ~~4. Lateral resistance of each pile: 30 kip for strength limit states. 40 kip for extreme limit states.~~

5. Maximum spacing between piles is shown in the table. Reduce to suit the length of footing.

6. Minimum distance between any two piles is 3'-0". Reduce to suit the length of footing.

7. For sound wall and retaining wall architectural finish or texture, see details elsewhere in Project Plans.

8. For details not shown and drainage notes, see B3-8

9. Footing cover, 2'-0" minimum.

10. For sound wall and reinforcement see "SOUND WALL - MASONRY BLOCK WITH BARRIER ON RETAINING WALL" sheets.

11. For H=6' through 14', extend ⓑ bar into Barrier for stem with haunch.

SPECIAL DETAILS

REVISED STANDARD DRAWING
FILE NO. xs14-410-1
APPROVAL DATE July 2011

1 Does Not Apply
2 Detail Modified
3 Design Data Modified

STATE OF CALIFORNIA
DEPARTMENT OF TRANSPORTATION

DIVISION OF ENGINEERING SERVICES

BRIDGE NO. 35E0117
POST MILE 28.6

RETAINING WALL No. 232
RETAINING WALL TYPE 7SWBP - DETAILS NO.1

DS OSD 2147A (ENGLISH STANDARD DRAWING "XS" BORDER REV. (02-02-11)

ORIGINAL SCALE IN INCHES FOR REDUCED PLANS 0 1 2 3

UNIT: 0724
PROJECT NUMBER & PHASE: 04000001601
CONTRACT NO.: 04-0A7101

DISREGARD PRINTS BEARING EARLIER REVISION DATES
REVISION DATES 2/24/11 3/30/12 6/26/12
SHEET 11 OF 22

FILE => 33-E0117-u-miscdt03.dgn

USERNAME => s124196 DATE PLOTTED => 10-APR-2013 TIME PLOTTED => 08:59

DIST	COUNTY	ROUTE	POST MILES TOTAL PROJECT	SHEET No.	TOTAL SHEETS
04	Ala	880	28.4/29.2	779	789

REGISTERED CIVIL ENGINEER — DATE 6/26/12

4-8-13
PLANS APPROVAL DATE

REGISTERED PROFESSIONAL ENGINEER S.McCauley No. 71495 Exp. 12-31-13 CIVIL STATE OF CALIFORNIA

The State of California or its officers or agents shall not be responsible for the accuracy or completeness of electronic copies of this plan sheet.

ALAMEDA COUNTY TRANSPORTATION COMMISSION
1333 BROADWAY, SUITE 220
OAKLAND, CA 94612

RBF CONSULTING
ONE KAISER PLAZA, SUITE 1150
OAKLAND, CA 94612

TABLE OF WALL DIMENSIONS, REINFORCING STEEL, AND PILE SPACINGS

DESIGN H	STEM WITH HAUNCH				STEM WITHOUT HAUNCH								
	8′	10′	12′	14′	16′	18′	20′	22′	24′	26′	28′	30′	32′
W	6′-6"	7′-3"	7′-9"	8′-0"	9′-0"	9′-3"	10′-3"	11′-3"	12′-3"	13′-0"	14′-3"	15′-3"	17′-0"
C	5′-3"	6′-0"	6′-3"	6′-6"	7′-3"	7′-3"	8′-0"	8′-6"	9′-6"	10′-0"	10′-10"	11′-6"	13′-2"
B	1′-3"	1′-3"	1′-6"	1′-6"	1′-9"	2′-0"	2′-3"	2′-9"	2′-9"	3′-0"	3′-5"	3′-9"	3′-10"
F	2′-6"	2′-6"	2′-9"	2′-9"	2′-9"	2′-9"	3′-0"	3′-0"	3′-3"	3′-6"	3′-9"	4′-0"	4′-3"
STEM THICKNESS AT TOP	1′-6"	1′-6"			1′-7"	1′-11"	2′-0"	2′-0"	2′-0"	2′-0"	2′-0"	2′-3"	2′-3"
STEM THICKNESS AT HAUNCH	1′-0"	1′-0"	1′-3"	1′-3"									
BATTER	0	0	0	0	0	0	0	1/4:12	1/4:12	1/4:12	1/2:12	1/2:12	1/2:12
M	3′-6"	4′-3"	4′-9"	5′-0"	5′-9"	5′-9"	6′-6"	7′-0"	8′-0"	8′-6"	9′-4"	10′-0"	11′-8"
N	0	0	0′-0"	0′-0"	0′-3"	0′-6"	0′-9"	1′-3"	1′-3"	1′-6"	1′-11"	2′-3"	2′-4"
ROW 1 SPACING	6′-0"	6′-0"	10′-0"	9′-6"	8′-0"	7′-0"	6′-0"	4′-0"	4′-0"	4′-0"	4′-0"	3′-9"	4′-0"
ROW 2 SPACING	12′-0"	12′-0"	16′-0"	14′-0"	14′-0"	12′-0"	10′-0"	10′-0"	8′-0"	4′-0"	7′-6"	6′-6"	4′-0"
ROM 3 SPACING											6′-0"	5′-0"	4′-0"
ⓐ BARS					#5 @ 14	#6 @ 14	#6 @ 13	#6 @ 13	#6 @ 11	#7 @ 12	#7 @ 11	#7 @ 10	#8 @ 11
ⓑ BARS	#5 @ 6	#5 @ 5.5	#5 @ 4.5	#6 @ 5	#8 @ 7	#9 @ 7	#9 @ 6.5	#9 @ 6.5	#9 @ 5.5	#10 @ 6	#10 @ 11ϒ	#10 @ 10ϒ	#11 @ 11ϒ
ha	7′-10"	9′-10"	6′-0"	6′-0"	6′-3"	7′-3"	7′-6"	9′-0"	9′-9"	10′-6"	11′-3"	12′-0"	14′-0"
hb					12′-0"	11′-9"	13′-0"	14′-6"	15′-6"	18′-6"	20′-6"	21′-6"	23′-0"
hx	4′-9"	5′-6"	6′-0"	6′-3"	7′-0"	7′-0"	7′-9"	8′-3"	6′-3"	9′-6"	10′-7"	10′-6"	12′-11"
ⓓ BARS	#5 @ 12	#5 @ 11	#5 @ 9	#5 @ 10	#5 @ 14	#5 @ 14	#5 @ 13	#5 @ 13	#5 @ 11	#5 @ 12	#5 @ 11	#5 @ 10	#5 @ 11
ⓓ BAR LENGTH	3′-6"	4′-6" *	4′-6"	6′-0"	7′-0"	7′-0"	7′-9"	10′-9"	8′-9"	12′-6"	13′-9"	14′-9"	16′-6"
ⓔ BARS		#4 @ 12 **									#4 @ 11	#4 @ 10	#4 @ 11
ⓢ Bars	#4 @ 12	#4 @ 12	#5 @ 15	#5 @ 15	#5 @ 12	#5 @ 12	#6 @ 12	#6 @ 12	#6 @ 12	#6 @ 12	#6 @ 12	#7 @ 12	#7 @ 12
ⓣ Bars	#4 @ 18	#4 @ 18	#4 @ 18	#4 @ 18	#4 @ 12	#4 @ 12	#4 @ 12	#4 @ 12	#4 @ 12	#5 @ 12	#5 @ 12	#5 @ 12	#5 @ 12
H_D(k/ft), SVC	2.6	3.3	4.2	5.1	6.2	7.4	9.0	10.4	12.5	14.5	17.0	19.3	21.8
H_D(k/ft), Str	4.1	5.2	6.6	8.0	9.4	11.1	13.4	16.0	18.8	21.8	25.6	29.1	32.8
H_D(k/ft), ext	5.0	6.5	8.6	10.5	13.0	15.7	19.0	22.5	26.3	30.5	35.7	41.0	46.5

2 1

LEGEND:

ϒ : 2 bar bundle
H_D : Factored Horizontal Driving Force
SVC : Service Limit State
Str : Strength Limit State
ext : Extreme Event Limit State
* : ⓓ Bar Length Shall Extend To Back of Footing at Limit of Utility Corridor Footing (3)
** : At Limits of Utility Corridor Footing Only

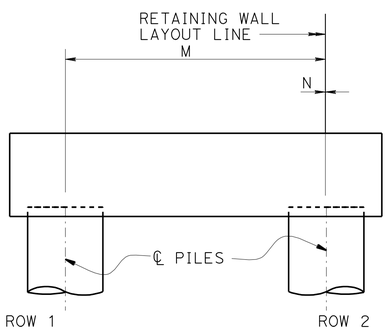

2 H = 8′ THROUGH 10′

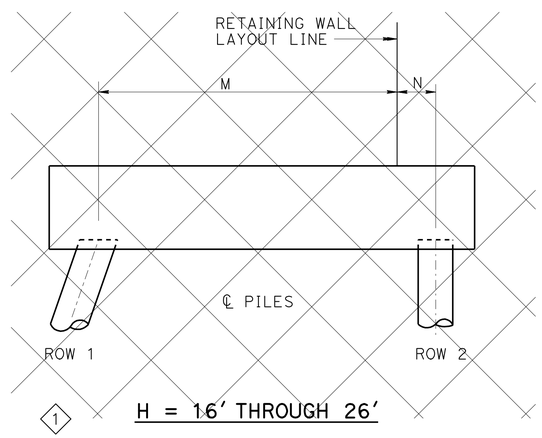

1 H = 16′ THROUGH 26′

PILE PATTERN
NO SCALE

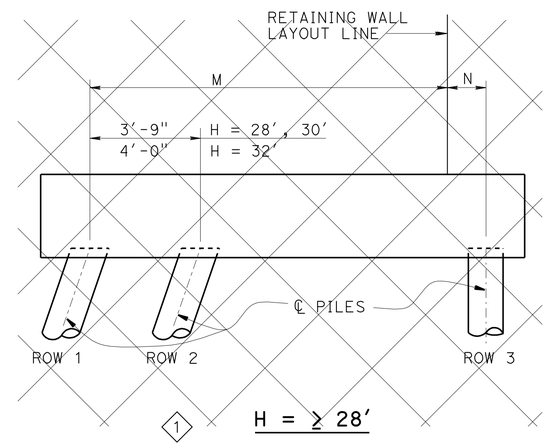

1 H = ≥ 28′

SPECIAL DETAILS

REVISED STANDARD DRAWING

FILE NO. xs14-410-2

APPROVAL DATE July 2011

1 Does Not Apply 3 Note Modified
2 Detail Modified

STATE OF CALIFORNIA
DEPARTMENT OF TRANSPORTATION

DIVISION OF ENGINEERING SERVICES

BRIDGE NO. 33E0117
POST MILE 28.6

RETAINING WALL No. 232

RETAINING WALL TYPE 7SWBP - DETAILS NO. 2

DS OSD 2147A (ENGLISH STANDARD DRAWING "XS" BORDER REV. (02-02-11)

ORIGINAL SCALE IN INCHES FOR REDUCED PLANS 0 1 2 3

UNIT: 0724
PROJECT NUMBER & PHASE: 04000001601
CONTRACT NO.: 04-0A7101

DISREGARD PRINTS BEARING EARLIER REVISION DATES

REVISION DATES 2/24/11 3/28/12 6/26/12

SHEET 12 OF 22

FILE => 33-E0117-u-miscdt04.dgn

USERNAME => s124496 DATE PLOTTED => 10-APR-2013 TIME PLOTTED => 09:53

DIST	COUNTY	ROUTE	POST MILES TOTAL PROJECT	SHEET No	TOTAL SHEETS
04	Ala	880	28.4/29.2	780	789

Scott McCauley 6/26/12
REGISTERED CIVIL ENGINEER DATE

4-8-13
PLANS APPROVAL DATE

REGISTERED PROFESSIONAL ENGINEER S.McCauley No. 71495 Exp. 12-31-13 CIVIL STATE OF CALIFORNIA

The State of California or its officers or agents shall not be responsible for the accuracy or completeness of electronic copies of this plan sheet.

ALAMEDA COUNTY TRANSPORTATION COMMISSION
1333 BROADWAY, SUITE 220
OAKLAND, CA 94612

RBF CONSULTING
ONE KAISER PLAZA, SUITE 1150
OAKLAND, CA 94612

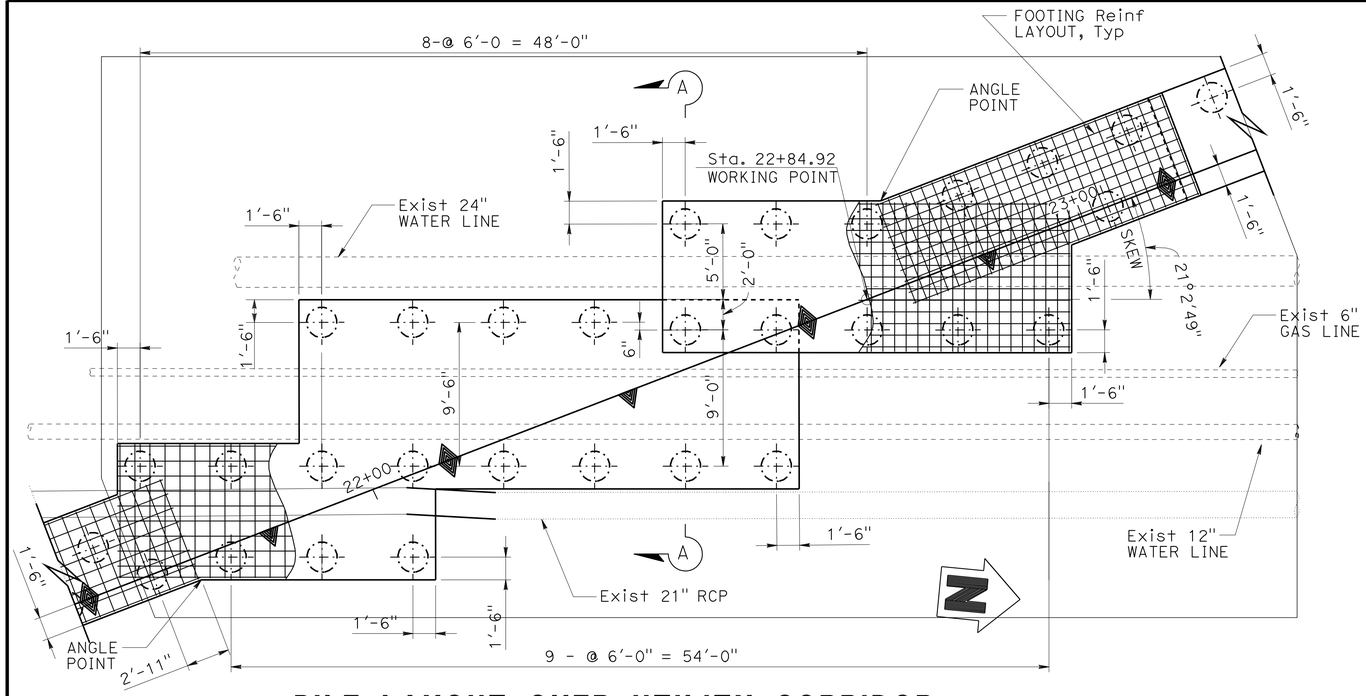

PILE LAYOUT OVER UTILITY CORRIDOR

1" = 5'

NOTES:

1. Location of existing utilities is approximate. Contractor to verify location and elevation of utilities prior to ordering or fabricating any material.
2. For utility information not shown, see Roadway Plans.

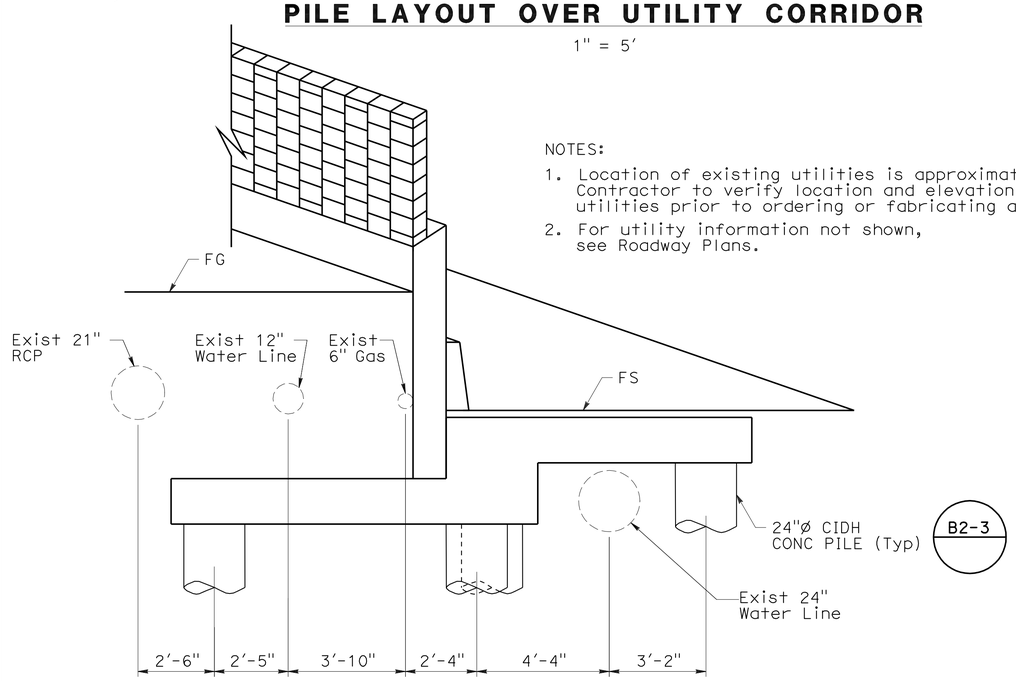

SECTION A-A

NO SCALE

NOTE:
THE CONTRACTOR SHALL VERIFY ALL CONTROLLING FIELD DIMENSIONS BEFORE ORDERING OR FABRICATING ANY MATERIAL.

RETAINING WALL No. 232

SOUND WALL ON RETAINING WALL DETAILS

MISCELLANEOUS DETAILS NO. 1

Paul Cotter
DESIGN OVERSIGHT Paul Cotter
7-16-12
SIGN OFF DATE

	BY	CHECKED
DESIGN	S McCauley	C. Cho
DETAILS	J Saldana	S. McCauley
QUANTITIES	C. Cho	S. McCauley

PREPARED FOR THE STATE OF CALIFORNIA DEPARTMENT OF TRANSPORTATION

Chad Harden
PROJECT ENGINEER

BRIDGE NO. 33E0117
POST MILES 28.6

DESIGN DETAIL SHEET (ENGLISH) (REV.7/16/10)

ORIGINAL SCALE IN INCHES FOR REDUCED PLANS 0 1 2 3

UNIT: 0724
PROJECT NUMBER & PHASE: 04000001601 CONTRACT NO.: 04-0A7101

DISREGARD PRINTS BEARING EARLIER REVISION DATES

REVISION DATES 2/24/11 3/30/12 6/26/12

SHEET 13 OF 22

FILE => 33-E0117-u-miscdt05.dgn

USERNAME => s124496 DATE PLOTTED => 10-APR-2013 TIME PLOTTED => 09:59

DIST	COUNTY	ROUTE	POST MILES TOTAL PROJECT	SHEET No	TOTAL SHEETS
04	Ala	880	28.4/29.2	781	789

REGISTERED CIVIL ENGINEER — DATE 3/29/13

4-8-13
PLANS APPROVAL DATE

REGISTERED PROFESSIONAL ENGINEER S.McCauley No. 71495 Exp. 12-31-13 CIVIL STATE OF CALIFORNIA

The State of California or its officers or agents shall not be responsible for the accuracy or completeness of electronic copies of this plan sheet.

ALAMEDA COUNTY TRANSPORTATION COMMISSION
1333 BROADWAY, SUITE 220
OAKLAND, CA 94612

RBF CONSULTING
ONE KAISER PLAZA, SUITE 1150
OAKLAND, CA 94612

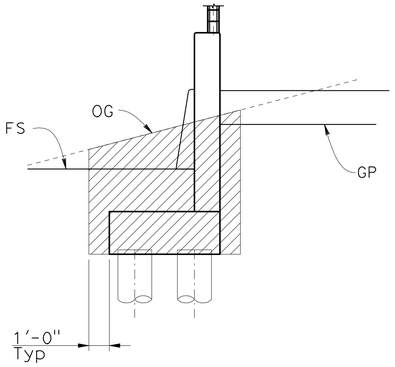

EXCAVATION
NO SCALE

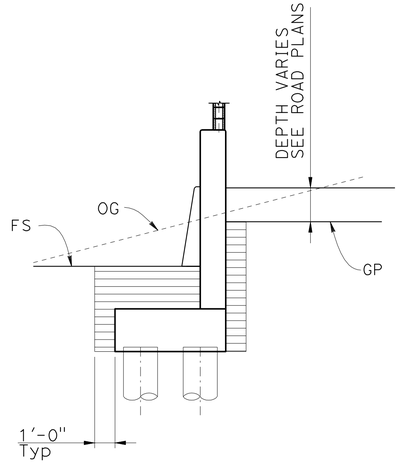

BACKFILL
NO SCALE

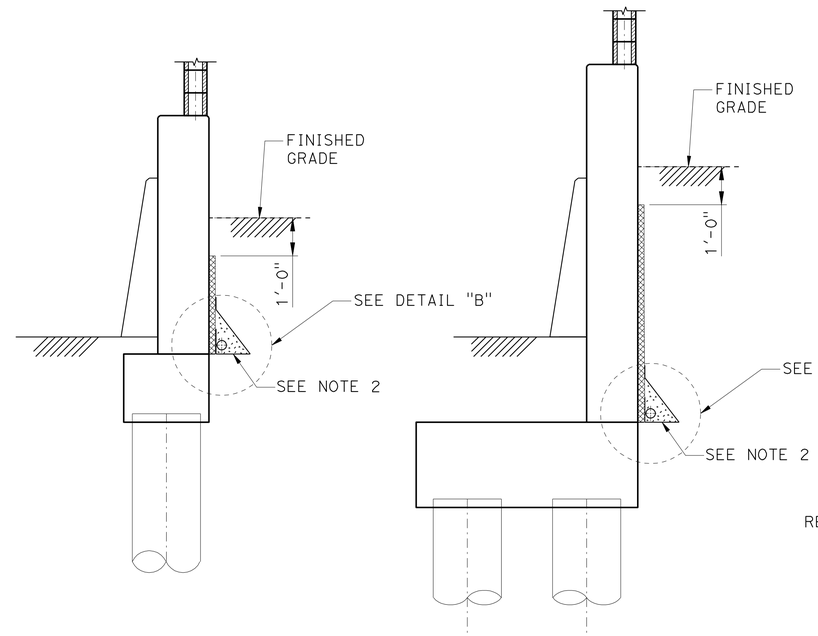

SOUND WALL GEOCOMPOSITE DRAIN DETAIL
NO SCALE

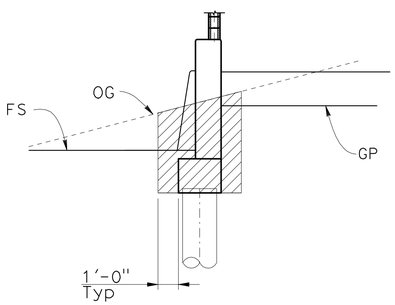

EXCAVATION
NO SCALE

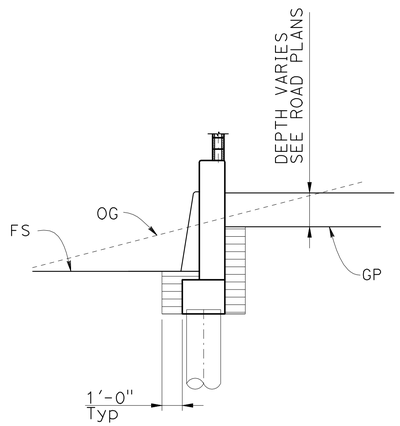

BACKFILL
NO SCALE

RETAINING WALL IN FILL AND CUT

LIMITS OF PAYMENT FOR RETAINING WALL EXCAVATION AND BACKFILL

NOTES:

1. 4" dia drains at intermediate sag points and at 25' max. center to center (9' c-c for Type 3 and 9'-3" c-c for Type 4 retaining walls). For wall adjacent to sidewalks or curbs, provide 4' cast iron or asbestos cement pipe under the sidewalk to discharge through curb face. Exposed wall drains shall be located 3"± above finished grade.
2. Geocomposite drain, cement treated permeable base, and 3" dia slotted plastic pipe continuous behind retaining wall or abutment. Cap ends of pipe. Provide 'Tee' connection at each 4" dia drain.
3. Connect the low end of plastic pipe to the main outlet pipe as applicable.

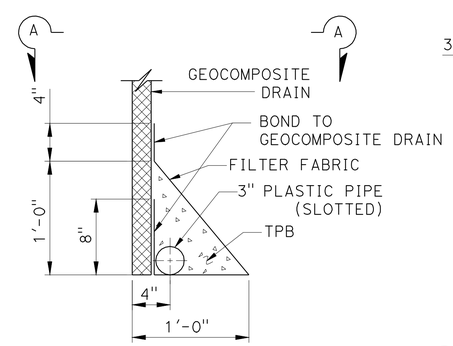

DETAIL "B"
NO SCALE

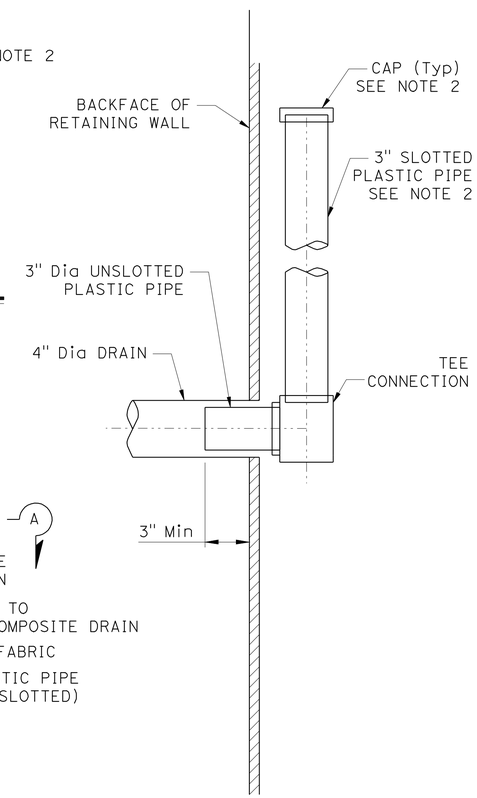

SECTION A-A
NO SCALE

LEGEND:

Structure Excavation

Structure Backfill

NOTE:
THE CONTRACTOR SHALL VERIFY ALL CONTROLLING FIELD DIMENSIONS BEFORE ORDERING OR FABRICATING ANY MATERIAL.

Paul Cotter
DESIGN OVERSIGHT — Paul Cotter
4-3-13
SIGN OFF DATE

	BY	CHECKED
DESIGN	S McCauley	C. Cho
DETAILS	J Saldana	S. McCauley
QUANTITIES	C. Cho	S. McCauley

PREPARED FOR THE STATE OF CALIFORNIA DEPARTMENT OF TRANSPORTATION

Chad Harden
PROJECT ENGINEER

BRIDGE NO. 33E0117
POST MILES 28.6

RETAINING WALL No. 232
SOUND WALL ON RETAINING WALL DETAILS
MISCELLANEOUS DETAILS NO. 2

DESIGN DETAIL SHEET (ENGLISH) (REV.7/16/10)

ORIGINAL SCALE IN INCHES FOR REDUCED PLANS 0 1 2 3

UNIT: 0724
PROJECT NUMBER & PHASE: 04000001601 CONTRACT NO.: 04-0A7101

DISREGARD PRINTS BEARING EARLIER REVISION DATES

REVISION DATES 2/24/11 3/30/12 6/28/12 3/29/13 — SHEET 14 OF 22

FILE => 33-E0117-u-miscdt06.dgn

USERNAME => s124196 DATE PLOTTED => 10-APR-2013 TIME PLOTTED => 09:59

DIST	COUNTY	ROUTE	POST MILES TOTAL PROJECT	SHEET No	TOTAL SHEETS
04	Ala	880	28.4/29.2	782	789

REGISTERED CIVIL ENGINEER — DATE 6/26/12

4-8-13
PLANS APPROVAL DATE

REGISTERED PROFESSIONAL ENGINEER S.McCauley No. 71495 Exp. 12-31-13 CIVIL STATE OF CALIFORNIA

The State of California or its officers or agents shall not be responsible for the accuracy or completeness of electronic copies of this plan sheet.

ALAMEDA COUNTY TRANSPORTATION COMMISSION
1333 BROADWAY, SUITE 220
OAKLAND, CA 94612

RBF CONSULTING
ONE KAISER PLAZA, SUITE 1150
OAKLAND, CA 94612

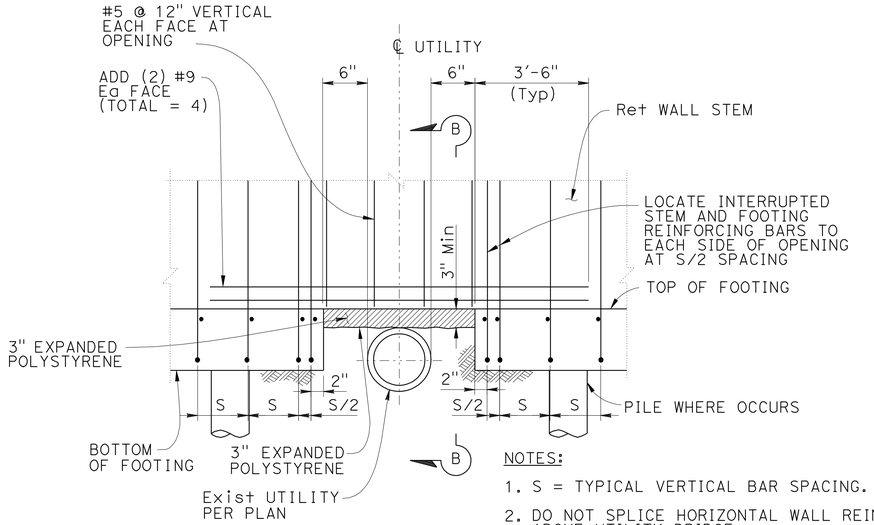

NOTES:

1. S = TYPICAL VERTICAL BAR SPACING.
2. DO NOT SPLICE HORIZONTAL WALL REINF ABOVE UTILITY BRIDGE.

UTILITY BRIDGE OVER DETAIL

NO SCALE

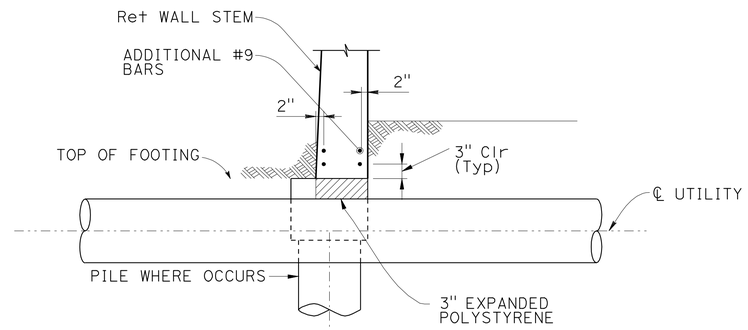

SECTION B-B

NO SCALE

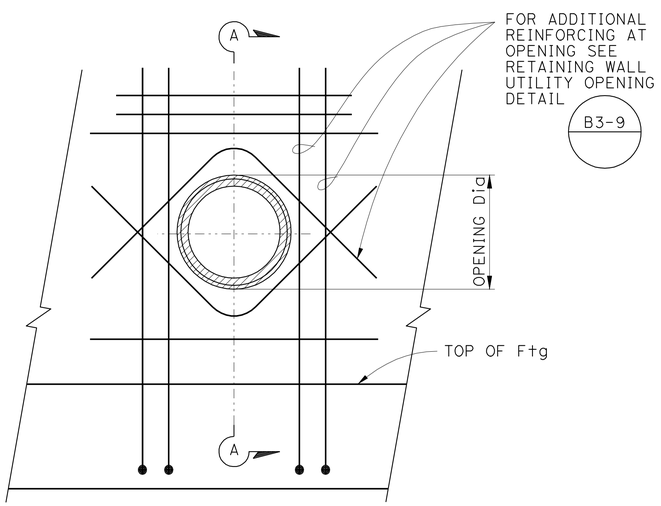

ELEVATION

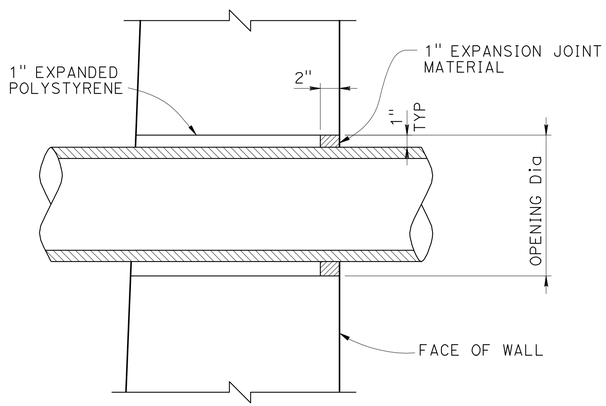

SECTION A-A

PIPE THROUGH WALL DETAIL

NO SCALE

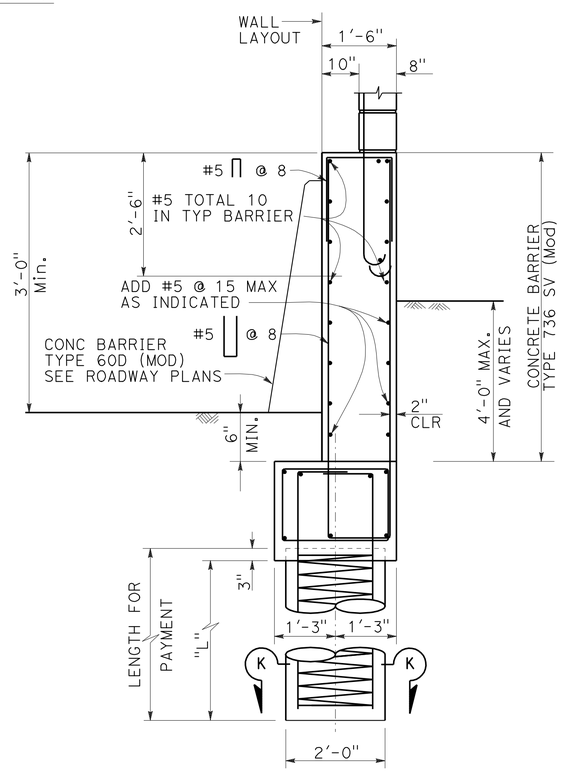

TYPE 736S/SV (MOD) BARRIER SECTION

NO SCALE

NOTE: For Dimensions and Reinf. not shown see RSP B15-15 dated April 2009

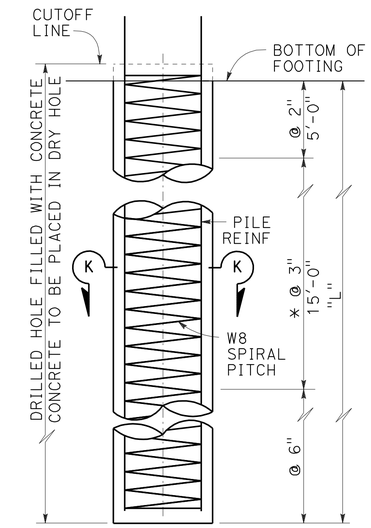

ELEVATION

* @ 2" AT OPTION OF CONTRACTOR.

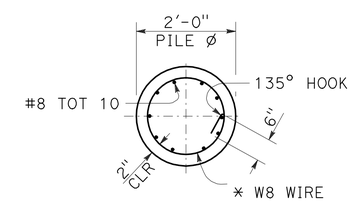

SECTION K-K

PILE SECTION

NO SCALE

* Lapped splices in Spiral reinforcement shall be lapped at least 80 wire diameters. Spiral reinforcement at splices and at ends shall be terminated with a 135° hook with a 6" tail hooked around a logitudinal bar.

NOTE:
THE CONTRACTOR SHALL VERIFY ALL CONTROLLING FIELD DIMENSIONS BEFORE ORDERING OR FABRICATING ANY MATERIAL.

RETAINING WALL No. 232

SOUND WALL ON RETAINING WALL DETAILS

MISCELLANEOUS DETAILS NO. 3

DESIGN OVERSIGHT — Paul Cotter
7-16-12
SIGN OFF DATE

	BY	CHECKED
DESIGN	S McCauley	C. Cho
DETAILS	J Saldana	S. McCauley
QUANTITIES	C. Cho	S. McCauley

PREPARED FOR THE STATE OF CALIFORNIA DEPARTMENT OF TRANSPORTATION

Chad Harden
PROJECT ENGINEER

BRIDGE NO. 33E0117
POST MILES 28.6

DESIGN DETAIL SHEET (ENGLISH) (REV.7/16/10)

ORIGINAL SCALE IN INCHES FOR REDUCED PLANS 0 1 2 3

UNIT: 0724
PROJECT NUMBER & PHASE: 04000001601
CONTRACT NO.: 04-0A7101

DISREGARD PRINTS BEARING EARLIER REVISION DATES — REVISION DATES 2/24/11 3/30/12 6/26/12

SHEET 15 OF 22

FILE => 33-E0117-u-miscdt07.dgn

USERNAME => s124496 DATE PLOTTED => 10-APR-2013 TIME PLOTTED => 03:59

DIST	COUNTY	ROUTE	POST MILES TOTAL PROJECT	SHEET No	TOTAL SHEETS
04	Ala	880	28.4/29.2	783	789

REGISTERED CIVIL ENGINEER — DATE 3/29/13

4-8-13
PLANS APPROVAL DATE

REGISTERED PROFESSIONAL ENGINEER S.McCauley No. 71495 Exp. 12-31-13 CIVIL STATE OF CALIFORNIA

The State of California or its officers or agents shall not be responsible for the accuracy or completeness of electronic copies of this plan sheet.

ALAMEDA COUNTY TRANSPORTATION COMMISSION
1333 BROADWAY, SUITE 220
OAKLAND, CA 94612

RBF CONSULTING
ONE KAISER PLAZA, SUITE 1150
OAKLAND, CA 94612

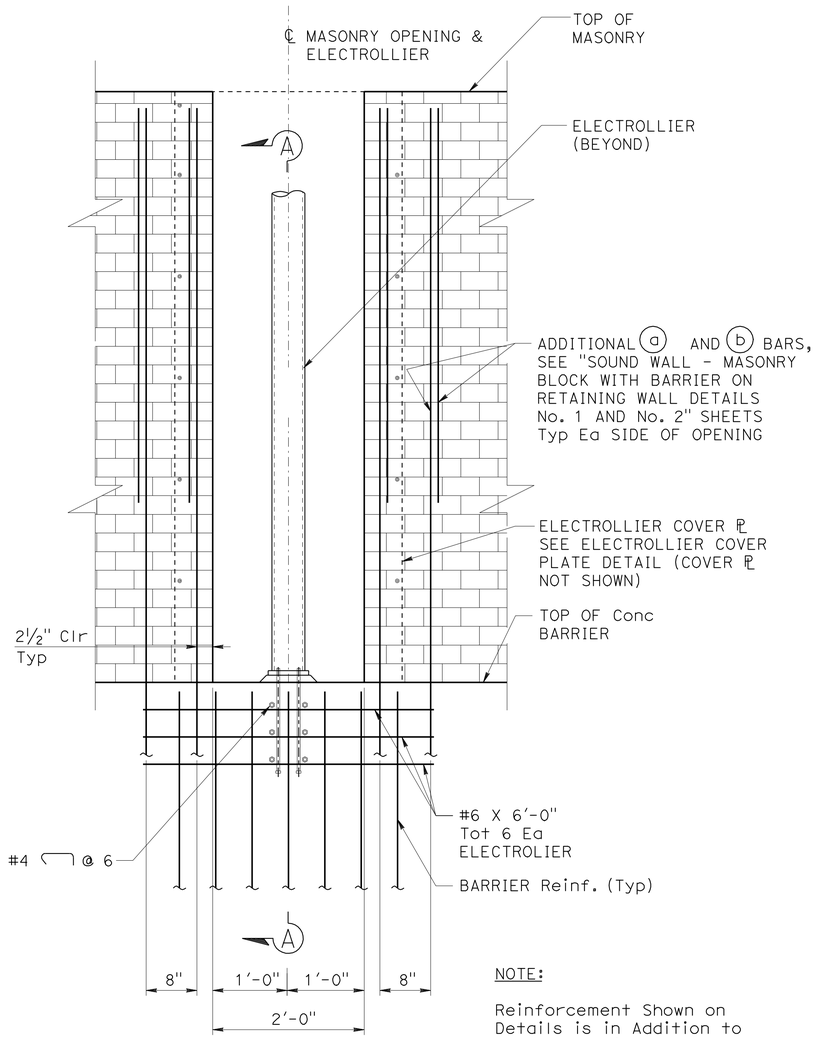

NOTE:

Reinforcement Shown on Details is in Addition to all other Reinforcement.

SOUND WALL ELECTROLIER OPENING DETAIL

1" = 1'-0"

NOTE:
THE CONTRACTOR SHALL VERIFY ALL CONTROLLING FIELD DIMENSIONS BEFORE ORDERING OR FABRICATING ANY MATERIAL.

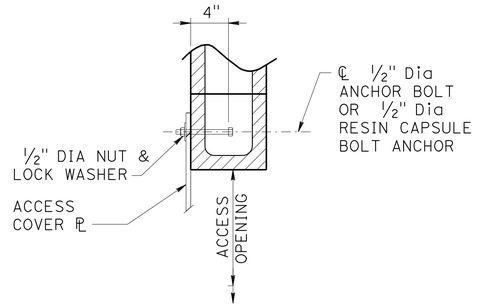

ANCHOR BOLT DETAIL

NO SCALE

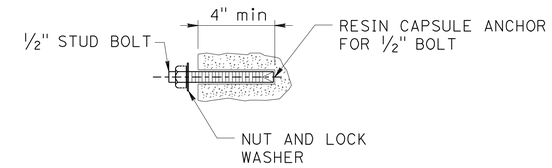

NOTE: RESIN CAPSULE ANCHORAGE IS SUBJECT TO APPROVAL OF ENGINEER. INSTALLATION PROCEDURES SHALL COMPLY WITH MANUFACTURER'S INSTRUCTIONS.

RESIN CAPSULE BOLT ANCHORAGE

NO SCALE

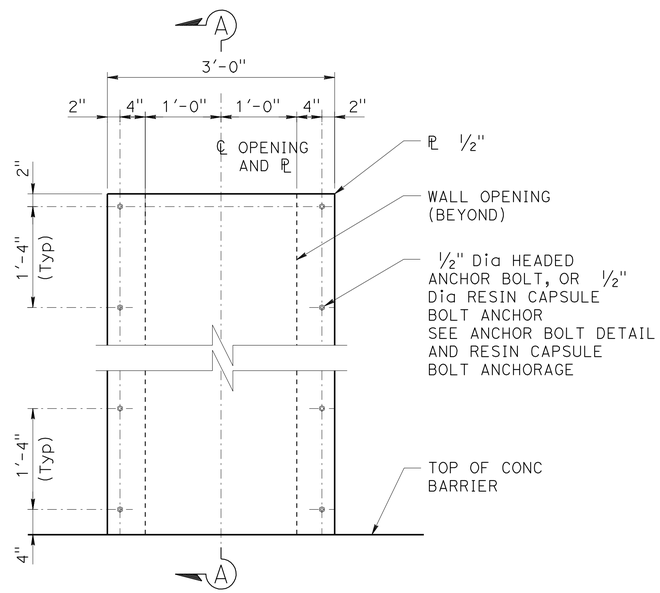

ELECTROLIER COVER PLATE DETAIL

1" = 1'-0"

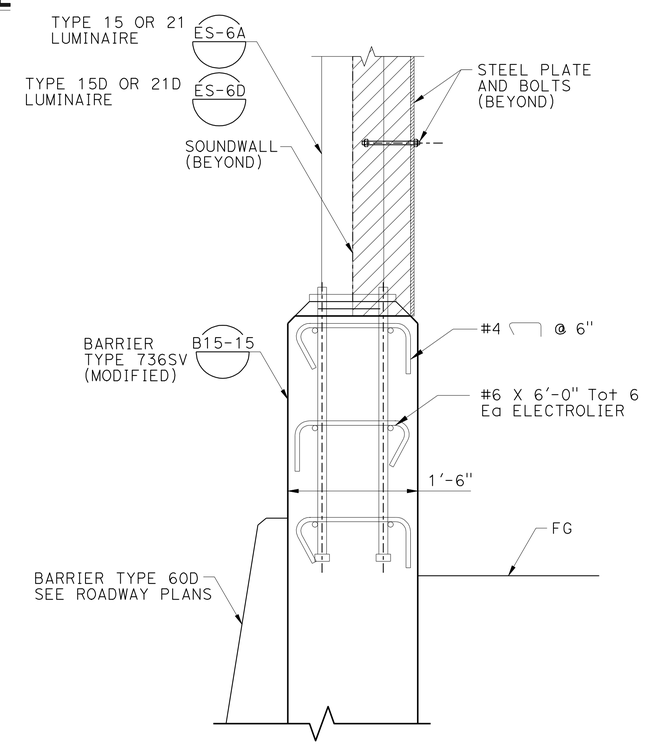

SECTION A-A

NO SCALE

NOTES:

1. For Location of Light Poles, see ROADWAY PLANS
2. See Standard Plans ES-9a, ES-9B, ES-9C, ES-9D and ES-9E for electrical details. The maximum number of conduits in the barrier is limited to two 2" conduits along with one 3" conduit. When a 3" conduit is used, it is restricted to the base of the barrier.

DESIGN OVERSIGHT Paul Cotter
4-3-13
SIGN OFF DATE

	BY	CHECKED
DESIGN	S McCauley	C. Cho
DETAILS	J Saldana	S. McCauley
QUANTITIES	C. Cho	S. McCauley

PREPARED FOR THE STATE OF CALIFORNIA DEPARTMENT OF TRANSPORTATION

Chad Harden
PROJECT ENGINEER

BRIDGE NO. 33E0117
POST MILES 28.6

RETAINING WALL No. 232
SOUND WALL ON RETAINING WALL DETAILS
MISCELLANEOUS DETAILS NO. 4

DESIGN DETAIL SHEET (ENGLISH) (REV.7/16/10)

ORIGINAL SCALE IN INCHES FOR REDUCED PLANS 0 1 2 3

UNIT: 0724
PROJECT NUMBER & PHASE: 04000001601
CONTRACT NO.: 04-0A7101

DISREGARD PRINTS BEARING EARLIER REVISION DATES

REVISION DATES 2/24/11 3/28/12 6/28/12 3/29/13

SHEET 16 OF 22

FILE => 33-E0117-u-miscdt08.dgn

USERNAME => s124496 DATE PLOTTED => 10-APR-2013 TIME PLOTTED => 09:53

DIST	COUNTY	ROUTE	POST MILES TOTAL PROJECT	SHEET No	TOTAL SHEETS
04	Ala	880	28.4/29.2	784	789

Lino Cheang — REGISTERED ENGINEER — DATE 6-25-12

4-8-13 — PLANS APPROVAL DATE

REGISTERED PROFESSIONAL ENGINEER — L. CHEANG — NO. GE 2345 — EXP. 9-30-13 — GEOTECHNICAL — STATE OF CALIFORNIA

The State of California or its officers or agents shall not be responsible for the accuracy or completeness of electronic copies of this plan sheet.

ALAMEDA COUNTY TRANSPORTATION COMMISSION
1333 BROADWAY, SUITE 220
OAKLAND, CA 94612

EARTH MECHANICS, INC.
17800 NEWHOPE STREET, SUITE B
FOUNTAIN VALLEY, CA 92708

BENCH MARK:

DESIGNATION: ALA8 ELEV=14.521
FOUND BRASS DISK STAMPED "ALA8" IN THE SIDEWALK AT THE WEST CORNER OF EAST 8TH STREET AND 5TH AVENUE.

DESIGNATION: ALA7 ELEV=15.591
FOUND BRASS DISK STAMPED "ALA7" IN THE SIDEWALK AT THE WEST SIDE OF 7TH STREET ALONG THE NORTH SIDE OF LAKE MERRITT CHANNEL.

DESIGNATION: 8TH/37TH ELEV=20.262
FOUND A CITY OF OAKLAND PIN IN CONCRETE IN A MONUMENT WELL AT THE INTERSECTION OF EAST 8TH STREET AND 37TH AVENUE.

DESIGNATION: ALA13 ELEV=15.318
FOUND BRASS DISK STAMPED "ALA13" INSIDE A 1 INCH IRON PIPE WITH A CONCRETE COLLAR 24.6 FEET NORTH OF THE NORTH SIDE OF HIGH STREET, 56 FEET WEST OF THE WEST SIDE OF THE OFFRAMP FROM SOUTHBOUND STATE ROUTE 880 AND 4.99 FEET SOUTH OF THE SOUTH RAIL OF THE RAILROAD TRACKS.

DESIGNATION: KA121 ELEV=15.768
FOUND 1 INCH IRON PIPE WITH RED PLASTIC PLUG AND TACK STAMPED "CALTRANS" ALONG THE EAST SIDE OF OAKPORT STREET ABOUT 230 FEET SOUTH OF THE SOUTH SIDE OF HIGH STREET, ACROSS FROM 4401 OAKPORT STREET, 6.92 FEET NORTH OF THE FLOWLINE OF THE CURB.

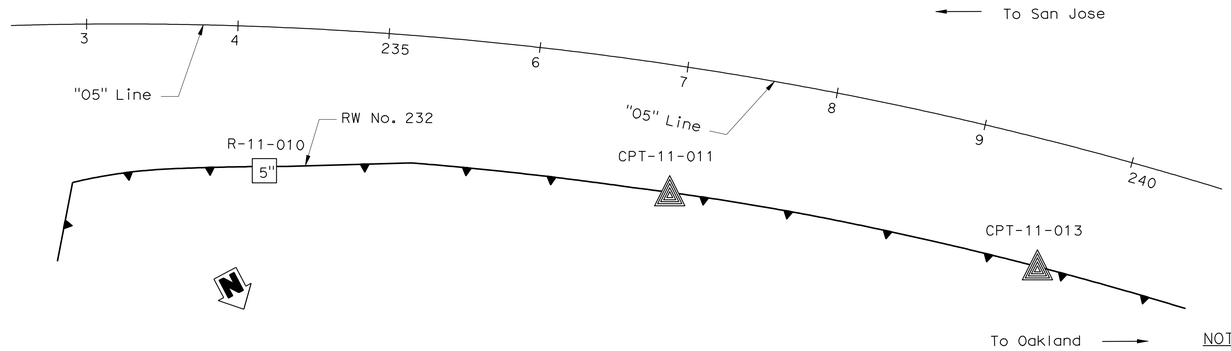

PLAN

1" = 50'

NOTES:

(1) This LOTB sheet was prepared in accordance with the Caltrans Soil and Rock Logging, Classification and Presentation Manual (June 2010).

(2) 2.4" samples were taken using a California Modified Sampler.

(3) An automatic trip hammer system consisting of a hammer weight of 140 lbs falling a distance of 30" was used to advance the drive sampler.

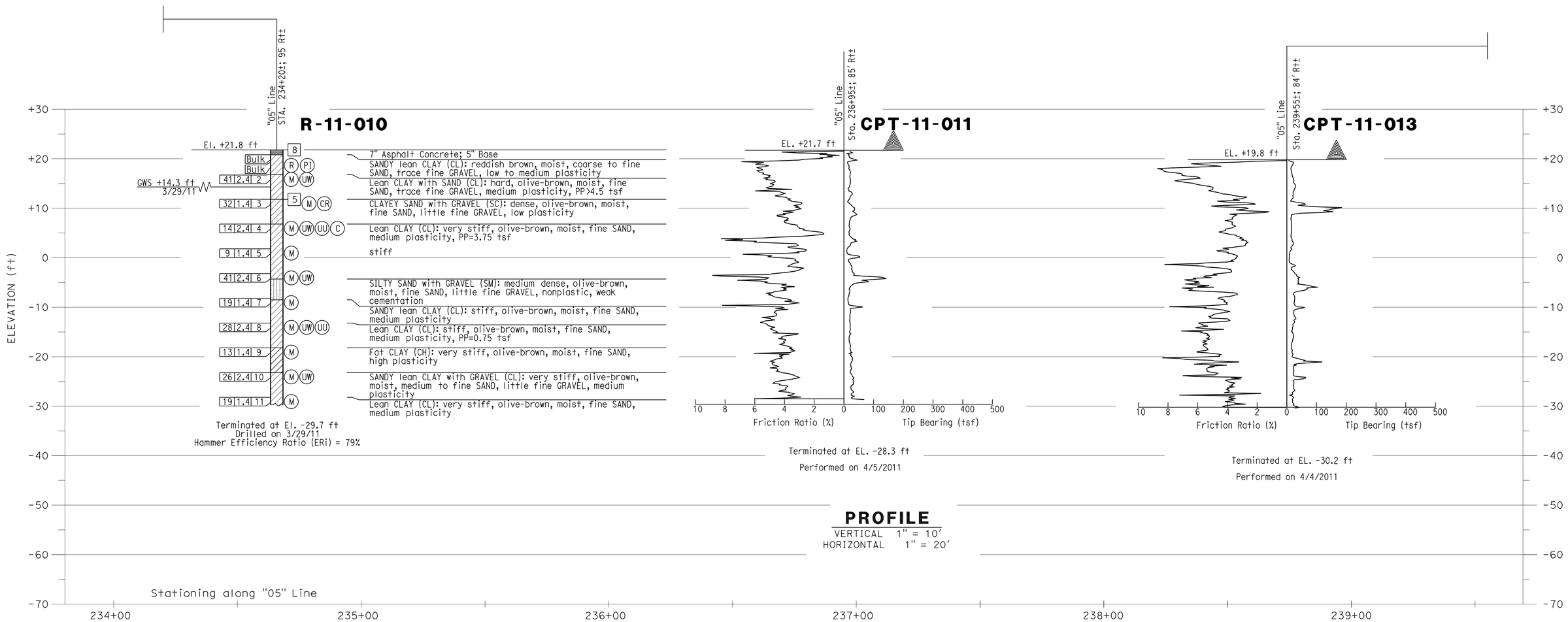

PROFILE

VERTICAL 1" = 10'
HORIZONTAL 1" = 20'

Paul Cotter — DESIGN OVERSIGHT: Paul Cotter; 7-16-12 — SIGN OFF DATE	DRAWN BY	J. Fang	K. Thant — FIELD INVESTIGATION BY:	PREPARED FOR THE STATE OF CALIFORNIA DEPARTMENT OF TRANSPORTATION	L. Cheang — PROJECT ENGINEER	BRIDGE NO. 33E0117	RETAINING WALL No. 232
	CHECKED BY	G. J. Gunaranjan	DATE: 3/2011, 4/2011			POST MILES 28.6	LOG OF TEST BORINGS 1 OF 6

GS GEOTECHNICAL LOG OF TEST BORINGS SHEET (ENGLISH) (REV. 7/16/10)

ORIGINAL SCALE IN INCHES FOR REDUCED PLANS 0 1 2 3

UNIT: 0724
PROJECT NUMBER & PHASE: 04000001601

DISREGARD PRINTS BEARING EARLIER REVISION DATES

REVISION DATES

SHEET 17 OF 22

FILE => 33-E0117-z-ltb1.dgn

CONTRACT NO.:04-0A7101 PROJECT ID:

USERNAME => s124496 DATE PLOTTED => 10-APR-2013 TIME PLOTTED => 10:00

DIST	COUNTY	ROUTE	POST MILES TOTAL PROJECT	SHEET No	TOTAL SHEETS
04	Ala	880	28.4/29.2	785	789

Lino Cheang 6-25-12
REGISTERED ENGINEER DATE

4-8-13
PLANS APPROVAL DATE

REGISTERED PROFESSIONAL ENGINEER L. CHEANG NO. GE 2345 EXP. 9-30-13 GEOTECHNICAL STATE OF CALIFORNIA

The State of California or its officers or agents shall not be responsible for the accuracy or completeness of electronic copies of this plan sheet.

ALAMEDA COUNTY TRANSPORTATION COMMISSION
1333 BROADWAY, SUITE 220
OAKLAND, CA 94612

EARTH MECHANICS, INC.
17800 NEWHOPE STREET, SUITE B
FOUNTAIN VALLEY, CA 92708

BENCH MARK:

DESIGNATION: ALA8 ELEV=14.521
FOUND BRASS DISK STAMPED "ALA8" IN THE SIDEWALK AT THE WEST CORNER OF EAST 8TH STREET AND 5TH AVENUE.

DESIGNATION: ALA7 ELEV=15.591
FOUND BRASS DISK STAMPED "ALA7" IN THE SIDEWALK AT THE WEST SIDE OF 7TH STREET ALONG THE NORTH SIDE OF LAKE MERRITT CHANNEL.

DESIGNATION: 8TH/37TH ELEV=20.262
FOUND A CITY OF OAKLAND PIN IN CONCRETE IN A MONUMENT WELL AT THE INTERSECTION OF EAST 8TH STREET AND 37TH AVENUE.

DESIGNATION: ALA13 ELEV=15.318
FOUND BRASS DISK STAMPED "ALA13" INSIDE A 1 INCH IRON PIPE WITH A CONCRETE COLLAR 24.6 FEET NORTH OF THE NORTH SIDE OF HIGH STREET, 56 FEET WEST OF THE WEST SIDE OF THE OFFRAMP FROM SOUTHBOUND STATE ROUTE 880 AND 4.99 FEET SOUTH OF THE SOUTH RAIL OF THE RAILROAD TRACKS.

DESIGNATION: KA121 ELEV=15.768
FOUND 1 INCH IRON PIPE WITH RED PLASTIC PLUG AND TACK STAMPED "CALTRANS" ALONG THE EAST SIDE OF OAKPORT STREET ABOUT 230 FEET SOUTH OF THE SOUTH SIDE OF HIGH STREET, ACROSS FROM 4401 OAKPORT STREET, 6.92 FEET NORTH OF THE FLOWLINE OF THE CURB.

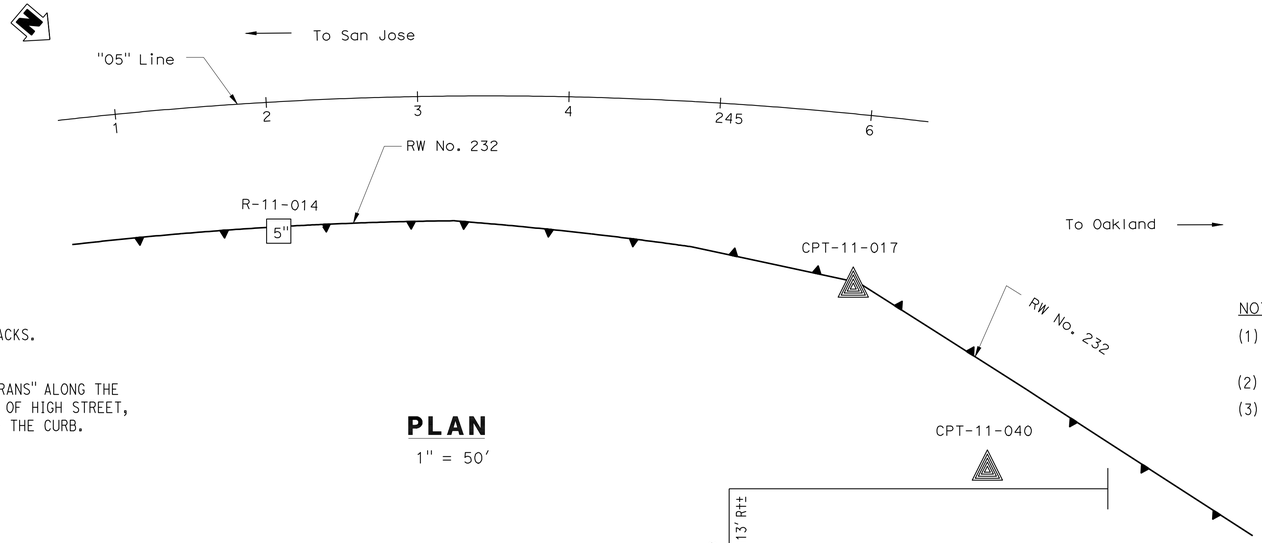

PLAN

1" = 50'

NOTES:

(1) This LOTB sheet was prepared in accordance with the Caltrans Soil and Rock Logging, Classification and Presentation Manual (June 2010).

(2) 2.4" samples were taken using a California Modified Sampler.

(3) An automatic trip hammer system consisting of a hammer weight of 140 lbs falling a distance of 30" was used to advance the drive sampler.

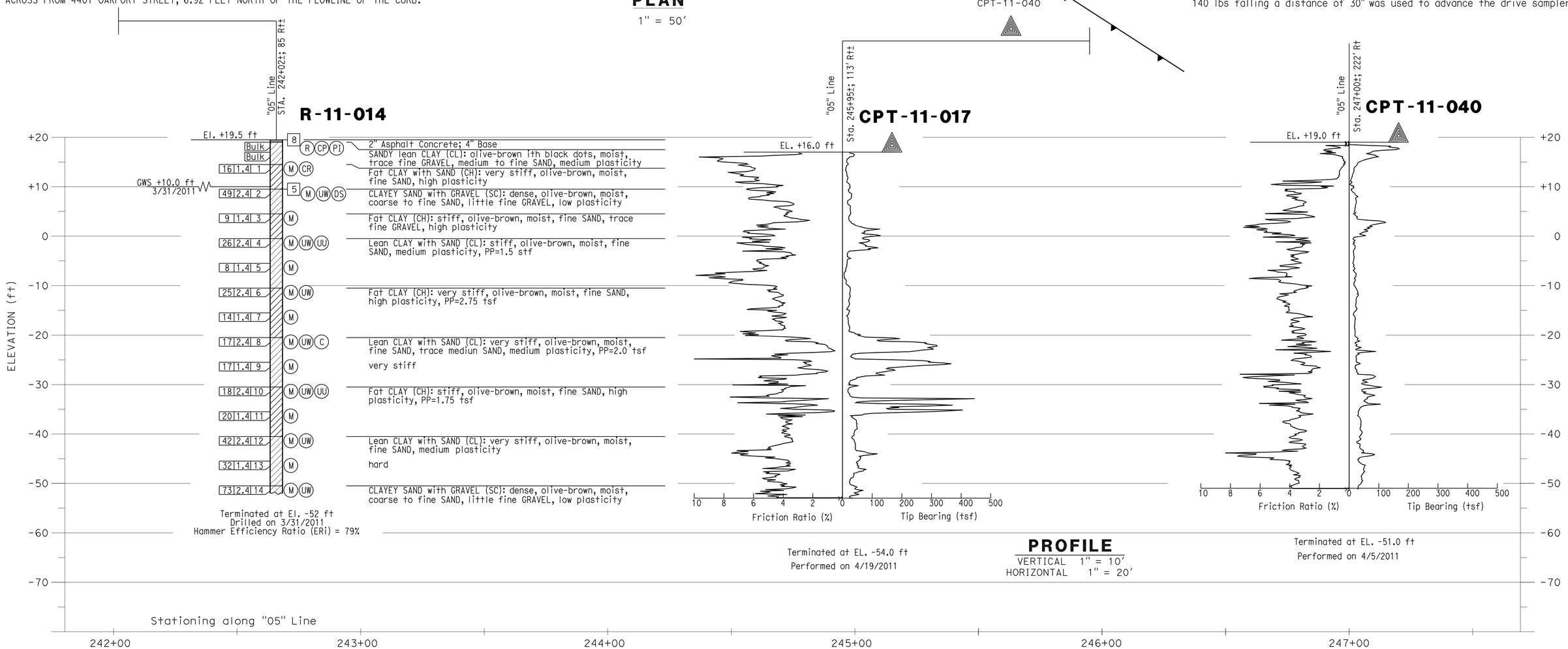

PROFILE

VERTICAL 1" = 10'
HORIZONTAL 1" = 20'

Paul Cotter DESIGN OVERSIGHT Paul Cotter	DRAWN BY	J. Fang	K. Thant FIELD INVESTIGATION BY:	PREPARED FOR THE STATE OF CALIFORNIA DEPARTMENT OF TRANSPORTATION	L.Cheang PROJECT ENGINEER	BRIDGE NO. 33E0117
7-16-12 SIGN OFF DATE	CHECKED BY	G. J. Gunaranjan	DATE: 3/2011, 4/2011			POST MILES 28.6

RETAINING WALL No. 232

LOG OF TEST BORINGS 2 OF 6

GS GEOTECHNICAL LOG OF TEST BORINGS SHEET (ENGLISH) (REV. 7/16/10)

ORIGINAL SCALE IN INCHES FOR REDUCED PLANS 0 1 2 3

UNIT: 0724
PROJECT NUMBER & PHASE: 04000001601

DISREGARD PRINTS BEARING EARLIER REVISION DATES

REVISION DATES

SHEET 18 OF 22

CONTRACT NO.:04-0A7101 PROJECT ID:

FILE => 33-E0117-z-ltb2.dgn

USERNAME => s124496 DATE PLOTTED => 10-APR-2013 TIME PLOTTED => 10:00

DIST	COUNTY	ROUTE	POST MILES TOTAL PROJECT	SHEET No	TOTAL SHEETS
04	Ala	880	28.4/29.2	786	789

Lino Cheang 6-25-12
REGISTERED ENGINEER DATE

4-8-13
PLANS APPROVAL DATE

REGISTERED PROFESSIONAL ENGINEER L. CHEANG NO. GE 2345 EXP. 9-30-13 GEOTECHNICAL STATE OF CALIFORNIA

The State of California or its officers or agents shall not be responsible for the accuracy or completeness of electronic copies of this plan sheet.

ALAMEDA COUNTY TRANSPORTATION COMMISSION
1333 BROADWAY, SUITE 220
OAKLAND, CA 94612

EARTH MECHANICS, INC.
17800 NEWHOPE STREET, SUITE B
FOUNTAIN VALLEY, CA 92708

BENCH MARK:

DESIGNATION: ALA8 ELEV=14.521
FOUND BRASS DISK STAMPED "ALA8" IN THE SIDEWALK AT THE WEST CORNER OF EAST 8TH STREET AND 5TH AVENUE.

DESIGNATION: ALA7 ELEV=15.591
FOUND BRASS DISK STAMPED "ALA7" IN THE SIDEWALK AT THE WEST SIDE OF 7TH STREET ALONG THE NORTH SIDE OF LAKE MERRITT CHANNEL.

DESIGNATION: 8TH/37TH ELEV=20.262
FOUND A CITY OF OAKLAND PIN IN CONCRETE IN A MONUMENT WELL AT THE INTERSECTION OF EAST 8TH STREET AND 37TH AVENUE.

DESIGNATION: ALA13 ELEV=15.318
FOUND BRASS DISK STAMPED "ALA13" INSIDE A 1 INCH IRON PIPE WITH A CONCRETE COLLAR 24.6 FEET NORTH OF THE NORTH SIDE OF HIGH STREET, 56 FEET WEST OF THE WEST SIDE OF THE OFFRAMP FROM SOUTHBOUND STATE ROUTE 880 AND 4.99 FEET SOUTH OF THE SOUTH RAIL OF THE RAILROAD TRACKS.

DESIGNATION: KA121 ELEV=15.768
FOUND 1 INCH IRON PIPE WITH RED PLASTIC PLUG AND TACK STAMPED "CALTRANS" ALONG THE EAST SIDE OF OAKPORT STREET ABOUT 230 FEET SOUTH OF THE SOUTH SIDE OF HIGH STREET, ACROSS FROM 4401 OAKPORT STREET, 6.92 FEET NORTH OF THE FLOWLINE OF THE CURB.

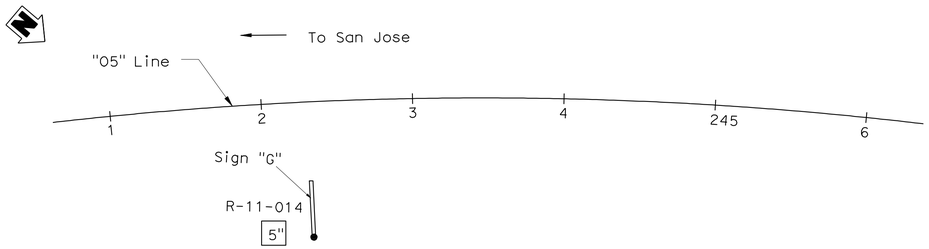

To Oakland

PLAN

1" = 50'

NOTES:

(1) This LOTB sheet was prepared in accordance with the Caltrans Soil and Rock Logging, Classification and Presentation Manual (June 2010).

(2) 2.4" samples were taken using a California Modified Sampler.

(3) An automatic trip hammer system consisting of a hammer weight of 140 lbs falling a distance of 30" was used to advance the drive sampler.

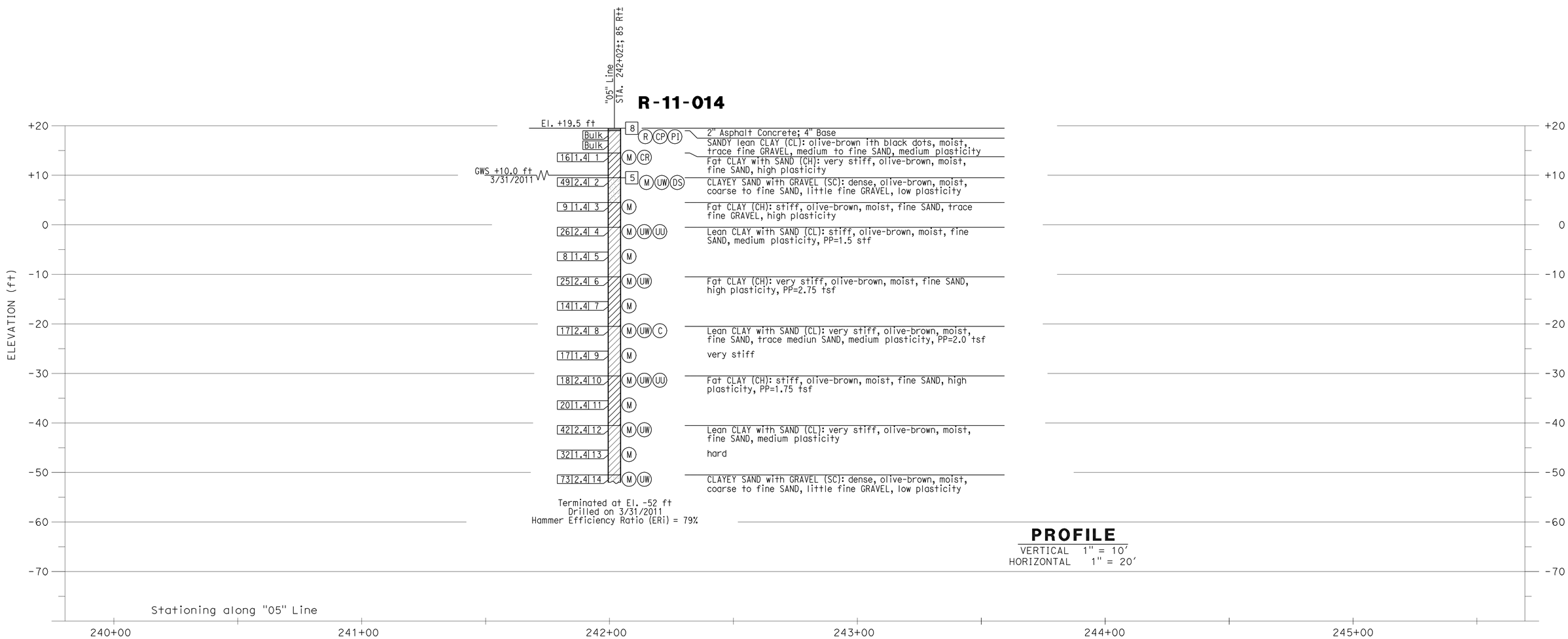

PROFILE

VERTICAL 1" = 10'
HORIZONTAL 1" = 20'

Paul Cotter
DESIGN OVERSIGHT Paul Cotter
7-16-12
SIGN OFF DATE

DRAWN BY J. Fang
CHECKED BY G. J. Gunaranjan

K. Thant
FIELD INVESTIGATION BY:
DATE: 3/2011, 4/2011

PREPARED FOR THE STATE OF CALIFORNIA DEPARTMENT OF TRANSPORTATION

L.Cheang
PROJECT ENGINEER

BRIDGE NO. 33E0117
POST MILES 28.6

RETAINING WALL No. 232

LOG OF TEST BORING 3 OF 6

GS GEOTECHNICAL LOG OF TEST BORINGS SHEET (ENGLISH) (REV. 7/16/10)

ORIGINAL SCALE IN INCHES FOR REDUCED PLANS 0 1 2 3

UNIT: 0247
PROJECT NUMBER & PHASE: 04000001601

DISREGARD PRINTS BEARING EARLIER REVISION DATES

REVISION DATES

SHEET 19 OF 22

FILE => 33-E0117-z-ltb3.dgn

CONTRACT NO.:04-0A7101 PROJECT ID:

USERNAME => s124496 DATE PLOTTED => 10-APR-2013 TIME PLOTTED => 10:00

TO ACCOMPANY PLANS DATED 4-8-13

DIVISION OF ENGINEERING SERVICES - GEOTECHNICAL SERVICES

The information presented on this drawing, was not the result of any work developed, performed, or completed by EMI. This drawing is available and presented only for the convenience of any bidder, contractor, or other interested party. It should be understood that EMI assumes no responsibility in respect to the sufficiency, accuracy, completeness, interpretation set forth, or any other aspect of the information shown on this drawing.

DIST.	COUNTY	ROUTE	POST MILES-TOTAL PROJECT	Sheet No.	Total Sheets
04	Ala	880	28.4/29.2	787	789

Lino Cheang — CERTIFIED ENGINEERING GEOLOGIST — 6/25/12 DATE

RETAINING WALL No. 232

LOG OF TEST BORINGS 4 OF 6

UNIT: 0724	CONTRACT No.	BRIDGE No.
PROJECT NUMBER & PHASE: 04000001601	04-0A7101	33E0117

Sheet	of
20	22

REGISTERED PROFESSIONAL ENGINEER — L. CHEANG — NO. GE 2345 — EXP. 9-30-13 — GEOTECHNICAL — STATE OF CALIFORNIA

DIST	COUNTY	ROUTE	POST MILES TOTAL PROJECT	SHEET No	TOTAL SHEETS
04	880	Ala			

REGISTERED CIVIL ENGINEER — DATE 3/30/12

PLANS APPROVAL DATE

REGISTERED PROFESSIONAL ENGINEER — Philip Meymand — No. 2596 — Exp. 6/30/13 — GEOTECHNICAL — STATE OF CALIFORNIA

The State of California or its officers or agents shall not be responsible for the accuracy or completeness of electronic copies of this plan sheet.

ALAMEDA COUNTY TRANSPORTATION
1333 BROADWAY
OAKLAND, CA 94612

URS CORPORATION
1333 BROADWAY, SUITE 800
OAKLAND, CA 94612

NOTES:

1. Ground water table was not measured in the borings due to rotary wash drilling.
2. Hammer energy ratio calibration not performed.
3. The borings were hand augered in the top 5 ft to check for the existence of underground utilities.

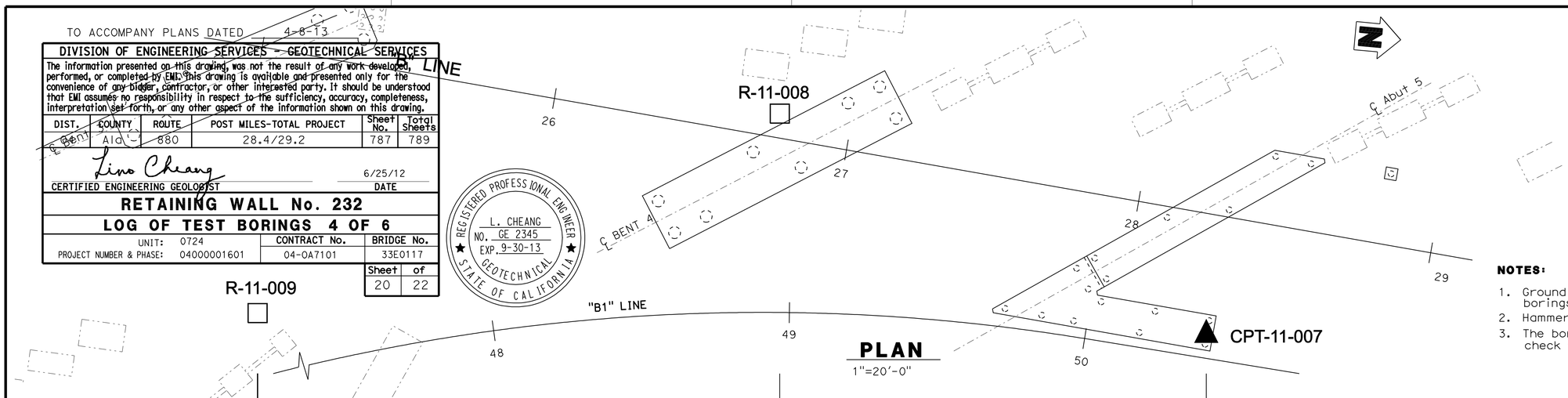

PLAN
1"=20'-0"

R-11-009

88.57' Rt, Sta. 25+14, "B" Line — EL. 17.0'

Elev. (ft)	Blows	Type	Description
	16 2.0		Fat CLAY (CH); very stiff; dark gray; dry to moist; about 10% fine SAND; about 90% medium to high plasticity, very high dry strength fines; PP=2.5 tsf (FILL).
	22 2.0		SANDY lean CLAY (CL); very stiff; medium to dark brown; dry to moist; about 10% coarse, angular GRAVEL; about 40% medium SAND; about 50% low plasticity fines; PP=3.5 tsf.
	18 2.0	M UW UC	SANDY lean CLAY (CL); very stiff; medium brown; moist; about 30% fine SAND; about 70% medium plasticity fines; trace coarse sand; PP=2.75 tsf (ALLUVIUM).
	12 2.0		Lean CLAY with SAND (CL); stiff; medium brown; moist; trace coarse GRAVEL; about 20% fine SAND; about 80% medium plasticity fines; sample disturbed; PP=3.0 tsf.
	13 2.0		-very stiff about 15% subrounded gravel up to 1/2 in; black and red mottles; PP=3.25-3.75 tsf.
	17 2.0		-no evident gravel; black; mottles very common; stiff; about 15% fine sand; PP=1.75 tsf.
	8 2.0	M UW UU	-very stiff; trace angular gravel to 1/2 in; PP=3.5 tsf. Lean CLAY (CL); very stiff; medium brown; moist; about 5% fine SAND; about 95% medium plasticity fines; PP=3.0 tsf.
	35 1.4	PA	SANDY lean CLAY (CL); medium stiff; brown and gray; moist; about 25% fine SAND; about 75% medium plasticity fines; PP=1.75 tsf. Poorly graded SAND with SILT and GRAVEL (SP-SM); dense; brown; wet; about 26% subangular GRAVEL, max. 3/4 in. dia.; about 63% coarse to medium SAND; about 11% nonplastic fines.
	38 1.4		
	15 2.0	M PI	Fat CLAY (CH); very stiff; gray; moist; about 5% fine SAND; about 95% medium to high plasticity, very high dry strength fines; PP=2.0-3.0 tsf.
	40 2.0	M UW	Lean CLAY with SAND (CL); hard; greenish-gray; dry to moist; about 5% fine, subangular GRAVEL; about 25% fine SAND; about 70% low plasticity fines; PP=>4.5 tsf.
	27 2.0		-brown; very stiff; about 10% fine sand; medium plasticity fines; PP=3.0 tsf. SANDY lean CLAY (CL); very stiff to hard; brown and gray; moist; about 35% fine SAND; about 65% low plasticity fines; PP=>4.5 tsf.
	40 2.0	M PI	-very stiff; occasional black mottles; PP=3.0 tsf.
	28 1.4		-hard coarse sand lens at 90.5 ft; <1 in thick; PP=4.25 tsf.
	38 2.0	M UW UU	-very stiff; about 45% fine sand; about 55% low plasticity fines; PP=3.25 tsf.

Terminated at El. -84.5'
04-28-11

R-11-008

8.18' Lt, Sta. 26+75.7, "B" Line — EL. 19.0'

Elev. (ft)	Blows	Type	Description
	26 2.0	M UW UC	Fat CLAY (CH); dark gray; dry; about 5% fine SAND; about 95% high plasticity, very high dry strength fines; (FILL).
	12 2.0	C PI	-hard; moist; PP=4.25 tsf. Lean CLAY with SAND (CL); hard; medium brown; moist; about 5% fine, subangular to subrounded GRAVEL; about 15% fine SAND; about 80% medium plasticity fines; light brown mottles; PP=3.25-4.25 tsf; (ALLUVIUM).
	9 1.4		-stiff; PP=1.75 tsf. SANDY lean CLAY with GRAVEL (CL); stiff to very stiff; medium brown; moist; about 20% subrounded GRAVEL, max. 1/2 in. dia.; about 40% medium to fine SAND; about 40% medium plasticity fines; PP=1.5-2.0 tsf.
	12 2.0	M UW UC	Lean CLAY with SAND (CL); stiff; medium brown; moist; about 5% fine, subangular to subrounded GRAVEL; about 15% fine SAND; about 80% medium plasticity fines; PP=1.75 tsf.
	11 2.0	M UW	Lean CLAY (CL); stiff to very stiff; medium brown; moist; about 5% fine SAND; about 95% medium plasticity fines; PP=1.0-2.0 tsf.
	19 2.0		PP=3.0 tsf.
	14 2.0	M PI	SANDY lean CLAY (CL); very stiff; medium brown; moist; about 40% fine SAND; about 60% low plasticity fines; PP=2.5 tsf.
	32 2.0	PA	Fat CLAY (CH); very stiff; medium brown; moist; about 5% fine SAND; about 95% high plasticity, very high dry strength fines; PP=2.0-2.75 tsf.
	12 1.4		SILTY SAND with GRAVEL (SM); medium dense; brown; moist; about 40% subrounded GRAVEL, max. 1 in. dia.; about 43% coarse to medium SAND; about 17% nonplastic fines.
	55 2.0		SANDY lean CLAY (CL); stiff; medium brown; moist; about 35% fine SAND; about 65% medium plasticity fines; PP=1.0 tsf. Poorly graded SAND with SILT (SP-SM); dense; medium brown; moist; trace GRAVEL, max. 1/4 in. dia.; about 90% coarse to medium SAND; about 10% nonplastic fines; PP=>4.5 tsf.
	47 2.0		SANDY lean CLAY (CL); very stiff; medium brown; moist; about 45% fine SAND; about 55% medium plasticity fines. SILTY SAND (SM); dense; medium brown; moist; about 85% medium SAND; about 15% low plasticity fines.
	14 1.4		SANDY lean CLAY (CL); very stiff; brown and gray; moist; trace subangular GRAVEL, max. 1/3 in. dia.; about 30% fine SAND; about 70% medium plasticity fines; Manganese and iron staining; PP=2.25-2.75 tsf.
	35 2.0	M UW UU	-stiff; sand lens 81 to 81.25 ft; PP=4.5 tsf.
	22 1.4		-very stiff; PP=3.5 tsf.
	30 1.4		PP=2.25 tsf.

Terminated at El. -82.5'
04-27-11

CPT-11-007

39.31' Rt, Sta. 28+30.1, "B" Line — EL. 25.0'

GWS EL. 10.9'
04-29-11

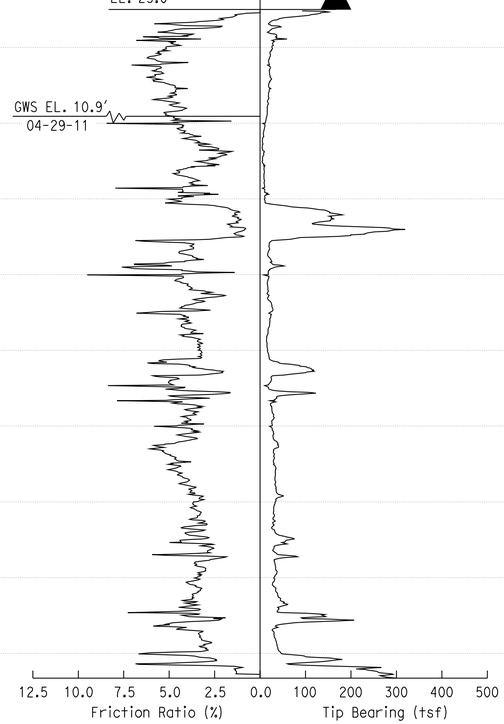

Terminated at EL. -63.3'
04-29-11

Elevation (ft): +20, 10, 0, -10, -20, -30, -40, -50, -60, -70, -80, -90

Paul Cotter — DESIGN OVERSIGHT: Paul Cotter	DRAWN BY: N. HUTTON	S. JANOWSKI — FIELD INVESTIGATION BY:	PREPARED FOR THE STATE OF CALIFORNIA DEPARTMENT OF TRANSPORTATION
7-16-12 — SIGN OFF DATE	CHECKED BY: C. TSAI	DATE: 04-25-11 TO 05-04-11	

Jan Hueser — PROJECT ENGINEER

BRIDGE NO. 33-0753 — POST MILES 28.95

23RD AVENUE OC (REPLACE)

LOG OF TEST BORINGS 4 OF 4

GS CIVIL LOG OF TEST BORINGS SHEET (ENGLISH) (REV. 7/16/10)

ORIGINAL SCALE IN INCHES FOR REDUCED PLANS 0 1 2 3

UNIT: 0724
PROJECT NUMBER & PHASE: 04000001601 — CONTRACT NO.: 04-0A7101

DISREGARD PRINTS BEARING EARLIER REVISION DATES — REVISION DATES 9-6-11 1-10-12 3-30-12 6-25-12 — SHEET 48 OF 51

FILE => 33-E0117-z-ltb4.dgn

USERNAME => s124496 DATE PLOTTED => 10-APR-2013 TIME PLOTTED => 10:00

DIST	COUNTY	ROUTE	POST MILES TOTAL PROJECT	SHEET No	TOTAL SHEETS
04	Ala	880	28.4/29.2	788	789

Lino Cheang 6-25-12
REGISTERED ENGINEER DATE

4-8-13
PLANS APPROVAL DATE

REGISTERED PROFESSIONAL ENGINEER L. CHEANG NO. GE 2345 EXP. 9-30-13 GEOTECHNICAL STATE OF CALIFORNIA

The State of California or its officers or agents shall not be responsible for the accuracy or completeness of electronic copies of this plan sheet.

ALAMEDA COUNTY TRANSPORTATION COMMISSION
1333 BROADWAY, SUITE 220
OAKLAND, CA 94612

EARTH MECHANICS, INC.
17800 NEWHOPE STREET, SUITE B
FOUNTAIN VALLEY, CA 92708

REFERENCE: CALTRANS SOIL & ROCK LOGGING, CLASSIFICATION, AND PRESENTATION MANUAL (2010)

CEMENTATION

Description	Criteria
Weak	Crumbles or breaks with handling or little finger pressure.
Moderate	Crumbles or breaks with considerable finger pressure.
Strong	Will not crumble or break with finger pressure.

BOREHOLE IDENTIFICATION

Symbol	Hole Type	Description
Size	A	Auger Boring (hollow or solid stem bucket)
Size	R RW RC P	Rotary drilled boring (conventional) Rotary drilled with self-casing wire-line Rotary core with continuously-sampled, self-casing wire-line Rotary percussion boring (air)
Size	R	Rotary drilled diamond core
Size	HD HA	Hand driven (1-inch soil tube) Hand Auger
●	D	Dynamic Cone Penetration Boring
▲	CPT	Cone Penetration Test (ASTM D 5778)
⬚	O	Other (note on LOTB)

Note: Size in inches.

CONSISTENCY OF COHESIVE SOILS

Description	Shear Strength (tsf)	Pocket Penetrometer Measurement, PP, (tsf)	Torvane Measurement, TV, (tsf)	Vane Shear Measurement, VS, (tsf)
Very Soft	Less than 0.12	Less than 0.25	Less than 0.12	Less than 0.12
Soft	0.12 - 0.25	0.25 - 0.5	0.12 - 0.25	0.12 - 0.25
Medium Stiff	0.25 - 0.5	0.5 - 1	0.25 - 0.5	0.25 - 0.5
Stiff	0.5 - 1	1 - 2	0.5 - 1	0.5 - 1
Very Stiff	1 - 2	2 - 4	1 - 2	1 - 2
Hard	Greater than 2	Greater than 4	Greater than 2	Greater than 2

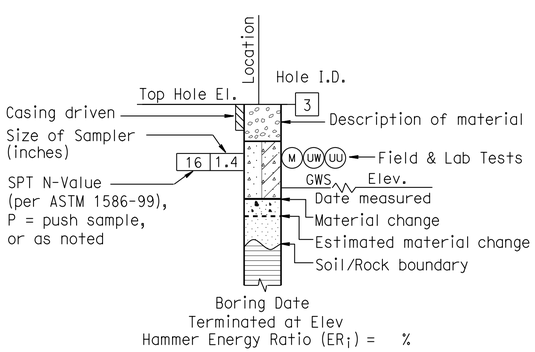

ROTARY BORING

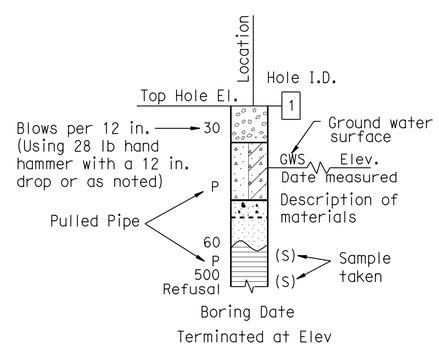

HAND BORING

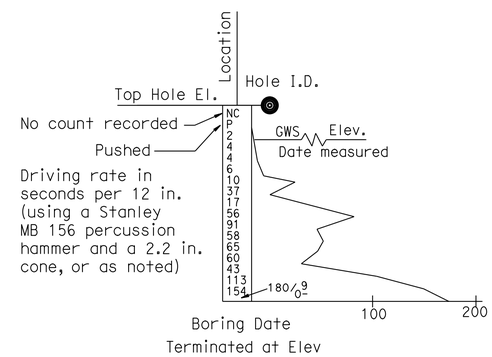

DYNAMIC CONE PENETRATION BORING

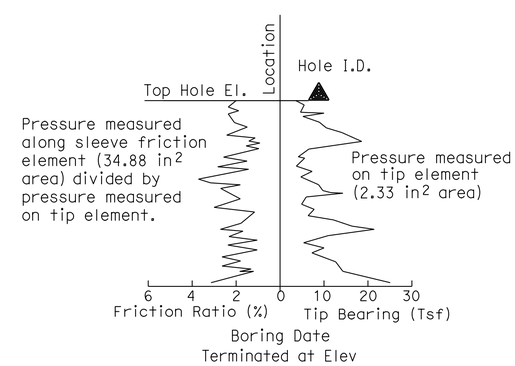

CONE PENETRATION TEST (CPT) BORING

Paul Cotter
DESIGN OVERSIGHT Paul Cotter
7-16-12
SIGN OFF DATE

DRAWN BY J. Fang
CHECKED BY G. J. Gunaranjan

K. Thant
FIELD INVESTIGATION BY:
DATE: 3/2011, 4/2011

PREPARED FOR THE STATE OF CALIFORNIA DEPARTMENT OF TRANSPORTATION

L. Cheang
PROJECT ENGINEER

BRIDGE NO. 33E0117
POST MILES 28.6

RETAINING WALL No. 232
LOG OF TEST BORINGS 5 OF 6

GS GEOTECHNICAL LOG OF TEST BORINGS SHEET (ENGLISH) (REV. 7/16/10)

ORIGINAL SCALE IN INCHES FOR REDUCED PLANS 0 1 2 3

UNIT: 0724
PROJECT NUMBER & PHASE: 04000001601

DISREGARD PRINTS BEARING EARLIER REVISION DATES

REVISION DATES

SHEET 21 OF 22

FILE => 33-E0117-z-soil legend-ltb1.dgn

CONTRACT NO.:04-0A7101 PROJECT ID:

USERNAME => s121614 DATE PLOTTED => 11-APR-2013 TIME PLOTTED => 13:16

REFERENCE: CALTRANS SOIL & ROCK LOGGING, CLASSIFICATION, AND PRESENTATION MANUAL (2010)

DIST	COUNTY	ROUTE	POST MILES TOTAL PROJECT	SHEET No	TOTAL SHEETS
04	Ala	880	28.4/29.2	789	789

Lino Cheang
REGISTERED ENGINEER — DATE 6-25-12

4-8-13
PLANS APPROVAL DATE

REGISTERED PROFESSIONAL ENGINEER — L. CHEANG — NO. GE 2345 — EXP. 9-30-13 — GEOTECHNICAL — STATE OF CALIFORNIA

The State of California or its officers or agents shall not be responsible for the accuracy or completeness of electronic copies of this plan sheet.

ALAMEDA COUNTY TRANSPORTATION COMMISSION
1333 BROADWAY, SUITE 220
OAKLAND, CA 94612

EARTH MECHANICS, INC.
17800 NEWHOPE STREET, SUITE B
FOUNTAIN VALLEY, CA 92708

GROUP SYMBOLS AND NAMES

Graphic/Symbol	Group Names	Graphic/Symbol	Group Names
GW	Well-graded GRAVEL Well-graded GRAVEL with SAND	CL	Lean CLAY Lean CLAY with SAND Lean CLAY with GRAVEL SANDY lean CLAY SANDY lean CLAY with GRAVEL GRAVELLY lean CLAY GRAVELLY lean CLAY with SAND
GP	Poorly-graded GRAVEL Poorly-graded GRAVEL with SAND		
GW-GM	Well-graded GRAVEL with SILT Well-graded GRAVEL with SILT and SAND	CL-ML	SILTY CLAY SILTY CLAY with SAND SILTY CLAY with GRAVEL SANDY SILTY CLAY SANDY SILTY CLAY with GRAVEL GRAVELLY SILTY CLAY GRAVELLY SILTY CLAY with SAND
GW-GC	Well-graded GRAVEL with CLAY (or SILTY CLAY) Well-graded GRAVEL with CLAY and SAND (or SILTY CLAY and SAND)		
GP-GM	Poorly-graded GRAVEL with SILT Poorly-graded GRAVEL with SILT and SAND	ML	SILT SILT with SAND SILT with GRAVEL SANDY SILT SANDY SILT with GRAVEL GRAVELLY SILT GRAVELLY SILT with SAND
GP-GC	Poorly-graded GRAVEL with CLAY (or SILTY CLAY) Poorly-graded GRAVEL with CLAY and SAND (or SILTY CLAY and SAND)		
GM	SILTY GRAVEL SILTY GRAVEL with SAND	OL	ORGANIC lean CLAY ORGANIC lean CLAY with SAND ORGANIC lean CLAY with GRAVEL SANDY ORGANIC lean CLAY SANDY ORGANIC lean CLAY with GRAVEL GRAVELLY ORGANIC lean CLAY GRAVELLY ORGANIC lean CLAY with SAND
GC	CLAYEY GRAVEL CLAYEY GRAVEL with SAND		
GC-GM	SILTY, CLAYEY GRAVEL SILTY, CLAYEY GRAVEL with SAND	OL	ORGANIC SILT ORGANIC SILT with SAND ORGANIC SILT with GRAVEL SANDY ORGANIC SILT SANDY ORGANIC SILT with GRAVEL GRAVELLY ORGANIC SILT GRAVELLY ORGANIC SILT with SAND
SW	Well-graded SAND Well-graded SAND with GRAVEL		
SP	Poorly-graded SAND Poorly-graded SAND with GRAVEL	CH	Fat CLAY Fat CLAY with SAND Fat CLAY with GRAVEL SANDY fat CLAY SANDY fat CLAY with GRAVEL GRAVELLY fat CLAY GRAVELLY fat CLAY with SAND
SW-SM	Well-graded SAND with SILT Well-graded SAND with SILT and GRAVEL		
SW-SC	Well-graded SAND with CLAY (or SILTY CLAY) Well-graded SAND with CLAY and GRAVEL (or SILTY CLAY and GRAVEL)	MH	Elastic SILT Elastic SILT with SAND Elastic SILT with GRAVEL SANDY elastic SILT SANDY elastic SILT with GRAVEL GRAVELLY elastic SILT GRAVELLY elastic SILT with SAND
SP-SM	Poorly-graded SAND with SILT Poorly-graded SAND with SILT and GRAVEL		
SP-SC	Poorly-graded SAND with CLAY (or SILTY CLAY) Poorly-graded SAND with CLAY and GRAVEL (or SILTY CLAY and GRAVEL)	OH	ORGANIC fat CLAY ORGANIC fat CLAY with SAND ORGANIC fat CLAY with GRAVEL SANDY ORGANIC fat CLAY SANDY ORGANIC fat CLAY with GRAVEL GRAVELLY ORGANIC fat CLAY GRAVELLY ORGANIC fat CLAY with SAND
SM	SILTY SAND SILTY SAND with GRAVEL		
SC	CLAYEY SAND CLAYEY SAND with GRAVEL	OH	ORGANIC elastic SILT ORGANIC elastic SILT with SAND ORGANIC elastic SILT with GRAVEL SANDY ORGANIC elastic SILT SANDY ORGANIC elastic SILT with GRAVEL GRAVELLY ORGANIC elastic SILT GRAVELLY ORGANIC elastic SILT with SAND
SC-SM	SILTY, CLAYEY SAND SILTY, CLAYEY SAND with GRAVEL		
PT	PEAT	OL/OH	ORGANIC SOIL ORGANIC SOIL with SAND ORGANIC SOIL with GRAVEL SANDY ORGANIC SOIL SANDY ORGANIC SOIL with GRAVEL GRAVELLY ORGANIC SOIL GRAVELLY ORGANIC SOIL with SAND
	COBBLES COBBLES and BOULDERS BOULDERS		

FIELD AND LABORATORY TESTING

- (C) Consolidation (ASTM D 2435)
- (CL) Collapse Potential (ASTM D 5333)
- (CP) Compaction Curve (CTM 216)
- (CR) Corrosivity Testing (CTM 643, CTM 422, CTM 417)
- (CU) Consolidated Undrained Triaxial (ASTM D 4767)
- (DS) Direct Shear (ASTM D 3080)
- (EI) Expansion Index (ASTM D 4829)
- (M) Moisture Content (ASTM D 2216)
- (OC) Organic Content-% (ASTM D 2974)
- (P) Permeability (CTM 220)
- (PA) Particle Size Analysis (ASTM D 422)
- (PI) Plasticity Index (AASHTO T 90) Liquid Limit (AASHTO T 89)
- (PL) Point Load Index (ASTM D 5731)
- (PM) Pressure Meter
- (R) R-Value (CTM 301)
- (SE) Sand Equivalent (CTM 217)
- (SG) Specific Gravity (AASHTO T 100)
- (SL) Shrinkage Limit (ASTM D 427)
- (SW) Swell Potential (ASTM D 4546)
- (UC) Unconfined Compression-Soil (ASTM D 2166) Unconfined Compression-Rock (ASTM D 2938)
- (UU) Unconsolidated Undrained Triaxial (ASTM D 2850)
- (UW) Unit Weight (ASTM D 4767)

APPARENT DENSITY OF COHESIONLESS SOILS

Description	SPT N_{60} (Blows / 12 in.)
Very Loose	0 - 5
Loose	5 - 10
Medium Dense	10 - 30
Dense	30 - 50
Very Dense	Greater than 50

MOISTURE

Description	Criteria
Dry	No discernable moisture
Moist	Moisture present, but no free water
Wet	Visible free water

PERCENT OR PROPORTION OF SOILS

Description	Criteria
Trace	Particles are present but estimated to be less than 5%
Few	5% - 10%
Little	15% - 25%
Some	30% - 45%
Mostly	50% - 100%

PARTICLE SIZE

Description		Size (in.)
Boulder		Greater than 12
Cobble		3 - 12
Gravel	Coarse	3/4 - 3
	Fine	1/5 - 3/4
Sand	Coarse	1/16 - 1/5
	Medium	1/64 - 1/16
	Fine	1/300 - 1/64
Silt and Clay		Less than 1/300

Paul Cotter
DESIGN OVERSIGHT Paul Cotter
7-16-12
SIGN OFF DATE

DRAWN BY J. Fang
CHECKED BY G. J. Gunaranjan

K. Thant
FIELD INVESTIGATION BY:
DATE: 3/2011, 4/2011

PREPARED FOR THE STATE OF CALIFORNIA DEPARTMENT OF TRANSPORTATION

L. Cheang
PROJECT ENGINEER

BRIDGE NO. 33E0117
POST MILES 28.6

RETAINING WALL No. 232
LOG OF TEST BORINGS 6 OF 6

GS GEOTECHNICAL LOG OF TEST BORINGS SHEET (ENGLISH) (REV. 7/16/10)

ORIGINAL SCALE IN INCHES FOR REDUCED PLANS 0 1 2 3

UNIT: 0724
PROJECT NUMBER & PHASE: 04000001601

DISREGARD PRINTS BEARING EARLIER REVISION DATES

REVISION DATES

SHEET 22 OF 22

FILE => 33-E0117-z-soil legend-ltb2.dgn

CONTRACT NO.:04-0A7101 PROJECT ID:

USERNAME => s124496 DATE PLOTTED => 10-APR-2013 TIME PLOTTED => 10:00