DIST	COUNTY	ROUTE	POST MILES TOTAL PROJECT	SHEET NO.	TOTAL SHEETS
04	Ala	880	28.4/29.2	501	789

REGISTERED ELECTRICAL ENGINEER

January 20, 2012
PLANS APPROVAL DATE

REGISTERED PROFESSIONAL ENGINEER Jeffery G. McRae No. E14512 Exp. 6-30-12 ELECTRICAL STATE OF CALIFORNIA

The State of California or its officers or agents shall not be responsible for the accuracy or completeness of electronic copies of this plan sheet.

To accompany plans dated 4-8-13

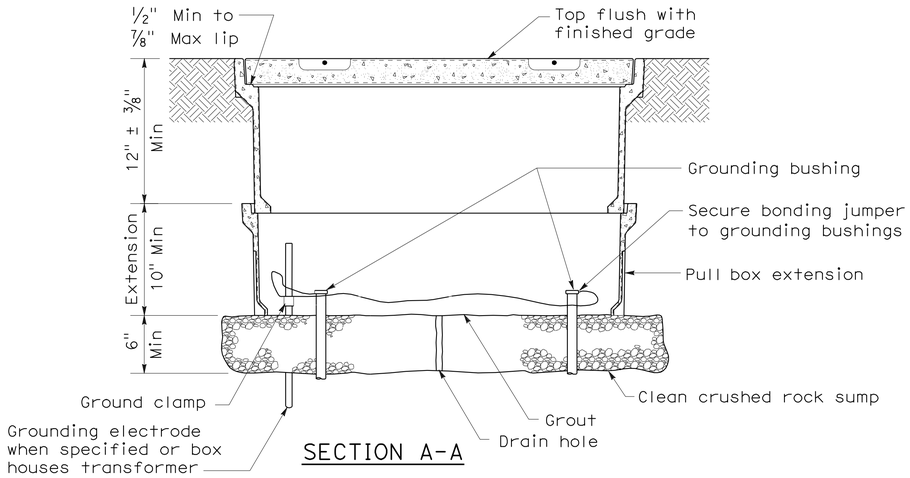

SECTION A-A

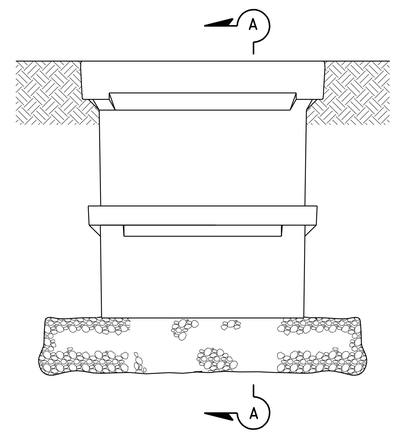

SIDE VIEW

INSTALLATION DETAILS

DETAIL A

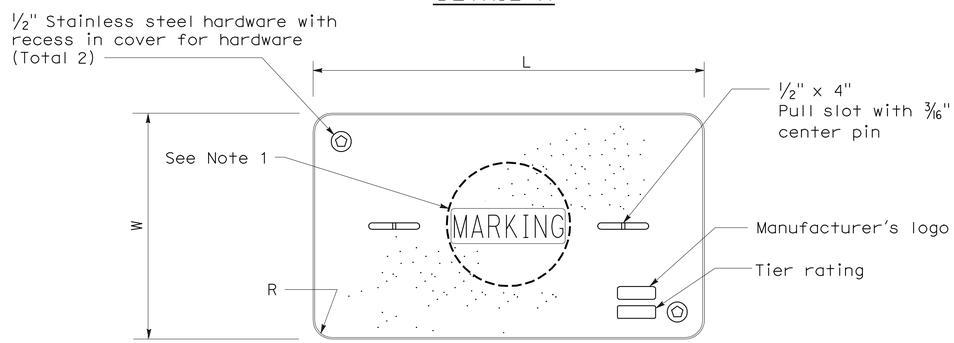

COVER TOP VIEW

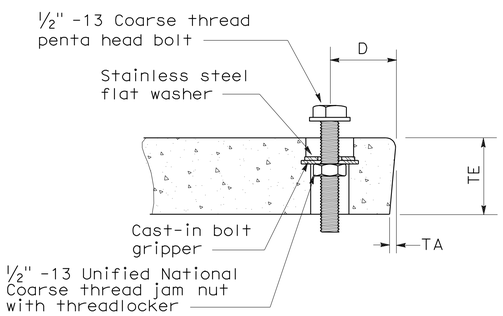

TYPICAL COVER CAPTIVE BOLT

(Or similar)

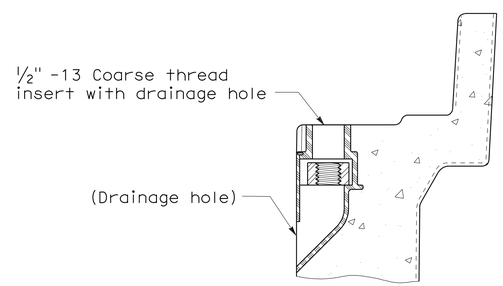

TYPICAL THREADED INSERT

(Or similar)

DIMENSION TABLE										
PULL BOX	PULL BOX			COVER						
	Minimum Depth Box	Minimum Depth Extension	Maximum Weight	L	W	R	TE	TA	D	Maximum Weight
No. 3 1/2	12"	N/A	40 lb	1' - 3 3/8"	10 1/8"	1 3/8"	2"	1/8"	1 3/4"	30 lb
No. 5	12"	10"	55 lb	1' - 11 1/4"	1' - 1 3/4"	1 3/8"	2"	1/8"	1 3/4"	60 lb
No. 6	12"	10"	70 lb	2' - 6 1/2"	1' - 5 1/2"	1 3/8"	2"	1/8"	2"	85 lb

NOTES ON PULL BOXES:

1. Pull box covers must be marked as follows: "SERVICE" Service circuits between service point and service disconnect; "SPRINKLER-CONTROL" sprinkler control circuits, 50 V or less; "CALTRANS" on all pull boxes, except pull boxes marked "SPRINKLER-CONTROL"; and "TELEPHONE" Telephone service;

   A) No. 3 1/2 pull box.
      1) "SIGNAL" - Traffic signal circuits with or without street or sign lighting circuits.
      2) "ST LIGHTING" - Street or sign lighting circuits where voltage is under 600 V.

   B) No. 5, 6, 9 or 9A pull box.
      1) "TRAFFIC SIGNAL" - Traffic signal circuits with or without street or sign lighting circuits.
      2) "STREET LIGHTING" - Street or sign lighting circuits where voltage is under 600 V.
      3) "STREET LIGHTING-HIGH VOLTAGE" - Street or sign lighting circuits where voltage is above 600 V.
      4) "IRRIGATION" - Circuits to irrigation controller 120 V or more.
      5) "RAMP METER" - Ramp meter circuits.
      6) "COUNT STATION" - Count or speed monitor circuits.
      7) "COMMUNICATIONS" - Communication circuits.
      8) "TOS COMMUNICATIONS" - TOS communication line.
      9) "TOS POWER" -TOS power.
      10) "TDC POWER" - Telephone demarcation cabinet power.
      11) "CCTV" - Closed circuit television circuits.
      12) "TMS" - Traffic monitoring station circuits.
      13) "CMS" - Changeable message sign circuits.
      14) "HAR" - Highway advisory radio circuits.

2. The nominal dimensions of the opening in which the cover sets must be the same as the cover dimensions (L and W) plus 1/8" or greater.

3. Covers and boxes must be interchangeable with California Standard. When interchanged with a standard, the top surfaces must be flush within 1/8". Top outside radius of covers and pull boxes must have a 1/8" radius.

4. Pull box extension may be another pull box as long as the bottom edge of the pull box can fit into the cover opening.

STATE OF CALIFORNIA
DEPARTMENT OF TRANSPORTATION

ELECTRICAL SYSTEMS (PULL BOX)

NO SCALE

NSP ES-8A DATED JANUARY 20, 2012 SUPPLEMENTS THE STANDARD PLANS BOOK DATED MAY 2006.

NEW STANDARD PLAN NSP ES-8A

2006 NEW STANDARD PLAN NSP ES-8A

9-28-11

DIST	COUNTY	ROUTE	POST MILES TOTAL PROJECT	SHEET NO.	TOTAL SHEETS
04	Ala	880	28.4/29.2	502	789

REGISTERED ELECTRICAL ENGINEER

January 20, 2012
PLANS APPROVAL DATE

REGISTERED PROFESSIONAL ENGINEER
Jeffery G. McRae
No. E14512
Exp. 6-30-12
ELECTRICAL
STATE OF CALIFORNIA

The State of California or its officers or agents shall not be responsible for the accuracy or completeness of electronic copies of this plan sheet.

To accompany plans dated 4-8-13

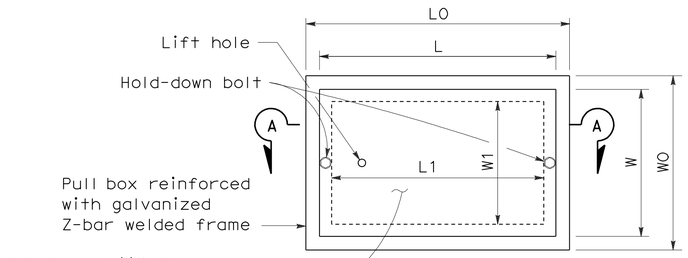

TOP VIEW

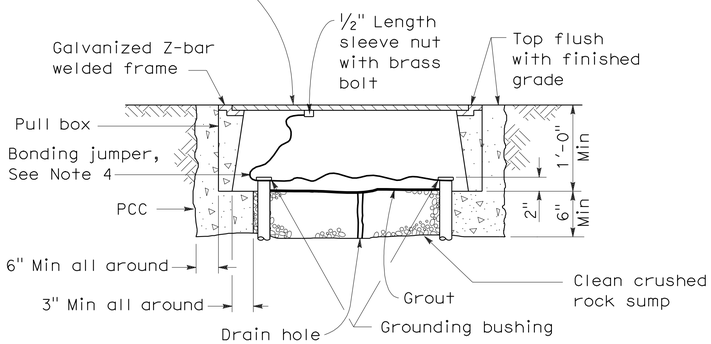

SECTION A-A

No. 3½(T), No. 5(T) AND No. 6(T) TRAFFIC PULL BOX

NOTES ON PULL BOXES:

1. Traffic pull box shall be provided with steel cover and special concrete footing. Steel cover shall have embossed non-skid pattern.
2. Steel reinforcing shall be as regularly used in the standard products of the respective manufacturer.
3. Pull box covers must be marked as follows: "SERVICE" Service circuits between service point and service disconnect; "SPRINKLER-CONTROL" Sprinkler control circuits, 50 V or less; "CALTRANS" On all pull boxes, except pull boxes marked "SPRINKLER-CONTROL"; and "TELEPHONE" Telephone service.
   A) No. 3½(T) pull box.
      1) "SIGNAL" - Traffic signal circuits with or without street or sign lighting circuits.
      2) "ST LIGHTING" - Street or sign lighting circuits where voltage is under 600 V.
   B) No. 5(T) or 6(T) pull box.
      1) "TRAFFIC SIGNAL" - Traffic signal circuits with or without street or sign lighting circuits.
      2) "STREET LIGHTING" - Street or sign lighting circuits where voltage is under 600 V.
      3) "STREET LIGHTING-HIGH VOLTAGE" - Street or sign lighting circuits where voltage is above 600 V.
      4) "IRRIGATION" - Circuits to irrigation controller 120 V or more.
      5) "RAMP METER" - Ramp meter circuits.
      6) "COUNT STATION" - Count or speed monitor circuits.
      7) "COMMUNICATION" - Communication circuits.
      8) "TOS COMMUNICATIONS" - TOS communications line.
      9) "TOS POWER" - TOS power.
      10) "TDC POWER" - Telephone demarcation cabinet power.
      11) "CCTV" - Closed circuit television circuits.
      12) "TMS" - Traffic monitoring station circuits.
      13) "CMS" - Changeable message sign circuits.
      14) "HAR" - Highway advisory radio circuits.
4. Bonding jumper for metal covers shall be 3' long, minimum.
5. The nominal dimensions of the opening in which the cover sets must be the same as the cover dimensions except the length and width dimensions shall be ⅛" greater.
6. Covers and boxes must be interchangeable with California standard male and female gages. When interchanged with a standard male or female gage, the top surfaces must be flush within ⅛".

DIMENSION TABLE

PULL BOX	BOX						COVER				
	Minimum * Thickness	Minimum Depth Box and Extension	WO	LO	L1	W1	L **	W **	R	Edge Thickness	Edge Taper
No. 3½(T)	1½"	1'-0"	1'-5"± 1"	1'-8⅞"±	1'-2½"±	10⅝"± 1"	1'-8"±	1'-1¾"±	0"	½"	None
No. 5(T)	1¾"	1'-0"	1'-11½"± 1"	2'-5½"±	1'-7"±	1'-1"± 1"	2'-3"±	1'-4"±	0"	½"	None
No. 6(T)	2"	1'-0"	2'-6"± 1"	2'-11½"±	1'-11½"±	1'-5"± 1"	2'-9"±	1'-8"±	0"	½"	None

* Excluding conduit web ** Top dimension

STATE OF CALIFORNIA
DEPARTMENT OF TRANSPORTATION

ELECTRICAL SYSTEMS (TRAFFIC RATED PULL BOX)

NO SCALE

NSP ES-8B DATED JANUARY 20, 2012 SUPPLEMENTS THE STANDARD PLANS BOOK DATED MAY 2006.

NEW STANDARD PLAN NSP ES-8B

2006 NEW STANDARD PLAN NSP ES-8B

9-28-11

DIST	COUNTY	ROUTE	POST MILES TOTAL PROJECT	SHEET NO.	TOTAL SHEETS
04	Ala	880	28.4/29.2	503	789

REGISTERED ELECTRICAL ENGINEER

October 5, 2007
PLANS APPROVAL DATE

REGISTERED PROFESSIONAL ENGINEER
Jeffery G. McRae
No. E14512
Exp. 6-30-08
ELECTRICAL
STATE OF CALIFORNIA

The State of California or its officers or agents shall not be responsible for the accuracy or completeness of electronic copies of this plan sheet.

To accompany plans dated 4-8-13

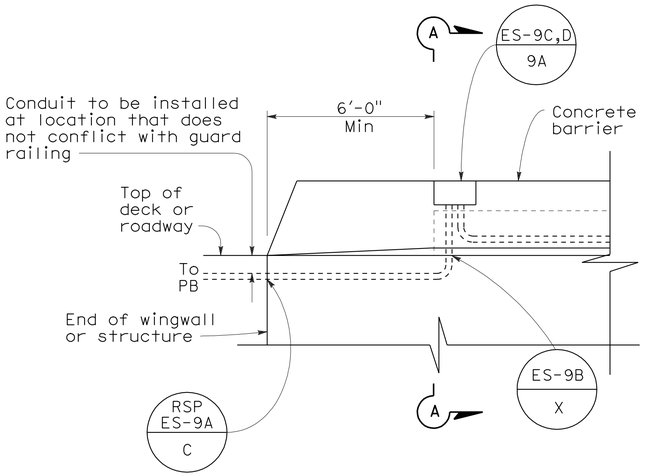

SIDEVIEW

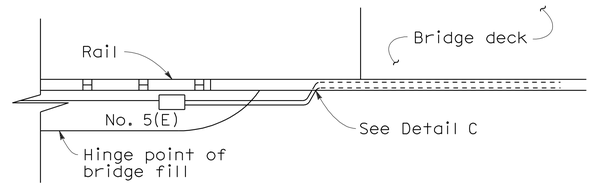

TOP VIEW

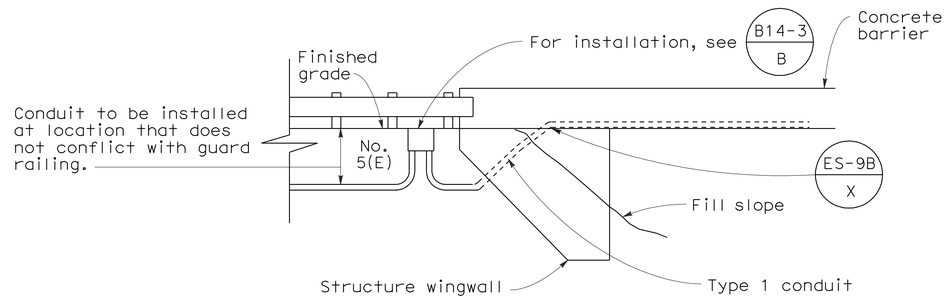

SIDE VIEW
DETAIL I
CONDUIT TERMINATION

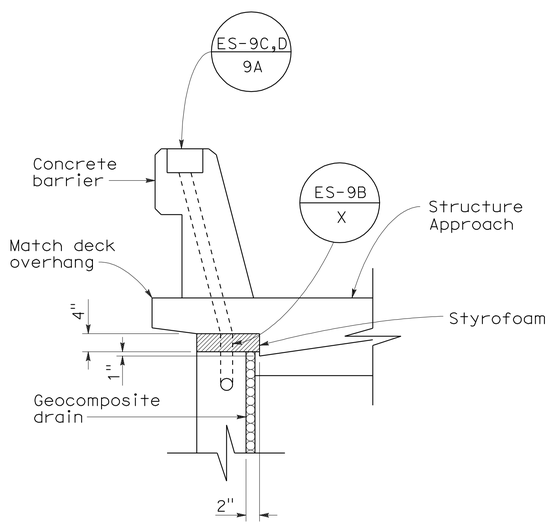

SECTION A-A

DETAIL A
CONDUIT TERMINATION

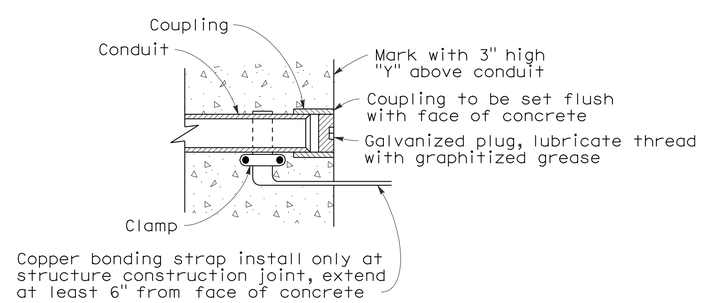

DETAIL C
CONDUIT TERMINATION

STATE OF CALIFORNIA
DEPARTMENT OF TRANSPORTATION

ELECTRICAL SYSTEMS (ELECTRICAL DETAILS STRUCTURE INSTALLATIONS)

NO SCALE

RSP ES-9A DATED OCTOBER 5, 2007 SUPERCEDES STANDARD PLAN ES-9A DATED MAY 1, 2006 - PAGE 454 OF THE STANDARD PLANS BOOK DATED MAY 2006.

REVISED STANDARD PLAN RSP ES-9A

2006 REVISED STANDARD PLAN RSP ES-9A

DIST	COUNTY	ROUTE	POST MILES TOTAL PROJECT	SHEET NO.	TOTAL SHEETS
04	Ala	880	28.4/29.2	504	789

REGISTERED ELECTRICAL ENGINEER

October 5, 2007
PLANS APPROVAL DATE

REGISTERED PROFESSIONAL ENGINEER Jeffery G. McRae No. E14512 Exp. 6-30-08 ELECTRICAL STATE OF CALIFORNIA

The State of California or its officers or agents shall not be responsible for the accuracy or completeness of electronic copies of this plan sheet.

To accompany plans dated 4-8-13

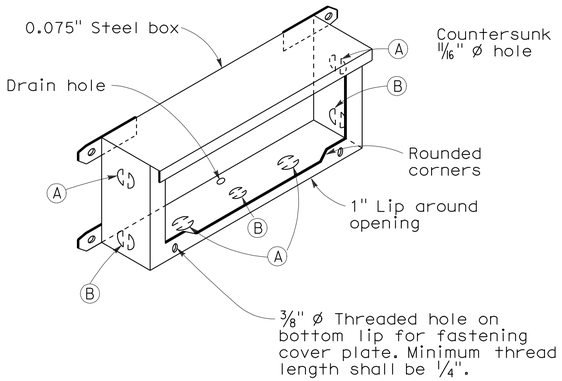

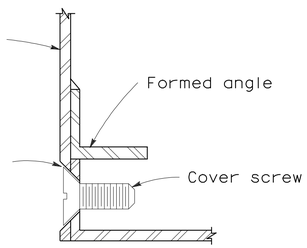

DETAIL J

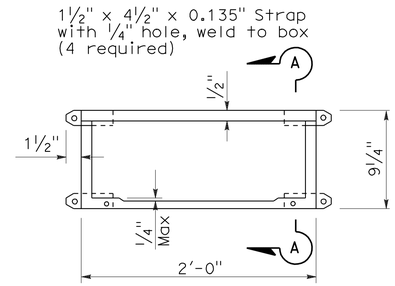

PLAN

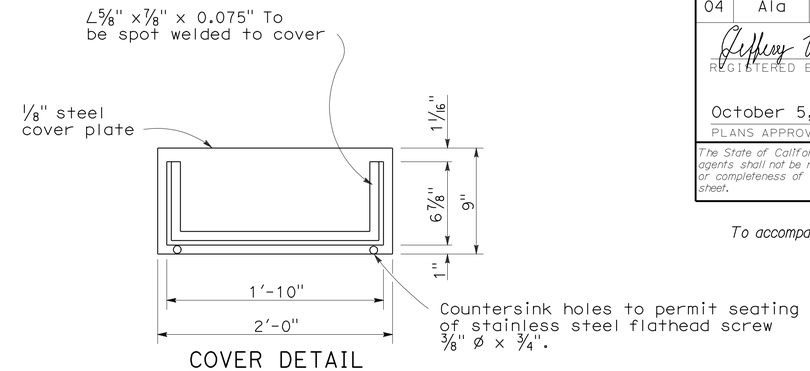

COVER DETAIL

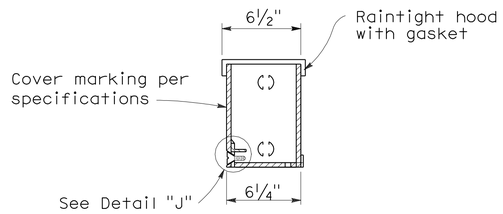

SECTION A-A

INSTALLATION NOTE:

Box shall be parallel to top of railing. Close cover box during pouring with 1/4" plywood of sufficient size to provide 1:1 chamfer on 3 sides of cover. Upper edge of plywood shall fit against lower edge of raintight hood.

No. 9 STRUCTURE PULL BOX

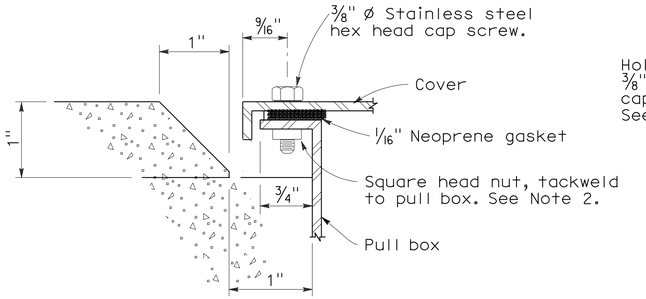

SECTION C-C

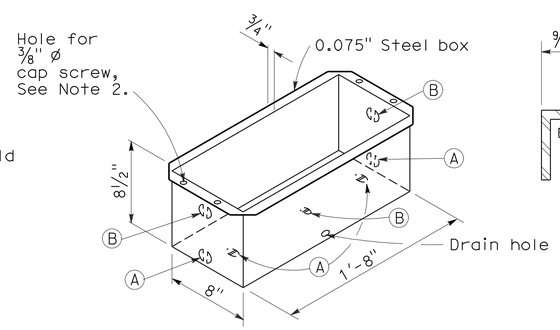

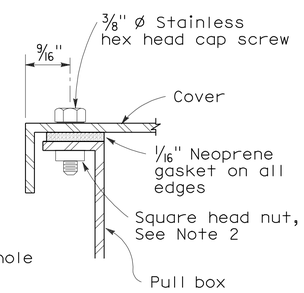

DETAIL A

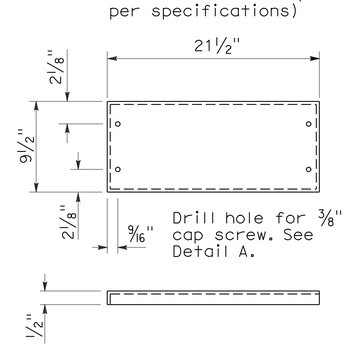

COVER DETAIL

NOTES: No. 9 and 9A Pull Box

1. Corner joints shall be lapped and secured by spot welding or riveting.
2. Where cap screws are used to attach cover to box, either of the following methods of providing adequate threading may be used:
   a. Tack weld square nut to bottom of flange (Total 4), or
   b. Tack weld a 1/4" x 5/8" x 8" bar beneath flange (Total 2).
3. Pound knockouts flat after punching.
4. Multiple size knockouts shall not be permitted.
5. Pull box covers shall be marked as shown on Standard Plan ES-8.

No. 9A STRUCTURE PULL BOX

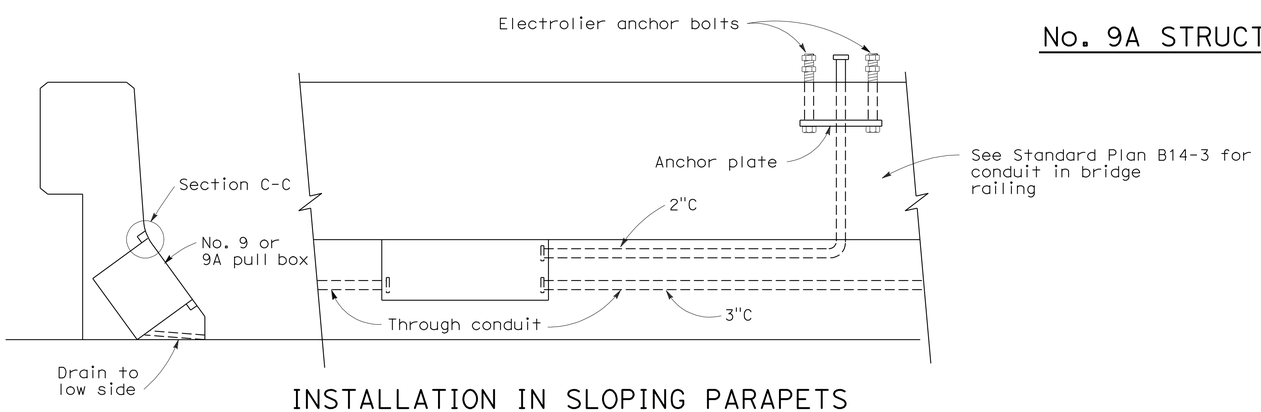

INSTALLATION IN SLOPING PARAPETS

For reinforcement in area of electrolier, see railing sheets. For electrolier anchor bolts, see Standard Plan ES-6B.

KNOCKOUT SCHEDULE
No. 9 AND 9A PULL BOX

(A) 2"C, 1 each end, 2 on bottom.

(B) 3"C, 1 each end, 1 on bottom.

STATE OF CALIFORNIA
DEPARTMENT OF TRANSPORTATION

ELECTRICAL SYSTEMS (ELECTRICAL DETAILS STRUCTURE INSTALLATIONS)

NO SCALE

RSP ES-9C DATED OCTOBER 5, 2007 SUPERCEDES STANDARD PLAN ES-9C DATED MAY 1, 2006 - PAGE 456 OF THE STANDARD PLANS BOOK DATED MAY 2006.

REVISED STANDARD PLAN RSP ES-9C

2006 REVISED STANDARD PLAN RSP ES-9C

7-26-07

DIST	COUNTY	ROUTE	POST MILES TOTAL PROJECT	SHEET NO.	TOTAL SHEETS
04	Ala	880	28.4/29.2	505	789

REGISTERED ELECTRICAL ENGINEER

July 20, 2012
PLANS APPROVAL DATE

REGISTERED PROFESSIONAL ENGINEER
Jeffery G. McRae
No. E14512
Exp. 6-30-14
ELECTRICAL
STATE OF CALIFORNIA

The State of California or its officers or agents shall not be responsible for the accuracy or completeness of electronic copies of this plan sheet.

To accompany plans dated 4-8-13

ISOFOOTCANDLE CURVE - MINIMUM

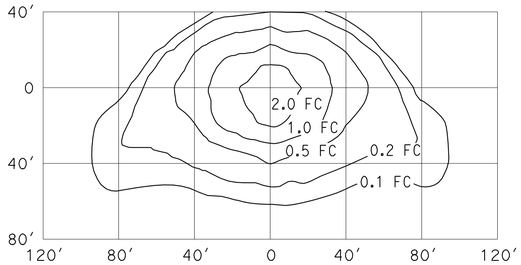

TYPE III MEDIUM CUTOFF

Cutoff Luminaire
34′ Mounting Height
Lamp operated at 22,000 lm
200-W high pressure sodium lamp
ANSI Designation S66

ISOFOOTCANDLE CURVE - MINIMUM

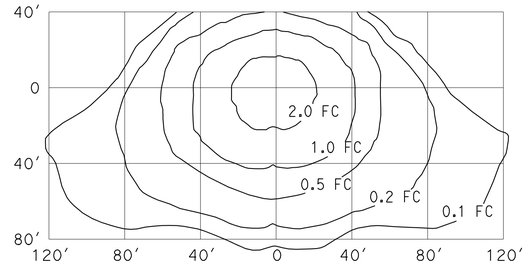

TYPE III MEDIUM CUTOFF

Cutoff Luminaire
40′ Mounting Height
Lamp operated at 37,000 lm
310-W high pressure sodium lamp
ANSI Designation S67

ISOFOOTCANDLE CURVE - MINIMUM

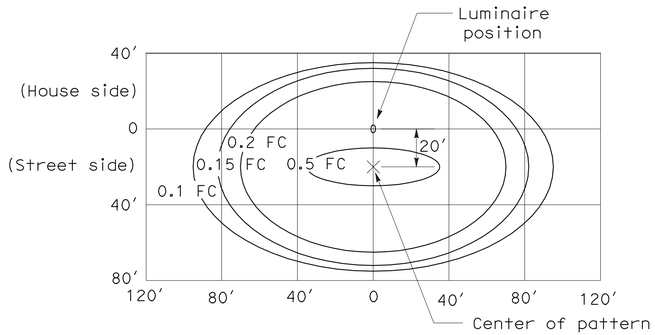

LED LUMINAIRE ROADWAY 1

200-W HPS Equivalent at 34′ Mounting Height

ISOFOOTCANDLE CURVE - MINIMUM

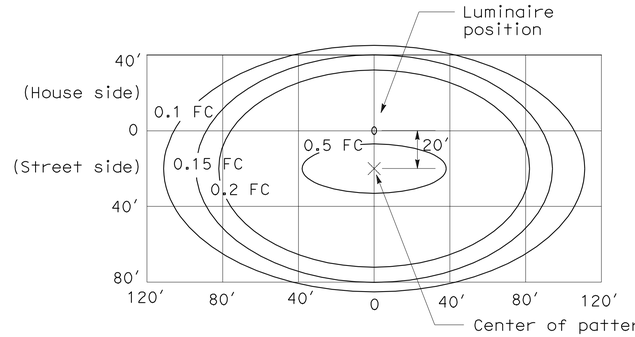

LED LUMINAIRE ROADWAY 2

310-W HPS Equivalent at 40′ Mounting Height

ISOFOOTCANDLE CURVE - MINIMUM

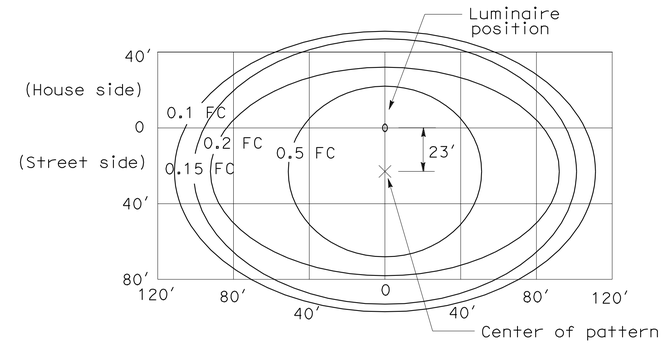

LED LUMINAIRE ROADWAY 4

400-W HPS Equivalent at 40′ Mounting Height

ISOFOOTCANDLE CURVE - MINIMUM

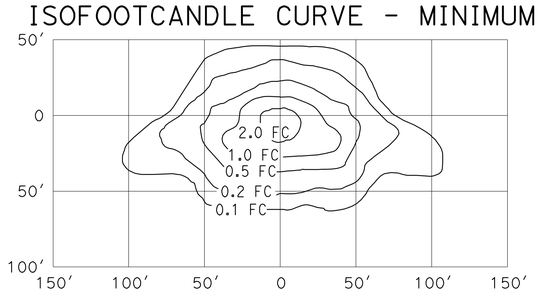

TYPE III MEDIUM CUTOFF

Cutoff Luminaire
30′ Mounting Height
Lamp operated at 16,000 lm
150-W high pressure sodium lamp
ANSI Designation S55

ISOFOOTCANDLE CURVE - MINIMUM

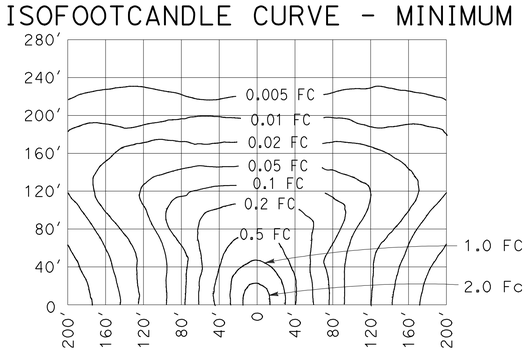

LOW PRESSURE SODIUM LUMINAIRE

40′ Mounting Height
Lamp operated at 33,000 lm
180-W low pressure sodium lamp

STATE OF CALIFORNIA
DEPARTMENT OF TRANSPORTATION

ELECTRICAL SYSTEMS (ISOFOOTCANDLE DIAGRAMS)

NO SCALE

NSP ES-10A DATED JULY 20, 2012 SUPPLEMENTS THE STANDARD PLANS BOOK DATED MAY 2006.

NEW STANDARD PLAN NSP ES-10A

2006 NEW STANDARD PLAN NSP ES-10A

2-16-12

DIST	COUNTY	ROUTE	POST MILES TOTAL PROJECT	SHEET NO.	TOTAL SHEETS
04	Ala	880	28.4/29.2	506	789

REGISTERED ELECTRICAL ENGINEER

July 20, 2012
PLANS APPROVAL DATE

REGISTERED PROFESSIONAL ENGINEER
Jeffery G. McRae
No. E14512
Exp. 6-30-14
ELECTRICAL
STATE OF CALIFORNIA

The State of California or its officers or agents shall not be responsible for the accuracy or completeness of electronic copies of this plan sheet.

To accompany plans dated 4-8-13

ISOFOOTCANDLE CURVE - MINIMUM

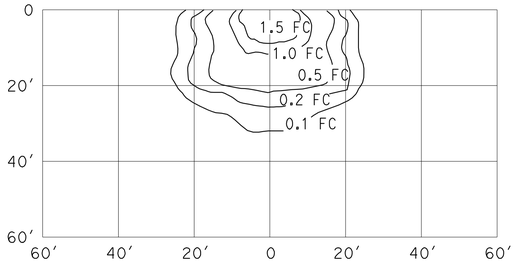

WALL LUMINAIRE
15′ Mounting Height
Lamp operated at 5,800 lm
70-W high pressure sodium lamp
ANSI Designation S62

ISOFOOTCANDLE CURVE - MINIMUM

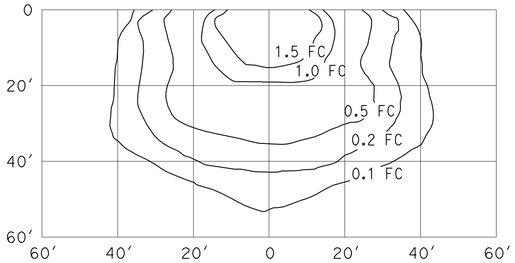

WALL LUMINAIRE
15′ Mounting Height
Lamp operated at 9,500 lm
100-W high pressure sodium lamp
ANSI Designation S54

ISOFOOTCANDLE CURVE - MINIMUM

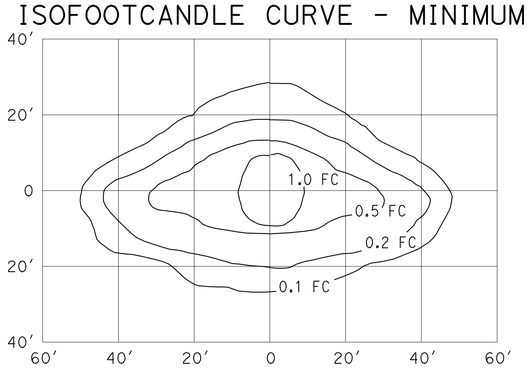

PENDANT SOFFIT LUMINAIRE
TYPE III SHORT
17′ Mounting Height
Lamp operated at 5,800 lm
70-W high pressure sodium lamp
ANSI Designation S62

ISOFOOTCANDLE CURVE - MINIMUM

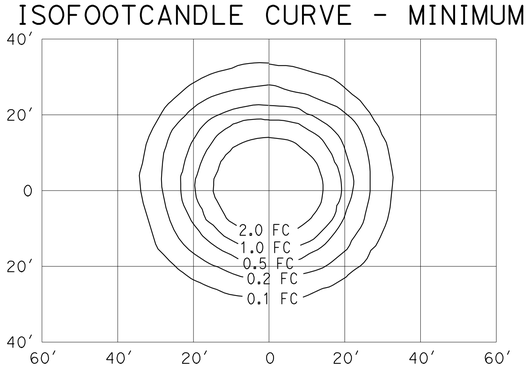

PENDANT SOFFIT LUMINAIRE
17′ Mounting Height
Lamp operated at 5,800 lm
70-W high pressure sodium lamp
ANSI Designation S62

ISOFOOTCANDLE CURVE - MINIMUM

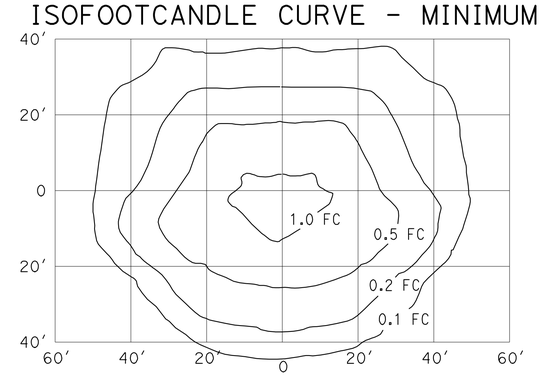

FLUSH SOFFIT LUMINAIRE
17′ Mounting Height
Lamp operated at 5,800 lm
70-W high pressure sodium lamp
ANSI Designation S62

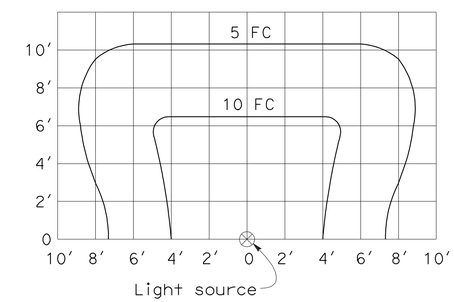

SIGN LIGHTING FIXTURE
ISOFOOTCANDLE DIAGRAM

NOTES:

1. Curves represent the minimum footcandle (FC) of initial illumination on a 10′-0" x 20′-0" panel.
2. The FC shown are with the fixture attached to the light fixture mounting channel which places the center of the source 4′-8" in front of panel and 1′-0" below the bottom edge.
3. Applicable lamp: 85-W fluorescent phosphor coated induction lamp.

STATE OF CALIFORNIA
DEPARTMENT OF TRANSPORTATION

ELECTRICAL SYSTEMS (ISOFOOTCANDLE DIAGRAMS)

NO SCALE

NSP ES-10B DATED JULY 20, 2012 SUPPLEMENTS THE STANDARD PLANS BOOK DATED MAY 2006.

NEW STANDARD PLAN NSP ES-10B

2006 NEW STANDARD PLAN NSP ES-10B

DIST	COUNTY	ROUTE	POST MILES TOTAL PROJECT	SHEET NO.	TOTAL SHEETS
04	Ala	880	28.4/29.2	507	789

REGISTERED ELECTRICAL ENGINEER

October 5, 2007
PLANS APPROVAL DATE

REGISTERED PROFESSIONAL ENGINEER
Jeffery G. McRae
No. E14512
Exp. 6-30-08
ELECTRICAL
STATE OF CALIFORNIA

The State of California or its officers or agents shall not be responsible for the accuracy or completeness of electronic copies of this plan sheet.

To accompany plans dated 4-8-13

NOTES: (FOR LIGHTING AND SIGN ILLUMINATION CONTROL)

1. The ballast voltages of lighting fixtures and luminaires shall match line service voltages.
2. Voltage rating of photoelectric controls shall conform to the service voltage indicated on the plans.
3. Terminal strip shall be provided for wiring to fixtures.
4. Type SC1A, SC2A, SC3A controls are similar to Types SC1, SC2 and SC3 controls respectively except test switch and wiring are not required.

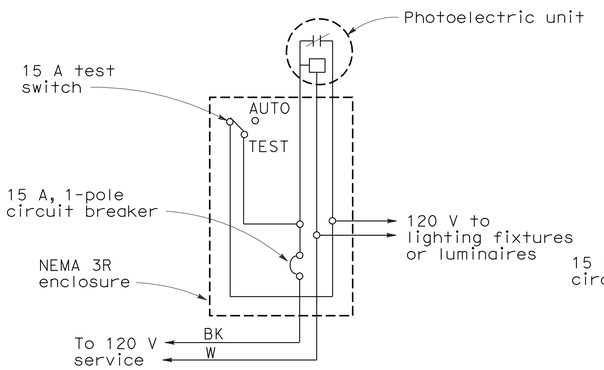

TYPE LC1 CONTROL

For 120 V unswitched circuit with no more than 800 W load.

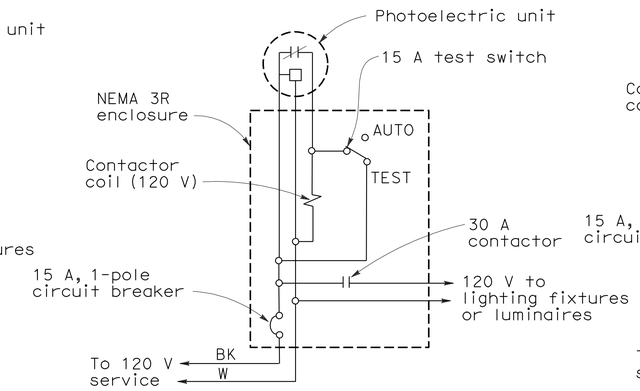

TYPE LC2 CONTROL

For 120 V unswitched circuit

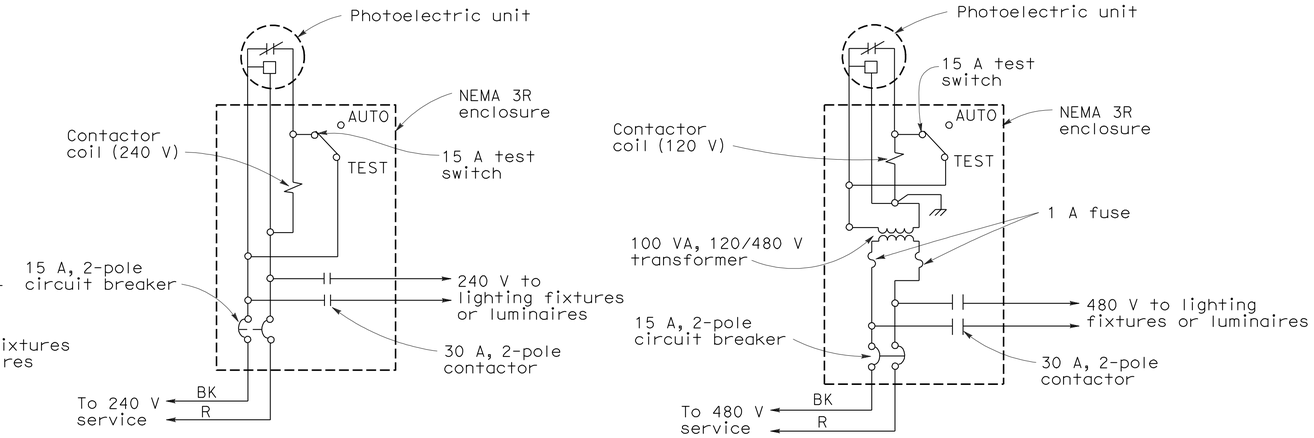

TYPE LC3 CONTROL

For 240 V and 480 V unswitched circuits

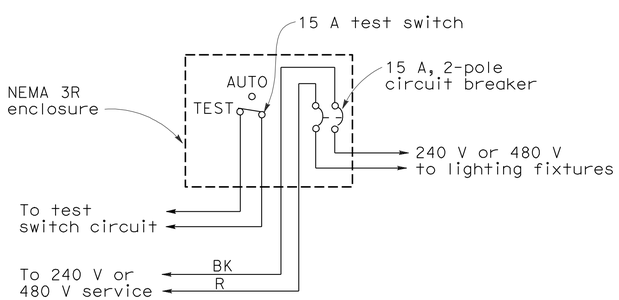

TYPE SC1 CONTROL

For 240 V or 480 V switched circuit, see Note 4 for Type SC1A

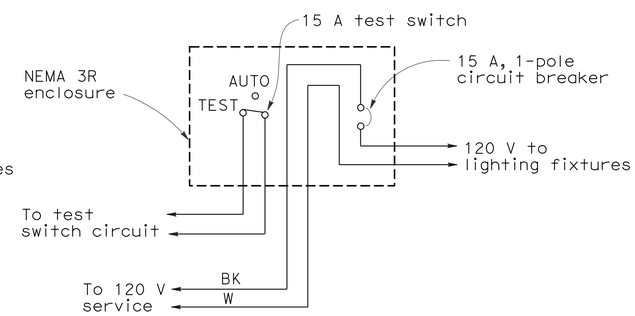

TYPE SC2 CONTROL

For 120 V switched circuit, see Note 4 for Type SC2A

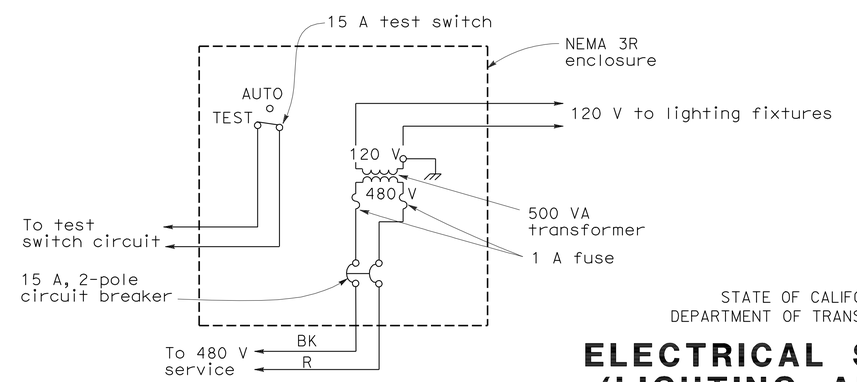

TYPE SC3 CONTROL

For 480 V switched sign circuit, see Note 4 for Type SC3A

STATE OF CALIFORNIA
DEPARTMENT OF TRANSPORTATION

ELECTRICAL SYSTEMS (LIGHTING AND SIGN ILLUMINATION CONTROL)

NO SCALE

RSP ES-15D DATED OCTOBER 5, 2007 SUPERCEDES STANDARD PLAN ES-15D DATED MAY 1, 2006 - PAGE 472 OF THE STANDARD PLANS BOOK DATED MAY 2006.

REVISED STANDARD PLAN RSP ES-15D

2006 REVISED STANDARD PLAN RSP ES-15D

DIST	COUNTY	ROUTE	POST MILES TOTAL PROJECT	SHEET No	TOTAL SHEETS
04	Ala	880	28.4/29.2	508	789

REGISTERED CIVIL ENGINEER — DATE 6/25/12

4-8-13
PLANS APPROVAL DATE

REGISTERED PROFESSIONAL ENGINEER — Jan M. Hueser No. C050215 Exp. 6/30/13 CIVIL — STATE OF CALIFORNIA

The State of California or its officers or agents shall not be responsible for the accuracy or completeness of electronic copies of this plan sheet.

ALAMEDA COUNTY TRANSPORTATION COMMISSION
1333 BROADWAY
OAKLAND, CA 94612-1918

URS CORPORATION
1380 LEAD HILL BLVD, SUITE 100
ROSEVILLE, CA 95661-2997

PROFILE GRADE - "A" LINE

NO SCALE

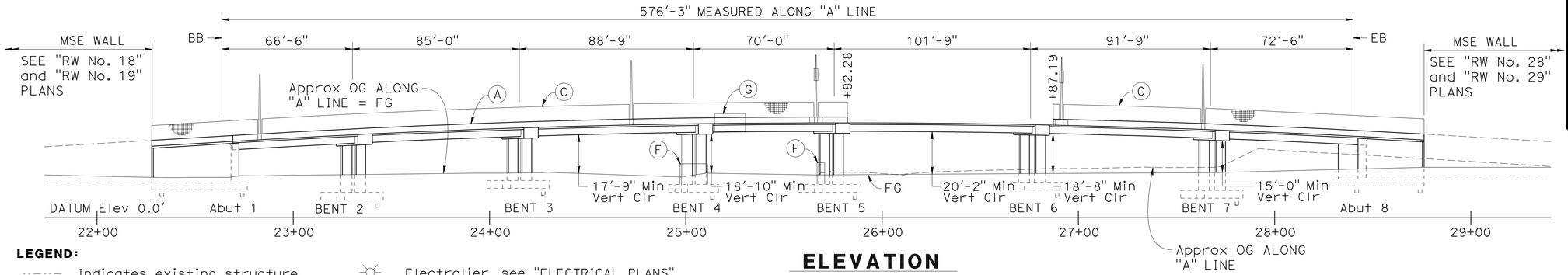

ELEVATION

1"=30'-0"

LEGEND:

- Indicates existing structure
- Indicates direction of traffic
- Point of minimum vertical clearance
- TS Bridge Mounted Traffic Signal Pole, see "BARRIER PEDESTAL DETAILS" sheet
- Electrolier, see "ELECTRICAL PLANS"
- Preformed Signal Loop Detectors, see "ELECTRICAL PLANS"

NOTES:

(A) Concrete Barrier (Type 732 Modified) with Architectural Treatment
(B) Concrete Barrier (Type 26 Modified) with Architectural Treatment
(C) Chain Link Railing Type 7
(D) Structure Approach Type N(30S)
(E) Remove existing 29th Ave OC Bridge No. 33-0141
(F) Concrete Barrier, see "ROAD PLANS"
(G) Bridge mounted sign, see "ROAD PLANS"
(H) Paint "Bridge No. 33-0751", "Bridge Name" and Year Completed

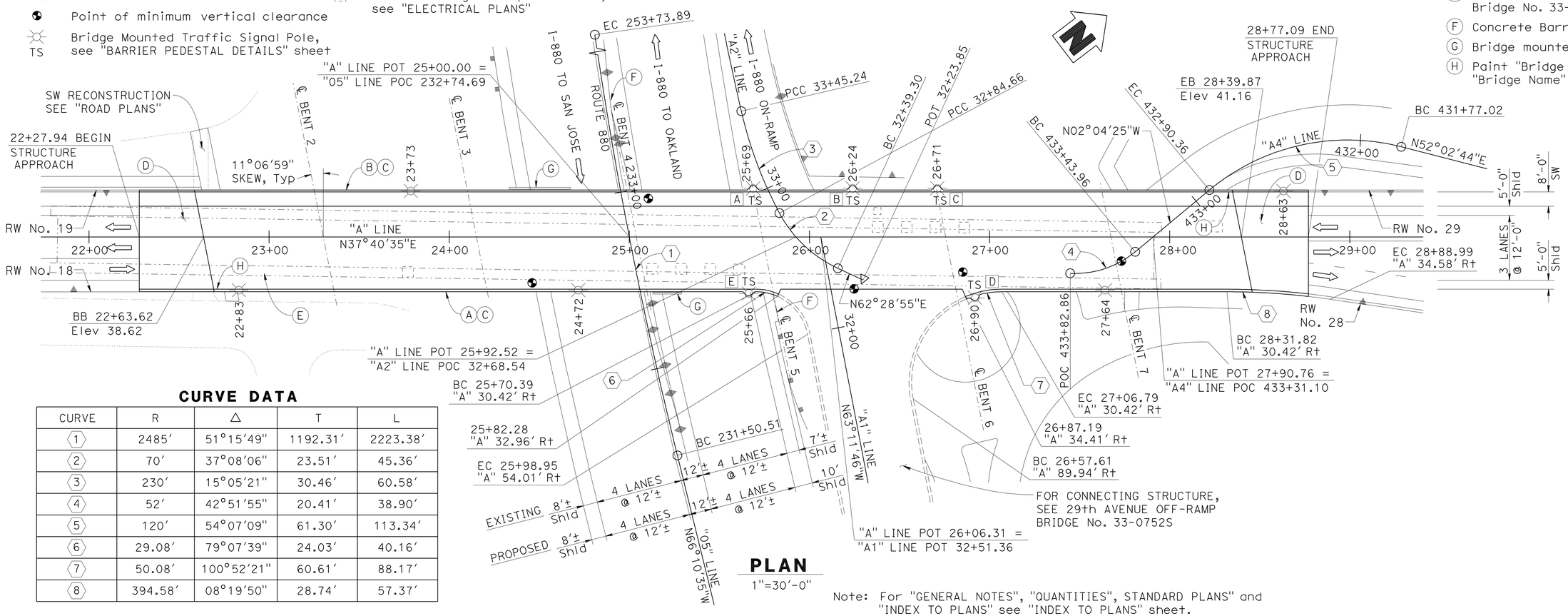

CURVE DATA

CURVE	R	Δ	T	L
1	2485'	51°15'49"	1192.31'	2223.38'
2	70'	37°08'06"	23.51'	45.36'
3	230'	15°05'21"	30.46'	60.58'
4	52'	42°51'55"	20.41'	38.90'
5	120'	54°07'09"	61.30'	113.34'
6	29.08'	79°07'39"	24.03'	40.16'
7	50.08'	100°52'21"	60.61'	88.17'
8	394.58'	08°19'50"	28.74'	57.37'

PLAN

1"=30'-0"

Note: For "GENERAL NOTES", "QUANTITIES", STANDARD PLANS" and "INDEX TO PLANS" see "INDEX TO PLANS" sheet.

DESIGN OVERSIGHT Paul Cotter
7-16-12
SIGN OFF DATE

	BY	CHECKED
DESIGN	B. Schoppe	S. Landis
DETAILS	L. Davis	S. Landis
QUANTITIES	B. Schoppe	F. Hakemi/B. Osorio

LOAD & RESISTANCE FACTOR DESIGN — LIVE LOADING: HL93 W/"LOW-BOY"; PERMIT DESIGN VEHICLE
LAYOUT — BY J. Hueser — CHECKED S. Landis
SPECIFICATIONS — BY D. Harnagel — PLANS AND SPECS COMPARED J. Hueser

PREPARED FOR THE STATE OF CALIFORNIA DEPARTMENT OF TRANSPORTATION

Jan Hueser
PROJECT ENGINEER

BRIDGE NO. 33-0751
POST MILES 28.69

29TH AVENUE OC (REPLACE)
GENERAL PLAN No. 1

DESIGN GENERAL PLAN SHEET (ENGLISH) (REV.7/16/10)

ORIGINAL SCALE IN INCHES FOR REDUCED PLANS 0 1 2 3

UNIT: 0724
PROJECT NUMBER & PHASE: 04000001601 CONTRACT NO.: 04-0A7101

DISREGARD PRINTS BEARING EARLIER REVISION DATES — REVISION DATES 9-8-11 1-30-12 3-30-12 6-25-12 — SHEET 1 OF 60

FILE => 33-0751-a-gp01.dgn

USERNAME => s124496 DATE PLOTTED => 10-APR-2013 TIME PLOTTED => 06:20

DIST	COUNTY	ROUTE	POST MILES TOTAL PROJECT	SHEET No	TOTAL SHEETS
04	Ala	880	28.4/29.2	509	789

REGISTERED CIVIL ENGINEER 6/25/12 DATE

4-8-13
PLANS APPROVAL DATE

REGISTERED PROFESSIONAL ENGINEER Jan M. Hueser No. C050215 Exp. 6/30/13 CIVIL STATE OF CALIFORNIA

The State of California or its officers or agents shall not be responsible for the accuracy or completeness of electronic copies of this plan sheet.

ALAMEDA COUNTY TRANSPORTATION COMMISSION
1333 BROADWAY
OAKLAND, CA 94612-1918

URS CORPORATION
1380 LEAD HILL BLVD, SUITE 100
ROSEVILLE, CA 95661-2997

NOTES:

(A) Concrete Barrier (Type 732 Modified) with Architectural Treatment
(B) Concrete Barrier (Type 26 Modified) with Architectural Treatment
(C) Chain Link Railing Type 7
(J) 5'-0" square column with Architectural Treatment
(K) Precast Prestressed Concrete Girders
(L) CIP Prestressed Concrete Bent Cap
(M) Temporary Railing Type K, see "Road Plans"
(N) Temporary Fence, see "Road Plans"
(P) Precast Prestressed "Modified" Concrete Girder
(Q) 2-4" Dia Future Utility Openings

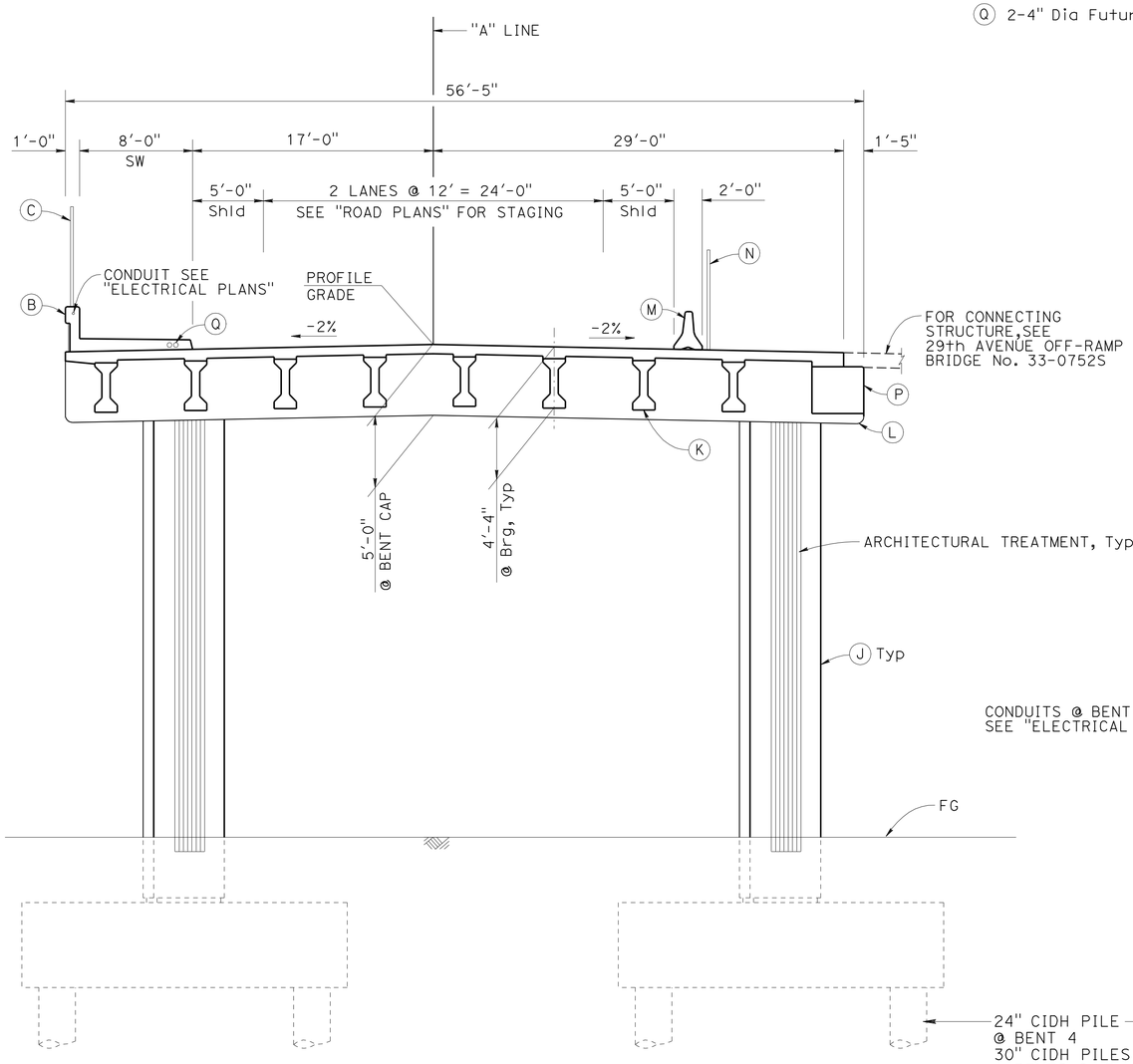

TYPICAL SECTION - SPAN 5
3/16" = 1'-0"

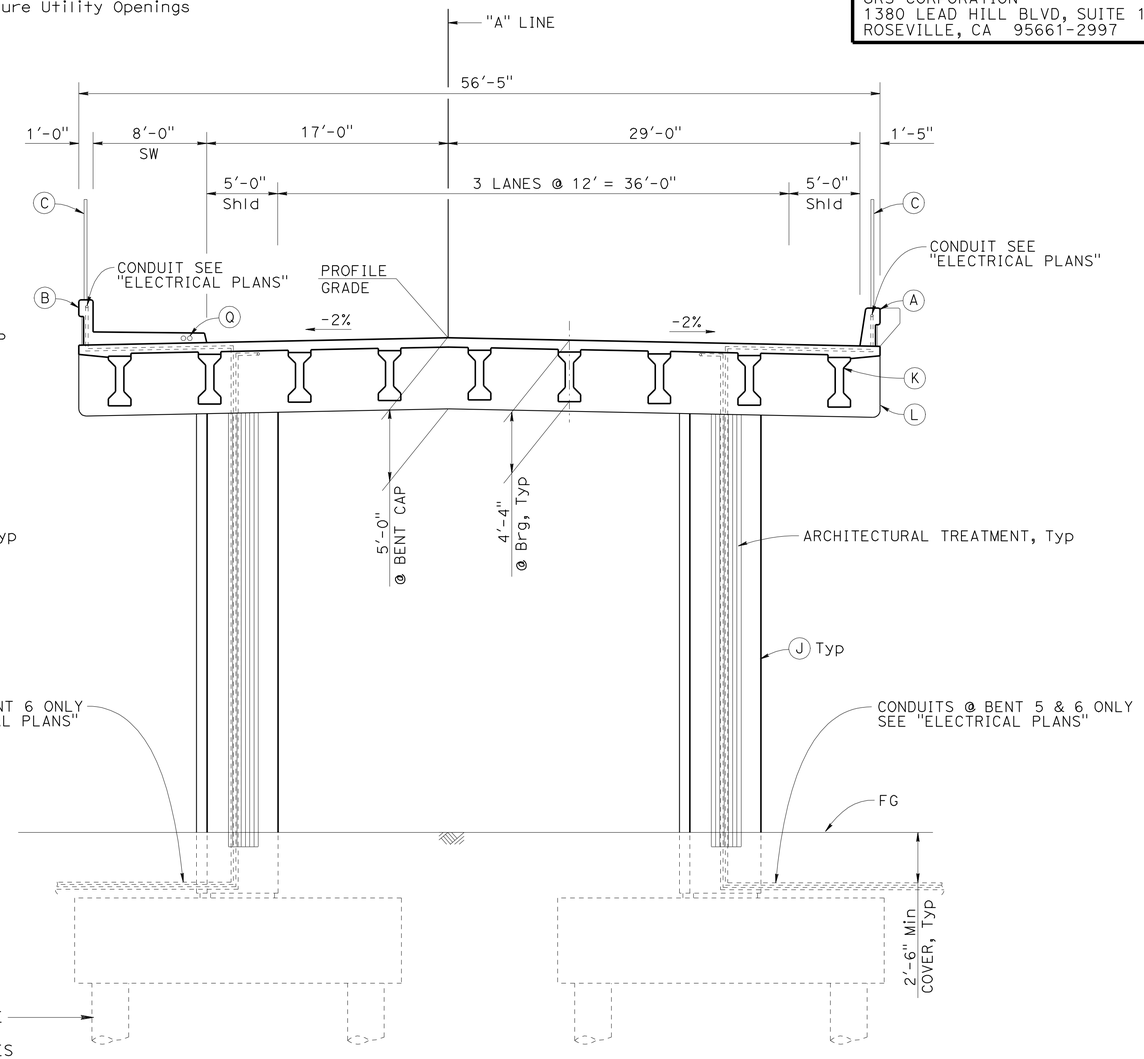

TYPICAL SECTION
3/16" = 1'-0"

DESIGN	BY B. Schoppe	CHECKED S. Landis	LOAD & RESISTANCE FACTOR DESIGN	LIVE LOADING: HL93 W/"LOW-BOY"; PERMIT DESIGN VEHICLE		
DETAILS	BY L. Davis	CHECKED S. Landis	LAYOUT	BY J. Hueser	CHECKED S. Landis	
QUANTITIES	BY B. Schoppe	CHECKED F. Hakemi/B. Osorio	SPECIFICATIONS	BY D. Harnagel	PLANS AND SPECS COMPARED J. Hueser	

Paul Cotter
DESIGN OVERSIGHT Paul Cotter
8-8-12
SIGN OFF DATE

PREPARED FOR THE STATE OF CALIFORNIA DEPARTMENT OF TRANSPORTATION

Jan Hueser
PROJECT ENGINEER

BRIDGE NO. 33-0751
POST MILES 28.69

29TH AVENUE OC (REPLACE)
GENERAL PLAN No. 2

DESIGN GENERAL PLAN SHEET (ENGLISH) (REV.7/16/10)

ORIGINAL SCALE IN INCHES FOR REDUCED PLANS 0 1 2 3

UNIT: 0724
PROJECT NUMBER & PHASE: 04000001601 CONTRACT NO.: 04-0A7101

DISREGARD PRINTS BEARING EARLIER REVISION DATES

REVISION DATES: 8-8-11 1-18-12 3-30-12 8-7-12 SHEET 2 OF 60

FILE => 33-0751-a-gp02.dgn

USERNAME => s124496 DATE PLOTTED => 10-APR-2013 TIME PLOTTED => 06:20

DIST	COUNTY	ROUTE	POST MILES TOTAL PROJECT	SHEET No	TOTAL SHEETS
04	Ala	880	28.4/29.2	510	789

REGISTERED CIVIL ENGINEER — DATE 6/25/12

4-8-13
PLANS APPROVAL DATE

REGISTERED PROFESSIONAL ENGINEER — Jan M. Hueser No. C050215 Exp. 6/30/13 CIVIL — STATE OF CALIFORNIA

The State of California or its officers or agents shall not be responsible for the accuracy or completeness of electronic copies of this plan sheet.

ALAMEDA COUNTY TRANSPORTATION COMMISSION
1333 BROADWAY
OAKLAND, CA 94612-1918

URS CORPORATION
1380 LEAD HILL BLVD, SUITE 100
ROSEVILLE, CA 95661-2997

GENERAL NOTES
LOAD AND RESISTANCE FACTOR DESIGN

DESIGN: AASHTO LRFD Bridge Design Specifications, 4th edition and the Caltrans Amendments, preface dated September 2010; except that concrete barriers and bridge details taken from Standard Plans 2006 are designed using Bridge Design Specifications ('96 AASHTO with Revisions by Caltrans).

SEISMIC DESIGN: Caltrans Seismic Design Criteria (SDC), Version 1.6 Dated November 2010.

DEAD LOAD: Includes 35 psf for future wearing surface. The deck dead load has been increased by a factor of 10% to allow for the use of steel deck forms.

LIVE LOAD: HL93 and permit design load. Permit loading does not include additional live load from connecting structure.

SEISMIC LOADING: Soil Profile: Type D
Shear Wave Velocity, Vs30 = 820 ft/sec for the top 100 ft of soil.
Moment Magnitude: 7.3
Peak Ground Acceleration = 0.72g

CONCRETE: fy = 60 ksi
f'c = 3.6 ksi
n = 8

See prestressing notes on "GIRDER DETAILS No. 1" sheet and "BENT NOTES AND CAMBER" sheet.

CREEP AND SHRINKAGE: In accordance with "AASHTO LRFD Bridge Design Specifications"

Relative humidity = 70%
Assumed precast girder age at time of erection = 28 days

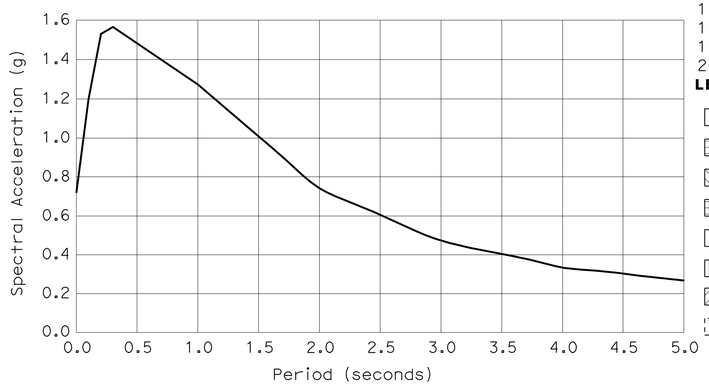

STANDARD PLANS DATED MAY 2006

STANDARD PLAN SHEET No.
DETAIL No.

A10A	ACRONYMS AND ABBREVIATIONS (SHEET 1 OF 2)
A10B	ACRONUMS AND ABBREVIATIONS (SHEET 2 OF 2)
A10C	SYMBOLS (SHEET 1 OF 2)
A10D	SYMBOLS (SHEET 2 OF 2)
A62C	LIMITS OF PAYMENT FOR EXCAVATION AND BACKFILL BRIDGE
B0-1	BRIDGE DETAILS
B0-3	BRIDGE DETAILS
B0-5	BRIDGE DETAILS
B0-13	BRIDGE DETAILS
B8-5	CAST-IN-PLACE PRESTRESSED GIRDER DETAILS
B11-52	CHAIN LINK RAILING TYPE 7
B11-54	CONCRETE BARRIER TYPE 26
B11-55	CONCRETE BARRIER TYPE 732
ES-9E	ELECTRICAL SYSTEMS (ELECTRICAL DETAILS STRUCTURE INSTALLATIONS)

INDEX TO PLANS

SHEET NO.	TITLE	SHEET NO.	TITLE	SHEET NO.	TITLE
1	GENERAL PLAN No. 1	21	BENT 6 DETAILS No. 2	41	LONGITUDINAL SECTION No. 3
2	GENERAL PLAN No. 2	22	BENT 6 DETAILS No. 3	42	GIRDER DETAILS No. 1
3	INDEX TO PLANS	23	BENT 6 DETAILS No. 4	43	GIRDER DETAILS No. 2
4	BRIDGE CONSTRUCTION SEQUENCE	24	BENT 7 LAYOUT	44	END DIAPHRAGM DETAILS
5	DECK CONTOURS	25	BENT 7 DETAILS No. 1	45	DECK REINFORCEMENT DETAILS No. 1
6	FOUNDATION PLAN	26	BENT 7 DETAILS No. 2	46	DECK REINFORCEMENT DETAILS No. 2
7	ABUTMENT 1 LAYOUT	27	BENT 7 DETAILS No. 3	47	DECK REINFORCEMENT DETAILS No. 3
8	ABUTMENT 1 PILE LAYOUT	28	BENT 7 DETAILS No. 4	48	JOINT SEAL ASSEMBLY MAXIMUM MOVEMENT RATING = 4"
9	ABUTMENT 8 LAYOUT	29	BENT NOTES AND CAMBER	49	STRUCTURE APPROACH TYPE N(30S)
10	ABUTMENT 8 PILE LAYOUT	30	BENT 2 THRU 5 COLUMN DETAILS	50	BARRIER PEDESTAL DETAILS
11	ABUTMENT DETAILS No. 1	31	BENT 6 AND 7 COLUMN DETAILS	51	ARCHITECTURAL DETAILS
12	ABUTMENT DETAILS No. 2	32	BENT 4 FOOTING DETAILS	52	LOG OF TEST BORINGS 1 OF 9
13	ABUTMENT DETAILS No. 3	33	BENT 2, 3, 5, 6 AND 7 FOOTING DETAILS	53	LOG OF TEST BORINGS 2 OF 9
14	BENT 2 THRU 5 LAYOUT	34	TYPICAL SECTION No. 1	54	LOG OF TEST BORINGS 3 OF 9
15	BENT 2 THRU 5 DETAILS No. 1	35	TYPICAL SECTION No. 2	55	LOG OF TEST BORINGS 4 OF 9
16	BENT 2 THRU 5 DETAILS No. 2	36	GIRDER LAYOUT No. 1	56	LOG OF TEST BORINGS 5 OF 9
17	BENT 2 THRU 5 DETAILS No. 3	37	GIRDER LAYOUT No. 2	57	LOG OF TEST BORINGS 6 OF 9
18	BENT 2 THRU 5 DETAILS No. 4	38	GIRDER LAYOUT No. 3	58	LOG OF TEST BORINGS 7 OF 9
19	BENT 6 LAYOUT	39	LONGITUDINAL SECTION No. 1	59	LOG OF TEST BORINGS 8 OF 9
20	BENT 6 DETAILS No. 1	40	LONGITUDINAL SECTION No. 2	60	LOG OF TEST BORINGS 9 OF 9

LEGEND:

- Structural Concrete, Bridge, see "LONGITUDINAL SECTION No. 3" sheet
- Structural Concrete, Bridge, see "BENT NOTES AND CAMBER" sheet
- Structural Concrete, Bridge
- Structural Concrete, Retaining Wall
- Structural Concrete, Bridge (f'c = 5 ksi @ 28 days)
- Precast Prestressed Concrete Girder, see "GIRDER DETAILS No. 1" sheet
- Structural Concrete, Bridge Footing (f'c = 4 ksi @ 28 days)
- Structural Concrete, Approach Slab

29TH AVENUE OC (REPALCE)
QUANTITIES

BRIDGE REMOVAL, LOCATION C	LUMP	SUM
STRUCTURE EXCAVATION (BRIDGE)	2,401	CY
STRUCTURE EXCAVATION (RETAINING WALL)	624	CY
STRUCTURE BACKFILL (BRIDGE)	1,247	CY
STRUCTURE BACKFILL (RETAINING WALL)	98	CY
24" CAST-IN-DRILLED-HOLE CONCRETE PILING	4,095	LF
30" CAST-IN-DRILLED-HOLE CONCRETE PILING	5,333	LF
PRESTRESSING CAST-IN-PLACE CONCRETE(TRANSVERSE)	LUMP	SUM
PRESTRESSING PRECAST GIRDER	LUMP	SUM
STRUCTURAL CONCRETE, BRIDGE FOOTING	833	CY
STRUCTURAL CONCRETE, BRIDGE	1,778	CY
STRUCTURAL CONCRETE, RETAINING WALL	328	CY
STRUCTURAL CONCRETE, APPROACH SLAB(TYPE N)	150	CY
FRACTURED RIB TEXTURE	5,495	SQFT
FURNISH PRECAST PRESTRESSED CONCRETE GIRDER (60'-70')	27	EA
FURNISH PRECAST PRESTRESSED CONCRETE GIRDER (70'-80')	9	EA
FURNISH PRECAST PRESTRESSED CONCRETE GIRDER (80'-90')	18	EA
FURNISH PRECAST PRESTRESSED CONCRETE GIRDER (90'-100')	9	EA
ERECT PRECAST PRESTRESSED CONCRETE GIRDER	63	EA
JOINT SEAL ASSEMBLY (MR 3")	116	LF
BAR REINFORCING STEEL (BRIDGE)	995,389	LB
BAR REINFORCING STEEL (RETAINING WALL)	56,678	LB
CHAIN LINK RAILING (TYPE 7)	1,195	LF
CONCRETE BARRIER (TYPE 26 MODIFIED)	649	LF
CONCRETE BARRIER (TYPE 732 MODIFIED)	544	LF

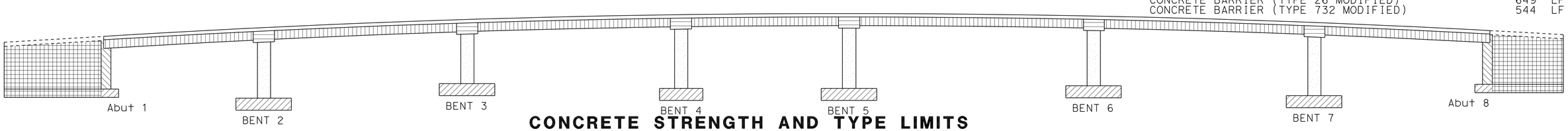

CONCRETE STRENGTH AND TYPE LIMITS

NO SCALE

DESIGN OVERSIGHT Paul Cotter
8-8-12
SIGN OFF DATE

	BY	CHECKED
DESIGN	B. Schoppe	S. Landis
DETAILS	L. Davis	S. Landis
QUANTITIES	B. Schoppe	F. Hakemi/B. Osorio

PREPARED FOR THE STATE OF CALIFORNIA DEPARTMENT OF TRANSPORTATION

Jan Hueser
PROJECT ENGINEER

BRIDGE NO. 33-0751
POST MILES 28.69

29TH AVENUE OC (REPLACE)
INDEX TO PLANS

DESIGN DETAIL SHEET (ENGLISH) (REV.7/16/10)

ORIGINAL SCALE IN INCHES FOR REDUCED PLANS 0 1 2 3

UNIT: 0724
PROJECT NUMBER & PHASE: 04000001601 CONTRACT NO.: 04-0A7101

DISREGARD PRINTS BEARING EARLIER REVISION DATES → REVISION DATES 9-6-11 1-30-12 3-30-12 8-7-12 SHEET 3 OF 60

FILE => 33-0751-a-itp.dgn

USERNAME => s124496 DATE PLOTTED => 10-APR-2013 TIME PLOTTED => 06:20

DIST	COUNTY	ROUTE	POST MILES TOTAL PROJECT	SHEET No	TOTAL SHEETS
04	Ala	880	28.4/29.2	511	789

REGISTERED CIVIL ENGINEER 6/25/12 DATE

4-8-13
PLANS APPROVAL DATE

REGISTERED PROFESSIONAL ENGINEER Jan M. Hueser No. C050215 Exp. 6/30/13 CIVIL STATE OF CALIFORNIA

The State of California or its officers or agents shall not be responsible for the accuracy or completeness of electronic copies of this plan sheet.

ALAMEDA COUNTY TRANSPORTATION COMMISSION
1333 BROADWAY
OAKLAND, CA 94612-1918

URS CORPORATION
1380 LEAD HILL BLVD, SUITE 100
ROSEVILLE, CA 95661-2997

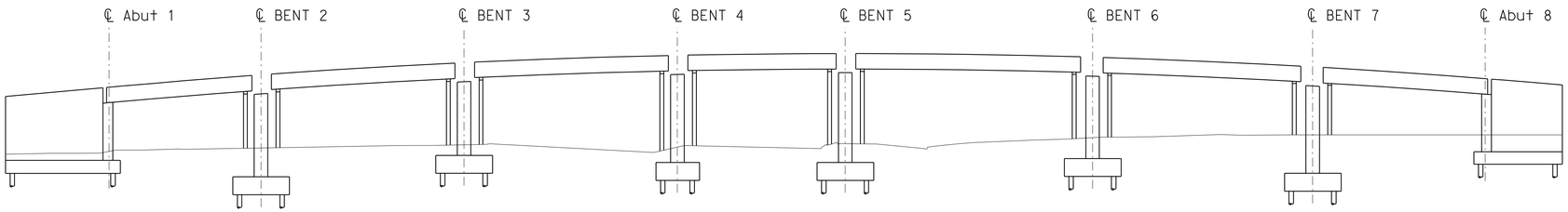

STEP 1, 2 AND 3

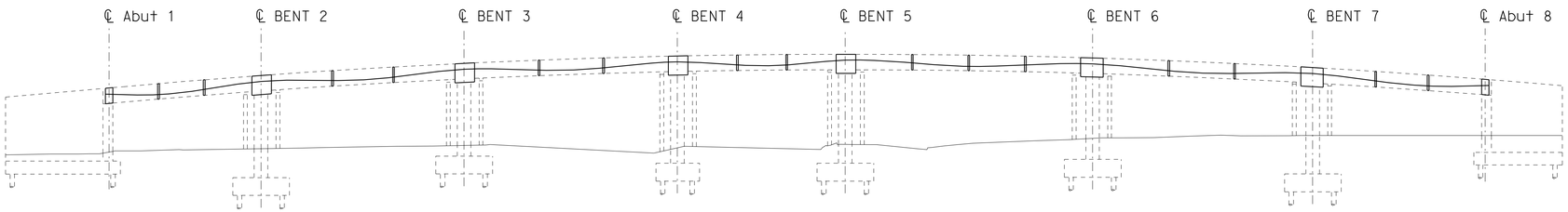

STEP 4 AND 5

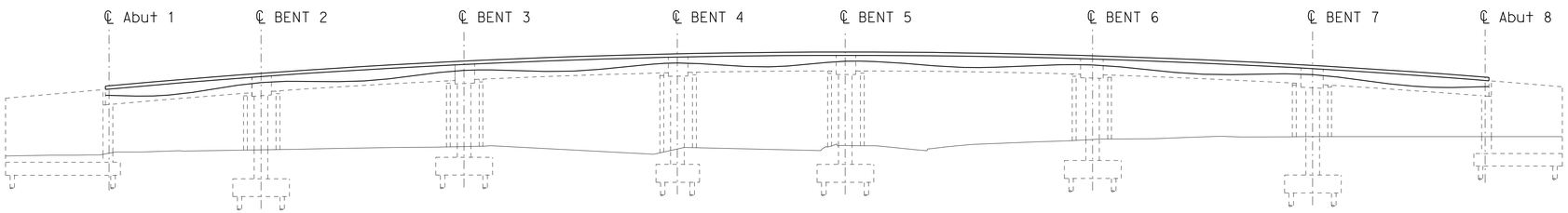

STEP 6, 7 AND 8

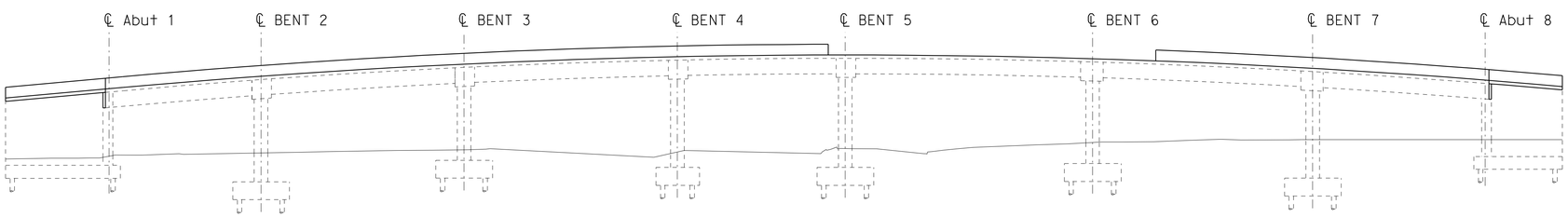

STEP 9

CONSTRUCTION SEQUENCE

NO SCALE

CONSTRUCTION SEQUENCE

Step 1: Construct abutments, retaining walls, bent footings, and columns.

Step 2: Erect falsework at bents.

Step 3: Erect precast prestressed concrete girders on falsework and abutments.

Step 4: Construct cast-in-place end diaphragms, intermediate diaphragms and bent caps with blockout for prestressing (post-tensioning). Allow concrete to reach a minimum strength of 4.5 ksi.

Step 5: Complete Path 1 prestressing (post-tensioning)

Step 6: Form and place deck concrete.

Step 7: Complete Path 2 and Path 3 prestressing (post-tensioning). Path 2 and 3 prestressing shall not be permitted less than 10 days after deck concrete has been placed and the deck concrete compressible strength at time of stressing has achieved the minimum specified f'ci of 4.5 ksi.

Step 8: Complete transverse prestressing (post-tensioning) at bent caps.

Step 9: Remove falsework and complete prestress blockouts, construct backwalls at abutments, approach slabs, barrier rails and fence.

Step 10: Construction of 29th Avenue Off-Ramp, BRIDGE No. 33-0752S to occur after completion of 29th Avenue OC (Replace).

Paul Cotter
DESIGN OVERSIGHT Paul Cotter
8-8-12
SIGN OFF DATE

	BY	CHECKED
DESIGN	B. Schoppe	S. Landis
DETAILS	L. Davis	S. Landis
QUANTITIES	B. Schoppe	F. Hakemi/B. Osorio

PREPARED FOR THE STATE OF CALIFORNIA DEPARTMENT OF TRANSPORTATION

Jan Hueser
PROJECT ENGINEER

BRIDGE NO. 33-0751
POST MILES 28.69

29TH AVENUE OC (REPLACE)
BRIDGE CONSTRUCTION SEQUENCE

DESIGN DETAIL SHEET (ENGLISH) (REV.7/16/10)

ORIGINAL SCALE IN INCHES FOR REDUCED PLANS 0 1 2 3

UNIT: 0724
PROJECT NUMBER & PHASE: 04000001601 CONTRACT NO.: 04-0A7101

DISREGARD PRINTS BEARING EARLIER REVISION DATES → REVISION DATES ~~9-6-11~~ ~~1-10-12~~ ~~3-30-12~~ 8-1-12 SHEET 4 OF 60

FILE => 33-0751-b-cs.dgn

USERNAME => s124496 DATE PLOTTED => 10-APR-2013 TIME PLOTTED => 06:20

DIST	COUNTY	ROUTE	POST MILES TOTAL PROJECT	SHEET No	TOTAL SHEETS
04	Ala	880	28.4/29.2	512	789

REGISTERED CIVIL ENGINEER — DATE 6/25/12

4-8-13
PLANS APPROVAL DATE

REGISTERED PROFESSIONAL ENGINEER — Jan M. Hueser No. C050215 Exp. 6/30/13 CIVIL — STATE OF CALIFORNIA

The State of California or its officers or agents shall not be responsible for the accuracy or completeness of electronic copies of this plan sheet.

ALAMEDA COUNTY TRANSPORTATION COMMISSION
1333 BROADWAY
OAKLAND, CA 94612-1918

URS CORPORATION
1380 LEAD HILL BLVD, SUITE 100
ROSEVILLE, CA 95661-2997

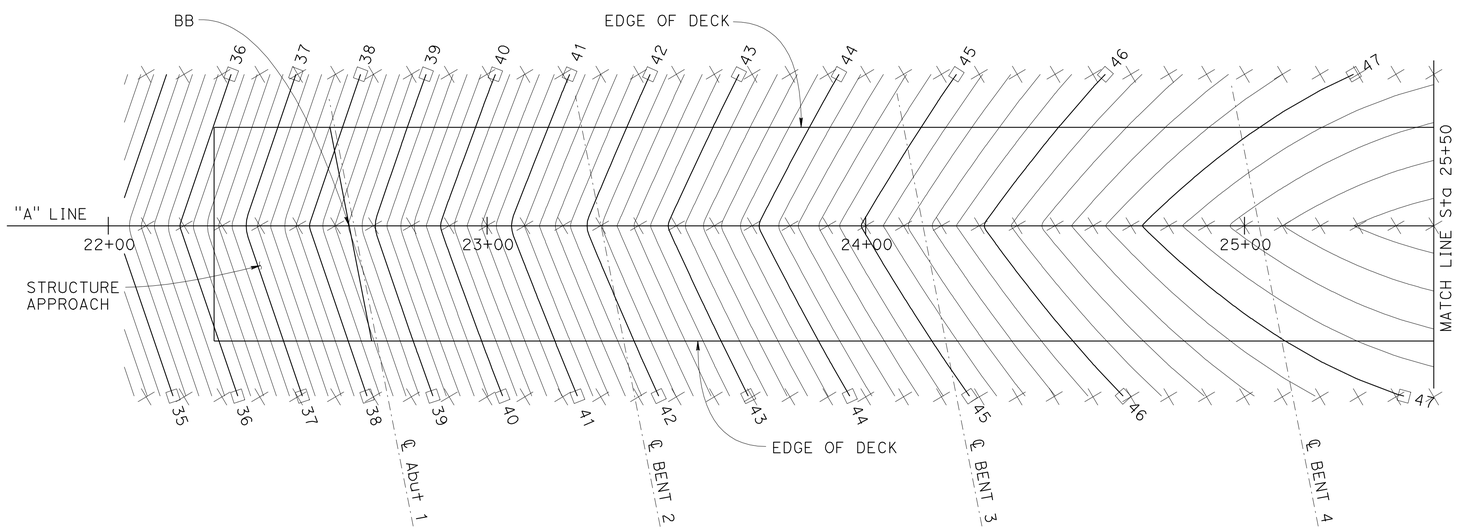

NOTES:

1. Contours do not include camber.
2. Contour interval = 0.20′.

LEGEND:

× Indicates 10′ interval measured along "A1" Line.

□ Indicates even foot contours.

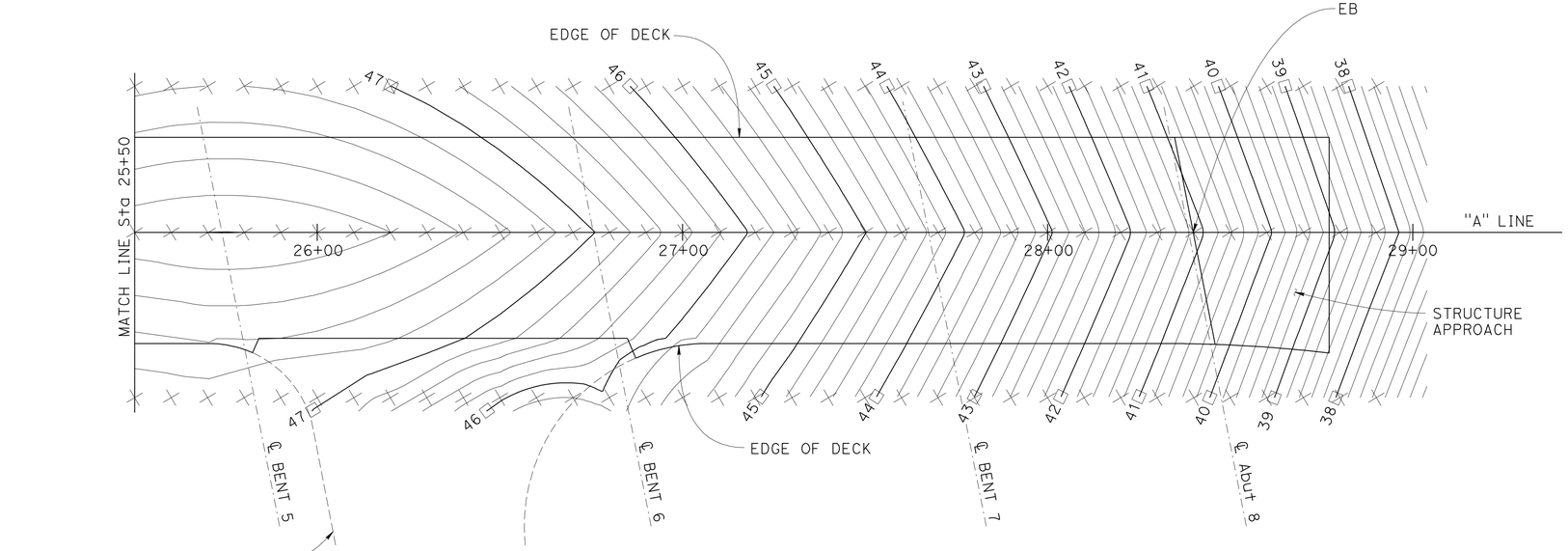

FOR CONNECTING STRUCTURE, SEE 29th AVENUE OFF-RAMP BRIDGE No. 33-0752S

PLAN
1"=20′-0"

Paul Cotter
DESIGN OVERSIGHT — Paul Cotter
7-16-12
SIGN OFF DATE

	BY	CHECKED
DESIGN	B. Schoppe	S. Landis
DETAILS	L. Davis	S. Landis
QUANTITIES	B. Schoppe	F. Hakemi/B. Osorio

PREPARED FOR THE STATE OF CALIFORNIA DEPARTMENT OF TRANSPORTATION

Jan Hueser
PROJECT ENGINEER

BRIDGE NO. 33-0751
POST MILES 28.69

29TH AVENUE OC (REPLACE)
DECK CONTOURS

DESIGN DETAIL SHEET (ENGLISH) (REV.7/16/10)

ORIGINAL SCALE IN INCHES FOR REDUCED PLANS 0 1 2 3

UNIT: 0724
PROJECT NUMBER & PHASE: 04000001601 CONTRACT NO.: 04-0A7101

DISREGARD PRINTS BEARING EARLIER REVISION DATES → 9-6-11 1-30-12 3-30-12 6-25-12

SHEET 5 OF 60

FILE => 33-0751-d-dc01.dgn

USERNAME => s124496 DATE PLOTTED => 10-APR-2013 TIME PLOTTED => 08:20

DIST	COUNTY	ROUTE	POST MILES TOTAL PROJECT	SHEET No	TOTAL SHEETS
04	Ala	880	28.4/29.2	513	789

REGISTERED CIVIL ENGINEER 6/25/12 DATE

4-8-13
PLANS APPROVAL DATE

The State of California or its officers or agents shall not be responsible for the accuracy or completeness of electronic copies of this plan sheet.

REGISTERED PROFESSIONAL ENGINEER Jan M. Hueser No. C050215 Exp. 6/30/13 CIVIL STATE OF CALIFORNIA

ALAMEDA COUNTY TRANSPORTATION COMMISSION
1333 BROADWAY
OAKLAND, CA 94612-1918

URS CORPORATION
1380 LEAD HILL BLVD, SUITE 100
ROSEVILLE, CA 95661-2997

PILE DATA TABLE

LOCATION	PILE TYPE	NOMINAL RESISTANCE (kips)		DESIGN TIP ELEVATION (ft)	SPECIFIED TIP ELEVATION (ft)
		COMPRESSION	TENSION		
Abut 1	24" CIDH	390	0	-46(A), -13(C)	-46
Abut 1Lt RW	24" CIDH	180	40	-20(A), 1(B), -13(C)	-20
Abut 1Rt RW	24" CIDH	240	60	-29(A), -3(B), -13(C)	-29
BENT 2	30" CIDH	480	0	-49(A), -18(C)	-49
BENT 3	30" CIDH	410	0	-40(A), -13(C)	-40
BENT 4	24" CIDH	370	0	-45(A), -9(C)	-45
BENT 5	30" CIDH	420	0	-42(A), -15(C)	-42
BENT 6	30" CIDH	480	0	-46(A), -14(C)	-46
BENT 7	30" CIDH	520	0	-52(A), -17(C)	-52
Abut 8	24" CIDH	370	0	-43(A), -11(C)	-43
Abut 8Lt RW	24" CIDH	260	60	-29(A), -1(B), -11(C)	-29
Abut 8Rt RW	24" CIDH	200	60	-21(A), -1(B), -11(C)	-21

DESIGN TIP ELEVATION IS CONTROLLED BY THE FOLLOWING DEMANDS:
(A) COMPRESSION, (B) TENSION, (C) LATERAL LOADS.

BENCH MARK

BENCH MARK	N	E	ELEV	DESCRIPTION
1006	2109767.725	6061074.488	29.21	SPIKE AND PUNCH EAST 10th STREET AND 29th AVENUE
2001	2108838.617	6060355.399	16.75	BRASS BUTTON AND PUNCH IN WELL

SURVEY CONTROL
HORIZONTAL CONTROL FOR THIS SURVEY IS BASED ON THE CALIFORNIA COORDINATE SYSTEM, ZONE 3, US SURVEY FEET, NORTH AMERICAN DATUM OF 1983 (NAD83 2007), VERTICAL CONTROL IS THE NORTH AMERICAN VERTICAL DATUM (NAVD88 RCFCD).

CURVE DATA

CURVE	R	Δ	T	L
1	2485′	51°15′49"	1192.31′	2223.38′
2	70′	37°08′06"	23.51′	45.36′
3	230′	15°05′21"	30.46′	60.58′
4	52′	42°51′55"	20.41′	38.90′
5	120′	54°07′09"	61.30′	113.34′

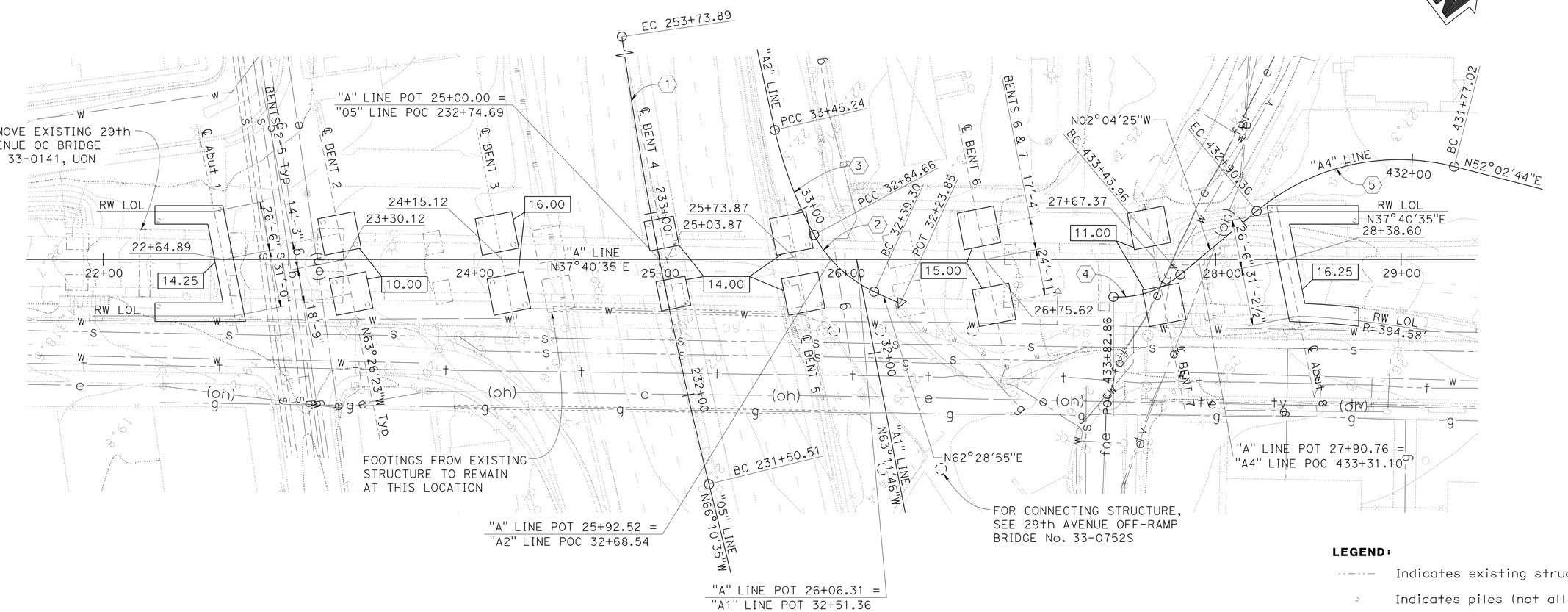

PLAN

LEGEND:

- Indicates existing structure
- Indicates piles (not all piles shown)
- Indicates bottom of footing elevation

GEOTECHNICAL PROFESSIONAL 6/25/12 APPROVAL DATE

DESIGN OVERSIGHT Paul Cotter	SCALE: 1"=30′-0"	VERT.DATUM NAVD88	HORZ.DATUM CCS83, Zone 3	DESIGN	BY B. Schoppe	CHECKED S. Landis	
7-16-12	PHOTOGRAMMETRY AS OF: 9-04-08	ALIGNMENT TIES		DETAILS	BY L. Davis	CHECKED S. Landis	
SIGN OFF DATE	SURVEYED BY D. Bustamante	DRAFTED BY		QUANTITIES	BY B. Schoppe	CHECKED F. Hakemi/B. Osorio	
	FIELD CHECKED BY D. Baumann	CHECKED BY					

PREPARED FOR THE STATE OF CALIFORNIA DEPARTMENT OF TRANSPORTATION

Jan Hueser
PROJECT ENGINEER

BRIDGE NO. 33-0751
POST MILES 28.69

29TH AVENUE OC (REPLACE)
FOUNDATION PLAN

FOUNDATION PLAN SHEET (ENGLISH) (REV.7/16/10)

ORIGINAL SCALE IN INCHES FOR REDUCED PLANS 0 1 2 3

UNIT: 0724
PROJECT NUMBER & PHASE: 04000001601 CONTRACT NO.: 04-0A7101

DISREGARD PRINTS BEARING EARLIER REVISION DATES

REVISION DATES				SHEET	OF
9-6-11	1-30-12	3-30-12	6-25-12	6	60

FILE => 33-0751-e-fp101.dgn

USERNAME => s8124196 DATE PLOTTED => 10-APR-2013 TIME PLOTTED => 06:20

DIST	COUNTY	ROUTE	POST MILES TOTAL PROJECT	SHEET No	TOTAL SHEETS
04	Ala	880	28.4/29.2	514	789

REGISTERED CIVIL ENGINEER 6/25/12 DATE

4-8-13
PLANS APPROVAL DATE

REGISTERED PROFESSIONAL ENGINEER Jan M. Hueser No. C050215 Exp. 6/30/13 CIVIL STATE OF CALIFORNIA

The State of California or its officers or agents shall not be responsible for the accuracy or completeness of electronic copies of this plan sheet.

ALAMEDA COUNTY TRANSPORTATION COMMISSION
1333 BROADWAY
OAKLAND, CA 94612-1918

URS CORPORATION
1380 LEAD HILL BLVD, SUITE 100
ROSEVILLE, CA 95661-2997

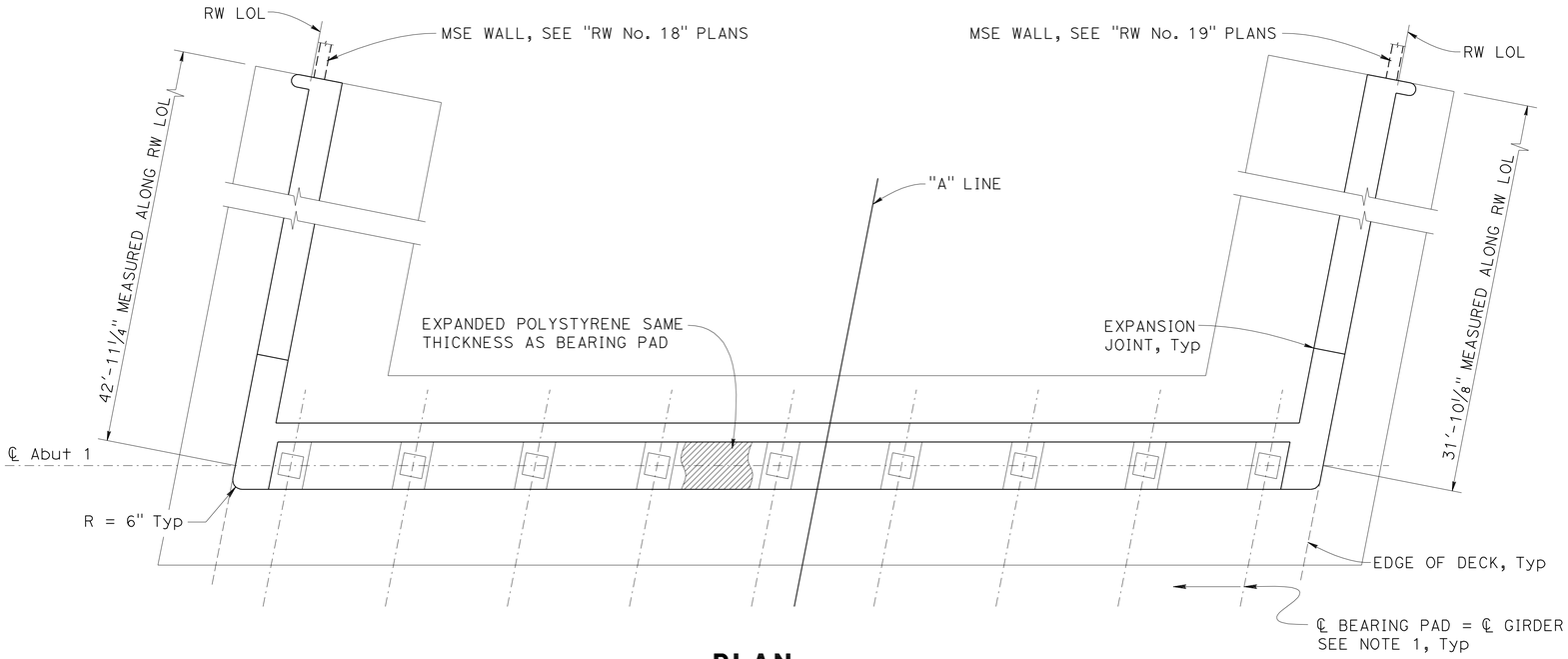

PLAN
¼" = 1'-0"

NOTES:

1. For "BEARING PAD DETAIL" and "SECTION A-A", see "ABUTMENT DETAILS No. 1" sheet.
2. For "SHEAR KEY DETAIL" see "ABUTMENT DETAILS No. 2" sheet.
3. For "PILE LAYOUT" see "ABUTMENT 1 PILE LAYOUT" sheet.

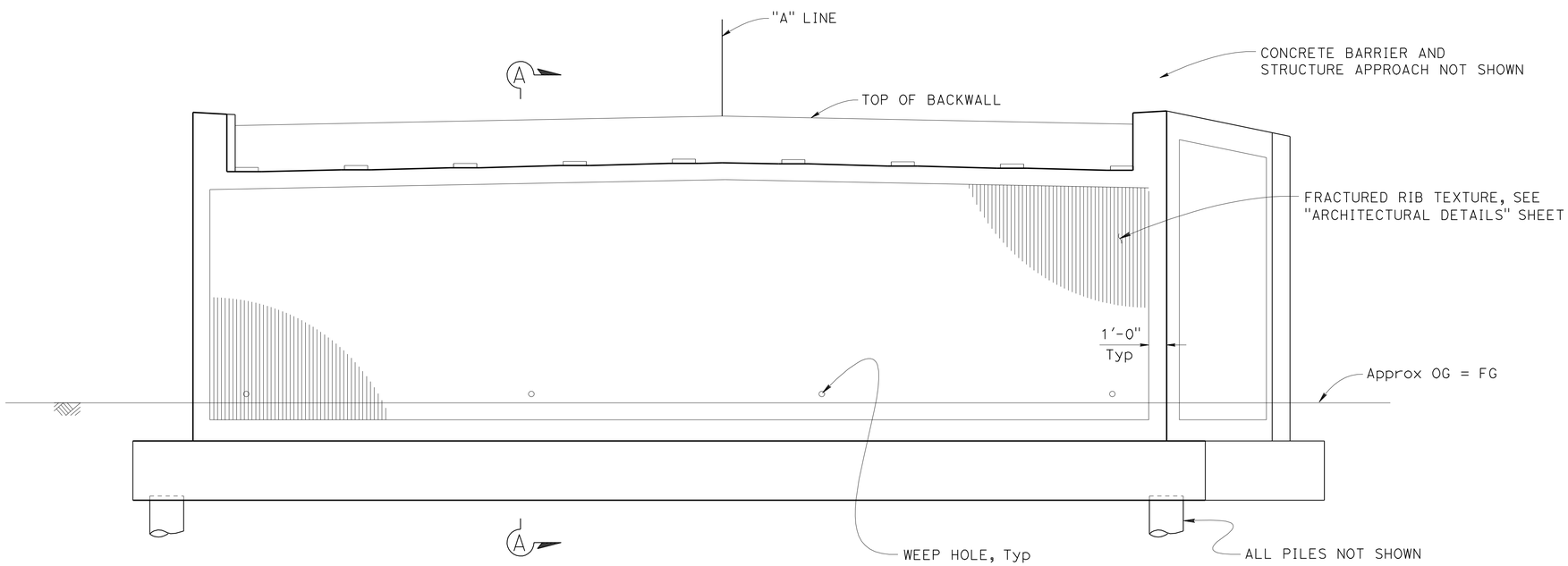

ELEVATION
¼" = 1'-0"

DESIGN OVERSIGHT Paul Cotter
7-16-12
SIGN OFF DATE

	BY	CHECKED
DESIGN	B. Schoppe	S. Landis
DETAILS	L. Davis	S. Landis
QUANTITIES	B. Schoppe	F. Hakemi/B. Osorio

PREPARED FOR THE STATE OF CALIFORNIA DEPARTMENT OF TRANSPORTATION

Jan Hueser
PROJECT ENGINEER

BRIDGE NO. 33-0751
POST MILES 28.69

29TH AVENUE OC (REPLACE)
ABUTMENT 1 LAYOUT

DESIGN DETAIL SHEET (ENGLISH) (REV.7/16/10)

ORIGINAL SCALE IN INCHES FOR REDUCED PLANS 0 1 2 3

UNIT: 0724
PROJECT NUMBER & PHASE: 04000001601 CONTRACT NO.: 04-0A7101

DISREGARD PRINTS BEARING EARLIER REVISION DATES

REVISION DATES 9-6-11 1-18-12 3-30-12 6-25-12 SHEET 7 OF 60

FILE => 33-0751-f-a01_1o01.dgn

USERNAME => s124436 DATE PLOTTED => 10-APR-2013 TIME PLOTTED => 06:20

DIST	COUNTY	ROUTE	POST MILES TOTAL PROJECT	SHEET No	TOTAL SHEETS
04	Ala	880	28.4/29.2	515	789

REGISTERED CIVIL ENGINEER 6/25/12 DATE

4-8-13
PLANS APPROVAL DATE

REGISTERED PROFESSIONAL ENGINEER Jan M. Hueser No. C050215 Exp. 6/30/13 CIVIL STATE OF CALIFORNIA

The State of California or its officers or agents shall not be responsible for the accuracy or completeness of electronic copies of this plan sheet.

ALAMEDA COUNTY TRANSPORTATION COMMISSION
1333 BROADWAY
OAKLAND, CA 94612-1918

URS CORPORATION
1380 LEAD HILL BLVD, SUITE 100
ROSEVILLE, CA 95661-2997

NOTES:

1. For Abut footing details, see "ABUTMENT DETAILS No. 1" sheet.
2. For retaining wall footing details, see "ABUTMENT DETAILS No. 3" sheet.
3. Lapped splices in spiral pile Reinf shall be lapped at least 80 bar diameters. Spiral pile Reinf at splices and at ends shall be terminated with a 135° hook with a 6" tail hooked around a longitudinal bar.

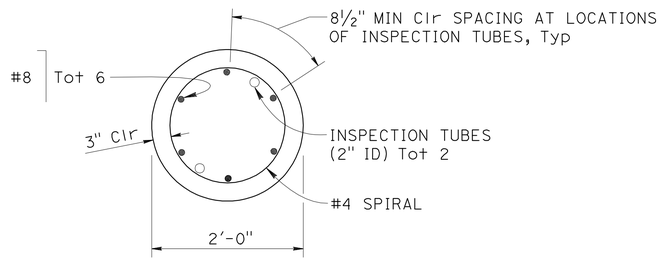

SECTION A-A

PILE DESIGN NOTES

REINFORCED CONCRETE: f'c = 4 ksi

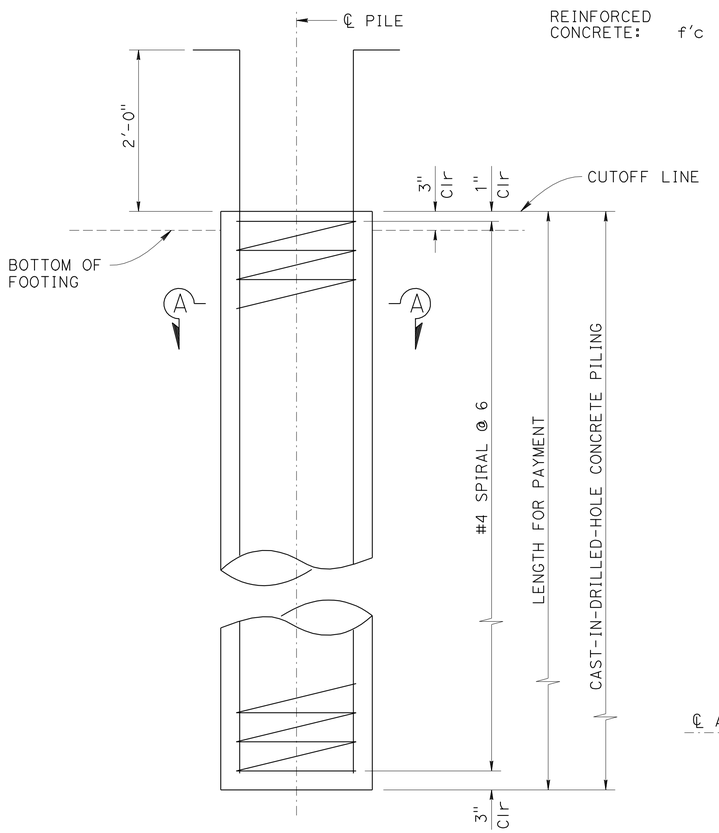

ELEVATION

24" CIDH PILE

NO SCALE

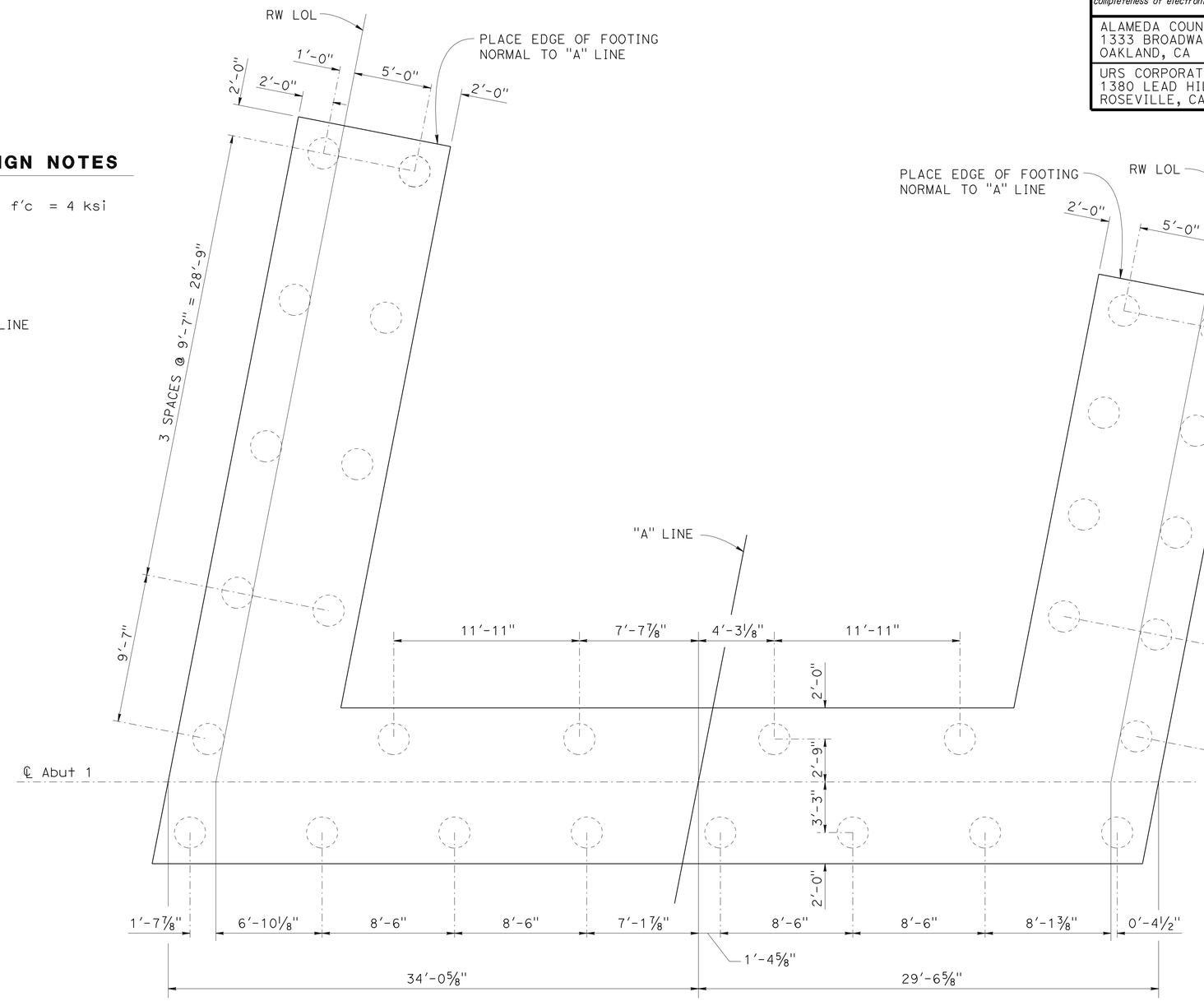

PLAN

¼" = 1'-0"

Paul Cotter DESIGN OVERSIGHT Paul Cotter	DESIGN	BY B. Schoppe	CHECKED S. Landis	PREPARED FOR THE STATE OF CALIFORNIA DEPARTMENT OF TRANSPORTATION	Jan Hueser PROJECT ENGINEER
8-8-12 SIGN OFF DATE	DETAILS	BY L. Davis	CHECKED S. Landis		BRIDGE NO. 33-0751
	QUANTITIES	BY B. Schoppe	CHECKED F. Hakemi/B. Osorio		POST MILES 28.69

29TH AVENUE OC (REPLACE)

ABUTMENT 1 PILE LAYOUT

DESIGN DETAIL SHEET (ENGLISH) (REV.7/16/10)

ORIGINAL SCALE IN INCHES FOR REDUCED PLANS 0 1 2 3

UNIT: 0724
PROJECT NUMBER & PHASE: 04000001601 CONTRACT NO.: 04-0A7101

DISREGARD PRINTS BEARING EARLIER REVISION DATES

REVISION DATES: 9-6-11 1-18-12 3-30-12 8-7-12 SHEET 8 OF 60

FILE => 33-0751-f-a01_1o02.dgn

USERNAME => s124196 DATE PLOTTED => 10-APR-2013 TIME PLOTTED => 06:20

DIST	COUNTY	ROUTE	POST MILES TOTAL PROJECT	SHEET No	TOTAL SHEETS
04	Ala	880	28.4/29.2	516	789

REGISTERED CIVIL ENGINEER 6/25/12 DATE

4-8-13
PLANS APPROVAL DATE

REGISTERED PROFESSIONAL ENGINEER Jan M. Hueser No. C050215 Exp. 6/30/13 CIVIL STATE OF CALIFORNIA

The State of California or its officers or agents shall not be responsible for the accuracy or completeness of electronic copies of this plan sheet.

ALAMEDA COUNTY TRANSPORTATION COMMISSION
1333 BROADWAY
OAKLAND, CA 94612-1918

URS CORPORATION
1380 LEAD HILL BLVD, SUITE 100
ROSEVILLE, CA 95661-2997

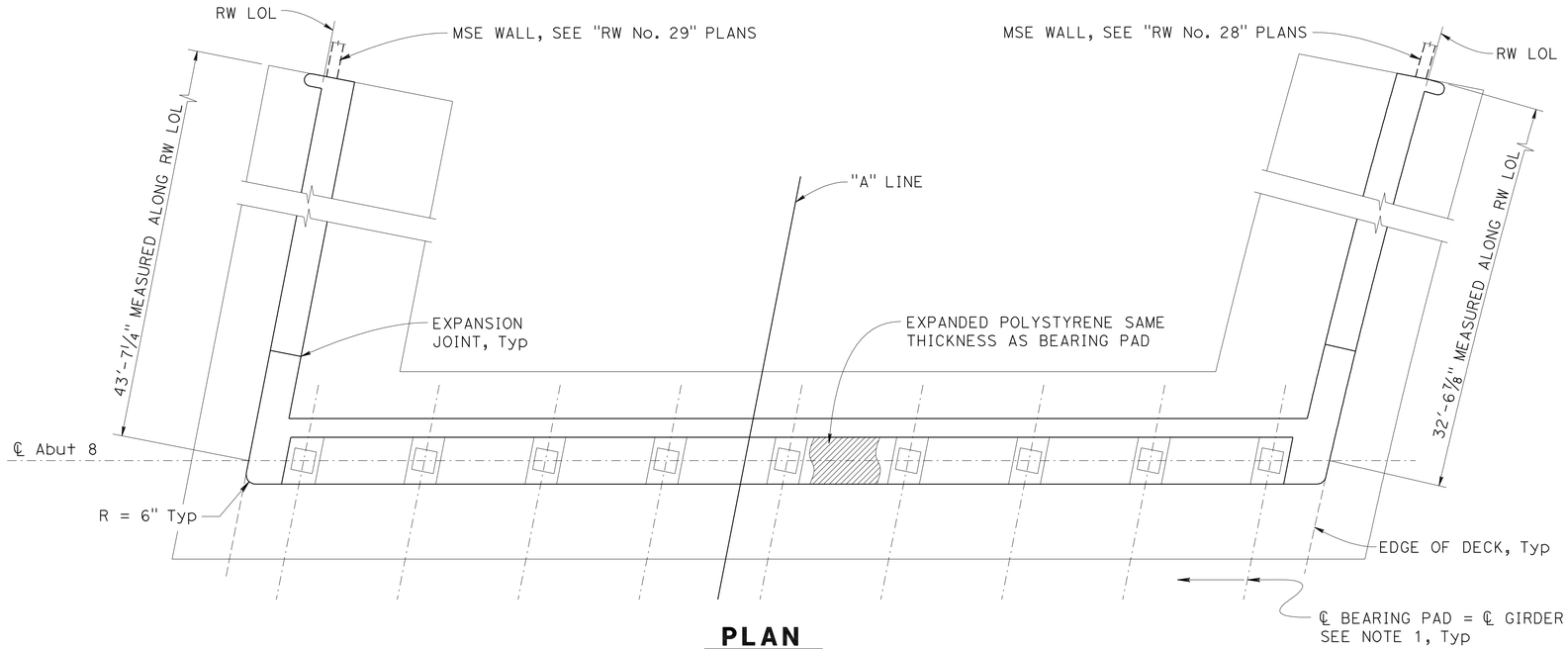

PLAN
1/4" = 1'-0"

NOTES:

1. For "BEARING PAD DETAIL" and "SECTION A-A", see "ABUTMENT DETAILS No. 1" sheet.
2. For "SHEAR KEY DETAIL" see "ABUTMENT DETAILS No. 2" sheet.
3. For "PILE LAYOUT" see "ABUTMENT 8 PILE LAYOUT" sheet.

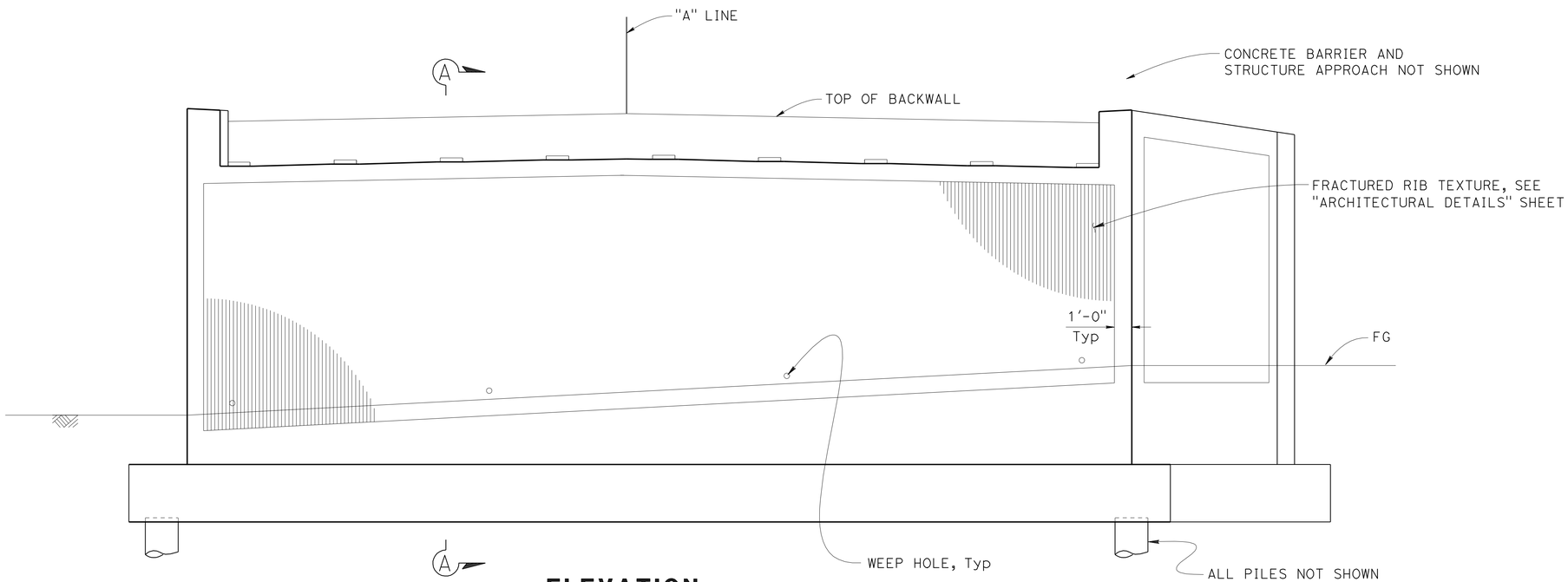

ELEVATION
1/4" = 1'-0"

Paul Cotter
DESIGN OVERSIGHT Paul Cotter
7-16-12
SIGN OFF DATE

	BY	CHECKED
DESIGN	B. Schoppe	S. Landis
DETAILS	L. Davis	S. Landis
QUANTITIES	B. Schoppe	F. Hakemi/B. Osorio

PREPARED FOR THE STATE OF CALIFORNIA DEPARTMENT OF TRANSPORTATION

Jan Hueser
PROJECT ENGINEER

BRIDGE NO. 33-0751
POST MILES 28.69

29TH AVENUE OC (REPLACE)
ABUTMENT 8 LAYOUT

DESIGN DETAIL SHEET (ENGLISH) (REV.7/16/10)

ORIGINAL SCALE IN INCHES FOR REDUCED PLANS 0 1 2 3

UNIT: 0724
PROJECT NUMBER & PHASE: 04000001601 CONTRACT NO.: 04-0A7101

DISREGARD PRINTS BEARING EARLIER REVISION DATES

REVISION DATES: 9-6-11 1-18-12 3-30-12 6-25-12 SHEET 9 OF 60

FILE => 33-0751-f-a08_lo01.dgn

USERNAME => s124496 DATE PLOTTED => 10-APR-2013 TIME PLOTTED => 06:20

DIST	COUNTY	ROUTE	POST MILES TOTAL PROJECT	SHEET No	TOTAL SHEETS
04	Ala	880	28.4/29.2	517	789

REGISTERED CIVIL ENGINEER 6/25/12 DATE

4-8-13
PLANS APPROVAL DATE

REGISTERED PROFESSIONAL ENGINEER Jan M. Hueser No. C050215 Exp. 6/30/13 CIVIL STATE OF CALIFORNIA

The State of California or its officers or agents shall not be responsible for the accuracy or completeness of electronic copies of this plan sheet.

ALAMEDA COUNTY TRANSPORTATION COMMISSION
1333 BROADWAY
OAKLAND, CA 94612-1918

URS CORPORATION
1380 LEAD HILL BLVD, SUITE 100
ROSEVILLE, CA 95661-2997

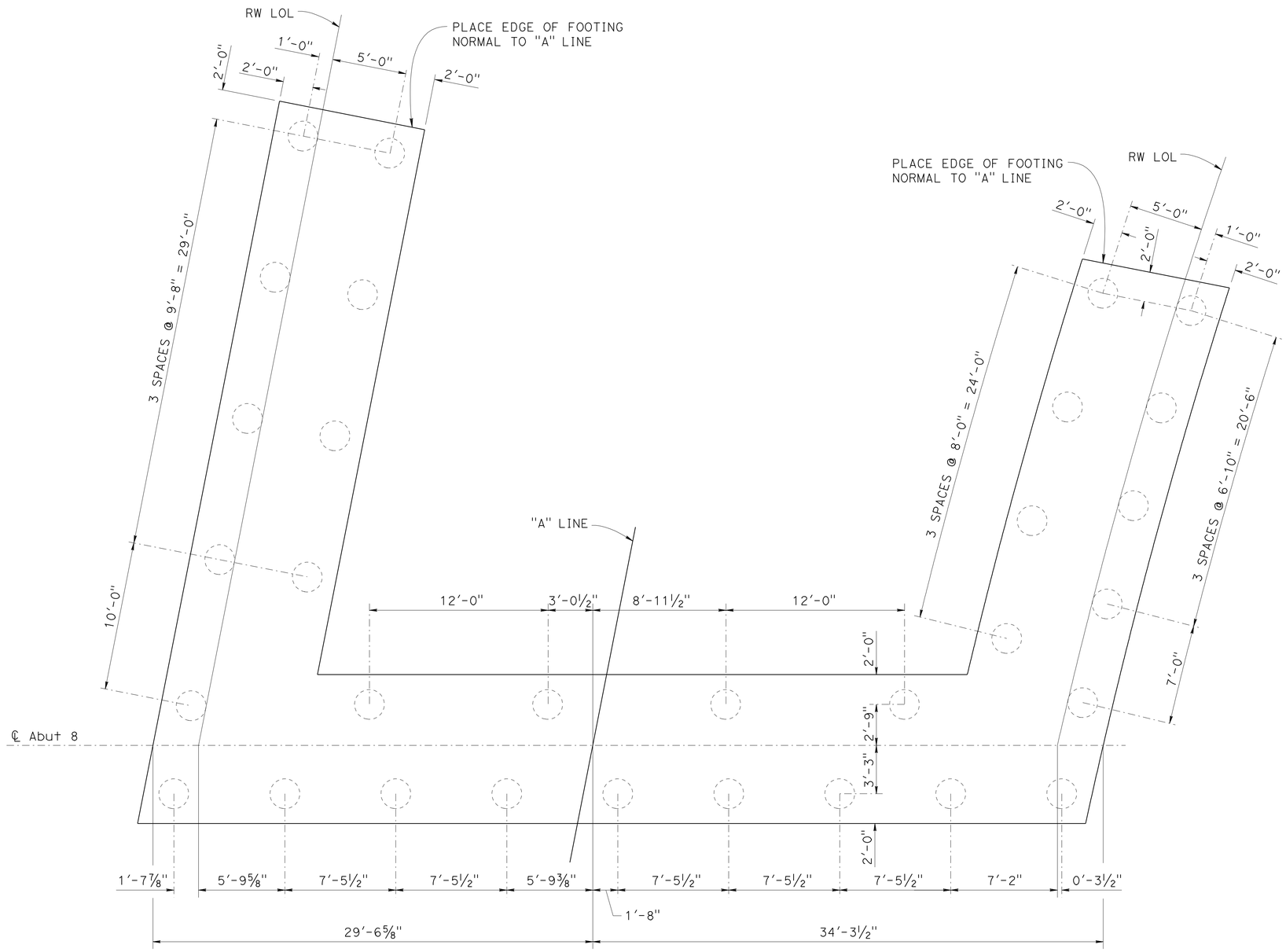

PLAN

¼" = 1'-0"

NOTES:

1. For Abut footing details, see "ABUTMENT DETAILS No. 1" sheet.
2. For retaining wall footing details, see "ABUTMENT DETAILS No. 3" sheet.
3. For "24" CIDH PILE AT ABUTMENT", see "ABUTMENT 1 PILE LAYOUT" sheet.

DESIGN OVERSIGHT Paul Cotter
7-16-12
SIGN OFF DATE

	BY	CHECKED
DESIGN	B. Schoppe	S. Landis
DETAILS	L. Davis	S. Landis
QUANTITIES	B. Schoppe	F. Hakemi/B. Osorio

PREPARED FOR THE STATE OF CALIFORNIA DEPARTMENT OF TRANSPORTATION

Jan Hueser
PROJECT ENGINEER

BRIDGE NO. 33-0751
POST MILES 28.69

29TH AVENUE OC (REPLACE)
ABUTMENT 8 PILE LAYOUT

DESIGN DETAIL SHEET (ENGLISH) (REV.7/16/10)

ORIGINAL SCALE IN INCHES FOR REDUCED PLANS 0 1 2 3

UNIT: 0724
PROJECT NUMBER & PHASE: 04000001601 CONTRACT NO.: 04-0A7101

DISREGARD PRINTS BEARING EARLIER REVISION DATES

REVISION DATES				SHEET	OF
9-6-11	1-18-12	3-30-12	6-25-12	10	60

FILE => 33-0751-f-a08_1o02.dgn

USERNAME => s124496 DATE PLOTTED => 10-APR-2013 TIME PLOTTED => 06:20

DIST	COUNTY	ROUTE	POST MILES TOTAL PROJECT	SHEET No	TOTAL SHEETS
04	Ala	880	28.4/29.2	518	789

REGISTERED CIVIL ENGINEER — DATE 6/25/12

4-8-13
PLANS APPROVAL DATE

The State of California or its officers or agents shall not be responsible for the accuracy or completeness of electronic copies of this plan sheet.

REGISTERED PROFESSIONAL ENGINEER — Jan M. Hueser — No. C050215 — Exp. 6/30/13 — CIVIL — STATE OF CALIFORNIA

ALAMEDA COUNTY TRANSPORTATION COMMISSION
1333 BROADWAY
OAKLAND, CA 94612-1918

URS CORPORATION
1380 LEAD HILL BLVD, SUITE 100
ROSEVILLE, CA 95661-2997

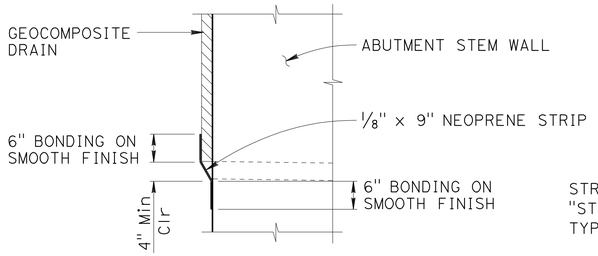

DETAIL B
NO SCALE

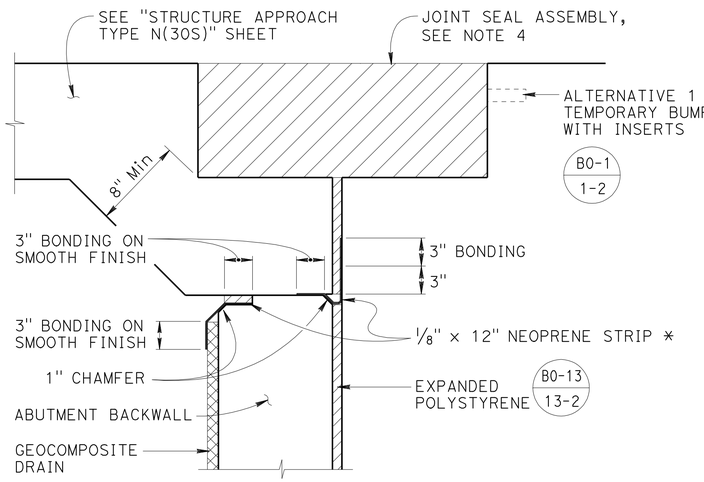

* Place prior to backfilling the Abutment backwall and installing temporary bumper (Fold neoprene into chamfer)

JOINT PROTECTION DETAIL
NO SCALE

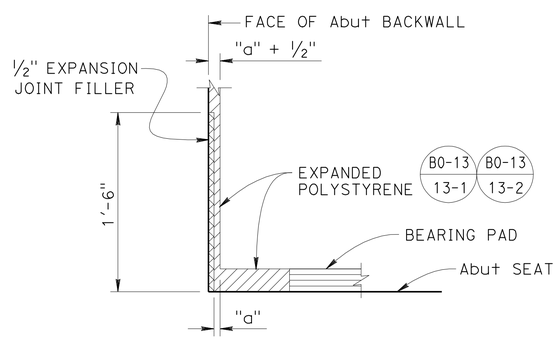

DETAIL A
NO SCALE

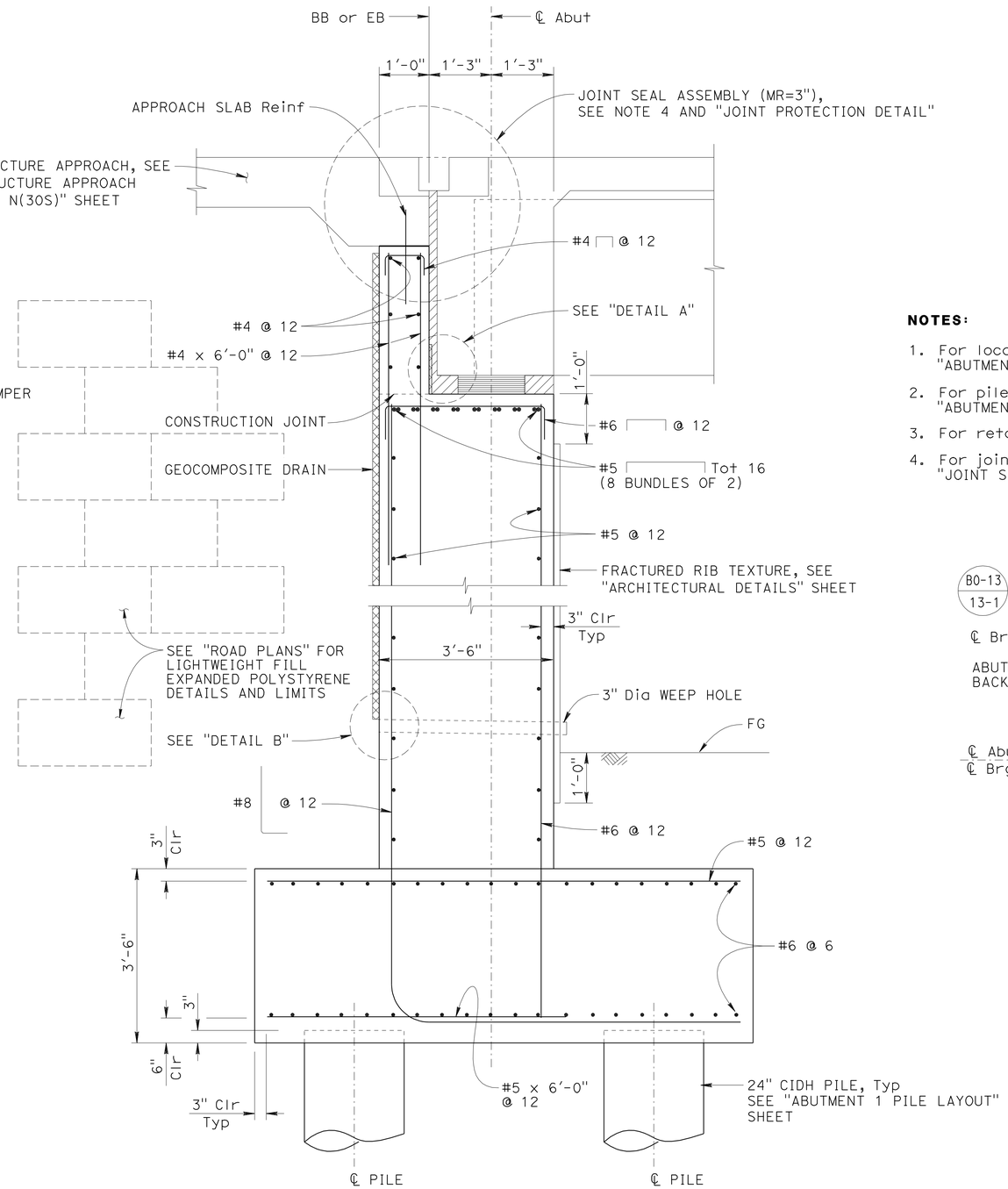

SECTION A-A
3/4" = 1'-0"

NOTES:

1. For location of "SECTION A-A", see "ABUTMENT 1 LAYOUT" and "ABUTMENT 8 LAYOUT" sheets.
2. For pile layout, see "ABUTMENT 1 PILE LAYOUT" and "ABUTMENT 8 PILE LAYOUT" sheets.
3. For retaining wall, see "ABUTMENT DETAILS No. 3" sheet.
4. For joint seal assembly details, see "JOINT SEAL ASSEMBLY MAXIMUM MOVEMENT RATING = 4" sheet.

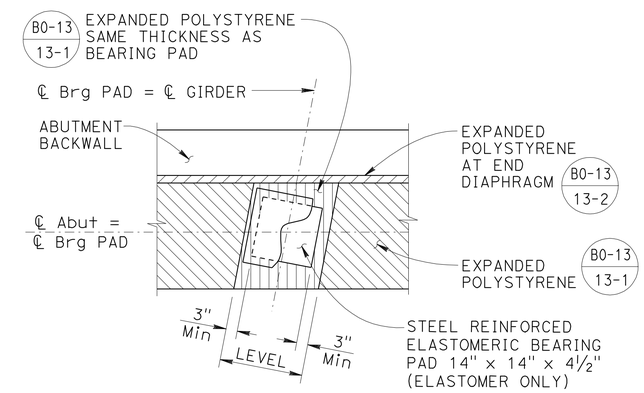

PLAN

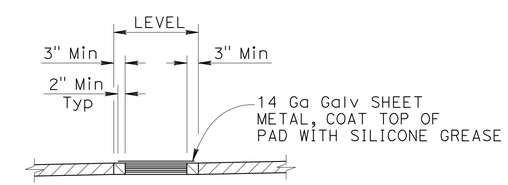

ELEVATION

BEARING PAD DETAIL
NO SCALE

DESIGN OVERSIGHT Paul Cotter — 7-16-12 SIGN OFF DATE	DESIGN	BY B. Schoppe	CHECKED S. Landis	PREPARED FOR THE STATE OF CALIFORNIA DEPARTMENT OF TRANSPORTATION	Jan Hueser PROJECT ENGINEER
	DETAILS	BY L. Davis	CHECKED S. Landis		BRIDGE NO. 33-0751 / POST MILES 28.69
	QUANTITIES	BY B. Schoppe	CHECKED F. Hakemi/B. Osorio		29TH AVENUE OC (REPLACE) ABUTMENT DETAILS No. 1

DESIGN DETAIL SHEET (ENGLISH) (REV.7/16/10)

ORIGINAL SCALE IN INCHES FOR REDUCED PLANS 0 1 2 3

UNIT: 0724
PROJECT NUMBER & PHASE: 04000001601 CONTRACT NO.: 04-0A7101

DISREGARD PRINTS BEARING EARLIER REVISION DATES — REVISION DATES 9-6-11 1-18-12 3-30-12 6-25-12 — SHEET 11 OF 60

FILE => 33-0751-f-adt01.dgn

USERNAME => s124496 DATE PLOTTED => 10-APR-2013 TIME PLOTTED => 06:20

DIST	COUNTY	ROUTE	POST MILES TOTAL PROJECT	SHEET No	TOTAL SHEETS
04	Ala	880	28.4/29.2	519	789

REGISTERED CIVIL ENGINEER 6/25/12 DATE

4-8-13
PLANS APPROVAL DATE

REGISTERED PROFESSIONAL ENGINEER Jan M. Hueser No. C050215 Exp. 6/30/13 CIVIL STATE OF CALIFORNIA

The State of California or its officers or agents shall not be responsible for the accuracy or completeness of electronic copies of this plan sheet.

ALAMEDA COUNTY TRANSPORTATION COMMISSION
1333 BROADWAY
OAKLAND, CA 94612-1918

URS CORPORATION
1380 LEAD HILL BLVD, SUITE 100
ROSEVILLE, CA 95661-2997

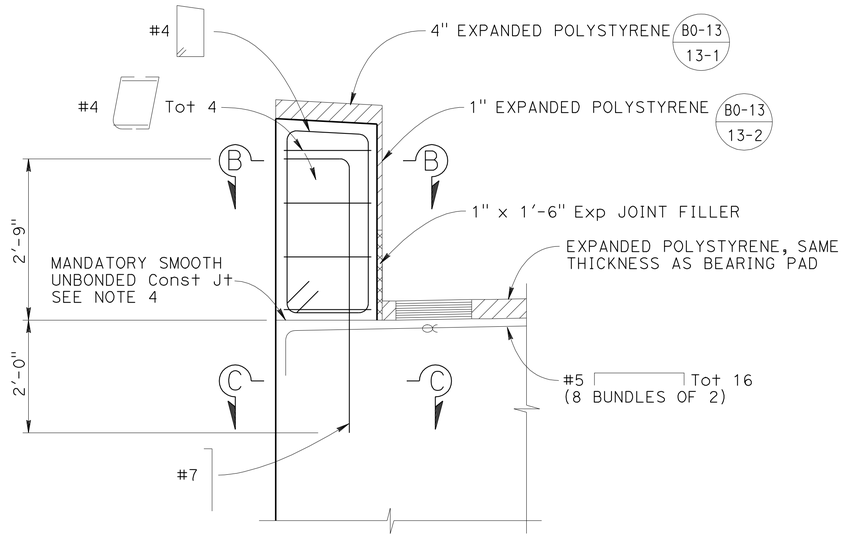

SHEAR KEY DETAIL

3/4" = 1'-0"

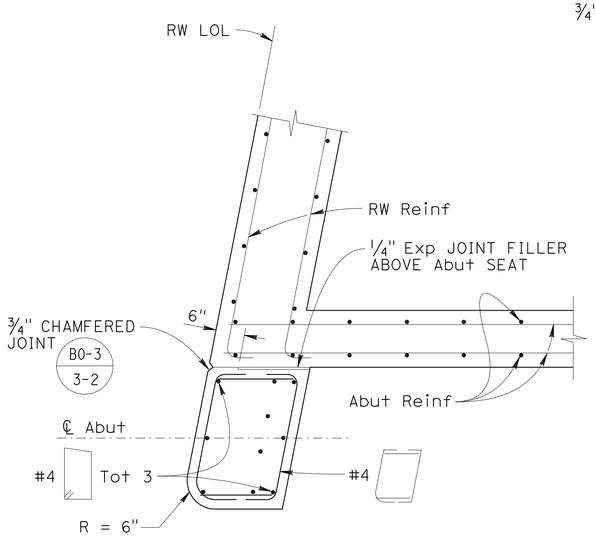

SECTION B-B

3/4" = 1'-0"

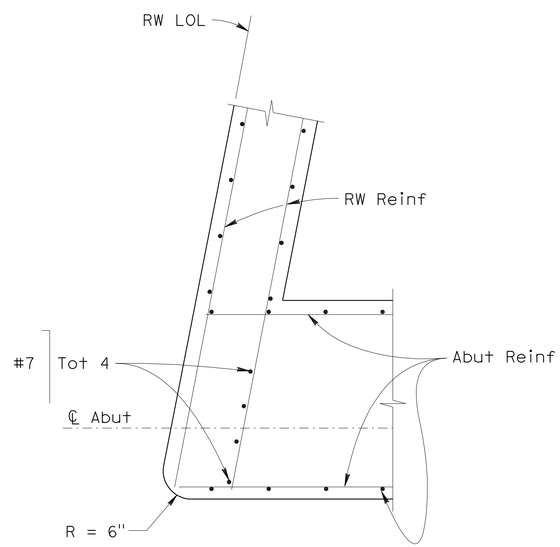

SECTION C-C

3/4" = 1'-0"

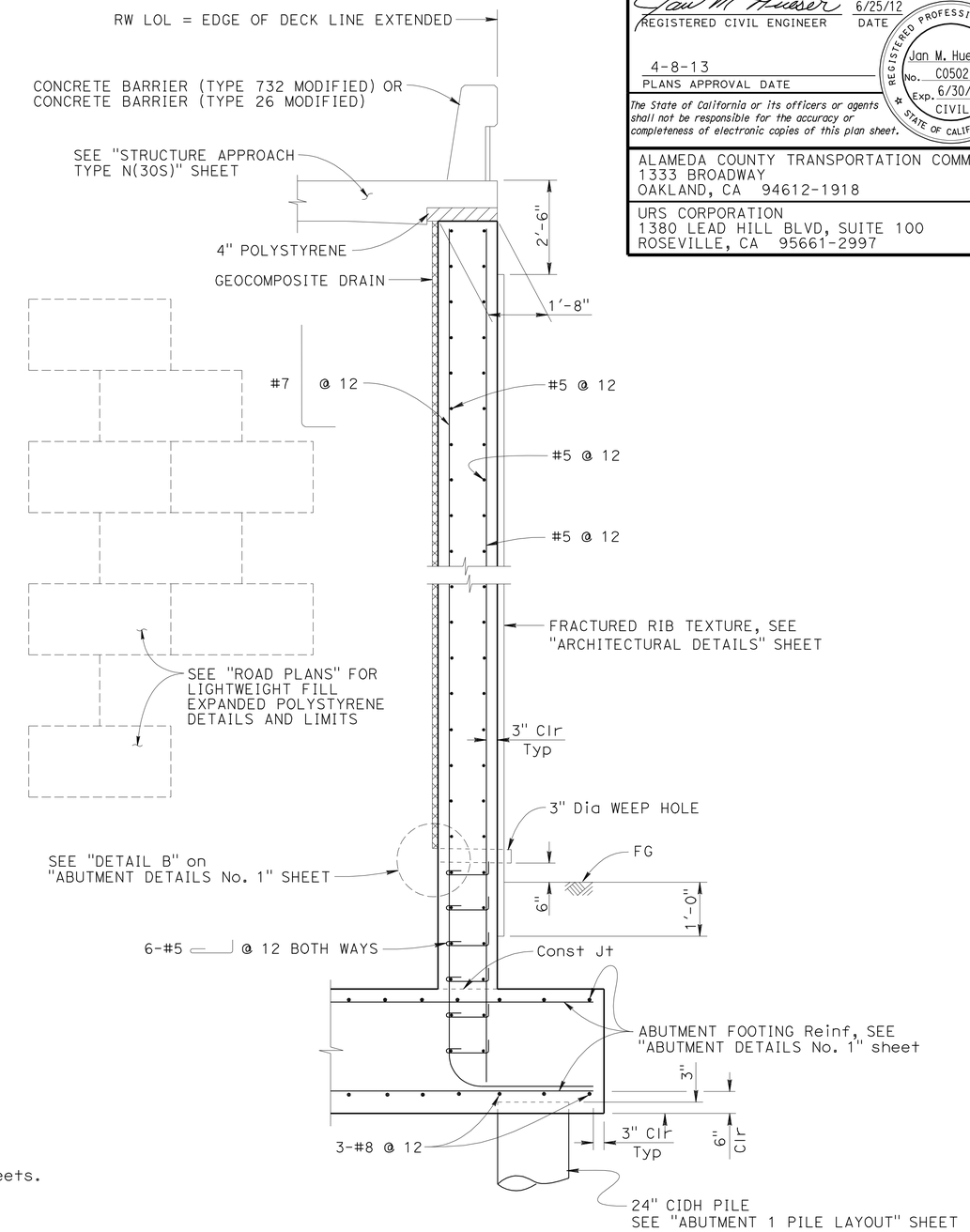

SECTION D-D

1/2" = 1'-0"

LEGEND:

∝ Indicates bundled bars

NOTES:

1. For information not shown, see "ABUTMENT 1 LAYOUT" and "ABUTMENT 8 LAYOUT" sheets.
2. One side of key shown, other side similar.
3. For location of "SECTION D-D" see "ABUTMENT DETAILS No. 3" sheet.
4. Mandatory surface to be smooth finished and lined with 15 pound construction paper.

DESIGN OVERSIGHT Paul Cotter
7-16-12
SIGN OFF DATE

	BY	CHECKED
DESIGN	B. Schoppe	S. Landis
DETAILS	L. Davis	S. Landis
QUANTITIES	B. Schoppe	F. Hakemi/B. Osorio

PREPARED FOR THE STATE OF CALIFORNIA DEPARTMENT OF TRANSPORTATION

Jan Hueser
PROJECT ENGINEER

BRIDGE NO. 33-0751
POST MILES 28.69

29TH AVENUE OC (REPLACE)
ABUTMENT DETAILS No. 2

DESIGN DETAIL SHEET (ENGLISH) (REV.7/16/10)

ORIGINAL SCALE IN INCHES FOR REDUCED PLANS 0 1 2 3

UNIT: 0724
PROJECT NUMBER & PHASE: 04000001601 CONTRACT NO.: 04-0A7101

DISREGARD PRINTS BEARING EARLIER REVISION DATES

REVISION DATES 9-6-11 1-30-12 3-30-12 6-25-12 SHEET 12 OF 60

FILE => 33-0751-f-adt02.dgn

USERNAME => s124496 DATE PLOTTED => 10-APR-2013 TIME PLOTTED => 06:20

DIST	COUNTY	ROUTE	POST MILES TOTAL PROJECT	SHEET No	TOTAL SHEETS
04	Ala	880	28.4/29.2	520	789

Jan M. Hueser 6/25/12
REGISTERED CIVIL ENGINEER DATE

4-8-13
PLANS APPROVAL DATE

REGISTERED PROFESSIONAL ENGINEER Jan M. Hueser No. C050215 Exp. 6/30/13 CIVIL STATE OF CALIFORNIA

The State of California or its officers or agents shall not be responsible for the accuracy or completeness of electronic copies of this plan sheet.

ALAMEDA COUNTY TRANSPORTATION COMMISSION
1333 BROADWAY
OAKLAND, CA 94612-1918

URS CORPORATION
1380 LEAD HILL BLVD, SUITE 100
ROSEVILLE, CA 95661-2997

NOTES:

1. For information not shown, see "ABUTMENT 1 LAYOUT" and "ABUTMENT 8 LAYOUT" sheets.
2. For "SECTION D-D", see "ABUTMENT DETAILS No. 2" sheet.
3. Neoprene water stop shall not be bonded to MSE wall panels.

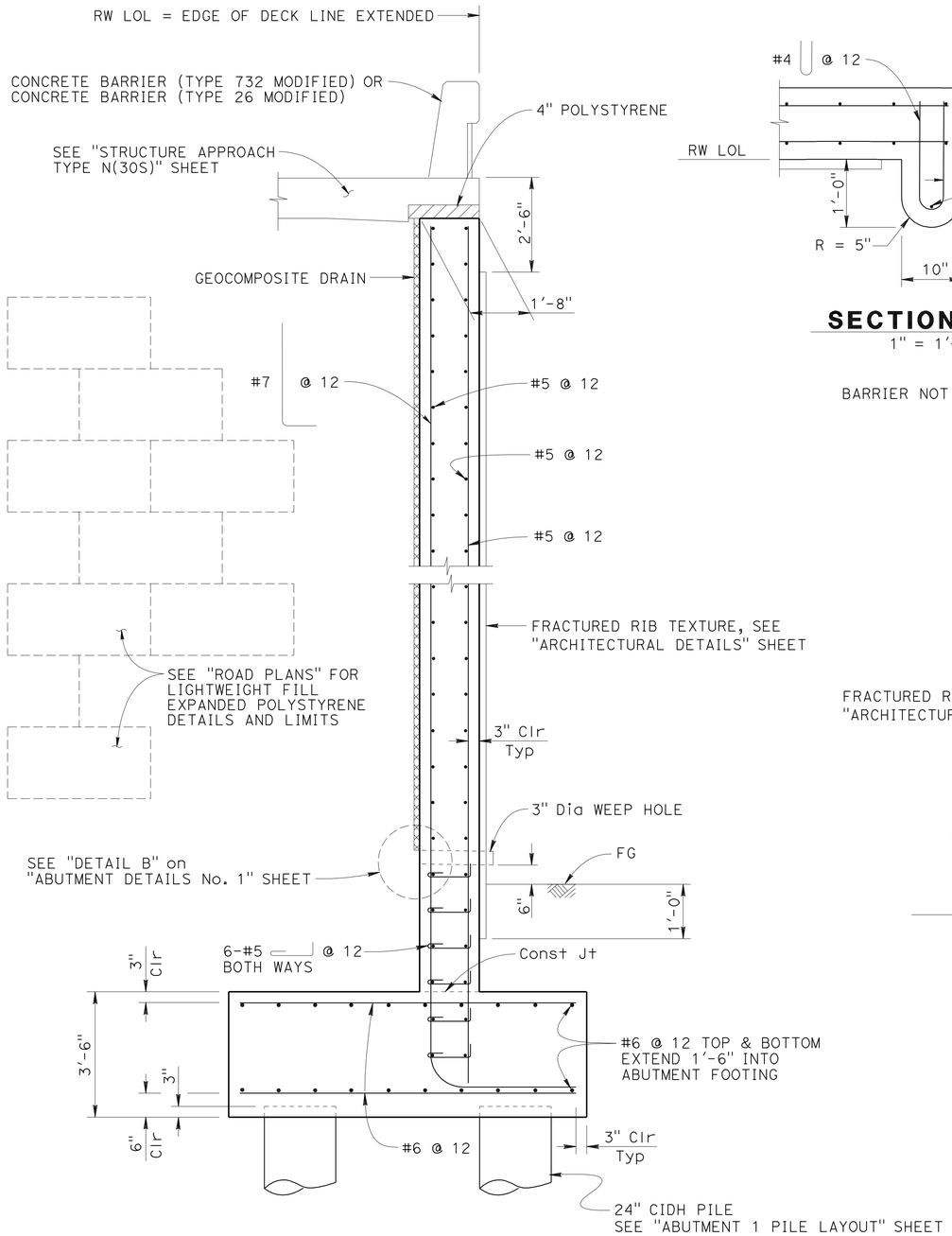

SECTION E-E

½" = 1'-0"

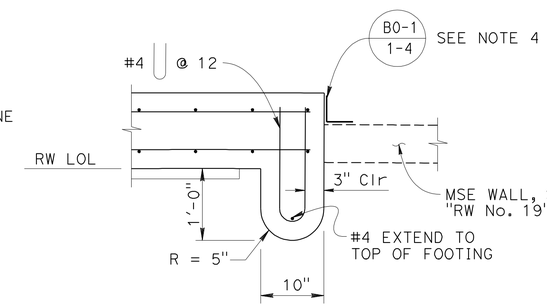

SECTION F-F

1" = 1'-0"

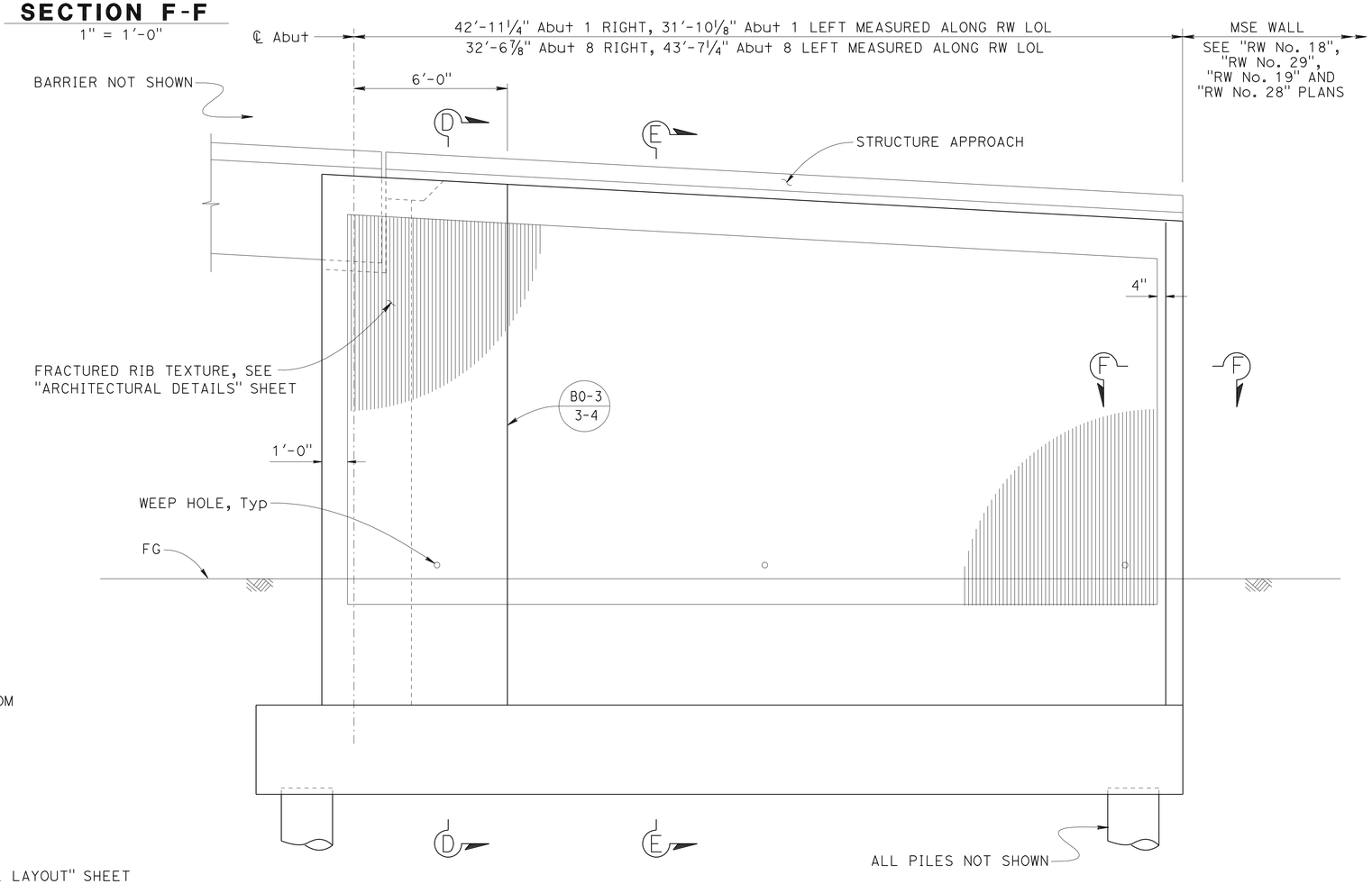

RETAINING WALL ELEVATION

⅜" = 1'-0"

ABUTMENT 8 RIGHT SHOWN, ALL OTHERS SIMILAR

Paul Cotter
DESIGN OVERSIGHT Paul Cotter
7-16-12
SIGN OFF DATE

	BY	CHECKED
DESIGN	B. Schoppe	S. Landis
DETAILS	L. Davis	S. Landis
QUANTITIES	B. Schoppe	F. Hakemi/B. Osorio

PREPARED FOR THE STATE OF CALIFORNIA DEPARTMENT OF TRANSPORTATION

Jan Hueser
PROJECT ENGINEER

BRIDGE NO. 33-0751
POST MILES 28.69

29TH AVENUE OC (REPLACE)
ABUTMENT DETAILS No. 3

DESIGN DETAIL SHEET (ENGLISH) (REV.7/16/10)

ORIGINAL SCALE IN INCHES FOR REDUCED PLANS 0 1 2 3

UNIT: 0724
PROJECT NUMBER & PHASE: 04000001601 CONTRACT NO.: 04-0A7101

DISREGARD PRINTS BEARING EARLIER REVISION DATES

REVISION DATES 9-6-11 1-30-12 3-30-12 6-25-12 SHEET 13 OF 60

FILE => 33-0751-f-adt03.dgn

USERNAME => s124496 DATE PLOTTED => 10-APR-2013 TIME PLOTTED => 06:21

DIST	COUNTY	ROUTE	POST MILES TOTAL PROJECT	SHEET No	TOTAL SHEETS
04	Ala	880	28.4/29.2	521	789

REGISTERED CIVIL ENGINEER 6/25/12 DATE

4-8-13
PLANS APPROVAL DATE

REGISTERED PROFESSIONAL ENGINEER Jan M. Hueser No. C050215 Exp. 6/30/13 CIVIL STATE OF CALIFORNIA

The State of California or its officers or agents shall not be responsible for the accuracy or completeness of electronic copies of this plan sheet.

ALAMEDA COUNTY TRANSPORTATION COMMISSION
1333 BROADWAY
OAKLAND, CA 94612-1918

URS CORPORATION
1380 LEAD HILL BLVD, SUITE 100
ROSEVILLE, CA 95661-2997

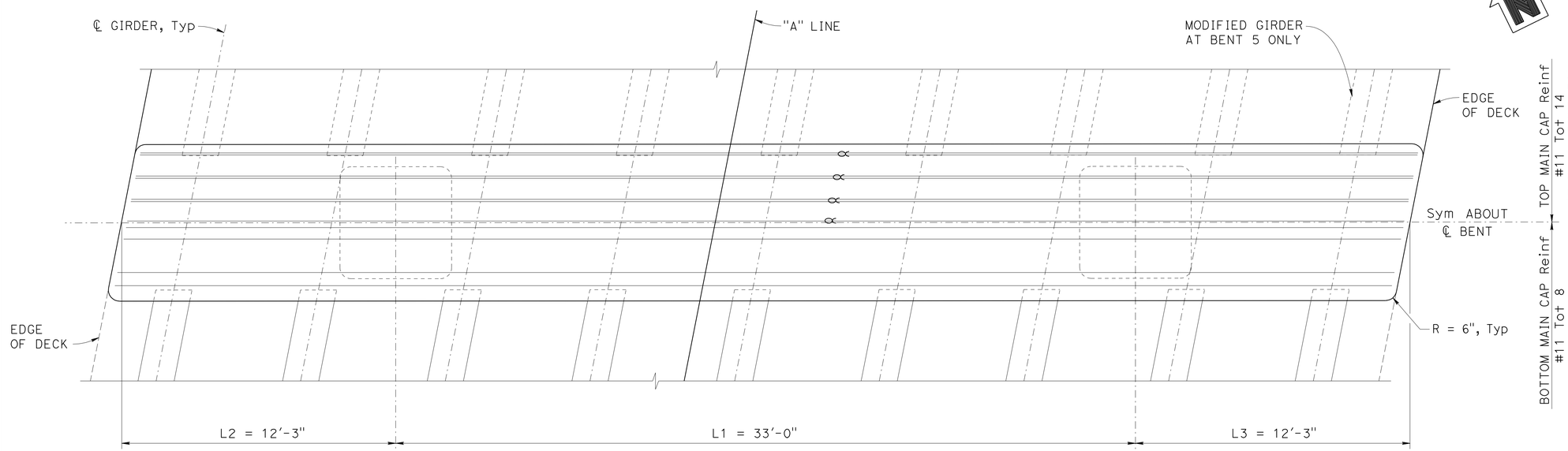

PLAN
3/8" = 1'-0"

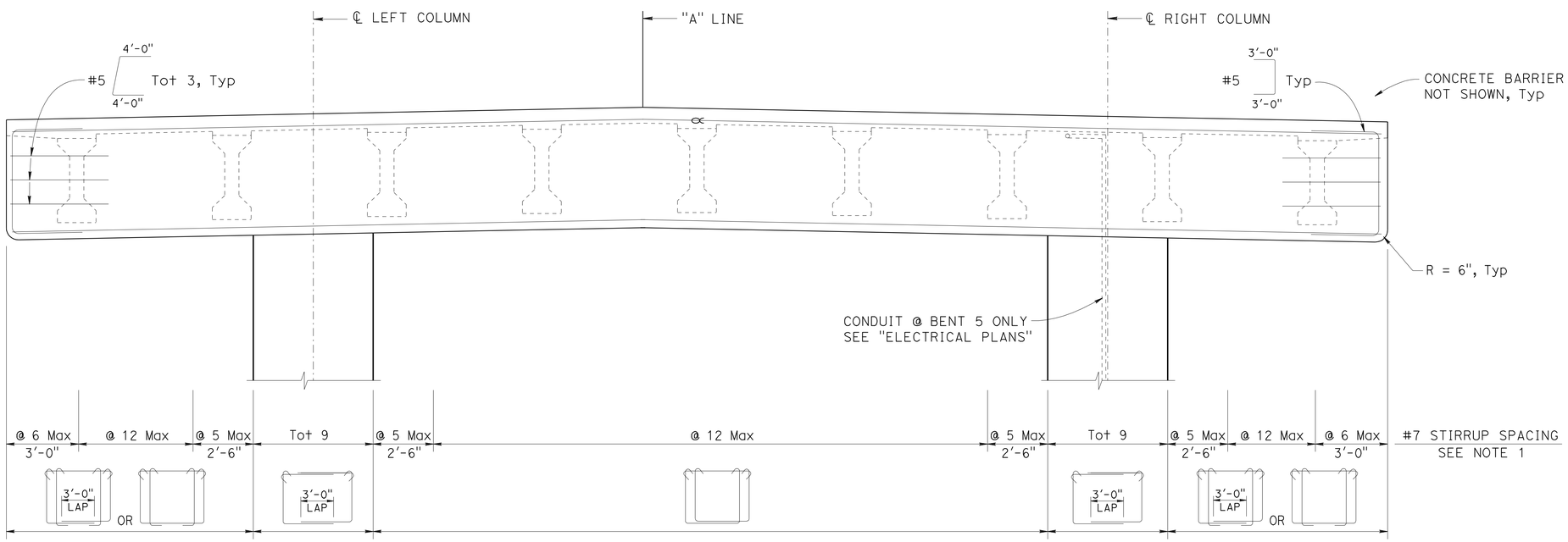

ELEVATION
3/8" = 1'-0"

LEGEND:

∝ Indicates bundled bars

NOTES:

1. For stirrup configuration, see "BENT 2 THRU 5 DETAILS No. 1" sheet.
2. For column details, see "BENT 2 THRU 5 COLUMN DETAILS" sheet.
3. For transverse PT and notes, see "BENT NOTES AND CAMBER" sheet.
4. Only service level splices are allowed in main bent cap Reinf.

DESIGN OVERSIGHT Paul Cotter
7-16-12
SIGN OFF DATE

	BY	CHECKED
DESIGN	B. Schoppe	S. Landis
DETAILS	L. Davis	S. Landis
QUANTITIES	B. Schoppe	F. Hakemi/B. Osorio

PREPARED FOR THE STATE OF CALIFORNIA DEPARTMENT OF TRANSPORTATION

Jan Hueser
PROJECT ENGINEER

BRIDGE NO. 33-0751
POST MILES 28.69

29TH AVENUE OC (REPLACE)
BENT 2 THRU 5 LAYOUT

DESIGN DETAIL SHEET (ENGLISH) (REV.7/16/10)

ORIGINAL SCALE IN INCHES FOR REDUCED PLANS 0 1 2 3

UNIT: 0724
PROJECT NUMBER & PHASE: 04000001601 CONTRACT NO.: 04-0A7101

DISREGARD PRINTS BEARING EARLIER REVISION DATES

REVISION DATES 9-6-11 1-30-12 3-30-12 6-25-12 SHEET 14 OF 60

FILE => 33-0751-h-b02-5_1o01.dgn

USERNAME => s124496 DATE PLOTTED => 10-APR-2013 TIME PLOTTED => 06:21

DIST	COUNTY	ROUTE	POST MILES TOTAL PROJECT	SHEET No	TOTAL SHEETS
04	Ala	880	28.4/29.2	522	789

REGISTERED CIVIL ENGINEER 6/25/12 DATE

4-8-13
PLANS APPROVAL DATE

REGISTERED PROFESSIONAL ENGINEER Jan M. Hueser No. C050215 Exp. 6/30/13 CIVIL STATE OF CALIFORNIA

The State of California or its officers or agents shall not be responsible for the accuracy or completeness of electronic copies of this plan sheet.

ALAMEDA COUNTY TRANSPORTATION COMMISSION
1333 BROADWAY
OAKLAND, CA 94612-1918

URS CORPORATION
1380 LEAD HILL BLVD, SUITE 100
ROSEVILLE, CA 95661-2997

NOTES:

1. For "SECTION A-A" thru "SECTION C-C", see "BENT 2 THRU 5 DETAILS No. 2" sheet.
2. For "SECTION D-D" thru "SECTION F-F", see "BENT 2 THRU 5 DETAILS No. 3" sheet.
3. For column details, see "BENT 2 THRU 5 COLUMN DETAILS" sheet.
4. Place bent cap stirrups perpendicular to ℄ Bent.
5. Reinf may be bent or adjusted to clear prestressing ducts and anchorage, subject to the approval of the Engineer.

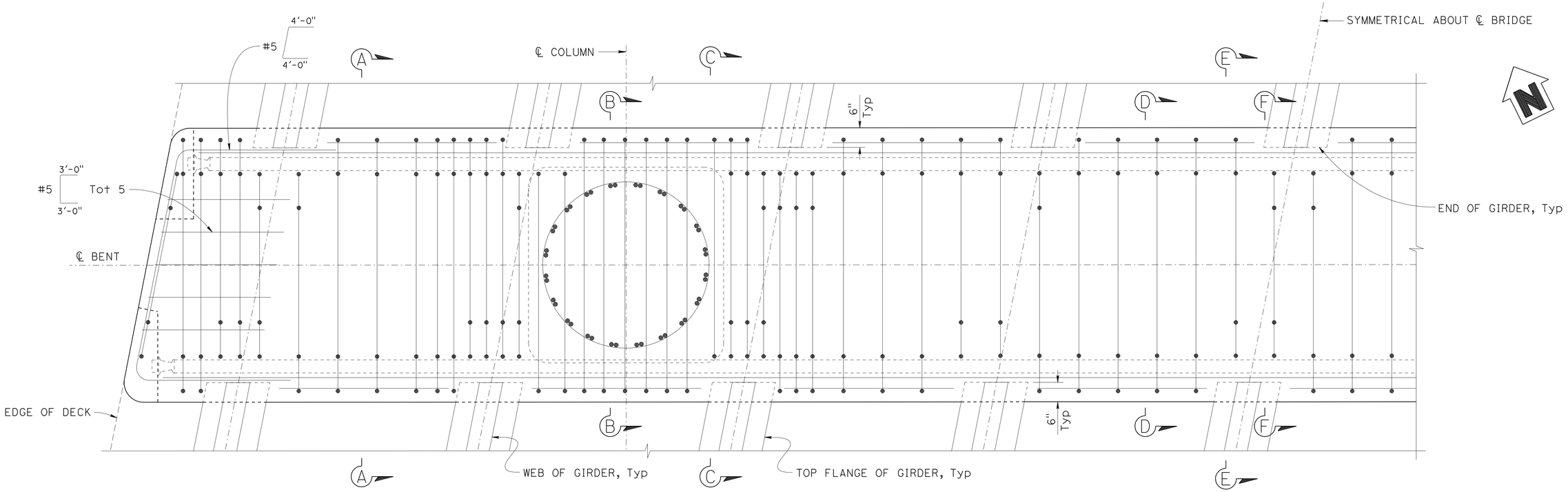

PART PLAN

3/4" = 1'-0"

Paul Cotter DESIGN OVERSIGHT Paul Cotter	DESIGN	BY B. Schoppe	CHECKED S. Landis	PREPARED FOR THE STATE OF CALIFORNIA DEPARTMENT OF TRANSPORTATION	Jan Hueser PROJECT ENGINEER
7-16-12 SIGN OFF DATE	DETAILS	BY L. Davis	CHECKED S. Landis		BRIDGE NO. 33-0751
	QUANTITIES	BY B. Schoppe	CHECKED F. Hakemi/B. Osorio		POST MILES 28.69

29TH AVENUE OC (REPLACE)

BENT 2 THRU 5 DETAILS No. 1

DESIGN DETAIL SHEET (ENGLISH) (REV.7/16/10)

ORIGINAL SCALE IN INCHES FOR REDUCED PLANS 0 1 2 3

UNIT: 0724
PROJECT NUMBER & PHASE: 04000001601 CONTRACT NO.: 04-0A7101

DISREGARD PRINTS BEARING EARLIER REVISION DATES

REVISION DATES: 9-6-11 1-30-12 3-30-12 6-25-12 SHEET 15 OF 60

FILE => 33-0751-h-b02-5dt01.dgn

USERNAME => s124496 DATE PLOTTED => 10-APR-2013 TIME PLOTTED => 08:21

DIST	COUNTY	ROUTE	POST MILES TOTAL PROJECT	SHEET No	TOTAL SHEETS
04	Ala	880	28.4/29.2	523	789

REGISTERED CIVIL ENGINEER 6/25/12 DATE

4-8-13
PLANS APPROVAL DATE

REGISTERED PROFESSIONAL ENGINEER Jan M. Hueser No. C050215 Exp. 6/30/13 CIVIL STATE OF CALIFORNIA

The State of California or its officers or agents shall not be responsible for the accuracy or completeness of electronic copies of this plan sheet.

ALAMEDA COUNTY TRANSPORTATION COMMISSION
1333 BROADWAY
OAKLAND, CA 94612-1918

URS CORPORATION
1380 LEAD HILL BLVD, SUITE 100
ROSEVILLE, CA 95661-2997

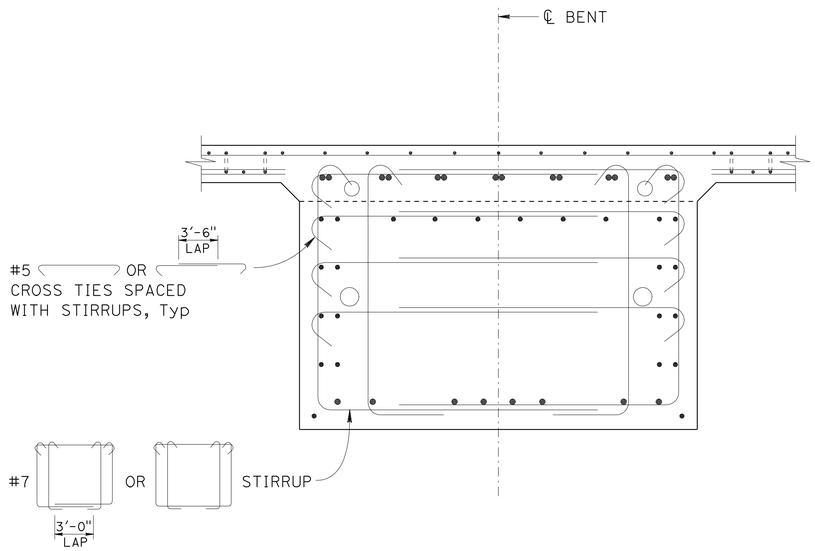

SECTION A-A

¾" = 1'-0"

NOTE: For information not shown, see "SECTION B-B"

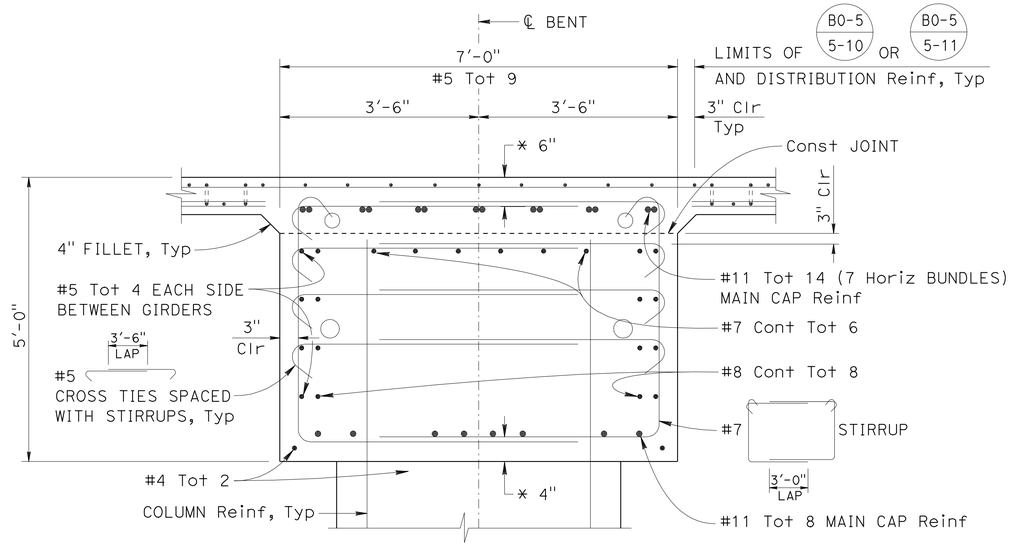

SECTION B-B

¾" = 1'-0"

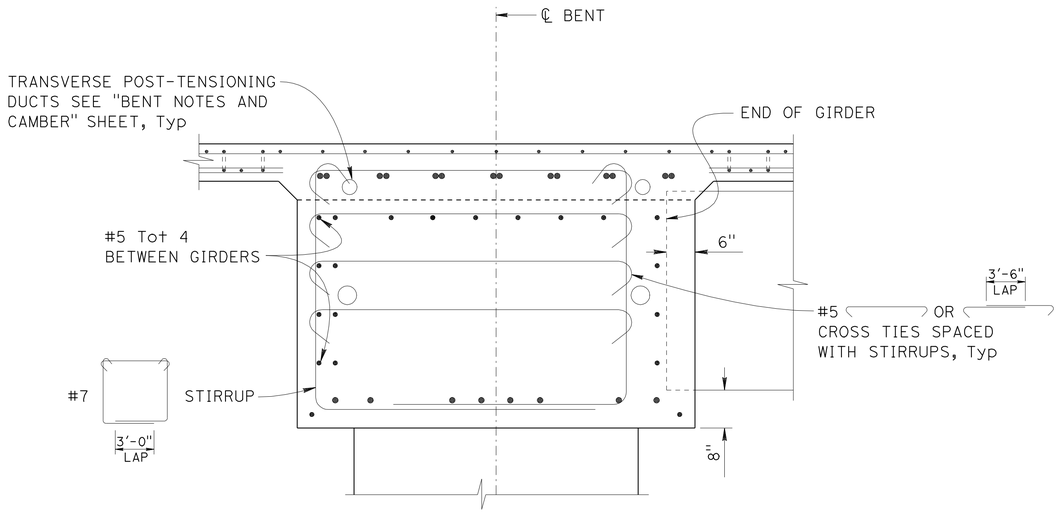

SECTION C-C

¾" = 1'-0"

NOTE: For information not shown, see "SECTION B-B"

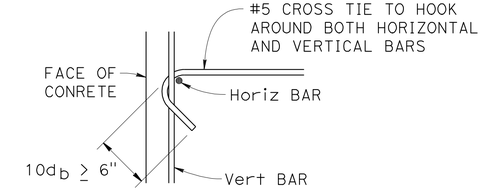

CROSS TIE DETAIL

NO SCALE

NOTES:

1. * Indicates clearance to main cap reinforcement.
2. For column reinforcement, see "BENT 2 THRU 5 COLUMN DETAILS" sheet.
3. For location of "SECTION A-A" thru "SECTION C-C", see "BENT 2 THRU 5 DETAILS No. 1" sheet.
4. Reinf may be bent or adjusted to clear prestressing ducts, subject to the approval of the Engineer.
5. For limits of reinforcement, see "BENT 2 THRU 5 LAYOUT" sheet.

DESIGN OVERSIGHT Paul Cotter
7-16-12
SIGN OFF DATE

	BY	CHECKED
DESIGN	B. Schoppe	S. Landis
DETAILS	L. Davis	S. Landis
QUANTITIES	B. Schoppe	F. Hakemi/B. Osorio

PREPARED FOR THE STATE OF CALIFORNIA DEPARTMENT OF TRANSPORTATION

Jan Hueser
PROJECT ENGINEER

BRIDGE NO. 33-0751
POST MILES 28.69

29TH AVENUE OC (REPLACE)
BENT 2 THRU 5 DETAILS No. 2

DESIGN DETAIL SHEET (ENGLISH) (REV.7/16/10)

ORIGINAL SCALE IN INCHES FOR REDUCED PLANS 0 1 2 3

UNIT: 0724
PROJECT NUMBER & PHASE: 04000001601 CONTRACT NO.: 04-0A7101

DISREGARD PRINTS BEARING EARLIER REVISION DATES

REVISION DATES: 9-6-11 1-18-12 3-30-12 6-25-12 SHEET 16 OF 60

FILE => 33-0751-h-b02-5dt02.dgn

USERNAME => s124496 DATE PLOTTED => 10-APR-2013 TIME PLOTTED => 06:21

DIST	COUNTY	ROUTE	POST MILES TOTAL PROJECT	SHEET No	TOTAL SHEETS
04	Ala	880	28.4/29.2	524	789

REGISTERED CIVIL ENGINEER 6/25/12 DATE

4-8-13
PLANS APPROVAL DATE

REGISTERED PROFESSIONAL ENGINEER Jan M. Hueser No. C050215 Exp. 6/30/13 CIVIL STATE OF CALIFORNIA

The State of California or its officers or agents shall not be responsible for the accuracy or completeness of electronic copies of this plan sheet.

ALAMEDA COUNTY TRANSPORTATION COMMISSION
1333 BROADWAY
OAKLAND, CA 94612-1918

URS CORPORATION
1380 LEAD HILL BLVD, SUITE 100
ROSEVILLE, CA 95661-2997

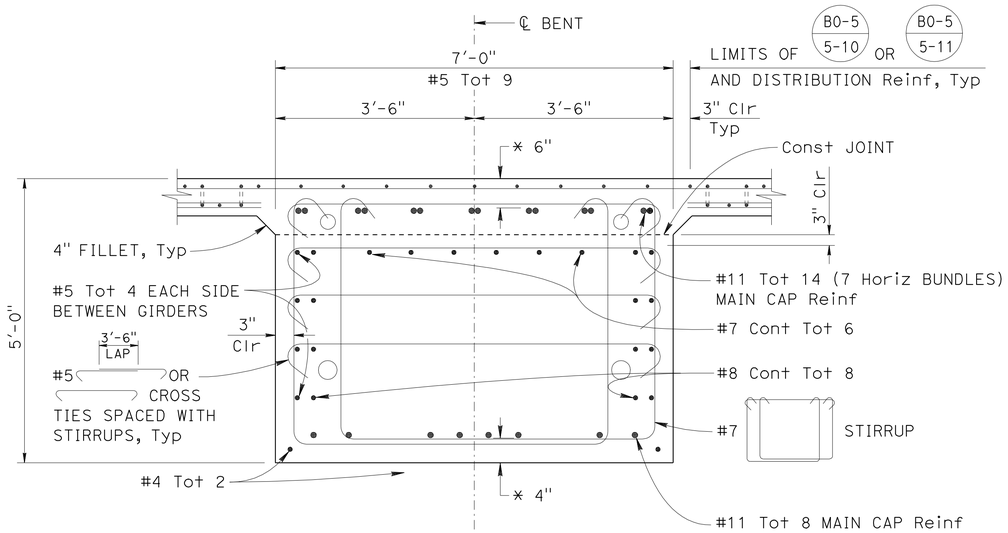

SECTION D-D

3/4" = 1'-0"

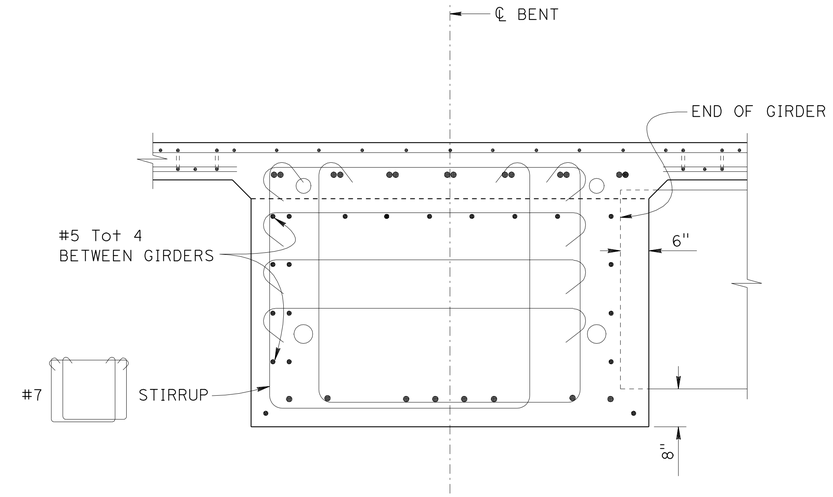

SECTION E-E

3/4" = 1'-0"

NOTE: For information not shown, see "SECTION D-D"

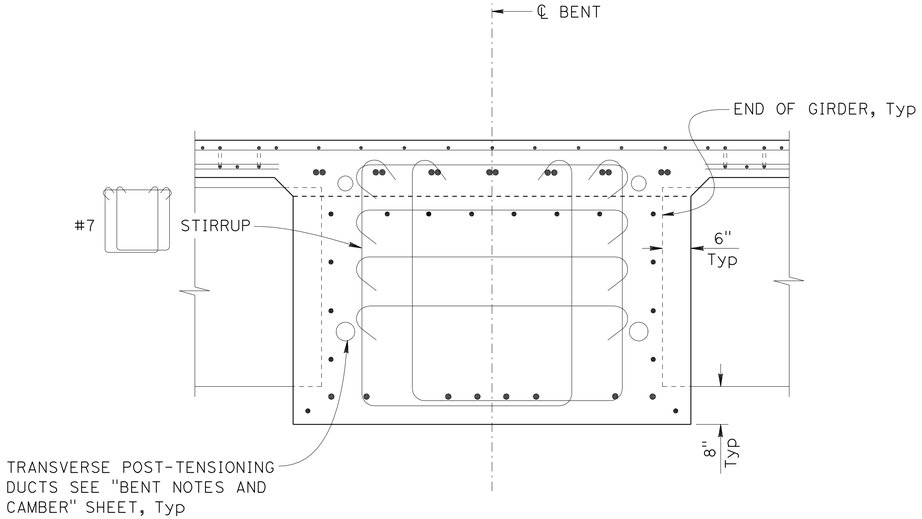

SECTION F-F

3/4" = 1'-0"

NOTE: For information not shown, see "SECTION D-D"

NOTES:

1. * Indicates clearance to main cap reinforcement.
2. For column reinforcement, see "BENT 2 THRU 5 COLUMN DETAILS" sheet.
3. For location of "SECTION D-D" thru "SECTION F-F", see "BENT 2 THRU 5 DETAILS No. 1" sheet.
4. Reinf may be bent or adjusted to clear prestressing ducts, subject to the approval of the Engineer.
5. For limits of reinforcement, see "BENT 2 THRU 5 LAYOUT" sheet.
6. For "CROSS TIE DETAIL", see "BENT 2 THRU 5 DETAILS No. 2" sheet.

DESIGN OVERSIGHT Paul Cotter
7-16-12
SIGN OFF DATE

	BY	CHECKED
DESIGN	B. Schoppe	S. Landis
DETAILS	L. Davis	S. Landis
QUANTITIES	B. Schoppe	F. Hakemi/B. Osorio

PREPARED FOR THE STATE OF CALIFORNIA DEPARTMENT OF TRANSPORTATION

Jan Hueser
PROJECT ENGINEER

BRIDGE NO. 33-0751
POST MILES 28.69

29TH AVENUE OC (REPLACE)
BENT 2 THRU 5 DETAILS No. 3

DESIGN DETAIL SHEET (ENGLISH) (REV.7/16/10)

ORIGINAL SCALE IN INCHES FOR REDUCED PLANS 0 1 2 3

UNIT: 0724
PROJECT NUMBER & PHASE: 04000001601 CONTRACT NO.: 04-0A7101

DISREGARD PRINTS BEARING EARLIER REVISION DATES

REVISION DATES: 9-6-11 1-18-12 3-30-12 6-25-12 SHEET 17 OF 60

FILE => 33-0751-h-b02-5dt03.dgn

USERNAME => s124496 DATE PLOTTED => 10-APR-2013 TIME PLOTTED => 06:21

DIST	COUNTY	ROUTE	POST MILES TOTAL PROJECT	SHEET No	TOTAL SHEETS
04	Ala	880	28.4/29.2	525	789

REGISTERED CIVIL ENGINEER 6/25/12 DATE

4-8-13
PLANS APPROVAL DATE

REGISTERED PROFESSIONAL ENGINEER Jan M. Hueser No. C050215 Exp. 6/30/13 CIVIL STATE OF CALIFORNIA

The State of California or its officers or agents shall not be responsible for the accuracy or completeness of electronic copies of this plan sheet.

ALAMEDA COUNTY TRANSPORTATION COMMISSION
1333 BROADWAY
OAKLAND, CA 94612-1918

URS CORPORATION
1380 LEAD HILL BLVD, SUITE 100
ROSEVILLE, CA 95661-2997

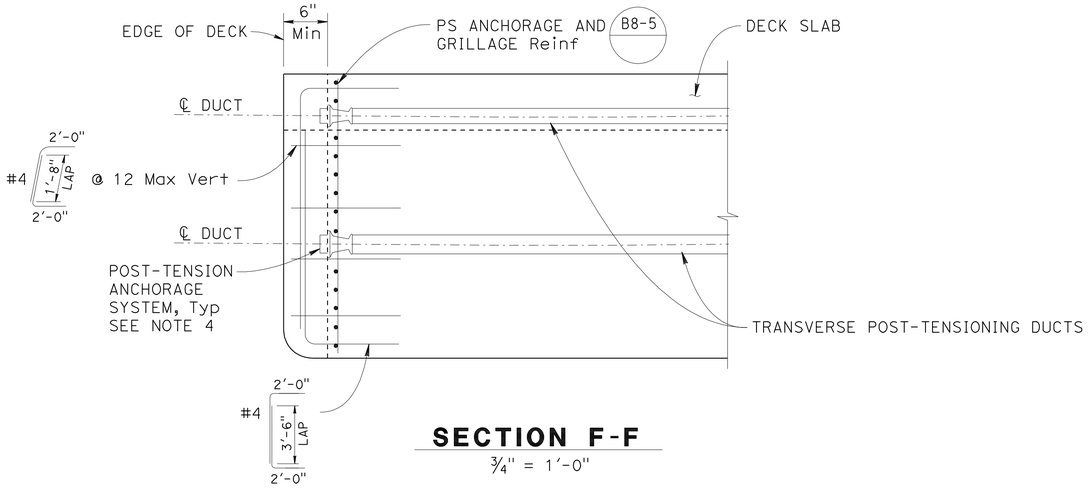

SECTION F-F

3/4" = 1'-0"

NOTES:

1. For reinforcement not shown, see "BENT 2 THRU 5 DETAILS No. 2" and "BENT 2 THRU 5 DETAILS No. 3" sheets.
2. For transverse post-tensioning details, see "BENT NOTES AND CAMBER" sheet.
3. Blockout Reinf may be bent or adjusted to clear prestressing ducts and anchorage, subject to the approval of the Engineer.
4. No. of ducts and anchorage system shown for illustrative purpose only. The Contractor shall submit shop drawings for post-tensioning system for approval by the Engineer.

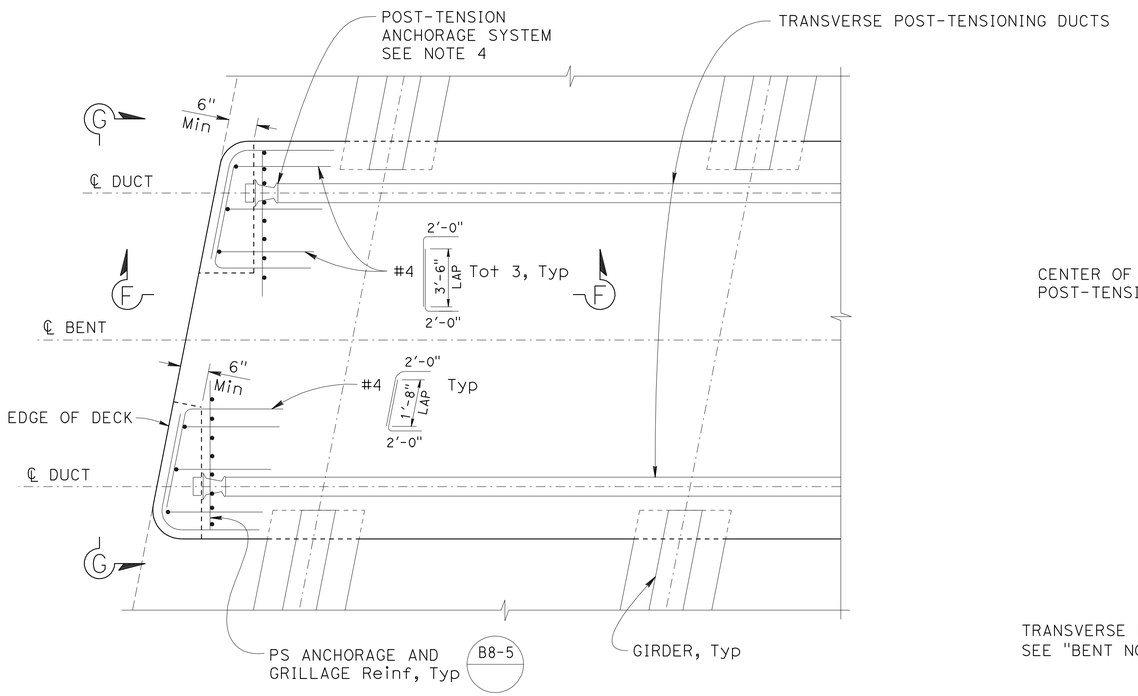

BENT CAP END

3/4" = 1'-0"

NOTE: Left side shown, right side similar

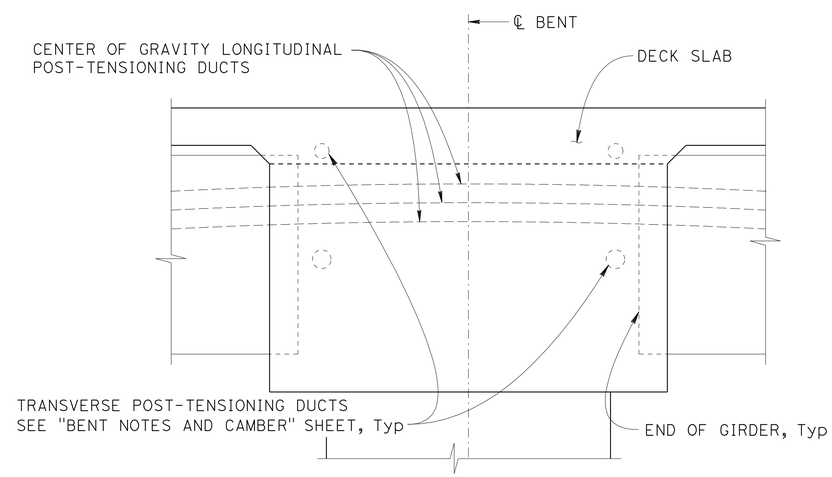

SECTION G-G

3/4" = 1'-0"

DESIGN OVERSIGHT Paul Cotter	DESIGN	BY B. Schoppe	CHECKED S. Landis	PREPARED FOR THE STATE OF CALIFORNIA DEPARTMENT OF TRANSPORTATION	Jan Hueser PROJECT ENGINEER
7-16-12 SIGN OFF DATE	DETAILS	BY J. Harold	CHECKED S. Landis		BRIDGE NO. 33-0751
	QUANTITIES	BY B. Schoppe	CHECKED F. Hakemi/B. Osorio		POST MILES 28.69

29TH AVENUE OC (REPLACE)

BENT 2 THRU 5 DETAILS No. 4

DESIGN DETAIL SHEET (ENGLISH) (REV.7/16/10)

ORIGINAL SCALE IN INCHES FOR REDUCED PLANS 0 1 2 3

UNIT: 0724
PROJECT NUMBER & PHASE: 04000001601 CONTRACT NO.: 04-0A7101

DISREGARD PRINTS BEARING EARLIER REVISION DATES → REVISION DATES 9-6-11 1-30-12 3-30-12 6-25-12 SHEET 18 OF 60

FILE => 33-0751-h-b02-5dt04.dgn

USERNAME => s124496 DATE PLOTTED => 10-APR-2013 TIME PLOTTED => 06:21

DIST	COUNTY	ROUTE	POST MILES TOTAL PROJECT	SHEET No	TOTAL SHEETS
04	Ala	880	28.4/29.2	526	789

REGISTERED CIVIL ENGINEER 6/25/12 DATE

4-8-13
PLANS APPROVAL DATE

REGISTERED PROFESSIONAL ENGINEER Jan M. Hueser No. C050215 Exp. 6/30/13 CIVIL STATE OF CALIFORNIA

The State of California or its officers or agents shall not be responsible for the accuracy or completeness of electronic copies of this plan sheet.

ALAMEDA COUNTY TRANSPORTATION COMMISSION
1333 BROADWAY
OAKLAND, CA 94612-1918

URS CORPORATION
1380 LEAD HILL BLVD, SUITE 100
ROSEVILLE, CA 95661-2997

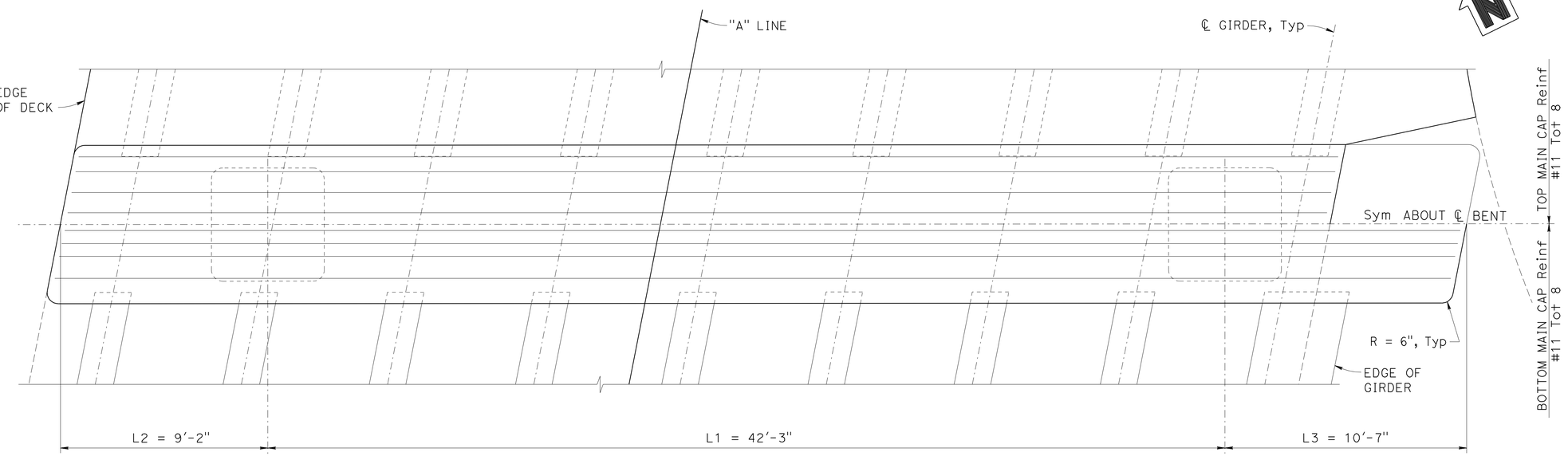

PLAN
3/8" = 1'-0"

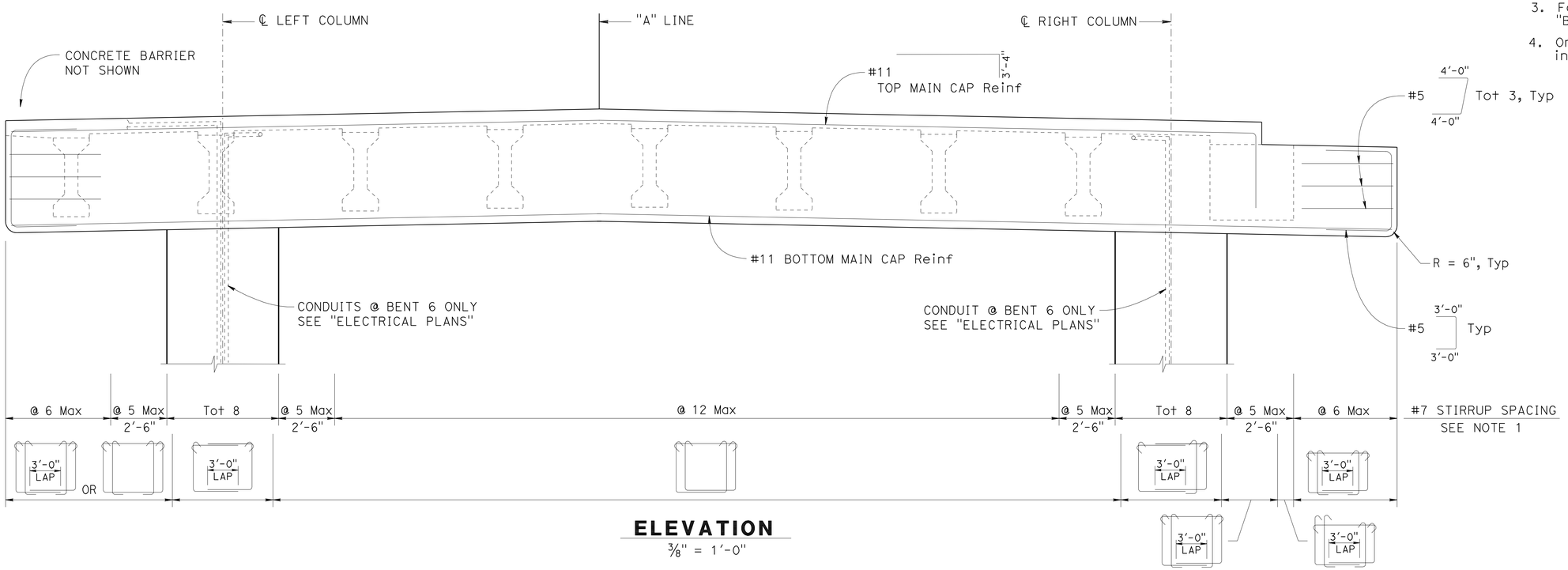

ELEVATION
3/8" = 1'-0"

NOTES:

1. For stirrup configuration, see "BENT 6 DETAILS No. 1" sheet.
2. For column details, see "BENT 6 and 7 COLUMN DETAILS" sheet.
3. For transverse PT and notes, see "BENT NOTES AND CAMBER" sheet.
4. Only service level splices are allowed in main bent cap Reinf.

Paul Cotter
DESIGN OVERSIGHT Paul Cotter
7-16-12
SIGN OFF DATE

	BY	CHECKED
DESIGN	B. Schoppe	S. Landis
DETAILS	L. Davis	S. Landis
QUANTITIES	B. Schoppe	F. Hakemi/B. Osorio

PREPARED FOR THE STATE OF CALIFORNIA DEPARTMENT OF TRANSPORTATION

Jan Hueser
PROJECT ENGINEER

BRIDGE NO. 33-0751
POST MILES 28.69

29TH AVENUE OC (REPLACE)
BENT 6 LAYOUT

DESIGN DETAIL SHEET (ENGLISH) (REV.7/16/10)

ORIGINAL SCALE IN INCHES FOR REDUCED PLANS 0 1 2 3

UNIT: 0724
PROJECT NUMBER & PHASE: 04000001601 CONTRACT NO.: 04-0A7101

DISREGARD PRINTS BEARING EARLIER REVISION DATES

REVISION DATES: ~~9-6-11~~ ~~1-18-12~~ ~~3-28-12~~ 6-25-12 SHEET 19 OF 60

FILE => 33-0751-h-b06_1o01.dgn

USERNAME => s124496 DATE PLOTTED => 10-APR-2013 TIME PLOTTED => 06:21

DIST	COUNTY	ROUTE	POST MILES TOTAL PROJECT	SHEET No	TOTAL SHEETS
04	Ala	880	28.4/29.2	527	789

REGISTERED CIVIL ENGINEER — DATE 6/25/12

4-8-13
PLANS APPROVAL DATE

REGISTERED PROFESSIONAL ENGINEER — Jan M. Hueser No. C050215 Exp. 6/30/13 CIVIL — STATE OF CALIFORNIA

The State of California or its officers or agents shall not be responsible for the accuracy or completeness of electronic copies of this plan sheet.

ALAMEDA COUNTY TRANSPORTATION COMMISSION
1333 BROADWAY
OAKLAND, CA 94612-1918

URS CORPORATION
1380 LEAD HILL BLVD, SUITE 100
ROSEVILLE, CA 95661-2997

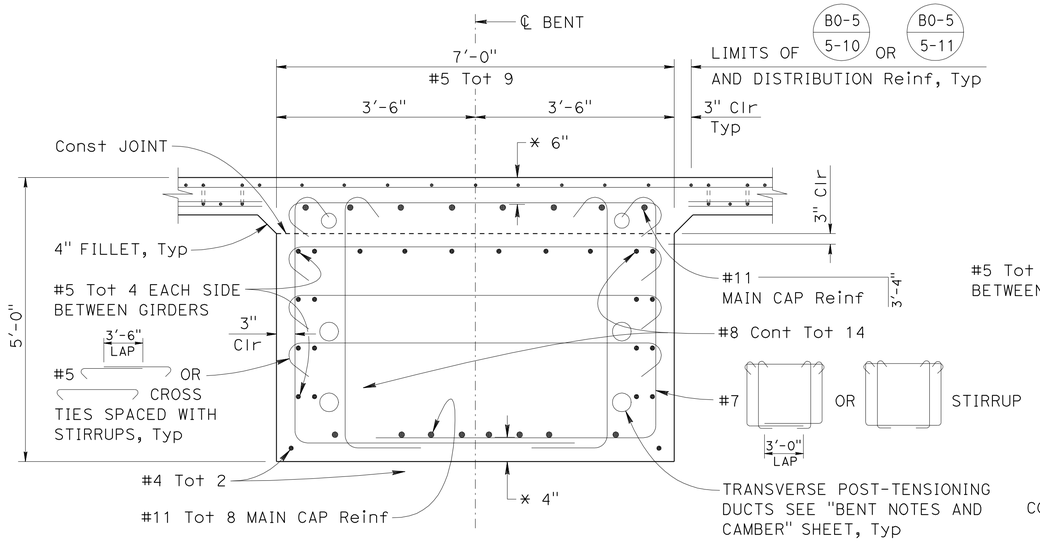

SECTION A-A

¾" = 1'-0"

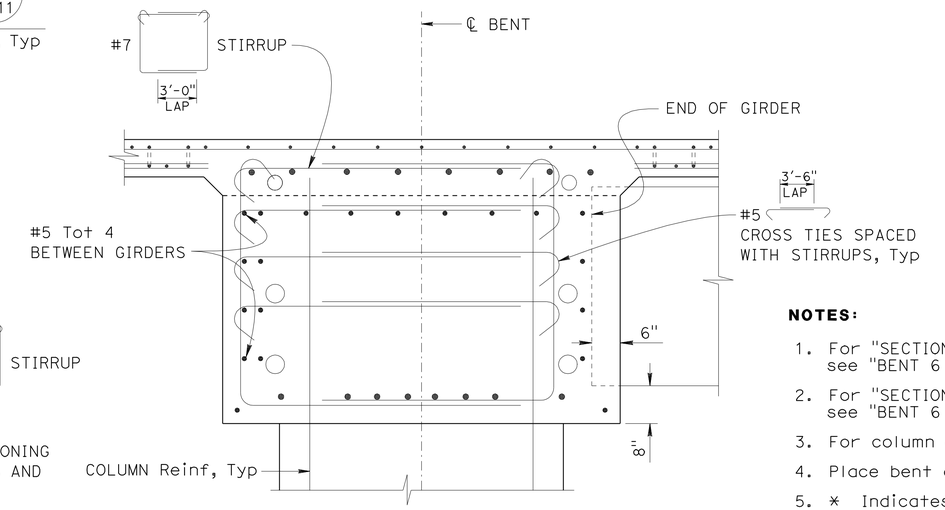

SECTION B-B

¾" = 1'-0"

NOTE: For information not shown, see "SECTION A-A"

NOTES:

1. For "SECTION C-C" thru "SECTION F-F", see "BENT 6 DETAILS No. 2" sheet.
2. For "SECTION G-G" thru "SECTION K-K", see "BENT 6 DETAILS No. 3" sheet.
3. For column details, see "BENT 6 AND 7 COLUMN DETAILS" sheet.
4. Place bent cap stirrups perpendicular to ℄ Bent.
5. * Indicates clearance to main cap reinforcement.
6. Reinf may be bent or adjusted to clear prestressing ducts and anchorage, subject to the approval of the Engineer.
7. For "CROSS TIE DETAIL", see "BENT 2 THRU 5 DETAILS No. 2" sheet.

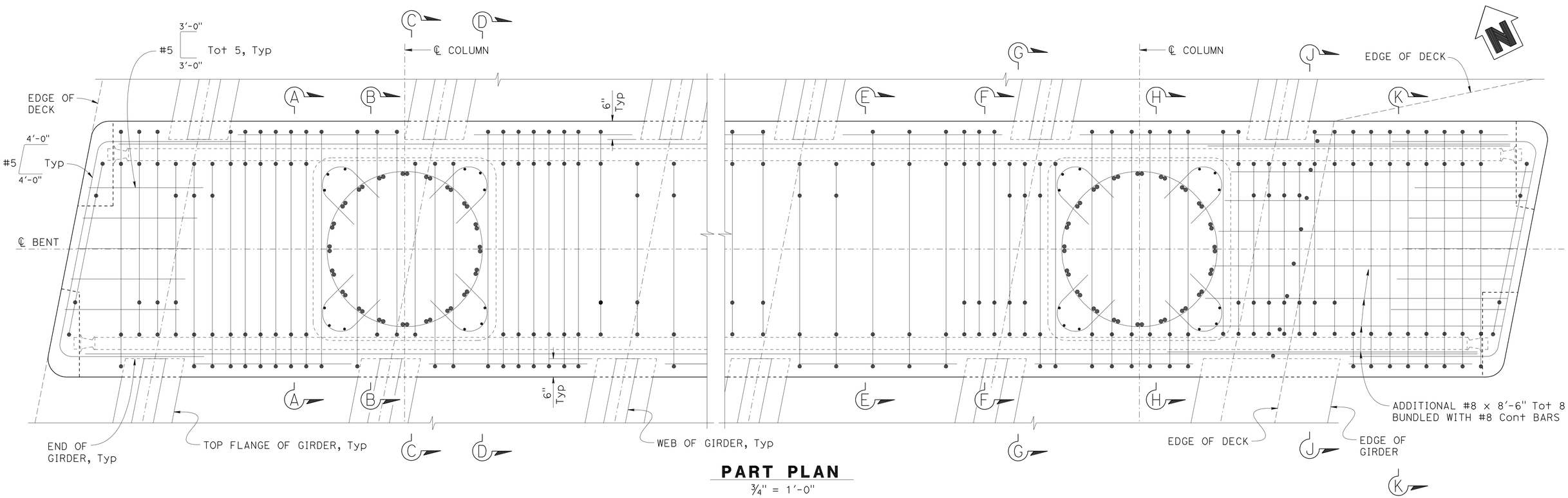

PART PLAN

¾" = 1'-0"

DESIGN OVERSIGHT Paul Cotter	DESIGN	BY B. Schoppe	CHECKED S. Landis
7-16-12 SIGN OFF DATE	DETAILS	BY L. Davis	CHECKED S. Landis
	QUANTITIES	BY B. Schoppe	CHECKED F. Hakemi/B. Osorio

PREPARED FOR THE STATE OF CALIFORNIA DEPARTMENT OF TRANSPORTATION

Jan Hueser
PROJECT ENGINEER

BRIDGE NO. 33-0751
POST MILES 28.69

29TH AVENUE OC (REPLACE)

BENT 6 DETAILS No. 1

DESIGN DETAIL SHEET (ENGLISH) (REV.7/16/10)

ORIGINAL SCALE IN INCHES FOR REDUCED PLANS 0 1 2 3

UNIT: 0724
PROJECT NUMBER & PHASE: 04000001601 CONTRACT NO.: 04-0A7101

DISREGARD PRINTS BEARING EARLIER REVISION DATES

REVISION DATES: 9-6-11 1-10-12 3-30-12 6-25-12

SHEET 20 OF 60

FILE => 33-0751-h-b06dt01.dgn

USERNAME => s124496 DATE PLOTTED => 10-APR-2013 TIME PLOTTED => 06:21

DIST	COUNTY	ROUTE	POST MILES TOTAL PROJECT	SHEET No	TOTAL SHEETS
04	Ala	880	28.4/29.2	528	789

REGISTERED CIVIL ENGINEER 6/25/12 DATE

4-8-13
PLANS APPROVAL DATE

REGISTERED PROFESSIONAL ENGINEER Jan M. Hueser No. C050215 Exp. 6/30/13 CIVIL STATE OF CALIFORNIA

The State of California or its officers or agents shall not be responsible for the accuracy or completeness of electronic copies of this plan sheet.

ALAMEDA COUNTY TRANSPORTATION COMMISSION
1333 BROADWAY
OAKLAND, CA 94612-1918

URS CORPORATION
1380 LEAD HILL BLVD, SUITE 100
ROSEVILLE, CA 95661-2997

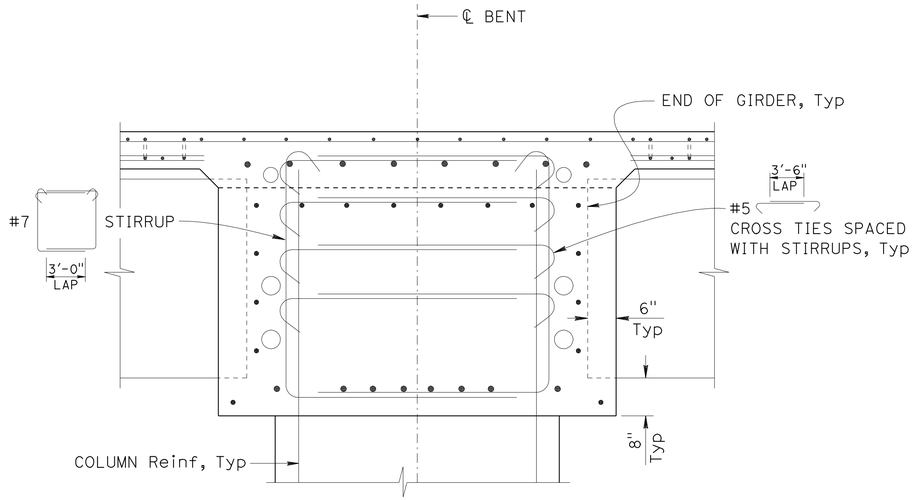

SECTION C-C

¾" = 1'-0"

NOTE: For information not shown, see "SECTION E-E"

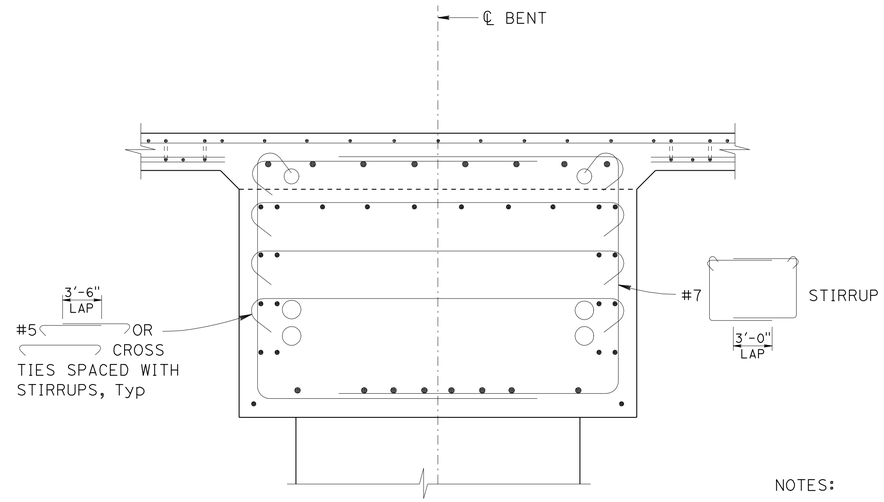

SECTION D-D

¾" = 1'-0"

NOTE: For information not shown, see "SECTION E-E"

NOTES:

1. * Indicates clearance to main cap reinforcement.
2. For column reinforcement, see "BENT 6 AND 7 COLUMN DETAILS" sheet.
3. For location of "SECTION C-C" thru "SECTION F-F", see "BENT 6 DETAILS No. 1" sheet.
4. Reinf may be bent or adjusted to clear prestressing ducts, subject to the approval of the Engineer.
5. For limits of reinforcement, see "BENT 6 LAYOUT" sheet.
6. For "CROSS TIE DETAIL", see "BENT 2 THRU 5 DETAILS No. 2" sheet.

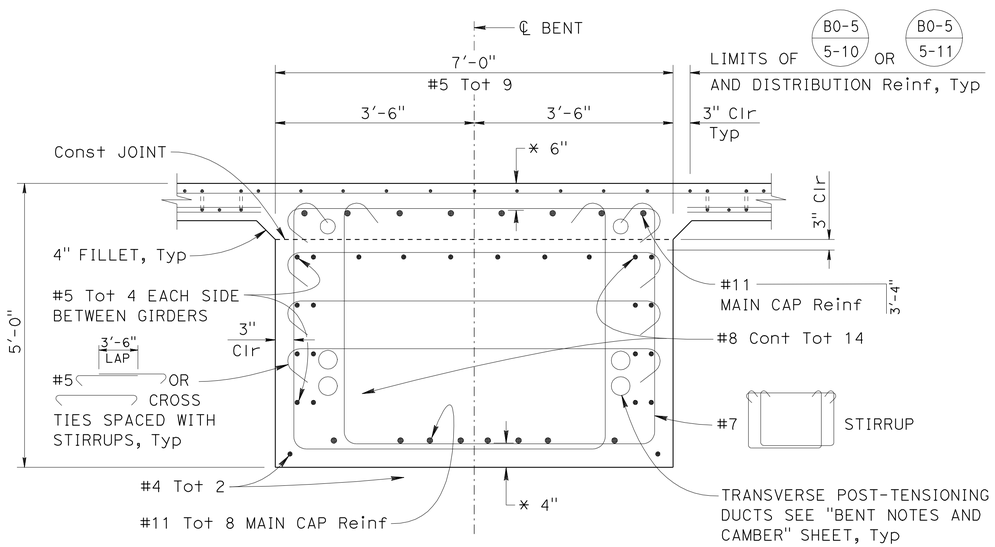

SECTION E-E

¾" = 1'-0"

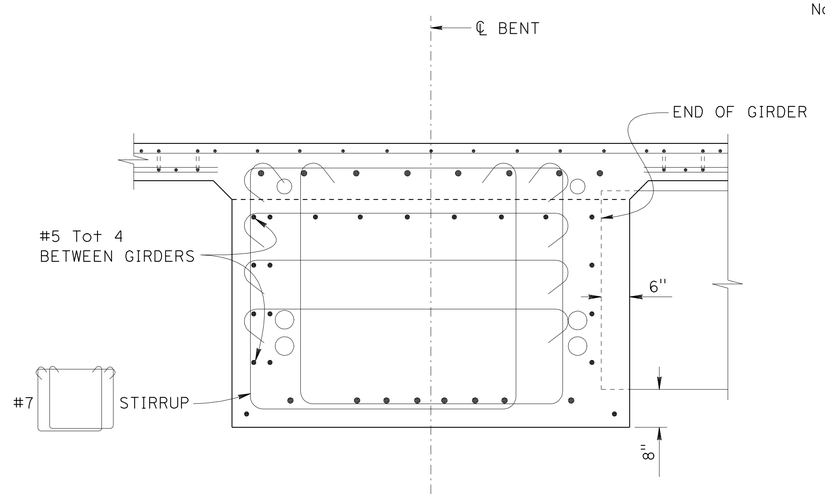

SECTION F-F

¾" = 1'-0"

NOTE: For information not shown, see "SECTION E-E"

DESIGN OVERSIGHT Paul Cotter	DESIGN	BY B. Schoppe	CHECKED S. Landis
7-16-12 SIGN OFF DATE	DETAILS	BY L. Davis	CHECKED S. Landis
	QUANTITIES	BY B. Schoppe	CHECKED F. Hakemi/B. Osorio

PREPARED FOR THE STATE OF CALIFORNIA DEPARTMENT OF TRANSPORTATION

Jan Hueser
PROJECT ENGINEER

BRIDGE NO. 33-0751
POST MILES 28.69

29TH AVENUE OC (REPLACE)
BENT 6 DETAILS No. 2

DESIGN DETAIL SHEET (ENGLISH) (REV.7/16/10)

ORIGINAL SCALE IN INCHES FOR REDUCED PLANS 0 1 2 3

UNIT: 0724
PROJECT NUMBER & PHASE: 04000001601 CONTRACT NO.: 04-0A7101

DISREGARD PRINTS BEARING EARLIER REVISION DATES

REVISION DATES: 9-6-11 1-18-12 3-30-12 6-25-12 SHEET 21 OF 60

FILE => 33-0751-h-b06dt02.dgn

USERNAME => s124436 DATE PLOTTED => 10-APR-2013 TIME PLOTTED => 06:21

DIST	COUNTY	ROUTE	POST MILES TOTAL PROJECT	SHEET No	TOTAL SHEETS
04	Ala	880	28.4/29.2	529	789

REGISTERED CIVIL ENGINEER 6/25/12 DATE

4-8-13
PLANS APPROVAL DATE

REGISTERED PROFESSIONAL ENGINEER Jan M. Hueser No. C050215 Exp. 6/30/13 CIVIL STATE OF CALIFORNIA

The State of California or its officers or agents shall not be responsible for the accuracy or completeness of electronic copies of this plan sheet.

ALAMEDA COUNTY TRANSPORTATION COMMISSION
1333 BROADWAY
OAKLAND, CA 94612-1918

URS CORPORATION
1380 LEAD HILL BLVD, SUITE 100
ROSEVILLE, CA 95661-2997

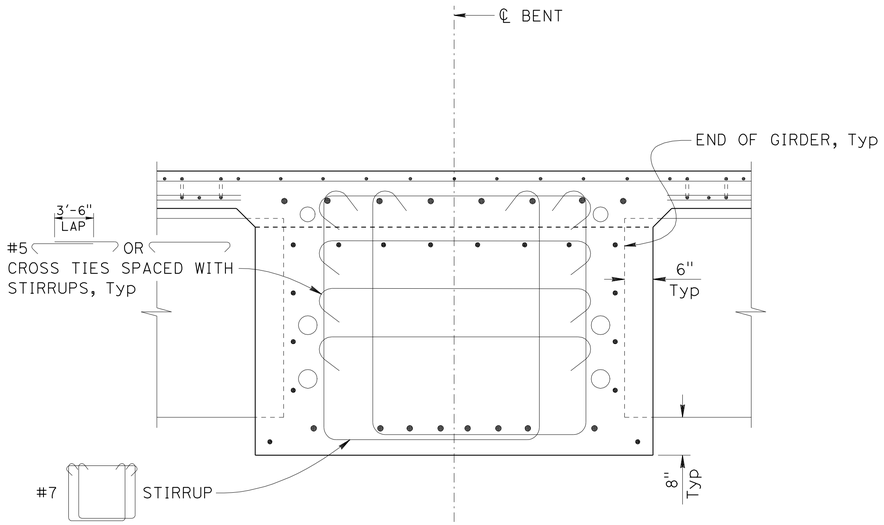

SECTION G-G

¾" = 1'-0"

NOTE: For information not shown, see "SECTION H-H"

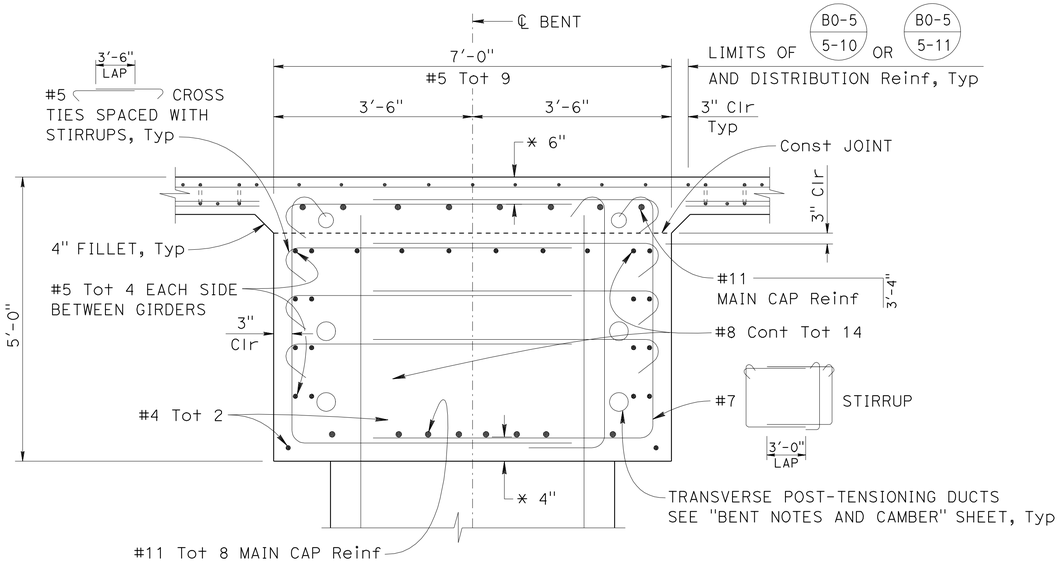

SECTION H-H

¾" = 1'-0"

NOTES:

1. * Indicates clearance to main cap reinforcement.
2. For column reinforcement, see "BENT 6 AND 7 COLUMN DETAILS" sheet.
3. For location of "SECTION G-G" thru "SECTION K-K", see "BENT 6 DETAILS No. 1" sheet.
4. Reinf may be bent or adjusted to clear prestressing ducts, subject to the approval of the Engineer.
5. For limits of reinforcement, see "BENT 6 LAYOUT" sheet.
6. For "CROSS TIE DETAIL", see "BENT 2 THRU 5 DETAILS No. 2" sheet.

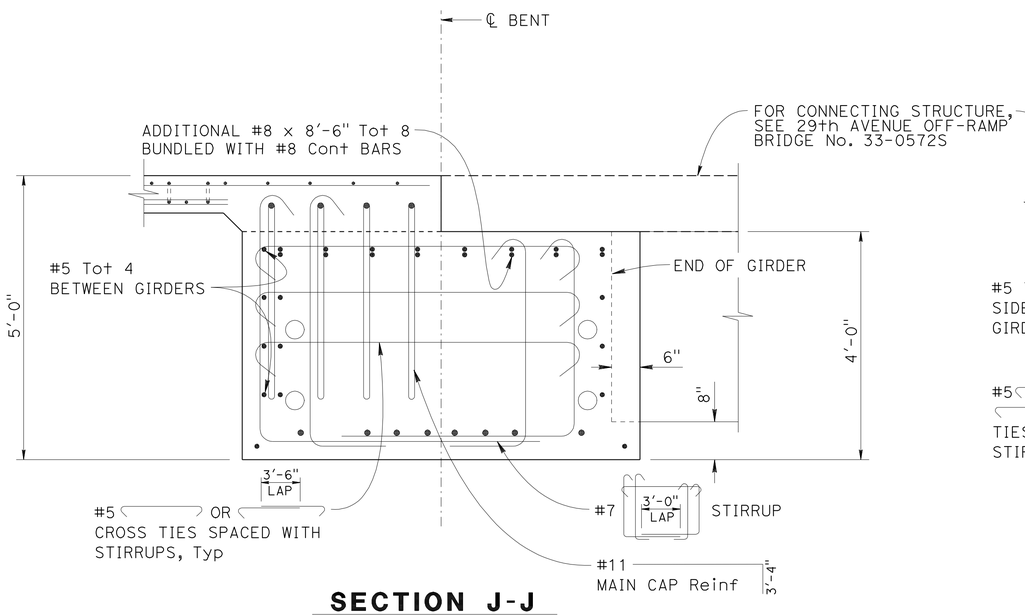

SECTION J-J

¾" = 1'-0"

NOTE: For information not shown, see "SECTION H-H"

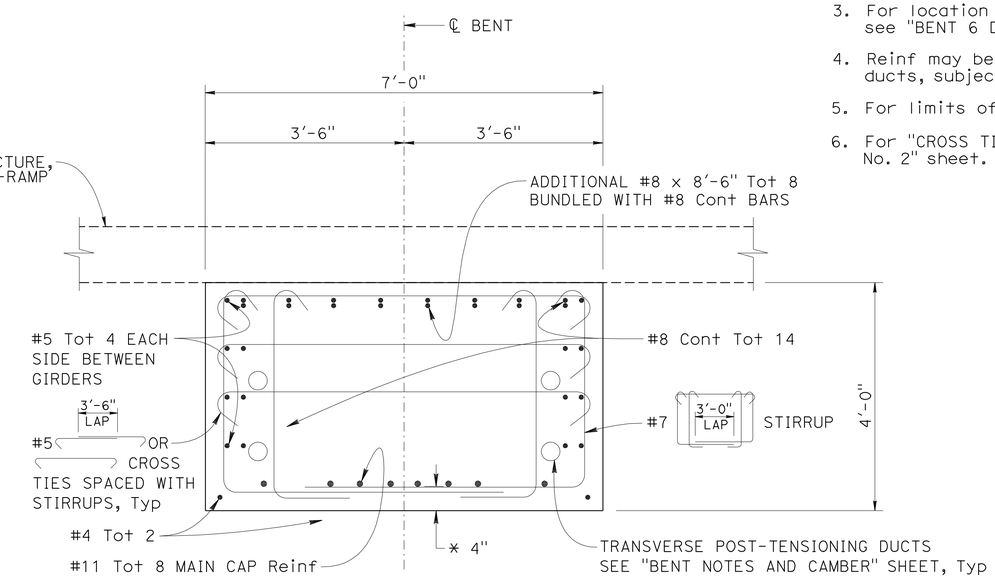

SECTION K-K

¾" = 1'-0"

DESIGN OVERSIGHT Paul Cotter
7-16-12
SIGN OFF DATE

	BY	CHECKED
DESIGN	B. Schoppe	S. Landis
DETAILS	L. Davis	S. Landis
QUANTITIES	B. Schoppe	F. Hakemi/B. Osorio

PREPARED FOR THE STATE OF CALIFORNIA DEPARTMENT OF TRANSPORTATION

Jan Hueser
PROJECT ENGINEER

BRIDGE NO. 33-0751
POST MILES 28.69

29TH AVENUE OC (REPLACE)

BENT 6 DETAILS No. 3

DESIGN DETAIL SHEET (ENGLISH) (REV.7/16/10)

ORIGINAL SCALE IN INCHES FOR REDUCED PLANS 0 1 2 3

UNIT: 0724
PROJECT NUMBER & PHASE: 04000001601 CONTRACT NO.: 04-0A7101

DISREGARD PRINTS BEARING EARLIER REVISION DATES

REVISION DATES: 9-6-11 1-18-12 3-30-12 6-25-12 | SHEET 22 | OF 60

FILE => 33-0751-h-b06dt03.dgn

USERNAME => s124436 DATE PLOTTED => 10-APR-2013 TIME PLOTTED => 06:21

DIST	COUNTY	ROUTE	POST MILES TOTAL PROJECT	SHEET No	TOTAL SHEETS
04	Ala	880	28.4/29.2	530	789

REGISTERED CIVIL ENGINEER 6/25/12 DATE

4-8-13
PLANS APPROVAL DATE

REGISTERED PROFESSIONAL ENGINEER Jan M. Hueser No. C050215 Exp. 6/30/13 CIVIL STATE OF CALIFORNIA

The State of California or its officers or agents shall not be responsible for the accuracy or completeness of electronic copies of this plan sheet.

ALAMEDA COUNTY TRANSPORTATION COMMISSION
1333 BROADWAY
OAKLAND, CA 94612-1918

URS CORPORATION
1380 LEAD HILL BLVD, SUITE 100
ROSEVILLE, CA 95661-2997

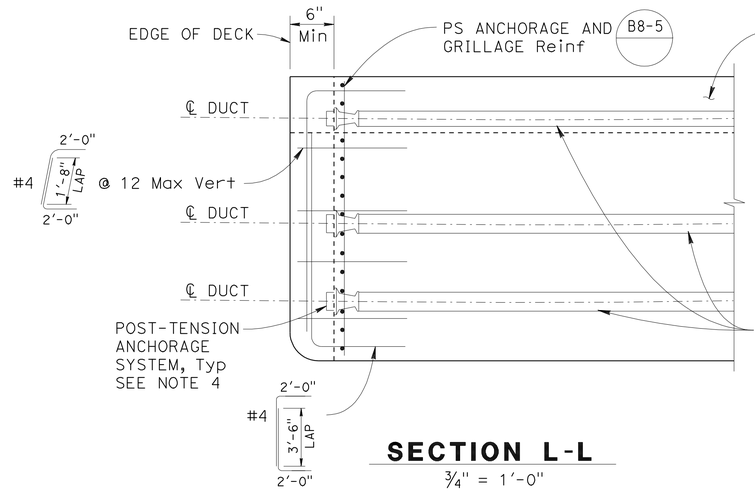

SECTION L-L

¾" = 1'-0"

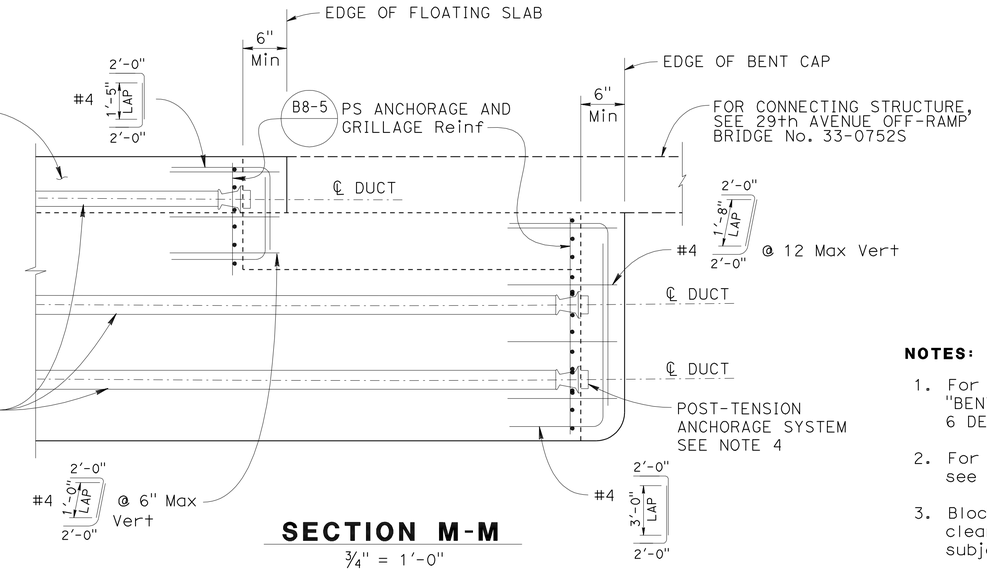

SECTION M-M

¾" = 1'-0"

NOTES:

1. For reinforcement not shown, see "BENT 6 DETAILS No. 1" thru "BENT 6 DETAILS No. 3" sheets.
2. For transverse post-tensioning details, see "BENT NOTES AND CAMBER" sheet.
3. Blockout Reinf may be bent or adjusted to clear prestressing ducts and anchorage, subject to the approval of the Engineer.
4. No. of ducts and anchorage system shown for illustrative purpose only. The Contractor shall submit shop drawings for post-tensioning system for approval by the Engineer.

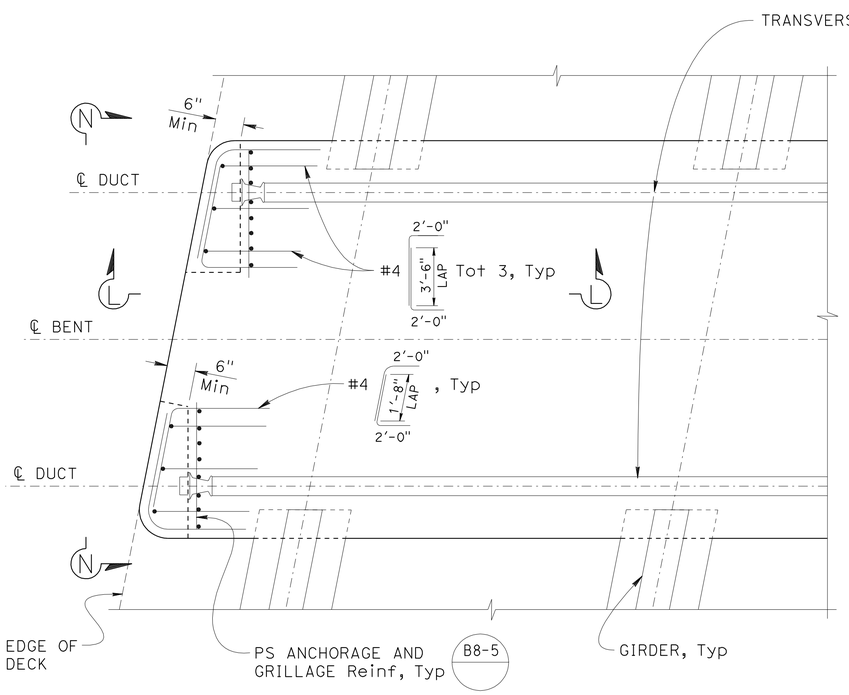

BENT CAP END (LEFT SIDE)

¾" = 1'-0"

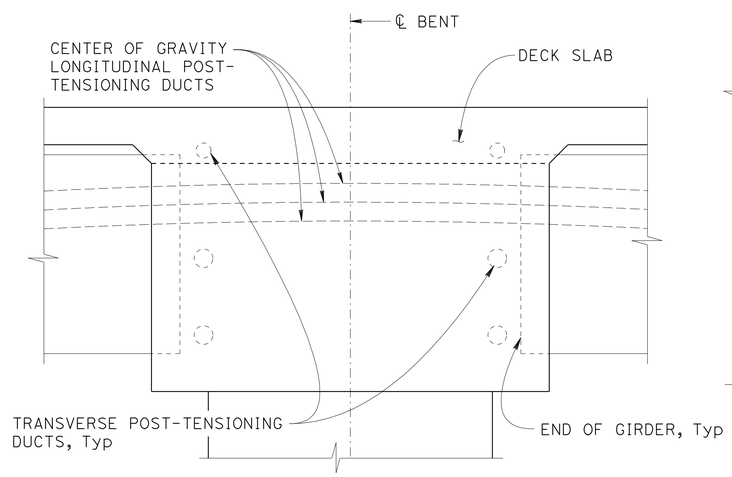

SECTION N-N

¾" = 1'-0"

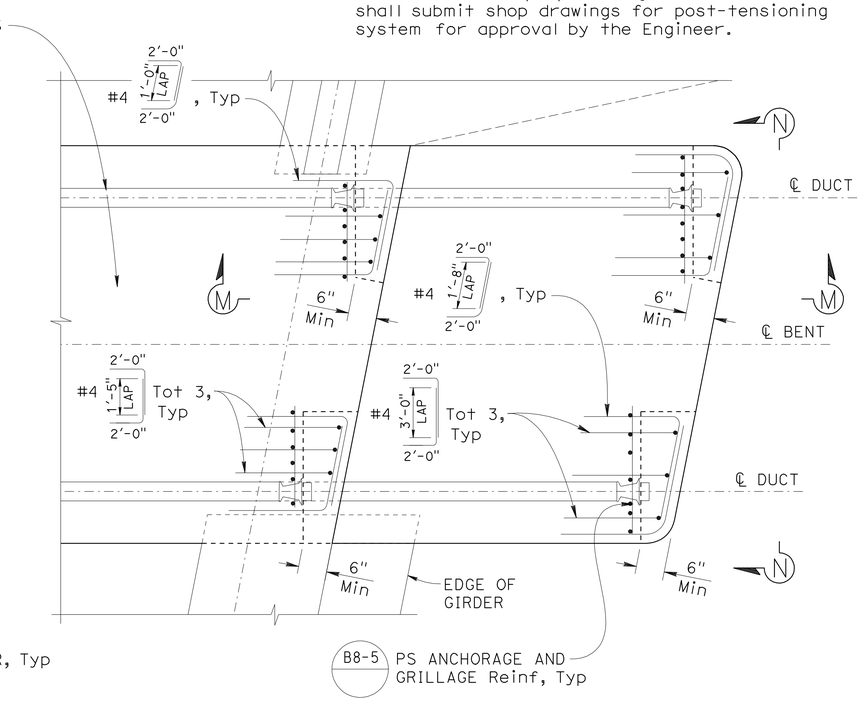

BENT CAP END (RIGHT SIDE)

¾" = 1'-0"

Paul Cotter
DESIGN OVERSIGHT Paul Cotter
7-16-12
SIGN OFF DATE

	BY	CHECKED
DESIGN	B. Schoppe	S. Landis
DETAILS	L. Davis	S. Landis
QUANTITIES	B. Schoppe	F. Hakemi/B. Osorio

PREPARED FOR THE STATE OF CALIFORNIA DEPARTMENT OF TRANSPORTATION

Jan Hueser
PROJECT ENGINEER

BRIDGE NO. 33-0751
POST MILES 28.69

29TH AVENUE OC (REPLACE)
BENT 6 DETAILS No. 4

DESIGN DETAIL SHEET (ENGLISH) (REV.7/16/10)

ORIGINAL SCALE IN INCHES FOR REDUCED PLANS 0 1 2 3

UNIT: 0724
PROJECT NUMBER & PHASE: 04000001601 CONTRACT NO.: 04-0A7101

DISREGARD PRINTS BEARING EARLIER REVISION DATES → 9-6-11 1-30-12 3-30-12 6-25-12

SHEET 23 OF 60

FILE => 33-0751-h-b06dt04.dgn

USERNAME => s124496 DATE PLOTTED => 10-APR-2013 TIME PLOTTED => 06:21

DIST	COUNTY	ROUTE	POST MILES TOTAL PROJECT	SHEET No	TOTAL SHEETS
04	Ala	880	28.4/29.2	531	789

REGISTERED CIVIL ENGINEER 6/25/12 DATE

4-8-13
PLANS APPROVAL DATE

REGISTERED PROFESSIONAL ENGINEER Jan M. Hueser No. C050215 Exp. 6/30/13 CIVIL STATE OF CALIFORNIA

The State of California or its officers or agents shall not be responsible for the accuracy or completeness of electronic copies of this plan sheet.

ALAMEDA COUNTY TRANSPORTATION COMMISSION
1333 BROADWAY
OAKLAND, CA 94612-1918

URS CORPORATION
1380 LEAD HILL BLVD, SUITE 100
ROSEVILLE, CA 95661-2997

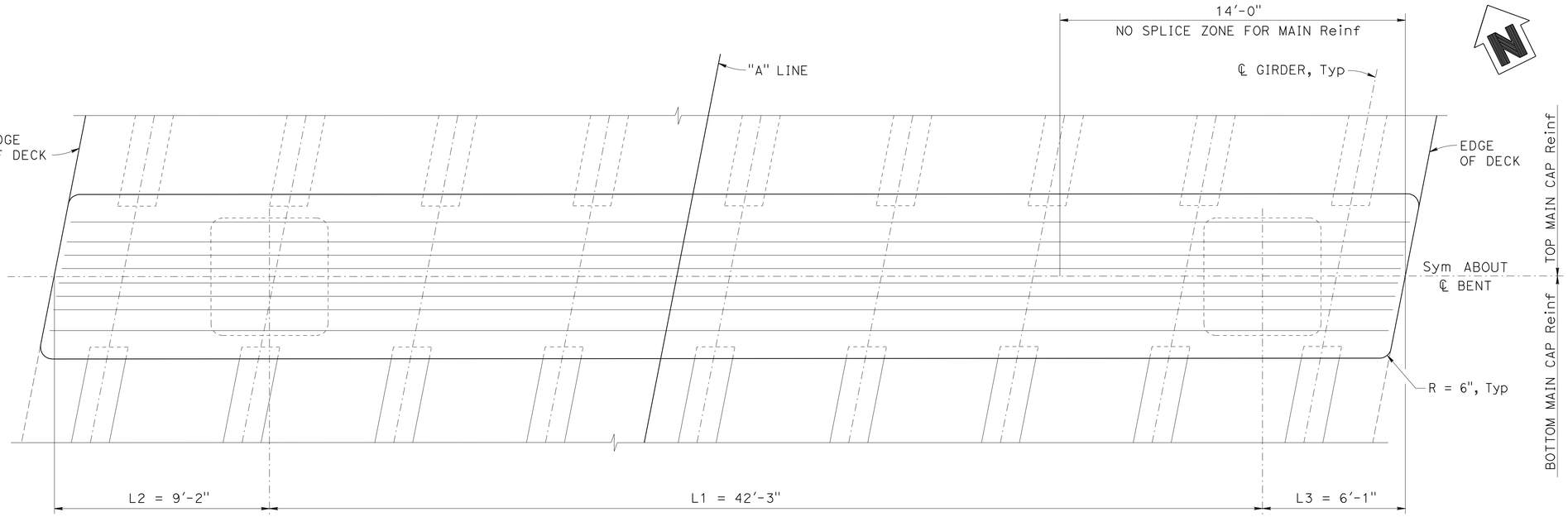

PLAN

3/8" = 1'-0"

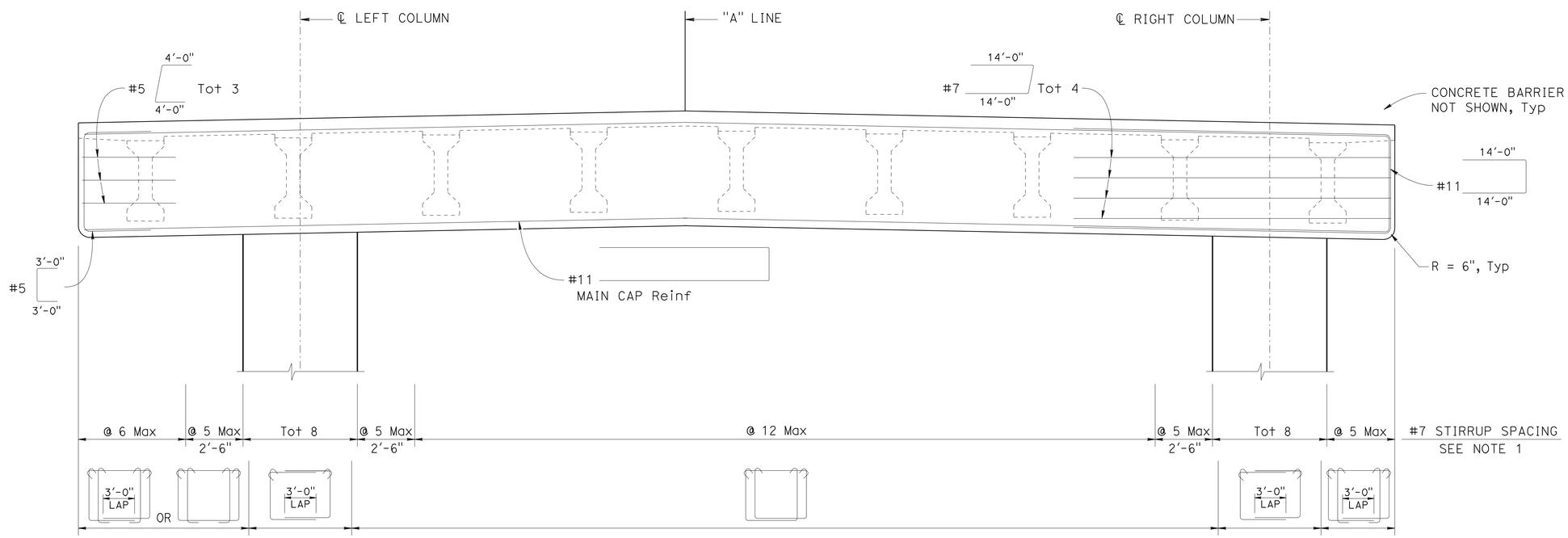

ELEVATION

3/8" = 1'-0"

NOTES:

1. For stirrup configuration, see "BENT 7 DETAILS No. 1" sheet.
2. For column details, see "BENT 6 and 7 COLUMN DETAILS" sheet.
3. For transverse PT and notes, see "BENT NOTES AND CAMBER" sheet.
4. Only ultimate butt splices are allowed in main bent cap Reinf.

DESIGN OVERSIGHT Paul Cotter
7-16-12
SIGN OFF DATE

	BY	CHECKED
DESIGN	B. Schoppe	S. Landis
DETAILS	L. Davis	S. Landis
QUANTITIES	B. Schoppe	F. Hakemi/B. Osorio

PREPARED FOR THE STATE OF CALIFORNIA DEPARTMENT OF TRANSPORTATION

Jan Hueser
PROJECT ENGINEER

BRIDGE NO. 33-0751
POST MILES 28.69

29TH AVENUE OC (REPLACE)
BENT 7 LAYOUT

DESIGN DETAIL SHEET (ENGLISH) (REV.7/16/10)

ORIGINAL SCALE IN INCHES FOR REDUCED PLANS 0 1 2 3

UNIT: 0724
PROJECT NUMBER & PHASE: 04000001601 CONTRACT NO.: 04-0A7101

DISREGARD PRINTS BEARING EARLIER REVISION DATES

REVISION DATES: 9-6-11 1-18-12 3-30-12 6-25-12 SHEET 24 OF 60

FILE => 33-0751-h-b07_1o01.dgn

USERNAME => s124496 DATE PLOTTED => 10-APR-2013 TIME PLOTTED => 06:21

DIST	COUNTY	ROUTE	POST MILES TOTAL PROJECT	SHEET No	TOTAL SHEETS
04	Ala	880	28.4/29.2	532	789

REGISTERED CIVIL ENGINEER 6/25/12 DATE

4-8-13
PLANS APPROVAL DATE

REGISTERED PROFESSIONAL ENGINEER Jan M. Hueser No. C050215 Exp. 6/30/13 CIVIL STATE OF CALIFORNIA

The State of California or its officers or agents shall not be responsible for the accuracy or completeness of electronic copies of this plan sheet.

ALAMEDA COUNTY TRANSPORTATION COMMISSION
1333 BROADWAY
OAKLAND, CA 94612-1918

URS CORPORATION
1380 LEAD HILL BLVD, SUITE 100
ROSEVILLE, CA 95661-2997

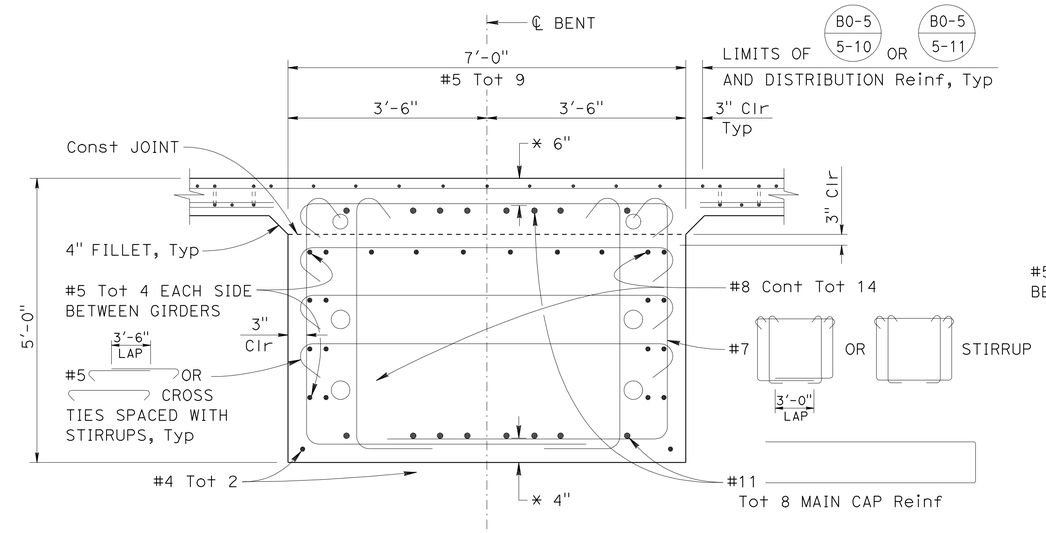

SECTION A-A

3/4" = 1'-0"

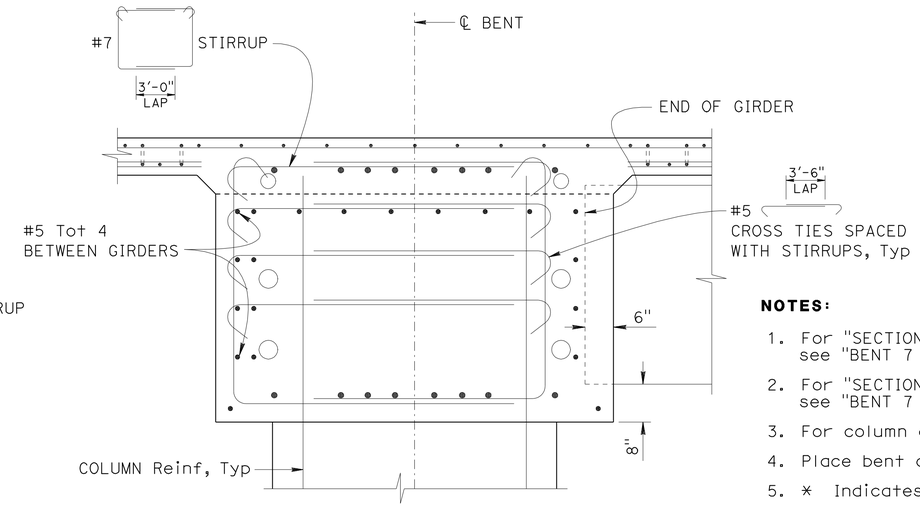

SECTION B-B

3/4" = 1'-0"

NOTE: For information not shown, see "SECTION A-A"

NOTES:

1. For "SECTION C-C" thru "SECTION F-F", see "BENT 7 DETAILS No. 2" sheet.
2. For "SECTION G-G" thru "SECTION K-K", see "BENT 7 DETAILS No. 3" sheet.
3. For column details, see "BENT 6 AND 7 COLUMN DETAILS" sheet.
4. Place bent cap stirrups perpendicular to ℄ Bent.
5. * Indicates clearance to main cap reinforcement.
6. Reinf may be bent or adjusted to clear prestressing ducts and anchorage, subject to the approval of the Engineer.
7. For "CROSS TIE DETAIL", see "BENT 2 THRU 5 DETAILS No. 2" sheet.

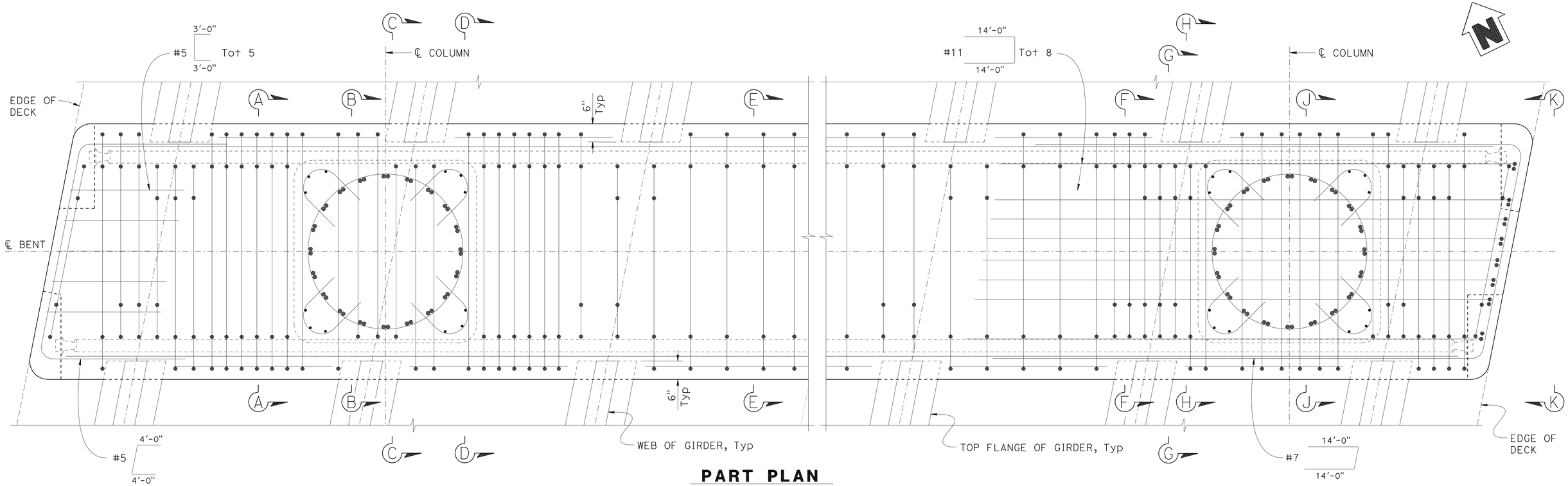

PART PLAN

3/4" = 1'-0"

DESIGN	BY B. Schoppe	CHECKED S. Landis	
DETAILS	BY L. Davis	CHECKED S. Landis	
QUANTITIES	BY B. Schoppe	CHECKED F. Hakemi/B. Osorio	

DESIGN OVERSIGHT Paul Cotter
7-16-12
SIGN OFF DATE

PREPARED FOR THE STATE OF CALIFORNIA DEPARTMENT OF TRANSPORTATION

Jan Hueser
PROJECT ENGINEER

BRIDGE NO. 33-0751
POST MILES 28.69

29TH AVENUE OC (REPLACE)
BENT 7 DETAILS No. 1

DESIGN DETAIL SHEET (ENGLISH) (REV.7/16/10)

ORIGINAL SCALE IN INCHES FOR REDUCED PLANS 0 1 2 3

UNIT: 0724
PROJECT NUMBER & PHASE: 04000001601 CONTRACT NO.: 04-0A7101

DISREGARD PRINTS BEARING EARLIER REVISION DATES

REVISION DATES: 9-6-11 1-30-12 3-30-12 6-25-12

SHEET 25 OF 60

FILE => 33-0751-h-b07dt01.dgn

USERNAME => s124496 DATE PLOTTED => 10-APR-2013 TIME PLOTTED => 06:21

DIST	COUNTY	ROUTE	POST MILES TOTAL PROJECT	SHEET No	TOTAL SHEETS
04	Ala	880	28.4/29.2	533	789

REGISTERED CIVIL ENGINEER 6/25/12 DATE

4-8-13
PLANS APPROVAL DATE

REGISTERED PROFESSIONAL ENGINEER Jan M. Hueser No. C050215 Exp. 6/30/13 CIVIL STATE OF CALIFORNIA

The State of California or its officers or agents shall not be responsible for the accuracy or completeness of electronic copies of this plan sheet.

ALAMEDA COUNTY TRANSPORTATION COMMISSION
1333 BROADWAY
OAKLAND, CA 94612-1918

URS CORPORATION
1380 LEAD HILL BLVD, SUITE 100
ROSEVILLE, CA 95661-2997

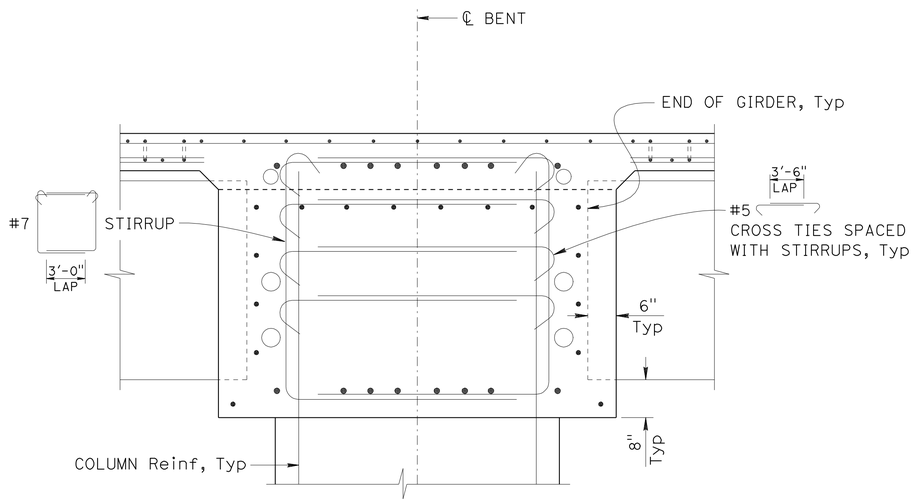

SECTION C-C

3/4" = 1'-0"

NOTE: For information not shown, see "SECTION E-E"

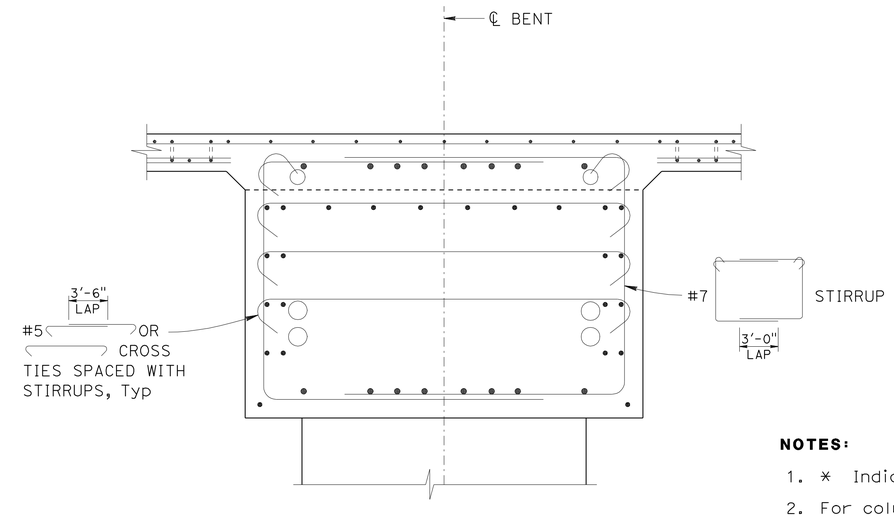

SECTION D-D

3/4" = 1'-0"

NOTE: For information not shown, see "SECTION E-E"

NOTES:

1. * Indicates clearance to main cap reinforcement.
2. For column reinforcement, see "BENT 6 AND 7 COLUMN DETAILS" sheet.
3. For location of "SECTION C-C" thru "SECTION F-F", see "BENT 7 DETAILS No. 1" sheet.
4. Reinf may be bent or adjusted to clear prestressing ducts, subject to the approval of the Engineer.
5. For limits of reinforcement, see "BENT 7 LAYOUT" sheet.
6. For "CROSS TIE DETAIL", see "BENT 2 THRU 5 DETAILS No. 2" sheet.

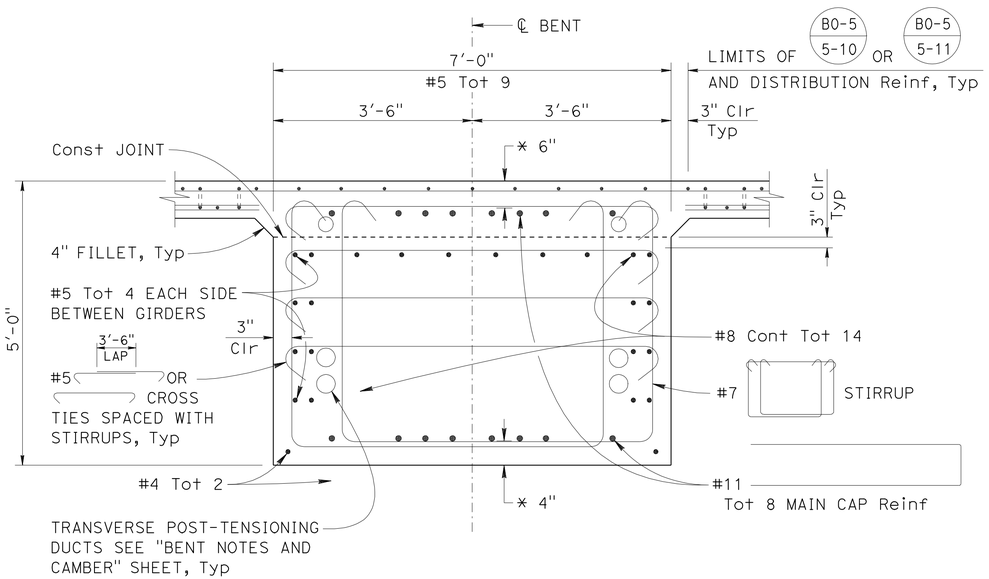

SECTION E-E

3/4" = 1'-0"

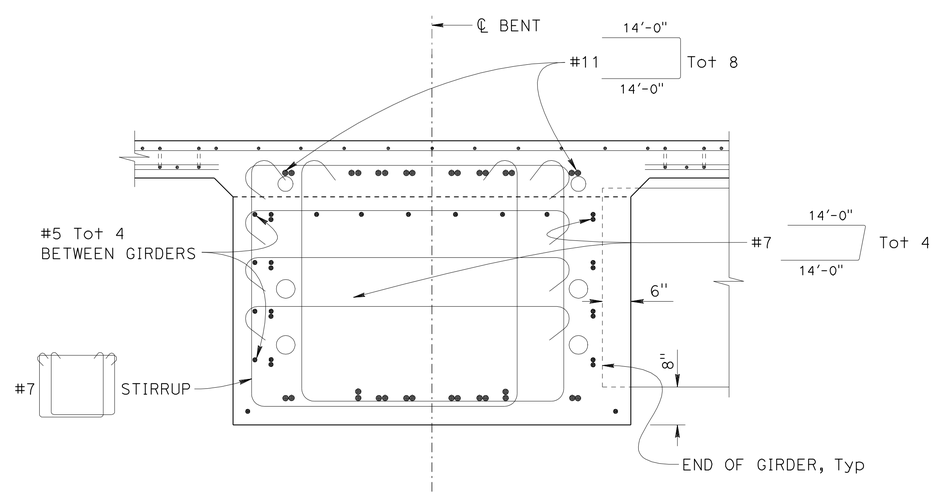

SECTION F-F

3/4" = 1'-0"

NOTE: For information not shown, see "SECTION E-E"

Paul Cotter
DESIGN OVERSIGHT Paul Cotter
7-16-12
SIGN OFF DATE

	BY	CHECKED
DESIGN	B. Schoppe	S. Landis
DETAILS	L. Davis	S. Landis
QUANTITIES	B. Schoppe	F. Hakemi/B. Osorio

PREPARED FOR THE STATE OF CALIFORNIA DEPARTMENT OF TRANSPORTATION

Jan Hueser
PROJECT ENGINEER

BRIDGE NO. 33-0751
POST MILES 28.69

29TH AVENUE OC (REPLACE)
BENT 7 DETAILS No. 2

DESIGN DETAIL SHEET (ENGLISH) (REV.7/16/10)

ORIGINAL SCALE IN INCHES FOR REDUCED PLANS 0 1 2 3

UNIT: 0724
PROJECT NUMBER & PHASE: 04000001601 CONTRACT NO.: 04-0A7101

DISREGARD PRINTS BEARING EARLIER REVISION DATES

REVISION DATES: 9-6-11 1-18-12 3-28-12 6-25-12

SHEET 26 OF 60

FILE => 33-0751-h-b07dt02.dgn

USERNAME => s124936 DATE PLOTTED => 10-APR-2013 TIME PLOTTED => 06:22

DIST	COUNTY	ROUTE	POST MILES TOTAL PROJECT	SHEET No	TOTAL SHEETS
04	Ala	880	28.4/29.2	534	789

REGISTERED CIVIL ENGINEER 6/25/12 DATE

4-8-13
PLANS APPROVAL DATE

REGISTERED PROFESSIONAL ENGINEER Jan M. Hueser No. C050215 Exp. 6/30/13 CIVIL STATE OF CALIFORNIA

The State of California or its officers or agents shall not be responsible for the accuracy or completeness of electronic copies of this plan sheet.

ALAMEDA COUNTY TRANSPORTATION COMMISSION
1333 BROADWAY
OAKLAND, CA 94612-1918

URS CORPORATION
1380 LEAD HILL BLVD, SUITE 100
ROSEVILLE, CA 95661-2997

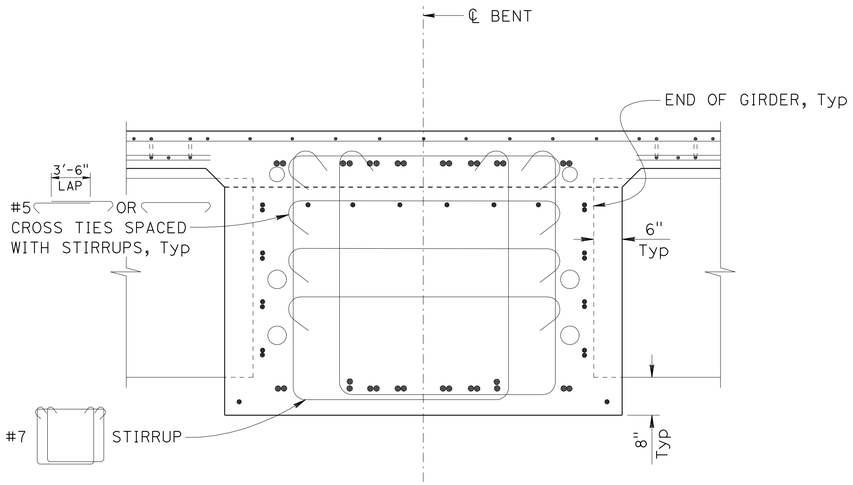

SECTION G-G

¾" = 1'-0"

NOTE: For information not shown, see "SECTION J-J"

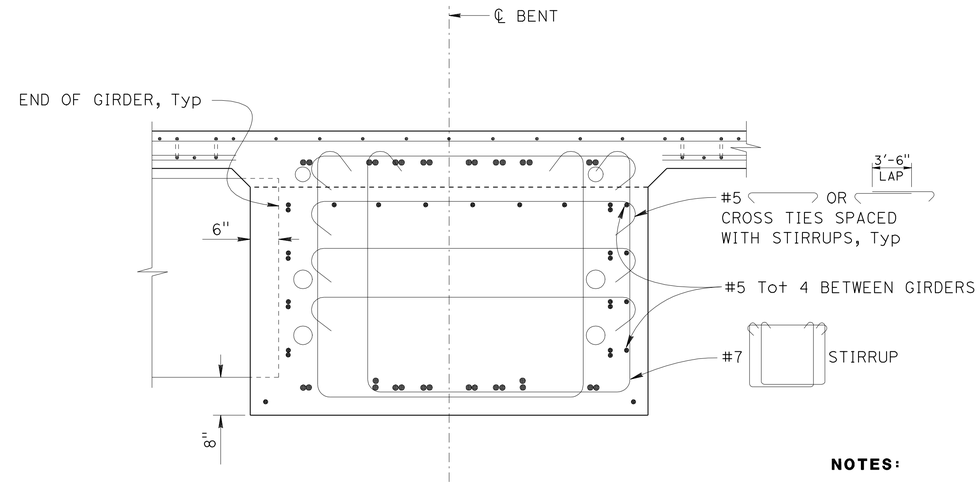

SECTION H-H

¾" = 1'-0"

NOTE: For information not shown, see "SECTION J-J"

NOTES:

1. * Indicates clearance to main cap reinforcement.
2. For column reinforcement, see "BENT 6 AND 7 COLUMN DETAILS" sheet.
3. For location of "SECTION G-G" thru "SECTION K-K", see "BENT 7 DETAILS No. 1" sheet.
4. Reinf may be bent or adjusted to clear prestressing ducts, subject to the approval of the Engineer.
5. For limits of reinforcement, see "BENT 7 LAYOUT" sheet.
6. For "CROSS TIE DETAIL", see "BENT 2 THRU 5 DETAILS No. 2" sheet.

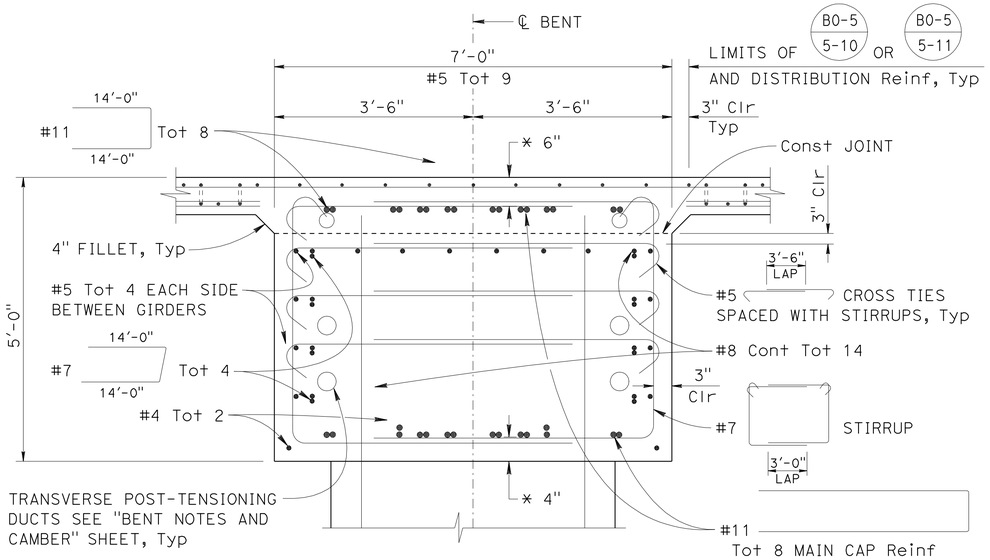

SECTION J-J

¾" = 1'-0"

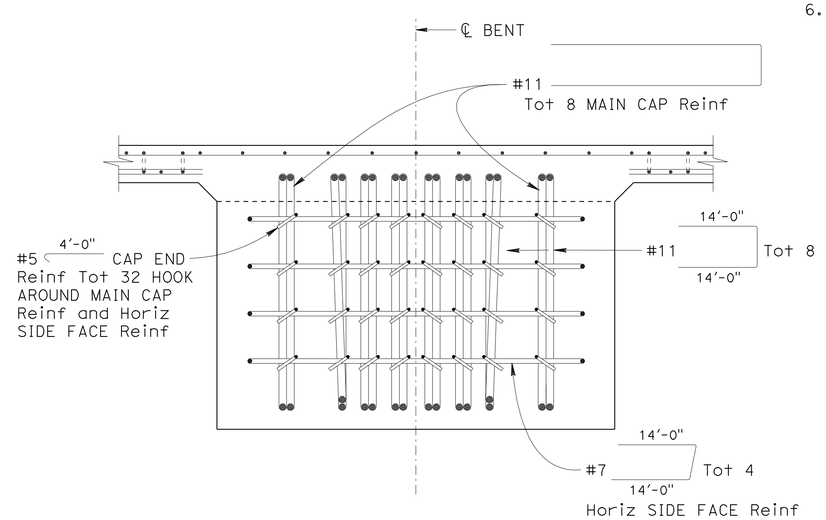

SECTION K-K

¾" = 1'-0"

DESIGN OVERSIGHT Paul Cotter	DESIGN	BY B. Schoppe	CHECKED S. Landis	PREPARED FOR THE STATE OF CALIFORNIA DEPARTMENT OF TRANSPORTATION	Jan Hueser PROJECT ENGINEER
7-16-12 SIGN OFF DATE	DETAILS	BY L. Davis	CHECKED S. Landis		BRIDGE NO. 33-0751
	QUANTITIES	BY B. Schoppe	CHECKED F. Hakemi/B. Osorio		POST MILES 28.69

29TH AVENUE OC (REPLACE)

BENT 7 DETAILS No. 3

DESIGN DETAIL SHEET (ENGLISH) (REV.7/16/10)

ORIGINAL SCALE IN INCHES FOR REDUCED PLANS 0 1 2 3

UNIT: 0724
PROJECT NUMBER & PHASE: 04000001601 CONTRACT NO.: 04-0A7101

DISREGARD PRINTS BEARING EARLIER REVISION DATES → REVISION DATES ~~9-6-11~~ ~~1-18-12~~ ~~3-30-12~~ 6-25-12 SHEET 27 OF 60

FILE => 33-0751-h-b07dt03.dgn

USERNAME => s124496 DATE PLOTTED => 10-APR-2013 TIME PLOTTED => 06:22

DIST	COUNTY	ROUTE	POST MILES TOTAL PROJECT	SHEET No	TOTAL SHEETS
04	Ala	880	28.4/29.2	535	789

REGISTERED CIVIL ENGINEER 6/25/12 DATE

4-8-13
PLANS APPROVAL DATE

REGISTERED PROFESSIONAL ENGINEER Jan M. Hueser No. C050215 Exp. 6/30/13 CIVIL STATE OF CALIFORNIA

The State of California or its officers or agents shall not be responsible for the accuracy or completeness of electronic copies of this plan sheet.

ALAMEDA COUNTY TRANSPORTATION COMMISSION
1333 BROADWAY
OAKLAND, CA 94612-1918

URS CORPORATION
1380 LEAD HILL BLVD, SUITE 100
ROSEVILLE, CA 95661-2997

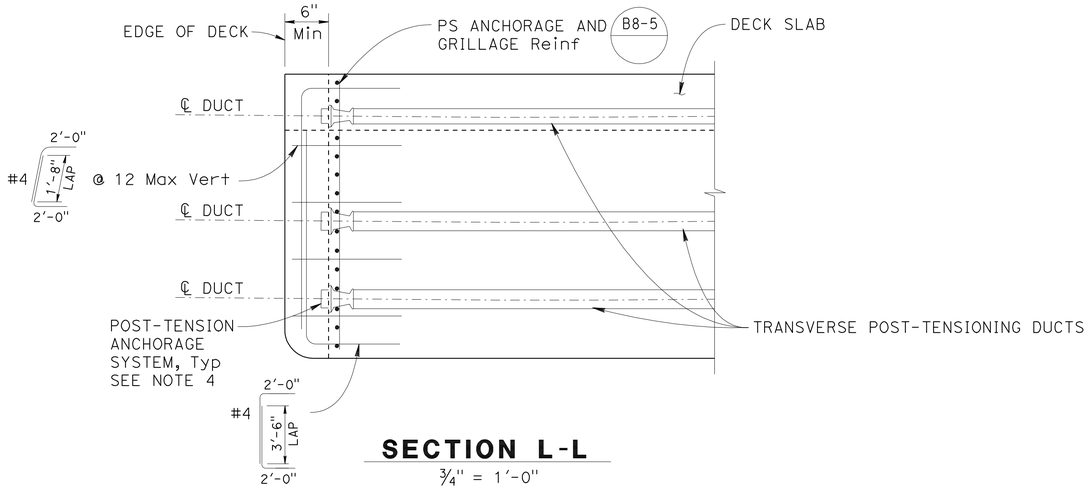

SECTION L-L

¾" = 1'-0"

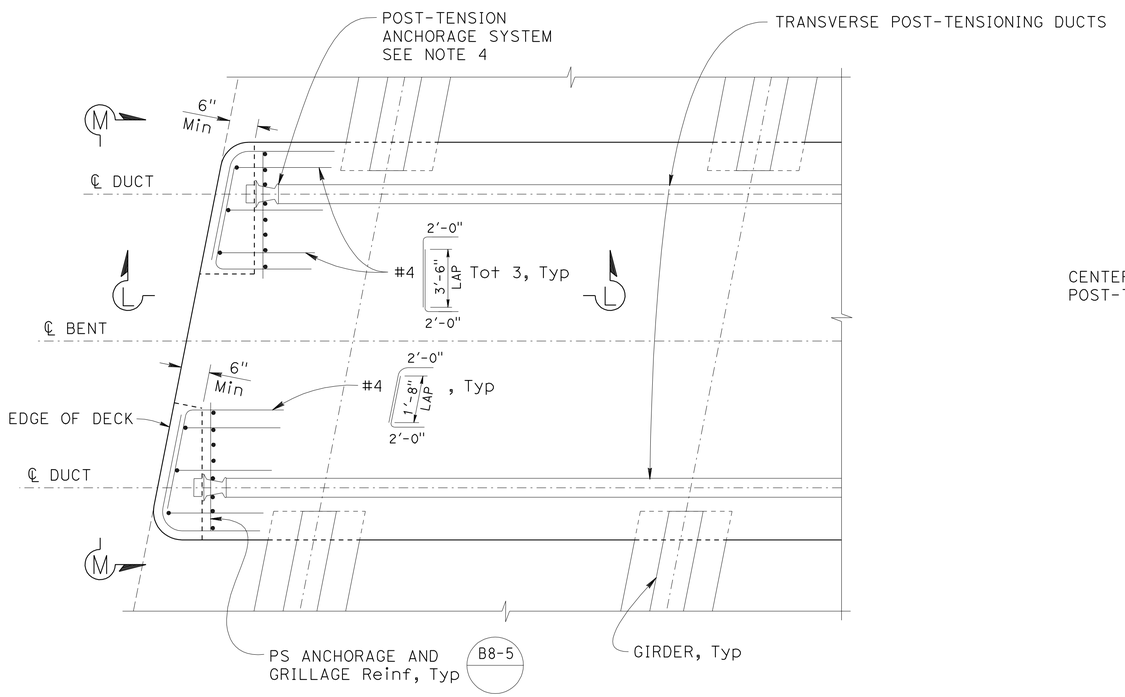

BENT CAP END

¾" = 1'-0"

NOTE: Left side shown, right side similar

NOTES:

1. For reinforcement not shown, see "BENT 7 DETAILS No. 1" thru "BENT 7 DETAILS No. 3" sheets.
2. For transverse post-tensioning details, see "BENT NOTES AND CAMBER" sheet.
3. Blockout Reinf may be bent or adjusted to clear prestressing ducts and anchorage, subject to the approval of the Engineer.
4. No. of ducts and anchorage system shown for illustrative purpose only. The Contractor shall submit shop drawings for post-tensioning system for approval by the Engineer.

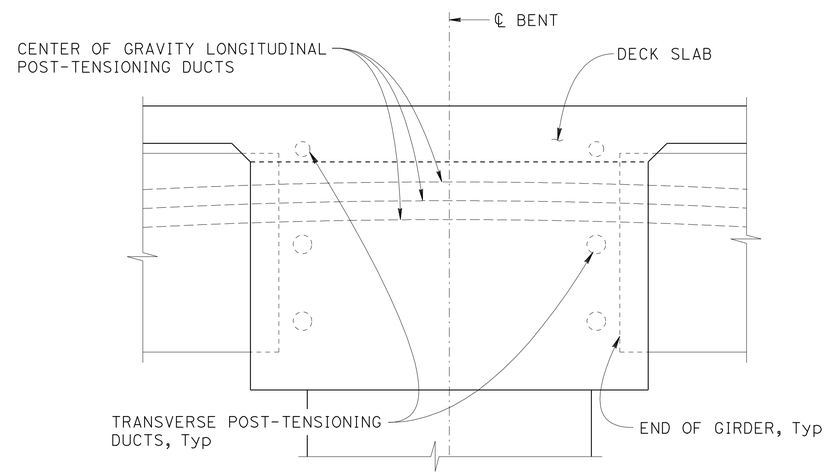

SECTION M-M

¾" = 1'-0"

Paul Cotter
DESIGN OVERSIGHT Paul Cotter
7-16-12
SIGN OFF DATE

	BY	CHECKED
DESIGN	B. Schoppe	S. Landis
DETAILS	J. Harold	S. Landis
QUANTITIES	B. Schoppe	F. Hakemi/B. Osorio

PREPARED FOR THE STATE OF CALIFORNIA DEPARTMENT OF TRANSPORTATION

Jan Hueser
PROJECT ENGINEER

BRIDGE NO. 33-0751
POST MILES 28.69

29TH AVENUE OC (REPLACE)

BENT 7 DETAILS No. 4

DESIGN DETAIL SHEET (ENGLISH) (REV.7/16/10)

ORIGINAL SCALE IN INCHES FOR REDUCED PLANS 0 1 2 3

UNIT: 0724
PROJECT NUMBER & PHASE: 04000001601 CONTRACT NO.: 04-0A7101

DISREGARD PRINTS BEARING EARLIER REVISION DATES

REVISION DATES 9-6-11 1-30-12 3-30-12 6-25-12 SHEET 28 OF 60

FILE => 33-0751-h-b07dt04.dgn

USERNAME => s124496 DATE PLOTTED => 10-APR-2013 TIME PLOTTED => 06:22

DIST	COUNTY	ROUTE	POST MILES TOTAL PROJECT	SHEET No	TOTAL SHEETS
04	Ala	880	28.4/29.2	536	789

REGISTERED CIVIL ENGINEER 6/25/12 DATE

4-8-13
PLANS APPROVAL DATE

REGISTERED PROFESSIONAL ENGINEER Jan M. Hueser No. C050215 Exp. 6/30/13 CIVIL STATE OF CALIFORNIA

The State of California or its officers or agents shall not be responsible for the accuracy or completeness of electronic copies of this plan sheet.

ALAMEDA COUNTY TRANSPORTATION COMMISSION
1333 BROADWAY
OAKLAND, CA 94612-1918

URS CORPORATION
1380 LEAD HILL BLVD, SUITE 100
ROSEVILLE, CA 95661-2997

TRANSVERSE POST-TENSIONING NOTES

270 Ksi Low Relaxation Strands:

Anchor Set = 0.375 inches

μ = 0.15
K = 0.0002 / ft

Concrete: f'c = 5.5 ksi f'ci = 4.5 ksi

One end stressing shall be performed from left end of Bent cap.

BENT 2

PATH A: Pjack = 615 kips

Contractor shall submit elongation calculations based on initial stress at ⊠ = 0.923 times jacking stress.

PATH B: Pjack = 2372 kips

Contractor shall submit elongation calculations based on initial stress at ⊠ = 0.922 times jacking stress.

BENT 3

PATH A: Pjack = 615 kips

Contractor shall submit elongation calculations based on initial stress at ⊠ = 0.922 times jacking stress.

PATH B: Pjack = 2372 kips

Contractor shall submit elongation calculations based on initial stress at ⊠ = 0.922 times jacking stress.

BENT 4

PATH A: Pjack = 395 kips

Contractor shall submit elongation calculations based on initial stress at ⊠ = 0.923 times jacking stress.

PATH B: Pjack = 2372 kips

Contractor shall submit elongation calculations based on initial stress at ⊠ = 0.922 times jacking stress.

BENT 5

PATH A: Pjack = 615 kips

Contractor shall submit elongation calculations based on initial stress at ⊠ = 0.922 times jacking stress.

PATH B: Pjack = 2372 kips

Contractor shall submit elongation calculations based on initial stress at ⊠ = 0.922 times jacking stress.

BENT 6

PATH A: Pjack = 615 kips

Contractor shall submit elongation calculations based on initial stress at ⊠ = 0.920 times jacking stress.

PATH B: Pjack = 3866 kips

Contractor shall submit elongation calculations based on initial stress at ⊠ = 0.927 times jacking stress.

BENT 7

PATH A: Pjack = 615 kips

Contractor shall submit elongation calculations based on initial stress at ⊠ = 0.921 times jacking stress.

PATH B: Pjack = 3866 kips

Contractor shall submit elongation calculations based on initial stress at ⊠ = 0.922 times jacking stress.

TRANSVERSE POST-TENSIONING TABLE

LOCATION	DIMENSION						
	"A"	"B"	"C"	"D"	"E"	"F"	"G"
BENT 2	2'-2"	2'-2"	2'-0¾"	1'-8"	2'-0¾"	2'-2"	2'-2"
BENT 3	2'-6"	2'-6"	2'-4"	1'-8"	2'-4"	2'-6"	2'-6"
BENT 4	2'-5"	2'-5"	2'-3⅜"	1'-9"	2'-3⅜"	2'-5"	2'-5"
BENT 5	2'-6"	2'-6"	2'-4"	1'-8"	2'-4"	2'-6"	2'-6"
BENT 6	2'-2"	2'-2"	2'-0¾"	1'-8"	2'-0¾"	2'-2"	2'-2"
BENT 7	1'-11"	1'-11"	1'-10¼"	1'-7"	1'-10¼"	1'-11"	1'-11"

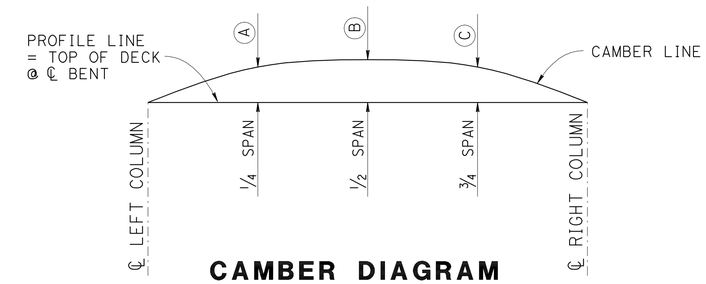

CAMBER DIAGRAM

NO SCALE

Does not include allowance for falsework deflection and settlement

CAMBER TABLE

LOCATION	A	B	C
Bent 2	0.00	0.01	0.00
Bent 3	0.00	0.01	0.00
Bent 4	0.00	0.00	0.00
Bent 5	0.00	0.01	0.00
Bent 6	0.02	0.02	0.02
Bent 7	0.01	0.02	0.01

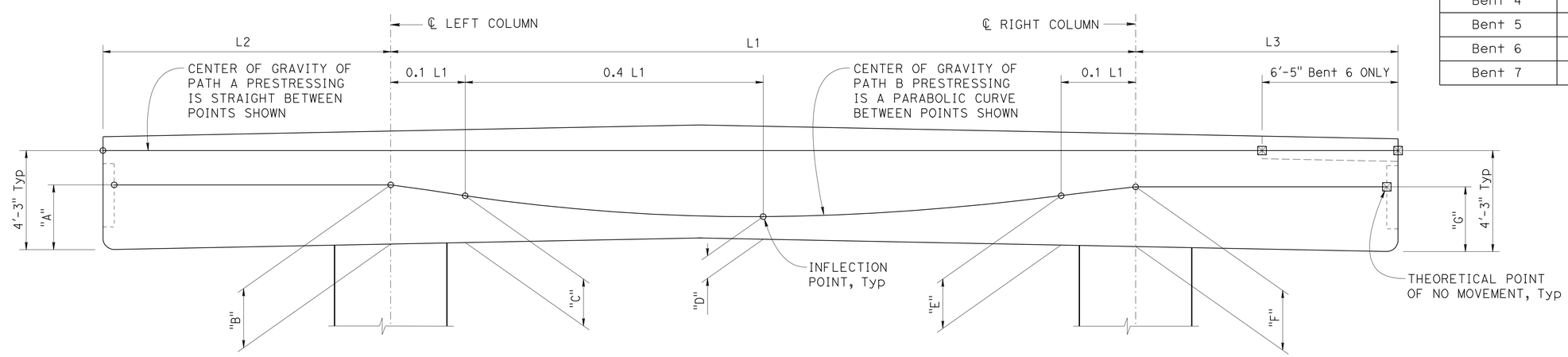

TYPICAL TRANSVERSE POST-TENSIONING SECTION

NO SCALE

DESIGN OVERSIGHT Paul Cotter
7-16-12
SIGN OFF DATE

	BY	CHECKED
DESIGN	B. Schoppe	S. Landis
DETAILS	L. Davis	S. Landis
QUANTITIES	B. Schoppe	F. Hakemi/B. Osorio

PREPARED FOR THE STATE OF CALIFORNIA DEPARTMENT OF TRANSPORTATION

Jan Hueser
PROJECT ENGINEER

BRIDGE NO. 33-0751
POST MILES 28.69

29TH AVENUE OC (REPLACE)
BENT NOTES AND CAMBER

DESIGN DETAIL SHEET (ENGLISH) (REV.7/16/10)

ORIGINAL SCALE IN INCHES FOR REDUCED PLANS 0 1 2 3

UNIT: 0724
PROJECT NUMBER & PHASE: 04000001601 CONTRACT NO.: 04-0A7101

DISREGARD PRINTS BEARING EARLIER REVISION DATES

REVISION DATES: 9-6-11 1-18-12 3-30-12 6-25-12 SHEET 29 OF 60

FILE => 33-0751-h-bdt01.dgn

USERNAME => s124196 DATE PLOTTED => 10-APR-2013 TIME PLOTTED => 06:22

DIST	COUNTY	ROUTE	POST MILES TOTAL PROJECT	SHEET No	TOTAL SHEETS
04	Ala	880	28.4/29.2	537	789

REGISTERED CIVIL ENGINEER — DATE 6/25/12

4-8-13
PLANS APPROVAL DATE

REGISTERED PROFESSIONAL ENGINEER — Jan M. Hueser No. C050215 Exp. 6/30/13 CIVIL — STATE OF CALIFORNIA

The State of California or its officers or agents shall not be responsible for the accuracy or completeness of electronic copies of this plan sheet.

ALAMEDA COUNTY TRANSPORTATION COMMISSION
1333 BROADWAY
OAKLAND, CA 94612-1918

URS CORPORATION
1380 LEAD HILL BLVD, SUITE 100
ROSEVILLE, CA 95661-2997

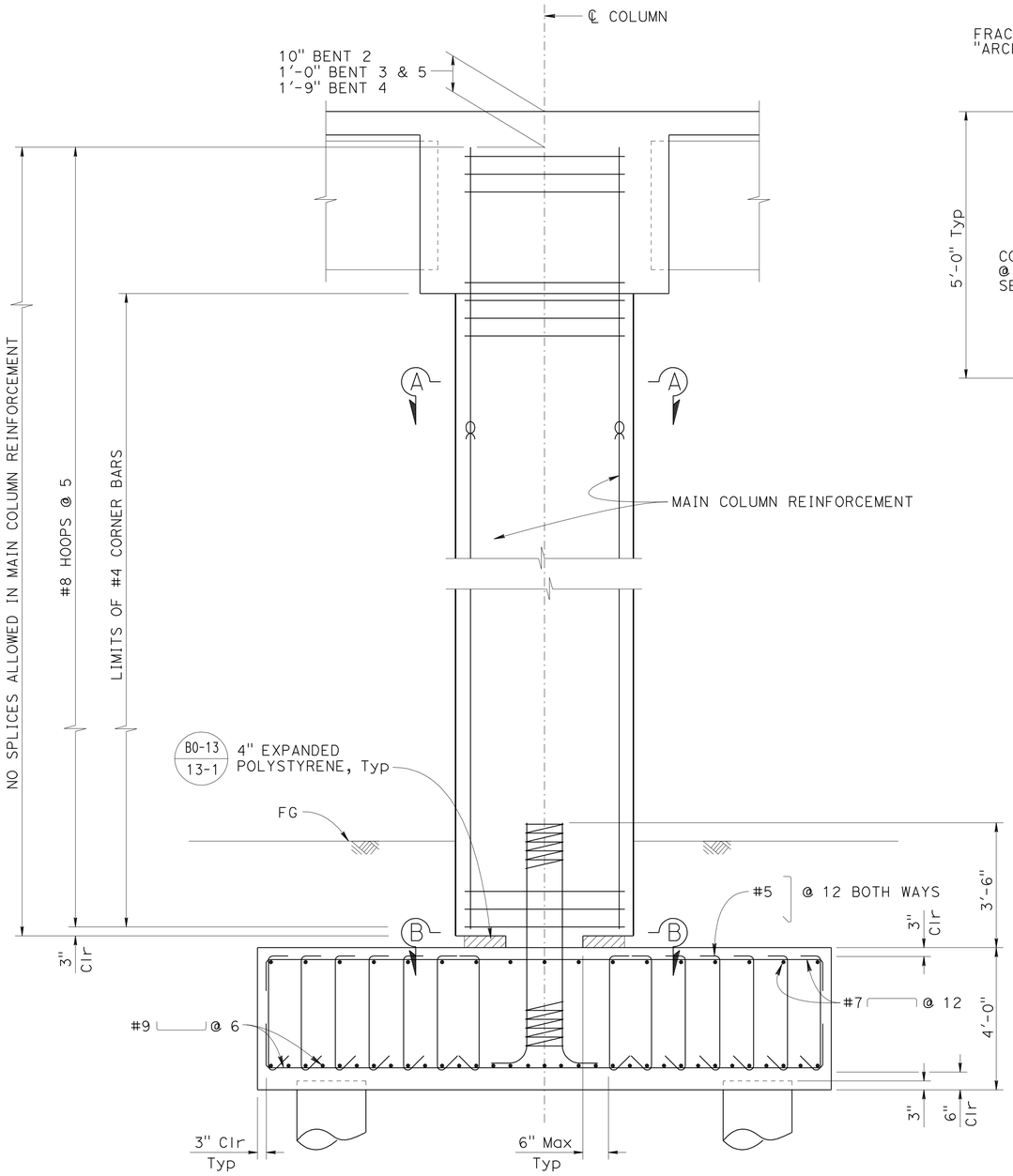

COLUMN ELEVATION

½" = 1'-0"

BENT 4 FOOTING SHOWN, BENT 2, 3 AND 5 FOOTING SIMILAR

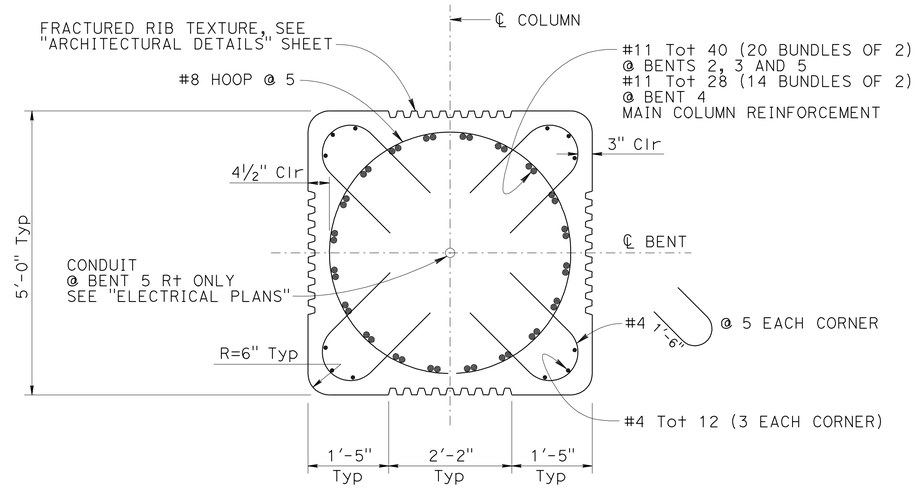

SECTION A-A

¾" = 1'-0"

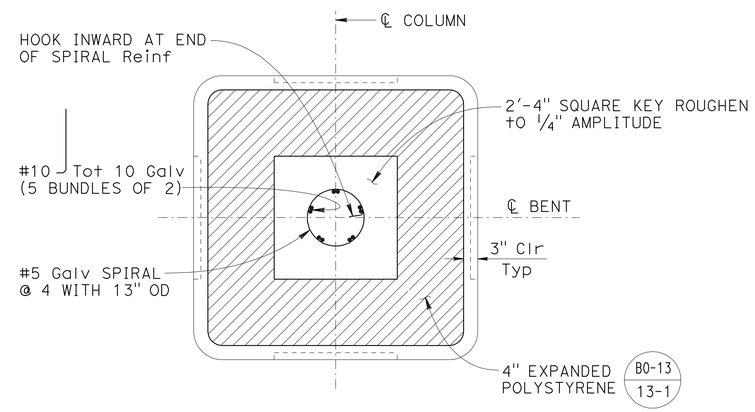

SECTION B-B

¾" = 1'-0"

LEGEND:

∝ Indicates bundled bars

NOTES:

1. For information not shown, see "BENT 2 THRU 5 LAYOUT" sheet.
2. For footing layout, see "BENT 4 FOOTING DETAILS" and "BENT 2, 3, 5, 6 AND 7 FOOTING DETAILS" sheets.
3. All hoops shall be "Ultimate" butt spliced.

Paul Cotter
DESIGN OVERSIGHT — Paul Cotter
7-16-12
SIGN OFF DATE

	BY	CHECKED
DESIGN	B. Schoppe	S. Landis
DETAILS	L. Davis	S. Landis
QUANTITIES	B. Schoppe	F. Hakemi/B. Osorio

PREPARED FOR THE STATE OF CALIFORNIA DEPARTMENT OF TRANSPORTATION

Jan Hueser
PROJECT ENGINEER

BRIDGE NO. 33-0751
POST MILES 28.69

29TH AVENUE OC (REPLACE)
BENT 2 THRU 5 COLUMN DETAILS

DESIGN DETAIL SHEET (ENGLISH) (REV.7/16/10)

ORIGINAL SCALE IN INCHES FOR REDUCED PLANS 0 1 2 3

UNIT: 0724
PROJECT NUMBER & PHASE: 04000001601 CONTRACT NO.: 04-0A7101

DISREGARD PRINTS BEARING EARLIER REVISION DATES

REVISION DATES				SHEET	OF
9-6-11	1-18-12	3-30-12	6-25-12	30	60

FILE => 33-0751-h-cdet01.dgn

USERNAME => s124496 DATE PLOTTED => 10-APR-2013 TIME PLOTTED => 06:22

DIST	COUNTY	ROUTE	POST MILES TOTAL PROJECT	SHEET No	TOTAL SHEETS
04	Ala	880	28.4/29.2	538	789

REGISTERED CIVIL ENGINEER 6/25/12 DATE

4-8-13
PLANS APPROVAL DATE

REGISTERED PROFESSIONAL ENGINEER Jan M. Hueser No. C050215 Exp. 6/30/13 CIVIL STATE OF CALIFORNIA

The State of California or its officers or agents shall not be responsible for the accuracy or completeness of electronic copies of this plan sheet.

ALAMEDA COUNTY TRANSPORTATION COMMISSION
1333 BROADWAY
OAKLAND, CA 94612-1918

URS CORPORATION
1380 LEAD HILL BLVD, SUITE 100
ROSEVILLE, CA 95661-2997

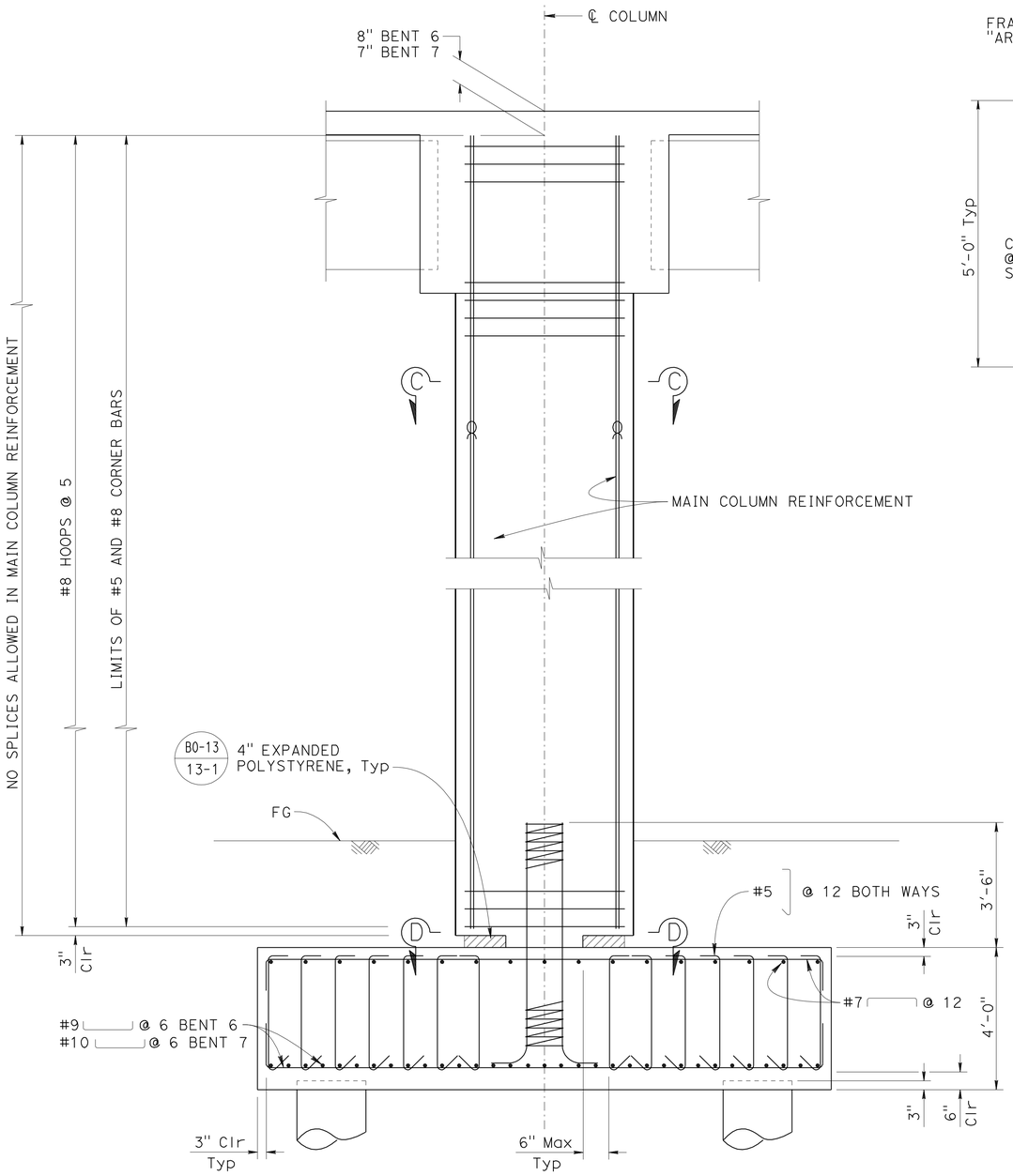

COLUMN ELEVATION

½" = 1'-0"

BENT 6 FOOTING SHOWN, BENT 7 FOOTING SIMILAR

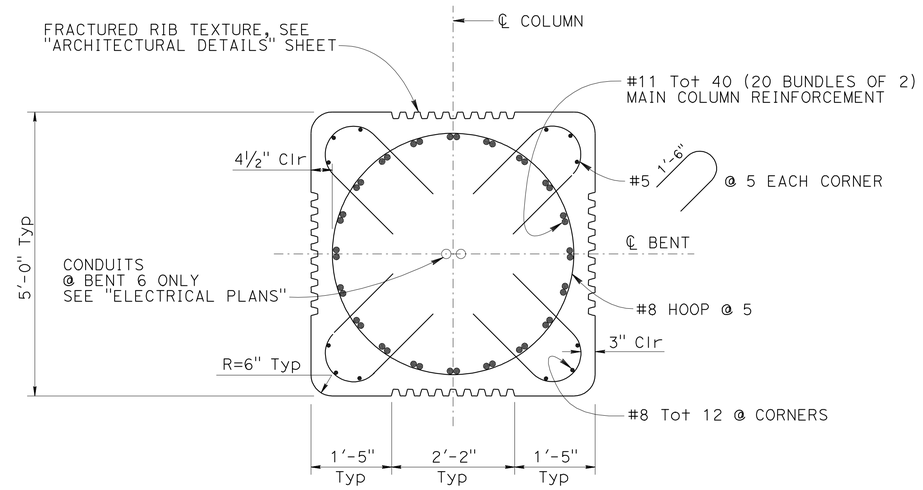

SECTION C-C

¾" = 1'-0"

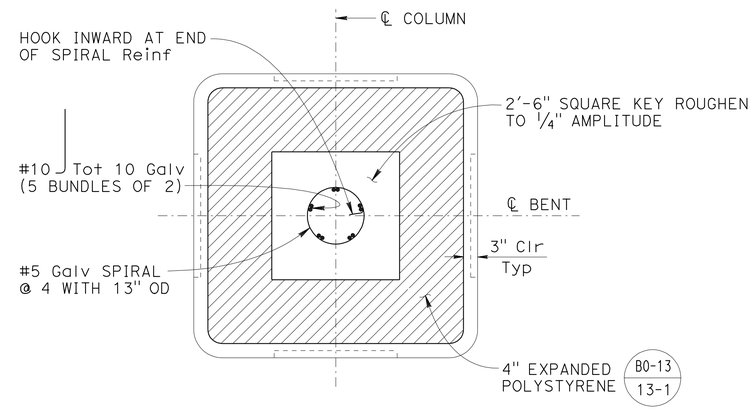

SECTION D-D

¾" = 1'-0"

LEGEND:

∝ Indicates bundled bars

NOTES:

1. For information not shown, see "BENT 6 LAYOUT" and "BENT 7 LAYOUT" sheets.
2. For footing layout, see "BENT 4 FOOTING DETAILS" and "BENT 2, 3, 5, 6 AND 7 FOOTING DETAILS" sheets.
3. All hoops shall be "Ultimate" butt spliced.

DESIGN OVERSIGHT Paul Cotter
7-16-12
SIGN OFF DATE

	BY	CHECKED
DESIGN	B. Schoppe	S. Landis
DETAILS	L. Davis	S. Landis
QUANTITIES	B. Schoppe	F. Hakemi/B. Osorio

PREPARED FOR THE STATE OF CALIFORNIA DEPARTMENT OF TRANSPORTATION

Jan Hueser
PROJECT ENGINEER

BRIDGE NO. 33-0751
POST MILES 28.69

29TH AVENUE OC (REPLACE)
BENT 6 AND 7 COLUMN DETAILS

DESIGN DETAIL SHEET (ENGLISH) (REV.7/16/10)

ORIGINAL SCALE IN INCHES FOR REDUCED PLANS 0 1 2 3

UNIT: 0724
PROJECT NUMBER & PHASE: 04000001601 CONTRACT NO.: 04-0A7101

DISREGARD PRINTS BEARING EARLIER REVISION DATES → REVISION DATES 9-6-11 1-18-12 3-30-12 6-25-12 SHEET 31 OF 60

FILE => 33-0751-h-cdet02.dgn

USERNAME => s124496 DATE PLOTTED => 10-APR-2013 TIME PLOTTED => 06:22

DIST	COUNTY	ROUTE	POST MILES TOTAL PROJECT	SHEET No	TOTAL SHEETS
04	Ala	880	28.4/29.2	539	789

REGISTERED CIVIL ENGINEER 6/25/12 DATE

4-8-13
PLANS APPROVAL DATE

REGISTERED PROFESSIONAL ENGINEER Jan M. Hueser No. C050215 Exp. 6/30/13 CIVIL STATE OF CALIFORNIA

The State of California or its officers or agents shall not be responsible for the accuracy or completeness of electronic copies of this plan sheet.

ALAMEDA COUNTY TRANSPORTATION COMMISSION
1333 BROADWAY
OAKLAND, CA 94612-1918

URS CORPORATION
1380 LEAD HILL BLVD, SUITE 100
ROSEVILLE, CA 95661-2997

NOTES:

1. Lapped splices in spiral pile Reinf shall be lapped at least 80 bar diameters. Spiral pile Reinf at splices and at ends shall be terminated with a 135° hook with a 6" tail hooked around a longitudinal bar.
2. For details not shown, see "BENT 2 THRU 5 COLUMN DETAILS" sheet.

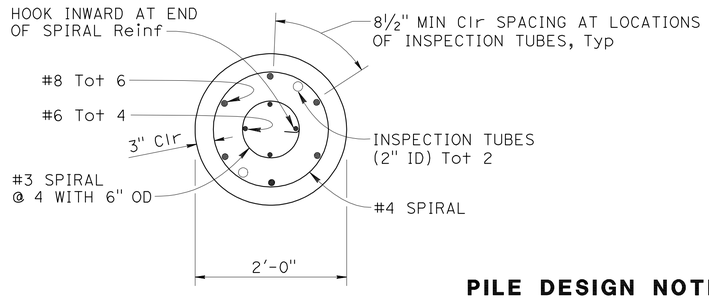

SECTION A-A

PILE DESIGN NOTES

REINFORCED CONCRETE: f'c = 4 ksi

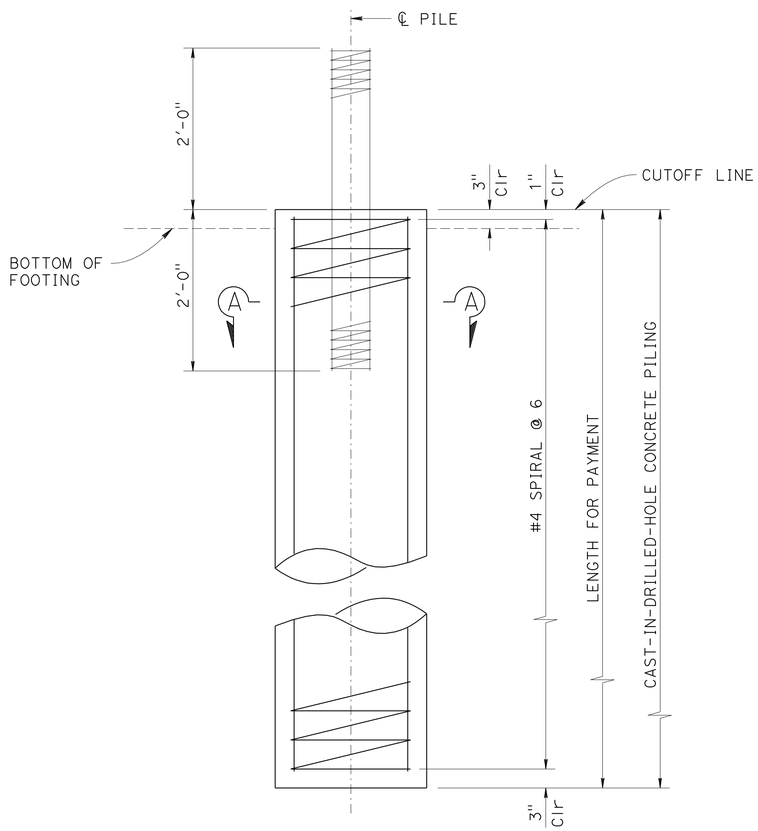

ELEVATION

24" CIDH PILE AT BENT

NO SCALE

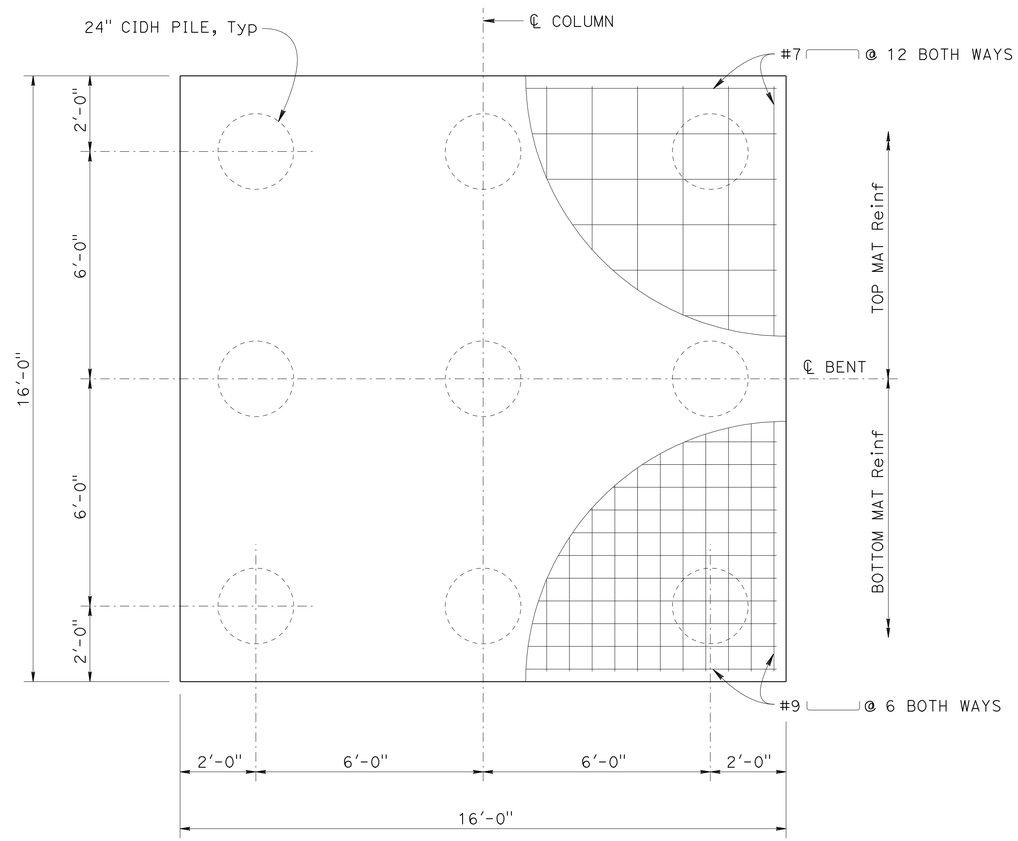

BENT 4 FOOTING

½" = 1'-0"

Paul Cotter DESIGN OVERSIGHT Paul Cotter 8-8-12 SIGN OFF DATE	DESIGN	BY B. Schoppe	CHECKED S. Landis	PREPARED FOR THE STATE OF CALIFORNIA DEPARTMENT OF TRANSPORTATION
	DETAILS	BY L. Davis	CHECKED S. Landis	
	QUANTITIES	BY B. Schoppe	CHECKED F. Hakemi/B. Osorio	

Jan Hueser
PROJECT ENGINEER

BRIDGE NO. 33-0751
POST MILES 28.69

29TH AVENUE OC (REPLACE)
BENT 4 FOOTING DETAILS

DESIGN DETAIL SHEET (ENGLISH) (REV.7/16/10)

ORIGINAL SCALE IN INCHES FOR REDUCED PLANS 0 1 2 3

UNIT: 0724
PROJECT NUMBER & PHASE: 04000001601 CONTRACT NO.: 04-0A7101

DISREGARD PRINTS BEARING EARLIER REVISION DATES

REVISION DATES: 9-6-11 1-18-12 3-28-12 8-7-12 SHEET 32 OF 60

FILE => 33-0751-h-fdt01.dgn

USERNAME => s124936 DATE PLOTTED => 10-APR-2013 TIME PLOTTED => 06:22

DIST	COUNTY	ROUTE	POST MILES TOTAL PROJECT	SHEET No	TOTAL SHEETS
04	Ala	880	28.4/29.2	540	789

REGISTERED CIVIL ENGINEER 6/25/12 DATE

4-8-13
PLANS APPROVAL DATE

REGISTERED PROFESSIONAL ENGINEER Jan M. Hueser No. C050215 Exp. 6/30/13 CIVIL STATE OF CALIFORNIA

The State of California or its officers or agents shall not be responsible for the accuracy or completeness of electronic copies of this plan sheet.

ALAMEDA COUNTY TRANSPORTATION COMMISSION
1333 BROADWAY
OAKLAND, CA 94612-1918

URS CORPORATION
1380 LEAD HILL BLVD, SUITE 100
ROSEVILLE, CA 95661-2997

NOTES:

1. For details not shown, see "BENT 2 THRU 5 COLUMN DETAILS" and "BENT 6 AND 7 COLUMN DETAILS" sheets.

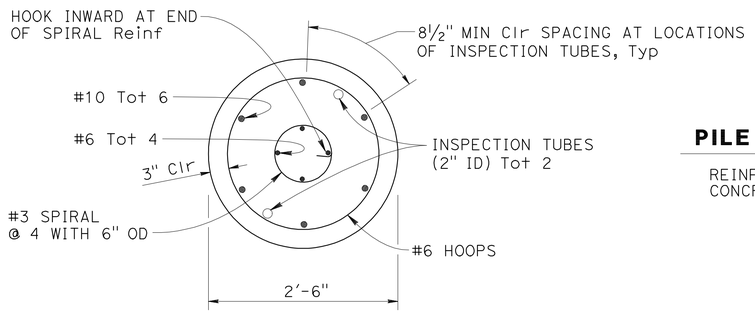

SECTION A-A

PILE DESIGN NOTES

REINFORCED CONCRETE: f'c = 4 ksi

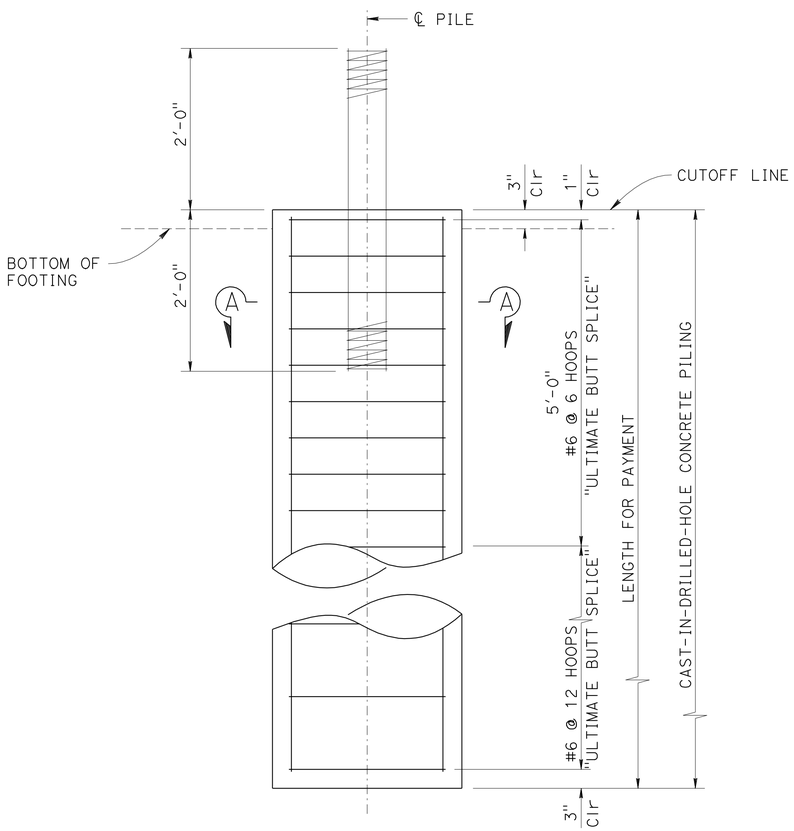

ELEVATION

30" CIDH PILE

NO SCALE

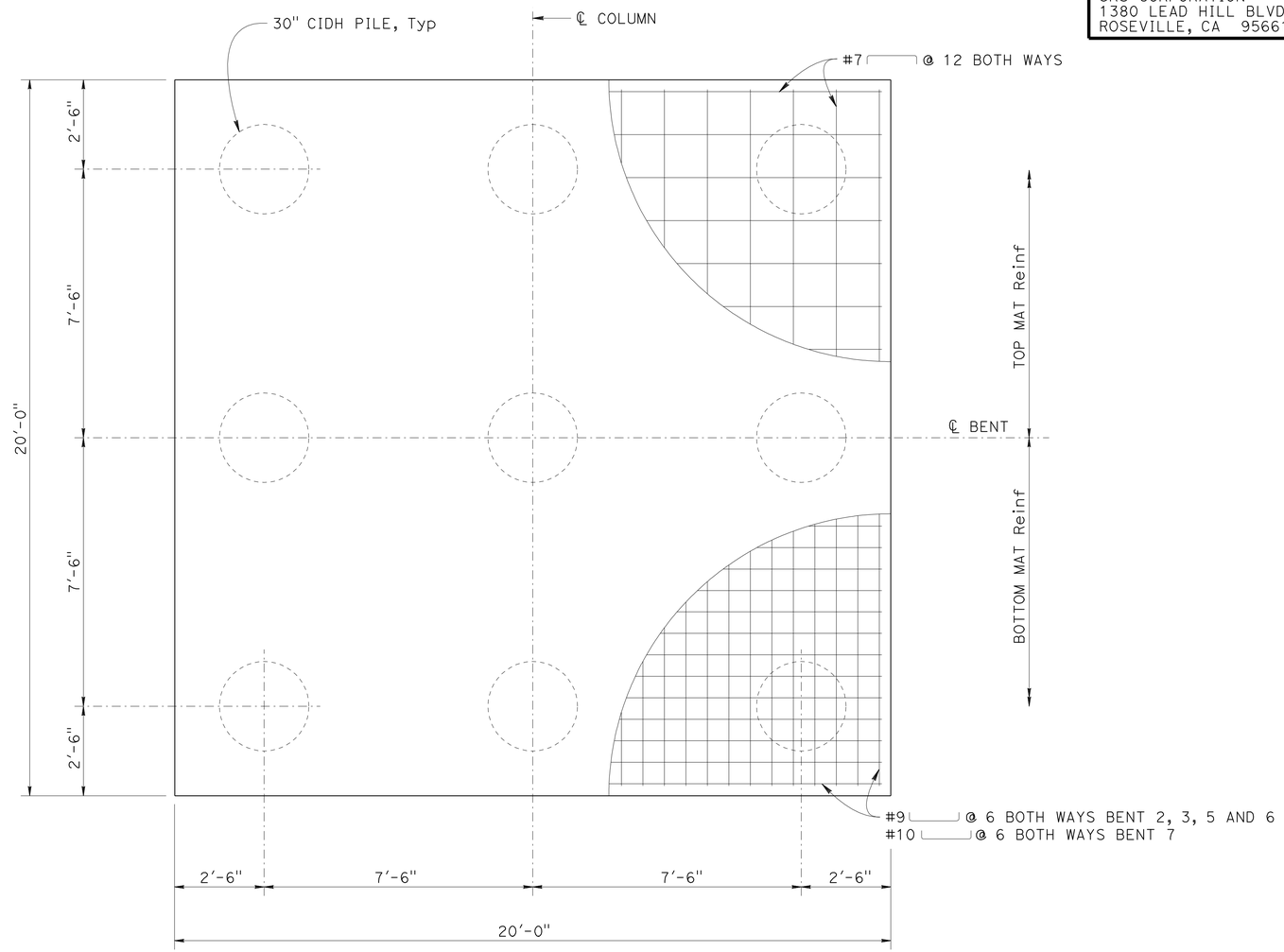

BENT 2, 3, 5, 6 AND 7 FOOTING

½" = 1'-0"

Paul Cotter
DESIGN OVERSIGHT Paul Cotter
8-8-12
SIGN OFF DATE

	BY	CHECKED
DESIGN	B. Schoppe	S. Landis
DETAILS	L. Davis	S. Landis
QUANTITIES	B. Schoppe	F. Hakemi/B. Osorio

PREPARED FOR THE STATE OF CALIFORNIA DEPARTMENT OF TRANSPORTATION

Jan Hueser
PROJECT ENGINEER

BRIDGE NO. 33-0751
POST MILES 28.69

29TH AVENUE OC (REPLACE)

BENT 2, 3, 5, 6 AND 7 FOOTING DETAILS

DESIGN DETAIL SHEET (ENGLISH) (REV.7/16/10)

ORIGINAL SCALE IN INCHES FOR REDUCED PLANS 0 1 2 3

UNIT: 0724
PROJECT NUMBER & PHASE: 04000001601 CONTRACT NO.: 04-0A7101

DISREGARD PRINTS BEARING EARLIER REVISION DATES

REVISION DATES: 9-6-11 1-10-12 3-30-12 8-7-12 SHEET 33 OF 60

FILE => 33-0751-h-fdt02.dgn

USERNAME => s124496 DATE PLOTTED => 10-APR-2013 TIME PLOTTED => 06:22

DIST	COUNTY	ROUTE	POST MILES TOTAL PROJECT	SHEET No	TOTAL SHEETS
04	Ala	880	28.4/29.2	541	789

REGISTERED CIVIL ENGINEER 6/25/12 DATE

4-8-13
PLANS APPROVAL DATE

REGISTERED PROFESSIONAL ENGINEER Jan M. Hueser No. C050215 Exp. 6/30/13 CIVIL STATE OF CALIFORNIA

The State of California or its officers or agents shall not be responsible for the accuracy or completeness of electronic copies of this plan sheet.

ALAMEDA COUNTY TRANSPORTATION COMMISSION
1333 BROADWAY
OAKLAND, CA 94612-1918

URS CORPORATION
1380 LEAD HILL BLVD, SUITE 100
ROSEVILLE, CA 95661-2997

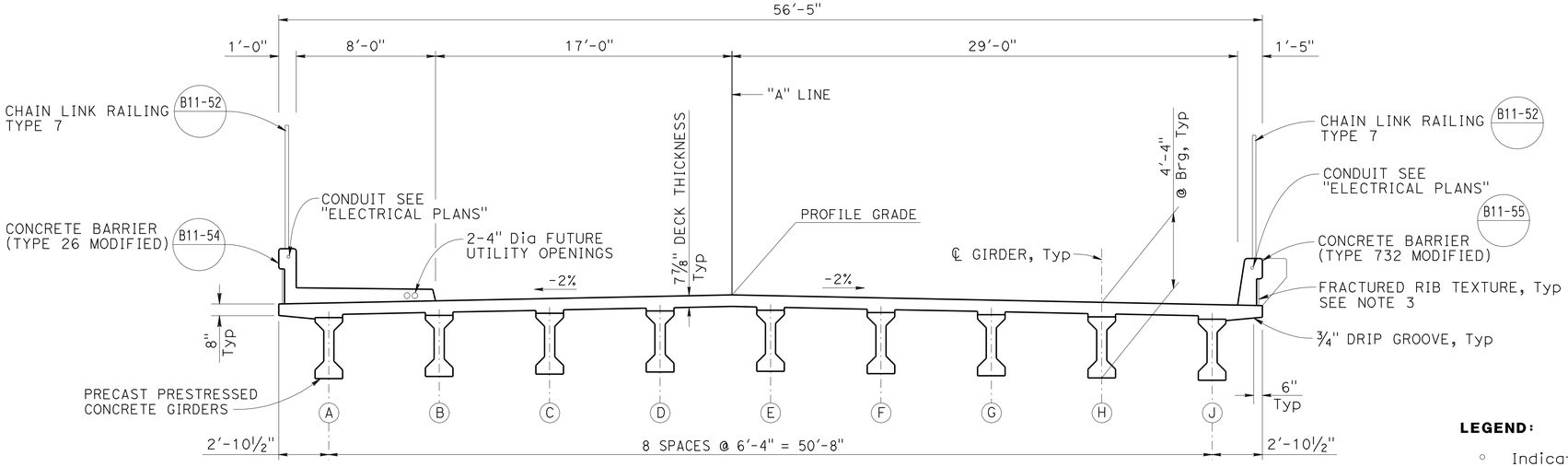

TYPICAL SECTION - SPAN 1 THRU 4, 6 AND 7

1/4" = 1'-0"

LEGEND:

◦ Indicates additional mild reinforcement

* Splices of reinforcement indicated shall be staggered service level splices. Lap splices equal to two times the standard lap splice may be substituted for service splices.

NOTES:

1. For details not shown, see "GIRDER DETAILS No. 1" AND "GIRDER DETAILS No. 2" sheets.
2. For additional reinforcement, see "DECK REINFORCEMENT DETAILS No. 1" sheet.
3. For Architectural Treatment, see "ARCHITECTURAL DETAILS" sheet.
4. For additional blister reinforcement, see "BARRIER PEDESTAL DETAILS" sheet.
5. For splice locations, see "DECK REINFORCEMENT DETAILS No. 1" and "DECK REINFORCEMENT DETAILS No. 2" sheets.

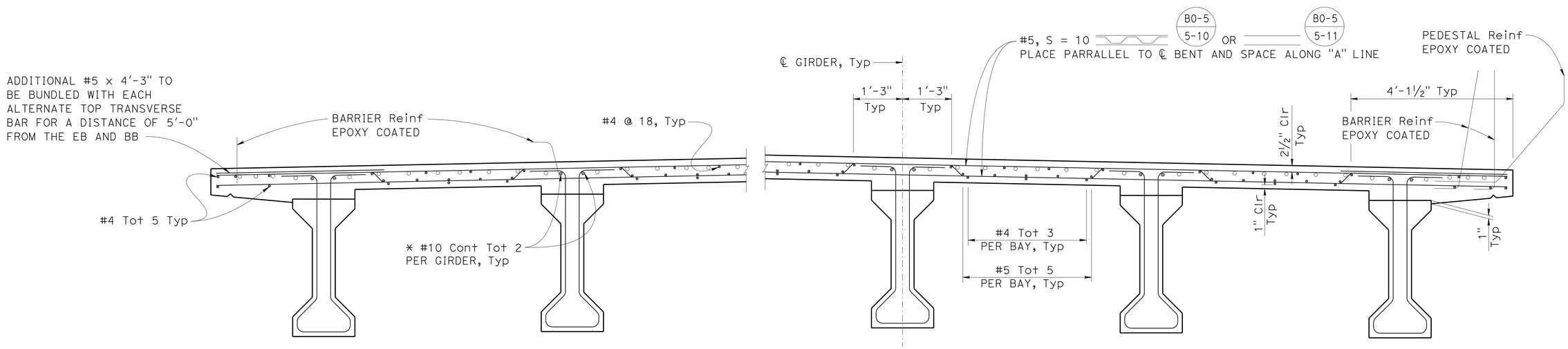

PART TYPICAL SECTION

B0-5

3/4" = 1'-0"

DESIGN OVERSIGHT Paul Cotter
8-8-12
SIGN OFF DATE

	BY	CHECKED
DESIGN	B. Schoppe	S. Landis
DETAILS	L. Davis	S. Landis
QUANTITIES	B. Schoppe	F. Hakemi/B. Osorio

PREPARED FOR THE STATE OF CALIFORNIA DEPARTMENT OF TRANSPORTATION

Jan Hueser
PROJECT ENGINEER

BRIDGE NO. 33-0751
POST MILES 28.69

29TH AVENUE OC (REPLACE)

TYPICAL SECTION No. 1

DESIGN DETAIL SHEET (ENGLISH) (REV.7/16/10)

ORIGINAL SCALE IN INCHES FOR REDUCED PLANS 0 1 2 3

UNIT: 0724
PROJECT NUMBER & PHASE: 04000001601 CONTRACT NO.: 04-0A7101

DISREGARD PRINTS BEARING EARLIER REVISION DATES

REVISION DATES 9-6-11 1-18-12 3-30-12 8-7-12

SHEET 34 OF 60

FILE => 33-0751-k-ts01.dgn

USERNAME => s124496 DATE PLOTTED => 10-APR-2013 TIME PLOTTED => 06:22

DIST	COUNTY	ROUTE	POST MILES TOTAL PROJECT	SHEET No	TOTAL SHEETS
04	Ala	880	28.4/29.2	542	789

REGISTERED CIVIL ENGINEER 6/25/12 DATE

4-8-13
PLANS APPROVAL DATE

REGISTERED PROFESSIONAL ENGINEER Jan M. Hueser No. C050215 Exp. 6/30/13 CIVIL STATE OF CALIFORNIA

The State of California or its officers or agents shall not be responsible for the accuracy or completeness of electronic copies of this plan sheet.

ALAMEDA COUNTY TRANSPORTATION COMMISSION
1333 BROADWAY
OAKLAND, CA 94612-1918

URS CORPORATION
1380 LEAD HILL BLVD, SUITE 100
ROSEVILLE, CA 95661-2997

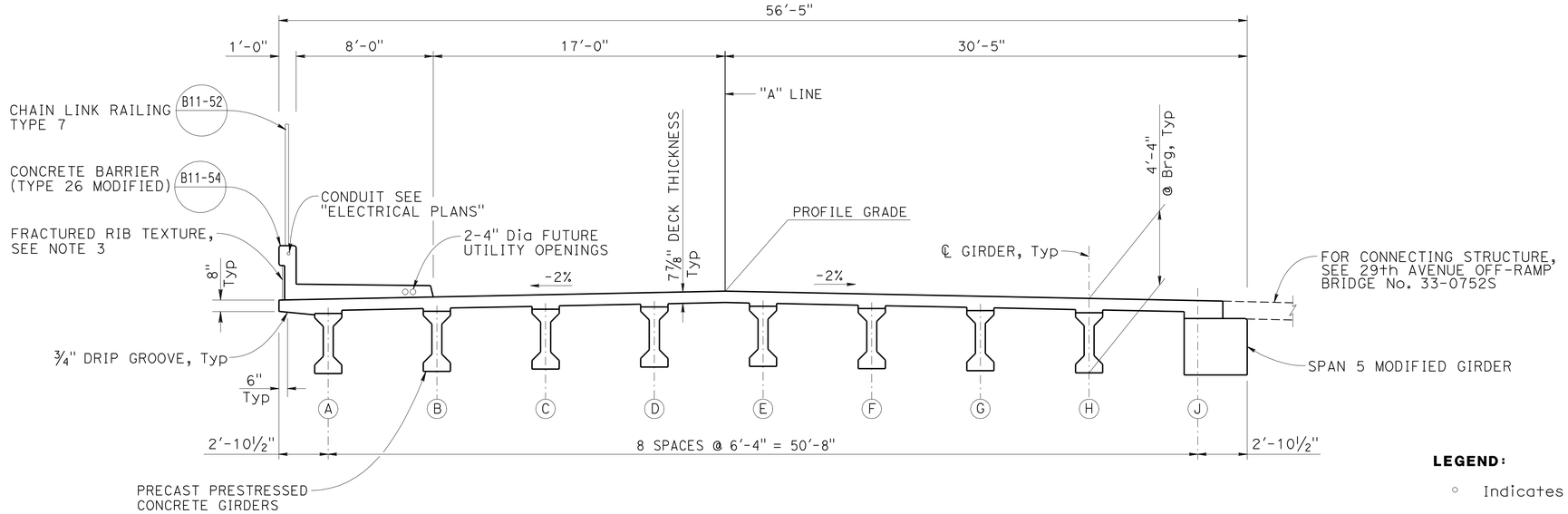

TYPICAL SECTION - SPAN 5

1/4" = 1'-0"

LEGEND:

○ Indicates additional mild reinforcement

* Splices of reinforcement indicated shall be staggered service level splices. Lap splices equal to two times the standard lap splice may be substituted for service splices.

NOTES:

1. For details not shown, see "GIRDER DETAILS No. 1" AND "GIRDER DETAILS No. 2" sheets.
2. For additional reinforcement, see "DECK REINFORCEMENT DETAILS No. 2" sheet.
3. For Architectural Treatment, see "ARCHITECTURAL DETAILS" sheet.
4. For additional blister reinforcement, see "BARRIER PEDESTAL DETAILS" sheet.
5. For splice locations, see "DECK REINFORCEMENT DETAILS No. 1" and "DECK REINFORCEMENT DETAILS No. 2" sheets.

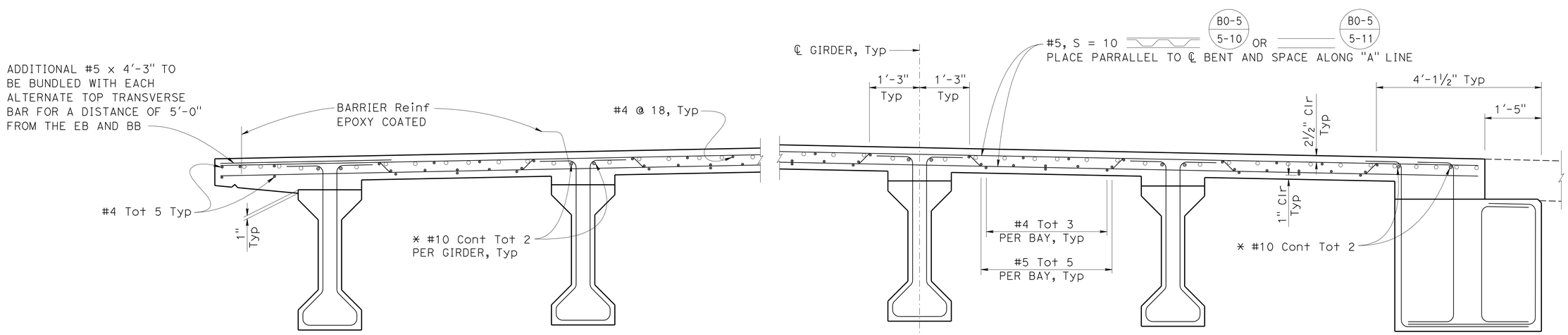

PART TYPICAL SECTION B0-5

3/4" = 1'-0"

Paul Cotter
DESIGN OVERSIGHT Paul Cotter
8-8-12
SIGN OFF DATE

	BY	CHECKED
DESIGN	B. Schoppe	S. Landis
DETAILS	L. Davis	S. Landis
QUANTITIES	B. Schoppe	F. Hakemi/B. Osorio

PREPARED FOR THE STATE OF CALIFORNIA DEPARTMENT OF TRANSPORTATION

Jan Hueser
PROJECT ENGINEER

BRIDGE NO. 33-0751
POST MILES 28.69

29TH AVENUE OC (REPLACE)
TYPICAL SECTION No. 2

DESIGN DETAIL SHEET (ENGLISH) (REV.7/16/10)

ORIGINAL SCALE IN INCHES FOR REDUCED PLANS 0 1 2 3

UNIT: 0724
PROJECT NUMBER & PHASE: 04000001601 CONTRACT NO.: 04-0A7101

DISREGARD PRINTS BEARING EARLIER REVISION DATES

REVISION DATES: 9-6-11 1-18-12 3-30-12 8-7-12 SHEET 35 OF 60

FILE => 33-0751-k-ts02.dgn

USERNAME => s124496 DATE PLOTTED => 10-APR-2013 TIME PLOTTED => 06:22

DIST	COUNTY	ROUTE	POST MILES TOTAL PROJECT	SHEET No	TOTAL SHEETS
04	Ala	880	28.4/29.2	543	789

REGISTERED CIVIL ENGINEER 6/25/12 DATE

4-8-13
PLANS APPROVAL DATE

REGISTERED PROFESSIONAL ENGINEER Jan M. Hueser No. C050215 Exp. 6/30/13 CIVIL STATE OF CALIFORNIA

The State of California or its officers or agents shall not be responsible for the accuracy or completeness of electronic copies of this plan sheet.

ALAMEDA COUNTY TRANSPORTATION COMMISSION
1333 BROADWAY
OAKLAND, CA 94612-1918

URS CORPORATION
1380 LEAD HILL BLVD, SUITE 100
ROSEVILLE, CA 95661-2997

LEGEND:

Pendant Soffit Light, see "ELECTRICAL PLANS" (ES-9E)

NOTES:

1. Place intermediate diaphragms parrallel to ℄ Bent at third points along spans.

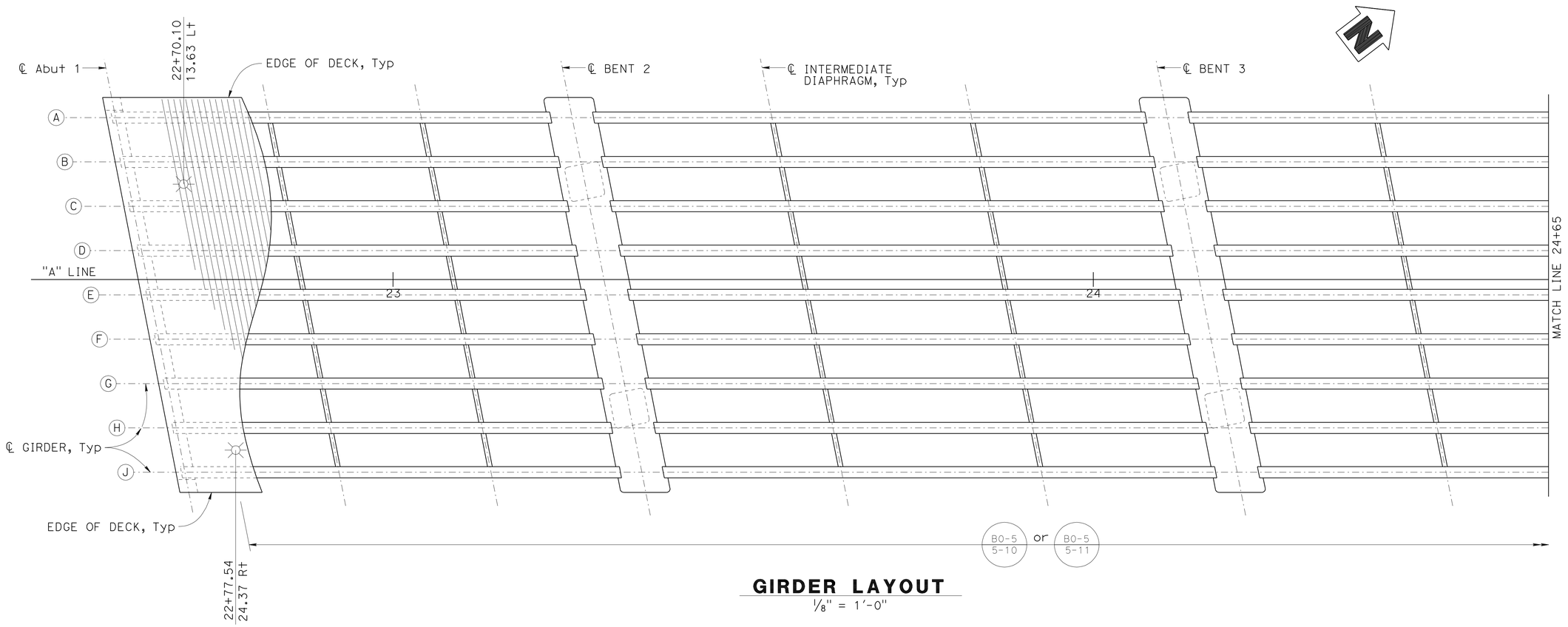

GIRDER LAYOUT

1/8" = 1'-0"

Paul Cotter DESIGN OVERSIGHT Paul Cotter 7-16-12 SIGN OFF DATE		DESIGN	BY B. Schoppe	CHECKED S. Landis	PREPARED FOR THE STATE OF CALIFORNIA DEPARTMENT OF TRANSPORTATION
		DETAILS	BY L. Davis	CHECKED S. Landis	
		QUANTITIES	BY B. Schoppe	CHECKED F. Hakemi/B. Osorio	

Jan Hueser
PROJECT ENGINEER

BRIDGE NO. 33-0751
POST MILES 28.69

29TH AVENUE OC (REPLACE)
GIRDER LAYOUT No. 1

DESIGN DETAIL SHEET (ENGLISH) (REV.7/16/10)

ORIGINAL SCALE IN INCHES FOR REDUCED PLANS 0 1 2 3

UNIT: 0724
PROJECT NUMBER & PHASE: 04000001601 CONTRACT NO.: 04-0A7101

DISREGARD PRINTS BEARING EARLIER REVISION DATES

REVISION DATES: 9-6-11 1-18-12 3-30-12 6-25-12 SHEET 36 OF 60

FILE => 33-0751-1-g_1o01.dgn

USERNAME => s124496 DATE PLOTTED => 10-APR-2013 TIME PLOTTED => 06:22

DIST	COUNTY	ROUTE	POST MILES TOTAL PROJECT	SHEET No	TOTAL SHEETS
04	Ala	880	28.4/29.2	544	789

REGISTERED CIVIL ENGINEER 6/25/12 DATE

4-8-13
PLANS APPROVAL DATE

REGISTERED PROFESSIONAL ENGINEER Jan M. Hueser No. C050215 Exp. 6/30/13 CIVIL STATE OF CALIFORNIA

The State of California or its officers or agents shall not be responsible for the accuracy or completeness of electronic copies of this plan sheet.

ALAMEDA COUNTY TRANSPORTATION COMMISSION
1333 BROADWAY
OAKLAND, CA 94612-1918

URS CORPORATION
1380 LEAD HILL BLVD, SUITE 100
ROSEVILLE, CA 95661-2997

LEGEND:

Pendant Soffit Light, see "ELECTRICAL PLANS" ES-9E

NOTES:

1. Place intermediate diaphragms parrallel to ℄ Bent at third points along typical spans and at quarter points along span 5.

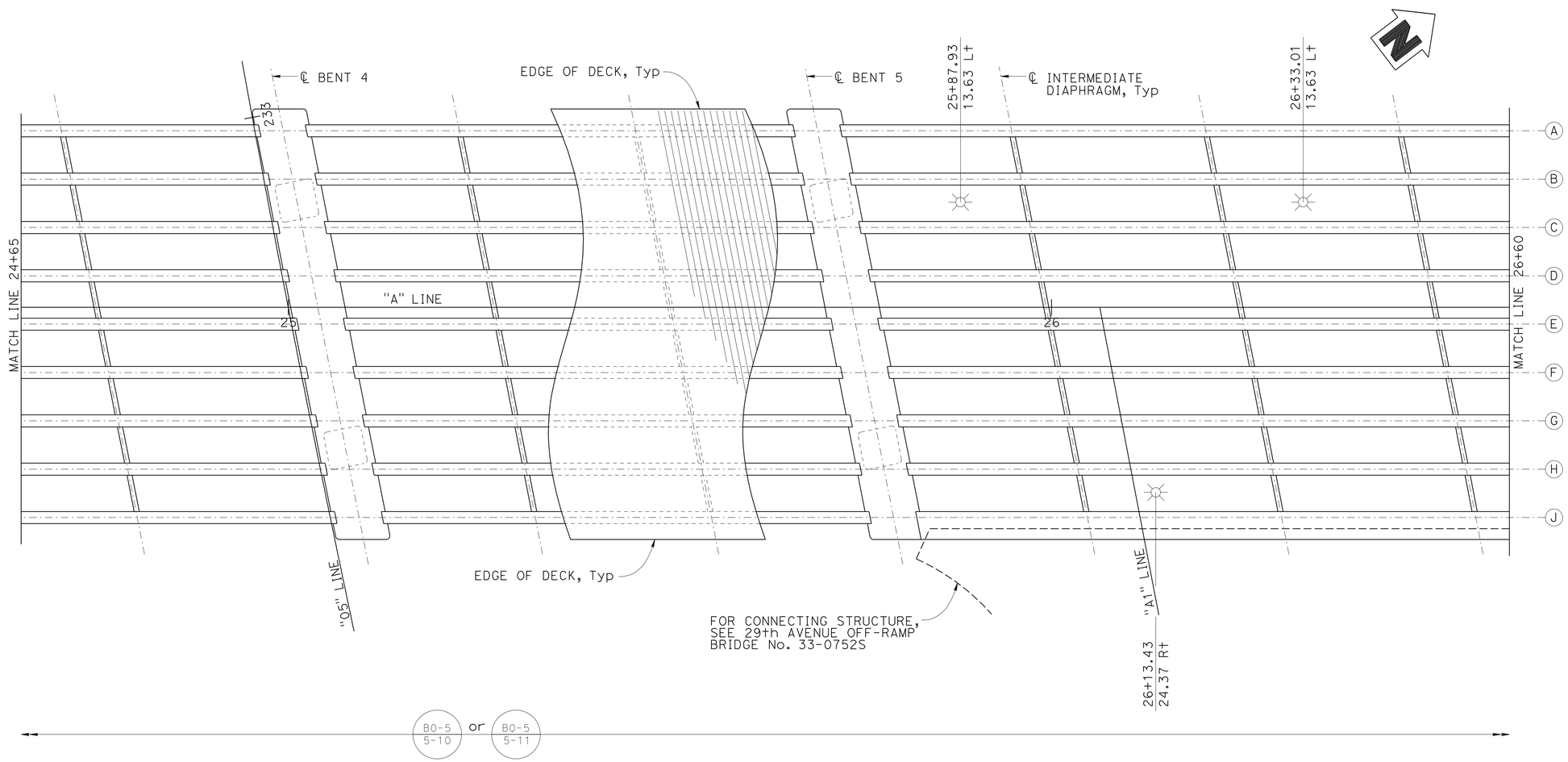

GIRDER LAYOUT

1/8" = 1'-0"

Paul Cotter DESIGN OVERSIGHT Paul Cotter 7-16-12 SIGN OFF DATE	DESIGN	BY B. Schoppe	CHECKED S. Landis	PREPARED FOR THE STATE OF CALIFORNIA DEPARTMENT OF TRANSPORTATION	Jan Hueser PROJECT ENGINEER
	DETAILS	BY L. Davis	CHECKED S. Landis		
	QUANTITIES	BY B. Schoppe	CHECKED F. Hakemi/B. Osorio		

BRIDGE NO. 33-0751
POST MILES 28.69

29TH AVENUE OC (REPLACE)
GIRDER LAYOUT No. 2

DESIGN DETAIL SHEET (ENGLISH) (REV.7/16/10)

ORIGINAL SCALE IN INCHES FOR REDUCED PLANS 0 1 2 3

UNIT: 0724
PROJECT NUMBER & PHASE: 04000001601 CONTRACT NO.: 04-0A7101

DISREGARD PRINTS BEARING EARLIER REVISION DATES

REVISION DATES: 9-6-11 1-18-12 3-30-12 6-25-12 SHEET 37 OF 60

FILE => 33-0751-1-g_1o02.dgn

USERNAME => s124496 DATE PLOTTED => 10-APR-2013 TIME PLOTTED => 06:22

DIST	COUNTY	ROUTE	POST MILES TOTAL PROJECT	SHEET No	TOTAL SHEETS
04	Ala	880	28.4/29.2	545	789

REGISTERED CIVIL ENGINEER 6/25/12 DATE

4-8-13
PLANS APPROVAL DATE

REGISTERED PROFESSIONAL ENGINEER Jan M. Hueser No. C050215 Exp. 6/30/13 CIVIL STATE OF CALIFORNIA

The State of California or its officers or agents shall not be responsible for the accuracy or completeness of electronic copies of this plan sheet.

ALAMEDA COUNTY TRANSPORTATION COMMISSION
1333 BROADWAY
OAKLAND, CA 94612-1918

URS CORPORATION
1380 LEAD HILL BLVD, SUITE 100
ROSEVILLE, CA 95661-2997

LEGEND:

Pendant Soffit Light, see "ELECTRICAL PLANS" ES-9E

NOTES:

1. Place intermediate diaphragms parrallel to ℄ Bent at third points along spans.

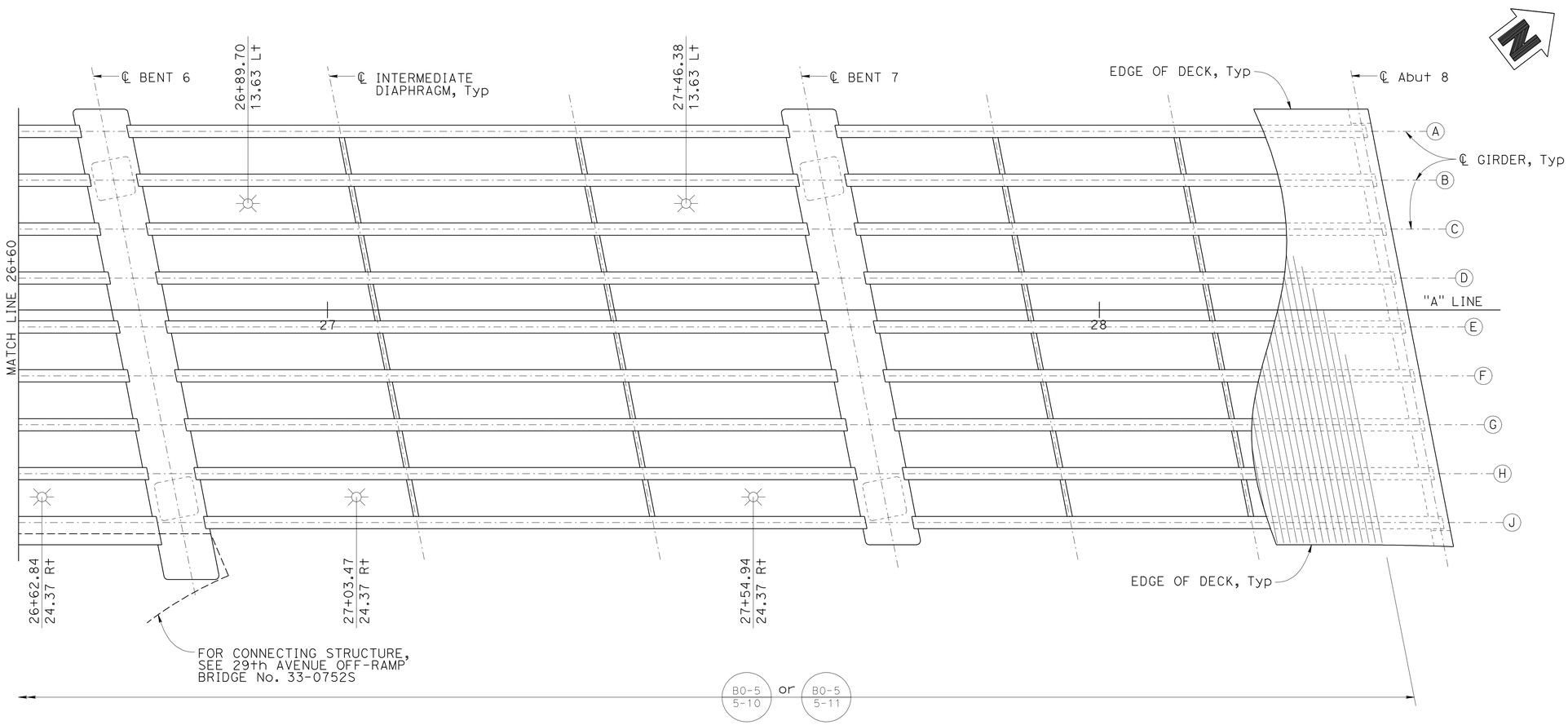

GIRDER LAYOUT

1/8" = 1'-0"

Paul Cotter DESIGN OVERSIGHT Paul Cotter 7-16-12 SIGN OFF DATE	DESIGN	BY B. Schoppe	CHECKED S. Landis	PREPARED FOR THE STATE OF CALIFORNIA DEPARTMENT OF TRANSPORTATION	Jan Hueser PROJECT ENGINEER
	DETAILS	BY L. Davis	CHECKED S. Landis		BRIDGE NO. 33-0751
	QUANTITIES	BY B. Schoppe	CHECKED F. Hakemi/B. Osorio		POST MILES 28.69

29TH AVENUE OC (REPLACE)

GIRDER LAYOUT No. 3

DESIGN DETAIL SHEET (ENGLISH) (REV.7/16/10)

ORIGINAL SCALE IN INCHES FOR REDUCED PLANS 0 1 2 3

UNIT: 0724
PROJECT NUMBER & PHASE: 04000001601 CONTRACT NO.: 04-0A7101

DISREGARD PRINTS BEARING EARLIER REVISION DATES

REVISION DATES: 9-6-11 1-18-12 3-30-12 6-25-12 SHEET 38 OF 60

FILE => 33-0751-1-g_1o03.dgn

USERNAME => s124496 DATE PLOTTED => 10-APR-2013 TIME PLOTTED => 06:22

DIST	COUNTY	ROUTE	POST MILES TOTAL PROJECT	SHEET No	TOTAL SHEETS
04	Ala	880	28.4/29.2	546	789

REGISTERED CIVIL ENGINEER 6/25/12 DATE

4-8-13
PLANS APPROVAL DATE

REGISTERED PROFESSIONAL ENGINEER Jan M. Hueser No. C050215 Exp. 6/30/13 CIVIL STATE OF CALIFORNIA

The State of California or its officers or agents shall not be responsible for the accuracy or completeness of electronic copies of this plan sheet.

ALAMEDA COUNTY TRANSPORTATION COMMISSION
1333 BROADWAY
OAKLAND, CA 94612-1918

URS CORPORATION
1380 LEAD HILL BLVD, SUITE 100
ROSEVILLE, CA 95661-2997

NOTES:

1. For post-tensioning sequence, see "BRIDGE CONSTRUCTION SEQUENCE" sheet.
2. For post-tensioning notes and stressing sequence, see "LONGITUDINAL SECTION No. 3" sheet.
3. Center of gravity of all path post-tensioning curves is parabolic between points shown.

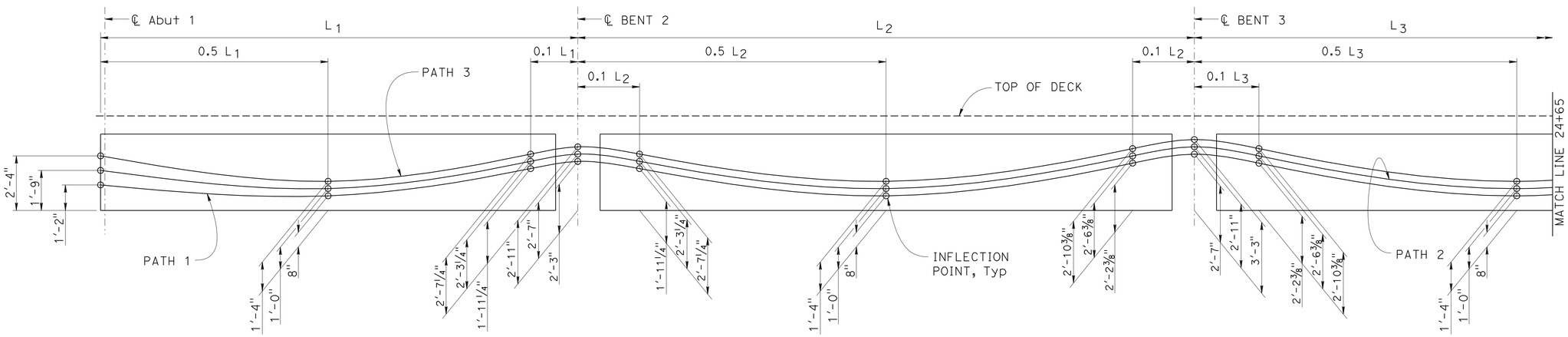

LONGITUDINAL SECTION AT GIRDER (J)

NO SCALE

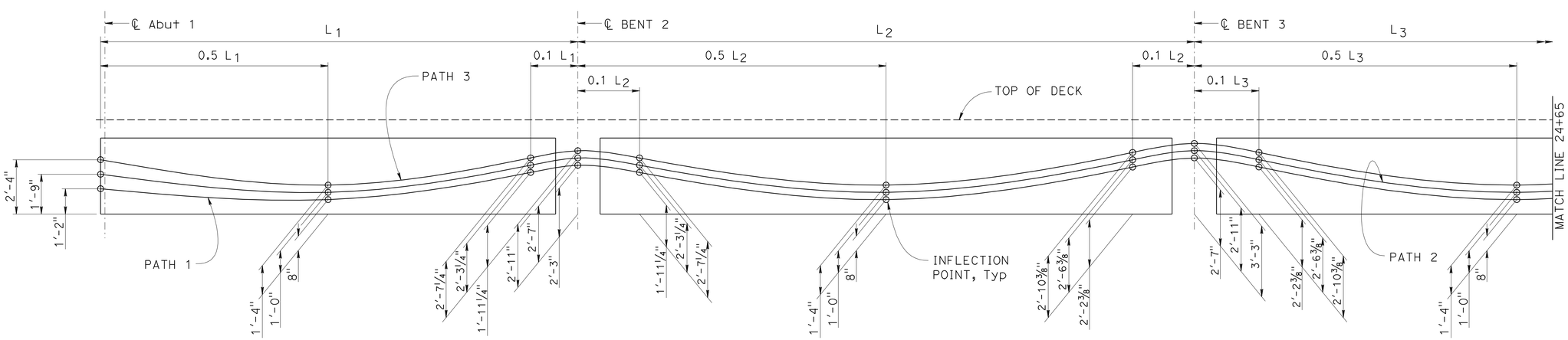

TYPICAL LONGITUDINAL SECTION

NO SCALE

DESIGN OVERSIGHT Paul Cotter	DESIGN	BY B. Schoppe	CHECKED S. Landis	PREPARED FOR THE STATE OF CALIFORNIA DEPARTMENT OF TRANSPORTATION	Jan Hueser PROJECT ENGINEER
7-16-12 SIGN OFF DATE	DETAILS	BY L. Davis	CHECKED S. Landis		BRIDGE NO. 33-0751
	QUANTITIES	BY B. Schoppe	CHECKED F. Hakemi/B. Osorio		POST MILES 28.69

29TH AVENUE OC (REPLACE)

LONGITUDINAL SECTION No. 1

DESIGN DETAIL SHEET (ENGLISH) (REV.7/16/10)

ORIGINAL SCALE IN INCHES FOR REDUCED PLANS 0 1 2 3

UNIT: 0724
PROJECT NUMBER & PHASE: 04000001601 CONTRACT NO.: 04-0A7101

DISREGARD PRINTS BEARING EARLIER REVISION DATES

REVISION DATES: 9-6-11 1-18-12 3-30-12 6-25-12 SHEET 39 OF 60

FILE => 33-0751-1-g_lsec01.dgn

USERNAME => s124496 DATE PLOTTED => 10-APR-2013 TIME PLOTTED => 06:23

DIST	COUNTY	ROUTE	POST MILES TOTAL PROJECT	SHEET No	TOTAL SHEETS
04	Ala	880	28.4/29.2	547	789

REGISTERED CIVIL ENGINEER 6/25/12 DATE

4-8-13
PLANS APPROVAL DATE

REGISTERED PROFESSIONAL ENGINEER Jan M. Hueser No. C050215 Exp. 6/30/13 CIVIL STATE OF CALIFORNIA

The State of California or its officers or agents shall not be responsible for the accuracy or completeness of electronic copies of this plan sheet.

ALAMEDA COUNTY TRANSPORTATION COMMISSION
1333 BROADWAY
OAKLAND, CA 94612-1918

URS CORPORATION
1380 LEAD HILL BLVD, SUITE 100
ROSEVILLE, CA 95661-2997

NOTES:

1. For post-tensioning sequence, see "BRIDGE CONSTRUCTION SEQUENCE" sheet.
2. For post-tensioning notes and stressing sequence, see "LONGITUDINAL SECTION No. 3" sheet.
3. Center of gravity of all path post-tensioning curves is parabolic between points shown.

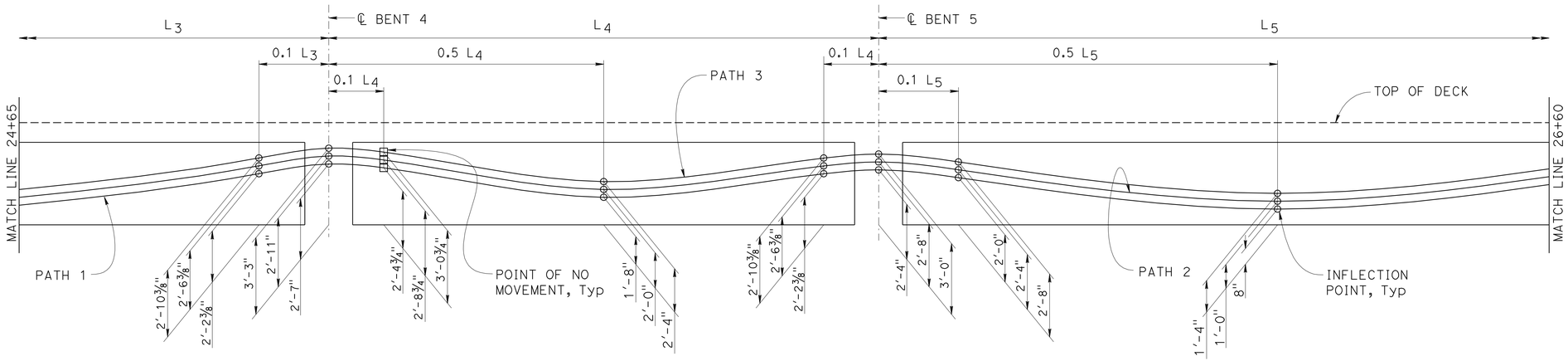

LONGITUDINAL SECTION AT GIRDER (J)

NO SCALE

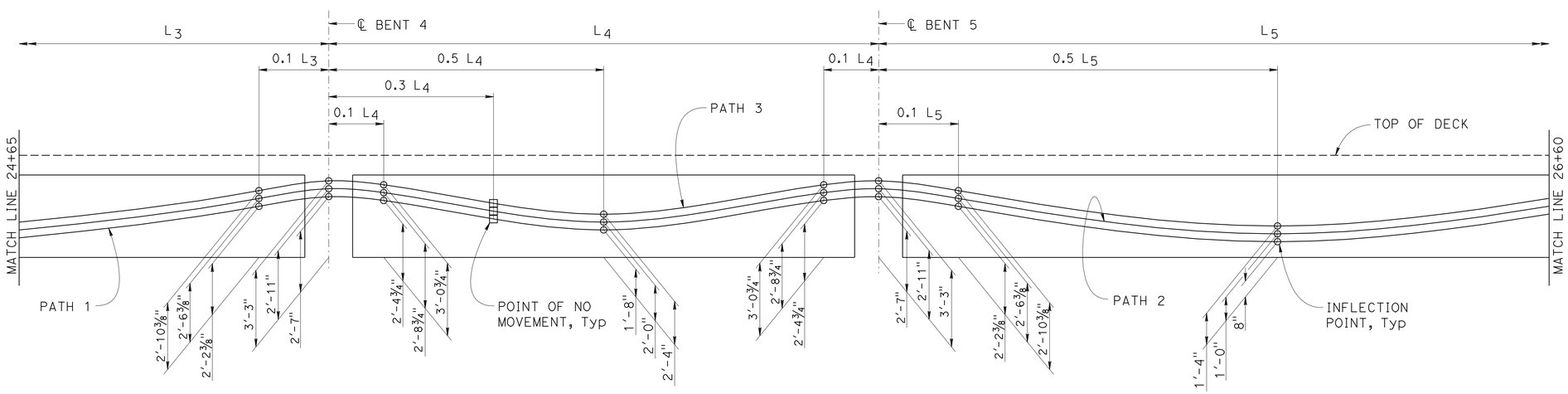

TYPICAL LONGITUDINAL SECTION

NO SCALE

Paul Cotter
DESIGN OVERSIGHT Paul Cotter
7-16-12
SIGN OFF DATE

	BY	CHECKED
DESIGN	B. Schoppe	S. Landis
DETAILS	L. Davis	S. Landis
QUANTITIES	B. Schoppe	F. Hakemi/B. Osorio

PREPARED FOR THE STATE OF CALIFORNIA DEPARTMENT OF TRANSPORTATION

Jan Hueser
PROJECT ENGINEER

BRIDGE NO. 33-0751
POST MILES 28.69

29TH AVENUE OC (REPLACE)
LONGITUDINAL SECTION No. 2

DESIGN DETAIL SHEET (ENGLISH) (REV.7/16/10)

ORIGINAL SCALE IN INCHES FOR REDUCED PLANS 0 1 2 3

UNIT: 0724
PROJECT NUMBER & PHASE: 04000001601 CONTRACT NO.: 04-0A7101

DISREGARD PRINTS BEARING EARLIER REVISION DATES

REVISION DATES: 9-6-11 1-18-12 3-30-12 6-25-12 SHEET 40 OF 60

FILE => 33-0751-1-g_lsec02.dgn

USERNAME => s124436 DATE PLOTTED => 10-APR-2013 TIME PLOTTED => 06:23

DIST	COUNTY	ROUTE	POST MILES TOTAL PROJECT	SHEET No	TOTAL SHEETS
04	Ala	880	28.4/29.2	548	789

REGISTERED CIVIL ENGINEER 6/25/12 DATE

4-8-13
PLANS APPROVAL DATE

REGISTERED PROFESSIONAL ENGINEER Jan M. Hueser No. C050215 Exp. 6/30/13 CIVIL STATE OF CALIFORNIA

The State of California or its officers or agents shall not be responsible for the accuracy or completeness of electronic copies of this plan sheet.

ALAMEDA COUNTY TRANSPORTATION COMMISSION
1333 BROADWAY
OAKLAND, CA 94612-1918

URS CORPORATION
1380 LEAD HILL BLVD, SUITE 100
ROSEVILLE, CA 95661-2997

PATH 1, 2 AND 3 POST-TENSIONING NOTES

270 ksi Low Relaxation Strand

	PATH 1	PATH 2	PATH 3
Pjack =	307.6 kips per girder	= 307.6 kips per girder	= 307.60 kips per girder

Anchor set = 0.375" Total No. of Girders = 9

Concrete: f'c = 5.5 ksi @ 28 days
(CIP bent caps) f'ci = 4.5 ksi @ time of stressing

Concrete: f'c = 5.5 ksi @ 28 days
(CIP deck) f'ci = 4.5 ksi @ time of stressing

Contractor shall submit elongation calculations based on initial stress at

☒ = 0.74 times jacking stress for PATH 1, 2 & 3 Typ Girder

☒ = 0.75 times jacking stress for PATH 1, 2 & 3 Girder (J)

Two end stressing shall be performed for each path. Post-tensioning ducts are 3⅛" Dia Max with 1" Min Clr in between.

STRESSING SEQUENCE:

For each post-tensioning sequence no more than ½ of the post-tensioning force in any girder may be applied before an equal force is applied in the adjacent girders. The maximum force variation between girders shall also not exceed the post-tensioning force of the largest tendon used in all girders. At no time during stressing operations will more than 1/6 of the total prestressing force be applied eccentrically about the centerline of each individual sequence of the structure. (Does not apply to Path 1 post-tensioning)

Bar reinforcement interfering with the prestressing ducts shall be adjusted, as approved by the Engineer.

The Contractor shall submit working drawings to the Engineer for approval. The working drawings shall include any additions or rearrangement of reinforcing steel from that shown on the plans. Offsets at sufficient points along the path shall be shown on the working drawings to place ducts accurately.

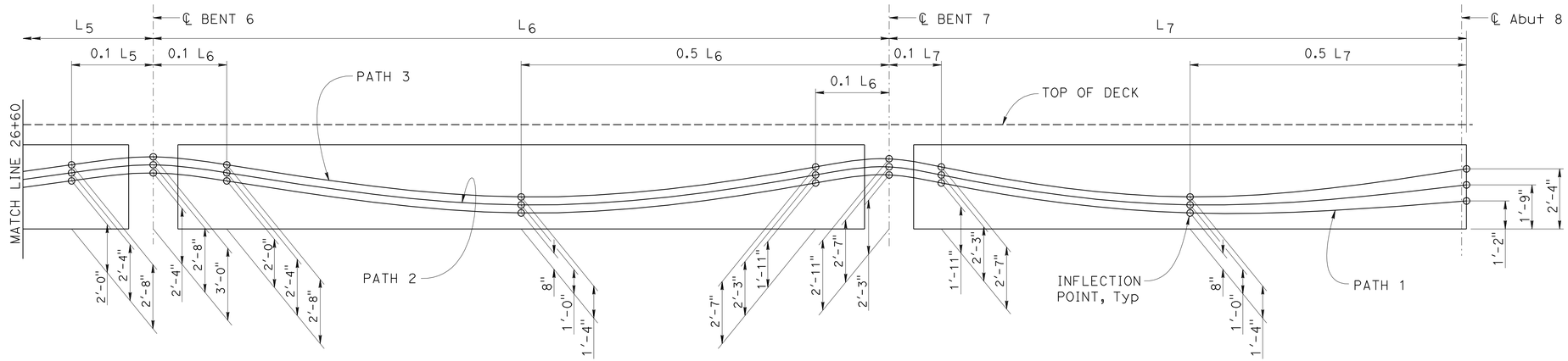

LONGITUDINAL SECTION AT GIRDER (J)

NO SCALE

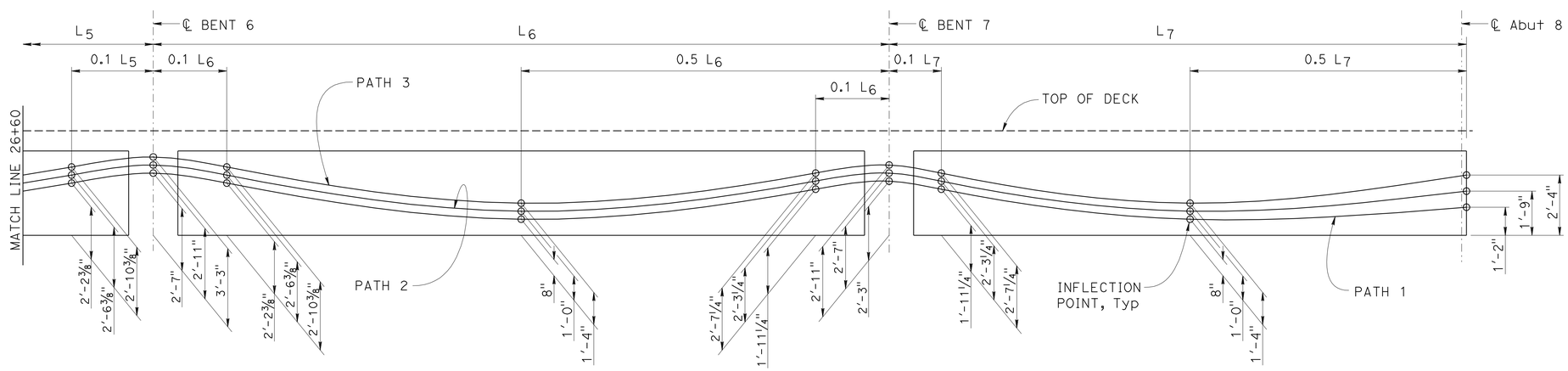

TYPICAL LONGITUDINAL SECTION

NO SCALE

NOTES:

1. For post-tensioning sequence, see "BRIDGE CONSTRUCTION SEQUENCE" sheet.
2. Center of gravity of all path post-tensioning curves is parabolic between points shown.

Paul Cotter
DESIGN OVERSIGHT Paul Cotter
7-16-12
SIGN OFF DATE

	BY	CHECKED
DESIGN	B. Schoppe	S. Landis
DETAILS	L. Davis	S. Landis
QUANTITIES	B. Schoppe	F. Hakemi/B. Osorio

PREPARED FOR THE STATE OF CALIFORNIA DEPARTMENT OF TRANSPORTATION

Jan Hueser
PROJECT ENGINEER

BRIDGE NO. 33-0751
POST MILES 28.69

29TH AVENUE OC (REPLACE)
LONGITUDINAL SECTION No. 3

DESIGN DETAIL SHEET (ENGLISH) (REV.7/16/10)

ORIGINAL SCALE IN INCHES FOR REDUCED PLANS 0 1 2 3

UNIT: 0724
PROJECT NUMBER & PHASE: 04000001601 CONTRACT NO.: 04-0A7101

DISREGARD PRINTS BEARING EARLIER REVISION DATES

REVISION DATES: 9-6-11 1-18-12 3-30-12 6-25-12

SHEET 41 OF 60

FILE => 33-0751-1-g_lsec03.dgn

USERNAME => s124496 DATE PLOTTED => 10-APR-2013 TIME PLOTTED => 06:23

DIST	COUNTY	ROUTE	POST MILES TOTAL PROJECT	SHEET No	TOTAL SHEETS
04	Ala	880	28.4/29.2	549	789

REGISTERED CIVIL ENGINEER 6/25/12 DATE

4-8-13
PLANS APPROVAL DATE

REGISTERED PROFESSIONAL ENGINEER Jan M. Hueser No. C050215 Exp. 6/30/13 CIVIL STATE OF CALIFORNIA

The State of California or its officers or agents shall not be responsible for the accuracy or completeness of electronic copies of this plan sheet.

ALAMEDA COUNTY TRANSPORTATION COMMISSION
1333 BROADWAY
OAKLAND, CA 94612-1918

URS CORPORATION
1380 LEAD HILL BLVD, SUITE 100
ROSEVILLE, CA 95661-2997

LOCATION	GIRDER LENGTH	NUMBER OF STRANDS	JACKING FORCE (P) IN KIPS	CONCRETE STRENGTH (Ksi)		MIDSPAN DEADLOAD DEFLECTION (INCHES)		
				f'_{ci}	f'_c	DECK	INTERMEDIATE Diaph	BARRIER
SPAN 1	62'-8"	15	659.10 (43.94 kips/strand)	5.5	7.5	0.17	0.04	0.02
SPAN 2	78'-10⅝"	17	746.98 (43.94 kips/strand)	5.5	7.5	0.23	0.08	0.03
SPAN 3	82'-7⅝"	17	746.98 (43.94 kips/strand)	5.5	7.5	0.27	0.09	0.04
SPAN 4	63'-10⅝"	15	659.10 (43.94 kips/strand)	5.5	7.5	0.11	0.04	0.00
SPAN 5	95'-7⅝"	20	878.80 (43.94 kips/strand)	5.5	7.5	0.48	0.19	0.07
SPAN 5 MODIFIED	95'-7⅝"	50	2197.00 (43.94 kips/strand)	5.5	7.5	0.24	0.08	N/A
SPAN 6	85'-7⅝"	17	746.98 (43.94 kips/strand)	5.5	7.5	0.31	0.10	0.03
SPAN 7	68'-8⅛"	15	659.10 (43.94 kips/strand)	5.5	7.5	0.25	0.05	0.03

PRESTRESSING NOTES

JACKING FORCE (P): The jacking force is required at the point of control along the span. The jacking force does not include any fabrication specific losses.

The maximum tensile stress in the prestressing steel upon release shall not exceed 75% of the specified minimum ultimate tensile strength of the prestressing steel.

The maximum temporary tensile stress (jacking stress) in the prestressing steel shall not exceed 80% of the specified minimum ultimate tensile strength of the prestressing steel.

CONCRETE STRENGTH: f'_{ci} is at time of initial stressing
f'_c is at 28 days

DEFLECTION COMPONENTS: Informational - to be used in setting screed line elevations.

Prestressing strand shall be 0.6" Dia 270 ksi low relaxation.

NOTES:

1. Contractor shall verify all dimensions prior to fabrication.
2. Reinf may be bent or adjusted to clear ducts, subject to the approval of the Engineer.
3. For information not shown, see "GIRDER DETAILS No. 2" sheet.
4. Girders to be cast such that a level surface is provided at bearing pads.
5. For "SECTION A-A" thru "SECTION E-E" see "GIRDER DETAILS No. 2" sheet.
6. Adjust vertical spacing of formed holes as necessary to clear Reinf and post-tension anchorage system, see "GIRDER DETAILS No. 2" sheet.
7. All splices shall be service level splices.

LEGEND:

- • Bonded Strands
- ◉ Bonded Strands extended (Typ both ends)
- ▲ Debonded Strands at girder ends

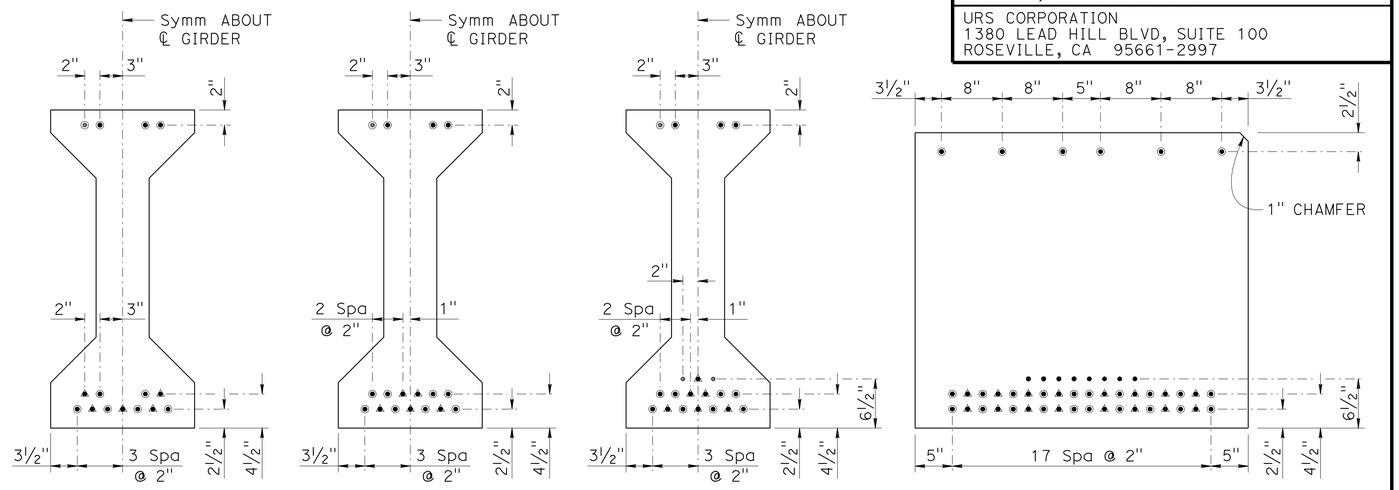

SPAN 1, 4 & 7 | SPAN 2, 3 & 6 | SPAN 5 | SPAN 5 MODIFIED GIRDER

STRAND LAYOUT

NO SCALE

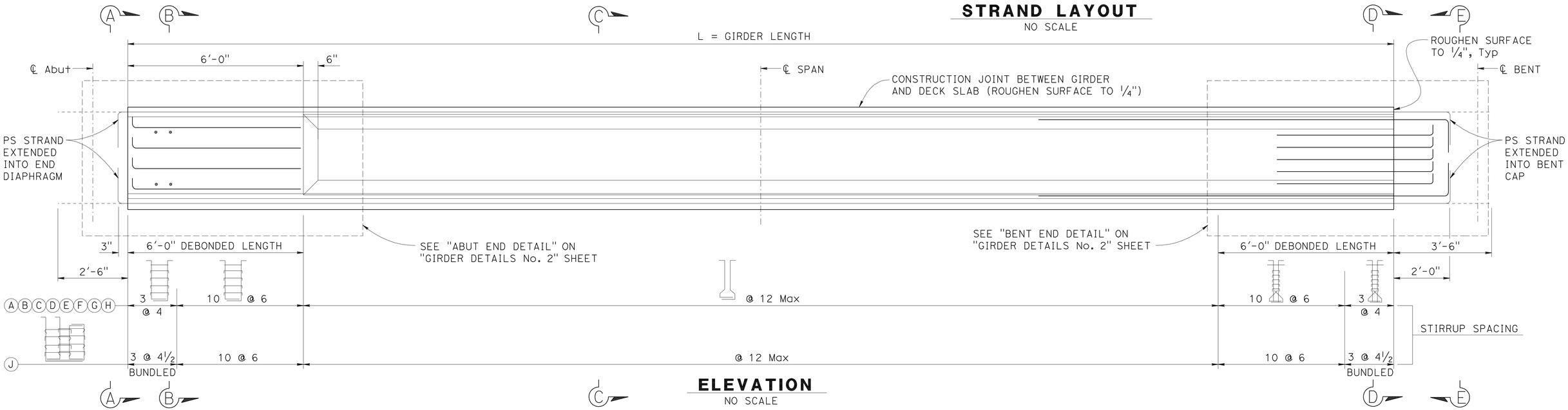

ELEVATION

NO SCALE

DESIGN	BY B. Schoppe	CHECKED S. Landis	
DETAILS	BY L. Davis	CHECKED S. Landis	
QUANTITIES	BY B. Schoppe	CHECKED F. Hakemi/B. Osorio	

DESIGN OVERSIGHT Paul Cotter
7-16-12
SIGN OFF DATE

PREPARED FOR THE STATE OF CALIFORNIA DEPARTMENT OF TRANSPORTATION

Jan Hueser
PROJECT ENGINEER

BRIDGE NO. 33-0751
POST MILES 28.69

29TH AVENUE OC (REPLACE)
GIRDER DETAILS No. 1

DESIGN DETAIL SHEET (ENGLISH) (REV.7/16/10)

ORIGINAL SCALE IN INCHES FOR REDUCED PLANS 0 1 2 3

UNIT: 0724
PROJECT NUMBER & PHASE: 04000001601 CONTRACT NO.: 04-0A7101

DISREGARD PRINTS BEARING EARLIER REVISION DATES

REVISION DATES: 9-6-11 1-18-12 3-30-12 6-25-12 | SHEET 42 | OF 60

FILE => 33-0751-1-gdt01.dgn

USERNAME => s124436 DATE PLOTTED => 10-APR-2013 TIME PLOTTED => 06:23

DIST	COUNTY	ROUTE	POST MILES TOTAL PROJECT	SHEET No	TOTAL SHEETS
04	Ala	880	28.4/29.2	550	789

REGISTERED CIVIL ENGINEER — DATE 6/25/12

4-8-13
PLANS APPROVAL DATE

REGISTERED PROFESSIONAL ENGINEER — Jan M. Hueser No. C050215 Exp. 6/30/13 CIVIL — STATE OF CALIFORNIA

The State of California or its officers or agents shall not be responsible for the accuracy or completeness of electronic copies of this plan sheet.

ALAMEDA COUNTY TRANSPORTATION COMMISSION
1333 BROADWAY
OAKLAND, CA 94612-1918

URS CORPORATION
1380 LEAD HILL BLVD, SUITE 100
ROSEVILLE, CA 95661-2997

NOTES:

1. Contractor shall verify all dimensions prior to fabrication.
2. Reinf may be bent or adjusted to clear ducts, subject to approval by Engineer.
3. For location of sections, see "GIRDER DETAILS No. 1" sheet.
4. Girders to be cast such that a level surface is provided at bearing pads.
5. See "ELEVATION" on "GIRDER DETAILS No. 1" for stirrup spacing.
6. P/S strand not shown.

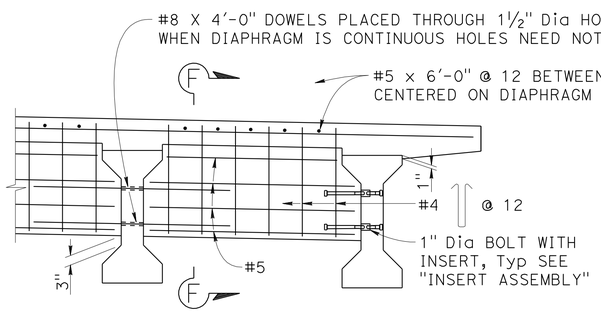

INTERMEDIATE DIAPHRAGM
½" = 1'-0"

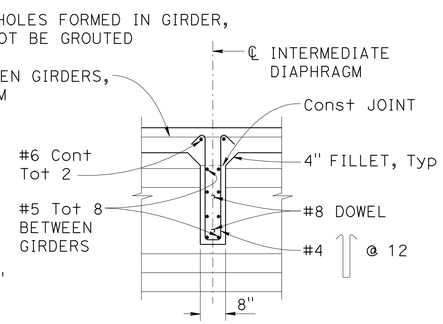

SECTION F-F
½" = 1'-0"

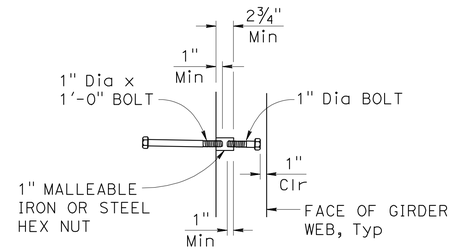

INSERT ASSEMBLY
NO SCALE

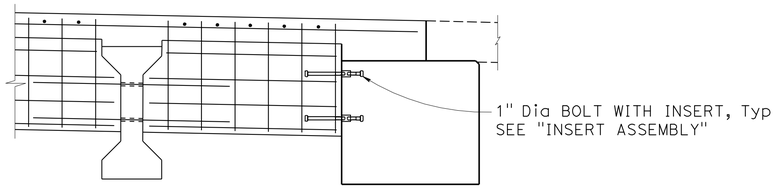

SPAN 5 INTERMEDIATE DIAPHRAGM
½" = 1'-0"

NOTE: For information not shown, see "INTERMEDIATE DIAPHRAGM"

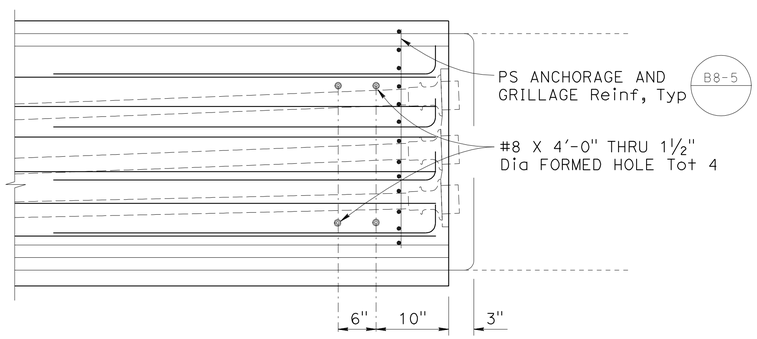

ABUT END DETAIL
1" = 1'-0"

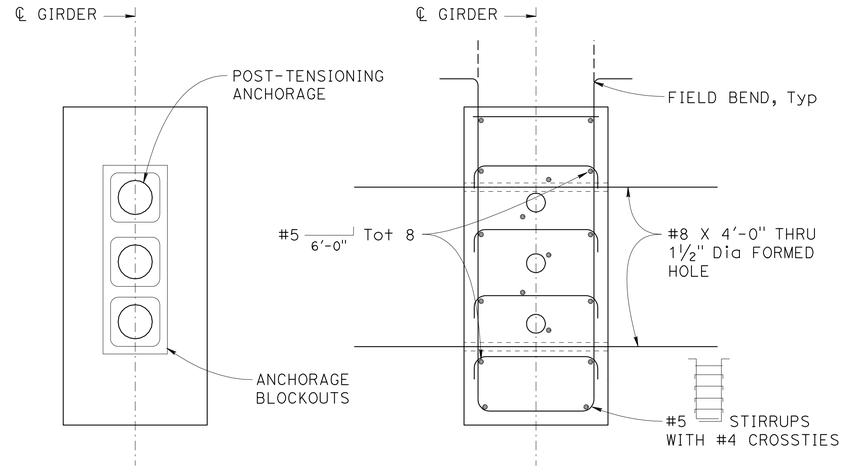

SECTION A-A
NO SCALE

SECTION B-B
NO SCALE

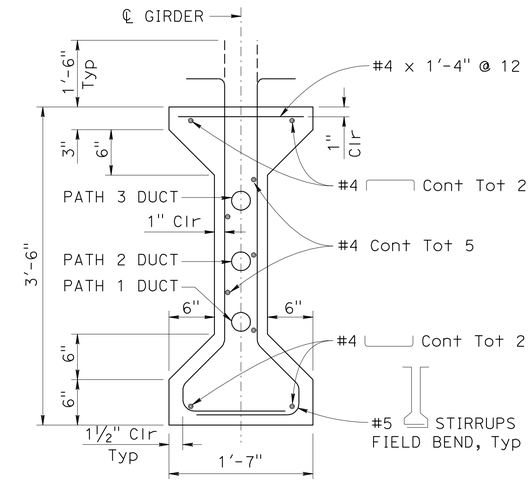

SECTION C-C
NO SCALE

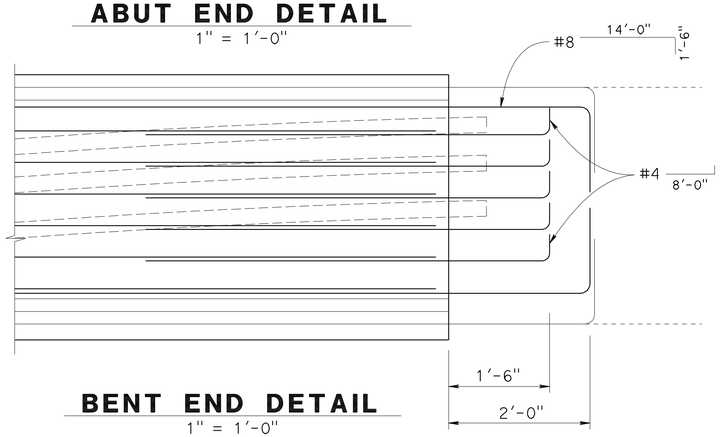

BENT END DETAIL
1" = 1'-0"

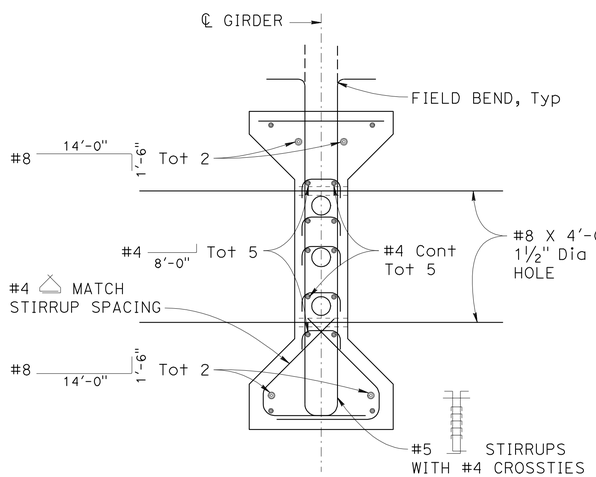

SECTION D-D
NO SCALE

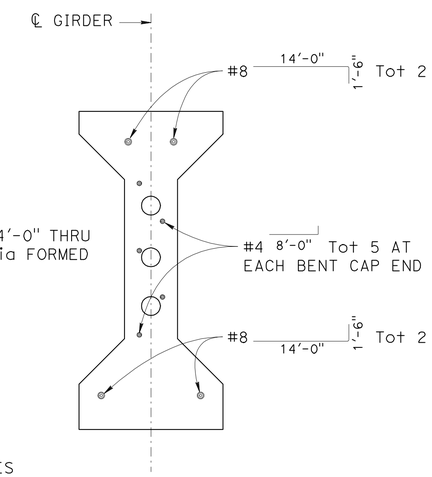

SECTION E-E
NO SCALE

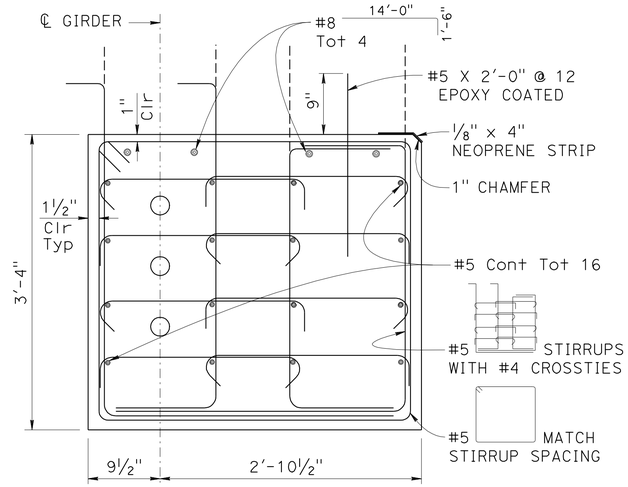

SPAN 5 MODIFIED GIRDER
NO SCALE

DESIGN OVERSIGHT — Paul Cotter
7-16-12
SIGN OFF DATE

	BY	CHECKED
DESIGN	B. Schoppe	S. Landis
DETAILS	L. Davis	S. Landis
QUANTITIES	B. Schoppe	F. Hakemi/B. Osorio

PREPARED FOR THE STATE OF CALIFORNIA DEPARTMENT OF TRANSPORTATION

Jan Hueser
PROJECT ENGINEER

BRIDGE NO. 33-0751
POST MILES 28.69

29TH AVENUE OC (REPLACE)
GIRDER DETAILS No. 2

DESIGN DETAIL SHEET (ENGLISH) (REV.7/16/10)

ORIGINAL SCALE IN INCHES FOR REDUCED PLANS 0 1 2 3

UNIT: 0724
PROJECT NUMBER & PHASE: 04000001601
CONTRACT NO.: 04-0A7101

DISREGARD PRINTS BEARING EARLIER REVISION DATES

REVISION DATES: 9-6-11 1-18-12 3-30-12 6-25-12 — SHEET 43 OF 60

FILE => 33-0751-1-gdt02.dgn

USERNAME => s124496 DATE PLOTTED => 10-APR-2013 TIME PLOTTED => 06:23

DIST	COUNTY	ROUTE	POST MILES TOTAL PROJECT	SHEET No	TOTAL SHEETS
04	Ala	880	28.4/29.2	551	789

REGISTERED CIVIL ENGINEER — DATE 6/25/12

4-8-13
PLANS APPROVAL DATE

REGISTERED PROFESSIONAL ENGINEER — Jan M. Hueser No. C050215 Exp. 6/30/13 CIVIL — STATE OF CALIFORNIA

The State of California or its officers or agents shall not be responsible for the accuracy or completeness of electronic copies of this plan sheet.

ALAMEDA COUNTY TRANSPORTATION COMMISSION
1333 BROADWAY
OAKLAND, CA 94612-1918

URS CORPORATION
1380 LEAD HILL BLVD, SUITE 100
ROSEVILLE, CA 95661-2997

NOTES:

1. For "INSERT ASSEMBLY" see "GIRDER DETAILS No. 2" sheet.
2. For joint details, see "JOINT SEAL ASSEMBLY MAXIMUM MOVEMENT RATING = 4"" sheet.

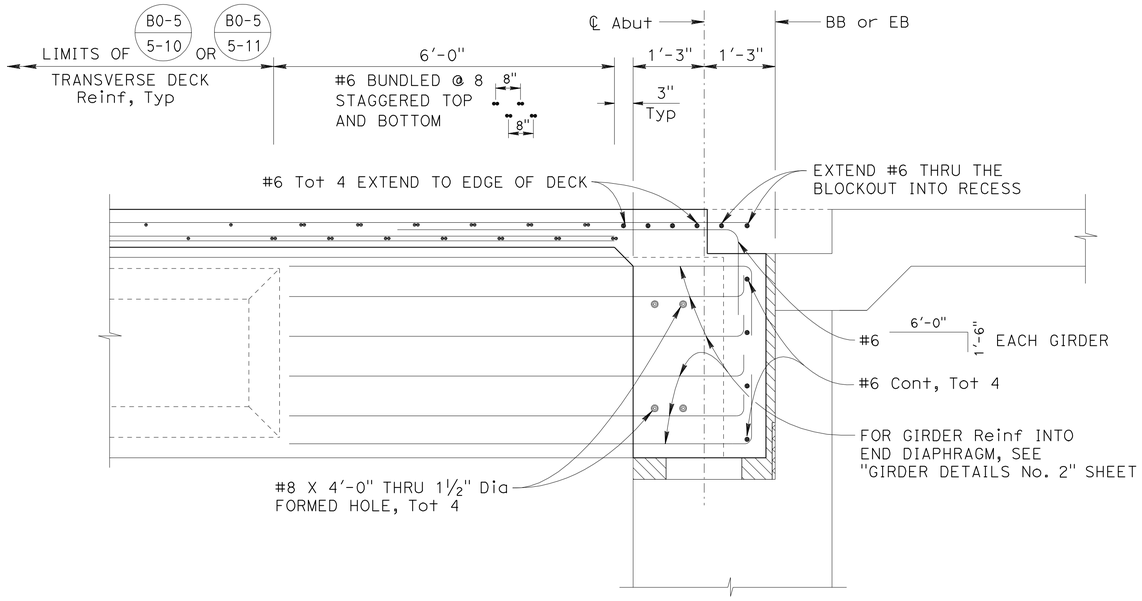

SECTION A-A

¾" = 1'-0"

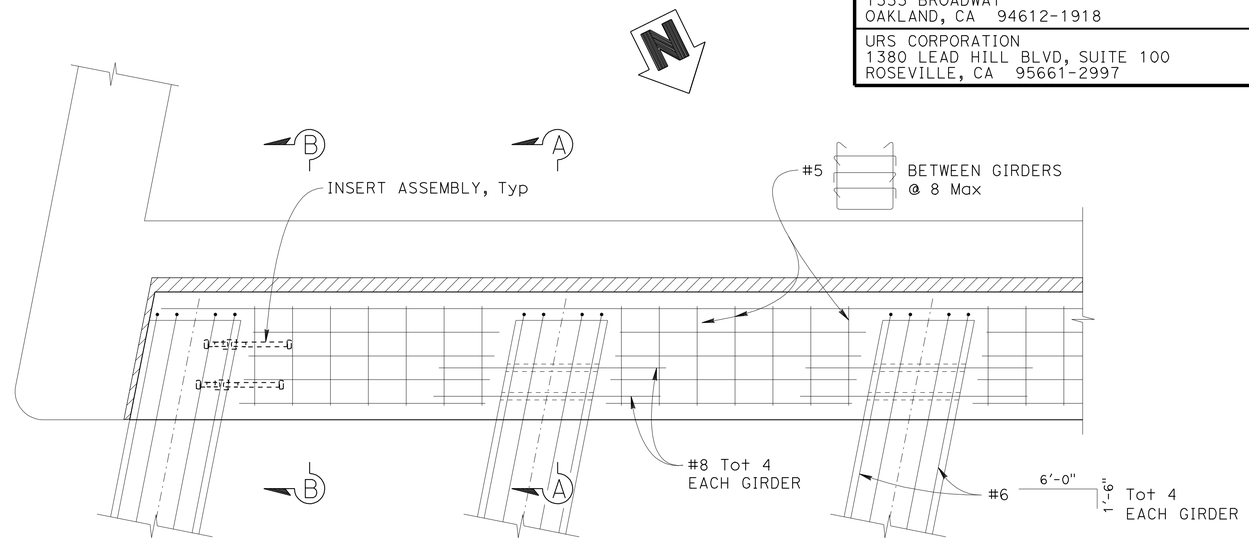

PARTIAL PLAN

¾" = 1'-0"

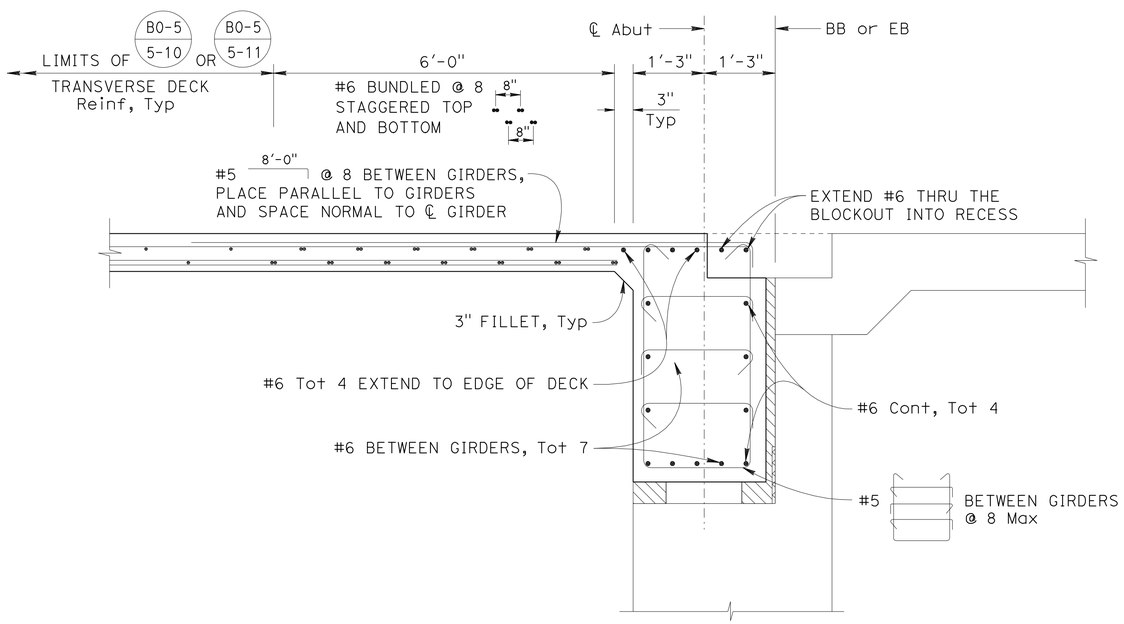

SECTION B-B

¾" = 1'-0"

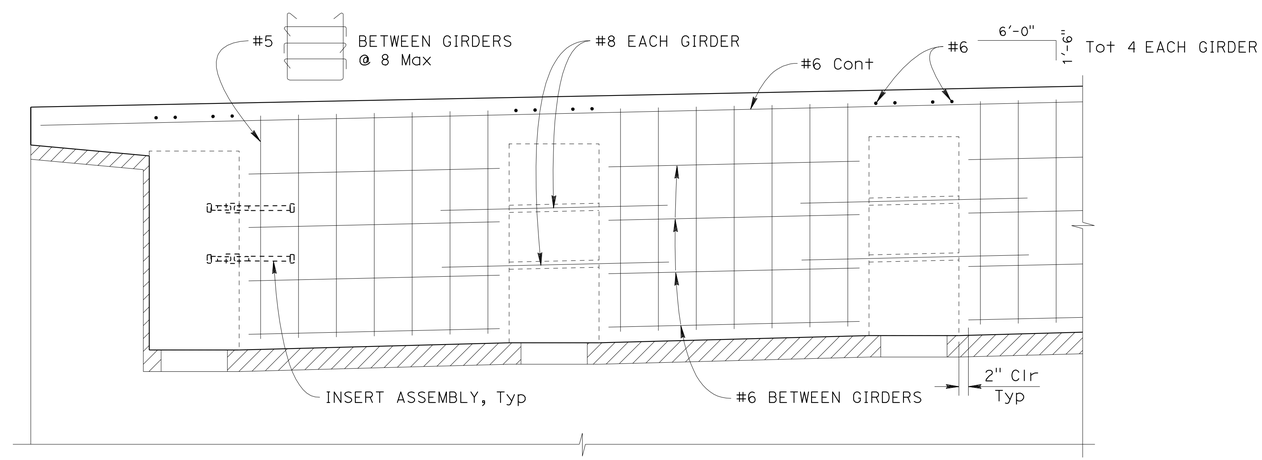

PARTIAL ELEVATION

¾" = 1'-0"

DESIGN OVERSIGHT: Paul Cotter	DESIGN	BY B. Schoppe	CHECKED S. Landis
7-16-12 SIGN OFF DATE	DETAILS	BY J. Harold	CHECKED S. Landis
	QUANTITIES	BY B. Schoppe	CHECKED F. Hakemi/B. Osorio

PREPARED FOR THE STATE OF CALIFORNIA DEPARTMENT OF TRANSPORTATION

Jan Hueser — PROJECT ENGINEER

BRIDGE NO. 33-0751
POST MILES 28.69

29TH AVENUE OC (REPLACE)
END DIAPHRAGM DETAILS

DESIGN DETAIL SHEET (ENGLISH) (REV.7/16/10)

ORIGINAL SCALE IN INCHES FOR REDUCED PLANS 0 1 2 3

UNIT: 0724
PROJECT NUMBER & PHASE: 04000001601 CONTRACT NO.: 04-0A7101

DISREGARD PRINTS BEARING EARLIER REVISION DATES → REVISION DATES ~~9-6-11~~ ~~1-30-12~~ ~~3-30-12~~ 6-25-12 SHEET 44 OF 60

FILE => 33-0751-1-geddt01.dgn

USERNAME => s124496 DATE PLOTTED => 10-APR-2013 TIME PLOTTED => 06:23

DIST	COUNTY	ROUTE	POST MILES TOTAL PROJECT	SHEET No	TOTAL SHEETS
04	Ala	880	28.4/29.2	552	789

REGISTERED CIVIL ENGINEER 6/25/12 DATE

4-8-13
PLANS APPROVAL DATE

REGISTERED PROFESSIONAL ENGINEER Jan M. Hueser No. C050215 Exp. 6/30/13 CIVIL STATE OF CALIFORNIA

The State of California or its officers or agents shall not be responsible for the accuracy or completeness of electronic copies of this plan sheet.

ALAMEDA COUNTY TRANSPORTATION COMMISSION
1333 BROADWAY
OAKLAND, CA 94612-1918

URS CORPORATION
1380 LEAD HILL BLVD, SUITE 100
ROSEVILLE, CA 95661-2997

NOTES:

1. Place all reinforcement parallel to "A" Line.
2. Reinforcement may be spaced as required with approval of the Engineer.

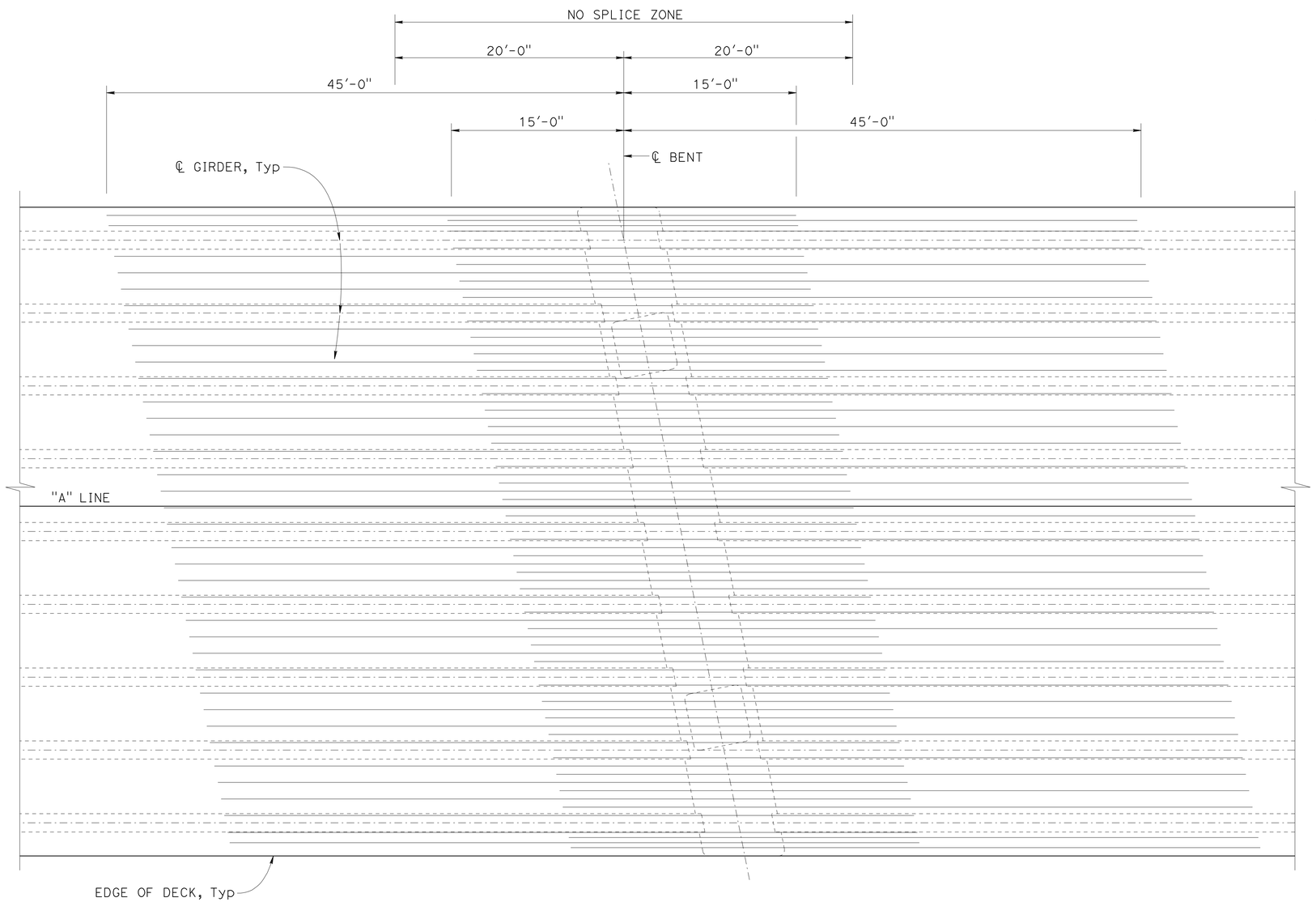

BENT 2, 3, 4 AND 7 ADDITIONAL DECK REINFORCEMENT

NO SCALE

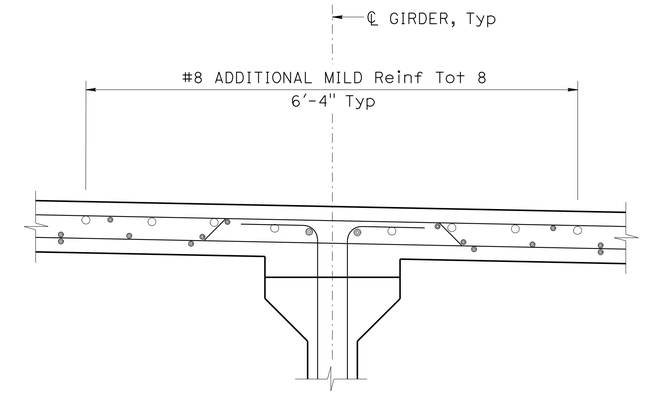

SECTION AT GIRDER

No Scale

LEGEND:

○ Indicates additional mild reinforcement

DESIGN OVERSIGHT Paul Cotter	DESIGN	BY B. Schoppe	CHECKED S. Landis	PREPARED FOR THE STATE OF CALIFORNIA DEPARTMENT OF TRANSPORTATION
7-16-12 SIGN OFF DATE	DETAILS	BY L. Davis	CHECKED S. Landis	
	QUANTITIES	BY B. Schoppe	CHECKED F. Hakemi/B. Osorio	

Jan Hueser
PROJECT ENGINEER

BRIDGE NO. 33-0751
POST MILES 28.69

29TH AVENUE OC (REPLACE)
DECK REINFORCEMENT DETAILS No. 1

DESIGN DETAIL SHEET (ENGLISH) (REV.7/16/10)

ORIGINAL SCALE IN INCHES FOR REDUCED PLANS 0 1 2 3

UNIT: 0724
PROJECT NUMBER & PHASE: 04000001601 CONTRACT NO.: 04-0A7101

DISREGARD PRINTS BEARING EARLIER REVISION DATES

REVISION DATES: 9-6-11 1-30-12 3-30-12 6-25-12 SHEET 45 OF 60

FILE => 33-0751-o-grdt01.dgn

USERNAME => s124496 DATE PLOTTED => 10-APR-2013 TIME PLOTTED => 06:23

DIST	COUNTY	ROUTE	POST MILES TOTAL PROJECT	SHEET No	TOTAL SHEETS
04	Ala	880	28.4/29.2	553	789

REGISTERED CIVIL ENGINEER 6/25/12 DATE

4-8-13
PLANS APPROVAL DATE

REGISTERED PROFESSIONAL ENGINEER Jan M. Hueser No. C050215 Exp. 6/30/13 CIVIL STATE OF CALIFORNIA

The State of California or its officers or agents shall not be responsible for the accuracy or completeness of electronic copies of this plan sheet.

ALAMEDA COUNTY TRANSPORTATION COMMISSION
1333 BROADWAY
OAKLAND, CA 94612-1918

URS CORPORATION
1380 LEAD HILL BLVD, SUITE 100
ROSEVILLE, CA 95661-2997

NOTES:

1. Place all reinforcement parallel to "A" Line.
2. Reinforcement may be spaced as required with approval of the Engineer.

LEGEND:

○ Indicates additional mild reinforcement

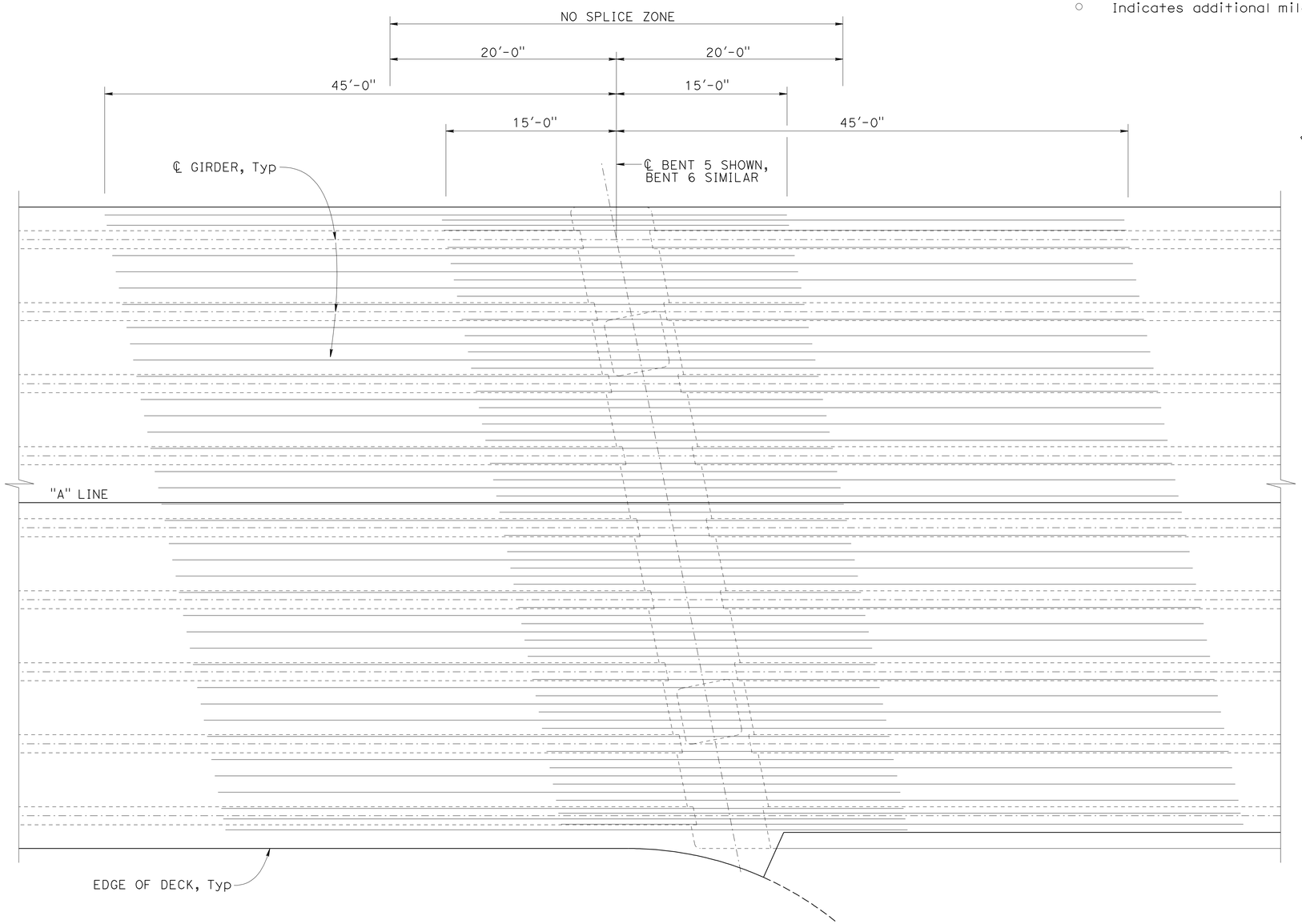

BENT 5 AND 6 ADDITIONAL DECK REINFORCEMENT

NO SCALE

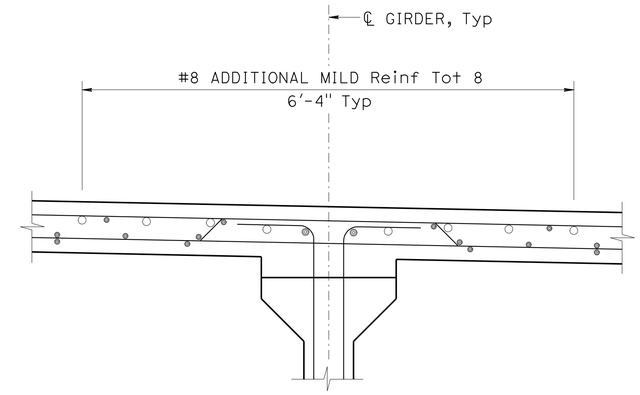

SECTION AT GIRDER

No Scale

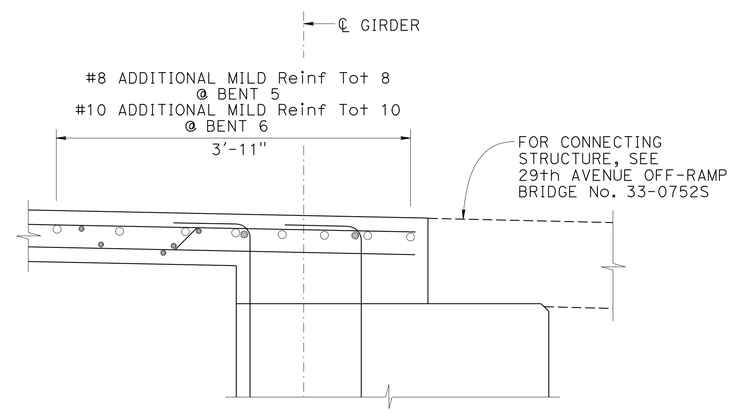

SECTION AT SPAN 5 MODIFIED GIRDER

No Scale

Paul Cotter
DESIGN OVERSIGHT Paul Cotter
7-16-12
SIGN OFF DATE

	BY	CHECKED
DESIGN	B. Schoppe	S. Landis
DETAILS	L. Davis	S. Landis
QUANTITIES	B. Schoppe	F. Hakemi/B. Osorio

PREPARED FOR THE STATE OF CALIFORNIA DEPARTMENT OF TRANSPORTATION

Jan Hueser
PROJECT ENGINEER

BRIDGE NO. 33-0751
POST MILES 28.69

29TH AVENUE OC (REPLACE)
DECK REINFORCEMENT DETAILS No. 2

DESIGN DETAIL SHEET (ENGLISH) (REV.7/16/10)

ORIGINAL SCALE IN INCHES FOR REDUCED PLANS 0 1 2 3

UNIT: 0724
PROJECT NUMBER & PHASE: 04000001601 CONTRACT NO.: 04-0A7101

DISREGARD PRINTS BEARING EARLIER REVISION DATES

REVISION DATES: 9-6-11 1-18-12 3-30-12 6-25-12 SHEET 46 OF 60

FILE => 33-0751-o-grdt02.dgn

USERNAME => s124496 DATE PLOTTED => 10-APR-2013 TIME PLOTTED => 06:23

DIST	COUNTY	ROUTE	POST MILES TOTAL PROJECT	SHEET No	TOTAL SHEETS
04	Ala	880	28.4/29.2	554	789

REGISTERED CIVIL ENGINEER 6/25/12 DATE

4-8-13
PLANS APPROVAL DATE

REGISTERED PROFESSIONAL ENGINEER Jan M. Hueser No. C050215 Exp. 6/30/13 CIVIL STATE OF CALIFORNIA

The State of California or its officers or agents shall not be responsible for the accuracy or completeness of electronic copies of this plan sheet.

ALAMEDA COUNTY TRANSPORTATION COMMISSION
1333 BROADWAY
OAKLAND, CA 94612-1918

URS CORPORATION
1380 LEAD HILL BLVD, SUITE 100
ROSEVILLE, CA 95661-2997

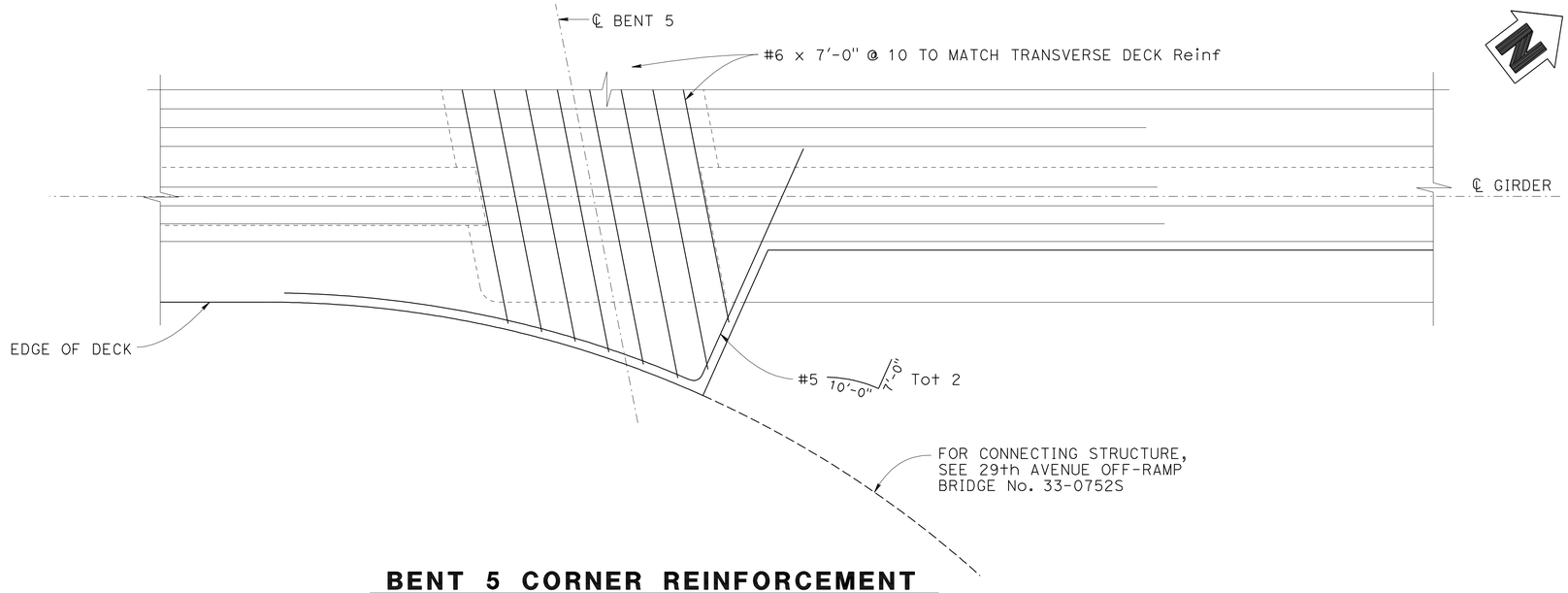

BENT 5 CORNER REINFORCEMENT

NO SCALE

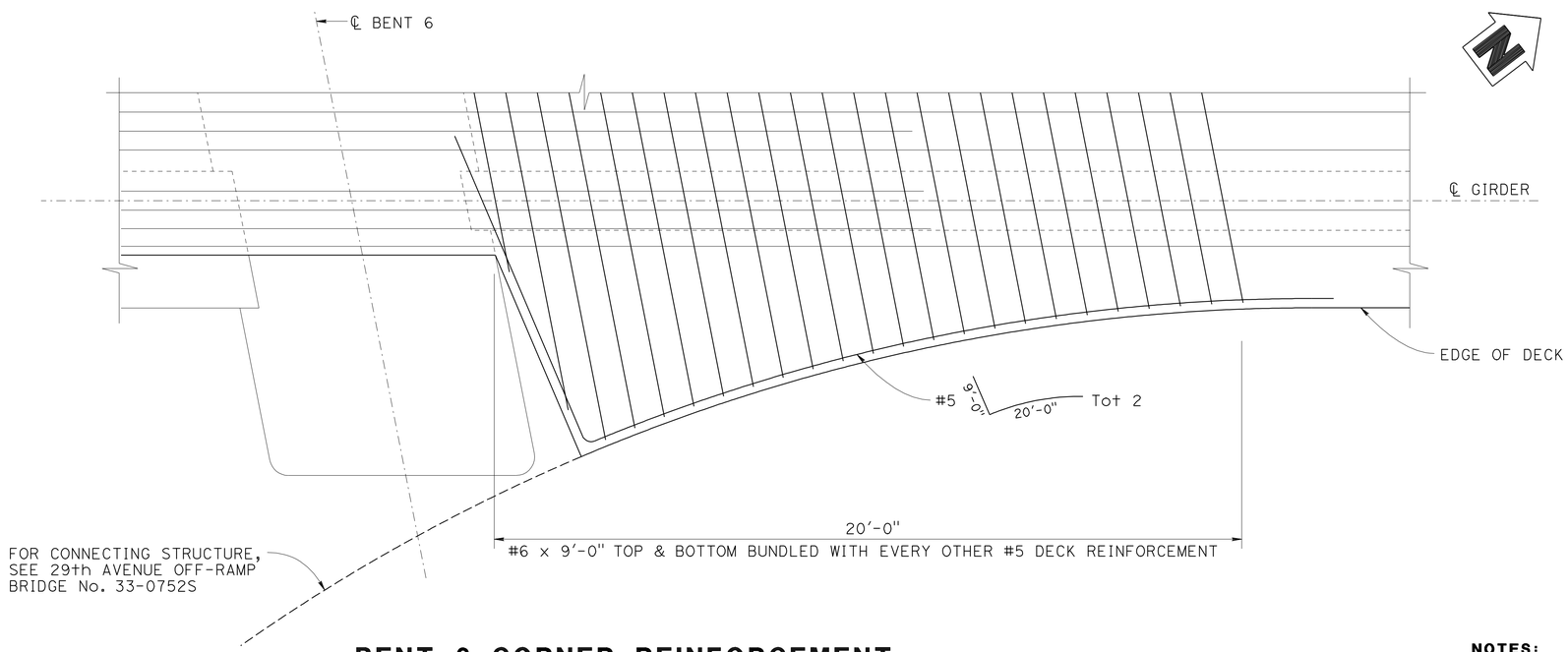

BENT 6 CORNER REINFORCEMENT

NO SCALE

NOTES:

1. Typical deck and bent cap reinforcement not shown for clarity.

DESIGN OVERSIGHT Paul Cotter
7-16-12
SIGN OFF DATE

	BY	CHECKED
DESIGN	B. Schoppe	S. Landis
DETAILS	L. Davis	S. Landis
QUANTITIES	B. Schoppe	F. Hakemi/B. Osorio

PREPARED FOR THE STATE OF CALIFORNIA DEPARTMENT OF TRANSPORTATION

Jan Hueser
PROJECT ENGINEER

BRIDGE NO. 33-0751
POST MILES 28.69

29TH AVENUE OC (REPLACE)
DECK REINFORCEMENT DETAILS No. 3

DESIGN DETAIL SHEET (ENGLISH) (REV.7/16/10)

ORIGINAL SCALE IN INCHES FOR REDUCED PLANS 0 1 2 3

UNIT: 0724
PROJECT NUMBER & PHASE: 04000001601 CONTRACT NO.: 04-0A7101

DISREGARD PRINTS BEARING EARLIER REVISION DATES

REVISION DATES 9-6-11 1-18-12 3-30-12 6-25-12 SHEET 47 OF 60

FILE => 33-0751-o-grdt03.dgn

USERNAME => s124496 DATE PLOTTED => 10-APR-2013 TIME PLOTTED => 06:23

DIST	COUNTY	ROUTE	POST MILES TOTAL PROJECT	SHEET No	TOTAL SHEETS
04	Ala	880	28.4/29.2	555	789

REGISTERED CIVIL ENGINEER — DATE 6/25/12

4-8-13
PLANS APPROVAL DATE

The State of California or its officers or agents shall not be responsible for the accuracy or completeness of electronic copies of this plan sheet.

REGISTERED PROFESSIONAL ENGINEER — Jan M. Hueser — No. C050215 — Exp. 6/30/13 — CIVIL — STATE OF CALIFORNIA

ALAMEDA COUNTY TRANSPORTATION COMMISSION
1333 BROADWAY
OAKLAND, CA 94612-1918

URS CORPORATION
1380 LEAD HILL BLVD, SUITE 100
ROSEVILLE, CA 95661-2997

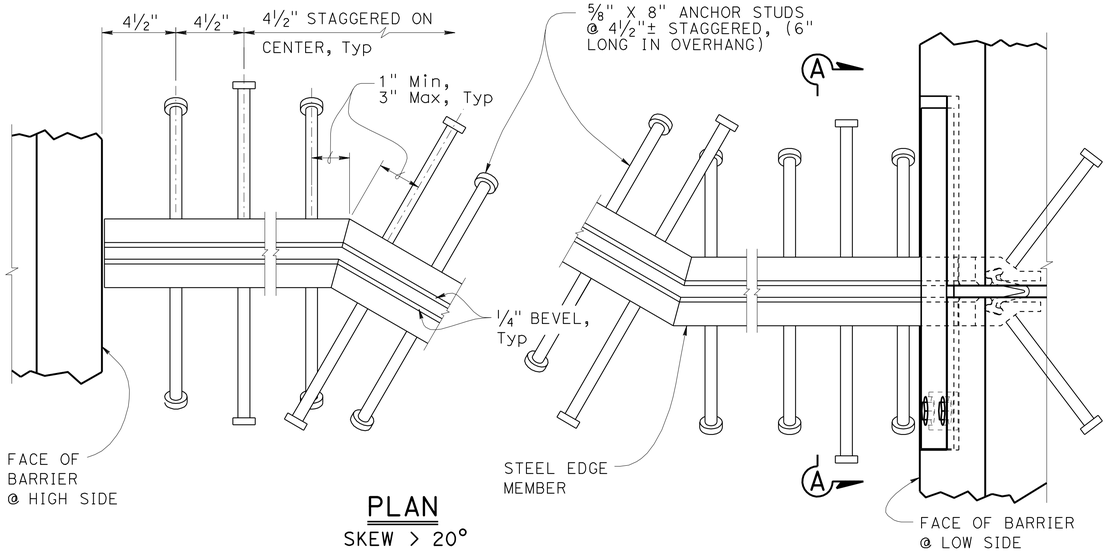

PLAN
SKEW > 20°

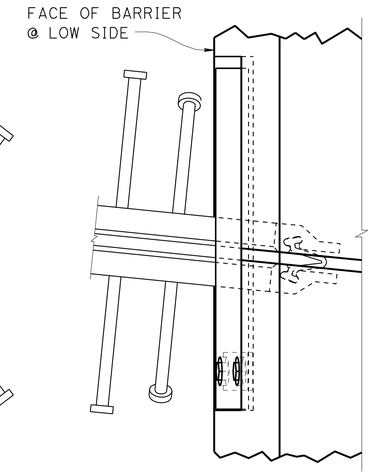

PLAN
SKEW ≤ 20°

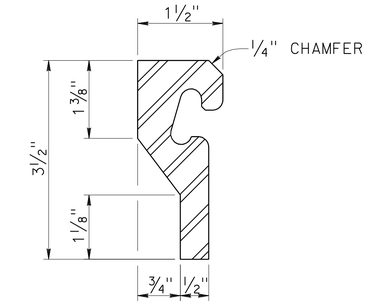

STEEL EDGE MEMBER

NOTES:

1. Full penetration butt welds may be substituted for fillet welds on all anchor studs
2. Alternate types of anchor studs may be permitted subject to the approval by the Engineer
3. Joint seal assembly to be used in conjunction with closure pour. (See other sheets for limits). Closure pour shall not be placed until final deck surface is within the tolerances specified
4. Use joint at crown of roadway, at any change in traverse slope in deck and at changes in horizontal direction. Place other joints at or near lanes. All metal parts to be painted or galvanized after fabrication
5. Sheet Neoprene shall be fabricated in one continuous piece and shall be fabricated to bend around corners
6. Insert assembly or expansion anchorage for ⅝" x 1¾" bolts. Use installation bolts extended ½" minimum past nut and coat with bond breaker, after concrete has cured, remove installation bolts, install A325 bolts and sheet neoprene
7. Sidewalk Detail similar to Barrier Detail on low side at both sides if the roadway is crowned or if the difference in elevation between the ends of the seal is 0.5′ or less
8. a_c, a_s, are the thermal expansion coefficients for concrete and steel respectfully.

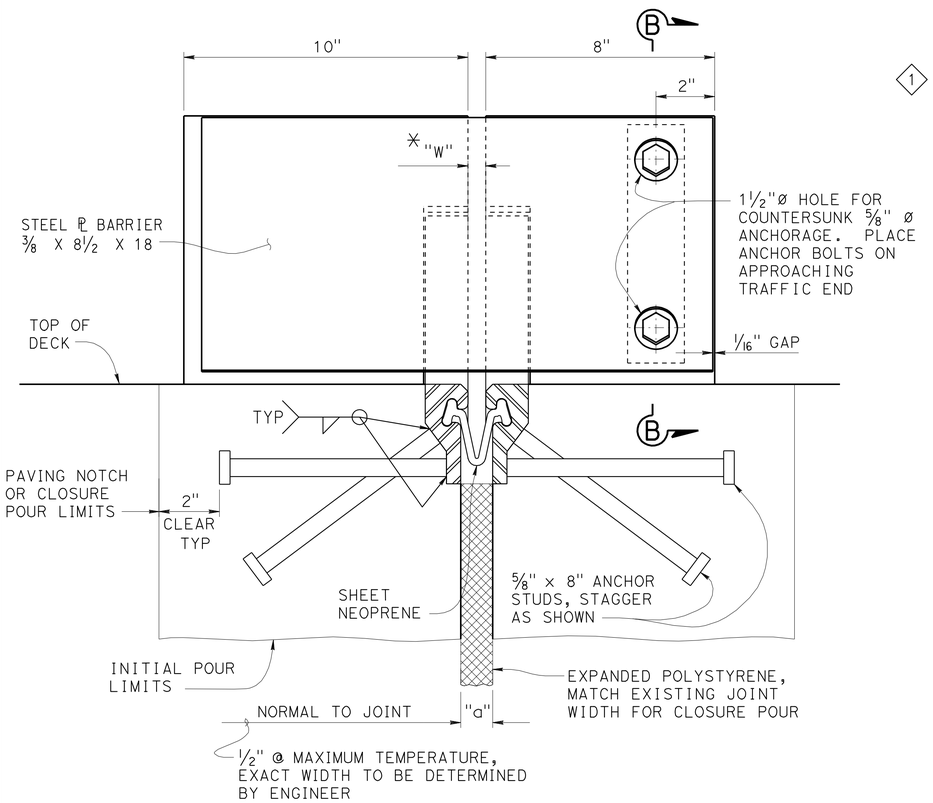

SECTION A-A

1

JOINT INFORMATION			"a" DIMENSIONS		
LOCATION	MOVEMENT RATING (MR)	SKEW	WINTER	SPRING & FALL	SUMMER
Abut 1	3"	11°06′59"	2⅝"	2"	1⅜"
Abut 8	3"	11°06′59"	2⅝"	2"	1⅜"

* TO SET MINIMUM JOINT OPENING "W"

"W" = ½"+[(Max Str temperature in F°)-(actual Str temperature in F°)]*(a_c or a_s)(12)(contributory L in feet)

½" Minimum
a_c = 0.0000060
a_s = 0.0000065

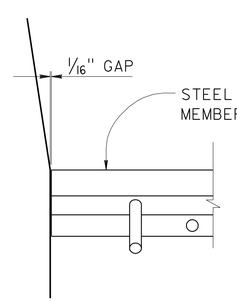

BARRIER DETAIL
HIGH SIDE

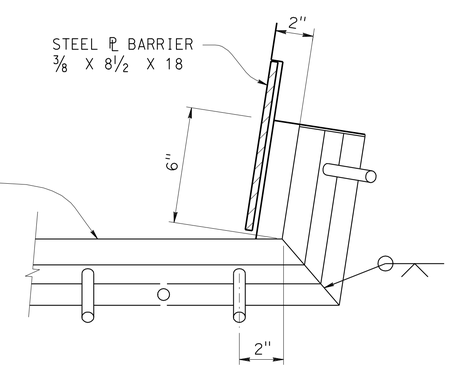

BARRIER DETAIL
LOW SIDE

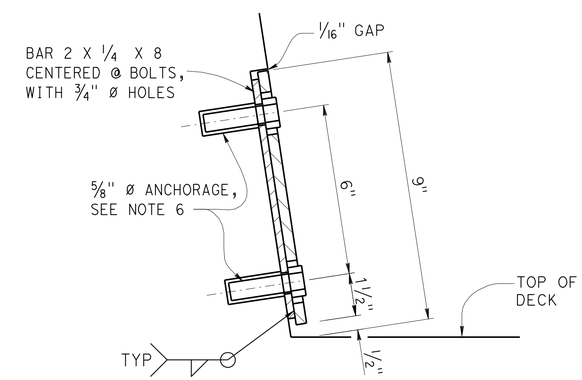

SECTION B-B

NO SCALE

SPECIAL DETAILS

REVISED STANDARD DRAWING

FILE NO. **xs8-010**

APPROVAL DATE October 2011

1 Revised table

STATE OF CALIFORNIA
DEPARTMENT OF TRANSPORTATION

DIVISION OF ENGINEERING SERVICES

BRIDGE NO. 33-0751
POST MILES 28.69

29TH AVENUE OC (REPLACE)

JOINT SEAL ASSEMBLY
MAXIMUM MOVEMENT RATING = 4"

DS OSD 2147A (ENGLISH STANDARD DRAWING "XS" BORDER REV. (02-02-11)

ORIGINAL SCALE IN INCHES FOR REDUCED PLANS 0 1 2 3

UNIT: 0724
PROJECT NUMBER & PHASE: 04000001601
CONTRACT NO.: 04-0A7101

DISREGARD PRINTS BEARING EARLIER REVISION DATES

REVISION DATES: 9-6-11 1-30-12 3-30-12 6-25-12

SHEET 48 OF 60

FILE => 33-0751-q-jntdt.dgn

USERNAME => s124496 DATE PLOTTED => 10-APR-2013 TIME PLOTTED => 06:23

DIST	COUNTY	ROUTE	POST MILES TOTAL PROJECT	SHEET No	TOTAL SHEETS
04	Ala	880	28.4/29.2	556	789

REGISTERED CIVIL ENGINEER — 6/25/12 DATE

4-8-13
PLANS APPROVAL DATE

REGISTERED PROFESSIONAL ENGINEER — Jan M. Hueser No. C050215 Exp. 6/30/13 CIVIL — STATE OF CALIFORNIA

The State of California or its officers or agents shall not be responsible for the accuracy or completeness of electronic copies of this plan sheet.

ALAMEDA COUNTY TRANSPORTATION COMMISSION
1333 BROADWAY
OAKLAND, CA 94612-1918

URS CORPORATION
1380 LEAD HILL BLVD, SUITE 100
ROSEVILLE, CA 95661-2997

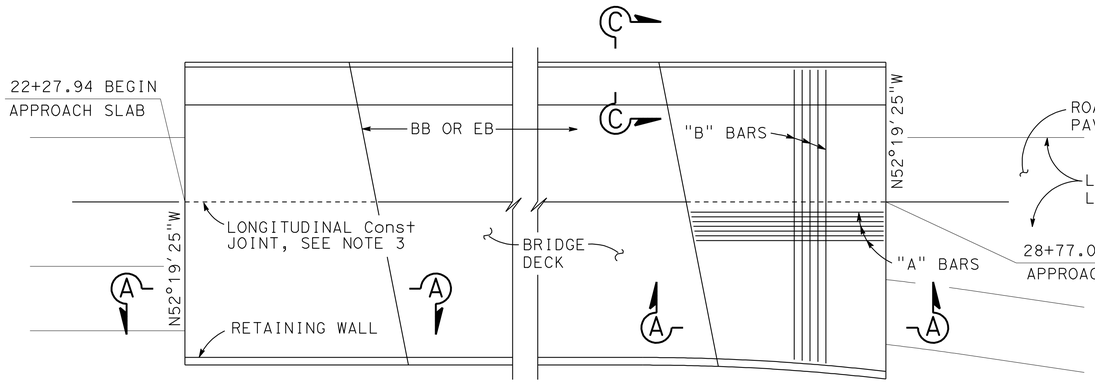

PLAN ◇1
1" = 10'

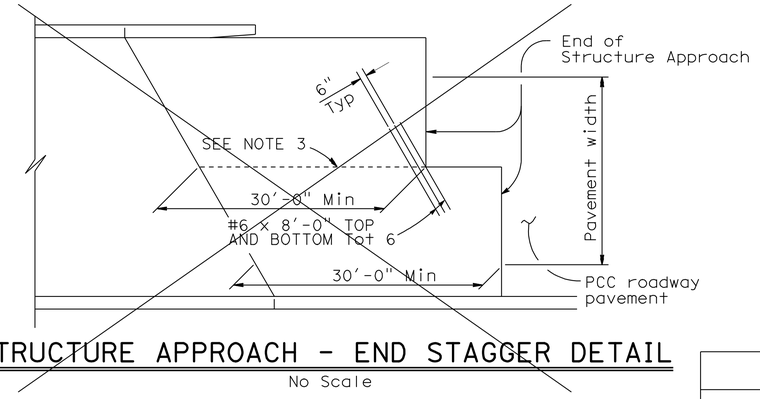

STRUCTURE APPROACH - END STAGGER DETAIL
No Scale

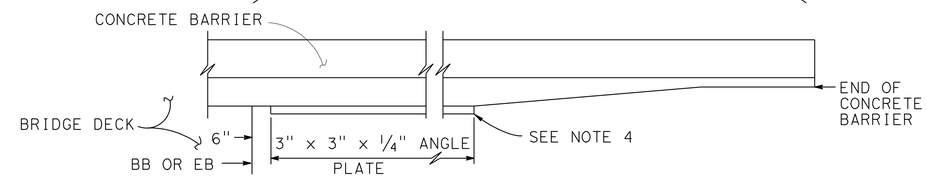

EDGE ANGLE DETAIL
1/2"=1'-0"

APPROACH SLAB TRANSVERSE CONTACT JOINT		
APPROACH SKEW	WITH AC ROADWAY PAVEMENT	WITH PCC ROADWAY PAVEMENT
< 20°	PARALLEL TO FACE OF PN	PARALLEL TO FACE OF PN
20° - 45°	PARALLEL TO FACE OF PN USE "DETAIL A"	STAGGER LINES 24' TO 36' APART
> 45°	PARALLEL TO FACE OF PN USE "DETAIL A"	STAGGER AT EACH LANE LINE

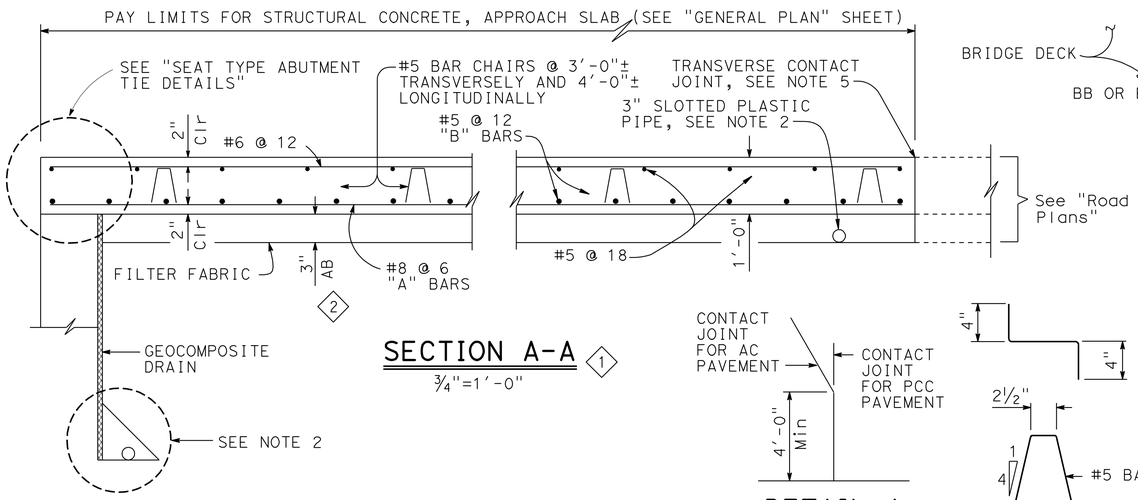

SECTION A-A ◇1
3/4"=1'-0"

DETAIL A
No Scale

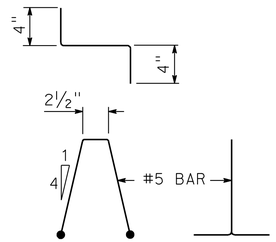

BAR CHAIR DETAIL
1 1/2"=1'-0"

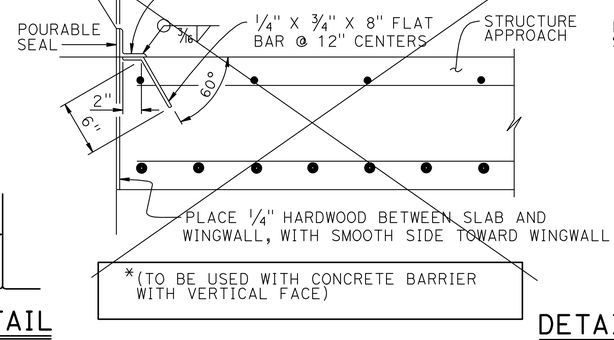

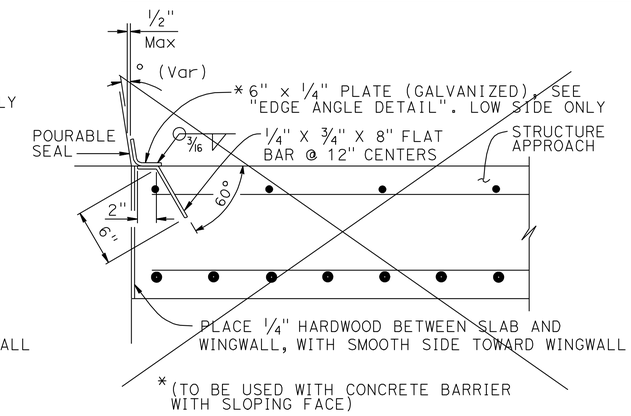

DETAIL B
1 1/2" = 1'-0"

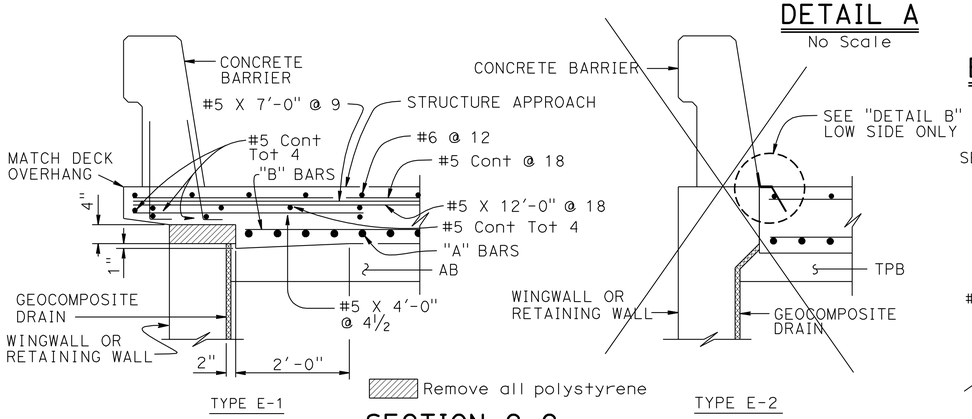

SECTION C-C
3/4"=1'-0"
(Type E-1 to be used, unless otherwise shown on plans)

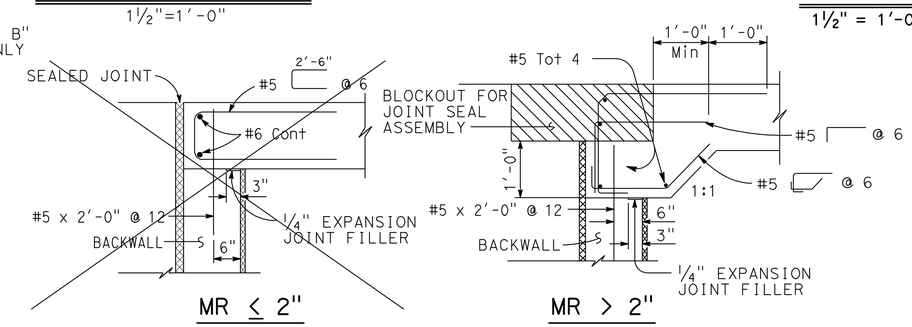

SEAT TYPE ABUTMENT TIE DETAILS (SEE NOTE 1)
3/4"=1'-0"

NOTES:

1. For details not shown, see Structure Plans. For MR ≤ 2", adjust bar reinforcement to clear a sawcut for sealed joint, when required
2. For drainage details, see "STRUCTURE APPROACH DRAINAGE DETAILS" sheet
3. Longitudinal construction joints, when permitted by the Engineer, shall be located on lane lines
4. End angle or plate at beginning of barrier transition, end of wingwall or end of structure approach as applicable
5. For transverse contact joint with new PCC paving, refer to Standard Plan P10
6. At the Contractor's option, approach slab transverse reinforcement may be placed parallel to paving notch. Spacing of transverse reinforcement is measured along ℄ roadway

SPECIAL DETAILS

REVISED STANDARD DRAWING
FILE NO. xs3-120
APPROVAL DATE July 2011

◇1 Revised detail
◇2 Changed TPB to AB

STATE OF CALIFORNIA
DEPARTMENT OF TRANSPORTATION

DIVISION OF ENGINEERING SERVICES

BRIDGE NO. 33-0751
POST MILES 28.69

29TH AVENUE OC (REPLACE)
STRUCTURE APPROACH TYPE N(30S)

DS OSD 2147A (ENGLISH STANDARD DRAWING "XS" BORDER REV. (02-02-11)

ORIGINAL SCALE IN INCHES FOR REDUCED PLANS 0 1 2 3

UNIT: 0724
PROJECT NUMBER & PHASE: 04000001601
CONTRACT NO.: 04-0A7101

DISREGARD PRINTS BEARING EARLIER REVISION DATES
REVISION DATES: 9-6-11 1-10-12 3-30-12 6-25-12
SHEET 49 OF 60

FILE => 33-0751-s-sa.dgn

USERNAME => s124436 DATE PLOTTED => 10-APR-2013 TIME PLOTTED => 06:23

DIST	COUNTY	ROUTE	POST MILES TOTAL PROJECT	SHEET No	TOTAL SHEETS
04	Ala	880	28.4/29.2	557	789

REGISTERED CIVIL ENGINEER 6/25/12 DATE

4-8-13
PLANS APPROVAL DATE

REGISTERED PROFESSIONAL ENGINEER Jan M. Hueser No. C050215 Exp. 6/30/13 CIVIL STATE OF CALIFORNIA

The State of California or its officers or agents shall not be responsible for the accuracy or completeness of electronic copies of this plan sheet.

ALAMEDA COUNTY TRANSPORTATION COMMISSION
1333 BROADWAY
OAKLAND, CA 94612-1918

URS CORPORATION
1380 LEAD HILL BLVD, SUITE 100
ROSEVILLE, CA 95661-2997

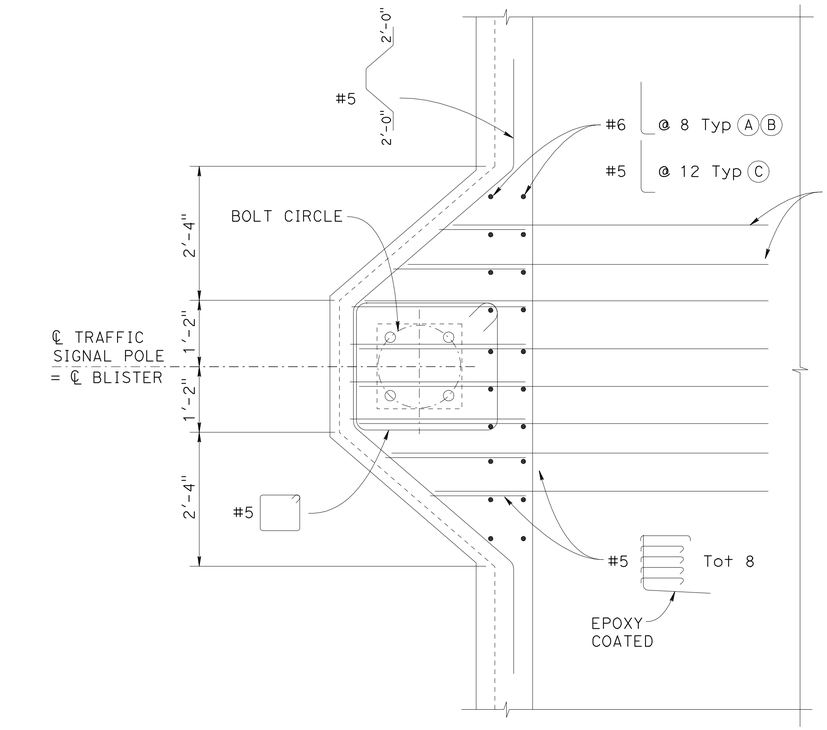

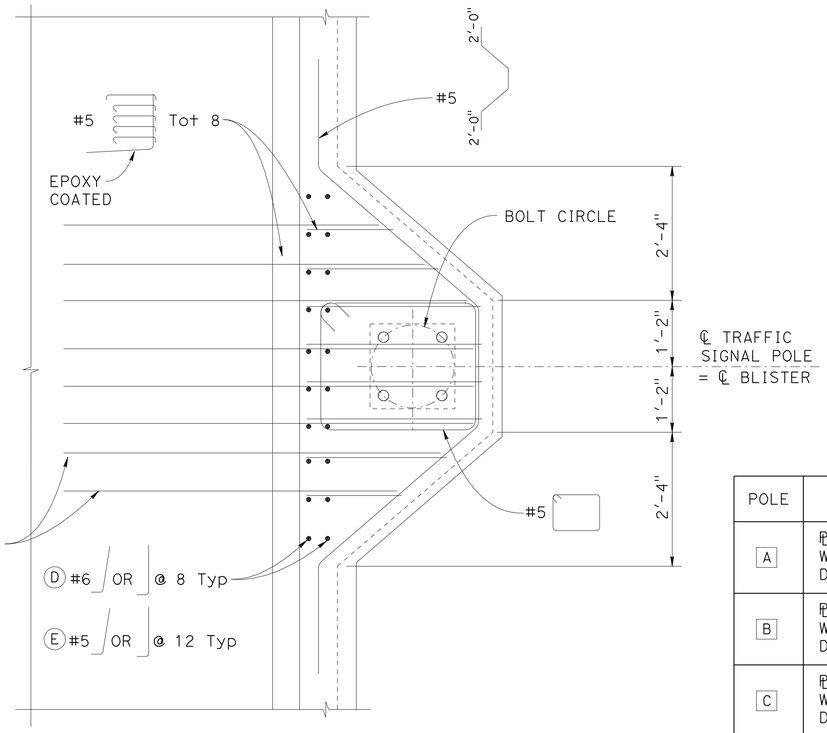

POLE AND HARDWARE TABLE

POLE	PLATE	BOLT CIRCLE	ANCHOR BOLTS
A	ℙ 3"x17½"x17½" WITH (4) 1¾" Dia HOLES	1'-5½" Dia	(4) 1½" Dia x 42" A706 ANCHOR BOLTS WITH HEX NUT, LEVELING NUT AND (2) WASHERS EACH BOLT
B	ℙ 3"x17½"x17½" WITH (4) 1¾" Dia HOLES	1'-5½" Dia	(4) 1½" Dia x 42" A706 ANCHOR BOLTS WITH HEX NUT, LEVELING NUT AND (2) WASHERS EACH BOLT
C	ℙ 2"x13½"x13½" WITH (4) 1¾" Dia HOLES	1'-0" Dia	(4) 1½" Dia x 42" A706 ANCHOR BOLTS WITH HEX NUT, LEVELING NUT AND (2) WASHERS EACH BOLT
D	ℙ 3"x17½"x17½" WITH (4) 1¾" Dia HOLES	1'-5½" Dia	(4) 1½" Dia x 42" A706 ANCHOR BOLTS WITH HEX NUT, LEVELING NUT AND (2) WASHERS EACH BOLT
E	ℙ 2"x13½"x13½" WITH (4) 1¾" Dia HOLES	1'-0" Dia	(4) 1½" Dia x 42" A706 ANCHOR BOLTS WITH HEX NUT, LEVELING NUT AND (2) WASHERS EACH BOLT

NOTES:

1. Standard Barrier Reinf not shown for clarity.

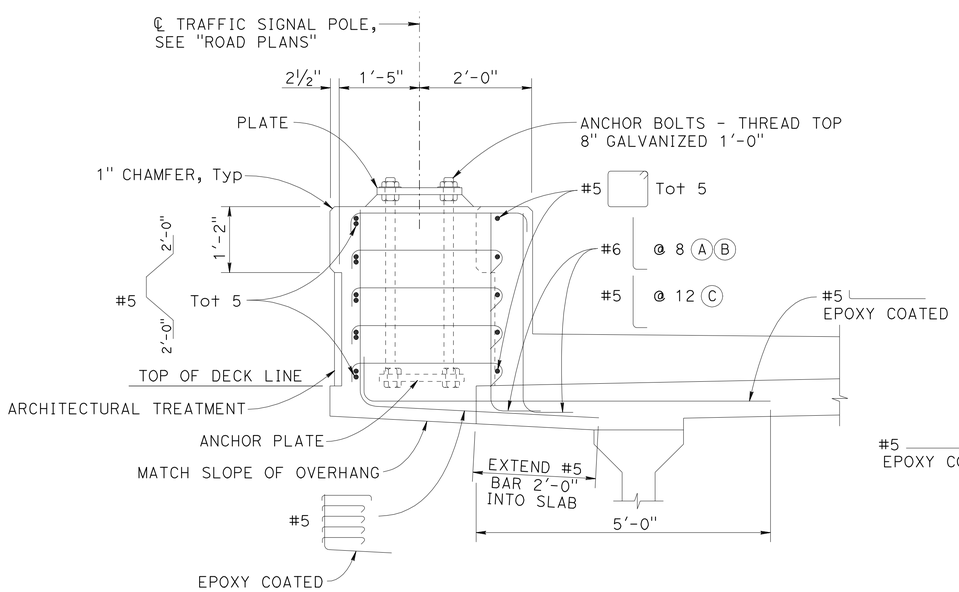

TRAFFIC SIGNAL POLE (TYPE 26) A B C

¾" = 1'-0"

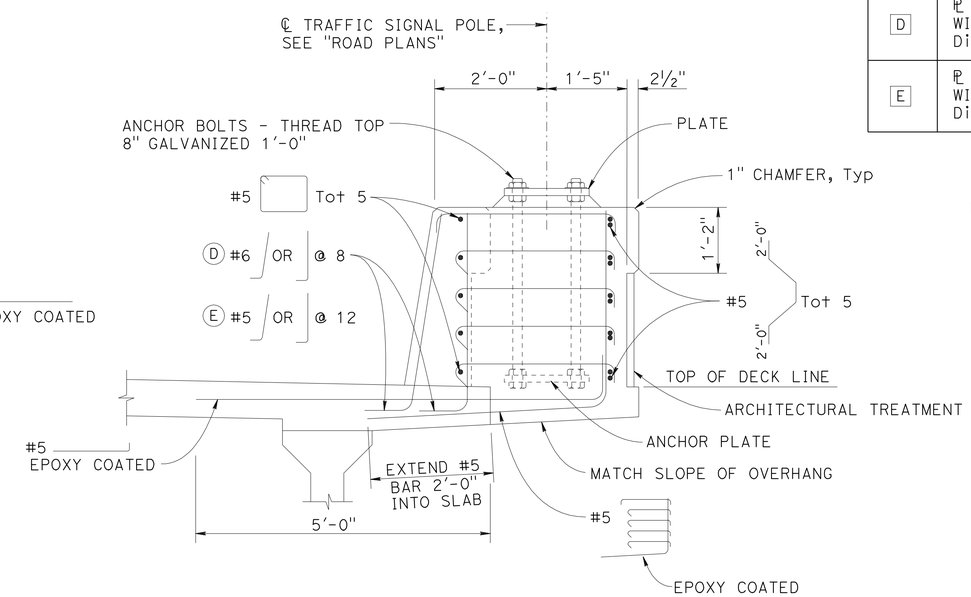

TRAFFIC SIGNAL POLE DETAIL (TYPE 732) D E

¾" = 1'-0"

DESIGN OVERSIGHT Paul Cotter	DESIGN	BY B. Schoppe	CHECKED S. Landis	PREPARED FOR THE STATE OF CALIFORNIA DEPARTMENT OF TRANSPORTATION	Jan Hueser PROJECT ENGINEER
7-16-12 SIGN OFF DATE	DETAILS	BY L. Davis	CHECKED S. Landis		BRIDGE NO. 33-0751
	QUANTITIES	BY B. Schoppe	CHECKED F. Hakemi/B. Osorio		POST MILES 28.69

29TH AVENUE OC (REPLACE)

BARRIER PEDESTAL DETAILS

DESIGN DETAIL SHEET (ENGLISH) (REV.7/16/10)

ORIGINAL SCALE IN INCHES FOR REDUCED PLANS 0 1 2 3

UNIT: 0724
PROJECT NUMBER & PHASE: 04000001601 CONTRACT NO.: 04-0A7101

DISREGARD PRINTS BEARING EARLIER REVISION DATES

REVISION DATES: 9-6-11 1-30-12 3-30-12 6-25-12 SHEET 50 OF 60

FILE => 33-0751-t-brdt.dgn

USERNAME => s124496 DATE PLOTTED => 10-APR-2013 TIME PLOTTED => 06:23

DIST	COUNTY	ROUTE	POST MILES TOTAL PROJECT	SHEET No	TOTAL SHEETS
04	Ala	880	28.4/29.2	558	789

REGISTERED CIVIL ENGINEER — DATE 6/25/12

4-8-13
PLANS APPROVAL DATE

REGISTERED PROFESSIONAL ENGINEER — Jan M. Hueser — No. C050215 — Exp. 6/30/13 — CIVIL — STATE OF CALIFORNIA

The State of California or its officers or agents shall not be responsible for the accuracy or completeness of electronic copies of this plan sheet.

ALAMEDA COUNTY TRANSPORTATION COMMISSION
1333 BROADWAY
OAKLAND, CA 94612-1918

URS CORPORATION
1380 LEAD HILL BLVD, SUITE 100
ROSEVILLE, CA 95661-2997

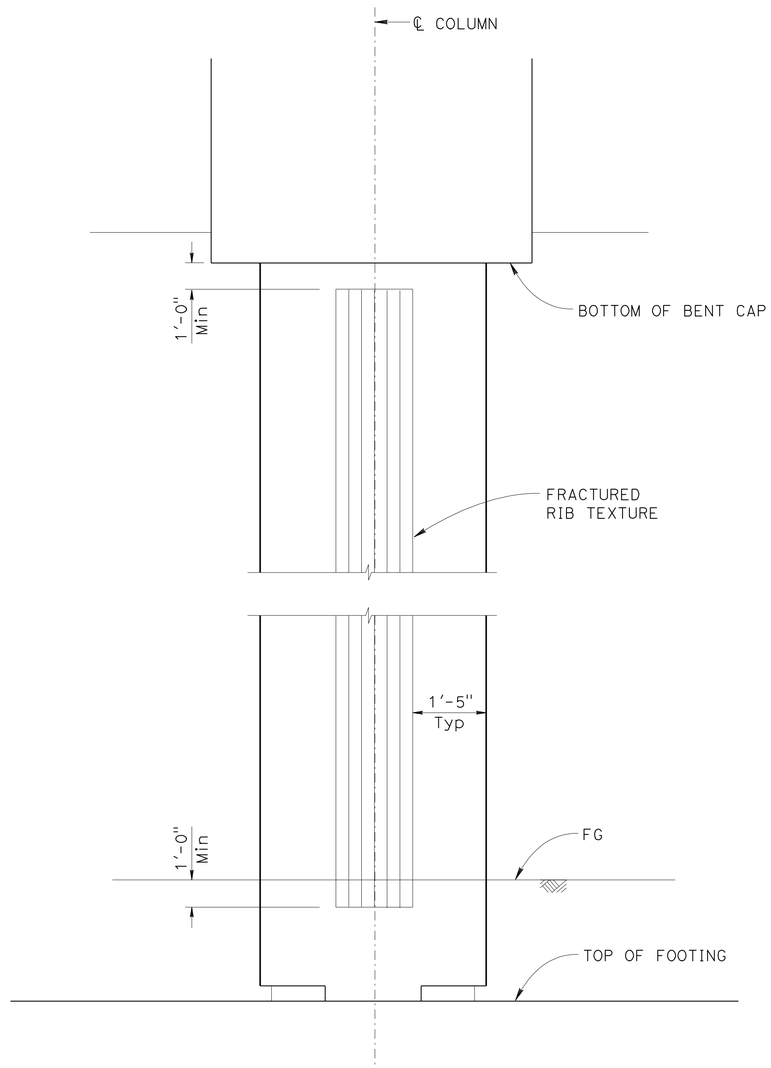

COLUMN DETAIL
NO SCALE

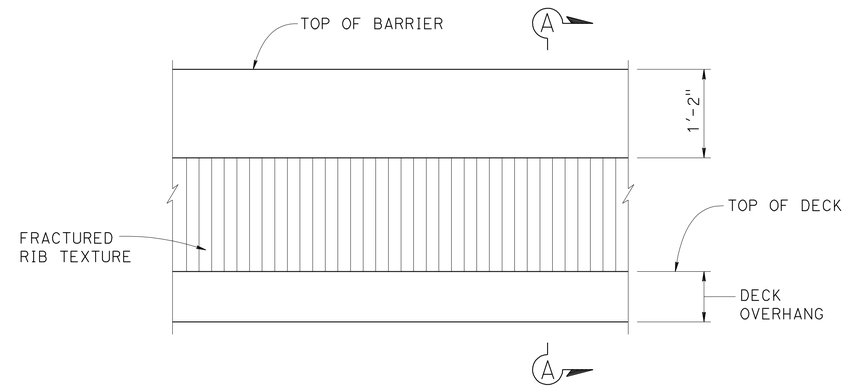

TYPICAL BARRIER
NO SCALE

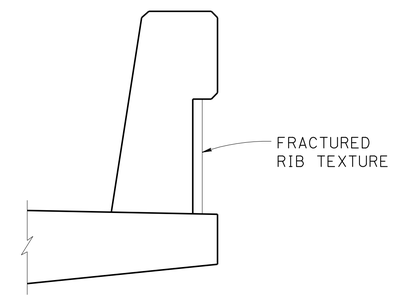

SECTION A-A
NO SCALE

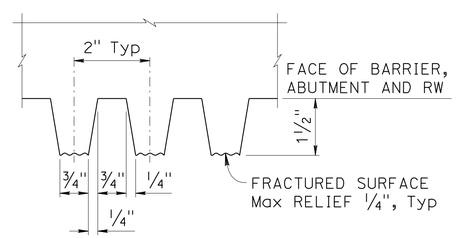

AT BARRIER, ABUTMENT AND RW

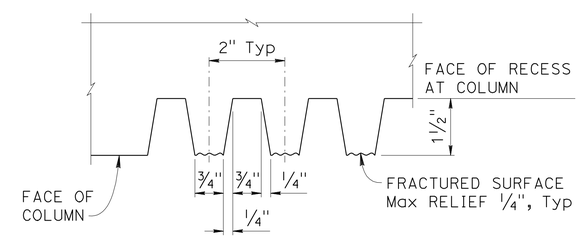

AT COLUMN

FRACTURED RIB TEXTURE DETAIL
NO SCALE

NOTES:

1. Vertical joints in form liners will be at center of trough between ribs. Min spacing of form liner vertical joints will be 4'-0".
2. No horizontal joints will be permitted in form liners.

Paul Cotter
DESIGN OVERSIGHT — Paul Cotter
7-16-12
SIGN OFF DATE

	BY	CHECKED
DESIGN	B. Schoppe	S. Landis
DETAILS	L. Davis	S. Landis
QUANTITIES	B. Schoppe	F. Hakemi/B. Osorio

PREPARED FOR THE STATE OF CALIFORNIA DEPARTMENT OF TRANSPORTATION

Jan Hueser
PROJECT ENGINEER

BRIDGE NO. 33-0751
POST MILES 28.69

29TH AVENUE OC (REPLACE)
ARCHITECTURAL DETAILS

DESIGN DETAIL SHEET (ENGLISH) (REV.7/16/10)

ORIGINAL SCALE IN INCHES FOR REDUCED PLANS 0 1 2 3

UNIT: 0724
PROJECT NUMBER & PHASE: 04000001601 CONTRACT NO.: 04-0A7101

DISREGARD PRINTS BEARING EARLIER REVISION DATES

REVISION DATES: 9-6-11 1-18-12 3-30-12 6-25-12 — SHEET 51 OF 60

FILE => 33-0751-u-adt.dgn

USERNAME => s124496 DATE PLOTTED => 10-APR-2013 TIME PLOTTED => 06:24

REFERENCE: CALTRANS SOIL & ROCK LOGGING, CLASSIFICATION, AND PRESENTATION MANUAL (2010)

DIST	COUNTY	ROUTE	POST MILES TOTAL PROJECT	SHEET No	TOTAL SHEETS
04	Ala	880	28.4/29.2	559	789

REGISTERED CIVIL ENGINEER — DATE 6/25/12

4-8-13
PLANS APPROVAL DATE

REGISTERED PROFESSIONAL ENGINEER — Philip Meymand — No. 2596 — Exp. 6/30/13 — GEOTECHNICAL — STATE OF CALIFORNIA

The State of California or its officers or agents shall not be responsible for the accuracy or completeness of electronic copies of this plan sheet.

ALAMEDA COUNTY TRANSPORTATION
1333 BROADWAY
OAKLAND, CA 94612

URS CORPORATION
1333 BROADWAY, SUITE 800
OAKLAND, CA 94612

CEMENTATION

DESCRIPTION	CRITERIA
WEAK	CRUMBLES OR BREAKS WITH HANDLING OR LITTLE FINGER PRESSURE.
MODERATE	CRUMBLES OR BREAKS WITH CONSIDERABLE FINGER PRESSURE.
STRONG	WILL NOT CRUMBLE OR BREAK WITH FINGER PRESSURE.

BOREHOLE IDENTIFICATION

SYMBOL	HOLE TYPE	DESCRIPTION
Size	A	AUGER BORING (HOLLOW OR SOLID STEM BUCKET)
Size	R RW RC P	ROTARY DRILLED BORING (CONVENTIONAL) ROTARY DRILLED WITH SELF-CASING WIRE-LINE ROTARY CORE WITH CONTINUOUSLY-SAMPLED, SELF-CASING WIRE-LINE ROTARY PERCUSSION BORING (AIR)
Size	R	ROTARY DRILLED DIAMOND CORE
Size	HD HA	HAND DRIVEN (1-INCH SOIL TUBE) HAND AUGER
●	D	DYNAMIC CONE PENETRATION BORING
▲	CPT	CONE PENETRATION TEST (ASTM D 5778)
⬚	O	OTHER (NOTE ON LOTB)

Note: Size in inches.

CONSISTENCY OF COHESIVE SOILS

DESCRIPTION	SHEAR STRENGTH (tsf)	POCKET PENETROMETER MEASUREMENT, PP, (tsf)	TORVANE MEASUREMENT, TV, (tsf)	VANE SHEAR MEASUREMENT, VS, (tsf)
VERY SOFT	LESS THAN 0.12	LESS THAN 0.25	LESS THAN 0.12	LESS THAN 0.12
SOFT	0.12 - 0.25	0.25 - 0.5	0.12 - 0.25	0.12 - 0.25
MEDIUM STIFF	0.25 - 0.5	0.5 - 1	0.25 - 0.5	0.25 - 0.5
STIFF	0.5 - 1	1 - 2	0.5 - 1	0.5 - 1
VERY STIFF	1 - 2	2 - 4	1 - 2	1 - 2
HARD	GREATER THAN 2	GREATER THAN 4	GREATER THAN 2	GREATER THAN 2

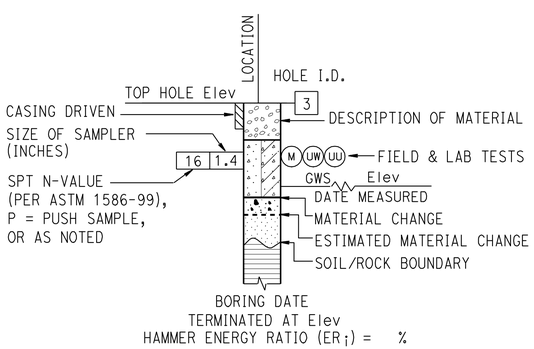

ROTARY BORING

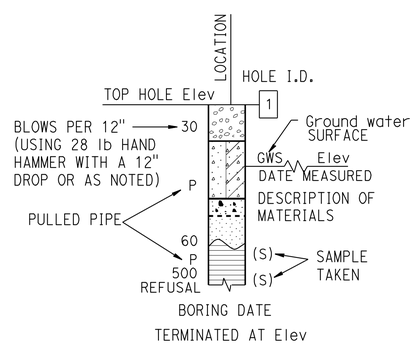

HAND BORING

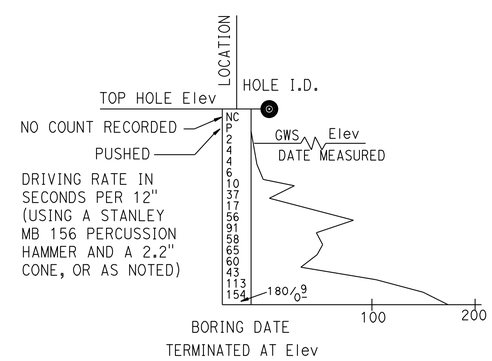

DYNAMIC CONE PENETRATION BORING

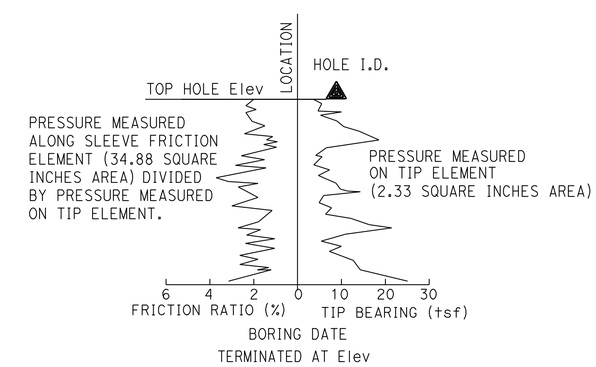

CONE PENETRATION TEST (CPT) BORING

Paul Cotter
DESIGN OVERSIGHT Paul Cotter
7-16-12
SIGN OFF DATE

DRAWN BY N. HUTTON
CHECKED BY C. TSAI

S. JANOWSKI
FIELD INVESTIGATION BY:
DATE: 04-25-11 TO 05-04-11

PREPARED FOR THE STATE OF CALIFORNIA DEPARTMENT OF TRANSPORTATION

Jan Hueser
PROJECT ENGINEER

BRIDGE NO. 33-0751
POST MILES 28.69

29TH AVENUE OC (REPLACE)
LOG OF TEST BORINGS 1 OF 9

GS CIVIL LOG OF TEST BORINGS SHEET (ENGLISH) (REV. 7/16/10)

ORIGINAL SCALE IN INCHES FOR REDUCED PLANS 0 1 2 3

UNIT: 0724
PROJECT NUMBER & PHASE: 04000001601
CONTRACT NO.: 04-0A7101

DISREGARD PRINTS BEARING EARLIER REVISION DATES
REVISION DATES 9-6-11 1-30-12 3-30-12 6-25-12
SHEET 52 OF 60

FILE => 33-0751-z-1tb01.dgn

USERNAME => s124936 DATE PLOTTED => 10-APR-2013 TIME PLOTTED => 06:24

REFERENCE: CALTRANS SOIL & ROCK LOGGING, CLASSIFICATION, AND PRESENTATION MANUAL (2010)

DIST	COUNTY	ROUTE	POST MILES TOTAL PROJECT	SHEET No	TOTAL SHEETS
04	Ala	880	28.4/29.2	560	789

REGISTERED CIVIL ENGINEER — DATE 6/25/12

4-8-13
PLANS APPROVAL DATE

REGISTERED PROFESSIONAL ENGINEER — Philip Meymand — No. 2596 — Exp. 6/30/13 — GEOTECHNICAL — STATE OF CALIFORNIA

The State of California or its officers or agents shall not be responsible for the accuracy or completeness of electronic copies of this plan sheet.

ALAMEDA COUNTY TRANSPORTATION
1333 BROADWAY
OAKLAND, CA 94612

URS CORPORATION
1333 BROADWAY, SUITE 800
OAKLAND, CA 94612

GROUP SYMBOLS AND NAMES

GRAPHIC/SYMBOL	GROUP NAMES	GRAPHIC/SYMBOL	GROUP NAMES
GW	WELL-GRADED GRAVEL WELL-GRADED GRAVEL WITH SAND	CL	LEAN CLAY LEAN CLAY WITH SAND LEAN CLAY WITH GRAVEL SANDY LEAN CLAY SANDY LEAN CLAY WITH GRAVEL GRAVELLY LEAN CLAY GRAVELLY LEAN CLAY WITH SAND
GP	POORLY-GRADED GRAVEL POORLY-GRADED GRAVEL WITH SAND		
GW-GM	WELL-GRADED GRAVEL WITH SILT WELL-GRADED GRAVEL WITH SILT AND SAND	CL-ML	SILTY CLAY SILTY CLAY WITH SAND SILTY CLAY WITH GRAVEL SANDY SILTY CLAY SANDY SILTY CLAY WITH GRAVEL GRAVELLY SILTY CLAY GRAVELLY SILTY CLAY WITH SAND
GW-GC	WELL-GRADED GRAVEL WITH CLAY (OR SILTY CLAY) WELL-GRADED GRAVEL WITH CLAY AND SAND (OR SILTY CLAY AND SAND)		
GP-GM	POORLY-GRADED GRAVEL WITH SILT POORLY-GRADED GRAVEL WITH SILT AND SAND	ML	SILT SILT WITH SAND SILT WITH GRAVEL SANDY SILT SANDY SILT WITH GRAVEL GRAVELLY SILT GRAVELLY SILT WITH SAND
GP-GC	POORLY-GRADED GRAVEL WITH CLAY (OR SILTY CLAY) POORLY-GRADED GRAVEL WITH CLAY AND SAND (OR SILTY CLAY AND SAND)		
GM	SILTY GRAVEL SILTY GRAVEL WITH SAND	OL	ORGANIC LEAN CLAY ORGANIC LEAN CLAY WITH SAND ORGANIC LEAN CLAY WITH GRAVEL SANDY ORGANIC LEAN CLAY SANDY ORGANIC LEAN CLAY WITH GRAVEL GRAVELLY ORGANIC LEAN CLAY GRAVELLY ORGANIC LEAN CLAY WITH SAND
GC	CLAYEY GRAVEL CLAYEY GRAVEL WITH SAND		
GC-GM	SILTY, CLAYEY GRAVEL SILTY, CLAYEY GRAVEL WITH SAND	OL	ORGANIC SILT ORGANIC SILT WITH SAND ORGANIC SILT WITH GRAVEL SANDY ORGANIC SILT SANDY ORGANIC SILT WITH GRAVEL GRAVELLY ORGANIC SILT GRAVELLY ORGANIC SILT WITH SAND
SW	WELL-GRADED SAND WELL-GRADED SAND WITH GRAVEL		
SP	POORLY-GRADED SAND POORLY-GRADED SAND WITH GRAVEL	CH	FAT CLAY FAT CLAY WITH SAND FAT CLAY WITH GRAVEL SANDY FAT CLAY SANDY FAT CLAY WITH GRAVEL GRAVELLY FAT CLAY GRAVELLY FAT CLAY WITH SAND
SW-SM	WELL-GRADED SAND WITH SILT WELL-GRADED SAND WITH SILT AND GRAVEL		
SW-SC	WELL-GRADED SAND WITH CLAY (OR SILTY CLAY) WELL-GRADED SAND WITH CLAY AND GRAVEL (OR SILTY CLAY AND GRAVEL)	MH	ELASTIC SILT ELASTIC SILT WITH SAND ELASTIC SILT WITH GRAVEL SANDY ELASTIC SILT SANDY ELASTIC SILT WITH GRAVEL GRAVELLY ELASTIC SILT GRAVELLY ELASTIC SILT WITH SAND
SP-SM	POORLY-GRADED SAND WITH SILT POORLY-GRADED SAND WITH SILT AND GRAVEL		
SP-SC	POORLY-GRADED SAND WITH CLAY (OR SILTY CLAY) POORLY-GRADED SAND WITH CLAY AND GRAVEL (OR SILTY CLAY AND GRAVEL)	OH	ORGANIC FAT CLAY ORGANIC FAT CLAY WITH SAND ORGANIC FAT CLAY WITH GRAVEL SANDY ORGANIC FAT CLAY SANDY ORGANIC FAT CLAY WITH GRAVEL GRAVELLY ORGANIC FAT CLAY GRAVELLY ORGANIC FAT CLAY WITH SAND
SM	SILTY SAND SILTY SAND WITH GRAVEL		
SC	CLAYEY SAND CLAYEY SAND WITH GRAVEL	OH	ORGANIC ELASTIC SILT ORGANIC ELASTIC SILT WITH SAND ORGANIC ELASTIC SILT WITH GRAVEL SANDY ORGANIC ELASTIC SILT SANDY ORGANIC ELASTIC SILT WITH GRAVEL GRAVELLY ORGANIC ELASTIC SILT GRAVELLY ORGANIC ELASTIC SILT WITH SAND
SC-SM	SILTY, CLAYEY SAND SILTY, CLAYEY SAND WITH GRAVEL		
PT	PEAT	OL/OH	ORGANIC SOIL ORGANIC SOIL WITH SAND ORGANIC SOIL WITH GRAVEL SANDY ORGANIC SOIL SANDY ORGANIC SOIL WITH GRAVEL GRAVELLY ORGANIC SOIL GRAVELLY ORGANIC SOIL WITH SAND
	COBBLES COBBLES AND BOULDERS BOULDERS		

FIELD AND LABORATORY TESTING

- (C) CONSOLIDATION (ASTM D 2435)
- (CL) COLLAPSE POTENTIAL (ASTM D 5333)
- (CP) COMPACTION CURVE (CTM 216)
- (CR) CORROSIVITY TESTING (CTM 643, CTM 422, CTM 417)
- (CU) CONSOLIDATED UNDRAINED TRIAXIAL (ASTM D 4767)
- (DS) DIRECT SHEAR (ASTM D 3080)
- (EI) EXPANSION INDEX (ASTM D 4829)
- (M) MOISTURE CONTENT (ASTM D 2216)
- (OC) ORGANIC CONTENT-% (ASTM D 2974)
- (P) PERMEABILITY (CTM 220)
- (PA) PARTICLE SIZE ANALYSIS (ASTM D 422)
- (PI) PLASTICITY INDEX (AASHTO T 90) LIQUID LIMIT (AASHTO T 89)
- (PL) POINT LOAD INDEX (ASTM D 5731)
- (PM) PRESSURE METER
- (R) R-VALUE (CTM 301)
- (SE) SAND EQUIVALENT (CTM 217)
- (SG) SPECIFIC GRAVITY (AASHTO T 100)
- (SL) SHRINKAGE LIMIT (ASTM D 427)
- (SW) SWELL POTENTIAL (ASTM D 4546)
- (UC) UNCONFINED COMPRESSION-SOIL (ASTM D 2166) UNCONFINED COMPRESSION-ROCK (ASTM D 2938)
- (UU) UNCONSOLIDATED UNDRAINED TRIAXIAL (ASTM D 2850)
- (UW) UNIT WEIGHT (ASTM D 4767)

APPARENT DENSITY OF COHESIONLESS SOILS

DESCRIPTION	SPT N_{60} (BLOWS / 12 INCHES)
VERY LOOSE	0 - 5
LOOSE	5 - 10
MEDIUM DENSE	10 - 30
DENSE	30 - 50
VERY DENSE	GREATER THAN 50

MOISTURE

DESCRIPTION	CRITERIA
DRY	NO DISCERNABLE MOISTURE
MOIST	MOISTURE PRESENT, BUT NO FREE WATER
WET	VISIBLE FREE WATER

PERCENT OR PROPORTION OF SOILS

DESCRIPTION	CRITERIA
TRACE	PARTICLES ARE PRESENT BUT ESTIMATED TO BE LESS THAN 5%
FEW	5% - 10%
LITTLE	15% - 25%
SOME	30% - 45%
MOSTLY	50% - 100%

PARTICLE SIZE

DESCRIPTION		SIZE
BOULDER		GREATER THAN 12"
COBBLE		3" - 12"
GRAVEL	COARSE	3/4" - 3"
	FINE	1/5" - 3/4"
SAND	COARSE	1/16" - 1/5"
	MEDIUM	1/64" - 1/16"
	FINE	1/300" - 1/64"
SILT AND CLAY		LESS THAN 1/300"

Paul Cotter
DESIGN OVERSIGHT Paul Cotter
7-16-12
SIGN OFF DATE

DRAWN BY N. HUTTON
CHECKED BY C. TSAI

S. JANOWSKI
FIELD INVESTIGATION BY:
DATE: 04-25-11 TO 05-04-11

PREPARED FOR THE STATE OF CALIFORNIA DEPARTMENT OF TRANSPORTATION

Jan Hueser
PROJECT ENGINEER

BRIDGE NO. 33-0751
POST MILES 28.69

29TH AVENUE OC (REPLACE)
LOG OF TEST BORINGS 2 OF 9

GS CIVIL LOG OF TEST BORINGS SHEET (ENGLISH) (REV. 7/16/10)

ORIGINAL SCALE IN INCHES FOR REDUCED PLANS 0 1 2 3

UNIT: 0724
PROJECT NUMBER & PHASE: 04000001601
CONTRACT NO.: 04-0A7101

DISREGARD PRINTS BEARING EARLIER REVISION DATES
REVISION DATES: 9-6-11 1-10-12 3-30-12 6-25-12
SHEET 53 OF 60

FILE => 33-0751-z-1tb02.dgn

USERNAME => s124496 DATE PLOTTED => 10-APR-2013 TIME PLOTTED => 06:24

DIST	COUNTY	ROUTE	POST MILES TOTAL PROJECT	SHEET No	TOTAL SHEETS
04	Ala	880	28.4/29.2	561	789

REGISTERED CIVIL ENGINEER — 6/25/12 DATE

4-8-13
PLANS APPROVAL DATE

REGISTERED PROFESSIONAL ENGINEER — Philip Meymand No. 2596 Exp. 6/30/13 GEOTECHNICAL — STATE OF CALIFORNIA

The State of California or its officers or agents shall not be responsible for the accuracy or completeness of electronic copies of this plan sheet.

ALAMEDA COUNTY TRANSPORTATION
1333 BROADWAY
OAKLAND, CA 94612

URS CORPORATION
1333 BROADWAY, SUITE 800
OAKLAND, CA 94612

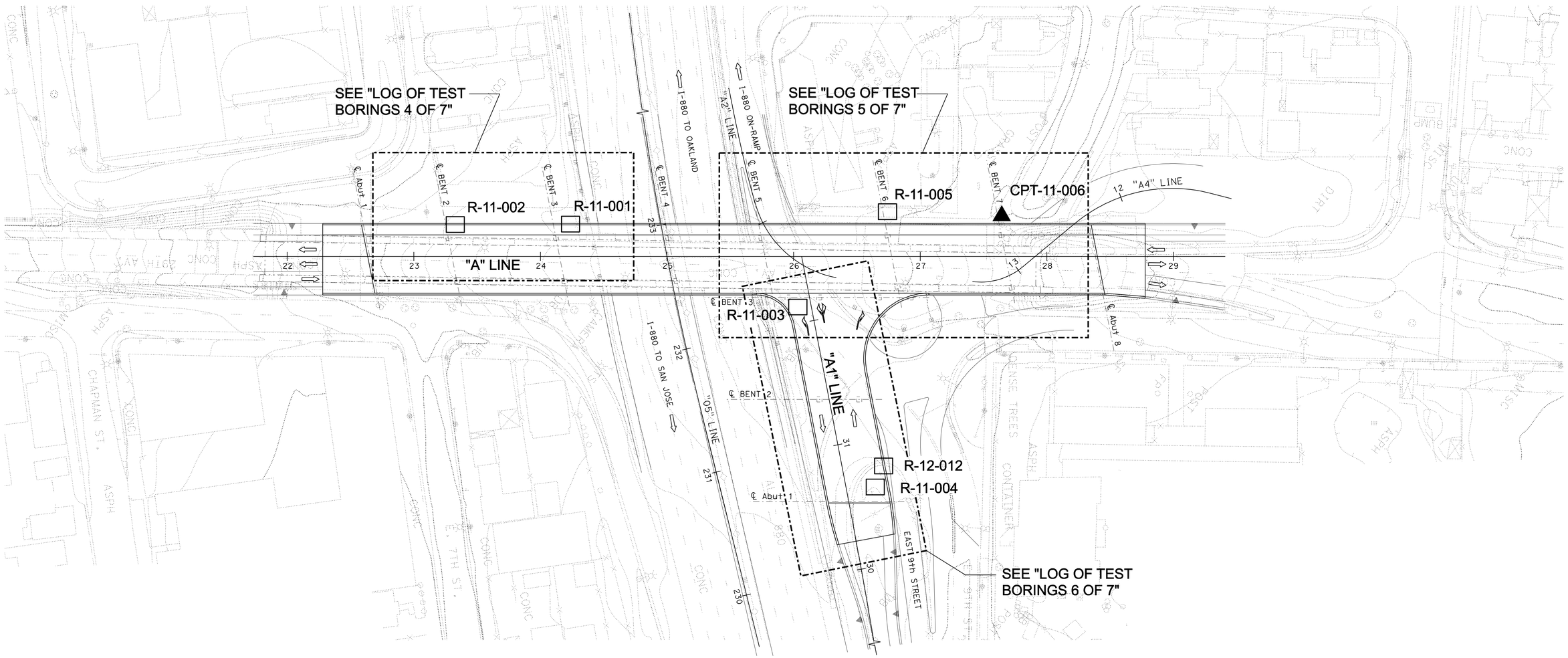

PLAN
1"=40'-0"

Paul Cotter
DESIGN OVERSIGHT — Paul Cotter
7-16-12
SIGN OFF DATE

DRAWN BY: N. HUTTON
CHECKED BY: C. TSAI

S. JANOWSKI
FIELD INVESTIGATION BY:
DATE: 04-25-11 TO 05-04-11

PREPARED FOR THE STATE OF CALIFORNIA DEPARTMENT OF TRANSPORTATION

Jan Hueser
PROJECT ENGINEER

BRIDGE NO. 33-0751
POST MILES 28.69

29TH AVENUE OC (REPLACE)
LOG OF TEST BORINGS 3 OF 9

GS CIVIL LOG OF TEST BORINGS SHEET (ENGLISH) (REV. 7/16/10)

ORIGINAL SCALE IN INCHES FOR REDUCED PLANS 0 1 2 3

UNIT: 0724
PROJECT NUMBER & PHASE: 04000001601
CONTRACT NO.: 04-0A7101

DISREGARD PRINTS BEARING EARLIER REVISION DATES

REVISION DATES: 9-6-11 1-18-12 3-30-12 6-25-12

SHEET 54 OF 60

FILE => 33-0751-z-ltb03.dgn

USERNAME => s124496 DATE PLOTTED => 10-APR-2013 TIME PLOTTED => 06:24

DIST	COUNTY	ROUTE	POST MILES TOTAL PROJECT	SHEET No	TOTAL SHEETS
04	Ala	880	28.4/29.2	562	789

REGISTERED CIVIL ENGINEER 6/25/12 DATE

4-8-13
PLANS APPROVAL DATE

REGISTERED PROFESSIONAL ENGINEER Philip Meymand No. 2596 Exp. 6/30/13 GEOTECHNICAL STATE OF CALIFORNIA

The State of California or its officers or agents shall not be responsible for the accuracy or completeness of electronic copies of this plan sheet.

ALAMEDA COUNTY TRANSPORTATION
1333 BROADWAY
OAKLAND, CA 94612

URS CORPORATION
1333 BROADWAY, SUITE 800
OAKLAND, CA 94612

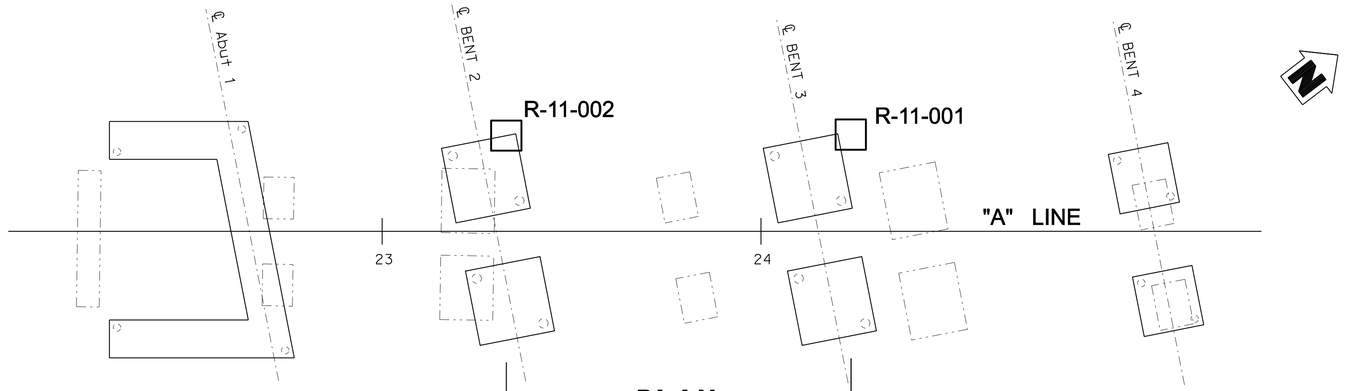

PLAN
1"=20'-0"

NOTES:

1. Ground water table was not measured in the borings due to rotary wash drilling.
2. Hammer energy ratio calibration not performed.
3. The borings were hand augered in the top 5 ft to check for the existence of underground utilities.

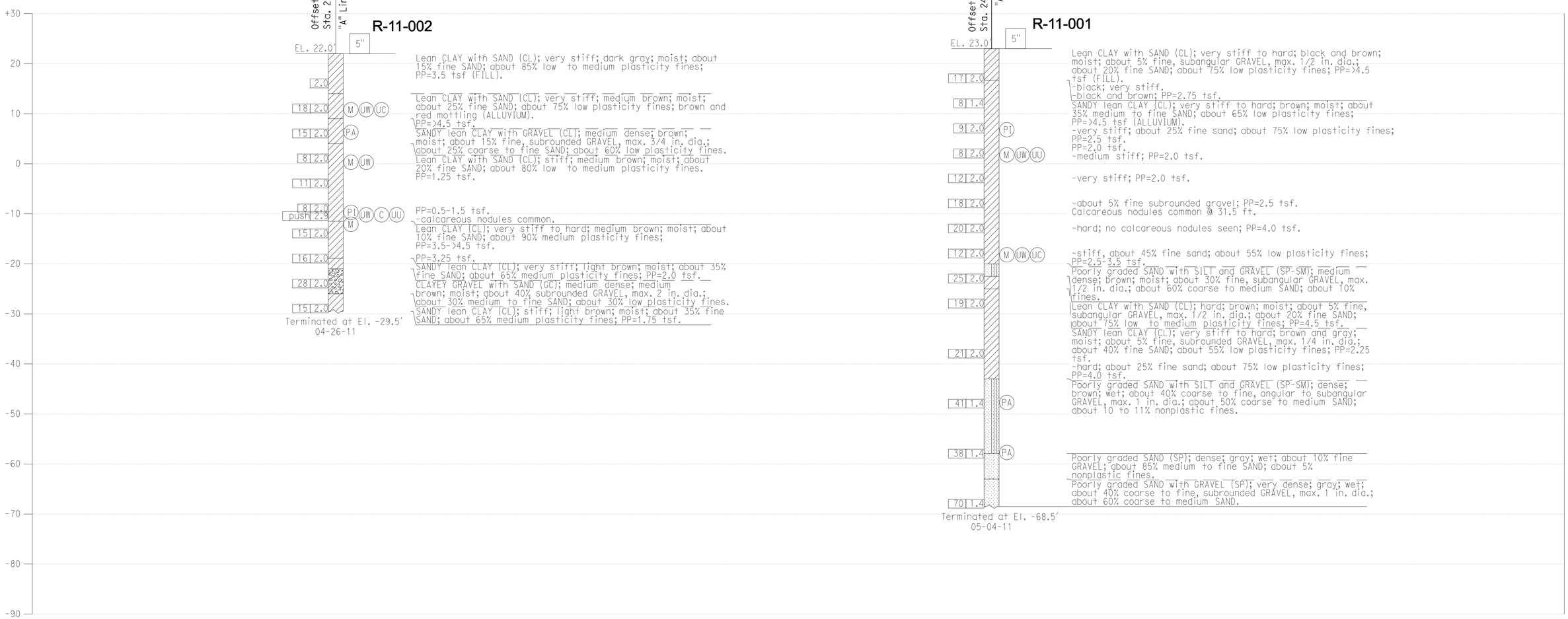

DESIGN OVERSIGHT Paul Cotter	DRAWN BY	N. HUTTON	S. JANOWSKI FIELD INVESTIGATION BY:
7-16-12 SIGN OFF DATE	CHECKED BY	C. TSAI	DATE: 04-25-11 TO 05-04-11

PREPARED FOR THE STATE OF CALIFORNIA DEPARTMENT OF TRANSPORTATION

Jan Hueser
PROJECT ENGINEER

BRIDGE NO. 33-0751
POST MILES 28.69

29TH AVENUE OC (REPLACE)
LOG OF TEST BORINGS 4 OF 9

GS CIVIL LOG OF TEST BORINGS SHEET (ENGLISH) (REV. 7/16/10)

ORIGINAL SCALE IN INCHES FOR REDUCED PLANS 0 1 2 3

UNIT: 0724
PROJECT NUMBER & PHASE: 04000001601 CONTRACT NO.: 04-0A7101

DISREGARD PRINTS BEARING EARLIER REVISION DATES → 9-6-11 1-18-12 3-30-12 6-25-12

SHEET 55 OF 60

FILE => 33-0751-z-ltb04.dgn

USERNAME => s124436 DATE PLOTTED => 10-APR-2013 TIME PLOTTED => 06:24

DIST	COUNTY	ROUTE	POST MILES TOTAL PROJECT	SHEET No	TOTAL SHEETS
04	Ala	880	28.4/29.2	563	789

REGISTERED CIVIL ENGINEER — 6/25/12 DATE

4-8-13
PLANS APPROVAL DATE

REGISTERED PROFESSIONAL ENGINEER — Philip Meymand — No. 2596 — Exp. 6/30/13 — GEOTECHNICAL — STATE OF CALIFORNIA

The State of California or its officers or agents shall not be responsible for the accuracy or completeness of electronic copies of this plan sheet.

ALAMEDA COUNTY TRANSPORTATION
1333 BROADWAY
OAKLAND, CA 94612

URS CORPORATION
1333 BROADWAY, SUITE 800
OAKLAND, CA 94612

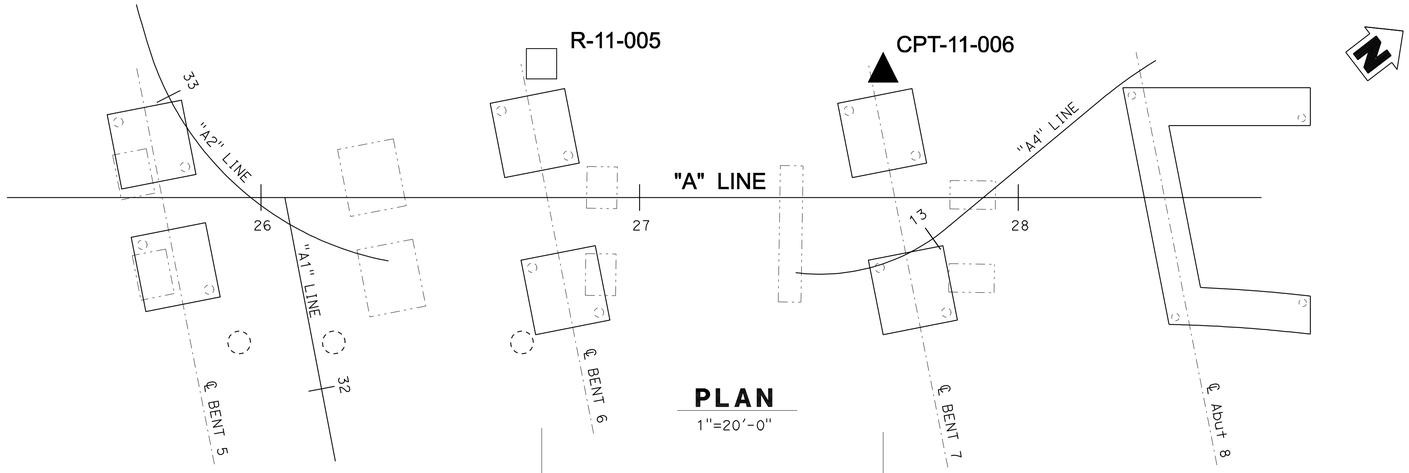

PLAN
1"=20'-0"

NOTES:

1. Ground water table was not measured in the borings due to rotary wash drilling.
2. Hammer energy ratio calibration not performed.
3. The borings were hand augered in the top 5 ft to check for the existence of underground utilities.

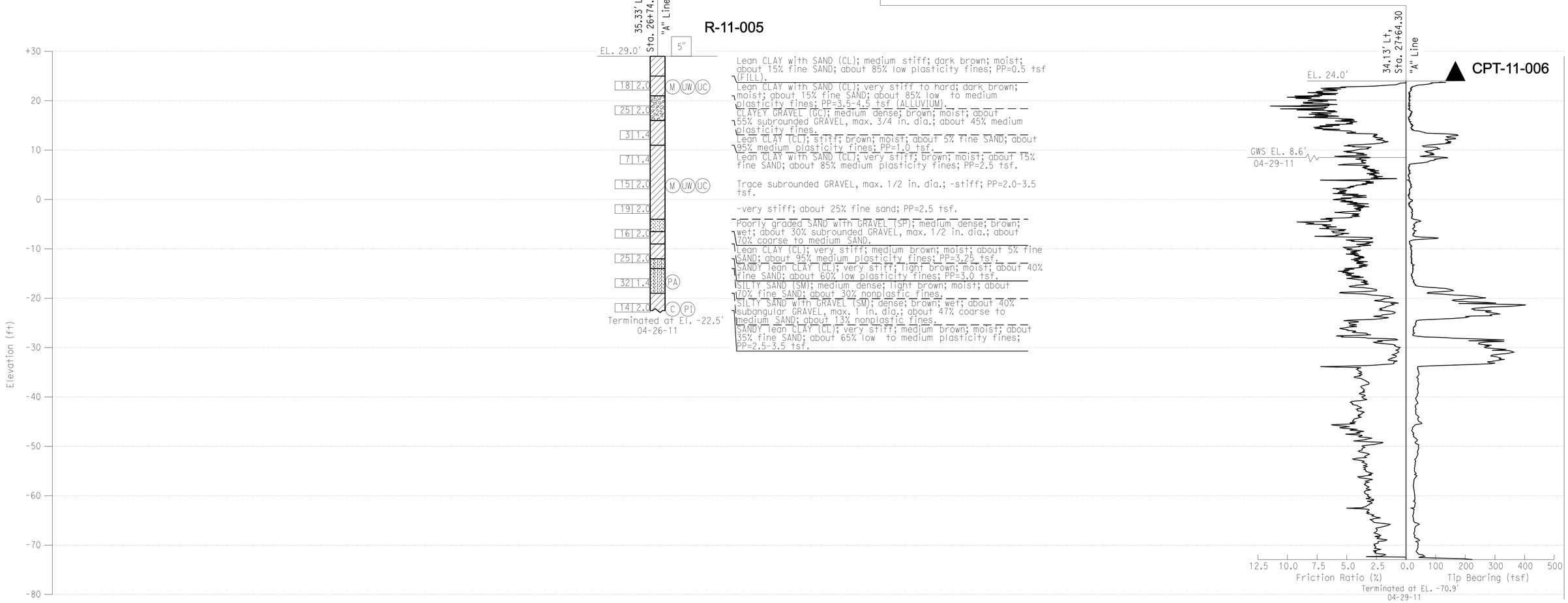

Paul Cotter — DESIGN OVERSIGHT Paul Cotter — 7-16-12 SIGN OFF DATE	DRAWN BY N. HUTTON	S. JANOWSKI FIELD INVESTIGATION BY:	PREPARED FOR THE STATE OF CALIFORNIA DEPARTMENT OF TRANSPORTATION	Jan Hueser PROJECT ENGINEER	BRIDGE NO. 33-0751 POST MILES 28.69
	CHECKED BY C. TSAI	DATE: 04-25-11 TO 05-04-11			

29TH AVENUE OC (REPLACE)
LOG OF TEST BORINGS 5 OF 9

GS CIVIL LOG OF TEST BORINGS SHEET (ENGLISH) (REV. 7/16/10)

ORIGINAL SCALE IN INCHES FOR REDUCED PLANS 0 1 2 3

UNIT: 0724
PROJECT NUMBER & PHASE: 04000001601 CONTRACT NO.: 04-0A7101

DISREGARD PRINTS BEARING EARLIER REVISION DATES → REVISION DATES ~~9-6-11~~ ~~1-10-12~~ ~~3-30-12~~ 6-25-12 SHEET 56 OF 60

FILE => 33-0751-z-ltb05.dgn

USERNAME => s124496 DATE PLOTTED => 10-APR-2013 TIME PLOTTED => 06:24

DIST	COUNTY	ROUTE	POST MILES TOTAL PROJECT	SHEET No	TOTAL SHEETS
04	Ala	880	28.4/29.2	564	789

REGISTERED CIVIL ENGINEER 6/25/12 DATE

4-8-13
PLANS APPROVAL DATE

REGISTERED PROFESSIONAL ENGINEER Philip Meymand No. 2596 Exp. 6/30/13 GEOTECHNICAL STATE OF CALIFORNIA

The State of California or its officers or agents shall not be responsible for the accuracy or completeness of electronic copies of this plan sheet.

ALAMEDA COUNTY TRANSPORTATION
1333 BROADWAY
OAKLAND, CA 94612

URS CORPORATION
1333 BROADWAY, SUITE 800
OAKLAND, CA 94612

NOTES:

1. Ground water table was not measured in the borings due to rotary wash drilling.
2. Hammer energy ratio calibration not performed.
3. The borings were hand augered in the top 5 ft to check for the existence of underground utilities.

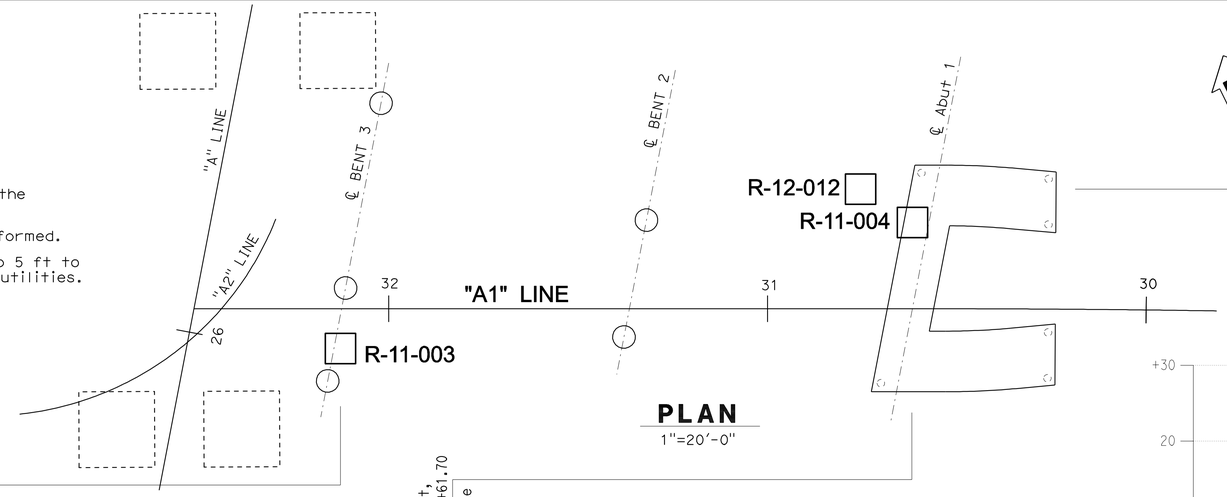

PLAN
1"=20'-0"

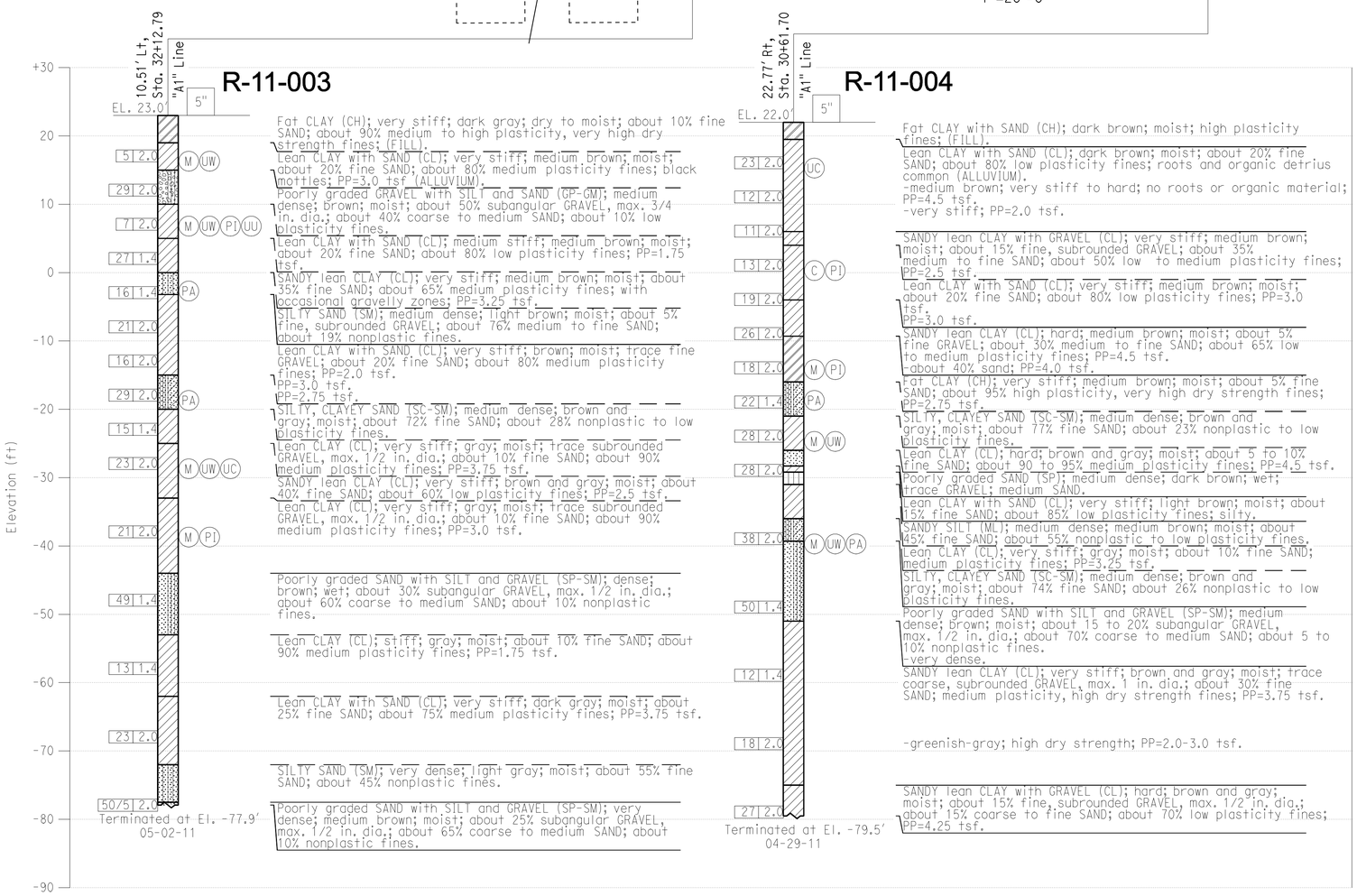

Paul Cotter DESIGN OVERSIGHT Paul Cotter	DRAWN BY	N. HUTTON	S. JANOWSKI FIELD INVESTIGATION BY:	PREPARED FOR THE STATE OF CALIFORNIA DEPARTMENT OF TRANSPORTATION	Jan Hueser PROJECT ENGINEER
7-16-12 SIGN OFF DATE	CHECKED BY	C. TSAI	DATE: 04-25-11 TO 05-04-11		

BRIDGE NO. 33-0751
POST MILES 28.69

29TH AVENUE OC (REPLACE)
LOG OF TEST BORINGS 6 OF 9

GS CIVIL LOG OF TEST BORINGS SHEET (ENGLISH) (REV. 7/16/10)

ORIGINAL SCALE IN INCHES FOR REDUCED PLANS 0 1 2 3

UNIT: 0724
PROJECT NUMBER & PHASE: 04000001601 CONTRACT NO.: 04-0A7101

DISREGARD PRINTS BEARING EARLIER REVISION DATES → REVISION DATES 9-6-11 1-30-12 5-30-12 6-25-12 SHEET 57 OF 60

FILE => 33-0751-z-1tb06.dgn

USERNAME => s124496 DATE PLOTTED => 10-APR-2013 TIME PLOTTED => 06:24

BENCH MARK:

DESIGNATION: ALA8 ELEV=14.521
FOUND BRASS DISK STAMPED "ALA8" IN THE SIDEWALK AT THE WEST CORNER OF EAST 8TH STREET AND 5TH AVENUE.

DESIGNATION: ALA7 ELEV=15.591
FOUND BRASS DISK STAMPED "ALA7" IN THE SIDEWALK AT THE WEST SIDE OF 7TH STREET ALONG THE NORTH SIDE OF LAKE MERRITT CHANNEL.

DESIGNATION: 8TH/37TH ELEV=20.262
FOUND A CITY OF OAKLAND PIN IN CONCRETE IN A MONUMENT WELL AT THE INTERSECTION OF EAST 8TH STREET AND 37TH AVENUE.

DESIGNATION: ALA13 ELEV=15.318
FOUND BRASS DISK STAMPED "ALA13" INSIDE A 1 INCH IRON PIPE WITH A CONCRETE COLLAR 24.6 FEET NORTH OF THE NORTH SIDE OF HIGH STREET,
56 FEET WEST OF THE WEST SIDE OF THE OFFRAMP FROM SOUTHBOUND STATE ROUTE 880 AND 4.99 FEET SOUTH OF THE SOUTH RAIL OF THE RAILROAD TRACKS.

DESIGNATION: KA121 ELEV=15.768
FOUND 1 INCH IRON PIPE WITH RED PLASTIC PLUG AND TACK STAMPED "CALTRANS" ALONG THE EAST SIDE OF OAKPORT STREET ABOUT 230 FEET SOUTH OF THE SOUTH SIDE OF HIGH STREET, ACROSS FROM 4401 OAKPORT STREET, 6.92 FEET NORTH OF THE FLOWLINE OF THE CURB.

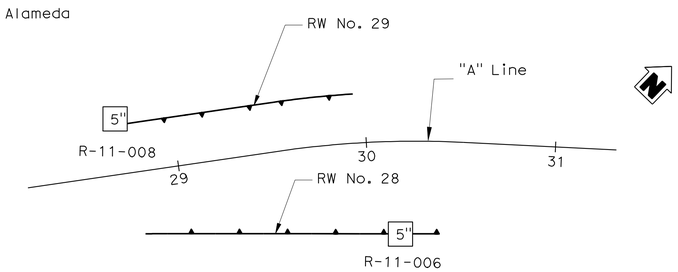

DIST	COUNTY	ROUTE	POST MILES TOTAL PROJECT	SHEET No	TOTAL SHEETS
04	Ala	880	28.4/29.2		

REGISTERED ENGINEER DATE

PLANS APPROVAL DATE

The State of California or its officers or agents shall not be responsible for the accuracy or completeness of electronic copies of this plan sheet.

REGISTERED PROFESSIONAL ENGINEER L. CHEANG NO. GE 2345 EXP. 9-30-13 GEOTECHNICAL STATE OF CALIFORNIA

ALAMEDA COUNTY TRANSPORTATION COMMISSION
1333 BROADWAY, SUITE 220
OAKLAND, CA 94612

EARTH MECHANICS, INC.
17800 NEWHOPE STREET, SUITE B
FOUNTAIN VALLEY, CA 92708

PLAN

1" = 40'

TO ACCOMPANY PLANS DATED 4-8-13

DIVISION OF ENGINEERING SERVICES - GEOTECHNICAL SERVICES

The information presented on this drawing, was not the result of any work developed, performed, or completed by URS. This drawing is available and presented only for the convenience of any bidder, contractor, or other interested party. It should be understood that URS assumes no responsibility in respect to the sufficiency, accuracy, completeness, interpretation set forth, or any other aspect of the information shown on this drawing.

DIST.	COUNTY	ROUTE	POST MILES-TOTAL PROJECT	Sheet No.	Total Sheets
04	Ala	880	28.4/29.2	565	789

CERTIFIED ENGINEERING GEOLOGIST — DATE 6/12/12

29TH AVENUE OC (REPLACE)

LOG OF TEST BORINGS 7 OF 9

UNIT: 0724	CONTRACT No.	BRIDGE No.
PROJECT NUMBER & PHASE: 04000001601	04-0A7101	33-0751
	Sheet 58	of 60

REGISTERED PROFESSIONAL ENGINEER Philip Meymand No. 2596 Exp. 6/30/13 GEOTECHNICAL STATE OF CALIFORNIA

NOTES:

(1) This LOTB sheet was prepared in accordance with the Caltrans Soil and Rock Logging, Classification and Presentation Manual (June 2010).

(2) 2.4" samples were taken using a California Modified Sampler.

(3) An automatic trip hammer system consisting of a hammer weight of 140 lbs falling a distance of 30" was used to advance the drive sampler.

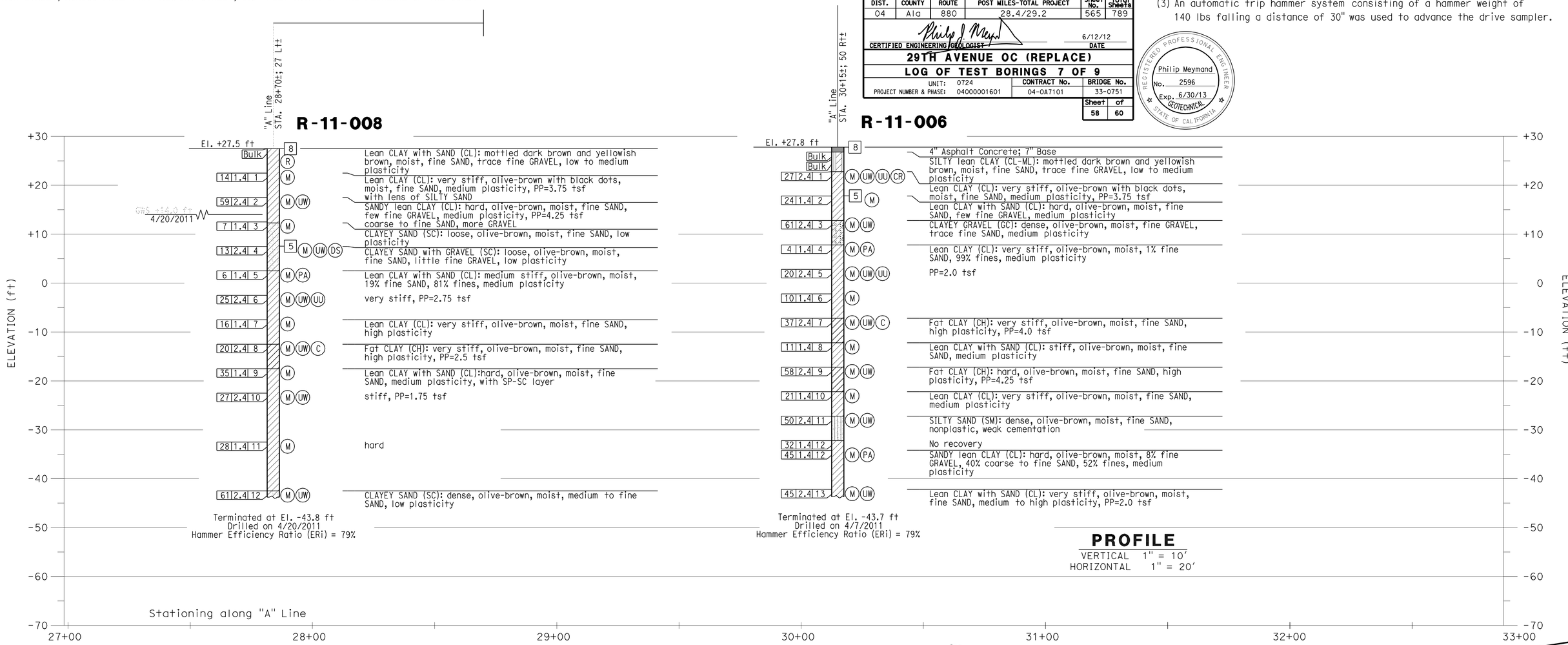

PROFILE

VERTICAL 1" = 10'
HORIZONTAL 1" = 20'

Paul Cotter DESIGN OVERSIGHT Paul Cotter	DRAWN BY	J. Fang	K. Thant FIELD INVESTIGATION BY:	PREPARED FOR THE STATE OF CALIFORNIA DEPARTMENT OF TRANSPORTATION	L. Cheang PROJECT ENGINEER
7-16-12 SIGN OFF DATE	CHECKED BY	G. J. Gunaranjan	DATE: 3/2011, 4/2011		

BRIDGE NO. –
POST MILES Varies

RETAINING WALL No. 28 and 29

LOG OF TEST BORINGS 1 OF 1

GS GEOTECHNICAL LOG OF TEST BORINGS SHEET (ENGLISH) (REV. 7/16/10)

ORIGINAL SCALE IN INCHES FOR REDUCED PLANS 0 1 2 3

UNIT: 0247
PROJECT NUMBER & PHASE: 04000001601

DISREGARD PRINTS BEARING EARLIER REVISION DATES

REVISION DATES SHEET OF

FILE => 33-0751-z-ltb07.dgn

CONTRACT NO.:04-0A7100 PROJECT ID:

USERNAME => s124496 DATE PLOTTED => 10-APR-2013 TIME PLOTTED => 06:24

BENCH MARK:

DESIGNATION: ALA8 ELEV=14.521
FOUND BRASS DISK STAMPED "ALA8" IN THE SIDEWALK AT THE WEST CORNER OF EAST 8TH STREET AND 5TH AVENUE.

DESIGNATION: ALA7 ELEV=15.591
FOUND BRASS DISK STAMPED "ALA7" IN THE SIDEWALK AT THE WEST SIDE OF 7TH STREET ALONG THE NORTH SIDE OF LAKE MERRITT CHANNEL.

DESIGNATION: 8TH/37TH ELEV=20.262
FOUND A CITY OF OAKLAND PIN IN CONCRETE IN A MONUMENT WELL AT THE INTERSECTION OF EAST 8TH STREET AND 37TH AVENUE.

DESIGNATION: ALA13 ELEV=15.318
FOUND BRASS DISK STAMPED "ALA13" INSIDE A 1 INCH IRON PIPE WITH A CONCRETE COLLAR 24.6 FEET NORTH OF THE NORTH SIDE OF HIGH STREET,
56 FEET WEST OF THE WEST SIDE OF THE OFFRAMP FROM SOUTHBOUND STATE ROUTE 880 AND 4.99 FEET SOUTH OF THE SOUTH RAIL OF THE RAILROAD TRACKS.

DESIGNATION: KA121 ELEV=15.768
FOUND 1 INCH IRON PIPE WITH RED PLASTIC PLUG AND TACK STAMPED "CALTRANS" ALONG THE EAST SIDE OF OAKPORT STREET ABOUT 230 FEET SOUTH OF THE SOUTH SIDE OF HIGH STREET, ACROSS FROM 4401 OAKPORT STREET, 6.92 FEET NORTH OF THE FLOWLINE OF THE CURB.

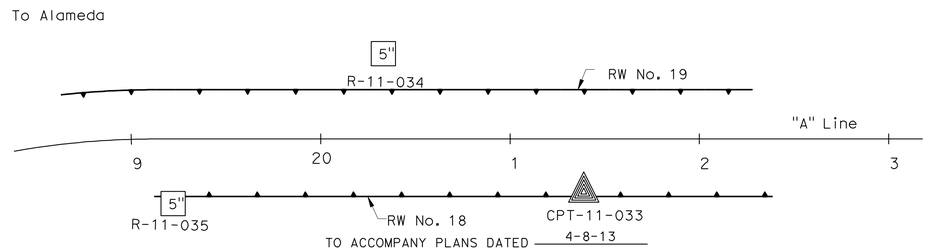

TO ACCOMPANY PLANS DATED 4-8-13

DIVISION OF ENGINEERING SERVICES - GEOTECHNICAL SERVICES

The information presented on this drawing, was not the result of any work developed, performed, or completed by URS. This drawing is available and presented only for the convenience of any bidder, contractor, or other interested party. It should be understood that URS assumes no responsibility in respect to the sufficiency, accuracy, completeness, interpretation set forth, or any other aspect of the information shown on this drawing.

DIST.	COUNTY	ROUTE	POST MILES-TOTAL PROJECT	Sheet No.	Total Sheets
04	Ala	880	28.4/29.2	566	789

CERTIFIED ENGINEERING GEOLOGIST — DATE 6/12/12

29TH AVENUE OC (REPLACE)

LOG OF TEST BORINGS 8 OF 9

UNIT: 0724	CONTRACT No.	BRIDGE No.
PROJECT NUMBER & PHASE: 04000001601	04-0A7101	33-0751
		Sheet 59 of 60

DIST	COUNTY	ROUTE	POST MILES TOTAL PROJECT	SHEET No	TOTAL SHEETS
04	Ala	880	28.4/29.2		

REGISTERED ENGINEER — DATE

PLANS APPROVAL DATE

The State of California or its officers or agents shall not be responsible for the accuracy or completeness of electronic copies of this plan sheet.

REGISTERED PROFESSIONAL ENGINEER — L. CHEANG — NO. GE 2345 — EXP. 9-30-13 — GEOTECHNICAL — STATE OF CALIFORNIA

ALAMEDA COUNTY TRANSPORTATION COMMISSION
1333 BROADWAY, SUITE 220
OAKLAND, CA 94612

EARTH MECHANICS, INC.
17800 NEWHOPE STREET, SUITE B
FOUNTAIN VALLEY, CA 92708

REGISTERED PROFESSIONAL ENGINEER — Philip Meymand — No. 2596 — Exp. 6/30/13 — GEOTECHNICAL — STATE OF CALIFORNIA

NOTES:

(1) This LOTB sheet was prepared in accordance with the Caltrans Soil and Rock Logging, Classification and Presentation Manual (June 2010).

(2) 2.4" samples were taken using a California Modified Sampler.

(3) An automatic trip hammer system consisting of a hammer weight of 140 lbs falling a distance of 30" was used to advance the drive sampler.

PLAN

1" = 40'

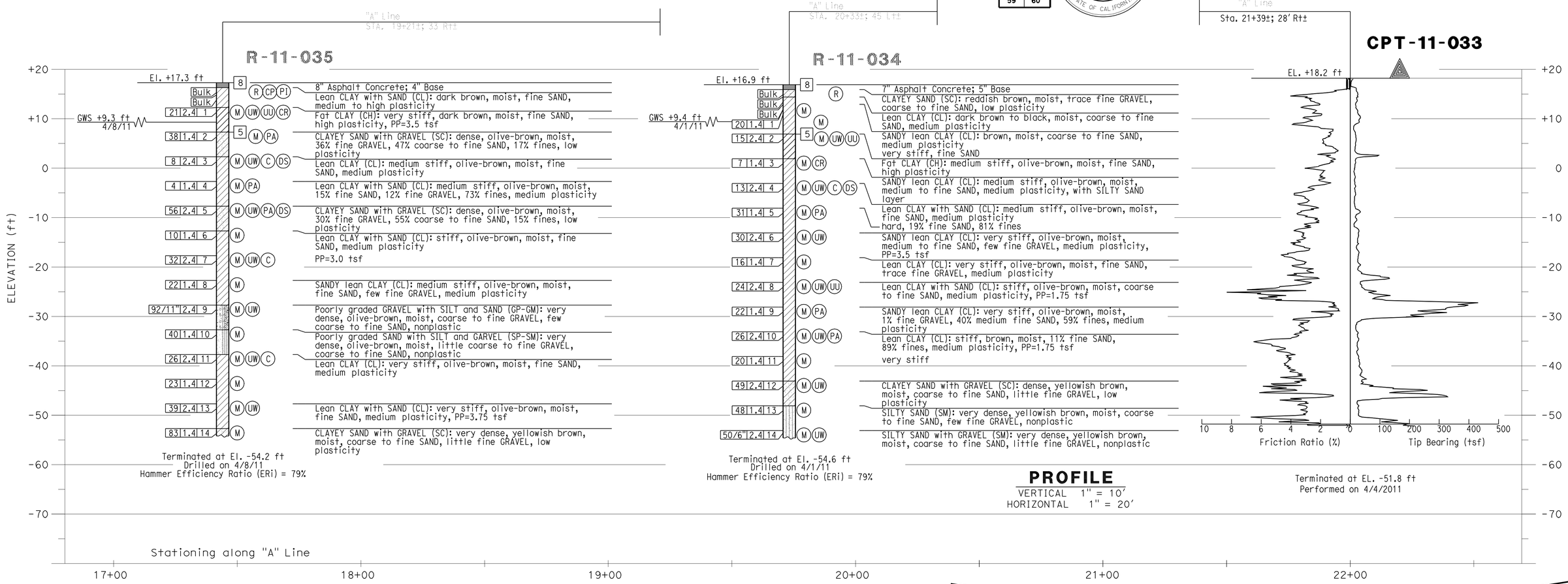

PROFILE

VERTICAL 1" = 10'
HORIZONTAL 1" = 20'

DESIGN OVERSIGHT Paul Cotter	DRAWN BY J. Fang	K. Thant FIELD INVESTIGATION BY:	PREPARED FOR THE STATE OF CALIFORNIA DEPARTMENT OF TRANSPORTATION
7-16-12 SIGN OFF DATE	CHECKED BY G. J. Gunaranjan	DATE: 3/2011, 4/2011	L. Cheang PROJECT ENGINEER

BRIDGE NO. –
POST MILES Varies

RETAINING WALL No. 18 and 19

LOG OF TEST BORINGS 1 OF 1

GS GEOTECHNICAL LOG OF TEST BORINGS SHEET (ENGLISH) (REV. 7/16/10)

ORIGINAL SCALE IN INCHES FOR REDUCED PLANS 0 1 2 3

UNIT: 0247
PROJECT NUMBER & PHASE: 04000001601

DISREGARD PRINTS BEARING EARLIER REVISION DATES

REVISION DATES — SHEET — OF

FILE => 33-0751-z-ltb08.dgn

CONTRACT NO.:04-0A7100 PROJECT ID:

USERNAME => s124496 DATE PLOTTED => 10-APR-2013 TIME PLOTTED => 06:24

The State of California or its officers or agents shall not be responsible for the accuracy or completeness of electronic copies of this plan sheet.

DIST	COUNTY	ROUTE	POST MILES TOTAL PROJECT	SHEET NO.	TOTAL SHEETS
04	Ala	77,880	0.3, 27.6/29.2	82	108

GEOTECHNICAL PROFESSIONAL

11-7-94
PLANS APPROVAL DATE

REGISTERED PROFESSIONAL ENGINEER BAHRAM KHAMENEHPOUR No. 2104 Exp. 12/31/93 GEOTECHNICAL STATE OF CALIFORNIA

AGS, INC.
120 HOWARD STREET
SUITE 600
SAN FRANCISCO, CALIFORNIA 94105

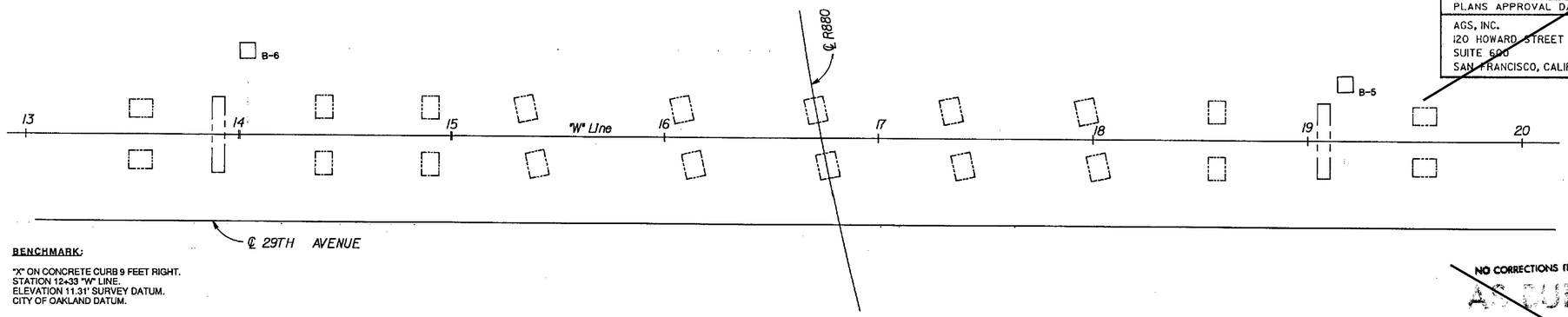

PLAN
1"=30'

LABORATORY TESTS

(W) WASH ANALYSIS (WITH % FINES CONTENT)

(U) UNCONFINED COMPRESSION (WITH UNCONFINED COMPRESSIVE STRENGTH IN TSF)

BENCHMARK:

"X" ON CONCRETE CURB 9 FEET RIGHT.
STATION 12+33 "W" LINE.
ELEVATION 11.31' SURVEY DATUM.
CITY OF OAKLAND DATUM.

NO CORRECTIONS THIS SHEET
AS BUILT
CORRECTIONS BY DT
CONTRACT NO. 04-133224
DATE 11/6/95 OK - 9/6/99

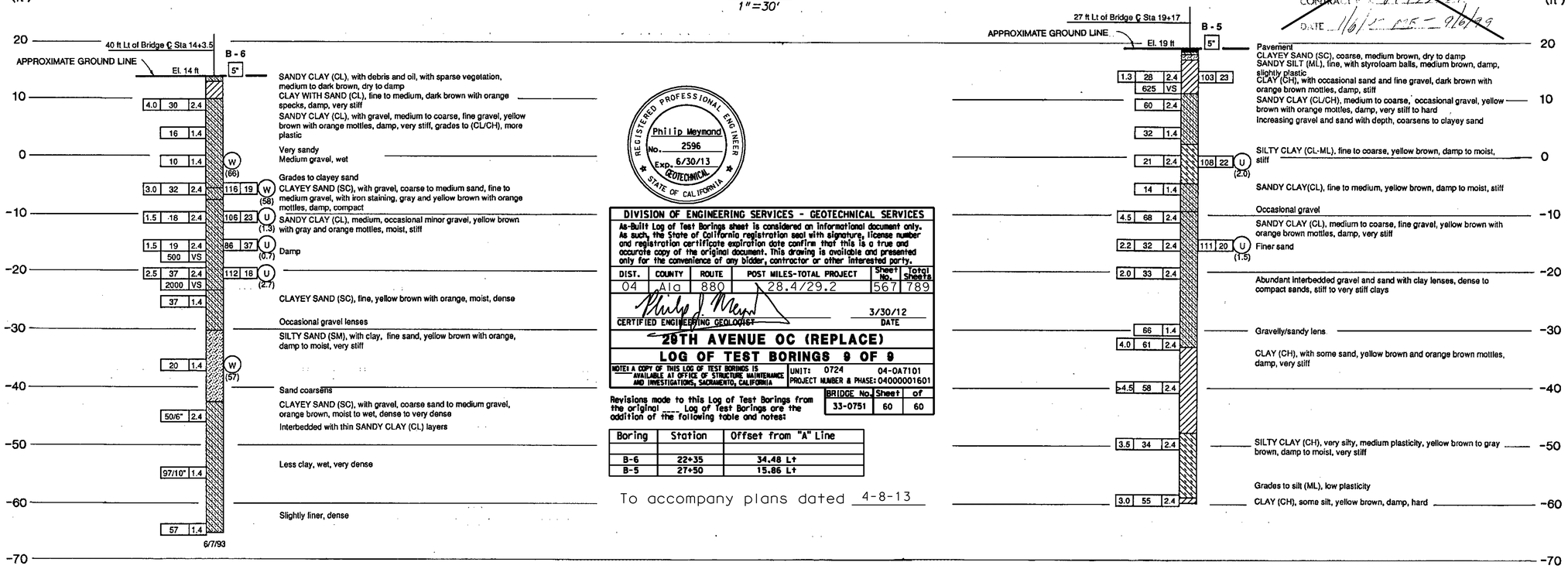

REGISTERED PROFESSIONAL ENGINEER Philip Meymand No. 2596 Exp. 6/30/13 GEOTECHNICAL STATE OF CALIFORNIA

DIVISION OF ENGINEERING SERVICES - GEOTECHNICAL SERVICES					
As-Built Log of Test Borings sheet is considered an informational document only. As such, the State of California registration seal with signature, license number and registration certificate expiration date confirm that this is a true and accurate copy of the original document. This drawing is available and presented only for the convenience of any bidder, contractor or other interested party.					
DIST.	COUNTY	ROUTE	POST MILES-TOTAL PROJECT	Sheet No.	Total Sheets
04	Ala	880	28.4/29.2	567	789
CERTIFIED ENGINEERING GEOLOGIST				3/30/12 DATE	

29TH AVENUE OC (REPLACE)

LOG OF TEST BORINGS 9 OF 9

NOTE: A COPY OF THIS LOG OF TEST BORINGS IS AVAILABLE AT OFFICE OF STRUCTURE MAINTENANCE AND INVESTIGATIONS, SACRAMENTO, CALIFORNIA

UNIT: 0724 04-0A7101
PROJECT NUMBER & PHASE: 04000001601

BRIDGE No.	Sheet	of
33-0751	60	60

Revisions made to this Log of Test Borings from the original ____ Log of Test Borings are the addition of the following table and notes:

Boring	Station	Offset from "A" Line
B-6	22+35	34.48 Lt
B-5	27+50	15.86 Lt

To accompany plans dated 4-8-13

LEGEND OF BORING OPERATIONS

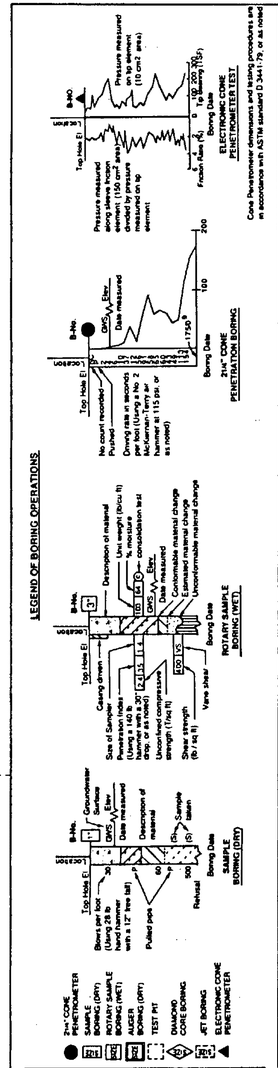

LEGEND OF EARTH MATERIALS

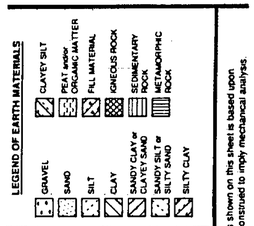

CONSISTENCY CLASSIFICATION FOR SOILS

According to the Standard Penetration Test

Penetration Index (Blows / Ft)	Granular	Cohesive
0-4	Very loose	Very soft
5-9	Loose	Soft
10-19	Slightly compact	Stiff
20-34	Compact	Very stiff
35-69	Dense	Hard
>70	Very dense	Very hard

NOTE: Classification of earth material as shown on this sheet is based upon field inspection and is not to be construed to imply mechanical analysis.

DESIGN OVERSIGHT 2-21-94 SIGN OFF DATE	DRAWN BY J. LAPID	C. ANDREWS FIELD INVESTIGATOR	PREPARED FOR THE STATE OF CALIFORNIA DEPARTMENT OF TRANSPORTATION	B. KHAMENEHPOUR PROJECT ENGINEER	BRIDGE NO. 33 - 0141
	CHECKED BY B. BROWN	DATE			POST MILE 28.69

EARTHQUAKE RETROFIT PROJECT NO. 83
29TH AVE OVERCROSSING
LOG OF TEST BORINGS

ORIGINAL SCALE IN INCHES FOR REDUCED PLANS 0 1 2 3

CU 04
EA 133231

DISREGARD PRINTS BEARING EARLIER REVISION DATES → 7/7/93 7/31/93 10/8/93

REVISION DATES (PRELIMINARY STAGE ONLY) SHEET 7 OF 7

33-0751-z-ltb09.tif

ClibPDF - www.fastio.com

DIST	COUNTY	ROUTE	POST MILES TOTAL PROJECT	SHEET No	TOTAL SHEETS
04	Ala	880	28.4/29.2	568	789

REGISTERED CIVIL ENGINEER 6/25/12 DATE

4-8-13
PLANS APPROVAL DATE

REGISTERED PROFESSIONAL ENGINEER Jan M. Hueser No. C050215 Exp. 6/30/13 CIVIL STATE OF CALIFORNIA

The State of California or its officers or agents shall not be responsible for the accuracy or completeness of electronic copies of this plan sheet.

ALAMEDA COUNTY TRANSPORTATION COMMISSION
1333 BROADWAY
OAKLAND, CA 94612-1918

URS CORPORATION
1380 LEAD HILL BLVD, SUITE 100
ROSEVILLE, CA 95661-2997

LEGEND:

- Indicates direction of traffic
- Point of minimum vertical clearance
- Preformed Signal Loop Detectors, see "ELECTRICAL PLANS"

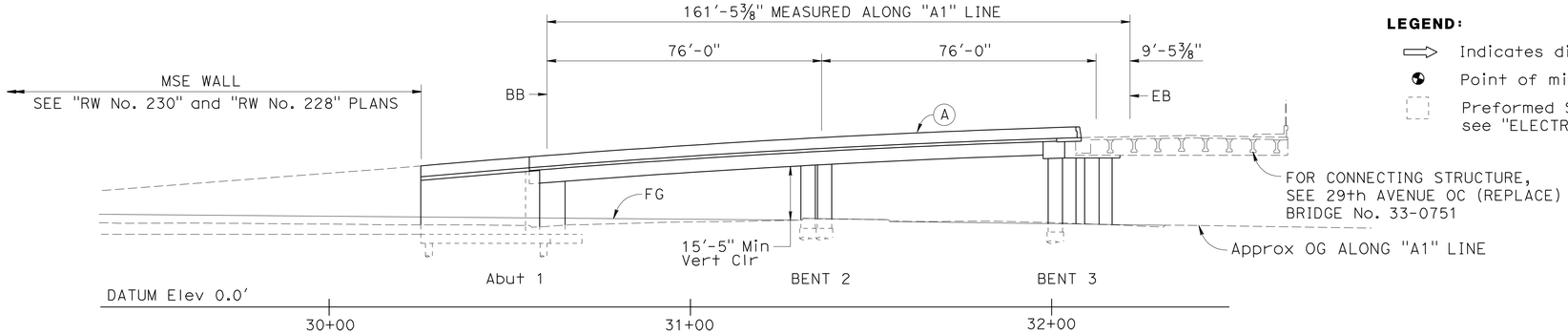

ELEVATION

1"=20'-0"

NOTES:

(A) Concrete Barrier (Type 732 Modified) with Architectural Treatment

(B) Structure Approach Type N(30S)

(C) Paint "Bridge No. 33-0752S", "Bridge Name" and Year Completed

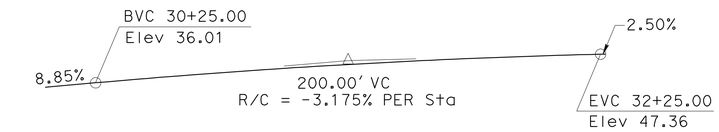

PROFILE GRADE - "A1" LINE

NO SCALE

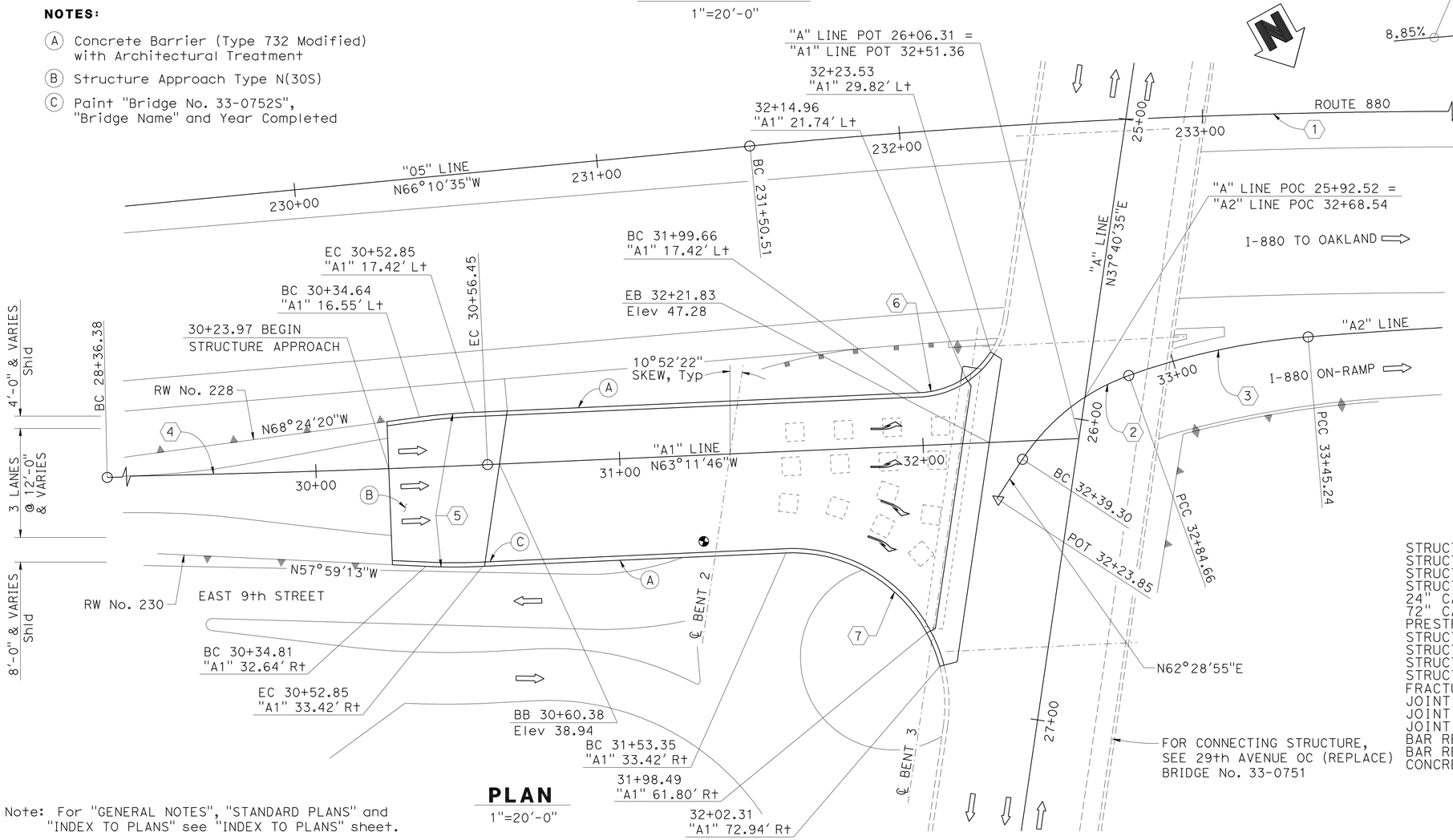

PLAN

1"=20'-0"

CURVE DATA

CURVE	R	Δ	T	L
1	2485'	51°15'49"	1192.31'	2223.38'
2	70'	37°08'06"	23.51'	45.36'
3	230'	15°05'21"	30.46'	60.58'
4	5000'	2°31'19"	110.05'	220.07'
5	200'	5°12'33"	9.10'	18.18'
6	29.08'	79°07'39"	24.03'	40.16'
7	50.08'	100°52'21"	60.61'	88.17'

29TH AVENUE OFF-RAMP

QUANTITIES

STRUCTURE EXCAVATION (BRIDGE)	170	CY
STRUCTURE EXCAVATION (RETAINING WALL)	235	CY
STRUCTURE BACKFILL (BRIDGE)	191	CY
STRUCTURE BACKFILL (RETAINING WALL)	524	CY
24" CAST-IN-DRILLED-HOLE CONCRETE PILING	1,756	LF
72" CAST-IN-DRILLED-HOLE CONCRETE PILING	523	LF
PRESTRESSING CAST-IN-PLACE CONCRETE(TRANSVERSE)	LUMP	SUM
STRUCTURAL CONCRETE, BRIDGE FOOTING	69	CY
STRUCTURAL CONCRETE, BRIDGE	829	CY
STRUCTURAL CONCRETE, RETAINING WALL	144	CY
STRUCTURAL CONCRETE, APPROACH SLAB(TYPE N)	66	CY
FRACTURED RIB TEXTURE	2,098	SQFT
JOINT SEAL (MR 1")	52	LF
JOINT SEAL (MR 1½")	88	LF
JOINT SEAL (TYPE AL)	111	LF
BAR REINFORCING STEEL (BRIDGE)	462,263	LB
BAR REINFORCING STEEL (RETAINING WALL)	49,148	LB
CONCRETE BARRIER (TYPE 732 MODIFIED)	402	LF

Note: For "GENERAL NOTES", "STANDARD PLANS" and "INDEX TO PLANS" see "INDEX TO PLANS" sheet.

Paul Cotter
DESIGN OVERSIGHT Paul Cotter
7-16-12
SIGN OFF DATE

	BY	CHECKED
DESIGN	S. Landis	A. Priley/F. Hakemi
DETAILS	L. Davis	A. Priley/F. Hakemi
QUANTITIES	S. Landis	F. Hakemi/B. Osorio

LOAD & RESISTANCE FACTOR DESIGN — LIVE LOADING: HL93 W/"LOW-BOY"; PERMIT DESIGN VEHICLE

LAYOUT BY J. Hueser CHECKED F. Hakemi
SPECIFICATIONS BY D. Harnagel PLANS AND SPECS COMPARED J. Hueser

PREPARED FOR THE STATE OF CALIFORNIA DEPARTMENT OF TRANSPORTATION

Jan Hueser
PROJECT ENGINEER

BRIDGE NO. 33-0752S
POST MILES 28.69

29TH AVENUE OFF-RAMP
GENERAL PLAN No. 1

DESIGN GENERAL PLAN SHEET (ENGLISH) (REV.7/16/10)

ORIGINAL SCALE IN INCHES FOR REDUCED PLANS 0 1 2 3

UNIT: 0724
PROJECT NUMBER & PHASE: 04000001601 CONTRACT NO.: 04-0A7101

DISREGARD PRINTS BEARING EARLIER REVISION DATES — REVISION DATES 9-6-11 1-18-12 3-30-12 6-25-12 SHEET 1 OF 34

FILE => 33-0752S-a-gp01.dgn

USERNAME => s1244396 DATE PLOTTED => 10-APR-2013 TIME PLOTTED => 06:37

DIST	COUNTY	ROUTE	POST MILES TOTAL PROJECT	SHEET No	TOTAL SHEETS
04	Ala	880	28.4/29.2	569	789

REGISTERED CIVIL ENGINEER 6/25/12 DATE

4-8-13
PLANS APPROVAL DATE

REGISTERED PROFESSIONAL ENGINEER Jan M. Hueser No. C050215 Exp. 6/30/13 CIVIL STATE OF CALIFORNIA

The State of California or its officers or agents shall not be responsible for the accuracy or completeness of electronic copies of this plan sheet.

ALAMEDA COUNTY TRANSPORTATION COMMISSION
1333 BROADWAY
OAKLAND, CA 94612-1918

URS CORPORATION
1380 LEAD HILL BLVD, SUITE 100
ROSEVILLE, CA 95661-2997

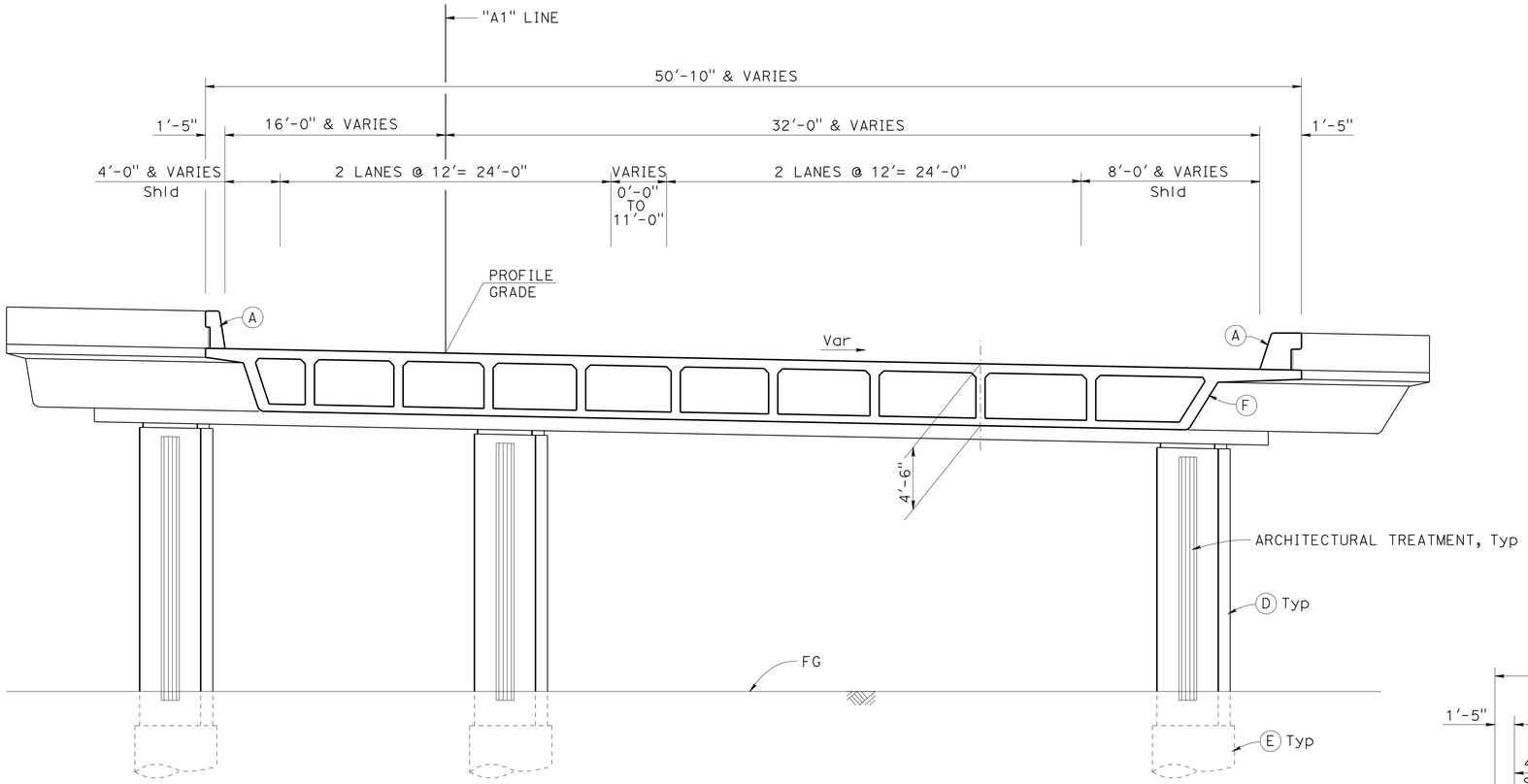

SECTION AT STA 31+53.35 TO EB

3/16" = 1'-0"

NOTES:

(A) Concrete Barrier (Type 732 Modified) with Architectural Treatment
(D) 4'-3" square column with Architectural Treatment
(E) 6'-0" Dia CIDH pile
(F) Cast-in-place reinforced concrete box girder

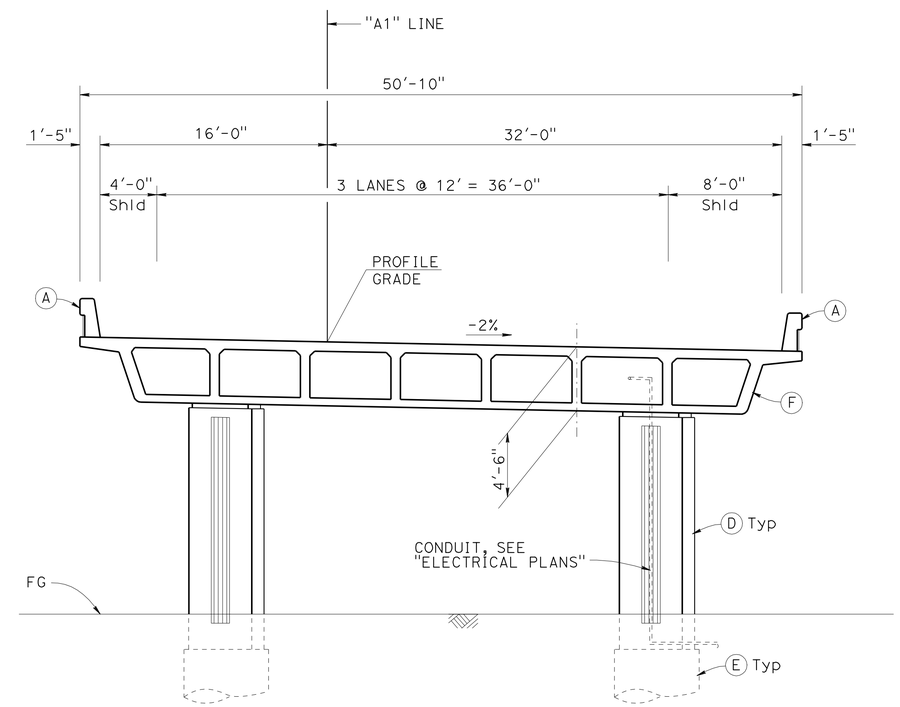

SECTION AT BB TO STA 31+53.35

3/16" = 1'-0"

Paul Cotter DESIGN OVERSIGHT Paul Cotter 7-16-12 SIGN OFF DATE	DESIGN	BY S. Landis	CHECKED A. Priley/F. Hakemi	LOAD & RESISTANCE FACTOR DESIGN	LIVE LOADING: HL93 W/"LOW-BOY"; PERMIT DESIGN VEHICLE		
	DETAILS	BY L. Davis	CHECKED A. Priley/F. Hakemi	LAYOUT	BY J. Hueser	CHECKED F. Hakemi	
	QUANTITIES	BY S. Landis	CHECKED F. Hakemi/B. Osorio	SPECIFICATIONS	BY D. Harnagel	PLANS AND SPECS COMPARED J. Hueser	

PREPARED FOR THE STATE OF CALIFORNIA DEPARTMENT OF TRANSPORTATION

Jan Hueser
PROJECT ENGINEER

BRIDGE NO. 33-0752S
POST MILES 28.69

29TH AVENUE OFF-RAMP
GENERAL PLAN No. 2

DESIGN GENERAL PLAN SHEET (ENGLISH) (REV.7/16/10)

ORIGINAL SCALE IN INCHES FOR REDUCED PLANS 0 1 2 3

UNIT: 0724
PROJECT NUMBER & PHASE: 04000001601 CONTRACT NO.: 04-0A7101

DISREGARD PRINTS BEARING EARLIER REVISION DATES

REVISION DATES: 9-6-11 1-18-12 3-30-12 6-25-12 SHEET 2 OF 34

FILE => 33-0752S-a-gp02.dgn

USERNAME => s124496 DATE PLOTTED => 10-APR-2013 TIME PLOTTED => 06:37

DIST	COUNTY	ROUTE	POST MILES TOTAL PROJECT	SHEET No	TOTAL SHEETS
04	Ala	880	28.4/29.2	570	789

REGISTERED CIVIL ENGINEER 6/25/12 DATE

4-8-13
PLANS APPROVAL DATE

REGISTERED PROFESSIONAL ENGINEER Jan M. Hueser No. C050215 Exp. 6/30/13 CIVIL STATE OF CALIFORNIA

The State of California or its officers or agents shall not be responsible for the accuracy or completeness of electronic copies of this plan sheet.

ALAMEDA COUNTY TRANSPORTATION COMMISSION
1333 BROADWAY
OAKLAND, CA 94612-1918

URS CORPORATION
1380 LEAD HILL BLVD, SUITE 100
ROSEVILLE, CA 95661-2997

GENERAL NOTES
LOAD AND RESISTANCE FACTOR DESIGN

DESIGN: AASHTO LRFD Bridge Design Specifications, 4th edition and the Caltrans Amendments, preface dated September 2010; except that concrete barriers and bridge details taken from Standard Plans 2006 are designed using Bridge Design Specifications ('96 AASHTO with Revisions by Caltrans).

SEISMIC DESIGN: Caltrans Seismic Design Criteria (SDC), Version 1.6 Dated November 2010.

DEAD LOAD: Includes 35 psf for future wearing surface.

LIVE LOAD: HL93 and permit design load.

SEISMIC LOADING: Soil Profile: Type D
Shear Wave Velocity, Vs30 = 820 ft/sec for the top 100 ft of soil.
Moment Magnitude: 7.3
Peak Ground Acceleration = 0.72g

CONCRETE: fy = 60 ksi
f'c = 3.6 ksi
n = 8

See Prestressing Notes on "BENT 2 LAYOUT" and "BENT 3 DETAILS" sheets.

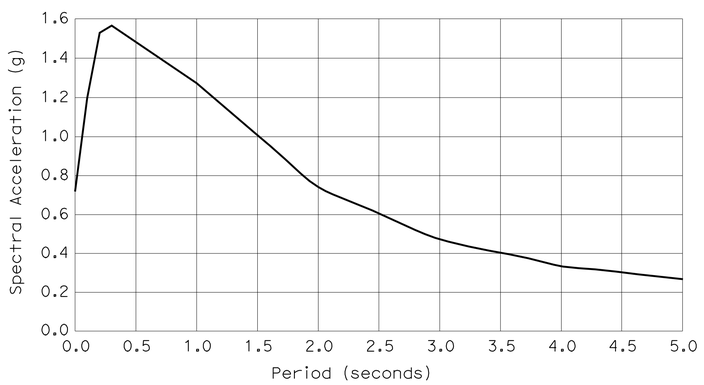

ARS CURVE

INDEX TO PLANS

SHEET NO.	TITLE	SHEET NO.	TITLE
1	GENERAL PLAN No. 1	18	GIRDER LAYOUT
2	GENERAL PLAN No. 2	19	GIRDER DETAILS
3	INDEX TO PLANS	20	FLOATING SLAB DETAILS
4	DECK CONTOURS	21	GIRDER REINFORCEMENT No. 1
5	FOUNDATION PLAN	22	GIRDER REINFORCEMENT No. 2
6	ABUTMENT LAYOUT	23	STRUCTURE APPROACH TYPE N(30S)
7	ABUTMENT PILE LAYOUT	24	STRUCTURE APPROACH DRAINAGE DETAILS
8	ABUTMENT DETAILS No. 1	25	ARCHITECTURAL DETAILS
9	ABUTMENT DETAILS No. 2	26	LOG OF TEST BORINGS 1 OF 9
10	ABUTMENT DETAILS No. 3	27	LOG OF TEST BORINGS 2 OF 9
11	BENT 2 LAYOUT	28	LOG OF TEST BORINGS 3 OF 9
12	BENT 2 DETAILS	29	LOG OF TEST BORINGS 4 OF 9
13	BENT 3 LAYOUT	30	LOG OF TEST BORINGS 5 OF 9
14	BENT 3 DETAILS	31	LOG OF TEST BORINGS 6 OF 9
15	COLUMN DETAILS	32	LOG OF TEST BORINGS 7 OF 9
16	TYPICAL SECTION No. 1	33	LOG OF TEST BORINGS 8 OF 9
17	TYPICAL SECTION No. 2	34	LOG OF TEST BORINGS 9 OF 9

STANDARD PLANS DATED MAY 2006

A10A	ACRONYMS AND ABBREVIATIONS (SHEET 1 OF 2)
A10B	ACRONUMS AND ABBREVIATIONS (SHEET 2 OF 2)
A10C	SYMBOLS (SHEET 1 OF 2)
A10D	SYMBOLS (SHEET 2 OF 2)
A62C	LIMITS OF PAYMENT FOR EXCAVATION AND BACKFILL BRIDGE
B0-1	BRIDGE DETAILS
B0-3	BRIDGE DETAILS
B0-5	BRIDGE DETAILS
B0-13	BRIDGE DETAILS
RSP B6-21	JOINT SEALS (MAXIMUM MOVEMENT RATING = 2")
B7-1	BOX GIRDER DETAILS
B11-55	CONCRETE BARRIER TYPE 732
B14-5	WATER SUPPLY LINE (DETAILS) (PIPE SIZES LESS THAN 4")
ES-9F	ELECTRICAL SYSTEMS (FLUSH SOFFIT LUMINAIRE MODIFICATION DETAILS STRUCTURE INSTALLATION)

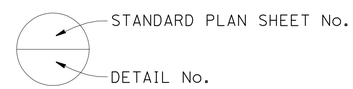

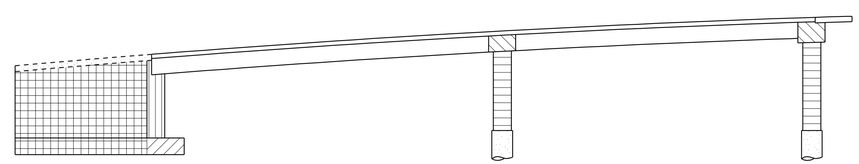

LEGEND:

- Structural Concrete, Bridge (f'c = 4.5 ksi @ 28 days)
- Structural Concrete, Bridge (f'c = 4 ksi @ 28 days)
- Structural Concrete, Bridge, see "PRESTRESSING NOTES" on "BENT 2 LAYOUT" and "BENT 3 DETAILS"
- Structural Concrete, Bridge
- Structural Concrete, Approach Slab
- Structural Concrete, Bridge Footing
- CIDH Pile (f'c = 4 ksi @ 28 days)
- Structural Concrete, Retaining Wall

CONCRETE STRENGTH AND TYPE LIMITS

NO SCALE

DESIGN OVERSIGHT Paul Cotter
7-16-12
SIGN OFF DATE

	BY	CHECKED
DESIGN	S. Landis	A. Priley/F. Hakemi
DETAILS	L. Davis	A. Priley/F. Hakemi
QUANTITIES	S. Landis	F. Hakemi/B. Osorio

PREPARED FOR THE STATE OF CALIFORNIA DEPARTMENT OF TRANSPORTATION

Jan Hueser
PROJECT ENGINEER

BRIDGE NO. 33-0752S
POST MILES 28.69

29TH AVENUE OFF-RAMP
INDEX TO PLANS

DESIGN DETAIL SHEET (ENGLISH) (REV.7/16/10)

ORIGINAL SCALE IN INCHES FOR REDUCED PLANS 0 1 2 3

UNIT: 0724
PROJECT NUMBER & PHASE: 04000001601 CONTRACT NO.: 04-0A7101

DISREGARD PRINTS BEARING EARLIER REVISION DATES

REVISION DATES 9-6-11 1-10-12 3-30-12 6-25-12 SHEET 3 OF 34

FILE => 33-0752S-a-itp.dgn

USERNAME => s124496 DATE PLOTTED => 10-APR-2013 TIME PLOTTED => 06:37

DIST	COUNTY	ROUTE	POST MILES TOTAL PROJECT	SHEET No	TOTAL SHEETS
04	Ala	880	28.4/29.2	571	789

REGISTERED CIVIL ENGINEER — DATE 6/25/12

4-8-13
PLANS APPROVAL DATE

REGISTERED PROFESSIONAL ENGINEER — Jan M. Hueser — No. C050215 — Exp. 6/30/13 — CIVIL — STATE OF CALIFORNIA

The State of California or its officers or agents shall not be responsible for the accuracy or completeness of electronic copies of this plan sheet.

ALAMEDA COUNTY TRANSPORTATION COMMISSION
1333 BROADWAY
OAKLAND, CA 94612-1918

URS CORPORATION
1380 LEAD HILL BLVD, SUITE 100
ROSEVILLE, CA 95661-2997

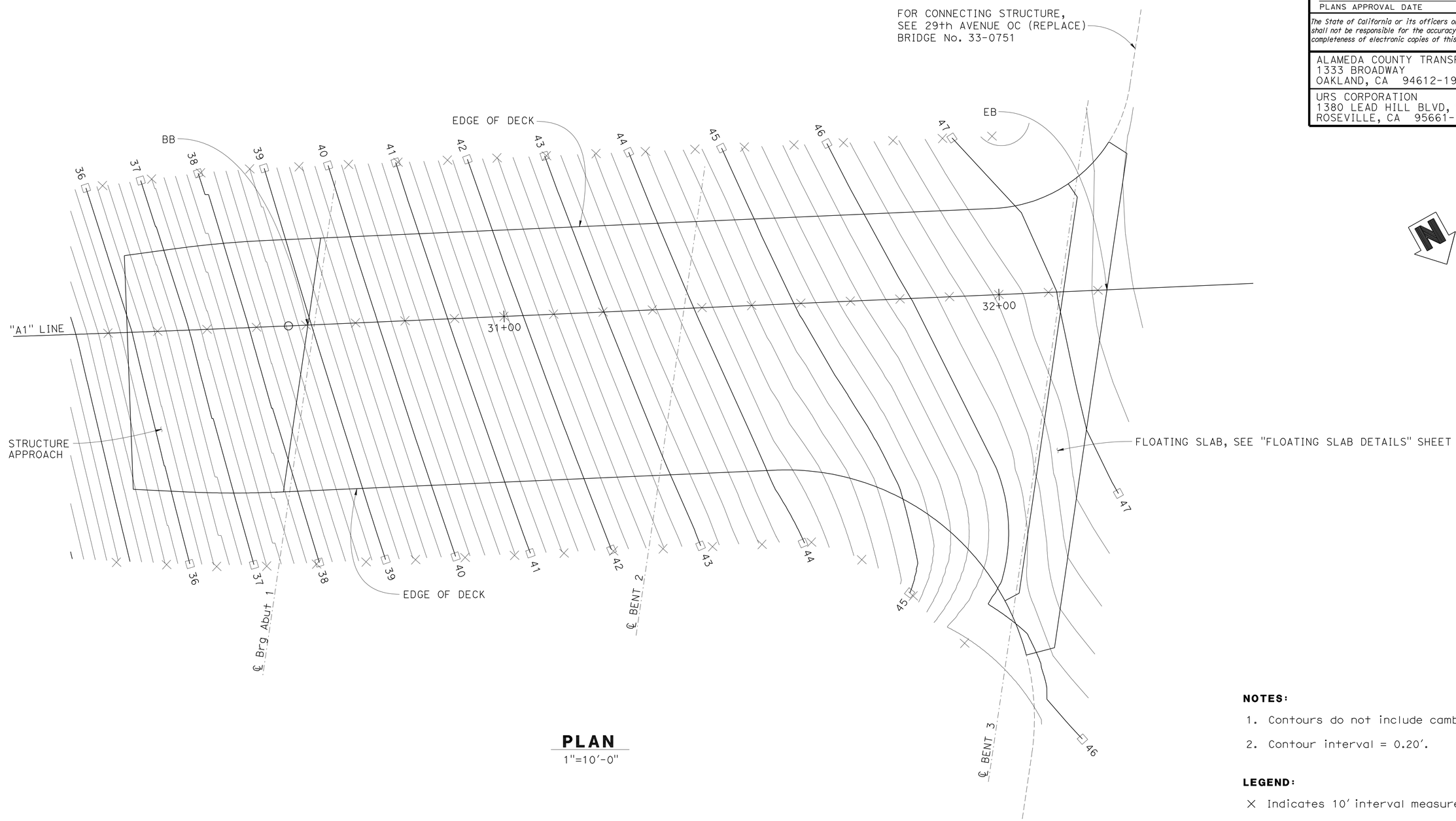

PLAN
1"=10'-0"

NOTES:

1. Contours do not include camber.
2. Contour interval = 0.20'.

LEGEND:

× Indicates 10' interval measured along "A1" Line.

□ Indicates even foot contours.

DESIGN OVERSIGHT Paul Cotter
7-16-12
SIGN OFF DATE

	BY	CHECKED
DESIGN	S. Landis	A. Priley/F. Hakemi
DETAILS	L. Davis	A. Priley/F. Hakemi
QUANTITIES	S. Landis	F. Hakemi/B. Osorio

PREPARED FOR THE STATE OF CALIFORNIA DEPARTMENT OF TRANSPORTATION

Jan Hueser
PROJECT ENGINEER

BRIDGE NO. 33-0752S
POST MILES 28.69

29TH AVENUE OFF-RAMP
DECK CONTOURS

DESIGN DETAIL SHEET (ENGLISH) (REV.7/16/10)

ORIGINAL SCALE IN INCHES FOR REDUCED PLANS 0 1 2 3

UNIT: 0724
PROJECT NUMBER & PHASE: 04000001601 CONTRACT NO.: 04-0A7101

DISREGARD PRINTS BEARING EARLIER REVISION DATES → 9-6-11 1-10-12 3-30-12 6-25-12

SHEET 4 OF 34

FILE => 33-0752S-d-dc01.dgn

USERNAME => s124496 DATE PLOTTED => 10-APR-2013 TIME PLOTTED => 06:37

DIST	COUNTY	ROUTE	POST MILES TOTAL PROJECT	SHEET No	TOTAL SHEETS
04	Ala	880	28.4/29.2	572	789

Jan M Hueser 6/25/12
REGISTERED CIVIL ENGINEER DATE

4-8-13
PLANS APPROVAL DATE

REGISTERED PROFESSIONAL ENGINEER Jan M. Hueser No. C050215 Exp. 6/30/13 CIVIL STATE OF CALIFORNIA

The State of California or its officers or agents shall not be responsible for the accuracy or completeness of electronic copies of this plan sheet.

ALAMEDA COUNTY TRANSPORTATION COMMISSION
1333 BROADWAY
OAKLAND, CA 94612-1918

URS CORPORATION
1380 LEAD HILL BLVD, SUITE 100
ROSEVILLE, CA 95661-2997

PILE DATA TABLE

LOCATION	PILE TYPE	NOMINAL RESISTANCE (kips)		DESIGN TIP ELEVATION (ft)	SPECIFIED TIP ELEVATION (ft)
		COMPRESSION	TENSION		
Abut 1	24" CIDH	270	0	-30(A), -11(C)	-30
Abut 1Lt RW	24" CIDH	270	30	-29(A), 9(B), -11(C)	-29
Abut 1Rt RW	24" CIDH	280	40	-30(A), 8(B), -17(C)	-30
BENT 2	72" CIDH	3120	0	-102(A), -57(C)	-102
BENT 3	72" CIDH	1950	0	-75(A), -50(C)	-75

DESIGN TIP ELEVATION IS CONTROLLED BY THE FOLLOWING DEMANDS:
(A) COMPRESSION, (B) TENSION, (C) LATERAL LOADS.

BENCH MARK

BENCH MARK	N	E	ELEV	DESCRIPTION
558	2109139.032	6061315.321	25.39	2.25" BRONZE DISK CA DIVISION OF HIGHWAYS EAST 9th STREET
1006	2109767.725	6061074.488	29.21	SPIKE AND PUNCH EAST 10th STREET AND 29th AVENUE

SURVEY CONTROL
HORIZONTAL CONTROL FOR THIS SURVEY IS BASED ON THE CALIFORNIA COORDINATE SYSTEM, ZONE 3, US SURVEY FEET, NORTH AMERICAN DATUM OF 1983 (NAD83 2007), VERTICAL CONTROL IS THE NORTH AMERICAN VERTICAL DATUM (NAVD88 RCFCD).

PLAN

CURVE DATA

CURVE	R	Δ	T	L
2	70'	37°08'06"	23.51'	45.36'
3	230'	15°05'21"	30.46'	60.58'
4	5000'	2°31'19"	110.05'	220.07'
5	200'	5°12'33"	9.10'	18.18'

LEGEND:

- Indicates existing structure
- Indicates 24" Dia CIDH piles (not all piles shown)
- Indicates 72" Dia CIDH piles
- Indicates bottom of footing elevation

GEOTECHNICAL PROFESSIONAL APPROVAL DATE 6/25/12

Paul Cotter
DESIGN OVERSIGHT Paul Cotter
7-16-12
SIGN OFF DATE

SCALE: 1"=20'-0"	VERT.DATUM NAVD88	HORZ.DATUM CCS83, Zone 3	
PHOTOGRAMMETRY AS OF: 9-04-08	ALIGNMENT TIES		
SURVEYED	BY D. Bustamante	DRAFTED	BY
FIELD CHECKED	BY D. Baumann	CHECKED	BY

	BY	CHECKED
DESIGN	S. Landis	A. Priley/F. Hakemi
DETAILS	L. Davis	A. Priley/F. Hakemi
QUANTITIES	S. Landis	F. Hakemi/B. Osorio

PREPARED FOR THE STATE OF CALIFORNIA DEPARTMENT OF TRANSPORTATION

Jan Hueser
PROJECT ENGINEER

BRIDGE NO. 33-0752S
POST MILES 28.69

29TH AVENUE OFF-RAMP
FOUNDATION PLAN

FOUNDATION PLAN SHEET (ENGLISH) (REV.7/16/10)

ORIGINAL SCALE IN INCHES FOR REDUCED PLANS 0 1 2 3

UNIT: 0724
PROJECT NUMBER & PHASE: 04000001601 CONTRACT NO.: 04-0A7101

DISREGARD PRINTS BEARING EARLIER REVISION DATES

REVISION DATES 9-8-11 1-18-12 3-30-12 6-25-12 SHEET 5 OF 34

FILE => 33-0752S-e-fp101.dgn

USERNAME => s124436 DATE PLOTTED => 10-APR-2013 TIME PLOTTED => 06:37

DIST	COUNTY	ROUTE	POST MILES TOTAL PROJECT	SHEET No	TOTAL SHEETS
04	Ala	880	28.4/29.2	573	789

REGISTERED CIVIL ENGINEER 6/25/12 DATE

4-8-13
PLANS APPROVAL DATE

REGISTERED PROFESSIONAL ENGINEER Jan M. Hueser No. C050215 Exp. 6/30/13 CIVIL STATE OF CALIFORNIA

The State of California or its officers or agents shall not be responsible for the accuracy or completeness of electronic copies of this plan sheet.

ALAMEDA COUNTY TRANSPORTATION COMMISSION
1333 BROADWAY
OAKLAND, CA 94612-1918

URS CORPORATION
1380 LEAD HILL BLVD, SUITE 100
ROSEVILLE, CA 95661-2997

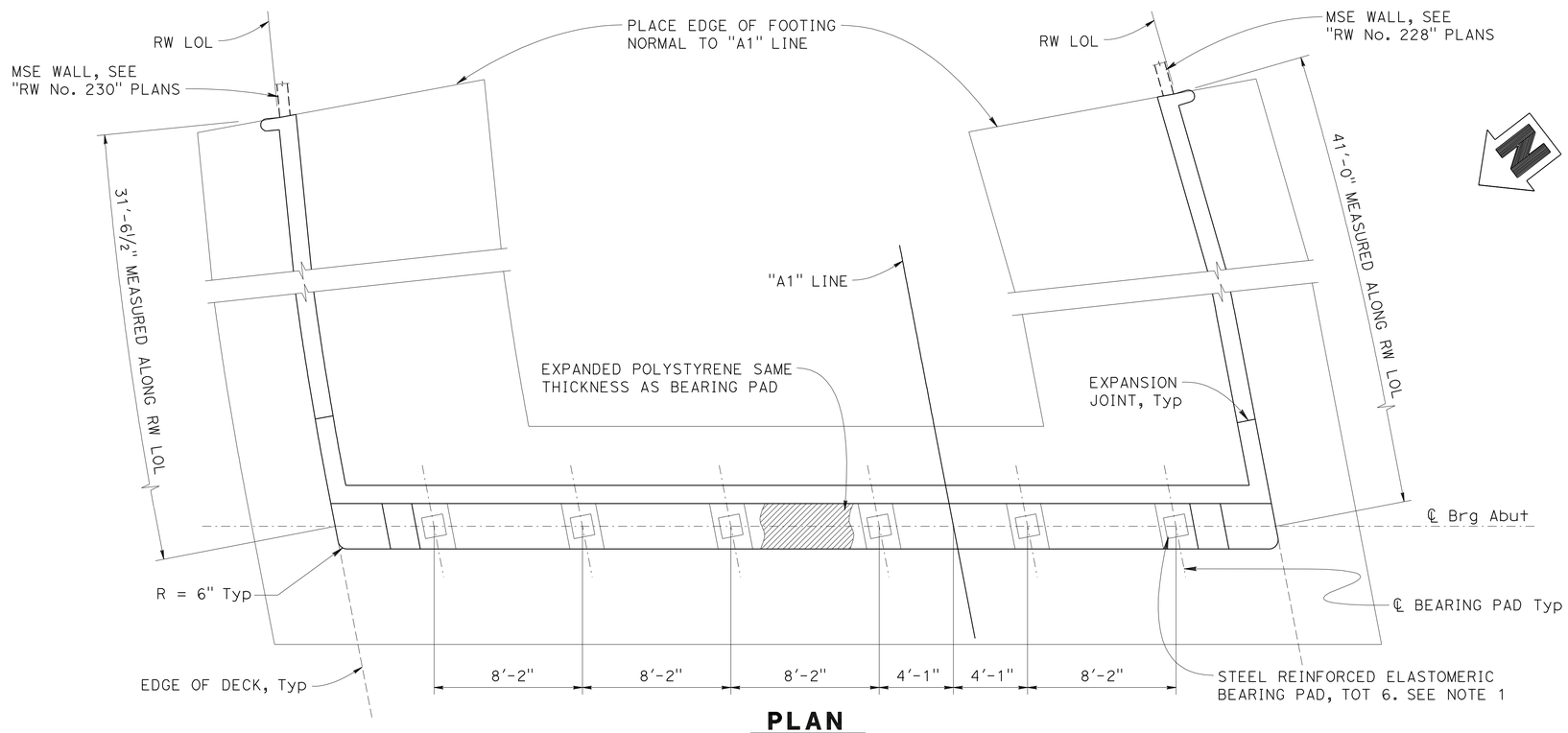

PLAN
¼" = 1'-0"

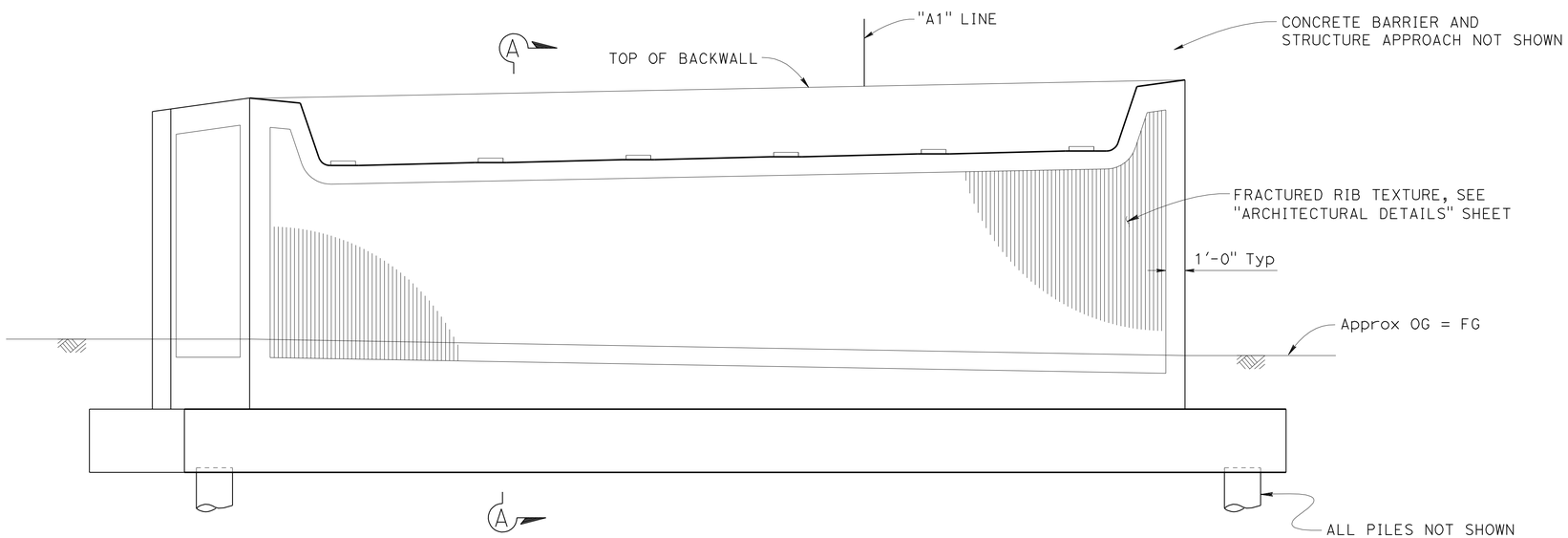

ELEVATION
¼" = 1'-0"

NOTES:

1. For "BEARING PAD DETAIL" and "SECTION A-A", see "ABUTMENT DETAILS No. 1" sheet.
2. For "SHEAR KEY DETAIL" see "ABUTMENT DETAILS No. 2" sheet.
3. For pile layout see "ABUTMENT PILE LAYOUT" sheet.

Paul Cotter
DESIGN OVERSIGHT Paul Cotter
7-16-12
SIGN OFF DATE

	BY	CHECKED
DESIGN	S. Landis	A. Priley/F. Hakemi
DETAILS	L. Davis	A. Priley/F. Hakemi
QUANTITIES	S. Landis	F. Hakemi/B. Osorio

PREPARED FOR THE STATE OF CALIFORNIA DEPARTMENT OF TRANSPORTATION

Jan Hueser
PROJECT ENGINEER

BRIDGE NO. 33-0752S
POST MILES 28.69

29TH AVENUE OFF-RAMP
ABUTMENT LAYOUT

DESIGN DETAIL SHEET (ENGLISH) (REV.7/16/10)

ORIGINAL SCALE IN INCHES FOR REDUCED PLANS 0 1 2 3

UNIT: 0724
PROJECT NUMBER & PHASE: 04000001601 CONTRACT NO.: 04-0A7101

DISREGARD PRINTS BEARING EARLIER REVISION DATES → 9-6-11 1-18-12 3-30-12 6-25-12

SHEET 6 OF 34

FILE => 33-0752S-f-a01_lo01.dgn

USERNAME => s124496 DATE PLOTTED => 10-APR-2013 TIME PLOTTED => 06:37

DIST	COUNTY	ROUTE	POST MILES TOTAL PROJECT	SHEET No	TOTAL SHEETS
04	Ala	880	28.4/29.2	574	789

REGISTERED CIVIL ENGINEER 6/25/12 DATE

4-8-13
PLANS APPROVAL DATE

REGISTERED PROFESSIONAL ENGINEER Jan M. Hueser No. C050215 Exp. 6/30/13 CIVIL STATE OF CALIFORNIA

The State of California or its officers or agents shall not be responsible for the accuracy or completeness of electronic copies of this plan sheet.

ALAMEDA COUNTY TRANSPORTATION COMMISSION
1333 BROADWAY
OAKLAND, CA 94612-1918

URS CORPORATION
1380 LEAD HILL BLVD, SUITE 100
ROSEVILLE, CA 95661-2997

NOTES:

1. For Abut footing details, see "ABUTMENT DETAILS No. 1" sheet.
2. For retaining wall footing details, see "ABUTMENT DETAILS No. 3" sheet.
3. Lapped splices in spiral pile Reinf shall be lapped at least 80 bar diameters. Spiral pile Reinf at splices and at ends shall be terminated with a 135° hook with a 6" tail hooked around a longitudinal bar.
4. Reinf extending into footing shall be hooked as required to provide clearance to top of footing.

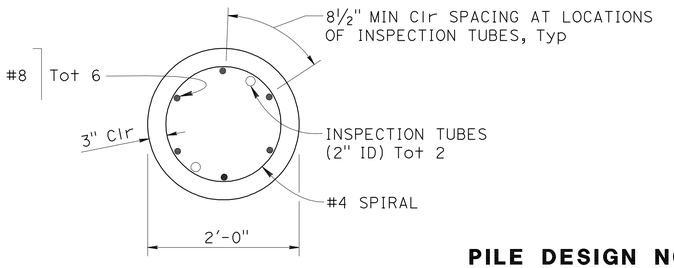

SECTION A-A

PILE DESIGN NOTES

REINFORCED CONCRETE: f'c = 4 ksi

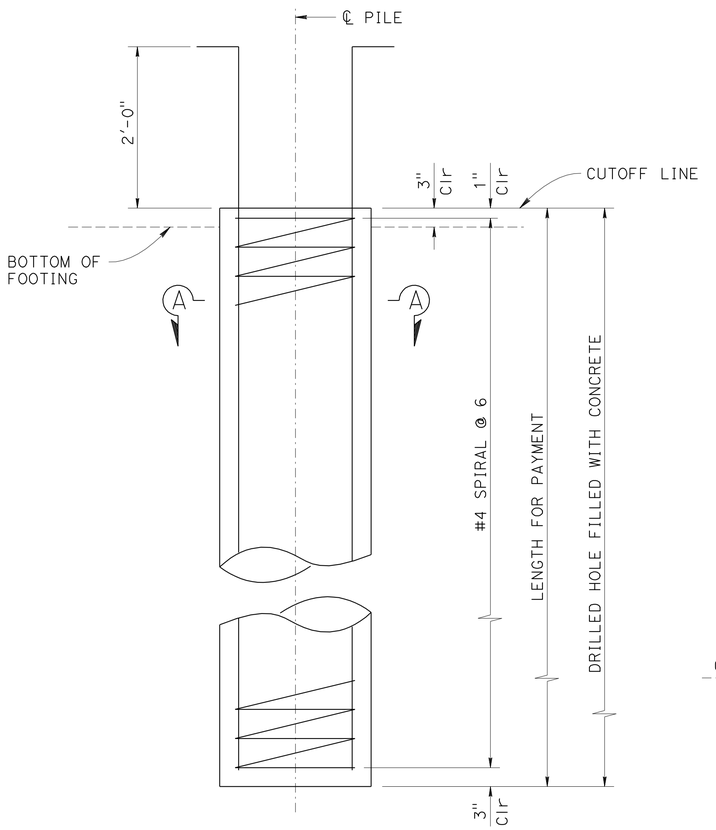

ELEVATION

24" CIDH PILE

NO SCALE

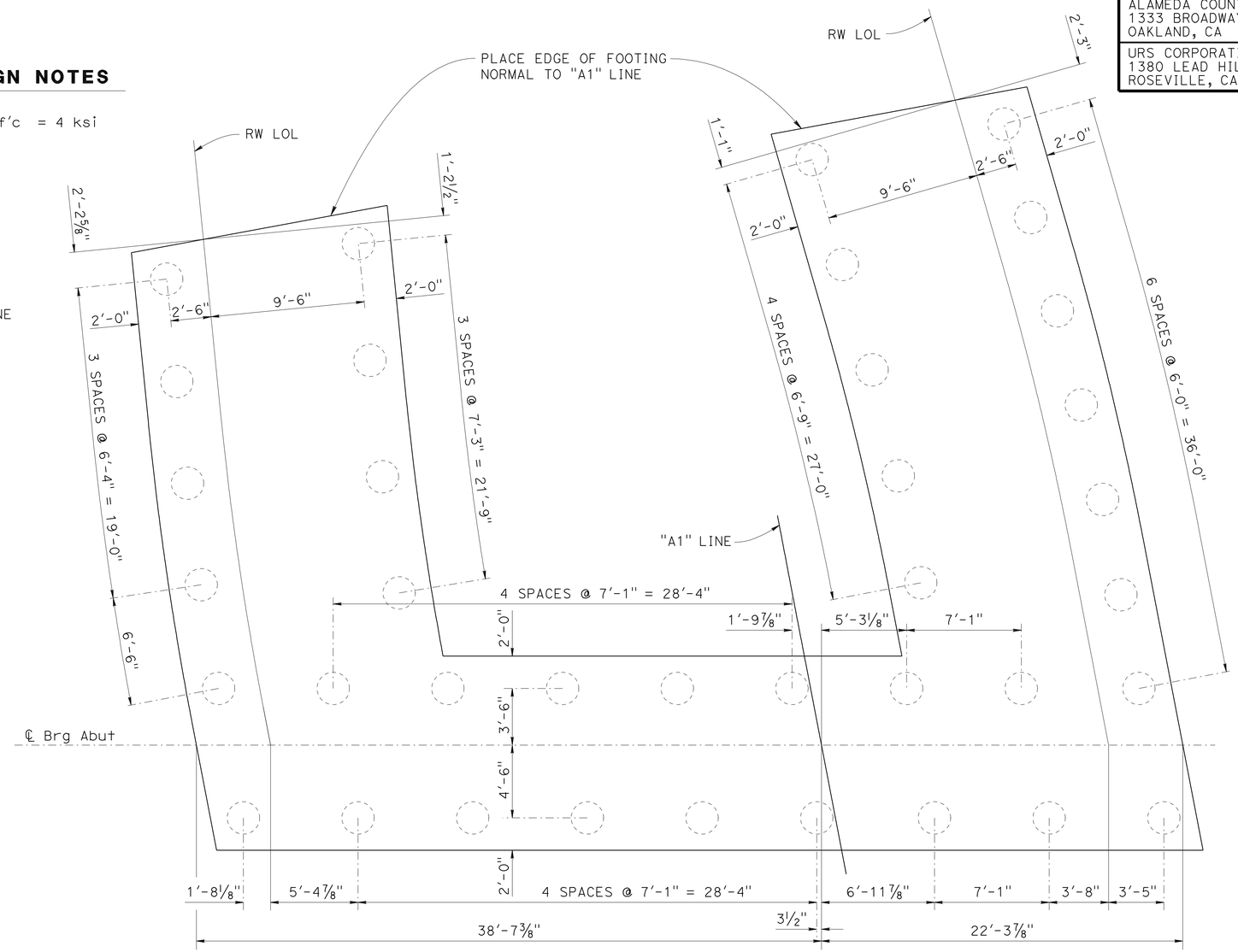

PLAN

¼" = 1'-0"

DESIGN OVERSIGHT Paul Cotter	DESIGN	BY S. Landis	CHECKED A. Priley/F. Hakemi	PREPARED FOR THE STATE OF CALIFORNIA DEPARTMENT OF TRANSPORTATION	Jan Hueser PROJECT ENGINEER
7-16-12 SIGN OFF DATE	DETAILS	BY L. Davis	CHECKED A. Priley/F. Hakemi		BRIDGE NO. 33-0752S
	QUANTITIES	BY S. Landis	CHECKED F. Hakemi/B. Osorio		POST MILES 28.69

29TH AVENUE OFF-RAMP

ABUTMENT PILE LAYOUT

DESIGN DETAIL SHEET (ENGLISH) (REV.7/16/10)

ORIGINAL SCALE IN INCHES FOR REDUCED PLANS 0 1 2 3

UNIT: 0724
PROJECT NUMBER & PHASE: 04000001601 CONTRACT NO.: 04-0A7101

DISREGARD PRINTS BEARING EARLIER REVISION DATES

REVISION DATES: 9-6-11 1-10-12 3-30-12 6-25-12 SHEET 7 OF 34

FILE => 33-0752S-f-a01_1o02.dgn

USERNAME => s124436 DATE PLOTTED => 10-APR-2013 TIME PLOTTED => 06:37

DIST	COUNTY	ROUTE	POST MILES TOTAL PROJECT	SHEET No	TOTAL SHEETS
04	Ala	880	28.4/29.2	575	789

REGISTERED CIVIL ENGINEER — DATE 6/25/12

4-8-13
PLANS APPROVAL DATE

REGISTERED PROFESSIONAL ENGINEER — Jan M. Hueser — No. C050215 — Exp. 6/30/13 — CIVIL — STATE OF CALIFORNIA

The State of California or its officers or agents shall not be responsible for the accuracy or completeness of electronic copies of this plan sheet.

ALAMEDA COUNTY TRANSPORTATION COMMISSION
1333 BROADWAY
OAKLAND, CA 94612-1918

URS CORPORATION
1380 LEAD HILL BLVD, SUITE 100
ROSEVILLE, CA 95661-2997

NOTES:

1. For location of "SECTION A-A", see "ABUTMENT LAYOUT" sheet.
2. For pile layout, see "ABUTMENT PILE LAYOUT" sheet.
3. For retaining wall, see "ABUTMENT DETAILS No. 3" sheet.

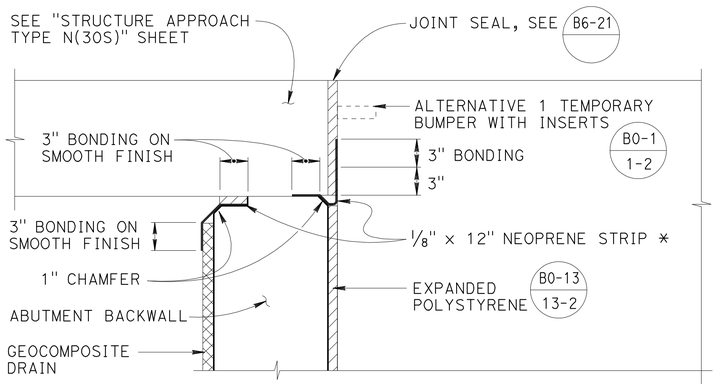

* Place prior to backfilling the Abutment backwall and installing temporary bumper (Fold neoprene into chamfer)

JOINT PROTECTION DETAIL
NO SCALE

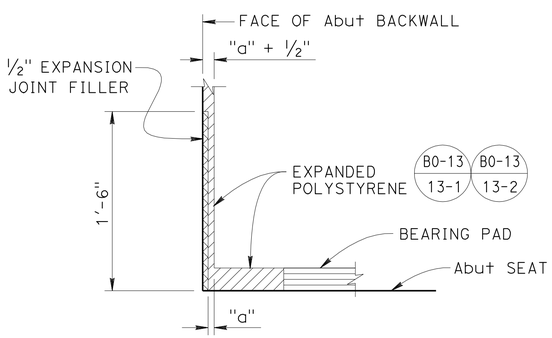

DETAIL A
NO SCALE

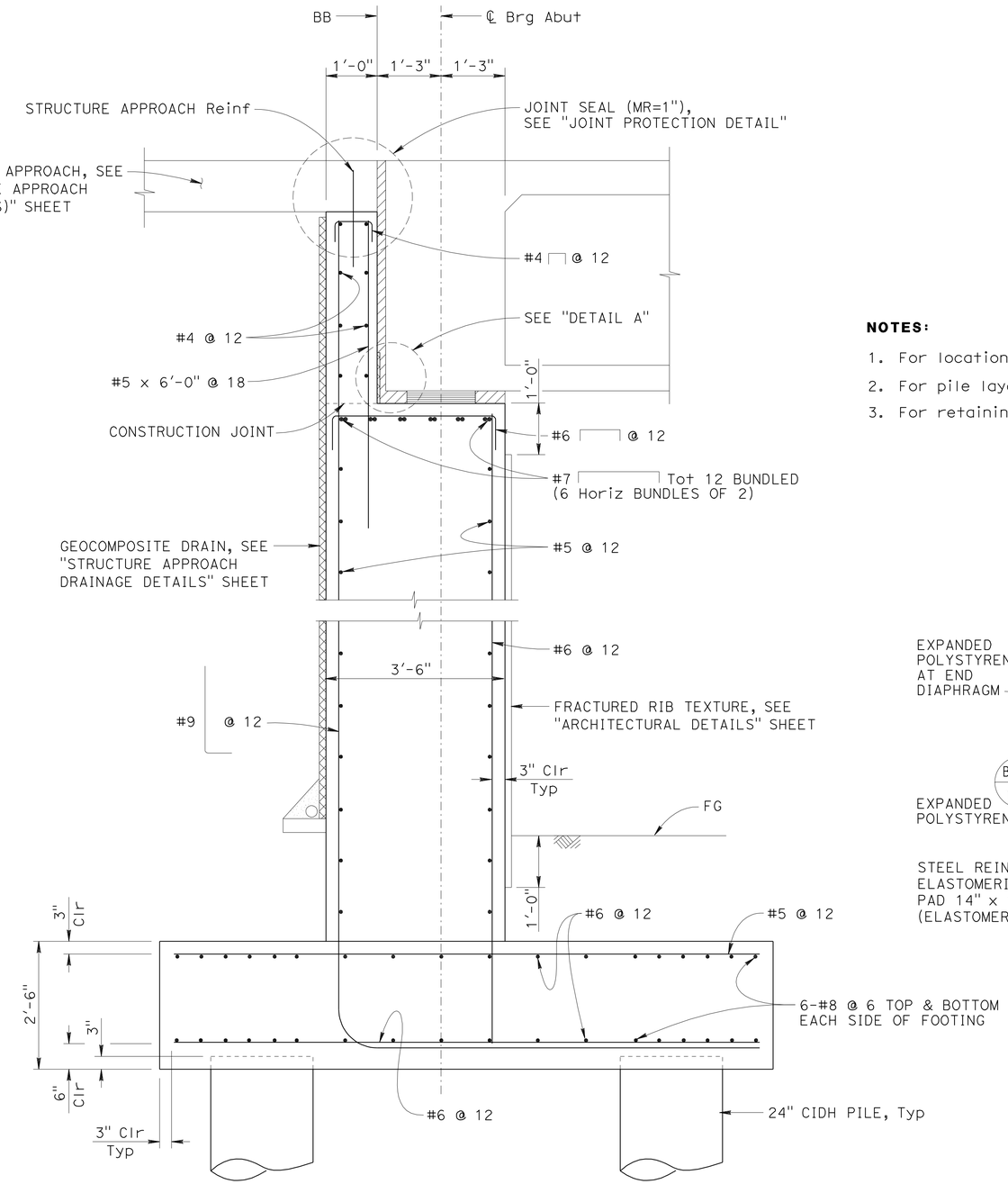

SECTION A-A
3/4" = 1'-0"

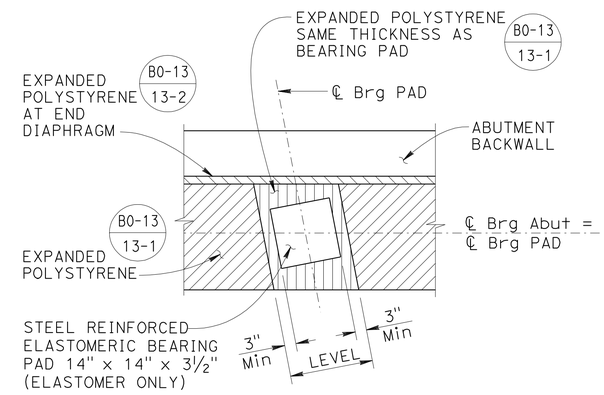

PLAN

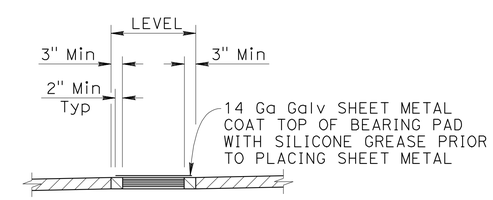

ELEVATION

BEARING PAD DETAIL
NO SCALE

DESIGN OVERSIGHT: Paul Cotter	DESIGN	BY S. Landis	CHECKED A. Priley/F. Hakemi
7-16-12 SIGN OFF DATE	DETAILS	BY L. Davis	CHECKED A. Priley/F. Hakemi
	QUANTITIES	BY S. Landis	CHECKED F. Hakemi/B. Osorio

PREPARED FOR THE STATE OF CALIFORNIA DEPARTMENT OF TRANSPORTATION

Jan Hueser — PROJECT ENGINEER

BRIDGE NO. 33-0752S — POST MILES 28.69

29TH AVENUE OFF-RAMP
ABUTMENT DETAILS No. 1

DESIGN DETAIL SHEET (ENGLISH) (REV.7/16/10)

ORIGINAL SCALE IN INCHES FOR REDUCED PLANS 0 1 2 3

UNIT: 0724
PROJECT NUMBER & PHASE: 04000001601 CONTRACT NO.: 04-0A7101

DISREGARD PRINTS BEARING EARLIER REVISION DATES → 9-6-11 1-10-12 3-30-12 7-11-12

SHEET 8 OF 34

FILE => 33-0752S-f-a01dt01.dgn

USERNAME => s124496 DATE PLOTTED => 10-APR-2013 TIME PLOTTED => 06:37

DIST	COUNTY	ROUTE	POST MILES TOTAL PROJECT	SHEET No	TOTAL SHEETS
04	Ala	880	28.4/29.2	576	789

REGISTERED CIVIL ENGINEER 6/25/12 DATE

4-8-13
PLANS APPROVAL DATE

REGISTERED PROFESSIONAL ENGINEER Jan M. Hueser No. C050215 Exp. 6/30/13 CIVIL STATE OF CALIFORNIA

The State of California or its officers or agents shall not be responsible for the accuracy or completeness of electronic copies of this plan sheet.

ALAMEDA COUNTY TRANSPORTATION COMMISSION
1333 BROADWAY
OAKLAND, CA 94612-1918

URS CORPORATION
1380 LEAD HILL BLVD, SUITE 100
ROSEVILLE, CA 95661-2997

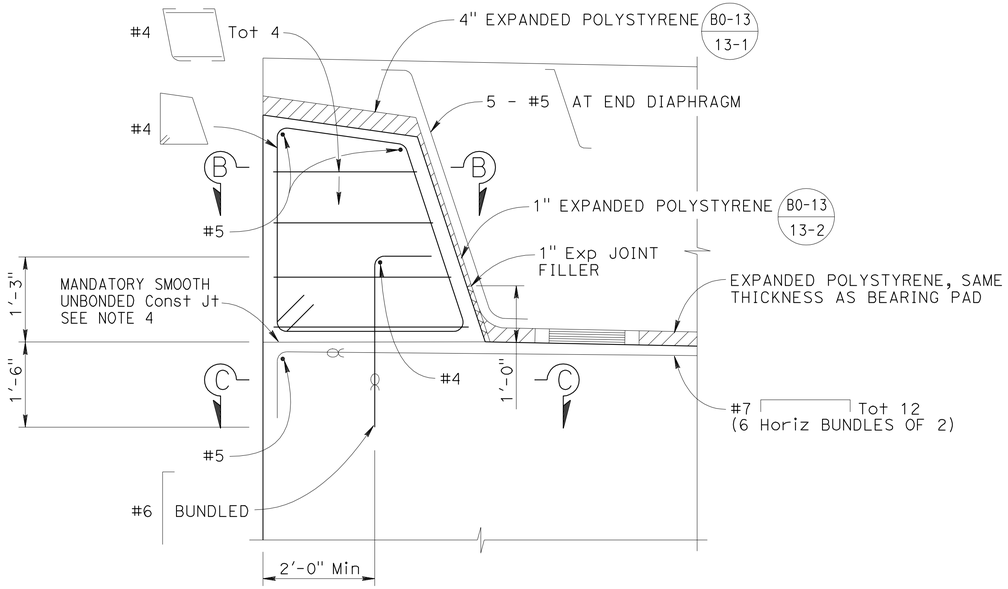

SHEAR KEY DETAIL

3/4" = 1'-0"

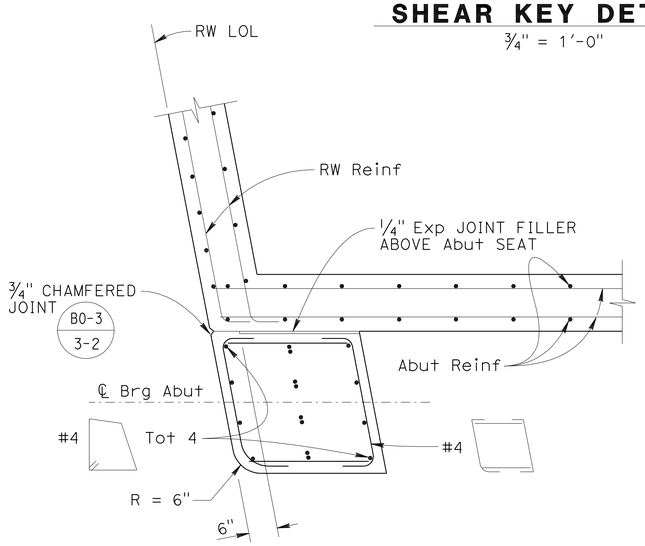

SECTION B-B

3/4" = 1'-0"

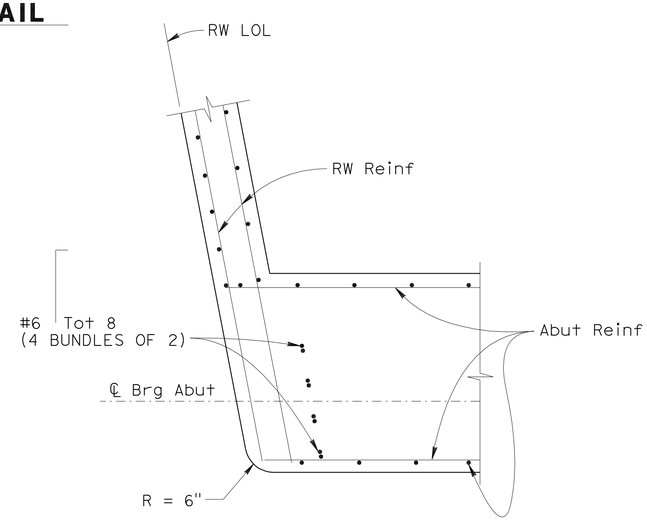

SECTION C-C

3/4" = 1'-0"

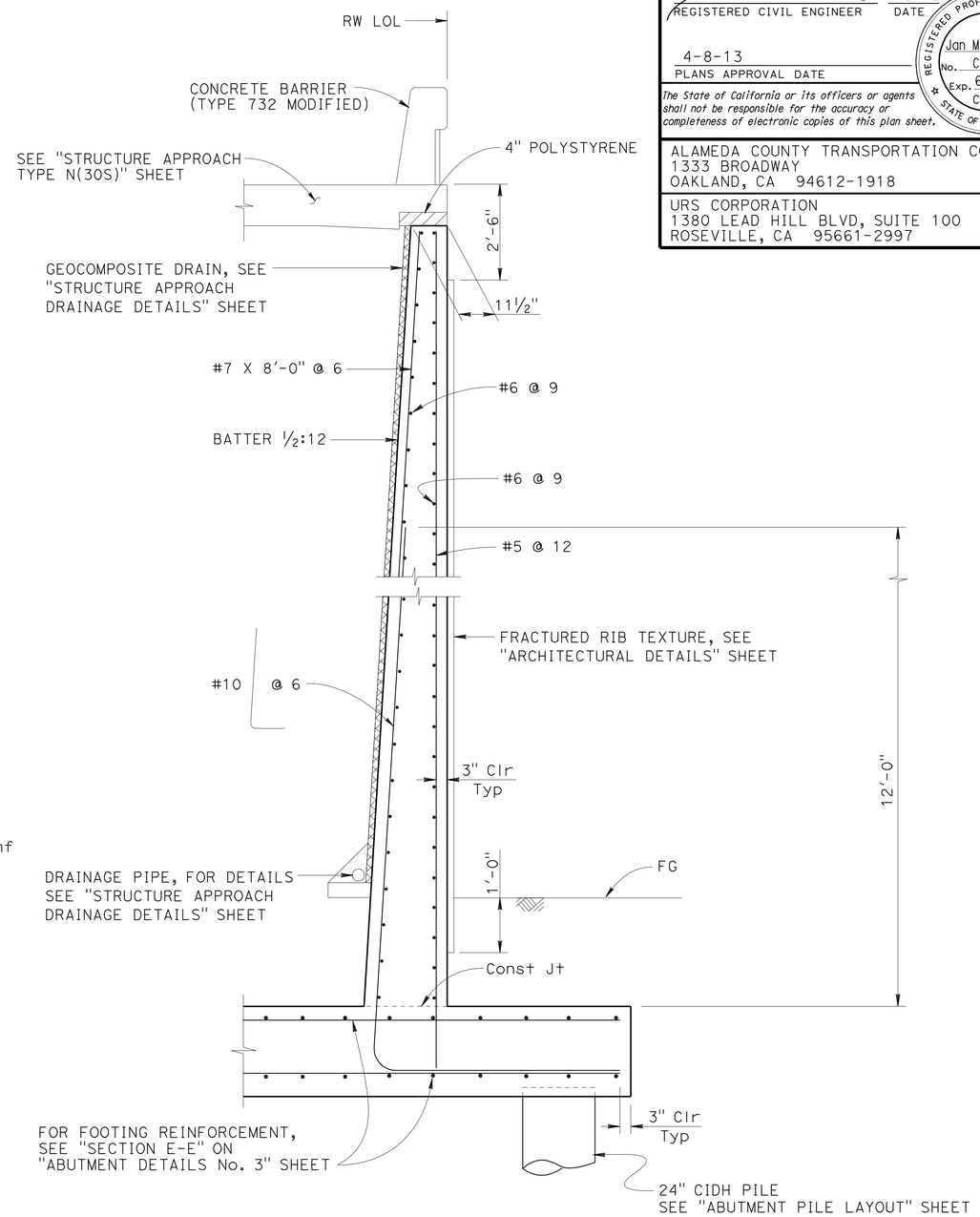

SECTION D-D

1/2" = 1'-0"

LEGEND:

∝ Indicates bundled bars

NOTES:

1. For information not shown, see "ABUTMENT LAYOUT" sheet.
2. Right side key shown, left side similar.
3. For location of "SECTION D-D" see "ABUTMENT DETAILS No. 3" sheet.
4. Mandatory joint surface to be smooth finished and lined with 15 pound construction paper.

DESIGN OVERSIGHT Paul Cotter
7-16-12
SIGN OFF DATE

	BY	CHECKED
DESIGN	S. Landis	A. Priley/F. Hakemi
DETAILS	L. Davis	A. Priley/F. Hakemi
QUANTITIES	S. Landis	F. Hakemi/B. Osorio

PREPARED FOR THE STATE OF CALIFORNIA DEPARTMENT OF TRANSPORTATION

Jan Hueser
PROJECT ENGINEER

BRIDGE NO. 33-0752S
POST MILES 28.69

29TH AVENUE OFF-RAMP
ABUTMENT DETAILS No. 2

DESIGN DETAIL SHEET (ENGLISH) (REV.7/16/10)

ORIGINAL SCALE IN INCHES FOR REDUCED PLANS 0 1 2 3

UNIT: 0724
PROJECT NUMBER & PHASE: 04000001601 CONTRACT NO.: 04-0A7101

DISREGARD PRINTS BEARING EARLIER REVISION DATES

REVISION DATES 9-6-11 1-18-12 3-30-12 6-25-12 SHEET 9 OF 34

FILE => 33-0752S-f-a01dt02.dgn

USERNAME => s124196 DATE PLOTTED => 10-APR-2013 TIME PLOTTED => 06:37

DIST	COUNTY	ROUTE	POST MILES TOTAL PROJECT	SHEET No	TOTAL SHEETS
04	Ala	880	28.4/29.2	577	789

REGISTERED CIVIL ENGINEER — DATE 6/25/12

4-8-13
PLANS APPROVAL DATE

REGISTERED PROFESSIONAL ENGINEER — Jan M. Hueser No. C050215 Exp. 6/30/13 CIVIL — STATE OF CALIFORNIA

The State of California or its officers or agents shall not be responsible for the accuracy or completeness of electronic copies of this plan sheet.

ALAMEDA COUNTY TRANSPORTATION COMMISSION
1333 BROADWAY
OAKLAND, CA 94612-1918

URS CORPORATION
1380 LEAD HILL BLVD, SUITE 100
ROSEVILLE, CA 95661-2997

NOTES:

1. For information not shown, see "ABUTMENT LAYOUT" sheet.
2. Right side RW shown, Left side similar.
3. For "SECTION D-D", see "ABUTMENT DETAILS No. 2" sheet.
4. Neoprene water stop shall not be bonded to MSE wall panels.

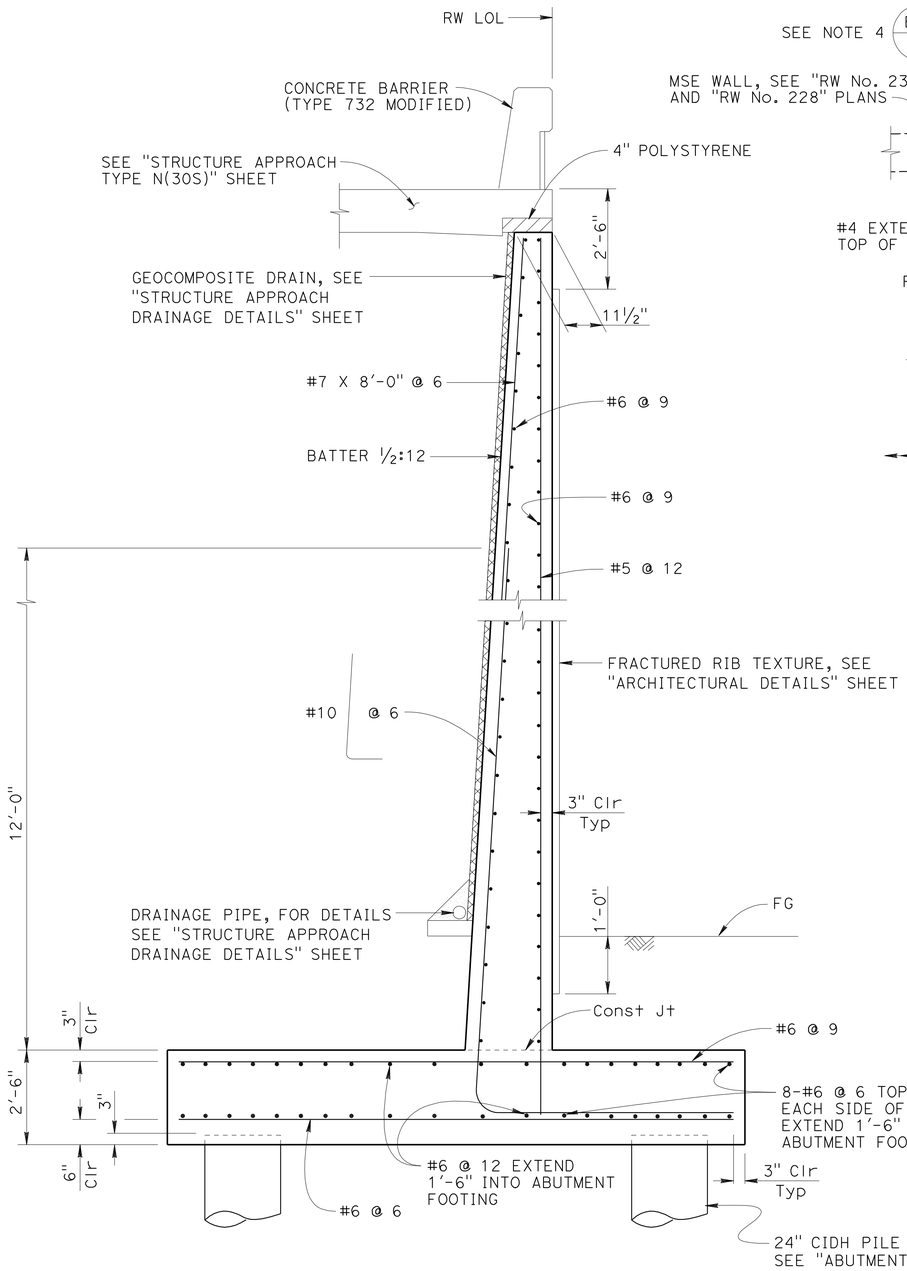

SECTION E-E

½" = 1'-0"

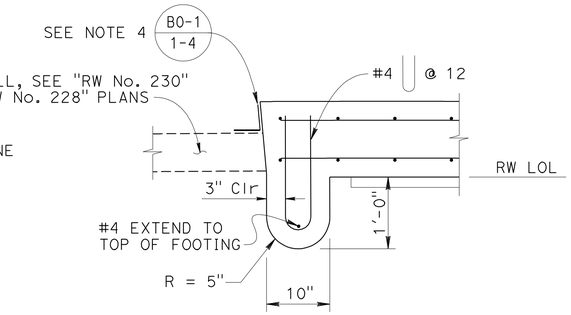

SECTION F-F

1" = 1'-0"

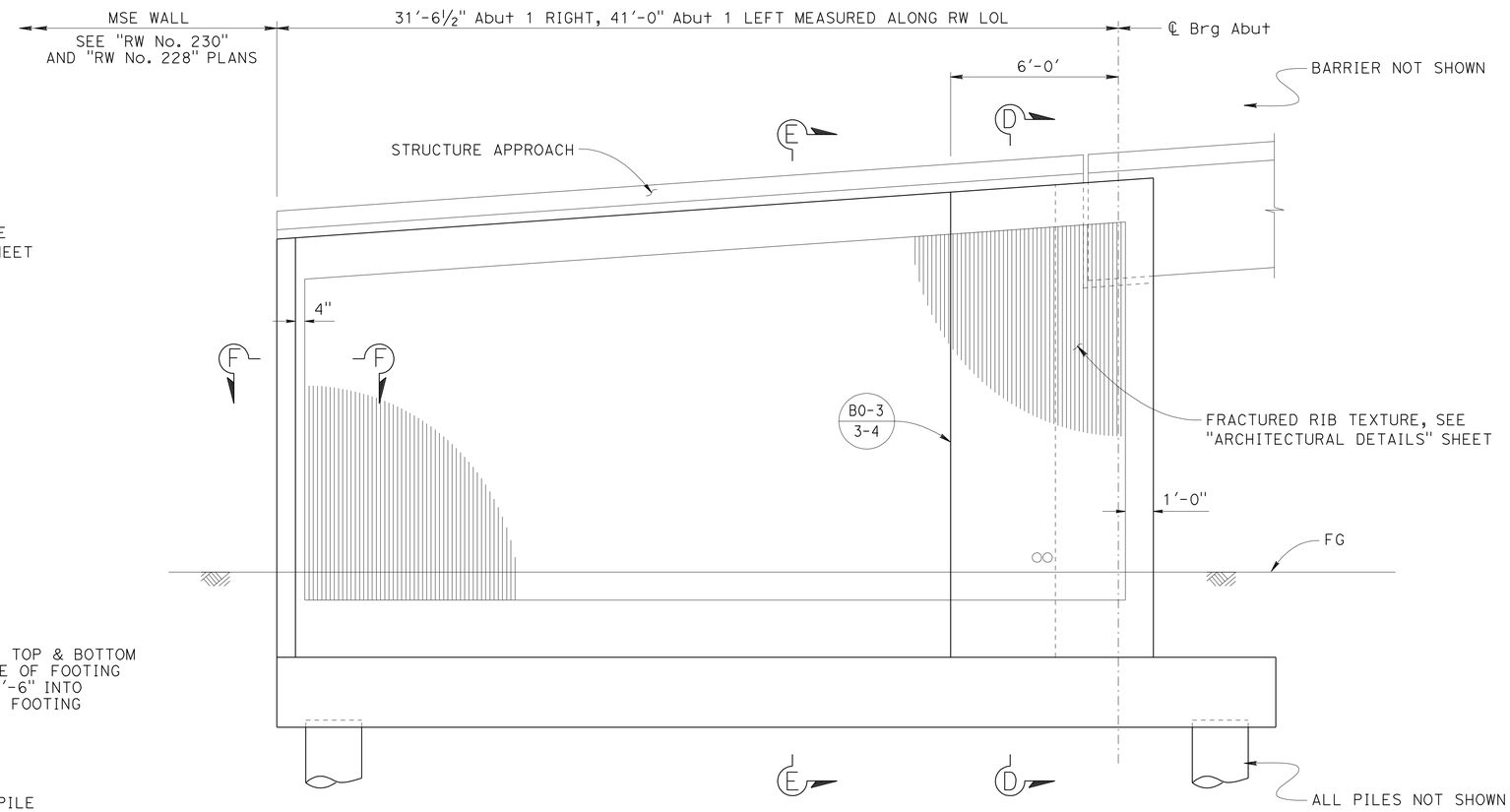

RETAINING WALL ELEVATION

B0-3 / 3-3

⅜" = 1'-0"

Abutment 1 Right shown, Abutment 1 Left similar

Paul Cotter
DESIGN OVERSIGHT — Paul Cotter
7-16-12
SIGN OFF DATE

	BY	CHECKED
DESIGN	S. Landis	A. Priley/F. Hakemi
DETAILS	L. Davis	A. Priley/F. Hakemi
QUANTITIES	S. Landis	F. Hakemi/B. Osorio

PREPARED FOR THE STATE OF CALIFORNIA DEPARTMENT OF TRANSPORTATION

Jan Hueser
PROJECT ENGINEER

BRIDGE NO. 33-0752S
POST MILES 28.69

29TH AVENUE OFF-RAMP
ABUTMENT DETAILS No. 3

DESIGN DETAIL SHEET (ENGLISH) (REV.7/16/10)

ORIGINAL SCALE IN INCHES FOR REDUCED PLANS 0 1 2 3

UNIT: 0724
PROJECT NUMBER & PHASE: 04000001601
CONTRACT NO.: 04-0A7101

DISREGARD PRINTS BEARING EARLIER REVISION DATES

REVISION DATES: 9-6-11 1-18-12 3-30-12 6-25-12

SHEET 10 OF 34

FILE => 33-0752S-f-a01dt03.dgn

USERNAME => s124496 DATE PLOTTED => 10-APR-2013 TIME PLOTTED => 06:38

DIST	COUNTY	ROUTE	POST MILES TOTAL PROJECT	SHEET No	TOTAL SHEETS
04	Ala	880	28.4/29.2	578	789

REGISTERED CIVIL ENGINEER 6/25/12 DATE

4-8-13
PLANS APPROVAL DATE

REGISTERED PROFESSIONAL ENGINEER Jan M. Hueser No. C050215 Exp. 6/30/13 CIVIL STATE OF CALIFORNIA

The State of California or its officers or agents shall not be responsible for the accuracy or completeness of electronic copies of this plan sheet.

ALAMEDA COUNTY TRANSPORTATION COMMISSION
1333 BROADWAY
OAKLAND, CA 94612-1918

URS CORPORATION
1380 LEAD HILL BLVD, SUITE 100
ROSEVILLE, CA 95661-2997

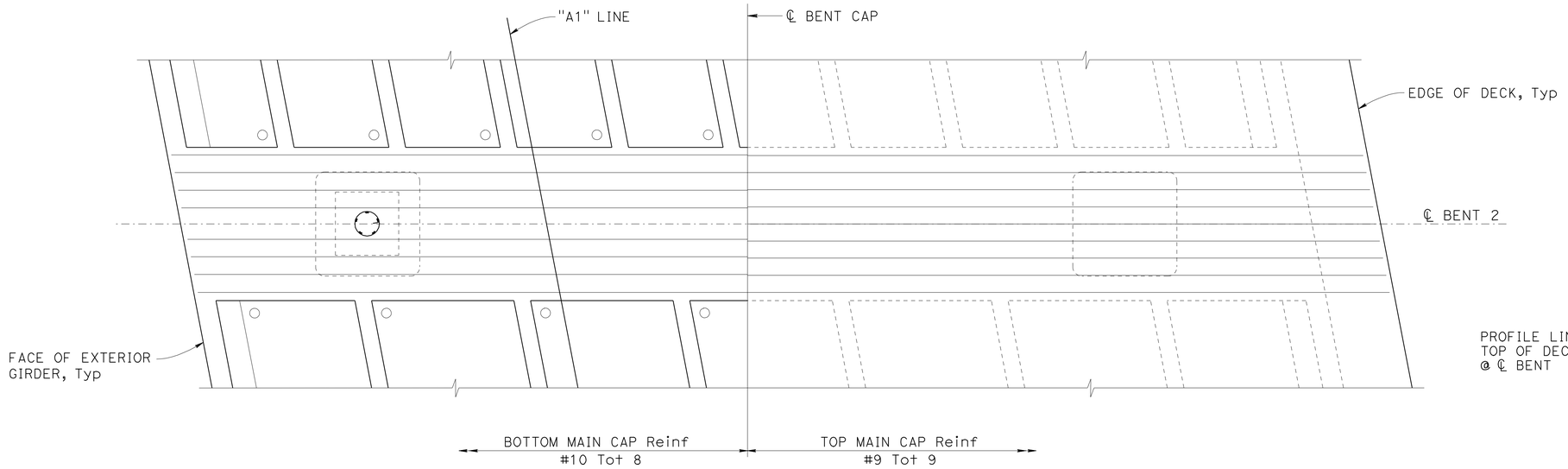

PLAN
3/8" = 1'-0"

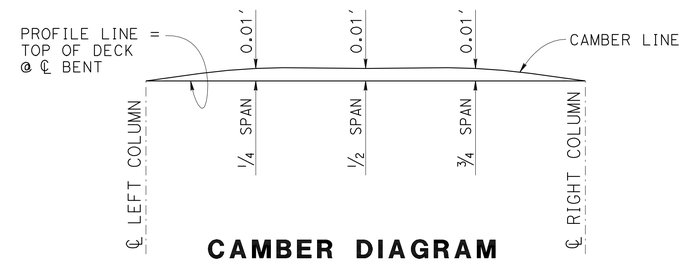

CAMBER DIAGRAM
NO SCALE

Does not include allowance for falsework deflection and settlement

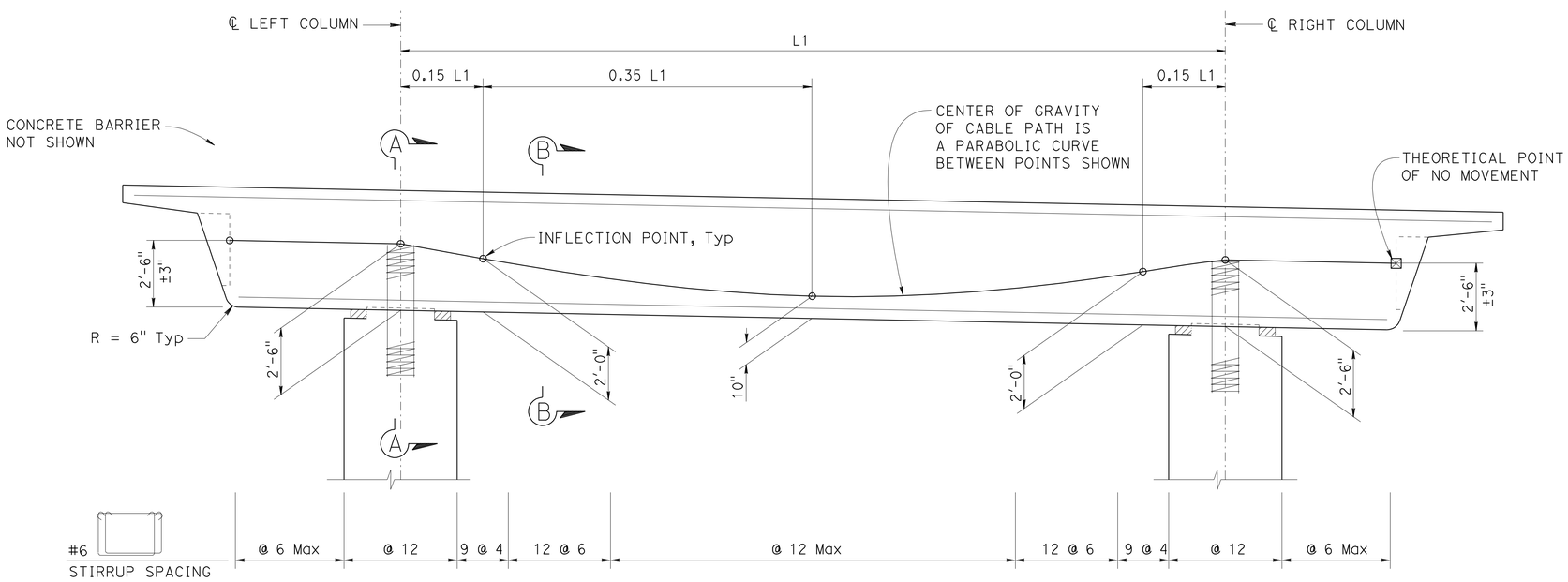

ELEVATION
3/8" = 1'-0"

PRESTRESSING NOTES

270 Ksi Low Relaxation Strands:

Pjack = 2000 kips
Anchor Set = 3/8 inches

μ = 0.15
K = 0.0002 / ft

Concrete: f'c = 4.5 ksi @ 28 days
f'ci = 3.5 ksi @ time of stressing

Contractor shall submit elongation calculations based on initial stress at ⊠ = 0.871 times jacking stress.

One end stressing shall be performed from left end of bent cap. Stressing shall occur after deck is poured.

Distribution of prestress force (pjack) and ducts shall be symmetrical about ℄ Bent caps.

At no time during stressing operation shall more than 1/6 of the total Bent prestressing force be applied eccentrically about the centerline of the Bent.

Bar reinforcement interfering with prestressing tendons shall be adjusted as approved by the Engineer.

Bent cap shall be stressed prior to removal of falsework.

NOTES:

1. For "SECTION A-A" and "SECTION B-B", see "BENT 2 DETAILS" sheet.
2. For column and pile details, see "COLUMN DETAILS" sheet.

DESIGN OVERSIGHT Paul Cotter
7-16-12
SIGN OFF DATE

	BY	CHECKED
DESIGN	S. Landis	A. Priley/F. Hakemi
DETAILS	L. Davis	A. Priley/F. Hakemi
QUANTITIES	S. Landis	F. Hakemi/B. Osorio

PREPARED FOR THE STATE OF CALIFORNIA DEPARTMENT OF TRANSPORTATION

Jan Hueser
PROJECT ENGINEER

BRIDGE NO. 33-0752S
POST MILES 28.69

29TH AVENUE OFF-RAMP
BENT 2 LAYOUT

DESIGN DETAIL SHEET (ENGLISH) (REV.7/16/10)

ORIGINAL SCALE IN INCHES FOR REDUCED PLANS 0 1 2 3

UNIT: 0724
PROJECT NUMBER & PHASE: 04000001601 CONTRACT NO.: 04-0A7101

DISREGARD PRINTS BEARING EARLIER REVISION DATES

REVISION DATES: 9-6-11 1-10-12 3-30-12 6-25-12 SHEET 11 OF 34

FILE => 33-0752S-h-b02_lo01.dgn

USERNAME => s124196 DATE PLOTTED => 10-APR-2013 TIME PLOTTED => 06:38

DIST	COUNTY	ROUTE	POST MILES TOTAL PROJECT	SHEET No	TOTAL SHEETS
04	Ala	880	28.4/29.2	579	789

REGISTERED CIVIL ENGINEER 6/25/12 DATE

4-8-13
PLANS APPROVAL DATE

REGISTERED PROFESSIONAL ENGINEER Jan M. Hueser No. C050215 Exp. 6/30/13 CIVIL STATE OF CALIFORNIA

The State of California or its officers or agents shall not be responsible for the accuracy or completeness of electronic copies of this plan sheet.

ALAMEDA COUNTY TRANSPORTATION COMMISSION
1333 BROADWAY
OAKLAND, CA 94612-1918

URS CORPORATION
1380 LEAD HILL BLVD, SUITE 100
ROSEVILLE, CA 95661-2997

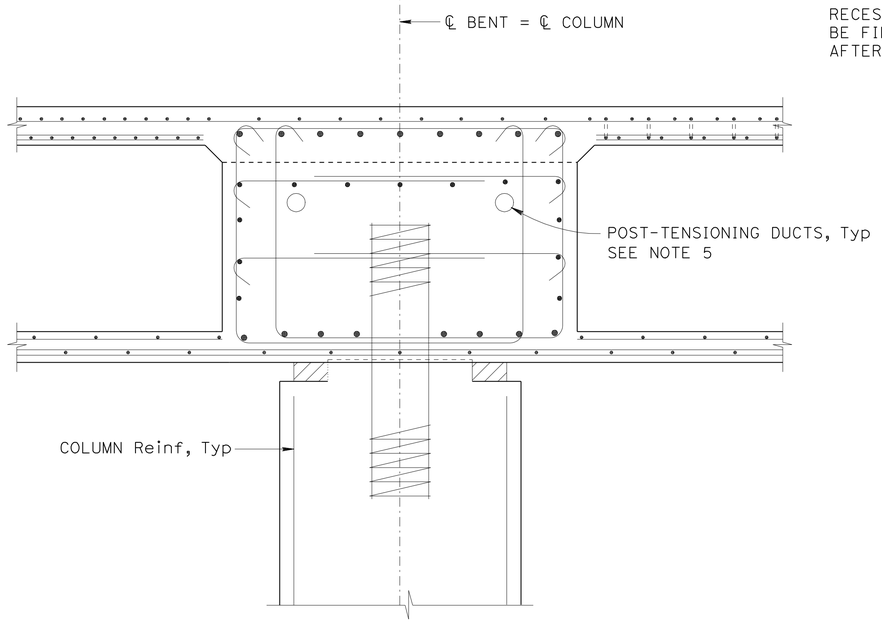

SECTION A-A

¾" = 1'-0"

For information not shown, see "SECTION B-B"

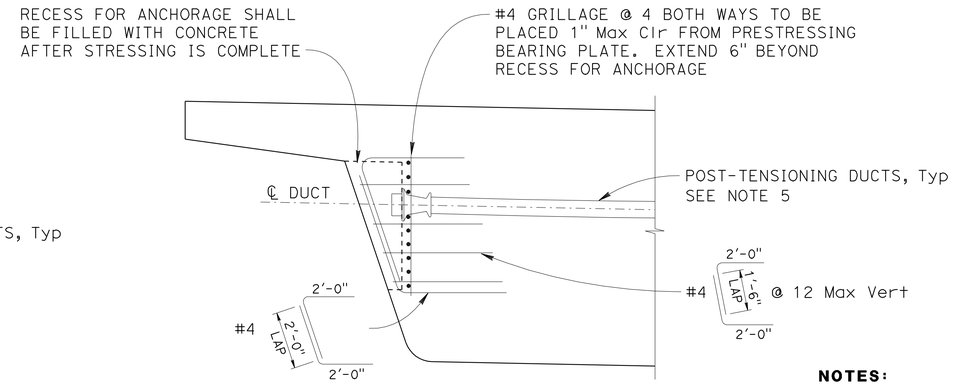

Note: Typical cap reinforcement not shown

SECTION C-C

¾" = 1'-0"

NOTES:

1. For column and pile details, see "COLUMN DETAILS" sheet.
2. For limits of Reinf and location of "SECTION A-A" and "SECTION B-B", see "BENT 2 LAYOUT" sheet.
3. Reinforcement may be bent or lowered to clear prestressing ducts subject to the approval of the Engineer.
4. Stirrups shall be placed normal to bent cap.
5. Number of ducts and anchorage system shown for illustrative purposes only. The contractor shall submit shop drawings for post-tensioning system for approval by the Engineer.
6. All splices in main bent cap reinforcement shall be service level splices.

LEGEND:

* Indicates clearance to main cap reinforcement.

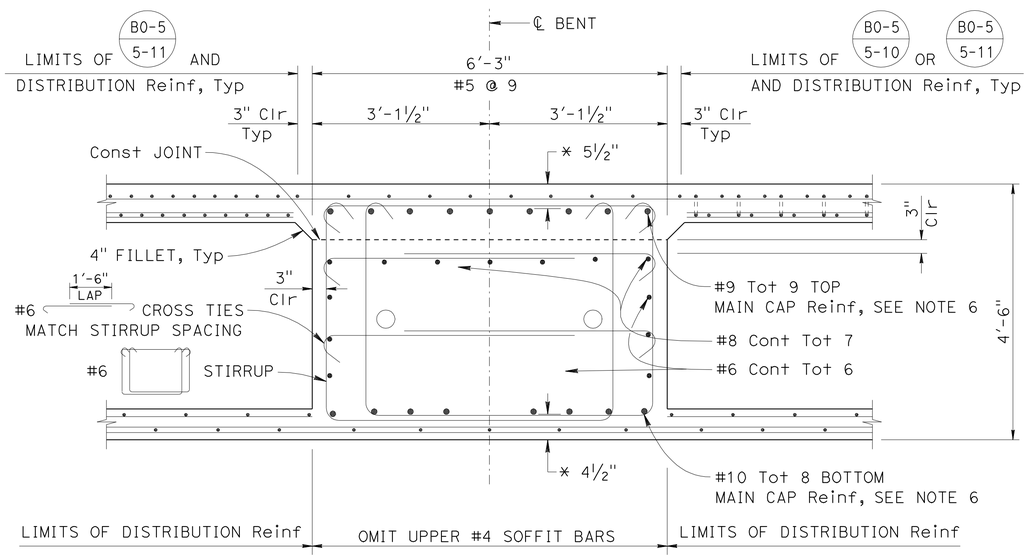

SECTION B-B

¾" = 1'-0"

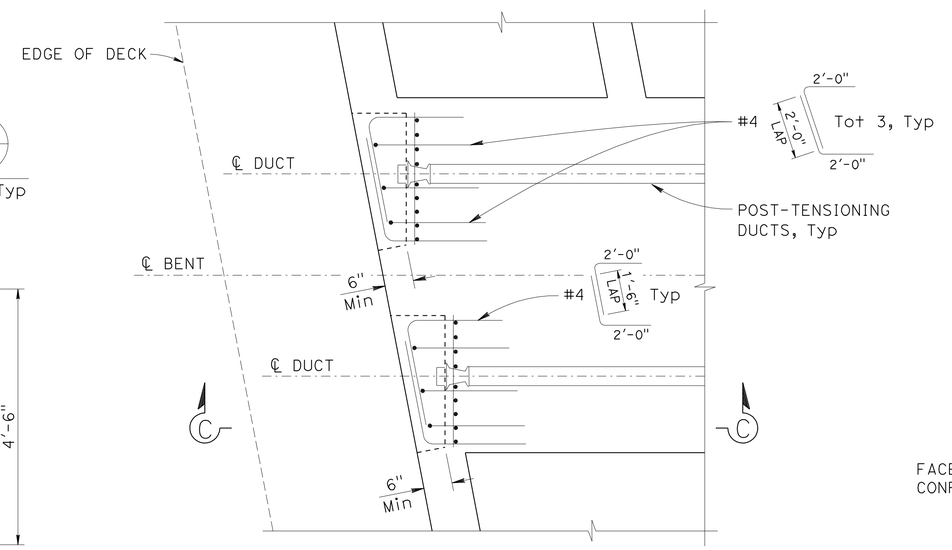

Note: Typical cap reinforcement not shown

END ANCHORAGE DETAIL

¾" = 1'-0"

Left side shown, right side similar

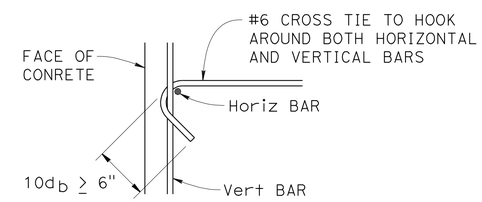

CROSS TIE DETAIL

NO SCALE

Paul Cotter
DESIGN OVERSIGHT Paul Cotter

7-16-12
SIGN OFF DATE

DESIGN DETAIL SHEET (ENGLISH) (REV.7/16/10)

	BY	CHECKED
DESIGN	S. Landis	A. Priley/F. Hakemi
DETAILS	L. Davis	A. Priley/F. Hakemi
QUANTITIES	S. Landis	F. Hakemi/B. Osorio

ORIGINAL SCALE IN INCHES FOR REDUCED PLANS 0 1 2 3

PREPARED FOR THE STATE OF CALIFORNIA DEPARTMENT OF TRANSPORTATION

Jan Hueser
PROJECT ENGINEER

BRIDGE NO. 33-0752S
POST MILES 28.69

29TH AVENUE OFF-RAMP
BENT 2 DETAILS

UNIT: 0724
PROJECT NUMBER & PHASE: 04000001601 CONTRACT NO.: 04-0A7101

DISREGARD PRINTS BEARING EARLIER REVISION DATES

REVISION DATES 9-6-11 1-10-12 3-30-12 6-25-12 SHEET 12 OF 34

FILE => 33-0752S-h-b02dt01.dgn

USERNAME => s124496 DATE PLOTTED => 10-APR-2013 TIME PLOTTED => 06:38

DIST	COUNTY	ROUTE	POST MILES TOTAL PROJECT	SHEET No	TOTAL SHEETS
04	Ala	880	28.4/29.2	580	789

REGISTERED CIVIL ENGINEER 6/25/12 DATE

4-8-13
PLANS APPROVAL DATE

REGISTERED PROFESSIONAL ENGINEER Jan M. Hueser No. C050215 Exp. 6/30/13 CIVIL STATE OF CALIFORNIA

The State of California or its officers or agents shall not be responsible for the accuracy or completeness of electronic copies of this plan sheet.

ALAMEDA COUNTY TRANSPORTATION COMMISSION
1333 BROADWAY
OAKLAND, CA 94612-1918

URS CORPORATION
1380 LEAD HILL BLVD, SUITE 100
ROSEVILLE, CA 95661-2997

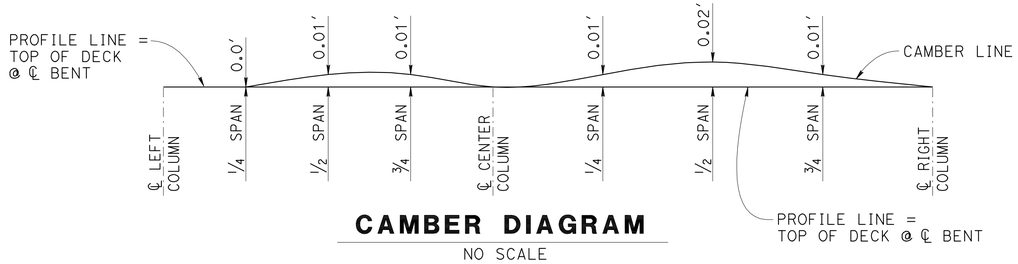

CAMBER DIAGRAM

NO SCALE

Does not include allowance for falsework deflection and settlement

NOTES:

1. For "SECTION D-D" and "SECTION E-E", see "BENT 3 DETAILS" sheet.
2. For column and pile details, see "COLUMN DETAILS" sheet.
3. For floating slab, see "FLOATING SLAB DETAILS" sheet.
4. For "PRESTRESSING NOTES", see "BENT 3 DETAILS" sheet.

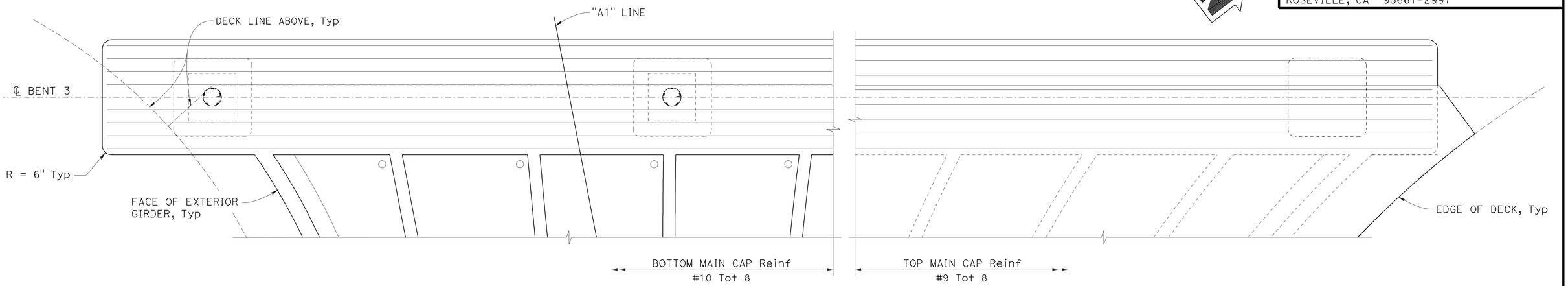

PLAN

3/8" = 1'-0"

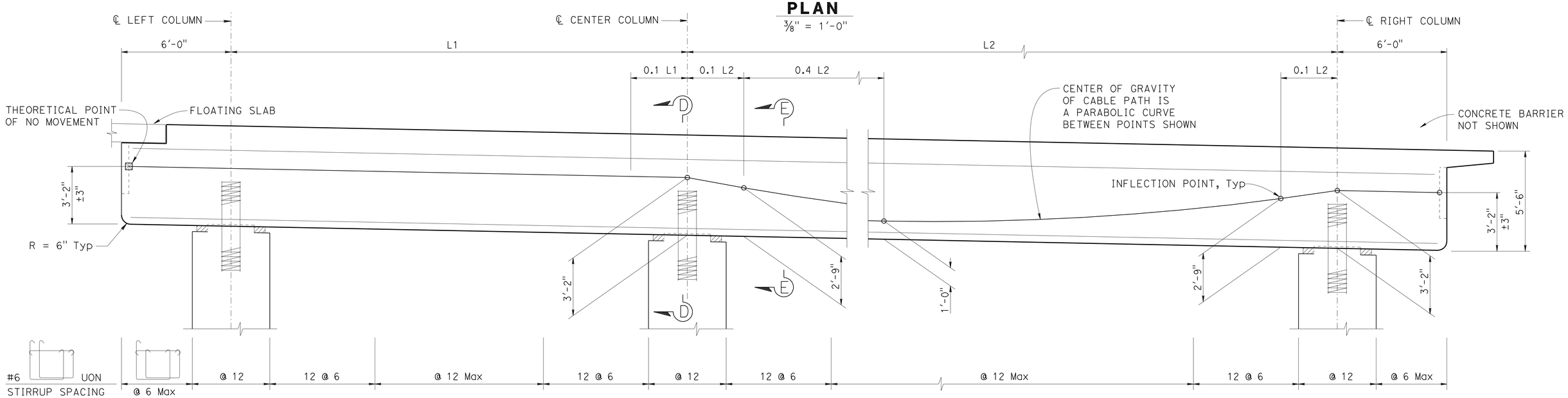

ELEVATION

3/8" = 1'-0"

Paul Cotter DESIGN OVERSIGHT Paul Cotter 7-16-12 SIGN OFF DATE	DESIGN	BY S. Landis	CHECKED A. Priley/F. Hakemi	PREPARED FOR THE STATE OF CALIFORNIA DEPARTMENT OF TRANSPORTATION	Jan Hueser PROJECT ENGINEER
	DETAILS	BY L. Davis	CHECKED A. Priley/F. Hakemi		BRIDGE NO. 33-0752S
	QUANTITIES	BY S. Landis	CHECKED F. Hakemi/B. Osorio		POST MILES 28.69

29TH AVENUE OFF-RAMP

BENT 3 LAYOUT

DESIGN DETAIL SHEET (ENGLISH) (REV.7/16/10)

ORIGINAL SCALE IN INCHES FOR REDUCED PLANS 0 1 2 3

UNIT: 0724
PROJECT NUMBER & PHASE: 04000001601 CONTRACT NO.: 04-0A7101

DISREGARD PRINTS BEARING EARLIER REVISION DATES

REVISION DATES				SHEET	OF
9-6-11	1-10-12	3-30-12	6-25-12	13	34

FILE => 33-0752S-h-b03_1o01.dgn

USERNAME => s124436 DATE PLOTTED => 10-APR-2013 TIME PLOTTED => 06:38

DIST	COUNTY	ROUTE	POST MILES TOTAL PROJECT	SHEET No	TOTAL SHEETS
04	Ala	880	28.4/29.2	581	789

REGISTERED CIVIL ENGINEER 6/25/12 DATE

4-8-13
PLANS APPROVAL DATE

REGISTERED PROFESSIONAL ENGINEER Jan M. Hueser No. C050215 Exp. 6/30/13 CIVIL STATE OF CALIFORNIA

The State of California or its officers or agents shall not be responsible for the accuracy or completeness of electronic copies of this plan sheet.

ALAMEDA COUNTY TRANSPORTATION COMMISSION
1333 BROADWAY
OAKLAND, CA 94612-1918

URS CORPORATION
1380 LEAD HILL BLVD, SUITE 100
ROSEVILLE, CA 95661-2997

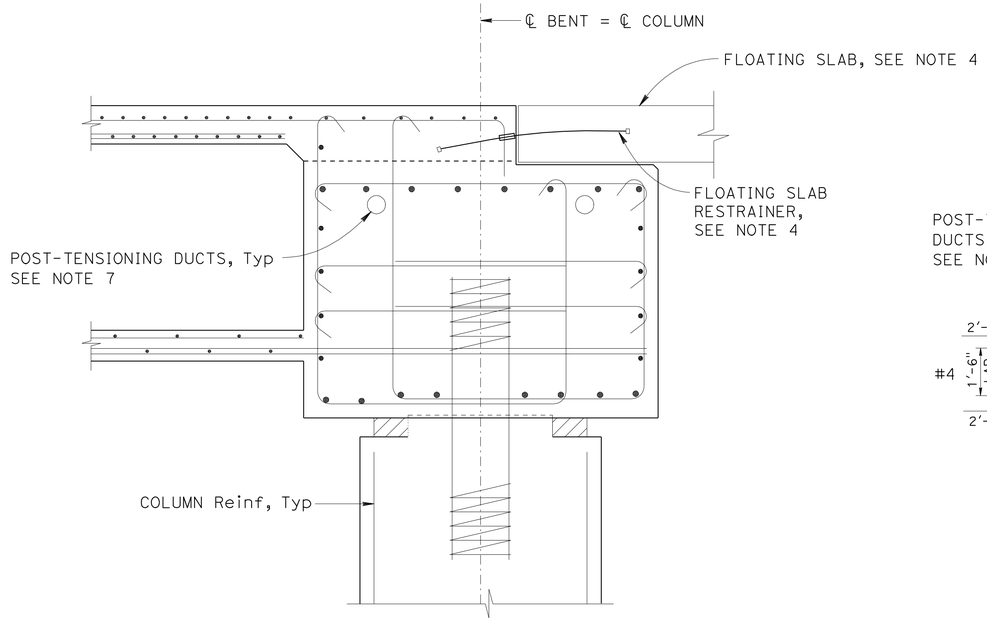

SECTION D-D

¾" = 1'-0"

For information not shown, see "SECTION E-E"

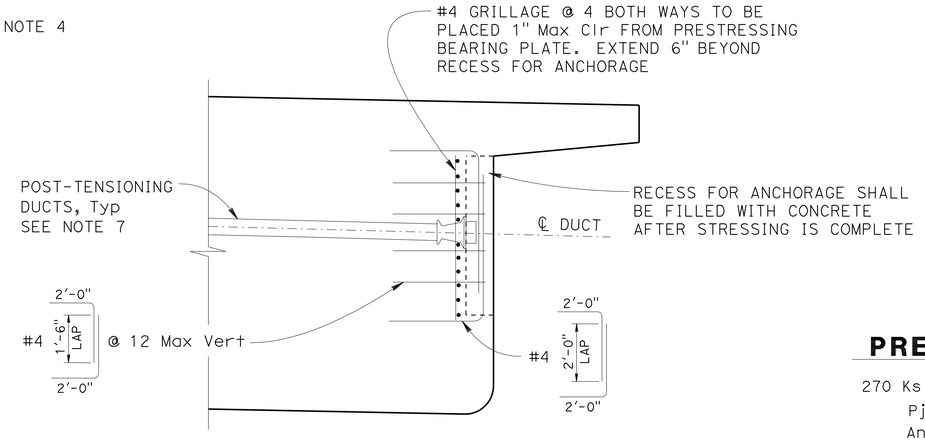

Note: Typical cap reinforcement not shown

SECTION F-F

¾" = 1'-0"

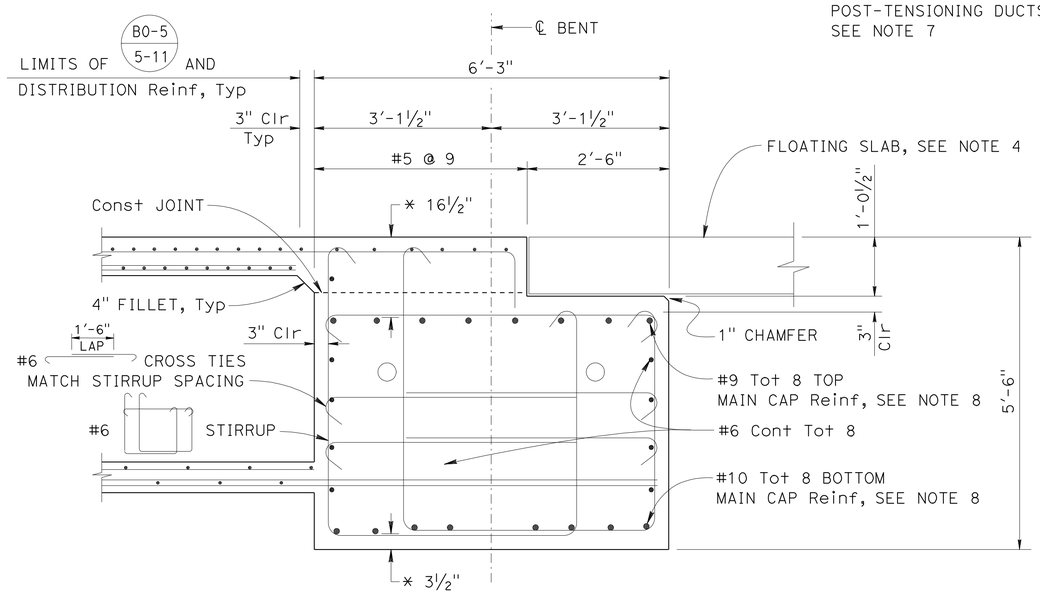

SECTION E-E

¾" = 1'-0"

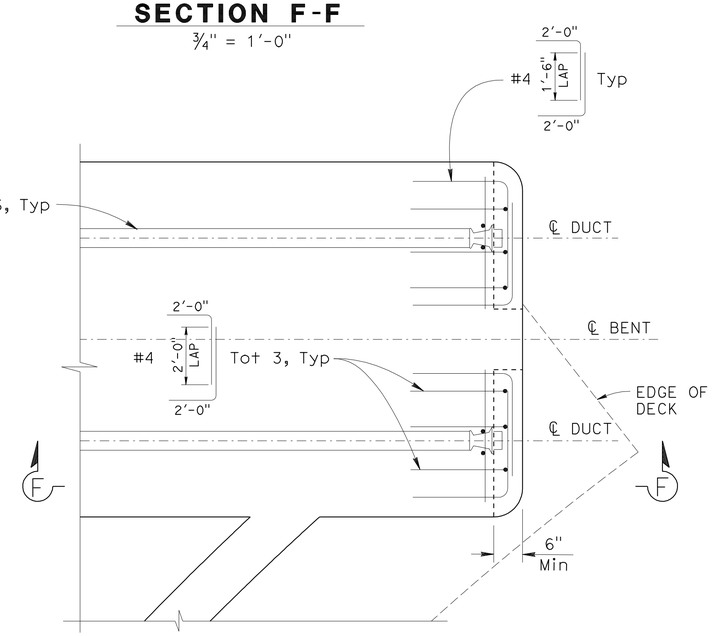

Note: Typical cap reinforcement not shown

END ANCHORAGE DETAIL

¾" = 1'-0"

Right side shown, Left side similar

PRESTRESSING NOTES

270 Ksi Low Relaxation Strands:

Pjack = 2000 kips
Anchor Set = ⅜ inches

μ = 0.15
K = 0.0002 / ft

Concrete: f'c = 4.5 ksi @ 28 days
f'ci = 3.5 ksi @ time of stressing

Contractor shall submit elongation calculations based on initial stress at ⊠ = 0.885 times jacking stress.

One end stressing shall be performed from right end of bent cap. Stressing shall occur after deck is poured.

Distribution of prestress force (pjack) and ducts shall be symmetrical about ℄ Bent caps.

At no time during stressing operation shall more than 1/6 of the total Bent prestressing force be applied eccentrically about the centerline of the Bent.

Bar reinforcement interfering with prestressing tendons shall be adjusted as approved by the Engineer.

Bent cap shall be stressed prior to removal of falsework.

LEGEND:

* Indicates clearance to main cap reinforcement.

NOTES:

1. For column and pile details, see "COLUMN DETAILS" sheet.
2. For limits of Reinf and location of "SECTION D-D" and "SECTION E-E", see "BENT 3 LAYOUT" sheet.
3. Reinforcement may be bent or lowered to clear PT ducts subject to the approval of the Engineer.
4. For floating slab and restrainer details, see "FLOATING SLAB DETAILS" sheet.
5. For "CROSS TIE DETAIL" see "BENT 2 DETAILS" sheet.
6. Stirrups shall be placed normal to bent cap.
7. Number of ducts and anchorage system shown for illustrative purposes only. The contractor shall submit shop drawings for post-tensioning system for approval by the Engineer.
8. All splices in main bent cap reinforcement shall be service level splices.

DESIGN OVERSIGHT Paul Cotter
7-16-12
SIGN OFF DATE

	BY	CHECKED
DESIGN	S. Landis	A. Priley/F. Hakemi
DETAILS	L. Davis	A. Priley/F. Hakemi
QUANTITIES	S. Landis	F. Hakemi/B. Osorio

PREPARED FOR THE STATE OF CALIFORNIA DEPARTMENT OF TRANSPORTATION

Jan Hueser
PROJECT ENGINEER

BRIDGE NO. 33-0752S
POST MILES 28.69

29TH AVENUE OFF-RAMP
BENT 3 DETAILS

DESIGN DETAIL SHEET (ENGLISH) (REV.7/16/10)

ORIGINAL SCALE IN INCHES FOR REDUCED PLANS 0 1 2 3

UNIT: 0724
PROJECT NUMBER & PHASE: 04000001601 CONTRACT NO.: 04-0A7101

DISREGARD PRINTS BEARING EARLIER REVISION DATES

REVISION DATES: 9-6-11 1-10-12 3-30-12 6-25-12

SHEET 14 OF 34

FILE => 33-0752S-h-b03dt01.dgn

USERNAME => s124196 DATE PLOTTED => 10-APR-2013 TIME PLOTTED => 06:38

DIST	COUNTY	ROUTE	POST MILES TOTAL PROJECT	SHEET No	TOTAL SHEETS
04	Ala	880	28.4/29.2	582	789

REGISTERED CIVIL ENGINEER 6/25/12 DATE

4-8-13
PLANS APPROVAL DATE

REGISTERED PROFESSIONAL ENGINEER Jan M. Hueser No. C050215 Exp. 6/30/13 CIVIL STATE OF CALIFORNIA

The State of California or its officers or agents shall not be responsible for the accuracy or completeness of electronic copies of this plan sheet.

ALAMEDA COUNTY TRANSPORTATION COMMISSION
1333 BROADWAY
OAKLAND, CA 94612-1918

URS CORPORATION
1380 LEAD HILL BLVD, SUITE 100
ROSEVILLE, CA 95661-2997

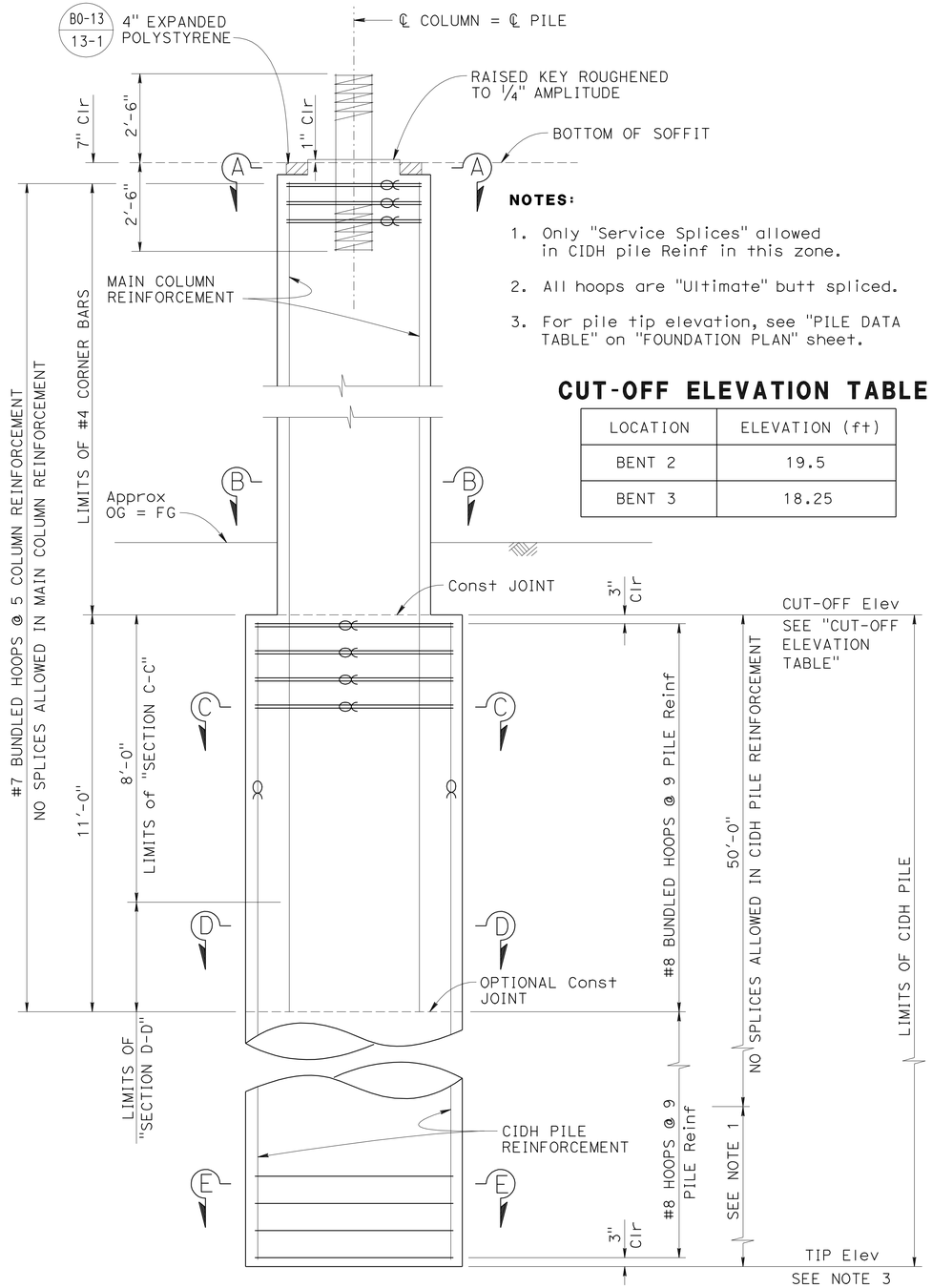

NOTES:

1. Only "Service Splices" allowed in CIDH pile Reinf in this zone.
2. All hoops are "Ultimate" butt spliced.
3. For pile tip elevation, see "PILE DATA TABLE" on "FOUNDATION PLAN" sheet.

CUT-OFF ELEVATION TABLE

LOCATION	ELEVATION (ft)
BENT 2	19.5
BENT 3	18.25

COLUMN ELEVATION
1/2" = 1'-0"

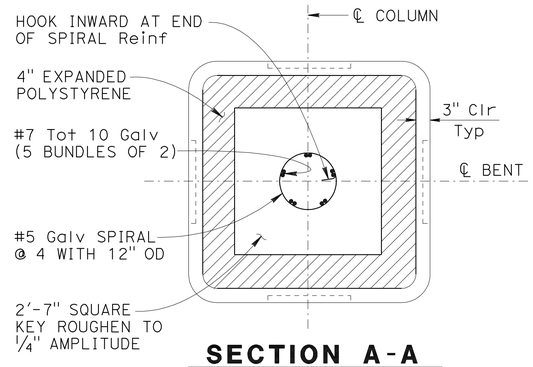

SECTION A-A
3/4" = 1'-0"

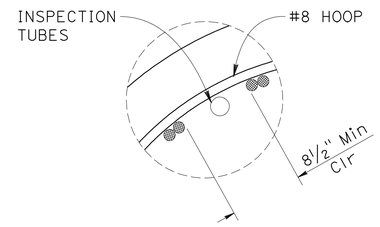

DETAIL Y
NO SCALE

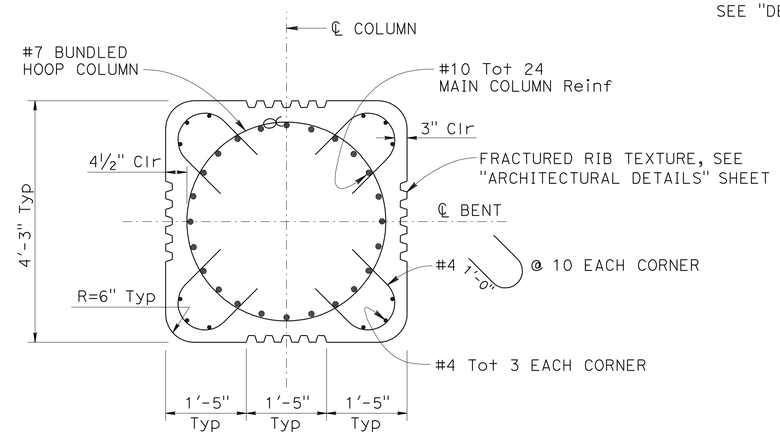

SECTION B-B
3/4" = 1'-0"

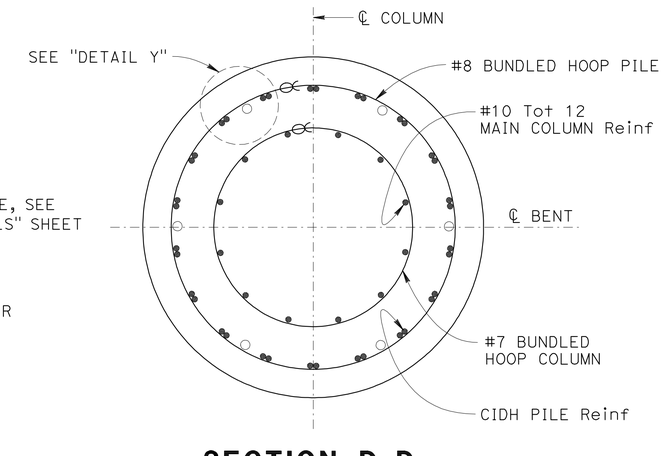

SECTION D-D
3/4" = 1'-0"

For information not shown, see "SECTION E-E"

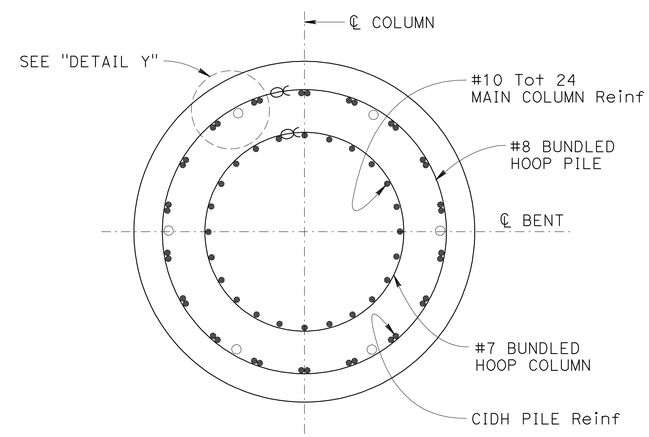

SECTION C-C
3/4" = 1'-0"

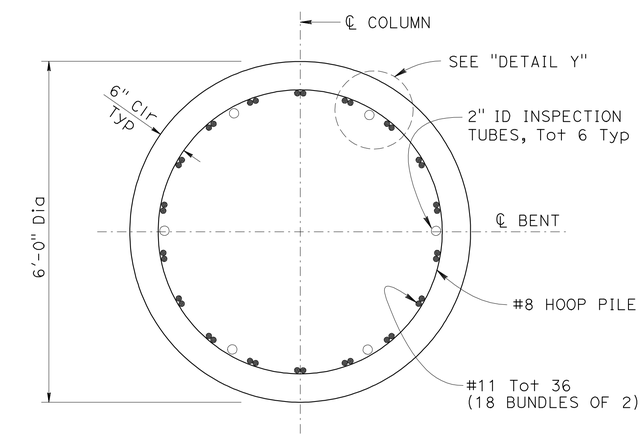

SECTION E-E
3/4" = 1'-0"

LEGEND:

∝ Indicates bundled bars

Paul Cotter
DESIGN OVERSIGHT Paul Cotter
7-16-12
SIGN OFF DATE

	BY	CHECKED
DESIGN	S. Landis	A. Priley/F. Hakemi
DETAILS	L. Davis	A. Priley/F. Hakemi
QUANTITIES	S. Landis	F. Hakemi/B. Osorio

PREPARED FOR THE STATE OF CALIFORNIA DEPARTMENT OF TRANSPORTATION

Jan Hueser
PROJECT ENGINEER

BRIDGE NO. 33-0752S
POST MILES 28.69

29TH AVENUE OFF-RAMP
COLUMN DETAILS

DESIGN DETAIL SHEET (ENGLISH) (REV.7/16/10)

ORIGINAL SCALE IN INCHES FOR REDUCED PLANS 0 1 2 3

UNIT: 0724
PROJECT NUMBER & PHASE: 04000001601 CONTRACT NO.: 04-0A7101

DISREGARD PRINTS BEARING EARLIER REVISION DATES

REVISION DATES: 9-6-11 1-18-12 3-30-12 6-25-12 | SHEET 15 | OF 34

FILE => 33-0752S-j-cdet01.dgn

USERNAME => s124496 DATE PLOTTED => 10-APR-2013 TIME PLOTTED => 06:38

DIST	COUNTY	ROUTE	POST MILES TOTAL PROJECT	SHEET No	TOTAL SHEETS
04	Ala	880	28.4/29.2	583	789

REGISTERED CIVIL ENGINEER 6/25/12 DATE

4-8-13
PLANS APPROVAL DATE

REGISTERED PROFESSIONAL ENGINEER Jan M. Hueser No. C050215 Exp. 6/30/13 CIVIL STATE OF CALIFORNIA

The State of California or its officers or agents shall not be responsible for the accuracy or completeness of electronic copies of this plan sheet.

ALAMEDA COUNTY TRANSPORTATION COMMISSION
1333 BROADWAY
OAKLAND, CA 94612-1918

URS CORPORATION
1380 LEAD HILL BLVD, SUITE 100
ROSEVILLE, CA 95661-2997

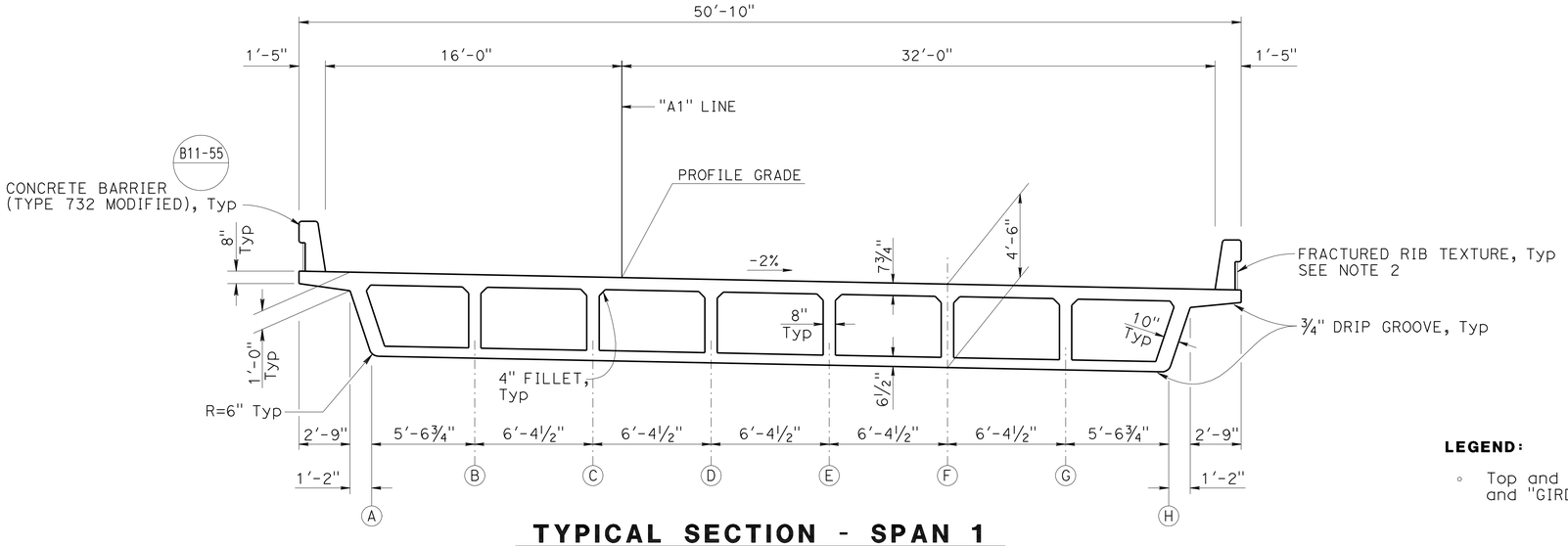

TYPICAL SECTION - SPAN 1

¼" = 1'-0"

LEGEND:

- Top and bottom reinforcement, see "GIRDER REINFORCEMENT No. 1" and "GIRDER REINFORCEMENT No. 2" sheets.

NOTES:

1. For details not shown see "GIRDER LAYOUT" sheets.
2. For Architectural Treatment see "ARCHITECTURAL DETAILS" sheet.
3. Typical girder reinforcing shall not be spliced within 9'-0" of face of Bent cap.

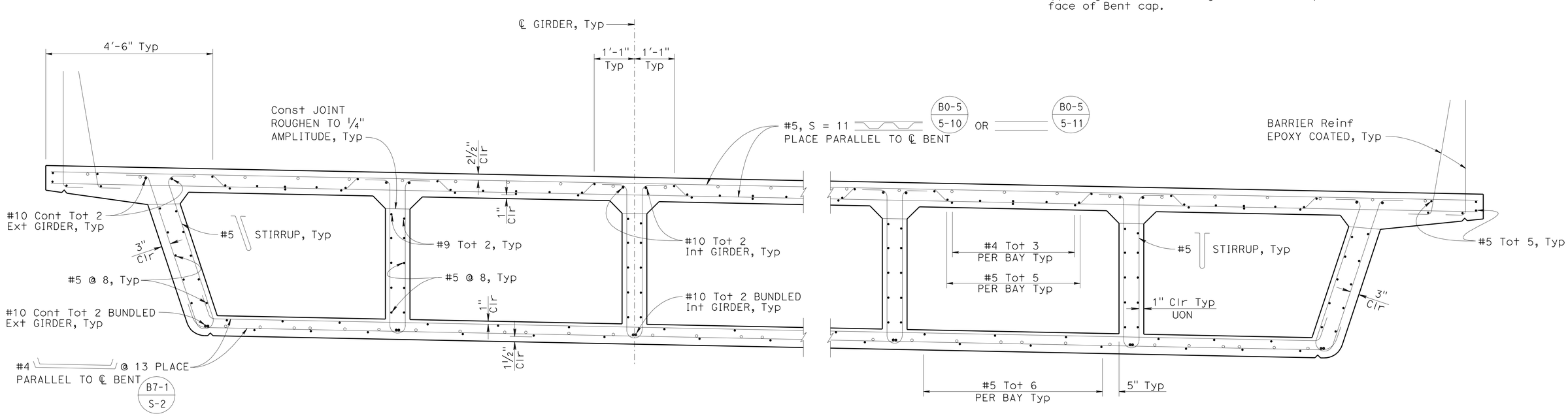

PART TYPICAL SECTION

B0-5 B7-1

¾" = 1'-0"

DESIGN OVERSIGHT Paul Cotter	DESIGN	BY S. Landis	CHECKED A. Priley/F. Hakemi	PREPARED FOR THE STATE OF CALIFORNIA DEPARTMENT OF TRANSPORTATION	Jan Hueser PROJECT ENGINEER
7-16-12 SIGN OFF DATE	DETAILS	BY L. Davis	CHECKED A. Priley/F. Hakemi		BRIDGE NO. 33-0752S / POST MILES 28.69
	QUANTITIES	BY S. Landis	CHECKED F. Hakemi/B. Osorio		

29TH AVENUE OFF-RAMP
TYPICAL SECTION No. 1

DESIGN DETAIL SHEET (ENGLISH) (REV.7/16/10)

ORIGINAL SCALE IN INCHES FOR REDUCED PLANS 0 1 2 3

UNIT: 0724
PROJECT NUMBER & PHASE: 04000001601 CONTRACT NO.: 04-0A7101

DISREGARD PRINTS BEARING EARLIER REVISION DATES

REVISION DATES: 9-6-11 1-10-12 3-30-12 6-25-12 | SHEET 16 | OF 34

FILE => 33-0752S-k-ts01.dgn

USERNAME => s124496 DATE PLOTTED => 10-APR-2013 TIME PLOTTED => 06:38

DIST	COUNTY	ROUTE	POST MILES TOTAL PROJECT	SHEET No	TOTAL SHEETS
04	Ala	880	28.4/29.2	584	789

REGISTERED CIVIL ENGINEER — DATE 6/25/12

4-8-13
PLANS APPROVAL DATE

REGISTERED PROFESSIONAL ENGINEER — Jan M. Hueser No. C050215 Exp. 6/30/13 CIVIL — STATE OF CALIFORNIA

The State of California or its officers or agents shall not be responsible for the accuracy or completeness of electronic copies of this plan sheet.

ALAMEDA COUNTY TRANSPORTATION COMMISSION
1333 BROADWAY
OAKLAND, CA 94612-1918

URS CORPORATION
1380 LEAD HILL BLVD, SUITE 100
ROSEVILLE, CA 95661-2997

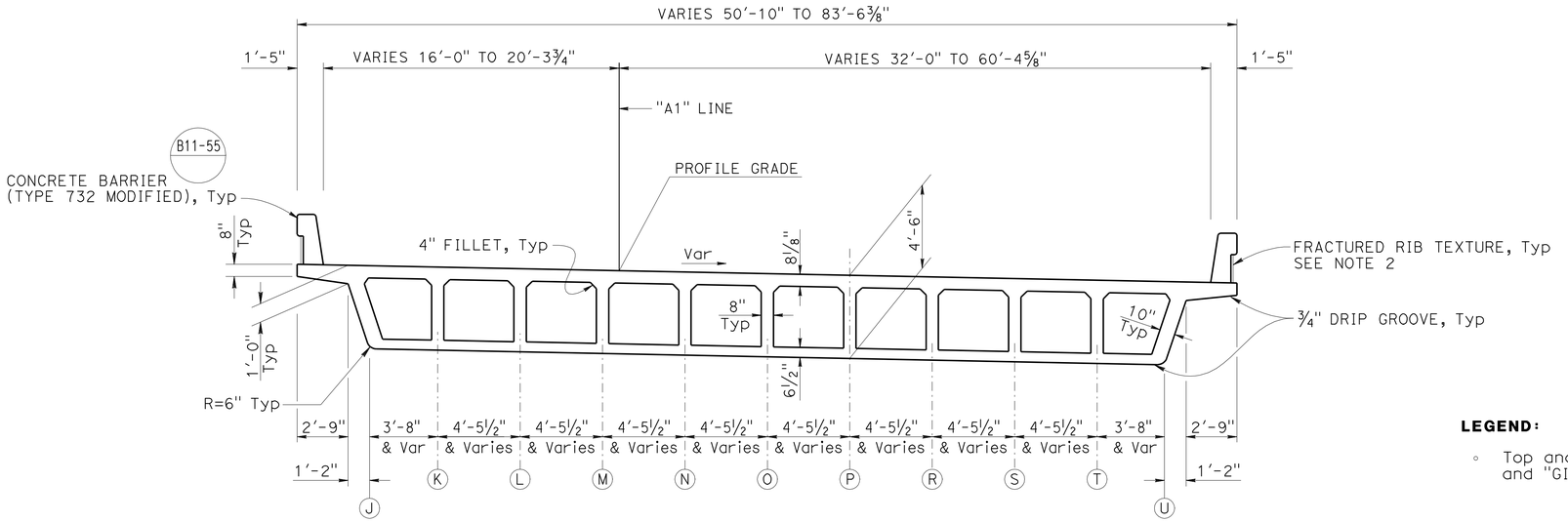

TYPICAL SECTION - SPAN 2

¼" = 1'-0"

LEGEND:

- Top and bottom reinforcement, see "GIRDER REINFORCEMENT No. 1" and "GIRDER REINFORCEMENT No. 2" sheets.

NOTES:

1. For details not shown see "GIRDER LAYOUT" sheets.
2. For Architectural Treatment see "ARCHITECTURAL DETAILS" sheet.
3. For floating slab, see "FLOATING SLAB DETAILS" sheet.
4. Typical girder reinforcing shall not be spliced within 9'-0" of face of Bent cap.

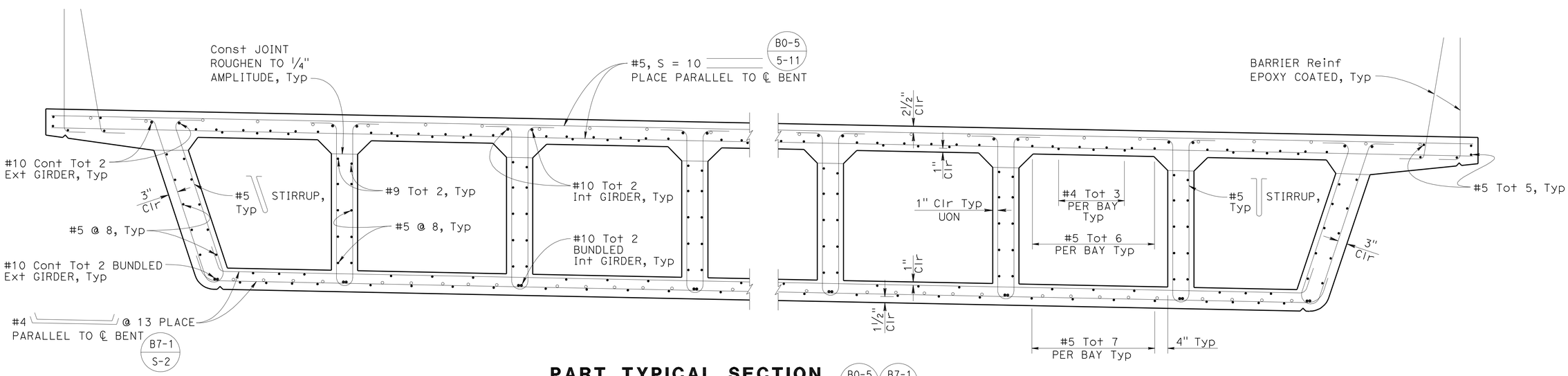

PART TYPICAL SECTION

¾" = 1'-0"

B0-5 B7-1

DESIGN	BY S. Landis	CHECKED A. Priley/F. Hakemi	
DETAILS	BY L. Davis	CHECKED A. Priley/F. Hakemi	
QUANTITIES	BY S. Landis	CHECKED F. Hakemi/B. Osorio	

DESIGN OVERSIGHT Paul Cotter
7-16-12
SIGN OFF DATE

PREPARED FOR THE STATE OF CALIFORNIA DEPARTMENT OF TRANSPORTATION

Jan Hueser
PROJECT ENGINEER

BRIDGE NO. 33-0752S
POST MILES 28.69

29TH AVENUE OFF-RAMP
TYPICAL SECTION No. 2

DESIGN DETAIL SHEET (ENGLISH) (REV.7/16/10)

ORIGINAL SCALE IN INCHES FOR REDUCED PLANS 0 1 2 3

UNIT: 0724
PROJECT NUMBER & PHASE: 04000001601 CONTRACT NO.: 04-0A7101

DISREGARD PRINTS BEARING EARLIER REVISION DATES

REVISION DATES: 9-6-11 1-18-12 3-30-12 6-25-12 — SHEET 17 OF 34

FILE => 33-0752S-k-ts02.dgn

USERNAME => s124936 DATE PLOTTED => 10-APR-2013 TIME PLOTTED => 06:38

DIST	COUNTY	ROUTE	POST MILES TOTAL PROJECT	SHEET No	TOTAL SHEETS
04	Ala	880	28.4/29.2	585	789

REGISTERED CIVIL ENGINEER — DATE 6/25/12

4-8-13
PLANS APPROVAL DATE

REGISTERED PROFESSIONAL ENGINEER — Jan M. Hueser — No. C050215 — Exp. 6/30/13 — CIVIL — STATE OF CALIFORNIA

The State of California or its officers or agents shall not be responsible for the accuracy or completeness of electronic copies of this plan sheet.

ALAMEDA COUNTY TRANSPORTATION COMMISSION
1333 BROADWAY
OAKLAND, CA 94612-1918

URS CORPORATION
1380 LEAD HILL BLVD, SUITE 100
ROSEVILLE, CA 95661-2997

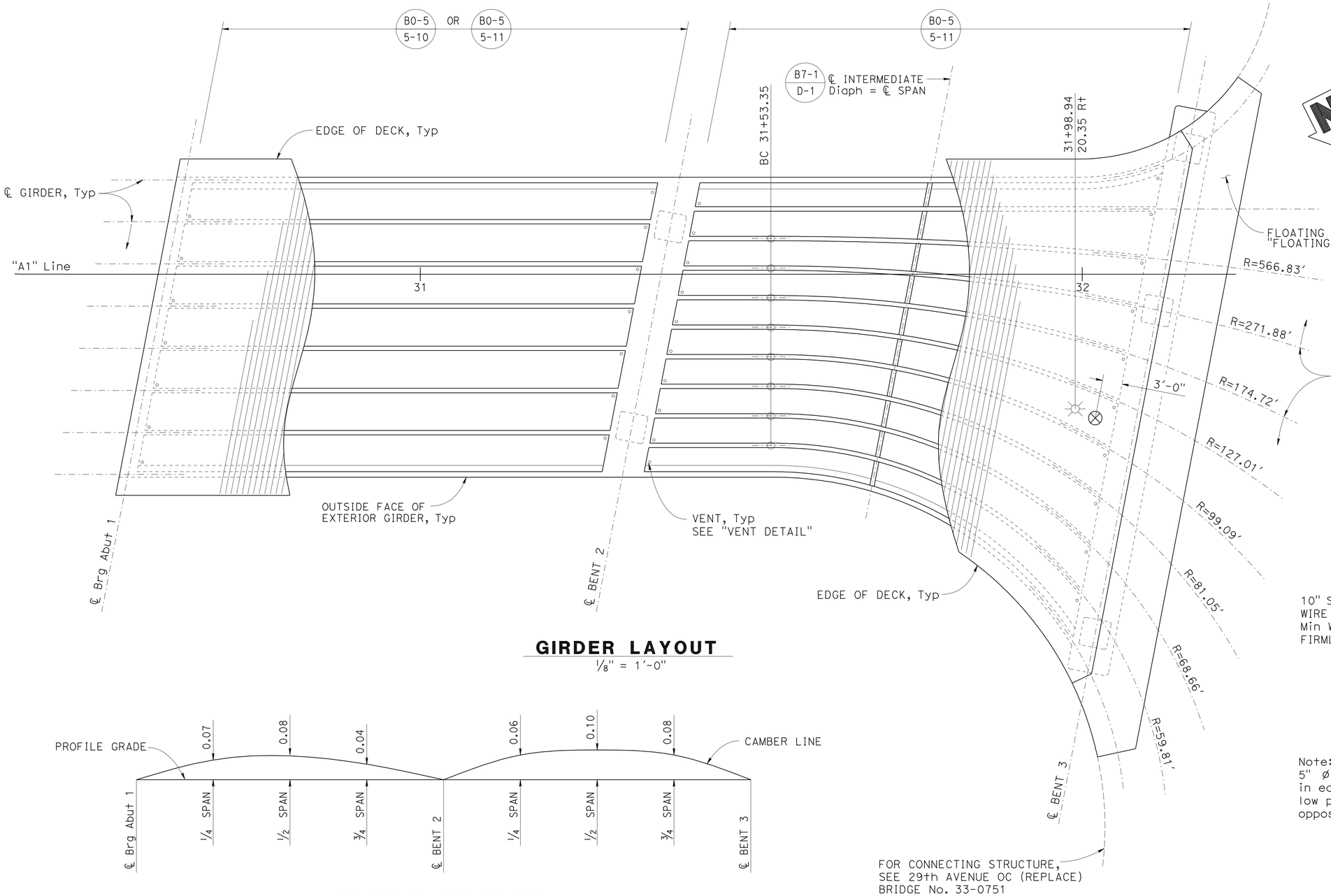

GIRDER LAYOUT

1/8" = 1'-0"

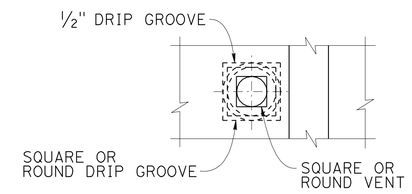

PLAN

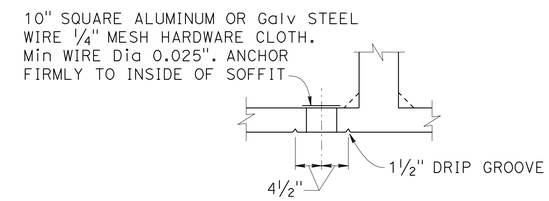

ELEVATION

Note:
5" ø or ⌀ vent in lower slab. Min of two vents per span in each bay between girders. One vent to be located at low point of span and other vent to be located at opposite end of span @ 1'-6" from face of Abut or bent.

VENT DETAIL

NO SCALE

CAMBER DIAGRAM

NO SCALE

Note: Does not include allowance for falsework deflection and settlement.

LEGEND:

- Recessed Soffit Light, see "ELECTRICAL PLANS" (ES-9F)
- Soffit Access Opening (B14-5)

DESIGN OVERSIGHT: Paul Cotter	DESIGN	BY S. Landis	CHECKED A. Priley/F. Hakemi
7-16-12 SIGN OFF DATE	DETAILS	BY L. Davis	CHECKED A. Priley/F. Hakemi
	QUANTITIES	BY S. Landis	CHECKED F. Hakemi/B. Osorio

PREPARED FOR THE STATE OF CALIFORNIA DEPARTMENT OF TRANSPORTATION

Jan Hueser — PROJECT ENGINEER

BRIDGE NO. 33-0752S — POST MILES 28.69

29TH AVENUE OFF-RAMP
GIRDER LAYOUT

DESIGN DETAIL SHEET (ENGLISH) (REV.7/16/10)

ORIGINAL SCALE IN INCHES FOR REDUCED PLANS 0 1 2 3

UNIT: 0724
PROJECT NUMBER & PHASE: 04000001601 CONTRACT NO.: 04-0A7101

DISREGARD PRINTS BEARING EARLIER REVISION DATES → REVISION DATES 9-6-11 1-30-12 3-30-12 6-25-12 SHEET 18 OF 34

FILE => 33-0752S-1-g_lo01.dgn

USERNAME => s124496 DATE PLOTTED => 10-APR-2013 TIME PLOTTED => 06:38

DIST	COUNTY	ROUTE	POST MILES TOTAL PROJECT	SHEET No	TOTAL SHEETS
04	Ala	880	28.4/29.2	586	789

REGISTERED CIVIL ENGINEER 6/25/12 DATE

4-8-13
PLANS APPROVAL DATE

REGISTERED PROFESSIONAL ENGINEER Jan M. Hueser No. C050215 Exp. 6/30/13 CIVIL STATE OF CALIFORNIA

The State of California or its officers or agents shall not be responsible for the accuracy or completeness of electronic copies of this plan sheet.

ALAMEDA COUNTY TRANSPORTATION COMMISSION
1333 BROADWAY
OAKLAND, CA 94612-1918

URS CORPORATION
1380 LEAD HILL BLVD, SUITE 100
ROSEVILLE, CA 95661-2997

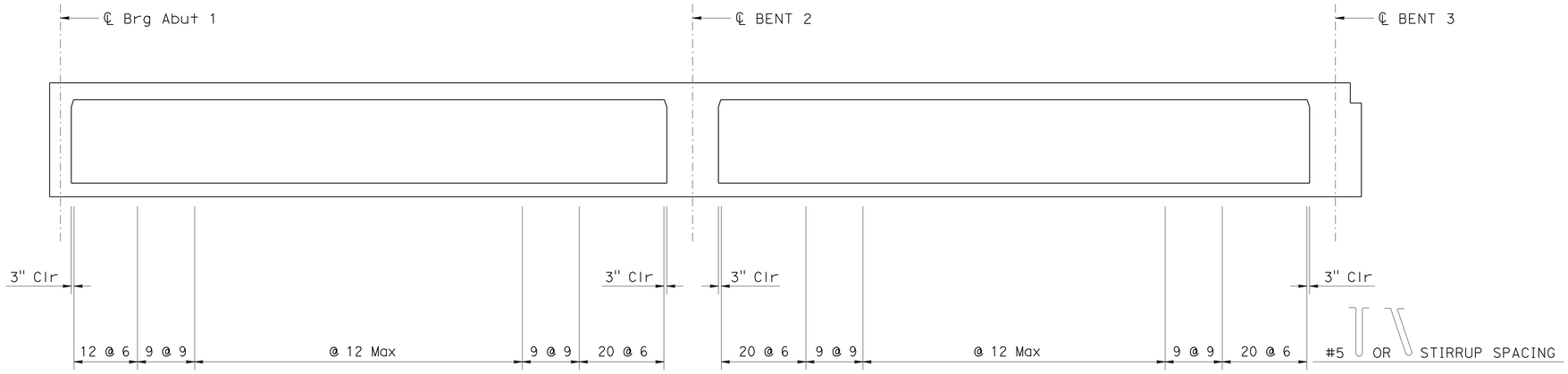

NOTES:

1. For information not shown, see "GIRDER LAYOUT" sheet.
2. Reinforcing may be moved to avoid post-tensioning ducts with the approval of the Engineer.

LONGITUDINAL SECTION

NO SCALE

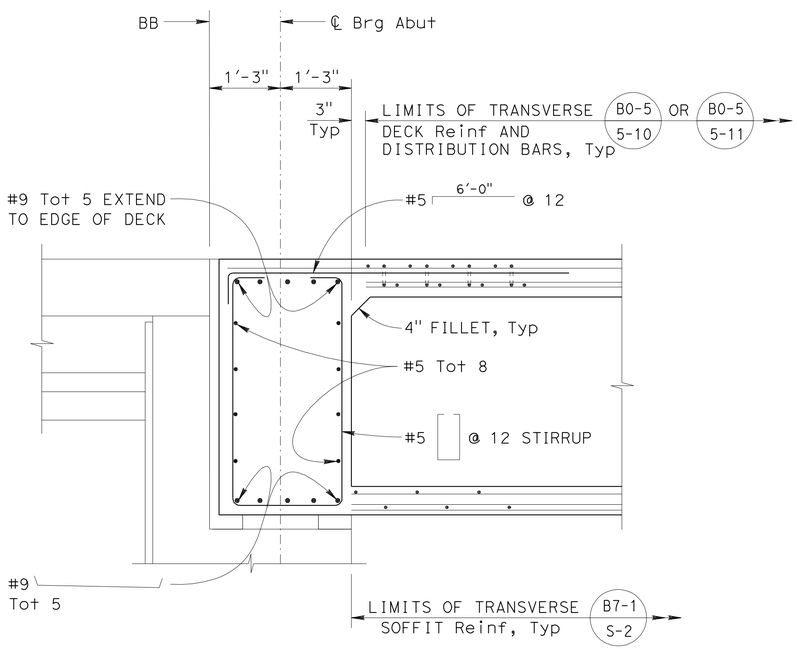

END DIAPHRAGM DETAIL - ABUT 1

3/4" = 1'-0"

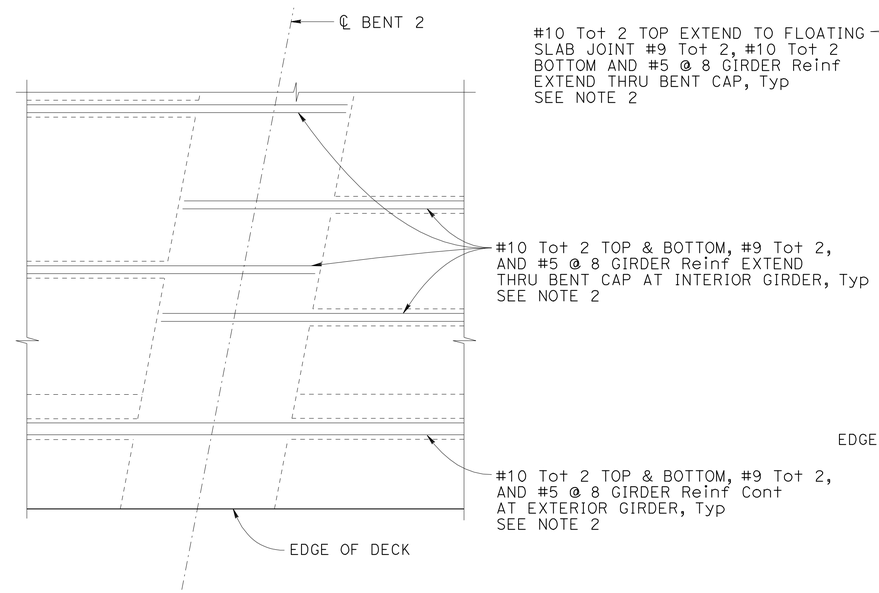

GIRDER REINFORCING DETAIL - BENT 2

NO SCALE

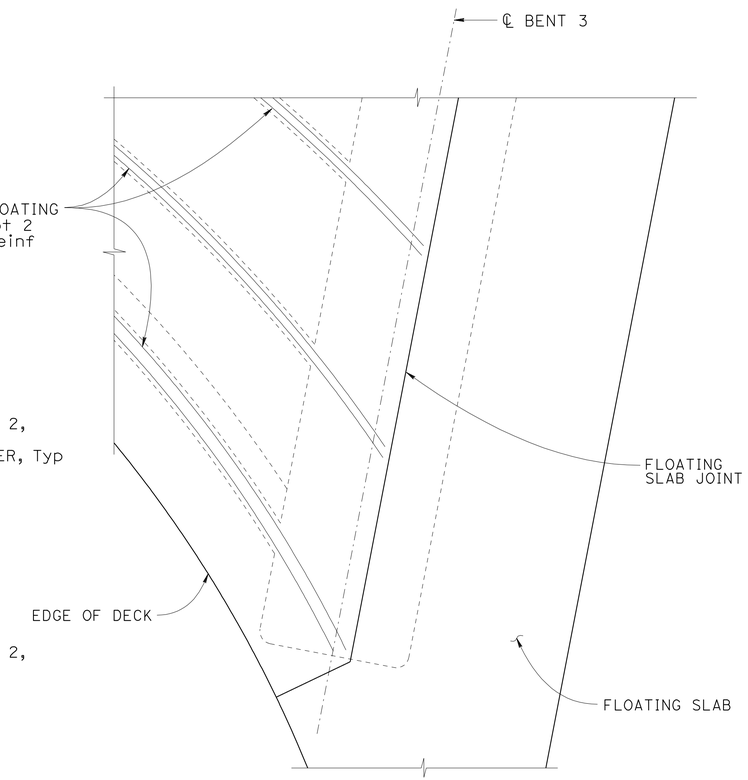

GIRDER REINFORCING DETAIL - BENT 3

NO SCALE

Paul Cotter
DESIGN OVERSIGHT Paul Cotter
7-16-12
SIGN OFF DATE

	BY	CHECKED
DESIGN	S. Landis	A. Priley/F. Hakemi
DETAILS	L. Davis	A. Priley/F. Hakemi
QUANTITIES	S. Landis	F. Hakemi/B. Osorio

PREPARED FOR THE STATE OF CALIFORNIA DEPARTMENT OF TRANSPORTATION

Jan Hueser
PROJECT ENGINEER

BRIDGE NO. 33-0752S
POST MILES 28.69

29TH AVENUE OFF-RAMP
GIRDER DETAILS

DESIGN DETAIL SHEET (ENGLISH) (REV.7/16/10)

ORIGINAL SCALE IN INCHES FOR REDUCED PLANS 0 1 2 3

UNIT: 0724
PROJECT NUMBER & PHASE: 04000001601 CONTRACT NO.: 04-0A7101

DISREGARD PRINTS BEARING EARLIER REVISION DATES

REVISION DATES: 9-6-11 1-10-12 3-30-12 6-25-12

SHEET 19 OF 34

FILE => 33-0752S-m-1sec.dgn

USERNAME => s124496 DATE PLOTTED => 10-APR-2013 TIME PLOTTED => 06:38

DIST	COUNTY	ROUTE	POST MILES TOTAL PROJECT	SHEET No	TOTAL SHEETS
04	Ala	880	28.4/29.2	587	789

REGISTERED CIVIL ENGINEER 6/25/12 DATE

4-8-13
PLANS APPROVAL DATE

REGISTERED PROFESSIONAL ENGINEER Jan M. Hueser No. C050215 Exp. 6/30/13 CIVIL STATE OF CALIFORNIA

The State of California or its officers or agents shall not be responsible for the accuracy or completeness of electronic copies of this plan sheet.

ALAMEDA COUNTY TRANSPORTATION COMMISSION
1333 BROADWAY
OAKLAND, CA 94612-1918

URS CORPORATION
1380 LEAD HILL BLVD, SUITE 100
ROSEVILLE, CA 95661-2997

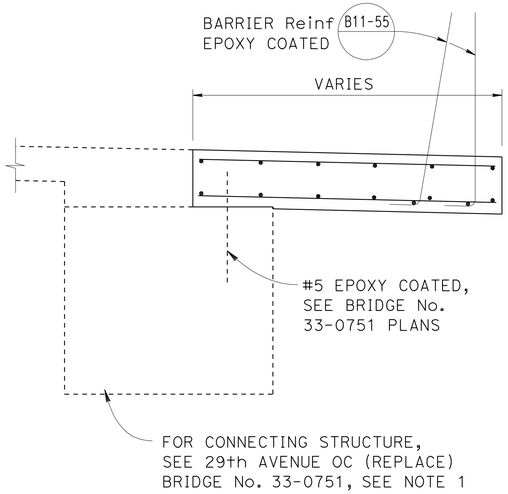

SECTION A-A
3/4" = 1'-0"

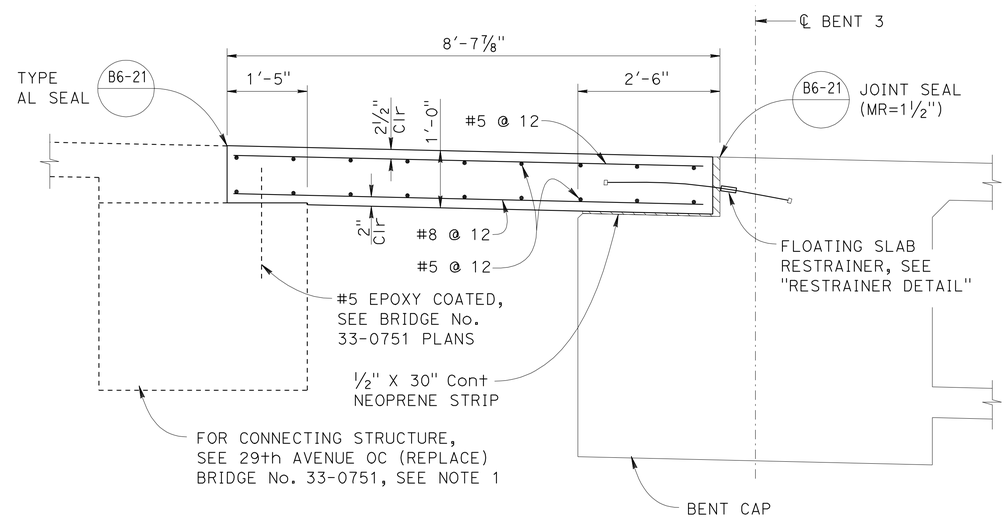

SECTION B-B
3/4" = 1'-0"

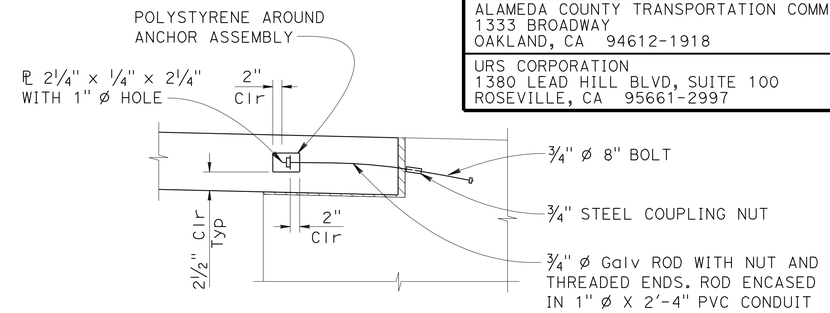

RESTRAINER DETAIL
NO SCALE

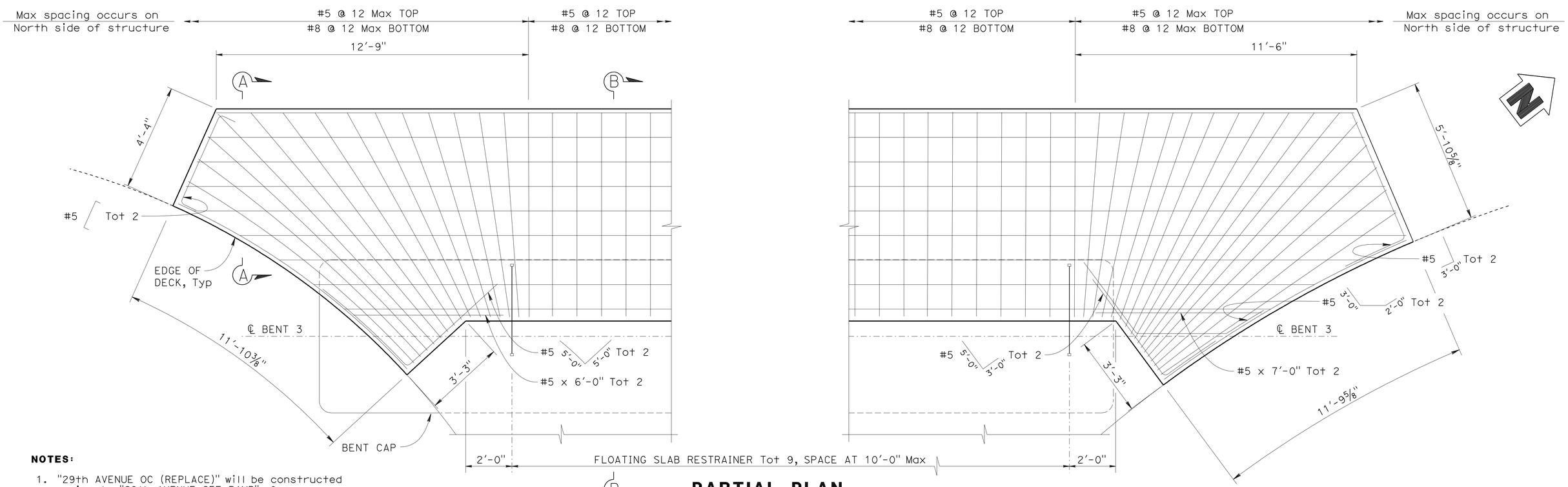

NOTES:

1. "29th AVENUE OC (REPLACE)" will be constructed prior to "29th AVENUE OFF-RAMP", for construction sequence see "ROAD PLANS"

PARTIAL PLAN
1/2" = 1'-0"

DESIGN OVERSIGHT Paul Cotter
7-16-12
SIGN OFF DATE

	BY	CHECKED
DESIGN	S. Landis	A. Priley/F. Hakemi
DETAILS	L. Davis	A. Priley/F. Hakemi
QUANTITIES	S. Landis	F. Hakemi/B. Osorio

PREPARED FOR THE STATE OF CALIFORNIA DEPARTMENT OF TRANSPORTATION

Jan Hueser
PROJECT ENGINEER

BRIDGE NO. 33-0752S
POST MILES 28.69

29TH AVENUE OFF-RAMP
FLOATING SLAB DETAILS

DESIGN DETAIL SHEET (ENGLISH) (REV.7/16/10)

ORIGINAL SCALE IN INCHES FOR REDUCED PLANS 0 1 2 3

UNIT: 0724
PROJECT NUMBER & PHASE: 04000001601 CONTRACT NO.: 04-0A7101

DISREGARD PRINTS BEARING EARLIER REVISION DATES

REVISION DATES: 9-6-11 1-18-12 3-30-12 7-11-12

SHEET 20 OF 34

FILE => 33-0752S-n-hdt01.dgn

USERNAME => s124496 DATE PLOTTED => 10-APR-2013 TIME PLOTTED => 06:39

DIST	COUNTY	ROUTE	POST MILES TOTAL PROJECT	SHEET No	TOTAL SHEETS
04	Ala	880	28.4/29.2	588	789

REGISTERED CIVIL ENGINEER 6/25/12 DATE

4-8-13
PLANS APPROVAL DATE

REGISTERED PROFESSIONAL ENGINEER Jan M. Hueser No. C050215 Exp. 6/30/13 CIVIL STATE OF CALIFORNIA

The State of California or its officers or agents shall not be responsible for the accuracy or completeness of electronic copies of this plan sheet.

ALAMEDA COUNTY TRANSPORTATION COMMISSION
1333 BROADWAY
OAKLAND, CA 94612-1918

URS CORPORATION
1380 LEAD HILL BLVD, SUITE 100
ROSEVILLE, CA 95661-2997

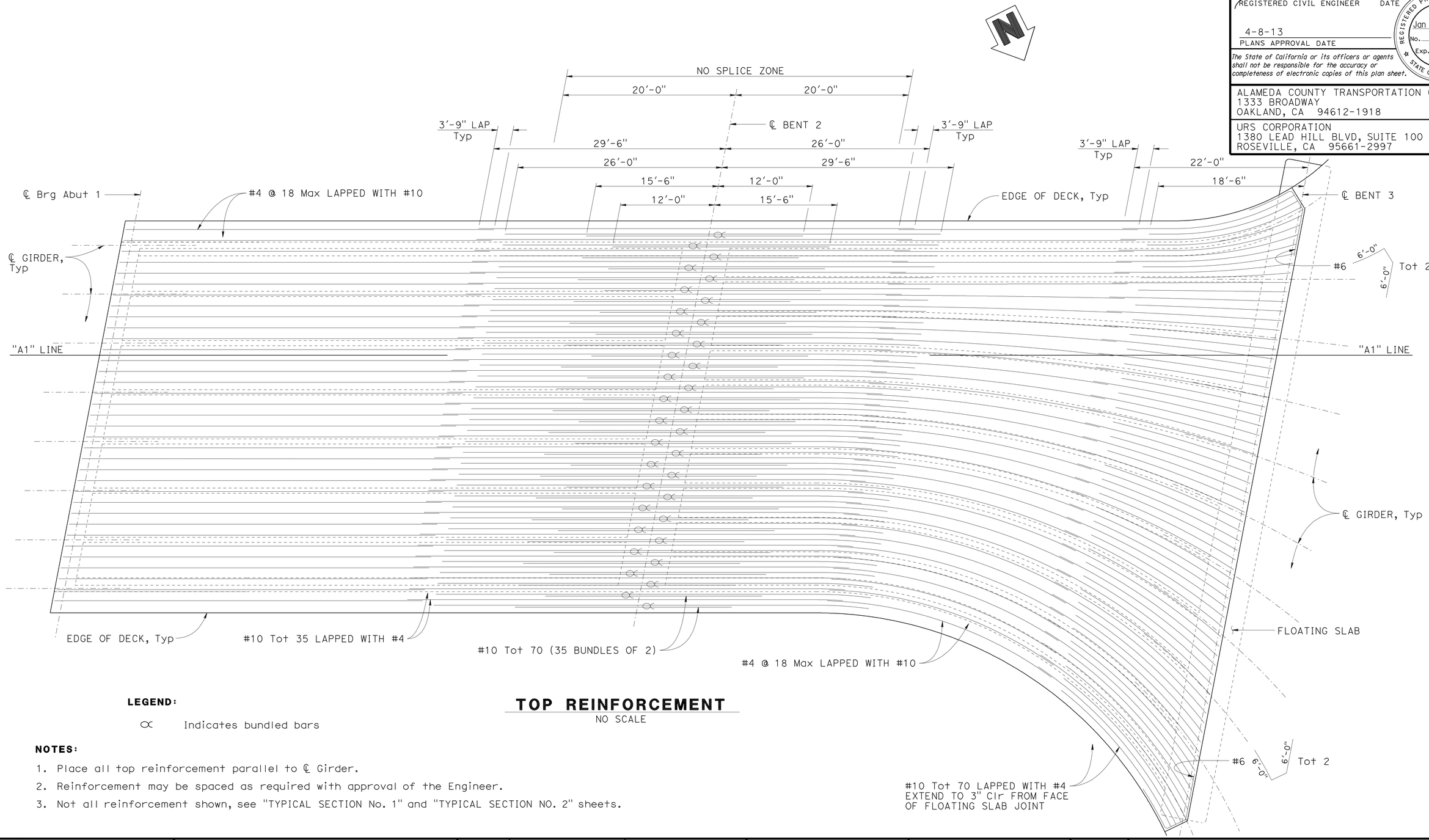

TOP REINFORCEMENT

NO SCALE

LEGEND:

∝ Indicates bundled bars

NOTES:

1. Place all top reinforcement parallel to ℄ Girder.
2. Reinforcement may be spaced as required with approval of the Engineer.
3. Not all reinforcement shown, see "TYPICAL SECTION No. 1" and "TYPICAL SECTION NO. 2" sheets.

Paul Cotter
DESIGN OVERSIGHT Paul Cotter
7-16-12
SIGN OFF DATE

	BY	CHECKED
DESIGN	S. Landis	A. Priley/F. Hakemi
DETAILS	L. Davis	A. Priley/F. Hakemi
QUANTITIES	S. Landis	F. Hakemi/B. Osorio

PREPARED FOR THE STATE OF CALIFORNIA DEPARTMENT OF TRANSPORTATION

Jan Hueser
PROJECT ENGINEER

BRIDGE NO. 33-0752S
POST MILES 28.69

29TH AVENUE OFF-RAMP
GIRDER REINFORCEMENT No. 1

DESIGN DETAIL SHEET (ENGLISH) (REV.7/16/10)

ORIGINAL SCALE IN INCHES FOR REDUCED PLANS 0 1 2 3

UNIT: 0724
PROJECT NUMBER & PHASE: 04000001601 CONTRACT NO.: 04-0A7101

DISREGARD PRINTS BEARING EARLIER REVISION DATES

REVISION DATES: 9-8-11 1-18-12 3-30-12 6-25-12

SHEET 21 OF 34

FILE => 33-0752S-o-grf01.dgn

USERNAME => s124936 DATE PLOTTED => 10-APR-2013 TIME PLOTTED => 06:39

DIST	COUNTY	ROUTE	POST MILES TOTAL PROJECT	SHEET No	TOTAL SHEETS
04	Ala	880	28.4/29.2	589	789

Jan M Hueser 6/25/12
REGISTERED CIVIL ENGINEER DATE

4-8-13
PLANS APPROVAL DATE

REGISTERED PROFESSIONAL ENGINEER
Jan M. Hueser
No. C050215
Exp. 6/30/13
CIVIL
STATE OF CALIFORNIA

The State of California or its officers or agents shall not be responsible for the accuracy or completeness of electronic copies of this plan sheet.

ALAMEDA COUNTY TRANSPORTATION COMMISSION
1333 BROADWAY
OAKLAND, CA 94612-1918

URS CORPORATION
1380 LEAD HILL BLVD, SUITE 100
ROSEVILLE, CA 95661-2997

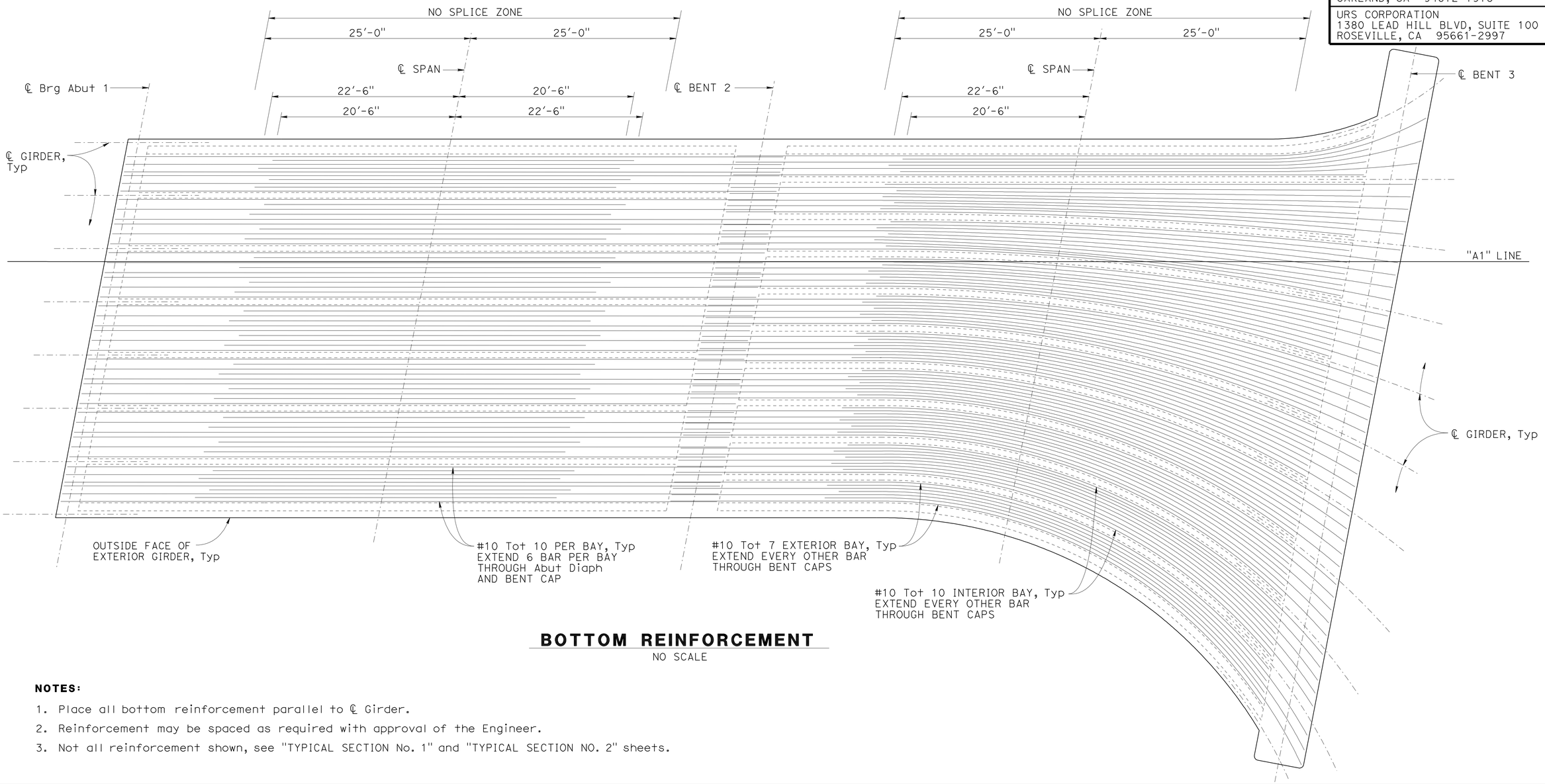

BOTTOM REINFORCEMENT

NO SCALE

NOTES:

1. Place all bottom reinforcement parallel to ℄ Girder.
2. Reinforcement may be spaced as required with approval of the Engineer.
3. Not all reinforcement shown, see "TYPICAL SECTION No. 1" and "TYPICAL SECTION NO. 2" sheets.

Paul Cotter
DESIGN OVERSIGHT Paul Cotter
7-16-12
SIGN OFF DATE

	BY	CHECKED
DESIGN	S. Landis	A. Priley/F. Hakemi
DETAILS	L. Davis	A. Priley/F. Hakemi
QUANTITIES	S. Landis	F. Hakemi/B. Osorio

PREPARED FOR THE STATE OF CALIFORNIA DEPARTMENT OF TRANSPORTATION

Jan Hueser
PROJECT ENGINEER

BRIDGE NO. 33-0752S
POST MILES 28.69

29TH AVENUE OFF-RAMP
GIRDER REINFORCEMENT No. 2

DESIGN DETAIL SHEET (ENGLISH) (REV.7/16/10)

ORIGINAL SCALE IN INCHES FOR REDUCED PLANS 0 1 2 3

UNIT: 0724
PROJECT NUMBER & PHASE: 04000001601 CONTRACT NO.: 04-0A7101

DISREGARD PRINTS BEARING EARLIER REVISION DATES

REVISION DATES				SHEET	OF
9-6-11	1-18-12	3-30-12	6-25-12	22	34

FILE => 33-0752S-o-grf02.dgn

USERNAME => s124496 DATE PLOTTED => 10-APR-2013 TIME PLOTTED => 06:39

DIST	COUNTY	ROUTE	POST MILES TOTAL PROJECT	SHEET No	TOTAL SHEETS
04	Ala	880	28.4/29.2	590	789

REGISTERED CIVIL ENGINEER — DATE 6/25/12

4-8-13
PLANS APPROVAL DATE

REGISTERED PROFESSIONAL ENGINEER — Jan M. Hueser No. C050215 Exp. 6/30/13 CIVIL — STATE OF CALIFORNIA

The State of California or its officers or agents shall not be responsible for the accuracy or completeness of electronic copies of this plan sheet.

ALAMEDA COUNTY TRANSPORTATION COMMISSION
1333 BROADWAY
OAKLAND, CA 94612-1918

URS CORPORATION
1380 LEAD HILL BLVD, SUITE 100
ROSEVILLE, CA 95661-2997

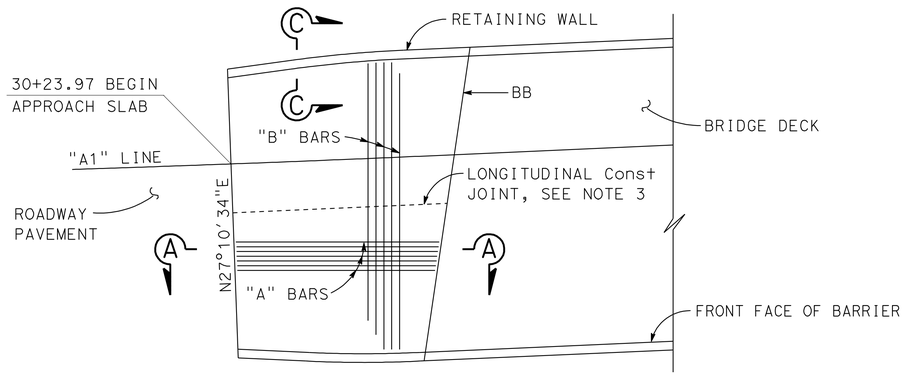

PLAN (1)
1" = 10'

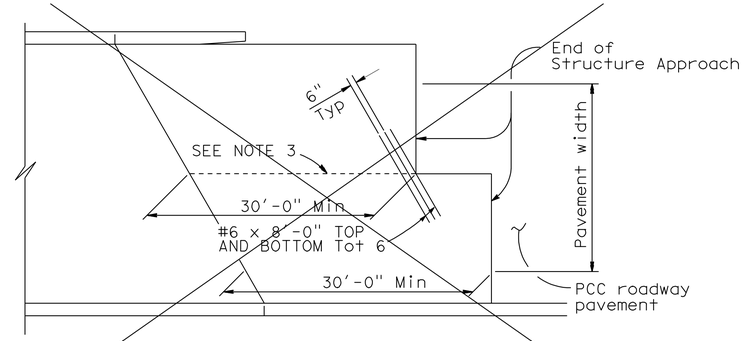

STRUCTURE APPROACH - END STAGGER DETAIL
No Scale

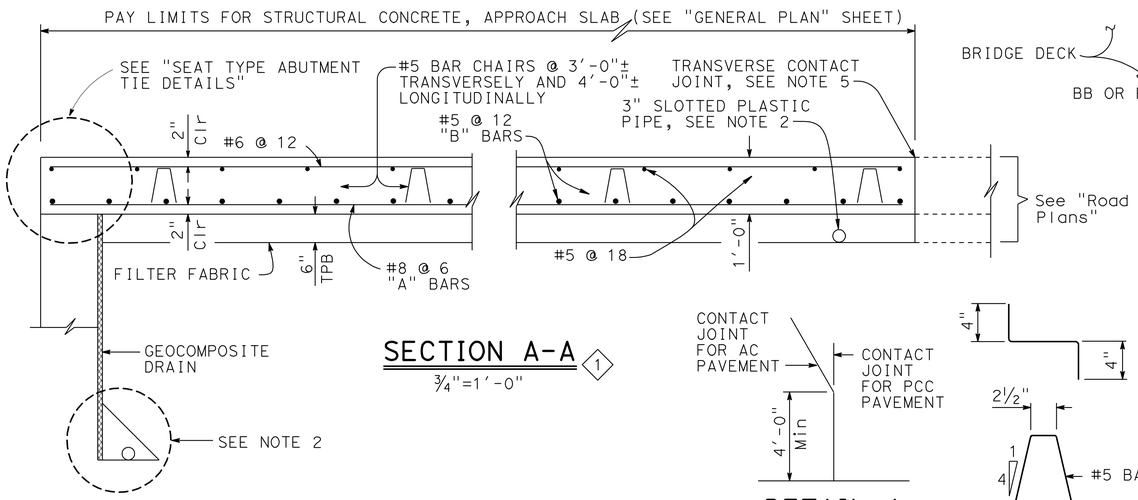

SECTION A-A (1)
¾"=1'-0"

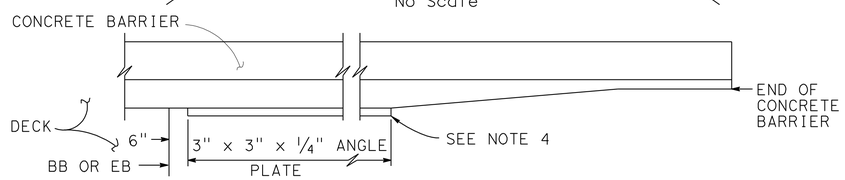

EDGE ANGLE DETAIL
½"=1'-0"

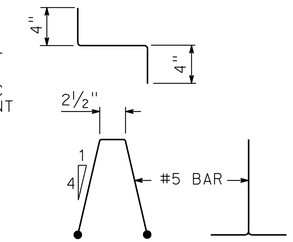

DETAIL A
No Scale

BAR CHAIR DETAIL
1½"=1'-0"

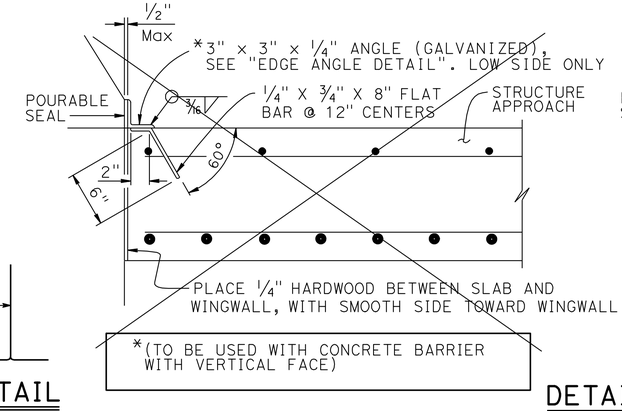

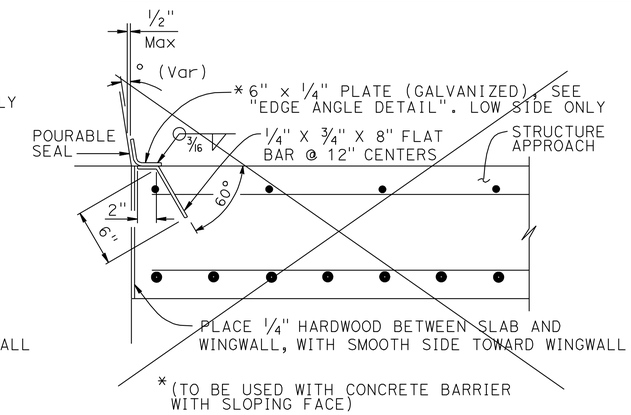

DETAIL B
1½" = 1'-0"

APPROACH SLAB TRANSVERSE CONTACT JOINT		
APPROACH SKEW	WITH AC ROADWAY PAVEMENT	WITH PCC ROADWAY PAVEMENT
< 20°	PARALLEL TO FACE OF PN	PARALLEL TO FACE OF PN
20° - 45°	PARALLEL TO FACE OF PN USE "DETAIL A"	STAGGER LINES 24' TO 36' APART
> 45°	PARALLEL TO FACE OF PN USE "DETAIL A"	STAGGER AT EACH LANE LINE

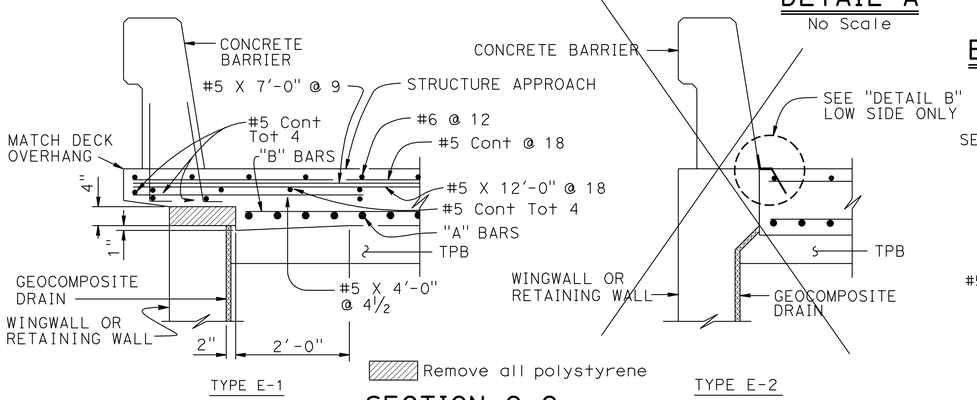

SECTION C-C
¾"=1'-0"
(Type E-1 to be used, unless otherwise shown on plans)

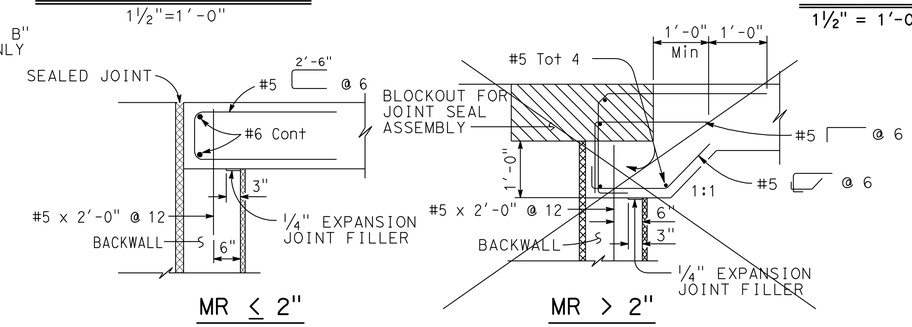

SEAT TYPE ABUTMENT TIE DETAILS (SEE NOTE 1)
¾"=1'-0"

NOTES:

1. For details not shown, see Structure Plans. For MR ≤ 2", adjust bar reinforcement to clear a sawcut for sealed joint, when required
2. For drainage details, see "STRUCTURE APPROACH DRAINAGE DETAILS" sheet
3. Longitudinal construction joints, when permitted by the Engineer, shall be located on lane lines
4. End angle or plate at beginning of barrier transition, end of wingwall or end of structure approach as applicable
5. For transverse contact joint with new PCC paving, refer to Standard Plan P10
6. At the Contractor's option, approach slab transverse reinforcement may be placed parallel to paving notch. Spacing of transverse reinforcement is measured along ℄ roadway

SPECIAL DETAILS

REVISED STANDARD DRAWING
FILE NO. xs3-120
APPROVAL DATE July 2011

(1) Revised detail

STATE OF CALIFORNIA
DEPARTMENT OF TRANSPORTATION

DIVISION OF ENGINEERING SERVICES

BRIDGE NO. 33-0752S
POST MILES 28.69

29TH AVENUE OFF-RAMP
STRUCTURE APPROACH TYPE N(30S)

DS OSD 2147A (ENGLISH STANDARD DRAWING "XS" BORDER REV. (02-02-11)

ORIGINAL SCALE IN INCHES FOR REDUCED PLANS 0 1 2 3

UNIT: 0724
PROJECT NUMBER & PHASE: 04000001601
CONTRACT NO.: 04-0A7101

DISREGARD PRINTS BEARING EARLIER REVISION DATES

REVISION DATES: 9-6-11 1-10-12 3-30-12 6-25-12 — SHEET 23 OF 34

FILE => 33-0752S-s-sa.dgn

USERNAME => s124436 DATE PLOTTED => 10-APR-2013 TIME PLOTTED => 06:39

DIST	COUNTY	ROUTE	POST MILES TOTAL PROJECT	SHEET No	TOTAL SHEETS
04	Ala	880	28.4/29.2	591	789

REGISTERED CIVIL ENGINEER 6/25/12 DATE

4-8-13
PLANS APPROVAL DATE

REGISTERED PROFESSIONAL ENGINEER Jan M. Hueser No. C050215 Exp. 6/30/13 CIVIL STATE OF CALIFORNIA

The State of California or its officers or agents shall not be responsible for the accuracy or completeness of electronic copies of this plan sheet.

ALAMEDA COUNTY TRANSPORTATION COMMISSION
1333 BROADWAY
OAKLAND, CA 94612-1918

URS CORPORATION
1380 LEAD HILL BLVD, SUITE 100
ROSEVILLE, CA 95661-2997

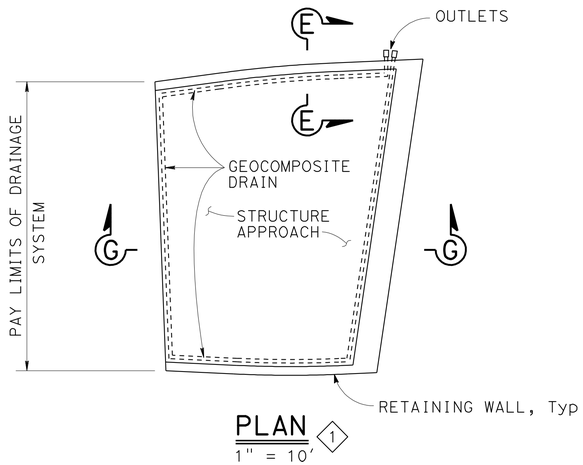

PLAN (1)
1" = 10'

NOTE: FOR PIPE LAYOUT AT STAGGERED END, SEE "DETAIL B"

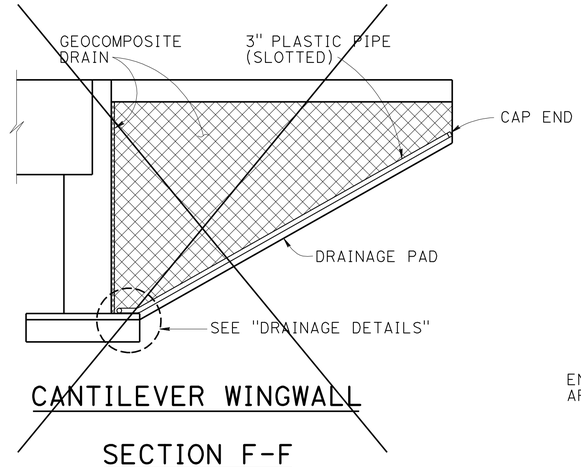

CANTILEVER WINGWALL

SECTION F-F
1/4" = 1'-0"

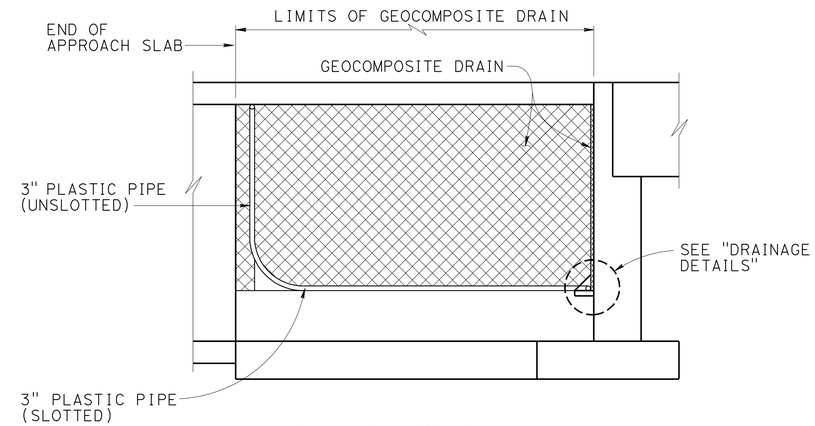

RETAINING WALL DRAINAGE DETAILS

SECTION G-G (1)
1/4" = 1'-0"

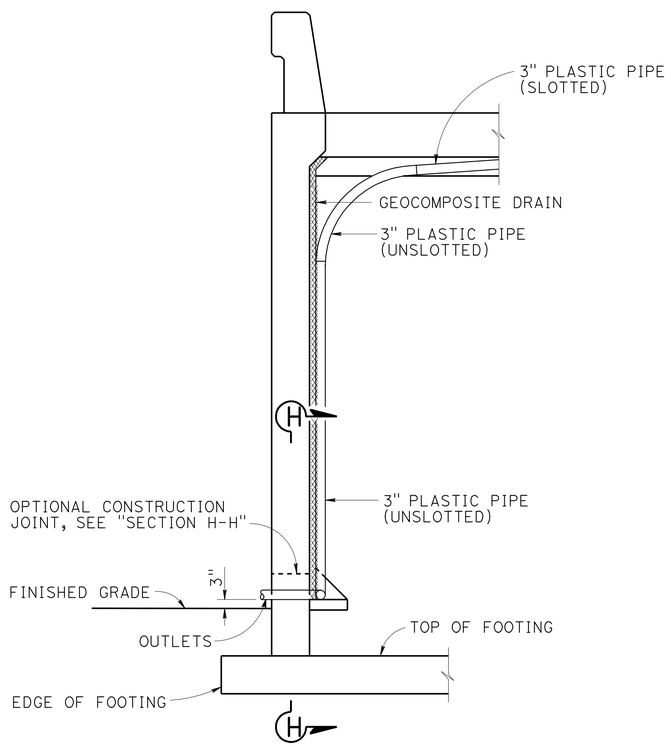

SECTION E-E (1)
1/2" = 1'-0"

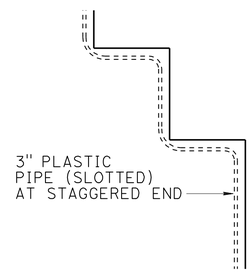

DETAIL B
No Scale

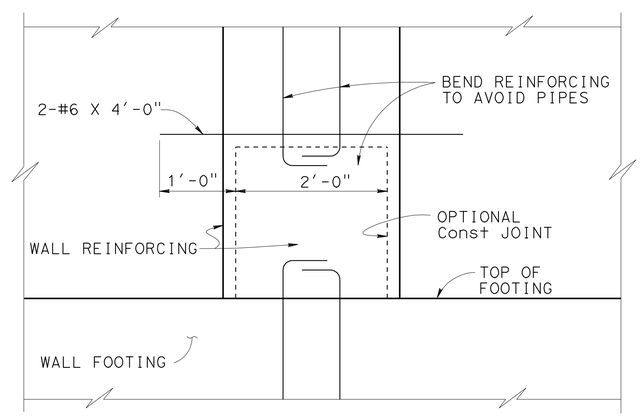

SECTION H-H
1" = 1'-0"

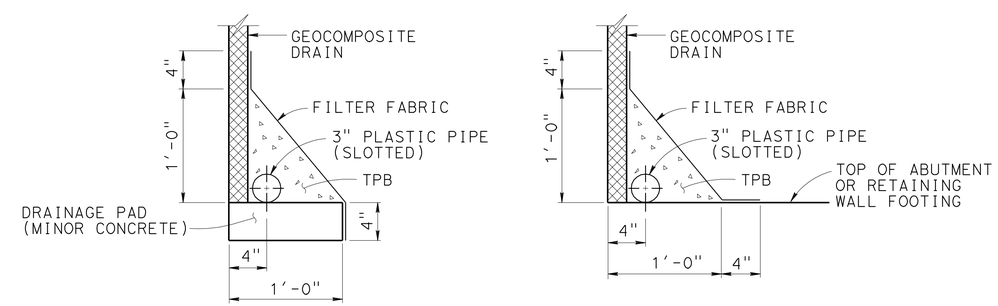

WITHOUT FOOTING

WITH FOOTING

DRAINAGE DETAILS
1 1/2" = 1'-0"

NOTE: BENDS AND JUNCTIONS IN 3" PLASTIC PIPE ARE 30" RADIUS Min

SPECIAL DETAILS

REVISED STANDARD DRAWING

FILE NO. xs3-110

APPROVAL DATE July 2011

(1) Revised detail

STATE OF CALIFORNIA
DEPARTMENT OF TRANSPORTATION

DIVISION OF ENGINEERING SERVICES

BRIDGE NO. 33-0752S
POST MILES 28.69

29TH AVENUE OFF-RAMP
STRUCTURE APPROACH DRAINAGE DETAILS

DS OSD 2147A (ENGLISH STANDARD DRAWING "XS" BORDER REV. (02-02-11)

ORIGINAL SCALE IN INCHES FOR REDUCED PLANS 0 1 2 3

UNIT: 0724
PROJECT NUMBER & PHASE: 04000001601 CONTRACT NO.: 04-0A7101

DISREGARD PRINTS BEARING EARLIER REVISION DATES

REVISION DATES				SHEET	OF
9-6-11	1-18-12	3-30-12	6-25-12	24	34

FILE => 33-0752S-s-sadd.dgn

USERNAME => s124496 DATE PLOTTED => 10-APR-2013 TIME PLOTTED => 06:39

DIST	COUNTY	ROUTE	POST MILES TOTAL PROJECT	SHEET No	TOTAL SHEETS
04	Ala	880	28.4/29.2	592	789

REGISTERED CIVIL ENGINEER — DATE 6/25/12

4-8-13
PLANS APPROVAL DATE

REGISTERED PROFESSIONAL ENGINEER — Jan M. Hueser — No. C050215 — Exp. 6/30/13 — CIVIL — STATE OF CALIFORNIA

The State of California or its officers or agents shall not be responsible for the accuracy or completeness of electronic copies of this plan sheet.

ALAMEDA COUNTY TRANSPORTATION COMMISSION
1333 BROADWAY
OAKLAND, CA 94612-1918

URS CORPORATION
1380 LEAD HILL BLVD, SUITE 100
ROSEVILLE, CA 95661-2997

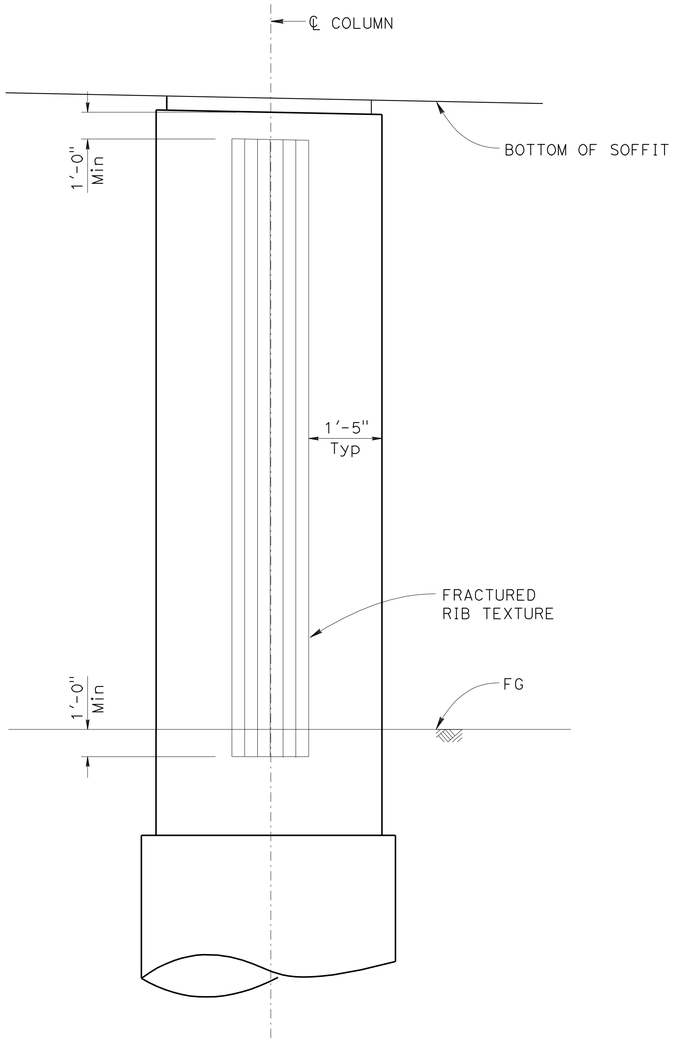

COLUMN DETAIL
NO SCALE

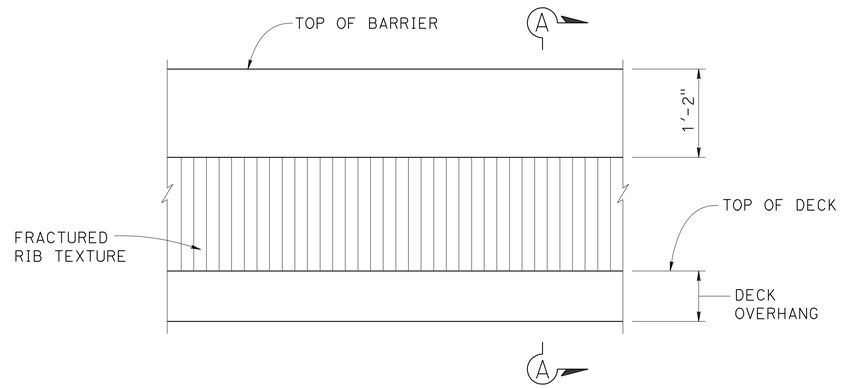

TYPICAL BARRIER
NO SCALE

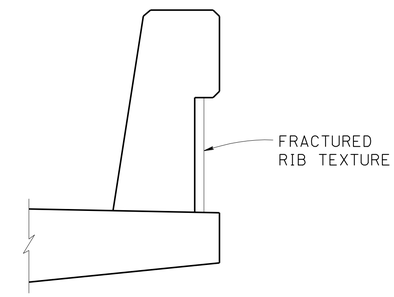

SECTION A-A
NO SCALE

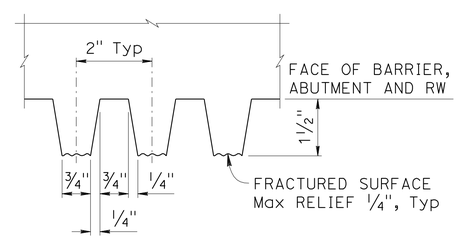

AT BARRIER, ABUTMENT AND RW

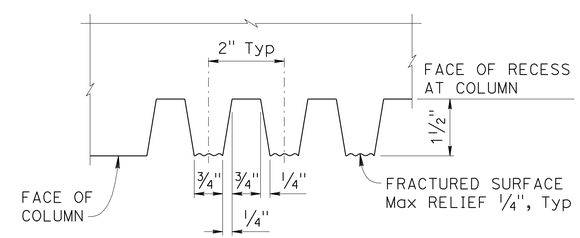

AT COLUMN

FRACTURED RIB TEXTURE DETAIL
NO SCALE

NOTES:

1. Vertical joints in form liners will be at center of trough between ribs. Min spacing of form liner vertical joints will be 4'-0".
2. No horizontal joints will be permitted in form liners.

DESIGN OVERSIGHT — Paul Cotter
7-16-12
SIGN OFF DATE

	BY	CHECKED
DESIGN	S. Landis	A. Priley/F. Hakemi
DETAILS	L. Davis	A. Priley/F. Hakemi
QUANTITIES	S. Landis	F. Hakemi/B. Osorio

PREPARED FOR THE STATE OF CALIFORNIA DEPARTMENT OF TRANSPORTATION

Jan Hueser
PROJECT ENGINEER

BRIDGE NO. 33-0752S
POST MILES 28.69

29TH AVENUE OFF-RAMP
ARCHITECTURAL DETAILS

DESIGN DETAIL SHEET (ENGLISH) (REV.7/16/10)

ORIGINAL SCALE IN INCHES FOR REDUCED PLANS 0 1 2 3

UNIT: 0724
PROJECT NUMBER & PHASE: 04000001601 CONTRACT NO.: 04-0A7101

DISREGARD PRINTS BEARING EARLIER REVISION DATES

REVISION DATES: 9-6-11 1-18-12 3-30-12 6-25-12

SHEET 25 OF 34

FILE => 33-0752S-u-adt.dgn

USERNAME => s124496 DATE PLOTTED => 10-APR-2013 TIME PLOTTED => 06:39

REFERENCE: CALTRANS SOIL & ROCK LOGGING, CLASSIFICATION, AND PRESENTATION MANUAL (2010)

DIST	COUNTY	ROUTE	POST MILES TOTAL PROJECT	SHEET No	TOTAL SHEETS
04	Ala	880	28.4/29.2	593	789

REGISTERED CIVIL ENGINEER — DATE 6/25/12

4-8-13
PLANS APPROVAL DATE

REGISTERED PROFESSIONAL ENGINEER — Philip Meymand — No. 2596 — Exp. 6/30/13 — GEOTECHNICAL — STATE OF CALIFORNIA

The State of California or its officers or agents shall not be responsible for the accuracy or completeness of electronic copies of this plan sheet.

ALAMEDA COUNTY TRANSPORTATION
1333 BROADWAY
OAKLAND, CA 94612

URS CORPORATION
1333 BROADWAY, SUITE 800
OAKLAND, CA 94612

CEMENTATION

DESCRIPTION	CRITERIA
WEAK	CRUMBLES OR BREAKS WITH HANDLING OR LITTLE FINGER PRESSURE.
MODERATE	CRUMBLES OR BREAKS WITH CONSIDERABLE FINGER PRESSURE.
STRONG	WILL NOT CRUMBLE OR BREAK WITH FINGER PRESSURE.

BOREHOLE IDENTIFICATION

SYMBOL	HOLE TYPE	DESCRIPTION
Size	A	AUGER BORING (HOLLOW OR SOLID STEM BUCKET)
Size	R RW RC P	ROTARY DRILLED BORING (CONVENTIONAL) ROTARY DRILLED WITH SELF-CASING WIRE-LINE ROTARY CORE WITH CONTINUOUSLY-SAMPLED, SELF-CASING WIRE-LINE ROTARY PERCUSSION BORING (AIR)
Size	R	ROTARY DRILLED DIAMOND CORE
Size	HD HA	HAND DRIVEN (1-INCH SOIL TUBE) HAND AUGER
●	D	DYNAMIC CONE PENETRATION BORING
▲	CPT	CONE PENETRATION TEST (ASTM D 5778)
⬚	O	OTHER (NOTE ON LOTB)

Note: Size in inches.

CONSISTENCY OF COHESIVE SOILS

DESCRIPTION	SHEAR STRENGTH (tsf)	POCKET PENETROMETER MEASUREMENT, PP, (tsf)	TORVANE MEASUREMENT, TV, (tsf)	VANE SHEAR MEASUREMENT, VS, (tsf)
VERY SOFT	LESS THAN 0.12	LESS THAN 0.25	LESS THAN 0.12	LESS THAN 0.12
SOFT	0.12 - 0.25	0.25 - 0.5	0.12 - 0.25	0.12 - 0.25
MEDIUM STIFF	0.25 - 0.5	0.5 - 1	0.25 - 0.5	0.25 - 0.5
STIFF	0.5 - 1	1 - 2	0.5 - 1	0.5 - 1
VERY STIFF	1 - 2	2 - 4	1 - 2	1 - 2
HARD	GREATER THAN 2	GREATER THAN 4	GREATER THAN 2	GREATER THAN 2

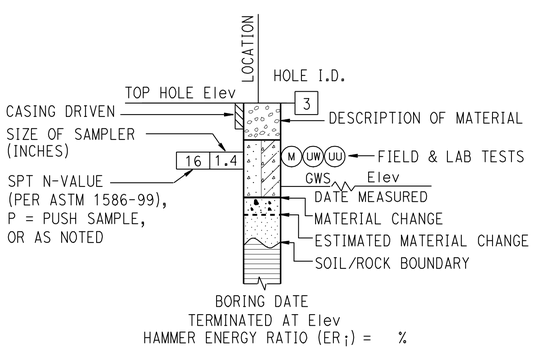

ROTARY BORING

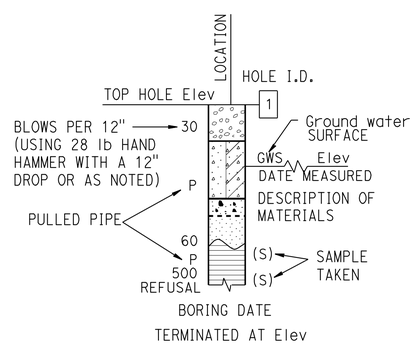

HAND BORING

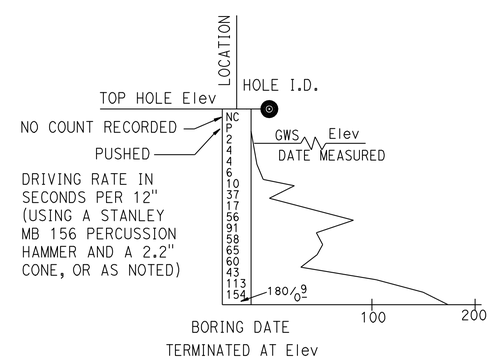

DYNAMIC CONE PENETRATION BORING

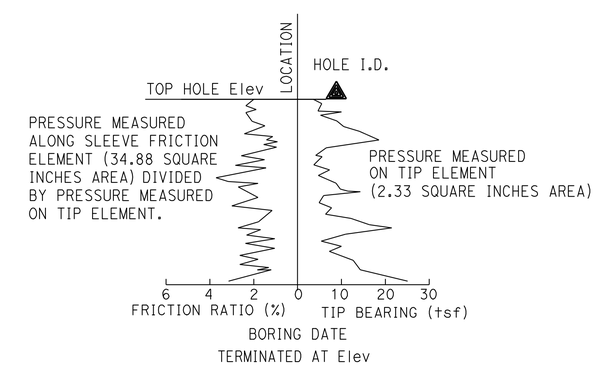

CONE PENETRATION TEST (CPT) BORING

Paul Cotter
DESIGN OVERSIGHT Paul Cotter
7-16-12
SIGN OFF DATE

DRAWN BY N. HUTTON
CHECKED BY C. TSAI

S. JANOWSKI
FIELD INVESTIGATION BY:
DATE: 04-25-11 TO 05-04-11

PREPARED FOR THE STATE OF CALIFORNIA DEPARTMENT OF TRANSPORTATION

Jan Hueser
PROJECT ENGINEER

BRIDGE NO. 33-0752S
POST MILES 28.69

29TH AVENUE OFF-RAMP
LOG OF TEST BORINGS 1 OF 9

GS CIVIL LOG OF TEST BORINGS SHEET (ENGLISH) (REV. 7/16/10)

ORIGINAL SCALE IN INCHES FOR REDUCED PLANS 0 1 2 3

UNIT: 0724
PROJECT NUMBER & PHASE: 04000001601
CONTRACT NO.: 04-0A7101

DISREGARD PRINTS BEARING EARLIER REVISION DATES
REVISION DATES 9-6-11 1-10-12 3-30-12 6-25-12
SHEET 26 OF 34

FILE => 33-0752S-z-ltb01.dgn

USERNAME => s124496 DATE PLOTTED => 10-APR-2013 TIME PLOTTED => 06:39

REFERENCE: CALTRANS SOIL & ROCK LOGGING, CLASSIFICATION, AND PRESENTATION MANUAL (2010)

DIST	COUNTY	ROUTE	POST MILES TOTAL PROJECT	SHEET No	TOTAL SHEETS
04	Ala	880	28.4/29.2	594	789

REGISTERED CIVIL ENGINEER — DATE 6/25/12

4-8-13
PLANS APPROVAL DATE

REGISTERED PROFESSIONAL ENGINEER — Philip Meymand — No. 2596 — Exp. 6/30/13 — GEOTECHNICAL — STATE OF CALIFORNIA

The State of California or its officers or agents shall not be responsible for the accuracy or completeness of electronic copies of this plan sheet.

ALAMEDA COUNTY TRANSPORTATION
1333 BROADWAY
OAKLAND, CA 94612

URS CORPORATION
1333 BROADWAY, SUITE 800
OAKLAND, CA 94612

GROUP SYMBOLS AND NAMES

GRAPHIC/SYMBOL	GROUP NAMES	GRAPHIC/SYMBOL	GROUP NAMES
GW	WELL-GRADED GRAVEL WELL-GRADED GRAVEL WITH SAND	CL	LEAN CLAY LEAN CLAY WITH SAND LEAN CLAY WITH GRAVEL SANDY LEAN CLAY SANDY LEAN CLAY WITH GRAVEL GRAVELLY LEAN CLAY GRAVELLY LEAN CLAY WITH SAND
GP	POORLY-GRADED GRAVEL POORLY-GRADED GRAVEL WITH SAND		
GW-GM	WELL-GRADED GRAVEL WITH SILT WELL-GRADED GRAVEL WITH SILT AND SAND	CL-ML	SILTY CLAY SILTY CLAY WITH SAND SILTY CLAY WITH GRAVEL SANDY SILTY CLAY SANDY SILTY CLAY WITH GRAVEL GRAVELLY SILTY CLAY GRAVELLY SILTY CLAY WITH SAND
GW-GC	WELL-GRADED GRAVEL WITH CLAY (OR SILTY CLAY) WELL-GRADED GRAVEL WITH CLAY AND SAND (OR SILTY CLAY AND SAND)		
GP-GM	POORLY-GRADED GRAVEL WITH SILT POORLY-GRADED GRAVEL WITH SILT AND SAND	ML	SILT SILT WITH SAND SILT WITH GRAVEL SANDY SILT SANDY SILT WITH GRAVEL GRAVELLY SILT GRAVELLY SILT WITH SAND
GP-GC	POORLY-GRADED GRAVEL WITH CLAY (OR SILTY CLAY) POORLY-GRADED GRAVEL WITH CLAY AND SAND (OR SILTY CLAY AND SAND)		
GM	SILTY GRAVEL SILTY GRAVEL WITH SAND	OL	ORGANIC LEAN CLAY ORGANIC LEAN CLAY WITH SAND ORGANIC LEAN CLAY WITH GRAVEL SANDY ORGANIC LEAN CLAY SANDY ORGANIC LEAN CLAY WITH GRAVEL GRAVELLY ORGANIC LEAN CLAY GRAVELLY ORGANIC LEAN CLAY WITH SAND
GC	CLAYEY GRAVEL CLAYEY GRAVEL WITH SAND		
GC-GM	SILTY, CLAYEY GRAVEL SILTY, CLAYEY GRAVEL WITH SAND	OL	ORGANIC SILT ORGANIC SILT WITH SAND ORGANIC SILT WITH GRAVEL SANDY ORGANIC SILT SANDY ORGANIC SILT WITH GRAVEL GRAVELLY ORGANIC SILT GRAVELLY ORGANIC SILT WITH SAND
SW	WELL-GRADED SAND WELL-GRADED SAND WITH GRAVEL		
SP	POORLY-GRADED SAND POORLY-GRADED SAND WITH GRAVEL	CH	FAT CLAY FAT CLAY WITH SAND FAT CLAY WITH GRAVEL SANDY FAT CLAY SANDY FAT CLAY WITH GRAVEL GRAVELLY FAT CLAY GRAVELLY FAT CLAY WITH SAND
SW-SM	WELL-GRADED SAND WITH SILT WELL-GRADED SAND WITH SILT AND GRAVEL		
SW-SC	WELL-GRADED SAND WITH CLAY (OR SILTY CLAY) WELL-GRADED SAND WITH CLAY AND GRAVEL (OR SILTY CLAY AND GRAVEL)	MH	ELASTIC SILT ELASTIC SILT WITH SAND ELASTIC SILT WITH GRAVEL SANDY ELASTIC SILT SANDY ELASTIC SILT WITH GRAVEL GRAVELLY ELASTIC SILT GRAVELLY ELASTIC SILT WITH SAND
SP-SM	POORLY-GRADED SAND WITH SILT POORLY-GRADED SAND WITH SILT AND GRAVEL		
SP-SC	POORLY-GRADED SAND WITH CLAY (OR SILTY CLAY) POORLY-GRADED SAND WITH CLAY AND GRAVEL (OR SILTY CLAY AND GRAVEL)	OH	ORGANIC FAT CLAY ORGANIC FAT CLAY WITH SAND ORGANIC FAT CLAY WITH GRAVEL SANDY ORGANIC FAT CLAY SANDY ORGANIC FAT CLAY WITH GRAVEL GRAVELLY ORGANIC FAT CLAY GRAVELLY ORGANIC FAT CLAY WITH SAND
SM	SILTY SAND SILTY SAND WITH GRAVEL		
SC	CLAYEY SAND CLAYEY SAND WITH GRAVEL	OH	ORGANIC ELASTIC SILT ORGANIC ELASTIC SILT WITH SAND ORGANIC ELASTIC SILT WITH GRAVEL SANDY ORGANIC ELASTIC SILT SANDY ORGANIC ELASTIC SILT WITH GRAVEL GRAVELLY ORGANIC ELASTIC SILT GRAVELLY ORGANIC ELASTIC SILT WITH SAND
SC-SM	SILTY, CLAYEY SAND SILTY, CLAYEY SAND WITH GRAVEL		
PT	PEAT	OL/OH	ORGANIC SOIL ORGANIC SOIL WITH SAND ORGANIC SOIL WITH GRAVEL SANDY ORGANIC SOIL SANDY ORGANIC SOIL WITH GRAVEL GRAVELLY ORGANIC SOIL GRAVELLY ORGANIC SOIL WITH SAND
	COBBLES COBBLES AND BOULDERS BOULDERS		

FIELD AND LABORATORY TESTING

- (C) CONSOLIDATION (ASTM D 2435)
- (CL) COLLAPSE POTENTIAL (ASTM D 5333)
- (CP) COMPACTION CURVE (CTM 216)
- (CR) CORROSIVITY TESTING (CTM 643, CTM 422, CTM 417)
- (CU) CONSOLIDATED UNDRAINED TRIAXIAL (ASTM D 4767)
- (DS) DIRECT SHEAR (ASTM D 3080)
- (EI) EXPANSION INDEX (ASTM D 4829)
- (M) MOISTURE CONTENT (ASTM D 2216)
- (OC) ORGANIC CONTENT-% (ASTM D 2974)
- (P) PERMEABILITY (CTM 220)
- (PA) PARTICLE SIZE ANALYSIS (ASTM D 422)
- (PI) PLASTICITY INDEX (AASHTO T 90) LIQUID LIMIT (AASHTO T 89)
- (PL) POINT LOAD INDEX (ASTM D 5731)
- (PM) PRESSURE METER
- (R) R-VALUE (CTM 301)
- (SE) SAND EQUIVALENT (CTM 217)
- (SG) SPECIFIC GRAVITY (AASHTO T 100)
- (SL) SHRINKAGE LIMIT (ASTM D 427)
- (SW) SWELL POTENTIAL (ASTM D 4546)
- (UC) UNCONFINED COMPRESSION-SOIL (ASTM D 2166) UNCONFINED COMPRESSION-ROCK (ASTM D 2938)
- (UU) UNCONSOLIDATED UNDRAINED TRIAXIAL (ASTM D 2850)
- (UW) UNIT WEIGHT (ASTM D 4767)

APPARENT DENSITY OF COHESIONLESS SOILS

DESCRIPTION	SPT N_{60} (BLOWS / 12 INCHES)
VERY LOOSE	0 - 5
LOOSE	5 - 10
MEDIUM DENSE	10 - 30
DENSE	30 - 50
VERY DENSE	GREATER THAN 50

MOISTURE

DESCRIPTION	CRITERIA
DRY	NO DISCERNABLE MOISTURE
MOIST	MOISTURE PRESENT, BUT NO FREE WATER
WET	VISIBLE FREE WATER

PERCENT OR PROPORTION OF SOILS

DESCRIPTION	CRITERIA
TRACE	PARTICLES ARE PRESENT BUT ESTIMATED TO BE LESS THAN 5%
FEW	5% - 10%
LITTLE	15% - 25%
SOME	30% - 45%
MOSTLY	50% - 100%

PARTICLE SIZE

DESCRIPTION		SIZE
BOULDER		GREATER THAN 12"
COBBLE		3" - 12"
GRAVEL	COARSE	3/4" - 3"
	FINE	1/5" - 3/4"
SAND	COARSE	1/16" - 1/5"
	MEDIUM	1/64" - 1/16"
	FINE	1/300" - 1/64"
SILT AND CLAY		LESS THAN 1/300"

Paul Cotter
DESIGN OVERSIGHT Paul Cotter
7-16-12
SIGN OFF DATE

DRAWN BY N. HUTTON
CHECKED BY C. TSAI

S. JANOWSKI
FIELD INVESTIGATION BY:
DATE: 04-25-11 TO 05-04-11

PREPARED FOR THE STATE OF CALIFORNIA DEPARTMENT OF TRANSPORTATION

Jan Hueser
PROJECT ENGINEER

BRIDGE NO. 33-0752S
POST MILES 28.69

29TH AVENUE OFF-RAMP
LOG OF TEST BORINGS 2 OF 9

GS CIVIL LOG OF TEST BORINGS SHEET (ENGLISH) (REV. 7/16/10)

ORIGINAL SCALE IN INCHES FOR REDUCED PLANS 0 1 2 3

UNIT: 0724
PROJECT NUMBER & PHASE: 04000001601
CONTRACT NO.: 04-0A7101

DISREGARD PRINTS BEARING EARLIER REVISION DATES
REVISION DATES: 9-6-11 1-30-12 3-30-12 6-25-12

SHEET 27 OF 34

FILE => 33-0752S-z-ltb02.dgn

USERNAME => s124496 DATE PLOTTED => 10-APR-2013 TIME PLOTTED => 06:39

DIST	COUNTY	ROUTE	POST MILES TOTAL PROJECT	SHEET No	TOTAL SHEETS
04	Ala	880	28.4/29.2	595	789

REGISTERED CIVIL ENGINEER — 6/25/12 DATE

4-8-13
PLANS APPROVAL DATE

REGISTERED PROFESSIONAL ENGINEER — Philip Meymand No. 2596 Exp. 6/30/13 GEOTECHNICAL — STATE OF CALIFORNIA

The State of California or its officers or agents shall not be responsible for the accuracy or completeness of electronic copies of this plan sheet.

ALAMEDA COUNTY TRANSPORTATION
1333 BROADWAY
OAKLAND, CA 94612

URS CORPORATION
1333 BROADWAY, SUITE 800
OAKLAND, CA 94612

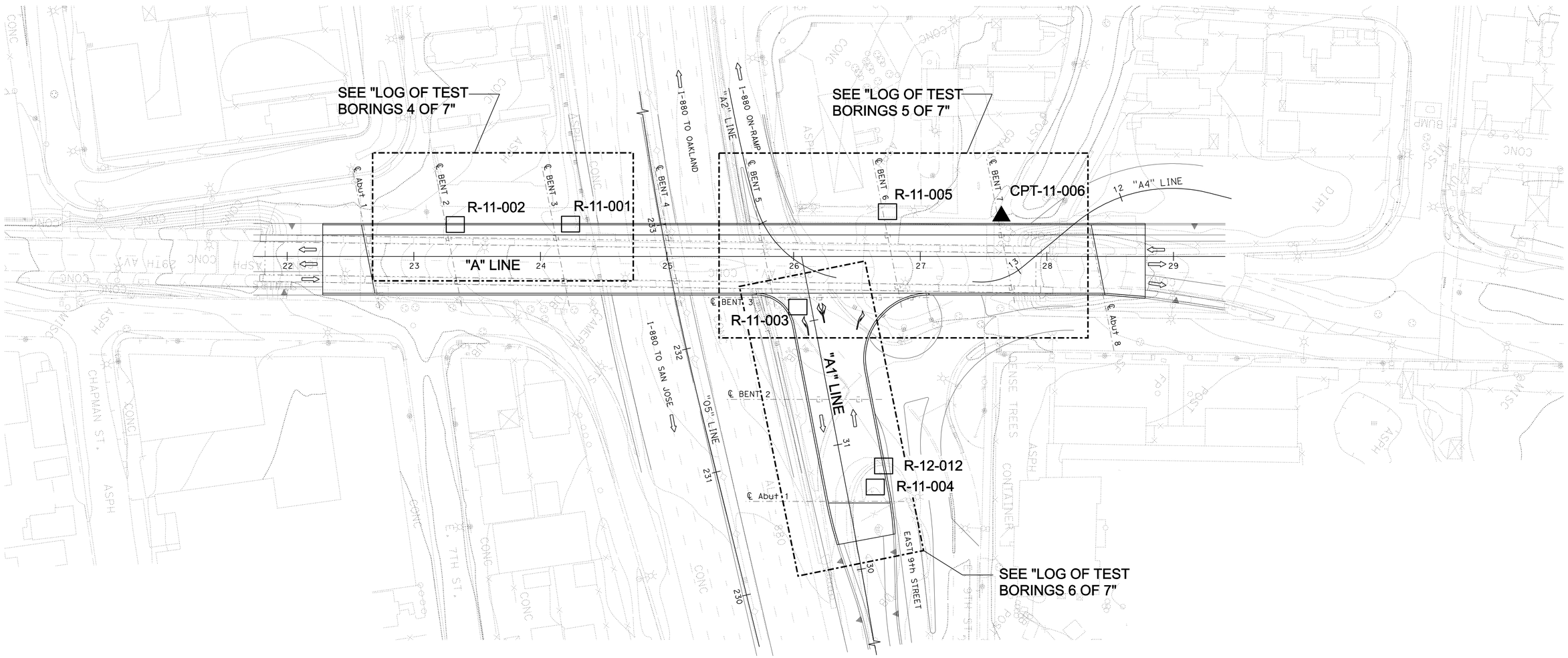

PLAN
1"=40'-0"

Paul Cotter DESIGN OVERSIGHT Paul Cotter 7-16-12 SIGN OFF DATE	DRAWN BY	N. HUTTON	S. JANOWSKI FIELD INVESTIGATION BY: DATE: 04-25-11 TO 05-04-11	PREPARED FOR THE STATE OF CALIFORNIA DEPARTMENT OF TRANSPORTATION	Jan Hueser PROJECT ENGINEER	BRIDGE NO. 33-0752S POST MILES 28.69	29TH AVENUE OFF-RAMP LOG OF TEST BORINGS 3 OF 9
	CHECKED BY	C. TSAI					

GS CIVIL LOG OF TEST BORINGS SHEET (ENGLISH) (REV. 7/16/10)

ORIGINAL SCALE IN INCHES FOR REDUCED PLANS 0 1 2 3

UNIT: 0724
PROJECT NUMBER & PHASE: 04000001601 CONTRACT NO.: 04-0A7101

DISREGARD PRINTS BEARING EARLIER REVISION DATES → REVISION DATES 9-6-11 1-18-12 3-30-12 6-25-12 SHEET 28 OF 34

FILE => 33-0752S-z-l-tb03.dgn

USERNAME => s124496 DATE PLOTTED => 10-APR-2013 TIME PLOTTED => 06:40

DIST	COUNTY	ROUTE	POST MILES TOTAL PROJECT	SHEET No	TOTAL SHEETS
04	Ala	880	28.4/29.2	596	789

REGISTERED CIVIL ENGINEER 6/25/12 DATE

4-8-13
PLANS APPROVAL DATE

REGISTERED PROFESSIONAL ENGINEER Philip Meymand No. 2596 Exp. 6/30/13 GEOTECHNICAL STATE OF CALIFORNIA

The State of California or its officers or agents shall not be responsible for the accuracy or completeness of electronic copies of this plan sheet.

ALAMEDA COUNTY TRANSPORTATION
1333 BROADWAY
OAKLAND, CA 94612

URS CORPORATION
1333 BROADWAY, SUITE 800
OAKLAND, CA 94612

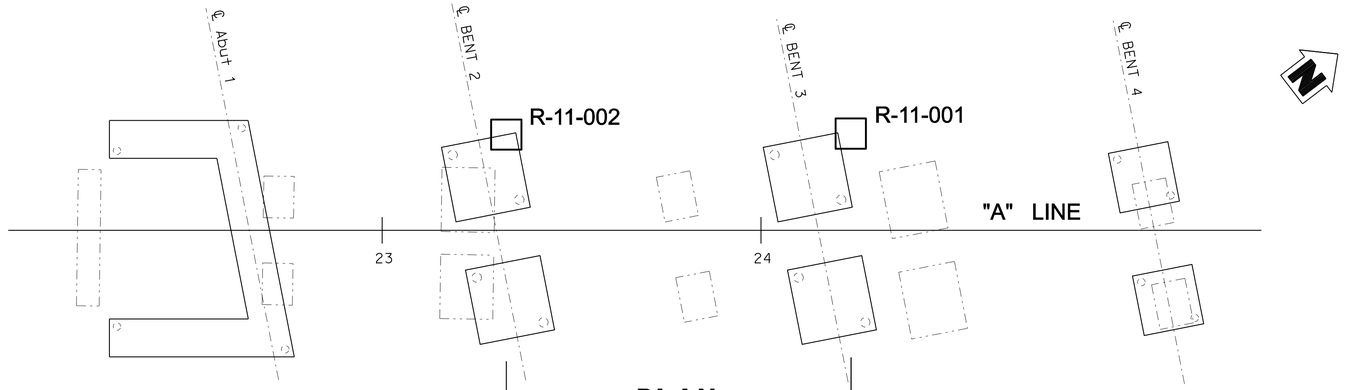

PLAN
1"=20'-0"

NOTES:

1. Ground water table was not measured in the borings due to rotary wash drilling.
2. Hammer energy ratio calibration not performed.
3. The borings were hand augered in the top 5 ft to check for the existence of underground utilities.

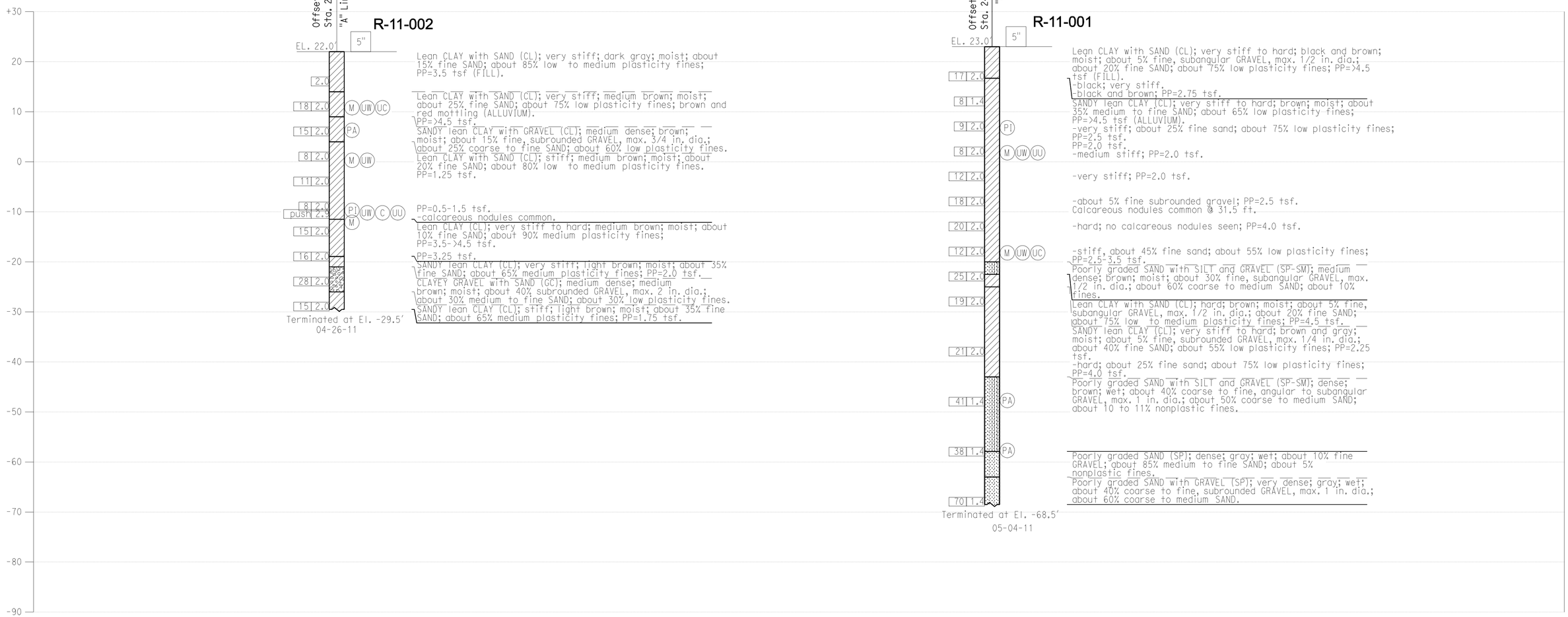

Paul Cotter DESIGN OVERSIGHT Paul Cotter 7-16-12 SIGN OFF DATE	DRAWN BY N. HUTTON	S. JANOWSKI FIELD INVESTIGATION BY:	PREPARED FOR THE STATE OF CALIFORNIA DEPARTMENT OF TRANSPORTATION	Jan Hueser PROJECT ENGINEER	BRIDGE NO. 33-0752S POST MILES 28.69
	CHECKED BY C. TSAI	DATE: 04-25-11 TO 05-04-11			

29TH AVENUE OFF-RAMP
LOG OF TEST BORINGS 4 OF 9

GS CIVIL LOG OF TEST BORINGS SHEET (ENGLISH) (REV. 7/16/10)

ORIGINAL SCALE IN INCHES FOR REDUCED PLANS 0 1 2 3

UNIT: 0724
PROJECT NUMBER & PHASE: 04000001601 CONTRACT NO.: 04-0A7101

DISREGARD PRINTS BEARING EARLIER REVISION DATES → REVISION DATES 9-6-11 1-18-12 3-30-12 6-25-12

SHEET 29 OF 34

FILE => 33-0752S-z-1tb04.dgn

USERNAME => s124496 DATE PLOTTED => 10-APR-2013 TIME PLOTTED => 06:40

DIST	COUNTY	ROUTE	POST MILES TOTAL PROJECT	SHEET No	TOTAL SHEETS
04	Ala	880	28.4/29.2	597	789

REGISTERED CIVIL ENGINEER — DATE 6/25/12

4-8-13
PLANS APPROVAL DATE

REGISTERED PROFESSIONAL ENGINEER — Philip Meymand — No. 2596 — Exp. 6/30/13 — GEOTECHNICAL — STATE OF CALIFORNIA

The State of California or its officers or agents shall not be responsible for the accuracy or completeness of electronic copies of this plan sheet.

ALAMEDA COUNTY TRANSPORTATION
1333 BROADWAY
OAKLAND, CA 94612

URS CORPORATION
1333 BROADWAY, SUITE 800
OAKLAND, CA 94612

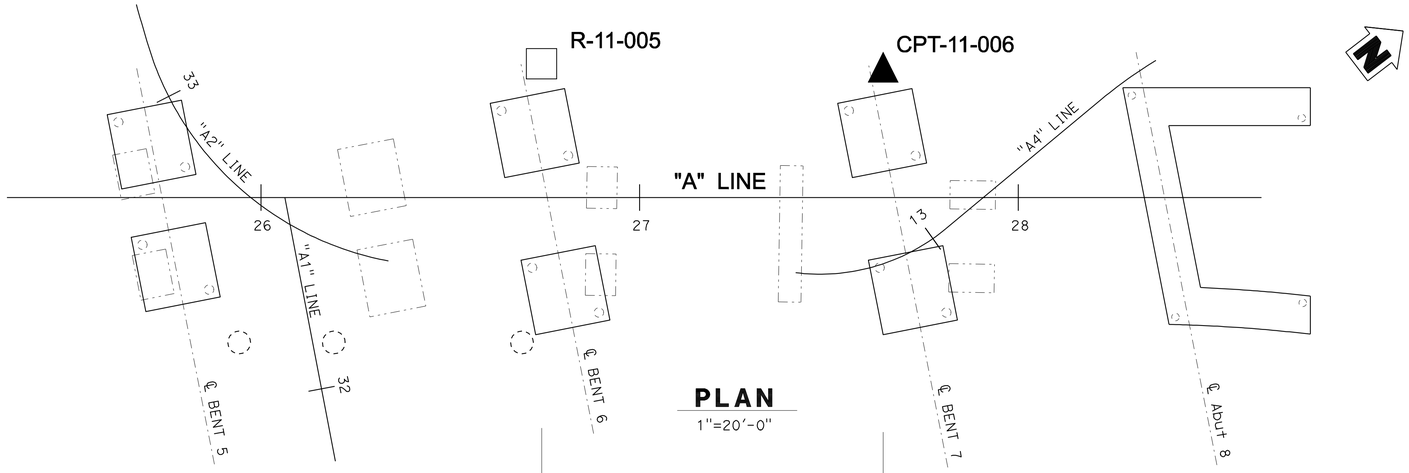

PLAN
1"=20'-0"

NOTES:

1. Ground water table was not measured in the borings due to rotary wash drilling.
2. Hammer energy ratio calibration not performed.
3. The borings were hand augered in the top 5 ft to check for the existence of underground utilities.

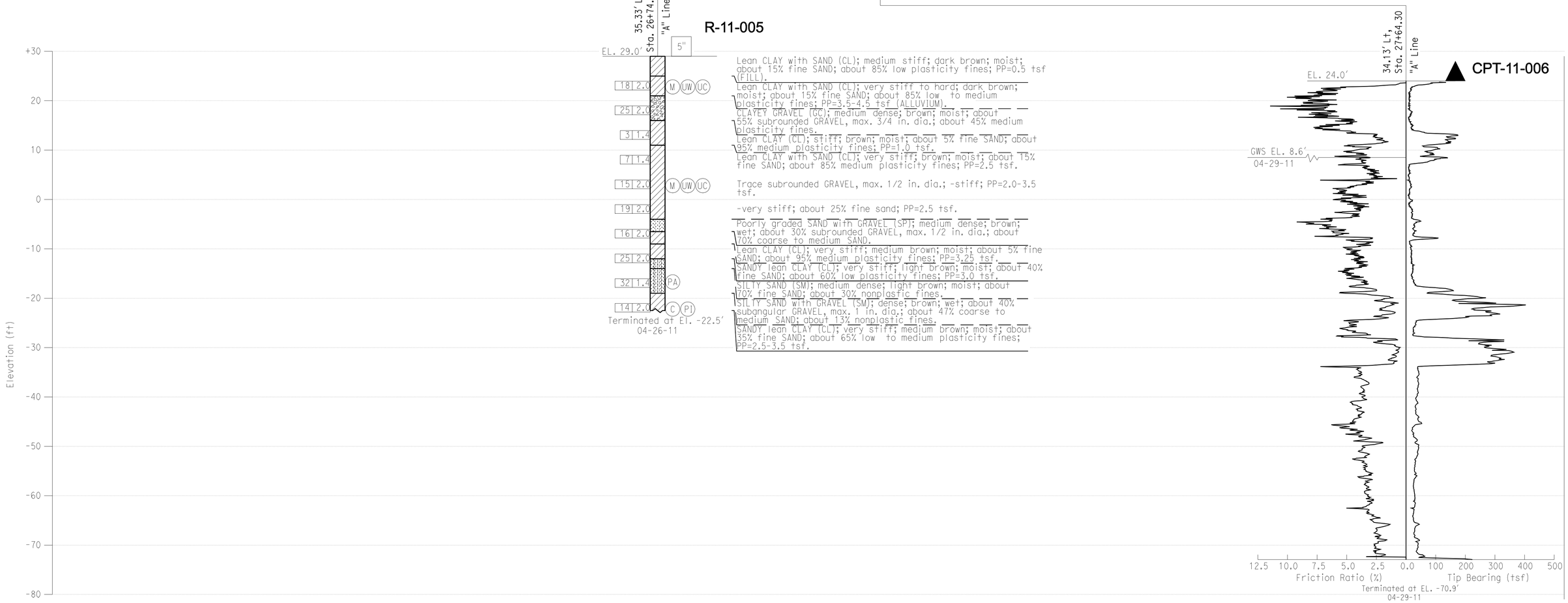

DESIGN OVERSIGHT Paul Cotter	DRAWN BY	N. HUTTON	S. JANOWSKI FIELD INVESTIGATION BY:	PREPARED FOR THE STATE OF CALIFORNIA DEPARTMENT OF TRANSPORTATION	Jan Hueser PROJECT ENGINEER
7-16-12 SIGN OFF DATE	CHECKED BY	C. TSAI	DATE: 04-25-11 TO 05-04-11		

BRIDGE NO. 33-0752S
POST MILES 28.69

29TH AVENUE OFF-RAMP
LOG OF TEST BORINGS 5 OF 9

GS CIVIL LOG OF TEST BORINGS SHEET (ENGLISH) (REV. 7/16/10)

ORIGINAL SCALE IN INCHES FOR REDUCED PLANS 0 1 2 3

UNIT: 0724
PROJECT NUMBER & PHASE: 04000001601 CONTRACT NO.: 04-0A7101

DISREGARD PRINTS BEARING EARLIER REVISION DATES → 9-6-11 1-18-12 3-30-12 6-25-12

SHEET 30 OF 34

FILE => 33-0752S-z-ltb05.dgn

USERNAME => s124496 DATE PLOTTED => 10-APR-2013 TIME PLOTTED => 06:40

DIST	COUNTY	ROUTE	POST MILES TOTAL PROJECT	SHEET No	TOTAL SHEETS
04	Ala	880	28.4/29.2	598	789

REGISTERED CIVIL ENGINEER 6/25/12 DATE

4-8-13
PLANS APPROVAL DATE

REGISTERED PROFESSIONAL ENGINEER Philip Meymand No. 2596 Exp. 6/30/13 GEOTECHNICAL STATE OF CALIFORNIA

The State of California or its officers or agents shall not be responsible for the accuracy or completeness of electronic copies of this plan sheet.

ALAMEDA COUNTY TRANSPORTATION
1333 BROADWAY
OAKLAND, CA 94612

URS CORPORATION
1333 BROADWAY, SUITE 800
OAKLAND, CA 94612

NOTES:

1. Ground water table was not measured in the borings due to rotary wash drilling.
2. Hammer energy ratio calibration not performed.
3. The borings were hand augered in the top 5 ft to check for the existence of underground utilities.

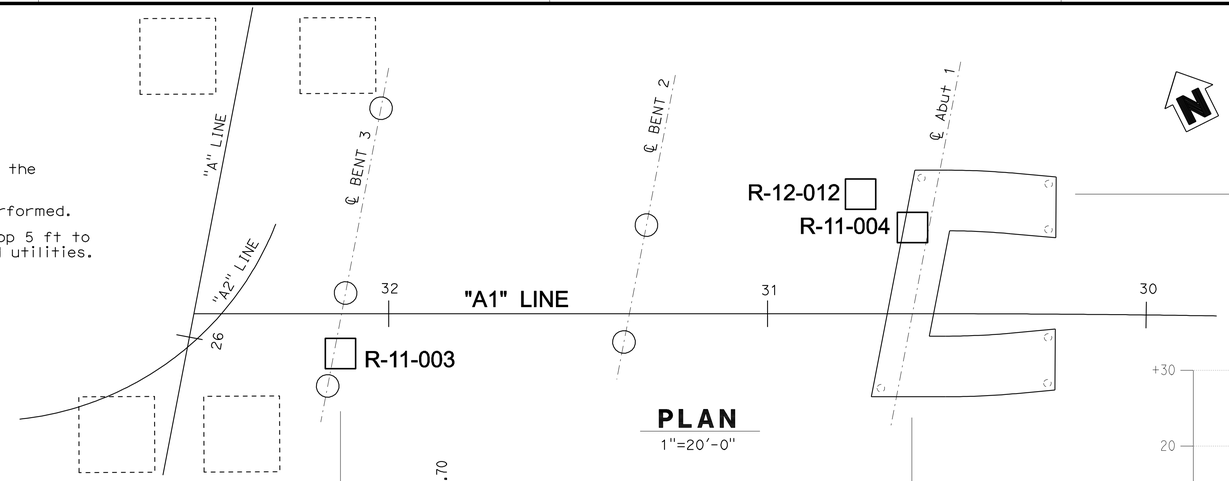

PLAN
1"=20'-0"

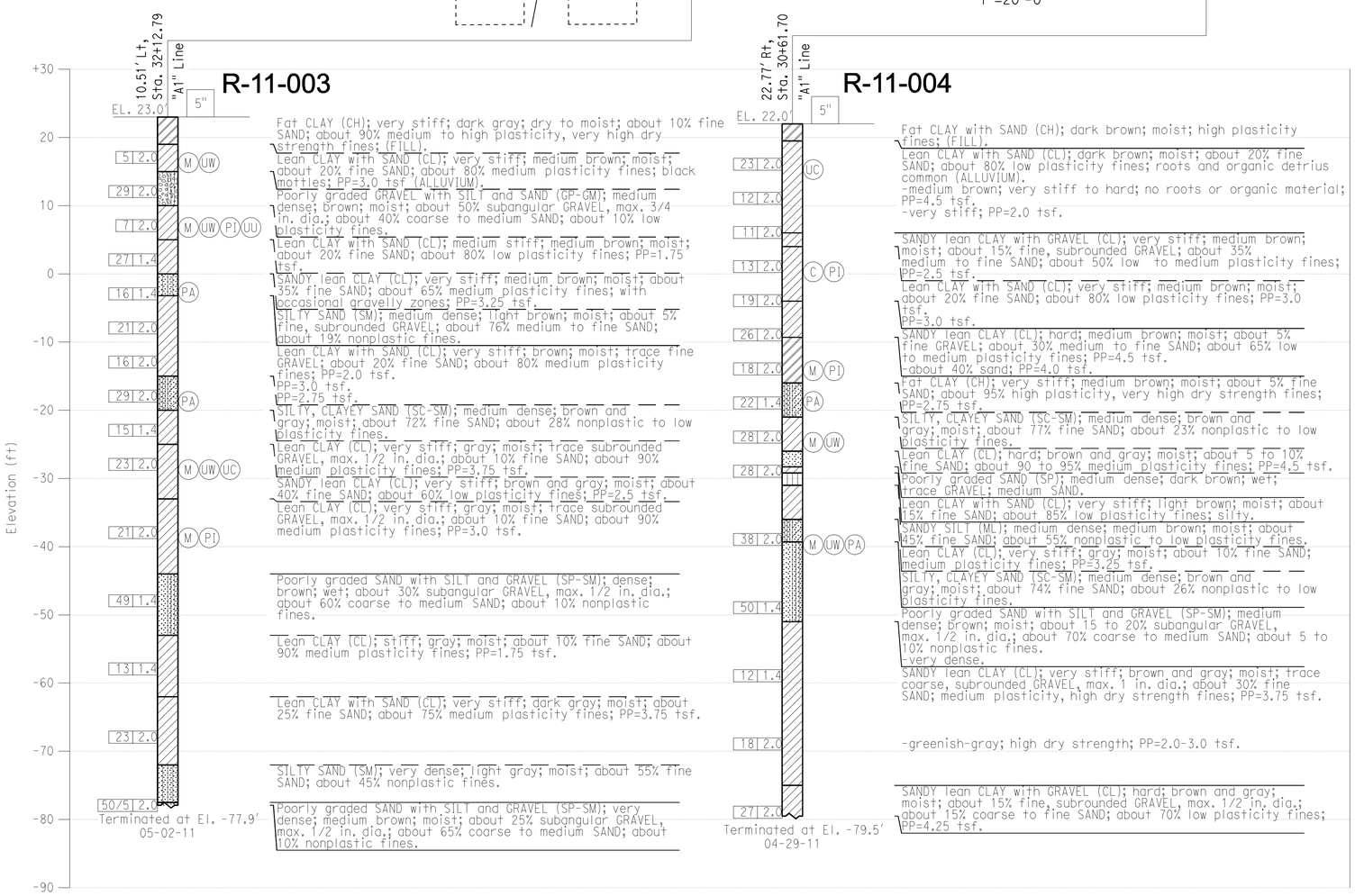

DESIGN OVERSIGHT Paul Cotter	DRAWN BY N. HUTTON	S. JANOWSKI FIELD INVESTIGATION BY:	PREPARED FOR THE STATE OF CALIFORNIA DEPARTMENT OF TRANSPORTATION
7-16-12 SIGN OFF DATE	CHECKED BY C. TSAI	DATE: 04-25-11 TO 05-04-11	

Jan Hueser
PROJECT ENGINEER

BRIDGE NO. 33-0752S
POST MILES 28.69

29TH AVENUE OFF-RAMP
LOG OF TEST BORINGS 6 OF 9

GS CIVIL LOG OF TEST BORINGS SHEET (ENGLISH) (REV. 7/16/10)

ORIGINAL SCALE IN INCHES FOR REDUCED PLANS 0 1 2 3

UNIT: 0724
PROJECT NUMBER & PHASE: 04000001601 CONTRACT NO.: 04-0A7101

DISREGARD PRINTS BEARING EARLIER REVISION DATES → REVISION DATES 9-6-11 1-10-12 3-30-12 6-25-12

SHEET 31 OF 34

FILE => 33-0752S-z-ltb06.dgn

USERNAME => s124496 DATE PLOTTED => 10-APR-2013 TIME PLOTTED => 06:40

BENCH MARK:

DESIGNATION: ALA8 ELEV=14.521
FOUND BRASS DISK STAMPED "ALA8" IN THE SIDEWALK AT THE WEST CORNER OF EAST 8TH STREET AND 5TH AVENUE.

DESIGNATION: ALA7 ELEV=15.591
FOUND BRASS DISK STAMPED "ALA7" IN THE SIDEWALK AT THE WEST SIDE OF 7TH STREET ALONG THE NORTH SIDE OF LAKE MERRITT CHANNEL.

DESIGNATION: 8TH/37TH ELEV=20.262
FOUND A CITY OF OAKLAND PIN IN CONCRETE IN A MONUMENT WELL AT THE INTERSECTION OF EAST 8TH STREET AND 37TH AVENUE.

DESIGNATION: ALA13 ELEV=15.318
FOUND BRASS DISK STAMPED "ALA13" INSIDE A 1 INCH IRON PIPE WITH A CONCRETE COLLAR 24.6 FEET NORTH OF THE NORTH SIDE OF HIGH STREET,
56 FEET WEST OF THE WEST SIDE OF THE OFFRAMP FROM SOUTHBOUND STATE ROUTE 880 AND 4.99 FEET SOUTH OF THE SOUTH RAIL OF THE RAILROAD TRACKS.

DESIGNATION: KA121 ELEV=15.768
FOUND 1 INCH IRON PIPE WITH RED PLASTIC PLUG AND TACK STAMPED "CALTRANS" ALONG THE EAST SIDE OF OAKPORT STREET ABOUT 230 FEET SOUTH OF THE SOUTH SIDE OF HIGH STREET, ACROSS FROM 4401 OAKPORT STREET, 6.92 FEET NORTH OF THE FLOWLINE OF THE CURB.

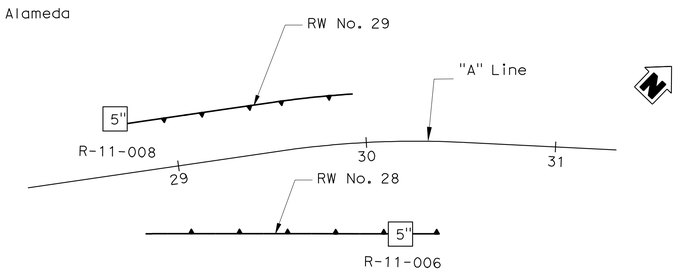

PLAN
1" = 40'

TO ACCOMPANY PLANS DATED 4-8-13

DIVISION OF ENGINEERING SERVICES - GEOTECHNICAL SERVICES

The information presented on this drawing, was not the result of any work developed, performed, or completed by URS. This drawing is available and presented only for the convenience of any bidder, contractor, or other interested party. It should be understood that URS assumes no responsibility in respect to the sufficiency, accuracy, completeness, interpretation set forth, or any other aspect of the information shown on this drawing.

DIST.	COUNTY	ROUTE	POST MILES-TOTAL PROJECT	Sheet No.	Total Sheets
04	Ala	880	28.4/29.2	599	789

CERTIFIED ENGINEERING GEOLOGIST — DATE 6/12/12

29TH AVENUE OFF-RAMP

LOG OF TEST BORINGS 7 OF 9

UNIT: 0724	CONTRACT No.	BRIDGE No.
PROJECT NUMBER & PHASE: 04000001601	04-0A7101	33-0752S
	Sheet 32	of 34

DIST	COUNTY	ROUTE	POST MILES TOTAL PROJECT	SHEET No	TOTAL SHEETS
04	Ala	880	28.4/29.2		

REGISTERED ENGINEER — DATE

PLANS APPROVAL DATE

The State of California or its officers or agents shall not be responsible for the accuracy or completeness of electronic copies of this plan sheet.

REGISTERED PROFESSIONAL ENGINEER L. CHEANG NO. GE 2345 EXP. 9-30-13 GEOTECHNICAL STATE OF CALIFORNIA

ALAMEDA COUNTY TRANSPORTATION COMMISSION
1333 BROADWAY, SUITE 220
OAKLAND, CA 94612

EARTH MECHANICS, INC.
17800 NEWHOPE STREET, SUITE B
FOUNTAIN VALLEY, CA 92708

NOTES:

(1) This LOTB sheet was prepared in accordance with the Caltrans Soil and Rock Logging, Classification and Presentation Manual (June 2010).

(2) 2.4" samples were taken using a California Modified Sampler.

(3) An automatic trip hammer system consisting of a hammer weight of 140 lbs falling a distance of 30" was used to advance the drive sampler.

REGISTERED PROFESSIONAL ENGINEER Philip Meymand No. 2596 Exp. 6/30/13 GEOTECHNICAL STATE OF CALIFORNIA

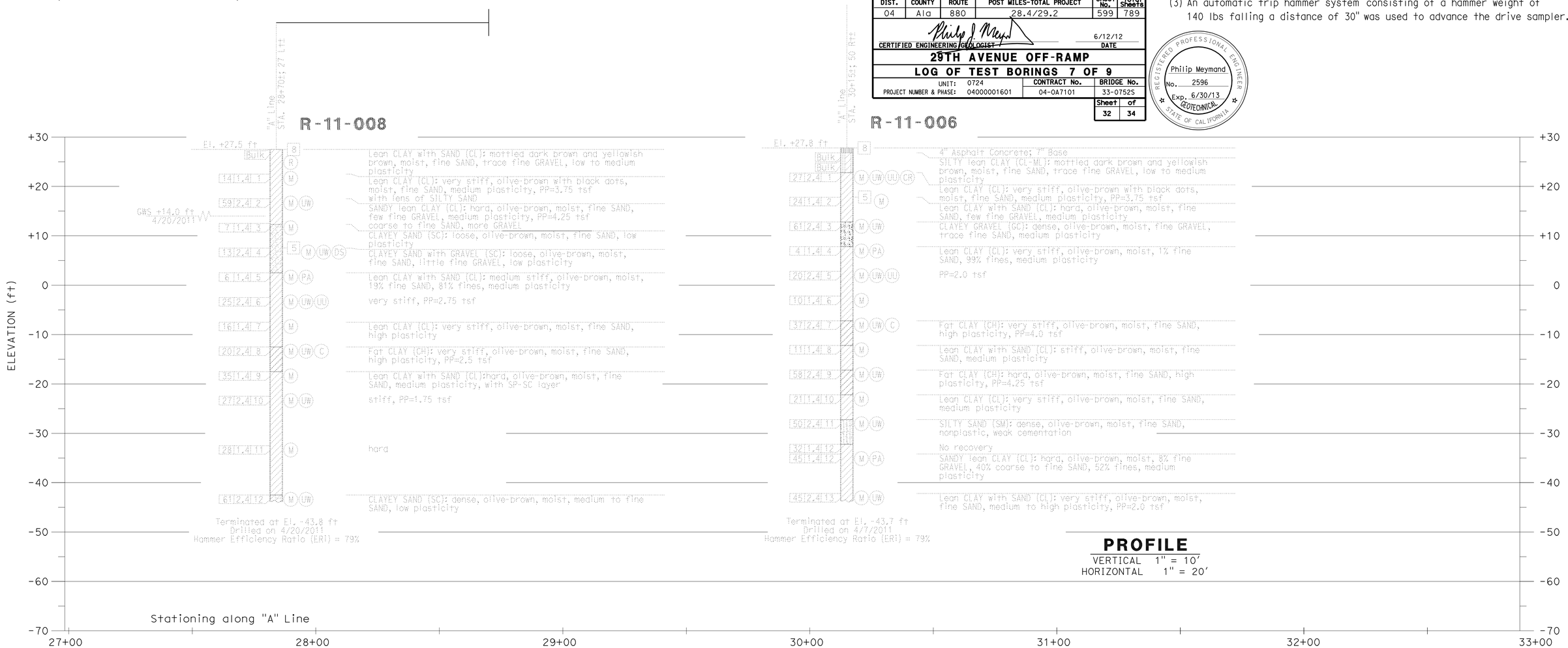

PROFILE
VERTICAL 1" = 10'
HORIZONTAL 1" = 20'

Paul Cotter — DESIGN OVERSIGHT: Paul Cotter; 7-16-12 SIGN OFF DATE	DRAWN BY: J. Fang	K. Thant — FIELD INVESTIGATION BY:	PREPARED FOR THE STATE OF CALIFORNIA DEPARTMENT OF TRANSPORTATION
	CHECKED BY: G. J. Gunaranjan	DATE: 3/2011, 4/2011	

L. Cheang — PROJECT ENGINEER

BRIDGE NO. -
POST MILES Varies

RETAINING WALL No. 28 and 29

LOG OF TEST BORINGS 1 OF 1

GS GEOTECHNICAL LOG OF TEST BORINGS SHEET (ENGLISH) (REV. 7/16/10)

ORIGINAL SCALE IN INCHES FOR REDUCED PLANS 0 1 2 3

UNIT: 0247
PROJECT NUMBER & PHASE: 04000001601

DISREGARD PRINTS BEARING EARLIER REVISION DATES

REVISION DATES — SHEET — OF

FILE => 33-0752S-z-ltb07.dgn

CONTRACT NO.:04-0A7100 PROJECT ID:

USERNAME => s124496 DATE PLOTTED => 10-APR-2013 TIME PLOTTED => 06:40

BENCH MARK:

DESIGNATION: ALA8 ELEV=14.521
FOUND BRASS DISK STAMPED "ALA8" IN THE SIDEWALK AT THE WEST CORNER OF EAST 8TH STREET AND 5TH AVENUE.

DESIGNATION: ALA7 ELEV=15.591
FOUND BRASS DISK STAMPED "ALA7" IN THE SIDEWALK AT THE WEST SIDE OF 7TH STREET ALONG THE NORTH SIDE OF LAKE MERRITT CHANNEL.

DESIGNATION: 8TH/37TH ELEV=20.262
FOUND A CITY OF OAKLAND PIN IN CONCRETE IN A MONUMENT WELL AT THE INTERSECTION OF EAST 8TH STREET AND 37TH AVENUE.

DESIGNATION: ALA13 ELEV=15.318
FOUND BRASS DISK STAMPED "ALA13" INSIDE A 1 INCH IRON PIPE WITH A CONCRETE COLLAR 24.6 FEET NORTH OF THE NORTH SIDE OF HIGH STREET,
56 FEET WEST OF THE WEST SIDE OF THE OFFRAMP FROM SOUTHBOUND STATE ROUTE 880 AND 4.99 FEET SOUTH OF THE SOUTH RAIL OF THE RAILROAD TRACKS.

DESIGNATION: KA121 ELEV=15.768
FOUND 1 INCH IRON PIPE WITH RED PLASTIC PLUG AND TACK STAMPED "CALTRANS" ALONG THE EAST SIDE OF OAKPORT STREET ABOUT 230 FEET SOUTH OF THE SOUTH SIDE OF HIGH STREET, ACROSS FROM 4401 OAKPORT STREET, 6.92 FEET NORTH OF THE FLOWLINE OF THE CURB.

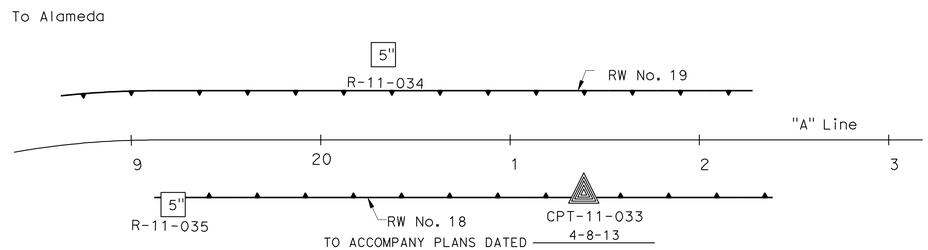

TO ACCOMPANY PLANS DATED 4-8-13

PLAN
1" = 40'

DIST	COUNTY	ROUTE	POST MILES TOTAL PROJECT	SHEET No	TOTAL SHEETS
04	Ala	880	28.4/29.2		

REGISTERED ENGINEER DATE

PLANS APPROVAL DATE

REGISTERED PROFESSIONAL ENGINEER L. CHEANG NO. GE 2345 EXP. 9-30-13 GEOTECHNICAL STATE OF CALIFORNIA

The State of California or its officers or agents shall not be responsible for the accuracy or completeness of electronic copies of this plan sheet.

ALAMEDA COUNTY TRANSPORTATION COMMISSION
1333 BROADWAY, SUITE 220
OAKLAND, CA 94612

EARTH MECHANICS, INC.
17800 NEWHOPE STREET, SUITE B
FOUNTAIN VALLEY, CA 92708

DIVISION OF ENGINEERING SERVICES - GEOTECHNICAL SERVICES

The information presented on this drawing, was not the result of any work developed, performed, or completed by URS. This drawing is available and presented only for the convenience of any bidder, contractor, or other interested party. It should be understood that URS assumes no responsibility in respect to the sufficiency, accuracy, completeness, interpretation set forth, or any other aspect of the information shown on this drawing.

DIST.	COUNTY	ROUTE	POST MILES-TOTAL PROJECT	Sheet No.	Total Sheets
04	Ala	880	28.4/29.2	600	789

CERTIFIED ENGINEERING GEOLOGIST 6/12/12 DATE

REGISTERED PROFESSIONAL ENGINEER Philip Meymand No. 2596 Exp. 6/30/13 GEOTECHNICAL STATE OF CALIFORNIA

29TH AVENUE OFF-RAMP

LOG OF TEST BORINGS 8 OF 9

UNIT:	0724	CONTRACT No.	BRIDGE No.
PROJECT NUMBER & PHASE:	04000001601	04-0A7101	33-0752S

Sheet	of
33	34

NOTES:

(1) This LOTB sheet was prepared in accordance with the Caltrans Soil and Rock Logging, Classification and Presentation Manual (June 2010).

(2) 2.4" samples were taken using a California Modified Sampler.

(3) An automatic trip hammer system consisting of a hammer weight of 140 lbs falling a distance of 30" was used to advance the drive sampler.

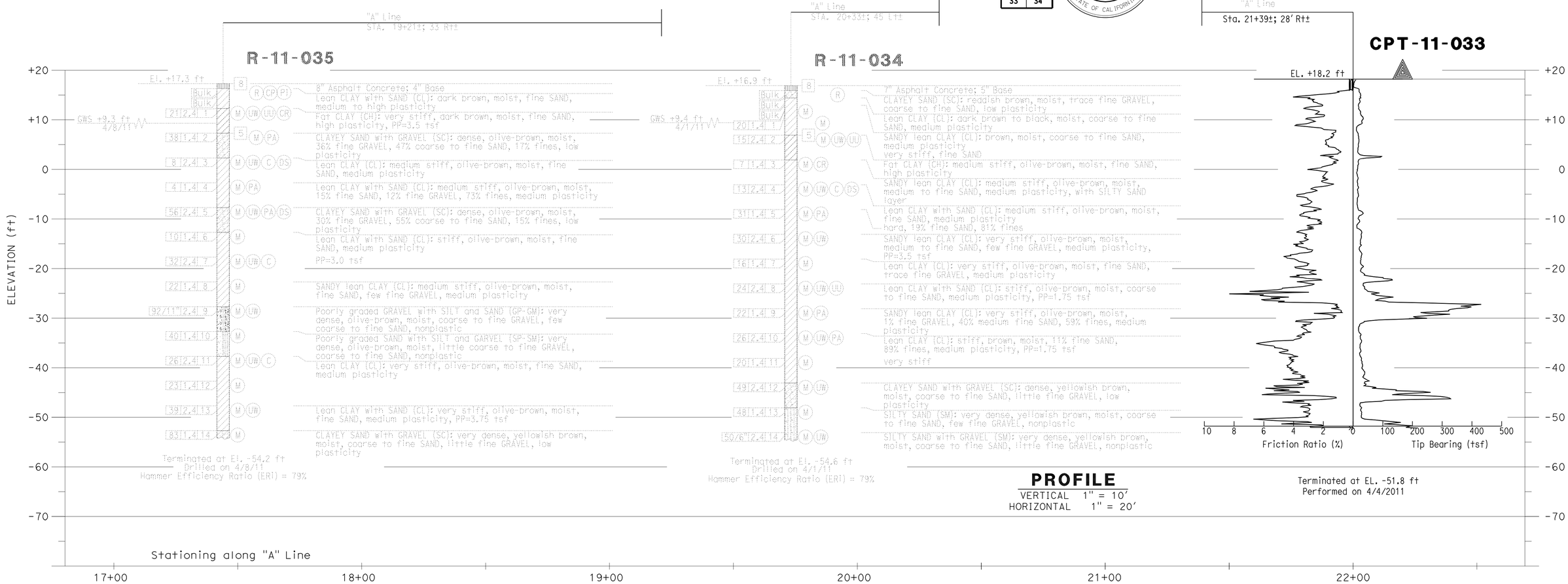

PROFILE
VERTICAL 1" = 10'
HORIZONTAL 1" = 20'

DESIGN OVERSIGHT Paul Cotter	DRAWN BY J. Fang	K. Thant FIELD INVESTIGATION BY:	PREPARED FOR THE STATE OF CALIFORNIA DEPARTMENT OF TRANSPORTATION
7-16-12 SIGN OFF DATE	CHECKED BY G. J. Gunaranjan	DATE: 3/2011, 4/2011	L. Cheang PROJECT ENGINEER

BRIDGE NO. –
POST MILES Varies

RETAINING WALL No. 18 and 19
LOG OF TEST BORINGS 1 OF 1

GS GEOTECHNICAL LOG OF TEST BORINGS SHEET (ENGLISH) (REV. 7/16/10)

ORIGINAL SCALE IN INCHES FOR REDUCED PLANS 0 1 2 3

UNIT: 0247
PROJECT NUMBER & PHASE: 04000001601

DISREGARD PRINTS BEARING EARLIER REVISION DATES

REVISION DATES SHEET OF

FILE => 33-0752S-z-ltb08.dgn

CONTRACT NO.:04-0A7100 PROJECT ID:

USERNAME => s124436 DATE PLOTTED => 10-APR-2013 TIME PLOTTED => 06:40