DIST.	COUNTY	ROUTE	POST MILES TOTAL PROJECT	SHEET NO.	TOTAL SHEETS
04	Sol	12,80	L1.8/L2.0, 13.3/15.7	601	740

Mahrash Harris 05/03/11
REGISTERED STRUCTURAL ENGINEER DATE

REGISTERED PROFESSIONAL ENGINEER MAHRASH M. HARRIS No. 2639 Exp. 12/31/12 STRUCTURAL STATE OF CALIFORNIA

5-16-11
PLANS APPROVAL DATE

The State of California or its officers or agents shall not be responsible for the accuracy or completeness of electronic copies of this plan sheet.

BIGGS CARDOSA ASSOCIATES
865 THE ALAMEDA
SAN JOSE, CA 95126
408-296-5515

SOLANO TRANSPORTATION AUTHORITY
ONE HARBOR CENTER, SUITE 130
SUISUN CITY, CA 94585

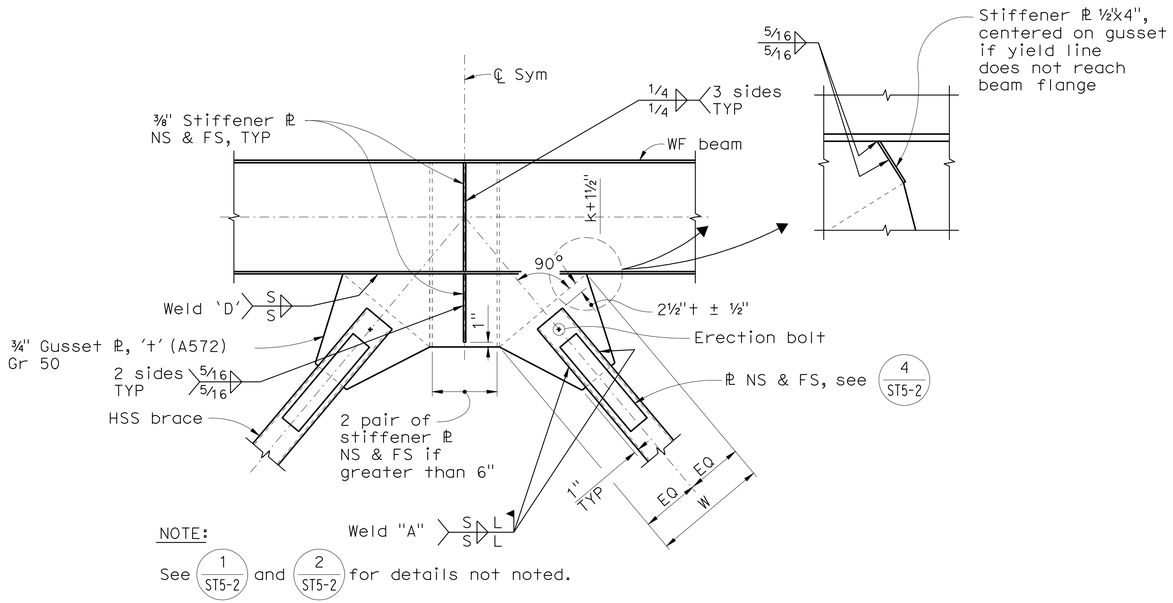

NOTE:
See 1 ST5-2 and 2 ST5-2 for details not noted.

DETAIL 1 ST5-3
3/4" = 1'-0"

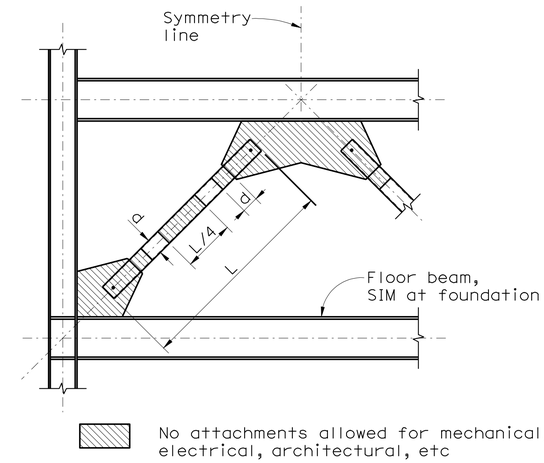

DETAIL 2 ST5-3
NO SCALE

CALIFORNIA STATE FIRE MARSHAL
APPROVED

Approval of this plan does not authorize or approve any omission or deviation from applicable regulations. Final approval is subject to field inspection. One set of approved plans shall be available on the project site at all times.

Reviewed by: Hans Henneberque 5/9/11
Hans Henneberque
Senior Deputy State Fire Marshal

DESIGN	BY S. HAYAT	CHECKED D. FURIA	
DETAILS	BY A. RICHARDSON	CHECKED D. FURIA	
QUANTITIES	BY G. TOLAN	CHECKED S. HAYAT	

PREPARED FOR THE STATE OF CALIFORNIA DEPARTMENT OF TRANSPORTATION

DIVISION OF ENGINEERING SERVICES
ARCHITECTURAL AND STRUCTURAL DESIGN

BRIDGE NO. 23W0001R
POST MILE 14.8

EASTBOUND CORDELIA CVEF
CVEF — STEEL BRACED FRAME DETAILS No. 2

SHEET **ST5-3**

40a535wcST5-03.dgn
DS OSD imperial Rev. 10/07 18-MAY-2011 11:20

ORIGINAL SCALE IN INCHES FOR REDUCED PLANS 0 1 2 3

CU 04264
EA 0A5351

DISREGARD PRINTS BEARING EARLIER REVISION DATES → REVISION DATES (PRELIMINARY STAGE ONLY) 10/19/09 3/22/10 5/6/10 8/23/10 11/22/10 05/03/11 SHEET OF

20081178 (20081785 15-3)
18-MAY-2011 11:20
40a535wcST5-0

DIST.	COUNTY	ROUTE	POST MILES TOTAL PROJECT	SHEET NO.	TOTAL SHEETS
04	Sol	12,80	L1.8/L2.0, 13.3/15.7	602	740

Mahrash Harms 05/03/11
REGISTERED STRUCTURAL ENGINEER DATE

REGISTERED PROFESSIONAL ENGINEER MAHRASH M. HARMS No. 2639 Exp. 12/31/12 STRUCTURAL STATE OF CALIFORNIA

5-16-11
PLANS APPROVAL DATE

The State of California or its officers or agents shall not be responsible for the accuracy or completeness of electronic copies of this plan sheet.

BIGGS CARDOSA ASSOCIATES
865 THE ALAMEDA
SAN JOSE, CA 95126
408-296-5515

SOLANO TRANSPORTATION AUTHORITY
ONE HARBOR CENTER, SUITE 130
SUISUN CITY, CA 94585

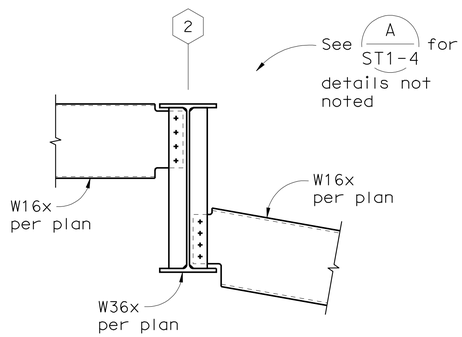

SECTION A ST5-4
3/4" = 1'-0"

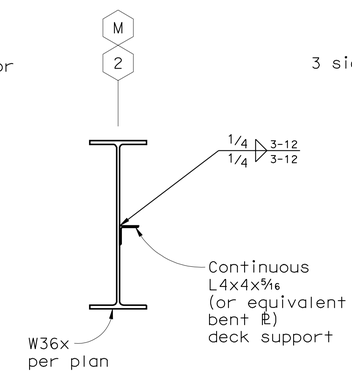

SECTION B ST5-4
3/4" = 1'-0"

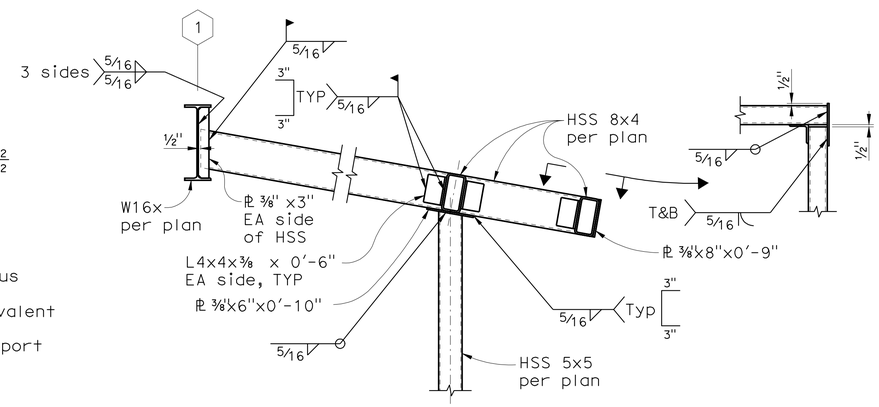

SECTION C ST5-4
3/4" = 1'-0"

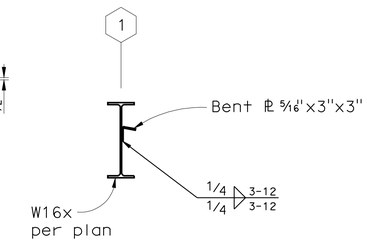

SECTION D ST5-4
3/4" = 1'-0"

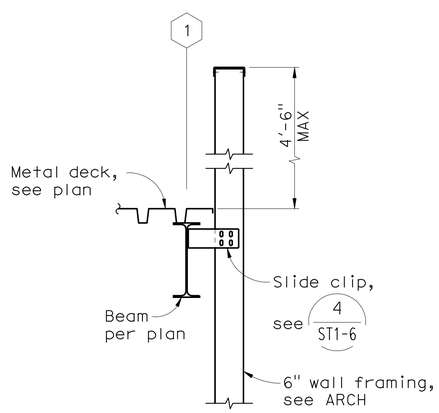

SECTION E ST5-4
3/4" = 1'-0"

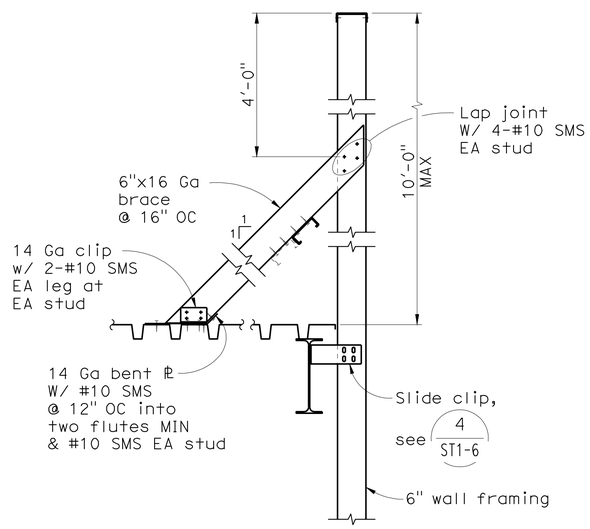

SECTION F ST5-4
3/4" = 1'-0"

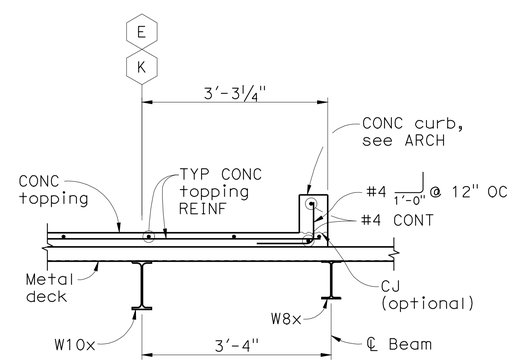

SECTION G ST5-4
3/4" = 1'-0"

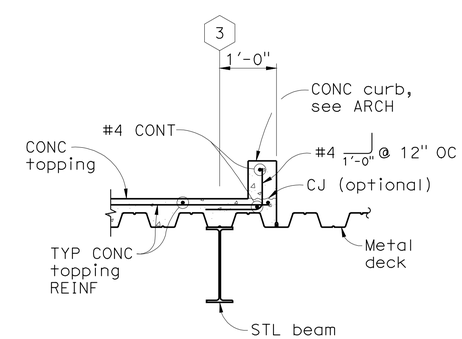

SECTION H ST5-4
3/4" = 1'-0"

CALIFORNIA STATE FIRE MARSHAL APPROVED

Approval of this plan does not authorize or approve any omission or deviation from applicable regulations. Final approval is subject to field inspection. One set of approved plans shall be available on the project site at all times.

Reviewed by: 5/9/11
Hans Henneberque
Senior Deputy State Fire Marshal

DESIGN	BY S. HAYAT	CHECKED D. FURIA	
DETAILS	BY A. RICHARDSON	CHECKED D. FURIA	
QUANTITIES	BY G. TOLAN	CHECKED S. HAYAT	

PREPARED FOR THE STATE OF CALIFORNIA DEPARTMENT OF TRANSPORTATION

DIVISION OF ENGINEERING SERVICES
ARCHITECTURAL AND STRUCTURAL DESIGN

BRIDGE NO. 23W0001R
POST MILE 14.8

EASTBOUND CORDELIA CVEF

CVEF — OFFICE BLDG STEEL DETAILS

SHEET **ST5-4**

40a535wcST5-04.dgn
DS OSD imperial Rev. 10/07 18-MAY-2011 11:20

ORIGINAL SCALE IN INCHES FOR REDUCED PLANS 0 1 2 3

CU 04264
EA 0A5351

DISREGARD PRINTS BEARING EARLIER REVISION DATES

REVISION DATES (PRELIMINARY STAGE ONLY) 10/19/09 3/22/10 5/6/10 8/23/10 11/22/10 05/03/11

SHEET OF

2008178 (20081785 15-4) 18-MAY-2011 11:20

40a535wcST5-04

DIST.	COUNTY	ROUTE	POST MILES TOTAL PROJECT	SHEET NO.	TOTAL SHEETS
04	Sol	12,80	L1.8/L2.0, 13.3/15.7	603	740

Mahvash Harris 05/03/11
REGISTERED STRUCTURAL ENGINEER DATE

REGISTERED PROFESSIONAL ENGINEER MAHVASH M. HARRIS No. 2639 Exp. 12/31/12 STRUCTURAL STATE OF CALIFORNIA

5-16-11
PLANS APPROVAL DATE

The State of California or its officers or agents shall not be responsible for the accuracy or completeness of electronic copies of this plan sheet.

BIGGS CARDOSA ASSOCIATES
865 THE ALAMEDA
SAN JOSE, CA 95126
408-296-5515

SOLANO TRANSPORTATION AUTHORITY
ONE HARBOR CENTER, SUITE 130
SUISUN CITY, CA 94585

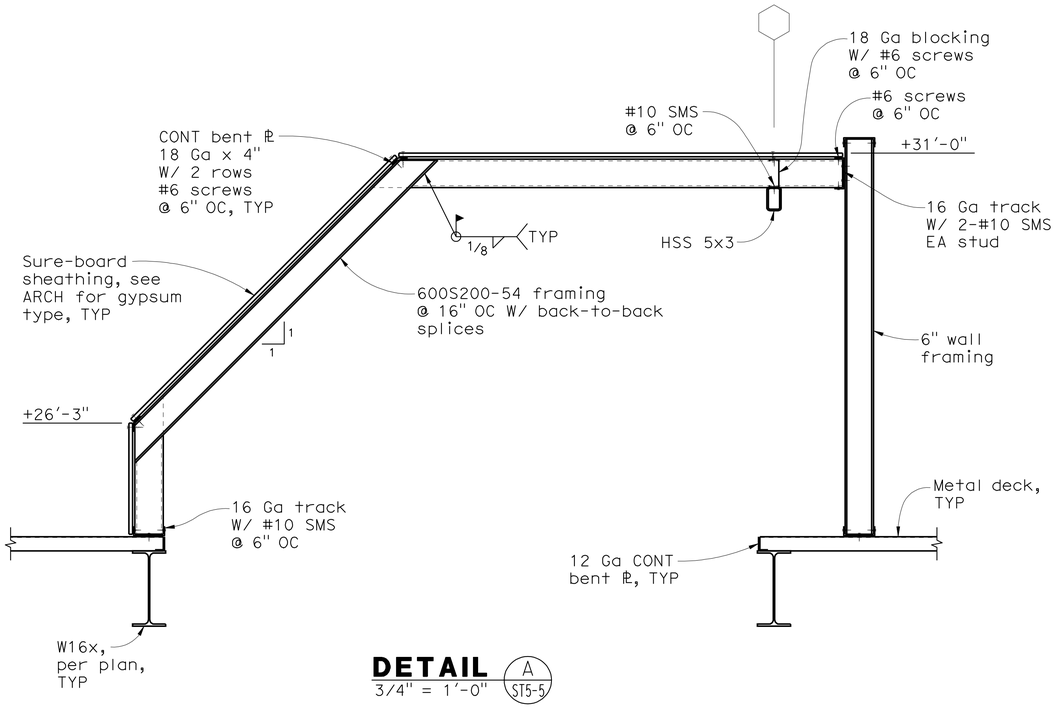

DETAIL A (ST5-5)
3/4" = 1'-0"

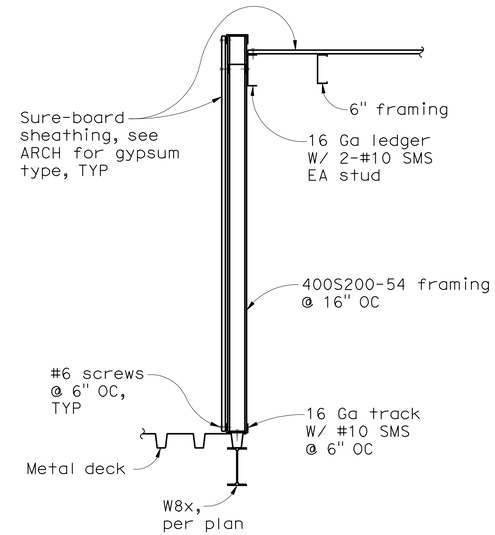

DETAIL B (ST5-5)
3/4" = 1'-0"

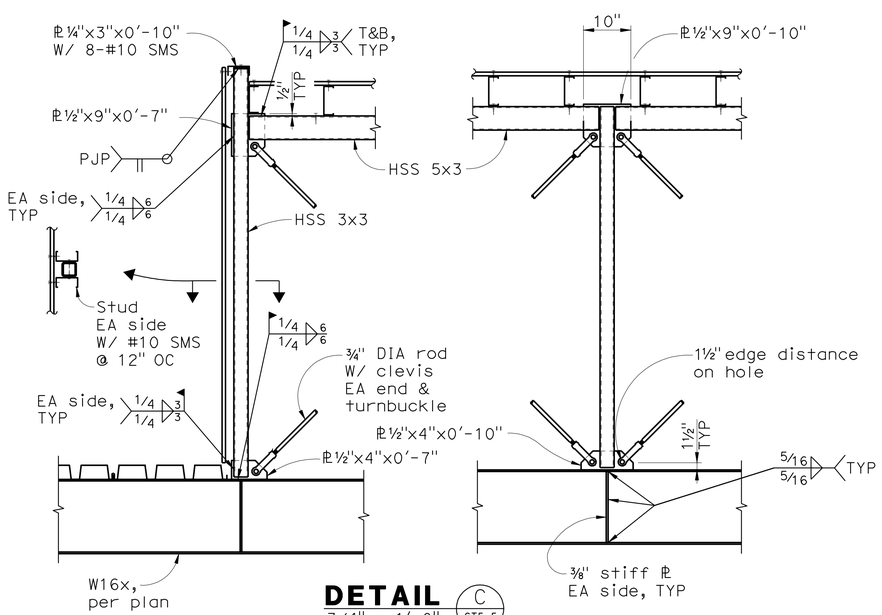

DETAIL C (ST5-5)
3/4" = 1'-0"

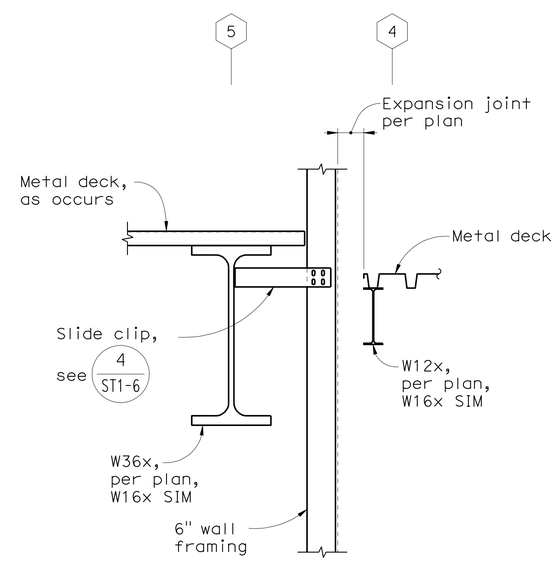

DETAIL D (ST5-5)
3/4" = 1'-0"

CALIFORNIA STATE FIRE MARSHAL APPROVED

Approval of this plan does not authorize or approve any omission or deviation from applicable regulations. Final approval is subject to field inspection. One set of approved plans shall be available on the project site at all times.

Reviewed by: Hans Hennebarque 5/9/11
Hans Hennebarque
Senior Deputy State Fire Marshal

DESIGN	BY S. HAYAT	CHECKED D. FURIA	
DETAILS	BY A. RICHARDSON	CHECKED D. FURIA	
QUANTITIES	BY G. TOLAN	CHECKED S. HAYAT	

PREPARED FOR THE STATE OF CALIFORNIA DEPARTMENT OF TRANSPORTATION

DIVISION OF ENGINEERING SERVICES
ARCHITECTURAL AND STRUCTURAL DESIGN

BRIDGE NO. 23W0001R
POST MILE 14.8

EASTBOUND CORDELIA CVEF

CVEF — INSPECTION BLDG STEEL DETAILS

SHEET **ST5-5**

40a535wcST5-05.dgn
DS OSD imperial Rev. 10/07 18-MAY-2011 11:20

ORIGINAL SCALE IN INCHES FOR REDUCED PLANS 0 1 2 3

CU 04624
EA 0A5351

DISREGARD PRINTS BEARING EARLIER REVISION DATES

REVISION DATES (PRELIMINARY STAGE ONLY) 10/19/09 03/22/10 05/07/10 08/23/10 11/22/10 05/03/11 SHEET OF

20081178 (20081178S15-5)

18-MAY-2011 11:20

40a535wcST5-0

DIST.	COUNTY	ROUTE	POST MILES TOTAL PROJECT	SHEET NO.	TOTAL SHEETS
04	Sol	12,80	L1.8/L2.0, 13.3/15.7	604	740

Mahvash Harris 05/03/11
REGISTERED STRUCTURAL ENGINEER DATE

REGISTERED PROFESSIONAL ENGINEER MAHVASH M. HARRIS No. 2639 Exp. 12/31/12 STRUCTURAL STATE OF CALIFORNIA

5-16-11
PLANS APPROVAL DATE

The State of California or its officers or agents shall not be responsible for the accuracy or completeness of electronic copies of this plan sheet.

BIGGS CARDOSA ASSOCIATES
865 THE ALAMEDA
SAN JOSE, CA 95126
408-296-5515

SOLANO TRANSPORTATION AUTHORITY
ONE HARBOR CENTER, SUITE 130
SUISUN CITY, CA 94585

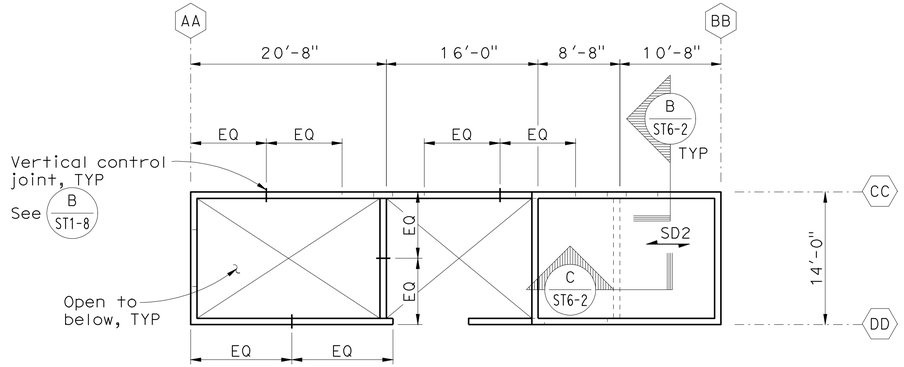

ROOF PLAN
1/8" = 1'-0"

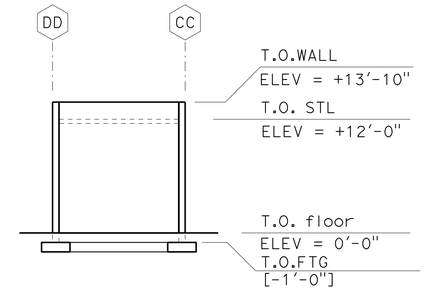

NORTH WALL ELEVATION
1/8" = 1'-0"

Notes:
1. For typical masonry details, see sheet ST1-8.
2. For mechanical equipment anchorage, concrete pad size and location, see MECH.
3. For mechanical equipment pad reinforcement, see C ST1-2.

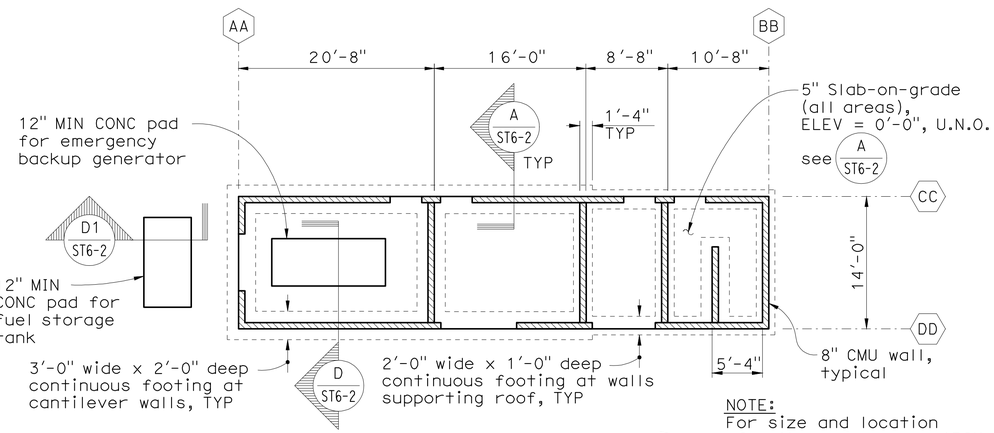

NOTE:
For size and location of wall openings, see ARCH.

FOUNDATION PLAN
1/8" = 1'-0"

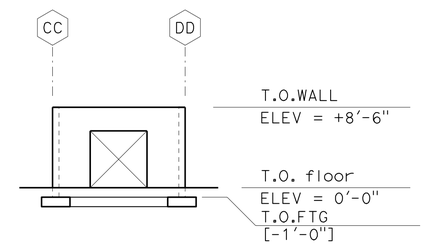

SOUTH WALL ELEVATION
1/8" = 1'-0"

CALIFORNIA STATE FIRE MARSHAL APPROVED

Approval of this plan does not authorize or approve any omission or deviation from applicable regulations. Final approval is subject to field inspection. One set of approved plans shall be available on the project site at all times.

Reviewed by: 5/9/11
Hans Henneberque
Senior Deputy State Fire Marshal

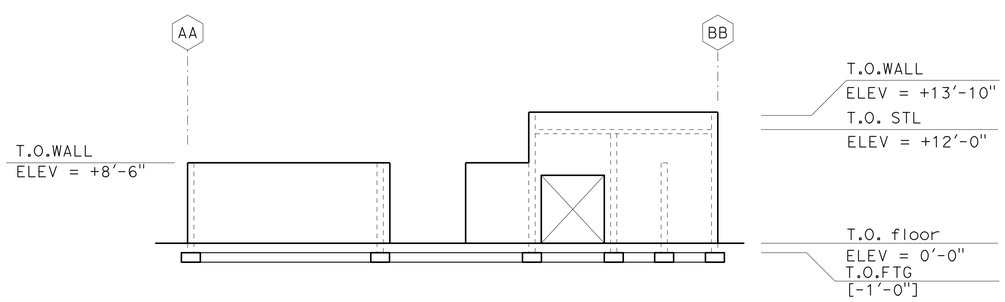

EAST WALL ELEVATION
1/8" = 1'-0"

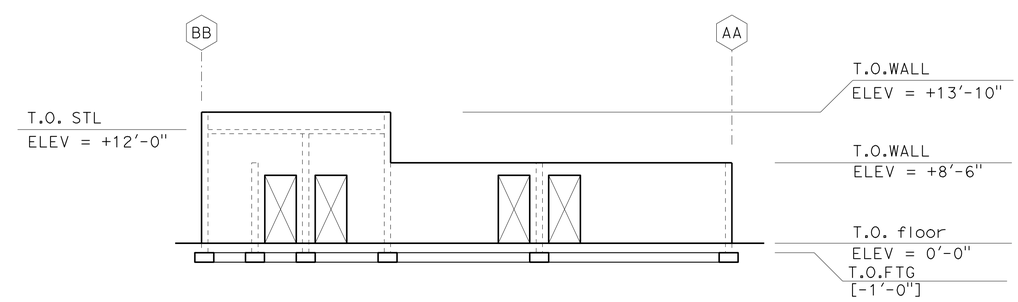

WEST WALL ELEVATION
1/8" = 1'-0"

DESIGN	BY S. HAYAT	CHECKED D. FURIA	
DETAILS	BY A. RICHARDSON	CHECKED D. FURIA	
QUANTITIES	BY G. TOLAN	CHECKED S. HAYAT	

PREPARED FOR THE STATE OF CALIFORNIA DEPARTMENT OF TRANSPORTATION

DIVISION OF ENGINEERING SERVICES
ARCHITECTURAL AND STRUCTURAL DESIGN

BRIDGE NO. 23W0001R
POST MILE 14.8

EASTBOUND CORDELIA CVEF

CVEF | GENERATOR BLDG PLANS AND ELEVATIONS

SHEET ST6-1

40a535wcST6-01.dgn
DS OSD imperial Rev. 10/07 18-MAY-2011 11:20

ORIGINAL SCALE IN INCHES FOR REDUCED PLANS 0 1 2 3

CU 04624
EA 0A5351

DISREGARD PRINTS BEARING EARLIER REVISION DATES

REVISION DATES (PRELIMINARY STAGE ONLY) 10/19/09 3/22/10 5/6/10 8/23/10 11/22/10 05/03/11 SHEET OF

18-MAY-2011 11:20 (20081178S16-1) 20081178

40a535wcST6-0

DIST.	COUNTY	ROUTE	POST MILES TOTAL PROJECT	SHEET NO.	TOTAL SHEETS
04	Sol	12,80	L1.8/L2.0, 13.3/15.7	605	740

Mahvash Harris 05/03/11
REGISTERED STRUCTURAL ENGINEER DATE

REGISTERED PROFESSIONAL ENGINEER MAHVASH M. HARRIS No. 2639 Exp. 12/31/12 STRUCTURAL STATE OF CALIFORNIA

5-16-11
PLANS APPROVAL DATE

The State of California or its officers or agents shall not be responsible for the accuracy or completeness of electronic copies of this plan sheet.

BIGGS CARDOSA ASSOCIATES
865 THE ALAMEDA
SAN JOSE, CA 95126
408-296-5515

SOLANO TRANSPORTATION AUTHORITY
ONE HARBOR CENTER, SUITE 130
SUISUN CITY, CA 94585

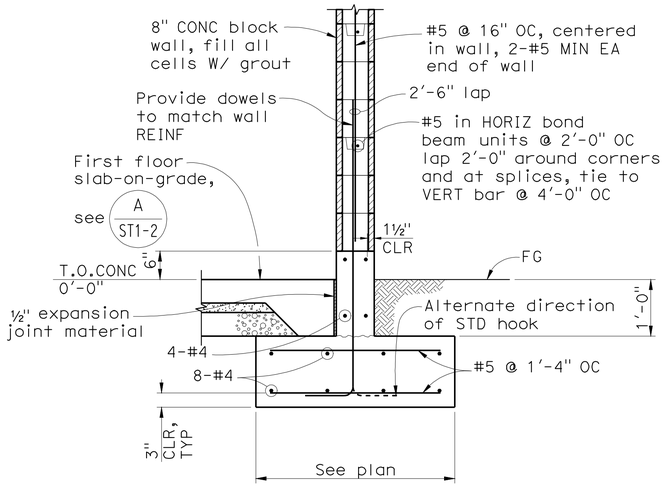

SECTION A/ST6-2
3/4" = 1'-0"

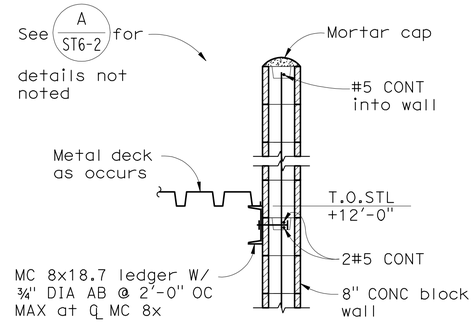

SECTION B/ST6-2
3/4" = 1'-0"

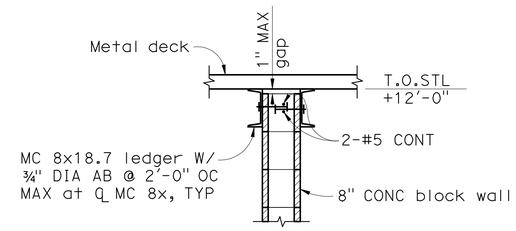

NOTE:
At contractor's option, ¾" DIA AB may be replaced with ¾" DIA thru bolts.

SECTION C/ST6-2
3/4" = 1'-0"

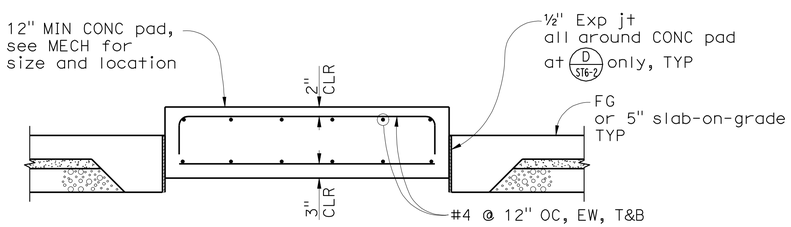

NOTE:
CMU wall and footing in D/ST6-2 not shown for clarity.

SECTION D/ST6-2 D1/ST6-2
3/4" = 1'-0"

CALIFORNIA STATE FIRE MARSHAL APPROVED

Approval of this plan does not authorize or approve any omission or deviation from applicable regulations. Final approval is subject to field inspection. One set of approved plans shall be available on the project site at all times.

Reviewed by: Hans Henneberque 5/9/11
Hans Henneberque
Senior Deputy State Fire Marshal

DESIGN	BY S. HAYAT	CHECKED D. FURIA	
DETAILS	BY A. RICHARDSON	CHECKED D. FURIA	
QUANTITIES	BY G. TOLAN	CHECKED S. HAYAT	

PREPARED FOR THE STATE OF CALIFORNIA DEPARTMENT OF TRANSPORTATION

DIVISION OF ENGINEERING SERVICES
ARCHITECTURAL AND STRUCTURAL DESIGN

BRIDGE NO. 23W0001R
POST MILE 14.8

EASTBOUND CORDELIA CVEF

CVEF — GENERATOR BLDG DETAILS

SHEET **ST6-2**

40a535wcST6-02.dgn
DS OSD imperial Rev. 10/07 18-MAY-2011 11:21

ORIGINAL SCALE IN INCHES FOR REDUCED PLANS 0 1 2 3

CU 04624
EA 0A5351

DISREGARD PRINTS BEARING EARLIER REVISION DATES → 10/19/09 03/22/10 05/07/10 08/23/10 11/22/10 05/03/11

REVISION DATES (PRELIMINARY STAGE ONLY) SHEET OF

20081178 (20081178S16-2)

18-MAY-2011 11:21

40a535wcST6-0

DIST.	COUNTY	ROUTE	POST MILES TOTAL PROJECT	SHEET NO.	TOTAL SHEETS
04	Sol	12,80	L1.8/L2.0, 13.3/15.7	606	740

Mahrash Harris 05/03/11
REGISTERED STRUCTURAL ENGINEER DATE

REGISTERED PROFESSIONAL ENGINEER MAHRASH M. HARRIS No. 2639 Exp. 12/31/12 STRUCTURAL STATE OF CALIFORNIA

5-16-11
PLANS APPROVAL DATE

The State of California or its officers or agents shall not be responsible for the accuracy or completeness of electronic copies of this plan sheet.

BIGGS CARDOSA ASSOCIATES
865 THE ALAMEDA
SAN JOSE, CA 95126
408-296-5515

SOLANO TRANSPORTATION AUTHORITY
ONE HARBOR CENTER, SUITE 130
SUISUN CITY, CA 94585

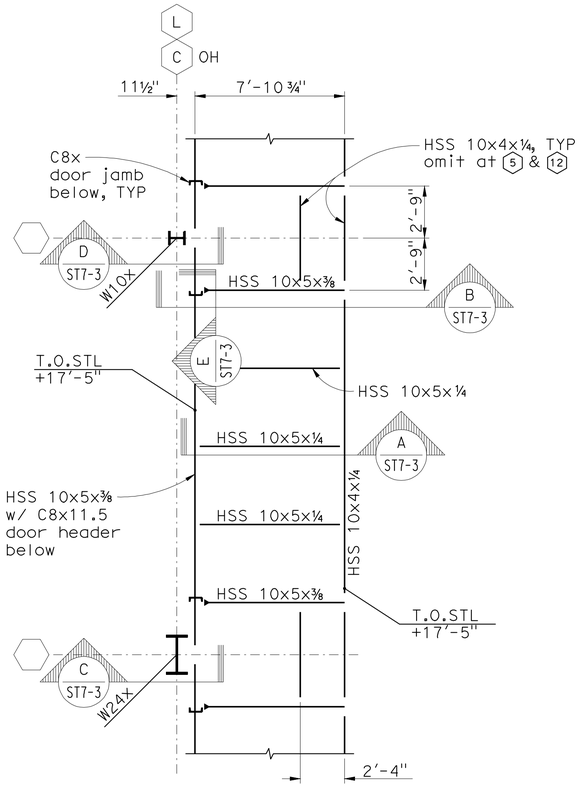

NOTE: For screen framing above, see sheet ST7-2.

CANOPY 1 FRAMING PLAN

1/4" = 1'-0"

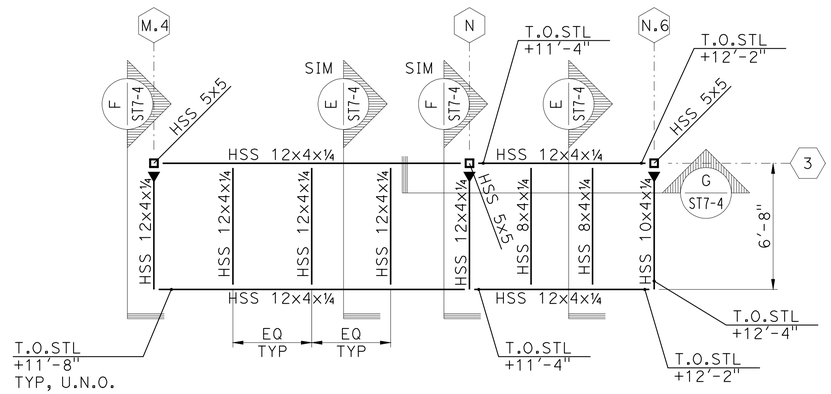

CANOPY 2 FRAMING PLAN

1/4" = 1'-0"

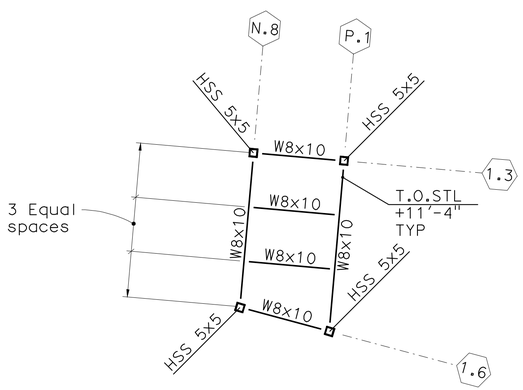

CANOPY 3 FRAMING PLAN

1/4" = 1'-0"

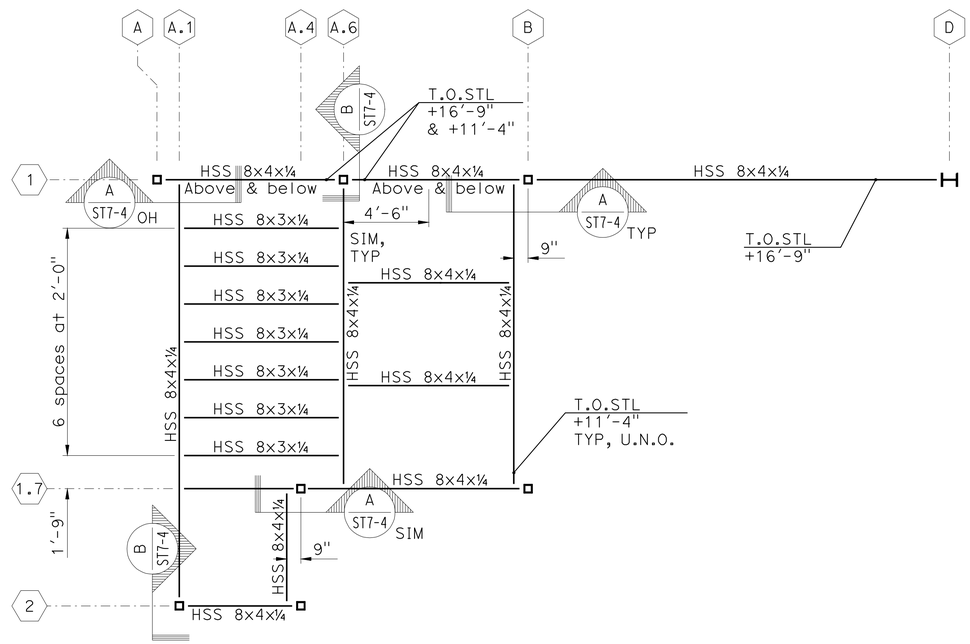

CANOPY 4 FRAMING PLAN

1/4" = 1'-0"

CALIFORNIA STATE FIRE MARSHAL APPROVED

Approval of this plan does not authorize or approve any omission or deviation from applicable regulations. Final approval is subject to field inspection. One set of approved plans shall be available on the project site at all times.

5/9/11

Reviewed by: Hans Henneberque
Hans Henneberque
Senior Deputy State Fire Marshal

DESIGN	BY S. HAYAT	CHECKED D. FURIA	
DETAILS	BY A. RICHARDSON	CHECKED D. FURIA	
QUANTITIES	BY G. TOLAN	CHECKED S. HAYAT	

PREPARED FOR THE STATE OF CALIFORNIA DEPARTMENT OF TRANSPORTATION

DIVISION OF ENGINEERING SERVICES ARCHITECTURAL AND STRUCTURAL DESIGN

BRIDGE NO. 23W0001R
POST MILE 14.8

EASTBOUND CORDELIA CVEF

CVEF — CANOPY FRAMING PLANS

SHEET ST7-1

40a535wcST7-01.dgn
DS OSD imperial Rev. 10/07 18-MAY-2011 11:21

ORIGINAL SCALE IN INCHES FOR REDUCED PLANS 0 1 2 3

CU 04264
EA 0A5351

DISREGARD PRINTS BEARING EARLIER REVISION DATES → 10/19/09 3/22/10 5/6/10 8/23/10 11/22/10 05/03/11

REVISION DATES (PRELIMINARY STAGE ONLY) SHEET OF

20081178 (20081178S17-1)

18-MAY-2011 11:21

40a535wcST7-0

DIST.	COUNTY	ROUTE	POST MILES TOTAL PROJECT	SHEET NO.	TOTAL SHEETS
04	Sol	12,80	L1.8/L2.0, 13.3/15.7	607	740

Mahvash Harms 05/03/11
REGISTERED STRUCTURAL ENGINEER DATE

REGISTERED PROFESSIONAL ENGINEER MAHVASH M. HARMS No. 2639 Exp. 12/31/12 STRUCTURAL STATE OF CALIFORNIA

5-16-11
PLANS APPROVAL DATE

The State of California or its officers or agents shall not be responsible for the accuracy or completeness of electronic copies of this plan sheet.

BIGGS CARDOSA ASSOCIATES
865 THE ALAMEDA
SAN JOSE, CA 95126
408-296-5515

SOLANO TRANSPORTATION AUTHORITY
ONE HARBOR CENTER, SUITE 130
SUISUN CITY, CA 94585

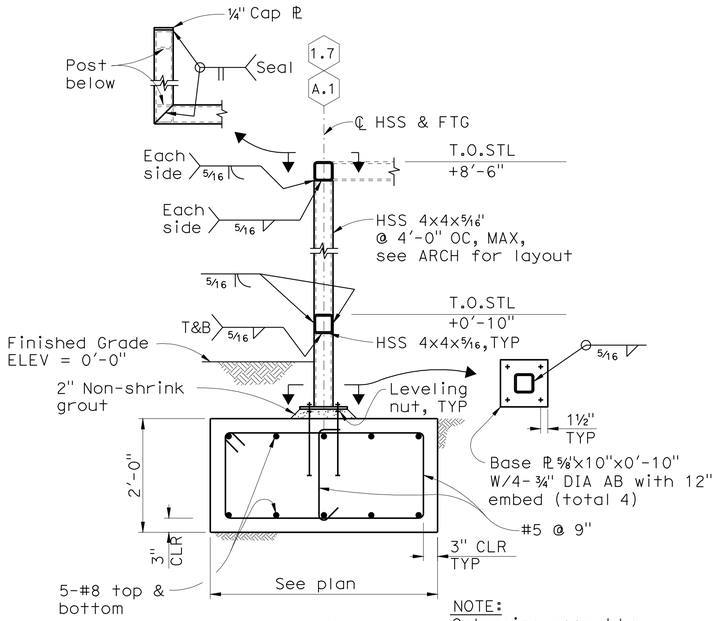

PATIO SCREEN

NOTE: Galvanize assembly after fabrication

SECTION A ST7-2
3/4" = 1'-0"

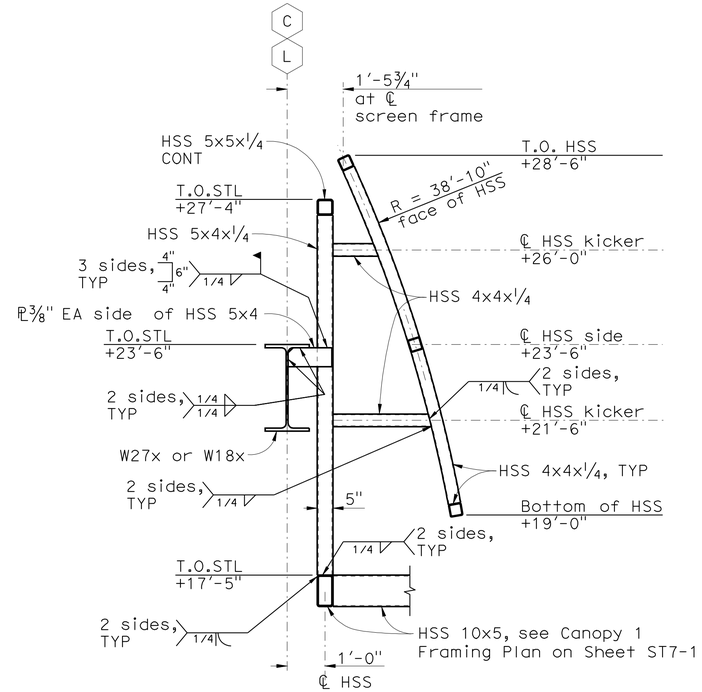

NOTE: Coordinate all dimensions with ARCH.

SECTION B ST7-2
1/2" = 1'-0"

CALIFORNIA STATE FIRE MARSHAL APPROVED

Approval of this plan does not authorize or approve any omission or deviation from applicable regulations. Final approval is subject to field inspection. One set of approved plans shall be available on the project site at all times.

Reviewed by: Hans Henneberque 5/9/11
Hans Henneberque
Senior Deputy State Fire Marshal

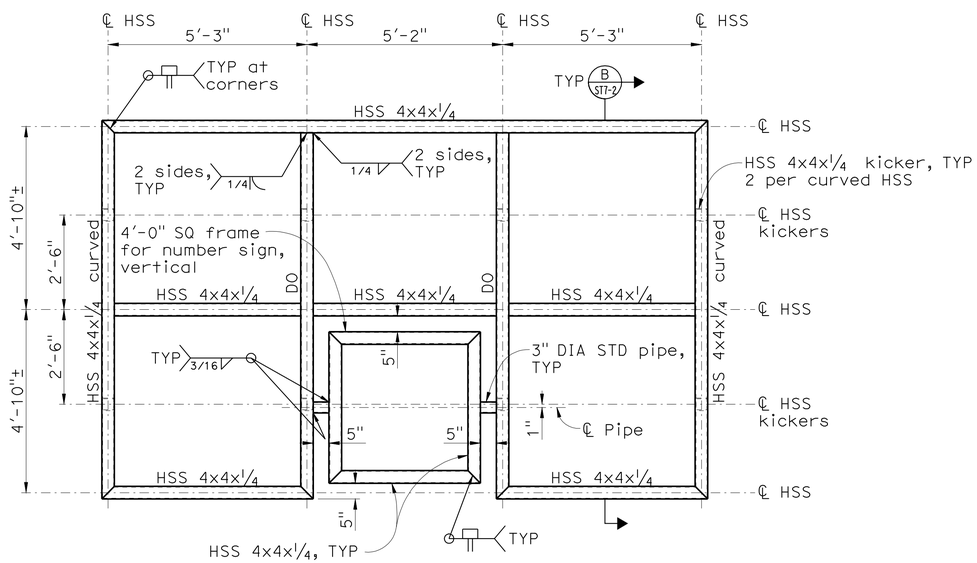

NOTE: See ARCH for screen frame locations. Coordinate all dimensions with ARCH.

TYP SCREEN FRAME ELEVATION - LINE C 1 ST7-2
1/2 = 1'-0"

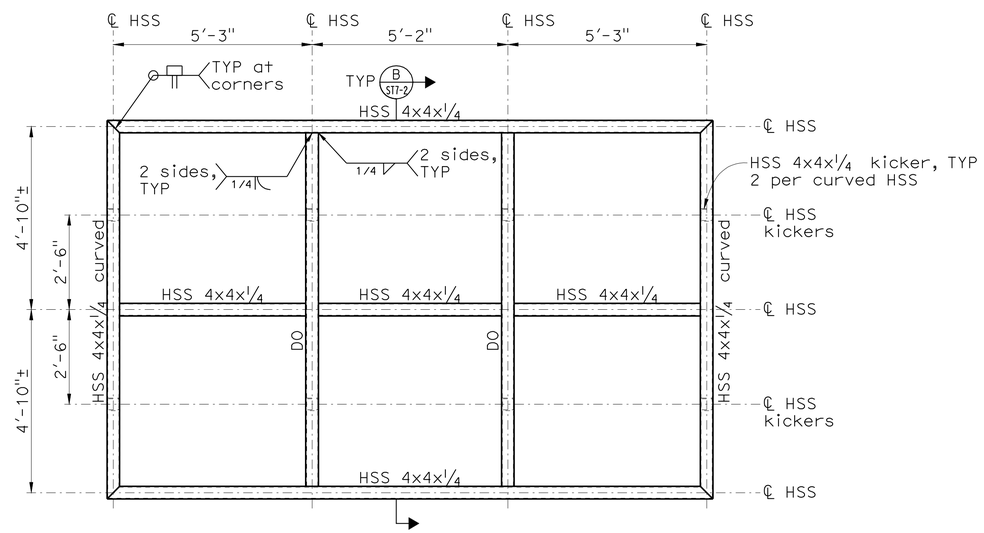

NOTE: See ARCH for screen frame locations. Coordinate all dimensions with ARCH.

TYP SCREEN FRAME ELEVATION - LINE L 2 ST7-2
1/2 = 1'-0"

DESIGN	BY S. HAYAT	CHECKED D. FURIA	
DETAILS	BY A. RICHARDSON	CHECKED D. FURIA	
QUANTITIES	BY G. TOLAN	CHECKED S. HAYAT	

PREPARED FOR THE STATE OF CALIFORNIA DEPARTMENT OF TRANSPORTATION

DIVISION OF ENGINEERING SERVICES
ARCHITECTURAL AND STRUCTURAL DESIGN

BRIDGE NO. 23W0001R
POST MILE 14.8

EASTBOUND CORDELIA CVEF
CVEF
CANOPY DETAILS No. 1

SHEET ST7-2

40a535wcST7-02.dgn
DS OSD imperial Rev. 10/07 18-MAY-2011 11:21

ORIGINAL SCALE IN INCHES FOR REDUCED PLANS 0 1 2 3

CU 04624
EA 0A5351

DISREGARD PRINTS BEARING EARLIER REVISION DATES

REVISION DATES (PRELIMINARY STAGE ONLY) 10/19/09 3/22/10 5/6/10 8/23/10 11/22/10 05/03/11

SHEET OF

20081178 (20081178ST7-2)

18-MAY-2011 11:21

40a535wcST7-0

DIST.	COUNTY	ROUTE	POST MILES TOTAL PROJECT	SHEET NO.	TOTAL SHEETS
04	Sol	12,80	L1.8/L2.0, 13.3/15.7	608	740

Mahvash Harris 05/03/11
REGISTERED STRUCTURAL ENGINEER DATE

REGISTERED PROFESSIONAL ENGINEER MAHVASH M. HARRIS No. 2639 Exp.12/31/12 STRUCTURAL STATE OF CALIFORNIA

5-16-11
PLANS APPROVAL DATE

The State of California or its officers or agents shall not be responsible for the accuracy or completeness of electronic copies of this plan sheet.

BIGGS CARDOSA ASSOCIATES
865 THE ALAMEDA
SAN JOSE, CA 95126
408-296-5515

SOLANO TRANSPORTATION AUTHORITY
ONE HARBOR CENTER, SUITE 130
SUISUN CITY, CA 94585

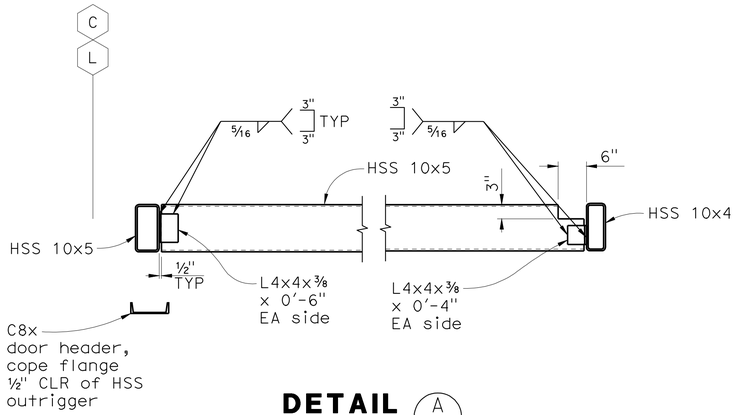

DETAIL A (ST7-3)
3/4" = 1'-0"

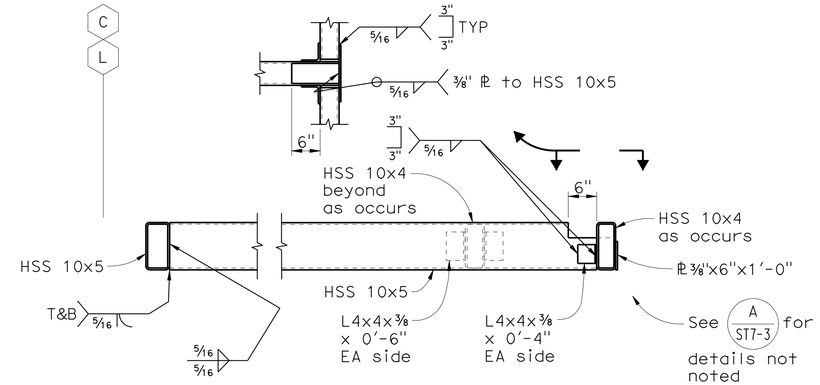

DETAIL B (ST7-3)
3/4" = 1'-0"

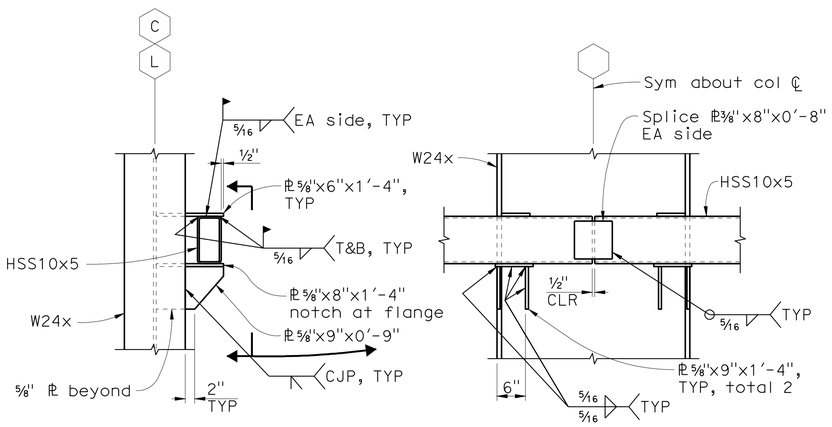

DETAIL C (ST7-3)
3/4" = 1'-0"

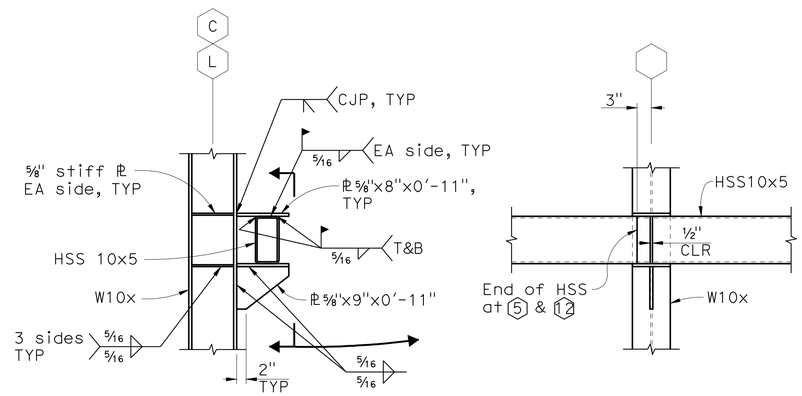

DETAIL D (ST7-3)
3/4" = 1'-0"

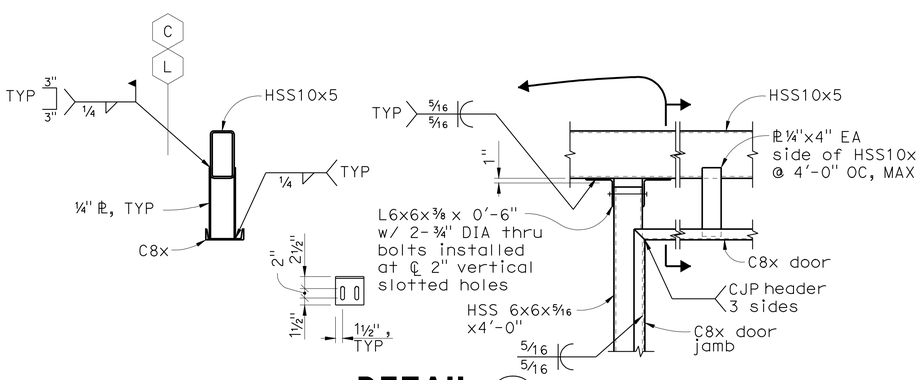

DETAIL E (ST7-3)
3/4" = 1'-0"

CALIFORNIA STATE FIRE MARSHAL
APPROVED

Approval of this plan does not authorize or approve any omission or deviation from applicable regulations. Final approval is subject to field inspection. One set of approved plans shall be available on the project site at all times.

Reviewed by: 5/9/11
Hans Henneberque
Senior Deputy State Fire Marshal

DESIGN	BY S. HAYAT	CHECKED D. FURIA	PREPARED FOR THE STATE OF CALIFORNIA DEPARTMENT OF TRANSPORTATION	DIVISION OF ENGINEERING SERVICES ARCHITECTURAL AND STRUCTURAL DESIGN	BRIDGE NO. 23W0001R
DETAILS	BY A. RICHARDSON	CHECKED D. FURIA			POST MILE 14.8
QUANTITIES	BY G. TOLAN	CHECKED S. HAYAT			

EASTBOUND CORDELIA CVEF

CVEF — CANOPY DETAILS No. 2

SHEET **ST7-3**

40a535wcST7-03.dgn
DS OSD imperial Rev. 10/07 18-MAY-2011 11:21

ORIGINAL SCALE IN INCHES FOR REDUCED PLANS 0 1 2 3

CU 04624
EA 0A5351

DISREGARD PRINTS BEARING EARLIER REVISION DATES

REVISION DATES (PRELIMINARY STAGE ONLY) 10/19/09 3/22/10 5/6/10 8/23/10 11/22/10 05/03/11 SHEET OF

20081178 (20081785T7-3)

18-MAY-2011 11:21

40a535wcST7-0

DIST.	COUNTY	ROUTE	POST MILES TOTAL PROJECT	SHEET NO.	TOTAL SHEETS
04	Sol	12,80	L1.8/L2.0, 13.3/15.7	609	740

Mahvash Harms 05/03/11
REGISTERED STRUCTURAL ENGINEER DATE

REGISTERED PROFESSIONAL ENGINEER MAHVASH M. HARMS No. 2639 Exp. 12/31/12 STRUCTURAL STATE OF CALIFORNIA

5-16-11
PLANS APPROVAL DATE

The State of California or its officers or agents shall not be responsible for the accuracy or completeness of electronic copies of this plan sheet.

BIGGS CARDOSA ASSOCIATES
865 THE ALAMEDA
SAN JOSE, CA 95126
408-296-5515

SOLANO TRANSPORTATION AUTHORITY
ONE HARBOR CENTER, SUITE 130
SUISUN CITY, CA 94585

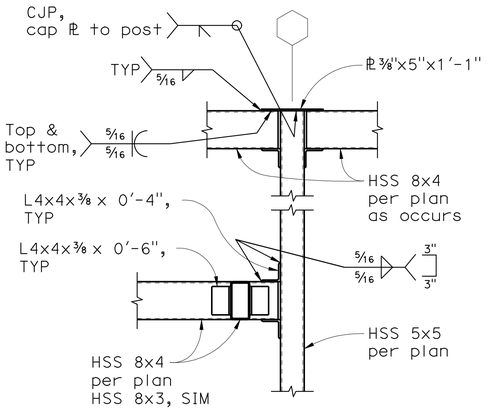

DETAIL A ST7-4
3/4" = 1'-0"

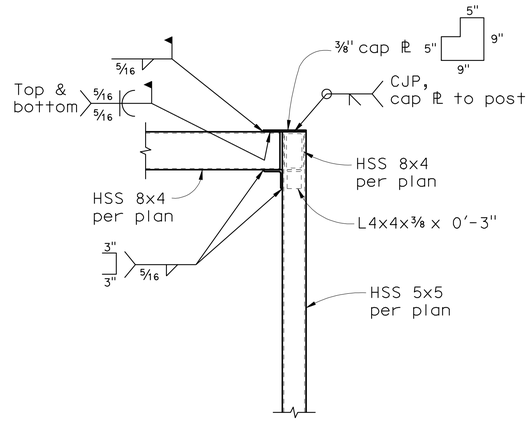

DETAIL B ST7-4
3/4" = 1'-0"

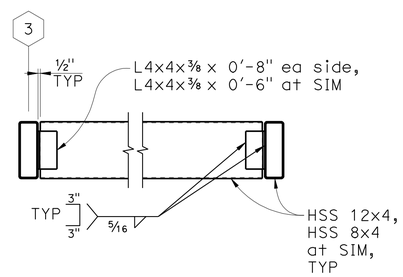

DETAIL E ST7-4
3/4" = 1'-0"

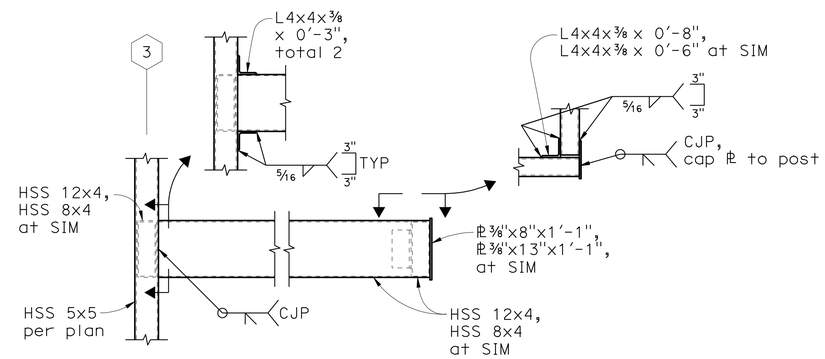

DETAIL F ST7-4
3/4" = 1'-0"

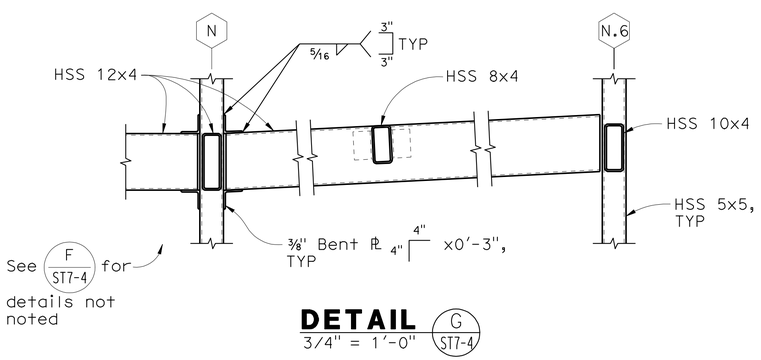

DETAIL G ST7-4
3/4" = 1'-0"

CALIFORNIA STATE FIRE MARSHAL
APPROVED

Approval of this plan does not authorize or approve any omission or deviation from applicable regulations. Final approval is subject to field inspection. One set of approved plans shall be available on the project site at all times.

Reviewed by: Hans Henneberque 5/9/11
Hans Henneberque
Senior Deputy State Fire Marshal

DESIGN	BY S. HAYAT	CHECKED D. FURIA	
DETAILS	BY A. RICHARDSON	CHECKED D. FURIA	
QUANTITIES	BY G. TOLAN	CHECKED S. HAYAT	

PREPARED FOR THE STATE OF CALIFORNIA DEPARTMENT OF TRANSPORTATION

DIVISION OF ENGINEERING SERVICES
ARCHITECTURAL AND STRUCTURAL DESIGN

BRIDGE NO. 23W0001R
POST MILE 14.8

EASTBOUND CORDELIA CVEF

CVEF — CANOPY DETAILS No. 3

SHEET **ST7-4**

40a535wcST7-04.dgn
DS OSD imperial Rev. 10/07 18-MAY-2011 11:21

ORIGINAL SCALE IN INCHES FOR REDUCED PLANS 0 1 2 3

CU 04624
EA 0A5351

DISREGARD PRINTS BEARING EARLIER REVISION DATES →
REVISION DATES (PRELIMINARY STAGE ONLY) 10/19/09 3/22/10 5/6/10 8/23/10 11/22/10 05/03/11 SHEET OF

20081178 (20081178S17-4)
18-MAY-2011 11:21
40a535wcST7-0

DIST.	COUNTY	ROUTE	POST MILES TOTAL PROJECT	SHEET NO.	TOTAL SHEETS
04	Sol	12,80	L1.8/L2.0, 13.3/15.7	610	740

Mahvash Harris 05/03/11
REGISTERED STRUCTURAL ENGINEER DATE

REGISTERED PROFESSIONAL ENGINEER MAHVASH M. HARRIS No. 2639 Exp.12/31/12 STRUCTURAL STATE OF CALIFORNIA

5-16-11
PLANS APPROVAL DATE

The State of California or its officers or agents shall not be responsible for the accuracy or completeness of electronic copies of this plan sheet.

BIGGS CARDOSA ASSOCIATES
865 THE ALAMEDA
SAN JOSE, CA 95126
408-296-5515

SOLANO TRANSPORTATION AUTHORITY
ONE HARBOR CENTER, SUITE 130
SUISUN CITY, CA 94585

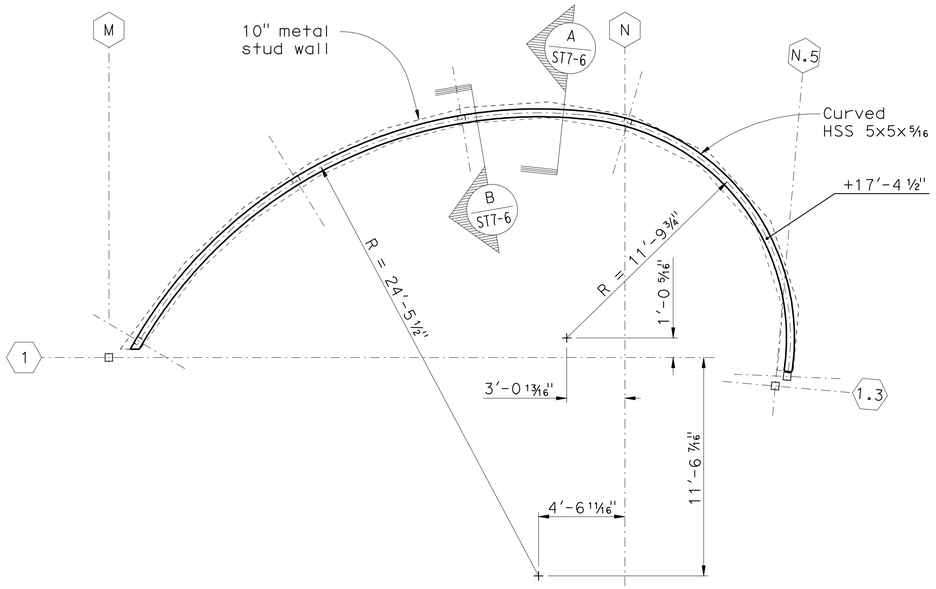

UPPER FRAMING PLAN
1/4" = 1'-0"

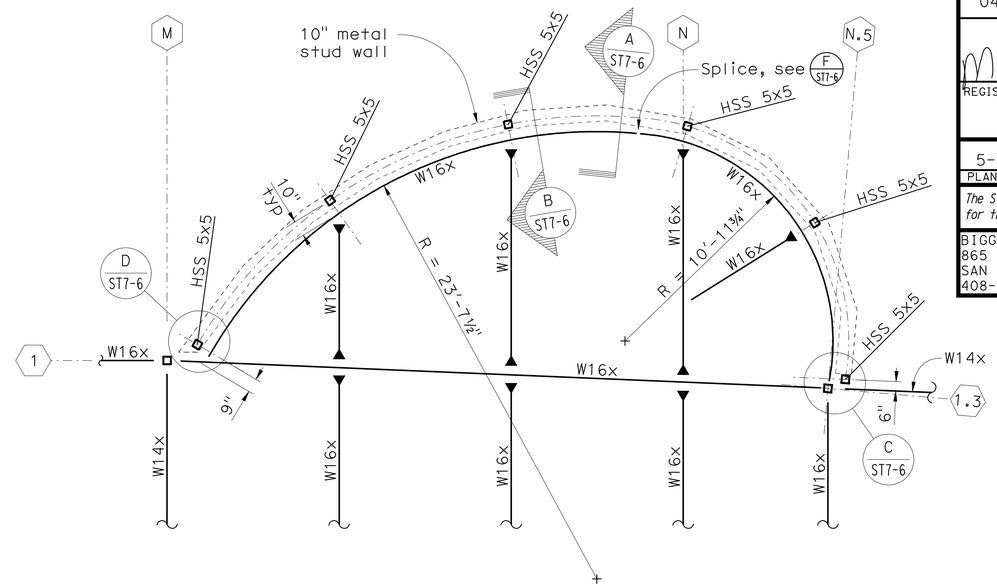

PARTIAL ROOF FRAMING PLAN
1/4" = 1'-0"

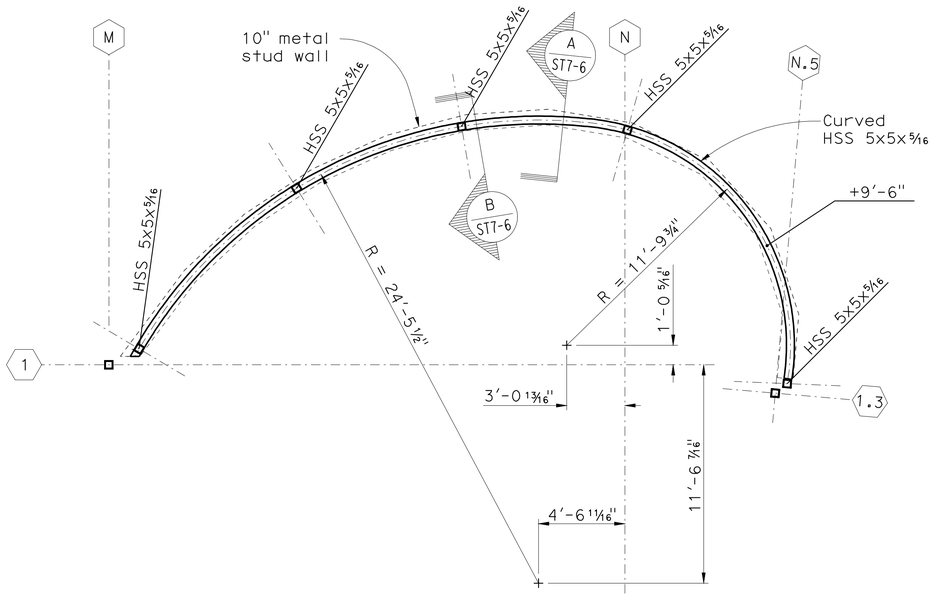

LOWER FRAMING PLAN
1/4" = 1'-0"

CALIFORNIA STATE FIRE MARSHAL APPROVED

Approval of this plan does not authorize or approve any omission or deviation from applicable regulations. Final approval is subject to field inspection. One set of approved plans shall be available on the project site at all times.

Reviewed by: 5/9/11
Hans Henneberque
Senior Deputy State Fire Marshal

DESIGN	BY S. HAYAT	CHECKED D. FURIA	
DETAILS	BY A. RICHARDSON	CHECKED D. FURIA	
QUANTITIES	BY G. TOLAN	CHECKED S. HAYAT	

PREPARED FOR THE STATE OF CALIFORNIA DEPARTMENT OF TRANSPORTATION

DIVISION OF ENGINEERING SERVICES
ARCHITECTURAL AND STRUCTURAL DESIGN

BRIDGE NO. 23W0001R
POST MILE 14.8

EASTBOUND CORDELIA CVEF

CVEF — OBSERVATION ROOM ROOF FRAMING PLANS

SHEET **ST7-5**

40a535wcST7-05.dgn
DS OSD imperial Rev. 10/07 18-MAY-2011 11:21

ORIGINAL SCALE IN INCHES FOR REDUCED PLANS 0 1 2 3

CU 04264
EA 0A5351

DISREGARD PRINTS BEARING EARLIER REVISION DATES

REVISION DATES (PRELIMINARY STAGE ONLY) 10/19/09 3/22/10 5/6/10 8/23/10 11/22/10 05/03/11 SHEET OF

20081178 (20081785177-5)

18-MAY-2011 11:21

40a535wcST7-0

DIST.	COUNTY	ROUTE	POST MILES TOTAL PROJECT	SHEET NO.	TOTAL SHEETS
04	Sol	12,80	L1.8/L2.0, 13.3/15.7	611	740

Mahvash Harris 05/03/11
REGISTERED STRUCTURAL ENGINEER DATE

REGISTERED PROFESSIONAL ENGINEER MAHVASH M. HARRIS No. 2639 Exp. 12/31/12 STRUCTURAL STATE OF CALIFORNIA

5-16-11
PLANS APPROVAL DATE

The State of California or its officers or agents shall not be responsible for the accuracy or completeness of electronic copies of this plan sheet.

BIGGS CARDOSA ASSOCIATES
865 THE ALAMEDA
SAN JOSE, CA 95126
408-296-5515

SOLANO TRANSPORTATION AUTHORITY
ONE HARBOR CENTER, SUITE 130
SUISUN CITY, CA 94585

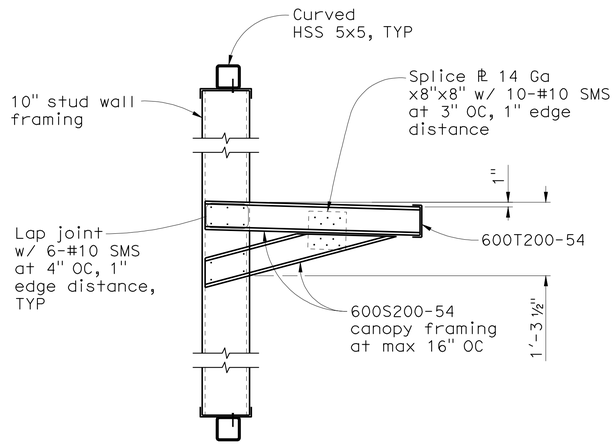

DETAIL A (ST7-6)
3/4" = 1'-0"

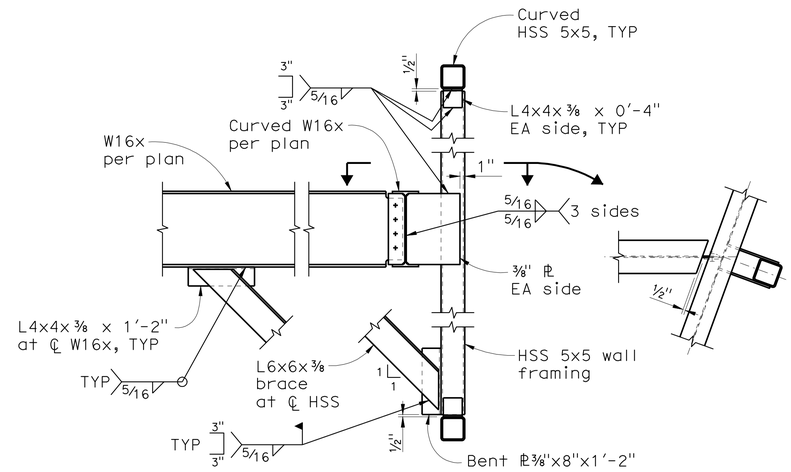

DETAIL B (ST7-6)
3/4" = 1'-0"

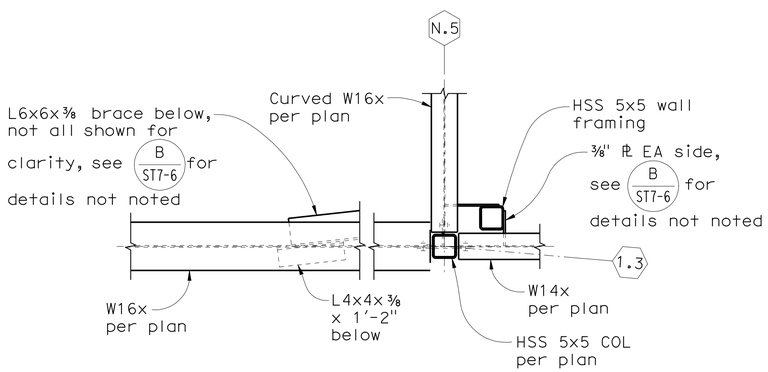

DETAIL C (ST7-6)
3/4" = 1'-0"

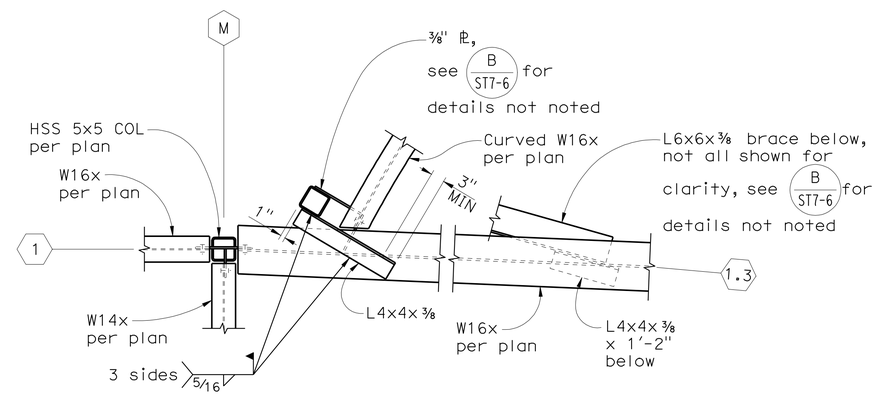

DETAIL D (ST7-6)
3/4" = 1'-0"

CALIFORNIA STATE FIRE MARSHAL APPROVED

Approval of this plan does not authorize or approve any omission or deviation from applicable regulations. Final approval is subject to field inspection. One set of approved plans shall be available on the project site at all times.

Reviewed by: 5/9/11
Hans Hennebergue
Senior Deputy State Fire Marshal

DESIGN	BY S. HAYAT	CHECKED D. FURIA	
DETAILS	BY A. RICHARDSON	CHECKED D. FURIA	
QUANTITIES	BY G. TOLAN	CHECKED S. HAYAT	

PREPARED FOR THE STATE OF CALIFORNIA DEPARTMENT OF TRANSPORTATION

DIVISION OF ENGINEERING SERVICES
ARCHITECTURAL AND STRUCTURAL DESIGN

BRIDGE NO. 23W0001R
POST MILE 14.8

EASTBOUND CORDELIA CVEF

CVEF — OBSERVATION ROOM ROOF FRAMING DETAILS

SHEET **ST7-6**

40a535wcST7-06.dgn
DS OSD imperial Rev. 10/07 18-MAY-2011 11:37

ORIGINAL SCALE IN INCHES FOR REDUCED PLANS 0 1 2 3

CU 04264
EA 0A5351

DISREGARD PRINTS BEARING EARLIER REVISION DATES

REVISION DATES (PRELIMINARY STAGE ONLY) 10/19/09 3/22/10 5/6/10 8/23/10 11/22/10 05/03/11

SHEET OF

20081178 (20081178ST7-6) 18-MAY-2011 11:37

40a535wcST7-0

DIST.	COUNTY	ROUTE	POST MILES TOTAL PROJECT	SHEET NO.	TOTAL SHEETS
04	Sol	12,80	L1.8/L2.0, 13.3/15.7	612	740

REGISTERED CIVIL ENGINEER 05/03/11 DATE

REGISTERED PROFESSIONAL ENGINEER JOANN ENGLISH No. 36098 Exp. 6/30/12 CIVIL STATE OF CALIFORNIA

5-16-11
PLANS APPROVAL DATE

The State of California or its officers or agents shall not be responsible for the accuracy or completeness of electronic copies of this plan sheet.

WMH CORPORATION
555 12th Street
Suite 1900
Oakland, CA 94607

SOLANO TRANSPORTATION AUTHORITY
ONE HARBOR CENTER, SUITE 130
SUISUN CITY, CA 94585

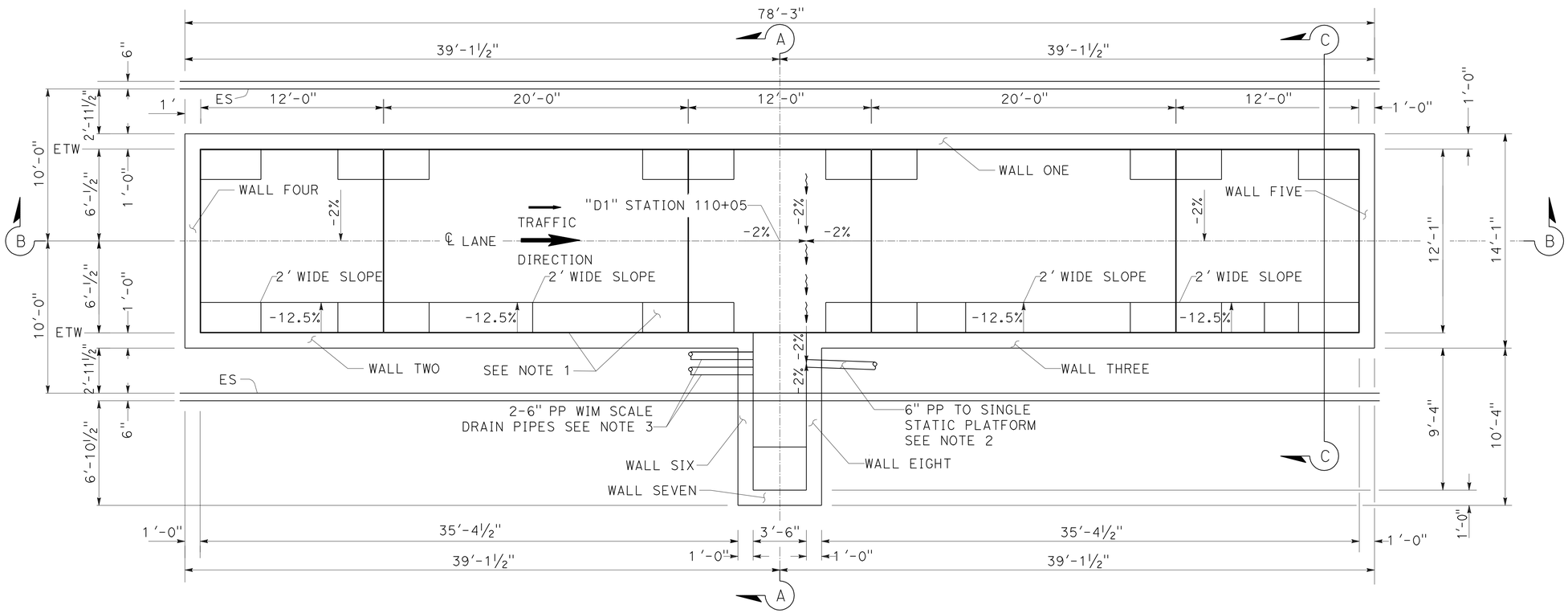

MULTI-PLATFORM

PLAN VIEW

NOTES:

1. CONFIGURATION, DIMENSIONS, RESTRAINERS AND REINFORCEMENT OF WEIGHBRIDGE ASSEMBLY SHALL BE RECOMMENDED BY THE SCALE MANUFACTURER.
2. 6" PLASTIC PIPE DRAINS MULTI-PLATFORM STATIC SCALE PIT TO SINGLE-PLATFORM STATIC SCALE SUMP.
3. 6" PLASTIC PIPES DRAINS FROM WEIGH -IN-MOTION SCALES TO MULTI-PLATFORM STATIC SCALE.
4. FOR BAR SIZE, LENGTH AND BENDING DETAILS SEE REINFORCEMENT CHARTS LOCATED ON SHEETS ST-8-4 AND ST8-8.

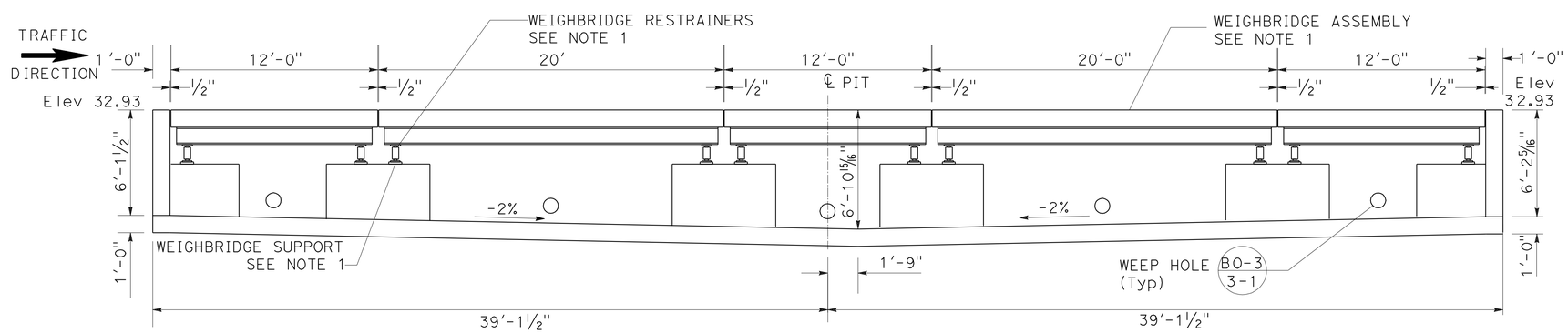

SECTION B-B

CALIFORNIA STATE FIRE MARSHAL
APPROVED

Approval of this plan does not authorize or approve any omission or deviation from applicable regulations. Final approval is subject to field inspection. One set of approved plans shall be available on the project site at all times.

Reviewed by: Hans Hanneberque 5/9/11
Hans Hanneberque
Senior Deputy State Fire Marshal

NO SCALE

	BY	CHECKED
DESIGN	DARRELL WADE	JOANN ENGLISH
DETAILS	DARRELL WADE	JOANN ENGLISH
QUANTITIES	DARRELL WADE	JOANN ENGLISH

PREPARED FOR THE STATE OF CALIFORNIA DEPARTMENT OF TRANSPORTATION

DIVISION OF ENGINEERING SERVICES
ARCHITECTURAL AND STRUCTURAL DESIGN

BRIDGE NO. 23W0001R
POST MILE 14.8

EASTBOUND CORDELIA CVEF

CVEF

MULTI-PLATFORM STATIC SCALE PIT DETAILS No. 1

SHEET ST8-1

40a535wcST8-01.dgn
DS OSD Imperial Rev. 10/07 18-MAY-2011 11:37

ORIGINAL SCALE IN INCHES FOR REDUCED PLANS 0 1 2 3

CU 04264
EA 0A5351

DISREGARD PRINTS BEARING EARLIER REVISION DATES → 02/15/10 04/20/10 07/09/10 11/12/10 11/22/10 05/03/11

REVISION DATES (PRELIMINARY STAGE ONLY) SHEET OF

18-MAY-2011 11:37

40a535wcST8-01.dgn

DIST.	COUNTY	ROUTE	POST MILES TOTAL PROJECT	SHEET NO.	TOTAL SHEETS
04	Sol	12,80	L1.8/L2.0, 13.3/15.7	613	740

REGISTERED CIVIL ENGINEER 05/03/11 DATE

REGISTERED PROFESSIONAL ENGINEER JOANN ENGLISH No. 36098 Exp. 6/30/12 CIVIL STATE OF CALIFORNIA

5-16-11
PLANS APPROVAL DATE

The State of California or its officers or agents shall not be responsible for the accuracy or completeness of electronic copies of this plan sheet.

WMH CORPORATION
555 12th Street
Suite 1900
Oakland, CA 94607

SOLANO TRANSPORTATION AUTHORITY
ONE HARBOR CENTER, SUITE 130
SUISUN CITY, CA 94585

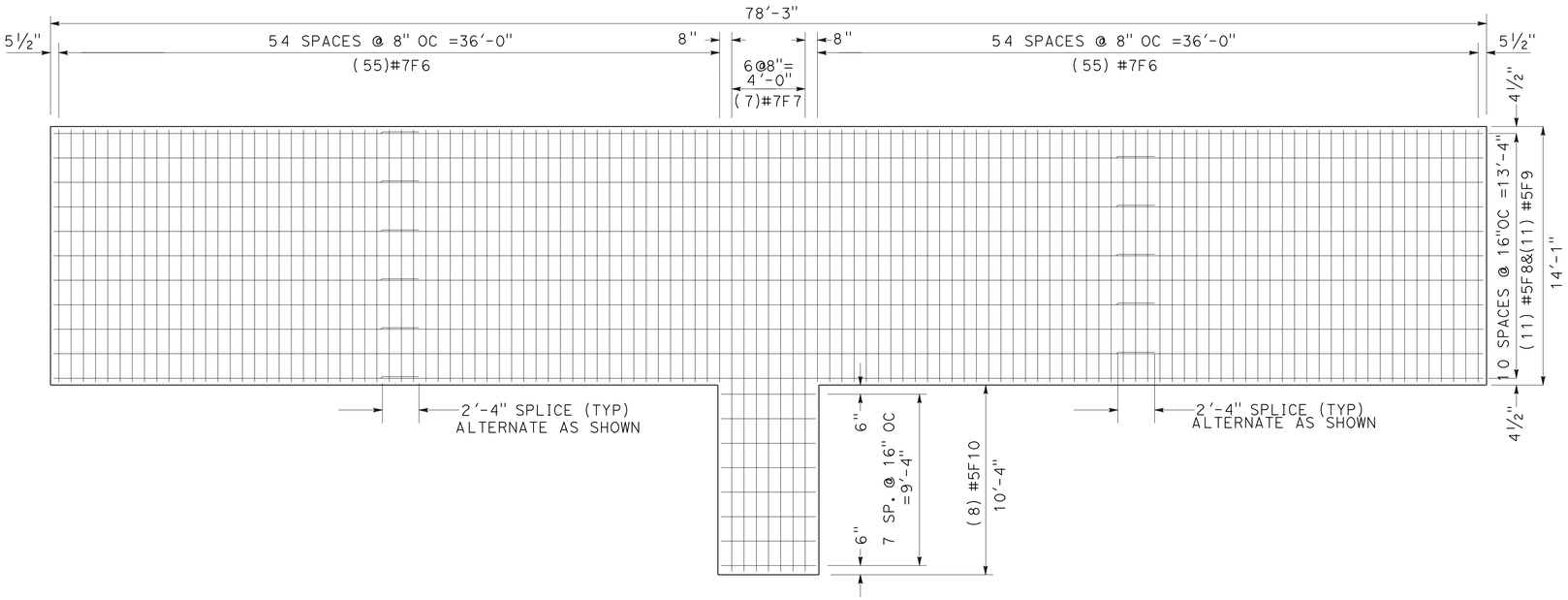

FOOTING TOP MAT REINFORCEMENT

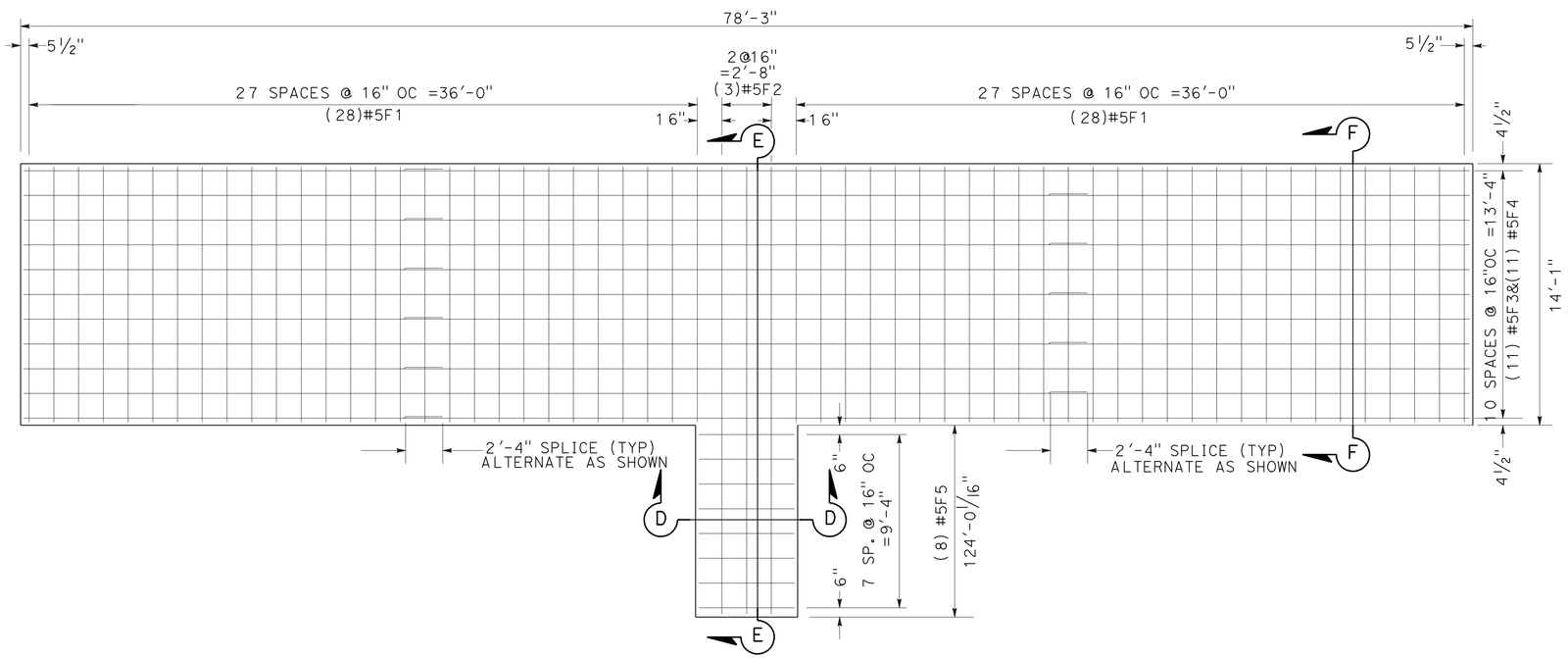

FOOTING BOTTOM MAT REINFORCEMENT

CALIFORNIA STATE FIRE MARSHAL
APPROVED

Approval of this plan does not authorize or approve any omission or deviation from applicable regulations. Final approval is subject to field inspection. One set of approved plans shall be available on the project site at all times.

Reviewed by Hans Hennebergue 5/9/11
Hans Hennebergue
Senior Deputy State Fire Marshal

NO SCALE

	BY	CHECKED
DESIGN	DARRELL WADE	JOANN ENGLISH
DETAILS	DARRELL WADE	JOANN ENGLISH
QUANTITIES	DARRELL WADE	JOANN ENGLISH

PREPARED FOR THE STATE OF CALIFORNIA DEPARTMENT OF TRANSPORTATION

DIVISION OF ENGINEERING SERVICES
ARCHITECTURAL AND STRUCTURAL DESIGN

BRIDGE NO. 23W000IR
POST MILE 14.8

EASTBOUND CORDELIA CVEF

CVEF

MULTI-PLATFORM STATIC SCALE PIT DETAILS No. 2

SHEET **ST8-2**

40a535wcST8-02.dgn
DS OSD ImperialRev.10/07 18-MAY-2011 11:37

ORIGINAL SCALE IN INCHES FOR REDUCED PLANS 0 1 2 3

CU 04264
EA 0A5351

DISREGARD PRINTS BEARING EARLIER REVISION DATES → 02/15/10 04/20/10 07/09/10 11/15/10 11/22/10 05/03/11

REVISION DATES (PRELIMINARY STAGE ONLY) SHEET OF

18-MAY-2011 11:37
40a535wcST8-02.dgn

DIST.	COUNTY	ROUTE	POST MILES TOTAL PROJECT	SHEET NO.	TOTAL SHEETS
04	Sol	12,80	L1.8/L2.0, 13.3/15.7	614	740

REGISTERED CIVIL ENGINEER 05/03/11 DATE

REGISTERED PROFESSIONAL ENGINEER JOANN ENGLISH No. 36098 Exp. 6/30/12 CIVIL STATE OF CALIFORNIA

5-16-11
PLANS APPROVAL DATE

The State of California or its officers or agents shall not be responsible for the accuracy or completeness of electronic copies of this plan sheet.

WMH CORPORATION
555 12th Street
Suite 1900
Oakland, CA 94607

SOLANO TRANSPORTATION AUTHORITY
ONE HARBOR CENTER, SUITE 130
SUISUN CITY, CA 94585

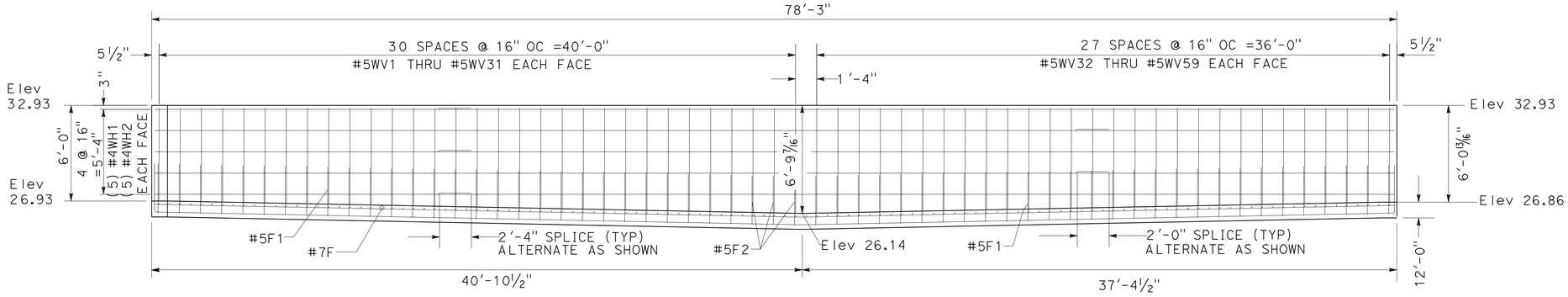

WALL ONE ELEVATION
(LOOKING SOUTHEAST)

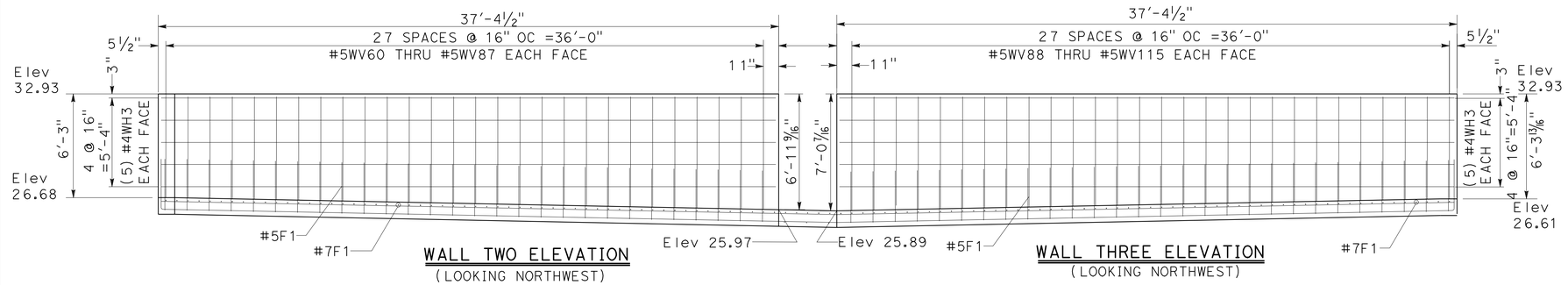

WALL TWO ELEVATION
(LOOKING NORTHWEST)

WALL THREE ELEVATION
(LOOKING NORTHWEST)

CALIFORNIA STATE FIRE MARSHAL
APPROVED

Approval of this plan does not authorize or approve any omission or deviation from applicable regulations. Final approval is subject to field inspection. One set of approved plans shall be available on the project site at all times.

Reviewed by: 5/9/11
Hans Hennebergue
Senior Deputy State Fire Marshal

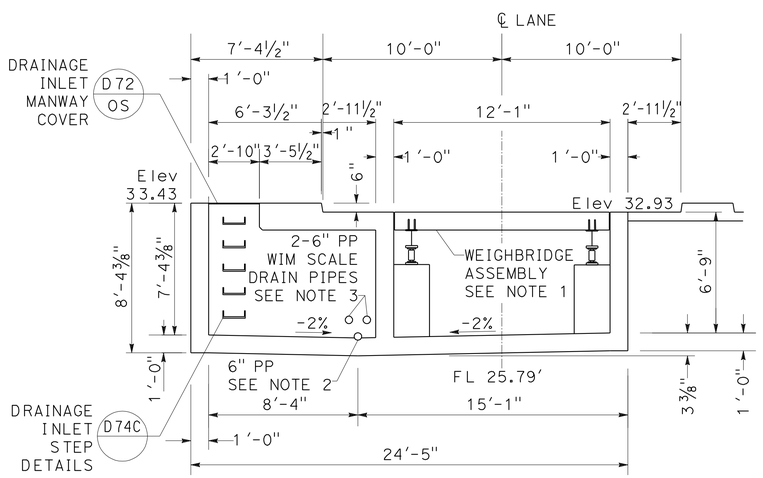

SECTION A-A

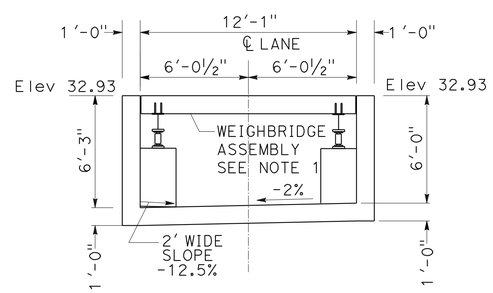

SECTION C-C

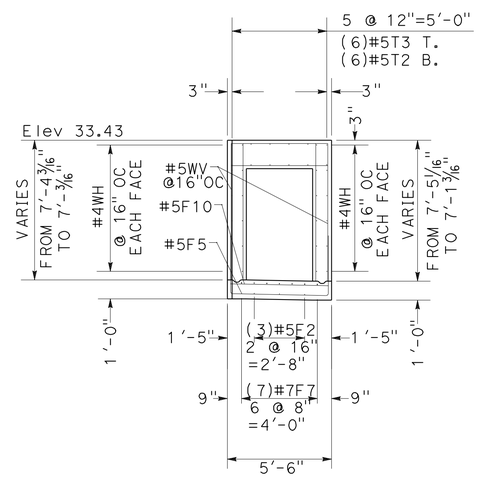

SECTION D-D

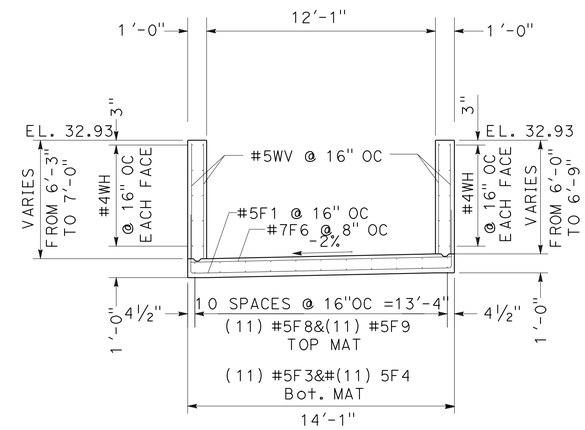

SECTION E-E

NO SCALE

	BY	CHECKED
DESIGN	DARRELL WADE	JOANN ENGLISH
DETAILS	DARRELL WADE	JOANN ENGLISH
QUANTITIES	DARRELL WADE	JOANN ENGLISH

PREPARED FOR THE STATE OF CALIFORNIA DEPARTMENT OF TRANSPORTATION

DIVISION OF ENGINEERING SERVICES
ARCHITECTURAL AND STRUCTURAL DESIGN

BRIDGE NO. 23W0001R
POST MILE 14.8

EASTBOUND CORDELIA CVEF

CVEF

MULTI-PLATFORM STATIC SCALE PIT DETAILS No. 3

SHEET ST8-3

40a535wcST8-03.dgn
DS OSD Imperial Rev. 10/07 18-MAY-2011 11:38

ORIGINAL SCALE IN INCHES FOR REDUCED PLANS 0 1 2 3

CU 04264
EA 0A5351

DISREGARD PRINTS BEARING EARLIER REVISION DATES → 02/15/10 04/20/10 07/09/10 11/16/10 11/22/10 05/03/11

REVISION DATES (PRELIMINARY STAGE ONLY) SHEET OF

18-MAY-2011 11:38
40a535wcST8-03.dgn

DIST.	COUNTY	ROUTE	POST MILES TOTAL PROJECT	SHEET NO.	TOTAL SHEETS
04	Sol	12,80	L1.8/L2.0, 13.3/15.7	615	740

REGISTERED CIVIL ENGINEER 05/03/11 DATE

REGISTERED PROFESSIONAL ENGINEER JOANN ENGLISH No. 36098 Exp. 6/30/12 CIVIL STATE OF CALIFORNIA

5-16-11
PLANS APPROVAL DATE

The State of California or its officers or agents shall not be responsible for the accuracy or completeness of electronic copies of this plan sheet.

WMH CORPORATION
555 12th Street
Suite 1900
Oakland, CA 94607

SOLANO TRANSPORTATION AUTHORITY
ONE HARBOR CENTER, SUITE 130
SUISUN CITY, CA 94585

CALIFORNIA STATE FIRE MARSHAL APPROVED

Approval of this plan does not authorize or approve any omission or deviation from applicable regulations. Final approval is subject to field inspection. One set of approved plans shall be available on the project site at all times.

Reviewed by: 5/9/11
Hans Henneberque
Senior Deputy State Fire Marshal

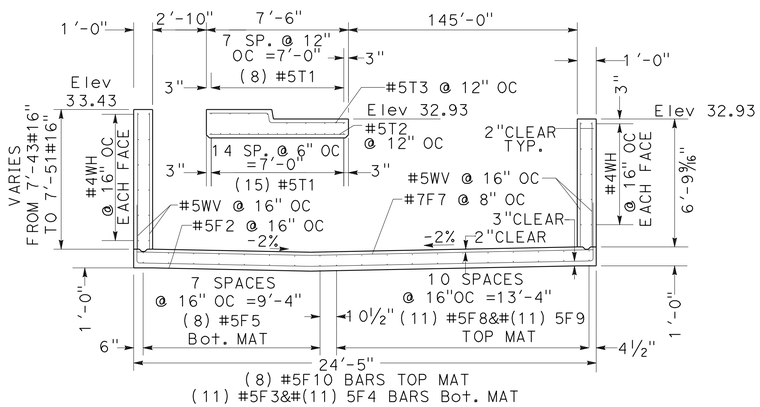

SECTION F-F

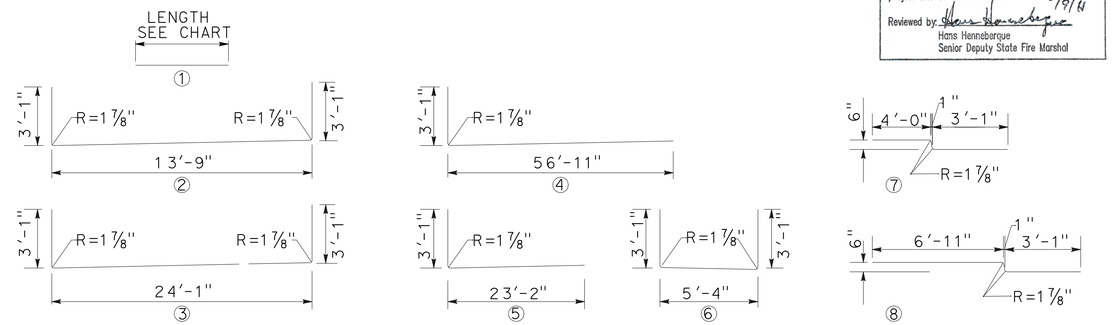

BAR BENDING DETAILS

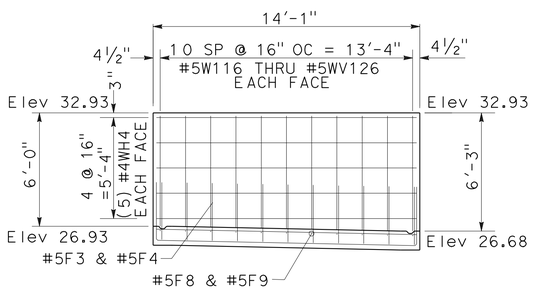

WALL FOUR ELEVATION
(LOOKING NORTHEAST)

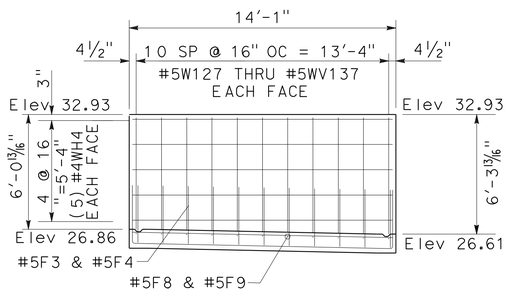

WALL FIVE ELEVATION
(LOOKING SOUTHWEST)

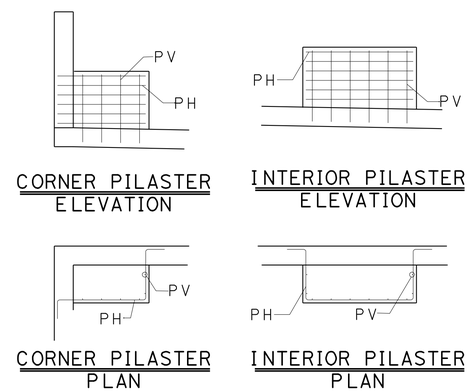

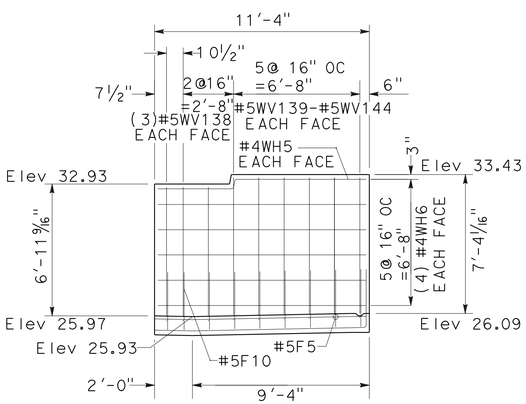

WALL SIX ELEVATION
(LOOKING NORTHEAST)

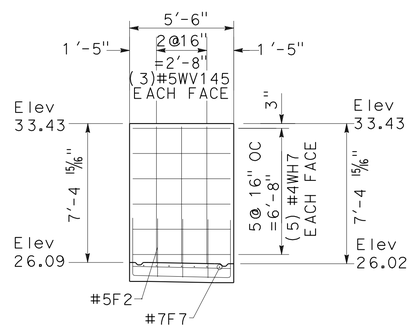

WALL SEVEN ELEVATION
(LOOKING NORTHWEST)

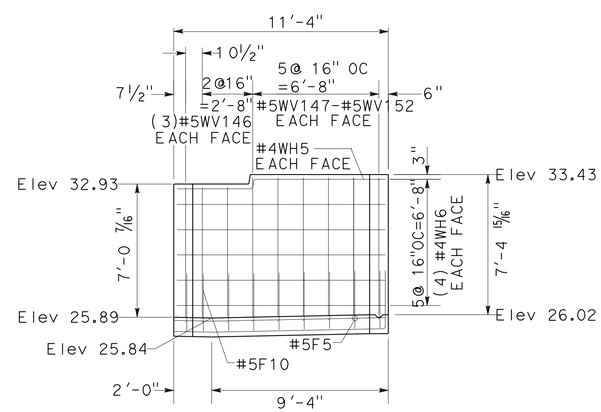

WALL EIGHT ELEVATION
(LOOKING SOUTHWEST)

REINFORCEMENT CHART

GRADE 60 BARS				
BAR	# TYPE	SIZE	LENGTH	No. REQ'D
#4WH1	1	4	60'-0"	10
#4WH2	1	4	19'-11"	10
#4WH3	1	4	37'-0 1/2"	20
#4WH4	1	4	13'-9"	20
#4WH5	8	4	11'-4"	4
#4WH6	1	4	11'-0"	16
#4WH7	1	4	5'-2"	10
#5F1	2	5	19'-11"	56
#5F2	3	5	30'-3"	3
#5F3	4	5	60'-0"	11
#5F4	5	5	26'-3"	11
#5F5	6	5	11'-4"	8
#5F8	1	5	60'-0"	11
#5F9	1	5	20'-3"	11
#5F10	1	5	5'-2"	8
#5T1	1	5	5'-2"	23
#5T2	1	5	7'-2"	6
#5T3	7	5	7'-6"	6
#5WV1	1	5	5'-10"	62 TOTAL
THRU	0.3" INCREMENT			
#5WV31	1	5	6'-7"	
#5WV32	1	5	6'-7"	56 TOTAL
THRU	0.3" INCREMENT			
#5WV59	1	5	5'-9"	
#5WV60	1	5	6'-1"	56 TOTAL
THRU	0.3" INCREMENT			
#5WV87	1	5	6'-9"	
#5WV88	1	5	6'-10"	56 TOTAL
THRU	0.3" INCREMENT			
#5WV115	1	5	6'-2"	
#5WV116	1	5	5'-10"	22 TOTAL
THRU	0.3" INCREMENT			
#5WV126	1	5	6'-1"	
#5WV127	1	5	5'-11"	22 TOTAL
THRU	0.3" INCREMENT			
#5WV137	1	5	6'-2"	
#5WV138	1	5	6'-10"	6
#5WV139	1	5	7'-4"	12 TOTAL
THRU	0.3" INCREMENT			
#5WV144	1	5	7'-2"	
#5WV145	1	5	7'-2 1/2"	6
#5WV146	1	5	6'-11"	6
#5WV147	1	5	7'-5"	12 TOTAL
THRU	0.3" INCREMENT			
#5WV152	1	5	7'-3"	
#7F6	1	7	13'-9"	110
#7F7	1	7	24'-1"	7

NO SCALE

	BY	CHECKED
DESIGN	DARRELL WADE	JOANN ENGLISH
DETAILS	DARRELL WADE	JOANN ENGLISH
QUANTITIES	DARRELL WADE	JOANN ENGLISH

PREPARED FOR THE STATE OF CALIFORNIA DEPARTMENT OF TRANSPORTATION

DIVISION OF ENGINEERING SERVICES
ARCHITECTURAL AND STRUCTURAL DESIGN

BRIDGE NO. 23W0001R
POST MILE 14.8

EASTBOUND CORDELIA CVEF

CVEF

MULTI-PLATFORM STATIC SCALE PIT DETAILS No. 4

SHEET ST8-4

40a535wcST8-04.dgn
DS OSD Imperial Rev. 10/07 18-MAY-2011 11:38

ORIGINAL SCALE IN INCHES FOR REDUCED PLANS 0 1 2 3

CU 04264
EA 0A5351

DISREGARD PRINTS BEARING EARLIER REVISION DATES

REVISION DATES (PRELIMINARY STAGE ONLY) 05/03/11 SHEET OF

18-MAY-2011 11:38

40a535wcST8-04.dgn

DIST.	COUNTY	ROUTE	POST MILES TOTAL PROJECT	SHEET NO.	TOTAL SHEETS
04	Sol	12,80	L1.8/L2.0, 13.3/15.7	616	740

REGISTERED CIVIL ENGINEER 05/03/11 DATE

REGISTERED PROFESSIONAL ENGINEER JOANN ENGLISH No. 36098 Exp. 6/30/12 CIVIL STATE OF CALIFORNIA

5-16-11
PLANS APPROVAL DATE

The State of California or its officers or agents shall not be responsible for the accuracy or completeness of electronic copies of this plan sheet.

WMH CORPORATION
555 12th Street
Suite 1900
Oakland, CA 94607

SOLANO TRANSPORTATION AUTHORITY
ONE HARBOR CENTER, SUITE 130
SUISUN CITY, CA 94585

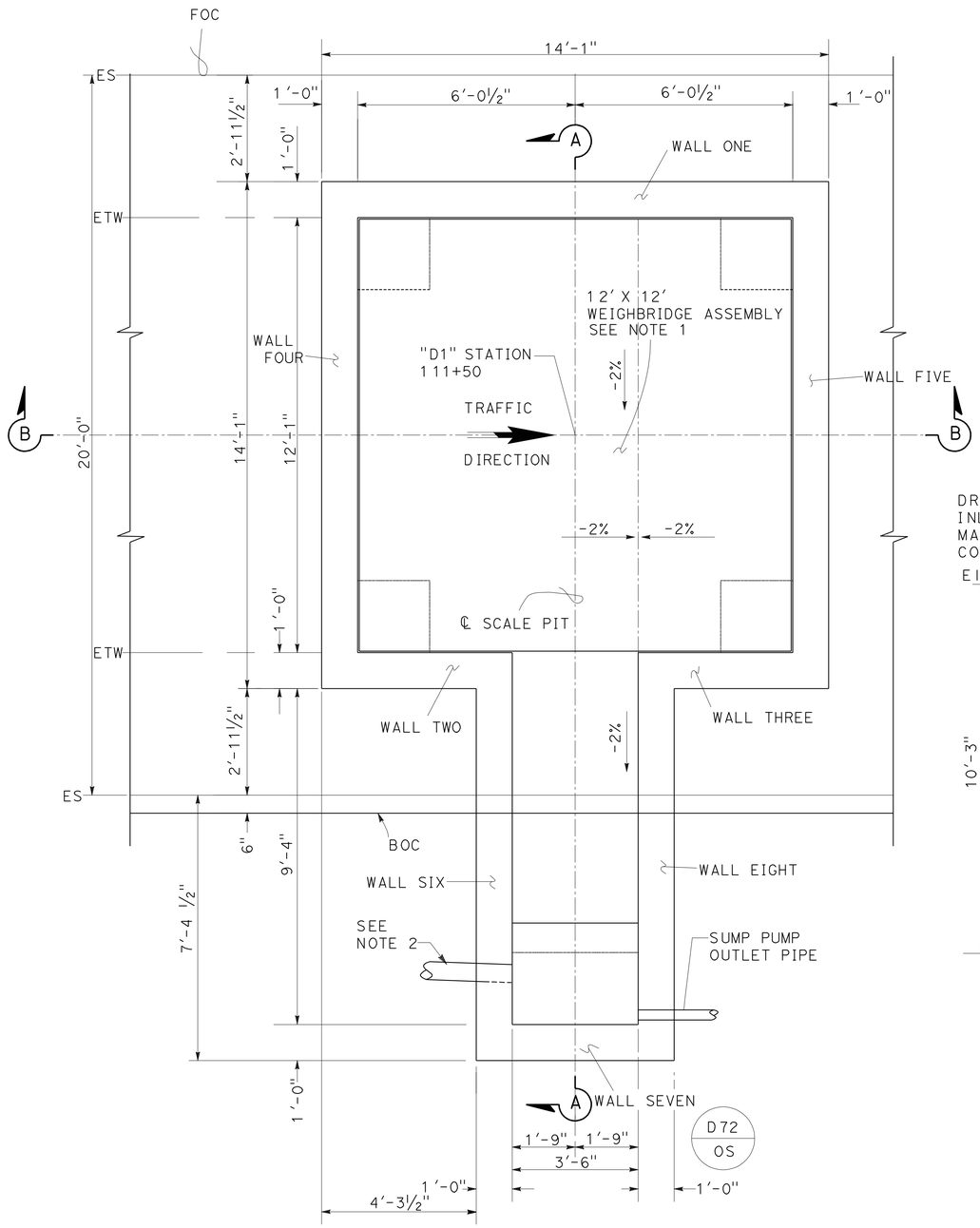

FOR NOTES
SEE SHEET ST8-1

SINGLE-PLATFORM
PLAN VIEW

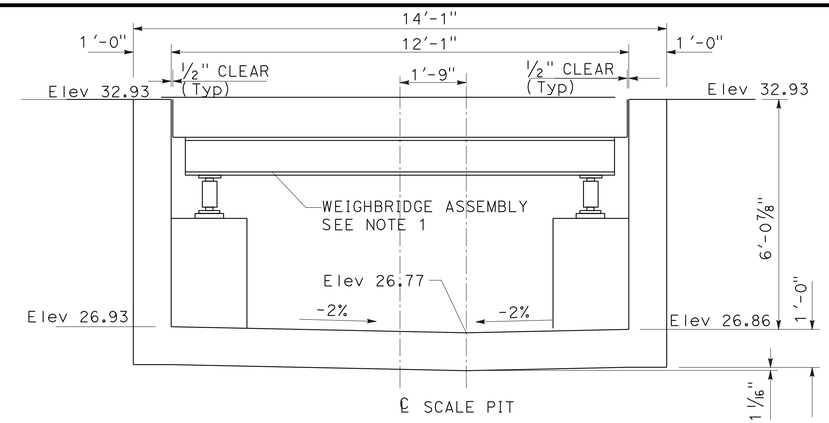

SECTION B-B

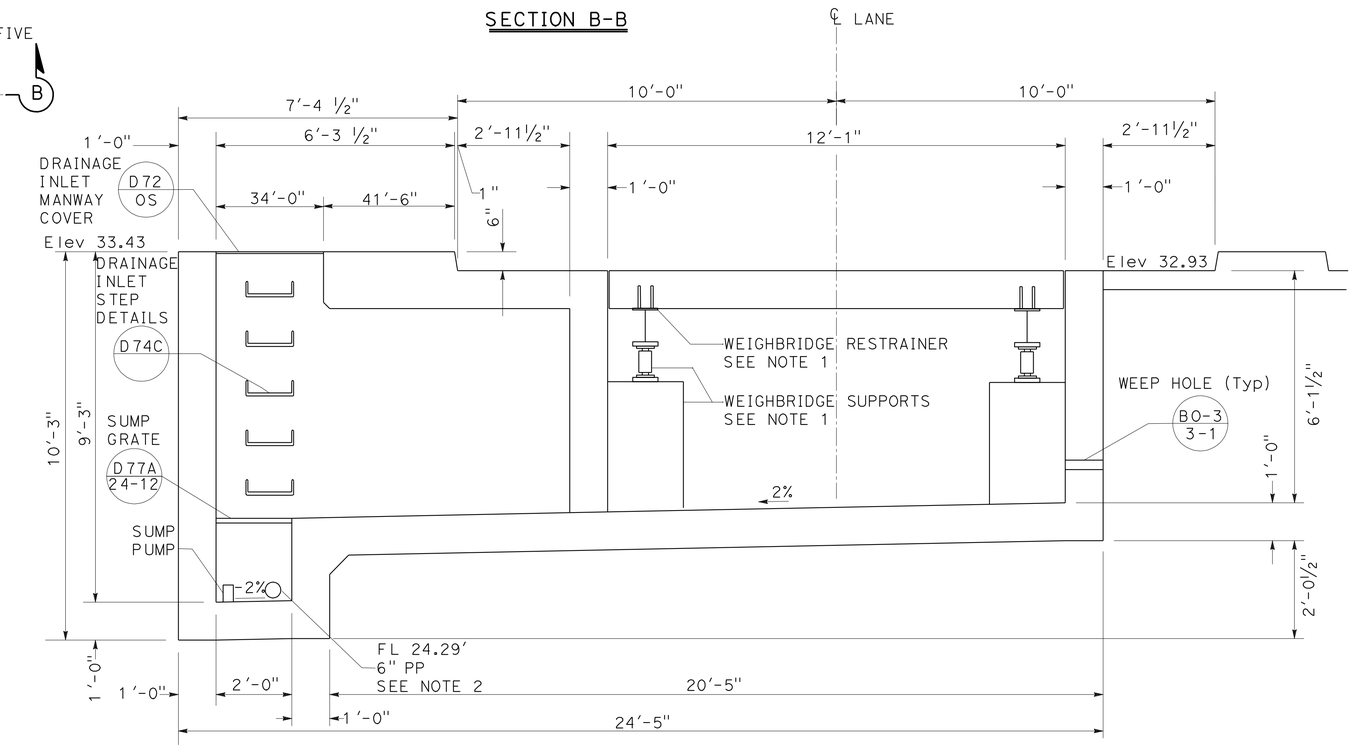

SECTION A-A

CALIFORNIA STATE FIRE MARSHAL
APPROVED

Approval of this plan does not authorize or approve any omission or deviation from applicable regulations. Final approval is subject to field inspection. One set of approved plans shall be available on the project site at all times.

Reviewed by Hans Henneberque 5/9/11
Hans Henneberque
Senior Deputy State Fire Marshal

NO SCALE

	BY	CHECKED
DESIGN	DARRELL WADE	JOANN ENGLISH
DETAILS	DARRELL WADE	JOANN ENGLISH
QUANTITIES	DARRELL WADE	JOANN ENGLISH

PREPARED FOR THE STATE OF CALIFORNIA DEPARTMENT OF TRANSPORTATION

DIVISION OF ENGINEERING SERVICES
ARCHITECTURAL AND STRUCTURAL DESIGN

BRIDGE NO. 23W000IR
POST MILE 14.8

EASTBOUND CORDELIA CVEF

CVEF

SINGLE-PLATFORM STATIC SCALE PIT DETAILS No. 1

SHEET ST8-5

40a535wcST8-05.dgn
DS OSD Imperial Rev. 10/07 18-MAY-2011 11:38

ORIGINAL SCALE IN INCHES FOR REDUCED PLANS 0 1 2 3

CU 04264
EA 0A5351

DISREGARD PRINTS BEARING EARLIER REVISION DATES → 02/15/10 04/20/10 07/09/10 11/22/10 05/03/11

REVISION DATES (PRELIMINARY STAGE ONLY) SHEET OF

18-MAY-2011 11:38
40a535wcST8-05.dgn

DIST.	COUNTY	ROUTE	POST MILES TOTAL PROJECT	SHEET NO.	TOTAL SHEETS
04	Sol	12,80	L1.8/L2.0, 13.3/15.7	617	740

REGISTERED CIVIL ENGINEER 05/03/11 DATE

REGISTERED PROFESSIONAL ENGINEER JOANN ENGLISH No. 36098 Exp. 6/30/12 CIVIL STATE OF CALIFORNIA

5-16-11
PLANS APPROVAL DATE

The State of California or its officers or agents shall not be responsible for the accuracy or completeness of electronic copies of this plan sheet.

WMH CORPORATION
555 12th Street
Suite 1900
Oakland, CA 94607

SOLANO TRANSPORTATION AUTHORITY
ONE HARBOR CENTER, SUITE 130
SUISUN CITY, CA 94585

CALIFORNIA STATE FIRE MARSHAL APPROVED

Approval of this plan does not authorize or approve any omission or deviation from applicable regulations. Final approval is subject to field inspection. One set of approved plans shall be available on the project site at all times.

Reviewed by: Hans Hennebergue 5/9/11
Hans Hennebergue
Senior Deputy State Fire Marshal

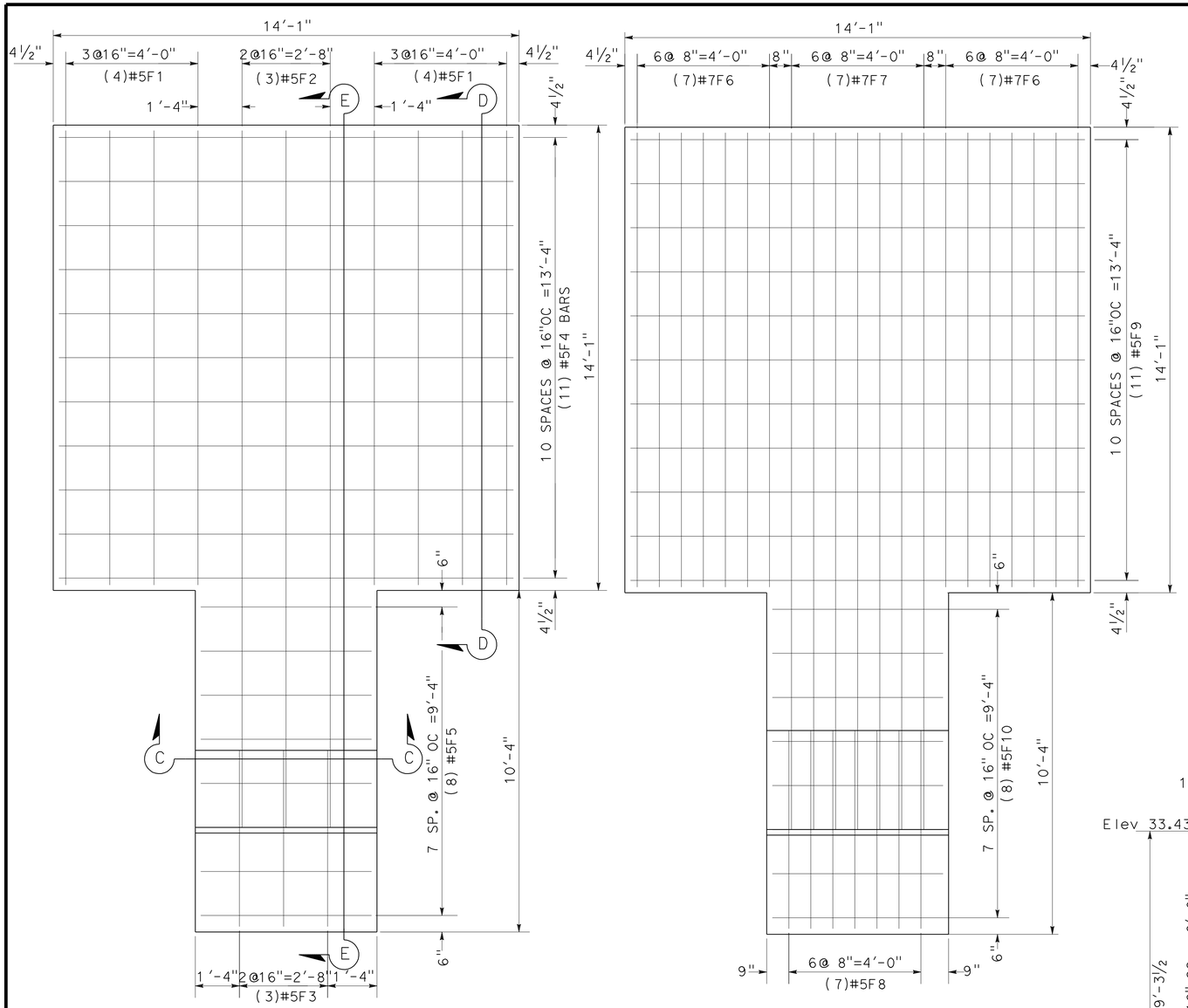

FOOTING BOTTOM MAT REINFORCEMENT

FOOTING TOP MAT REINFORCEMENT

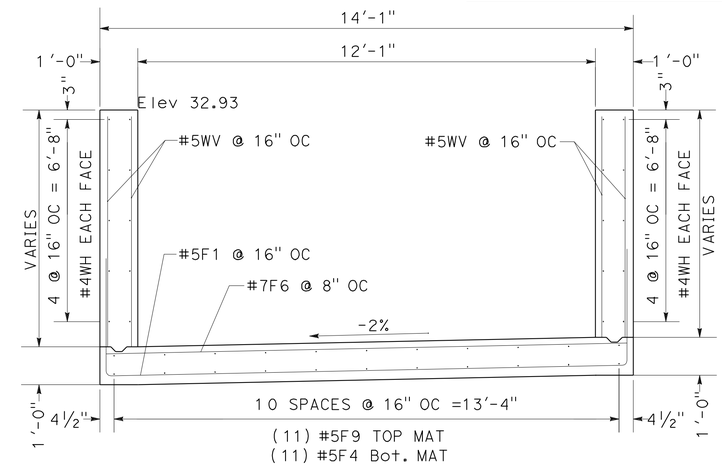

SECTION D-D

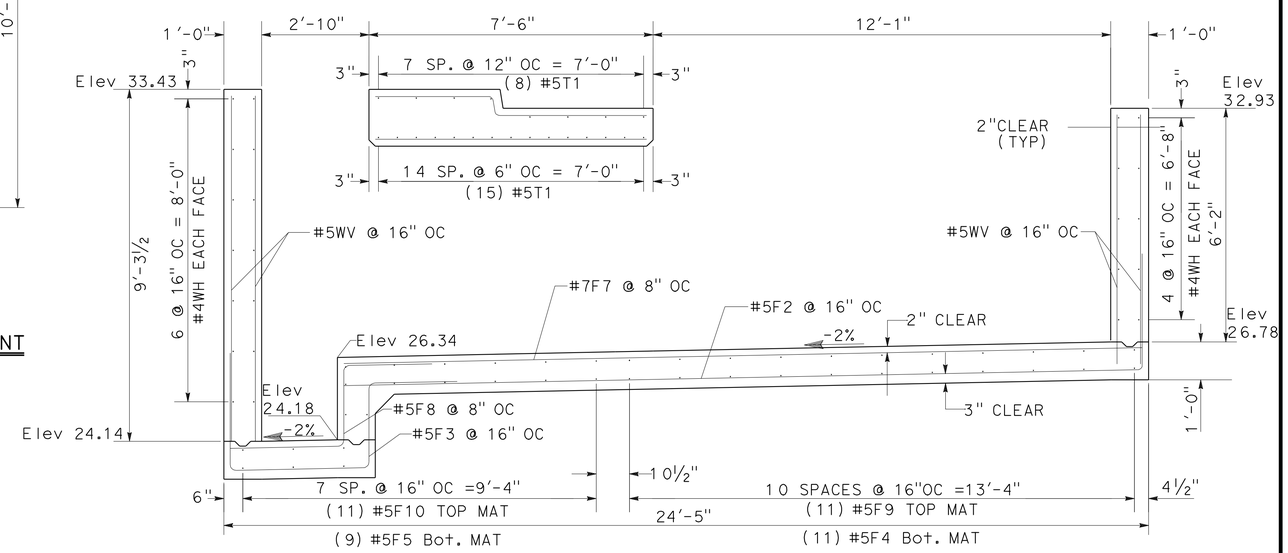

SECTION E-E

NO SCALE

	BY	CHECKED
DESIGN	DARRELL WADE	JOANN ENGLISH
DETAILS	DARRELL WADE	JOANN ENGLISH
QUANTITIES	DARRELL WADE	JOANN ENGLISH

PREPARED FOR THE STATE OF CALIFORNIA DEPARTMENT OF TRANSPORTATION

DIVISION OF ENGINEERING SERVICES
ARCHITECTURAL AND STRUCTURAL DESIGN

BRIDGE NO. 23W000IR
POST MILE 14.8

EASTBOUND CORDELIA CVEF

CVEF

SINGLE-PLATFORM STATIC SCALE PIT DETAILS No. 2

SHEET ST8-6

40a535wcST8-06.dgn
DS OSD imperialRev.10/07 18-MAY-2011 11:38

ORIGINAL SCALE IN INCHES FOR REDUCED PLANS 0 1 2 3

CU 04264
EA 0A5351

DISREGARD PRINTS BEARING EARLIER REVISION DATES → 02/15/10 04/28/10 07/09/10 11/22/10 05/03/11

REVISION DATES (PRELIMINARY STAGE ONLY) SHEET OF

18-MAY-2011 11:38
40a535wcST8-06.dgn

DIST.	COUNTY	ROUTE	POST MILES TOTAL PROJECT	SHEET NO.	TOTAL SHEETS
04	Sol	12,80	L1.8/L2.0, 13.3/15.7	618	740

REGISTERED CIVIL ENGINEER 05/03/11 DATE

REGISTERED PROFESSIONAL ENGINEER JOANN ENGLISH No. 36098 Exp. 6/30/12 CIVIL STATE OF CALIFORNIA

5-16-11
PLANS APPROVAL DATE

The State of California or its officers or agents shall not be responsible for the accuracy or completeness of electronic copies of this plan sheet.

WMH CORPORATION
555 12th Street
Suite 1900
Oakland, CA 94607

SOLANO TRANSPORTATION AUTHORITY
ONE HARBOR CENTER, SUITE 130
SUISUN CITY, CA 94585

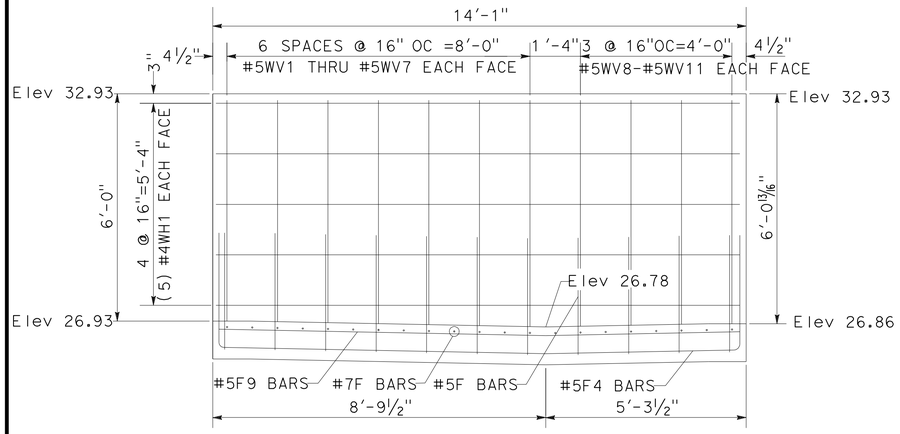

WALL ONE ELEVATION
(LOOKING SOUTHEAST)

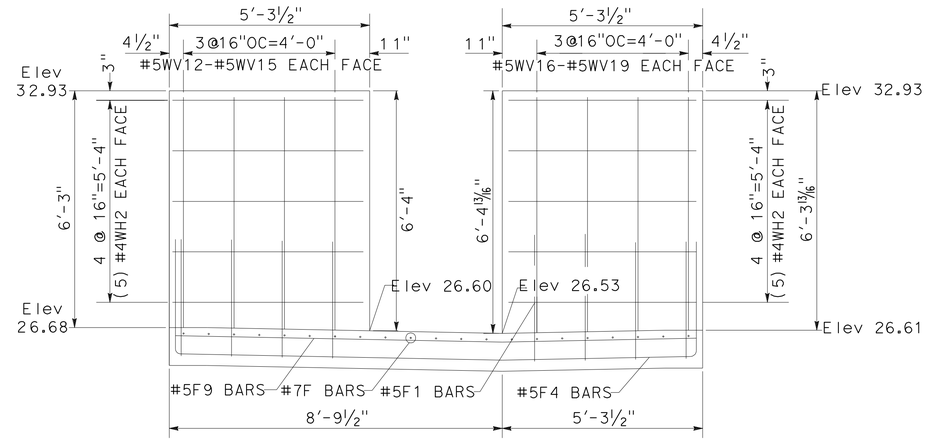

WALL TWO ELEVATION
(LOOKING NORTHWEST)

WALL THREE ELEVATION
(LOOKING NORTHWEST)

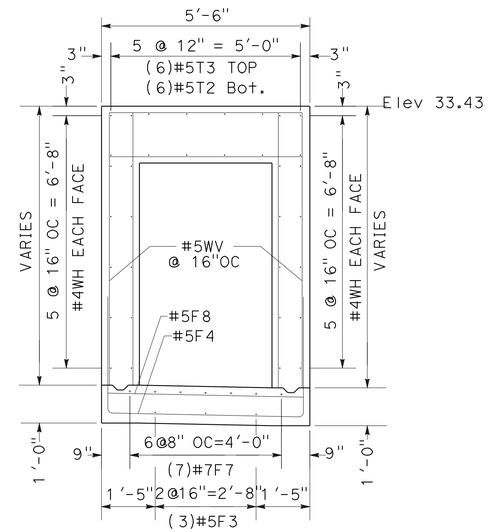

SECTION C-C

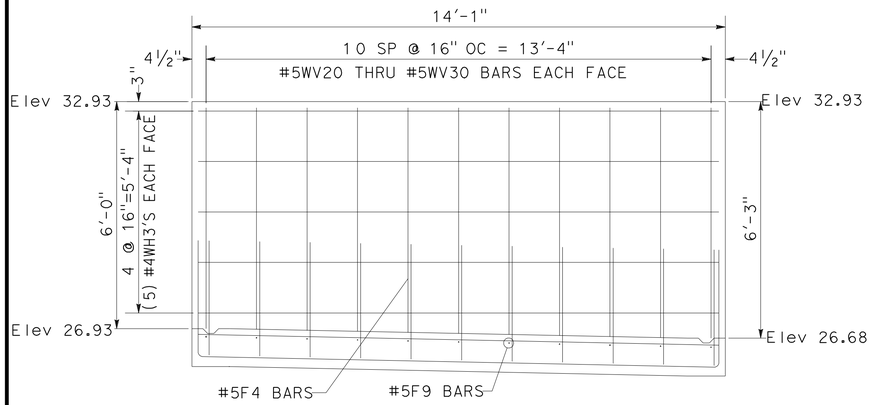

WALL FOUR ELEVATION
(LOOKING NORTHEAST)

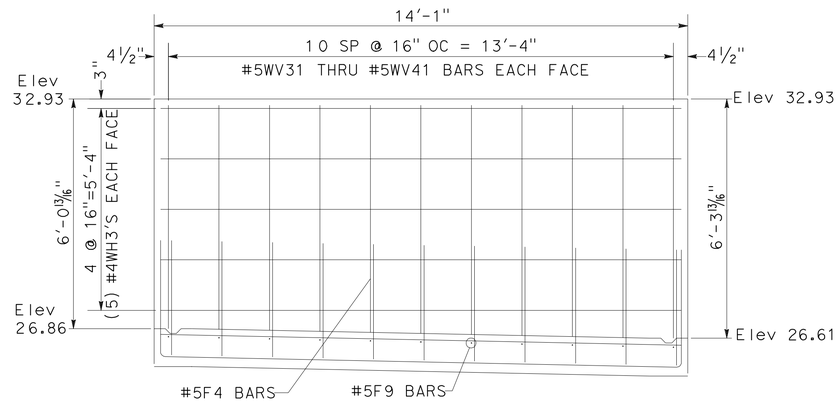

WALL FIVE ELEVATION
(LOOKING SOUTHWEST)

CALIFORNIA STATE FIRE MARSHAL
APPROVED

Approval of this plan does not authorize or approve any omission or deviation from applicable regulations. Final approval is subject to field inspection. One set of approved plans shall be available on the project site at all times.

Reviewed by: Hans Henneberque 5/9/11
Hans Henneberque
Senior Deputy State Fire Marshal

NO SCALE

	BY	CHECKED
DESIGN	DARRELL WADE	JOANN ENGLISH
DETAILS	DARRELL WADE	JOANN ENGLISH
QUANTITIES	DARRELL WADE	JOANN ENGLISH

PREPARED FOR THE STATE OF CALIFORNIA DEPARTMENT OF TRANSPORTATION

DIVISION OF ENGINEERING SERVICES
ARCHITECTURAL AND STRUCTURAL DESIGN

BRIDGE NO. 23W000IR
POST MILE 14.8

EASTBOUND CORDELIA CVEF

CVEF

SINGLE-PLATFORM STATIC SCALE PIT DETAILS No. 3

SHEET ST8-7

40a535wcST8-07.dgn
DS OSD Imperial Rev. 10/07 18-MAY-2011 11:38

ORIGINAL SCALE IN INCHES FOR REDUCED PLANS 0 1 2 3

CU 04264
EA 0A5351

DISREGARD PRINTS BEARING EARLIER REVISION DATES

REVISION DATES (PRELIMINARY STAGE ONLY) 02/15/10 04/20/10 07/09/10 11/22/10 05/03/11

SHEET OF

18-MAY-2011 11:38

40a535wcST8-07.dgn

DIST.	COUNTY	ROUTE	POST MILES TOTAL PROJECT	SHEET NO.	TOTAL SHEETS
04	Sol	12,80	L1.8/L2.0, 13.3/15.7	619	740

REGISTERED CIVIL ENGINEER 05/03/11 DATE

REGISTERED PROFESSIONAL ENGINEER JOANN ENGLISH No. 36098 Exp. 6/30/12 CIVIL STATE OF CALIFORNIA

5-16-11
PLANS APPROVAL DATE

The State of California or its officers or agents shall not be responsible for the accuracy or completeness of electronic copies of this plan sheet.

WMH CORPORATION
555 12th Street
Suite 1900
Oakland, CA 94607

SOLANO TRANSPORTATION AUTHORITY
ONE HARBOR CENTER, SUITE 130
SUISUN CITY, CA 94585

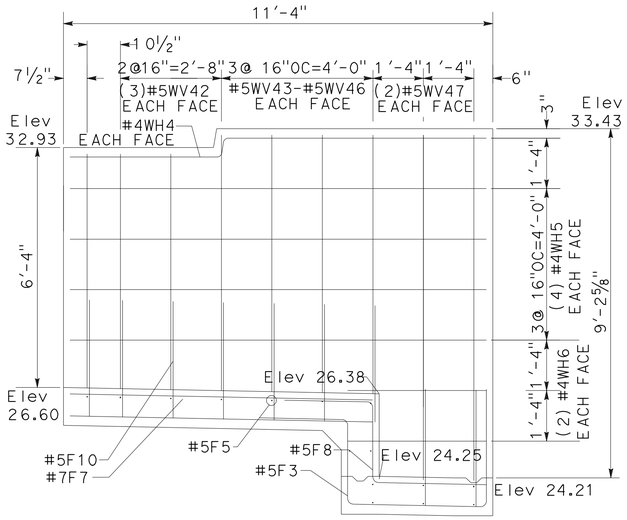

WALL SIX ELEVATION
(LOOKING NORTHEAST)

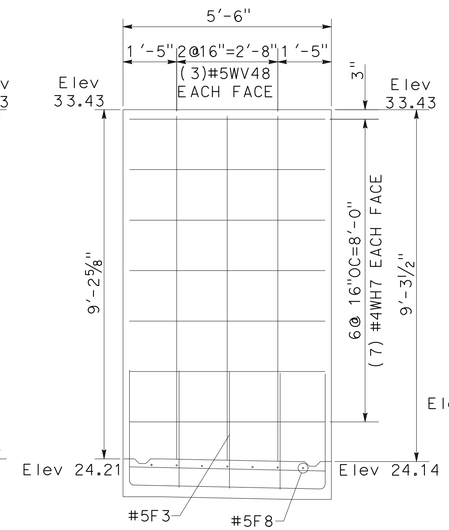

WALL SEVEN ELEVATION
(LOOKING NORTHWEST)

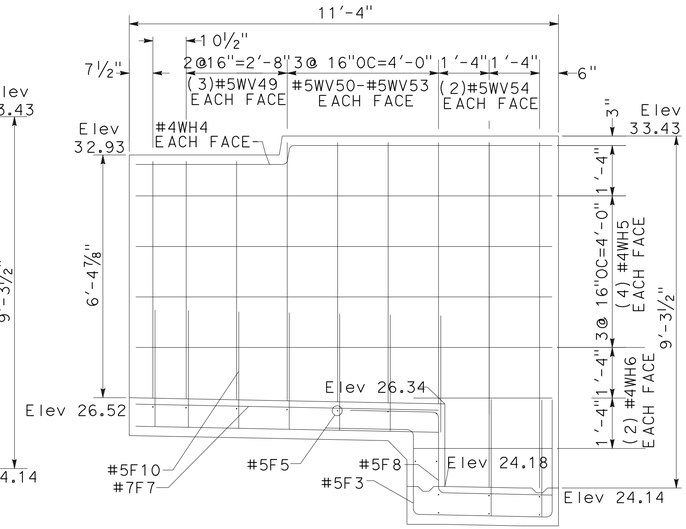

WALL EIGHT ELEVATION
(LOOKING SOUTHWEST)

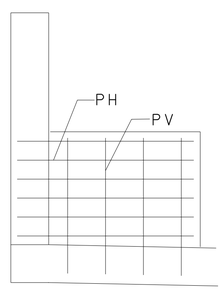

PILASTER
ELEVATION

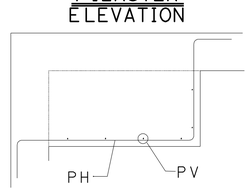

PILASTER
PLAN

CALIFORNIA STATE FIRE MARSHAL
APPROVED

Approval of this plan does not authorize or approve any omission or deviation from applicable regulations. Final approval is subject to field inspection. One set of approved plans shall be available on the project site at all times.

Reviewed by: Hans Hennebergue 5/9/11
Hans Hennebergue
Senior Deputy State Fire Marshal

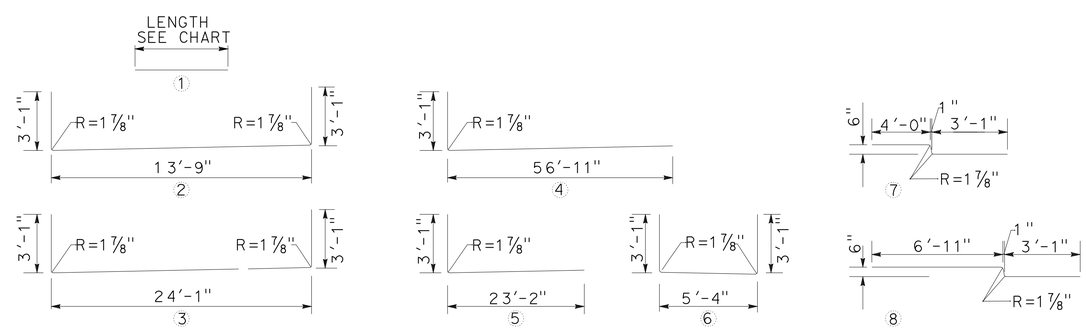

BAR BENDING DETAILS

REINFORCEMENT CHART

GRADE 60 BARS				
BAR	# TYPE	SIZE	LENGTH	No. REQ'D
#4WH1	1	4	13'-9"	10
#4WH2	1	4	5'-0½"	10
#4WH3	1	4	13'-9"	20
#4WH4	8	4	11'-4"	4
#4WH5	1	4	11'-0"	16
#4WH6	1	4	3'-8"	8
#4WH7	1	4	5'-2"	14
#5F1	2	5	19'-11"	8
#5F2	3	5	24'-2"	3
#5F3	4	5	11'-2"	3
#5F4	2	5	19'-11"	11
#5F5	5	5	11'-4"	8
#5F8	6	5	7'-4"	7
#5F9	1	5	13'-9"	11
#5F10	1	5	5'-2"	8
#5T1	1	5	5'-2"	23
#5T2	1	5	7'-2"	6
#5T3	7	5	7'-6"	6
#5WV1	1	5	5'-10"	14 TOTAL
THRU	0.3" INCREMENT			
#5WV7	1	5	6'-0"	
#5WV8	1	5	6'-0"	8 TOTAL
THRU	0.3" INCREMENT			
#5WV11	1	5	5'-11"	
#5WV12	1	5	6'-1"	8 TOTAL
THRU	0.3" INCREMENT			
#5WV15	1	5	6'-2"	
#5WV16	1	5	6'-3"	8 TOTAL
THRU	0.3" INCREMENT			
#5WV19	1	5	6'-2"	
#5WV20	1	5	5'-10"	22 TOTAL
THRU	0.3" INCREMENT			
#5WV30	1	5	6'-1"	
#5WV31	1	5	5'-11"	22 TOTAL
THRU	0.3" INCREMENT			
#5WV41	1	5	6'-2"	
#5WV42	1	5	6'-3"	6
#5WV43	1	5	6'-9"	8 TOTAL
THRU	0.3" INCREMENT			
#5WV46	1	5	6'-10"	
#5WV47	1	5	9'-1"	4
#5WV48	1	5	9'-1½"	6
#5WV49	1	5	6'-3"	6
#5WV50	1	5	6'-10"	8 TOTAL
THRU	0.3" INCREMENT			
#5WV53	1	5	6'-11"	
#5WV54	1	5	9'-2"	4
#7F6	1	7	13'-9"	14
#7F7	1	7	21'-1"	7

NO SCALE

	BY	CHECKED
DESIGN	DARRELL WADE	JOANN ENGLISH
DETAILS	DARRELL WADE	JOANN ENGLISH
QUANTITIES	DARRELL WADE	JOANN ENGLISH

PREPARED FOR THE STATE OF CALIFORNIA DEPARTMENT OF TRANSPORTATION

DIVISION OF ENGINEERING SERVICES
ARCHITECTURAL AND STRUCTURAL DESIGN

BRIDGE NO. 23W0001R
POST MILE 14.8

EASTBOUND CORDELIA CVEF

CVEF

SINGLE-PLATFORM STATIC SCALE PIT DETAILS No. 4

SHEET ST8-8

40a535wcST8-08.dgn
DS OSD Imperial Rev. 10/07 18-MAY-2011 11:38

ORIGINAL SCALE IN INCHES FOR REDUCED PLANS 0 1 2 3

CU 04264
EA 0A5351

DISREGARD PRINTS BEARING EARLIER REVISION DATES → 02/15/10 04/28/10 07/09/10 11/22/10 05/03/11

REVISION DATES (PRELIMINARY STAGE ONLY) SHEET OF

18-MAY-2011 11:38

40a535wcST8-08.dgn

REFERENCE: CALTRANS SOIL & ROCK LOGGING, CLASSIFICATION, AND PRESENTATION MANUAL (JUNE 2007)

DIST	COUNTY	ROUTE	POST MILES TOTAL PROJECT	SHEET No	TOTAL SHEETS
04	Sol	12,80	L1.8/L2.0, 13.3/15.7	620	740

GEOTECHNICAL PROFESSIONAL — 11/22/10 DATE

5-16-11
PLANS APPROVAL DATE

REGISTERED PROFESSIONAL ENGINEER — GARY PARIKH — No. G.E. 666 — Exp. 12/31/11 — GEOTECHNICAL — STATE OF CALIFORNIA

The State of California or its officers or agents shall not be responsible for the accuracy or completeness of scanned copies of this plan sheet.

PARIKH CONSULTANTS, INC.
2360 QUME DRIVE, SUITE A
SAN JOSE, CA 95131

SOLANO TRANSPORTATION AUTHORITY
ONE HARBOUR CENTER, SUITE 130
SUISUN CITY, CA 94585

CALIFORNIA STATE FIRE MARSHAL APPROVED

Approval of this plan does not authorize or approve any omission or deviation from applicable regulations. Final approval is subject to field inspection. One set of approved plans shall be available on the project site at all times.

Reviewed by: 5/9/11
Hans Henneberque
Senior Deputy State Fire Marshal

GROUP SYMBOLS AND NAMES

Graphic/Symbol	Group Names	Graphic/Symbol	Group Names
GW	Well-graded GRAVEL Well-graded GRAVEL with SAND	CL	Lean CLAY Lean CLAY with SAND Lean CLAY with GRAVEL SANDY lean CLAY SANDY lean CLAY with GRAVEL GRAVELLY lean CLAY GRAVELLY lean CLAY with SAND
GP	Poorly graded GRAVEL Poorly graded GRAVEL with SAND		
GW-GM	Well-graded GRAVEL with SILT Well-graded GRAVEL with SILT and SAND	CL-ML	SILTY CLAY SILTY CLAY with SAND SILTY CLAY with GRAVEL SANDY SILTY CLAY SANDY SILTY CLAY with GRAVEL GRAVELLY SILTY CLAY GRAVELLY SILTY CLAY with SAND
GW-GC	Well-graded GRAVEL with CLAY (or SILTY CLAY) Well-graded GRAVEL with CLAY and SAND (or SILTY CLAY and SAND)		
GP-GM	Poorly graded GRAVEL with SILT Poorly graded GRAVEL with SILT and SAND	ML	SILT SILT with SAND SILT with GRAVEL SANDY SILT SANDY SILT with GRAVEL GRAVELLY SILT GRAVELLY SILT with SAND
GP-GC	Poorly graded GRAVEL with CLAY (or SILTY CLAY) Poorly graded GRAVEL with CLAY and SAND (or SILTY CLAY and SAND)		
GM	SILTY GRAVEL SILTY GRAVEL with SAND	OL	ORGANIC lean CLAY ORGANIC lean CLAY with SAND ORGANIC lean CLAY with GRAVEL SANDY ORGANIC lean CLAY SANDY ORGANIC lean CLAY with GRAVEL GRAVELLY ORGANIC lean CLAY GRAVELLY ORGANIC lean CLAY with SAND
GC	CLAYEY GRAVEL CLAYEY GRAVEL with SAND		
GC-GM	SILTY, CLAYEY GRAVEL SILTY, CLAYEY GRAVEL with SAND	OL	ORGANIC SILT ORGANIC SILT with SAND ORGANIC SILT with GRAVEL SANDY ORGANIC SILT SANDY ORGANIC SILT with GRAVEL GRAVELLY ORGANIC SILT GRAVELLY ORGANIC SILT with SAND
SW	Well-graded SAND Well-graded SAND with GRAVEL		
SP	Poorly graded SAND Poorly graded SAND with GRAVEL	CH	Fat CLAY Fat CLAY with SAND Fat CLAY with GRAVEL SANDY fat CLAY SANDY fat CLAY with GRAVEL GRAVELLY fat CLAY GRAVELLY fat CLAY with SAND
SW-SM	Well-graded SAND with SILT Well-graded SAND with SILT and GRAVEL		
SW-SC	Well-graded SAND with CLAY (or SILTY CLAY) Well-graded SAND with CLAY and GRAVEL (or SILTY CLAY and GRAVEL)	MH	Elastic SILT Elastic SILT with SAND Elastic SILT with GRAVEL SANDY elastic SILT SANDY elastic SILT with GRAVEL GRAVELLY elastic SILT GRAVELLY elastic SILT with SAND
SP-SM	Poorly graded SAND with SILT Poorly graded SAND with SILT and GRAVEL		
SP-SC	Poorly graded SAND with CLAY (or SILTY CLAY) Poorly graded SAND with CLAY and GRAVEL (or SILTY CLAY and GRAVEL)	OH	ORGANIC fat CLAY ORGANIC fat CLAY with SAND ORGANIC fat CLAY with GRAVEL SANDY ORGANIC fat CLAY SANDY ORGANIC fat CLAY with GRAVEL GRAVELLY ORGANIC fat CLAY GRAVELLY ORGANIC fat CLAY with SAND
SM	SILTY SAND SILTY SAND with GRAVEL		
SC	CLAYEY SAND CLAYEY SAND with GRAVEL	OH	ORGANIC elastic SILT ORGANIC elastic SILT with SAND ORGANIC elastic SILT with GRAVEL SANDY ORGANIC elastic SILT SANDY ORGANIC elastic SILT with GRAVEL GRAVELLY ORGANIC elastic SILT GRAVELLY ORGANIC elastic SILT with SAND
SC-SM	SILTY, CLAYEY SAND SILTY, CLAYEY SAND with GRAVEL		
PT	PEAT	OL/OH	ORGANIC SOIL ORGANIC SOIL with SAND ORGANIC SOIL with GRAVEL SANDY ORGANIC SOIL SANDY ORGANIC SOIL with GRAVEL GRAVELLY ORGANIC SOIL GRAVELLY ORGANIC SOIL with SAND
	COBBLES COBBLES and BOULDERS BOULDERS		

FIELD AND LABORATORY TESTING

C	Consolidation (ASTM D 2435)
CL	Collapse Potential (ASTM D 5333)
CP	Compaction Curve (CTM 216)
CR	Corrosivity Testing (CTM 643, CTM 422, CTM 417)
CU	Consolidated Undrained Triaxial (ASTM D 4767)
DS	Direct Shear (ASTM D 3080)
EI	Expansion Index (ASTM D 4829)
M	Moisture Content (ASTM D 2216)
OC	Organic Content-% (ASTM D 2974)
P	Permeability (CTM 220)
PA	Particle Size Analysis (ASTM D 422)
PI	Plasticity Index (AASHTO T 90) Liquid Limit (AASHTO T 89)
PL	Point Load Index (ASTM D 5731)
PM	Pressure Meter
PP	Pocket Penetrometer
R	R-Value (CTM 301)
SE	Sand Equivalent (CTM 217)
SG	Specific Gravity (AASHTO T 100)
SL	Shrinkage Limit (ASTM D 427)
SW	Swell Potential (ASTM D 4546)
TV	Pocket Torvane
UC	Unconfined Compression-Soil (ASTM D 2166) Unconfined Compression-Rock (ASTM D 2938)
UU	Unconsolidated Undrained Triaxial (ASTM D 2850)
UW	Unit Weight (ASTM D 4767)
VS	Vane Shear (AASHTO T 223)

APPARENT DENSITY OF COHESIONLESS SOILS

Description	SPT N_{60} (Blows / 12 inches)
Very loose	0 - 4
Loose	5 - 10
Medium Dense	11 - 30
Dense	31 - 50
Very Dense	> 50

MOISTURE

Description	Criteria
Dry	Absence of moisture, dusty, dry to the touch
Moist	Damp but no visible water
Wet	Visible free water, usually soil is below water table

PERCENT OR PROPORTION OF SOILS

Description	Criteria
Trace	Particles are present but estimated to be less than 5%
Few	5 to 10%
Little	15 to 25%
Some	30 to 45%
Mostly	50 to 100%

PARTICLE SIZE

Description		Size
Boulder		> 12"
Cobble		3" to 12"
Gravel	Coarse	3/4" to 3"
	Fine	No. 4 to 3/4"
Sand	Coarse	No. 10 to No. 4
	Medium	No. 40 to No. 10
	Fine	No. 200 to No. 40

G. PARIKH — DESIGN OVERSIGHT
SIGN OFF DATE

DRAWN BY: O. GOUTHIER
CHECKED BY: D. WANG

S. DUDDU — FIELD INVESTIGATION BY:
DATE: JANUARY 2009 - JUNE 2009

PREPARED FOR THE STATE OF CALIFORNIA DEPARTMENT OF TRANSPORTATION

A. LAM — PROJECT ENGINEER

BRIDGE NO. 23W0001R
POST MILES 14.8

EASTBOUND CORDELIA CVEF
SOIL LEGEND SHEET 1 OF 2

OGS CIVIL LOG OF TEST BORINGS SHEET (ENGLISH) (REV. 06-01-09)

ORIGINAL SCALE IN INCHES FOR REDUCED PLANS 0 1 2 3

CU 04264
EA 04-0A5351

DISREGARD PRINTS BEARING EARLIER REVISION DATES — REVISION DATES 09/11/09 08/16/10 — SHEET — OF

FILE => 40a535wcST9-01.dgn

USERNAME => rtstrk DATE PLOTTED => 18-MAY-2011 TIME PLOTTED => 11:55

DIST	COUNTY	ROUTE	POST MILES TOTAL PROJECT	SHEET No	TOTAL SHEETS
04	Sol	12,80	L1.8/L2.0, 13.3/15.7	621	740

GEOTECHNICAL PROFESSIONAL — 11/22/10 DATE

5-16-11
PLANS APPROVAL DATE

REGISTERED PROFESSIONAL ENGINEER — GARY PARIKH — No. G.E. 666 — Exp. 12/31/11 — GEOTECHNICAL — STATE OF CALIFORNIA

The State of California or its officers or agents shall not be responsible for the accuracy or completeness of scanned copies of this plan sheet.

PARIKH CONSULTANTS, INC.
2360 QUME DRIVE, SUITE A
SAN JOSE, CA 95131

SOLANO TRANSPORTATION AUTHORITY
ONE HARBOUR CENTER, SUITE 130
SUISUN CITY, CA 94585

REFERENCE: CALTRANS SOIL & ROCK LOGGING, CLASSIFICATION, AND PRESENTATION MANUAL (JUNE 2007)

CEMENTATION

Description	Criteria
Weak	Crumbles or breaks with handling or little finger pressure.
Moderate	Crumbles or breaks with considerable finger pressure.
Strong	Will not crumble or break with finger pressure.

CONSISTENCY OF COHESIVE SOILS

Description	Unconfined Compressive Strength (tsf)	Pocket Penetrometer Measurement (tsf)	Torvane Measurement (tsf)	Field Approximation
Very Soft	< 0.25	< 0.25	< 0.12	Easily penetrated several inches by fist
Soft	0.25 to 0.50	0.25 to 0.50	0.12 to 0.25	Easily penetrated several inches by thumb
Medium Stiff	0.50 to 1.0	0.50 to 1.0	0.25 to 0.50	Penetrated several inches by thumb with moderate effort
Stiff	1 to 2	1 to 2	0.50 to 1.0	Readily indented by thumb but penetrated only with great effort
Very Stiff	2 to 4	2 to 4	1.0 to 2.0	Readily indented by thumbnail
Hard	> 4.0	> 4.0	> 2.0	Indented by thumbnail with difficulty

BOREHOLE IDENTIFICATION

Symbol	Hole Type	Description
Size	A	Auger Boring
Size	R P	Rotary drilled boring Rotary percussion boring (air)
Size	R	Rotary drilled diamond core
Size	HD HA	Hand driven (1-inch soil tube) Hand Auger
●	D	Dynamic Cone Penetration Boring
▲	CPT	Cone Penetration Test (ASTM D 5778-95)
⬚	O	Other

Note: Size in inches.

PLASTICITY OF FINE-GRAINED SOILS

Description	Criteria
Nonplastic	A 1/8-inch thread cannot be rolled at any water content.
Low	The thread can barely be rolled and the lump cannot be formed when drier than the plastic limit.
Medium	The thread is easy to roll and not much time is required to reach the plastic limit. The thread cannot be rerolled after reaching the plastic limit. The lump crumbles when drier than the plastic limit.
High	It takes considerable time rolling and kneading to reach the plastic limit. The thread can be rerolled several times after reaching the plastic limit. The lump can be formed without crumbling when drier than the plastic limit.

CALIFORNIA STATE FIRE MARSHAL APPROVED

Approval of this plan does not authorize or approve any omission or deviation from applicable regulations. Final approval is subject to field inspection. One set of approved plans shall be available on the project site at all times.

Reviewed by: Hans Hanneberque — 5/9/11
Hans Hanneberque
Senior Deputy State Fire Marshal

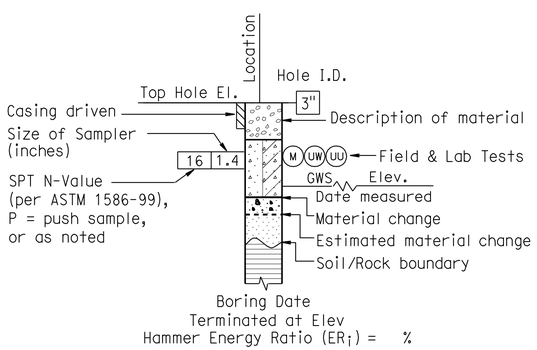

ROTARY BORING

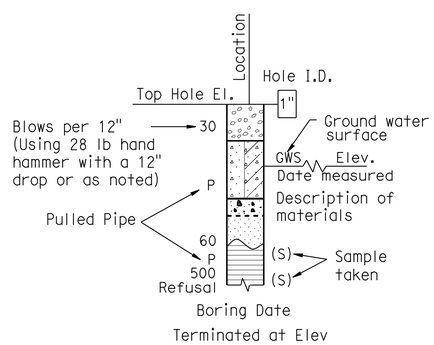

HAND BORING

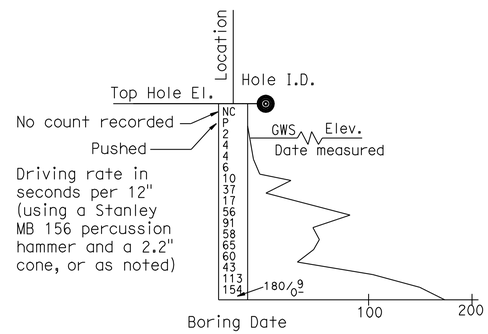

DYNAMIC CONE PENETRATION BORING

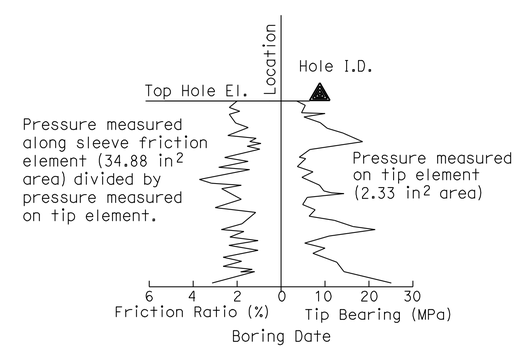

CONE PENETRATION TEST (CPT) SOUNDING

G. PARIKH DESIGN OVERSIGHT	DRAWN BY	O. GOUTHIER	S. DUDDU FIELD INVESTIGATION BY: DATE: JANUARY 2009 - JUNE 2009	PREPARED FOR THE STATE OF CALIFORNIA DEPARTMENT OF TRANSPORTATION	A. LAM PROJECT ENGINEER
SIGN OFF DATE	CHECKED BY	D. WANG			

BRIDGE NO. 23W0001R
POST MILES 14.8

EASTBOUND CORDELIA CVEF
SOIL LEGEND SHEET 2 OF 2

CU 04264
EA 04-0A5351

DISREGARD PRINTS BEARING EARLIER REVISION DATES → 09/11/09 08/16/10

REVISION DATES — SHEET — OF

OGS CIVIL LOG OF TEST BORINGS SHEET (ENGLISH) (REV. 06-01-09)

ORIGINAL SCALE IN INCHES FOR REDUCED PLANS 0 1 2 3

FILE => 40a535wcST9-02.dgn

USERNAME => rtrstrk DATE PLOTTED => 18-MAY-2011 TIME PLOTTED => 11:55

DIST	COUNTY	ROUTE	POST MILES TOTAL PROJECT	SHEET No	TOTAL SHEETS
04	Sol	12,80	L1.8/L2.0, 13.3/15.7	622	740

GEOTECHNICAL PROFESSIONAL — DATE 11/22/10

5-16-11
PLANS APPROVAL DATE

REGISTERED PROFESSIONAL ENGINEER — GARY PARIKH — No. G.E. 666 — Exp. 12/31/11 — GEOTECHNICAL — STATE OF CALIFORNIA

The State of California or its officers or agents shall not be responsible for the accuracy or completeness of scanned copies of this plan sheet.

PARIKH CONSULTANTS, INC.
2360 QUME DRIVE, SUITE A
SAN JOSE, CA 95131

SOLANO TRANSPORTATION AUTHORITY
ONE HARBOUR CENTER, SUITE 130
SUISUN CITY, CA 94585

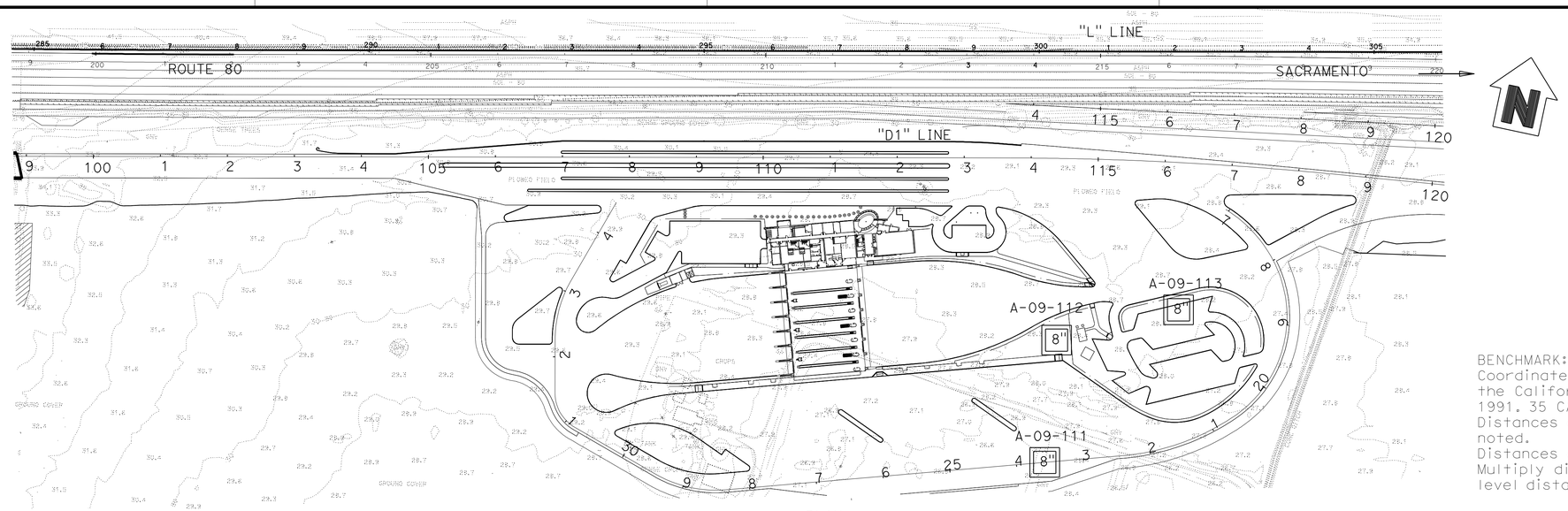

PLAN
1"=100'

BENCHMARK:
Coordinates, bearings and distances are based on the California Coordinate System of 1983, Zone 2, 1991. 35 CA-HPGN.
Distances are in U.S. Survey feet unless otherwise noted.
Distances and stationing are grid distances.
Multiply distances by 0.99999972 to obtain ground level distances.

Notes:
1.Standard Penetration Test Sampler: I.D. = 1.4"; O.D. = 2"
Modified California Sampler: I.D. = 2.5"; O.D. = 3" Hammer Assembly: A 140 lb hammer with a 30" drop (Automatic Hammer)

2.This LOTB sheet was prepared in accordance with Caltrans Soil & Rock Logging, Classification, and Presentation Manual (2007)

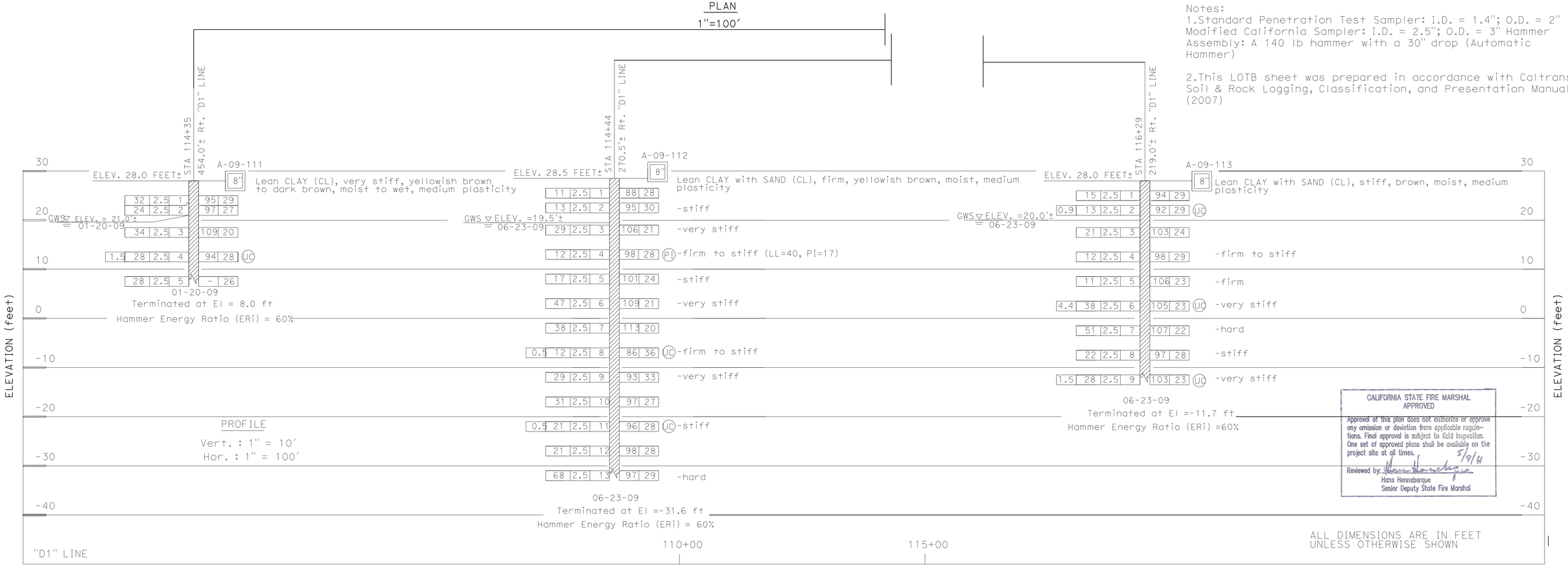

CALIFORNIA STATE FIRE MARSHAL APPROVED
Approval of this plan does not authorize or approve any omission or deviation from applicable regulations. Final approval is subject to field inspection. One set of approved plans shall be available on the project site at all times.
Reviewed by: 5/9/11
Hans Henneberque
Senior Deputy State Fire Marshal

G. PARIKH — DESIGN OVERSIGHT	DRAWN BY	O. GOUTHIER	S. DUDDU — FIELD INVESTIGATION BY:
SIGN OFF DATE	CHECKED BY	D. WANG	DATE: JANUARY 2009 - JULY 2009

PREPARED FOR THE STATE OF CALIFORNIA DEPARTMENT OF TRANSPORTATION

A. LAM — PROJECT ENGINEER

BRIDGE NO. 23W0001R
POST MILES 14.8

EASTBOUND CORDELIA CVEF
LOG OF TEST BORINGS 1 OF 5

OGS GEOTECHNICAL LOG OF TEST BORINGS SHEET (ENGLISH) (REV. 06-01-09)

ORIGINAL SCALE IN INCHES FOR REDUCED PLANS 0 1 2 3

CU 04264
EA 04-0A5351

DISREGARD PRINTS BEARING EARLIER REVISION DATES → 09/11/09 08/16/10

REVISION DATES — SHEET — OF

FILE => 40a535wcST9-03 .dgn

USERNAME => trstrk DATE PLOTTED => 18-MAY-2011 TIME PLOTTED => 11:56

DIST	COUNTY	ROUTE	POST MILES TOTAL PROJECT	SHEET No	TOTAL SHEETS
04	Sol	12,80	L1.8/L2.0, 13.3/15.7	623	740

GEOTECHNICAL PROFESSIONAL — 11/22/10 DATE

5-16-11
PLANS APPROVAL DATE

REGISTERED PROFESSIONAL ENGINEER — GARY PARIKH — No. G.E. 666 — Exp. 12/31/11 — GEOTECHNICAL — STATE OF CALIFORNIA

The State of California or its officers or agents shall not be responsible for the accuracy or completeness of scanned copies of this plan sheet.

PARIKH CONSULTANTS, INC.
2360 QUME DRIVE, SUITE A
SAN JOSE, CA 95131

SOLANO TRANSPORTATION AUTHORITY
ONE HARBOUR CENTER, SUITE 130
SUISUN CITY, CA 94585

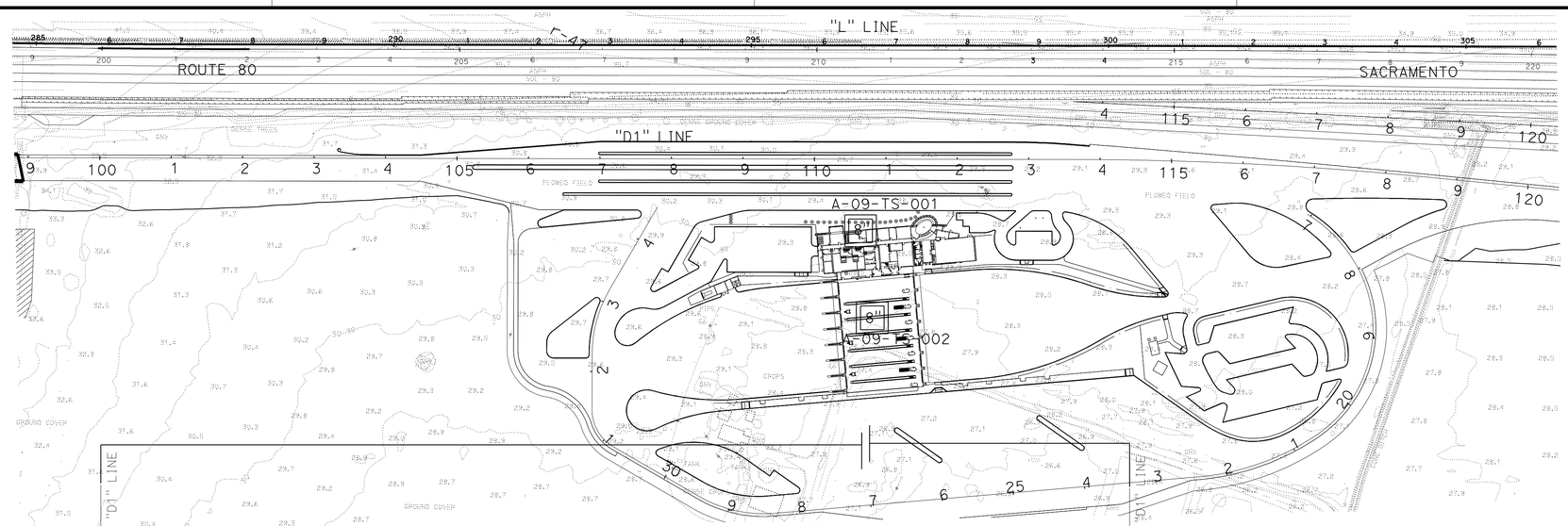

BENCHMARK:
Coordinates, bearings and distances are based on the California Coordinate System of 1983, Zone 2, 1991. 35 CA-HPGN.
Distances are in U.S. Survey feet unless otherwise noted.
Distances and stationing are grid distances.
Multiply distances by 0.99999972 to obtain ground level distances.

Notes:
1.Standard Penetration Test Sampler: I.D. = 1.4"; O.D. = 2"
Modified California Sampler: I.D. = 2.5"; O.D. = 3" Hammer Assembly: A 140 lb hammer with a 30" drop (Automatic Hammer)

2.This LOTB sheet was prepared in accordance with Caltrans Soil & Rock Logging, Classification, and Presentation Manual (2007)

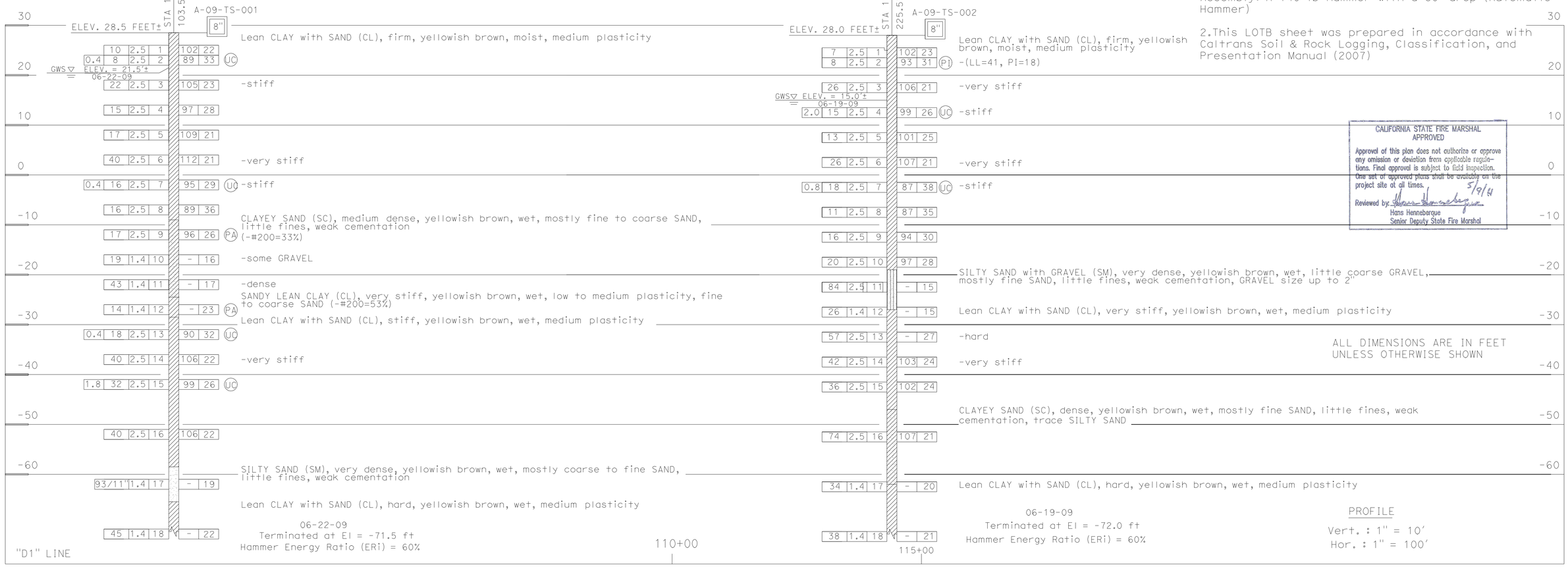

CALIFORNIA STATE FIRE MARSHAL APPROVED
Approval of this plan does not authorize or approve any omission or deviation from applicable regulations. Final approval is subject to field inspection. One set of approved plans shall be available on the project site at all times.
Reviewed by: Hans Henneberque 5/9/11
Hans Henneberque
Senior Deputy State Fire Marshal

G. PARIKH DESIGN OVERSIGHT	DRAWN BY	O. GOUTHIER	S. DUDDU FIELD INVESTIGATION BY:	PREPARED FOR THE STATE OF CALIFORNIA DEPARTMENT OF TRANSPORTATION	A. LAM PROJECT ENGINEER
? SIGN OFF DATE	CHECKED BY	D. WANG	DATE: JANUARY 2009 - JULY 2009		

BRIDGE NO. 23W0001R — POST MILES 14.8

EASTBOUND CORDELIA CVEF
LOG OF TEST BORINGS 2 OF 5

OGS GEOTECHNICAL LOG OF TEST BORINGS SHEET (ENGLISH) (REV. 06-01-09)

ORIGINAL SCALE IN INCHES FOR REDUCED PLANS 0 1 2 3

CU 04264
EA 04-0A5351

DISREGARD PRINTS BEARING EARLIER REVISION DATES

REVISION DATES: 09/11/09 08/16/10 ----- ----- ----- ----- ----- ----- ----- -----

SHEET OF

FILE => 40a535wcST9-04 .dgn

USERNAME => rtstrk DATE PLOTTED => 18-MAY-2011 TIME PLOTTED => 11:56

DIST	COUNTY	ROUTE	POST MILES TOTAL PROJECT	SHEET No	TOTAL SHEETS
04	Sol	12,80	L1.8/L2.0, 13.3/15.7	624	740

GEOTECHNICAL PROFESSIONAL — 11/22/10 DATE

5-16-11
PLANS APPROVAL DATE

REGISTERED PROFESSIONAL ENGINEER — GARY PARIKH — No. G.E. 666 — Exp. 12/31/11 — GEOTECHNICAL — STATE OF CALIFORNIA

The State of California or its officers or agents shall not be responsible for the accuracy or completeness of scanned copies of this plan sheet.

PARIKH CONSULTANTS, INC.
2360 QUME DRIVE, SUITE A
SAN JOSE, CA 95131

SOLANO TRANSPORTATION AUTHORITY
ONE HARBOUR CENTER, SUITE 130
SUISUN CITY, CA 94585

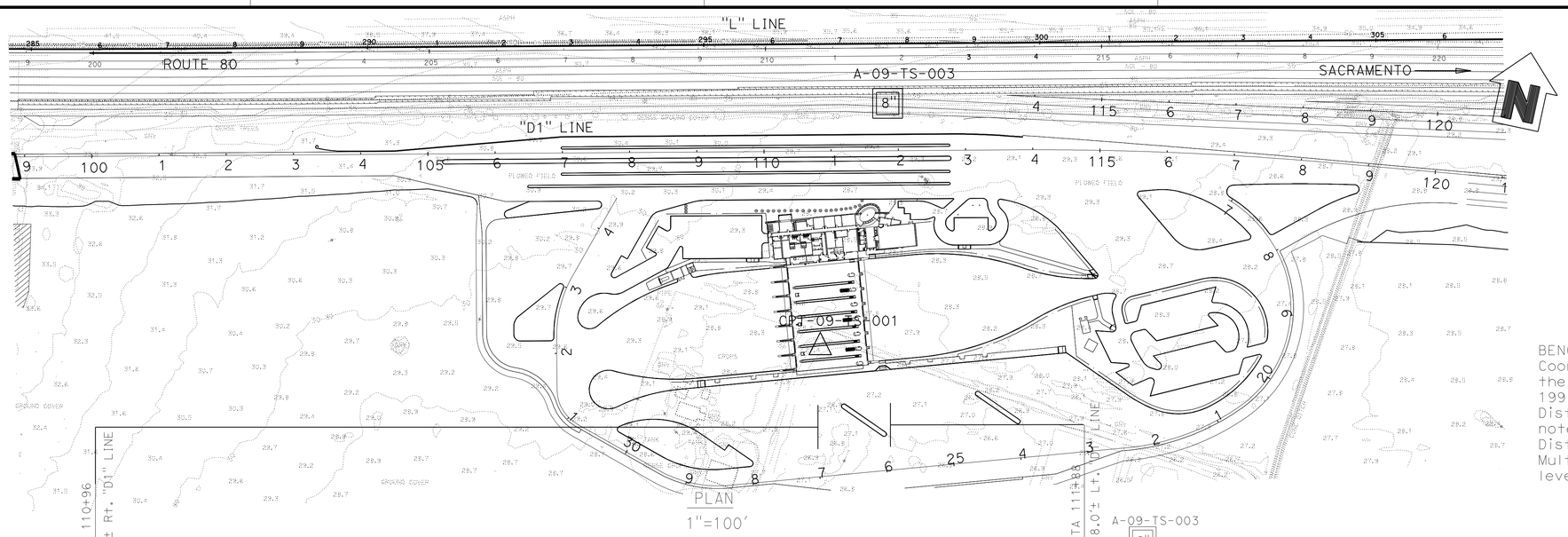

BENCHMARK:
Coordinates, bearings and distances are based on the California Coordinate System of 1983, Zone 2, 1991. 35 CA-HPGN.
Distances are in U.S. Survey feet unless otherwise noted.
Distances and stationing are grid distances.
Multiply distances by 0.99999972 to obtain ground level distances.

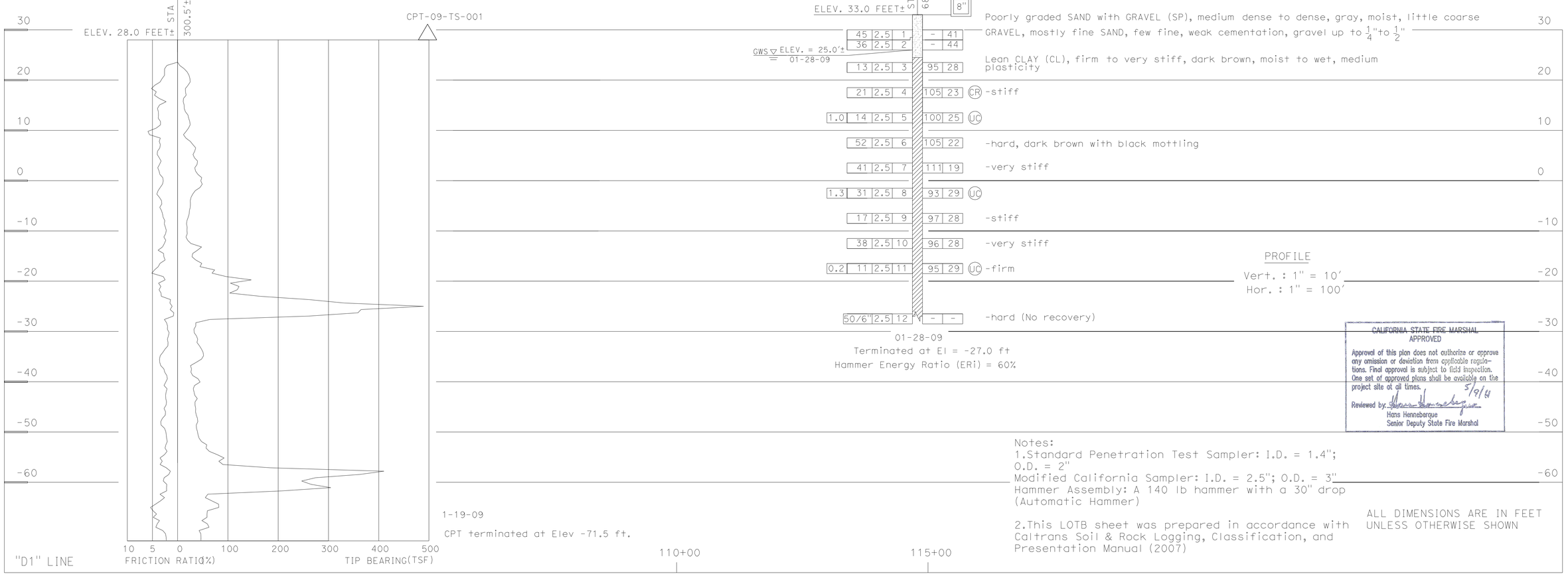

1-19-09
CPT terminated at Elev -71.5 ft.

CALIFORNIA STATE FIRE MARSHAL APPROVED
Approval of this plan does not authorize or approve any omission or deviation from applicable regulations. Final approval is subject to field inspection. One set of approved plans shall be available on the project site at all times.
Reviewed by: Hans Henneberque 5/9/11
Hans Henneberque
Senior Deputy State Fire Marshal

Notes:
1.Standard Penetration Test Sampler: I.D. = 1.4"; O.D. = 2"
Modified California Sampler: I.D. = 2.5"; O.D. = 3"
Hammer Assembly: A 140 lb hammer with a 30" drop (Automatic Hammer)

2.This LOTB sheet was prepared in accordance with Caltrans Soil & Rock Logging, Classification, and Presentation Manual (2007)

ALL DIMENSIONS ARE IN FEET UNLESS OTHERWISE SHOWN

G. PARIKH DESIGN OVERSIGHT	DRAWN BY	O. GOUTHIER	S. DUDDU FIELD INVESTIGATION BY:	PREPARED FOR THE STATE OF CALIFORNIA DEPARTMENT OF TRANSPORTATION	A. LAM PROJECT ENGINEER
? SIGN OFF DATE	CHECKED BY	D. WANG	DATE: JANUARY 2009 - JULY 2009		

BRIDGE NO. 23W0001R — POST MILES 14.8

EASTBOUND CORDELIA CVEF
LOG OF TEST BORINGS 3 OF 5

OGS GEOTECHNICAL LOG OF TEST BORINGS SHEET (ENGLISH) (REV. 06-01-09)

ORIGINAL SCALE IN INCHES FOR REDUCED PLANS 0 1 2 3

CU 04264
EA 04-0A5351

DISREGARD PRINTS BEARING EARLIER REVISION DATES → REVISION DATES 09/11/09 08/16/10 SHEET OF

FILE => 40a535wcST9-05 .dgn

USERNAME => frstrk DATE PLOTTED => 18-MAY-2011 TIME PLOTTED => 11:56

DIST	COUNTY	ROUTE	POST MILES TOTAL PROJECT	SHEET No	TOTAL SHEETS
04	Sol	12,80	L1.8/L2.0, 13.3/15.7	625	740

GEOTECHNICAL PROFESSIONAL — 11/22/10 DATE

5-16-11
PLANS APPROVAL DATE

REGISTERED PROFESSIONAL ENGINEER — GARY PARIKH — No. G.E. 666 — Exp. 12/31/11 — GEOTECHNICAL — STATE OF CALIFORNIA

The State of California or its officers or agents shall not be responsible for the accuracy or completeness of scanned copies of this plan sheet.

PARIKH CONSULTANTS, INC.
2360 QUME DRIVE, SUITE A
SAN JOSE, CA 95131

SOLANO TRANSPORTATION AUTHORITY
ONE HARBOUR CENTER, SUITE 130
SUISUN CITY, CA 94585

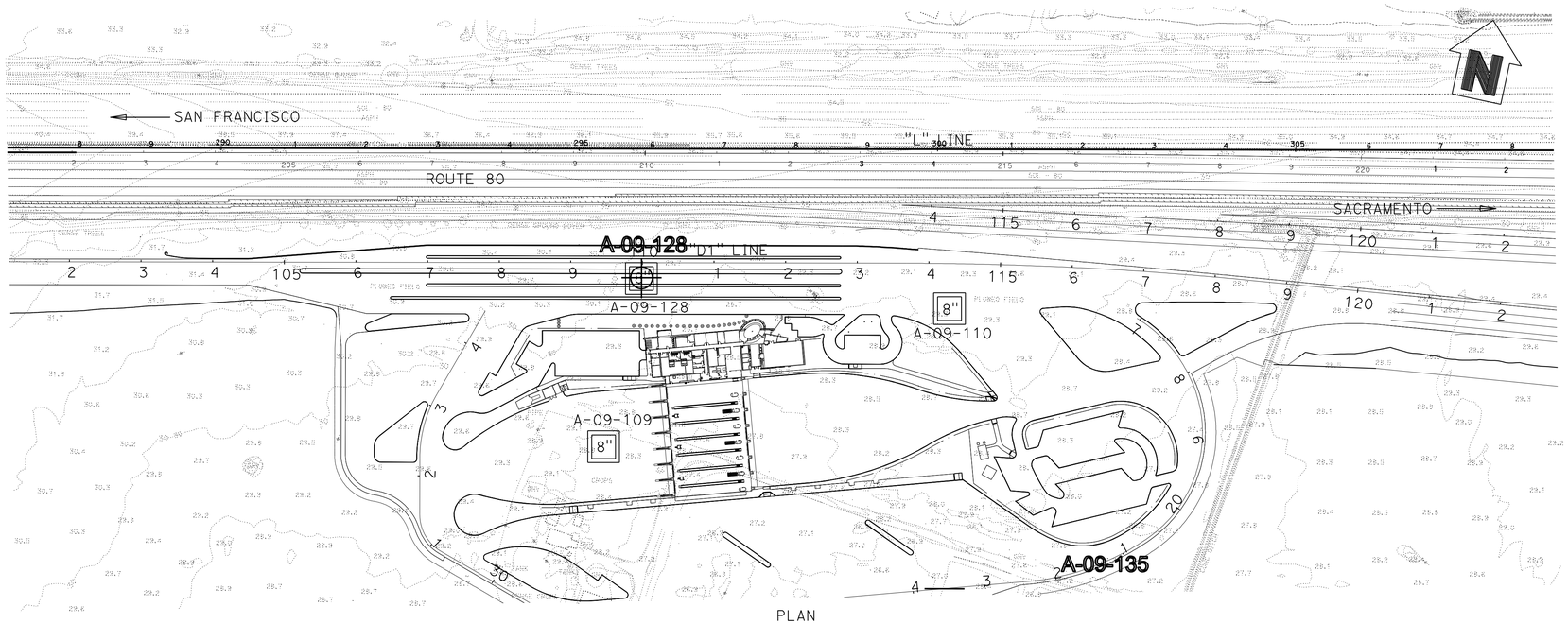

PLAN
1"=100'

BENCHMARK:
Coordinates, bearings and distances are based on the California Coordinate System of 1983, Zone 2, 1991. 35 CA-HPGN.
Distances are in U.S. Survey feet unless otherwise noted.
Distances and stationing are grid distances.
Multiply distances by 0.99999972 to obtain ground level distances.

CALIFORNIA STATE FIRE MARSHAL APPROVED
Approval of this plan does not authorize or approve any omission or deviation from applicable regulations. Final approval is subject to field inspection. One set of approved plans shall be available on the project site at all times.
Reviewed by: 5/9/11
Hans Hennebarque
Senior Deputy State Fire Marshal

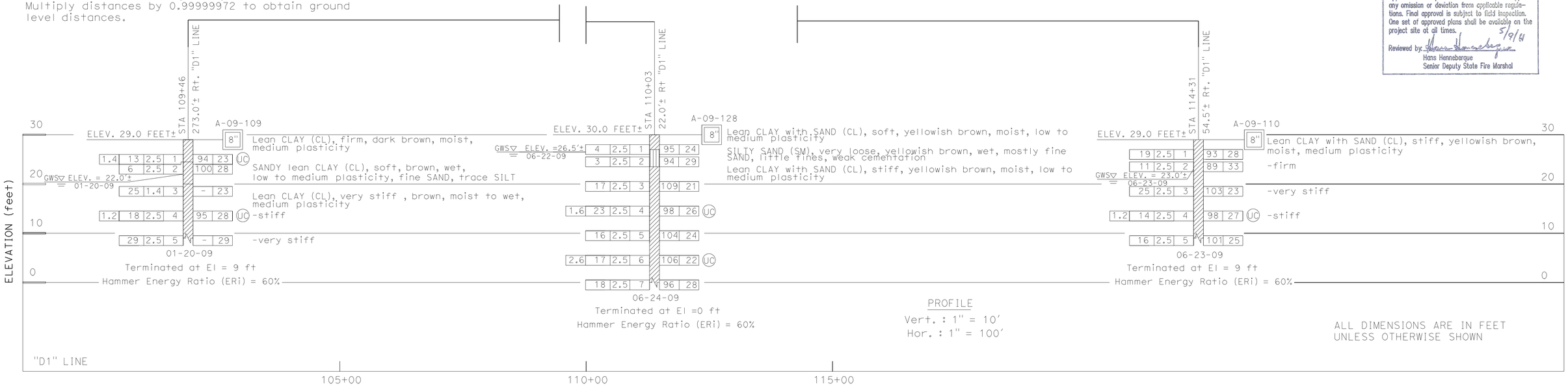

PROFILE
Vert. : 1" = 10'
Hor. : 1" = 100'

ALL DIMENSIONS ARE IN FEET UNLESS OTHERWISE SHOWN

G. PARIKH — DESIGN OVERSIGHT	DRAWN BY	O. GOUTHIER	S. DUDDU — FIELD INVESTIGATION BY:
? — SIGN OFF DATE	CHECKED BY	D. WANG	DATE: JANUARY 2009 - JULY 2009

PREPARED FOR THE STATE OF CALIFORNIA DEPARTMENT OF TRANSPORTATION

A. LAM — PROJECT ENGINEER

BRIDGE NO. 23W0001R
POST MILES 14.8

EASTBOUND CORDELIA CVEF
LOG OF TEST BORINGS 4 OF 5

OGS GEOTECHNICAL LOG OF TEST BORINGS SHEET (ENGLISH) (REV. 06-01-09)

ORIGINAL SCALE IN INCHES FOR REDUCED PLANS 0 1 2 3

CU 04264
EA 04-0A5351

DISREGARD PRINTS BEARING EARLIER REVISION DATES

REVISION DATES: 09/11/09 08/16/10 ------ ------ ------ ------ ------ ------ ------ ------ SHEET OF

FILE => 40a535wcST9-06.dgn

USERNAME => tr-stik DATE PLOTTED => 18-MAY-2011 TIME PLOTTED => 11:57

DIST	COUNTY	ROUTE	POST MILES TOTAL PROJECT	SHEET No	TOTAL SHEETS
04	Sol	12,80	L1.8/L2.0, 13.3/15.7	626	740

GEOTECHNICAL PROFESSIONAL — 11/22/10 DATE

5-16-11
PLANS APPROVAL DATE

REGISTERED PROFESSIONAL ENGINEER — GARY PARIKH — No. G.E. 666 — Exp. 12/31/11 — GEOTECHNICAL — STATE OF CALIFORNIA

The State of California or its officers or agents shall not be responsible for the accuracy or completeness of scanned copies of this plan sheet.

PARIKH CONSULTANTS, INC.
2360 QUME DRIVE, SUITE A
SAN JOSE, CA 95131

SOLANO TRANSPORTATION AUTHORITY
ONE HARBOUR CENTER, SUITE 130
SUISUN CITY, CA 94585

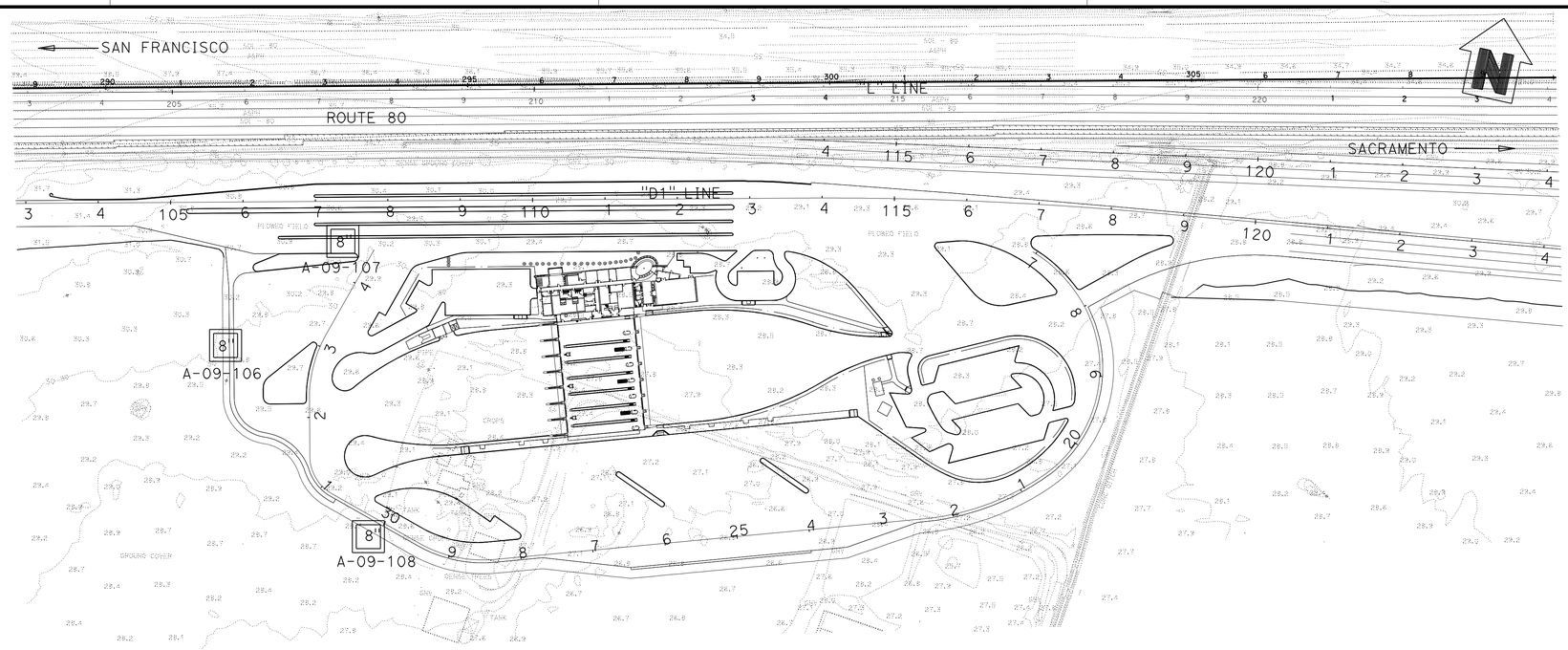

PLAN
1"=100'

CALIFORNIA STATE FIRE MARSHAL APPROVED

Approval of this plan does not authorize or approve any omission or deviation from applicable regulations. Final approval is subject to field inspection. One set of approved plans shall be available on the project site at all times.

Reviewed by: Hans Henneberque 5/9/11
Hans Henneberque
Senior Deputy State Fire Marshal

BENCHMARK:
Coordinates, bearings and distances are based on the California Coordinate System of 1983, Zone 2, 1991. 35 CA-HPGN.
DISTANCES ARE IN U.S. SURVEY FEET UNLESS OTHERWISE NOTED.
Distances and stationing are grid distances.
Multiply distances by 0.99999972 to obtain ground level distances.

Notes:
1.Standard Penetration Test Sampler: I.D. = 1.4"; O.D. = 2"
Modified California Sampler: I.D. = 2.5"; O.D. = 3"
Hammer Assembly: A 140 lb hammer with a 30" drop (Automatic Hammer)

2.This LOTB sheet was prepared in accordance with Caltrans Soil & Rock Logging, Classification, and Presentation Manual (2007)

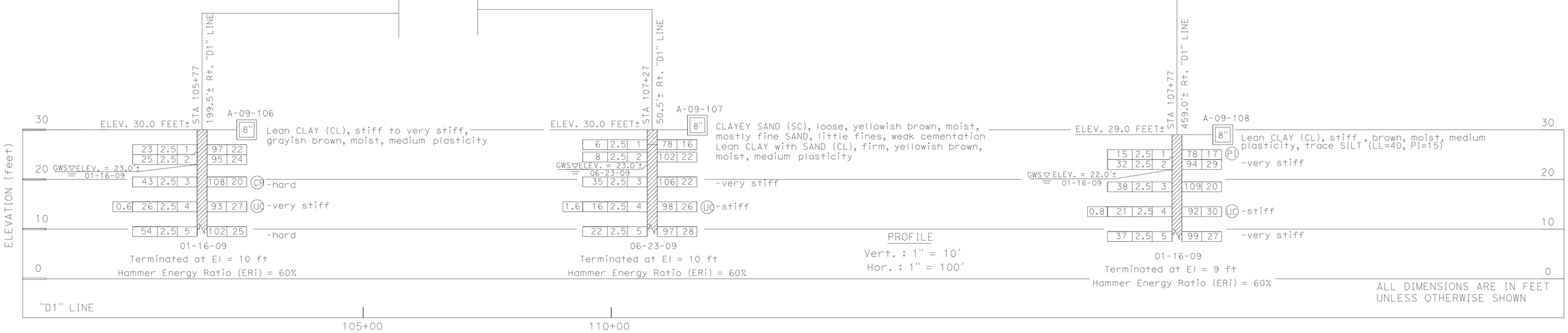

G. PARIKH — DESIGN OVERSIGHT	DRAWN BY	O. GOUTHIER	S. DUDDU — FIELD INVESTIGATION BY:	PREPARED FOR THE STATE OF CALIFORNIA DEPARTMENT OF TRANSPORTATION	A. LAM — PROJECT ENGINEER
? — SIGN OFF DATE	CHECKED BY	D. WANG	DATE: JANUARY 2009 - JULY 2009		

BRIDGE NO. 23W0001R — POST MILES 14.8

EASTBOUND CORDELIA CVEF
LOG OF TEST BORINGS 5 OF 5

OGS GEOTECHNICAL LOG OF TEST BORINGS SHEET (ENGLISH) (REV. 06-01-09)

ORIGINAL SCALE IN INCHES FOR REDUCED PLANS 0 1 2 3

CU 04264
EA 04-0A5351

DISREGARD PRINTS BEARING EARLIER REVISION DATES → REVISION DATES: 09/11/09 08/16/10 ------ ------ ------ ------ ------ ------ ------ ------ SHEET OF

FILE => 40a535wcST9-07.dgn

USERNAME => tr-stirk DATE PLOTTED => 18-MAY-2011 TIME PLOTTED => 11:57

DIST.	COUNTY	ROUTE	POST MILES TOTAL PROJECT	SHEET NO.	TOTAL SHEETS
04	Sol	12,80	L1.8/L2.0, 13.3/15.7	627	740

REGISTERED MECHANICAL ENGINEER — 05/03/11 DATE

REGISTERED PROFESSIONAL ENGINEER — SEAN E NEPRUD — No. M33458 — Exp. 06/30/12 — MECH — STATE OF CALIFORNIA

5-16-11
PLANS APPROVAL DATE

The State of California or its officers or agents shall not be responsible for the accuracy or completeness of electronic copies of this plan sheet.

KENNEDY/JENKS CONSULTANTS
303 SECOND STREET
SUITE 300 SOUTH
SAN FRANCISCO, CA 94960

SOLANO TRANSPORTATION AUTHORITY
ONE HARBOR CENTER, SUITE 130
SUISUN CITY, CA 94585

PLUMBING

- Cold Water (CW.W)
- Hot Water (HW)
- Radiant Heat (RH)
- Radiant Heat Return (RHR)
- Drain (D)
- Storm Drain (SD)
- Fire Protection Water (FP)
- A — Compressed Air (CA)
- NG — Natural Gas (NG)
- FOR — Fuel Oil Supply (FOS)
- FOS — Fuel Oil Return (FOR)
- SFM — Sewer Force Main (SFM)

PIPE FITTINGS AND VALVES

- Cap,Threaded
- Elbow,Turned Down
- Elbow,Turned Up
- Reducer,Concentric
- Pressure Gauge (with gage cock and Snubber)
- Strainer
- Union
- Union,Insulating
- Valve,Ball
- Valve,Check
- Valve,Gas
- Valve,Gate
- Valve,Safety Relief
- Valve,Faucet Assembly
- Valve,Pressure/Temperature Relief
- Water Hammer Arrestor

HEATING, VENTILATING AND AIR CONDITIONING

- Balance Damper
- Flexible Duct
- EA — Exhaust Air Duct - First figure is side shown
- 12x24 RA — Return Air Duct - First figure is side shown
- 12x24 SA — Supply Air Duct - First figure is side shown
- Exhaust Register
- or — Return Register
- or — Supply Diffuser
- Slot Diffuser
- T — Thermostat
- C — CO_2 Sensor
- TS — Time Switch
- Anode Test Station
- Three Wire Test Station
- F — Exhaust Fan
- FE — Fire Extinguisher
- TG — Temperature Gauge
- Exhaust Duct In Section View
- Return Duct In Section View
- Supply Duct In Section View
- Round Duct In Section View
- F — Fire/Smoke Damper
- H — Duct Heat Detector
- S — Duct Smoke Detector

MISCELLANEOUS

- L — Angle
- ℄ — Centerline
- Ø — Diameter
- Section / Elevation Letter
- Sheet Number
- Detail Number
- Sheet Number

MECHANICAL ABBREVIATIONS:

A/C	Air Conditioning
ABS	Acrylontirle Butadiene Styrene
AC	Air Compressor
ACU	Air Conditioning Unit
AD	Air Drop
AFF	Above Finished Floor
AP	Alternative Pipe
ARV	Air Release Valve
ATF	Automatic Transmission Fluid
AWG	American Wire Gauge
BFP	Backflow Preventer
BFV	Butterfly Valve
BH	Box Hydrant
BLDG	Building
BLR	Boiler
BV	Balancing Valve
°C	Celsius Temperature
C	Conduit
Cap.	Capacity
CCP	Concrete Cylinder Pipe
CD	Ceiling Diffuser
CI	Cast-Iron
CL	Centerline
CML&C	Cement Mortar Lined and Coated Steel Pipe
CO	Cleanout
COTF	Cleanout Through Floor
COTG	Cleanout Through Grade
COTW	Cleanout To Wall
CU	Copper
CV	Check Valve
CW	Cold Water
D	Depth
DB	Dry Bulb
DF	Drinking Fountain
DH	Duct Heater
DI	Drain Inlet
Dia	Diameter
DR	Dimension Ratio
(E)	Existing
EA	Exhaust Air
EC	Evaporative Cooler
ESEW	Emergency Shower And Eye Wash
EF	Exhaust Fan
EL	Elevation
Elect.	Electrical
ES	Evaporative Cooler Switch
ESP	External Static Pressure
ETS	Electrolytic Test Station
EWC	Electric Water Cooler
EWH	Electric Water Heater
FC	Flexible Connection
FCA	Flanged Coupling Adapter
FD	Floor Drain
FDC	Fire Department Connection
FE	Fire Extinguisher
FG	Finish Grade
FH	Fire Hydrant
FL	Flow Line
FLG	Flange
FP	Fire Protection
FS	Floor Sink
FTR	Flue through roof
GA	Gauge
GAL	Gallon(s)
GALV	Galvanized
GH	Ground Hydrant
GLV	Globe Valve
GPF	Gallons Per Flush
GPM	Gallon Per Minute
GSP	Galvanized Steel Pipe
GV	Gate Valve
GWH	Gas Water Heater
GYP	Gypsum
H	Height
HB	Hose Bibb
H/C	Hot Water,High Pressure Cleaner
HF	Hose Faucet
HVAC	Heating,Ventilating And Air Conditioning
HW	Hot Water
HZ	Hertz
ID	Inside Diameter
IE	Invert Elevation
IPS	International Pipe Standard,Iron Pipe Size
KS	Kitchen Sink
KW	Kilowatt
LAV	Lavatory
L/s	Liters per Second
m	Meter
MAX	Maximum
MAN	Manhole
MBH	Thousands Btus Per Hour
MIN	Minimum
MJ	Mechanical Joint
mm	millimeter
MS	Mop Sink
NG	Natural Gas
NIC	Not In Contract
NO	Number
NPS	Nominal Pipe Size
NPT	National Pipe Thread
NST	National Standard Thread
OA	Outside Air
OC	On Center
OD	Outside Diameter
OG	Original Ground
PBEF	Push-Button Exhaust Fan
PCC	Portland Cement Concrete
PCO	Pressure Cleanout
PE	Plain End
PH	Phase
PIV	Post Indicator Valve
PRV	Pressure Reducing Valve
PSI	Pounds Per Square Inch
PVC	Polyvinyl Chloride
PW	Potable Water
RA	Return Air
RCP	Reinforced Concrete Pipe
RD	Roof Drain
RE	Refrigerator
REG	Register
REQ	Required
RH	Radiant Heater
RV	Relief Valve
RWL	Rain Water Leader
RW	Raw Water
S	Switch,Slope
SF	Fan,Switch
S/S	Service Sink
SA	Supply Air
SCH	Schedule
SDS	Sanitary Dump Station
SF	Supply Fan
SFM	Sewer Force Main
SHR	Shower
SID	Solano Irrigation District
SP	Static Pressure
SS	Sanitary Sewer
SST	Stainless Steel
STA	Station
STD	Standard
TCV	Temperature Control Valve
TSPV	Trap Seal Primer Valve
TPRV	Temp.,Pressure,Relief Valve
TS	Time Switch
Typ.	Typical
UH	Unit Heater
UR	Urinal
	Vent
VA	Vacuum
VAC	Voltage,Alternating Current
VB	Valve Box
VIF	Verify In Field
VR	Vent Riser
VM	Vending Machine
VTR	Vent Thru Roof
	Width
W/	With
W/O	Without
WB	Wet Bulb,Westbound
WC	Water Closet
W.C.	Water Column
WD	Water Drop
WH	Water Heater
W.H.	Wall Hydrant
WHA	Water Hammer Arrestor
WLS	Water Level Switch
WP	Weatherproof
WS	Wash Sink
WSP	Welded Steel Pipe

CALIFORNIA STATE FIRE MARSHAL APPROVED
Approval of this plan does not authorize or approve any omission or deviation from applicable regulations. Final approval is subject to field inspection. One set of approved plans shall be available on the project site at all times.
5/9/11
Reviewed by: Hans Henneberque
Hans Henneberque
Senior Deputy State Fire Marshal

IDENTIFICATION STAMP DIV. OF THE STATE ARCHITECT
02 111744
AC ARLS — SS —
DATE 5-9-11

	BY	CHECKED
DESIGN	S. NEPRUD	Z. HARRIS
DETAILS	S. NEPRUD	Z. HARRIS
QUANTITIES	S. NEPRUD	Z. HARRIS

PREPARED FOR THE STATE OF CALIFORNIA DEPARTMENT OF TRANSPORTATION

DIVISION OF ENGINEERING SERVICES
ELECTRICAL-MECHANICAL-WATER AND WASTEWATER DESIGN

BRIDGE NO. 23W000IR
POST MILE 14.8

EASTBOUND CORDELIA CVEF

CVEF — LEGENDS AND ABBREVIATIONS

SHEET MO-1

ORIGINAL SCALE IN INCHES FOR REDUCED PLANS 0 1 2 3

CU 04264
EA 0A5351

DISREGARD PRINTS BEARING EARLIER REVISION DATES → 10/18/09 03/22/10 05/06/10 08/23/10 11/22/10 05/03/11

REVISION DATES (PRELIMINARY STAGE ONLY) SHEET OF

40a535wdm0-01.dgn
DOES SD imperial Rev.1/07 18-MAY-2011 16:32

18-MAY-2011 16:32
40a535wdm0-01.dgn

DIST.	COUNTY	ROUTE	POST MILES TOTAL PROJECT	SHEET NO.	TOTAL SHEETS
04	Sol	12,80	L1.8/L2.0, 13.3/15.7	628	740

REGISTERED MECHANICAL ENGINEER 05/03/11 DATE

REGISTERED PROFESSIONAL ENGINEER SEAN E NEPRUD No. M33458 Exp. 06/30/12 MECH STATE OF CALIFORNIA

5-16-11
PLANS APPROVAL DATE

The State of California or its officers or agents shall not be responsible for the accuracy or completeness of electronic copies of this plan sheet.

KENNEDY/JENKS CONSULTANTS 303 SECOND STREET SUITE 300 SOUTH SAN FRANCISCO, CA 94960	SOLANO TRANSPORTATION AUTHORITY ONE HARBOR CENTER, SUITE 130 SUISUN CITY, CA 94585

MANDATORY MEASURES FOR SPACE CONDITIONING SYSTEM AND EQUIPMENT

VENTILATION

1. OUTDOOR AIR SHALL BE PROVIDED BY A MECHANICAL VENTILATION SYSTEM AT A RATE NO LESS THAN THE GREATER OF 15 CFM PER OCCUPANT AND THE APPLICABLE RATE PER SQUARE FOOT OF CONDITIONED FLOOR AREA LISTED INTABLE 121-A OF THE CALIFORNIA ENERGY CODE.
2. THE MINIMUM RATE OF OUTDOOR AIR SHALL BE SUPPLIED TO EACH SPACE AT ALL TIMES THAT THE SPACE IS USUALLY OCCUPIED.
3. THREE COMPLETE AIR CHANGES SHALL BE SUPPLIED TO THE CONDITIONED SPACE IN THE ONE HOUR PERIOD IMMEDIATELY BEFORE THE BUILDING IS NORMALLY OCCUPIED.
4. VENTILATION DEMAND CONTROLS CONSISTING OF CARBON DIOXIDE (CO_2) SENSORS SHALL BE INSTALLED IN EACH ROOM WITHIN A SINGLE-ZONE SYSTEM THAT INCLUDES AN OUTDOOR AIR ECONOMIZER WHERE THE DESIGN OCCUPANT DENSITY IS 25 PERSONS OR MORE PER 1000 SQ. FT. FLOOR AREA. CO_2 SENSORS SHALL BE INSTALLED BETWEEN 3 AND 6-FEET ABOVE THE FLOOR.
5. CONTROLS SHALL BE PROVIDED TO ALLOW OUTSIDE AIR DAMPERS OR DEVICES TO BE OPERATED AT THE VENTILATION RATES AS SPECIFIED IN THESE PLANS.

CONTROLS

1. EACH SPACE-CONDITIONING ZONE SHALL BE CONTROLLED BY AN INDIVIDUAL THERMOSTATIC CONTROL THAT RESPONDS TO TEMPERATURE WITHIN THE ZONE. WHERE USED TO CONTROL HEATING, THE CONTROL SHALL BE ADJUSTABLE DOWN TO 55 33/64 F OR LOWER. FOR COOLING, THE CONTROL SHALL BE ADJUSTABLE UP TO 85 33/64 F OR HIGHER. WHERE USED TO CONTROL BOTH HEATING AND COOLING, THE CONTROL SHALL BE CAPABLE OF PROVIDING A DEAD BAND OF LEAST 5 33/64 F WITHIN WHICH THE SUPPLY OF HEATING AND COOLING IS SHUT OFF OR REDUCED TO A MINIMUM.
2. THERMOSTATS SHALL HAVE ADJUSTABLE SETPOINT STOPS ACCESSIBLE ONLY TO AUTHORIZED PERSONNEL.
3. EACH SPACE CONDITIONING SYSTEM SHALL BE PROVIDED WITH CONTROLS CAPABLE OF AUTOMATICALLY SHUTTING OFF THE SYSTEM DURING PERIODS OF NON-USE WHICH INCLUDES AN ACCESSIBLE MANUAL OVERRIDE THAT ALLOWS OPERATION OF THE SYSTEM FOR UP TO 4 HOURS.
4. EACH SPACE CONDITIONING SYSTEM SHALL BE PROVIDED WITH CONTROLS CAPABLE OF AUTOMATICALLY RESTARTING AND OPERATING THE SYSTEM AS REQUIRED TO MAINTAIN A SETBACK HEATING THERMOSTAT SETPOINT IF THE SYSTEM PROVIDES MECHANICAL HEATING; AND A SETUP COOLING THERMOSTAT SETPOINT IF THE SYSTEM PROVIDES MECHANICAL COOLING.
5. GRAVITY OR AUTOMATIC DAMPERS INTERLOCKED AND CLOSED ON FAN SHUTDOWN SHALL BE PROVIDED ON THE OUTSIDE AIR INTAKES AND DISCHARGES OF ALL SPACE-CONDITIONING AND EXHAUST SYSTEMS.

PIPE INSULATION

1. REFRIGERANT TUBING, SERVICE WATER HEATING AND HYDRONIC HEATING PIPING SYSTEMS CONVEYING FLUIDS BELOW 60°F AND ABOVE 105°F SHALL BE INSULATED TO THICKNESS LISTED IN TABLE 123-A OF THE CALIFORNIA ENERGY CODE BY MATERIALS WITH CONDUCTIVITY RATINGS MEETING OR EXCEEDING THE STANDARDS OF TABLE 123-A.
2. PIPE INSULATION SHALL BE PROTECTED FROM SUNLIGHT, MOISTURE, WIND AND EQUIPMENT MAINTENANCE BY MEANS OF PROTECTIVE JACKETING. CELLULAR FOAM INSULATION SHALL BE PERMITTED TO BE PROTECTED BY WATER-RETARDANT AND UV-PROTECTIVE COATING IN LIEU OF PROTECTIVE JACKETING WHERE THE INSULATED PIPING IS ABOVE GRADE.
3. INSULATION OF COOLING SYSTEM PIPING SHALL BE PROVIDED WITH VAPOR RETARDANT OUTSIDE OF THE INSULATION IF THE INSULATION SYSTEM IS NOT INHERENTLY VAPOR RETARDANT. ALL JOINTS AND PENETRATIONS SHALL BE SEALED.

MANDATORY MEASURES FOR SPACE CONDITIONING SYSTEM AND EQUIPMENT (CONTINUED)

AIR DISTRIBUTION DUCTS

1. AIR HANDLING DUCT SYSTEMS SHALL BE CONSTRUCTED, INSTALLED, SEALED, AND INSULATED AND PROTECTED FROM DAMAGE AS PROVIDED IN CH. 6 OF THE CALIFORNIA MECHANICAL CODE. DUCT AND PLENUM MATERIALS, TAPES, SEALANTS, AND MESH SHALL COMPLY WITH UL 181.
2. FACTORY FABRICATED DUCT AND CLOSURE SYSTEMS SHALL COMPLY WITH UL 181, INCLUDING COLLARS, CONNECTIONS AND SPLICES, AND BE UL LABELED. ALL PRESSURE SENSITIVE TAPES AND MASTICS USED WITH FLEXIBLE DUCTS SHALL COMPLY WITH UL 181 OR UL 181B. JOINTS AND SEAMS OF DUCT SYSTEMS AND THEIR COMPONENTS SHALL NOT BE SEALED WITH CLOTH-BACK RUBBER ADHESIVE DUCT TAPES UNLESS SUCH TAPE IS USED IN COMBINATION WITH MASTIC AND DRAWBANDS.
3. FLEXIBLE DUCTS FOR FIELD-FABRICATED DUCT SYSTEMS SHALL COMPLY WITH UL 181. ALL PRESSURE-SENSITIVE TAPES, MASTICS, AEROSOL SEALANTS OR OTHER CLOSURE SYSTEMS USED FOR INSTALLING FIELD-FABRICATED DUCT SYSTEMS SHALL MEET THE APPLICABLE REQUIREMENTS OF UL 181, UL 181A, OR UL 181B.
4. FOR FIELD-FABRICATED DUCT SYSTEMS, SEALANTS SHALL COMPLY WITH UL 181, UL 181A, OR UL 181B, AND BE NONTOXIC AND WATER RESISTANT. SEALANTS FOR INTERIOR APPLICATIONS SHALL PASS ASTM TEST C731 AND D2202. SEALANTS FOR EXTERIOR APPLICATIONS SHALL PASS ASTM TESTS C731, C732, AND D2202. SEALANTS AND MESHES SHALL BE RATED FOR EXTERIOR USE. PRESSURE-SENSITIVE TAPES SHALL COMPLY WITH UL 181, UL 181A, OR UL 181B. JOINTS AND SEAMS SHALL NOT BE SEALED WITH CLOTH-BACK RUBBER ADHESIVE DUCT TAPES UNLESS SUCH TAPE IS USED IN COMBINATION WITH MASTICS AND DRAWBANDS.
5. DRAWBANDS USED WITH FLEXIBLE DUCT ON FIELD-FABRICATED DUCT SYSTEMS SHALL BE EITHER STAINLESS-STEEL WORM-DRIVE HOSE CLAMPS OR UV-RESISTANT NYLON DUCT TIES. DRAWBANDS SHALL HAVE A MINIMUM TENSILE STRENGTH RATING OF 150 POUNDS. DRAWBANDS SHALL BE TIGHTENED AS RECOMMENDED BY THE MANUFACTURER WITH AN ADJUSTABLE TENSIONING TOOL.
6. AEROSOL-SEALANTS USED ON FIELD-FABRICATED DUCT SYSTEMS SHALL MEET THE REQUIREMENTS OF UL 723 AND BE APPLIED ACCORDING TO MANUFACTURERS SPECIFICATIONS. TAPES OR MASTICS USED IN COMBINATION WITH AEROSOL SEALING SHALL MEET THE REQUIREMENTS ABOVE.
7. ALL DUCT INSULATION R-VALUES SHALL BE BASED ON INSULATION ONLY (EXCLUDING AIR FILMS, VAPOR BARRIERS OR OTHER DUCT COMPONENTS) AND TESTED C-VALUES AT 75°F MEAN TEMPERATURE AT THE INSTALLED THICKNESS, IN ACCORDANCE WITH ASTM C518 OR ASTM C177.
8. FOR DUCT BOARD, DUCT LINER AND FACTORY-MADE RIGID DUCTS NOT NORMALLY SUBJECTED TO COMPRESSION, THE NOMINAL INSULATION THICKNESS SHALL BE USED TO DETERMINE ITS R-VALUE. FOR DUCT WRAP, INSTALLED THICKNESS SHALL BE ASSUMED TO BE 75 PERCENT OF NOMINAL THICKNESS TO DETERMINE ITS R-VALUE. FOR FACTORY MADE FLEXIBLE DUCTS, THE INSTALLED THICKNESS TO DETERMINE ITS R-VALUE SHALL BE DETERMINED BY DIVIDING THE DIFFERENCE BETWEEN THE ACTUAL OUTSIDE DIAMETER AND NOMINAL INSIDE DIAMETER BY 2.
9. INSULATED FLEXIBLE DUCT PRODUCTS INSTALLED TO MEET THE REQUIREMENTS ABOVE MUST INCLUDE LABELS, IN MAXIMUM INTERVALS OF 3 FEET, SHOWING THE THERMAL PERFORMANCE R-VALUE FOR THE DUCT INSULATION ITSELF, EXCLUDING AIR FILMS, VAPOR BARRIERS, OR OTHER DUCT COMPONENTS.

MANDATORY MEASURES FOR WATER CONSERVATION, APPLIANCES AND SPACE CONDITIONING EQUIPMENT

PLUMBING FIXTURES

1. NEW WATER CLOSETS SHALL NOT USE MORE THAN 1.3 GALLONS PER FLUSH AND SHALL MEET PERFORMANCE STANDARDS ESTABLISHED BY THE AMERICAN NATIONAL STANDARDS INSTITUTE STANDARD A112.19.2
2. NEW LAVATORY AND LABORATORY FAUCETS SHALL NOT HAVE A FLOWRATE GREATER THAN 1.5 GALLONS PER MINUTE AND SHALL MEET PERFORMANCE STANDARDS ESTABLISHED BY THE AMERICAN NATIONAL STANDARDS INSTITUTE STANDARD/NSF 61.
3. WATER CONSERVING FIXTURES SHALL BE INSTALLED IN STRICT ACCORDANCE WITH MANUFACTURER'S INSTRUCTION TO MAINTAIN THEIR RATED PERFORMANCE.

SPACE-CONDITIONING EQUIPMENT

1. ALL INSTALLED SPACE-CONDITIONING EQUIPMENT HAS BEEN CERTIFIED BY THE MANUFACTURER TO MEET ALL LISTED EFFICIENCY REQUIREMENTS [SECTION 112(a)].

APPLIANCES

1. ANY APPLIANCE WHERE A STANDARD IS ESTABLISHED IN THE APPLIANCE EFFICIENCY REGULATIONS SHALL ONLY BE INSTALLED IF THE MANUFACTURER HAS CERTIFIED THAT THE APPLIANCE COMPLIES WITH THE APPLICABLE STANDARD FOR THAT APPLIANCE.

SERVICE WATER HEATING SYSTEMS

1. SERVICE WATER HEATING SYSTEMS AND EQUIPMENT MAY BE INSTALLED ONLY IF THE MANUFACTURER HAS CERTIFIED THAT THE EQUIPMENT MEETS OR EXCEEDS ALL APPLICABLE EFFICIENCY REQUIREMENTS LISTED IN THE APPLIANCE EFFICIENCY REGULATIONS.
2. LAVATORIES IN RESTROOMS OF PUBLIC FACILITIES SHALL BE EQUIPPED WITH SELF-CLOSING VALVES, AND OUTLET DEVICES THAT LIMIT THE FLOW OF HOT WATER TO A MAXIMUM OF 1.8 GPM AND 0.75 GALLONS/CYCLE.
3. LAVATORIES IN RESTROOMS OF PUBLIC FACILITIES SHALL BE EQUIPPED WITH CONTROLS TO LIMIT THE OUTLET TEMPERATURE TO 110°F.
4. UNFIRED SERVICE WATER HEATER STORAGE TANKS SHALL HAVE COMBINED INTERNAL/ EXTERNAL INSULATION RATING OF R-16 OR HAVE SUFFICIENT INSULATION SO THAT THE HEAT LOSS OF THE TANK SURFACE BASED ON AN 80° F WATER-AIR TEMPERATURE DIFFERENCE SHALL BE LESS THAN 6.5 BTU/HR/SQ.FT.
5. SERVICE WATER HEATING SYSTEMS SHALL BE EQUIPPED WITH AUTOMATIC TEMPERATURE CONTROLS CAPABLE OF ADJUSTMENT FROM THE LOWEST TO THE HIGHEST ACCEPTABLE TEMPERATURE SETTINGS FOR THE INTENDED USE AS LISTED IN TABLE 2, CHAPTER 49 OF THE ASHRAE HANDBOOK, HVAC APPLICATIONS VOLUME.

CALIFORNIA STATE FIRE MARSHAL
APPROVED
Approval of this plan does not authorize or approve any omission or deviation from applicable regulations. Final approval is subject to field inspection. One set of approved plans shall be available on the project site at all times.
5/9/11
Reviewed by: Hans Henneberque
Senior Deputy State Fire Marshal

IDENTIFICATION STAMP
DIV. OF THE STATE ARCHITECT
02 111744
AC ___ FLS — SS —
DATE 5-5-11

DESIGN	BY S. NEPRUD	CHECKED Z. HARRIS
DETAILS	BY S. NEPRUD	CHECKED Z. HARRIS
QUANTITIES	BY S. NEPRUD	CHECKED Z. HARRIS

PREPARED FOR THE STATE OF CALIFORNIA DEPARTMENT OF TRANSPORTATION

DIVISION OF ENGINEERING SERVICES
ELECTRICAL-MECHANICAL-WATER AND WASTEWATER DESIGN

BRIDGE NO. 23W0001R
POST MILE 14.8

EASTBOUND CORDELIA CVEF
CVEF — TITLE 24 MANDATORY MEASURES

SHEET MO-1.1

ORIGINAL SCALE IN INCHES FOR REDUCED PLANS 0 1 2 3

CU 04264
EA 0A5351

DISREGARD PRINTS BEARING EARLIER REVISION DATES →

REVISION DATES (PRELIMINARY STAGE ONLY): 10/19/09 03/22/10 05/06/10 08/23/10 11/22/10 05/03/11

SHEET OF

40a535wdm0-01-01.dgn
DOES SD imperial Rev.1/07 18-MAY-2011 16:32

18-MAY-2011 16:32

40a535wdm0-01-01.dgn

DIST.	COUNTY	ROUTE	POST MILES TOTAL PROJECT	SHEET NO.	TOTAL SHEETS
04	Sol	12,80	L1.8/L2.0, 13.3/15.7	629	740

REGISTERED MECHANICAL ENGINEER — 05/03/11 DATE

REGISTERED PROFESSIONAL ENGINEER SEAN E NEPRUD No. M33458 Exp. 06/30/12 MECH STATE OF CALIFORNIA

5-16-11
PLANS APPROVAL DATE

The State of California or its officers or agents shall not be responsible for the accuracy or completeness of electronic copies of this plan sheet.

KENNEDY/JENKS CONSULTANTS
303 SECOND STREET
SUITE 300 SOUTH
SAN FRANCISCO, CA 94960

SOLANO TRANSPORTATION AUTHORITY
ONE HARBOR CENTER, SUITE 130
SUISUN CITY, CA 94585

CERTIFICATE OF COMPLIANCE (Part 1 of 2) ENV 1 C

PROJECT NAME: Cordelia Commercial Vehicle Enforcement Facility	DATE: 11/30/2010
PROJECT ADDRESS: Interstate 80 Eastbound, Mile 14.8	Building Permit #
PRINCIPAL DESIGNER-ENVELOPE: Greg Robley — TELEPHONE: 415-243-2150	
DOCUMENTATION AUTHOR: Heidi Vincent — TELEPHONE: 415-243-2150	Checked by/Date Enforcement Agency Use

GENERAL INFORMATION

DATE OF PLANS 11-22-2010 | BUILDING CONDITIONED FLOOR AREA 12,295 SQ. FT. | CLIMATE ZONE 12

BUILDING TYPE ☒ NONRESIDENTIAL ☐ HIGH-RISE RESIDENTIAL ☐ HOTEL/MOTEL GUEST

☐ RELOCATABLE – Indicate: ☐ specific climate – list _____, or ☐ all climates

PHASE OF CONSTRUCTION ☒ NEW CONSTRUCTION ☐ ADDITION ☐ ALTERATION ☐ UNCONDITIONED (file

METHOD OF ENVELOPE COMPLIANCE ☒ COMPONENT ☐ OVERALL ENVELOPE

SUPPORTING FORMS SUBMITTED ☒ ENV-2-C (Component) ☐ ENV-3-C (Overall Envelope) ☐ ENV-4-C (Skylight Worksheet)

STATEMENT OF COMPLIANCE

This Certificate of Compliance lists the building features and performance specifications need to comply with Title 24, Parts 1 and 6 of the California Code of Regulations. This certificate applies only to building envelope requirements.

The documentation preparer hereby certifies that the documentation is accurate and complete.

DOCUMENTATION AUTHOR	SIGNATURE	DATE
Bill Ramroth	William D Ramroth	12/1/2010

The Principal Envelope Designer hereby certifies that the proposed building design represented in this set of construction documents is consistent with the other compliance forms and worksheets, with the specifications, and with any other calculations submitted with this permit application. The proposed building has been designed to meet the envelope requirements contained in sections 110, 116 through 118, and 140, 142, 143 or 149 of Title 24, Part 6. **Please check one:**

☒ I hereby affirm that I am eligible under the provisions of Division 3 of the Business and Professions Code to sign this document as the person responsible for its preparation; and that I am licensed in the State of California as a civil engineer or mechanical engineer, or I am a licensed architect.

☐ I affirm that I am eligible under the provisions of Division 3 of the Business and Professions Code by section 5537.2 or 6737.3 to sign this document as the person responsible for its preparation; and that I am a licensed contractor performing this work.

☐ I affirm that I am eligible under Division 3 of the Business and Professions Code to sign this document because it pertains to a structure or type of work described as exempt pursuant to Business and Professions Code Sections 5537, 5538 and 6737.1.

(These sections of the Business and Professions Code are printed in full in the Nonresidential Manual.)

PRINCIPAL ENVELOPE DESIGNER-NAME	SIGNATURE	DATE	LIC. #
Greg Robley		12/1/2010	C30986

ENVELOPE MANDATORY MEASURES

Indicate location on plans of Note Block for Mandatory Measures _____

INSTRUCTIONS TO APPLICANT ENVELOPE COMPLIANCE & WORKSHEETS (check box if worksheet is included)

For detailed instructions on the use of this and all Energy Efficiency Standards compliance forms, please refer to the Nonresidential Manual published by the California Energy Commission.

☒ *ENV-1-C*	Certificate of Compliance. Required on plans for all submittals. Part 2 may be incorporated in schedules on plans.
☒ *ENV-2-C*	Use with the Envelope Component compliance method.
☐ *ENV-3-C*	Use with the Overall Envelope compliance method.
☐ *ENV-4-C*	Optional. Use for the minimum skylight requirements for large enclosed spaces.

CERTIFICATE OF COMPLIANCE (Part 2 of 2) ENV-1-C

PROJECT NAME: Cordelia Commercial Vehicle Enforcement Facility — DATE: 11/30/2010

OPAQUE SURFACES

Surface Type	Area	U-factor	Insulation Cavity	Insulation Continuous	Actual Azimuth	Tilt	Condition Status*	Joint App IV Reference	Location/Comments (e.g., Suspended Ceiling, Demising, etc.)	NOTES TO FIELD For Building Use Only
W1	533	N/A	R19	NONE	0	90	N	FIG IV.11/J5	Perf. Fiber Cement	
W1	851	N/A	R19	NONE	180	90	N	FIG IV.11/J5	Perf. Fiber Cement	
W1	575	N/A	R19	NONE	90	90	N	FIG IV.11/J5	Perf. Fiber Cement	
W2	238	N/A	R19	NONE	0	90	N	FIG IV.11/J5	Metal Panel	
W2	244	N/A	R19	NONE	180	90	N	FIG IV.11/J5	Metal Panel	
W2	73	N/A	R19	NONE	90	90	N	FIG IV.11/J5	Metal Panel	
W3	268	N/A	R19	NONE	0	90	N	FIG IV.11/J5	Alum. Composite Pnl	
W3	12	N/A	R19	NONE	90	90	N	FIG IV.11/J5	Alum. Composite Pnl	

* N, E, A, (New, Existing, Altered)

FENESTRATION SURFACES

✓ ☐ More than or equal to10,000 ft² of site-built fenestration area must include a label certificate issued by NFRC or provide a CEC Default Label Certificate using the default U-factors from Standards Tables 116-A and B. Certificate shall be filed in the contractor's project office during construction and in the building manager's office after construction.

A	B	C	D	E	F	G	H	I	J	K
Fen. #	Fenestration Type	Area	Azimuth	U-factor	U-factor Type[1]	Fenestration SHGC	SHGC Type[2]	Condition Status[3]	Location / Comments	NOTES TO FIELD – For Bldg. Dept. Use Only
F2	BR SF	320	0	.47	D	.38	D	N	Low-e	
F2	BR SF	30	0	.47	D	.38	D	N	Low-e	
F2	BR SF (TINT)	280	0	.47	D	.38	D	N	Low-e	
F2	BR SF (TINT)	12.5	0	.47	D	.38	D	N	Low-e	
F2	BR SF (TINT)	32	0	.470	D	.38	D	N	Low-e	

[1] U-factor Type: D, A or N (D for Default Table from Section 116, A for ACM Manual Appendix Default Table, or N for NFRC Labeled)
[2] SHGC Type: D, C or N (D for Default Table from Section 116, C for Center of Glass, or N for NFRC).
[3] Condition Status: N, E, or A (New, Existing, or Altered)..

EXTERIOR SHADING

Fenestration No.	Exterior Shade Type	SHGC	Window Height	Window Width	Overhang Length	Overhang Height	Overhang LExt.	Overhang RExt.
F2-A	-	.38	2'-0"	4'-0"	-	-	-	-
F2-B	-	.38	2'-0"	2'-0"	-	-	-	-
F2-K	-	.38	2'-6"	16'-0"	-	-	-	-
F2-C	OH	.38	5'-0"	4'-0"	2'-6"	7'-6"	-	-
F2-D	OH	.38	5'-0"	2'-0"	2'-6"	7'-6"	-	-

MINIMUM SKYLIGHT AREA FOR LARGE ENCLOSED SPACES

✓ ☐ The proposed building contains an enclosed space with floor area greater than 25,000 ft², a ceiling height greater than 15 feet, and an LPD for general lighting of at least 0.5 W/ft² **If this box is checked, ENV-4-C must be filled out.**

NOTES TO FIELD - For Building Department Use Only

CALIFORNIA STATE FIRE MARSHAL APPROVED

Approval of this plan does not authorize or approve any omission or deviation from applicable regulations. Final approval is subject to field inspection. One set of approved plans shall be available on the project site at all times.

Reviewed by: Hans Henneberque 5/9/11
Hans Henneberque
Senior Deputy State Fire Marshal

IDENTIFICATION STAMP DIV. OF THE STATE ARCHITECT
02 111744
AC ALS — SS —
DATE

DESIGN	BY S. NEPRUD	CHECKED Z. HARRIS	
DETAILS	BY S. NEPRUD	CHECKED Z. HARRIS	
QUANTITIES	BY S. NEPRUD	CHECKED Z. HARRIS	

ORIGINAL SCALE IN INCHES FOR REDUCED PLANS 0 1 2 3

PREPARED FOR THE STATE OF CALIFORNIA DEPARTMENT OF TRANSPORTATION

DIVISION OF ENGINEERING SERVICES
ELECTRICAL-MECHANICAL-WATER AND WASTEWATER DESIGN

CU 04264
EA 0A5351

BRIDGE NO. 23W000IR
POST MILE 14.8

EASTBOUND CORDELIA CVEF

CVEF — TITLE 24 BUILDING ENVELOPE COMPLIANCE FORMS

SHEET **MO-1.2**

DISREGARD PRINTS BEARING EARLIER REVISION DATES → REVISION DATES (PRELIMINARY STAGE ONLY) 10/13/09 03/22/10 05/06/10 08/23/10 11/22/10 05/03/11 SHEET OF

40a535wdm0-01-02.dgn
DOES SD imperial Rev.1/07 18-MAY-2011 15:01

18-MAY-2011 15:01
40a535wdm0-01-02.dgn

DIST.	COUNTY	ROUTE	POST MILES TOTAL PROJECT	SHEET NO.	TOTAL SHEETS
04	Sol	12,80	L1.8/L2.0, 13.3/15.7	630	740

REGISTERED MECHANICAL ENGINEER — 05/03/11 DATE

REGISTERED PROFESSIONAL ENGINEER SEAN E NEPRUD No. M33458 Exp. 06/30/12 MECH STATE OF CALIFORNIA

5-16-11
PLANS APPROVAL DATE

The State of California or its officers or agents shall not be responsible for the accuracy or completeness of electronic copies of this plan sheet.

KENNEDY/JENKS CONSULTANTS
303 SECOND STREET
SUITE 300 SOUTH
SAN FRANCISCO, CA 94960

SOLANO TRANSPORTATION AUTHORITY
ONE HARBOR CENTER, SUITE 130
SUISUN CITY, CA 94585

CERTIFICATE OF COMPLIANCE (Part 2 of 2) ENV-1-C

PROJECT NAME: Cordelia Commercial Vehicle Enforcement Facility
DATE: 11/30/2010

OPAQUE SURFACES

Surface Type	Area	U-factor	Insulation Cavity	Insulation Continuous	Actual Azimuth	Tilt	Condition Status*	Joint App IV Reference	Location/Comments (e.g., Suspended Ceiling, Demising, etc.)	NOTES TO FIELD For Building Use Only
W3	150	N/A	R-19	NONE	270	90	N	FIG IV.11 A/5	Alum. Composite Pnl	
W4	1206	N/A	R-19	NONE	0	90	N	FIG IV.11 A/5	Fiber Cement Panel	
W4	602	N/A	R-19	NONE	180	90	N	FIG IV.11 A/5	Fiber Cement Panel	
W4	206	N/A	R-19	NONE	90	90	N	FIG IV.11 A/5	Fiber Cement Panel	
W5	144	.63	-	NONE	0	90	N	FIG IV.13 J/5	Concrete	
W6	150	N/A	R-19	NONE	0	90	N	FIG IV.11 A/5	Alum Canopy	
W6	50	N/A	R-19	NONE	180	90	N	FIG IV.11 A/5	Alum Canopy	
W6	30	N/A	R-19	NONE	270	90	N	FIG IV.11 A/5	Alum Canopy	

* N, E, A, (New, Existing, Altered)

FENESTRATION SURFACES

✓ ☐ More than or equal to10,000 ft² of site-built fenestration area must include a label certificate issued by NFRC or provide a CEC Default Label Certificate using the default U-factors from Standards Tables 116-A and B. Certificate shall be filed in the contractor's project office during construction and in the building manager's office after construction.

A	B	C	D	E	F	G	H	I	J	K
Fen. #	Fenestration Type	Area	Azimuth	U-factor	U-factor Type[1]	Fenestration SHGC	SHGC Type[2]	Condition Status[3]	Location / Comments	NOTES TO FIELD – For Bldg. Dept. Use Only
F3	Store Front	60	90	.42	D	.38	D	N	Low-e	
F3	Store Front	133	270	.42	D	.38	D	N	Low-e	
F3	Store Front	5.5	0	.42	D	.38	D	N	Low-e	
F3	Store Front	112	180	.42	D	.38	D	N	Low-e	
F3	Store Front	5.5	0	.42	D	.38	D	N	Low-e	

[1] U-factor Type: D, A or N (D for Default Table from Section 116, A for ACM Manual Appendix Default Table, or N for NFRC Labeled)
[2] SHGC Type: D, C or N (D for Default Table from Section 116, C for Center of Glass, or N for NFRC).
[3] Condition Status: N, E, or A (New, Existing, or Altered)..

EXTERIOR SHADING

Fenestration No.	Exterior Shade Type	SHGC	Window Height	Window Width	Overhang Length	Overhang Height	Overhang LExt.	Overhang RExt.
F2-N, N1	OH	.38	4'-8"	6'-0"	-	-	-	-
F3-Q	OH	.38	7'-2"	4'-8"	-	-	-	-
F2-P	OH	.38	5'-6"	4'-0"	3'-0"	10'-6"	-	-
F2-K	OH	.38	7'-6"	4'-0"	-	-	-	-
F3-G	OH	.38	10'-6"	14'-0"	8'-10"	10'-6"	1'-10"	11'-3"

MINIMUM SKYLIGHT AREA FOR LARGE ENCLOSED SPACES

✓ ☐ The proposed building contains an enclosed space with floor area greater than 25,000 ft², a ceiling height greater than 15 feet, and an LPD for general lighting of at least 0.5 W/ft² **If this box is checked, ENV-4-C must be filled out.**

NOTES TO FIELD - For Building Department Use Only

2005 Nonresidential Compliance Forms *April 2005*

CERTIFICATE OF COMPLIANCE (Part 2 of 2) ENV-1-C

PROJECT NAME: Cordelia Commercial Vehicle Enforcement Facility
DATE: 11/30/2010

OPAQUE SURFACES

Surface Type	Area	U-factor	Insulation Cavity	Insulation Continuous	Actual Azimuth	Tilt	Condition Status*	Joint App IV Reference	Location/Comments (e.g., Suspended Ceiling, Demising, etc.)	NOTES TO FIELD For Building Use Only
W7	254	.78	-	-	180	90	N	IV.13/E5	Concrete	
W8	1666	-	R-19	NONE	180	90	N	IV.11/A5	Stud Wall	

* N, E, A, (New, Existing, Altered)

FENESTRATION SURFACES

✓ ☐ More than or equal to10,000 ft² of site-built fenestration area must include a label certificate issued by NFRC or provide a CEC Default Label Certificate using the default U-factors from Standards Tables 116-A and B. Certificate shall be filed in the contractor's project office during construction and in the building manager's office after construction.

A	B	C	D	E	F	G	H	I	J	K
Fen. #	Fenestration Type	Area	Azimuth	U-factor	U-factor Type[1]	Fenestration SHGC	SHGC Type[2]	Condition Status[3]	Location / Comments	NOTES TO FIELD – For Bldg. Dept. Use Only
F4	SF Door	50	180	.42	D	.38	D	N		
F4	SF Door	50	90	.42	D	.38	D	N		
F4	SF Door	25	270	.42	D	.38	D	N		
-	-	-	-	-						
-	-	-	-	-						

[1] U-factor Type: D, A or N (D for Default Table from Section 116, A for ACM Manual Appendix Default Table, or N for NFRC Labeled)
[2] SHGC Type: D, C or N (D for Default Table from Section 116, C for Center of Glass, or N for NFRC).
[3] Condition Status: N, E, or A (New, Existing, or Altered)..

EXTERIOR SHADING

Fenestration No.	Exterior Shade Type	SHGC	Window Height	Window Width	Overhang Length	Overhang Height	Overhang LExt.	Overhang RExt.
F3-L	OH	.38	10'-6"	15'-0"	17'-10'	0	-	-
F3-H	OH	.38	10'-6"	6'-0"	4'-1"	10'-6"	-	-
F3-S	-	.38	9'-0"	5'-0"	-	-	-	-
F3-J	OH	.38	9'-0"	5'-0"	5'-7"	0	-	-
F4-S	-	.38	7'-0"	3'-0"	-	-	-	-

MINIMUM SKYLIGHT AREA FOR LARGE ENCLOSED SPACES

✓ ☐ The proposed building contains an enclosed space with floor area greater than 25,000 ft², a ceiling height greater than 15 feet, and an LPD for general lighting of at least 0.5 W/ft² **If this box is checked, ENV-4-C must be filled out.**

NOTES TO FIELD - For Building Department Use Only

2005 Nonresidential Compliance Forms *April 2005*

CALIFORNIA STATE FIRE MARSHAL APPROVED
Approval of this plan does not authorize or approve any omission or deviation from applicable regulations. Final approval is subject to field inspection. One set of approved plans shall be available on the project site at all times.
Reviewed by: Hans Henneberque 5/9/11
Hans Henneberque
Senior Deputy State Fire Marshal

IDENTIFICATION STAMP DIV. OF THE STATE ARCHITECT
02 1117 44
AC ✓ BLS — SS —
DATE 5-5-11

	BY	CHECKED
DESIGN	S. NEPRUD	Z. HARRIS
DETAILS	S. NEPRUD	Z. HARRIS
QUANTITIES	S. NEPRUD	Z. HARRIS

PREPARED FOR THE STATE OF CALIFORNIA DEPARTMENT OF TRANSPORTATION

DIVISION OF ENGINEERING SERVICES
ELECTRICAL-MECHANICAL-WATER AND WASTEWATER DESIGN

BRIDGE NO. 23W000IR
POST MILE 14.8

EASTBOUND CORDELIA CVEF
CVEF
TITLE 24 BUILDING ENVELOPE COMPLIANCE FORMS

SHEET MO-1.3

ORIGINAL SCALE IN INCHES FOR REDUCED PLANS 0 1 2 3

CU 04264
EA 0A5351

DISREGARD PRINTS BEARING EARLIER REVISION DATES → REVISION DATES (PRELIMINARY STAGE ONLY) 10/19/09 03/22/10 05/06/10 08/23/10 11/22/10 05/03/11 SHEET OF

40a535wdm0-01-03.dgn
DOES SD imperial Rev.1/07 18-MAY-2011 07:37

18-MAY-2011 07:37
40a535wdm0-01-03.dgn

DIST.	COUNTY	ROUTE	POST MILES TOTAL PROJECT	SHEET NO.	TOTAL SHEETS
04	Sol	12,80	L1.8/L2.0, 13.3/15.7	631	740

REGISTERED MECHANICAL ENGINEER — 05/03/11 DATE

REGISTERED PROFESSIONAL ENGINEER SEAN E NEPRUD No. M33458 Exp. 06/30/12 MECH STATE OF CALIFORNIA

5-16-11
PLANS APPROVAL DATE

The State of California or its officers or agents shall not be responsible for the accuracy or completeness of electronic copies of this plan sheet.

KENNEDY/JENKS CONSULTANTS
303 SECOND STREET
SUITE 300 SOUTH
SAN FRANCISCO, CA 94960

SOLANO TRANSPORTATION AUTHORITY
ONE HARBOR CENTER, SUITE 130
SUISUN CITY, CA 94585

CERTIFICATE OF COMPLIANCE (Part 2 of 2) ENV-1-C

PROJECT NAME: Cordelia Commercial Vehicle Enforcement Facility
DATE: 11/30/2010

OPAQUE SURFACES

Surface Type	Area	U-factor	Insulation Cavity	Insulation Continuous	Actual Azimuth	Tilt	Condition Status*	Joint App IV Reference	Location/Comments (e.g., Suspended Ceiling, Demising, etc.)	NOTES TO FIELD For Building Use Only

* N, E, A, (New, Existing, Altered)

FENESTRATION SURFACES

✓ ☐ More than or equal to10,000 ft² of site-built fenestration area must include a label certificate issued by NFRC or provide a CEC Default Label Certificate using the default U-factors from Standards Tables 116-A and B. Certificate shall be filed in the contractor's project office during construction and in the building manager's office after construction.

A	B	C	D	E	F	G	H	I	J	K
Fen. #	Fenestration Type	Area	Azimuth	U-factor	U-factor Type[1]	Fenestration SHGC	SHGC Type[2]	Condition Status[3]	Location / Comments	NOTES TO FIELD – For Bldg. Dept. Use Only

[1] U-factor Type: D, A or N (D for Default Table from Section 116, A for ACM Manual Appendix Default Table, or N for NFRC Labeled)
[2] SHGC Type: D, C or N (D for Default Table from Section 116, C for Center of Glass, or N for NFRC).
[3] Condition Status: N, E, or A (New, Existing, or Altered)..

EXTERIOR SHADING

Fenestration No.	Exterior Shade Type	SHGC	Window Height	Window Width	Overhang Length	Overhang Height	Overhang LExt.	Overhang RExt.
F4-G	OH	.38	8'-5"	6'-0"	8'-10"	10'-6"	4'-0"	4'-0"
F4-H	OH	.38	8'-5"	3'-0"	4'-1"	10'-6"	3'-0"	0
F4-J	OH	.38	7'-0"	3'-0"	5'-7"	10'-6"	2'-0"	1'-3"
F4-L	OH	.38	8'-5"	3'-0"	17'-10"	10'-6"	12'-0"	0
F4-Q	-	.38	7'-0"	3'-0"	-	-	-	-

MINIMUM SKYLIGHT AREA FOR LARGE ENCLOSED SPACES

✓ ☐ The proposed building contains an enclosed space with floor area greater than 25,000 ft², a ceiling height greater than 15 feet, and an LPD for general lighting of at least 0.5 W/ft² **If this box is checked, ENV-4-C must be filled out.**

NOTES TO FIELD - For Building Department Use Only

ENVELOPE COMPONENT METHOD (Part 1 of 2) ENV-2-C

PROJECT NAME: Cordelia Commercial Vehicle Enforcement Facility
DATE: 11/30/2010

WINDOW AREA CALCULATION

A. DISPLAY PERIMETER	0	FT × 6 FT =	0	SF	DISPLAY AREA
B. GROSS EXTERIOR WALL AREA	7285	SF × 0.40 =	2914	SF	40% of GROSS EXTERIOR WALL AREA
C. ENTER LARGER OF A OR B			2914	SF	MAXIMUM STANDARD AREA
D. ENTER PROPOSED WINDOW AREA			1103	SF	PROPOSED WINDOW AREA

If the PROPOSED WINDOW AREA is greater than the MAXIMUM STANDARD AREA then the envelope component method may not be used.

E. WINDOW WALL RATIO = Proposed Window Area Divided by Gross Exterior Wall Area = .39

F. WEST DISPLAY PERIMETER	0	FT × 6 FT =	0	SF	WEST DISPLAY AREA
G. WEST EXTERIOR WALL AREA	1089	SF × 0.40 =	436	SF	40% of WEST EXTERIOR WALL AREA
H. ENTER THE LARGER OF F AND G			436	SF	MAXIMUM STANDARD WEST AREA
I. ENTER PROPOSED WEST WINDOW AREA			206	SF	PROPOSED WEST WINDOW AREA

If the PROPOSED WEST WINDOW AREA is greater than the MAXIMUM STANDARD WEST AREA then the envelope component method may not

J. WEST WINDOW WALL RATIO = Proposed West Window Area Divided by West Exterior Wall Area = .47

SKYLIGHT AREA CALCULATION

A. ATRIUM or SKYLIGHT HEIGHT	FT			
	GROSS ROOF AREA		STANDARD ALLOWED SKYLIGHT AREA	
B. IF Atrium/Skylight Height in A ≤ 55 FT		SF × 0.05 =	SF	
C. IF Height in A > 55 FT		SF × 0.10 =	SF	
D. PROPOSED SKYLIGHT AREA				SF

If the PROPOSD SKYLIGHT AREA is greater than the STANDARD ALLOWED SKYLIGHT AREA then the envelope component method may not be used.

SKYLIGHTS

SKYLIGHT NAME (e.g., Sky-1, Sky-2)	SKYLIGHT GLAZING ✓ With Curb	✓ With No Curb	✓ Plastic	# OF PANES	U-FACTOR PROPOSED	U-FACTOR ALLOWED	SOLAR HEAT GAIN COEFFICIENT PROPOSED	SOLAR HEAT GAIN COEFFICIENT ALLOWED

RELOCATABLE PUBLIC SCHOOL BUILDINGS - See §143(a)8 in the Energy Standards

☐ For Specific Climate Zone, use Table 143-A - Prescriptive Envelope Criteria.	☐ Specific Climate Zone Metal Identification Label – Place two labels on each relocatable building and indicate on the building plans.
☐ For Any (All) Climate Zone, use Table 143-C - Prescriptive Envelope Criteria.	☐ Any (All) Climate Zone Metal Identification Label - Place two labels on each relocatable building and indicate on the building plans.

CALIFORNIA STATE FIRE MARSHAL APPROVED
Approval of this plan does not authorize or approve any omission or deviation from applicable regulations. Final approval is subject to field inspection. One set of approved plans shall be available on the project site at all times.
Reviewed by: Hans Henneberque 5/9/11
Hans Henneberque
Senior Deputy State Fire Marshal

IDENTIFICATION STAMP DIV. OF THE STATE ARCHITECT
02 111744
AC BLS SS
DATE

DESIGN	BY S. NEPRUD	CHECKED Z. HARRIS	
DETAILS	BY S. NEPRUD	CHECKED Z. HARRIS	
QUANTITIES	BY S. NEPRUD	CHECKED Z. HARRIS	

PREPARED FOR THE STATE OF CALIFORNIA DEPARTMENT OF TRANSPORTATION

DIVISION OF ENGINEERING SERVICES
ELECTRICAL-MECHANICAL-WATER AND WASTEWATER DESIGN

BRIDGE NO. 23W000IR
POST MILE 14.8

EASTBOUND CORDELIA CVEF
CVEF
TITLE 24
BUILDING ENVELOPE COMPLIANCE FORMS

SHEET **MO-1.4**

ORIGINAL SCALE IN INCHES FOR REDUCED PLANS 0 1 2 3

CU 04264
EA 0A5351

DISREGARD PRINTS BEARING EARLIER REVISION DATES → REVISION DATES (PRELIMINARY STAGE ONLY) 10/18/09 03/22/10 05/06/10 08/23/10 11/22/10 05/03/11 SHEET OF

40a535wdm0-01-04.dgn
DOES SD Imperial Rev.1/07 18-MAY-2011 07:38

18-MAY-2011 07:38
40a535wdm0-01-04.dgn

DIST.	COUNTY	ROUTE	POST MILES TOTAL PROJECT	SHEET NO.	TOTAL SHEETS
04	Sol	12,80	L1.8/L2.0, 13.3/15.7	632	740

REGISTERED MECHANICAL ENGINEER — 05/03/11 DATE

REGISTERED PROFESSIONAL ENGINEER SEAN E NEPRUD No. M33458 Exp. 06/30/12 MECH STATE OF CALIFORNIA

5-16-11
PLANS APPROVAL DATE

The State of California or its officers or agents shall not be responsible for the accuracy or completeness of electronic copies of this plan sheet.

KENNEDY/JENKS CONSULTANTS
303 SECOND STREET
SUITE 300 SOUTH
SAN FRANCISCO, CA 94960

SOLANO TRANSPORTATION AUTHORITY
ONE HARBOR CENTER, SUITE 130
SUISUN CITY, CA 94585

ENVELOPE COMPONENT METHOD (Part 2 of 2) ENV-2-C

PROJECT NAME: Cordelia Commercial Vehicle Enforcement Facility
DATE: 11/30/2010

COOL ROOFS - LOW-SLOPED - See Section 3.4 in the NRM and §118(i)3 and §143(a)1 in the Energy Standards for further description about exterior roofs and mandatory requirements for Cool Roofs.

✓ CHECK APPLICABLE BOXES

☒ **Option 1- Tested - Initial Thermal Emittance ≥0.75 and Intial Solar Reflectance ≥0.70**

Proposed emittance and reflectance must be ≥the standard when tested with CRRC-1.	Proposed	Standard	
1. Enter proposed initial thermal emittance, $\varepsilon_{initial}$	.9	≥0.75	If proposed ≥to the Standard then it complies.
2. Enter the proposed initial solar reflectance, $\rho_{initial}$	.83	≥0.70	If proposed ≥to the Standard then it complies.

3. When applying **Liquid Field Applied Coatings,** the coating must be applied with a minimum dry mil thickness of 20 mils across the entire roof surface and meet minimum performance requirements listed in §118(i)3 and Table 118-C. Select the applicable coating:

☐ Aluminum-Pigmented Asphalt Roof Coating ☐ Cement-Based Roof Coating ☒ Other Single-Ply

☐ **Option 2 - CRRC-1 Tested - Initial Thermal Emittance < 0.75**

Proposed initial thermal emittance < 0.75 when tested with CRRC-1.	Proposed	Standard	
1. Enter proposed initial thermal emittance, $\varepsilon_{initial}$		< 0.75	Go to line 2. Insert $\varepsilon_{initial}$ value in calculation.
2. Enter the initial solar reflectance, $\rho_{initial}$		0.70 + [0.34 X (0.75 - $\varepsilon_{initial}$)]	Standard $\rho_{initial}$ =

3. To apply **Liquid Field Applied Coatings,** the coating must be applied with a minimum dry mil thickness of 20 mils across the entire roof surface and meet minimum performance requirements listed in §118(i)3 and Table 118-C. Select the applicable coating:

☐ Aluminum-Pigmented Asphalt Roof Coating ☐ Cement-Based Roof Coating ☐ Other

✓ ☐ **CRRC-1 Label Attached to Submittal**
(Note if no CRRC-1 label is available, this compliance method can not be used).

OPAQUE SURFACES

ASSEMBLY NAME (e.g. Roof-1, Wall-1, Floor-, Soffits, etc…)	TYPE (e.g. Roof, Wall, Floor, demising, etc…)	HEAT CAPACITY	INSULATION R-VALUE* PROPOSED	INSULATION R-VALUE* MINIMUM ALLOWED	ASSEMBLY U-FACTOR* PROPOSED	ASSEMBLY U-FACTOR* Joint Appendix IV REF	ASSEMBLY U-FACTOR* MAXIMUM ALLOWED
W1	WALL	N/A	R-19	R-13	-	-	-
W2	WALL	N/A	R-19	R-13	-	-	-
W3	WALL	N/A	R-19	R-13	-	-	-
W4	WALL	N/A	R-19	R-13	-	-	-
W5	WALL	28.80	-	-	.63	.TABLE IV.13J/12	.65

* For each assembly type, meet the minimum insulation R-value or the maximum assembly U-factor.

WINDOWS

WINDOW NAME (e.g., Window-1, Window-2)	ORIENTATION ✓ N	✓ E	✓ S	✓ W	Fenestration U-FACTOR PROP.	U-FACTOR ALLOW.	# OF PANES	Fen. SHGC*	PROPOSED RSHG H	V	H/V	OHF	PROP. RSHG	ALLOWED RSHG
F2-A	☒	☐	☐	☐	.47	.47	2	.38	0	-	0	1	.38	.61
F2-B	☒	☐	☐	☐	.47	.47	1	.38	0	-	0	1	.38	.61
F2-P	☒	☐	☐	☐	.47	.47	11	.38	3	10'-6"	3.5	.9	.34	.61
F2-K (TINT)	☒	☐	☐	☐	.47	.47	12	.38	0	-	0	1	.38	.61
F2-K	☒	☐	☐	☐	.47	.47	4	.38	0	-	0	.1	.38	.61

* From Fenestration Surfaces ENV-1-C, Part 2, Column G, or when Column H has a "C" identifier, calculate using the center of glass value SHGCc in $SHGC_{FEN}$ = .08 + (.86 x SHGCc) and enter value.

2005 Nonresidential Compliance Forms *April 2005*

ENVELOPE COMPONENT METHOD (Part 2 of 2) ENV-2-C

PROJECT NAME: Cordelia Commercial Vehicle Enforcement Facility
DATE: 11/30/2010

COOL ROOFS - LOW-SLOPED - See Section 3.4 in the NRM and §118(i)3 and §143(a)1 in the Energy Standards for further description about exterior roofs and mandatory requirements for Cool Roofs.

✓ CHECK APPLICABLE BOXES

☐ **Option 1- Tested - Initial Thermal Emittance ≥0.75 and Intial Solar Reflectance ≥0.70**

Proposed emittance and reflectance must be ≥the standard when tested with CRRC-1.	Proposed	Standard	
1. Enter proposed initial thermal emittance, $\varepsilon_{initial}$		≥0.75	If proposed ≥to the Standard then it complies.
2. Enter the proposed initial solar reflectance, $\rho_{initial}$		≥0.70	If proposed ≥to the Standard then it complies.

3. When applying **Liquid Field Applied Coatings,** the coating must be applied with a minimum dry mil thickness of 20 mils across the entire roof surface and meet minimum performance requirements listed in §118(i)3 and Table 118-C. Select the applicable coating:

☐ Aluminum-Pigmented Asphalt Roof Coating ☐ Cement-Based Roof Coating ☐ Other

☐ **Option 2 - CRRC-1 Tested - Initial Thermal Emittance < 0.75**

Proposed initial thermal emittance < 0.75 when tested with CRRC-1.	Proposed	Standard	
1. Enter proposed initial thermal emittance, $\varepsilon_{initial}$		< 0.75	Go to line 2. Insert $\varepsilon_{initial}$ value in calculation.
2. Enter the initial solar reflectance, $\rho_{initial}$		0.70 + [0.34 X (0.75 - $\varepsilon_{initial}$)]	Standard $\rho_{initial}$ =

3. To apply **Liquid Field Applied Coatings,** the coating must be applied with a minimum dry mil thickness of 20 mils across the entire roof surface and meet minimum performance requirements listed in §118(i)3 and Table 118-C. Select the applicable coating:

☐ Aluminum-Pigmented Asphalt Roof Coating ☐ Cement-Based Roof Coating ☐ Other

✓ ☐ **CRRC-1 Label Attached to Submittal**
(Note if no CRRC-1 label is available, this compliance method can not be used).

OPAQUE SURFACES

ASSEMBLY NAME (e.g. Roof-1, Wall-1, Floor-, Soffits, etc…)	TYPE (e.g. Roof, Wall, Floor, demising, etc…)	HEAT CAPACITY	INSULATION R-VALUE* PROPOSED	INSULATION R-VALUE* MINIMUM ALLOWED	ASSEMBLY U-FACTOR* PROPOSED	ASSEMBLY U-FACTOR* Joint Appendix IV REF	ASSEMBLY U-FACTOR* MAXIMUM ALLOWED
W6	WALL	-	R-19	R-13	-	-	-
W7	WALL	16.80	-	-	.78	IV.13/J5	.65
W8	WALL	-	R-19	R-13	-	-	-
-							
-							

* For each assembly type, meet the minimum insulation R-value or the maximum assembly U-factor.

WINDOWS

WINDOW NAME (e.g., Window-1, Window-2)	ORIENTATION ✓ N	✓ E	✓ S	✓ W	Fenestration U-FACTOR PROP.	U-FACTOR ALLOW.	# OF PANES	Fen. SHGC*	PROPOSED RSHG H	V	H/V	OHF	PROP. RSHG	ALLOWED RSHG
F2-C (TINT)	☒	☐	☐	☐	.47	.47	4	.38	7.5	8.5	.39	.69	.26	.47
F2-D (TINT)	☒	☐	☐	☐	.47	.47	2	.38	7.5	8.5	0	1	.38	.61
F2-F	☒	☐	☐	☐	.47	.47	1	.38	0	-	0	1	.38	.61
F2-N	☐	☐	☒	☐	.47	.47	2	.38	0	-	0	1	.38	.47
F2-N1	☐	☐	☒	☐	.47	.47	2	.38	0	-	0	1	.38	.47

* From Fenestration Surfaces ENV-1-C, Part 2, Column G, or when Column H has a "C" identifier, calculate using the center of glass value SHGCc in $SHGC_{FEN}$ = .08 + (.86 x SHGCc) and enter value.

2005 Nonresidential Compliance Forms *April 2005*

CALIFORNIA STATE FIRE MARSHAL APPROVED
Approval of this plan does not authorize or approve any omission or deviation from applicable regulations. Final approval is subject to field inspection. One set of approved plans shall be available on the project site at all times.
Reviewed by: Hans Henneberque 5/9/11
Hans Henneberque
Senior Deputy State Fire Marshal

IDENTIFICATION STAMP DIV. OF THE STATE ARCHITECT
02 111744
AC ___ BLS ___ SS ___
DATE 5-5-11

	BY	CHECKED
DESIGN	S. NEPRUD	Z. HARRIS
DETAILS	S. NEPRUD	Z. HARRIS
QUANTITIES	S. NEPRUD	Z. HARRIS

PREPARED FOR THE STATE OF CALIFORNIA DEPARTMENT OF TRANSPORTATION

DIVISION OF ENGINEERING SERVICES
ELECTRICAL-MECHANICAL-WATER AND WASTEWATER DESIGN

BRIDGE NO. 23W000IR
POST MILE 14.8

EASTBOUND CORDELIA CVEF
CVEF
TITLE 24
BUILDING ENVELOPE COMPLIANCE FORMS

SHEET **MO-1.5**

ORIGINAL SCALE IN INCHES FOR REDUCED PLANS 0 1 2 3

CU 04264
EA 0A5351

DISREGARD PRINTS BEARING EARLIER REVISION DATES → 10/19/09 03/22/10 05/06/10 08/23/10 11/22/10 05/03/11

REVISION DATES (PRELIMINARY STAGE ONLY) SHEET OF

40a535wdm0-01-05.dgn
DOES SD Imperial Rev.1/07 18-MAY-2011 07:38

18-MAY-2011 07:38
40a535wdm0-01-05.dgn

DIST.	COUNTY	ROUTE	POST MILES TOTAL PROJECT	SHEET NO.	TOTAL SHEETS
04	Sol	12,80	L1.8/L2.0, 13.3/15.7	633	740

REGISTERED MECHANICAL ENGINEER — 05/03/11 DATE

REGISTERED PROFESSIONAL ENGINEER SEAN E NEPRUD No. M33458 Exp. 06/30/12 MECH STATE OF CALIFORNIA

5-16-11
PLANS APPROVAL DATE

The State of California or its officers or agents shall not be responsible for the accuracy or completeness of electronic copies of this plan sheet.

KENNEDY/JENKS CONSULTANTS
303 SECOND STREET
SUITE 300 SOUTH
SAN FRANCISCO, CA 94960

SOLANO TRANSPORTATION AUTHORITY
ONE HARBOR CENTER, SUITE 130
SUISUN CITY, CA 94585

ENVELOPE COMPONENT METHOD (Part 2 of 2) ENV-2-C

PROJECT NAME: Cordelia Commercial Vehicle Enforcement Facility
DATE: 11/30/2010

COOL ROOFS - LOW-SLOPED - See Section 3.4 in the NRM and §118(i)3 and §143(a)1 in the Energy Standards for further description about exterior roofs and mandatory requirements for Cool Roofs.

✓ CHECK APPLICABLE BOXES

☐ **Option 1- Tested - Initial Thermal Emittance ≥0.75 and Intial Solar Reflectance ≥0.70**

Proposed emittance and reflectance must be ≥the standard when tested with CRRC-1.	Proposed	Standard	
1. Enter proposed initial thermal emittance, $\varepsilon_{initial}$		≥0.75	If proposed ≥to the Standard then it complies.
2. Enter the proposed initial solar reflectance, $\rho_{initial}$		≥0.70	If proposed ≥to the Standard then it complies.

3. When applying **Liquid Field Applied Coatings,** the coating must be applied with a minimum dry mil thickness of 20 mils across the entire roof surface and meet minimum performance requirements listed in §118(i)3 and Table 118-C. Select the applicable coating:

☐ Aluminum-Pigmented Asphalt Roof Coating ☐ Cement-Based Roof Coating ☐ Other _____

☐ **Option 2 - CRRC-1 Tested - Initial Thermal Emittance < 0.75**

Proposed initial thermal emittance < 0.75 when tested with CRRC-1.	Proposed	Standard	
1. Enter proposed initial thermal emittance, $\varepsilon_{initial}$		< 0.75	Go to line 2. Insert $\varepsilon_{initial}$ value in calculation.
2. Enter the initial solar reflectance, $\rho_{initial}$		$0.70 + [0.34 \times (0.75 - \varepsilon_{initial})]$	Standard $\rho_{initial}$ =

3. To apply **Liquid Field Applied Coatings,** the coating must be applied with a minimum dry mil thickness of 20 mils across the entire roof surface and meet minimum performance requirements listed in §118(i)3 and Table 118-C. Select the applicable coating:

☐ Aluminum-Pigmented Asphalt Roof Coating ☐ Cement-Based Roof Coating ☐ Other _____

✓ ☐ **CRRC-1 Label Attached to Submittal**
(Note if no CRRC-1 label is available, this compliance method can not be used).

OPAQUE SURFACES

ASSEMBLY NAME (e.g. Roof-1, Wall-1, Floor-, Soffits, etc…)	TYPE (e.g. Roof, Wall, Floor, demising, etc…)	HEAT CAPACITY	INSULATION R-VALUE* PROPOSED	INSULATION R-VALUE* MINIMUM ALLOWED	ASSEMBLY U-FACTOR* PROPOSED	ASSEMBLY U-FACTOR* Joint Appendix IV REF	ASSEMBLY U-FACTOR* MAXIMUM ALLOWED

* For each assembly type, meet the minimum insulation R-value or the maximum assembly U-factor.

WINDOWS

WINDOW NAME (e.g., Window-1, Window-2)	ORIENTATION ✓ N	✓ E	✓ S	✓ W	Fenestration U-FACTOR PROP.	U-FACTOR ALLOW.	# OF PANES	Fen. SHGC*	PROPOSED RSHG H	V	H/V	OHF	PROP. RSHG	ALLOWED RSHG
F3-G	☐	☐	☒	☐	.42	.47	11	.38	8.8	10.5	.84	.45	.17	.47
F3-H	☐	☒	☐	☐	.42	.47	6	.38	4.1	10.5	.39	.69	..26	.47
F3-S	☐	☒	☐	☐	.42	.47	4	.38	0	-	0	1	.38	.47
	☐	☐	☐	☐										
	☐	☐	☐	☐										

ENVELOPE COMPONENT METHOD (Part 2 of 2) ENV-2-C

PROJECT NAME: Cordelia Commercial Vehicle Enforcement Facility
DATE: 11/30/2010

COOL ROOFS - LOW-SLOPED - See Section 3.4 in the NRM and §118(i)3 and §143(a)1 in the Energy Standards for further description about exterior roofs and mandatory requirements for Cool Roofs.

✓ CHECK APPLICABLE BOXES

☐ **Option 1- Tested - Initial Thermal Emittance ≥0.75 and Intial Solar Reflectance ≥0.70**

Proposed emittance and reflectance must be ≥the standard when tested with CRRC-1.	Proposed	Standard	
1. Enter proposed initial thermal emittance, $\varepsilon_{initial}$		≥0.75	If proposed ≥to the Standard then it complies.
2. Enter the proposed initial solar reflectance, $\rho_{initial}$		≥0.70	If proposed ≥to the Standard then it complies.

3. When applying **Liquid Field Applied Coatings,** the coating must be applied with a minimum dry mil thickness of 20 mils across the entire roof surface and meet minimum performance requirements listed in §118(i)3 and Table 118-C. Select the applicable coating:

☐ Aluminum-Pigmented Asphalt Roof Coating ☐ Cement-Based Roof Coating ☐ Other _____

☐ **Option 2 - CRRC-1 Tested - Initial Thermal Emittance < 0.75**

Proposed initial thermal emittance < 0.75 when tested with CRRC-1.	Proposed	Standard	
1. Enter proposed initial thermal emittance, $\varepsilon_{initial}$		< 0.75	Go to line 2. Insert $\varepsilon_{initial}$ value in calculation.
2. Enter the initial solar reflectance, $\rho_{initial}$		$0.70 + [0.34 \times (0.75 - \varepsilon_{initial})]$	Standard $\rho_{initial}$ =

3. To apply **Liquid Field Applied Coatings,** the coating must be applied with a minimum dry mil thickness of 20 mils across the entire roof surface and meet minimum performance requirements listed in §118(i)3 and Table 118-C. Select the applicable coating:

☐ Aluminum-Pigmented Asphalt Roof Coating ☐ Cement-Based Roof Coating ☐ Other _____

✓ ☐ **CRRC-1 Label Attached to Submittal**
(Note if no CRRC-1 label is available, this compliance method can not be used).

OPAQUE SURFACES

ASSEMBLY NAME (e.g. Roof-1, Wall-1, Floor-, Soffits, etc…)	TYPE (e.g. Roof, Wall, Floor, demising, etc…)	HEAT CAPACITY	INSULATION R-VALUE* PROPOSED	INSULATION R-VALUE* MINIMUM ALLOWED	ASSEMBLY U-FACTOR* PROPOSED	ASSEMBLY U-FACTOR* Joint Appendix IV REF	ASSEMBLY U-FACTOR* MAXIMUM ALLOWED

* For each assembly type, meet the minimum insulation R-value or the maximum assembly U-factor.

WINDOWS

WINDOW NAME (e.g., Window-1, Window-2)	ORIENTATION ✓ N	✓ E	✓ S	✓ W	Fenestration U-FACTOR PROP.	U-FACTOR ALLOW.	# OF PANES	Fen. SHGC*	PROPOSED RSHG H	V	H/V	OHF	PROP. RSHG	ALLOWED RSHG
F3-J	☐	☐	☐	☒	.42	.47	4	.38	5.6	9	.62	.56	.21	.47
F3-L	☐	☐	☐	☒	.42	.47	16	.38	17.8	10.5	1.69	.49	.18	.47
F3-Q	☐	☐	☐	☒	.42	.47	3	.38	0	-	0	1	.38	.47
F4-G	☐	☐	☒	☐	.42	.47	1	.38	8.8	10.5	.83	.43	.16	.47
F4-H	☐	☒	☐	☐	.42	.47	1	.38	4.1	10.5	.39	.70	.27	.47

CALIFORNIA STATE FIRE MARSHAL APPROVED
Approval of this plan does not authorize or approve any omission or deviation from applicable regulations. Final approval is subject to field inspection. One set of approved plans shall be available on the project site at all times.
Reviewed by: Hans Henneberque 5/9/11
Hans Henneberque
Senior Deputy State Fire Marshal

IDENTIFICATION STAMP DIV. OF THE STATE ARCHITECT
02 111744
ACP ELS — SS —
DATE 5-5-11

	BY	CHECKED
DESIGN	S. NEPRUD	Z. HARRIS
DETAILS	S. NEPRUD	Z. HARRIS
QUANTITIES	S. NEPRUD	Z. HARRIS

ORIGINAL SCALE IN INCHES FOR REDUCED PLANS 0 1 2 3

PREPARED FOR THE STATE OF CALIFORNIA DEPARTMENT OF TRANSPORTATION

DIVISION OF ENGINEERING SERVICES
ELECTRICAL-MECHANICAL-WATER AND WASTEWATER DESIGN

CU 04264
EA 0A5351

BRIDGE NO. 23W000IR
POST MILE 14.8

EASTBOUND CORDELIA CVEF
CVEF
TITLE 24
BUILDING ENVELOPE COMPLIANCE FORMS

SHEET **MO-1.6**

DISREGARD PRINTS BEARING EARLIER REVISION DATES → REVISION DATES (PRELIMINARY STAGE ONLY) 10/13/09 03/22/10 05/06/10 08/23/10 11/22/10 05/03/11 SHEET OF

40a535wdm0-01-06.dgn
DOES SD Imperial Rev.1/07 18-MAY-2011 07:38

18-MAY-2011 07:38
40a535wdm0-01-06.dgn

DIST.	COUNTY	ROUTE	POST MILES TOTAL PROJECT	SHEET NO.	TOTAL SHEETS
04	Sol	12,80	L1.8/L2.0, 13.3/15.7	634	740

REGISTERED MECHANICAL ENGINEER — 05/03/11 DATE

REGISTERED PROFESSIONAL ENGINEER SEAN E NEPRUD No. M33458 Exp. 06/30/12 MECH STATE OF CALIFORNIA

5-16-11
PLANS APPROVAL DATE

The State of California or its officers or agents shall not be responsible for the accuracy or completeness of electronic copies of this plan sheet.

KENNEDY/JENKS CONSULTANTS
303 SECOND STREET
SUITE 300 SOUTH
SAN FRANCISCO, CA 94960

SOLANO TRANSPORTATION AUTHORITY
ONE HARBOR CENTER, SUITE 130
SUISUN CITY, CA 94585

ENVELOPE COMPONENT METHOD (Part 2 of 2) ENV-2-C

PROJECT NAME: Cordelia Commercial Vehicle Enforcement Facility
DATE: 11/30/2010

COOL ROOFS - LOW-SLOPED - See Section 3.4 in the NRM and §118(i)3 and §143(a)1 in the Energy Standards for further description about exterior roofs and mandatory requirements for Cool Roofs.

✓ CHECK APPLICABLE BOXES

☐ **Option 1- Tested - Initial Thermal Emittance ≥0.75 and Intial Solar Reflectance ≥0.70**

Proposed emittance and reflectance must be ≥the standard when tested with CRRC-1.	Proposed	Standard	
1. Enter proposed initial thermal emittance, $\varepsilon_{initial}$		≥0.75	If proposed ≥to the Standard then it complies.
2. Enter the proposed initial solar reflectance, $\rho_{initial}$		≥0.70	If proposed ≥to the Standard then it complies.

3. When applying **Liquid Field Applied Coatings,** the coating must be applied with a minimum dry mil thickness of 20 mils across the entire roof surface and meet minimum performance requirements listed in §118(i)3 and Table 118-C. Select the applicable coating:

☐ Aluminum-Pigmented Asphalt Roof Coating ☐ Cement-Based Roof Coating ☐ Other _____

☐ **Option 2 - CRRC-1 Tested - Initial Thermal Emittance < 0.75**

Proposed initial thermal emittance < 0.75 when tested with CRRC-1.	Proposed	Standard	
1. Enter proposed initial thermal emittance, $\varepsilon_{initial}$		< 0.75	Go to line 2. Insert $\varepsilon_{initial}$ value in calculation.
2. Enter the initial solar reflectance, $\rho_{initial}$		$0.70 + [0.34 \times (0.75 - \varepsilon_{initial})]$	Standard $\rho_{initial}$ =

3. To apply **Liquid Field Applied Coatings,** the coating must be applied with a minimum dry mil thickness of 20 mils across the entire roof surface and meet minimum performance requirements listed in §118(i)3 and Table 118-C. Select the applicable coating:

☐ Aluminum-Pigmented Asphalt Roof Coating ☐ Cement-Based Roof Coating ☐ Other _____

✓ ☐ **CRRC-1 Label Attached to Submittal**
(Note if no CRRC-1 label is available, this compliance method can not be used).

OPAQUE SURFACES

ASSEMBLY NAME (e.g. Roof-1, Wall-1, Floor-, Soffits, etc...)	TYPE (e.g. Roof, Wall, Floor, demising, etc...)	HEAT CAPACITY	INSULATION R-VALUE* PROPOSED	INSULATION R-VALUE* MINIMUM ALLOWED	ASSEMBLY U-FACTOR* PROPOSED	ASSEMBLY U-FACTOR* Joint Appendix IV REF	ASSEMBLY U-FACTOR* MAXIMUM ALLOWED

* For each assembly type, meet the minimum insulation R-value or the maximum assembly U-factor.

WINDOWS

WINDOW NAME (e.g., Window-1, Window-2)	ORIENTATION ✓ N	✓ E	✓ S	✓ W	Fenestration U-FACTOR PROP.	U-FACTOR ALLOW.	# OF PANES	Fen. SHGC*	PROPOSED RSHG H	V	H/V	OHF	PROP. RSHG	ALLOWED RSHG
F4-J	☐	☐	☒	☐	.42	.47	1	.38	5.6	9	.62	.49	.18	.47
F4-L	☐	☒	☐	☐	.42	.47	1	.38	17.8	10.5	1.7	.45	.17	.47
F4-Q	☐	☐	☐	☒	.42	.47	1	.38	0	-	0	1	.38	.47
F4-S	☐	☒	☐	☐	.42	.47	1	.38	0	-	0	1	.38	.47
	☐	☐	☐	☐										

* From Fenestration Surfaces ENV-1-C, Part 2, Column G, or when Column H has a "C" identifier, calculate using the center of glass value SHGCc in $SHGC_{FEN}$ = .08 + (.86 x SHGCc) and enter value.

2005 Nonresidential Compliance Forms *April 2005*

CALIFORNIA STATE FIRE MARSHAL APPROVED

Approval of this plan does not authorize or approve any omission or deviation from applicable regulations. Final approval is subject to field inspection. One set of approved plans shall be available on the project site at all times.

Reviewed by: Hans Henneberque 5/9/11
Hans Henneberque
Senior Deputy State Fire Marshal

IDENTIFICATION STAMP DIV. OF THE STATE ARCHITECT
02 111744
AC ALS — SS —
DATE

	BY	CHECKED
DESIGN	S. NEPRUD	Z. HARRIS
DETAILS	S. NEPRUD	Z. HARRIS
QUANTITIES	S. NEPRUD	Z. HARRIS

PREPARED FOR THE STATE OF CALIFORNIA DEPARTMENT OF TRANSPORTATION

DIVISION OF ENGINEERING SERVICES
ELECTRICAL-MECHANICAL-WATER AND WASTEWATER DESIGN

BRIDGE NO. 23W000IR
POST MILE 14.8

EASTBOUND CORDELIA CVEF
CVEF
TITLE 24 BUILDING ENVELOPE COMPLIANCE FORMS

SHEET **MO-1.7**

ORIGINAL SCALE IN INCHES FOR REDUCED PLANS 0 1 2 3

CU 04264
EA 0A5351

DISREGARD PRINTS BEARING EARLIER REVISION DATES → 10/19/09 03/22/10 05/06/10 08/23/10 11/22/10 05/03/11

REVISION DATES (PRELIMINARY STAGE ONLY) SHEET OF

40a535wdm0-01-07.dgn
DOES SD imperial Rev.1/07 18-MAY-2011 07:38

18-MAY-2011 07:38
40a535wdm0-01-07.dgn

DIST.	COUNTY	ROUTE	POST MILES TOTAL PROJECT	SHEET NO.	TOTAL SHEETS
04	Sol	12,80	L1.8/L2.0, 13.3/15.7	635	740

REGISTERED MECHANICAL ENGINEER — 05/03/11 DATE

REGISTERED PROFESSIONAL ENGINEER SEAN E NEPRUD No. M33458 Exp. 06/30/12 MECH STATE OF CALIFORNIA

5-16-11
PLANS APPROVAL DATE

The State of California or its officers or agents shall not be responsible for the accuracy or completeness of electronic copies of this plan sheet.

KENNEDY/JENKS CONSULTANTS
303 SECOND STREET
SUITE 300 SOUTH
SAN FRANCISCO, CA 94960

SOLANO TRANSPORTATION AUTHORITY
ONE HARBOR CENTER, SUITE 130
SUISUN CITY, CA 94585

CERTIFICATE OF COMPLIANCE (Part 1 of 3) MECH-1-C

PROJECT NAME: CORDELIA COMMERCIAL VEHICLE ENFORCEMENT FACILITY		DATE: 11/29/10
PROJECT ADDRESS: INTERSTATE 80 EASTBOUND, MILE 14.8		Building Permit
PRINCIPAL DESIGNER-MECHANICAL: SEAN NEPRUD	TELEPHONE: 415-243-2150	
DOCUMENTATION AUTHOR: SEAN NEPRUD	TELEPHONE: 415-243-2150	Checked by/Date Enforcement Agency Use

GENERAL INFORMATION

DATE OF PLANS 11/22/10 | BUILDING CONDITIONED FLOOR AREA 12,630 sq. ft. | CLIMATE ZONE 12

BUILDING TYPE ☒ NONRESIDENTIAL ☐ HIGH RISE RESIDENTIAL ☐ HOTEL/MOTEL GUEST ROOM

PHASE OF CONSTRUCTION ☒ NEW CONSTRUCTION ☐ ADDITION ☐ ALTERATION ☐ UNCONDITIONED (file affidavit)

PROOF OF ENVELOPE COMPLIANCE ☐ PREVIOUS ENVELOPE PERMIT ☒ ENVELOPE COMPLIANCE ATTACHED

STATEMENT OF COMPLIANCE

This Certificate of Compliance lists the building features and performance specifications needed to comply with Title 24, Parts 1 and 6 of the California Code of Regulations. This certificate applies only to building mechanical requirements.

The documentation preparer hereby certifies that the documentation is accurate and complete.

DOCUMENTATION AUTHOR	SIGNATURE	DATE
SEAN NEPRUD		11/29/10

The Principal Mechanical Designer hereby certifies that the proposed building design represented in this set of construction documents is consistent with the other compliance forms and worksheets, with the specifications, and with any other calculations submitted with this permit application. The proposed building has been designed to meet the mechanical requirements contained in the applicable parts of Sections 100, ~~104, 105, 110~~ through 115, 120 through 125, 142, 144 and 145.

✓

☒ The plans & specifications meet the requirements of Part 6 (Sections 10-103a).

☐ The installation certificates meet the requirements of Part 6 (10-103a 3).

☐ The operation & maintenance information meets the requirements of Part 6 (10-103c).

REGISTERED PROFESSIONAL ENGINEER SEAN E. NEPRUD No. M33458 Exp. 06/30/2012 MECHANICAL STATE OF CALIFORNIA 11-29-10

Please check one: (These sections of the Business and Professions Code are printed in full in the Nonresidential Manual.)

☒ I hereby affirm that I am eligible under the provisions of Division 3 of the Business and Professions Code to sign this document as the person responsible for its preparation; and that I am licensed in the State of California as a civil engineer or mechanical engineer, or I am a licensed architect.

☐ I affirm that I am eligible under the exemption to Division 3 of the Business and Professions Code by Section 5537.2 or 6737.3 to sign this document as the person responsible for its preparation; and that I am a licensed contractor performing this work.

☐ I affirm that I am eligible under the exemption to Division 3 of the Business and Professions Code to sign this document because it pertains to a structure or type of work described pursuant to Business and Professions Code sections 5537, 5538, and 6737.1.

PRINCIPAL MECHANICAL DESIGNER-NAME	SIGNATURE	DATE	LIC. #
SEAN NEPRUD		11/29/10	M 33458

INSTRUCTIONS TO APPLICANT MECHANICAL COMPLIANCE & WORKSHEETS (check box if worksheet is included)	
☒ MECH-1-C	Certificate of Compliance. Part 1 of 3, 2 of 3, 3 of 3 are required on plans for all submittals
☒ MECH-2-C	Certificate of Compliance. Part 1 of 3, 2 of 3, 3 of 3 are required for all submittals, but may be on plans.
☒ MECH-3-C	Certificate of Compliance are required for all submittals with mechanical ventilation, but may be on plans.
☐ MECH-4-C	Certificate of Compliance are required for all prescriptive submittals, but may be on plans.

CERTIFICATE OF COMPLIANCE (Part 2 of 3) MECH-1-C

PROJECT NAME: CORDELIA COMMERCIAL VEHICLE ENFORCEMENT FACILITY | DATE: 11/29/10

Designer:

This form is to be used by the designer and attached to the plans. Listed below are all the acceptance tests for mechanical systems. The designer is required to check the boxes by all acceptance tests that apply and list all equipment that requires an acceptance test. If all equipment of a certain type requires a test, list the equipment description and the number of systems to be tested in parentheses. The NJ number designates the Section in the Appendix of the Nonresidential ACM Manual that describes the test. Also indicate the person responsible for performing the tests (i.e. the installing contractor, design professional or an agent selected by the owner). Since this form will be part of the plans, completion of this section will allow the responsible party to budget for the scope of work appropriately.

Building Departments:

Systems Acceptance. Before occupancy permit is granted for a newly constructed building or space, or a new space-conditioning system serving a building or space is operated for normal use, all control devices serving the building or space shall be certified as meeting the Acceptance Requirements for Code Compliance.

In addition a Certificate of Acceptance, MECH-1-A, Form shall be submitted to the building department that certifies plans, specifications, installation certificates, and operating and maintenance information meet the requirements of §10-103(b) and Title 24 Part 6.

Test Description	Test Performed By:
✓ ☒ MECH-2-A: Ventilation System Acceptance Document • Variable Air Volume Systems Outdoor Air Acceptance • Constant Air Volume Systems Outdoor Air Acceptance *Test required on all New systems both New Construction and Retrofit.* Equipment requiring acceptance testing PACKAGED AIR CONDITIONING UNITS (ACU-101, ACU-102, ACU-103, ACU-104, ACU-105, ACU-106)	
✓ ☐ MECH-3-A: Packaged HVAC Systems Acceptance Document *Test required on all New packaged systems both New Construction and Retrofit.* Equipment requiring acceptance testing PACKAGED AIR CONDITIONING UNITS (ACU-101, ACU-102, ACU-103, ACU-104, ACU-105, ACU-106)	
✓ ☐ MECH-4-A: Air-Side Economizer Acceptance Document *Test required on all new air-side economizers for both New Construction and Retrofit. Units with economizers that are installed at the factory and certified with the Commission do not require equipment testing but do require construction inspection.* Equipment requiring acceptance testing PACKAGED AIR CONDITIONING UNITS (ACU-101, ACU-103, ACU-104, ACU-105, ACU-106)	

CALIFORNIA STATE FIRE MARSHAL APPROVED
Approval of this plan does not authorize or approve any omission or deviation from applicable regulations. Final approval is subject to field inspection. One set of approved plans shall be available on the project site at all times.
Reviewed by: Hans Henneberque 5/9/11
Hans Henneberque
Senior Deputy State Fire Marshal

IDENTIFICATION STAMP DIV. OF THE STATE ARCHITECT
02 111744
AC Arias — SS —
DATE 5-9-11

	BY	CHECKED
DESIGN	S. NEPRUD	Z. HARRIS
DETAILS	S. NEPRUD	Z. HARRIS
QUANTITIES	S. NEPRUD	Z. HARRIS

PREPARED FOR THE STATE OF CALIFORNIA DEPARTMENT OF TRANSPORTATION

DIVISION OF ENGINEERING SERVICES
ELECTRICAL-MECHANICAL-WATER AND WASTEWATER DESIGN

BRIDGE NO. 23W000IR
POST MILE 14.8

EASTBOUND CORDELIA CVEF
CVEF — TITLE 24 MECHANICAL COMPLIANCE FORMS

SHEET MO-1.8

40a535wdm0-01-08.dgn
DOES SD Imperial Rev. 1/07 18-MAY-2011 07:38

ORIGINAL SCALE IN INCHES FOR REDUCED PLANS 0 1 2 3

CU 04264
EA 0A5351

DISREGARD PRINTS BEARING EARLIER REVISION DATES → REVISION DATES (PRELIMINARY STAGE ONLY) 10/19/09 03/22/10 05/06/10 08/23/10 11/22/10 05/03/11 SHEET OF

18-MAY-2011 07:38
40a535wdm0-01-08.dgn

DIST.	COUNTY	ROUTE	POST MILES TOTAL PROJECT	SHEET NO.	TOTAL SHEETS
04	Sol	12,80	L1.8/L2.0, 13.3/15.7	636	740

REGISTERED MECHANICAL ENGINEER — 05/03/11 DATE

REGISTERED PROFESSIONAL ENGINEER SEAN E NEPRUD No. M33458 Exp. 06/30/12 MECH STATE OF CALIFORNIA

5-16-11
PLANS APPROVAL DATE

The State of California or its officers or agents shall not be responsible for the accuracy or completeness of electronic copies of this plan sheet.

KENNEDY/JENKS CONSULTANTS
303 SECOND STREET
SUITE 300 SOUTH
SAN FRANCISCO, CA 94960

SOLANO TRANSPORTATION AUTHORITY
ONE HARBOR CENTER, SUITE 130
SUISUN CITY, CA 94585

CERTIFICATE OF COMPLIANCE (Part 3 of 3) MECH-1-C

PROJECT NAME	DATE
CORDELIA COMMERCIAL VEHICLE ENFORCEMENT FACILITY	11/29/10

Test Description	Test Performed By:
✓ ☐ MECH-5-A: Air Distribution Acceptance Document *This test required If the unit serves 5,000 ft² of space or less and 25% or more of the ducts are in nonconditioned or semiconditioned space like an attic. New systems that meet the above requirements. Retrofit systems that meet the above requirements and either extend ducts, replace ducts or replace the packaged unit.* Equipment requiring acceptance testing N/A	
✓ ☒ MECH-6-A : Demand Control Ventilation Acceptance Document *All new DCV controls installed on new or existing packaged systems must be tested.* Equipment requiring acceptance testing ACU-106	
✓ ☐ MECH-7-A: Supply Fan Variable Flow Control Acceptance Document *All new VAV fan volume controls installed on new or existing systems must be tested.* Equipment requiring acceptance testing N/A	
✓ ☐ MECH-8-A: • Hydronic System Control Acceptance Document • Variable Flow Controls, *Applies to chilled and hot water systems.* • Automatic Isolation Controls, *Applies to new boilers and chillers and the primary pumps are connected to a common header.* • Supply Water Temperature Reset Controls, Applies *to new constant flow chilled and hot water systems that have a design capacity greater than or equal to 500,000 Btu/hr.* • Water-loop Heat Pump Controls, *Applies to all new waterloop heat pump systems where the combined loop pumps are greater than 5 hp.* • Variable Frequency Control, *Applies to all new distribution pumps on new variable flow chilled, hydronic heat pump or condenser water systems where the pumps motors are greater than 5 hp.* Equipment requiring acceptance testing N/A	

AIR SYSTEM REQUIREMENTS (Part 1 of 3) MECH-2-C

PROJECT NAME: CORDELIA COMMERCIAL VEHICLE ENFORCEMENT FACILITY DATE: 11/29/10

AIR SYSTEMS, Central or Single Zone

ITEM or SYSTEM TAG(S)	T-24 Section	ACU-101, ACU-103, ACU-105, ACU-106	ACU-102	ACU-104
Reference on Plans or Specification[1]				
MANDATORY MEASURES				
Heating Equipment Efficiency	112(a)	MΦ-4	MΦ-4	MΦ-4
Cooling Equipment Efficiency	112(a)	MΦ-4	MΦ-4	MΦ-4
Heat Pump Thermostat	112(b)	N/A	N/A	N/A
Furnace Controls	112(c), 115(a)	MΦ-4	MΦ-4	MΦ-4
Natural Ventilation	121(b)	N/A	N/A	N/A
Minimum Ventilation	121(b)	MΦ-4	MΦ-4	MΦ-4
VAV Minimum Position Control	121(c)	MΦ-4	MΦ-4	MΦ-4
Demand Control Ventilation	121(c)	N/A	N/A	N/A
Time Control	121(c), 122(e)	M2-20	M2-20	M2-20
Setback and Setup Control	122(e)	M2-20	M2-20	M2-20
Outdoor Damper Control	122(f)	M2-20	M2-20	M2-20
Isolation Zones	122(g)	N/A	N/A	N/A
Pipe Insulation	123	N/A	N/A	N/A
Duct Insulation	124	MΦ-4	MΦ-4	MΦ-4
PRESCRIPTIVE MEASURES				
Calculated Heating Capacity[2]	144(a & b)	MΦ-4	MΦ-4	MΦ-4
Proposed Heating Capacity[2]	144(a & b)	MΦ-4	MΦ-4	MΦ-4
Calculated Cooling Capacity[2]	144(a & b)	MΦ-4	MΦ-4	MΦ-4
Proposed Cooling Capacity[2]	144(a & b)	MΦ-4	MΦ-4	MΦ-4
Fan Control	144(c)	N/A	N/A	N/A
DP Sensor Location	144(c)	N/A	N/A	N/A
Supply Pressure Reset (DDC only)	144(c)	N/A	N/A	N/A
Simultaneous Heat/Cool	144(d)	M2-20	M2-20	M2-20
Economizer	144(e)	MΦ-4	MΦ-4	MΦ-4
Heat and Cool Air Supply Reset	144(f)	N/A	N/A	N/A
Duct Sealing	144(k)	N/A	N/A	N/A

1: For each central and single zone air systems (or group of similar units) fill in the reference to sheet number and/or specification section and paragraph number where the required features are documented. If a requirement is not applicable, put "N/A" in the column.

2: Not required for hydronic heating or cooling. Either enter value here or put in reference to plans and specifications per footnote 1.

CALIFORNIA STATE FIRE MARSHAL APPROVED
Approval of this plan does not authorize or approve any omission or deviation from applicable regulations. Final approval is subject to field inspection. One set of approved plans shall be available on the project site at all times.
Reviewed by: Hans Henneberque 5/9/11
Hans Henneberque
Senior Deputy State Fire Marshal

IDENTIFICATION STAMP DIV. OF THE STATE ARCHITECT
02 111744
AC ALS — SS —
DATE 5-9-11

	BY	CHECKED
DESIGN	S. NEPRUD	Z. HARRIS
DETAILS	S. NEPRUD	Z. HARRIS
QUANTITIES	S. NEPRUD	Z. HARRIS

PREPARED FOR THE STATE OF CALIFORNIA DEPARTMENT OF TRANSPORTATION

DIVISION OF ENGINEERING SERVICES ELECTRICAL-MECHANICAL-WATER AND WASTEWATER DESIGN

BRIDGE NO. 23W000IR
POST MILE 14.8

EASTBOUND CORDELIA CVEF
CVEF — TITLE 24 MECHANICAL COMPLIANCE FORMS

SHEET MO-1.09

40a535wdm0-01-09.dgn
DOES SD Imperial Rev.1/07 18-MAY-2011 07:38

ORIGINAL SCALE IN INCHES FOR REDUCED PLANS 0 1 2 3

CU 04264
EA 0A5351

DISREGARD PRINTS BEARING EARLIER REVISION DATES → 10/19/09 03/22/10 05/06/10 08/23/10 11/22/10 05/03/11

REVISION DATES (PRELIMINARY STAGE ONLY) SHEET OF

18-MAY-2011 07:38
40a535wdm0-01-09.dgn

WATER SIDE SYSTEM REQUIREMENTS (Part 2 of 3) MECH-2-C

PROJECT NAME: CORDELIA COMMERCIAL VEHICLE ENFORCEMENT FACILITY

DATE: 11/29/10

ITEM or SYSTEM TAG(S)		WATER[2] SIDE SYSTEMS: Chillers, Towers, Boilers, Hydronic Loops					
		BLR-1					
MANDATORY MEASURES	T-24 Section	Reference on Plans or Specification[1]					
Equipment Efficiency	112(a)	MØ-2					
Pipe Insulation	123	SPEC. 12-15.05					
PRESCRIPTIVE MEASURES							
Calculated Capacity	144(a & b)	MØ-2					
Proposed Capacity	144(a & b)	MØ-2					
Tower Fan Controls	144(h)	N/A					
Tower Flow Controls	144(h)	N/A					
Variable Flow System Design	144(j)	M2-20					
Chiller and Boiler Isolation	144(j)	M2-20					
CHW and HHW Reset Controls	144(j)	N/A					
WLHP Isolation Valves	144(j)	N/A					
VSD on CHW, CW & WLHP Pumps >5HP	144(j)	N/A					
DP Sensor Location	144(j)	N/A					

1: For each chiller, cooling tower, boiler, and hydronic loop (or groups of similar equipment) fill in the reference to sheet number and/or specification section and paragraph number where the required features are documented. If a requirement is not applicable, put "N/A" in the column.

2. Water side systems include wet side systems using other liquids such as glycol or brine.

SERVICE HOT WATER & POOL REQUIREMENTS (Part 3 of 3) MECH-2-C

PROJECT NAME: CORDELIA COMMERCIAL VEHICLE ENFORCEMENT FACILITY

DATE: 11/29/10

ITEM or SYSTEM TAG(S)		Service Hot Water, Pool Heating				
		WH				
MANDATORY MEASURES	T-24 Section	Reference on Plans or Specification[1]				
Water Heater Certification	§113 (a)	SPEC. 12-15.07				
Water Heater Efficiency	§113 (b)	MØ-2				
Service Water Heating Installation	§113 (c)	SPEC. 12-15.07				
Pool and Spa Efficiency and Control	§114 (a)	N/A				
Pool and Spa Installation	§114 (b)	N/A				
Pool Heater – No Pilot Light	§115 (c)	N/A				
Spa Heater – No Pilot Light	§115 (d)	N/A				

1: For each water heater, pool heat and domestic water loop (or groups of similar equipment) fill in the reference to sheet number and/or specification section and paragraph number where the required features are documented. If a requirement is not applicable, put "N/A" in the column.

CALIFORNIA STATE FIRE MARSHAL APPROVED
Approval of this plan does not authorize or approve any omission or deviation from applicable regulations. Final approval is subject to field inspection. One set of approved plans shall be available on the project site at all times.
Reviewed by: Jeffrey Hendricksen 5/9/11
Jeffrey Hendricksen
Senior Deputy State Fire Marshal

CERTIFICATE NUMBER OF THE STATE ARCHITECT
02 1117 44
ACCESS: PLS — SS —
DATE: ___ Stamp

DIST.	COUNTY	ROUTE	POST MILES TOTAL PROJECT	SHEET NO.	TOTAL SHEETS
04	Sol	12.80	L1.8/L2.0, 1.3/15.7	637	740

REGISTERED MECHANICAL ENGINEER — DATE 05/03/11

REGISTERED PROFESSIONAL ENGINEER — SEAN E NEPRUD No. M23458 Exp. 06/30/12 MECH — STATE OF CALIFORNIA

5-16-11
PLANS APPROVAL DATE

The State of California or its officers or agents shall not be responsible for the accuracy or completeness of electronic copies of this plan sheet.

KENNEDY/JENKS CONSULTANTS
303 SECOND STREET
SUITE 300 SOUTH
SAN FRANCISCO, CA 94960

SOLANO TRANSPORTATION AUTHORITY
ONE HARBOR CENTER, SUITE 130
SUISUN CITY, CA 94585

PREPARED FOR THE STATE OF CALIFORNIA DEPARTMENT OF TRANSPORTATION

DIVISION OF ENGINEERING SERVICES
ELECTRICAL-MECHANICAL-WATER AND WASTEWATER DESIGN

CU 04264
EA 0A5351

DESIGN BY S. NEPRUD CHECKED Z. HARRIS
DETAILS BY S. NEPRUD CHECKED Z. HARRIS
QUANTITIES BY S. NEPRUD CHECKED Z. HARRIS

ORIGINAL SCALE IN INCHES FOR REDUCED PLANS 0 1 2 3

BRIDGE NO. 23W0001R
POST MILE 14.8

DISREGARD PRINTS BEARING EARLIER REVISION DATES

EASTBOUND CORDELIA CVEF

CVEF

TITLE 24 MECHANICAL COMPLIANCE FORMS

REVISION DATES (PRELIMINARY STAGE ONLY)

SHEET **MO-1.10** OF

40o535wdm0-01-10.dgn
DOES_SD Imperial Rev.1/07 18-MAY-2011 07:38

MECHANICAL VENTILATION AND REHEAT — MECH-3-C

PROJECT NAME: CORDELIA COMMERCIAL VEHICLE ENFORCEMENT FACILITY

DATE: 11/29/10

	MECHANICAL VENTILATION (§121(b)2)								REHEAT LIMITATION (§144(d))				
	AREA BASIS			OCCUPANCY BASIS					VAV Minimum				
A	B	C	D	E	F	G	H	I	J	K	L	M	N
Zone/ System	Condition Area (ft²)	CFM per ft²	Min CFM by Area B x C	Num of People	CFM per Person	Min CFM by Occupant E x F	REQ'D V.A. Max of D or G	Design Ventilation Air cfm	30% of Design Zone Supply cfm	B x 0.4 cfm/ft²	Max of Columns H, J, K, or 300 cfm	Design minimum Air setpoint	Transfer Air
ACU-101					15								
VAV-1	505	0.15	76	6	15	90	90	372	384	202	384	310	∅
VAV-2	71	0.15	11	1	15	15	15	29	30	28	300	55	∅
VAV-3	324	0.15	49	2	15	30	49	73	75	130	300	170	∅
VAV-4	131	0.15	20	1	15	15	20	36	38	52	300	70	∅
VAV-5	110	0.15	17	1	15	15	17	34	35	44	300	60	∅
VAV-6	164	0.15	25	1	15	15	25	42	44	66	300	85	∅
~~CENTRAL~~ NON-VARIABLE	2047	0.15	307	15	15	225	307	415	N/A	N/A	N/A	N/A	∅
					15								
					15								
					15								
					15								
			Totals	27			523	1,001	Column I Total Design Ventilation Air				∅

C	Minimum ventilation rate per Section §121, Table 121-A.
E	Based on fixed seat or the greater of the expected number of occupants and 50% of the CBC occupant load for egress purposes for spaces without fixed seating.
H	Required Ventilation Air (REQ'D V.A.) is the larger of the ventilation rates calculated on an AREA BASIS or OCCUPANCY BASIS (Column D or G).
I	Must be greater than or equal to H, or use Transfer Air (column N) to make up the difference.
J	Design fan supply cfm (Fan CFM) x 30%; or
K	Condition area (ft²) x 0.4 cfm/ft²; or
L	Maximum of Columns H, J, K, or 300 cfm
M	This must be less than or equal to Column L and greater than or equal to the sum of Columns H plus N.
N	Transfer Air must be provided where the Required Ventilation Air (Column H) is greater than the Design Minimum Air (Column M). Where required, transfer air must be greater than or equal to the difference between the Required Ventilation Air (Column H) and the Design Minimum Air (Column M), Column H minus M.

2005 Nonresidential Compliance Forms — *April 2005*

MECHANICAL VENTILATION AND REHEAT — MECH-3-C

PROJECT NAME: CORDELIA COMMERCIAL VEHICLE ENFORCEMENT FACILITY

DATE: 11/29/10

	MECHANICAL VENTILATION (§121(b)2)								REHEAT LIMITATION (§144(d))				
	AREA BASIS			OCCUPANCY BASIS					VAV Minimum				
A	B	C	D	E	F	G	H	I	J	K	L	M	N
Zone/ System	Condition Area (ft²)	CFM per ft²	Min CFM by Area B x C	Num of People	CFM per Person	Min CFM by Occupant E x F	REQ'D V.A. Max of D or G	Design Ventilation Air cfm	30% of Design Zone Supply cfm	B x 0.4 cfm/ft²	Max of Columns H, J, K, or 300 cfm	Design minimum Air setpoint	Transfer Air
ACU-103					15								
VAV-7	259	0.15	39	2	15	30	39	85	77	104	300	120	∅
VAV-8	259	0.15	39	2	15	30	39	80	72	104	300	120	∅
VAV-9	162	0.15	24	2	15	30	30	60	54	65	300	90	∅
VAV-10	337	0.15	51	2	15	30	51	110	99	135	300	150	∅
VAV-11	623	0.15	93	4	15	60	93	155	140	249	300	280	∅
VAV-12	383	0.15	57	3	15	45	57	97	87	153	300	175	∅
~~CENTRAL~~ NON-VARIABLE	580	0.15	87	1	15	15	87	193	N/A	N/A	N/A	N/A	∅
					15								
					15								
					15								
					15								
			Totals	16			396	780	Column I Total Design Ventilation Air				∅

C	Minimum ventilation rate per Section §121, Table 121-A.
E	Based on fixed seat or the greater of the expected number of occupants and 50% of the CBC occupant load for egress purposes for spaces without fixed seating.
H	Required Ventilation Air (REQ'D V.A.) is the larger of the ventilation rates calculated on an AREA BASIS or OCCUPANCY BASIS (Column D or G).
I	Must be greater than or equal to H, or use Transfer Air (column N) to make up the difference.
J	Design fan supply cfm (Fan CFM) x 30%; or
K	Condition area (ft²) x 0.4 cfm/ft²; or
L	Maximum of Columns H, J, K, or 300 cfm
M	This must be less than or equal to Column L and greater than or equal to the sum of Columns H plus N.
N	Transfer Air must be provided where the Required Ventilation Air (Column H) is greater than the Design Minimum Air (Column M). Where required, transfer air must be greater than or equal to the difference between the Required Ventilation Air (Column H) and the Design Minimum Air (Column M), Column H minus M.

2005 Nonresidential Compliance Forms — *April 2005*

CALIFORNIA STATE FIRE MARSHAL APPROVED

Approval of this plan does not authorize or approve any violation or deviation from applicable regulations. Final approval is subject to field inspection. One set of approved plans shall be available on the project site at all times.

Reviewed by: 5/9/11
Henry Hansberger
Senior Deputy State Fire Marshal

CERTIFICATION STAMP
OFFICE OF THE STATE ARCHITECT
02 1 1 1 7 4 4
DATE

DIST.	COUNTY	ROUTE	POST MILES TOTAL PROJECT	SHEET NO.	TOTAL SHEETS
04	Sol	12,80	L1.8/L2.0, 1.3,3/15.7	638	740

REGISTERED MECHANICAL ENGINEER — 05/03/11 DATE

REGISTERED PROFESSIONAL ENGINEER — SEAN E NEPRUD — No. M23458 — Exp. 06/30/12 — MECH — STATE OF CALIFORNIA

5-16-11
PLANS APPROVAL DATE

The State of California or its officers or agents shall not be responsible for the accuracy or completeness of electronic copies of this plan sheet.

KENNEDY/JENKS CONSULTANTS
303 SECOND STREET
SUITE 300 SOUTH
SAN FRANCISCO, CA 94960

SOLANO TRANSPORTATION AUTHORITY
ONE HARBOR CENTER, SUITE 130
SUISUN CITY, CA 94585

PREPARED FOR THE STATE OF CALIFORNIA DEPARTMENT OF TRANSPORTATION

DIVISION OF ENGINEERING SERVICES
ELECTRICAL-MECHANICAL-WATER AND WASTEWATER DESIGN

CU 04264
EA 0A5351

BRIDGE NO. 23W0001R
POST MILE 14.8

EASTBOUND CORDELIA CVEF

CVEF

TITLE 24 MECHANICAL COMPLIANCE FORMS

SHEET MO-1.11

	BY	CHECKED
DESIGN	S. NEPRUD	Z. HARRIS
DETAILS	S. NEPRUD	Z. HARRIS
QUANTITIES	S. NEPRUD	Z. HARRIS

ORIGINAL SCALE IN INCHES FOR REDUCED PLANS 0 1 2 3

DISREGARD PRINTS BEARING EARLIER REVISION DATES

REVISION DATES (PRELIMINARY STAGE ONLY)

40o535wdm0-01-11.dgn
DOES SD Imperial Rev.1/07 18-MAY-2011 07:38

18-MAY-2011 07:38

DIST.	COUNTY	ROUTE	POST MILES TOTAL PROJECT	SHEET NO.	TOTAL SHEETS
04	Sol	12,80	L1.8/L2.0, 13.3/15.7	639	740

REGISTERED MECHANICAL ENGINEER — 05/03/11 DATE

REGISTERED PROFESSIONAL ENGINEER SEAN E NEPRUD No. M33458 Exp. 06/30/12 MECH STATE OF CALIFORNIA

5-16-11
PLANS APPROVAL DATE

The State of California or its officers or agents shall not be responsible for the accuracy or completeness of electronic copies of this plan sheet.

KENNEDY/JENKS CONSULTANTS
303 SECOND STREET
SUITE 300 SOUTH
SAN FRANCISCO, CA 94960

SOLANO TRANSPORTATION AUTHORITY
ONE HARBOR CENTER, SUITE 130
SUISUN CITY, CA 94585

MECHANICAL VENTILATION AND REHEAT — MECH-3-C

PROJECT NAME: CORDELIA COMMERCIAL VEHICLE ENFORCEMENT FACILITY

DATE: 11/29/10

MECHANICAL VENTILATION (§121(b)2)

	AREA BASIS				OCCUPANCY BASIS				REHEAT LIMITATION (§144(d))			VAV Minimum			
A	B	C	D	E	F	G	H	I	J	K	L	M	N
Zone/ System	Condition Area (ft²)	CFM per ft²	Min CFM by Area B x C	Num of People	CFM per Person	Min CFM by Occupant E x F	REQ'D V.A. Max of D or G	Design Ventilation Air cfm	30% of Design Zone Supply cfm	B x 0.4 cfm/ft²	Max of Columns H, J, K, or 300 cfm	Design minimum Air setpoint	Transfer Air
ACU-105					15								
VAV-13	640	0.15	96	4	15	60	96	264	276	256	300	300	0
VAV-14	465	0.15	70	8	15	120	120	212	222	186	300	300	0
NON-VAV ZONES	865	0.15	130	13	15	195	195	194	N/A	N/A	N/A	N/A	21
ACU-102	222	0.15	33	2	15	30	33	440	N/A	N/A	N/A	N/A	0
ACU-104	313	0.15	47	1	15	15	47	50	N/A	N/A	N/A	N/A	0
ACU-106	1,880	0.15	282	63	15	945	945	950	918	752	945	945	0
					15								
Totals				91			1,436	2,090	Column I Total Design Ventilation Air				21

C	Minimum ventilation rate per Section §121, Table 121-A.
E	Based on fixed seat or the greater of the expected number of occupants and 50% of the CBC occupant load for egress purposes for spaces without fixed seating.
H	Required Ventilation Air (REQ'D V.A.) is the larger of the ventilation rates calculated on an AREA BASIS or OCCUPANCY BASIS (Column D or G).
I	Must be greater than or equal to H, or use Transfer Air (column N) to make up the difference.
J	Design fan supply cfm (Fan CFM) x 30%; or
K	Condition area (ft²) x 0.4 cfm/ft²; or
L	Maximum of Columns H, J, K, or 300 cfm
M	This must be less than or equal to Column L and greater than or equal to the sum of Columns H plus N.
N	Transfer Air must be provided where the Required Ventilation Air (Column H) is greater than the Design Minimum Air (Column M). Where required, transfer air must be greater than or equal to the difference between the Required Ventilation Air (Column H) and the Design Minimum Air (Column M), Column H minus M.

April 2005

2005 Nonresidential Compliance Forms

HVAC MISC. PRESCRIPTIVE REQUIREMENTS: MECH-4-C

PROJECT NAME: CORDELIA COMMERCIAL VEHICLE ENFORCEMENT FACILITY

DATE: 11/29/10

FAN POWER CONSUMPTION §144(c)

NOTE: Provide one copy of this worksheet for each fan system with a total fan system horsepower greater than 25 hp for Constant Volume Fan Systems or Variable Air Volume (VAV) Systems when using the Prescriptive Approach.

A	B	C	D	E	F
FAN DESCRIPTION	DESIGN BRAKE HP	EFFICIENCY		NUMBER OF FANS	PEAK WATTS B x E x 746 / (C x D)
		MOTOR	DRIVE		

FILTER PRESSURE ADJUSTMENT Equation. 144-A	1) TOTAL FAN SYSTEM POWER (WATTS, SUM COLUMN F)	
A) If filter pressure drop is greater than 1 inch W. C. enter filter pressure drop. SP_a on line 4 and Total Fan pressure SP_f on Line 5.	2) SUPPLY DESIGN AIRFLOW (CFM)	
	3) TOTAL FAN SYSTEM POWER INDEX (Row 1 / Row 2)[1]	W/CFM
	4) SP_a	
B) Calculate Fan Adjustment and enter on line 6.	5) SP_f	
	6) Fan Adjustment = $1-(SP_a - 1)/SP_f$	
C) Calculate Adjusted Fan Power Index and enter on Row 7	7) ADJUSTED FAN POWER INDEX (Line 3 x Line 6)[1]	W/CFM

1. TOTAL FAN SYSTEM POWER INDEX or ADJUSTED FAN POWER INDEX must not exceed 0.8 w/cfm, for Constant Volume systems or 1.25 w/cfm for VAV systems

ITEM or SYSTEM TAG(S)				
PRESCRIPTIVE MEASURES	*T-24 Section*	**Capacity**	**Exception**	***Notes***
Electric Resistance Heating[1]	§144 (g)			
Heat Rejection System[2]	§144 (h)			
Air Cooled Chiller Limitation[3]	§144 (I)			

1. Total installed capacity (MBtu/hr) of all electric heat on this project exclusive of electric auxiliary heat for heat pumps. If electric heat is used explain which exception(s) to §144(g) apply.

2. Are centrifugal fan cooling towers used on this project? (Enter "Yes" or "No") If centrifugal fan cooling towers are used explain which exception(s) to §144(h) apply.

3. Total installed capacity (tons) of all chillers and air cooled chillers under this permit, If there are more than 100 tons of air-cooled chiller capacity being installed explain which exception(s) to §144(i) apply.

2005 Nonresidential Compliance Forms — *September 2005*

CALIFORNIA STATE FIRE MARSHAL APPROVED

Approval of this plan does not authorize or approve any omission or deviation from applicable regulations. Final approval is subject to field inspection. One set of approved plans shall be available on the project site at all times.

Reviewed by: Hans Henneberque 5/9/11
Hans Henneberque
Senior Deputy State Fire Marshal

IDENTIFICATION STAMP DIV. OF THE STATE ARCHITECT
02 111744
AC ___ BLS ___ SS ___
DATE ___

	BY	CHECKED
DESIGN	S. NEPRUD	Z. HARRIS
DETAILS	S. NEPRUD	Z. HARRIS
QUANTITIES	S. NEPRUD	Z. HARRIS

PREPARED FOR THE STATE OF CALIFORNIA DEPARTMENT OF TRANSPORTATION

DIVISION OF ENGINEERING SERVICES
ELECTRICAL-MECHANICAL-WATER AND WASTEWATER DESIGN

BRIDGE NO. 23W000IR
POST MILE 14.8

EASTBOUND CORDELIA CVEF
CVEF — TITLE 24 MECHANICAL COMPLIANCE FORMS

SHEET MO-1.12

40a535wdm0-01-12.dgn
DOES SD Imperial Rev.1/07 18-MAY-2011 07:38

ORIGINAL SCALE IN INCHES FOR REDUCED PLANS 0 1 2 3

CU 04264
EA 0A5351

DISREGARD PRINTS BEARING EARLIER REVISION DATES → 10/19/09 03/22/10 05/06/10 08/23/10 11/22/10 05/03/11

REVISION DATES (PRELIMINARY STAGE ONLY) SHEET OF

18-MAY-2011 07:38
40a535wdm0-01-12.dgn

DIST.	COUNTY	ROUTE	POST MILES TOTAL PROJECT	SHEET NO.	TOTAL SHEETS
04	Sol	12,80	L1.8/L2.0, 13.3/15.7	640	740

REGISTERED MECHANICAL ENGINEER — 05/03/11 DATE

REGISTERED PROFESSIONAL ENGINEER SEAN E NEPRUD No. M33458 Exp. 06/30/12 MECH STATE OF CALIFORNIA

5-16-11
PLANS APPROVAL DATE

The State of California or its officers or agents shall not be responsible for the accuracy or completeness of electronic copies of this plan sheet.

KENNEDY/JENKS CONSULTANTS
303 SECOND STREET
SUITE 300 SOUTH
SAN FRANCISCO, CA 94960

SOLANO TRANSPORTATION AUTHORITY
ONE HARBOR CENTER, SUITE 130
SUISUN CITY, CA 94585

STATE OF CALIFORNIA—THE RESOURCES AGENCY

ARNOLD SCHWARZENEGGER, *Governor*

DEPARTMENT OF FORESTRY AND FIRE PROTECTION
OFFICE OF THE STATE FIRE MARSHAL
FIRE & LIFE SAFETY DIVISION
1131 S Street
SACRAMENTO, CA 95811
T: (916) 445-8550 F: (916)324-3784
Website: www.fire.ca.gov

LOCAL FIRE DEPARTMENT – ACCESS APPROVAL

Project: CHP Eastbound 80 Cordelia Inspection Facility
3895 Interstate 80, Fairfield, CA 94534

CSFM File Number: 40-48-11-0030
SFM Project #: 48-63

Pursuant to Title 19, California Code of Regulations, Article 3, Section 3.05, Fire Department Access and Egress, it is necessary to provide the California State Fire Marshal with written certification from the local fire authority that the above section is being met to their satisfaction.

Please return this form with all sections filled in completely. Without this form, California State Fire Marshal approval may be delayed. If you have any questions, please contact the California State Fire Marshal Code Enforcement Unit at (916)445-8550.

The local fire authority shall consider the following items:

Approved	yes	no	n/a
Fire Department Connection	✓		
Fire Hydrant	✓		
Fire Alarm Annunciator			✓
Fire Alarm Control Panel	✓		
Knox Box	✓		

Local Fire Authority: MARK HOLLAND, CITY OF FAIRFIELD.
Address: 1000 WEBSTER ST.
City/State/ZIP: FAIRFIELD, CA. 95433

Approval issued by: MARK HOLLAND
Rank/Title: FIRE INSPECTOR / PLANS EXAMINER
Phone Number: (707) 428-7322
Signature: Mark Holland

CONSERVATION IS WISE-KEEP CALIFORNIA GREEN AND GOLDEN

PLEASE REMEMBER TO CONSERVE ENERGY. FOR TIPS AND INFORMATION, VISIT "FLEX YOUR POWER" AT WWW.CA.GOV.

CALIFORNIA STATE FIRE MARSHAL
APPROVED
Approval of this plan does not authorize or approve any omission or deviation from applicable regulations. Final approval is subject to field inspection. One set of approved plans shall be available on the project site at all times.
Reviewed by: Hans Henneberque 5/9/11
Hans Henneberque
Senior Deputy State Fire Marshal

IDENTIFICATION STAMP
DIV. OF THE STATE ARCHITECT
02 111744
AC ARCH ELS — SS —
DATE 5-5-11

	BY	CHECKED
DESIGN	S. NEPRUD	Z. HARRIS
DETAILS	S. NEPRUD	Z. HARRIS
QUANTITIES	S. NEPRUD	Z. HARRIS

PREPARED FOR THE STATE OF CALIFORNIA DEPARTMENT OF TRANSPORTATION

DIVISION OF ENGINEERING SERVICES
ELECTRICAL-MECHANICAL-WATER AND WASTEWATER DESIGN

BRIDGE NO. 23W000IR
POST MILE 14.8

EASTBOUND CORDELIA CVEF

CVEF — LOCAL FIRE DEPARTMENT ACCESS APPROVAL

SHEET **MO-1.13**

40a535wdm0-01-13.dgn
DOES SD Imperial Rev.1/07 18-MAY-2011 07:38

ORIGINAL SCALE IN INCHES FOR REDUCED PLANS 0 1 2 3

CU 04264
EA 0A5351

DISREGARD PRINTS BEARING EARLIER REVISION DATES → 10/19/09 03/22/10 05/06/10 08/23/10 11/22/10 05/03/11

REVISION DATES (PRELIMINARY STAGE ONLY) SHEET OF

18-MAY-2011 07:38

40a535wdm0-01-13.dgn

DIST.	COUNTY	ROUTE	POST MILES TOTAL PROJECT	SHEET NO.	TOTAL SHEETS
04	Sol	12,80	L1.8/L2.0, 13.3/15.7	641	740

REGISTERED MECHANICAL ENGINEER — 05/03/11 DATE

REGISTERED PROFESSIONAL ENGINEER SEAN E NEPRUD No. M33458 Exp. 06/30/12 MECH STATE OF CALIFORNIA

5-16-11
PLANS APPROVAL DATE

The State of California or its officers or agents shall not be responsible for the accuracy or completeness of electronic copies of this plan sheet.

KENNEDY/JENKS CONSULTANTS
303 SECOND STREET
SUITE 300 SOUTH
SAN FRANCISCO, CA 94960

SOLANO TRANSPORTATION AUTHORITY
ONE HARBOR CENTER, SUITE 130
SUISUN CITY, CA 94585

PLUMBING FIXTURE SCHEDULE

ABBREVIATION	PLUMBING FIXTURE	DESCRIPTION	PLUMBING CONNECTIONS				IST LISTED PRODUCT, OR EQUAL
			HOT WATER	COLD WATER	DRAIN	VENT	
WC	WATER CLOSET FREESTANDING	DISABLED ACCESS, FLOOR SET, ANSI A112.19 1.28 GPF FLUSH VALVE, ANSI A112.19.6	-	1-1/2"	3"	2"	AMERICAN STANDARD, 'MADERA FLOWISE', SELECTRONIC FLUSH VALVE
WCL	LAVATORY/WATER CLOSET COMBINATION	FLOOR SET, ANSI A112.2M 1.6 GPF FLUSH VALVE, ANSI A112.2M	-	1-1/2"	3"	2"	ACORN 'PENAL-WARE' 1440
UR	URINAL	WALL HUNG W/WALL CARRIER, ANSI A.112.19.2 0.5 GPF FLUSH VALVE, ANSI A112.19.6	-	1"	2"	1 1/2"	AMERICAN STANDARD 'ALLBROOK' URINAL, SELECTRONIC 6063 FLUSH VALVE
LAV	LAVATORY, COUNTERTOP	COUNTERTOP SET, VIT. CHINA, ADA FAUCET	1/2"	1/2"	1-1/2"	1-1/2"	KOHLER 'RONDELLE' SINK; 15592 FAUCET
MOP	MOP SINK	CAST-IRON SINK, 24"x24", TWO-SIDED WALL GUARD, WALL-MOUNT FAUCET W/ VACUUM BREAKER	1/2"	1/2"	1-1/2"	1-1/2"	AMERICAN STANDARD 7741; MODEL 8344 FAUCET
KIT	SINGLE BASIN KITCHEN SINK	COUNTERTOP SET, ST STEEL, SINGLE-COMPARTMENT GOOSENECK FAUCET, WRIST-BLADE HANDLES, 0.5 GPM	1/2"	1/2"	1-1/2"	1-1/2"	ELKAY 'LUSTERTONE' LRADQ-2219 ELKAY LKDC-2432-BH FAUCET
2KIT	DOUBLE BASIN KITCHEN SINK	COUNTERTOP SET, ST STEEL, DOUBLE-COMPARTMENT GOOSENECK FAUCET, WRIST-BLADE HANDLES, 0.5 GPM	1/2"	1/2"	1-1/2"	1-1/2"	ELKAY 'LUSTERTONE' LRADQ-4319 ELKAY LKDC-2432-BH FAUCET
SSINK	SERVICE SINK	FLOOR MOUNTED, SEMI-CIRCULAR	1"	1"	1-1/2"	1-1/2"	BRADLEY, MODEL WF2504
SHWR	SHOWER (SHR)	SINGLE-LEVER FAUCET, ANTI-SCALD VALVE, HOSE, GRAB BAR	1/2"	1/2"	1-1/2"	1-1/2"	KOHLER 'MASTERSHOWER'
EWC	ELECTRIC WATER COOLER	WALL-MOUNT ADA-ACCESSIBLE, CFC/HCFC-FREE	-	1/2"	1-1/2"	1-1/2"	HAWS HWUACP8
TP	TRAP PRIMING UNITS	BRASS CONST, INTEGRAL VACUUM BREAKER, ASSE 1018	-	1/2"	4"	2"	PRECISION PLUMBING PRODUCTS, MODEL P-2 W/DU-4
WH	STORAGE WATER HEATER	75-GALLON, 75 MBH INPUT, NATURAL GAS R-16, NON-CFC INSULATION	1"	1"	-	-	STATE 'SELECT' GS6 SERIES
EXP	THERMAL EXPANSION TANK	150 PSI RATED, 4.8 GAL CAPACITY, 3.0 GAL ACCEPTANCE	3/4"	-	-	-	WATTS DET-12
FD	FLOOR DRAIN	CI BODY, ADJ. CLAMP/COLLAR, 6"• STRAINER	-	-	3"	1-1/2"	ZURN Z-415
HB	HOSE BIBB	GALV. STEEL, 3/4" THREADED OUTLET	-	1/2"	-	-	NIBCO MODEL 55
EWS	EMERGENCY EYEWASH/ SHOWER	30 GALLON PER MINUTE CAPACITY, EYEWASH MOUNTED ON SHOWER RISER, BASE MOUNT, GALV. STEEL	-	1-1/4"	-	-	HAWS 8346
EW	EMERGENCY EYEWASH	GALV. STEEL, 3/4" THREADED OUTLET	-	1/2"	-	-	KEWAUNEE W-0934-00

PUMP SCHEDULE

TAG NO.	GPM	HEAD FT. WATER	HP	EFFIC %.	RPM	VOLT/ PHASE	SERVICE	REMARKS
P-101	24	20	1/3	93	1800	208V, 3 PHASE	HOT WATER	CLOSE COUPLED CENTRIFUGAL
P-102	30	22	1/4	93	1800	120V, 1PHASE	SEWER	SUBMERSIBLE CENTRIFUGAL
P-103	30	22	1/4	93	1800	120V, 1PHASE	SEWER	SUBMERSIBLE CENTRIFUGAL

BOILER SCHEDULE

TAG NO.	INPUT MBH	OUTPUT MBH	CEC EFFIC. %	MIN. HTG. SURF.	WEIGHT LBS.	REMARKS
BLR-1	199	159	80	4 SQ. FT.	800	-

BOILER SCHEDULE NOTES:
1. PROVIDE PRESSURE RELIEF VALVE, SET AT 60 PSI
2. BOILER OPERATING PRESSURE 35 PSI
3. OPERATING TEMP. = 180°F TO 200°F
4. PROVIDE ACCESSORY EXPANSION TANK AMTROL, OR EQUAL

COMPRESSOR SCHEDULE

TAG NO.	NORMAL OUTPUT	MAXIMUM OUTPUT	HORSE-POWER	VOLT/ PHASE	RECEIVER SIZE	REMARKS
COM-1	5.5 CFM @ 90 PSI	4.9 CFM @ 90 PSI	2	240 V, 1PHASE	80 GALLON	DUPLEX COMPRESSORS

PLUMBING NOTES:

1. INSTALL IN ACCORDANCE WITH CALIFORNIA MECHANICAL AND PLUMBING CODES AND LOCAL AMENDMENTS.
2. PLUMBING LAYOUT IS DIAGRAMMATIC AND DOES NOT SHOW ALL DETAILS OR FITTINGS REQUIRED FOR A COMPLETE INSTALLATION.
3. INSTALL ALL PIPING TO AVOID ARCHITECTURAL OPENING, STRUCTURAL MEMBER, DUCTS, FIXTURES AND OTHER OBSTRUCTIONS.
4. PIPE SIZES FOR HOT AND COLD WATER SUPPLY CONNECTIONS, SANITARY DRAIN AND VENT CONNECTIONS ARE SHOWN ON FIXTURE CONNECTION SCHEDULE.
5. PROVIDE ISOLATION VALVES ON ALL HOT AND COLD WATER BRANCH SUPPLIES TO FIXTURES. PROVIDE WATER HAMMER ARRESTORS PER SPECIFICATION.
6. PROVIDE WALL ACCESS DOOR FOR CLEANOUT TO WALL (COTW) INSTALLATIONS. PROVIDE CHRISTY G3 VALVE BOX FOR ALL CLEANOUT THROUGH GRADE (COTG) INSTALLATIONS.
7. ROUTE VERTICAL PIPING WITHIN CHASES WHERE PROVIDED. LAYOUT SHOWN ON PLAN IS SCHEMATIC AND NOT TO SCALE.
8. WHERE POSSIBLE ROUTE HOT AND COLD WATER, NATURAL GAS, AND COMPRESSED AIR PIPING FOR GROUND FLOOR FIXTURES WITHIN CEILING SPACE AND WITHIN FRAMED WALLS.
9. THERE SHALL BE NO DIRECT CONTACT BETWEEN PIPES AND HANGER STRAPS OR BUILDING CONSTRUCTION. SEPARATE PIPES FROM HANGERS/ BUILDING CONSTRUCTION USING HAIR FELT OF NOT LESS THAN 1/2" THICKNESS.
10. OBTAIN ROUGH-IN DATA AND DIMENSIONS OF ALL SINKS AND PLUMBING FIXTURES TO BE SET WITHIN COUNTERTOPS.
11. PROVIDE LISTED BACKFLOW PREVENTER AND FEED WATER PRESSURE REGULATOR ON SUPPLY PIPING TO BOILERS AND HOT WATER HEATERS.
12. ALL FLOOR DRAINS SHALL BE PROVIDED WITH INTEGRAL TRAPS AND TRAP SEAL PRIMER CONNECTIONS. CONTRACTOR SHALL DESIGN PRIMER SUPPLY PIPING FROM TRAP SEAL PRIMING VALVE TO TRAP SEAL PRIMER CONNECTION.
13. INSPECTION AND TESTING SHALL BE IN ACCORDANCE WITH LOCALLY RECOGNIZED PLUMBING CODES.
14. COORDINATE ALL WORK WITH ALL MECHANICAL, ELECTRICAL AND PLUMBING TRADES BEFORE COMMENCING WORK.
15. FLOOR DRAINS IN INSPECTION BAYS SHALL HAVE GRIT TRAPS.

CALIFORNIA STATE FIRE MARSHAL APPROVED
Approval of this plan does not authorize or approve any omission or deviation from applicable regulations. Final approval is subject to field inspection. One set of approved plans shall be available on the project site at all times.
Reviewed by: Hans Henneberque 5/9/11
Hans Henneberque
Senior Deputy State Fire Marshal

IDENTIFICATION STAMP DIV. OF THE STATE ARCHITECT
02 1117 44
AC ALS — SS —
DATE 5-5-11

	BY	CHECKED
DESIGN	S. NEPRUD	Z. HARRIS
DETAILS	S. NEPRUD	Z. HARRIS
QUANTITIES	S. NEPRUD	Z. HARRIS

PREPARED FOR THE STATE OF CALIFORNIA DEPARTMENT OF TRANSPORTATION

DIVISION OF ENGINEERING SERVICES
ELECTRICAL-MECHANICAL-WATER AND WASTEWATER DESIGN

BRIDGE NO. 23W000IR
POST MILE 14.8

EASTBOUND CORDELIA CVEF
CVEF — PLUMBING NOTES AND SCHEDULES

SHEET MO-2

40a535wdm0-02.dgn
DOES SD Imperial Rev.1/07 18-MAY-2011 07:38

ORIGINAL SCALE IN INCHES FOR REDUCED PLANS 0 1 2 3

CU 04264
EA 0A5351

DISREGARD PRINTS BEARING EARLIER REVISION DATES →

REVISION DATES (PRELIMINARY STAGE ONLY) 10/19/09 03/22/10 05/06/10 08/23/10 11/22/10 05/03/11 — SHEET — OF

18-MAY-2011 07:38
40a535wdm0-02.dgn

DIST.	COUNTY	ROUTE	POST MILES TOTAL PROJECT	SHEET NO.	TOTAL SHEETS
04	Sol	12,80	L1.8/L2.0, 13.3/15.7	642	740

REGISTERED MECHANICAL ENGINEER — 05/03/11 DATE

REGISTERED PROFESSIONAL ENGINEER SEAN E NEPRUD No. M33458 Exp. 06/30/12 MECH STATE OF CALIFORNIA

5-16-11
PLANS APPROVAL DATE

The State of California or its officers or agents shall not be responsible for the accuracy or completeness of electronic copies of this plan sheet.

KENNEDY/JENKS CONSULTANTS
303 SECOND STREET
SUITE 300 SOUTH
SAN FRANCISCO, CA 94960

SOLANO TRANSPORTATION AUTHORITY
ONE HARBOR CENTER, SUITE 130
SUISUN CITY, CA 94585

WET PIPE FIRE SPRINKLER SCHEDULE

BUILDING	AREA	COVERAGE (SQ. FT.)	HAZARD CLASSIFICATION	OPERATING ELEMENT (TEMPERATURE RATING)	ORICE TYPE	SPRINKLER TYPE	MFG/ MODEL	NOTES
CVEF	OFFICE	12,455	LIGHT HAZARD	FUSIBLE ELEMENT (ORDINARY)	STANDARD (K=5.5)	PENDENT (RECESSED)	TYCO MODEL TY-32II 2 (STYLE 20)	1, 3, 4
	INTOX	175	LIGHT HAZARD	FUSIBLE ELEMENT (ORDINARY)	STANDARD (K=5.5)	INSTITUTIONAL PENDENT	TYCO MODEL TFP-PH2	1, 3, 4
	INSPECTION BAYS	18,720	ORDINARY HAZARD GROUP 1	FUSIBLE ELEMENT (ORDINARY)	STANDARD (K=5.5)	UPRIGHT	TYCO MODEL TY-3111 2	4
GENERATOR BUILDING	KENNEL	125	ORDINARY HAZARD GROUP 1	FUSIBLE ELEMENT (ORDINARY)	STANDARD (K=5.5)	UPRIGHT	TYCO MODEL TY-3111 2	4, 5

WET PIPE FIRE SPRINKLER SCHEDULE NOTES:

1. VENTILATION SYSTEM LAYOUT MAY AFFECT QUANTITY AND LOCATION OF FIRE SPRINKLER PLACEMENT.
2. OR EQUIVALENT PRODUCT BY VIKING CORP., RELIABLE AUTOMATIC SPRINKLER.
3. CEILING ESCUTCHEONS SHALL BE INTEGRAL TO SPRINKLER ASSEMBLY.
4. SHIELD SHALL BE INTEGRAL TO SPRINKLER ASSEMBLY
5. INSTALL FIRE SPRINKLER RISER ALONG WEST FACE OF BUILDING. PROVIDE VALVE SUPERVISORY SWITCH AND WATER FLOW ALARM SWITCH FOR CONNECTION TO FIRE ALARM CONTROL SYSTEM.

FIRE PROTECTION NOTES:

1. AUTOMATIC SPRINKLER SYSTEMS SHALL BE SUPERVISED BY AN APPROVED PROPRIETARY SUPERVISING STATION OR REMOTE STATION SERVICE.
2. FIRE SPRINKLER RISER AND FIRE SPRINKLER LAYOUTS ARE DIAGRAMMATIC AND DO NOT SHOW ALL DETAILS OR FITTINGS REQUIRED FOR A COMPLETE INSTALLATION. DESIGN DRAWINGS AND CALCULATIONS, AND SEISMIC BRACING REQUIREMENTS SHALL BE SUBMITTED FOR APPROVAL BY A LICENSED FIRE PROTECTION ENGINEER OR A C-16 LICENSED CONTRACTOR.
3. INSPECTOR'S TEST CONNECTION SHALL BE INSTALLED ON A VERTICAL RISER NO GREATER THAN 6'-6" ABOVE FLOOR LEVEL. TEST CONNECTION OUTLET SHALL BE ON EXTERIOR OF BUILDING AND DISCHARGE TO SPLASHBLOCK.
4. INSPECTION AND TESTING SHALL BE IN ACCORDANCE WITH NFPA STANDARDS.
5. WHERE PENDENT SPRINKLERS ARE TO BE INSTALLED, SPRINKLERS SHALL BE MOUNTED WITH DEFLECTOR SET 4 INCHES BENEATH SUSPENDED CEILING.
6. ALL EXPOSED SPRINKLER PIPING, HANGERS, AND MOUNTING BRACKETS TO BE PAINTED. FIRE SPRINKLER RISER, VALVES, AND DOUBLE CHECK BACKFLOW PREVENTER AND CHECK VALVES SHALL BE PAINTED PER EXTERIOR PAINT SPECIFICATIONS. SEE ARCHITECTURAL SPECIFICATIONS.

CALIFORNIA STATE FIRE MARSHAL
APPROVED

Approval of this plan does not authorize or approve any omission or deviation from applicable regulations. Final approval is subject to field inspection. One set of approved plans shall be available on the project site at all times.

Reviewed by: Hans Henneberque 5/9/11
Hans Henneberque
Senior Deputy State Fire Marshal

IDENTIFICATION STAMP
DIV. OF THE STATE ARCHITECT
02 1117 44
ACC ARCH ELS — SS —
DATE 5-5-11

	BY	CHECKED
DESIGN	S. NEPRUD	Z. HARRIS
DETAILS	S. NEPRUD	Z. HARRIS
QUANTITIES	S. NEPRUD	Z. HARRIS

PREPARED FOR THE STATE OF CALIFORNIA DEPARTMENT OF TRANSPORTATION

DIVISION OF ENGINEERING SERVICES
ELECTRICAL-MECHANICAL-WATER AND WASTEWATER DESIGN

BRIDGE NO. 23W000IR
POST MILE 14.8

EASTBOUND CORDELIA CVEF
CVEF — FIRE PROTECTION NOTES AND SCHEDULES

SHEET MO-3

40a535wdm0-03.dgn
DOES SD imperial Rev.1/07 18-MAY-2011 07:38

ORIGINAL SCALE IN INCHES FOR REDUCED PLANS 0 1 2 3

CU 04264
EA 0A5351

DISREGARD PRINTS BEARING EARLIER REVISION DATES →

REVISION DATES (PRELIMINARY STAGE ONLY) 10/13/09 03/22/10 05/06/10 08/23/10 11/22/10 05/03/11 SHEET OF

18-MAY-2011 07:38
40a535wdm0-03.dgn

DIST.	COUNTY	ROUTE	POST MILES TOTAL PROJECT	SHEET NO.	TOTAL SHEETS
04	Sol	12,80	L1.8/L2.0, 13.3/15.7	643	740

REGISTERED MECHANICAL ENGINEER — 05/03/11 DATE

REGISTERED PROFESSIONAL ENGINEER SEAN E NEPRUD No. M33458 Exp. 06/30/12 MECH STATE OF CALIFORNIA

5-16-11
PLANS APPROVAL DATE

The State of California or its officers or agents shall not be responsible for the accuracy or completeness of electronic copies of this plan sheet.

KENNEDY/JENKS CONSULTANTS
303 SECOND STREET
SUITE 300 SOUTH
SAN FRANCISCO, CA 94960

SOLANO TRANSPORTATION AUTHORITY
ONE HARBOR CENTER, SUITE 130
SUISUN CITY, CA 94585

HEATING AND COOLING EQUIPMENT SCHEDULE

UNIT NO.	LOCATION	AREA SERVED [2]	HEATING INPUT [Btuh]	HEATING OUTPUT [Btuh]	HEATING NO. OF STAGES	HEATING EFFICIENCY	COOLING (SEE NOTE 1) NOMINAL/SENSIBLE OUTPUT [BTUH]	COOLING EFFICIENCY (S)EER	COOLING ECONOMIZER YES/NO	FAN CAPACITY [CFM]	FAN MIN.OA [CFM]	FAN ESP [IN. W.C.]	FAN POWER [HP]	FILTER	ELECTRICAL SERVICE	MAIN BREAKER	EQUIPMENT WEIGHT [LB]	EQUIPMENT TYPE	MODEL TRANE; OR EQUAL
ACU-101	OFFICE ROOF	ZONE 1	120,000	96,000	1	81%	102,000/83,300	13.0	YES	3,400	990	1.0	1.0	MERV 13	480 V, 3 PHASE	25 A	950	PACKAGED ELECTRIC COOLING GAS HEAT	YHC102
ACU-102	ROOF (ABOVE EVIDENCE)	ZONE 2 (EVIDENCE)	40,000	31,900	1	80%	18,000/16,700	13.0	NO	440	440	0.3	1/8	MERV 13	208 V, 1PHASE	15 A	385	PACKAGED ELECTRIC COOLING GAS HEAT	4YCC3018A
ACU-103	OFFICE ROOF	ZONE 3	120,000	96,000	1	81%	90,000/51,800	13.0	YES	2,100	700	1.0	1.0	MERV 13	480 V, 3 PHASE	25 A	950	PACKAGED ELECTRIC COOLING GAS HEAT	YHC092
ACU-104	ROOF (ABOVE SERVER)	ZONE 4 (SERVER)	N/A	N/A	--	--	24,000/19,250	13.0	YES	750	40	0.3	1/4	MERV 13	208 V, 1PHASE	20 A	385	PACKAGED ELECTRIC COOLING	4YCC3024A
ACU-105	OFFICE ROOF	ZONE 5	80,000	64,000	1	81%	72,000/54,500	12.6	YES	2,160	600	1.0	1.0	MERV 13	480 V, 3 PHASE	25 A	750	PACKAGED ELECTRIC COOLING GAS HEAT	YHC072
ACU-106	ROOF (ABOVE CONFERENCE)	ZONE 6 (CONFERENCE)	120,000	96,000	1	80%	102,000/62,240	13.0	YES	3,060	950	0.75	1.0	MERV 13	480 V, 3 PHASE	25 A	800	PACKAGED ELECTRIC COOLING GAS HEAT	YHC102
ACU-201	GEN. BLDG. WALL	KENNEL	-	9,900	1	3.1 C.O.P.	12,000/9,800	11.2	NO	320	--	--	0.1	N/A	208 V, 1PHASE	25 A	120	THROUGH THE WALL DUCTLESS HEAT PUMP	PTHE120

HEATING AND COOLING EQUIPMENT SCHEDULE NOTES:
1. OUTDOOR AIR DESIGN CONDITION: 91° DB, 66° WB (COOLING, 2% TEMPERATURES); 24° DB (HEATING)
2. REFER TO DRAWING M2-8 FOR DEFINITION OF ZONES
3. FURNACE SECTIONS OF ACU-101, ACU-102, ACU-103, ACU-105, AND ACU-106 SHALL BE SPARK IGNITION.
4. PROVIDE A HEAT AND SMOKE SENSOR IN THE SUPPLY DUCT OF ACU-101, ACU-103, ACU-104, ACU-105, AND ACU-106. EACH OF THESE UNITS SHALL HAVE CONTROLS TO SHUT DOWN THE UNIT IF SENSORS ARE TRIGGERED.

FAN SCHEDULE

NO.	BUILDING	AREA SERVED	LOCATION	CFM	RPM	ESP	HP	FAN TYPE	DRIVE	EQUIPMENT WEIGHT [LB]	ELEC SERVICE	MODEL NUMBER GREENHECK; OR EQUAL
EF-01	TIF OFFICE	LACTATION/ JANITOR	ROOF	170	1300	0.125	1/100	CENTRIFUGAL ROOF EXHAUST	DIRECT	18	120 V, 1PHASE	G-060-G
EF-02	TIF OFFICE	EMPLOYEE BATHROOMS	ROOF	1025	860	0.375	1/8	CENTRIFUGAL ROOF EXHAUST	DIRECT	81	120 V, 1PHASE	G-150-C
EF-03	TIF OFFICE	EVIDENCE	ROOF	450	1300	0.25	1/25	CENTRIFUGAL ROOF EXHAUST	DIRECT	26	120 V, 1PHASE	G-090-G
EF-04	TIF OFFICE	WEAPONS	ROOF	100	1550	0.2	1/60	CENTRIFUGAL ROOF EXHAUST	DIRECT	18	120 V, 1PHASE	G-060-D
EF-05	TIF OFFICE	INTOX	ROOF	110	1550	0.2	1/60	CENTRIFUGAL ROOF EXHAUST	DIRECT	18	120 V, 1PHASE	G-060-D
EF-06	TIF OFFICE	VISITOR BATHROOMS	ROOF	300	1300	0.375	1/12	CENTRIFUGAL ROOF EXHAUST	DIRECT	26	120 V, 1PHASE	G-095-G
EF-07	INSPECTION BAYS	INSPECTION BAYS	MECHANICAL ROOM	3,000	890	0.25	1/2	CENTRIFUGAL UTILITY EXHAUST FAN	BELT	312	480 V, 3 PHASE	SWB-118
EF-08	INSPECTION BAYS	INSPECTION BAYS	MECHANICAL ROOM	3,000	890	0.25	1/2	CENTRIFUGAL UTILITY EXHAUST FAN	BELT	312	480 V, 3 PHASE	SWB-118
EF-09	INSPECTION BAYS	INSPECTION BAYS	MECHANICAL ROOM	3,000	890	0.25	1/2	CENTRIFUGAL UTILITY EXHAUST FAN	BELT	312	480 V, 3 PHASE	SWB-118
EF-10	INSPECTION BAYS	INSPECTION BAYS	MECHANICAL ROOM	3,000	890	0.25	1/2	CENTRIFUGAL UTILITY EXHAUST FAN	BELT	312	480 V, 3 PHASE	SWB-118
EF-11	INSPECTION BAYS	INSPECTION BAYS	MECHANICAL ROOM	3,000	890	0.25	1/2	CENTRIFUGAL UTILITY EXHAUST FAN	BELT	312	480 V, 3 PHASE	SWB-118
EF-12	INSPECTION BAYS	INSPECTION BAYS	MECHANICAL ROOM	3,000	890	0.25	1/2	CENTRIFUGAL UTILITY EXHAUST FAN	BELT	312	480 V, 3 PHASE	SWB-118
EF-13	INSPECTION BAYS	INSPECTION BAYS	MECHANICAL ROOM	3,000	890	0.25	1/2	CENTRIFUGAL UTILITY EXHAUST FAN	BELT	312	480 V, 3 PHASE	SWB-118
EF-14	INSPECTION BAYS	TRENCH 1 AND 2	INSPECTION BAYS	300	1300	0.25	1/20	INLINE CENTRIFUGAL EXHAUST FAN	DIRECT	312	120 V, 1PHASE	SQ-85-G
EF-15	INSPECTION BAYS	TRENCH 3 AND 4	INSPECTION BAYS	300	1300	0.25	1/20	INLINE CENTRIFUGAL EXHAUST FAN	DIRECT	312	120 V, 1PHASE	SQ-85-G
EF-16	INSPECTION BAYS	TRENCH 5 AND 6	INSPECTION BAYS	300	1300	0.25	1/20	INLINE CENTRIFUGAL EXHAUST FAN	DIRECT	312	120 V, 1PHASE	SQ-85-G

VAV TERMINAL UNIT SCHEDULE

NO.	LOCATION	ROOM SERVED	INLET SP (1)	UNIT AIR ΔP	AIRFLOW CAPACITY MIN CFM	AIRFLOW CAPACITY MAX CFM	MAX INLET DUCT SIZE (2)	MODEL NUMBER (3)
VAV-1	27	27	-	0.03	310	1280	8	VCCF08
VAV-2	33	33	-	0.01	55	100	4	VCCF04
VAV-3	25	25	-	0.01	170	250	5	VCCF05
VAV-4	22	22	-	0.01	70	125	4	VCCF04
VAV-5	24	24	-	0.01	60	115	4	VCCF04
VAV-6	34	23	-	0.01	85	145	4	VCCF04
VAV-7	20	20	-	0.01	120	255	5	VCCF05
VAV-8	19	19	-	0.01	120	240	5	VCCF05
VAV-9	18	18	-	0.01	90	180	5	VCCF05
VAV-10	11	11	-	0.22	150	330	6	VCCF06
VAV-11	10	10	-	0.02	280	465	5	VCCF05
VAV-12	10	16, 17	-	0.01	175	290	5	VCCF05
VAV-13	5	5	-	0.07	300	920	8	VCCF08
VAV-14	5	2	-	0.02	300	740	5	VCCF05

VAV SCHEDULE NOTES:
1. DESIGN SP AT BOX INLET.
2. BASED ON 500 fpm DUCT VELOCITY AT THE MINIMUM CFM OR 2000 fpm, DUCT VELOCITY AT MAXIMUM CFM.
3. TRANE, UNLESS OTHERWISE NOTED.

BYPASS DAMPER SCHEDULE

NO.	LOCATION	ROOM SERVED	INLET SP (1)	AIRFLOW CAPACITY MAX CFM	AIRFLOW CAPACITY MIN CFM	MAX INLET DUCT SIZE (2)
BP-1	ROOM 30	ZONE 1	0.8	1900	0	14x12
BP-2	ROOM 36	ZONE 3	0.8	1800	0	14x12
BP-3	ROOM 5	ZONE 5	0.8	1500	0	16x10
BP-4	ROOM 9	ZONE 6	0.65	2115	0	14x8

CALIFORNIA STATE FIRE MARSHAL APPROVED
Approval of this plan does not authorize or approve any omission or deviation from applicable regulations. Final approval is subject to field inspection. One set of approved plans shall be available on the project site at all times.
Reviewed by: Hans Henneberque 5/9/11
Hans Henneberque
Senior Deputy State Fire Marshal

FAN SCHEDULE (CONTINUATION)

EF-03B	TIF OFFICE	EVIDENCE (HOOD)	ROOF	600	1600	0.4"	1/4	CENTRIFUGAL UTILITY EXHAUST FAN	BELT	135	120 V, 1PHASE	SWB-108
EF-04B	TIF OFFICE	WEAPONS (HOOD)	ROOF	600	1600	0.4"	1/4	CENTRIFUGAL UTILITY EXHAUST FAN	BELT	135	120 V, 1PHASE	SWB-108

HVAC NOTES:

1. ALL DUCTWORK INSTALLATION SHALL BE IN ACCORDANCE WITH ALL APPLICABLE CODES, SPECIFICATIONS, LOCAL ORDINANCES AND INDUSTRY STANDARDS.
2. COORDINATE EXACT LOCATION OF EQUIPMENT PENETRATIONS THROUGH ROOF, FLOORS, AND WALLS WITH ARCHITECTURAL DRAWINGS PRIOR TO SHOP DRAWING SUBMITTAL.
3. COORDINATE HVAC SYSTEMS WITH WORK OF OTHER SYSTEMS AND TRADES PRIOR TO ANY FABRICATION OR INSTALLATION. PROVIDE ALL FITTINGS, OFFSETS AND TRANSITIONS AS REQUIRED FOR A COMPLETE WORKABLE INSTALLATION.
4. COORDINATE LOCATIONS, FINISH AND PAINT COLOR OF ALL HVAC DIFFUSERS, REGISTERS AND GRILLES IN ROOMS WITH GYPSUM BOARD HARD-LID CEILINGS WITH ARCHITECTURAL FINISH SCHEDULE.
5. PROVIDE BRACING FOR HORIZONTAL DUCTWORK IN ACCORDANCE WITH THE LATEST EDITION OF THE SMACNA RESTRAINT MANUAL.
6. PROVIDE ACOUSTICAL LINING FOR ALL DUCTWORK INSTALLED UP TO 10' DOWNSTREAM OF HEAT PUMPS, AIR CONDITIONING UNITS, AND OTHER AIR HANDLING EQUIPMENT
7. PROVIDE CEILING ACCESS PANELS TO ACCESS DAMPERS INSTALLED ABOVE CEILING. COORDINATE SIZE AND LOCATION OF ACCESS PANELS WITH ARCHITECT.
8. ALL SUPPLY AND RETURN AIR DUCTS SHALL HAVE EXTERNAL INSULATION WHERE THEY PASS THROUGH UNCONDITIONED SPACES.
9. ALL EQUIPMENT SHALL BE INSTALLED IN STRICT ACCORDANCE WITH THE EQUIPMENT MANUFACTURERS RECOMMENDATION AND APPLICABLE CODES.
10. ALL MECHANICAL ROOM INTAKES SHALL HAVE A FILTER ON INSIDE OF LOUVER.
11. FOR LOCATION OF LOUVERS SEE ARCHITECTURAL DRAWINGS.
12. ALL DUCTING OF VAV UNITS SHALL BE INTERNALLY INSULATED A MINIMUM OF 5 FT. UPSTREAM AND DOWNSTREAM OR AS INDICATED ON THE DRAWING.
13. ALL EXPOSED AIR DUCTS SHALL BE SPIRAL GALVANIZED STEEL ARCHITECTURAL FINISH WITH GALVANIZED STEEL ATTACHMENT RODS AND STRAPS. INSTALLATION SHALL BE IN ACCORDANCE WITH INDUSTRY STANDARDS FOR EXPOSED ARCHITECTURAL DUCTING.
14. COORDINATE ALL WORK WITH ALL MECHANICAL, ELECTRICAL AND PLUMBING TRADES BEFORE COMMENCING WORK.

IDENTIFICATION STAMP DIV. OF THE STATE ARCHITECT
02 111744
AC ___ BLS — SS —
DATE 5-5-11

	BY	CHECKED
DESIGN	S. NEPRUD	Z. HARRIS
DETAILS	S. NEPRUD	Z. HARRIS
QUANTITIES	S. NEPRUD	Z. HARRIS

PREPARED FOR THE STATE OF CALIFORNIA DEPARTMENT OF TRANSPORTATION

DIVISION OF ENGINEERING SERVICES
ELECTRICAL-MECHANICAL-WATER AND WASTEWATER DESIGN

BRIDGE NO. 23W000IR
POST MILE 14.8

EASTBOUND CORDELIA CVEF
CVEF — HVAC NOTES AND EQUIPMENT SCHEDULES

SHEET MO-4

ORIGINAL SCALE IN INCHES FOR REDUCED PLANS 0 1 2 3

CU 04264
EA 0A5351

DISREGARD PRINTS BEARING EARLIER REVISION DATES → 10/19/09 03/22/10 05/06/10 08/23/10 11/22/10 05/03/11

REVISION DATES (PRELIMINARY STAGE ONLY) SHEET OF

40a535wdm0-04.dgn
DOES SD imperial Rev. 1/07 18-MAY-2011 07:39

18-MAY-2011 07:39
40a535wdm0-04.dgn

DIST.	COUNTY	ROUTE	POST MILES TOTAL PROJECT	SHEET NO.	TOTAL SHEETS
04	Sol	12,80	L1.8/L2.0, 13.3/15.7	644	740

Dolly Y Chen 3/14/11
REGISTERED CIVIL ENGINEER DATE

REGISTERED PROFESSIONAL ENGINEER DOLLY Y. CHEN No. C-63788 Exp. 9-30-12 STATE OF CALIFORNIA

5-16-11
PLANS APPROVAL DATE

The State of California or its officers or agents shall not be responsible for the accuracy or completeness of electronic copies of this plan sheet.

HDR ENGINEERING, INC.
2121 N CALIFORNIA BLVD
SUITE 475
WALNUT CREEK, CA 94596

SOLANO TRANSPORTATION AUTHORITY
ONE HARBOR CENTER, SUITE 130
SUISUN CITY, CA 94585

ROUTE 80 EB

NOTES:

1. FOR ACCURATE RIGHT OF WAY DATA, CONTACT RIGHT OF WAY ENGINEERING AT THE DISTRICT OFFICE.
2. GAS LINE DESIGNED BY PG&E. CONTACT ART FLETES, PG&E GC INSPECTOR FOR GAS AT (530) 355-0725 PRIOR TO INSTALLATION OF GAS LINE.

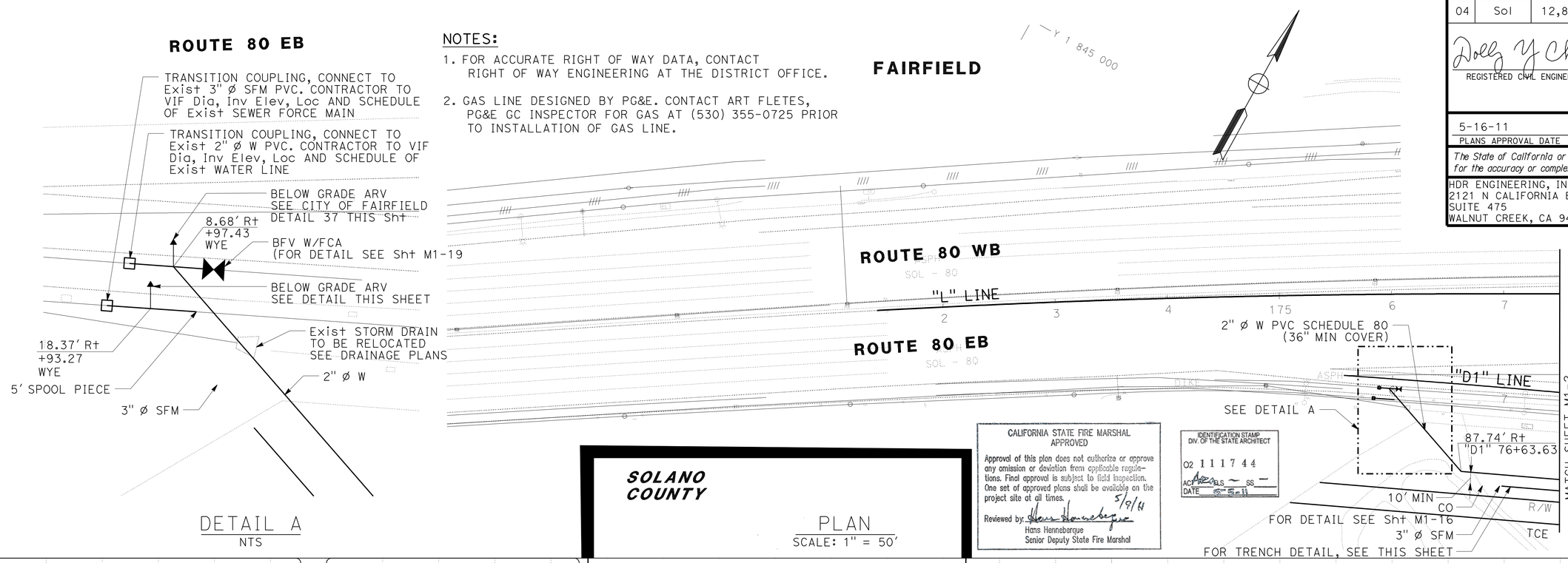

DETAIL A
NTS

SOLANO COUNTY

PLAN
SCALE: 1" = 50'

CALIFORNIA STATE FIRE MARSHAL APPROVED

Approval of this plan does not authorize or approve any omission or deviation from applicable regulations. Final approval is subject to field inspection. One set of approved plans shall be available on the project site at all times.

Reviewed by Hans Henneberque 5/9/11
Hans Henneberque
Senior Deputy State Fire Marshal

IDENTIFICATION STAMP DIV. OF THE STATE ARCHITECT
02 111744
ACP APPROVALS ~ SS ~
DATE 5-5-11

TRENCH DETAIL
NTS

Call USA At Least 48 Hours Prior To Any Excavation 1-800-642-2444

Caution: Overhead Power Lines in this Area

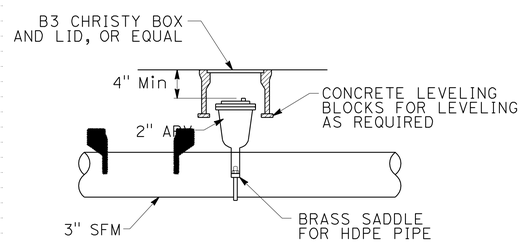

BELOW GRADE ARV STATION
No Scale

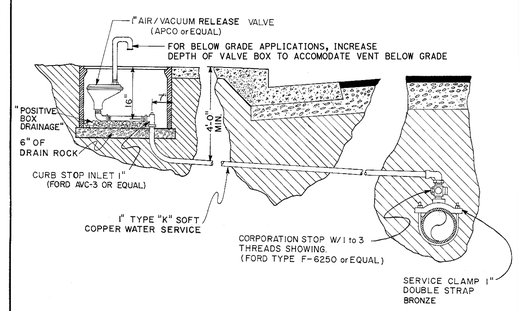

AIR & VACUUM RELEASE VALVE

NOTES:

1. AIR RELEASE VALVE SHALL HAVE CHRISTY B-36 METER BOX AND CHRISTY E-70 LID.
2. PLACE 6 INCHES OF DRAIN ROCK UNDER BOX.
3. ALL FITTINGS AND NIPPLES TO BE BRASS OR COPPER.
4. LOCATE BOX AT BACK OF SIDEWALK FOR BOTH MONOLITHIC AND SEPARATED SIDEWALK.

CITY OF FAIRFIELD
DEPARTMENT OF PUBLIC WORKS
AIR RELEASE VALVE
APPROVED BY Charles J. Scott CITY ENGINEER R.C.E. 22878
DATE JULY 1995 REV. REV. REV.
37

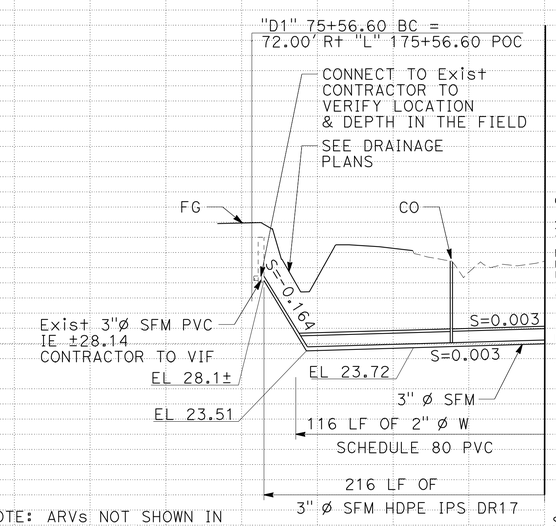

NOTE: ARVs NOT SHOWN IN PROFILE FOR CLARITY.

PROFILE
SCALE: 1" = 50' Horiz
1" = 5' Vert

STATION	40	30	20	10	76+00	77+00	TOTAL
CY Exc							
CY Emb							

	BY	CHECKED
DESIGN	D. CHEN	K. VON ASPERN
DETAILS	A. PAEZ	D. CHEN
QUANTITIES	D. CHEN	K. VON ASPERN

ORIGINAL SCALE IN INCHES FOR REDUCED PLANS 0 1 2 3

PREPARED FOR THE STATE OF CALIFORNIA DEPARTMENT OF TRANSPORTATION

DIVISION OF ENGINEERING SERVICES
ELECTRICAL-MECHANICAL-WATER AND WASTEWATER DESIGN

CU 04264
EA 0A5351

BRIDGE NO. 23W0001R
POST MILE 14.8

EASTBOUND CORDELIA CVEF

CVEF | SITE UTILITIES No. 1

SHEET **M1-1**

DISREGARD PRINTS BEARING EARLIER REVISION DATES → REVISION DATES (PRELIMINARY STAGE ONLY) 10/19/09 3/22/10 8/18/10 11/3/10 11/22/10 03/14/11 SHEET OF

40a535wdM1-01.dgn
DOES SD imperial Rev.1/07 18-MAY-2011 16:10

18-MAY-2011 16:10
40a535wdM1-01.dgn

DIST.	COUNTY	ROUTE	POST MILES TOTAL PROJECT	SHEET NO.	TOTAL SHEETS
04	Sol	12,80	L1.8/L2.0, 13.3/15.7	645	740

Dolly Y Chen 03/14/11
REGISTERED CIVIL ENGINEER DATE

REGISTERED PROFESSIONAL ENGINEER DOLLY Y. CHEN No. C-63788 Exp. 9-30-12 STATE OF CALIFORNIA

5-16-11
PLANS APPROVAL DATE

The State of California or its officers or agents shall not be responsible for the accuracy or completeness of electronic copies of this plan sheet.

HDR ENGINEERING, INC.
2121 N CALIFORNIA BLVD
SUITE 475
WALNUT CREEK, CA 94596

SOLANO TRANSPORTATION AUTHORITY
ONE HARBOR CENTER, SUITE 130
SUISUN CITY, CA 94585

NOTE:
FOR ACCURATE RIGHT OF WAY DATA, CONTACT RIGHT OF WAY ENGINEERING AT THE DISTRICT OFFICE.

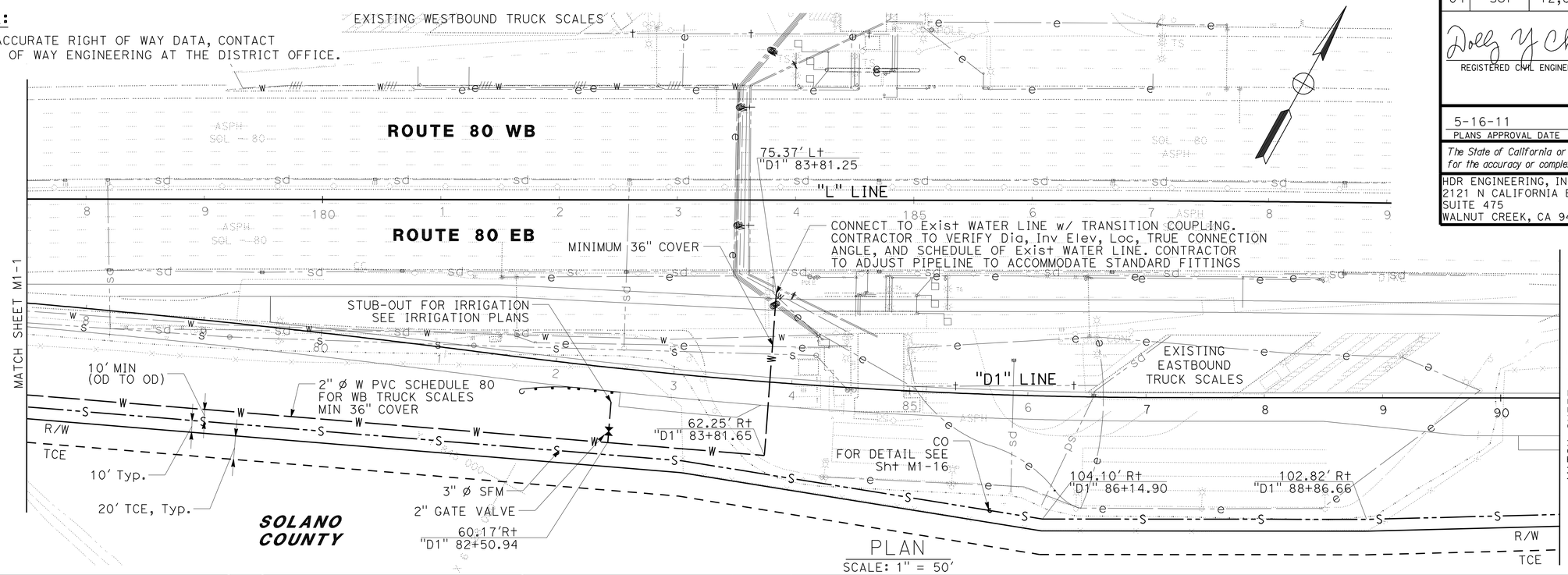

PLAN
SCALE: 1" = 50'

CALIFORNIA STATE FIRE MARSHAL APPROVED
Approval of this plan does not authorize or approve any omission or deviation from applicable regulations. Final approval is subject to field inspection. One set of approved plans shall be available on the project site at all times.
Reviewed by: Hans Hennebergue 5/9/11
Hans Hennebergue
Senior Deputy State Fire Marshal

IDENTIFICATION STAMP DIV. OF THE STATE ARCHITECT
02 111744
ACCESS BLS — SS —
DATE 5-5-11

Call USA At Least 48 Hours Prior To Any Excavation 1-800-642-2444

Caution: Overhead Power Lines in this Area

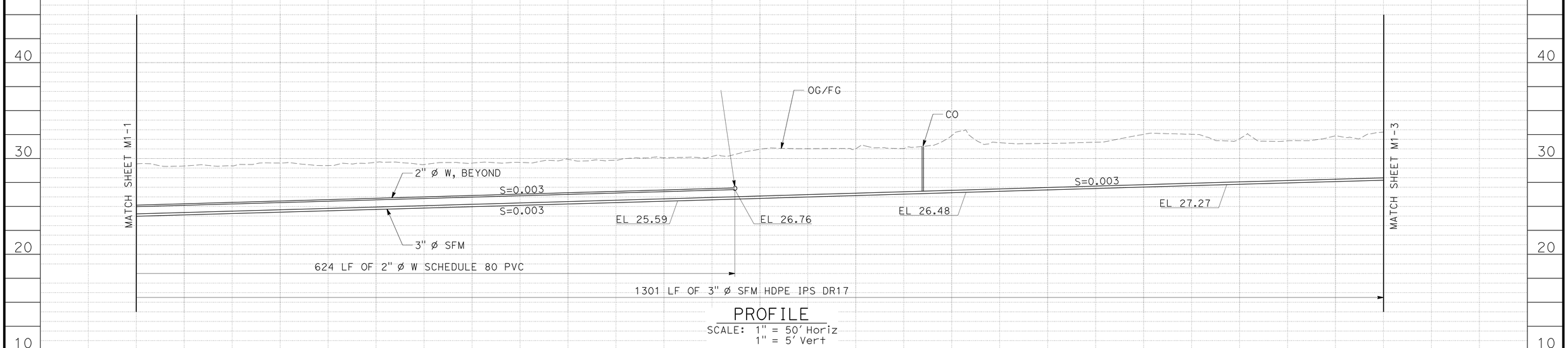

PROFILE
SCALE: 1" = 50' Horiz
1" = 5' Vert

STATION	78+00	79+00	80+00	81+00	82+00	83+00	84+00	85+00	86+00	87+00	88+00	89+00	90+00	TOTAL
CY Exc														
CY Emb														

	BY	CHECKED
DESIGN	D. CHEN	K. VON ASPERN
DETAILS	A. PAEZ	D. CHEN
QUANTITIES	D. CHEN	K. VON ASPERN

PREPARED FOR THE STATE OF CALIFORNIA DEPARTMENT OF TRANSPORTATION

DIVISION OF ENGINEERING SERVICES
ELECTRICAL-MECHANICAL-WATER AND WASTEWATER DESIGN

BRIDGE NO. 23W0001R
POST MILE 14.8

EASTBOUND CORDELIA CVEF
CVEF — SITE UTILITIES No. 2

SHEET **M1-2**

40a535wdM1-02.dgn
DOES SD imperial Rev.1/07 18-MAY-2011 16:10

ORIGINAL SCALE IN INCHES FOR REDUCED PLANS 0 1 2 3

CU 04264
EA 0A5351

DISREGARD PRINTS BEARING EARLIER REVISION DATES → 10/19/09 3/22/10 8/18/10 11/3/10 11/22/10 3/14/11

REVISION DATES (PRELIMINARY STAGE ONLY) SHEET OF

18-MAY-2011 16:10
40a535wdM1-02.dgn

DIST.	COUNTY	ROUTE	POST MILES TOTAL PROJECT	SHEET NO.	TOTAL SHEETS
04	Sol	12,80	L1.8/L2.0, 13.3/15.7	646	740

Dolly Y Chen 05/03/11
REGISTERED CIVIL ENGINEER DATE

REGISTERED PROFESSIONAL ENGINEER DOLLY Y. CHEN No. C-63788 Exp. 9-30-12 STATE OF CALIFORNIA

5-16-11
PLANS APPROVAL DATE

The State of California or its officers or agents shall not be responsible for the accuracy or completeness of electronic copies of this plan sheet.

HDR ENGINEERING, INC.
2121 N CALIFORNIA BLVD
SUITE 475
WALNUT CREEK, CA 94596

SOLANO TRANSPORTATION AUTHORITY
ONE HARBOR CENTER, SUITE 130
SUISUN CITY, CA 94585

NOTE:
FOR ACCURATE RIGHT OF WAY DATA, CONTACT RIGHT OF WAY ENGINEERING AT THE DISTRICT OFFICE.

CALIFORNIA STATE FIRE MARSHAL APPROVED
Approval of this plan does not authorize or approve any omission or deviation from applicable regulations. Final approval is subject to field inspection. One set of approved plans shall be available on the project site at all times. 5/9/11
Reviewed by: Hans Hennebergue
Hans Hennebergue
Senior Deputy State Fire Marshal

IDENTIFICATION STAMP DIV. OF THE STATE ARCHITECT
02 111744
AC AREALS — SS —
DATE 5-5-11

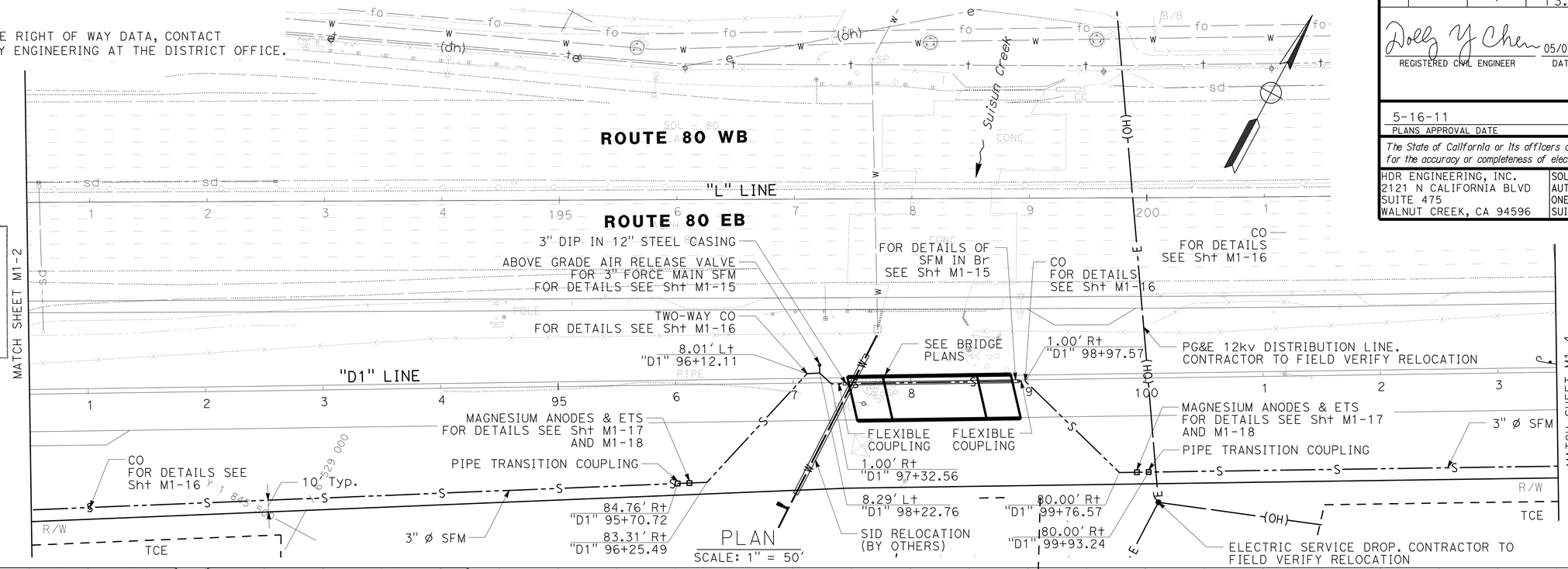

PLAN
SCALE: 1" = 50'

Call USA At Least 48 Hours Prior To Any Excavation 1-800-642-2444

Caution: Overhead Power Lines in this Area

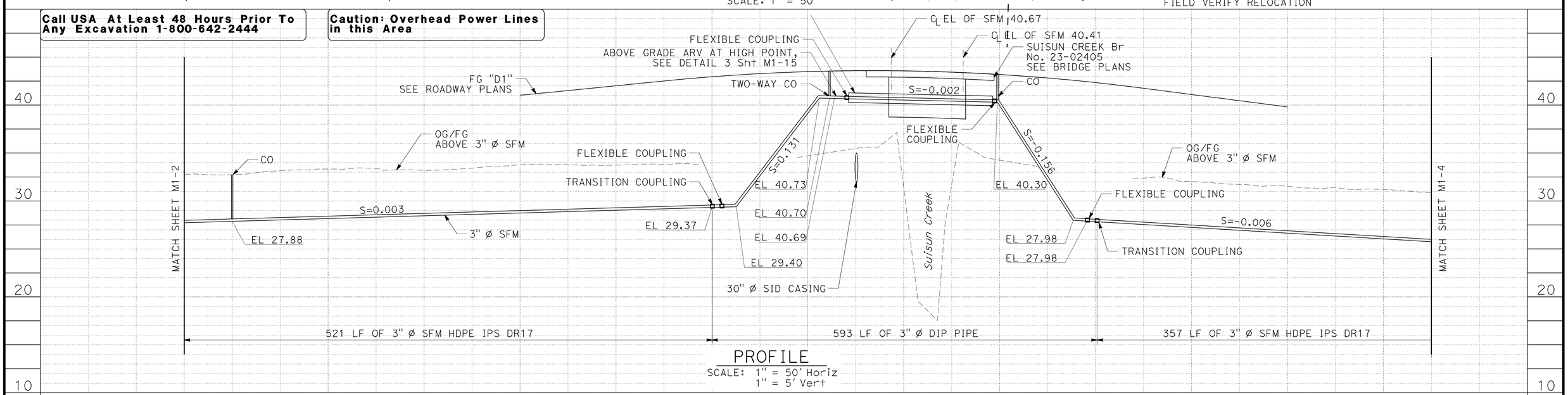

PROFILE
SCALE: 1" = 50' Horiz
1" = 5' Vert

	BY	CHECKED
DESIGN	D. CHEN	K. VON ASPERN
DETAILS	A. PAEZ	D. CHEN
QUANTITIES	D. CHEN	K. VON ASPERN

PREPARED FOR THE STATE OF CALIFORNIA DEPARTMENT OF TRANSPORTATION

DIVISION OF ENGINEERING SERVICES
ELECTRICAL-MECHANICAL-WATER AND WASTEWATER DESIGN

BRIDGE NO. 23W0001R
POST MILE 14.8

EASTBOUND CORDELIA CVEF

CVEF — SITE UTILITIES No. 3

SHEET **M1-3**

40a535wdM1-03.dgn
DOES SD imperial Rev.1/07 18-MAY-2011 16:10

ORIGINAL SCALE IN INCHES FOR REDUCED PLANS 0 1 2 3

CU 04264
EA 0A5351

DISREGARD PRINTS BEARING EARLIER REVISION DATES → 10/19/09 3/22/10 8/18/10 11/3/10 11/22/10 05/03/11

REVISION DATES (PRELIMINARY STAGE ONLY) SHEET OF

18-MAY-2011 16:10
40a535wdM1-03.dgn

DIST.	COUNTY	ROUTE	POST MILES TOTAL PROJECT	SHEET NO.	TOTAL SHEETS
04	Sol	12,80	L1.8/L2.0, 13.3/15.7	647	740

Dolly Y Chen 3/14/11
REGISTERED CIVIL ENGINEER DATE

REGISTERED PROFESSIONAL ENGINEER DOLLY Y. CHEN No. C-63788 Exp. 9-30-12 STATE OF CALIFORNIA

5-16-11
PLANS APPROVAL DATE

The State of California or its officers or agents shall not be responsible for the accuracy or completeness of electronic copies of this plan sheet.

HDR ENGINEERING, INC.
2121 N CALIFORNIA BLVD
SUITE 475
WALNUT CREEK, CA 94596

SOLANO TRANSPORTATION AUTHORITY
ONE HARBOR CENTER, SUITE 130
SUISUN CITY, CA 94585

NOTE:

FOR ACCURATE RIGHT OF WAY DATA, CONTACT RIGHT OF WAY ENGINEERING AT THE DISTRICT OFFICE.

CALIFORNIA STATE FIRE MARSHAL APPROVED

Approval of this plan does not authorize or approve any omission or deviation from applicable regulations. Final approval is subject to field inspection. One set of approved plans shall be available on the project site at all times.

Reviewed by: Hans Henneberque 5/9/11
Hans Henneberque
Senior Deputy State Fire Marshal

IDENTIFICATION STAMP
DIV. OF THE STATE ARCHITECT
02 111744
ACCESS ELS — SS —
DATE 05-05-11

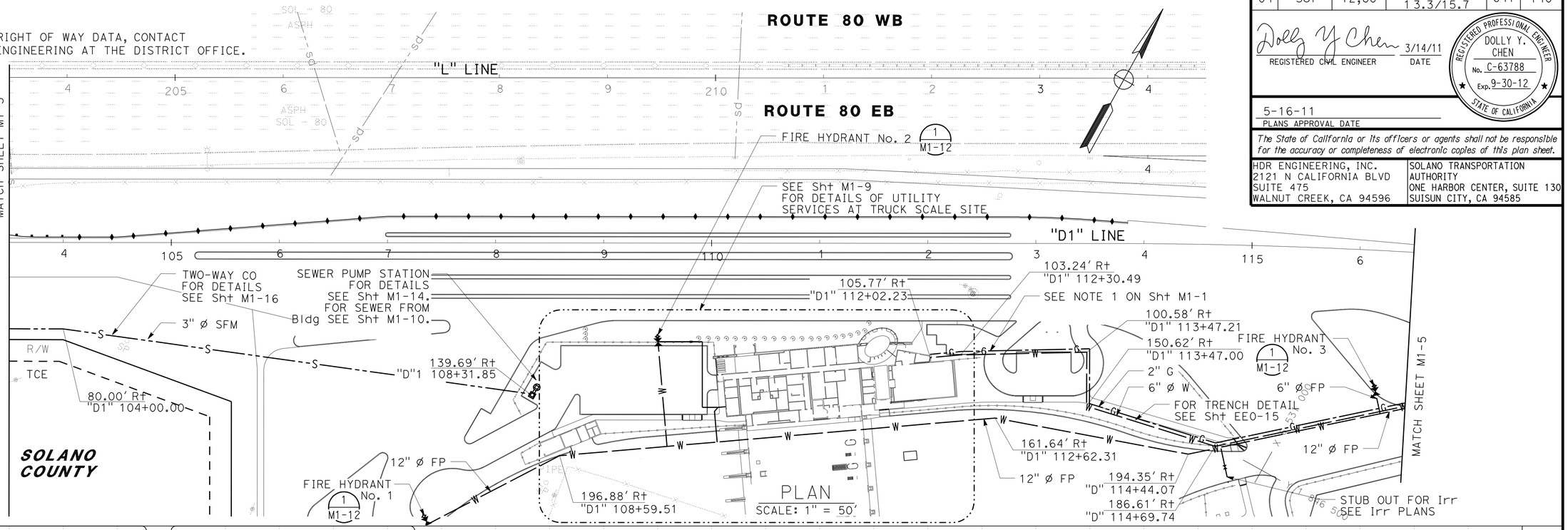

Call USA At Least 48 Hours Prior To Any Excavation 1-800-642-2444

Caution: Overhead Power Lines in this Area

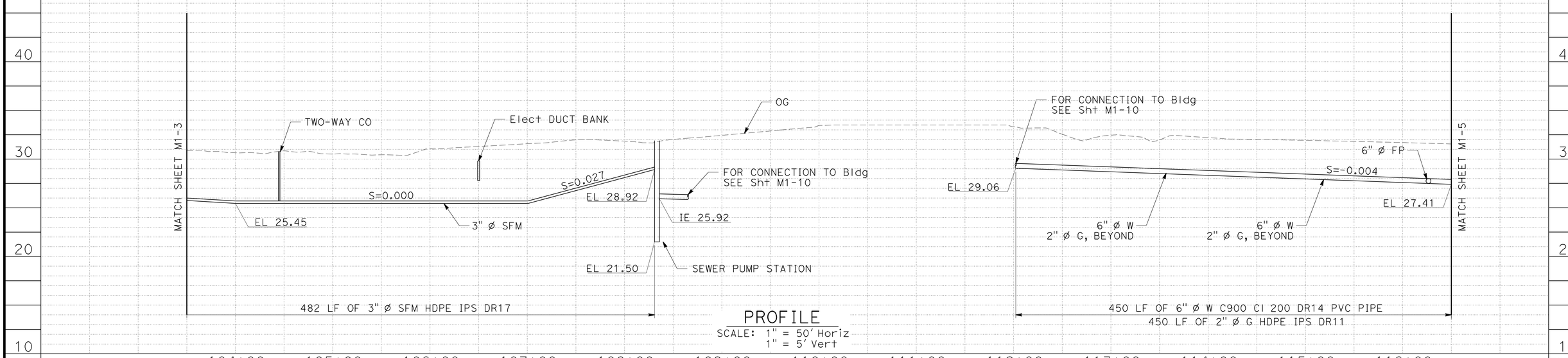

	BY	CHECKED
DESIGN	D. CHEN	K. VON ASPERN
DETAILS	A. PAEZ	D. CHEN
QUANTITIES	D. CHEN	K. VON ASPERN

PREPARED FOR THE STATE OF CALIFORNIA DEPARTMENT OF TRANSPORTATION

DIVISION OF ENGINEERING SERVICES
ELECTRICAL-MECHANICAL-WATER AND WASTEWATER DESIGN

BRIDGE NO. 23W0001R
POST MILE 14.8

EASTBOUND CORDELIA CVEF

CVEF — SITE UTILITIES No. 4

SHEET **M1-4**

40a535wdM1-04.dgn
DOES SD Imperial Rev.1/07 18-MAY-2011 16:10

ORIGINAL SCALE IN INCHES FOR REDUCED PLANS 0 1 2 3

CU 04264
EA 0A5351

DISREGARD PRINTS BEARING EARLIER REVISION DATES →

REVISION DATES (PRELIMINARY STAGE ONLY): 10/19/09 3/22/10 8/18/10 11/3/10 11/22/10 3/14/11

SHEET OF

18-MAY-2011 16:10
40a535wdM1-04.dgn

DIST.	COUNTY	ROUTE	POST MILES TOTAL PROJECT	SHEET NO.	TOTAL SHEETS
04	Sol	12,80	L1.8/L2.0, 13.3/15.7	648	740

Dolly Y Chen 3/14/11
REGISTERED CIVIL ENGINEER DATE

REGISTERED PROFESSIONAL ENGINEER DOLLY Y. CHEN No. C-63788 Exp. 9-30-12 STATE OF CALIFORNIA

5-16-11
PLANS APPROVAL DATE

The State of California or its officers or agents shall not be responsible for the accuracy or completeness of electronic copies of this plan sheet.

HDR ENGINEERING, INC.
2121 N CALIFORNIA BLVD
SUITE 475
WALNUT CREEK, CA 94596

SOLANO TRANSPORTATION AUTHORITY
ONE HARBOR CENTER, SUITE 130
SUISUN CITY, CA 94585

NOTE:
FOR ACCURATE RIGHT OF WAY DATA, CONTACT RIGHT OF WAY ENGINEERING AT THE DISTRICT OFFICE.

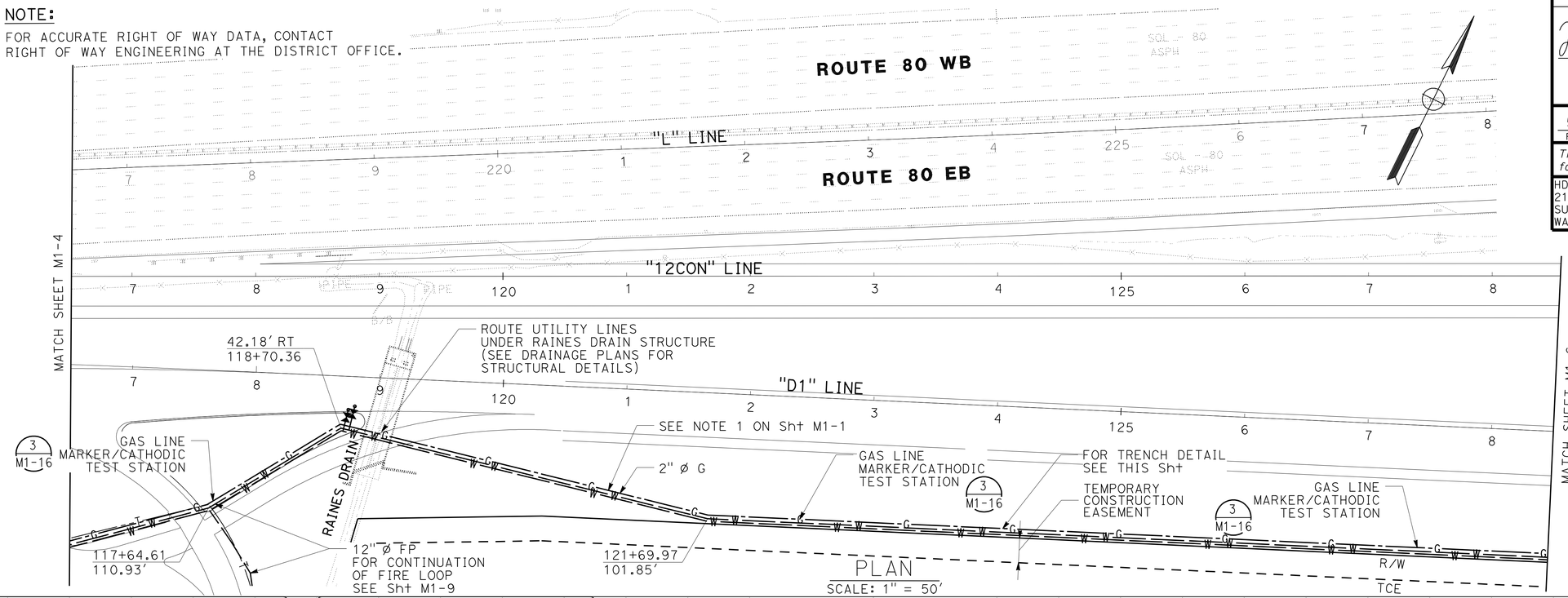

PLAN
SCALE: 1" = 50'

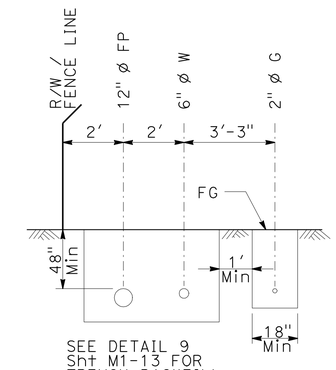

SEE DETAIL 9 Sht M1-13 FOR TRENCH BACKFILL

TRENCH DETAIL
NTS

Call USA At Least 48 Hours Prior To Any Excavation 1-800-642-2444

Caution: Overhead Power Lines in this Area

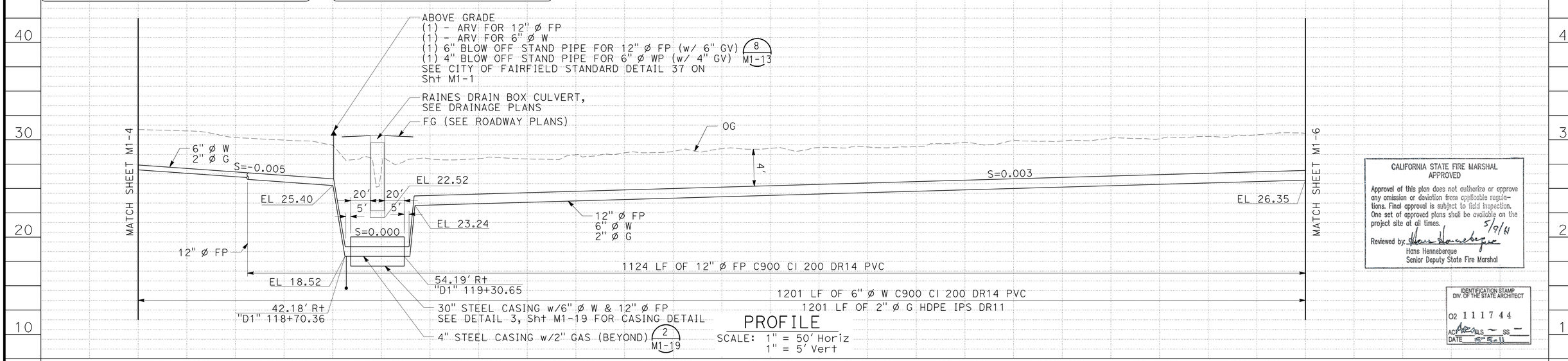

PROFILE
SCALE: 1" = 50' Horiz
1" = 5' Vert

CALIFORNIA STATE FIRE MARSHAL APPROVED

Approval of this plan does not authorize or approve any omission or deviation from applicable regulations. Final approval is subject to field inspection. One set of approved plans shall be available on the project site at all times.

Reviewed by: Hans Henneberque 5/9/11
Hans Henneberque
Senior Deputy State Fire Marshal

IDENTIFICATION STAMP DIV. OF THE STATE ARCHITECT
02 111744
AC — BLS — SS —
DATE 5-5-11

STATION	117+00	118+00	119+00	120+00	121+00	122+00	123+00	124+00	125+00	126+00	127+00	128+00	TOTAL
CY Exc													
CY Emb													

	BY	CHECKED
DESIGN	D. CHEN	K. VON ASPERN
DETAILS	A. PAEZ	D. CHEN
QUANTITIES	D. CHEN	K. VON ASPERN

PREPARED FOR THE STATE OF CALIFORNIA DEPARTMENT OF TRANSPORTATION

DIVISION OF ENGINEERING SERVICES
ELECTRICAL-MECHANICAL-WATER AND WASTEWATER DESIGN

BRIDGE NO. 23W0001R
POST MILE 14.8

EASTBOUND CORDELIA CVEF

CVEF — SITE UTILITIES No. 5

SHEET **M1-5**

40a535wdM1-05.dgn
DOES SD imperial Rev.1/07 18-MAY-2011 16:11

ORIGINAL SCALE IN INCHES FOR REDUCED PLANS 0 1 2 3

CU 04264
EA 0A5351

DISREGARD PRINTS BEARING EARLIER REVISION DATES → 10/19/09 3/22/10 8/18/10 11/3/10 11/22/10 03/14/11

REVISION DATES (PRELIMINARY STAGE ONLY) SHEET OF

18-MAY-2011 16:11
40a535wdM1-05.dgn

DIST.	COUNTY	ROUTE	POST MILES TOTAL PROJECT	SHEET NO.	TOTAL SHEETS
04	Sol	12,80	L1.8/L2.0, 13.3/15.7	649	740

Dolly Y Chen 05/03/11
REGISTERED CIVIL ENGINEER DATE

REGISTERED PROFESSIONAL ENGINEER DOLLY Y. CHEN No. C-63788 Exp. 9-30-12 STATE OF CALIFORNIA

5-16-11
PLANS APPROVAL DATE

The State of California or its officers or agents shall not be responsible for the accuracy or completeness of electronic copies of this plan sheet.

HDR ENGINEERING, INC.
2121 N CALIFORNIA BLVD
SUITE 475
WALNUT CREEK, CA 94596

SOLANO TRANSPORTATION AUTHORITY
ONE HARBOR CENTER, SUITE 130
SUISUN CITY, CA 94585

CALIFORNIA STATE FIRE MARSHAL
APPROVED

Approval of this plan does not authorize or approve any omission or deviation from applicable regulations. Final approval is subject to field inspection. One set of approved plans shall be available on the project site at all times.

Reviewed by: Hans Henneberque 5/9/11
Hans Henneberque
Senior Deputy State Fire Marshal

IDENTIFICATION STAMP
DIV. OF THE STATE ARCHITECT
02 111744
AC Area BLS — SS —
DATE 5-5-11

NOTE:

FOR ACCURATE RIGHT OF WAY DATA, CONTACT RIGHT OF WAY ENGINEERING AT THE DISTRICT OFFICE.

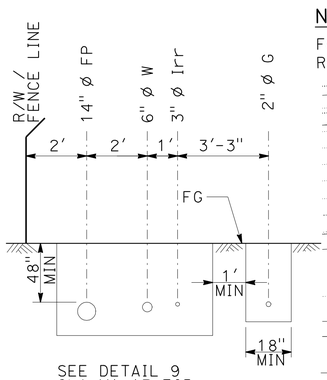

SEE DETAIL 9 Sht M1-13 FOR TRENCH BACKFILL

TRENCH DETAIL
NTS

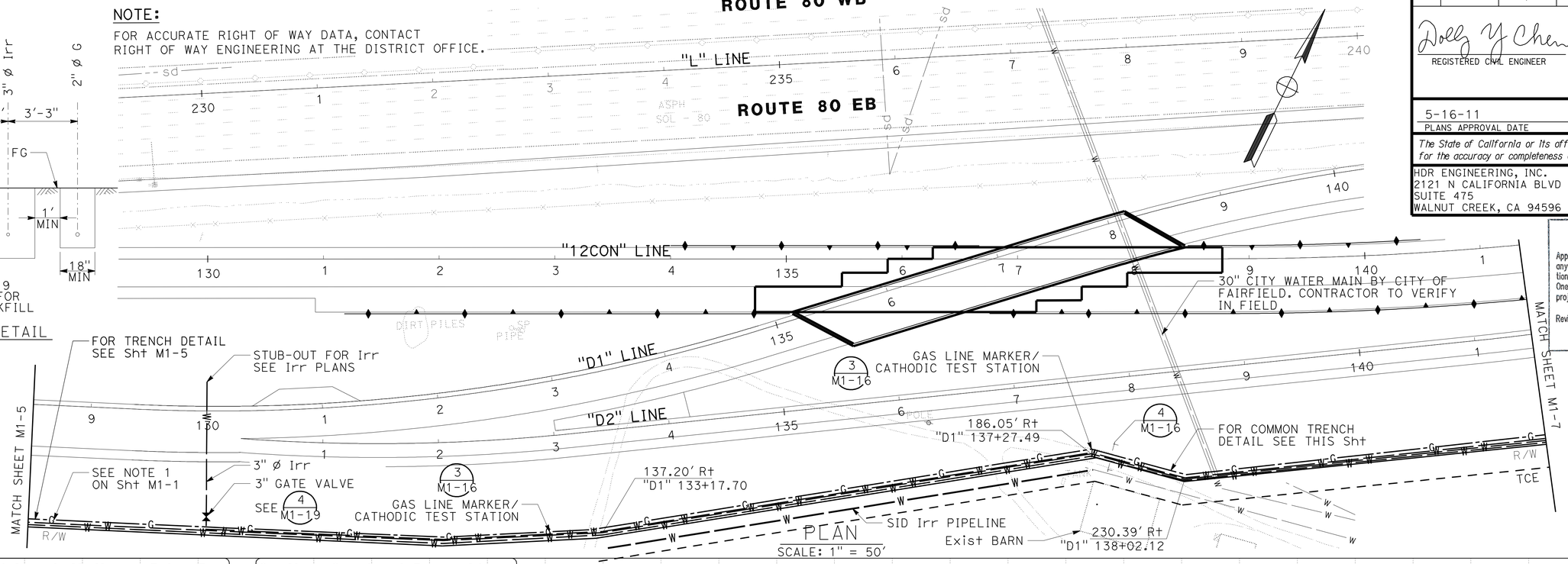

PLAN
SCALE: 1" = 50'

Call USA At Least 48 Hours Prior To Any Excavation 1-800-642-2444

Caution: Overhead Power Lines in this Area

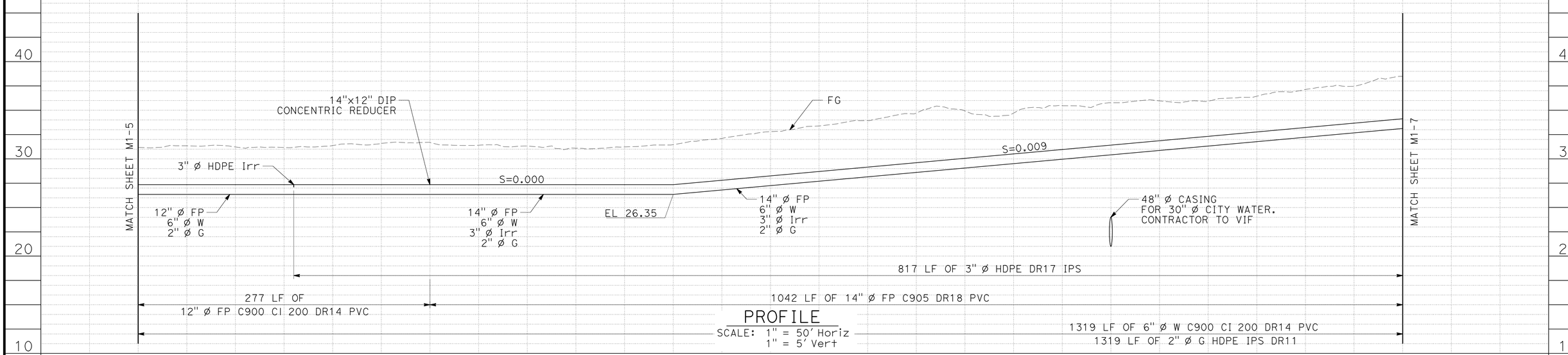

PROFILE
SCALE: 1" = 50' Horiz
1" = 5' Vert

	BY	CHECKED
DESIGN	D. CHEN	K. VON ASPERN
DETAILS	A. PAEZ	D. CHEN
QUANTITIES	D. CHEN	K. VON ASPERN

PREPARED FOR THE STATE OF CALIFORNIA DEPARTMENT OF TRANSPORTATION

DIVISION OF ENGINEERING SERVICES
ELECTRICAL-MECHANICAL-WATER AND WASTEWATER DESIGN

BRIDGE NO. 23W0001R
POST MILE 14.8

EASTBOUND CORDELIA CVEF

CVEF — SITE UTILITIES No. 6

SHEET **M1-6**

40a535wdM1-06.dgn
DOES SD Imperial Rev.1/07 18-MAY-2011 16:11

ORIGINAL SCALE IN INCHES FOR REDUCED PLANS 0 1 2 3

CU 04264
EA 0A5351

DISREGARD PRINTS BEARING EARLIER REVISION DATES →

REVISION DATES (PRELIMINARY STAGE ONLY): 10/19/09 | 3/22/10 | 8/18/10 | 11/3/10 | 11/22/10 | 05/03/11

SHEET OF

18-MAY-2011 16:11
40a535wdM1-06.dgn

DIST.	COUNTY	ROUTE	POST MILES TOTAL PROJECT	SHEET NO.	TOTAL SHEETS
04	Sol	12,80	L1.8/L2.0, 13.3/15.7	650	740

Dolly Y Chen 3/14/11
REGISTERED CIVIL ENGINEER DATE

REGISTERED PROFESSIONAL ENGINEER DOLLY Y. CHEN No. C-63788 Exp. 9-30-12 STATE OF CALIFORNIA

5-16-11
PLANS APPROVAL DATE

The State of California or its officers or agents shall not be responsible for the accuracy or completeness of electronic copies of this plan sheet.

HDR ENGINEERING, INC.
2121 N CALIFORNIA BLVD
SUITE 475
WALNUT CREEK, CA 94596

SOLANO TRANSPORTATION AUTHORITY
ONE HARBOR CENTER, SUITE 130
SUISUN CITY, CA 94585

NOTES:

1. FOR ACCURATE RIGHT OF WAY DATA, CONTACT RIGHT OF WAY ENGINEERING AT THE DISTRICT OFFICE.
2. CONTRACTOR TO BE AWARE WHILE WORKING IN THE VICINITY OF OH ELECTRIC.
3. CONTRACTOR TO CONTACT CITY OF FAIRFIELD FOR WORK OUTSIDE OF THE R/W.

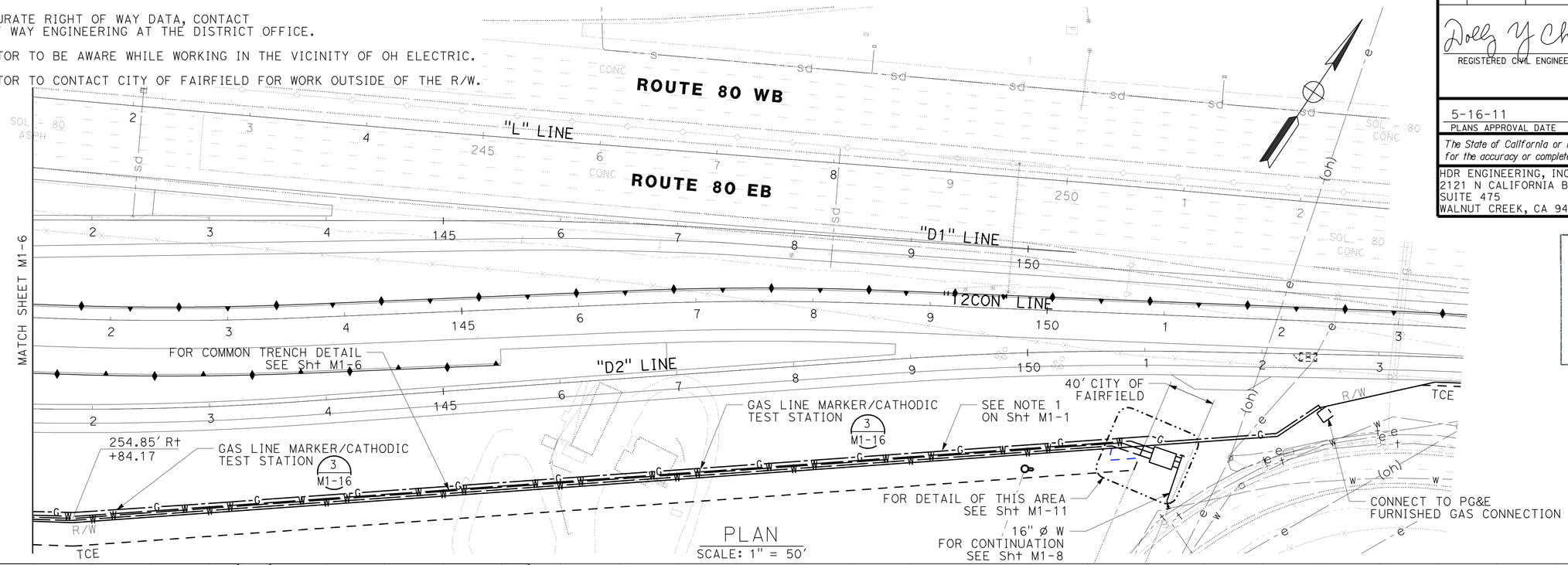

PLAN
SCALE: 1" = 50'

CALIFORNIA STATE FIRE MARSHAL APPROVED

Approval of this plan does not authorize or approve any omission or deviation from applicable regulations. Final approval is subject to field inspection. One set of approved plans shall be available on the project site at all times.

Reviewed by: Hans Henneberque 5/9/11
Hans Henneberque
Senior Deputy State Fire Marshal

IDENTIFICATION STAMP DIV. OF THE STATE ARCHITECT
02 1117 44
ACK ___ ELS ___ SS ___
DATE 5-5-11

Call USA At Least 48 Hours Prior To Any Excavation 1-800-642-2444

Caution: Overhead Power Lines in this Area

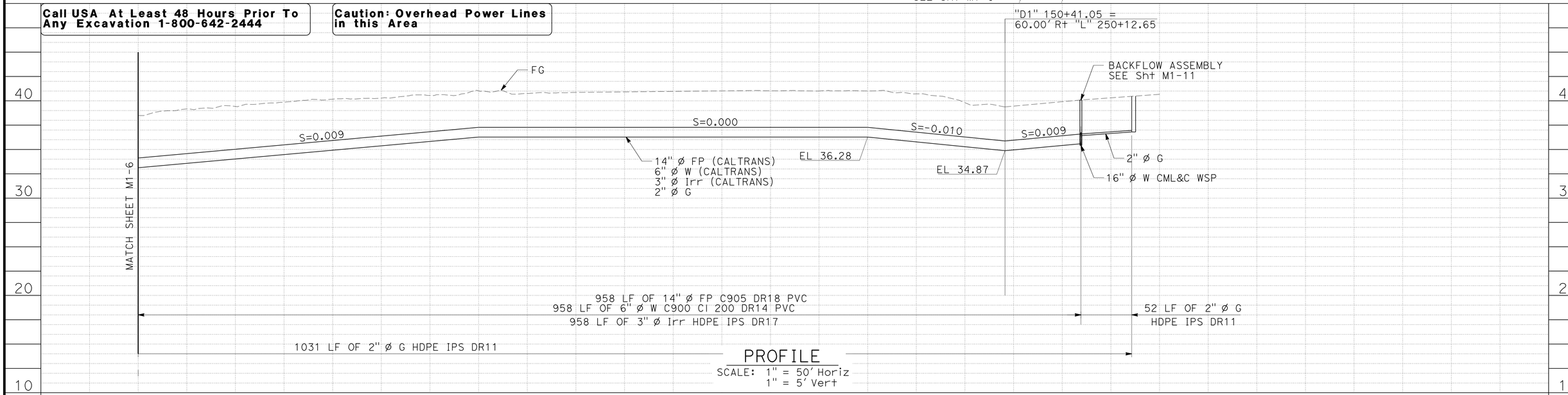

PROFILE
SCALE: 1" = 50' Horiz
1" = 5' Vert

	BY	CHECKED
DESIGN	D. CHEN	K. VON ASPERN
DETAILS	A. PAEZ	D. CHEN
QUANTITIES	D. CHEN	K. VON ASPERN

PREPARED FOR THE STATE OF CALIFORNIA DEPARTMENT OF TRANSPORTATION

DIVISION OF ENGINEERING SERVICES
ELECTRICAL-MECHANICAL-WATER AND WASTEWATER DESIGN

BRIDGE NO. 23W0001R
POST MILE 14.8

EASTBOUND CORDELIA CVEF

CVEF — SITE UTILITIES No. 7

SHEET **M1-7**

40a535wdM1-07.dgn
DOES SD imperial Rev.1/07 18-MAY-2011 16:11

ORIGINAL SCALE IN INCHES FOR REDUCED PLANS 0 1 2 3

CU 04264
EA 0A5351

DISREGARD PRINTS BEARING EARLIER REVISION DATES → 10/19/09 3/22/10 8/18/10 11/3/10 11/22/10 3/14/11

REVISION DATES (PRELIMINARY STAGE ONLY) SHEET OF

18-MAY-2011 16:11
40a535wdM1-07.dgn

DIST.	COUNTY	ROUTE	POST MILES TOTAL PROJECT	SHEET NO.	TOTAL SHEETS
04	Sol	12,80	L1.8/L2.0, 13.3/15.7	651	740

REGISTERED CIVIL ENGINEER — DATE 3/14/11

REGISTERED PROFESSIONAL ENGINEER DOLLY Y. CHEN No. C-63788 Exp. 9-30-12 STATE OF CALIFORNIA

5-16-11
PLANS APPROVAL DATE

The State of California or its officers or agents shall not be responsible for the accuracy or completeness of electronic copies of this plan sheet.

HDR ENGINEERING, INC.
2121 N CALIFORNIA BLVD
SUITE 475
WALNUT CREEK, CA 94596

SOLANO TRANSPORTATION AUTHORITY
ONE HARBOR CENTER, SUITE 130
SUISUN CITY, CA 94585

NOTES:

1. FOR ACCURATE RIGHT OF WAY DATA, CONTACT RIGHT OF WAY ENGINEERING AT THE DISTRICT OFFICE.
2. CONTRACTOR TO BE AWARE WHILE WORKING IN THE VICINITY OF OH ELECTRIC.
3. CONTRACTOR TO CONTACT CITY OF FAIRFIELD FOR WORK OUTSIDE OF THE R/W.
4. CAUTION: PRIOR TO CONNECTION, CONTRACTOR SHALL INJECT PERMEATION GROUT USING SLURRY CEMENT ON BOTH SIDES OF THE EXISTING 36" W PIPE WITH A Min OF 12' FROM THE POINT OF CONNECTION AND FROM 1' BELOW WATER PIPE Inv TO THE SURFACE TO STABILIZE OLD TRENCH PEA GRAVEL BACKFILL
5. PROVIDE 2 MONTH NOTICE TO CITY OF FAIRFIELD (STEVE HARTWIG, ASSISTANT PUBLIC WORKS DIRECTOR/CITY ENGINEER) BEFORE SHUTDOWN. DUE TO LIMITED WATER STORAGE AND PRODUCTION, ONLY 30 HOUR WATER SHUTDOWN TIME FOR THE CONNECTION DURING THE MONTHS OF DECEMBER OR JANUARY WILL BE ALLOWED. CONTRACTOR SHALL HAVE ALL MATERIALS ON HAND AT START OF CONNECTION OPERATIONS FOR THE NEW 16" W LINE TO Exist 36" W LINE.

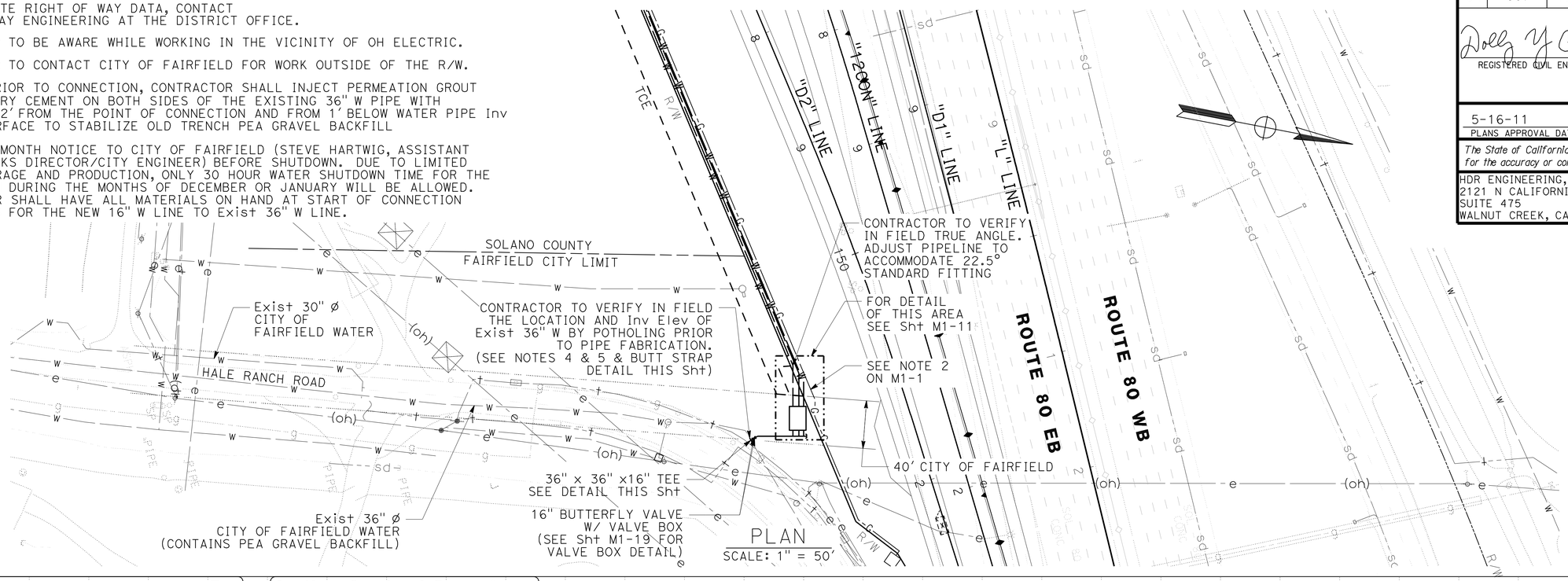

PLAN
SCALE: 1" = 50'

CALIFORNIA STATE FIRE MARSHAL APPROVED

Approval of this plan does not authorize or approve any omission or deviation from applicable regulations. Final approval is subject to field inspection. One set of approved plans shall be available on the project site at all times.

Reviewed by: Hans Henneberque 5/9/11
Hans Henneberque
Senior Deputy State Fire Marshal

IDENTIFICATION STAMP
DIV OF THE STATE ARCHITECT
02 111744
ACCEPTED BLS — SS —
DATE 5-5-11

Call USA At Least 48 Hours Prior To Any Excavation 1-800-642-2444

Caution: Overhead Power Lines in this Area

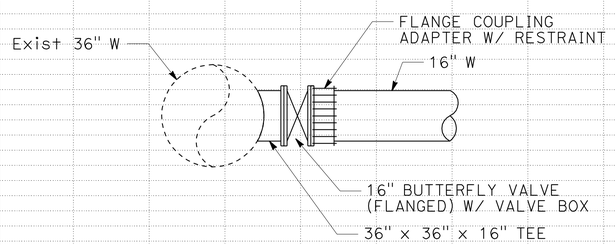

DETAIL
No Scale

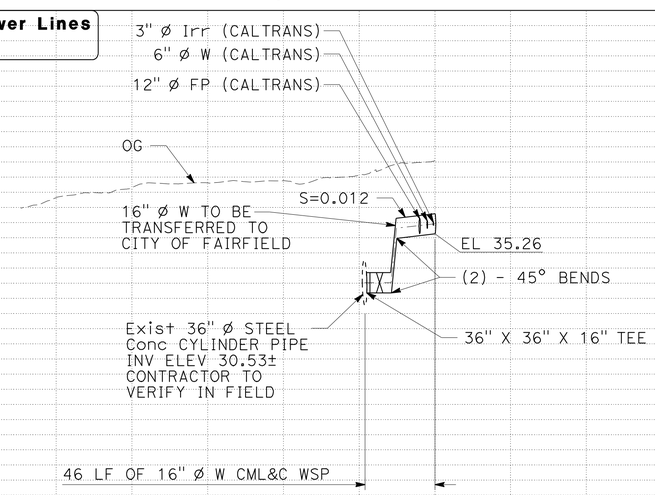

PROFILE
SCALE: 1" = 50' Horiz
1" = 5' Vert

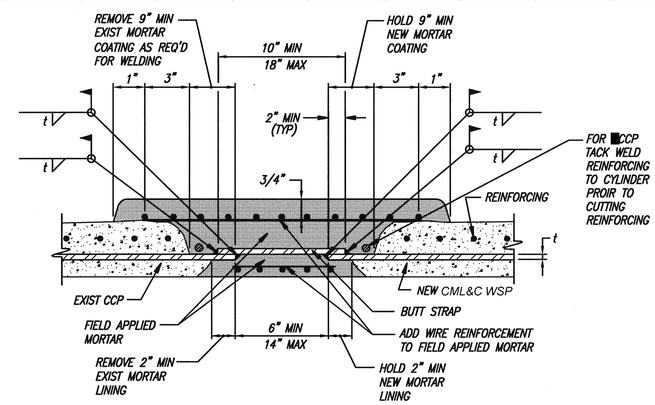

NOTES
1. SEE SPECS FOR CML&C WSP

BUTT STRAP DETAIL JOINT AT ML & CSP CONNECTIONS TO EXISTING CCP
NOT TO SCALE

STATION		2+00	1+00	0+00	TOTAL
CY	Exc				
	Emb				

	BY	CHECKED
DESIGN	D. CHEN	K. VON ASPERN
DETAILS	A. PAEZ	D. CHEN
QUANTITIES	D. CHEN	K. VON ASPERN

PREPARED FOR THE STATE OF CALIFORNIA DEPARTMENT OF TRANSPORTATION

DIVISION OF ENGINEERING SERVICES
ELECTRICAL-MECHANICAL-WATER AND WASTEWATER DESIGN

BRIDGE NO. 23W0001R
POST MILE 14.8

EASTBOUND CORDELIA CVEF

CVEF — SITE UTILITIES No. 8

SHEET **M1-8**

40a535wdM1-08.dgn
DOES SD Imperial Rev.1/07 19-MAY-2011 07:41

ORIGINAL SCALE IN INCHES FOR REDUCED PLANS 0 1 2 3

CU 04264
EA 0A5351

DISREGARD PRINTS BEARING EARLIER REVISION DATES → 10/19/09 3/22/10 8/18/10 11/3/10 11/22/10 03/14/11

SHEET OF

19-MAY-2011 07:41
40a535wdM1-08.dgn

DIST.	COUNTY	ROUTE	POST MILES TOTAL PROJECT	SHEET NO.	TOTAL SHEETS
04	Sol	12,80	L1.8/L2.0, 13.3/15.7	652	740

Dolly Y Chen 05/03/11
REGISTERED CIVIL ENGINEER DATE

REGISTERED PROFESSIONAL ENGINEER DOLLY Y. CHEN No. C-63788 Exp. 9-30-12 STATE OF CALIFORNIA

5-16-11
PLANS APPROVAL DATE

The State of California or its officers or agents shall not be responsible for the accuracy or completeness of electronic copies of this plan sheet.

HDR ENGINEERING, INC.
2121 N CALIFORNIA BLVD
SUITE 475
WALNUT CREEK, CA 94596

SOLANO TRANSPORTATION AUTHORITY
ONE HARBOR CENTER, SUITE 130
SUISUN CITY, CA 94585

NOTE:
FOR ACCURATE RIGHT OF WAY DATA, CONTACT RIGHT OF WAY ENGINEERING AT THE DISTRICT OFFICE.

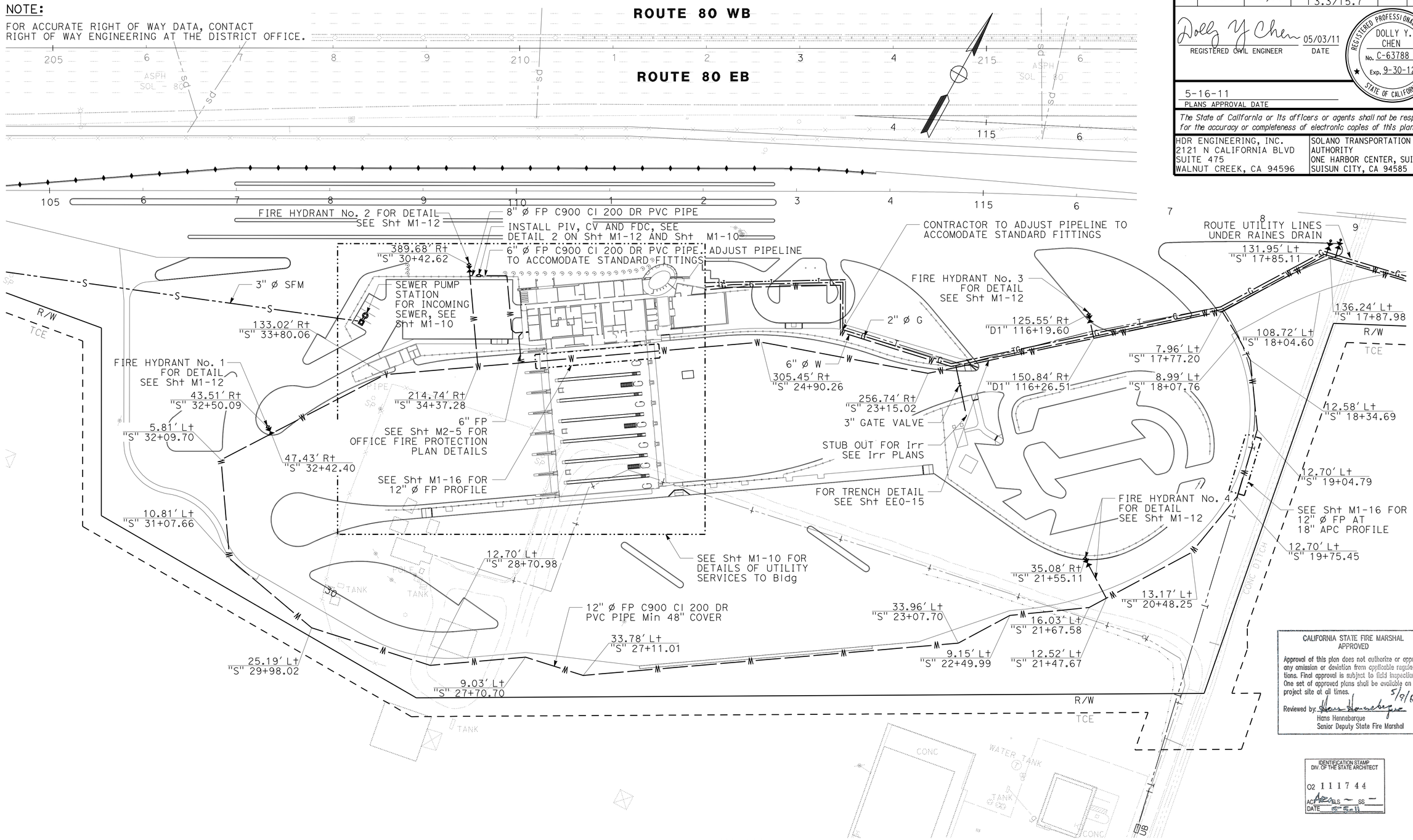

PLAN
SCALE: 1" = 50'

CALIFORNIA STATE FIRE MARSHAL APPROVED

Approval of this plan does not authorize or approve any omission or deviation from applicable regulations. Final approval is subject to field inspection. One set of approved plans shall be available on the project site at all times.

Reviewed by: Hans Henneberque 5/9/11
Hans Henneberque
Senior Deputy State Fire Marshal

IDENTIFICATION STAMP DIV. OF THE STATE ARCHITECT
02 111744
AC ARCHELS — SS —
DATE 6-6-11

	BY	CHECKED
DESIGN	D. CHEN	K. VON ASPERN
DETAILS	A. PAEZ	D. CHEN
QUANTITIES	D. CHEN	K. VON ASPERN

PREPARED FOR THE STATE OF CALIFORNIA DEPARTMENT OF TRANSPORTATION

DIVISION OF ENGINEERING SERVICES
ELECTRICAL-MECHANICAL-WATER AND WASTEWATER DESIGN

BRIDGE NO. 23W0001R
POST MILE 14.8

EASTBOUND CORDELIA CVEF
CVEF
SITE UTILITIES No. 9

SHEET **M1-9**

40a535wdM1-09.dgn
DOES SD imperial Rev.1/07 18-MAY-2011 15:54

ORIGINAL SCALE IN INCHES FOR REDUCED PLANS 0 1 2 3

CU 04264
EA 0A5351

DISREGARD PRINTS BEARING EARLIER REVISION DATES → 10/19/09 3/22/10 8/19/10 11/3/10 11/22/10 05/03/11

REVISION DATES (PRELIMINARY STAGE ONLY) SHEET OF

18-MAY-2011 15:54
40a535wdM1-09.dgn

DIST.	COUNTY	ROUTE	POST MILES TOTAL PROJECT	SHEET NO.	TOTAL SHEETS
04	Sol	12,80	L1.8/L2.0, 13.3/15.7	653	740

REGISTERED MECHANICAL ENGINEER — 05/03/11 DATE

REGISTERED PROFESSIONAL ENGINEER SEAN E NEPRUD No. M33458 Exp. 06/30/12 MECH STATE OF CALIFORNIA

5-16-11
PLANS APPROVAL DATE

The State of California or its officers or agents shall not be responsible for the accuracy or completeness of electronic copies of this plan sheet.

KENNEDY/JENKS CONSULTANTS
303 SECOND STREET
SUITE 300 SOUTH
SAN FRANCISCO, CA 94960

SOLANO TRANSPORTATION AUTHORITY
ONE HARBOR CENTER, SUITE 130
SUISUN CITY, CA 94585

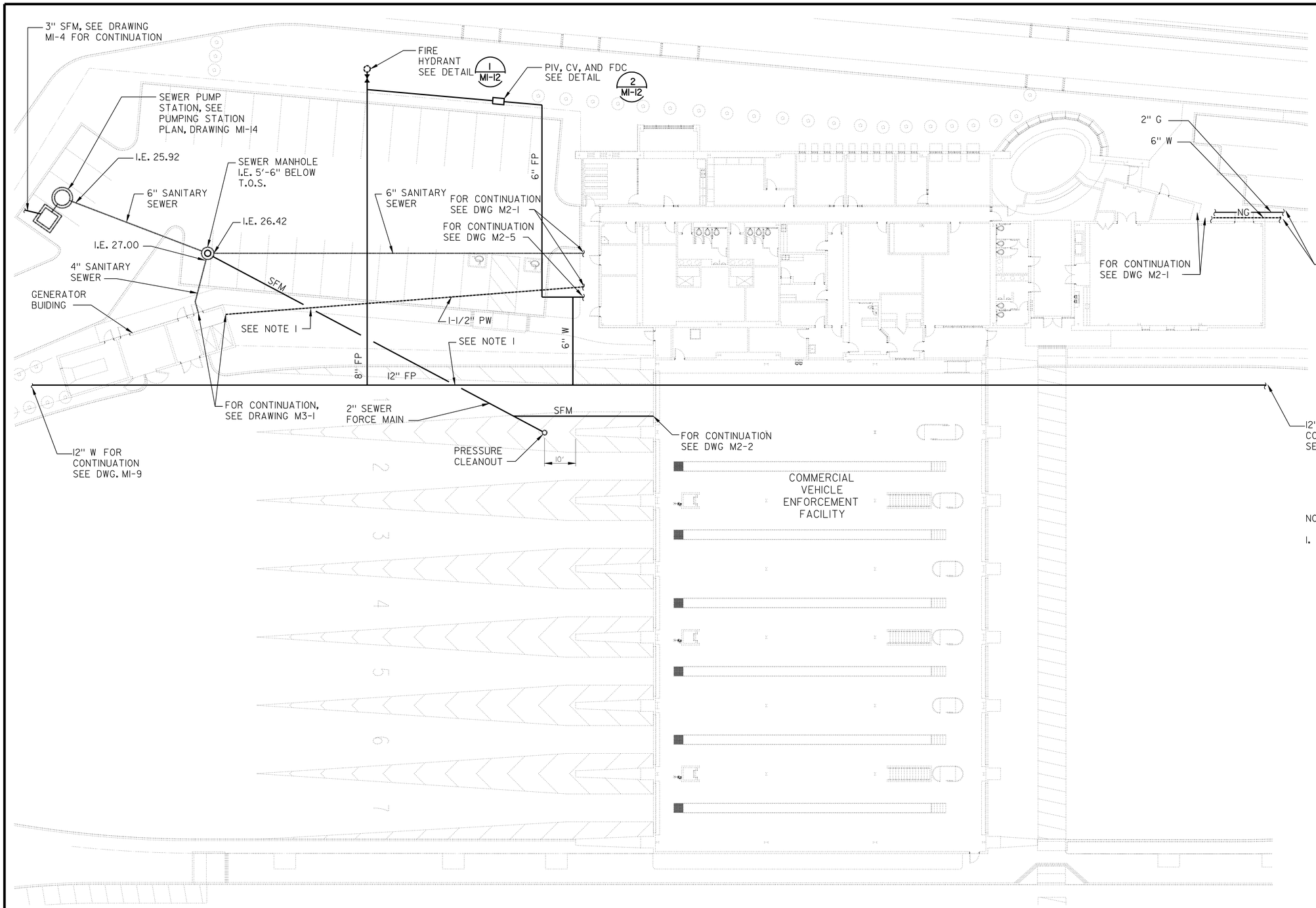

NOTES:

1. SEWER FORCE MAIN SHALL CROSS UNDERNEATH WATER PIPES WITH A MINIMUM OF 12" CLEAR BETWEEN PIPES.

CALIFORNIA STATE FIRE MARSHAL APPROVED

Approval of this plan does not authorize or approve any omission or deviation from applicable regulations. Final approval is subject to field inspection. One set of approved plans shall be available on the project site at all times.

Reviewed by: 5/9/11
Hans Henneberque
Senior Deputy State Fire Marshal

IDENTIFICATION STAMP DIV. OF THE STATE ARCHITECT
02 111744
AC ___ GLS ___ SS ___
DATE 5-5-11

FACILITY SITE UTILITY PLAN

SCALE: 1/16" = 1'-0"

	BY	CHECKED
DESIGN	S. NEPRUD	Z. HARRIS
DETAILS	S. NEPRUD	Z. HARRIS
QUANTITIES	S. NEPRUD	Z. HARRIS

PREPARED FOR THE STATE OF CALIFORNIA DEPARTMENT OF TRANSPORTATION

DIVISION OF ENGINEERING SERVICES
ELECTRICAL-MECHANICAL-WATER AND WASTEWATER DESIGN

BRIDGE NO. 23W000IR
POST MILE 14.8

EASTBOUND CORDELIA CVEF

CVEF — FACILITY SITE UTILITY PLAN

SHEET M1-10

40a535wdm1-10.dgn
DOES SD Imperial Rev.1/07 18-MAY-2011 17:05

ORIGINAL SCALE IN INCHES FOR REDUCED PLANS 0 1 2 3

CU 04264
EA 0A5351

DISREGARD PRINTS BEARING EARLIER REVISION DATES → 10/18/09 03/22/10 05/06/10 08/23/10 11/22/10 05/03/11

SHEET OF

18-MAY-2011 17:05

40a535wdm1-10.dgn

DIST.	COUNTY	ROUTE	POST MILES TOTAL PROJECT	SHEET NO.	TOTAL SHEETS
04	Sol	12,80	L1.8/L2.0, 13.3/15.7	654	740

Dolly Y Chen 3/14/11
REGISTERED CIVIL ENGINEER DATE

REGISTERED PROFESSIONAL ENGINEER DOLLY Y. CHEN No. C-63788 Exp. 9-30-12 STATE OF CALIFORNIA

5-16-11
PLANS APPROVAL DATE

The State of California or its officers or agents shall not be responsible for the accuracy or completeness of electronic copies of this plan sheet.

HDR ENGINEERING, INC.
2121 N CALIFORNIA BLVD
SUITE 475
WALNUT CREEK, CA 94596

SOLANO TRANSPORTATION AUTHORITY
ONE HARBOR CENTER, SUITE 130
SUISUN CITY, CA 94585

CALIFORNIA STATE FIRE MARSHAL APPROVED

Approval of this plan does not authorize or approve any omission or deviation from applicable regulations. Final approval is subject to field inspection. One set of approved plans shall be available on the project site at all times.

Reviewed by: Hans Henneberque 5/9/11
Hans Henneberque
Senior Deputy State Fire Marshal

NOTES:

1. CONTRACTOR TO BE AWARE WHILE WORKING IN THE VICINITY OF OH ELECTRIC.
2. CONTRACTOR TO CONTACT CITY OF FAIRFIELD FOR WORK OUTSIDE OF THE R/W.
3. BURIED DIP SHALL BE POLYETHYLENE ENCASED WITH DOUBLE TUBES OF Min 8 MIL THICKNESS EACH, MANUFACTURED AND INSTALLED PER AWWA C105.
4. BACKFLOW PREVENTER BLANKET AND ENCLOSURE NOT SHOWN FOR CLARITY. ENCLOSURE SHALL BE TWO PIECE AS DETAILED IN CALTRANS REVISED STANDARD PLAN RSP H8 AND AS SPECIFIED IN THE SPECIAL PROVISIONS.

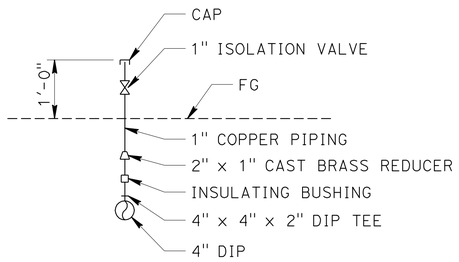

WATER QUALITY SAMPLING STATION STUB SCHEMATIC DETAIL

NO SCALE

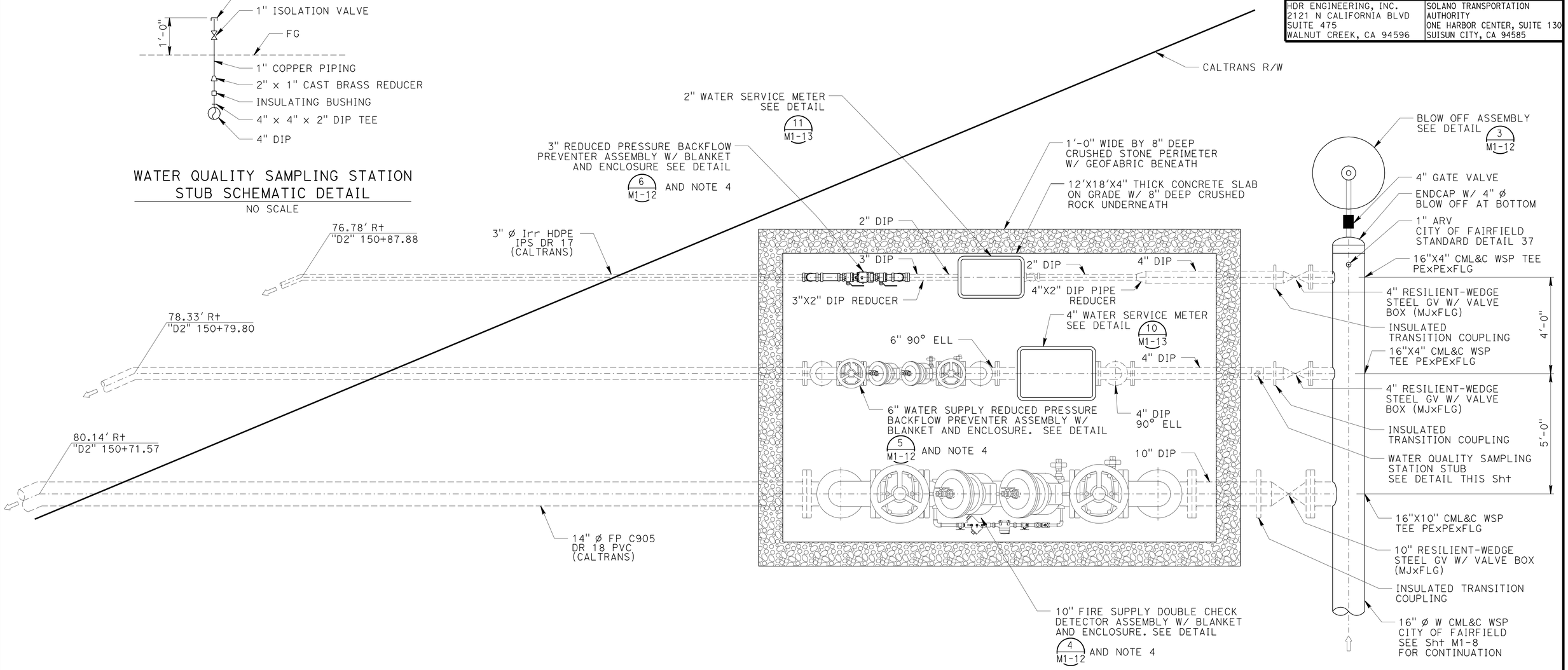

WATER SUPPLY CONNECTIONS @ HALE RANCH ROAD

NO SCALE

NOTE: PE = PLAIN END

IDENTIFICATION STAMP DIV. OF THE STATE ARCHITECT
02 111744
ACP BLS SS
DATE 5-11

	BY	CHECKED
DESIGN	D. CHEN	K. VON ASPERN
DETAILS	A. PAEZ	D. CHEN
QUANTITIES	D. CHEN	K. VON ASPERN

PREPARED FOR THE STATE OF CALIFORNIA DEPARTMENT OF TRANSPORTATION

DIVISION OF ENGINEERING SERVICES
ELECTRICAL-MECHANICAL-WATER AND WASTEWATER DESIGN

BRIDGE NO. 23W0001R
POST MILE 14.8

EASTBOUND CORDELIA CVEF

CVEF | WATER SUPPLY CONNECTIONS

SHEET M1-11

40a535wdM1-11.dgn
DOES SD imperial Rev.1/07 18-MAY-2011 15:54

ORIGINAL SCALE IN INCHES FOR REDUCED PLANS 0 1 2 3

CU 04264
EA 0A5351

DISREGARD PRINTS BEARING EARLIER REVISION DATES → 10/19/09 3/22/10 8/19/10 11/3/10 11/22/10 03/14/11

REVISION DATES (PRELIMINARY STAGE ONLY) SHEET OF

18-MAY-2011 15:54
40a535wdM1-11.dgn

DIST.	COUNTY	ROUTE	POST MILES TOTAL PROJECT	SHEET NO.	TOTAL SHEETS
04	Sol	12,80	L1.8/L2.0, 13.3/15.7	655	740

Dolly Y Chen 03/14/11
REGISTERED CIVIL ENGINEER DATE

REGISTERED PROFESSIONAL ENGINEER DOLLY Y. CHEN No. C-63788 Exp. 9-30-12 STATE OF CALIFORNIA

5-16-11
PLANS APPROVAL DATE

The State of California or its officers or agents shall not be responsible for the accuracy or completeness of electronic copies of this plan sheet.

HDR ENGINEERING, INC.
2121 N CALIFORNIA BLVD
SUITE 475
WALNUT CREEK, CA 94596

SOLANO TRANSPORTATION AUTHORITY
ONE HARBOR CENTER, SUITE 130
SUISUN CITY, CA 94585

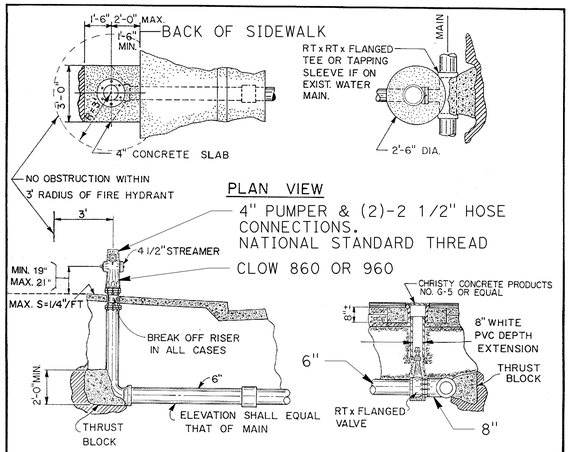

GENERAL NOTES

1. LATERAL SHALL INCLUDE A MINIMUM OF ONE FLEXIBLE JOINT.
2. INSTALL FIRE HYDRANTS WITH 4 1/2" STREAMER PERPENDICULAR TO AND FACING CURB.
3. FIRE HYDRANTS SHALL BE AS PER CITY SPECIFICATIONS.
4. WHERE SIDEWALK ADJACENT TO THE FACE OF CURB IS TO BE CONSTRUCTED AT A LATER DATE, FIRE HYDRANT SHALL BE INSTALLED SIX FEET BACK OF FACE OF CURB.
5. ALL FIRE HYDRANT TO BE PAINTED WHITE.
6. WHERE SIDEWALK WILL NEVER BE CONSTRUCTED, FIRE HYDRANT SHALL BE INSTALLED THREE FEET BACK OF FACE OF CURB AND PAD SHALL BE EXTENDED TO BACK OF CURB.

CITY OF FAIRFIELD
DEPARTMENT OF PUBLIC WORKS
FIRE HYDRANT INSTALLATION
APPROVED BY Charles L. Lock CITY ENGINEER R.C.E. 22878
DATE JULY 1995 REV. REV. REV. 32

1 FIRE HYDRANT DETAIL
No Scale

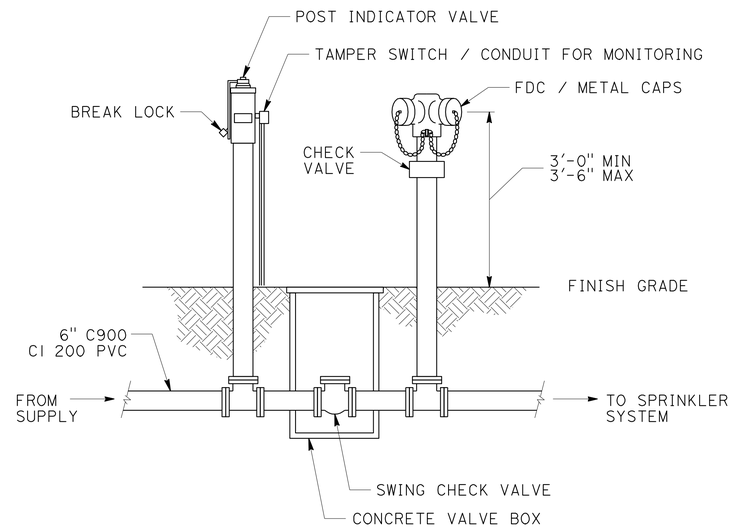

2 FDC AND SPRINKLER FEED DETAIL
No Scale

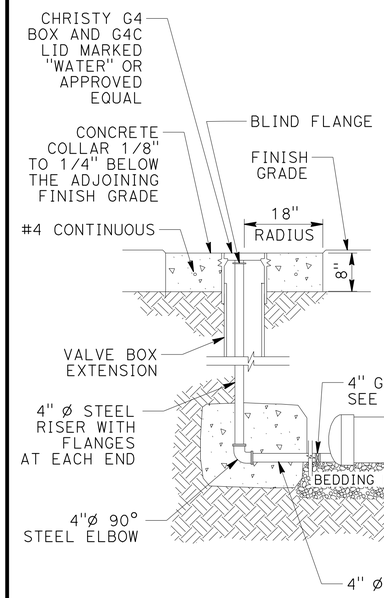

CALIFORNIA STATE FIRE MARSHAL APPROVED

Approval of this plan does not authorize or approve any omission or deviation from applicable regulations. Final approval is subject to field inspection. One set of approved plans shall be available on the project site at all times.

Reviewed by: Hans Henneberque 5/9/11
Hans Henneberque
Senior Deputy State Fire Marshal

3 BLOW OFF AT 16" MAIN
No Scale

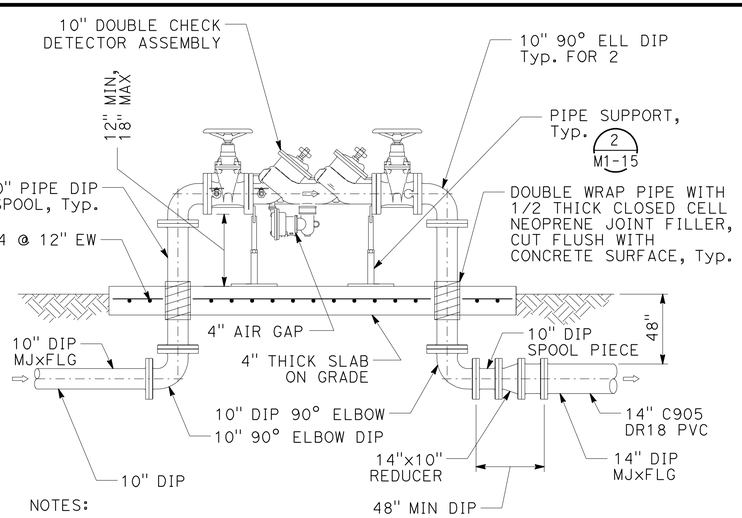

NOTES:

1. DEVICE SHALL BE FEBCO, WATTS, OR APPROVED EQUAL. IT MUST ALSO BE APPROVED BY THE U.S.C. TESTING LABORATORY.

4 FIRE SUPPLY DOUBLE CHECK DETECTOR ASSEMBLY
No Scale

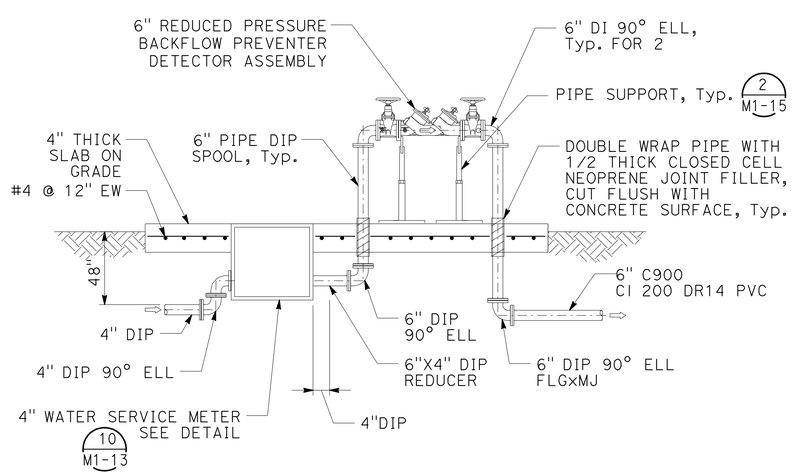

NOTES:

1. DEVICE SHALL BE FEBCO, WATTS, OR APPROVED EQUAL. IT MUST ALSO BE APPROVED BY THE U.S.C. TESTING LABORATORY.

5 WATER SUPPLY REDUCED PRESSURE BACKFLOW PREVENTER AND METER
No Scale

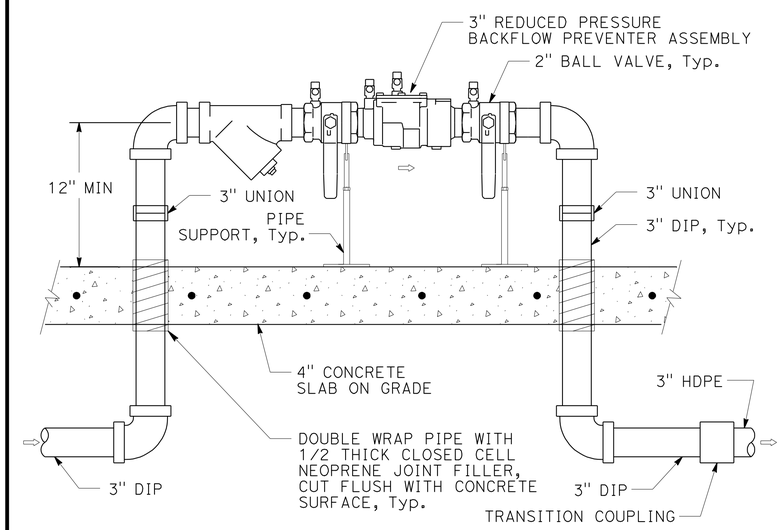

IDENTIFICATION STAMP DIV. OF THE STATE ARCHITECT
02 111744
ACC REC'D LS — SS —
DATE 5-5-11

6 3" REDUCED PRESSURE BACKFLOW PREVENTER
No Scale

	BY	CHECKED
DESIGN	D. CHEN	K. VON ASPERN
DETAILS	A. PAEZ	D. CHEN
QUANTITIES	D. CHEN	K. VON ASPERN

PREPARED FOR THE STATE OF CALIFORNIA DEPARTMENT OF TRANSPORTATION

DIVISION OF ENGINEERING SERVICES
ELECTRICAL-MECHANICAL-WATER AND WASTEWATER DESIGN

BRIDGE NO. 23W0001R
POST MILE 14.8

EASTBOUND CORDELIA CVEF
CVEF — SITE UTILITY DETAILS No. 1

SHEET M1-12

ORIGINAL SCALE IN INCHES FOR REDUCED PLANS 0 1 2 3

CU 04264
EA 0A5351

DISREGARD PRINTS BEARING EARLIER REVISION DATES → 10/19/09 3/22/10 8/19/10 11/3/10 11/22/10 3/14/11

REVISION DATES (PRELIMINARY STAGE ONLY) SHEET OF

40a535wdM1-12.dgn
DOES SD Imperial Rev.1/07 18-MAY-2011 15:54

18-MAY-2011 15:54
40a535wdM1-12.dgn

DIST.	COUNTY	ROUTE	POST MILES TOTAL PROJECT	SHEET NO.	TOTAL SHEETS
04	Sol	12,80	L1.8/L2.0, 13.3/15.7	656	740

REGISTERED CIVIL ENGINEER — DATE 05/03/11

REGISTERED PROFESSIONAL ENGINEER — DOLLY Y. CHEN — No. C-63788 — Exp. 9-30-12 — STATE OF CALIFORNIA

5-16-11
PLANS APPROVAL DATE

The State of California or its officers or agents shall not be responsible for the accuracy or completeness of electronic copies of this plan sheet.

HDR ENGINEERING, INC.
2121 N CALIFORNIA BLVD
SUITE 475
WALNUT CREEK, CA 94596

SOLANO TRANSPORTATION AUTHORITY
ONE HARBOR CENTER, SUITE 130
SUISUN CITY, CA 94585

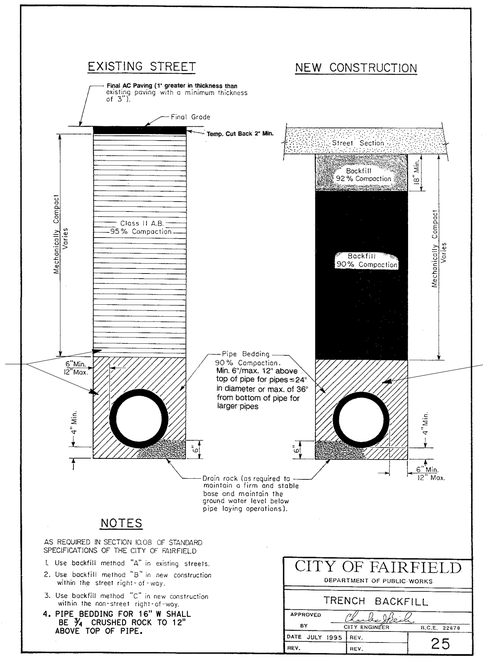

SEE SECTION 9 CITY OF FAIRFIELD ENGINEERING DESIGN STANDARDS FOR BEDDING, BACKFILL MATERIAL AND REQUIREMENTS

SEE NOTE 4 FOR PIPE BEDDING REQUIRMENTS FOR THE 16" W (SEE Sht MI-8)

NOTES

AS REQUIRED IN SECTION 10.08 OF STANDARD SPECIFICATIONS OF THE CITY OF FAIRFIELD

1. Use backfill method "A" in existing streets.
2. Use backfill method "B" in new construction within the street right-of-way.
3. Use backfill method "C" in new construction within the non-street right-of-way.
4. PIPE BEDDING FOR 16" W SHALL BE ¾ CRUSHED ROCK TO 12" ABOVE TOP OF PIPE.

CITY OF FAIRFIELD — DEPARTMENT OF PUBLIC WORKS — TRENCH BACKFILL — APPROVED BY CITY ENGINEER R.C.E. 22678 — DATE JULY 1995 — REV. — REV. — 25

7 CITY OF FAIRFIELD TRENCH BACKFILL
No Scale

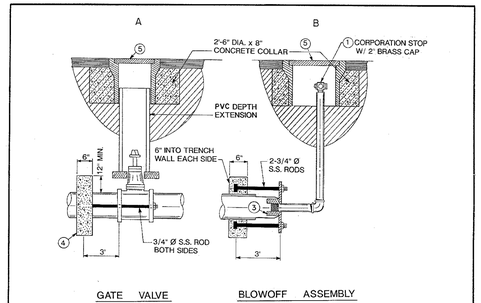

NOTES:

I. MATERIALS:
1. 2" VALVE FORD FB500-7 OR JONES J-1943.
2. ALL FITTINGS SHALL BE BRASS.
3. OLYMPIC 66 C.I.TAPPED PLUG 2".
4. CONCRETE FOR THRUST BLOCK SHALL BE 3000 P.S.I.
5. CHRISTY CONCRETE PRODUCTS NO. G-5 OR EQUAL.

INSTALLATION REQUIREMENTS:
I. CUL-DE-SAC INSTALL
a. STANDARD BLOWOFF ASSEMBLY (B only).
b. FIRE HYDRANT END OF LINE, NO BLOWOFF REQUIRED (A only).
2. END OF WATER MAINS
a. TO BE EXTENDED LATER - INSTALL GATE VALVE AND BLOWOFF RISER (A & B).
b. NOT TO BE EXTENDED - INSTALL BLOWOFF ASSEMBLY (B only).
c. IF FIRE HYDRANT END OF LINE NO BLOWOFF ASSEMBLY REQUIRED.
d. NO SERVICES BEYOND VALVE A.
3. THRUST BLOCK AND ST. STEEL TIE RODS TO BE USED ON GATE VALVE WHEN:
a. END OF WATER MAIN IS 300' OR LESS FROM GATE VALVE
b. AS STATED IN NOTE 2a.

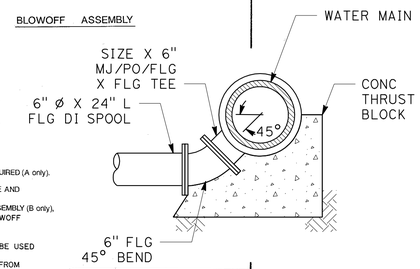

CITY OF FAIRFIELD — DEPARTMENT OF PUBLIC WORKS — BLOW OFF — APPROVED BY CITY ENGINEER R.C.E. 22678 — DATE JULY 1995 — REV. — REV. — 40

8 BLOW OFF
No Scale

CALIFORNIA STATE FIRE MARSHAL APPROVED

Approval of this plan does not authorize or approve any omission or deviation from applicable regulations. Final approval is subject to field inspection. One set of approved plans shall be available on the project site at all times.

Reviewed by: Hans Henneberque 5/9/11
Hans Henneberque
Senior Deputy State Fire Marshal

REQUIRED BEARING AREA
TOTAL SQUARE FEET

FITTING TYPE		45° BEND	90° BEND	22½° BEND	TEE OR DEAD END	TEE W/PLUG	CROSS W/PLUG
TYPICAL INSTALLATION							
PIPE SIZE	4"	1	2	1	2	2	2
	6"	2	4	1	3	4	4
	8"	5	8	3	6	8	8
	10"	7	14	4	10	14	14
	12"	11	18	6	14	18	18
	16"	19	34	10	23	34	34
	24"	45	83	23	59	83	83

NOTES

1. THRUST BLOCKS TO BE CONSTRUCTED OF 3000 PSI CONCRETE.
2. BLOCKS TO BE POURED AGAINST UNDISTURBED SOIL.
3. THRUST BLOCKS SHALL HAVE CONTACT WITH FITTINGS ONLY AND REMAIN CLEAR OF PIPE AND JOINTS.
4. ALL FITTINGS TO BE SEPARATED FROM JOINTS BY A 3' TO 6' LENGTH OR PIPE.

CITY OF FAIRFIELD — DEPARTMENT OF PUBLIC WORKS — HORIZONTAL & THRUST BLOCKS — APPROVED BY CITY ENGINEER R.C.E. 22678 — DATE JULY 1995 — REV. — REV. — 38

9 HORIZONTAL THRUST BLOCKS
No Scale

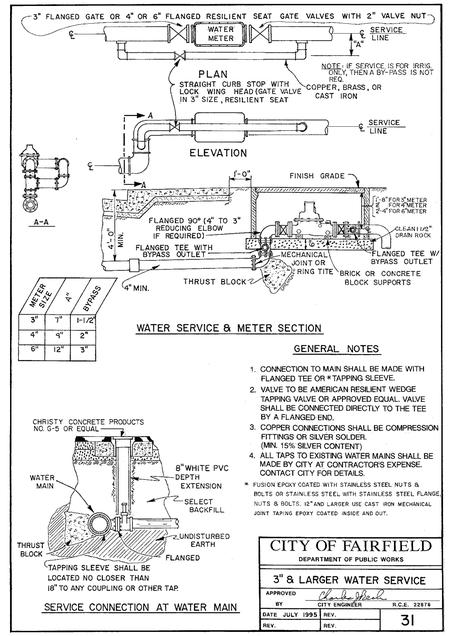

METER SIZE	A	BYPASS
3"	7"	1-1/2"
4"	4"	2"
6"	12"	3"

WATER SERVICE & METER SECTION

GENERAL NOTES

1. CONNECTION TO MAIN SHALL BE MADE WITH FLANGED TEE OR * TAPPING SLEEVE.
2. VALVE TO BE AMERICAN RESILIENT WEDGE TAPPING VALVE OR APPROVED EQUAL. VALVE SHALL BE CONNECTED DIRECTLY TO THE TEE BY A FLANGED END.
3. COPPER CONNECTIONS SHALL BE COMPRESSION FITTINGS OR SILVER SOLDER. (MIN. 15% SILVER CONTENT)
4. ALL TAPS TO EXISTING WATER MAINS SHALL BE MADE BY CITY AT CONTRACTOR'S EXPENSE. CONTACT CITY FOR DETAILS.

* FUSION EPOXY COATED WITH STAINLESS STEEL NUTS & BOLTS OR STAINLESS STEEL WITH STAINLESS STEEL FLANGE NUTS & BOLTS. 12" AND LARGER USE CAST IRON MECHANICAL JOINT TAPING EPOXY COATED INSIDE AND OUT.

SERVICE CONNECTION AT WATER MAIN

CITY OF FAIRFIELD — DEPARTMENT OF PUBLIC WORKS — 3" & LARGER WATER SERVICE — APPROVED BY CITY ENGINEER R.C.E. 22678 — DATE JULY 1995 — REV. — REV. — 31

10 4" WATER SERVICE METER
No Scale

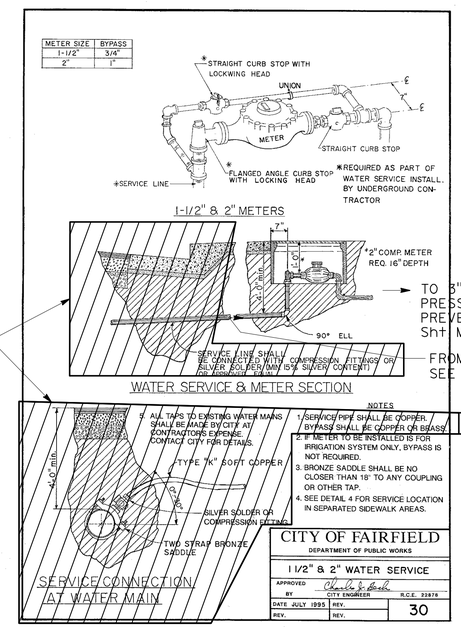

METER SIZE	BYPASS
1-1/2"	3/4"
2"	1"

NOTES

1. SERVICE PIPE SHALL BE COPPER. BYPASS SHALL BE COPPER OR BRASS.
2. IF METER TO BE INSTALLED IS FOR IRRIGATION SYSTEM ONLY, BYPASS IS NOT REQUIRED.
3. BRONZE SADDLE SHALL BE NO CLOSER THAN 18" TO ANY COUPLING OR OTHER TAP.
4. SEE DETAIL 4 FOR SERVICE LOCATION IN SEPARATED SIDEWALK AREAS.

CITY OF FAIRFIELD — DEPARTMENT OF PUBLIC WORKS — 1 1/2" & 2" WATER SERVICE — APPROVED BY CITY ENGINEER R.C.E. 22678 — DATE JULY 1995 — REV. — REV. — 30

IDENTIFICATION STAMP DIV. OF THE STATE ARCHITECT
02 1117 44
ACCESSIBLS — SS —
DATE 5-5-11

11 2" WATER SERVICE METER
No Scale

	BY	CHECKED
DESIGN	D. CHEN	K. VON ASPERN
DETAILS	A. PAEZ	D. CHEN
QUANTITIES	D. CHEN	K. VON ASPERN

PREPARED FOR THE STATE OF CALIFORNIA DEPARTMENT OF TRANSPORTATION

DIVISION OF ENGINEERING SERVICES
ELECTRICAL-MECHANICAL-WATER AND WASTEWATER DESIGN

BRIDGE NO. 23W0001R
POST MILE 14.8

EASTBOUND CORDELIA CVEF
CVEF — SITE UTILITY DETAILS No. 2

SHEET M1-13

40a535wdM1-13.dgn
DOES SD Imperial Rev.1/07 18-MAY-2011 15:54

ORIGINAL SCALE IN INCHES FOR REDUCED PLANS 0 1 2 3

CU 04264
EA 0A5351

DISREGARD PRINTS BEARING EARLIER REVISION DATES → REVISION DATES (PRELIMINARY STAGE ONLY) 10/19/09 3/22/10 8/19/10 11/3/10 11/22/10 05/03/11 — SHEET — OF

18-MAY-2011 15:54
40a535wdM1-13.dgn

DIST.	COUNTY	ROUTE	POST MILES TOTAL PROJECT	SHEET NO.	TOTAL SHEETS
04	Sol	12,80	L1.8/L2.0, 13.3/15.7	657	740

Dolly Y Chen 3/14/11
REGISTERED CIVIL ENGINEER DATE

REGISTERED PROFESSIONAL ENGINEER DOLLY Y. CHEN No. C-63788 Exp. 9-30-12 STATE OF CALIFORNIA

5-16-11
PLANS APPROVAL DATE

The State of California or its officers or agents shall not be responsible for the accuracy or completeness of electronic copies of this plan sheet.

HDR ENGINEERING, INC.
2121 N CALIFORNIA BLVD
SUITE 475
WALNUT CREEK, CA 94596

SOLANO TRANSPORTATION AUTHORITY
ONE HARBOR CENTER, SUITE 130
SUISUN CITY, CA 94585

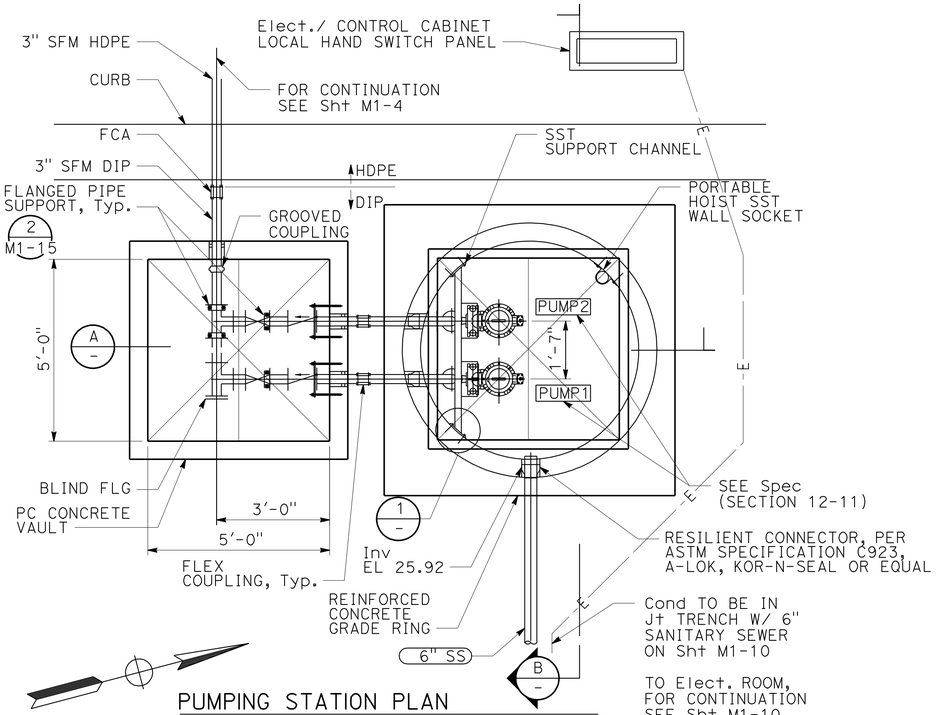

PUMPING STATION PLAN
No Scale

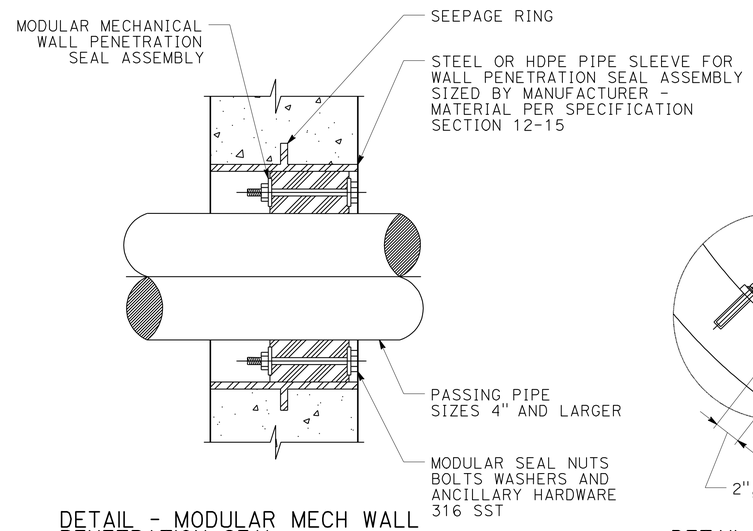

DETAIL - MODULAR MECH WALL PENETRATION SEAL
No Scale

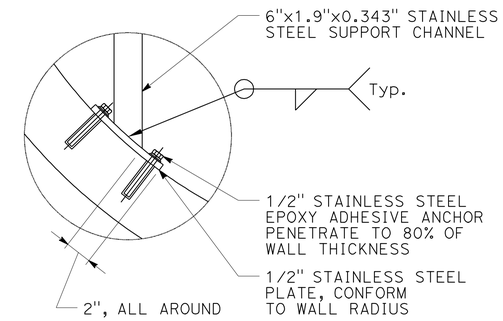

DETAIL 1
No Scale

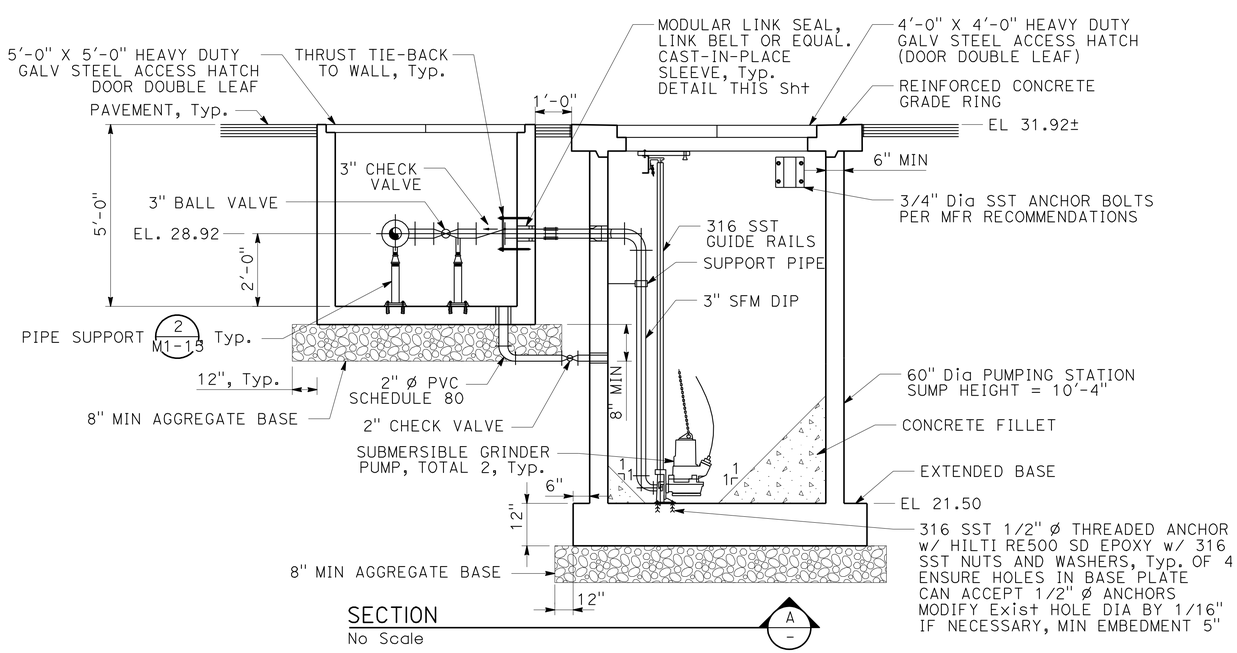

SECTION A
No Scale

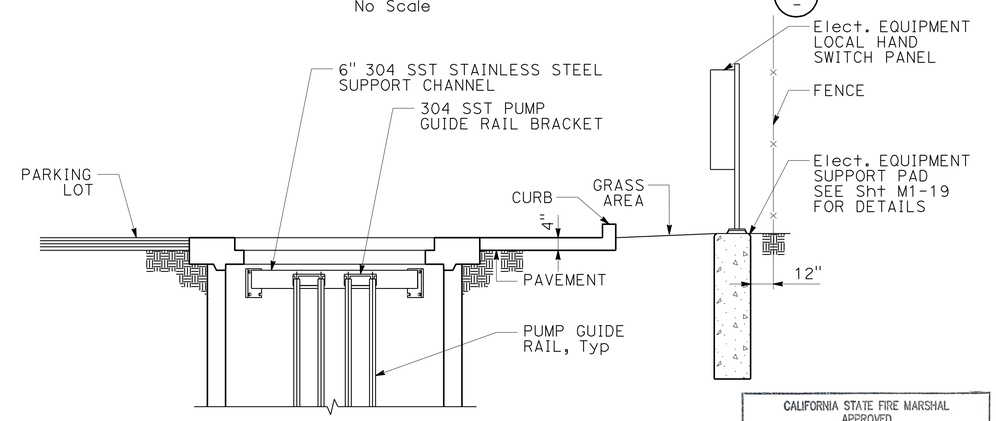

SECTION B
No Scale

WET WELL SET POINTS		
FLOAT SWITCH 4	LAG PUMP ON	EL 25.50
FLOAT SWITCH 3	LEAD PUMP ON	EL 24.50
FLOAT SWITCH 2	PUMP(S) OFF	EL 23.20
FLOAT SWITCH 1	LOW WATER LEVEL	EL 22.50

CALIFORNIA STATE FIRE MARSHAL APPROVED

Approval of this plan does not authorize or approve any omission or deviation from applicable regulations. Final approval is subject to field inspection. One set of approved plans shall be available on the project site at all times. 5/9/11

Reviewed by: Hans Henneberque
Hans Henneberque
Senior Deputy State Fire Marshal

IDENTIFICATION STAMP DIV. OF THE STATE ARCHITECT
02 111744
ACP BLS — SS —
DATE 05-09-11

	BY	CHECKED
DESIGN	D. CHEN	K. VON ASPERN
DETAILS	A. PAEZ	D. CHEN
QUANTITIES	D. CHEN	K. VON ASPERN

PREPARED FOR THE STATE OF CALIFORNIA DEPARTMENT OF TRANSPORTATION

DIVISION OF ENGINEERING SERVICES
ELECTRICAL-MECHANICAL-WATER AND WASTEWATER DESIGN

BRIDGE NO. 23W0001R
POST MILE 14.8

EASTBOUND CORDELIA CVEF
CVEF
SITE UTILITY DETAILS No. 3

SHEET M1-14

40a535wdM1-14.dgn
DOES SD Imperial Rev.1/07 18-MAY-2011 15:54

ORIGINAL SCALE IN INCHES FOR REDUCED PLANS 0 1 2 3

CU 04264
EA 0A5351

DISREGARD PRINTS BEARING EARLIER REVISION DATES → 10/19/09 3/22/10 8/19/10 11/3/10 11/22/10 3/14/11

REVISION DATES (PRELIMINARY STAGE ONLY) SHEET OF

18-MAY-2011 15:54
40a535wdM1-14.dgn

DIST.	COUNTY	ROUTE	POST MILES TOTAL PROJECT	SHEET NO.	TOTAL SHEETS
04	Sol	12,80	L1.8/L2.0, 13.3/15.7	658	740

Dolly Y Chen 05/03/11
REGISTERED CIVIL ENGINEER DATE

REGISTERED PROFESSIONAL ENGINEER DOLLY Y. CHEN No. C-63788 Exp. 9-30-12 STATE OF CALIFORNIA

5-16-11
PLANS APPROVAL DATE

The State of California or its officers or agents shall not be responsible for the accuracy or completeness of electronic copies of this plan sheet.

HDR ENGINEERING, INC.
2121 N CALIFORNIA BLVD
SUITE 475
WALNUT CREEK, CA 94596

SOLANO TRANSPORTATION AUTHORITY
ONE HARBOR CENTER, SUITE 130
SUISUN CITY, CA 94585

REQUIRED TIE DOWN
CUBIC FEET OF CONCRETE

FITTING TYPE		22½° BEND	45° BEND	90° BEND
TYPICAL INSTALLATION				
PIPE SIZE	4"	8	27	40
	6"	19	34	60
	8"	31	56	100
	10"	48	89	160
	12"	62	120	220
	16"	121	225	400
	24"	270	530	970

NOTES

1. THRUST BLOCKS TO BE CONSTRUCTED OF 3000 PSI CONCRETE.
2. BLOCKS TO BE POURED AGAINST UNDISTURBED SOIL.
3. THRUST BLOCKS SHALL HAVE CONTACT WITH FITTINGS ONLY AND REMAIN CLEAR OF PIPE AND JOINTS.
4. ALL FITTINGS TO BE SEPARATED FROM JOINTS BY A 3' TO 6' LENGTH OR PIPE.

CITY OF FAIRFIELD
DEPARTMENT OF PUBLIC WORKS
VERTICAL THRUST BLOCKS
APPROVED BY: CITY ENGINEER R.C.E. 22678
DATE JULY 1995 REV. REV. REV. 39

1 VERTICAL THRUST BLOCKS
No Scale

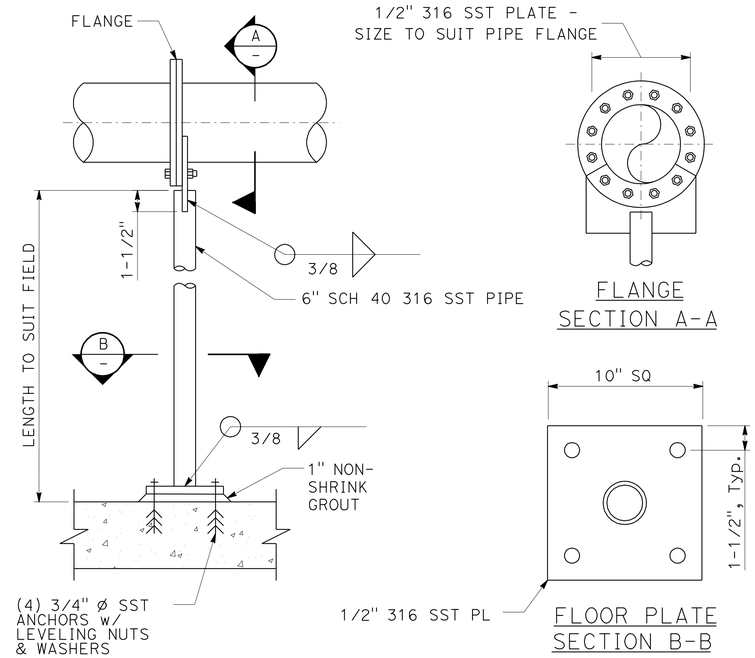

2 FLANGED PIPE SUPPORT
No Scale

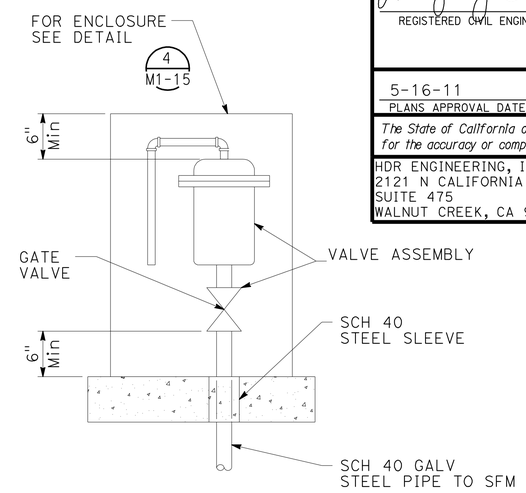

SECTION

CALIFORNIA STATE FIRE MARSHAL APPROVED
Approval of this plan does not authorize or approve any omission or deviation from applicable regulations. Final approval is subject to field inspection. One set of approved plans shall be available on the project site at all times.
Reviewed by: Hans Hennebergue 5/9/11
Hans Hennebergue
Senior Deputy State Fire Marshal

3 ABOVE GRADE AIR RELEASE VALVE (SEWER)
No Scale

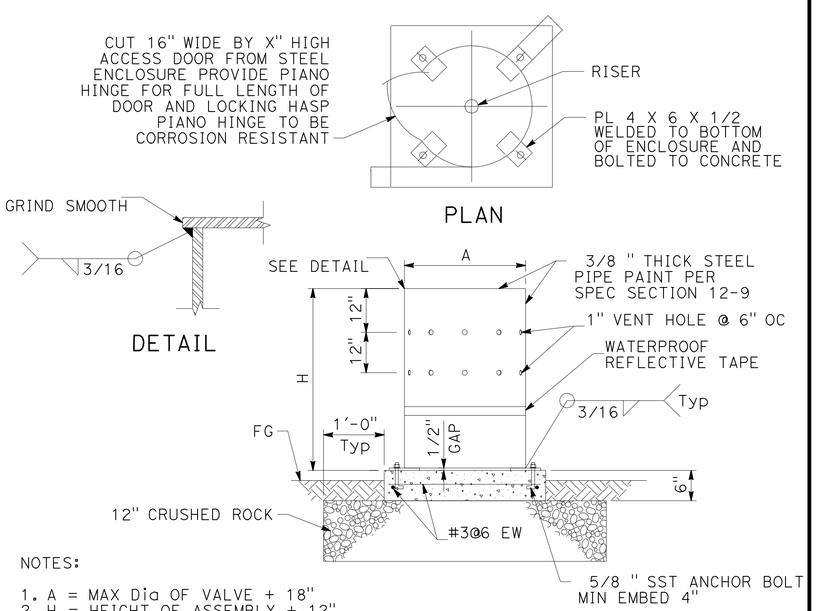

NOTES:

1. A = MAX Dia OF VALVE + 18"
2. H = HEIGHT OF ASSEMBLY + 12"
3. X = H - 6"

4 ABOVE GRADE AIR RELEASE VALVE ENCLOSURE
No Scale

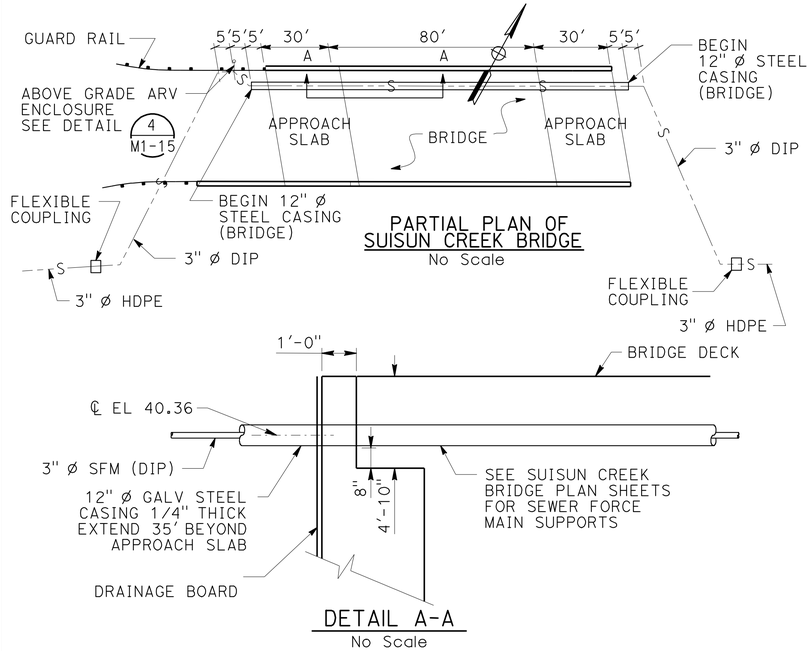

5 SEWER FORCE MAIN DETAILS AT SUISUN CREEK BRIDGE
No Scale

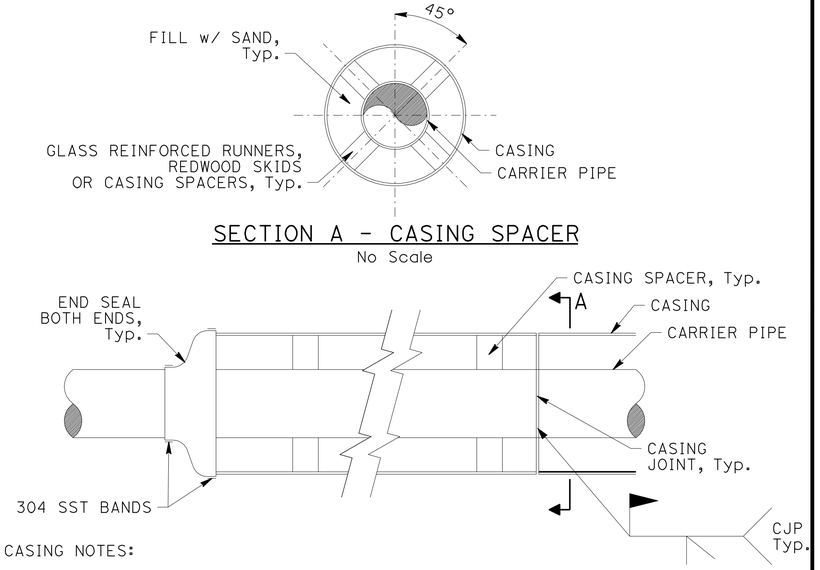

CASING NOTES:

1. CARRIER PIPE TO BE TESTED PRIOR TO INSTALLING END SEALS.
2. CASING SPACERS SHALL BE BOLTED AROUND THE PIPE SUCH THAT THE SKIDS ARE SYMMETRIC ABOUT THE LONGITUDINAL AXIS.

IDENTIFICATION STAMP DIV. OF THE STATE ARCHITECT
02 111744
AC ABS SS
DATE 05-05-11

6 SEWER FORCE MAIN - CASING END
No Scale

	BY	CHECKED
DESIGN	D. CHEN	K. VON ASPERN
DETAILS	A. PAEZ	D. CHEN
QUANTITIES	D. CHEN	K. VON ASPERN

PREPARED FOR THE STATE OF CALIFORNIA DEPARTMENT OF TRANSPORTATION

DIVISION OF ENGINEERING SERVICES
ELECTRICAL-MECHANICAL-WATER AND WASTEWATER DESIGN

BRIDGE NO. 23W0001R
POST MILE 14.8

EASTBOUND CORDELIA CVEF
CVEF — SITE UTILITY DETAILS No. 4

SHEET M1-15

40a535wdM1-15.dgn
DOES SD Imperial Rev.1/07 18-MAY-2011 15:55

ORIGINAL SCALE IN INCHES FOR REDUCED PLANS 0 1 2 3

CU 04264
EA 0A5351

DISREGARD PRINTS BEARING EARLIER REVISION DATES →
REVISION DATES (PRELIMINARY STAGE ONLY) 10/19/09 3/22/10 8/19/10 11/3/10 11/22/10 03/14/11 05/03/11
SHEET OF

18-MAY-2011 15:55
40a535wdM1-15.dgn

DIST.	COUNTY	ROUTE	POST MILES TOTAL PROJECT	SHEET NO.	TOTAL SHEETS
04	Sol	12,80	L1.8/L2.0, 13.3/15.7	659	740

Dolly Y Chen 05/03/11
REGISTERED CIVIL ENGINEER DATE

REGISTERED PROFESSIONAL ENGINEER DOLLY Y. CHEN No. C-63788 Exp. 9-30-12 STATE OF CALIFORNIA

5-16-11
PLANS APPROVAL DATE

The State of California or its officers or agents shall not be responsible for the accuracy or completeness of electronic copies of this plan sheet.

HDR ENGINEERING, INC.
2121 N CALIFORNIA BLVD
SUITE 475
WALNUT CREEK, CA 94596

SOLANO TRANSPORTATION AUTHORITY
ONE HARBOR CENTER, SUITE 130
SUISUN CITY, CA 94585

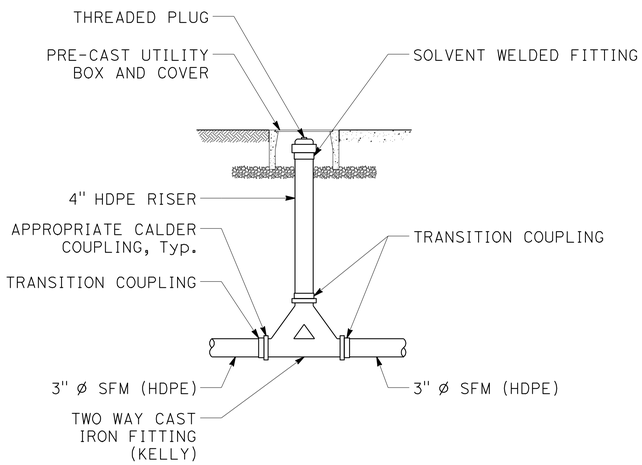

1 TWO-WAY CLEANOUT
No Scale

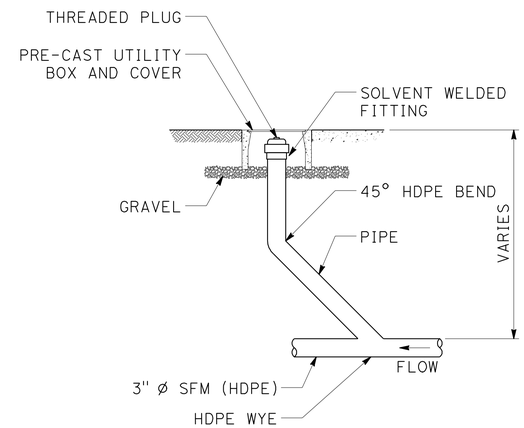

2 STANDARD CLEANOUT
No Scale

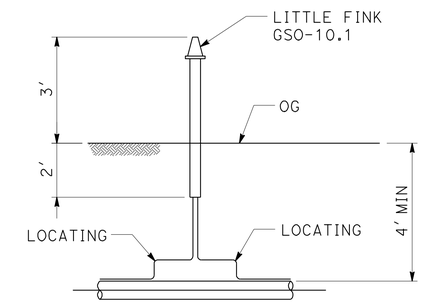

3 GAS LINE MARKER/ CATHODIC TEST STATION
No Scale

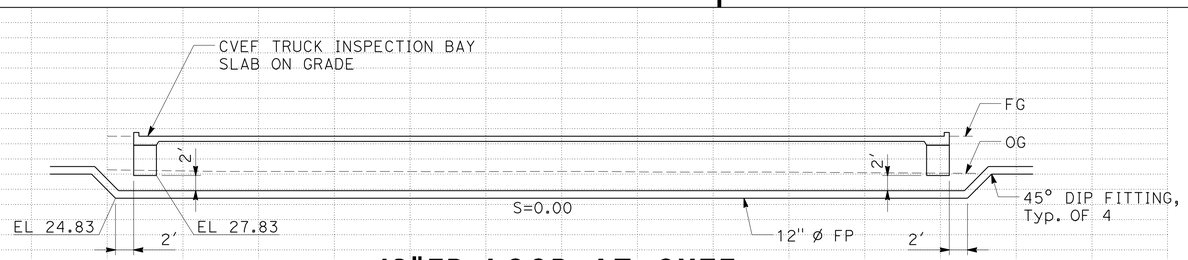

12"FP LOOP AT CVEF TRUCK INSPECTION BAY
No Scale

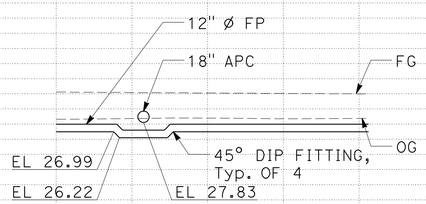

12"FP LOOP AT 18" APC
No Scale

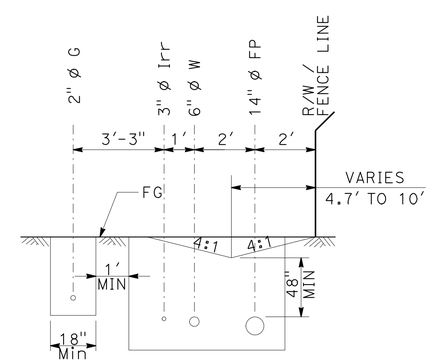

SECTION 4
No Scale

CALIFORNIA STATE FIRE MARSHAL APPROVED

Approval of this plan does not authorize or approve any omission or deviation from applicable regulations. Final approval is subject to field inspection. One set of approved plans shall be available on the project site at all times.

Reviewed by: Hans Hanneberque 5/9/11
Hans Hanneberque
Senior Deputy State Fire Marshal

IDENTIFICATION STAMP DIV. OF THE STATE ARCHITECT
02 1 1 1 7 4 4
ACP PLS — SS —
DATE 5-5-11

STATION	0+00	1+00	TOTAL
CY Exc			
CY Emb			

	BY	CHECKED
DESIGN	D. CHEN	K. VON ASPERN
DETAILS	A. PAEZ	D. CHEN
QUANTITIES	D. CHEN	K. VON ASPERN

PREPARED FOR THE STATE OF CALIFORNIA DEPARTMENT OF TRANSPORTATION

DIVISION OF ENGINEERING SERVICES
ELECTRICAL-MECHANICAL-WATER AND WASTEWATER DESIGN

BRIDGE NO. 23W0001R
POST MILE 14.8

EASTBOUND CORDELIA CVEF
CVEF — SITE UTILITY DETAILS No. 5

SHEET **M1-16**

40a535wdM1-16.dgn
DOES SD imperial Rev.1/07 18-MAY-2011 15:55

ORIGINAL SCALE IN INCHES FOR REDUCED PLANS 0 1 2 3

CU 04264
EA 0A5351

DISREGARD PRINTS BEARING EARLIER REVISION DATES → REVISION DATES (PRELIMINARY STAGE ONLY) 10/19/09 3/22/10 8/18/10 11/3/10 11/22/10 05/03/11 SHEET OF

18-MAY-2011 15:55
40a535wdM1-16.dgn

DIST.	COUNTY	ROUTE	POST MILES TOTAL PROJECT	SHEET NO.	TOTAL SHEETS
04	Sol	12,80	L1.8/L2.0, 13.3/15.7	660	740

Dolly Y Chen 05/03/11
REGISTERED CIVIL ENGINEER DATE

REGISTERED PROFESSIONAL ENGINEER DOLLY Y. CHEN No. C-63788 Exp. 9-30-12 STATE OF CALIFORNIA

5-16-11
PLANS APPROVAL DATE

The State of California or its officers or agents shall not be responsible for the accuracy or completeness of electronic copies of this plan sheet.

HDR ENGINEERING, INC.
2121 N CALIFORNIA BLVD
SUITE 475
WALNUT CREEK, CA 94596

SOLANO TRANSPORTATION AUTHORITY
ONE HARBOR CENTER, SUITE 130
SUISUN CITY, CA 94585

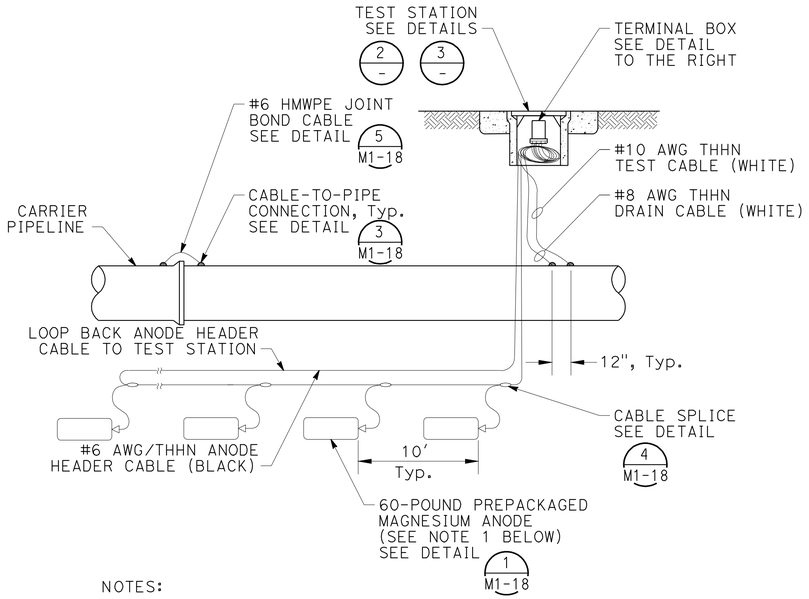

NOTES:

1. 4 QUANTITY OF 60-LB PREPACKAGE ANODES.
2. IDENTIFY ALL CABLES IN THE TERMINAL BOX PER DETAIL 5/-

1 ETS - ELECTROLYTIC TEST STATION
No Scale

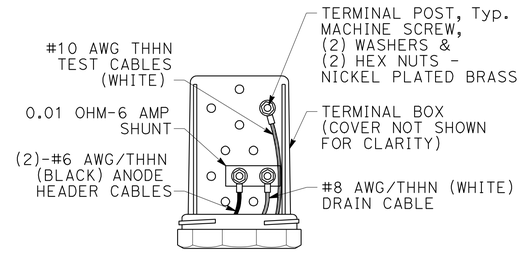

ETS TERMINAL BOX

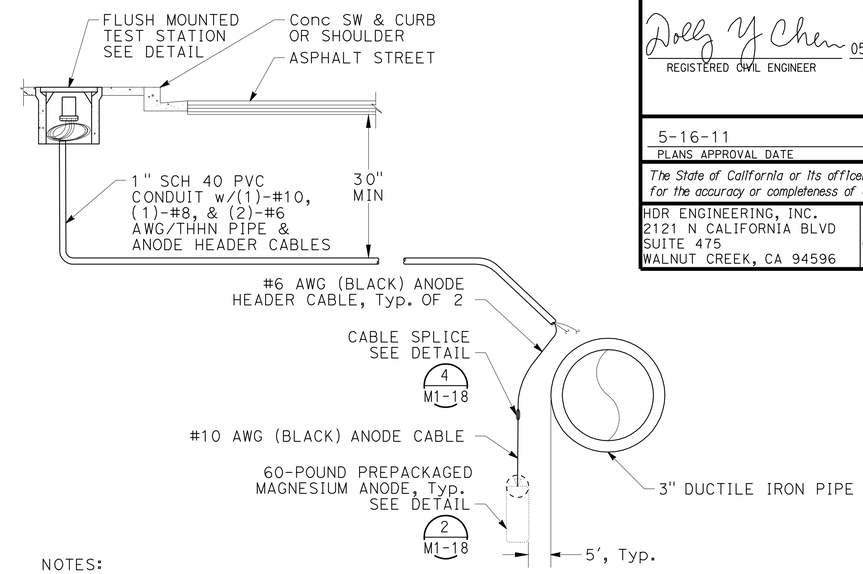

NOTES:

1. THE TEST STATION SHALL BE INSTALLED AT SUITABLE LOCATION, ACCESSIBLE FOR FUTURE MONITORING AND MAINTENANCE.
2. IN UNPAVED AREAS INSTALL THE TEST STATION DIRECTLY ABOVE THE PIPELINE.

2 TEST STATION INSTALLATION
No Scale

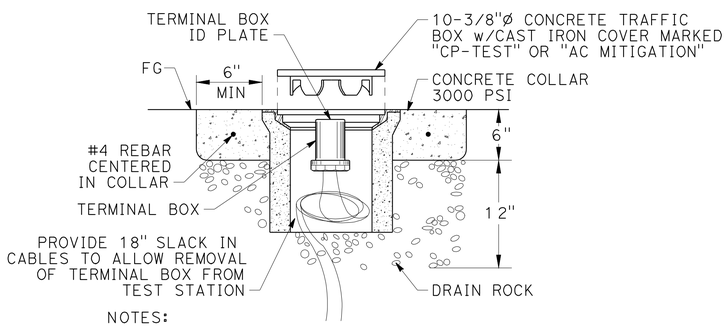

NOTES:

1. FLUSH MOUNTED TEST STATIONS SHALL BE USED FOR ALL TEST STATIONS.
2. INSTALL THE TEST STATION IN THE SIDEWALK OR EDGE OF ROAD, WHERE POSSIBLE, FOR EASY ACCESS AND DRAINAGE.
3. IDENTIFY ALL CABLES IN THE TERMINAL BOX; SEE DETAIL 5/-

3 FLUSH MOUNTED TEST STATION
No Scale

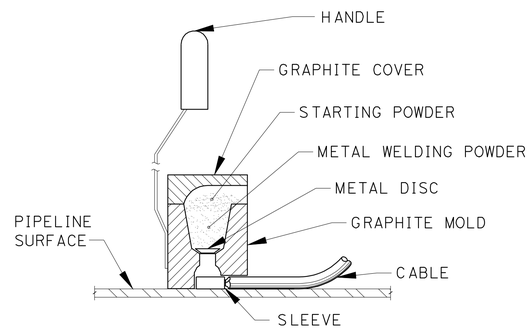

STEP 1. FILE STRUCTURE CONNECTION AREA TO BARE SHINY METAL AND CLEAN.

STEP 2. STRIP INSULATION FROM WIRE. ATTACH SLEEVE REQUIRED ON #6 AWG WIRE OR SMALLER

STEP 3. HOLD MOLD FIRMLY WITH OPENING AWAY FROM OPERATOR AND IGNITE WITH FLINT GUN.

STEP 4. REMOVE SLAG FROM CONNECTION AND PEEN WELD FOR SOUNDNESS.

STEP 5. COVER CONNECTION AND EXPOSED STRUCTURE SURFACE WITH COATING COMPOUND PER DETAIL 3, Sht M1-18.

NOTE:

PROCEDURE SHOWN ABOVE IS TO BE USED AS A GENERAL GUIDE ONLY. CONSULT MANUFACTURER'S LITERATURE FOR SPECIFIC INSTALLATION INSTRUCTIONS.

4 EXOTHERMIC WELD PROCEDURE
No Scale

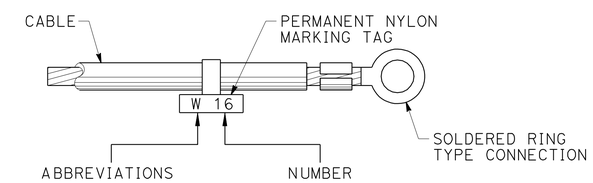

CALIFORNIA STATE FIRE MARSHAL APPROVED

Approval of this plan does not authorize or approve any omission or deviation from applicable regulations. Final approval is subject to field inspection. One set of approved plans shall be available on the project site at all times.

Reviewed by: 5/9/11
Hans Henneberque
Senior Deputy State Fire Marshal

5 CABLE IDENTIFICATION
No Scale

IDENTIFICATION STAMP DIV. OF THE STATE ARCHITECT
02 111744
AC ___ SS ___
DATE 5-5-11

	BY	CHECKED
DESIGN	D. CHEN	K. VON ASPERN
DETAILS	A. PAEZ	D. CHEN
QUANTITIES	D. CHEN	K. VON ASPERN

PREPARED FOR THE STATE OF CALIFORNIA DEPARTMENT OF TRANSPORTATION

DIVISION OF ENGINEERING SERVICES
ELECTRICAL-MECHANICAL-WATER AND WASTEWATER DESIGN

BRIDGE NO. 23W0001R
POST MILE 14.8

EASTBOUND CORDELIA CVEF

CVEF — SITE UTILITY DETAILS No. 6

SHEET **M1-17**

40a535wdM1-17.dgn
DOES SD imperial Rev.1/07 18-MAY-2011 15:55

ORIGINAL SCALE IN INCHES FOR REDUCED PLANS 0 1 2 3

CU 04264
EA 0A5351

DISREGARD PRINTS BEARING EARLIER REVISION DATES → 10/19/09 3/22/10 8/19/10 11/3/10 11/22/10 05/03/11

REVISION DATES (PRELIMINARY STAGE ONLY) SHEET OF

18-MAY-2011 15:55
40a535wdM1-17.dgn

DIST.	COUNTY	ROUTE	POST MILES TOTAL PROJECT	SHEET NO.	TOTAL SHEETS
04	Sol	12,80	L1.8/L2.0, 13.3/15.7	661	740

Dolly Y Chen 05/03/11
REGISTERED CIVIL ENGINEER DATE

REGISTERED PROFESSIONAL ENGINEER DOLLY Y. CHEN No. C-63788 Exp. 9-30-12 STATE OF CALIFORNIA

5-16-11
PLANS APPROVAL DATE

The State of California or its officers or agents shall not be responsible for the accuracy or completeness of electronic copies of this plan sheet.

HDR ENGINEERING, INC.
2121 N CALIFORNIA BLVD
SUITE 475
WALNUT CREEK, CA 94596

SOLANO TRANSPORTATION AUTHORITY
ONE HARBOR CENTER, SUITE 130
SUISUN CITY, CA 94585

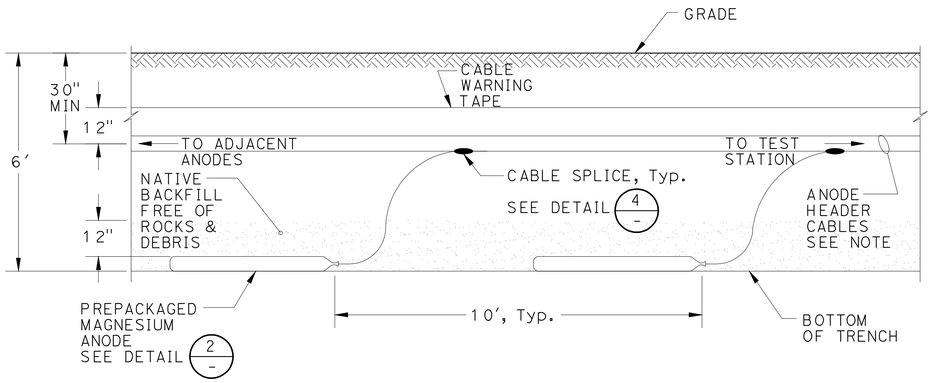

NOTE:

THE ANODES SHALL BE INSTALLED A MINIMUM OF 5 FEET OFF THE EDGE OF THE PIPE.

1 HORIZONTAL MAGNESIUM ANODE INSTALLATION
No Scale

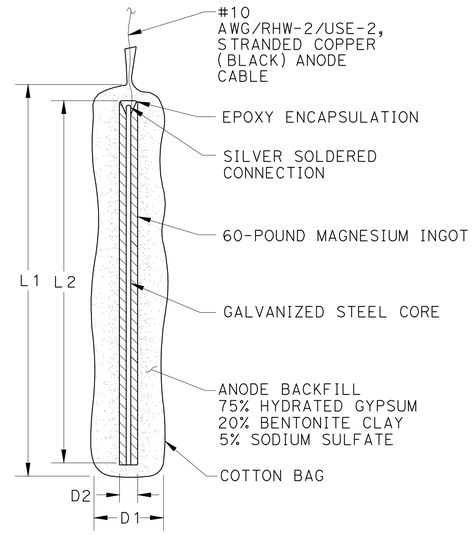

2 PREPACKAGED MAGNESIUM ANODE
No Scale

TABLE 1

HIGH POTENTIAL ANODES

SIZE (LB)	D1 (INCH)	D2 (INCH)	L1 (INCH)	L2 (INCH)
17	6	3	30	25.5
60	6.75	4	64	60

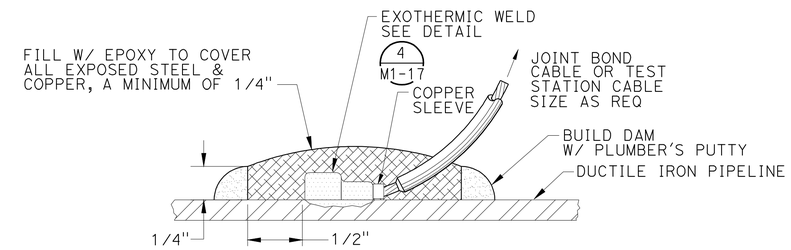

3 CABLE-TO-PIPE CONNECTION
No Scale

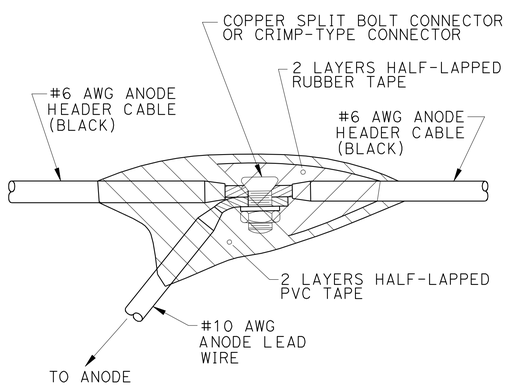

4 CABLE SPLICE FOR PREPACKED ANODES
No Scale

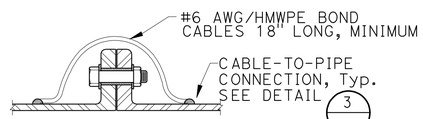

FLANGED JOINT

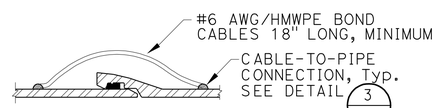

PUSH-ON JOINT

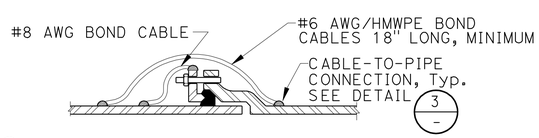

MECHANICAL JOINT

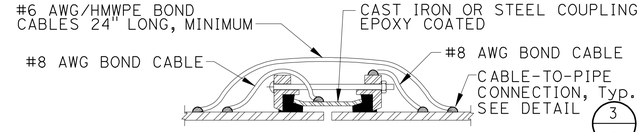

FLEXIBLE COUPLING

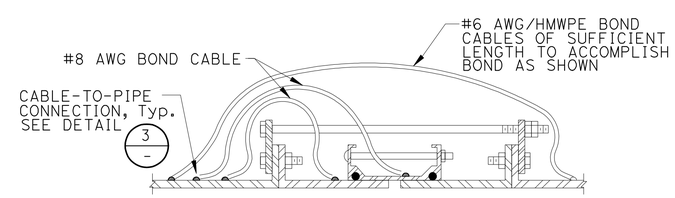

DUCTILE IRON PIPE FLEXIBLE COUPLING TIE DOWN

NOTE:

INSTALL ONE #6 AWG BOND CABLES ON ALL BURIED, NON-WELDED 16" Ø PIPE JOINTS.
INSTALL ONE #8 AWG BOND CABLES ON PIPE LESS THAN 16" Ø.

5 JOINT BOND CABLES
No Scale

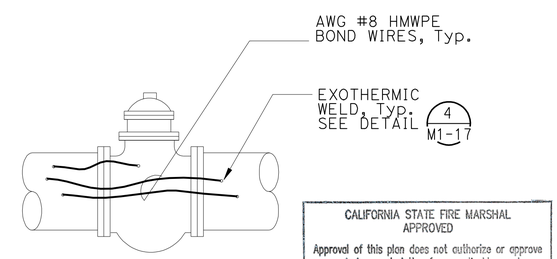

CALIFORNIA STATE FIRE MARSHAL APPROVED

Approval of this plan does not authorize or approve any omission or deviation from applicable regulations. Final approval is subject to field inspection. One set of approved plans shall be available on the project site at all times.

Reviewed by: Hans Henneberque 5/9/11
Hans Henneberque
Senior Deputy State Fire Marshal

6 VALVE BOND
No Scale

IDENTIFICATION STAMP DIV. OF THE STATE ARCHITECT
02 111744
AC ALS — SS —
DATE 05-05-11

	BY	CHECKED
DESIGN	D. CHEN	K. VON ASPERN
DETAILS	A. PAEZ	D. CHEN
QUANTITIES	D. CHEN	K. VON ASPERN

PREPARED FOR THE STATE OF CALIFORNIA DEPARTMENT OF TRANSPORTATION

DIVISION OF ENGINEERING SERVICES
ELECTRICAL-MECHANICAL-WATER AND WASTEWATER DESIGN

BRIDGE NO. 23W0001R
POST MILE 14.8

EASTBOUND CORDELIA CVEF
CVEF
SITE UTILITY DETAILS No. 7

SHEET M1-18

40a535wdM1-18.dgn
DOES SD imperial Rev.1/07 18-MAY-2011 15:55

ORIGINAL SCALE IN INCHES FOR REDUCED PLANS 0 1 2 3

CU 04264
EA 0A5351

DISREGARD PRINTS BEARING EARLIER REVISION DATES →
REVISION DATES (PRELIMINARY STAGE ONLY) 10/19/09 3/22/10 8/19/10 11/3/10 11/22/10 05/03/11
SHEET OF

18-MAY-2011 15:55
40a535wdM1-18.dgn

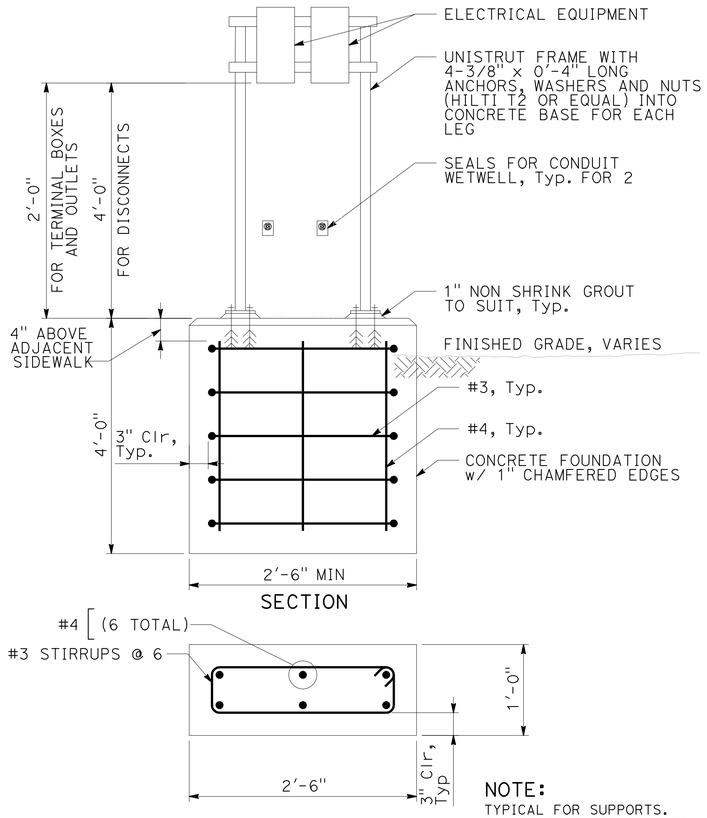

NOTE:
TYPICAL FOR SUPPORTS. CHANGE CONDUITS TO MATCH EQUIPMENT NEEDS.

1 EQUIPMENT SUPPORT STRUCTURE
No Scale

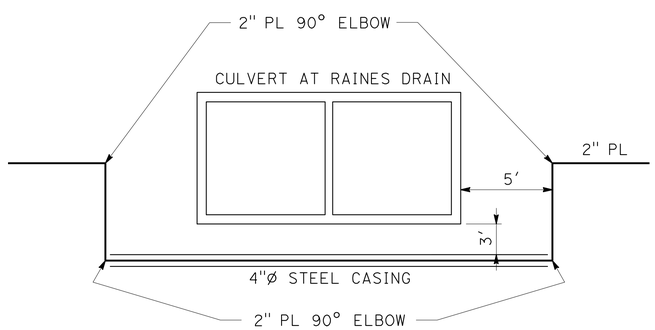

2 GAS LINE CASING AT RAINES DRAIN
No Scale

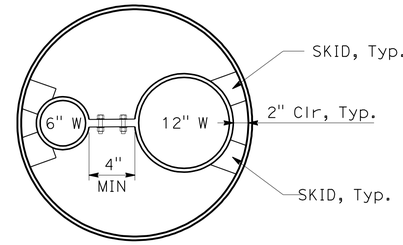

SECTION A - A

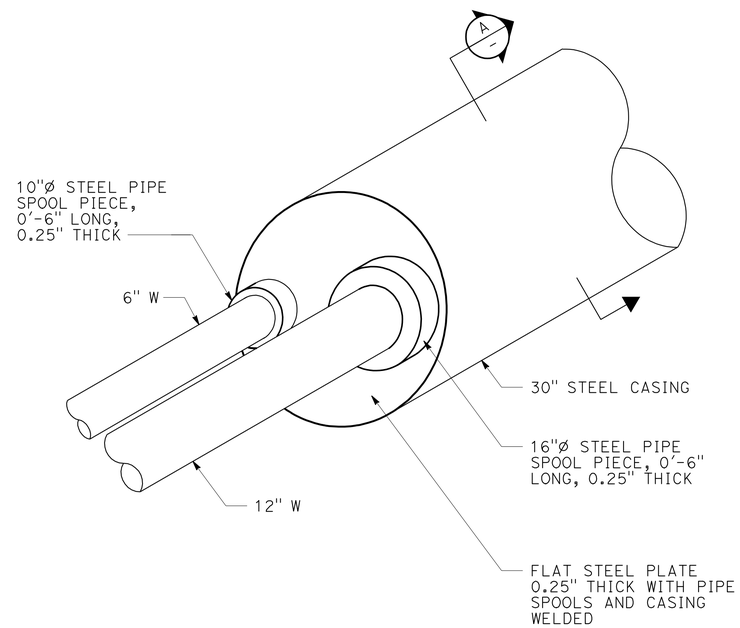

ISOMETRIC VIEW

NOTES:

1. SECTION A - A SHOWN FOR INFORMATIONAL PURPOSES ONLY. MANUFACTURER TO PROVIDE EXACT DIMENSIONS AND ORIENTATION.
2. CONTRACTOR TO FABRICATE IN THE FIELD THE FLAT STEEL PLATE AND STEEL PIPE SPOOLS.
3. LOCATION OF 10"Ø AND 16"Ø OPENINGS IN STEEL END PLATE TO BE DETERMINED IN THE FIELD.
4. INSTALL STANDARD PSI MODEL C END SEALS OR EQUAL. NOT SHOWN FOR CLARITY.

3 CASING AT RAINES DRAIN
No Scale

DIST.	COUNTY	ROUTE	POST MILES TOTAL PROJECT	SHEET NO.	TOTAL SHEETS
04	Sol	12,80	L1.8/L2.0, 13.3/15.7	662	740

Dolly Y Chen 05/03/11
REGISTERED CIVIL ENGINEER DATE

REGISTERED PROFESSIONAL ENGINEER DOLLY Y. CHEN No. C-63788 Exp. 9-30-12 STATE OF CALIFORNIA

5-16-11
PLANS APPROVAL DATE

The State of California or its officers or agents shall not be responsible for the accuracy or completeness of electronic copies of this plan sheet.

CALIFORNIA STATE FIRE MARSHAL APPROVED
Approval of this plan does not authorize or approve any omission or deviation from applicable regulations. Final approval is subject to field inspection. One set of approved plans shall be available on the project site at all times.
Reviewed by: Hans Henneberque 5/9/11
Hans Henneberque
Senior Deputy State Fire Marshal

HDR ENGINEERING, INC.
2121 N CALIFORNIA BLVD
SUITE 475
WALNUT CREEK, CA 94596

SOLANO TRANSPORTATION AUTHORITY
ONE HARBOR CENTER, SUITE 130
SUISUN CITY, CA 94585

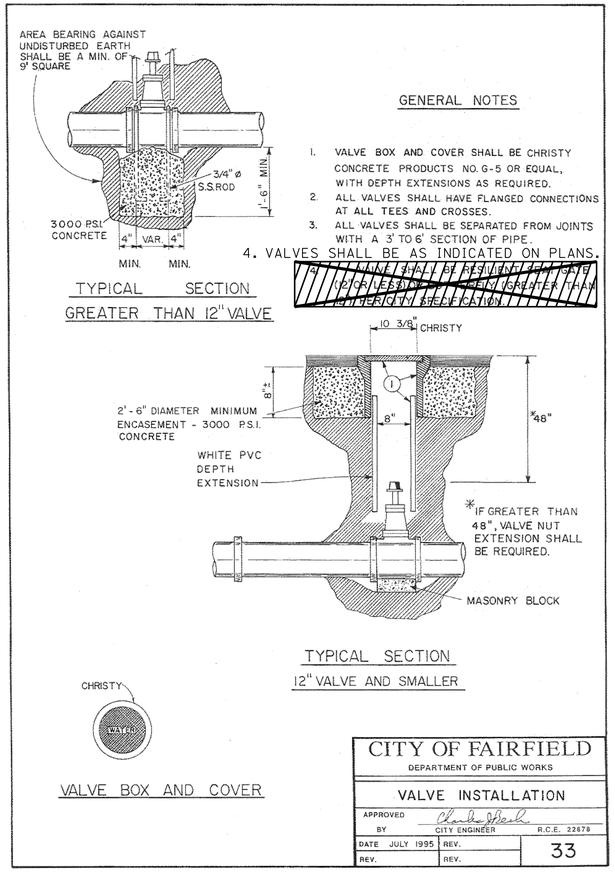

4 VALVE INSTALLATION
No Scale

IDENTIFICATION STAMP DIV. OF THE STATE ARCHITECT
02 1111744
ACCESS BLS — SS —
DATE 5-11-11

	BY	CHECKED
DESIGN	D. CHEN	K. VON ASPERN
DETAILS	A. PAEZ	D. CHEN
QUANTITIES	D. CHEN	K. VON ASPERN

PREPARED FOR THE STATE OF CALIFORNIA DEPARTMENT OF TRANSPORTATION

DIVISION OF ENGINEERING SERVICES
ELECTRICAL-MECHANICAL-WATER AND WASTEWATER DESIGN

BRIDGE NO. 23W0001R
POST MILE 14.8

EASTBOUND CORDELIA CVEF
CVEF
SITE UTILITY DETAILS No. 8

SHEET M1-19

40a535wdM1-19.dgn
DOES SD imperial Rev.1/07 18-MAY-2011 16:57

ORIGINAL SCALE IN INCHES FOR REDUCED PLANS 0 1 2 3

CU 04264
EA 0A5351

DISREGARD PRINTS BEARING EARLIER REVISION DATES
REVISION DATES (PRELIMINARY STAGE ONLY) 10/19/09 3/22/10 8/19/10 11/3/10 11/22/10 05/03/11
SHEET OF

18-MAY-2011 16:57
40a535wdM1-19.dgn

DIST.	COUNTY	ROUTE	POST MILES TOTAL PROJECT	SHEET NO.	TOTAL SHEETS
04	Sol	12,80	L1.8/L2.0, 13.3/15.7	663	740

REGISTERED MECHANICAL ENGINEER — 05/03/11 DATE

REGISTERED PROFESSIONAL ENGINEER SEAN E NEPRUD No. M33458 Exp. 06/30/12 MECH STATE OF CALIFORNIA

5-16-11
PLANS APPROVAL DATE

The State of California or its officers or agents shall not be responsible for the accuracy or completeness of electronic copies of this plan sheet.

KENNEDY/JENKS CONSULTANTS
303 SECOND STREET
SUITE 300 SOUTH
SAN FRANCISCO, CA 94960

SOLANO TRANSPORTATION AUTHORITY
ONE HARBOR CENTER, SUITE 130
SUISUN CITY, CA 94585

NOTES:

1. WHERE SANITARY DRAIN (D) PIPING CROSSES STORM DRAIN (SD) PIPING BELOW THE CONCRETE SLAB, SANITARY DRAIN PIPING SHALL PASS BELOW THE STORM DRAIN PIPING, WITH A MINIMUM 12" SEPARATION BETWEEN PIPES.
2. VENT PIPING IS NOT SHOWN ON PLUMBING PLANS. ALL TRAPPED FIXTURES REQUIRE VENT PIPING, REFER TO PLUMBING SYSTEM SCHEMATICS.
3. THE NATURAL GAS ROOF PENETRATION LOCATIONS SHOWN ARE APPROXIMATE. COORDINATE LOCATION OF NATURAL GAS PENETRATIONS WITH INSTALLED LOCATION AND ARRANGEMENT OF AIR CONDITIONING UNITS.

PLAN NORTH

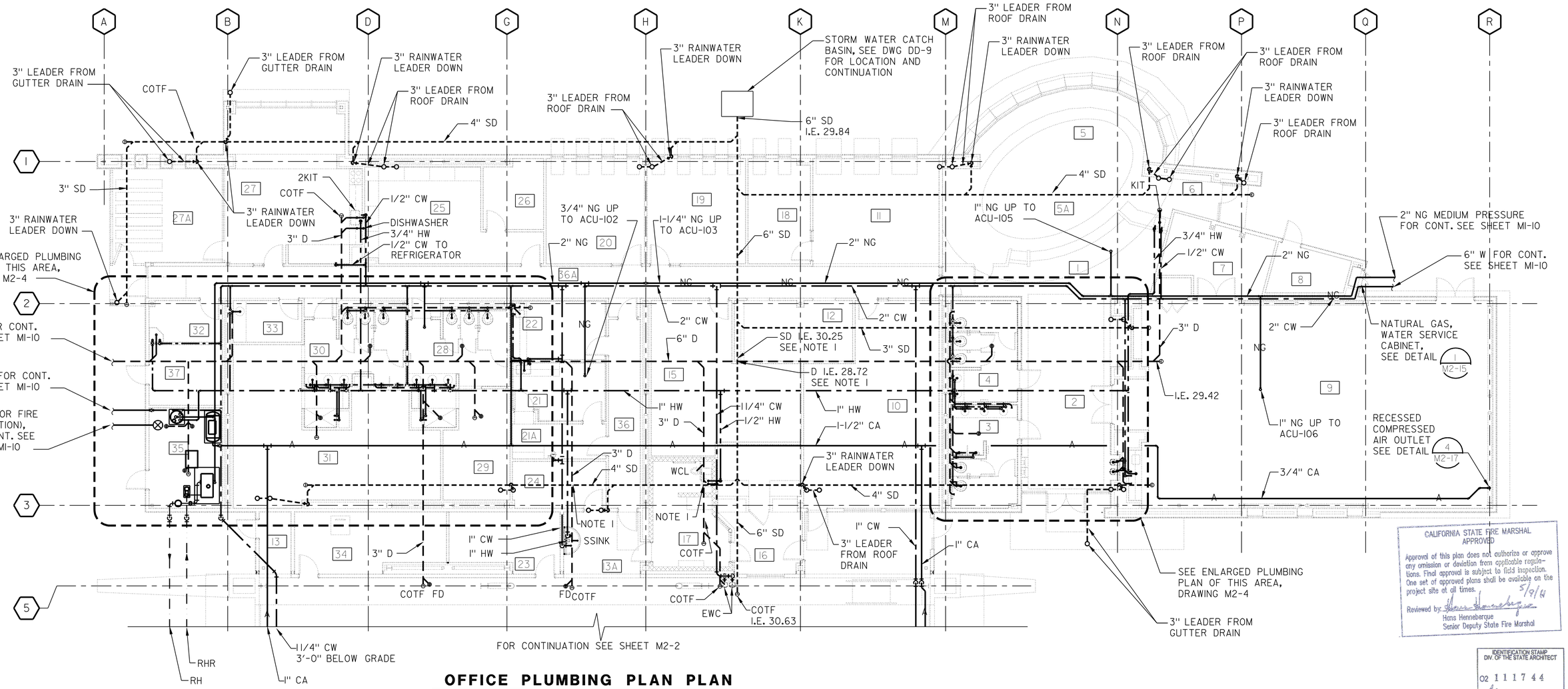

OFFICE PLUMBING PLAN PLAN

SCALE: 1/8" = 1'-0"

CALIFORNIA STATE FIRE MARSHAL APPROVED

Approval of this plan does not authorize or approve any omission or deviation from applicable regulations. Final approval is subject to field inspection. One set of approved plans shall be available on the project site at all times.

Reviewed by: 5/9/11
Hans Henneberque
Senior Deputy State Fire Marshal

IDENTIFICATION STAMP DIV. OF THE STATE ARCHITECT
02 1117 44
ACS ALS — SS —
DATE

	BY	CHECKED
DESIGN	S. NEPRUD	Z. HARRIS
DETAILS	S. NEPRUD	Z. HARRIS
QUANTITIES	S. NEPRUD	Z. HARRIS

PREPARED FOR THE STATE OF CALIFORNIA DEPARTMENT OF TRANSPORTATION

DIVISION OF ENGINEERING SERVICES
ELECTRICAL-MECHANICAL-WATER AND WASTEWATER DESIGN

BRIDGE NO. 23W000IR
POST MILE 14.8

EASTBOUND CORDELIA CVEF
CVEF — OFFICE PLUMBING PLAN

SHEET M2-1

40a535wdm2-01.dgn
DOES SD Imperial Rev.1/07 18-MAY-2011 07:41

ORIGINAL SCALE IN INCHES FOR REDUCED PLANS 0 1 2 3

CU 04264
EA 0A5351

DISREGARD PRINTS BEARING EARLIER REVISION DATES → 10/19/09 03/22/10 05/06/10 08/23/10 11/22/10 05/03/11

REVISION DATES (PRELIMINARY STAGE ONLY) SHEET OF

18-MAY-2011 07:41
40a535wdm2-01.dgn

DIST.	COUNTY	ROUTE	POST MILES TOTAL PROJECT	SHEET NO.	TOTAL SHEETS
04	Sol	12,80	L1.8/L2.0, 13.3/15.7	664	740

REGISTERED MECHANICAL ENGINEER — 05/03/11 DATE

REGISTERED PROFESSIONAL ENGINEER SEAN E NEPRUD No. M33458 Exp. 06/30/12 MECH STATE OF CALIFORNIA

5-16-11
PLANS APPROVAL DATE

The State of California or its officers or agents shall not be responsible for the accuracy or completeness of electronic copies of this plan sheet.

KENNEDY/JENKS CONSULTANTS
303 SECOND STREET
SUITE 300 SOUTH
SAN FRANCISCO, CA 94960

SOLANO TRANSPORTATION AUTHORITY
ONE HARBOR CENTER, SUITE 130
SUISUN CITY, CA 94585

PLAN NORTH

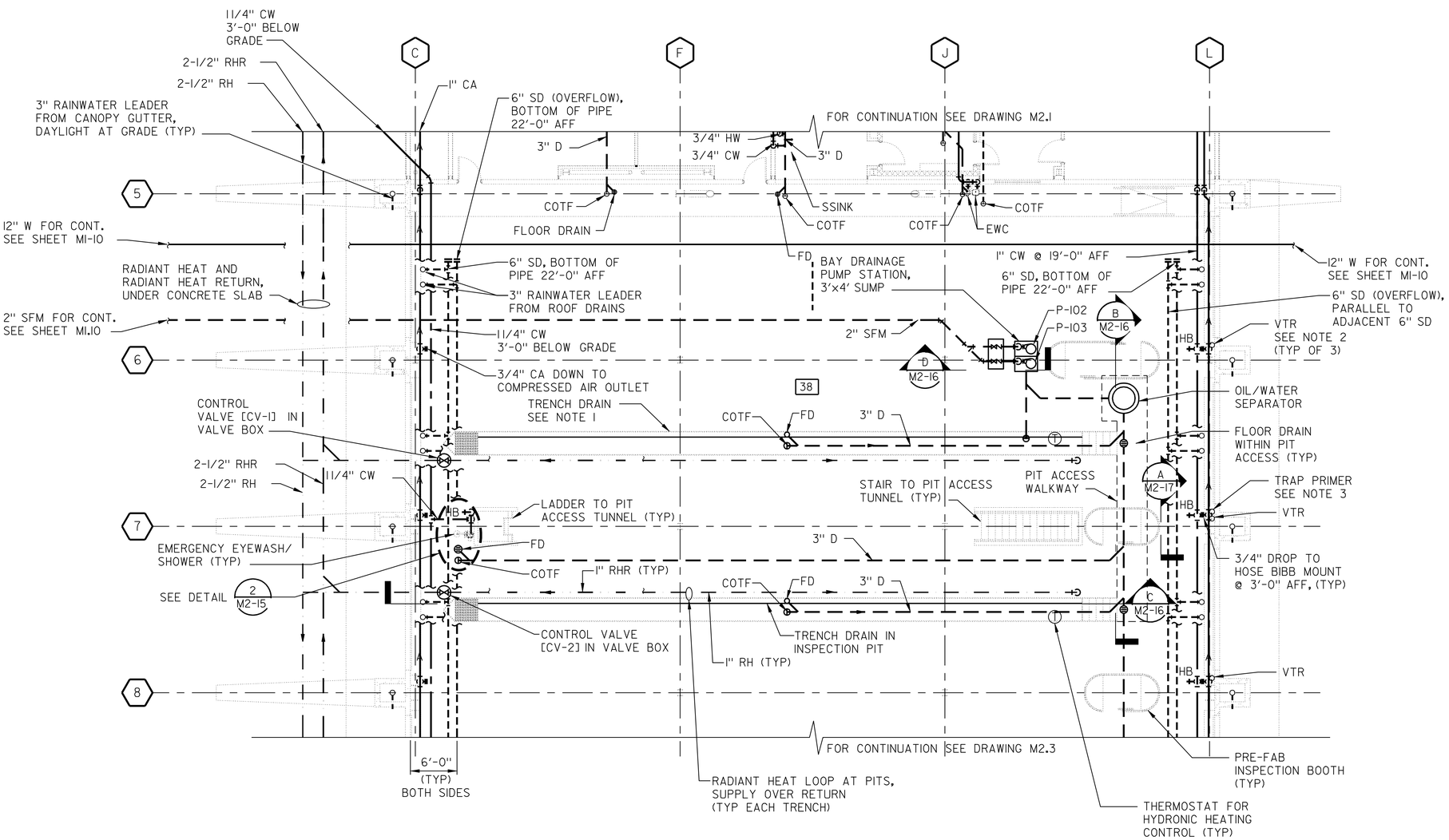

NOTES:

1. SLOPE TRENCH DRAIN IN INSPECTION PITS AT 1/8" PER FOOT TOWARDS FLOOR DRAIN.

2. INSTALL VENTS FROM FLOOR DRAINS TO LOCATIONS OF VENT THROUGH ROOF RISERS. VENT PIPING IS NOT SHOWN ON PLANS.

3. PLUMB TRAP PRIMERS TO FLOOR DRAINS IN THE INSPECTION PIT TRENCHES AND ACCESS WALKWAYS. PIPING BETWEEN TRAP PRIMER AND FLOOR DRAINS IS NOT SHOWN ON THE PLANS.

4. FLOOR DRAINS IN INSPECTION BAY TRENCHES SHALL BE EQUIPPED WITH A GRIT TRAP.

5. HEATING SYSTEM SHOWN IS TYPICAL FOR EACH INSPECTION BAY.

CALIFORNIA STATE FIRE MARSHAL APPROVED
Approval of this plan does not authorize or approve any omission or deviation from applicable regulations. Final approval is subject to field inspection. One set of approved plans shall be available on the project site at all times.
Reviewed by: Hans Henneberque 5/9/11
Hans Henneberque
Senior Deputy State Fire Marshal

IDENTIFICATION STAMP DIV. OF THE STATE ARCHITECT
02 1117 44
AC ELS — SS —
DATE 5-5-11

INSPECTION BAY PLUMBING PLAN NORTH

SCALE: 1/8" = 1'-0"

	BY	CHECKED
DESIGN	S. NEPRUD	Z. HARRIS
DETAILS	S. NEPRUD	Z. HARRIS
QUANTITIES	S. NEPRUD	Z. HARRIS

PREPARED FOR THE STATE OF CALIFORNIA DEPARTMENT OF TRANSPORTATION

DIVISION OF ENGINEERING SERVICES
ELECTRICAL-MECHANICAL-WATER AND WASTEWATER DESIGN

BRIDGE NO. 23W000IR
POST MILE 14.8

EASTBOUND CORDELIA CVEF
CVEF — INSPECTION BAY PLUMBING PLAN-NORTH

SHEET M2-2

40a535wdm2-02.dgn
DOES SD Imperial Rev.1/07 19-MAY-2011 07:44

ORIGINAL SCALE IN INCHES FOR REDUCED PLANS 0 1 2 3

CU 04264
EA 0A5351

DISREGARD PRINTS BEARING EARLIER REVISION DATES → 10/13/09 03/22/10 05/06/10 08/23/10 11/22/10 05/03/11

REVISION DATES (PRELIMINARY STAGE ONLY) SHEET OF

19-MAY-2011 07:44
40a535wdm2-02.dgn

DIST.	COUNTY	ROUTE	POST MILES TOTAL PROJECT	SHEET NO.	TOTAL SHEETS
04	Sol	12,80	L1.8/L2.0, 13.3/15.7	665	740

REGISTERED MECHANICAL ENGINEER — 05/03/11 DATE

REGISTERED PROFESSIONAL ENGINEER SEAN E NEPRUD No. M33458 Exp. 06/30/12 MECH STATE OF CALIFORNIA

5-16-11
PLANS APPROVAL DATE

The State of California or its officers or agents shall not be responsible for the accuracy or completeness of electronic copies of this plan sheet.

KENNEDY/JENKS CONSULTANTS 303 SECOND STREET SUITE 300 SOUTH SAN FRANCISCO, CA 94960	SOLANO TRANSPORTATION AUTHORITY ONE HARBOR CENTER, SUITE 130 SUISUN CITY, CA 94585

PLAN NORTH

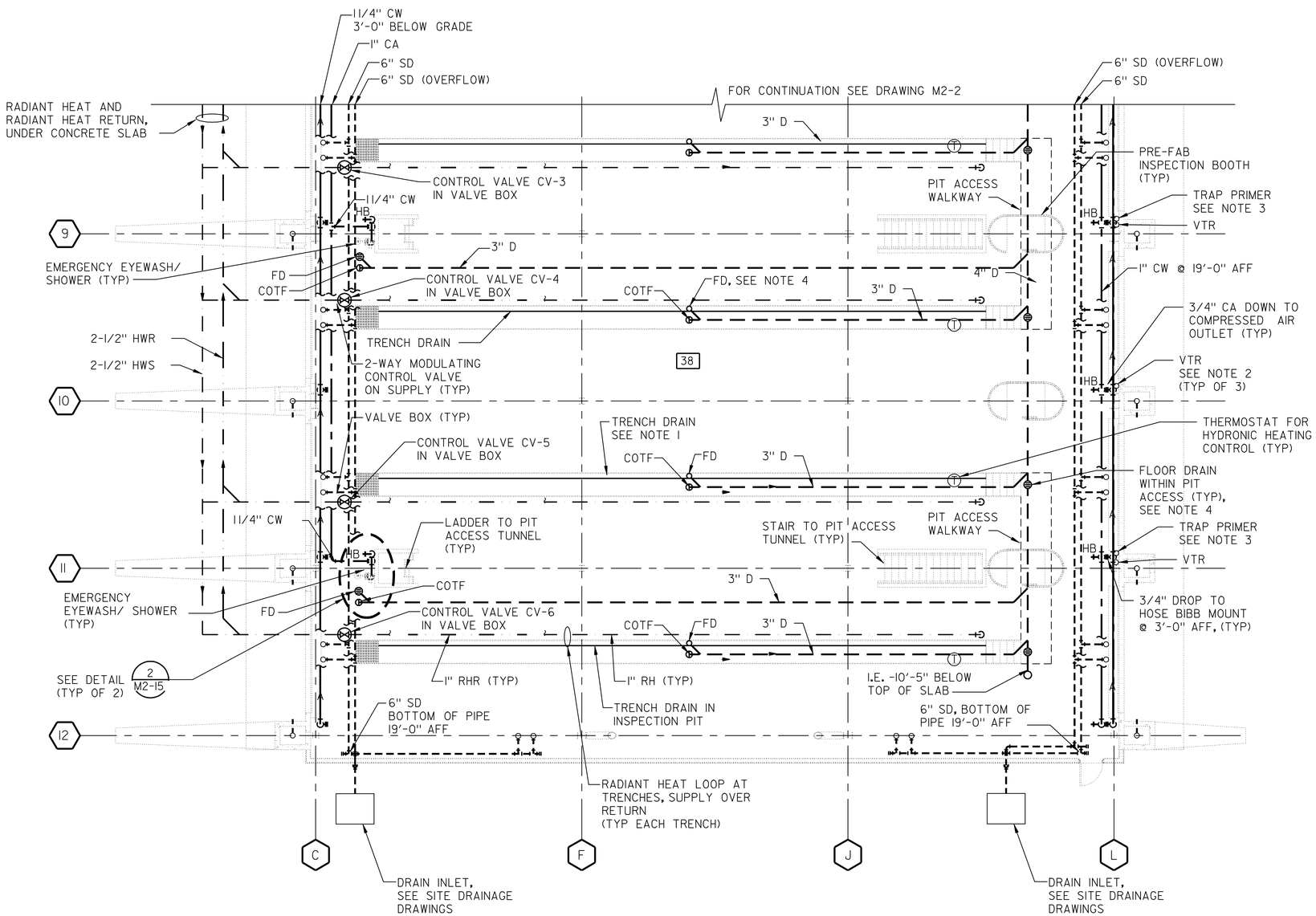

INSPECTION BAY PLUMBING PLAN SOUTH

SCALE: 1/8" = 1'-0"

NOTES:

1. SLOPE TRENCH DRAIN IN INSPECTION PITS AT 1/8" PER FOOT TOWARDS FLOOR DRAIN.

2. INSTALL VENTS FROM FLOOR DRAINS TO LOCATIONS OF VENT THROUGH ROOF RISERS. VENT PIPING IS NOT SHOWN ON PLANS.

3. PLUMB TRAP PRIMERS TO FLOOR DRAINS IN THE INSPECTION PIT TRENCHES AND ACCESS WALKWAYS. PIPING BETWEEN TRAP PRIMER AND FLOOR DRAINS IS NOT SHOWN ON THE PLANS.

4. FLOOR DRAINS IN INSPECTION BAY TRENCHES SHALL BE EQUIPPED WITH A GRIT TRAP.

5. HEATING SYSTEM SHOWN IS TYPICAL FOR EACH INSPECTION BAY.

CALIFORNIA STATE FIRE MARSHAL APPROVED

Approval of this plan does not authorize or approve any omission or deviation from applicable regulations. Final approval is subject to field inspection. One set of approved plans shall be available on the project site at all times.

Reviewed by: Hans Henneberque 5/9/11
Hans Henneberque
Senior Deputy State Fire Marshal

IDENTIFICATION STAMP DIV. OF THE STATE ARCHITECT
02 111744
AC ARCHS — SS —
DATE 5-9-11

	BY	CHECKED
DESIGN	S. NEPRUD	Z. HARRIS
DETAILS	S. NEPRUD	Z. HARRIS
QUANTITIES	S. NEPRUD	Z. HARRIS

PREPARED FOR THE STATE OF CALIFORNIA DEPARTMENT OF TRANSPORTATION

DIVISION OF ENGINEERING SERVICES
ELECTRICAL-MECHANICAL-WATER AND WASTEWATER DESIGN

BRIDGE NO. 23W000IR
POST MILE 14.8

EASTBOUND CORDELIA CVEF

CVEF — INSPECTION BAY PLUMBING PLAN-SOUTH

SHEET M2-3

40a535wdm2-03.dgn
DOES SD imperial Rev.1/07 18-MAY-2011 07:41

ORIGINAL SCALE IN INCHES FOR REDUCED PLANS 0 1 2 3

CU 04264
EA 0A5351

DISREGARD PRINTS BEARING EARLIER REVISION DATES → 10/19/09 03/22/10 05/06/10 08/23/10 11/22/10 05/03/11

REVISION DATES (PRELIMINARY STAGE ONLY) SHEET OF

18-MAY-2011 07:41

40a535wdm2-03.dgn

DIST.	COUNTY	ROUTE	POST MILES TOTAL PROJECT	SHEET NO.	TOTAL SHEETS
04	Sol	12,80	L1.8/L2.0, 13.3/15.7	666	740

REGISTERED MECHANICAL ENGINEER — 05/03/11 DATE

REGISTERED PROFESSIONAL ENGINEER — SEAN E NEPRUD — No. M33458 — Exp. 06/30/12 — MECH — STATE OF CALIFORNIA

5-16-11
PLANS APPROVAL DATE

The State of California or its officers or agents shall not be responsible for the accuracy or completeness of electronic copies of this plan sheet.

KENNEDY/JENKS CONSULTANTS
303 SECOND STREET
SUITE 300 SOUTH
SAN FRANCISCO, CA 94960

SOLANO TRANSPORTATION AUTHORITY
ONE HARBOR CENTER, SUITE 130
SUISUN CITY, CA 94585

CALIFORNIA STATE FIRE MARSHAL
APPROVED

Approval of this plan does not authorize or approve any omission or deviation from applicable regulations. Final approval is subject to field inspection. One set of approved plans shall be available on the project site at all times.

Reviewed by: Hans Henneberque 5/9/11
Hans Henneberque
Senior Deputy State Fire Marshal

LEGEND

- COLD WATER (CW, W)
- HOT WATER (HW)
- RADIANT HEAT (RH)
- RADIANT HEAT RETURN (RHR)
- DRAIN (D)
- STORM DRAIN (SD)
- A — COMPRESSED AIR (CA)
- NG — NATURAL GAS (NG)

PLAN NORTH

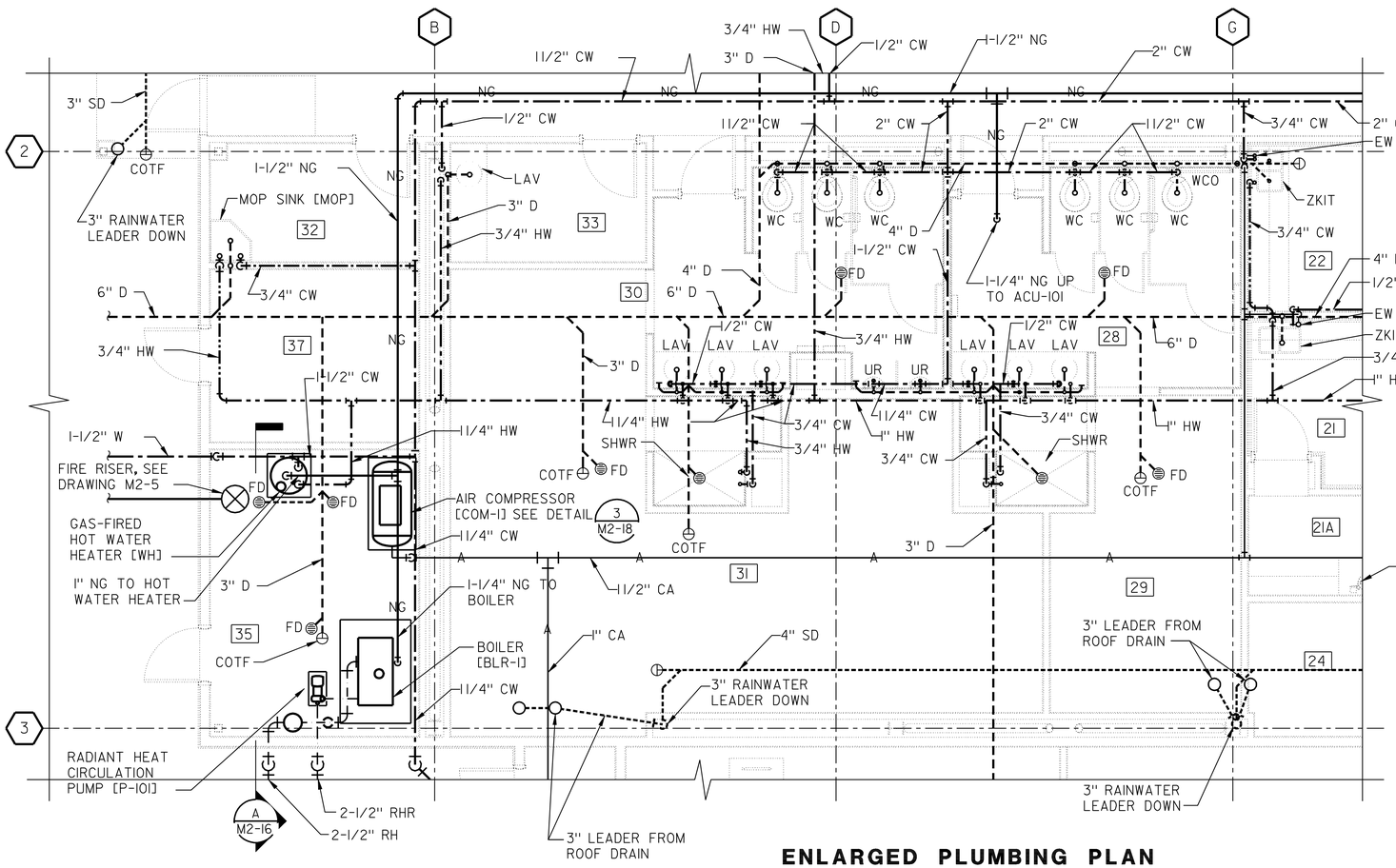

ENLARGED PLUMBING PLAN

SCALE: 1/4" = 1'-0"

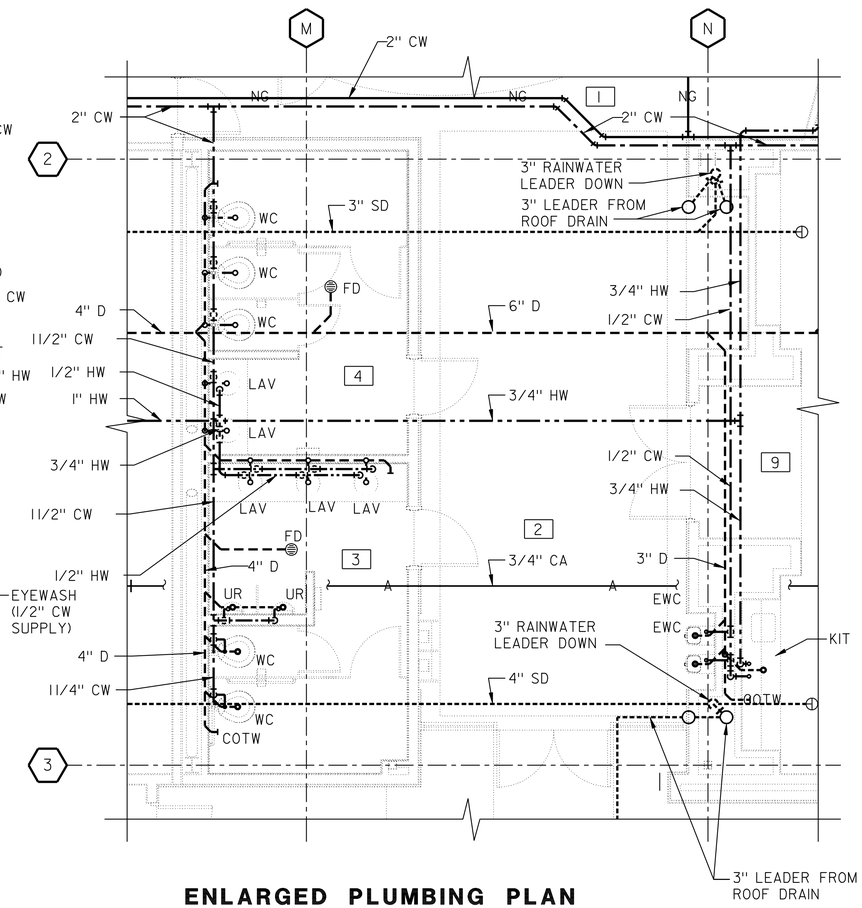

ENLARGED PLUMBING PLAN

SCALE: 1/4" = 1'-0"

IDENTIFICATION STAMP DIV. OF THE STATE ARCHITECT
02 1117 44
AC ALS SS
DATE 5-5-11

	BY	CHECKED
DESIGN	S. NEPRUD	Z. HARRIS
DETAILS	S. NEPRUD	Z. HARRIS
QUANTITIES	S. NEPRUD	Z. HARRIS

PREPARED FOR THE STATE OF CALIFORNIA DEPARTMENT OF TRANSPORTATION

DIVISION OF ENGINEERING SERVICES
ELECTRICAL-MECHANICAL-WATER AND WASTEWATER DESIGN

BRIDGE NO. 23W000IR
POST MILE 14.8

EASTBOUND CORDELIA CVEF

CVEF — ENLARGED PLUMBING PLANS

SHEET **M2-4**

40a535wdm2-04.dgn
DOES SD imperial Rev.1/07 18-MAY-2011 07:41

ORIGINAL SCALE IN INCHES FOR REDUCED PLANS 0 1 2 3

CU 04264
EA 0A5351

DISREGARD PRINTS BEARING EARLIER REVISION DATES → REVISION DATES (PRELIMINARY STAGE ONLY) 10/14/09 03/22/10 05/06/10 08/23/10 11/22/10 05/03/11 SHEET OF

18-MAY-2011 07:41
40a535wdm2-04.dgn

DIST.	COUNTY	ROUTE	POST MILES TOTAL PROJECT	SHEET NO.	TOTAL SHEETS
04	Sol	12,80	L1.8/L2.0, 13.3/15.7	667	740

REGISTERED MECHANICAL ENGINEER — 05/03/11 DATE

REGISTERED PROFESSIONAL ENGINEER — SEAN E NEPRUD — No. M33458 — Exp. 06/30/12 — MECH — STATE OF CALIFORNIA

5-16-11
PLANS APPROVAL DATE

The State of California or its officers or agents shall not be responsible for the accuracy or completeness of electronic copies of this plan sheet.

KENNEDY/JENKS CONSULTANTS
303 SECOND STREET
SUITE 300 SOUTH
SAN FRANCISCO, CA 94960

SOLANO TRANSPORTATION AUTHORITY
ONE HARBOR CENTER, SUITE 130
SUISUN CITY, CA 94585

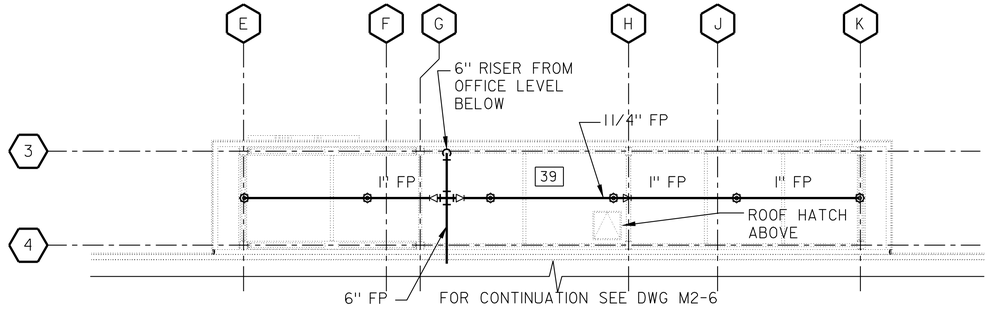

MECHANICAL ROOM FIRE PROTECTION PLAN

SCALE: 1/8" = 1'-0"

PLAN NORTH

CALIFORNIA STATE FIRE MARSHAL APPROVED

Approval of this plan does not authorize or approve any omission or deviation from applicable regulations. Final approval is subject to field inspection. One set of approved plans shall be available on the project site at all times.

Reviewed by: Hans Henneberque — 5/9/11
Hans Henneberque
Senior Deputy State Fire Marshal

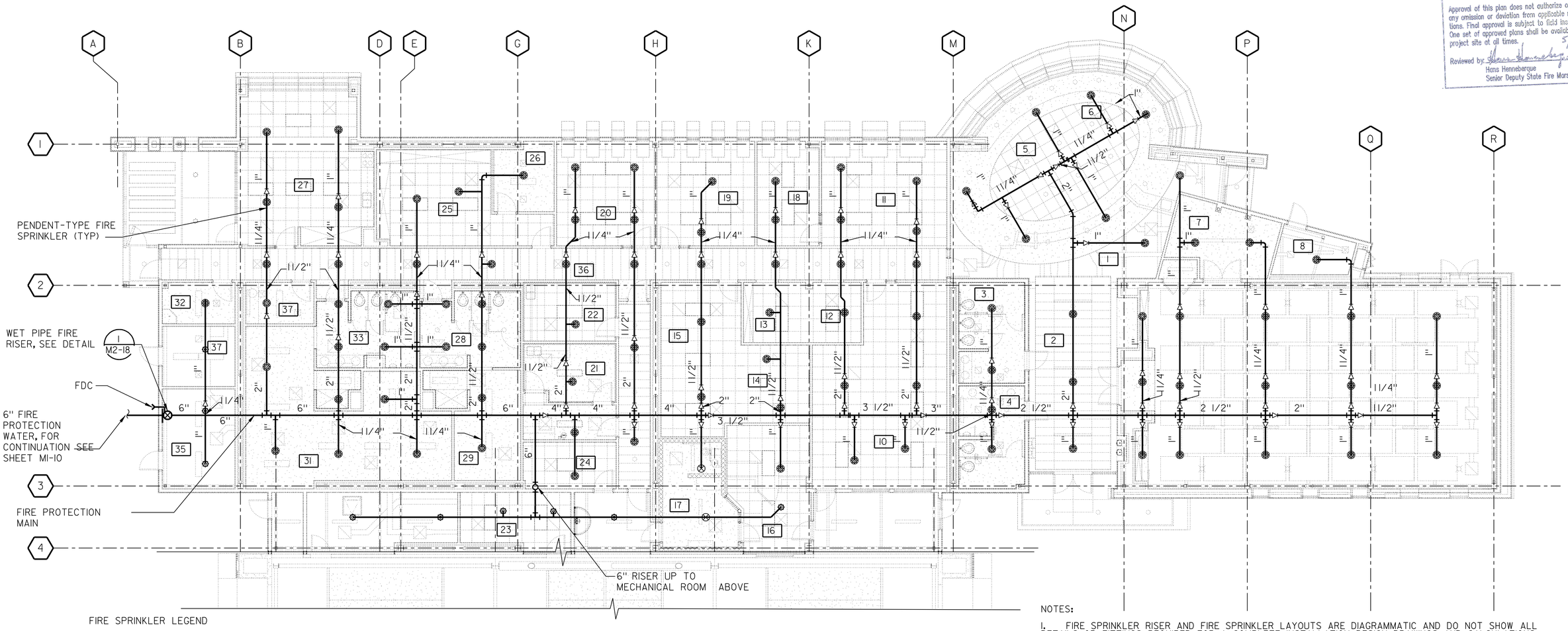

OFFICE FIRE PROTECTION PLAN

SCALE: 1/8" = 1'-0"

FIRE SPRINKLER LEGEND

- UPRIGHT-TYPE FIRE SPRINKLER
- RECESSED PENDANT-TYPE FIRE SPRINKLER
- INSTITUTIONAL PENDANT-TYPE FIRE SPRINKLER

NOTES:

1. FIRE SPRINKLER RISER AND FIRE SPRINKLER LAYOUTS ARE DIAGRAMMATIC AND DO NOT SHOW ALL DETAILS OR FITTINGS REQUIRED FOR A COMPLETE INSTALLATION. DESIGN DRAWINGS AND CALCULATIONS, AND SEISMIC BRACING REQUIREMENTS SHALL BE SUBMITTED FOR APPROVAL BY A LICENSED FIRE PROTECTION ENGINEER.
2. LOCATE SPRINKLER HEADS IN CENTER OF CEILING PANELS.

IDENTIFICATION STAMP DIV. OF THE STATE ARCHITECT
02 111744
ACP ELS SS
DATE

	BY	CHECKED
DESIGN	S. NEPRUD	Z. HARRIS
DETAILS	S. NEPRUD	Z. HARRIS
QUANTITIES	S. NEPRUD	Z. HARRIS

PREPARED FOR THE STATE OF CALIFORNIA DEPARTMENT OF TRANSPORTATION

DIVISION OF ENGINEERING SERVICES
ELECTRICAL-MECHANICAL-WATER AND WASTEWATER DESIGN

BRIDGE NO. 23W000IR
POST MILE 14.8

EASTBOUND CORDELIA CVEF

CVEF — OFFICE FIRE PROTECTION PLAN

SHEET M2-5

40a535wdm2-05.dgn
DOES SD imperial Rev. 1/07 18-MAY-2011 07:41

ORIGINAL SCALE IN INCHES FOR REDUCED PLANS 0 1 2 3

CU 04264
EA 0A5351

DISREGARD PRINTS BEARING EARLIER REVISION DATES → 10/19/09 03/22/10 05/06/10 08/23/10 11/22/10 05/03/11

REVISION DATES (PRELIMINARY STAGE ONLY) SHEET OF

18-MAY-2011 07:41

40a535wdm2-05.dgn

DIST.	COUNTY	ROUTE	POST MILES TOTAL PROJECT	SHEET NO.	TOTAL SHEETS
04	Sol	12,80	L1.8/L2.0, 13.3/15.7	668	740

REGISTERED MECHANICAL ENGINEER — 05/03/11 DATE

REGISTERED PROFESSIONAL ENGINEER SEAN E NEPRUD No. M33458 Exp. 06/30/12 MECH STATE OF CALIFORNIA

5-16-11
PLANS APPROVAL DATE

The State of California or its officers or agents shall not be responsible for the accuracy or completeness of electronic copies of this plan sheet.

KENNEDY/JENKS CONSULTANTS
303 SECOND STREET
SUITE 300 SOUTH
SAN FRANCISCO, CA 94960

SOLANO TRANSPORTATION AUTHORITY
ONE HARBOR CENTER, SUITE 130
SUISUN CITY, CA 94585

PLAN NORTH

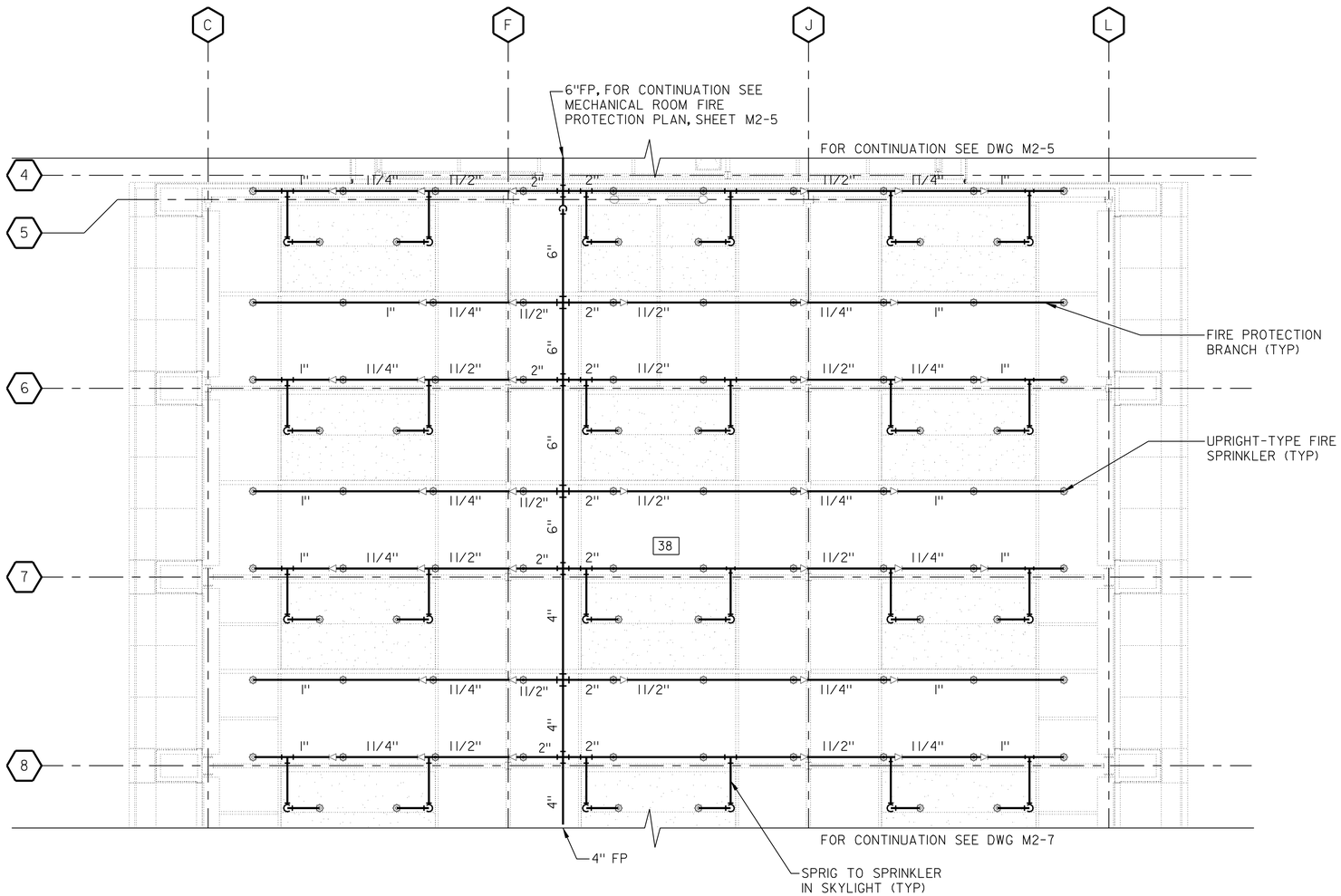

INSPECTION BAY FIRE PROTECTION PLAN NORTH

SCALE: 1/8" = 1'-0"

NOTES:

1. FIRE SPRINKLER RISER AND FIRE SPRINKLER LAYOUTS ARE DIAGRAMMATIC AND DO NOT SHOW ALL DETAILS OR FITTINGS REQUIRED FOR A COMPLETE INSTALLATION. DESIGN DRAWINGS AND CALCULATIONS, AND SEISMIC BRACING REQUIREMENTS SHALL BE SUBMITTED FOR APPROVAL BY A LICENSED FIRE PROTECTION ENGINEER.

2. BIRD NETTING IS SUSPENDED FROM THE CEILING. SEE ARCHITECTURAL DRAWINGS. COORDINATE SPRINKLER PLACEMENT WITH NETTING.

FIRE SPRINKLER LEGEND

- UPRIGHT-TYPE FIRE SPRINKLER
- RECESSED PENDANT-TYPE FIRE SPRINKLER

CALIFORNIA STATE FIRE MARSHAL APPROVED

Approval of this plan does not authorize or approve any omission or deviation from applicable regulations. Final approval is subject to field inspection. One set of approved plans shall be available on the project site at all times.

Reviewed by: 5/9/11
Hans Henneberque
Senior Deputy State Fire Marshal

IDENTIFICATION STAMP DIV. OF THE STATE ARCHITECT
02 111744
AC ARCHALS — SS —
DATE 5-9-11

DESIGN	BY S. NEPRUD	CHECKED Z. HARRIS	
DETAILS	BY S. NEPRUD	CHECKED Z. HARRIS	
QUANTITIES	BY S. NEPRUD	CHECKED Z. HARRIS	

PREPARED FOR THE STATE OF CALIFORNIA DEPARTMENT OF TRANSPORTATION

DIVISION OF ENGINEERING SERVICES
ELECTRICAL-MECHANICAL-WATER AND WASTEWATER DESIGN

BRIDGE NO. 23W000IR
POST MILE 14.8

EASTBOUND CORDELIA CVEF

CVEF

INSPECTION BAY FIRE PROTECTION PLAN-NORTH

SHEET M2-6

40a535wdm2-06.dgn
DOES SD Imperial Rev.1/07 18-MAY-2011 07:41

ORIGINAL SCALE IN INCHES FOR REDUCED PLANS 0 1 2 3

CU 04264
EA 0A5351

DISREGARD PRINTS BEARING EARLIER REVISION DATES → 10/19/09 03/22/10 05/06/10 08/23/10 11/22/10 05/03/11

REVISION DATES (PRELIMINARY STAGE ONLY) SHEET OF

18-MAY-2011 07:41

40a535wdm2-06.dgn

DIST.	COUNTY	ROUTE	POST MILES TOTAL PROJECT	SHEET NO.	TOTAL SHEETS
04	Sol	12,80	L1.8/L2.0, 13.3/15.7	669	740

REGISTERED MECHANICAL ENGINEER — 05/03/11 DATE

REGISTERED PROFESSIONAL ENGINEER SEAN E NEPRUD No. M33458 Exp. 06/30/12 MECH STATE OF CALIFORNIA

5-16-11
PLANS APPROVAL DATE

The State of California or its officers or agents shall not be responsible for the accuracy or completeness of electronic copies of this plan sheet.

KENNEDY/JENKS CONSULTANTS
303 SECOND STREET
SUITE 300 SOUTH
SAN FRANCISCO, CA 94960

SOLANO TRANSPORTATION AUTHORITY
ONE HARBOR CENTER, SUITE 130
SUISUN CITY, CA 94585

PLAN NORTH

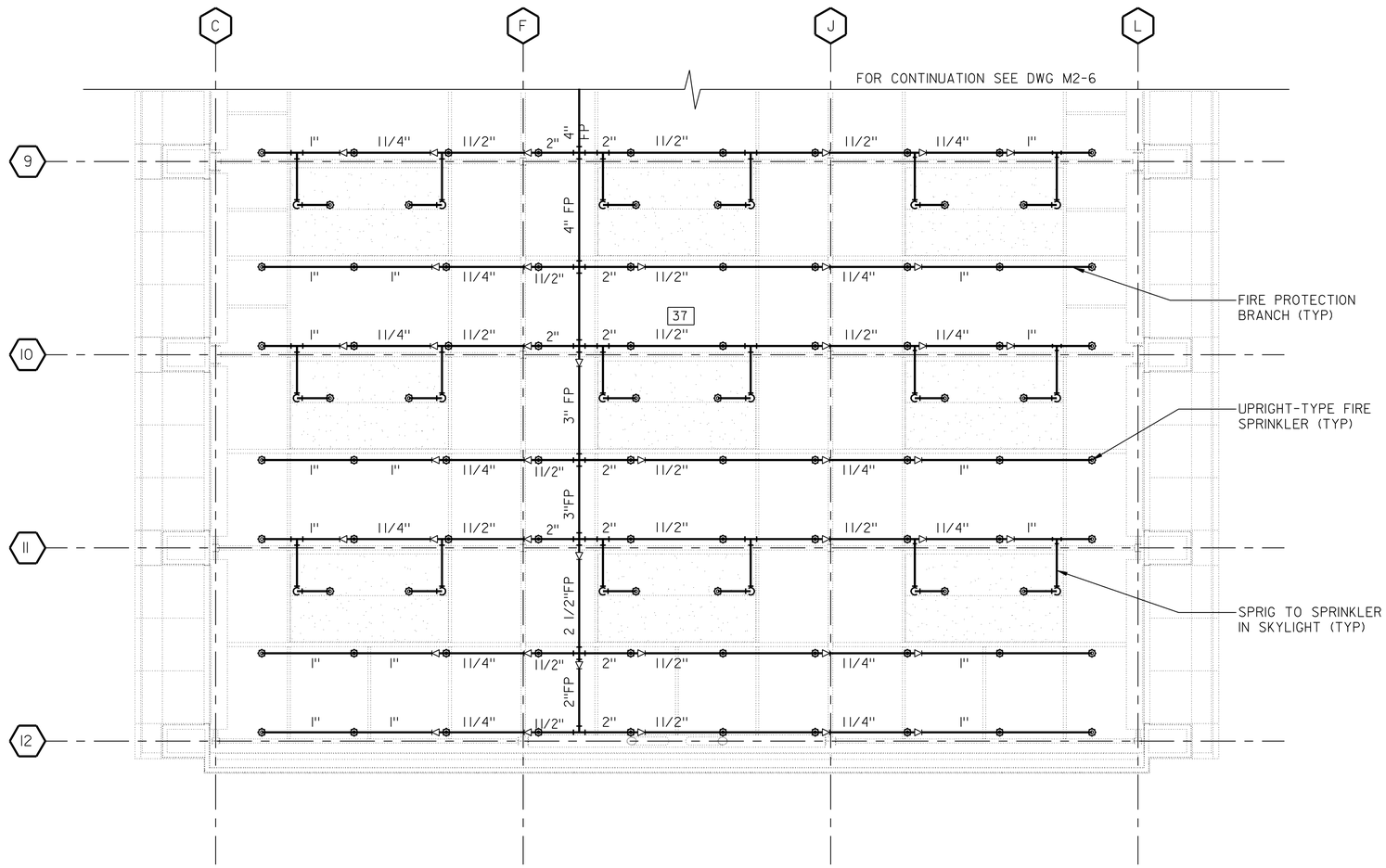

INSPECTION BAY FIRE PROTECTION PLAN SOUTH

SCALE: 1/8" = 1'-0"

NOTES:

1. FIRE SPRINKLER RISER AND FIRE SPRINKLER LAYOUTS ARE DIAGRAMMATIC AND DO NOT SHOW ALL DETAILS OR FITTINGS REQUIRED FOR A COMPLETE INSTALLATION. DESIGN DRAWINGS AND CALCULATIONS, AND SEISMIC BRACING REQUIREMENTS SHALL BE SUBMITTED FOR APPROVAL BY A LICENSED FIRE PROTECTION ENGINEER.

2. BIRD NETTING IS SUSPENDED FROM THE CEILING. SEE ARCHITECTURAL DRAWINGS. COORDINATE SPRINKLER PLACEMENT WITH NETTING.

FIRE SPRINKLER LEGEND

- UPRIGHT-TYPE FIRE SPRINKLER
- RECESSED PENDANT-TYPE FIRE SPRINKLER

CALIFORNIA STATE FIRE MARSHAL
APPROVED

Approval of this plan does not authorize or approve any omission or deviation from applicable regulations. Final approval is subject to field inspection. One set of approved plans shall be available on the project site at all times.

Reviewed by: 5/9/11
Hans Henneberque
Senior Deputy State Fire Marshal

IDENTIFICATION STAMP
DIV. OF THE STATE ARCHITECT
02 111744
AC ARCH ELS — SS —
DATE 5-5-11

	BY	CHECKED
DESIGN	S. NEPRUD	Z. HARRIS
DETAILS	S. NEPRUD	Z. HARRIS
QUANTITIES	S. NEPRUD	Z. HARRIS

PREPARED FOR THE STATE OF CALIFORNIA DEPARTMENT OF TRANSPORTATION

DIVISION OF ENGINEERING SERVICES
ELECTRICAL-MECHANICAL-WATER AND WASTEWATER DESIGN

BRIDGE NO. 23W0001R
POST MILE 14.8

EASTBOUND CORDELIA CVEF

CVEF — INSPECTION BAY FIRE PROTECTION PLAN-SOUTH

SHEET M2-7

40a535wdm2-07.dgn
DOES SD Imperial Rev.1/07 18-MAY-2011 07:42

ORIGINAL SCALE IN INCHES FOR REDUCED PLANS 0 1 2 3

CU 04264
EA 0A5351

DISREGARD PRINTS BEARING EARLIER REVISION DATES → REVISION DATES (PRELIMINARY STAGE ONLY) 10/18/09 03/22/10 05/06/10 08/23/10 11/22/10 05/03/11 SHEET OF

18-MAY-2011 07:42
40a535wdm2-07.dgn

DIST.	COUNTY	ROUTE	POST MILES TOTAL PROJECT	SHEET NO.	TOTAL SHEETS
04	Sol	12,80	L1.8/L2.0, 13.3/15.7	670	740

REGISTERED MECHANICAL ENGINEER — 05/03/11 DATE

REGISTERED PROFESSIONAL ENGINEER SEAN E NEPRUD No. M33458 Exp. 06/30/12 MECH STATE OF CALIFORNIA

5-16-11
PLANS APPROVAL DATE

The State of California or its officers or agents shall not be responsible for the accuracy or completeness of electronic copies of this plan sheet.

KENNEDY/JENKS CONSULTANTS
303 SECOND STREET
SUITE 300 SOUTH
SAN FRANCISCO, CA 94960

SOLANO TRANSPORTATION AUTHORITY
ONE HARBOR CENTER, SUITE 130
SUISUN CITY, CA 94585

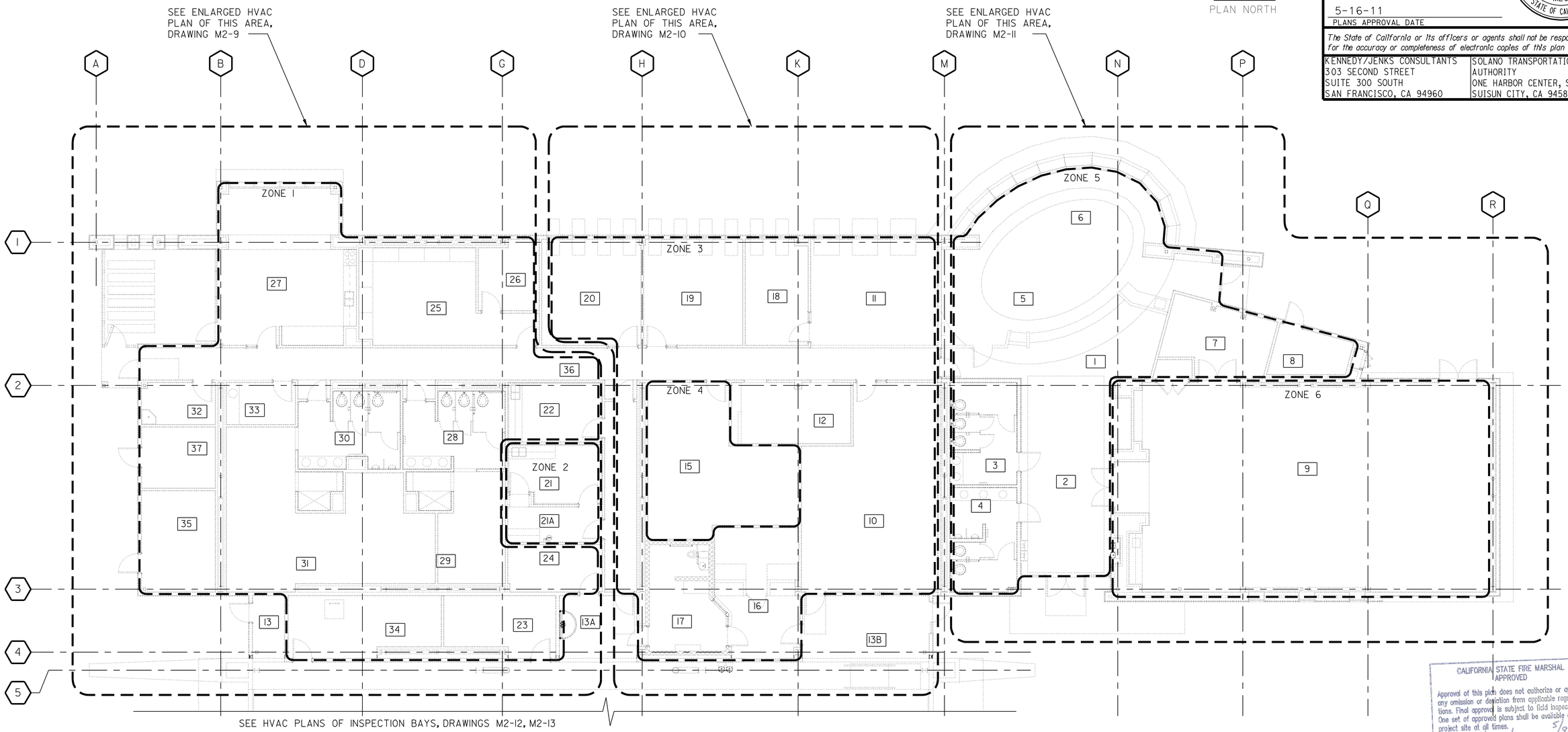

OFFICE HVAC KEY PLAN

SCALE: 1/8" = 1'-0"

CALIFORNIA STATE FIRE MARSHAL APPROVED

Approval of this plan does not authorize or approve any omission or deviation from applicable regulations. Final approval is subject to field inspection. One set of approved plans shall be available on the project site at all times.

Reviewed by: Hans Henneberque 5/9/11
Hans Henneberque
Senior Deputy State Fire Marshal

IDENTIFICATION STAMP DIV. OF THE STATE ARCHITECT
02 111744
AC Acevas — SS —
DATE 5-11

	BY	CHECKED
DESIGN	S. NEPRUD	Z. HARRIS
DETAILS	S. NEPRUD	Z. HARRIS
QUANTITIES	S. NEPRUD	Z. HARRIS

PREPARED FOR THE STATE OF CALIFORNIA DEPARTMENT OF TRANSPORTATION

DIVISION OF ENGINEERING SERVICES
ELECTRICAL-MECHANICAL-WATER AND WASTEWATER DESIGN

BRIDGE NO. 23W000IR
POST MILE 14.8

EASTBOUND CORDELIA CVEF

CVEF — OFFICE HVAC KEY PLAN

SHEET **M2-8**

40a535wdm2-08.dgn
DOES SD imperial Rev.1/07 18-MAY-2011 07:42

ORIGINAL SCALE IN INCHES FOR REDUCED PLANS 0 1 2 3

CU 04264
EA 0A5351

DISREGARD PRINTS BEARING EARLIER REVISION DATES → 10/19/09 03/22/10 05/06/10 08/23/10 11/22/10 05/03/11

REVISION DATES (PRELIMINARY STAGE ONLY) SHEET OF

18-MAY-2011 07:42
40a535wdm2-08.dgn

DIST.	COUNTY	ROUTE	POST MILES TOTAL PROJECT	SHEET NO.	TOTAL SHEETS
04	Sol	12,80	L1.8/L2.0, 13.3/15.7	671	740

REGISTERED MECHANICAL ENGINEER — 05/03/11 DATE

REGISTERED PROFESSIONAL ENGINEER — SEAN E NEPRUD — No. M33458 — Exp. 06/30/12 — MECH — STATE OF CALIFORNIA

5-16-11
PLANS APPROVAL DATE

The State of California or its officers or agents shall not be responsible for the accuracy or completeness of electronic copies of this plan sheet.

KENNEDY/JENKS CONSULTANTS
303 SECOND STREET
SUITE 300 SOUTH
SAN FRANCISCO, CA 94960

SOLANO TRANSPORTATION AUTHORITY
ONE HARBOR CENTER, SUITE 130
SUISUN CITY, CA 94585

PLAN NORTH

CALIFORNIA STATE FIRE MARSHAL APPROVED

Approval of this plan does not authorize or approve any omission or deviation from applicable regulations. Final approval is subject to field inspection. One set of approved plans shall be available on the project site at all times.

Reviewed by: Hans Henneberque 5/9/11
Hans Henneberque
Senior Deputy State Fire Marshal

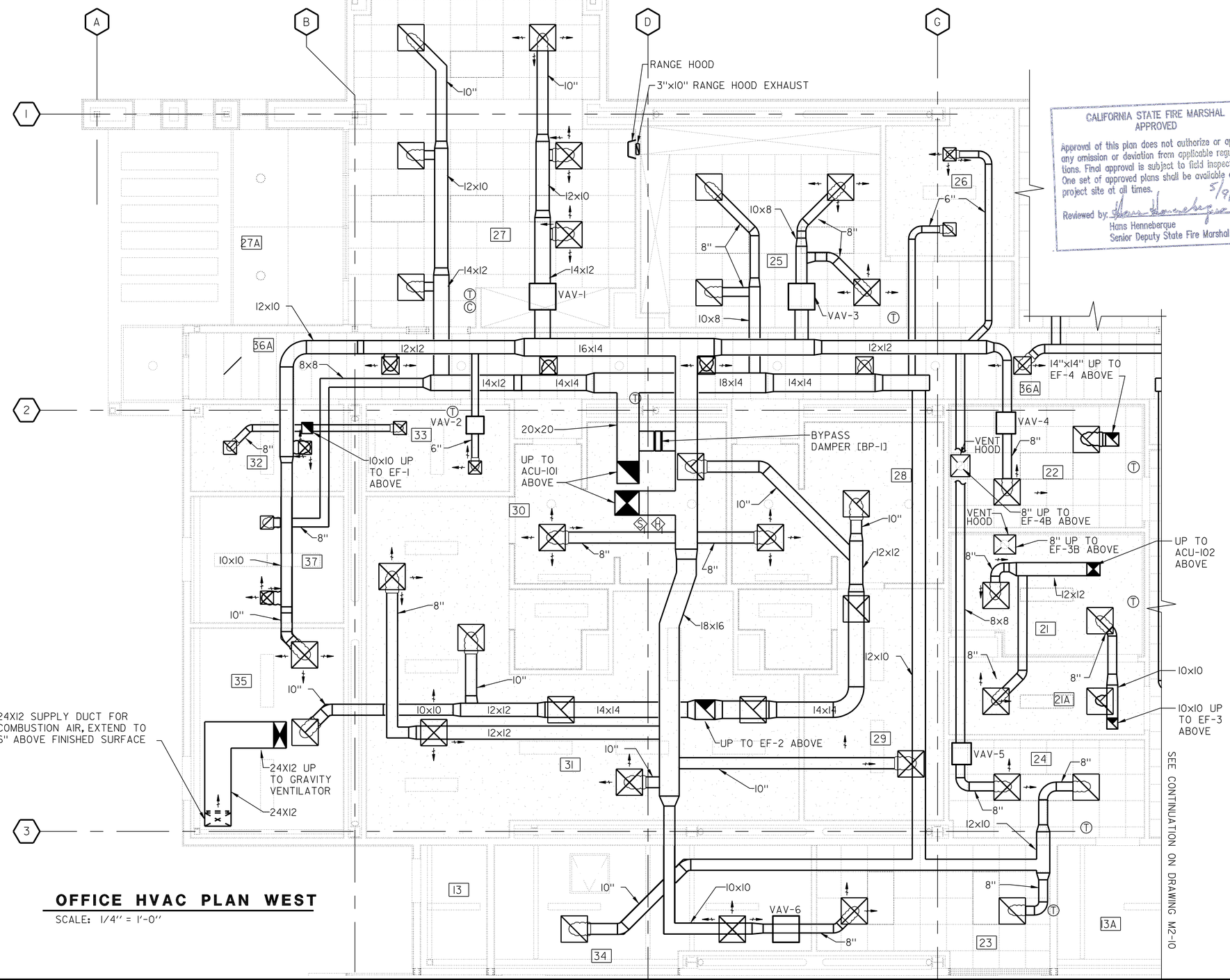

OFFICE HVAC PLAN WEST

SCALE: 1/4" = 1'-0"

NOTES:

1. WHERE MULTIPLE SUPPLY OR RETURN REGISTERS ARE SHOWN WITHIN A ROOM, DIVIDE ROOM AIRFLOW EQUALLY.

2. REFER TO SHEET M0-4 FOR GENERAL HVAC NOTES.

3. VOLUME DAMPERS REQUIRED AT EACH DUCT BRANCH TO DIFFUSER OR REGISTER. SEE DETAIL ON DRAWING M2-18.

4. WHEN THE VENT HOOD IN ROOM 22 IS TURNED ON, START EF-4B, AND TURN OFF EF-4. WHEN THE VENT HOOD IS TURNED OFF, TURN OFF EF-4B AND START EF-4.

5. WHEN THE VENT HOOD IN ROOM 21 IS TURNED ON, START EF-3B, AND TURN OFF EF-3. WHEN THE VENT HOOD IS TURNED OFF, TURN OFF EF-3B AND START EF-3.

AIRFLOW SCHEDULE (SEE NOTE 1)

ROOM NUMBER	SUPPLY [CFM] MINIMUM	SUPPLY [CFM] MAXIMUM	RETURN	EXHAUST	REGISTER/ DIFFUSER SIZE
13	--	--	--	--	--
21/21A	440	440	--	440	24X24
22	70	125	--	125	24X24
23	85	145	145	--	24X24
24	60	115	115	--	24X24
25	170	250	250	--	24X24
26	70	70	70	--	12X12
27	310	1280	1280	--	24X24
28	130	130	--	130	24X24
29	195	195	--	195	24X24
30	125	125	--	125	24X24
31	455	455	--	455	24X24
32	70	70	--	70	12X12
33	55	100	--	100	12X12
34	145	145	145	--	24X24
35	120	120	--	120	24X24
36A	240	240	240	--	16X16
37	75	75	75	--	12X12

IDENTIFICATION STAMP DIV. OF THE STATE ARCHITECT
02 1117 44
AC ALS — SS —
DATE 5-5-11

	BY	CHECKED
DESIGN	S. NEPRUD	Z. HARRIS
DETAILS	S. NEPRUD	Z. HARRIS
QUANTITIES	S. NEPRUD	Z. HARRIS

PREPARED FOR THE STATE OF CALIFORNIA DEPARTMENT OF TRANSPORTATION

DIVISION OF ENGINEERING SERVICES
ELECTRICAL-MECHANICAL-WATER AND WASTEWATER DESIGN

BRIDGE NO. 23W000IR
POST MILE 14.8

EASTBOUND CORDELIA CVEF
CVEF — OFFICE HVAC PLAN-WEST

SHEET M2-9

40a535wdm2-09.dgn
DOES SD Imperial Rev.1/07 18-MAY-2011 07:42

ORIGINAL SCALE IN INCHES FOR REDUCED PLANS 0 1 2 3

CU 04264
EA 0A5351

DISREGARD PRINTS BEARING EARLIER REVISION DATES → REVISION DATES (PRELIMINARY STAGE ONLY) 10/14/09 03/22/10 05/06/10 08/23/10 11/22/10 05/03/11 SHEET OF

18-MAY-2011 07:42
40a535wdm2-09.dgn

DIST.	COUNTY	ROUTE	POST MILES TOTAL PROJECT	SHEET NO.	TOTAL SHEETS
04	Sol	12,80	L1.8/L2.0, 13.3/15.7	672	740

REGISTERED MECHANICAL ENGINEER — 05/03/11 DATE

REGISTERED PROFESSIONAL ENGINEER SEAN E NEPRUD No. M33458 Exp. 06/30/12 MECH STATE OF CALIFORNIA

5-16-11
PLANS APPROVAL DATE

The State of California or its officers or agents shall not be responsible for the accuracy or completeness of electronic copies of this plan sheet.

KENNEDY/JENKS CONSULTANTS
303 SECOND STREET
SUITE 300 SOUTH
SAN FRANCISCO, CA 94960

SOLANO TRANSPORTATION AUTHORITY
ONE HARBOR CENTER, SUITE 130
SUISUN CITY, CA 94585

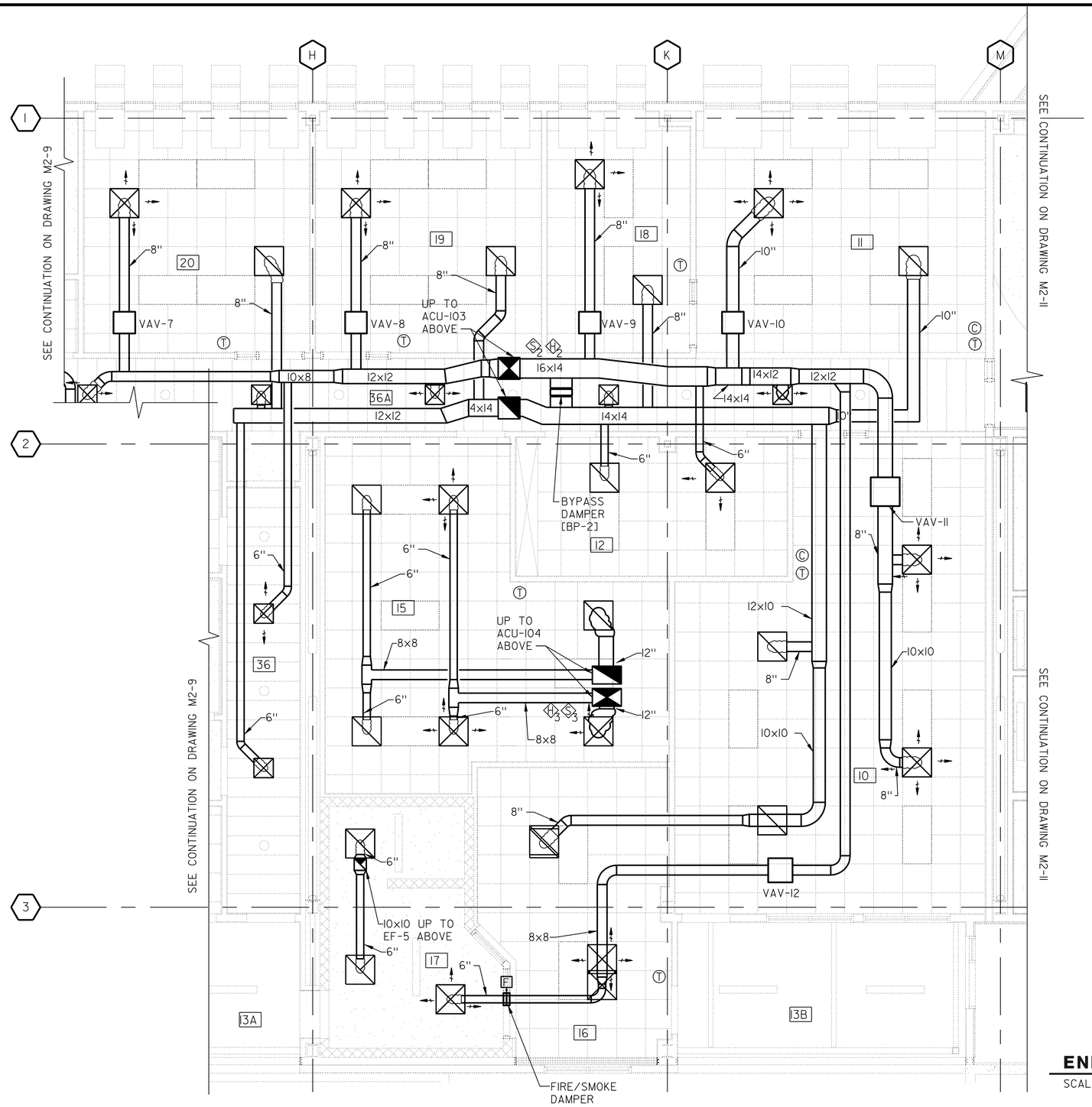

PLAN NORTH

NOTES:

1. WHERE MULTIPLE SUPPLY OR RETURN REGISTERS ARE SHOWN WITHIN A ROOM, DIVIDE ROOM AIRFLOW EQUALLY.

2. REFER TO SHEET MO-4 FOR GENERAL HVAC NOTES.

3. VOLUME DAMPERS REQUIRED AT EACH DUCT BRANCH TO DIFFUSER OR REGISTER. SEE DETAIL ON DRAWING M2-18.

AIRFLOW SCHEDULE (SEE NOTE 1)

ROOM NUMBER	SUPPLY [CFM] MINIMUM	SUPPLY [CFM] MAXIMUM	RETURN	EXHAUST	REGISTER/ DIFFUSER SIZE
10	280	465	465	--	24X24
11	150	330	330	--	24X24
12	80	120	120	--	24X24
13	--	--	--	--	--
15	750	750	750	--	24X24
16	95	180	180	--	24X24
17	80	110	--	110	24X24
18	90	180	180	--	24X24
19	120	240	240	--	24X24
20	120	255	255	--	24X24
36	125	125	125	--	24X24
36A	100	100	100	--	16X16

CALIFORNIA STATE FIRE MARSHAL APPROVED

Approval of this plan does not authorize or approve any omission or deviation from applicable regulations. Final approval is subject to field inspection. One set of approved plans shall be available on the project site at all times.

Reviewed by: Hans Henneberque 5/9/11
Hans Henneberque
Senior Deputy State Fire Marshal

IDENTIFICATION STAMP DIV. OF THE STATE ARCHITECT
02 111744
AC Details — SS —
DATE 5-5-11

ENLARGED OFFICE HVAC PLAN CENTRAL

SCALE: 1/4" = 1'-0"

	BY	CHECKED
DESIGN	S. NEPRUD	Z. HARRIS
DETAILS	S. NEPRUD	Z. HARRIS
QUANTITIES	S. NEPRUD	Z. HARRIS

PREPARED FOR THE STATE OF CALIFORNIA DEPARTMENT OF TRANSPORTATION

DIVISION OF ENGINEERING SERVICES
ELECTRICAL-MECHANICAL-WATER AND WASTEWATER DESIGN

BRIDGE NO. 23W000IR
POST MILE 14.8

EASTBOUND CORDELIA CVEF
CVEF — OFFICE HVAC PLAN-CENTRAL

SHEET M2-10

ORIGINAL SCALE IN INCHES FOR REDUCED PLANS 0 1 2 3

CU 04264
EA 0A5351

DISREGARD PRINTS BEARING EARLIER REVISION DATES → 10/19/09 03/22/10 05/06/10 08/23/10 11/22/10 05/03/11

REVISION DATES (PRELIMINARY STAGE ONLY) SHEET OF

40a535wdm2-10.dgn
DOES SD Imperial Rev.1/07 18-MAY-2011 07:42

18-MAY-2011 07:42
40a535wdm2-10.dgn

DIST.	COUNTY	ROUTE	POST MILES TOTAL PROJECT	SHEET NO.	TOTAL SHEETS
04	Sol	12,80	L1.8/L2.0, 13.3/15.7	673	740

REGISTERED MECHANICAL ENGINEER — 05/03/11 DATE

REGISTERED PROFESSIONAL ENGINEER SEAN E NEPRUD No. M33458 Exp. 06/30/12 MECH STATE OF CALIFORNIA

5-16-11
PLANS APPROVAL DATE

The State of California or its officers or agents shall not be responsible for the accuracy or completeness of electronic copies of this plan sheet.

KENNEDY/JENKS CONSULTANTS
303 SECOND STREET
SUITE 300 SOUTH
SAN FRANCISCO, CA 94960

SOLANO TRANSPORTATION AUTHORITY
ONE HARBOR CENTER, SUITE 130
SUISUN CITY, CA 94585

PLAN NORTH

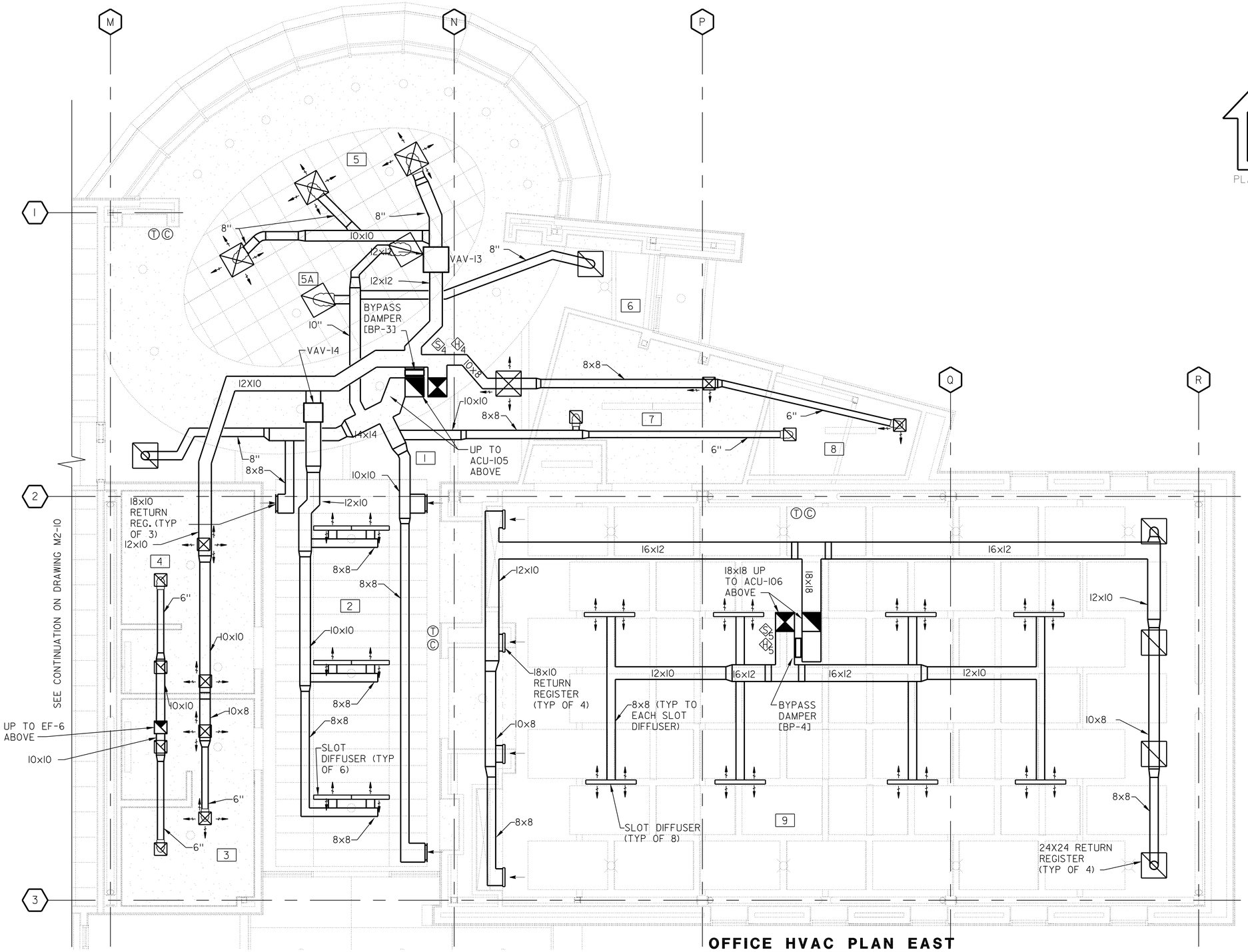

OFFICE HVAC PLAN EAST

SCALE: 1/4" = 1'-0"

NOTES:

1. WHERE MULTIPLE SUPPLY OR RETURN REGISTERS ARE SHOWN WITHIN A ROOM, DIVIDE ROOM AIRFLOW EQUALLY.
2. REFER TO SHEET M0-4 FOR GENERAL HVAC NOTES.
3. VOLUME DAMPERS REQUIRED AT EACH DUCT BRANCH TO DIFFUSER OR REGISTER. SEE DETAIL ON DRAWING M2-18.

AIRFLOW SCHEDULE (SEE NOTE 1)

ROOM NUMBER	SUPPLY [CFM] MINIMUM	SUPPLY [CFM] MAXIMUM	RETURN	EXHAUST	REGISTER/ DIFFUSER SIZE
1	100	100	100	--	24X24
2	430	740	740	--	AS NOTED
3	160	160	--	160	12X12
4	140	140	--	140	12X12
5	350	920	920	--	24X24
6	--	--	--	--	24X24
7	115	115	115	--	12X12
8	90	90	90	--	12X12
9	1600	3060	3060	--	AS SHOWN

CALIFORNIA STATE FIRE MARSHAL APPROVED
Approval of this plan does not authorize or approve any omission or deviation from applicable regulations. Final approval is subject to field inspection. One set of approved plans shall be available on the project site at all times.
Reviewed by: Hans Henneberque 5/9/11
Hans Henneberque
Senior Deputy State Fire Marshal

IDENTIFICATION STAMP DIV. OF THE STATE ARCHITECT
02 1117 44
ACCESS CLS — SS
DATE 05-11

	BY	CHECKED
DESIGN	S. NEPRUD	Z. HARRIS
DETAILS	S. NEPRUD	Z. HARRIS
QUANTITIES	S. NEPRUD	Z. HARRIS

PREPARED FOR THE STATE OF CALIFORNIA DEPARTMENT OF TRANSPORTATION

DIVISION OF ENGINEERING SERVICES
ELECTRICAL-MECHANICAL-WATER AND WASTEWATER DESIGN

BRIDGE NO. 23W000IR
POST MILE 14.8

EASTBOUND CORDELIA CVEF
CVEF — OFFICE HVAC PLAN-EAST

SHEET M2-11

40a535wdm2-11.dgn
DOES SD Imperial Rev.1/07 18-MAY-2011 07:42

ORIGINAL SCALE IN INCHES FOR REDUCED PLANS 0 1 2 3

CU 04264
EA 0A5351

DISREGARD PRINTS BEARING EARLIER REVISION DATES → 10/19/09 03/22/10 05/06/10 08/23/10 11/22/10 05/03/11

REVISION DATES (PRELIMINARY STAGE ONLY) SHEET OF

18-MAY-2011 07:42
40a535wdm2-11.dgn

DIST.	COUNTY	ROUTE	POST MILES TOTAL PROJECT	SHEET NO.	TOTAL SHEETS
04	Sol	12,80	L1.8/L2.0, 13.3/15.7	674	740

REGISTERED MECHANICAL ENGINEER — 05/03/11 DATE

REGISTERED PROFESSIONAL ENGINEER SEAN E NEPRUD No. M33458 Exp. 06/30/12 MECH STATE OF CALIFORNIA

5-16-11
PLANS APPROVAL DATE

The State of California or its officers or agents shall not be responsible for the accuracy or completeness of electronic copies of this plan sheet.

KENNEDY/JENKS CONSULTANTS
303 SECOND STREET
SUITE 300 SOUTH
SAN FRANCISCO, CA 94960

SOLANO TRANSPORTATION AUTHORITY
ONE HARBOR CENTER, SUITE 130
SUISUN CITY, CA 94585

PLAN NORTH

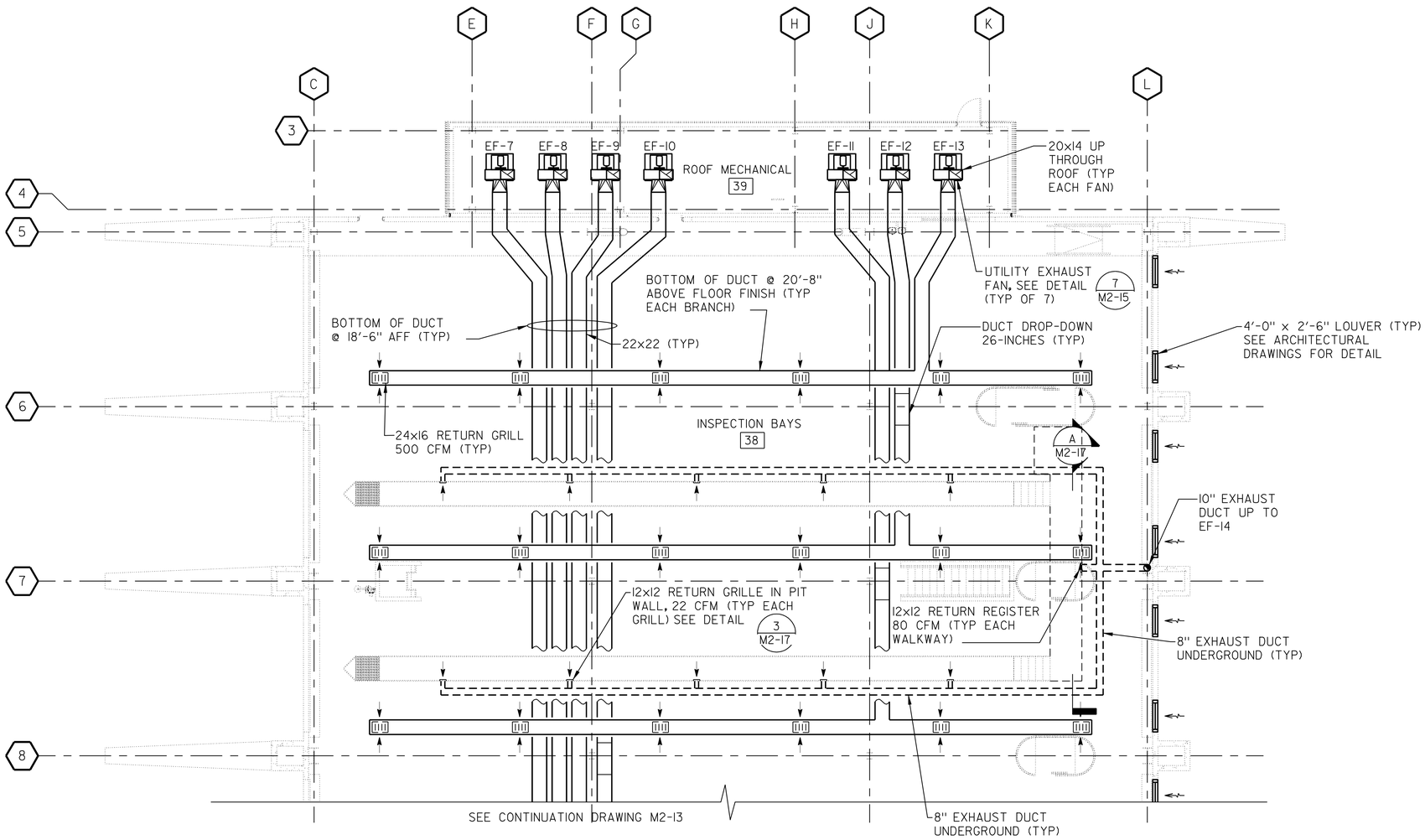

INSPECTION AREA FLOOR PLAN NORTH

SCALE: 1/8" = 1'-0"

NOTES:

1. BIRD NETTING WILL BE INSTALLED AT APPROXIMATELY 18'-4" ABOVE FLOOR FINISH IN THE INSPECTION BAYS. REFER TO ARCHITECTURAL DRAWINGS. COORDINATE INSTALLATION OF THE NETTING WITH THE HVAC WORK. ENSURE THAT THE NETTING DOES NOT BLOCK RETURN REGISTERS.

CALIFORNIA STATE FIRE MARSHAL APPROVED

Approval of this plan does not authorize or approve any omission or deviation from applicable regulations. Final approval is subject to field inspection. One set of approved plans shall be available on the project site at all times.

Reviewed by: 5/9/11
Hans Hennebarque
Senior Deputy State Fire Marshal

IDENTIFICATION STAMP DIV. OF THE STATE ARCHITECT
02 111744
ACI ALS — SS —
DATE 5-11

DESIGN	BY S. NEPRUD	CHECKED Z. HARRIS	
DETAILS	BY S. NEPRUD	CHECKED Z. HARRIS	
QUANTITIES	BY S. NEPRUD	CHECKED Z. HARRIS	

PREPARED FOR THE STATE OF CALIFORNIA DEPARTMENT OF TRANSPORTATION

DIVISION OF ENGINEERING SERVICES
ELECTRICAL-MECHANICAL-WATER AND WASTEWATER DESIGN

BRIDGE NO. 23W000IR
POST MILE 14.8

EASTBOUND CORDELIA CVEF

CVEF — INSPECTION BAY HVAC PLAN-NORTH

SHEET **M2-12**

40a535wdm2-12.dgn
DOES SD Imperial Rev.1/07 18-MAY-2011 16:21

ORIGINAL SCALE IN INCHES FOR REDUCED PLANS 0 1 2 3

CU 04264
EA 0A5351

DISREGARD PRINTS BEARING EARLIER REVISION DATES → 10/19/09 03/22/10 05/06/10 08/23/10 11/22/10 05/03/11

REVISION DATES (PRELIMINARY STAGE ONLY) SHEET OF

18-MAY-2011 16:21
40a535wdm2-12.dgn

DIST.	COUNTY	ROUTE	POST MILES TOTAL PROJECT	SHEET NO.	TOTAL SHEETS
04	Sol	12,80	L1.8/L2.0, 13.3/15.7	675	740

REGISTERED MECHANICAL ENGINEER — 05/03/11 DATE

REGISTERED PROFESSIONAL ENGINEER SEAN E NEPRUD No. M33458 Exp. 06/30/12 MECH STATE OF CALIFORNIA

5-16-11
PLANS APPROVAL DATE

The State of California or its officers or agents shall not be responsible for the accuracy or completeness of electronic copies of this plan sheet.

KENNEDY/JENKS CONSULTANTS
303 SECOND STREET
SUITE 300 SOUTH
SAN FRANCISCO, CA 94960

SOLANO TRANSPORTATION AUTHORITY
ONE HARBOR CENTER, SUITE 130
SUISUN CITY, CA 94585

PLAN NORTH

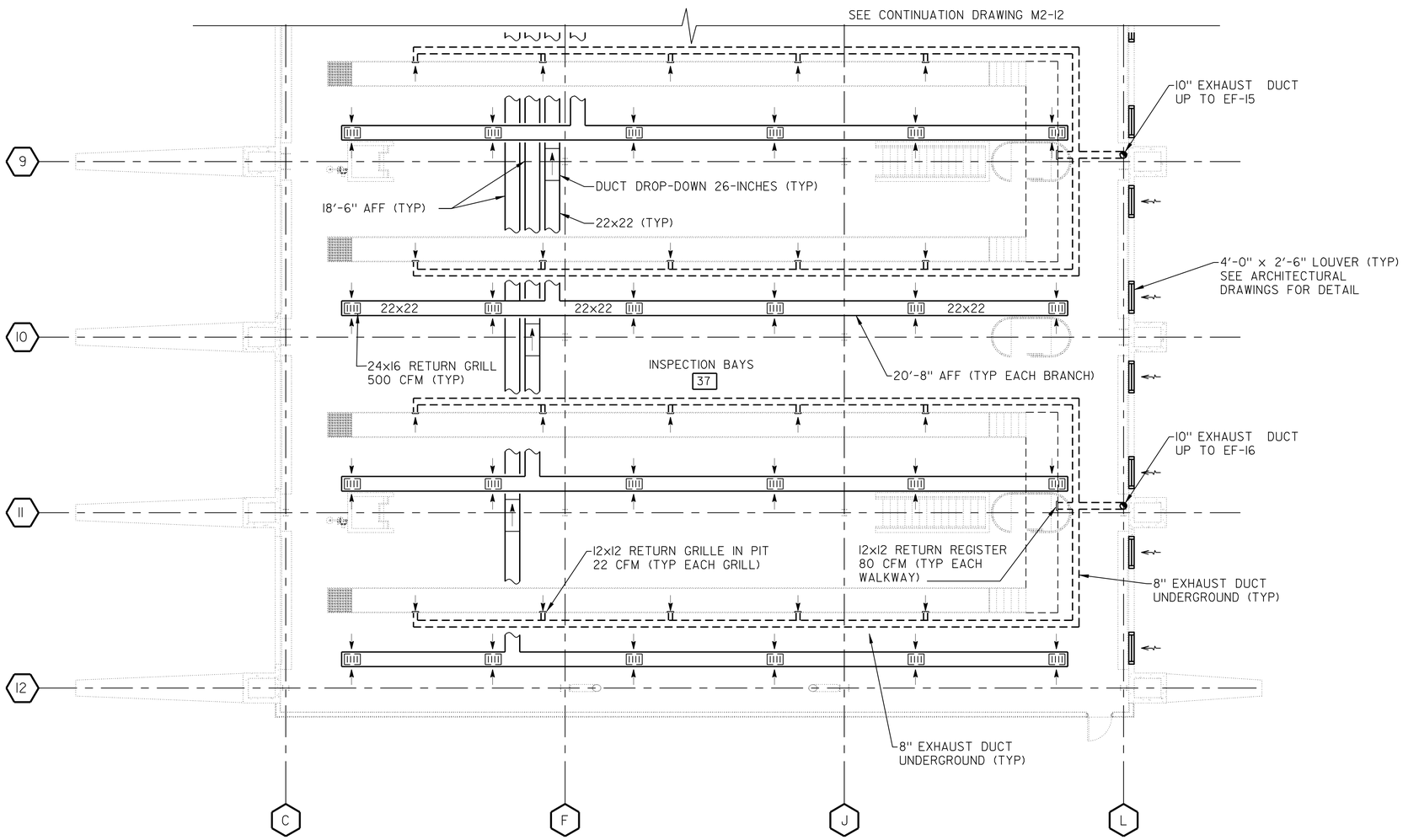

NOTES:

1. BIRD NETTING WILL BE INSTALLED AT APPROXIMATELY 18'-4" ABOVE FLOOR FINISH IN THE INSPECTION BAYS. REFER TO ARCHITECTURAL DRAWINGS. COORDINATE INSTALLATION OF THE NETTING WITH THE HVAC WORK. ENSURE THAT THE NETTING DOES NOT BLOCK RETURN REGISTERS.

CALIFORNIA STATE FIRE MARSHAL APPROVED

Approval of this plan does not authorize or approve any omission or deviation from applicable regulations. Final approval is subject to field inspection. One set of approved plans shall be available on the project site at all times.

Reviewed by: Hans Henneberque 5/9/11
Hans Henneberque
Senior Deputy State Fire Marshal

IDENTIFICATION STAMP DIV. OF THE STATE ARCHITECT
02 111744
AC ALS — SS —
DATE 5-5-11

INSPECTION BAY HVAC PLAN SOUTH

SCALE: 1/8" = 1'-0"

	BY	CHECKED
DESIGN	S. NEPRUD	Z. HARRIS
DETAILS	S. NEPRUD	Z. HARRIS
QUANTITIES	S. NEPRUD	Z. HARRIS

PREPARED FOR THE STATE OF CALIFORNIA DEPARTMENT OF TRANSPORTATION

DIVISION OF ENGINEERING SERVICES
ELECTRICAL-MECHANICAL-WATER AND WASTEWATER DESIGN

BRIDGE NO. 23W000IR
POST MILE 14.8

EASTBOUND CORDELIA CVEF

CVEF — INSPECTION BAY HVAC PLAN-SOUTH

SHEET M2-13

ORIGINAL SCALE IN INCHES FOR REDUCED PLANS 0 1 2 3

CU 04264
EA 0A5351

DISREGARD PRINTS BEARING EARLIER REVISION DATES → REVISION DATES (PRELIMINARY STAGE ONLY) 10/13/09 03/22/10 05/06/10 08/23/10 11/22/10 05/03/11 SHEET OF

40a535wdm2-13.dgn
DOES SD imperial Rev.1/07 18-MAY-2011 07:42

18-MAY-2011 07:42
40a535wdm2-13.dgn

DIST.	COUNTY	ROUTE	POST MILES TOTAL PROJECT	SHEET NO.	TOTAL SHEETS
04	Sol	12,80	L1.8/L2.0, 13.3/15.7	676	740

REGISTERED MECHANICAL ENGINEER — 05/03/11 DATE

REGISTERED PROFESSIONAL ENGINEER SEAN E NEPRUD No. M33458 Exp. 06/30/12 MECH STATE OF CALIFORNIA

5-16-11
PLANS APPROVAL DATE

The State of California or its officers or agents shall not be responsible for the accuracy or completeness of electronic copies of this plan sheet.

KENNEDY/JENKS CONSULTANTS
303 SECOND STREET
SUITE 300 SOUTH
SAN FRANCISCO, CA 94960

SOLANO TRANSPORTATION AUTHORITY
ONE HARBOR CENTER, SUITE 130
SUISUN CITY, CA 94585

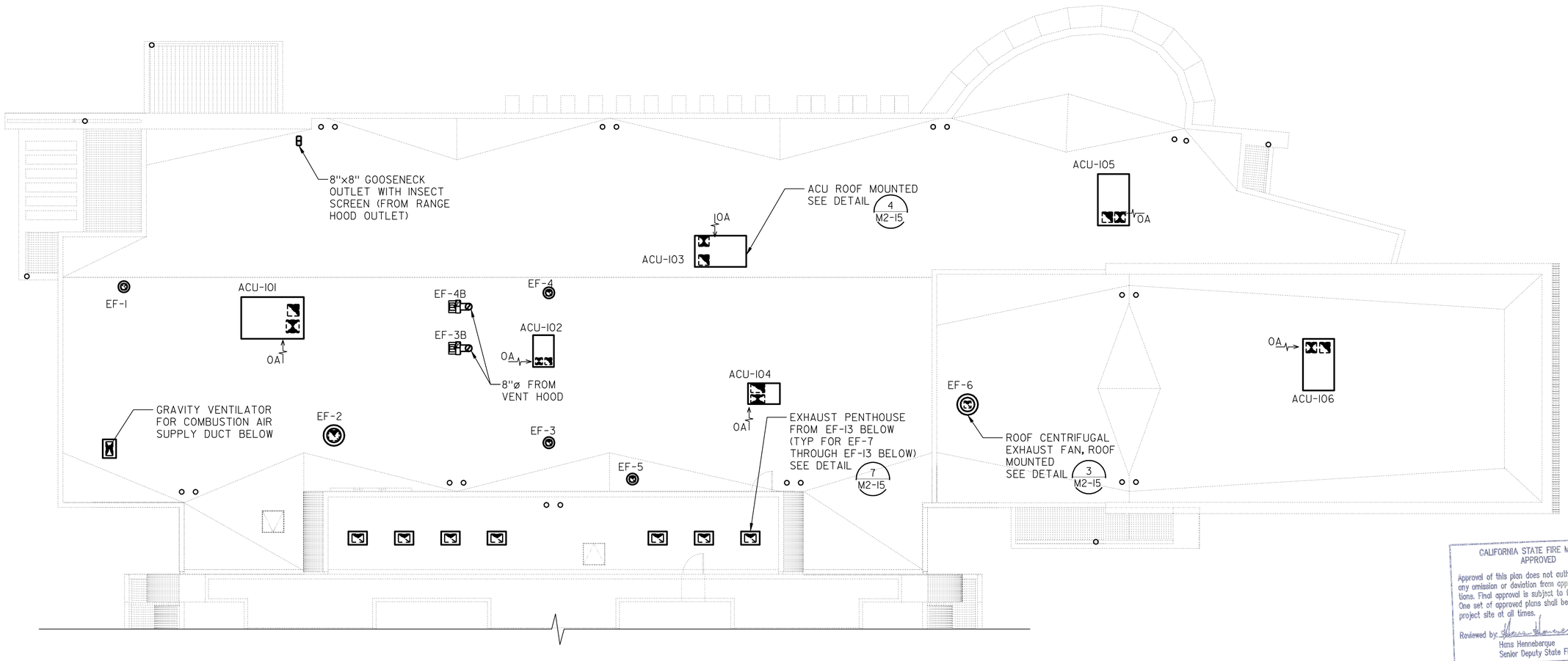

HVAC EQUIPMENT AND ZONE PLAN

SCALE: 1/8" = 1'-0"

CALIFORNIA STATE FIRE MARSHAL APPROVED

Approval of this plan does not authorize or approve any omission or deviation from applicable regulations. Final approval is subject to field inspection. One set of approved plans shall be available on the project site at all times.

Reviewed by: Hans Henneberque 5/9/11
Hans Henneberque
Senior Deputy State Fire Marshal

IDENTIFICATION STAMP DIV. OF THE STATE ARCHITECT
02 111744
AC ARCH BLS — SS —
DATE 5-9-11

	BY	CHECKED
DESIGN	S. NEPRUD	Z. HARRIS
DETAILS	S. NEPRUD	Z. HARRIS
QUANTITIES	S. NEPRUD	Z. HARRIS

PREPARED FOR THE STATE OF CALIFORNIA DEPARTMENT OF TRANSPORTATION

DIVISION OF ENGINEERING SERVICES
ELECTRICAL-MECHANICAL-WATER AND WASTEWATER DESIGN

BRIDGE NO. 23W000IR
POST MILE 14.8

EASTBOUND CORDELIA CVEF
CVEF — OFFICE ROOF PLAN

SHEET M2-14

40a535wdm2-14.dgn
DOES SD Imperial Rev.1/07 18-MAY-2011 07:42

ORIGINAL SCALE IN INCHES FOR REDUCED PLANS 0 1 2 3

CU 04264
EA 0A5351

DISREGARD PRINTS BEARING EARLIER REVISION DATES → REVISION DATES (PRELIMINARY STAGE ONLY) 10/19/09 03/22/10 05/06/10 08/23/10 11/22/10 05/03/11 SHEET OF

18-MAY-2011 07:42
40a535wdm2-14.dgn

DIST.	COUNTY	ROUTE	POST MILES TOTAL PROJECT	SHEET NO.	TOTAL SHEETS
04	Sol	12,80	L1.8/L2.0, 13.3/15.7	677	740

REGISTERED MECHANICAL ENGINEER — 05/03/11 DATE

REGISTERED PROFESSIONAL ENGINEER SEAN E NEPRUD No. M33458 Exp. 06/30/12 MECH STATE OF CALIFORNIA

5-16-11
PLANS APPROVAL DATE

The State of California or its officers or agents shall not be responsible for the accuracy or completeness of electronic copies of this plan sheet.

KENNEDY/JENKS CONSULTANTS
303 SECOND STREET
SUITE 300 SOUTH
SAN FRANCISCO, CA 94960

SOLANO TRANSPORTATION AUTHORITY
ONE HARBOR CENTER, SUITE 130
SUISUN CITY, CA 94585

CALIFORNIA STATE FIRE MARSHAL APPROVED
Approval of this plan does not authorize or approve any omission or deviation from applicable regulations. Final approval is subject to field inspection. One set of approved plans shall be available on the project site at all times.
Reviewed by: Hans Henneberque 5/9/11
Hans Henneberque
Senior Deputy State Fire Marshal

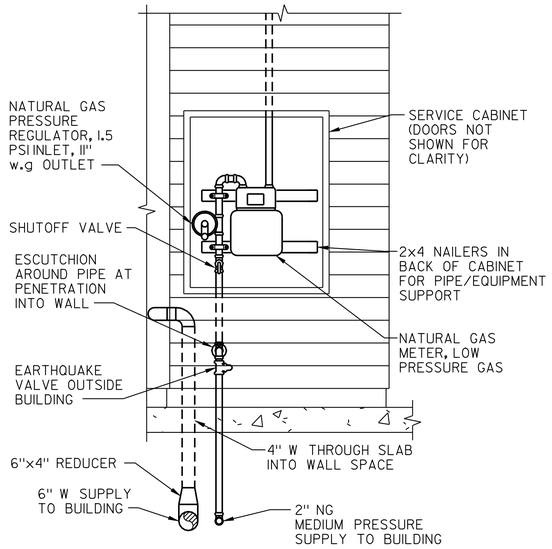

1 NATURAL GAS REGULATOR/METER
SCALE: 1/2" = 1'-0"

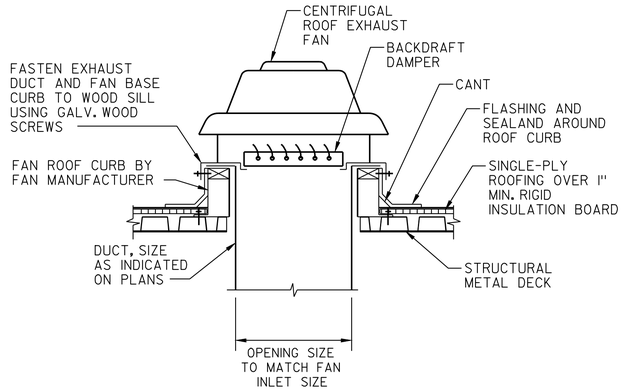

3 ROOF EXHAUST FAN INSTALLATION
SCALE: 1/2" = 1'-0"

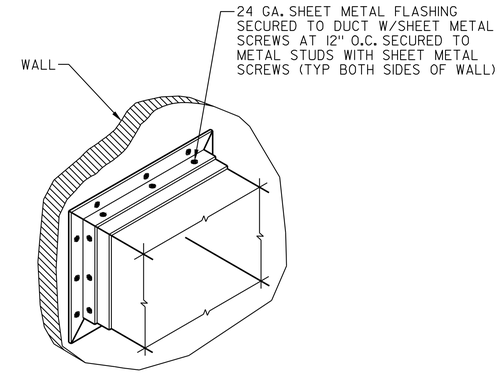

NOTES:

1. APPLY TWO-PART POLYEURATHANE SEALANT TO CMU TO ACHIEVE SMOOTH FACE FOR MOUNTING OF SHEET METAL FLASHING.
2. FRAME DUCT OPENING THROUGH THE WALL WITH METAL STUDS.

5 TYPICAL DUCT PENETRATION
SCALE: 1/2" = 1'-0"

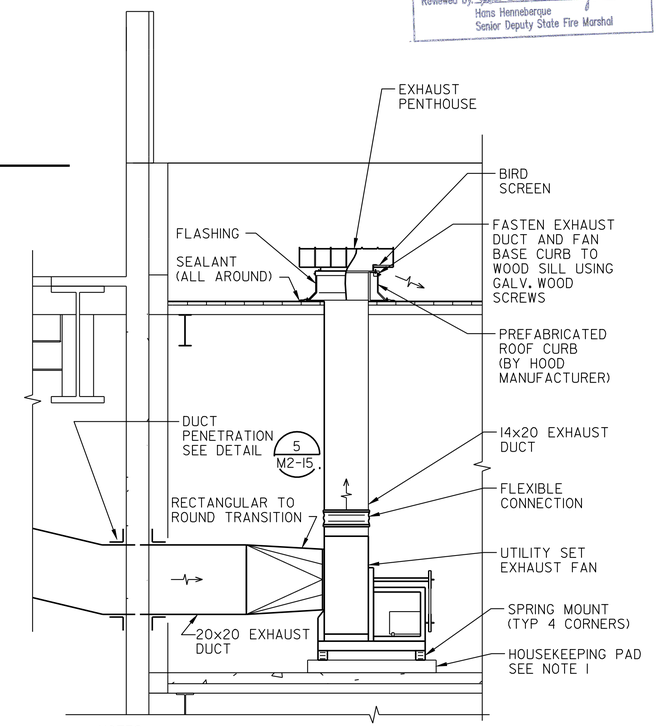

NOTES:
1. HOUSEKEEPING PAD SHALL BE 6" HEIGHT, AND EXTEND 4" BEYOND BASE OF FAN ON ALL SIDES. COORDINATE SIZE OF PAD WITH APPROVED FAN EQUIPMENT. SEE DETAILS ON STRUCTURAL DRAWINGS.

IDENTIFICATION STAMP DIV. OF THE STATE ARCHITECT
02 111744
AC BLS — SS —
DATE 5-9-11

7 EXHAUST FAN INSTALLATION
SCALE: 1/2" = 1'-0"

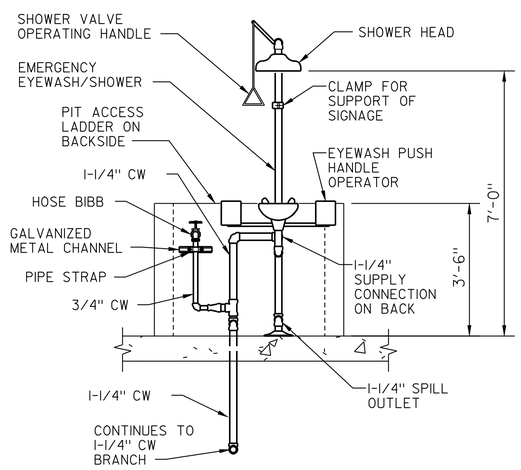

2 EYEWASH/SHOWER AND HOSE BIBB
SCALE: 1/2" = 1'-0"

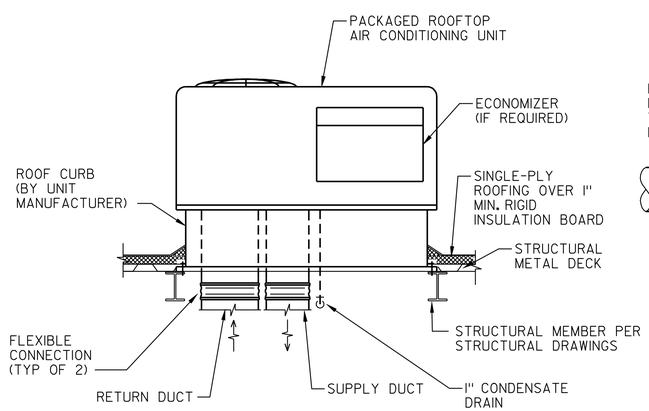

4 AIR CONDITIONING UNIT INSTALLATION
SCALE: NOT TO SCALE

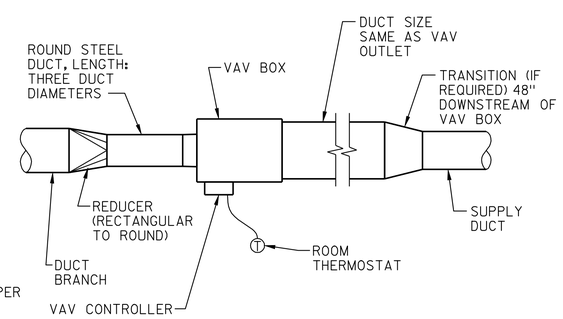

6 VAV BOX INSTALLATION
SCALE: 1/2" = 1'-0"

DESIGN	BY S. NEPRUD	CHECKED Z. HARRIS	PREPARED FOR THE STATE OF CALIFORNIA DEPARTMENT OF TRANSPORTATION	DIVISION OF ENGINEERING SERVICES ELECTRICAL-MECHANICAL-WATER AND WASTEWATER DESIGN	BRIDGE NO. 23W000IR	EASTBOUND CORDELIA CVEF
DETAILS	BY S. NEPRUD	CHECKED Z. HARRIS			POST MILE 14.8	CVEF — MECHANICAL DETAILS NO. 1
QUANTITIES	BY S. NEPRUD	CHECKED Z. HARRIS				

SHEET M2-15

40a535wdm2-15.dgn
DOES SD imperial Rev.1/07 18-MAY-2011 07:42

ORIGINAL SCALE IN INCHES FOR REDUCED PLANS 0 1 2 3

CU 04264
EA 0A5351

DISREGARD PRINTS BEARING EARLIER REVISION DATES → REVISION DATES (PRELIMINARY STAGE ONLY) 10/19/09 03/22/10 05/06/10 08/23/10 11/22/10 05/03/11 SHEET OF

18-MAY-2011 07:42
40a535wdm2-15.dgn

DIST.	COUNTY	ROUTE	POST MILES TOTAL PROJECT	SHEET NO.	TOTAL SHEETS
04	Sol	12,80	L1.8/L2.0, 13.3/15.7	678	740

REGISTERED MECHANICAL ENGINEER — 05/03/11 DATE

REGISTERED PROFESSIONAL ENGINEER SEAN E NEPRUD No. M33458 Exp. 06/30/12 MECH STATE OF CALIFORNIA

5-16-11
PLANS APPROVAL DATE

The State of California or its officers or agents shall not be responsible for the accuracy or completeness of electronic copies of this plan sheet.

KENNEDY/JENKS CONSULTANTS
303 SECOND STREET
SUITE 300 SOUTH
SAN FRANCISCO, CA 94960

SOLANO TRANSPORTATION AUTHORITY
ONE HARBOR CENTER, SUITE 130
SUISUN CITY, CA 94585

CALIFORNIA STATE FIRE MARSHAL APPROVED
Approval of this plan does not authorize or approve any omission or deviation from applicable regulations. Final approval is subject to field inspection. One set of approved plans shall be available on the project site at all times.
Reviewed by: Hans Henneberque 5/9/11
Hans Henneberque
Senior Deputy State Fire Marshal

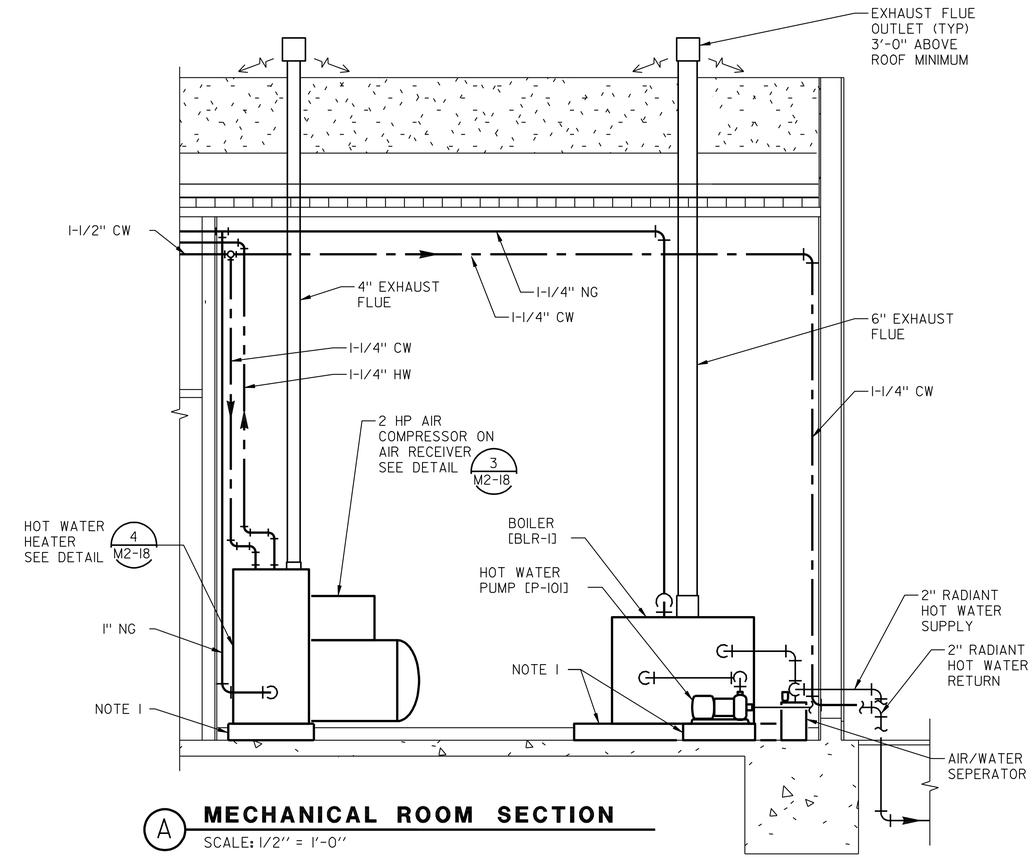

(A) MECHANICAL ROOM SECTION

SCALE: 1/2" = 1'-0"

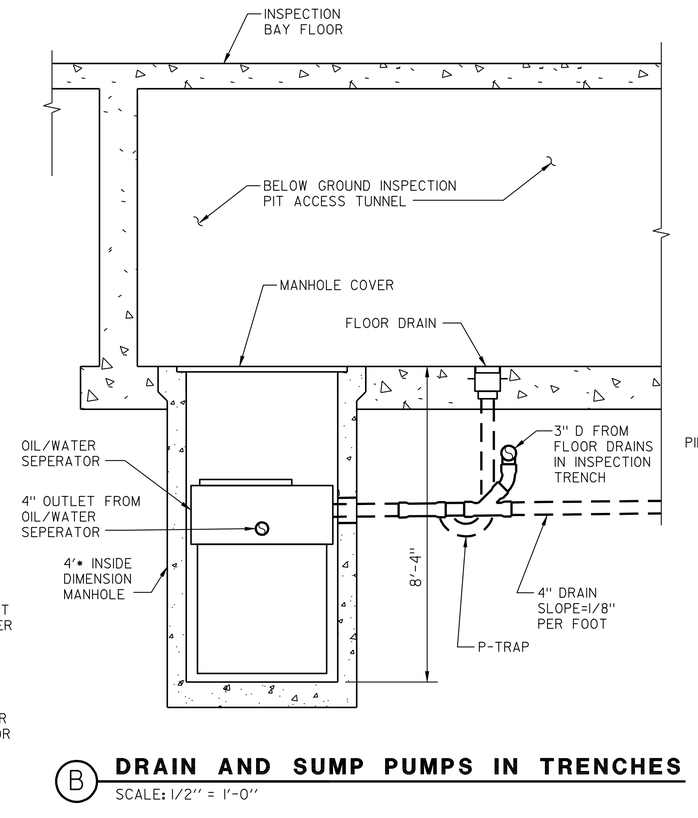

(B) DRAIN AND SUMP PUMPS IN TRENCHES

SCALE: 1/2" = 1'-0"

NOTES:
1. PROVIDE HOUSEKEEPING PADS FOR ALL MECHANICAL ROOM EQUIPMENT, 6" HEIGHT, EXTENDING 4" BEYOND EQUIPMENT BASE IN EACH DIRECTION.

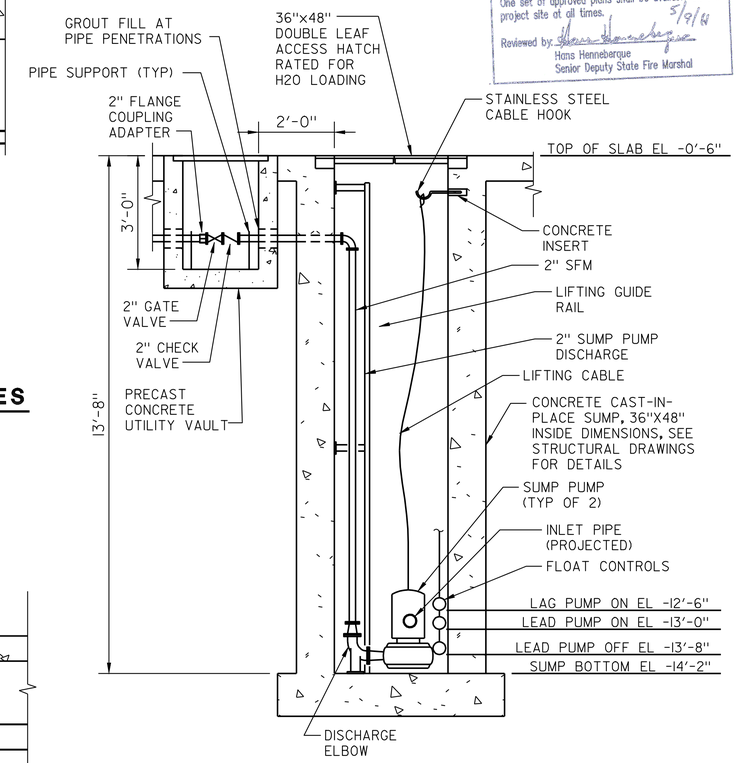

(D) DRAIN SUMP SECTION

SCALE: 1/2" = 1'-0"

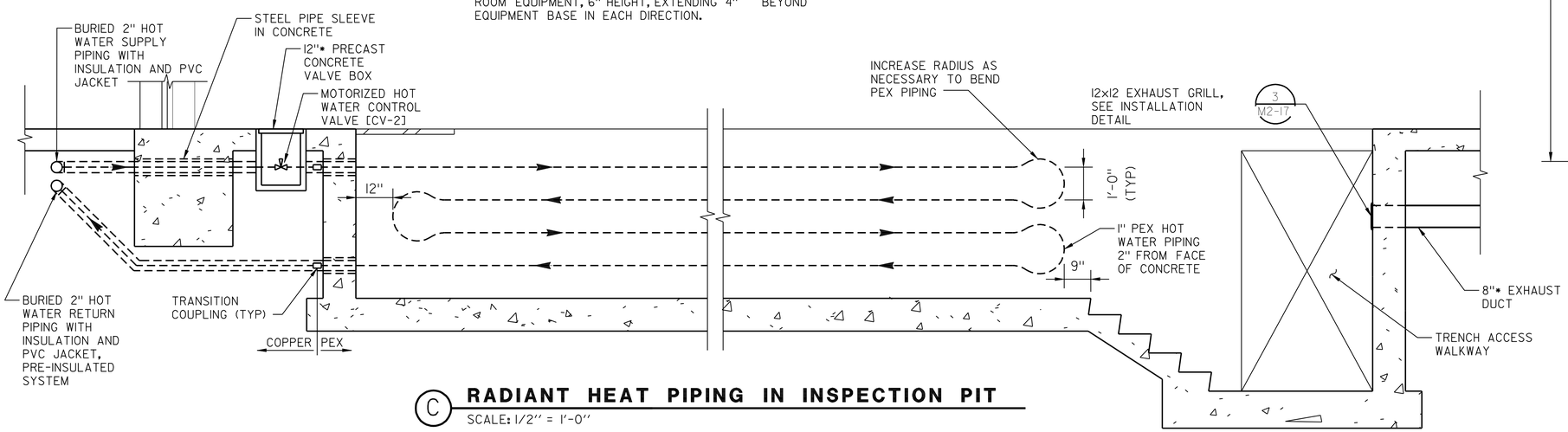

(C) RADIANT HEAT PIPING IN INSPECTION PIT

SCALE: 1/2" = 1'-0"

IDENTIFICATION STAMP DIV. OF THE STATE ARCHITECT
02 111744
AC ARCHS — BLS — SS —
DATE 5-5-11

	BY	CHECKED
DESIGN	S. NEPRUD	Z. HARRIS
DETAILS	S. NEPRUD	Z. HARRIS
QUANTITIES	S. NEPRUD	Z. HARRIS

PREPARED FOR THE STATE OF CALIFORNIA DEPARTMENT OF TRANSPORTATION

DIVISION OF ENGINEERING SERVICES
ELECTRICAL-MECHANICAL-WATER AND WASTEWATER DESIGN

BRIDGE NO. 23W000IR
POST MILE 14.8

EASTBOUND CORDELIA CVEF
CVEF — MECHANICAL SECTIONS

SHEET M2-16

40a535wdm2-16.dgn
DOES SD Imperial Rev.1/07 18-MAY-2011 07:42

ORIGINAL SCALE IN INCHES FOR REDUCED PLANS 0 1 2 3

CU 04264
EA 0A5351

DISREGARD PRINTS BEARING EARLIER REVISION DATES → 10/19/09 03/22/10 05/06/10 08/23/10 11/22/10 05/03/11

REVISION DATES (PRELIMINARY STAGE ONLY) SHEET OF

18-MAY-2011 07:42
40a535wdm2-16.dgn

DIST.	COUNTY	ROUTE	POST MILES TOTAL PROJECT	SHEET NO.	TOTAL SHEETS
04	Sol	12,80	L1.8/L2.0, 13.3/15.7	679	740

REGISTERED MECHANICAL ENGINEER — 05/03/11 DATE

REGISTERED PROFESSIONAL ENGINEER SEAN E NEPRUD No. M33458 Exp. 06/30/12 MECH STATE OF CALIFORNIA

5-16-11
PLANS APPROVAL DATE

The State of California or its officers or agents shall not be responsible for the accuracy or completeness of electronic copies of this plan sheet.

KENNEDY/JENKS CONSULTANTS
303 SECOND STREET
SUITE 300 SOUTH
SAN FRANCISCO, CA 94960

SOLANO TRANSPORTATION AUTHORITY
ONE HARBOR CENTER, SUITE 130
SUISUN CITY, CA 94585

CALIFORNIA STATE FIRE MARSHAL APPROVED
Approval of this plan does not authorize or approve any omission or deviation from applicable regulations. Final approval is subject to field inspection. One set of approved plans shall be available on the project site at all times.
Reviewed by: Hans Henneberque 5/9/11
Hans Henneberque
Senior Deputy State Fire Marshal

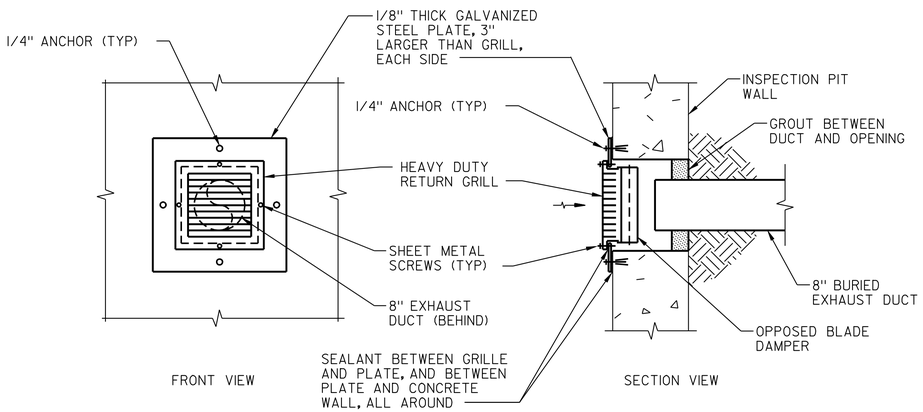

3 INSPECTION PIT EXHAUST GRILL INSTALLATION
NOT TO SCALE

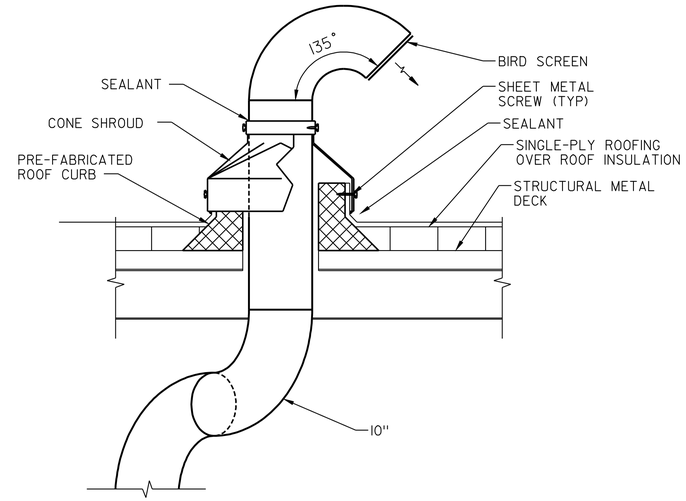

1 EXHAUST GOOSENECK
NOT TO SCALE

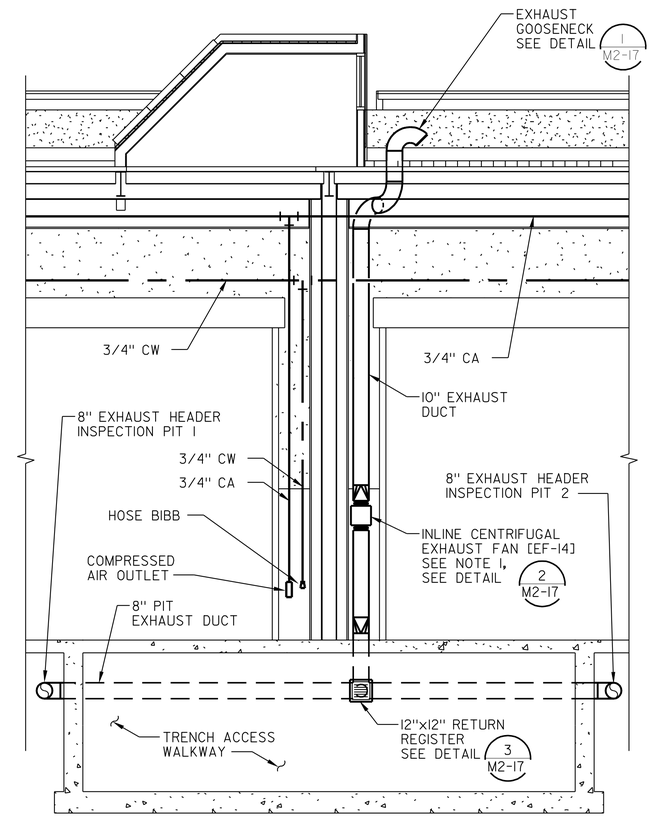

NOTE:

1. EXHAUST FAN INSTALLATION IS TYPICAL FOR EF-15/INSPECTION PIT 3 & 4, AND EF-16/INSPECTION PIT 5 & 6.

IDENTIFICATION STAMP DIV. OF THE STATE ARCHITECT
02 1117 44
AC ___ BLS ___ SS ___
DATE 5-5-11

A INSPECTION PIT VENTILATION SECTION
SCALE: 1/4"=1'-0"

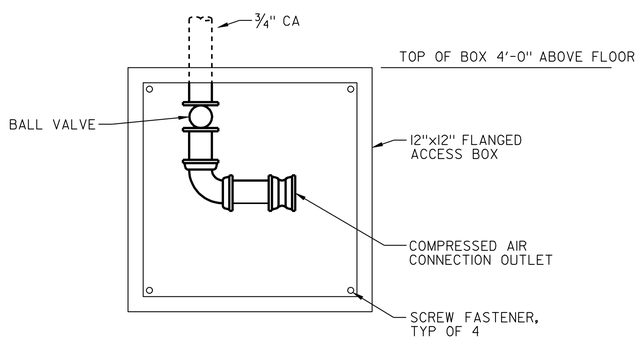

NOTE:

1. INSTALL FLANGED ACCESS BOX RECESSED IN WALL SO THAT THE FLANGE IS FLUSH AGAINST SURROUNDING WALL.

4 RECESSED COMPRESSED AIR OUTLET
NOT TO SCALE

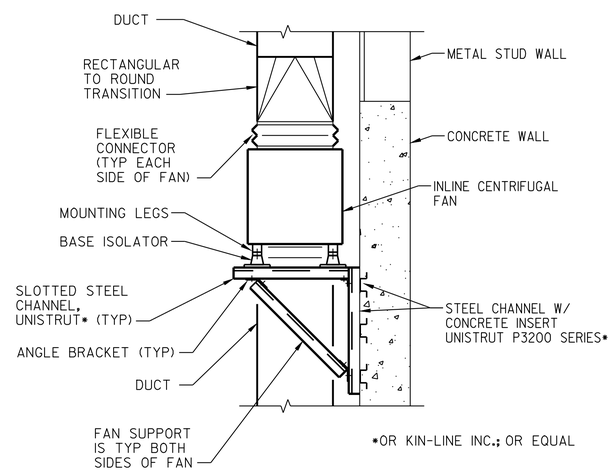

*OR KIN-LINE INC.; OR EQUAL

2 INLINE CENTRIFUGAL FAN INSTALLATION
NOT TO SCALE

DESIGN	BY S. NEPRUD	CHECKED Z. HARRIS	PREPARED FOR THE STATE OF CALIFORNIA DEPARTMENT OF TRANSPORTATION	DIVISION OF ENGINEERING SERVICES ELECTRICAL-MECHANICAL-WATER AND WASTEWATER DESIGN	BRIDGE NO. 23W000IR
DETAILS	BY S. NEPRUD	CHECKED Z. HARRIS			POST MILE 14.8
QUANTITIES	BY S. NEPRUD	CHECKED Z. HARRIS			

EASTBOUND CORDELIA CVEF — CVEF — MECHANICAL SECTIONS AND DETAILS

SHEET M2-17

ORIGINAL SCALE IN INCHES FOR REDUCED PLANS 0 1 2 3

CU 04264
EA 0A5351

DISREGARD PRINTS BEARING EARLIER REVISION DATES → REVISION DATES (PRELIMINARY STAGE ONLY) 10/19/09 03/22/10 05/06/10 08/23/10 11/22/10 05/03/11 — SHEET — OF

40a535wdm2-17.dgn
DOES SD imperial Rev.1/07 18-MAY-2011 07:43

18-MAY-2011 07:43
40a535wdm2-17.dgn

DIST.	COUNTY	ROUTE	POST MILES TOTAL PROJECT	SHEET NO.	TOTAL SHEETS
04	Sol	12,80	L1.8/L2.0, 13.3/15.7	680	740

REGISTERED MECHANICAL ENGINEER — 05/03/11 DATE

REGISTERED PROFESSIONAL ENGINEER SEAN E NEPRUD No. M33458 Exp. 06/30/12 MECH STATE OF CALIFORNIA

5-16-11
PLANS APPROVAL DATE

The State of California or its officers or agents shall not be responsible for the accuracy or completeness of electronic copies of this plan sheet.

KENNEDY/JENKS CONSULTANTS
303 SECOND STREET
SUITE 300 SOUTH
SAN FRANCISCO, CA 94960

SOLANO TRANSPORTATION AUTHORITY
ONE HARBOR CENTER, SUITE 130
SUISUN CITY, CA 94585

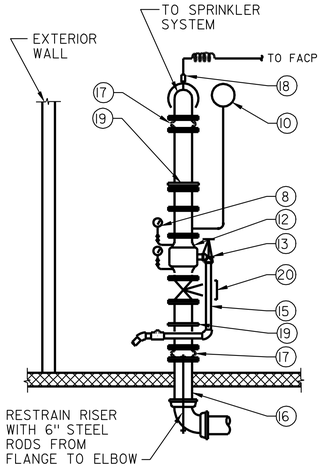

ITEM	DESCRIPTION
1	(NOT USED)
2	(NOT USED)
3	(NOT USED)
4	(NOT USED)
5	(NOT USED)
6	ALARM LINE STRAINER
7	(NOT USED)
8	PRESSURE GAUGE (2 REQUIRED)
9	(NOT USED)
10	WATER MOTOR ALARM
11	(NOT USED)
12	WET PIPE ALARM CHECK VALVE
13	MAIN DRAIN VALVE
14	(NOT USED)
15	MAIN DRAIN (TO OUTDOOR SPLASHBLOCK)
16	RISER FROM MAIN WATER SUPPLY
17	FLEXIBLE CONNECTOR
18	WATER FLOW ALARM SWITCH
19	PIPE SUPPORT
20	SYSTEM CONTROL VALVE (O.S.&Y.)

NOTES:

1. PROVIDE VALVE SUPERVISORY SWITCH (TAMPER SWITCH) FOR THE SYSTEM CONTROL VALVE, WIRED TO THE FIRE ALARM CONTROL PANEL.

1 WET PIPE FIRE RISER DETAIL
NOT TO SCALE

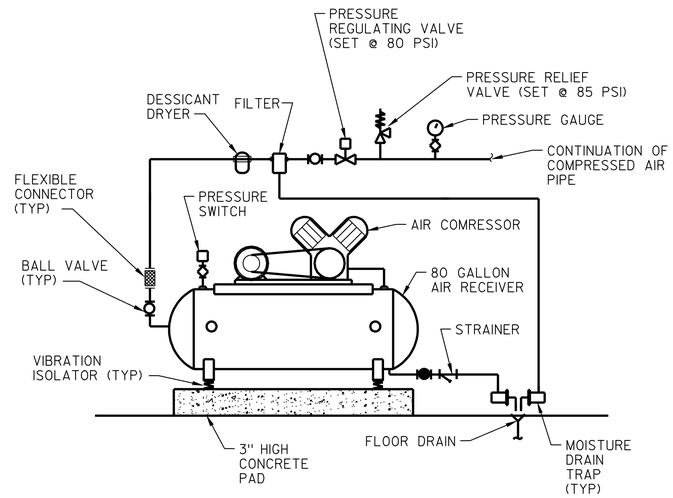

3 AIR COMPRESSOR INSTALLATION SCHEMATIC
NOT TO SCALE

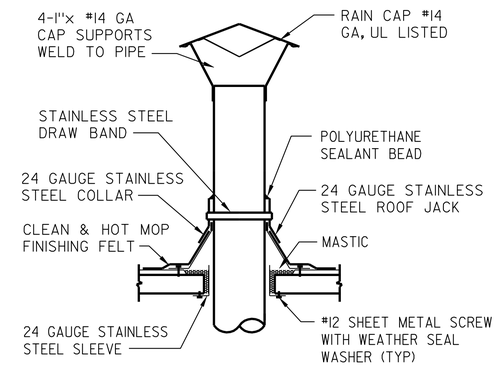

5 GAS FLUE THROUGH ROOF
NOT TO SCALE

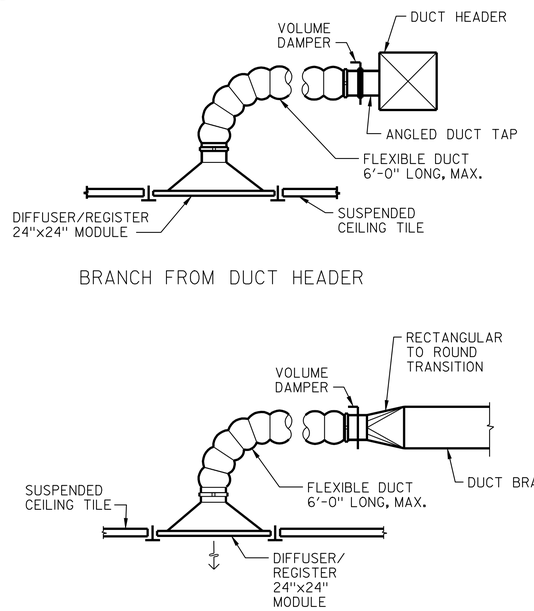

2 TYPICAL DUCT DIFFUSER/REGISTER DETAIL
NOT TO SCALE

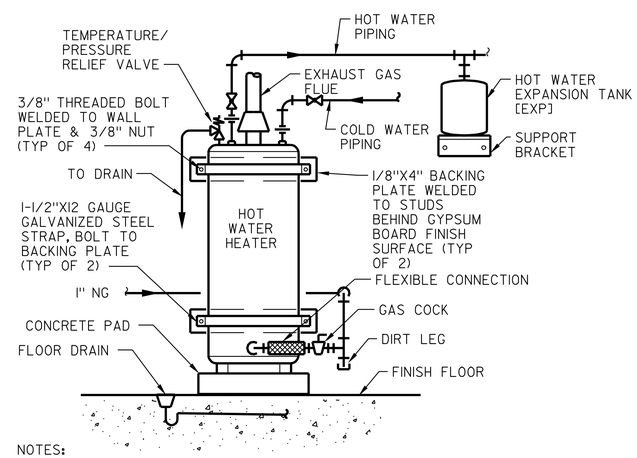

NOTES:

1. WATER HEATER SHALL BE CERTIFIED BY THE CALIFORNIA ENERGY COMMISSION.
2. PROVIDE BACKLFOW DEVICE ON COLD WATER SUPPLY CONNECTION.

4 NATURAL GAS FIRED HOT WATER HEATER INSTALLATION SCHEMATIC
NOT TO SCALE

CALIFORNIA STATE FIRE MARSHAL APPROVED
Approval of this plan does not authorize or approve any omission or deviation from applicable regulations. Final approval is subject to field inspection. One set of approved plans shall be available on the project site at all times.
Reviewed by: Hans Henneberque 5/9/11
Hans Henneberque
Senior Deputy State Fire Marshal

IDENTIFICATION STAMP DIV. OF THE STATE ARCHITECT
02 1117 44
AC ARCHS — SS —
DATE 5-9-11

	BY	CHECKED
DESIGN	S. NEPRUD	Z. HARRIS
DETAILS	S. NEPRUD	Z. HARRIS
QUANTITIES	S. NEPRUD	Z. HARRIS

PREPARED FOR THE STATE OF CALIFORNIA DEPARTMENT OF TRANSPORTATION

DIVISION OF ENGINEERING SERVICES
ELECTRICAL-MECHANICAL-WATER AND WASTEWATER DESIGN

BRIDGE NO. 23W000IR
POST MILE 14.8

EASTBOUND CORDELIA CVEF
CVEF — MECHANICAL DETAILS NO. 2

SHEET M2-18

40a535wdm2-18.dgn
DOES SD Imperial Rev.1/07 18-MAY-2011 13:38

ORIGINAL SCALE IN INCHES FOR REDUCED PLANS 0 1 2 3

CU 04264
EA 0A5351

DISREGARD PRINTS BEARING EARLIER REVISION DATES → 10/14/09 03/22/10 05/06/10 08/23/10 11/22/10 05/03/11

REVISION DATES (PRELIMINARY STAGE ONLY) SHEET OF

18-MAY-2011 13:38
40a535wdm2-18.dgn

DIST.	COUNTY	ROUTE	POST MILES TOTAL PROJECT	SHEET NO.	TOTAL SHEETS
04	Sol	12,80	L1.8/L2.0, 13.3/15.7	681	740

REGISTERED MECHANICAL ENGINEER — 05/03/11 DATE

REGISTERED PROFESSIONAL ENGINEER SEAN E NEPRUD No. M33458 Exp. 06/30/12 MECH STATE OF CALIFORNIA

5-16-11
PLANS APPROVAL DATE

The State of California or its officers or agents shall not be responsible for the accuracy or completeness of electronic copies of this plan sheet.

KENNEDY/JENKS CONSULTANTS
303 SECOND STREET
SUITE 300 SOUTH
SAN FRANCISCO, CA 94960

SOLANO TRANSPORTATION AUTHORITY
ONE HARBOR CENTER, SUITE 130
SUISUN CITY, CA 94585

CALIFORNIA STATE FIRE MARSHAL
APPROVED

Approval of this plan does not authorize or approve any omission or deviation from applicable regulations. Final approval is subject to field inspection. One set of approved plans shall be available on the project site at all times.

Reviewed by: 5/9/11
Hans Henneberque
Senior Deputy State Fire Marshal

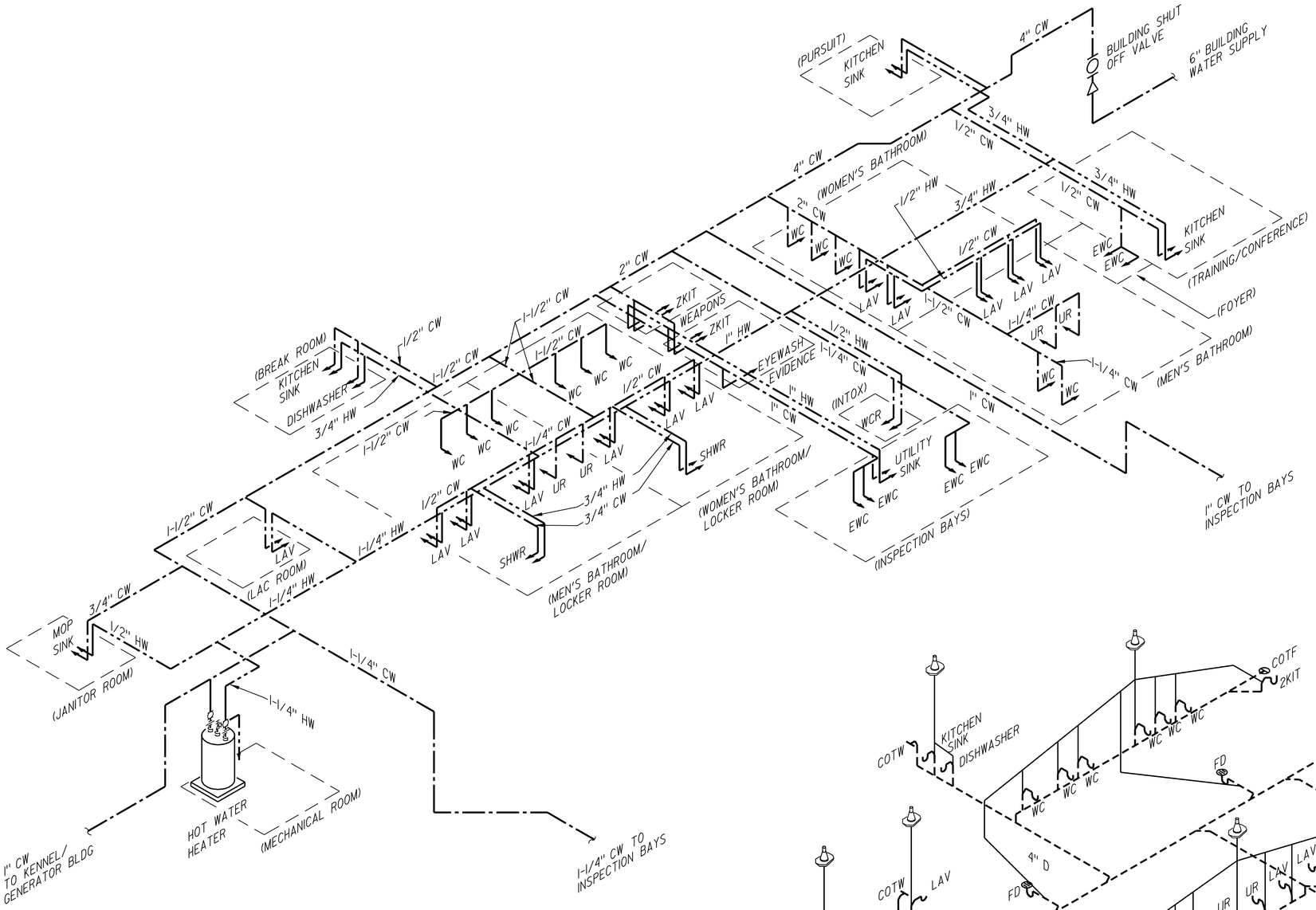

HOT AND COLD WATER PIPING SCHEMATIC

SCALE: NOT TO SCALE

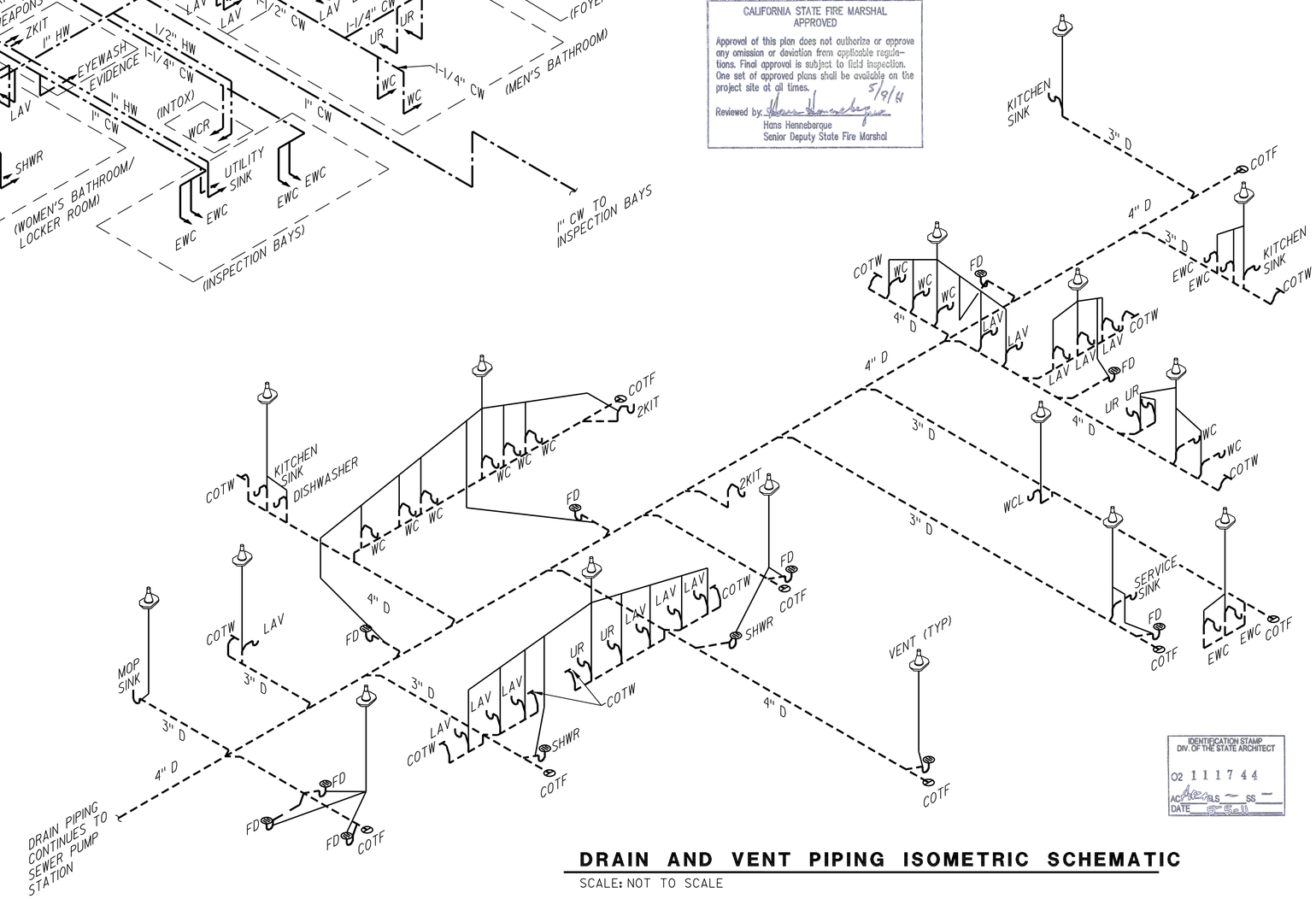

DRAIN AND VENT PIPING ISOMETRIC SCHEMATIC

SCALE: NOT TO SCALE

IDENTIFICATION STAMP DIV. OF THE STATE ARCHITECT
02 1117 44
AC ELS SS
DATE 15 Sep 11

	BY	CHECKED
DESIGN	S. NEPRUD	Z. HARRIS
DETAILS	S. NEPRUD	Z. HARRIS
QUANTITIES	S. NEPRUD	Z. HARRIS

PREPARED FOR THE STATE OF CALIFORNIA DEPARTMENT OF TRANSPORTATION

DIVISION OF ENGINEERING SERVICES
ELECTRICAL-MECHANICAL-WATER AND WASTEWATER DESIGN

BRIDGE NO. 23W000IR
POST MILE 14.8

EASTBOUND CORDELIA CVEF

CVEF — PLUMBING ISOMETRIC SCHEMATICS

SHEET **M2-19**

40a535wdm2-19.dgn
DOES SD imperial Rev.1/07 18-MAY-2011 13:38

ORIGINAL SCALE IN INCHES FOR REDUCED PLANS 0 1 2 3

CU 04264
EA 0A5351

DISREGARD PRINTS BEARING EARLIER REVISION DATES → 10/19/09 03/22/10 05/06/10 08/23/10 11/22/10 05/03/11

REVISION DATES (PRELIMINARY STAGE ONLY) SHEET OF

18-MAY-2011 13:38
40a535wdm2-19.dgn

DIST.	COUNTY	ROUTE	POST MILES TOTAL PROJECT	SHEET NO.	TOTAL SHEETS
04	Sol	12,80	L1.8/L2.0, 13.3/15.7	682	740

REGISTERED MECHANICAL ENGINEER — 05/03/11 DATE

REGISTERED PROFESSIONAL ENGINEER SEAN E NEPRUD No. M33458 Exp. 06/30/12 MECH STATE OF CALIFORNIA

5-16-11
PLANS APPROVAL DATE

The State of California or its officers or agents shall not be responsible for the accuracy or completeness of electronic copies of this plan sheet.

KENNEDY/JENKS CONSULTANTS
303 SECOND STREET
SUITE 300 SOUTH
SAN FRANCISCO, CA 94960

SOLANO TRANSPORTATION AUTHORITY
ONE HARBOR CENTER, SUITE 130
SUISUN CITY, CA 94585

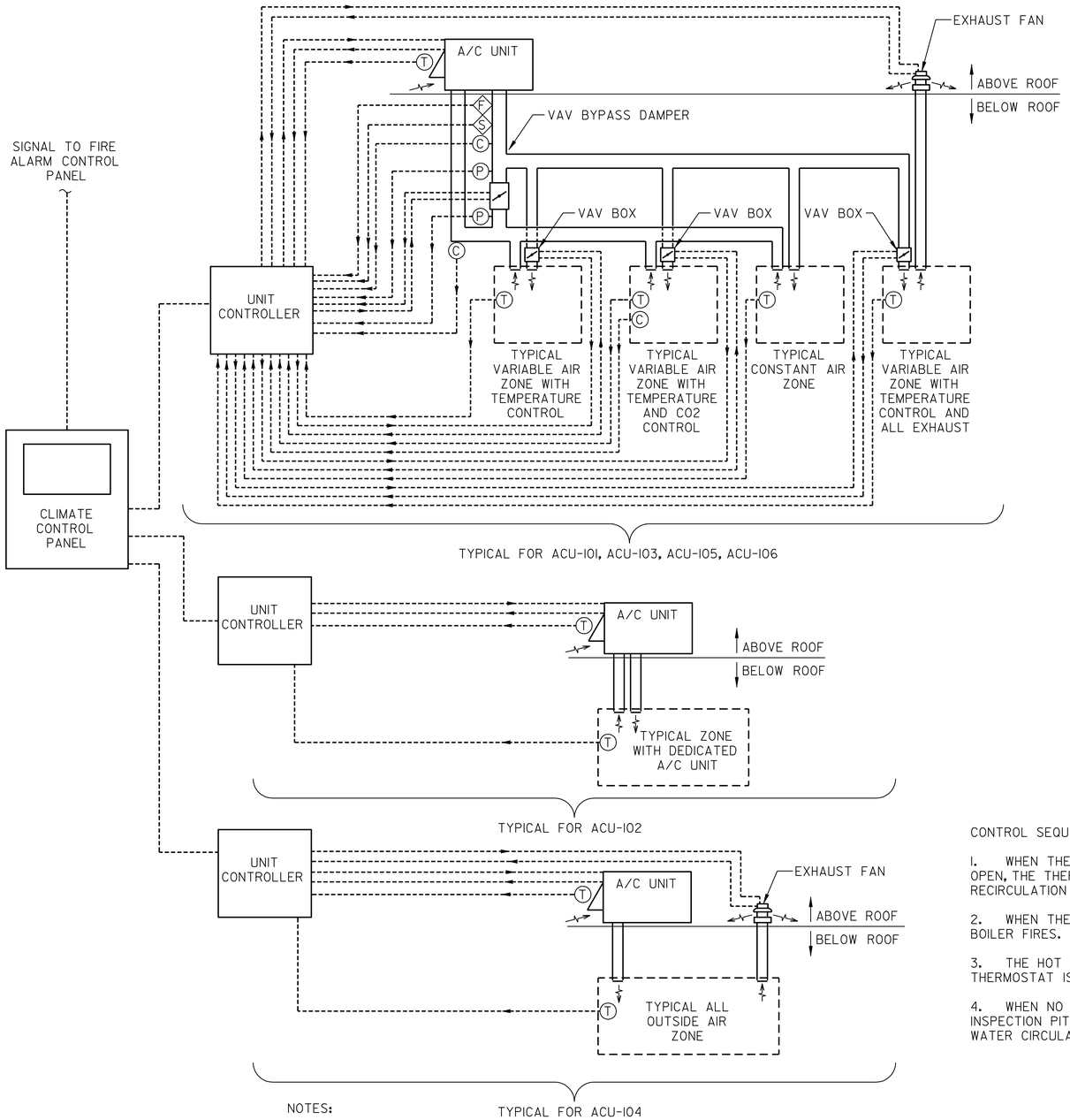

NOTES:

1. REFER TO DRAWING EE5-5 FOR POWER TO CONTROL DEVICES.
2. CLIMATE CONTROL PANEL SHALL INDICATE AN ALARM WHEN CO2 LEVELS ARE EITHER 10% ABOVE OR 10% BELOW A SETPOINT OF 700PPM.

HEATING, VENTILATING, AND AIR CONDITIONING CONTROL SCHEMATIC

SCALE: NOT TO SCALE

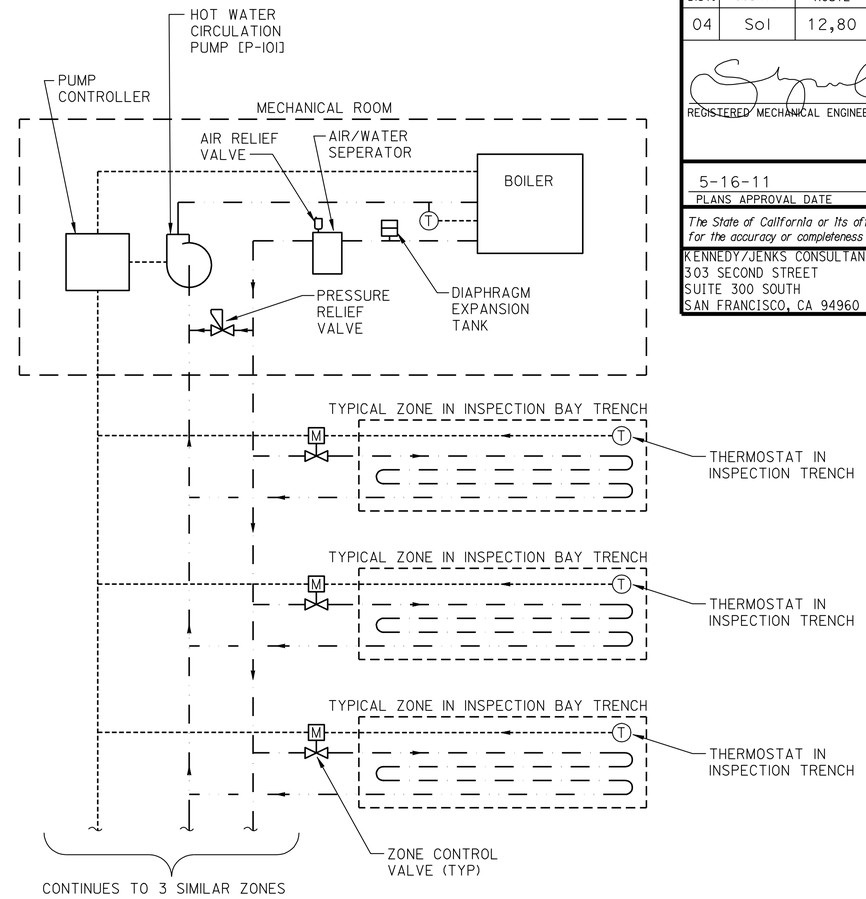

CONTROL SEQUENCE:

1. WHEN THE THERMOSTAT IN THE INSPECTION TRENCH DROPS BELOW 55°F AND THE INSPECTION TRENCH COVER IS OPEN, THE THERMOSTAT SIGNALS THE ZONE CONTROL VALVE TO OPEN. AFTER A 30-SECOND DELAY, THE HOT WATER RECIRCULATION PUMP STARTS.

2. WHEN THE WATER IN THE BOILER DROPS BELOW 165°F, AND THE HOT WATER CIRCULATION PUMP IS RUNNING, THE BOILER FIRES. THE BOILER STARTS AND STOPS ADDITIONAL STAGES TO MAINTAIN AN OUTPUT TEMPERATURE OF 180°F.

3. THE HOT WATER RECIRCULATION PUMP AND THE BOILER CONTINUE TO OPERATE WHILE AT LEAST ONE THERMOSTAT IS IN A TRENCH WITH THE INSPECTION PIT COVER OPEN AND TEMPERATURE BELOW 55°F.

4. WHEN NO ZONE CALLS FOR HEATING, EITHER BECAUSE THE THERMOSTAT TEMPERATURE IS ABOVE 55°F, OR THE INSPECTION PIT COVER CLOSES, FIRST TURN OFF THE BOILER. AFTER A 10 SECOND DELAY, TURN OFF THE HOT WATER CIRCULATION PUMP. AFTER A 30 SECOND DELAY, CLOSE THE ZONE CONTROL VALVE.

CALIFORNIA STATE FIRE MARSHAL APPROVED

Approval of this plan does not authorize or approve any omission or deviation from applicable regulations. Final approval is subject to field inspection. One set of approved plans shall be available on the project site at all times.

Reviewed by: Hans Hennebergue 5/9/11
Hans Hennebergue
Senior Deputy State Fire Marshal

IDENTIFICATION STAMP DIV. OF THE STATE ARCHITECT
02 111744
ACI — FLS — SS —
DATE 5-5-11

RADIANT HEATING CONTROL SCHEMATIC

SCALE: NOT TO SCALE

	BY	CHECKED
DESIGN	S. NEPRUD	Z. HARRIS
DETAILS	S. NEPRUD	Z. HARRIS
QUANTITIES	S. NEPRUD	Z. HARRIS

PREPARED FOR THE STATE OF CALIFORNIA DEPARTMENT OF TRANSPORTATION

DIVISION OF ENGINEERING SERVICES
ELECTRICAL-MECHANICAL-WATER AND WASTEWATER DESIGN

BRIDGE NO. 23W000IR
POST MILE 14.8

EASTBOUND CORDELIA CVEF
CVEF — CONTROL SCHEMATICS

SHEET M2-20

40a535wdm2-20.dgn
DOES SD imperial Rev.1/07 18-MAY-2011 13:38

ORIGINAL SCALE IN INCHES FOR REDUCED PLANS 0 1 2 3

CU 04264
EA 0A5351

DISREGARD PRINTS BEARING EARLIER REVISION DATES → 10/19/09 03/22/10 05/06/10 08/23/10 11/22/10 05/03/11

REVISION DATES (PRELIMINARY STAGE ONLY) SHEET OF

18-MAY-2011 13:38
40a535wdm2-20.dgn

DIST.	COUNTY	ROUTE	POST MILES TOTAL PROJECT	SHEET NO.	TOTAL SHEETS
04	Sol	12,80	L1.8/L2.0, 13.3/15.7	683	740

REGISTERED MECHANICAL ENGINEER — 05/03/11 DATE

REGISTERED PROFESSIONAL ENGINEER SEAN E NEPRUD No. M33458 Exp. 06/30/12 MECH STATE OF CALIFORNIA

5-16-11
PLANS APPROVAL DATE

The State of California or its officers or agents shall not be responsible for the accuracy or completeness of electronic copies of this plan sheet.

KENNEDY/JENKS CONSULTANTS
303 SECOND STREET
SUITE 300 SOUTH
SAN FRANCISCO, CA 94960

SOLANO TRANSPORTATION AUTHORITY
ONE HARBOR CENTER, SUITE 130
SUISUN CITY, CA 94585

CALIFORNIA STATE FIRE MARSHAL
APPROVED

Approval of this plan does not authorize or approve any omission or deviation from applicable regulations. Final approval is subject to field inspection. One set of approved plans shall be available on the project site at all times.

Reviewed by: 5/9/11
Hans Hennebergue
Senior Deputy State Fire Marshal

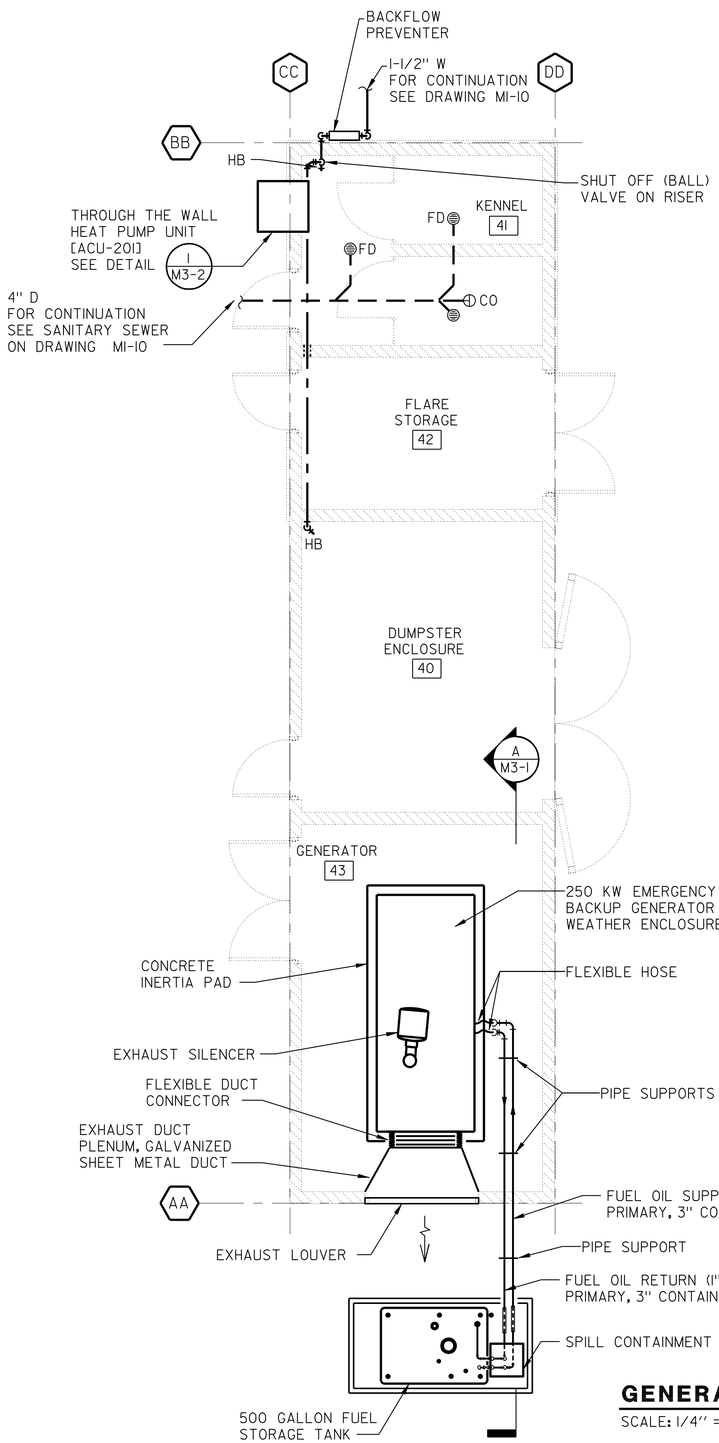

GENERATOR BUILDING PLAN

SCALE: 1/4" = 1'-0"

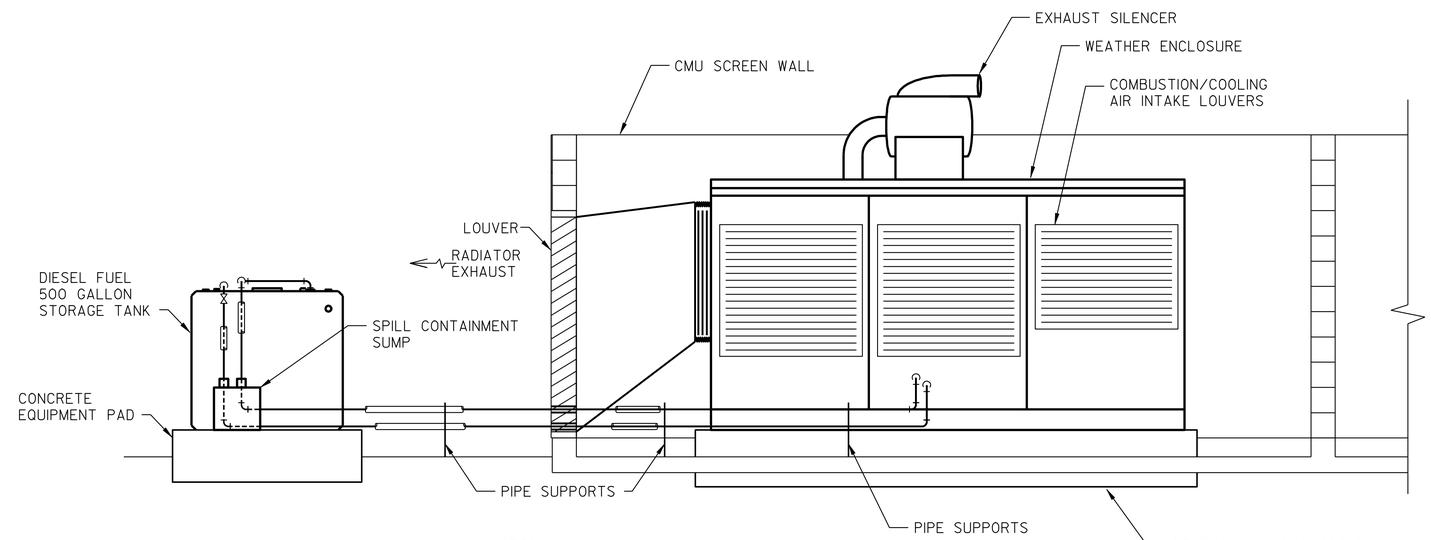

NOTES:

1. SIZE INERTIA PAD LARGE ENOUGH TO MOUNT THE GENERATOR WEATHER HOUSING, VERIFY FINAL DIMENSIONS AGAINST THE GENERATOR EQUIPMENT DIMENSIONS.

2. NOT ALL FUEL TANK CONNECTIONS ARE SHOWN, REFER TO SPECIFICATION 12-13.02 FOR ALL CONNECTIONS AND APPURTENANCES.

(A) GENERATOR BUILDING SECTION

SCALE: 1/2" = 1'-0"

IDENTIFICATION STAMP DIV. OF THE STATE ARCHITECT
02 111744
AC ELS — SS —
DATE 5-5-11

	BY	CHECKED
DESIGN	S. NEPRUD	Z. HARRIS
DETAILS	S. NEPRUD	Z. HARRIS
QUANTITIES	S. NEPRUD	Z. HARRIS

PREPARED FOR THE STATE OF CALIFORNIA DEPARTMENT OF TRANSPORTATION

DIVISION OF ENGINEERING SERVICES
ELECTRICAL-MECHANICAL-WATER AND WASTEWATER DESIGN

BRIDGE NO. 23W0001R
POST MILE 14.8

EASTBOUND CORDELIA CVEF

CVEF — GENERATOR BUILDING- PLAN AND SECTION

SHEET M3-1

40a535wdm3-01.dgn
DOES SD Imperial Rev.1/07 18-MAY-2011 13:38

ORIGINAL SCALE IN INCHES FOR REDUCED PLANS 0 1 2 3

CU 04264
EA 0A5351

DISREGARD PRINTS BEARING EARLIER REVISION DATES → 10/18/09 03/22/10 05/06/10 08/23/10 05/03/11

REVISION DATES (PRELIMINARY STAGE ONLY) SHEET OF

18-MAY-2011 13:38
40a535wdm3-01.dgn

DIST.	COUNTY	ROUTE	POST MILES TOTAL PROJECT	SHEET NO.	TOTAL SHEETS
04	Sol	12,80	L1.8/L2.0, 13.3/15.7	684	740

REGISTERED MECHANICAL ENGINEER — 05/03/11 DATE

REGISTERED PROFESSIONAL ENGINEER SEAN E NEPRUD No. M33458 Exp. 06/30/12 MECH STATE OF CALIFORNIA

5-16-11
PLANS APPROVAL DATE

The State of California or its officers or agents shall not be responsible for the accuracy or completeness of electronic copies of this plan sheet.

KENNEDY/JENKS CONSULTANTS
303 SECOND STREET
SUITE 300 SOUTH
SAN FRANCISCO, CA 94960

SOLANO TRANSPORTATION AUTHORITY
ONE HARBOR CENTER, SUITE 130
SUISUN CITY, CA 94585

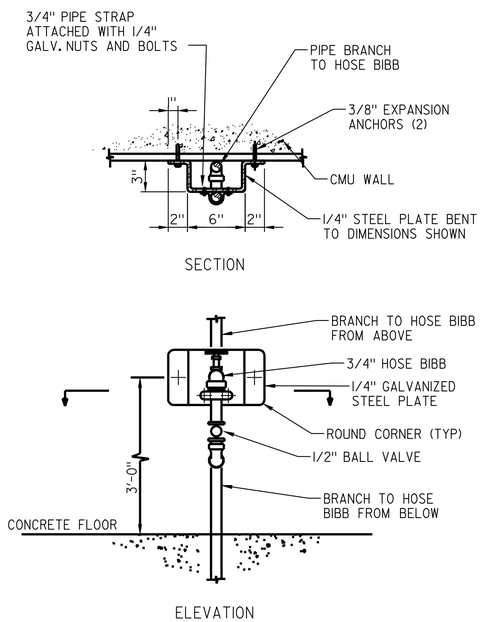

2 HOSE BIBB INSTALLATION DETAIL

SCALE: NOT TO SCALE'

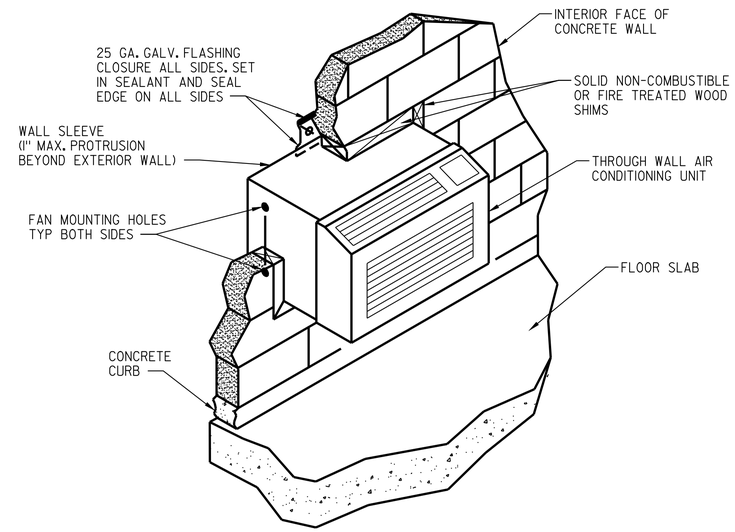

1 THROUGH WALL HEAT PUMP INSTALLATION

SCALE: NOT TO SCALE'

CALIFORNIA STATE FIRE MARSHAL APPROVED

Approval of this plan does not authorize or approve any omission or deviation from applicable regulations. Final approval is subject to field inspection. One set of approved plans shall be available on the project site at all times.

Reviewed by: Hans Henneberque 5/9/11
Hans Henneberque
Senior Deputy State Fire Marshal

IDENTIFICATION STAMP DIV. OF THE STATE ARCHITECT
02 111744
AC ELS — SS —
DATE

	BY	CHECKED
DESIGN	S. NEPRUD	Z. HARRIS
DETAILS	S. NEPRUD	Z. HARRIS
QUANTITIES	S. NEPRUD	Z. HARRIS

PREPARED FOR THE STATE OF CALIFORNIA DEPARTMENT OF TRANSPORTATION

DIVISION OF ENGINEERING SERVICES
ELECTRICAL-MECHANICAL-WATER AND WASTEWATER DESIGN

BRIDGE NO. 23W000IR
POST MILE 14.8

EASTBOUND CORDELIA CVEF

CVEF — GENERATOR BUILDING-MECHANICAL DETAILS

SHEET M3-2

40a535wdm3-02.dgn
DOES SD Imperial Rev.1/07 18-MAY-2011 13:38

ORIGINAL SCALE IN INCHES FOR REDUCED PLANS 0 1 2 3

CU 04264
EA 0A5351

DISREGARD PRINTS BEARING EARLIER REVISION DATES → REVISION DATES (PRELIMINARY STAGE ONLY) 10/14/09 03/22/10 05/06/10 08/23/10 11/22/10 05/03/11

SHEET OF

18-MAY-2011 13:38
40a535wdm3-02.dgn

ABBREVIATIONS

A	AMMETER, AMPERES
AC	ALTERNATING CURRENT
AF	AMPERE FRAME
AFD	ADJUSTABLE FREQUENCY DRIVE
AFF	ABOVE FINISHED FLOOR
AIC	AMPERES INTERRUPTING CAPACITY
ALPR	AUTOMATIC LICENSE PLATE RECOGNITION
APPROX	APPROXIMATE
AS	AMMETER SWITCH
AT	AMMETER TRIP
ATS	AUTOMATIC TRANSFER SWITCH
AUTO	AUTOMATIC
AUR	AUTOMATED USDOT READER
AUX	AUXILIARY
BCG	BARE COPPER GROUND
BLDG	BUILDING
C	CONDUIT
CB	CIRCUIT BREAKER
CEIL	CEILING
CKT	CIRCUIT
CO	CONDUIT ONLY
DISC	DISCONNECT
DISTR	DISTRIBUTION
DN	DOWN
DP	DISTRIBUTION PANELBOARD
(E)	EXISTING
EF	EXHAUST FAN
EH	ELECTRICAL HANDHOLE
ELEC	ELECTRIC, ELECTRICAL
EMERG	EMERGENCY
EQPT	EQUIPMENT
ES	ELECTRICAL SERVICE
FDR	FEEDER
(F)	FUTURE
FA	FIRE ALARM
FVNR	FULL VOLTAGE, NON REVERSING
FVR	FULL VOLTAGE, REVERSING
GALV	GALVANIZED
GF	GROUND FAULT INTERRUPTER
G, GND	GROUND
GRS	GALVANIZED RIGID STEEL
HCC	HYBRID CAMERA CABLE
HH	HANDHOLE
HOA	HAND-OFF-AUTOMATIC
HOR	HAND-OFF-REMOTE
HP	HORSEPOWER
HV	HIGH VOLTAGE
HZ	HERTZ (CYCLES PER SECOND)
JB	JUNCTION BOX
JT	JOINT TRENCH
KA	KILOAMPERES
KCMIL	THOUSANDS OF CIRCULAR MILS
KV	KILOVOLTS
KVA	KILOVOLT AMPERES
KVAR	KILOVOLT AMPERES REACTIVE
KW	KILOWATTS
KWH	KILOWATT HOURS
LP	LIGHTING PANEL
LV	LARGE VAULT
MAX	MAXIMUM
MCC	MOTOR CONTROL CENTER
MCP	MOTOR CIRCUIT PROTECTOR
MFR	MANUFACTURER
MH	MANHOLE
MIN	MINIMUM
MISC	MISCELLANEOUS
MOV	MOTOR OPERATED VALVE
MS	MOTOR STARTER
MTD	MOUNTED
MTS	MANUAL TRANSFER SWITCH
(N)	NEW
NEC	NATIONAL ELECTRICAL CODE
NEMA	NATIONAL ELECTRICAL MANUFACTURER'S ASSOCIATION
NIC	NOT IN CONTRACT
OH	OVERHEAD
OVC	OVER VIEW CAMERA
PNLBD	PANELBOARD
PVC	POLYVINYL CHLORIDE
PWR	POWER
RCPT	RECEPTACLE
RM	ROOM
SCADA	SUPERVISORY CONTROL AND DATA ACQUISTION
SH	SIGNAL HANDHOLE
SISC	SAFETY INSPECTION SYSTEM CAMERA
SPD	SURGE PROTECTION DEVICE
SRIS	SAFE ROADSIDE INSPECTION SYSTEM
SV	SMALL VAULT
SW	SWITCH
SWBD	SWITCHBOARD
TC	TECHNOLOGY CABINET
TP	TECHNOLOGY POLE
TSP	TWISTED SHIELDED PAIR
TYP	TYPICAL
UG	UNDERGROUND
UON	UNLESS OTHERWISE NOTED
V	VOLTS
VA	VOLT-AMPERES
VAV	VARIABLE AIR VOLUME
VFD	VARIABLE FREQUENCY DRIVE
VH	VAR-HOUR
VS	VOLTMETER SWITCH
VWI	VEHICLE WAVEFORM IDENTIFICATION SYSTEM
W	WIRE, WATTS
WHM	WATTHOUR METER
WHDM	WATTHOUR DEMAND METER
WP	WEATHERPROOF
WSMS	WEIGH STATION MESSAGE SIGN
XFMR	TRANSFORMER

GENERAL NOTES

G1. ALL EQUIPMENT INCLUDING CONDUIT, VAULTS AND PULLBOXES IS SHOWN IN APPROXIMATE LOCATIONS ONLY. PROPOSED FINAL LOCATIONS ARE TO BE APPROVED IN THE FIELD. THE CONTRACTOR SHALL GIVE AS LEAST 48 HOURS NOTICE FOR APPROVAL OF PROPOSED EQUIPMENT LOCATIONS.

G2. THE INSTALLATION OF ALL EQUIPMENT SHOWN ON THESE DRAWINGS OR DESCRIBED IN THE SPECIFICATIONS SHALL CONFORM TO THE REQUIREMENTS SET FORTH IN THE LATEST EDITIONS OF ALL APPLICABLE CODES AND UTILITY COMPANY STANDARDS. CONTACT THE UTILITY COMPANY REPRESENTATIVES AND VERIFY THEIR REQUIREMENTS.

G3. THIS IS A GENERALIZED LEGEND SHEET. THIS CONTRACT MAY NOT USE ALL INFORMATION SHOWN.

G4. INFORMATION SHOWN MAY NOT BE ALL INCLUSIVE. SEE ALSO ANSI C37.2, Y1.1, Y32.2, AND Y32.9.

G5. NOTIFY THE ENGINEER IMMEDIATELY IF CONFLICTS IN EQUIPMENT LOCATIONS ARE DISCOVERED OR IF PROBLEMS ARISE DUE TO FIELD CONDITIONS, LACK OF INFORMATION OR ANY OTHER REASON. NO PAYMENT WILL BE MADE FOR CHANGES WHICH HAVE NOT BEEN FAVORABLY REVIEWED BY THE ENGINEER.

G6. VERIFY ALL COLOR REQUIREMENTS BEFORE ORDERING MATERIALS.

G7. REFER TO THE MECHANICAL DRAWINGS FOR CERTAIN CONTROL DIAGRAMS AND EXACT LOCATIONS OF MECHANICAL EQUIPMENT AND FOR CERTAIN CONNECTIONS TO BE MADE TO ELECTRICAL CIRCUITS.

PLAN SYMBOLS

- UNDERGROUND CONDUIT WITH CONCRETE ENCASEMENT. SEE NOTE P3 & P4
- UNDERGROUND CONDUIT DIRECT BURIAL (NO CONC ENCASEMENT) SEE NOTE P3 & P4
- CONDUIT CONCEALED IN FLOOR. SEE NOTE P4
- CONDUIT CONCEALED IN WALL & CEILING. SEE NOTE P4
- CONDUIT EXPOSED, SEE NOTE P4
- 3/4"C-3#12, 1#12G — CALLOUT INDICATING CONDUIT SIZE, NUMBER OF WIRES AND WIRE SIZE. SEE NOTE P4
- 100 — CALLOUT INDICATING CONDUIT AND WIRE PER SCHEDULE
- CONDUIT RUN, HATCH MARKS INDICATE NUMBER OF #12 WIRES, NO HATCH MARKS IS 2#12 UNLESS OTHERWISE NOTED. SEE NOTE P4
- #10 — CONDUIT RUN, HATCH MARKS INDICATE NUMBER OF WIRES. CALLOUT INDICATES WIRE SIZE. SEE NOTE P4
- MULTIPLE CONDUIT RUN
- HOME RUN TO PANELBOARD OR AS INDICATED. SEE NOTE P4
- FLEXIBLE CONDUIT
- CONDUIT RUN, BROKEN AND CONTINUED ON SAME SHEET OR AS NOTED
- CONDUIT WITH SEAL FITTING
- OPEN CIRCLE DENOTES UPWARD CONDUIT RISER
- SOLID CIRCLE DENOTES DOWNWARD CONDUIT RISER
- T/D — TEL/DATA CONDUIT
- D — DATA CONDUIT
- S — SECURITY ALARM CONDUIT
- A — AUDIO CONDUIT
- V — VIDEO CONDUIT
- SURFACE MOUNTED PANELBOARD
- FLUSH MOUNTED PANELBOARD
- M — MOTOR
- DISCONNECT SWITCH
- COMBINATION MOTOR STARTER AND DISCONNECT SWITCH
- S_{MS} — MANUAL MOTOR STARTER
- CONTROL STATION, UON
- EQUIPMENT MOUNTING STAND
- GROUND ROD AND BOX
- INSTRUMENT
- S_* — SINGLE POLE SWITCH
  - * 2 = 2 POLE, 3 = 3 WAY, 4 = 4 WAY,
  - K = KEY OPERATED
  - WP = WEATHERPROOF
  - D = DIMMER
  - T = DIGITAL TIMER
- S^{ab} — SINGLE POLE SWITCH, SEE NOTE P2
- S^{ab} — WALL SWITCH INFRARED OCCUPANCY SENSOR WITH OPTIONAL DUAL RELAY
- CEILING MOUNT OCCUPANCY SENSOR FOR LIGHTING AUTOMATION
- PP — POWER PACK FOR OCCUPANCY SENSOR
- ab — FLUORESCENT FIXTURE SEE NOTE P2
- FLUORESCENT RECESS CAN FIXTURE
- FLUORESCENT OPEN STRIP FIXTURE
- WALL/CEILING MOUNTED FIXTURE
- WALL/CEILING MOUNTED EXIT LIGHT - DIRECTIONAL ARROW WHERE INDICATED, SHADED AREA INDICATES ILLUMINATED FACE
- EMERGENCY LIGHT WITH SELF CONTAINED BATTERY
- AMBIENT LIGHT SENSOR
- A — LIGHT FIXTURE IDENTIFICATION
- SINGLE RECEPTACLE, 120 V
- SINGLE RECEPTACLE, 208 V
- DUPLEX WALL RECEPTACLE, 120 V
  - WP = WEATHERPROOF
  - G = GROUNDED
  - IG = ISOLATED GROUND
  - GF = GROUND FAULT INTERRUPTER
- DOUBLE DUPLEX WALL RECEPTACLE, 120 V
- DUPLEX FLOOR RECEPTACLE, 120 V
- RECEPTACLE, 480 V
- J — WALL/CEILING MOUNTED JUNCTION BOX
- J — FLOOR RECESS MOUNTED JUNCTION BOX
- T — THERMOSTAT, WALL MOUNTED
- WALL TELEPHONE OUTLET
- * WALL TELEPHONE FAX OUTLET AT&T (NON-PPX)
- WALL DATA OUTLET
- FLOOR TELEPHONE OUTLET
- WALL TELEPHONE/DATA OUTLET
- FLOOR TELEPHONE/DATA OUTLET
- F — FIRE ALARM PULL STATION
- F — FIRE ALARM HORN WITH VISUAL
- FACP — FIRE ALARM CONTROL PANEL
- D — MAGNETIC DOOR HOLDER
- K — INTRUSION KEY PAD
- D — INTRUSION DOOR CONTACT SWITCH
- CR — CARD READER
- H — HEAT DETECTOR
- S — SMOKE DETECTOR
- V — SECURITY CAMERA, WALL OR CEILING MTD
- S — PAGING LOUD SPEAKER, WALL MTD (FOR EXTERIOR)
- S — PAGING SPEAKER, RECESS IN CEILING
- S — PAGING SPEAKER, WALL MTD
- OVER HEIGHT DETECTOR (FURNISHED AND INSTALLED BY OTHERS)
- PUBLIC ADDRESS SYSTEM
- OVC (FURNISHED AND INSTALLED BY OTHERS)
- A — ALPR (FURNISHED AND INSTALLED BY OTHERS)
- S — SISC (FURNISHED AND INSTALLED BY OTHERS)
- F1 — FUTURE TECHNOLOGY 1 (FURNISHED AND INSTALLED BY OTHERS)
- F2 — FUTURE TECHNOLOGY 2 (FURNISHED AND INSTALLED BY OTHERS)
- H — AUR (FURNISHED AND INSTALLED BY OTHERS)
- L — VAULT (TYPE L)
- S — VAULT (TYPE S)
- PULL BOX No. 5 TRAFFIC RATED UNLESS OTHERWISE INDICATED OR NOTED
- I — INTERCOM
- — PVC — POLYVINYL CHLORIDE CONDUIT
- VWI (FURNISHED BY OTHERS, INSTALLED BY CONTRACTOR)

PLAN NOTES

P1. THE SIZE OF ALL CONDUITS AND WIRE FILL SHALL BE SHOWN ON PLANS. PROVIDE 3/16 INCH NYLON PULL ROPE IN EACH EMPTY CONDUIT.

P2. LOWER CASE LETTERS ADJACENT TO A SWITCH OR LIGHT FIXTURE INDICATE A SWITCHED CIRCUIT. FOR 4 LAMP FLUORESCENT FIXTURES WIRED IN PAIRS WITHIN EACH FIXTURE, THE "a" SWITCH CONTROLS THE OUTER LAMPS AND THE "b" SWITCH CONTROLS THE INNER LAMPS; WIRE 3 LAMP FIXTURES SIMILARLY.

P3. NUMBER OF CIRCLES DOES NOT REPRESENT THE NUMBER OF CONDUITS IN THE ENCASEMENT.

P4. UNLESS OTHERWISE INDICATED CONDUIT SIZE SHALL BE 3/4" AND 1 1/4" UNDERGROUND.

DIST.	COUNTY	ROUTE	POST MILES TOTAL PROJECT	SHEET NO.	TOTAL SHEETS
04	Sol	12,80	L1.8/L2.0, 13.3/15.7	685	740

REGISTERED ELECTRICAL ENGINEER — 05/02/11 DATE

REGISTERED PROFESSIONAL ENGINEER — TONY I. WAKIM — No. E10363 — Exp. 09/30/12 — ELEC — STATE OF CALIFORNIA

5-16-11
PLANS APPROVAL DATE

The State of California or its officers or agents shall not be responsible for the accuracy or completeness of electronic copies of this plan sheet.

KENNEDY/JENKS CONSULTANTS 303 SECOND STREET SUITE 300 SOUTH SAN FRANCISCO, CA 94960	SOLANO TRANSPORTATION AUTHORITY ONE HARBOR CENTER, SUITE 130 SUISUN CITY, CA 94585

SINGLE LINE SYMBOLS

- MCP/00AT, 000AT/000AF — CIRCUIT BREAKER, 3 POLE EXCEPT WHERE NOTED. RATING IN AMPERES AS NOTED. IF TWO RATINGS APPEARS (EG. 100/625) THEN DEVICE IS MCP; NUMERATOR IS CONTINUOUS CURRENT RATING & DENOMINATOR IS INSTANTANEOUS TRIP SETTING.
- POWER CIRCUIT BREAKER DRAWOUT ABOVE 1500V RATING AS NOTED
- SURGE ARRESTER
- CURRENT TRANSFORMER
- VOLTAGE TRANSFORMER
- POWER OR DISTRIBUTION TRANSFORMER RATING AS NOTED
- GEN — GENERATOR
- CONTROL PACKAGE PROVIDED WITH THE DRIVEN EQUIPMENT
- 100 — MOTOR. NUMBER INDICATES HORSEPOWER
- SWITCH, 3 POLE EXCEPT WHERE NOTED. RATING IN AMPERES AS NOTED
- AUTOMATIC TRANSFER SWITCH 3 POLE, RATING AS NOTED
- BUS STAB ON MCC OR SWITCHGEAR, CORD & PLUG CONNECTION FOR MOTORS
- * — * A - AMMETER, V - VOLTMETER, WH - WATTHOUR METER, GS - GROUND FAULT SENSOR
- ST — SHUNT TRIP
- FUSE
- FUSE CUTOUT
- GROUND CONNECTION

CALIFORNIA STATE FIRE MARSHAL APPROVED
Approval of this plan does not authorize or approve any omission or deviation from applicable regulations. Final approval is subject to field inspection. One set of approved plans shall be available on the project site at all times. 5/9/11
Reviewed by: Hans Henneberque, Senior Deputy State Fire Marshal

STANDARD PLANS APPLICABLE

DATED MAY, 2006

- ES-1A
- ES-8
- ES-13A
- S48
- S49
- ES-1C
- ES-1B
- ES-4A THRU ES-4D
- ES-5A
- ES-5B
- ES-7B

IDENTIFICATION STAMP DIV. OF THE STATE ARCHITECT
02 111744
AC ___ FLS ___ SS ___
DATE 5-5-11

DESIGN	BY W. LUM	CHECKED T. WAKIM
DETAILS	BY W. LUM	CHECKED T. WAKIM
QUANTITIES	BY W. LUM	CHECKED T. WAKIM

PREPARED FOR THE STATE OF CALIFORNIA DEPARTMENT OF TRANSPORTATION

DIVISION OF ENGINEERING SERVICES
ELECTRICAL-MECHANICAL-WATER AND WASTEWATER DESIGN

BRIDGE NO. 23W0001R — POST MILE 14.8

EASTBOUND CORDELIA CVEF
CVEF — ELECTRICAL ABBREVIATIONS AND SYMBOLS
SHEET EE0-0

ORIGINAL SCALE IN INCHES FOR REDUCED PLANS 0 1 2 3

CU 04264
EA 0A5351

DISREGARD PRINTS BEARING EARLIER REVISION DATES →
REVISION DATES (PRELIMINARY STAGE ONLY): 10/19/09, 03/22/10, 05/06/10, 08/23/10, 11/22/10, 05/02/11
SHEET OF

40a535weee0-00.dgn
DOES SD Imperial Rev.1/07 18-MAY-2011 13:38

18-MAY-2011 13:38
40a535weee0-00.dgn

DIST.	COUNTY	ROUTE	POST MILES TOTAL PROJECT	SHEET NO.	TOTAL SHEETS
04	Sol	12,80	L1.8/L2.0, 13.3/15.7	686	740

Tony Wakim 11/22/10
REGISTERED ELECTRICAL ENGINEER DATE

REGISTERED PROFESSIONAL ENGINEER TONY I. WAKIM No. E10363 Exp. 09/30/12 ELEC STATE OF CALIFORNIA

5-16-11
PLANS APPROVAL DATE

The State of California or its officers or agents shall not be responsible for the accuracy or completeness of electronic copies of this plan sheet.

KENNEDY/JENKS CONSULTANTS
303 SECOND STREET
SUITE 300 SOUTH
SAN FRANCISCO, CA 94960

SOLANO TRANSPORTATION AUTHORITY
ONE HARBOR CENTER, SUITE 130
SUISUN CITY, CA 94585

CERTIFICATE OF COMPLIANCE (Part 1 of 4) LTG-1-C

PROJECT NAME: CORDELIA TRUCK INSPECTION FACILITY			DATE: 4/1/10
PROJECT ADDRESS: I-80 SOLANO COUNTY CALIFORNIA			Building Permit
PRINCIPAL DESIGNER-LIGHTING: TONY WAKIM	TELEPHONE: (415) 243-2150		
DOCUMENTATION AUTHOR: WEYLAND LUM	TELEPHONE: (415) 243-2150		Checked by/Date Enforcement Agency Use

GENERAL INFORMATION

DATE OF PLANS	4/1/10	BUILDING CONDITIONED FLOOR AREA	12,754	CLIMATE ZONE	12

BUILDING TYPE: ☒ NONRESIDENTIAL ☐ HIGH RISE RESIDENTIAL ☐ HOTEL/MOTEL GUEST

☒ CONDITIONED SPACES ☒ UNCONDITIONED SPACES ☐ INDOOR / OUTDOOR SIGNS

PHASE OF CONSTRUCTION: ☒ NEW ☐ ADDITION ☐ ALTERATION

METHOD OF COMPLIANCE

☐ PERFORMANCE ☐ COMPLETE BUILDING ☒ AREA CATEGORY ☐ TAILORED ☐ COMMON LIGHTING

STATEMENT OF COMPLIANCE

This Certificate of Compliance lists the building features and performance specifications need to comply with Title 24, Parts 1 and 6 of the California Code of Regulations. This certificate applies only to building lighting requirements.

The documentation preparer hereby certifies that the documentation is accurate and complete.

DOCUMENTATION AUTHOR	SIGNATURE	DATE
WEYLAND LUM	Weyland Lum	4/1/10

The Principal Lighting Designer hereby certifies that the proposed building design represented in this set of construction documents is consistent with the other compliance forms and worksheets, with the specifications, and with any other calculations submitted with this permit application. The proposed building has been designed to meet lighting requirements contained in applicable parts of Sections 110, 119,130–132, 146, 148, & 149 of Title 24, Part 6.

☐ The plans & specifications meet the requirements of Part 6 (Sections 10-103a). ☐ The installation certificates meet the requirements of Part 6 (10-103a 3).

☐ The operation & maintenance information meet the requirements of Part 6 (10-103c).

Please check one: (These sections of the Business and Professions Code are printed in full in the Nonresidential Manual.)

☒ I hereby affirm that I am eligible under the provisions of Division 3 of the Business and Professions Code to sign this document as the person responsible for its preparation; and that I am licensed in the State of California as a civil engineer or electrical engineer, or I am a licensed architect.

☐ I affirm that I am eligible under the provisions of Division 3 of the Business and Professions Code by section 5537.2 or 6737.3 to sign this document as the person responsible for its preparation; and that I am a licensed contractor performing this work.

☐ I affirm that I am eligible under Division 3 of the Business and Professions Code to sign this document because it pertains to a structure or type of work described as exempt pursuant to Business and Professions Code Sections 5537, 5538 and 6737.1.

PRINCIPAL LIGHTING DESIGNER-NAME	SIGNATURE	DATE	LIC. #
TONY WAKIM	Tony Wakim	4/1/10	E10363

LIGHTING MANDATORY MEASURES

✓ ☐ Indicate location on plans of Note Block for Mandatory Measure _____

LIGHTING COMPLAINCE FORMS & WORKSHEETS (check box if worksheet is included)

☒ LTG-1-C, Parts 1 of 4 and 2 of 4	Certificate of Compliance. Part 1 of 4 and 2 of 4 are required for all submittals
☒ LTG-1-C, Part 3 of 4	Certificate of Compliance. Part 3 of 4 submittal is required only if Control Credits are claimed
☒ LTG-1-C, Part 4 of 4	Certificate of Compliance. Part 4 of 4 submittal is required when lighting controls are installed
☒ LTG-2-C	Indoor Lighting Schedule
☐ LTG-3-C	Portable Lighting Worksheet
☒ LTG-4-C	Lighting Controls Credit Worksheet
☒ LTG-5-C	Indoor Lighting Power Allowance
☐ LTG-6-C	Tailored Method Worksheet
☐ LTG-7-C	Room Cavity Ratio Worksheet
☐ LTG-8-C	Common Lighting Systems Method Worksheet
☐ LTG-9-C	Line Voltage Track Lighting Worksheet
☐ OLTG-4-C	Signs (See OLTG-4-C Sign Worksheet in Chapter 6, Outdoor Lighting and Signs Chapter)

CERTIFICATE OF COMPLIANCE (Part 2 of 4) LTG-1-C

PROJECT NAME: CORDELIA TRUCK INSPECTION FACILITY
DATE: 4/1/10

INSTALLED INDOOR LIGHTING POWER FOR CONDITIONED AND UNCONDITIONED SPACES

		INSTALLED WATTS
INSTALLED LIGHTING, CONDITIONED SPACES (From LTG-2-C)		6864
PORTABLE LIGHTING (From LTG-3-C)	+	0
LIGHTING CONTROL CREDIT, CONDITIONED SPACES (From LTG-4-C)	-	1053.7
CONDITIONED SPACE ADJUSTED INSTALLED LIGHTING POWER	=	5810.3
INSTALLED LIGHTING, UNCONDITIONED SPACES (From LTG-2-C)		6592
LIGHTING CONTROL CREDIT, UNCONDITIONED SPACES (From LTG-4-C)	-	0
UNCONDITIONED SPACE ADJUSTED INSTALLED LIGHTING POWER	=	6592

ALLOWED INDOOR LIGHTING POWER FOR CONDITIONED SPACES

✓

☐ **COMPLETE BUILDING METHOD (from LTG-5-C)**

☒ **AREA CATEGORY METHOD (from LTG-5-C)**

☐ **TAILORED METHOD (from LTG-5-C)**

	ALLOWED WATTS
ALLOWED LIGHTING POWER	14,412

ALTERNATE COMPLIANCE

✓

☐ **PERFORMANCE METHOD**

☐ **COMMON LIGHTING SYSTEM (from LTG-8-C)**

ALLOWED INDOOR LIGHTING POWER FOR UNCONDITIONED SPACES (From LTG-5-C) _____ Watts

MANDATORY LIGHTING MEASURES FOR INDOOR LIGHTING AND DAYLIT AREAS

MANDATORY INDOOR AND DAYLIGHTING AUTOMATIC CONTROLS

CONTROL LOCATION (Room #, Area #, or Description)	CONTROL IDENTIFICATION	CONTROL TYPE (Auto Time Switch, Dimmimg, Photosensor, etc.)	SPACE CONTROLLED Lists the location of controlled lights	✓ If Control is for Daylighting	NOTE TO FIELD

CALIFORNIA STATE FIRE MARSHAL APPROVED

Approval of this plan does not authorize or approve any omission or deviation from applicable regulations. Final approval is subject to field inspection. One set of approved plans shall be available on the project site at all times.

Reviewed by: Hans Hennebergue 5/9/11
Hans Hennebergue
Senior Deputy State Fire Marshal

IDENTIFICATION STAMP DIV. OF THE STATE ARCHITECT
02 111744
AC ALS — SS —
DATE

2005 Nonresidential Compliance Forms *April 2005*

DESIGN	BY W. LUM	CHECKED T. WAKIM	
DETAILS	BY W. LUM	CHECKED T. WAKIM	
QUANTITIES	BY W. LUM	CHECKED T. WAKIM	

PREPARED FOR THE STATE OF CALIFORNIA DEPARTMENT OF TRANSPORTATION

DIVISION OF ENGINEERING SERVICES
ELECTRICAL-MECHANICAL-WATER AND WASTEWATER DESIGN

BRIDGE NO. 23W000IR
POST MILE 14.8

EASTBOUND CORDELIA CVEF

CVEF — TITLE 24 ELECTRICAL COMPLIANCE FORMS

SHEET EEO-0.1

40a535weee0-00-01.dgn
DOES SD Imperial Rev.1/07 18-MAY-2011 10:04:12 AM

ORIGINAL SCALE IN INCHES FOR REDUCED PLANS 0 1 2 3

CU 04264
EA 0A5351

DISREGARD PRINTS BEARING EARLIER REVISION DATES → REVISION DATES (PRELIMINARY STAGE ONLY) 10/19/09 03/22/10 05/06/10 08/23/10 11/22/10

SHEET OF

4/20/10 10:04:12 AM

40a535weee0-00-01.dgn

DIST.	COUNTY	ROUTE	POST MILES TOTAL PROJECT	SHEET NO.	TOTAL SHEETS
04	Sol	12,80	L1.8/L2.0, 13.3/15.7	687	740

Tony Wakim 11/22/10
REGISTERED ELECTRICAL ENGINEER DATE

REGISTERED PROFESSIONAL ENGINEER TONY I. WAKIM No. E10363 Exp. 09/30/12 ELEC STATE OF CALIFORNIA

5-16-11
PLANS APPROVAL DATE

The State of California or its officers or agents shall not be responsible for the accuracy or completeness of electronic copies of this plan sheet.

KENNEDY/JENKS CONSULTANTS
303 SECOND STREET
SUITE 300 SOUTH
SAN FRANCISCO, CA 94960

SOLANO TRANSPORTATION AUTHORITY
ONE HARBOR CENTER, SUITE 130
SUISUN CITY, CA 94585

CERTIFICATE OF COMPLIANCE (Part 3 of 4) LTG-1-C

PROJECT NAME: CORDELIA TRUCK INSPECTION FACILITY
DATE: 4/1/10

CONTROLS FOR CREDIT IN CONDITIONED AND UNCONDITIONED SPACES

CONTROL LOCATION (Room # or Dwg #)	CONTROL IDENTIFICATION	CONTROL TYPE (Occ Sensor, Daylight, Dimming, etc)	LUMINAIRES CONTROLLED TYPE	LUMINAIRES CONTROLLED # OF LUMINAIRES	NOTE TO FIELD
1, 5, 5A	S_D	Dimmer switch	FLUOR	19	
6	S_D	Dimmer switch	FLUOR	1	
3	(S)	Occ Sensor switch	FLUOR	4	
4		Occ Sensor switch	FLUOR	4	
9		Occ Sensor switch	FLUOR	24	
10		Occ Sensor switch	FLUOR	6	
12		Occ Sensor switch	FLUOR	2	
13		Occ Sensor switch	FLUOR	1	
13A		Occ Sensor switch	FLUOR	1	
13B		Occ Sensor switch	FLUOR	2	
16		Occ Sensor switch	FLUOR	2	
18		Occ Sensor switch	FLUOR	2	
19		Occ Sensor switch	FLUOR	4	
20		Occ Sensor switch	FLUOR	4	
21		Occ Sensor switch	FLUOR	2	
22		Occ Sensor switch	FLUOR	1	
23		Occ Sensor switch	FLUOR	2	
24		Occ Sensor switch	FLUOR	1	
25		Occ Sensor switch	FLUOR	2	
27		Occ Sensor switch	FLUOR	4	
32		Occ Sensor switch	FLUOR	1	
33		Occ Sensor switch	FLUOR	1	
34		Occ Sensor switch	FLUOR	2	
11	◆	Occ Sensor on ceiling	FLUOR	4	
15		Occ Sensor on ceiling	FLUOR	4	
17		Occ Sensor on ceiling	FLUOR	2	
28		Occ Sensor on ceiling	FLUOR	3	
29		Occ Sensor on ceiling	FLUOR	3	
30		Occ Sensor on ceiling	FLUOR	3	
31		Occ Sensor on ceiling	FLUOR	8	
36		Occ Sensor on ceiling	FLUOR	13	

CERTIFICATE OF COMPLIANCE (Part 4 of 4) LTG-1-C

PROJECT NAME: CORDELIA TRUCK INSPECTION FACILITY
DATE: 4/1/10

Designer:

This form is to be used by the designer and attached to the plans. Listed below are all the acceptance tests for lighting systems. The designer is required to check the boxes by all acceptance tests that apply and list all equipment that require an acceptance test. If all equipment of a certain type requires a test, list the equipment description and the number of systems to be tested in parentheses. The NJ number designates the Section in the Appendix of the Nonresidential ACM Manual that describes the test. Also indicate the person responsible for performing the tests (i.e. the installing contractor, design professional or an agent selected by the owner). Since this form will be part of the plans, completion of this section will allow the responsible party to budget for the scope of work appropriately.

Building Departments:

Systems Acceptance. Before an occupancy permit is granted for a newly constructed building or space, or a new space-conditioning system serving a building or space is operated for normal use, all control devices serving the building or space shall be certified as meeting the Acceptance Requirements for Code Compliance. In addition a Certificate of Acceptance, MECH-1-A, Forms shall be submitted to the building department that:

A. Certifies plans, specifications, installation certificates, and operating and maintenance information meet the requirements of §10-103(b) and Title 24 Part 6.

Test Description	Test Performed By:
✓ ☒ LTG-2-A: Lighting Control Acceptance Document • Occupancy Sensor Acceptance • Manual Daylight Controls Acceptance • Automatic Time Switch Control Acceptance Equipment requiring acceptance testing_____	ELECTRICAL CONTRACTOR AND ENGINEER
✓ ☐ LTG-3-A: Automatic Daylighting Controls Acceptance Document Equipment requiring acceptance testing _____	

CALIFORNIA STATE FIRE MARSHAL
APPROVED
Approval of this plan does not authorize or approve any omission or deviation from applicable regulations. Final approval is subject to field inspection. One set of approved plans shall be available on the project site at all times.
Reviewed by: Hans Henneberque 5/9/11
Hans Henneberque
Senior Deputy State Fire Marshal

IDENTIFICATION STAMP
DIV. OF THE STATE ARCHITECT
02 1117 44
ACC ___ BLS ___ SS ___
DATE ___

DESIGN	BY W. LUM	CHECKED T. WAKIM	
DETAILS	BY W. LUM	CHECKED T. WAKIM	
QUANTITIES	BY W. LUM	CHECKED T. WAKIM	

PREPARED FOR THE STATE OF CALIFORNIA DEPARTMENT OF TRANSPORTATION

DIVISION OF ENGINEERING SERVICES
ELECTRICAL-MECHANICAL-WATER AND WASTEWATER DESIGN

BRIDGE NO. 23W000IR
POST MILE 14.8

EASTBOUND CORDELIA CVEF
CVEF TITLE 24 ELECTRICAL COMPLIANCE FORMS

SHEET EEO-0.2

40a535weee0-00-02.dgn
DOES SD imperial Rev.1/07 18-MAY-2011 10:04:12 AM

ORIGINAL SCALE IN INCHES FOR REDUCED PLANS 0 1 2 3

CU 04264
EA 0A5351

DISREGARD PRINTS BEARING EARLIER REVISION DATES →
REVISION DATES (PRELIMINARY STAGE ONLY) 10/19/09 03/22/10 05/06/10 08/23/10 11/22/10
SHEET OF

4/20/10 10:04:12 AM
40a535weee0-00-02.dgn

DIST.	COUNTY	ROUTE	POST MILES TOTAL PROJECT	SHEET NO.	TOTAL SHEETS
04	Sol	12,80	L1.8/L2.0, 13.3/15.7	688	740

Tony Wakim 11/22/10
REGISTERED ELECTRICAL ENGINEER DATE

REGISTERED PROFESSIONAL ENGINEER TONY I. WAKIM No. E10363 Exp. 09/30/12 ELEC STATE OF CALIFORNIA

5-16-11
PLANS APPROVAL DATE

The State of California or its officers or agents shall not be responsible for the accuracy or completeness of electronic copies of this plan sheet.

KENNEDY/JENKS CONSULTANTS
303 SECOND STREET
SUITE 300 SOUTH
SAN FRANCISCO, CA 94960

SOLANO TRANSPORTATION AUTHORITY
ONE HARBOR CENTER, SUITE 130
SUISUN CITY, CA 94585

INDOOR LIGHTING SCHEDULE (Part 1 of 2) LTG-2-C

PROJECT NAME: CORDELIA TRUCK INSPECTION FACILITY
DATE: 4/1/10

INSTALLED LIGHTING POWER FOR CONDITIONED SPACES

Luminaire		Lamps/Ballasts				Installed Watts			
A	B	C	D	E	F	G	H	I	J
Name	Type Description	Lamp Type	Number of Lamps per Luminaire	Watts Per Lamp	Number of Ballast per Luminaire	Watts per Luminaire	✓ If CEC Default	Number of Luminaires	Installed Watts (H x J)
A2	Fluor 2x4 parabolic louver	T8	2	32	1	62	✓	15	930
A3	Fluor 2x4 parabolic louver	T8	3	32	2	94	✓	12	1128
B2	Fluor 2x4 lens	T8	2	32	1	62	✓	16	992
D1	Fluor 1x4 lens	T8	1	32	1	32	✓	12	44
D2	Fluor 1x4 lens	T8	2	32	1	62	✓	1	62
E	Fluor 1x4 wrap-around	T8	1	32	1	32	✓	6	192
F1	8" recess can	32 TRT	1	32	1	35	✓	25	875
F2	8" recess can	32 TRT	1	32	1	35	✓	13	455
G	Fluor louver pendent	T8	1	32	1	32	✓	23	736
H1	Fluor wrap-around	T8	1	32	1	32	✓	11	352
H2	Fluor 1x4 wrap-around	T8	2	32	1	62	✓	4	248
I1	Fluor hi-abuse wrap-around	T8	1	32	1	32	✓	1	32
I2	Fluor hi-abuse wrap-around	T8	2	32	1	62	✓	1	62
J	Fluor ABS wrap-around	T8	3	32	1	92	✓	1	92
M	11" pendent can	32 TRT	1	32	1	35	✓	8	280
P	Fluor cover strip	T8	1	32	1	32	✓	12	384

PAGE TOTAL	6864
BUILDING TOTAL (sum of all pages)	0
PORTABLE LIGHTING (From LTG-3-C)	0
CONTROL CREDIT (from LTG-4-C)	1053.7
ADJUSTED ACTUAL WATTS	5810.3

INDOOR LIGHTING SCHEDULE (Part 2 of 2) LTG-2-C

PROJECT NAME: CORDELIA TRUCK INSPECTION FACILITY
DATE: 4/1/10

INSTALLED LIGHTING POWER FOR UNCONDITIONED SPACES

Luminaire		Lamps/Ballasts				Installed Watts			
A	B	C	D	E	F	G	H	I	J
Name	Type Description	Lamp Type	Number of Lamps per Luminaire	Watts Per Lamp	Number of Ballast per Luminaire	Watts per Luminaire	✓ If CEC Default	Number of Luminaires	Installed Watts (H x J)
K	HID enclosed lens	MH	1	150	1	190	✓	32	6080
T2	Fluor open strip	T8	2	32	1	64	✓	8	512

BUILDING TOTAL (sum of all pages)	+ 6592
CONTROL CREDIT (from LTG-4-C	+ 0
ADJUSTED ACTUAL WATTS	+ 6592

CALIFORNIA STATE FIRE MARSHAL APPROVED

Approval of this plan does not authorize or approve any omission or deviation from applicable regulations. Final approval is subject to field inspection. One set of approved plans shall be available on the project site at all times.

Reviewed by: 5/9/11
Hans Henneberque
Senior Deputy State Fire Marshal

IDENTIFICATION STAMP DIV. OF THE STATE ARCHITECT
02 111744
AC ___ BLS ___ SS ___
DATE 5-5-11

DESIGN	BY W. LUM	CHECKED T. WAKIM	
DETAILS	BY W. LUM	CHECKED T. WAKIM	
QUANTITIES	BY W. LUM	CHECKED T. WAKIM	

PREPARED FOR THE STATE OF CALIFORNIA DEPARTMENT OF TRANSPORTATION

DIVISION OF ENGINEERING SERVICES ELECTRICAL-MECHANICAL-WATER AND WASTEWATER DESIGN

BRIDGE NO. 23W000IR
POST MILE 14.8

EASTBOUND CORDELIA CVEF
CVEF TITLE 24 ELECTRICAL COMPLIANCE FORMS

SHEET EEO-0.3

40a535weee0-00-03.dgn
DOES SD Imperial Rev.1/07 18-MAY-2011 10:04:12 AM

ORIGINAL SCALE IN INCHES FOR REDUCED PLANS 0 1 2 3

CU 04264
EA 0A5351

DISREGARD PRINTS BEARING EARLIER REVISION DATES → 10/19/09 03/22/10 05/06/10 08/23/10 11/22/10

REVISION DATES (PRELIMINARY STAGE ONLY) SHEET OF

4/20/10 10:04:12 AM

40a535weee0-00-03.dgn

DIST.	COUNTY	ROUTE	POST MILES TOTAL PROJECT	SHEET NO.	TOTAL SHEETS
04	Sol	12,80	L1.8/L2.0, 13.3/15.7	689	740

Tony Wakim 11/22/10
REGISTERED ELECTRICAL ENGINEER DATE

REGISTERED PROFESSIONAL ENGINEER TONY I. WAKIM No. E10363 Exp. 09/30/12 ELEC STATE OF CALIFORNIA

5-16-11
PLANS APPROVAL DATE

The State of California or its officers or agents shall not be responsible for the accuracy or completeness of electronic copies of this plan sheet.

KENNEDY/JENKS CONSULTANTS
303 SECOND STREET
SUITE 300 SOUTH
SAN FRANCISCO, CA 94960

SOLANO TRANSPORTATION AUTHORITY
ONE HARBOR CENTER, SUITE 130
SUISUN CITY, CA 94585

LIGHTING CONTROLS CREDIT WORKSHEET (Part 1 of 3) LTG-4-C

CONTROL CREDITS FOR CONDITIONED SPACES

PROJECT NAME: CORDELIA TRUCK INSPECTION FACILITY
DATE: 4/1/10

A	B	C	D	E	F	G	H	I	J
				DAYLIGHTING					
ROOM #, ZONE ID CONDITIONED AREAS	LIGHTING CONTROL DESCRIPTION	PLAN REFEFERENCE	ROOM AREA (ft^2)	WINDOW WALL RATIO	GLAZING VLT	SKYLIGHT EFFECTIVE APERTURE[1]	WATTS OF CONTROL LIGHTING	LIGHTING ADJUSTMENT FACTOR[2]	CONTROL CREDIT WATTS (H X I)
1, 5, 5A, 6	Dimmer sw	EE2-3	1095	-	-	-	676	.10	67.6
3	Occ sensor	EE2-3	172	-	-	-	134	.20	26.8
4	Occ sensor	EE2-3	168	-	-	-	137	.20	27.4
9	Dimmer sw	EE2-3	1815	-	-	-	795	.10	79.5
10	Occ sensor	EE2-2	615	-	-	-	552	.20	110.4
11	Occ sensor	EE2-2	340	-	-	-	368	.20	73.6
12	Occ sensor	EE2-2	176	-	-	-	124	.20	24.8
13	Occ sensor	EE2-2	50	-	-	-	32	.20	6.4
13A	Occ sensor	EE2-2	120	-	-	-	32	.20	6.4
13B	Occ sensor	EE2-2	200	-	-	-	64	.20	12.8
				-	-	-			
15	Occ sensor	EE2-2	442	-	-	-	248	.20	49.6
16	Occ sensor	EE2-2	198	-	-	-	124	.20	24.8
17	Occ sensor	EE2-2	176	-	-	-	93	.20	18.6
18	Occ sensor	EE2-2	160	-	-	-	184	.20	36.8
19	Occ sensor	EE2-2	248	-	-	-	248	.20	49.6
20	Occ sensor	EE2-2	248	-	-	-	248	.20	49.6
21	Occ sensor	EE2-2	218	-	-	-	124	.20	24.8
22	Occ sensor	EE2-2	131	-	-	-	62	.20	12.4
23	Occ sensor	EE2-2	167	-	-	-	124	.20	24.8
24	Occ sensor	EE2-2	112	-	-	-	62	.20	12.4
25	Occ sensor	EE2-2	313	-	-	-	124	.20	24.8
27	Occ sensor	EE2-2	490	-	-	-	248	.20	49.6
28	Occ sensor	EE2-2	192	-	-	-	102	.20	20.4
29	Occ sensor	EE2-2	210	-	-	-	96	.20	19.2

1) From Equation 146-A
2) From Table 146-A

PAGE TOTAL →	853.1
BUILDING TOTAL →	1053.7

Enter in LTG-2-C: Lighting Control Credit

LIGHTING CONTROLS CREDIT WORKSHEET (Part 2 of 3) LTG-4-C

CONTROL CREDITS FOR CONDITIONED SPACES

PROJECT NAME: CORDELIA TRUCK INSPECTION FACILITY
DATE: 4/1/10

A	B	C	D	E	F	G	H	I	J
				DAYLIGHTING					
ROOM #, ZONE ID CONDITIONED AREAS	LIGHTING CONTROL DESCRIPTION	PLAN REFEFERENCE	ROOM AREA (ft^2)	WINDOW WALL RATIO	GLAZING VLT	SKYLIGHT EFFECTIVE APERTURE[1]	WATTS OF CONTROL LIGHTING	LIGHTING ADJUSTMENT FACTOR[2]	CONTROL CREDIT WATTS (H X I)
30	Occ sensor	EE2-2	192	-	-	-	102	.20	20.4
31	Occ sensor	EE2-2	660	-	-	-	256	.20	51.2
32	Occ sensor	EE2-2	75	-	-	-	32	.20	6.4
33	Occ sensor	EE2-2	70	-	-	-	94	.20	18.8
34	Occ sensor	EE2-2	216	-	-	-	64	.20	12.8
36	Occ sensor	EE2-2	890	-	-	-	455	.20	91

1) From Equation 146-A
2) From Table 146-A

PAGE TOTAL →	200.6
BUILDING TOTAL →	1053.7

Enter in LTG-2-C: Lighting Control Credit

CALIFORNIA STATE FIRE MARSHAL APPROVED

Approval of this plan does not authorize or approve any omission or deviation from applicable regulations. Final approval is subject to field inspection. One set of approved plans shall be available on the project site at all times.

Reviewed by: 5/9/11
Hans Hennebergue
Senior Deputy State Fire Marshal

IDENTIFICATION STAMP DIV. OF THE STATE ARCHITECT
02 111744
AC ___ RLS ___ SS ___
DATE ___

DESIGN	BY W. LUM	CHECKED T. WAKIM	
DETAILS	BY W. LUM	CHECKED T. WAKIM	
QUANTITIES	BY W. LUM	CHECKED T. WAKIM	

PREPARED FOR THE STATE OF CALIFORNIA DEPARTMENT OF TRANSPORTATION

DIVISION OF ENGINEERING SERVICES
ELECTRICAL-MECHANICAL-WATER AND WASTEWATER DESIGN

BRIDGE NO. 23W000IR
POST MILE 14.8

EASTBOUND CORDELIA CVEF

CVEF — TITLE 24 ELECTRICAL COMPLIANCE FORMS

SHEET **EEO-0.4**

40a535weee0-00-04.dgn
DOES SD Imperial Rev.1/07 18-MAY-2011 10:04:12 AM

ORIGINAL SCALE IN INCHES FOR REDUCED PLANS 0 1 2 3

CU 04264
EA 0A5351

DISREGARD PRINTS BEARING EARLIER REVISION DATES → REVISION DATES (PRELIMINARY STAGE ONLY) 10/19/09 03/22/10 05/06/10 08/23/10 11/22/10

SHEET OF

4/20/10 10:04:12 AM

40a535weee0-00-04.dgn

DIST.	COUNTY	ROUTE	POST MILES TOTAL PROJECT	SHEET NO.	TOTAL SHEETS
04	Sol	12,80	L1.8/L2.0, 13.3/15.7	690	740

Tony Wakim 11/22/10
REGISTERED ELECTRICAL ENGINEER DATE

REGISTERED PROFESSIONAL ENGINEER TONY I. WAKIM No. E10363 Exp. 09/30/12 ELEC STATE OF CALIFORNIA

5-16-11
PLANS APPROVAL DATE

The State of California or its officers or agents shall not be responsible for the accuracy or completeness of electronic copies of this plan sheet.

KENNEDY/JENKS CONSULTANTS
303 SECOND STREET
SUITE 300 SOUTH
SAN FRANCISCO, CA 94960

SOLANO TRANSPORTATION AUTHORITY
ONE HARBOR CENTER, SUITE 130
SUISUN CITY, CA 94585

LIGHTING CONTROLS CREDIT WORKSHEET (Part 3 of 3) LTG-4-C

CONTROL CREDITS FOR UNCONDITIONED SPACES

PROJECT NAME: CORDELIA TRUCK INSPECTION FACLIITY
DATE: 4/1/10

A	B	C	D	E	F	G	H	I	J
				DAYLIGHTING					
ROOM # ZONE ID UNCONDITIONED AREAS	LIGHTING CONTROL DESCRIPTION	PLANS REFERENCE	ROOM AREA (ft^2)	WINDOW WALL RATIO	GLAZING VLT	SKYLIGHT EFFECT. APERTURE[1]	WATTS OF CONTROL LIGHTING	LIGHTING ADJUSTMENT FACTOR[2]	CONTROL CREDIT WATTS (H X I)
N/A				-	-	-			

PAGE TOTAL → 0
BUILDING TOTAL → 0
Enter in LTG-2-C: Lighting Control Credit

1) From Equation 146-A
2) From Table 146-A

INDOOR LIGHTING POWER ALLOWANCE LTG-5-C

PROJECT NAME: CORDELIA TRUCK INSPECTION FACILITY
DATE: 4/1/10

ALLOWED LIGHTING POWER (Choose One Method)

COMPLETE BUILDING METHOD– CONDITIONED SPACES

BUILDING CATEGORY (From § 146 Table 146-B)	WATTS PER (ft^2)	COMPLETE BLDG. AREA	ALLOWED WATTS

AREA CATEGORY METHOD – CONDITIONED SPACES

A	B	C	D
AREA CATEGORY (From § 146 Table 146-C)	WATTS PER (ft^2)	AREA (ft^2)	ALLOWED WATTS
OFFICE BUILDING - AREA B	1.1	8318	9149.8
ASSEMBLY AREA A-3	1.2	4313	5175.6
KENNEL ROOM 41	.7	123	86.1
TOTALS		12,754 AREA	14,412 WATTS

TAILORED METHOD– CONDITIONED SPACES

TOTAL ALLOWED WATTS (From **LTG-6-C**)

UNCONDITIONED SPACES

A	B	C	D
Complete Building and Area Category Methods CATEGORY (From § 146 Table 146-B & C)	WATTS PER (ft^2)	AREA (ft^2)	ALLOWED WATTS
TRUCK INSPECTION BAY	1.0	16,822	16,822
ROOF MECHANICAL ROOM 38	.7	798	559
FLARE STORAGE ROOM 42	.7	102	71
TOTALS		17,722 AREA	17,452 WATTS

TAILORED METHOD– UNCONDITIONED SPACES

TOTAL **UNCONDITIONED SPACES** ALLOWED WATTS (From LTG-5-C and LTG-6-C)

CALIFORNIA STATE FIRE MARSHAL APPROVED
Approval of this plan does not authorize or approve any omission or deviation from applicable regulations. Final approval is subject to field inspection. One set of approved plans shall be available on the project site at all times. 5/9/11
Reviewed by: Hans Henneberque
Hans Henneberque
Senior Deputy State Fire Marshal

IDENTIFICATION STAMP DIV. OF THE STATE ARCHITECT
02 111744
AC ARA FLS ~ SS —
DATE 5-5-11

DESIGN	BY W. LUM	CHECKED T. WAKIM
DETAILS	BY W. LUM	CHECKED T. WAKIM
QUANTITIES	BY W. LUM	CHECKED T. WAKIM

PREPARED FOR THE STATE OF CALIFORNIA DEPARTMENT OF TRANSPORTATION

DIVISION OF ENGINEERING SERVICES
ELECTRICAL-MECHANICAL-WATER AND WASTEWATER DESIGN

BRIDGE NO. 23W0001R
POST MILE 14.8

EASTBOUND CORDELIA CVEF
CVEF — TITLE 24 ELECTRICAL COMPLIANCE FORMS
SHEET EE0-0.5

ORIGINAL SCALE IN INCHES FOR REDUCED PLANS 0 1 2 3

CU 04264
EA 0A5351

DISREGARD PRINTS BEARING EARLIER REVISION DATES →
REVISION DATES (PRELIMINARY STAGE ONLY): 10/19/09 03/22/10 05/06/10 08/23/10 11/22/10
SHEET OF

40a535weee0-00-05.dgn
DOES SD imperial Rev.1/07 18-MAY-2011 10:04:12 AM
10:04:12 AM 4/20/10
40a535weee0-00-05.dgn

DIST.	COUNTY	ROUTE	POST MILES TOTAL PROJECT	SHEET NO.	TOTAL SHEETS
04	Sol	12,80	L1.8/L2.0, 13.3/15.7	691	740

REGISTERED CIVIL ENGINEER 05/02/11 DATE

REGISTERED PROFESSIONAL ENGINEER SEAN A. CHARLES No. 50767 Exp. 9/30/11 CIVIL STATE OF CALIFORNIA

5-16-11
PLANS APPROVAL DATE

The State of California or its officers or agents shall not be responsible for the accuracy or completeness of electronic copies of this plan sheet.

WMH CORPORATION
555 12th Street
Suite 1900
Oakland, CA 94607

SOLANO TRANSPORTATION AUTHORITY
ONE HARBOR CENTER, SUITE 130
SUISUN CITY, CA 94585

NOTES:

1) FOR ACCURATE RIGHT OF WAY DATA, CONTACT RIGHT OF WAY ENGINEERING AT THE DISTRICT OFFICE

2) SEE SHEETS EE0-7 THROUGH EE0-10 FOR TYPE AND SIZE OF CONDUIT AND CONDUCTORS

3) SEE SHEET EE0-14 FOR JOINT TRENCH DETAILS

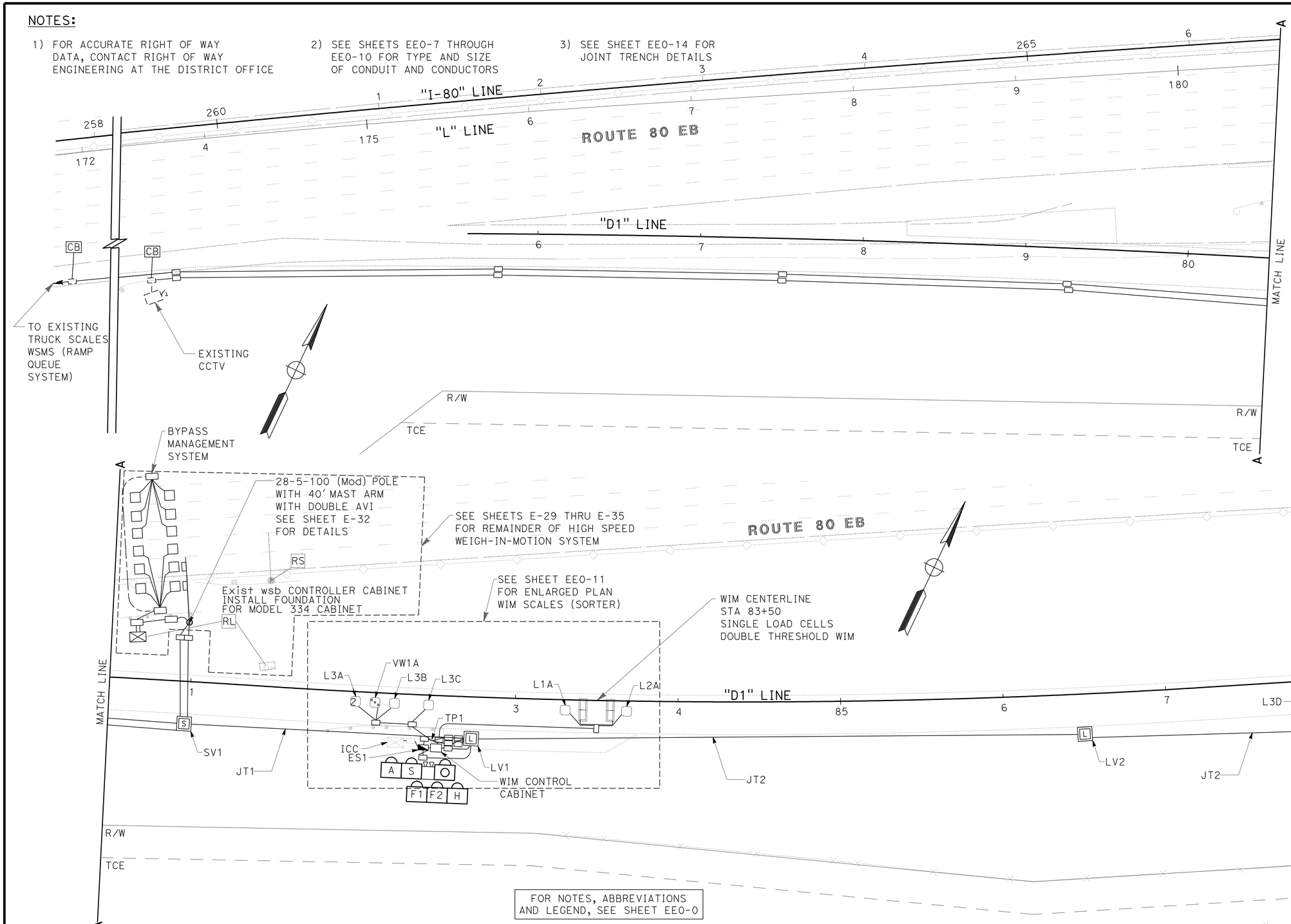

CALIFORNIA STATE FIRE MARSHAL APPROVED

Approval of this plan does not authorize or approve any omission or deviation from applicable regulations. Final approval is subject to field inspection. One set of approved plans shall be available on the project site at all times.

Reviewed by: 5/9/11
Hans Henneberque
Senior Deputy State Fire Marshal

FOR NOTES, ABBREVIATIONS AND LEGEND, SEE SHEET EE0-0

THIS PLAN IS ACCURATE FOR ELECTRICAL WORK ONLY.

SCALE: 1" = 30'

IDENTIFICATION STAMP DIV. OF THE STATE ARCHITECT
02 111744
ACP PLS SS
DATE

	BY	CHECKED
DESIGN	SHAWN VOGTMAN	SEAN CHARLES
DETAILS	HEATHER CHARLES	SEAN CHARLES
QUANTITIES	HEATHER CHARLES	SEAN CHARLES

PREPARED FOR THE STATE OF CALIFORNIA DEPARTMENT OF TRANSPORTATION

DIVISION OF ENGINEERING SERVICES
ELECTRICAL-MECHANICAL-WATER AND WASTEWATER DESIGN

BRIDGE NO. 23W0001R
POST MILE 14.8

EASTBOUND CORDELIA CVEF

CVEF — ELECTRICAL SITE PLAN No. 1

SHEET EE0-1

40a535weEE0-01.dgn
DOES SD imperial Rev.1/07 18-MAY-2011 14:36

ORIGINAL SCALE IN INCHES FOR REDUCED PLANS 0 1 2 3

CU 04264
EA 0A5351

DISREGARD PRINTS BEARING EARLIER REVISION DATES → 03/17/10 03/30/10 07/09/10 08/13/10 10/13/10 11/12/10 11/22/10 05/02/11

REVISION DATES (PRELIMINARY STAGE ONLY) SHEET OF

18-MAY-2011 14:36
40a535weEE0-01.dgn

DIST.	COUNTY	ROUTE	POST MILES TOTAL PROJECT	SHEET NO.	TOTAL SHEETS
04	Sol	12,80	L1.8/L2.0, 13.3/15.7	692	740

REGISTERED CIVIL ENGINEER 05/02/11 DATE

REGISTERED PROFESSIONAL ENGINEER SEAN A. CHARLES No. 50767 Exp. 9/30/11 CIVIL STATE OF CALIFORNIA

5-16-11
PLANS APPROVAL DATE

The State of California or its officers or agents shall not be responsible for the accuracy or completeness of electronic copies of this plan sheet.

WMH CORPORATION
555 12th Street
Suite 1900
Oakland, CA 94607

SOLANO TRANSPORTATION AUTHORITY
ONE HARBOR CENTER, SUITE 130
SUISUN CITY, CA 94585

NOTE:

FOR ACCURATE RIGHT OF WAY DATA, CONTACT RIGHT OF WAY ENGINEERING AT THE DISTRICT OFFICE

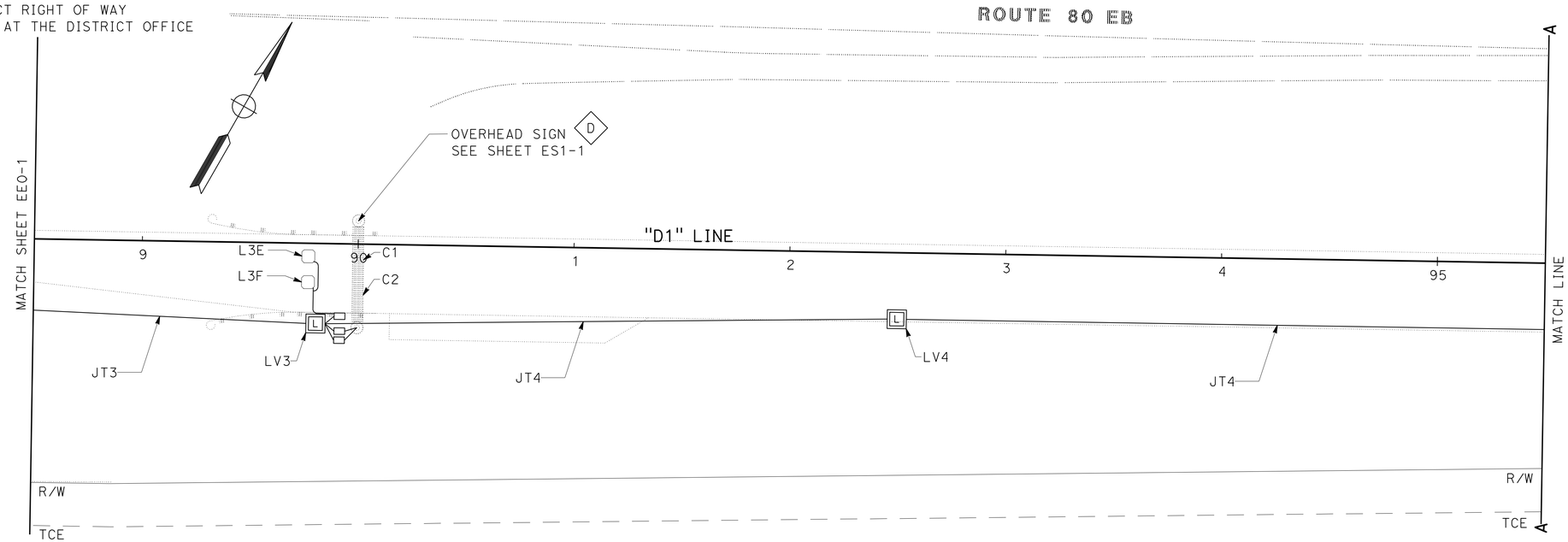

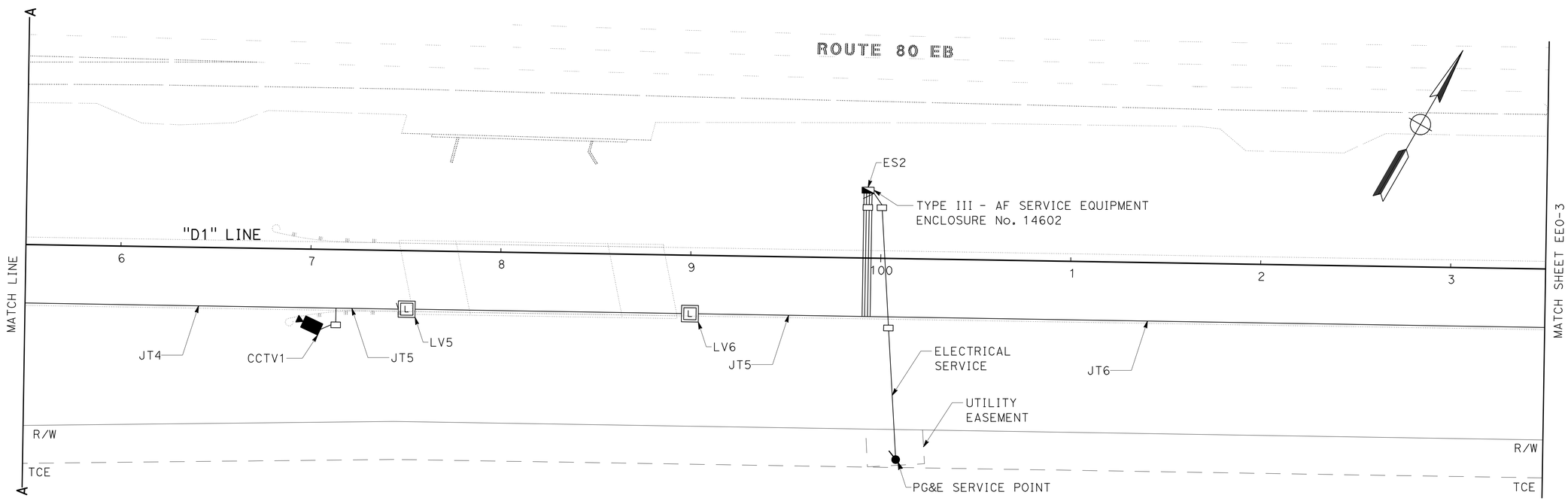

CALIFORNIA STATE FIRE MARSHAL
APPROVED

Approval of this plan does not authorize or approve any omission or deviation from applicable regulations. Final approval is subject to field inspection. One set of approved plans shall be available on the project site at all times.

Reviewed by: Hans Henneberque 5/9/11
Hans Henneberque
Senior Deputy State Fire Marshal

FOR NOTES, ABBREVIATIONS AND LEGEND, SEE SHEET EEO-0

THIS PLAN IS ACCURATE FOR ELECTRICAL WORK ONLY.

SCALE: 1" = 30'

IDENTIFICATION STAMP
DIV. OF THE STATE ARCHITECT
02 111744
ACC. PRELS — SS —
DATE 05-5-11

	BY	CHECKED
DESIGN	SHAWN VOGTMAN	SEAN CHARLES
DETAILS	HEATHER CHARLES	SEAN CHARLES
QUANTITIES	HEATHER CHARLES	SEAN CHARLES

PREPARED FOR THE STATE OF CALIFORNIA DEPARTMENT OF TRANSPORTATION

DIVISION OF ENGINEERING SERVICES
ELECTRICAL-MECHANICAL-WATER AND WASTEWATER DESIGN

BRIDGE NO. 23W0001R
POST MILE 14.8

EASTBOUND CORDELIA CVEF

CVEF — ELECTRICAL SITE PLAN No. 2

SHEET **EEO-2**

40a535weEEO-02.dgn
DOES SD Imperial Rev.1/07 18-MAY-2011 17:23

ORIGINAL SCALE IN INCHES FOR REDUCED PLANS 0 1 2 3

CU 04264
EA 0A5351

DISREGARD PRINTS BEARING EARLIER REVISION DATES →

REVISION DATES (PRELIMINARY STAGE ONLY): 03/17/10 03/30/10 07/09/10 08/17/10 10/13/10 11/12/10 11/22/10 05/02/11

SHEET OF

18-MAY-2011 17:23

40a535weEEO-02.dgn

NOTE:
FOR ACCURATE RIGHT OF WAY DATA, CONTACT RIGHT OF WAY ENGINEERING AT THE DISTRICT OFFICE

DIST.	COUNTY	ROUTE	POST MILES TOTAL PROJECT	SHEET NO.	TOTAL SHEETS
04	Sol	12,80	L1.8/L2.0, 13.3/15.7	693	740

REGISTERED CIVIL ENGINEER 05/02/11 DATE

REGISTERED PROFESSIONAL ENGINEER SEAN A. CHARLES No. 50767 Exp. 9/30/11 CIVIL STATE OF CALIFORNIA

5-16-11
PLANS APPROVAL DATE

The State of California or its officers or agents shall not be responsible for the accuracy or completeness of electronic copies of this plan sheet.

WMH CORPORATION
555 12th Street
Suite 1900
Oakland, CA 94607

SOLANO TRANSPORTATION AUTHORITY
ONE HARBOR CENTER, SUITE 130
SUISUN CITY, CA 94585

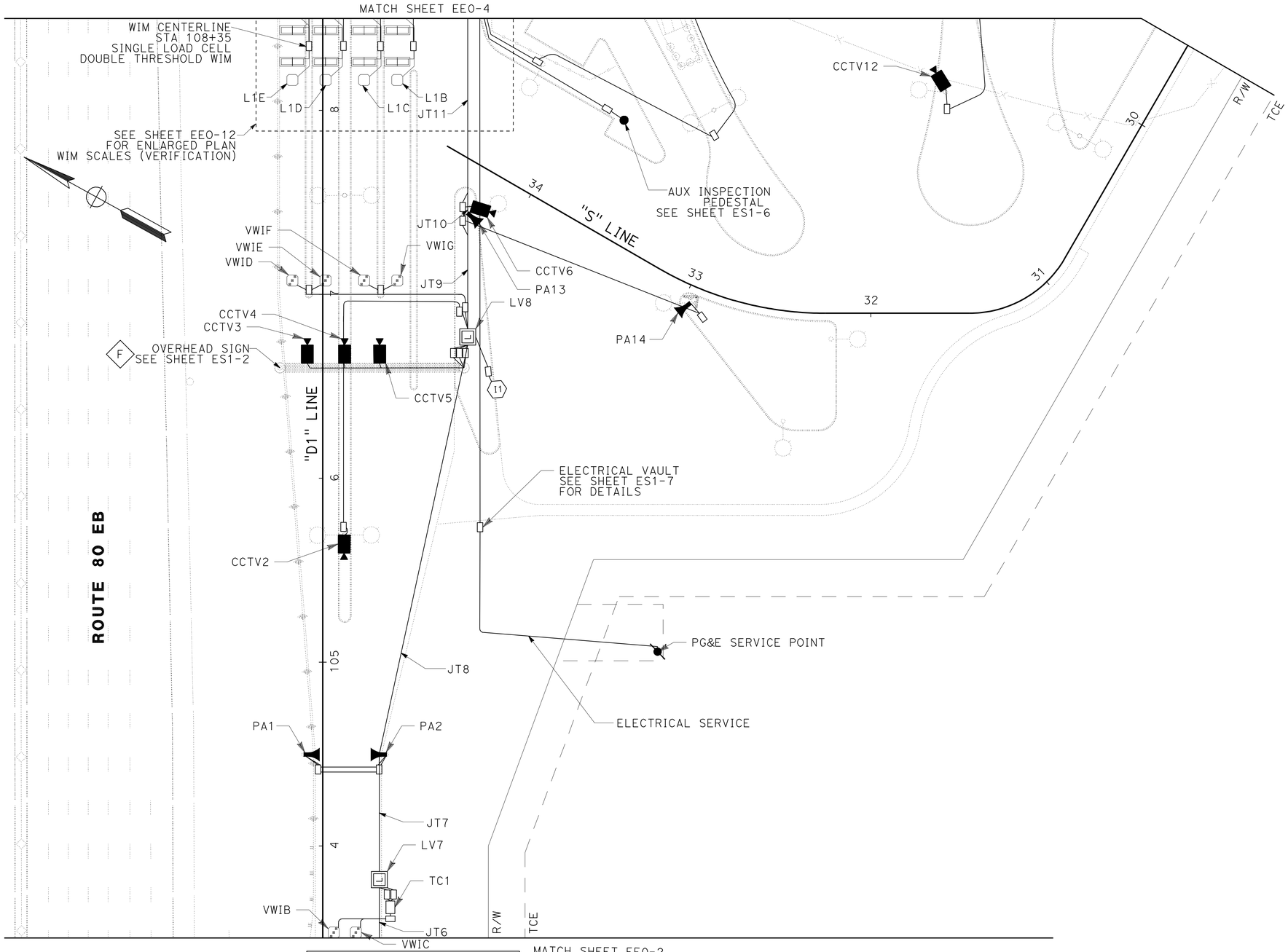

FOR NOTES, ABBREVIATIONS AND LEGEND, SEE SHEET EE0-0

THIS PLAN IS ACCURATE FOR ELECTRICAL WORK ONLY.

SCALE: 1" = 30'

CALIFORNIA STATE FIRE MARSHAL
APPROVED

Approval of this plan does not authorize or approve any omission or deviation from applicable regulations. Final approval is subject to field inspection. One set of approved plans shall be available on the project site at all times.

Reviewed by: 5/9/11
Hans Hennebergue
Senior Deputy State Fire Marshal

IDENTIFICATION STAMP
DIV. OF THE STATE ARCHITECT
02 1117 44
ACP APPROVALS — SS —
DATE 05-05-11

DESIGN	BY SHAWN VOGTMAN	CHECKED SEAN CHARLES	
DETAILS	BY HEATHER CHARLES	CHECKED SEAN CHARLES	
QUANTITIES	BY HEATHER CHARLES	CHECKED SEAN CHARLES	

PREPARED FOR THE STATE OF CALIFORNIA DEPARTMENT OF TRANSPORTATION

DIVISION OF ENGINEERING SERVICES
ELECTRICAL-MECHANICAL-WATER AND WASTEWATER DESIGN

BRIDGE NO. 23W0001R
POST MILE 14.8

EASTBOUND CORDELIA CVEF

CVEF — ELECTRICAL SITE PLAN No. 3

SHEET EE0-3

40a535weEE0-03.dgn
DOES SD imperial Rev.1/07 18-MAY-2011 17:23

ORIGINAL SCALE IN INCHES FOR REDUCED PLANS 0 1 2 3

CU 04264
EA 0A5351

DISREGARD PRINTS BEARING EARLIER REVISION DATES →
REVISION DATES (PRELIMINARY STAGE ONLY) 03/17/10 03/30/10 07/09/10 08/17/10 10/13/10 11/12/10 11/22/10 05/02/11
SHEET OF

18-MAY-2011 17:23
40a535weEE0-03.dgn

NOTE:

FOR ACCURATE RIGHT OF WAY DATA, CONTACT RIGHT OF WAY ENGINEERING AT THE DISTRICT OFFICE

DIST.	COUNTY	ROUTE	POST MILES TOTAL PROJECT	SHEET NO.	TOTAL SHEETS
04	Sol	12,80	L1.8/L2.0, 13.3/15.7	694	740

REGISTERED CIVIL ENGINEER 05/02/11 DATE

REGISTERED PROFESSIONAL ENGINEER SEAN A. CHARLES No. 50767 Exp. 9/30/11 CIVIL STATE OF CALIFORNIA

5-16-11
PLANS APPROVAL DATE

The State of California or its officers or agents shall not be responsible for the accuracy or completeness of electronic copies of this plan sheet.

WMH CORPORATION
555 12th Street
Suite 1900
Oakland, CA 94607

SOLANO TRANSPORTATION AUTHORITY
ONE HARBOR CENTER, SUITE 130
SUISUN CITY, CA 94585

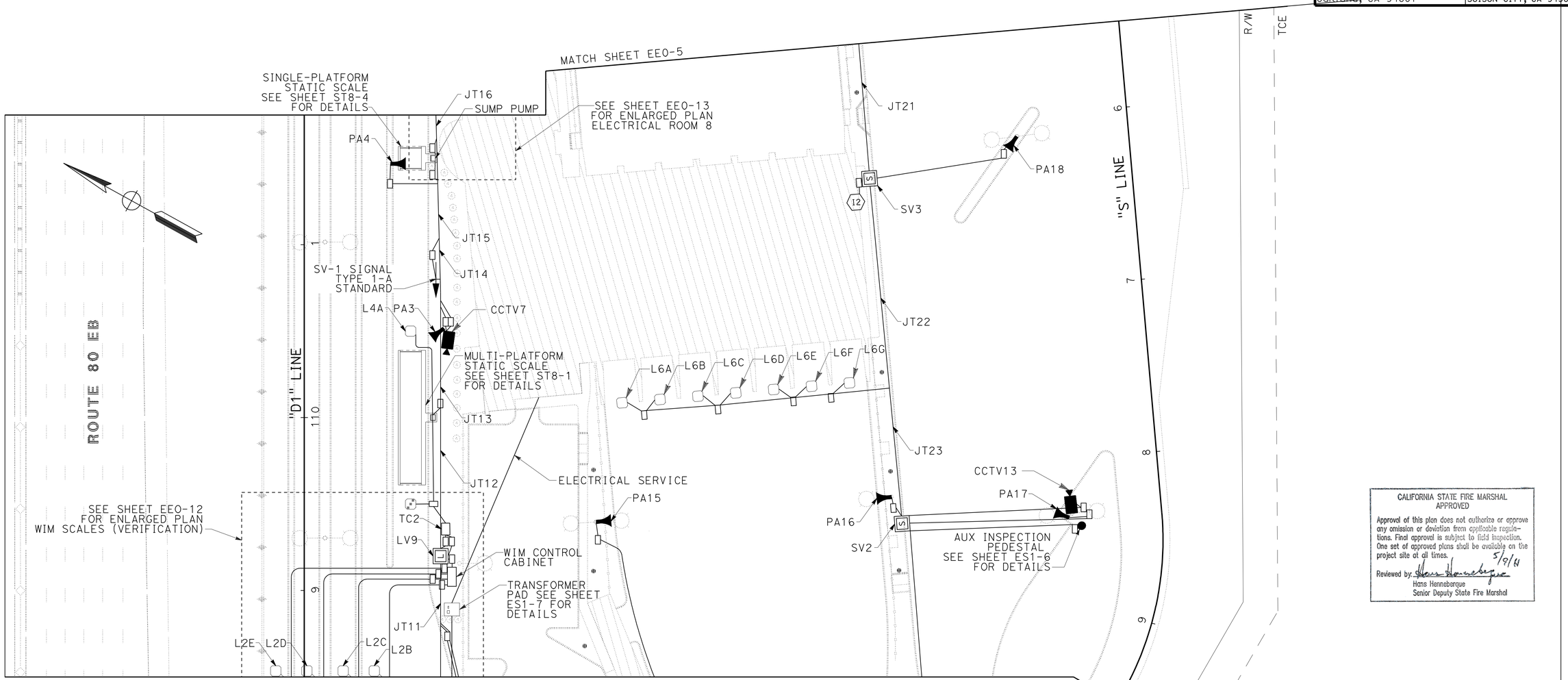

CALIFORNIA STATE FIRE MARSHAL APPROVED

Approval of this plan does not authorize or approve any omission or deviation from applicable regulations. Final approval is subject to field inspection. One set of approved plans shall be available on the project site at all times.

Reviewed by Hans Henneberque 5/9/11
Hans Henneberque
Senior Deputy State Fire Marshal

IDENTIFICATION STAMP DIV. OF THE STATE ARCHITECT
02 111744
DATE 5-9-11

FOR NOTES, ABBREVIATIONS AND LEGEND, SEE SHEET EEO-0

THIS PLAN IS ACCURATE FOR ELECTRICAL WORK ONLY.

SCALE: 1" = 30'

	BY	CHECKED
DESIGN	SHAWN VOGTMAN	SEAN CHARLES
DETAILS	HEATHER CHARLES	SEAN CHARLES
QUANTITIES	HEATHER CHARLES	SEAN CHARLES

PREPARED FOR THE STATE OF CALIFORNIA DEPARTMENT OF TRANSPORTATION

DIVISION OF ENGINEERING SERVICES
ELECTRICAL-MECHANICAL-WATER AND WASTEWATER DESIGN

BRIDGE NO. 23W0001R
POST MILE 14.8

EASTBOUND CORDELIA CVEF

CVEF — ELECTRICAL SITE PLAN No. 4

SHEET EEO-4

40a535weEEO-04.dgn
DOES SD imperial Rev.1/07 18-MAY-2011 17:42

ORIGINAL SCALE IN INCHES FOR REDUCED PLANS 0 1 2 3

CU 04264
EA 0A5351

DISREGARD PRINTS BEARING EARLIER REVISION DATES

REVISION DATES (PRELIMINARY STAGE ONLY) 03/17/10 03/30/10 07/09/10 08/17/10 10/13/10 11/12/10 11/22/10 05/02/11 SHEET OF

18-MAY-2011 17:42

40a535weEEO-04.dgn

NOTE:

FOR ACCURATE RIGHT OF WAY DATA, CONTACT RIGHT OF WAY ENGINEERING AT THE DISTRICT OFFICE

DIST.	COUNTY	ROUTE	POST MILES TOTAL PROJECT	SHEET NO.	TOTAL SHEETS
04	Sol	12,80	L1.8/L2.0, 13.3/15.7	695	740

REGISTERED CIVIL ENGINEER 05/02/11 DATE

REGISTERED PROFESSIONAL ENGINEER SEAN A. CHARLES No. 50767 Exp. 9/30/11 CIVIL STATE OF CALIFORNIA

5-16-11
PLANS APPROVAL DATE

The State of California or its officers or agents shall not be responsible for the accuracy or completeness of electronic copies of this plan sheet.

WMH CORPORATION
555 12th Street
Suite 1900
Oakland, CA 94607

SOLANO TRANSPORTATION AUTHORITY
ONE HARBOR CENTER, SUITE 130
SUISUN CITY, CA 94585

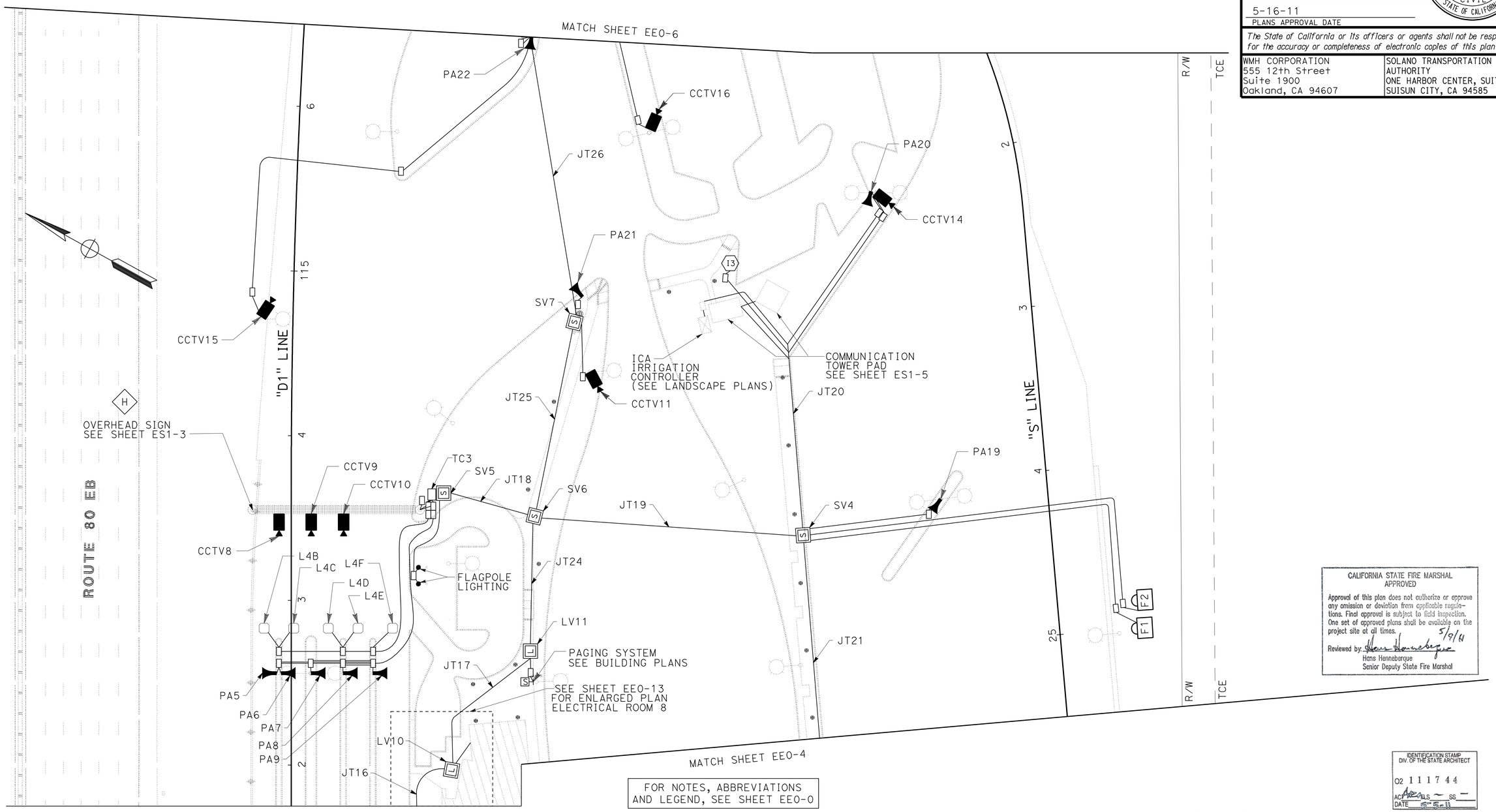

CALIFORNIA STATE FIRE MARSHAL APPROVED

Approval of this plan does not authorize or approve any omission or deviation from applicable regulations. Final approval is subject to field inspection. One set of approved plans shall be available on the project site at all times.

Reviewed by: Hans Henneberque 5/9/11
Hans Henneberque
Senior Deputy State Fire Marshal

IDENTIFICATION STAMP DIV. OF THE STATE ARCHITECT
02 1117 44
ACP ELS SS
DATE 5-9-11

FOR NOTES, ABBREVIATIONS AND LEGEND, SEE SHEET EE0-0

THIS PLAN IS ACCURATE FOR ELECTRICAL WORK ONLY.

SCALE: 1" = 30'

	BY	CHECKED
DESIGN	SHAWN VOGTMAN	SEAN CHARLES
DETAILS	HEATHER CHARLES	SEAN CHARLES
QUANTITIES	HEATHER CHARLES	SEAN CHARLES

PREPARED FOR THE STATE OF CALIFORNIA DEPARTMENT OF TRANSPORTATION

DIVISION OF ENGINEERING SERVICES
ELECTRICAL-MECHANICAL-WATER AND WASTEWATER DESIGN

BRIDGE NO. 23W0001R
POST MILE 14.8

EASTBOUND CORDELIA CVEF

CVEF — ELECTRICAL SITE PLAN No. 5

SHEET EE0-5

40a535weEE0-05.dgn
DOES SD Imperial Rev.1/07 18-MAY-2011 17:42

ORIGINAL SCALE IN INCHES FOR REDUCED PLANS 0 1 2 3

CU 04264
EA 0A5351

DISREGARD PRINTS BEARING EARLIER REVISION DATES → REVISION DATES (PRELIMINARY STAGE ONLY) 03/17/10 03/30/10 07/09/10 08/17/10 10/13/10 11/12/10 11/22/10 05/02/11 SHEET OF

18-MAY-2011 17:42
40a535weEE0-05.dgn

NOTE:

FOR ACCURATE RIGHT OF WAY DATA, CONTACT RIGHT OF WAY ENGINEERING AT THE DISTRICT OFFICE

DIST.	COUNTY	ROUTE	POST MILES TOTAL PROJECT	SHEET NO.	TOTAL SHEETS
04	Sol	12,80	L1.8/L2.0, 13.3/15.7	696	740

REGISTERED CIVIL ENGINEER 05/02/11 DATE

REGISTERED PROFESSIONAL ENGINEER SEAN A. CHARLES No. 50767 Exp. 9/30/11 CIVIL STATE OF CALIFORNIA

5-16-11
PLANS APPROVAL DATE

The State of California or its officers or agents shall not be responsible for the accuracy or completeness of electronic copies of this plan sheet.

WMH CORPORATION
555 12th Street
Suite 1900
Oakland, CA 94607

SOLANO TRANSPORTATION AUTHORITY
ONE HARBOR CENTER, SUITE 130
SUISUN CITY, CA 94585

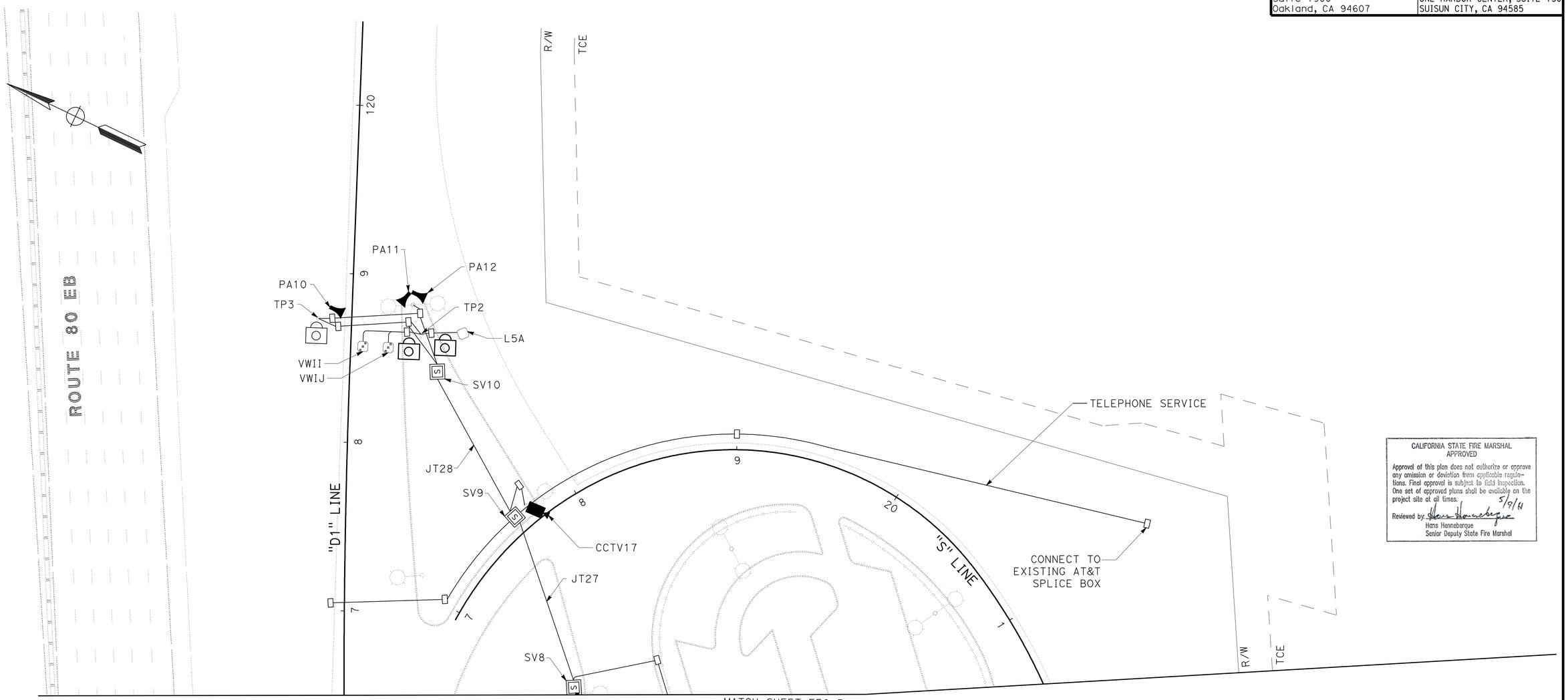

CALIFORNIA STATE FIRE MARSHAL APPROVED

Approval of this plan does not authorize or approve any omission or deviation from applicable regulations. Final approval is subject to field inspection. One set of approved plans shall be available on the project site at all times.

Reviewed by: Hans Hennebergue 5/9/11
Hans Hennebergue
Senior Deputy State Fire Marshal

MATCH SHEET EE0-5

FOR NOTES, ABBREVIATIONS AND LEGEND, SEE SHEET EE0-0

THIS PLAN IS ACCURATE FOR ELECTRICAL WORK ONLY.

SCALE: 1" = 30'

IDENTIFICATION STAMP DIV. OF THE STATE ARCHITECT
02 111744
AC ELS SS
DATE 05-05-11

	BY	CHECKED
DESIGN	SHAWN VOGTMAN	SEAN CHARLES
DETAILS	HEATHER CHARLES	SEAN CHARLES
QUANTITIES	HEATHER CHARLES	SEAN CHARLES

PREPARED FOR THE STATE OF CALIFORNIA DEPARTMENT OF TRANSPORTATION

DIVISION OF ENGINEERING SERVICES
ELECTRICAL-MECHANICAL-WATER AND WASTEWATER DESIGN

BRIDGE NO. 23W0001R
POST MILE 14.8

EASTBOUND CORDELIA CVEF

CVEF — ELECTRICAL SITE PLAN No. 6

SHEET EE0-6

ORIGINAL SCALE IN INCHES FOR REDUCED PLANS 0 1 2 3

CU 04264
EA 0A5351

DISREGARD PRINTS BEARING EARLIER REVISION DATES → 03/17/10 03/30/10 07/09/10 08/17/10 10/13/10 11/12/10 11/22/10 05/02/11

REVISION DATES (PRELIMINARY STAGE ONLY) SHEET OF

40a535weEE0-06.dgn
DOES SD Imperial Rev.1/07 18-MAY-2011 14:37

18-MAY-2011 14:37
40a535weEE0-06.dgn

DIST.	COUNTY	ROUTE	POST MILES TOTAL PROJECT	SHEET NO.	TOTAL SHEETS
04	Sol	12,80	L1.8/L2.0, 13.3/15.7	697	740

REGISTERED CIVIL ENGINEER 05/02/11 DATE

REGISTERED PROFESSIONAL ENGINEER SEAN A. CHARLES No. 50767 Exp. 9/30/11 CIVIL STATE OF CALIFORNIA

5-16-11
PLANS APPROVAL DATE

The State of California or its officers or agents shall not be responsible for the accuracy or completeness of electronic copies of this plan sheet.

WMH CORPORATION
555 12th Street
Suite 1900
Oakland, CA 94607

SOLANO TRANSPORTATION AUTHORITY
ONE HARBOR CENTER, SUITE 130
SUISUN CITY, CA 94585

1 2"C, PVC, 2#6, 1#6G (POWER), 2"C, PVC, 7#10 (CONTROL), 2"C, PVC, 2#10 (EMPTY); EXISTING CONDUIT AND CONDUCTORS TO EXISTING WSMS TO REMAIN (RAMP QUEUE SYSTEM)

2 2"C, PVC, 2#6, 1#6G (POWER), 2"C, PVC, 7#10 (CONTROL), 2"C, PVC, 2#10 (EMPTY); REMOVE PULLBOXES, ABANDON UNDERGROUND CONDUITS AND REMOVE EXPOSED CONDUITS (RAMP QUEUE SYSTEM)

3 4"C, PVC, (EMPTY) (INSTALLATION DETAILS PER PG&E GREEN BOOK) (ELECTRICAL SERVICE)

4 2-4"C, PVC, (EMPTY) (INSTALLATION DETAILS PER PG&E GREEN BOOK) (ELECTRICAL SERVICE)

5 2-5"C, PVC, (EMPTY) (INSTALLATION DETAILS PER PG&E GREEN BOOK) (ELECTRICAL SERVICE)

6 3-4"C, PVC, 6-2/0, 3-2/0G (POWER); 3"C, PVC, 2#4, 1#4G (CMS POWER) (ELECTRICAL SERVICE)

6A 3-4"C, PVC, 6-2/0, 3-2/0G (POWER) (ELECTRICAL SERVICE)

6B 3"C, PVC, 2#4, 1#4G (CMS POWER) (ELECTRICAL SERVICE)

6C INSTALL ELECTRICAL SERVICE TYPE III-AF SERVICE EQUIPMENT ENCLOSURE WITHOUT METER.

7 1½"C, PVC, 2#10, 1#10G (BYPASS MANAGEMENT SYSTEM POWER); 1½"C, PVC, 1 (BYPASS MANAGEMENT SYSTEM SIGNAL PER MANUFACTURER'S SPECIFICATION)

8 1½"C, PVC, 1 (BYPASS MANAGEMENT SYSTEM SIGNAL PER MANUFACTURER SPECIFICATIONS)

8A 1½"C, PVC, 2#10, 1#10G (BYPASS MANAGEMENT SYSTEM POWER)

9 1¾"C, PVC, 2#10, 1#10G (POWER); 1¾"C, PVC, 1 COAXIAL CABLE (SIGNAL); EXISTING CONDUIT AND CONDUCTORS TO EXISTING CCTV TO REMAIN

9A 2"C, PVC, 2#10, 1#10G (POWER); 2"C, PVC, 1 COAXIAL CABLE (SIGNAL), REMOVE PULLBOXES, ABANDON UNDERGROUND CONDUITS AND REMOVE EXPOSED CONDUITS (CCTV SYSTEM)

10 INSTALL CCTV AND 30' POLE PER STANDARD PLAN ES-6A AND DETAIL ON SHEET ES1-4 (CCTV SYSTEM)

10A INSTALL CCTV AND POLE PER STANDARD DETAIL ON SHEET ES1-4 (CCTV SYSTEM)

11 INSTALL CCTV TO ELECTROLIER SPECIFIED PER STANDARD PLAN ES-6A AND DETAIL ON SHEET ES1-4 (CCTV SYSTEM)

12 INSTALL CCTV ONTO OH SIGN PER DETAILS ON SHEET ES1-4

13 2"C, PVC, 1 HCC (CCTV SYSTEM)

14 1 HCC (PULLED THROUGH OH SIGN) (CCTV SYSTEM)

15 2"C, PVC, 2 HCC (CCTV SYSTEM)

16 2"C, PVC, 3 HCC (CCTV SYSTEM)

17 2"C, PVC, 4 HCC (CCTV SYSTEM)

18 2"C, PVC, 5 HCC (CCTV SYSTEM)

19 INSTALL MULTI-PLATFORM STATIC SCALE PER MANUFACTURER SPECIFICATIONS AND DETAILS SHOWN ON SHEET ST8-1

20 INSTALL SINGLE PLATFORM STATIC SCALE PER MANUFACTURER SPECIFICATIONS AND DETAILS SHOWN ON ST8-5

21 2"C, PVC, 2#12, 1#12G (MULTI-PLATFORM STATIC SCALE POWER); 2"C, PVC, 1 (MULTI-PLATFORM STATIC SCALE SIGNAL PER MANUFACTURER SPECIFICATIONS)

22 2"C, PVC, 2#12, 1#12G (SINGLE-PLATFORM STATIC SCALE POWER); 2"C, PVC, 1 (SINGLE-PLATFORM STATIC SCALE SIGNAL PER MANUFACTURER SPECIFICATIONS)

23 2"C, PVC, 2#12, 1#12G (MULTI-PLATFORM STATIC SCALE POWER); 2"C, PVC, 1 (MULTI-PLATFORM STATIC SCALE SIGNAL PER MANUFACTURER SPECIFICATIONS) 2"C, PVC, 2#12, 1#12G (SINGLE-PLATFORM STATIC SCALE POWER); 2"C, PVC, 1 (SINGLE-PLATFORM STATIC SCALE SIGNAL PER MANUFACTURER SPECIFICATIONS)

24 INSTALL PUBLIC ADDRESS SYSTEM SPEAKER AND POLE PER DETAIL ON SHEET ES1-4

25 INSTALL PUBLIC ACCESS SYSTEM SPEAKER TO ELECTROLIER SPECIFIED PER STANDARD PLAN ES-6A AND DETAIL ON SHEET ES1-4

26 1½"C, PVC, 2#14 (SPIRAL COPPER) (PUBLIC ADDRESS SYSTEM)

27 1½"C, PVC, 4#14 (SPIRAL COPPER) (PUBLIC ADDRESS SYSTEM)

28 1½"C, PVC, 6#14 (SPIRAL COPPER) (PUBLIC ADDRESS SYSTEM)

29 1½"C, PVC, 8#14 (SPIRAL COPPER) (PUBLIC ADDRESS SYSTEM)

30 1½"C, PVC, 10#14 (SPIRAL COPPER) (PUBLIC ADDRESS SYSTEM)

31 1½"C, PVC, 12#14 (SPIRAL COPPER) (PUBLIC ADDRESS SYSTEM)

32 1½"C, PVC, 14#14 (SPIRAL COPPER) (PUBLIC ADDRESS SYSTEM)

33 2-4"C, PVC, (EMPTY) (TELEPHONE SERVICE)

34 4-4"C, PVC, (EMPTY) (TELEPHONE SERVICE)

35 1½"C, PVC, 30#14 (SPIRAL COPPER) (PUBLIC ADDRESS SYSTEM)

36 1½"C, PVC, 44#14 (SPIRAL COPPER) (PUBLIC ADDRESS SYSTEM)

37 FURNISHED AND INSTALLED BY OTHERS

38 2-2"C, PVC, (EMPTY) (FUTURE TECHNOLOGY)

39 4-2"C, PVC, (EMPTY) (FUTURE TECHNOLOGY)

40 INSTALL PAGING SYSTEM SPEAKER TO ELECTROLIER (SEE BUILDING PLANS)

40A 1½"C, PVC, 1 PAGING SYSTEM CABLE (SEE BUILDING PLANS)

41 INSTALL INTERCOM SYSTEM PER DETAIL ON SHEET ES1-6

42 1½"C, PVC, 1#22 (SIGNAL) (INTERCOM SYSTEM)

43 1½"C, PVC, 2#22 (SIGNAL) (INTERCOM SYSTEM)

44 1½"C, PVC, 3#22 (SIGNAL) (INTERCOM SYSTEM)

45 1½"C, PVC, 2#12, 1#12G (POWER) (WIM CONTROL CABINET)

46 1½"C, PVC, 1 (WEIGH-IN-MOTION SCALES SIGNAL PER MANUFACTURER SPECIFICATIONS)

47 1½"C, PVC, 2#12, 1#12G (POWER); 1½"C, PVC, 1 (WEIGH-IN-MOTION SCALES SIGNAL PER MANUFACTURER SPECIFICATIONS)

48 1½"C, PVC, 2#12, 1#12G (POWER); 1½"C, PVC, 2 (WEIGH-IN-MOTION SCALES SIGNAL PER MANUFACTURER SPECIFICATIONS)

49 INSTALL MODEL 334 WIM CONTROL CABINET PER MANUFACTURER SPECIFICATIONS

50 INSTALL AUX INSPECTION PEDESTAL PER DETAIL ON SHEET ES1-6

51 2"C, PVC, 2#8, 1#8G (AUX INSPECTION PEDESTAL A POWER); 2"C, PVC, 2 CAT 6 CABLE (AUX INSPECTION PEDESTAL A SIGNAL)

52 2"C, PVC, 2#6, 1#6G (AUX INSPECTION PEDESTAL B POWER); 2"C, PVC, 2 CAT 6 CABLES (AUX INSPECTION PEDESTAL B SIGNAL)

53 2"C, PVC, 2#8, 1#8G (AUX INSPECTION PEDESTAL A POWER); 2"C, PVC, 2#6, 1#6G (AUX INSPECTION PEDESTAL B POWER); 2"C, PVC, 4 CAT 6 CABLES (AUX INSPECTION PEDESTAL A & B SIGNAL)

54 1½"C, PVC, 2#14 (120 V LIGHTING) AND 1#14G (FLAG POLE LIGHTING)

54A INSTALL 50 WATT WATER PROOF LIGHT FIXTURE PER DETAIL ON EE0-14 (FLAG POLE LIGHTING)

55 1½"C, PVC, 4#14 (120 V LIGHTING) AND 2#14G (FLAG POLE LIGHTING)

56 INSTALL PRE-FORMED TYPE A INDUCTIVE LOOP PER STANDARD PLAN ES-5B

56A 2"C, PVC, 2#16 (TYPE A LOOP SIGNAL)

57 2"C, PVC, 4#16 (TYPE A LOOP SIGNAL)

58 2"C, PVC, 8#16 (TYPE A LOOP SIGNAL)

59 2"C, PVC, 12#16 (TYPE A LOOP SIGNAL)

60 2"C, PVC, 14#16 (TYPE A LOOP SIGNAL)

61 2"C, PVC, 2#12, 1#12G (POWER) (SUMP PUMP)

62 INSTALL TECHNOLOGY POLE, SEE DETAIL ON SHEET EE0-11 (CVMS TECHNOLOGY)

62A INSTALL FOUNDATION FOR MODEL 332 CABINET PER STANDARD PLAN ES-03C (CVMS TECHNOLOGY)

63 2"C, PVC, 2#12, 1#12 (POWER) (TECHNOLOGY POLE 1) (CVMS TECHNOLOGY)

64 2"C, PVC, 4#16 (LOOP SIGNAL), 7#16 (VWI SIGNAL) (CVMS TECHNOLOGY)

65 2"C, PVC, 6#16 (LOOP SIGNAL), 7#16 (VWI SIGNAL) (CVMS TECHNOLOGY)

65A 2"C, PVC, 14#16 (VWI SIGNAL) (CVMS TECHNOLOGY)

66 2"C, PVC, 28#16 (VWI SIGNAL) (CVMS TECHNOLOGY)

67 2"C, PVC, 2#16 (LOOP SIGNAL), 7#16 (VWI SIGNAL) (CVMS TECHNOLOGY)

67A 2"C, PVC, (EMPTY) (CMS SIGNAL) (CVMS TECHNOLOGY)

68 2"C, PVC, 6#16 (TYPE A LOOP SIGNAL) 2"C, PVC, (EMPTY) (CMS SIGNAL) (CVMS TECHNOLOGY) 2"C, PVC, (EMPTY) (CVMS TECHNOLOGY)

68A 2"C, PVC, 4#16 (TYPE A LOOP SIGNAL) 2"C, PVC, (EMPTY) (CMS SIGNAL) (CVMS TECHNOLOGY) 2"C, PVC, (EMPTY) (CVMS TECHNOLOGY)

68B 2"C, PVC, 4#16 (LOOP SIGNAL); 2"C, PVC, (EMPTY); 2"C, PVC, (EMPTY) (CMS SIGNAL) (CVMS TECHNOLOGY)

69 2"C, PVC, (EMPTY) (CVMS TECHNOLOGY)

70 2"C, PVC, 2#6, 1#6G (POWER) (TECHNOLOGY CABINET 1) (CVMS TECHNOLOGY)

71 2"C, PVC, (EMPTY); 2"C, PVC, 2#6, 1#6G (POWER) (TECHNOLOGY CABINET 1) (CVMS TECHNOLOGY)

73 3"C, PVC, 10#10, 5#10G (CMS POWER); 2"C, PVC, (EMPTY) (CMS SIGNAL); 1½"C, PVC, 10#14, 5#14G (SIGNAL POWER) (CVMS TECHNOLOGY)

74 2"C, PVC, 28#16 (VWI SIGNAL) 2"C, PVC, (EMPTY); 2"C, PVC, 2#6, 1#6G (POWER) (TECHNOLOGY CABINET 1) 3"C, PVC, 10#10, 5#10G (CMS POWER); 2"C, PVC, (EMPTY) (CMS SIGNAL); 1½"C, PVC, 10#14, 5#14G (SIGNAL POWER) (CVMS TECHNOLOGY)

76 4"C, PVC, 2#4, 1#4G (POWER) (TECHNOLOGY CABINET 2) 3"C, PVC, 10#10, 5#10G (CMS POWER) 1½"C, PVC, 10#14, 5#14G (SIGNAL POWER) (CVMS TECHNOLOGY)

77 2"C, PVC, 2#6, 1#6G (POWER) (TECHNOLOGY CABINET 1) 4"C, PVC, 2#4, 1#4G (POWER) (TECHNOLOGY CABINET 2) 2"C, PVC, (EMPTY) 1½"C, PVC, 4#14, 2#14G (SIGNAL POWER) (CVMS TECHNOLOGY)

77A 2"C, PVC, 2#6, 1#6G (POWER) (TECHNOLOGY CABINET 1) 4"C, PVC, 2#4, 1#4G (POWER) (TECHNOLOGY CABINET 2) 2"C, PVC, (EMPTY) (CVMS TECHNOLOGY)

78 1½"C, PVC, 4#12, 2#12G (SIGNAL POWER) (CVMS TECHNOLOGY)

80 2"C, PVC, 10#10, 5#10G (CMS POWER); 2"C, PVC, (EMPTY) (CMS SIGNAL); 1-1½"C, PVC, 30#14, 15#14G (SIGNAL POWER) (CVMS TECHNOLOGY)

81 3"C, PVC, 2#6, 1#6G (POWER) (TECHNOLOGY CABINET 3) 2"C, PVC, (EMPTY) (CVMS TECHNOLOGY)

83 2"C, 2#4, 1#4G (POWER) (TECHNOLOGY POLE 2) 2"C, PVC, (EMPTY) (CVMS TECHNOLOGY)

84 3"C, PVC, 2#6, 1#6G (POWER) (TECHNOLOGY CABINET 3) 2"C, PVC, 2#4, 1#4G (POWER) (TECHNOLOGY POLE 2) 2"C, PVC, (EMPTY) (CVMS TECHNOLOGY)

85 3"C, PVC, 2#6, 1#6G (POWER) (TECHNOLOGY CABINET 1) 4"C, PVC, 2#4, 1#4G (POWER) (TECHNOLOGY CABINET 2) 3"C, PVC, 2#6, 1#6G (POWER) (TECHNOLOGY CABINET 3) 2"C, PVC, 2#4, 1#4G (POWER) (TECHNOLOGY POLE 2) 2"C, PVC, (EMPTY) (CVMS TECHNOLOGY)

86 INSTALL VWI PER DETAIL ON SHEET EE0-11

87 2-4"C, PVC (EMPTY) (COMMUNICATION TOWER)

87A 2-4"C, PVC, (EMPTY) (COMMUNICATION TOWER); 2"C, PVC, (EMPTY) (COMMUNICATION TOWER)

88 4-4"C, PVC (EMPTY) (COMMUNICATION TOWER) 2"C, PVC (EMPTY) (COMMUNICATION TOWER)

89 INSTALL COMMUNICATION TOWER PER SPECIAL PROVISIONS AND DETAIL ON SHEET ES1-5

90 INSTALL FOUNDATION FOR FUTURE PRE-FABRICATED COMMUNICATION BUILDING PER DETAIL ON SHEET ES1-5

91 2"C, PVC, 2#12, 1#12G (POWER) (IRRIGATION CONTROLLER)

92 2"C, PVC, 2#8, 1#8G (POWER) (IRRIGATION CONTROLLER)

93 2"C, PVC COATED METAL, HCC (SUISUN CREEK BRIDGE)

94 1½"C, PVC COATED METAL, 1 (BYPASS MANAGEMENT SYSTEM SIGNAL PER MANUFACTURER SPECIFICATIONS) (SUISUN CREEK BRIDGE)

95 2-2"C, PVC COATED METAL, (EMPTY) (SUISUN CREEK BRIDGE)

96 1½" C, PVC COATED METAL, (WEIGH-IN-MOTION SCALES SIGNAL PER MANUFACTURER SPECIFICATIONS) AND (WEIGH-IN-MOTION SCALES SYSTEM TO PULL BOX) (SUISUN CREEK BRIDGE)

97 2"C, PVC COATED METAL, (EMPTY) (SUISUN CREEK BRIDGE)

98 3-4"C, PVC COATED METAL, 6-2/0, 3-2/0G (POWER); 3"C, PVC COATED METAL, 2#4, 1#4G (CMS POWER)

CALIFORNIA STATE FIRE MARSHAL
APPROVED
Approval of this plan does not authorize or approve any omission or deviation from applicable regulations. Final approval is subject to field inspection. One set of approved plans shall be available on the project site at all times.
5/9/11
Reviewed by: Hans Henneberque
Senior Deputy State Fire Marshal

IDENTIFICATION STAMP
DIV. OF THE STATE ARCHITECT
02 111744
AC ___ FLS — SS —
DATE 5-5-11

DESIGN	BY HEATHER CHARLES	CHECKED SEAN CHARLES
DETAILS	BY HEATHER CHARLES	CHECKED SEAN CHARLES
QUANTITIES	BY GRACE SIMARD	CHECKED SEAN CHARLES

PREPARED FOR THE
STATE OF CALIFORNIA
DEPARTMENT OF TRANSPORTATION

DIVISION OF ENGINEERING SERVICES
ELECTRICAL-MECHANICAL-WATER AND WASTEWATER DESIGN

BRIDGE NO. 23W0001R
POST MILE 14.8

EASTBOUND CORDELIA CVEF

CVEF — SYSTEM INTERCONNECTION PLAN NOTES

SHEET **EE0-7**

ORIGINAL SCALE IN INCHES FOR REDUCED PLANS 0 1 2 3

CU 04264
EA 0A5351

DISREGARD PRINTS BEARING EARLIER REVISION DATES →
REVISION DATES (PRELIMINARY STAGE ONLY): 03/17/10 03/30/10 07/09/10 10/13/10 11/12/10 11/22/10 05/02/11

SHEET OF

40a535weEE0-07.dgn
DOES SD imperial Rev.1/07 18-MAY-2011 17:42

18-MAY-2011 17:42

40a535weEE0-07.dgn

DIST.	COUNTY	ROUTE	POST MILES TOTAL PROJECT	SHEET NO.	TOTAL SHEETS
04	Sol	12,80	L1.8/L2.0, 13.3/15.7	698	740

REGISTERED CIVIL ENGINEER 05/02/11 DATE

REGISTERED PROFESSIONAL ENGINEER SEAN A. CHARLES No. 50767 Exp. 9/30/11 CIVIL STATE OF CALIFORNIA

5-16-11
PLANS APPROVAL DATE

The State of California or its officers or agents shall not be responsible for the accuracy or completeness of electronic copies of this plan sheet.

WMH CORPORATION
555 12th Street
Suite 1900
Oakland, CA 94607

SOLANO TRANSPORTATION AUTHORITY
ONE HARBOR CENTER, SUITE 130
SUISUN CITY, CA 94585

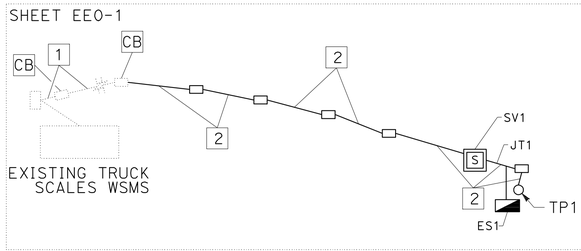

RAMP QUEUE SYSTEM

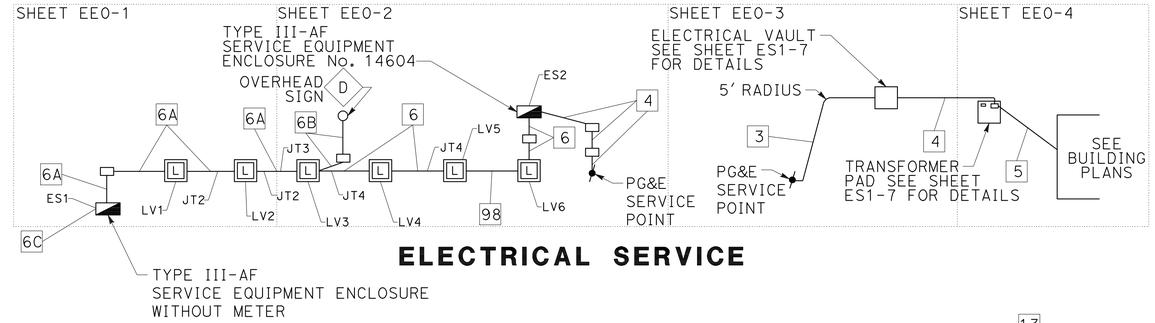

ELECTRICAL SERVICE

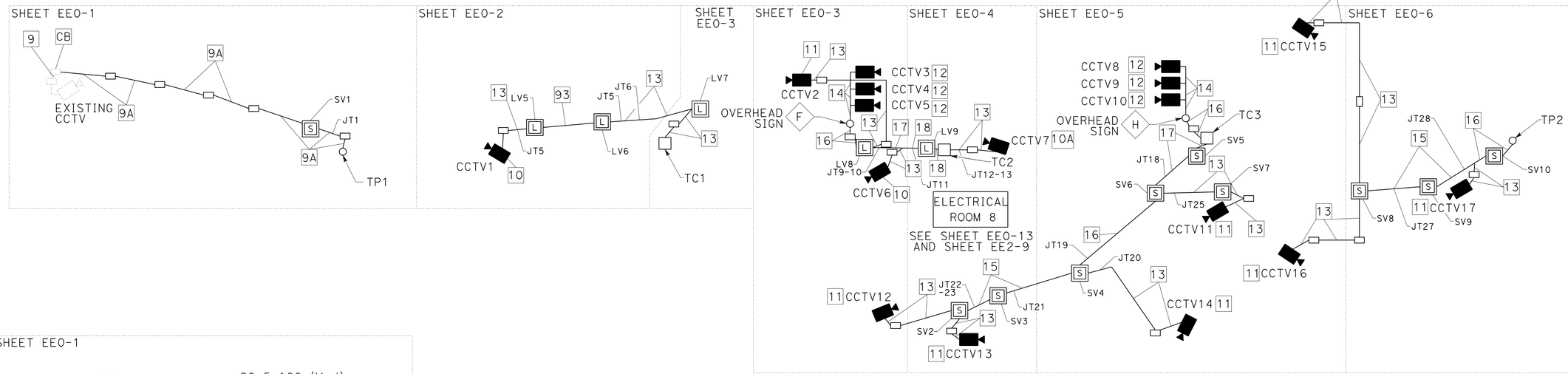

CCTV SYSTEM

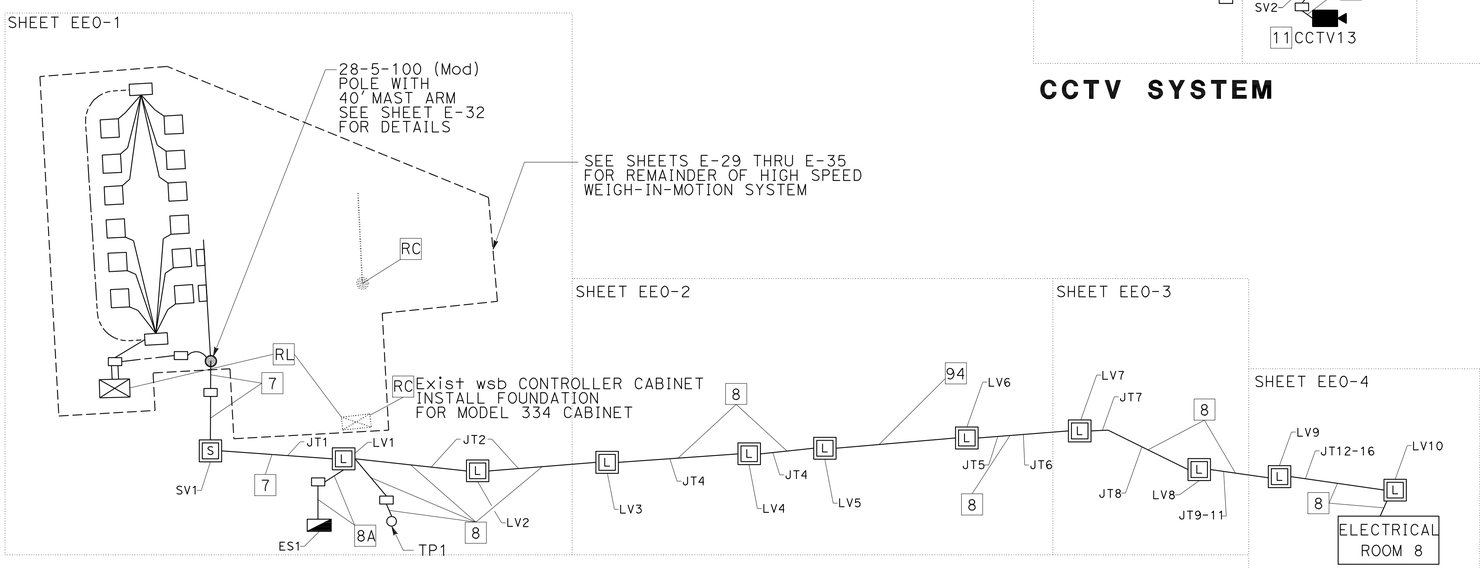

BYPASS MANAGEMENT SYSTEM

THIS PLAN IS ACCURATE FOR ELECTRICAL WORK ONLY.

CALIFORNIA STATE FIRE MARSHAL APPROVED

Approval of this plan does not authorize or approve any omission or deviation from applicable regulations. Final approval is subject to field inspection. One set of approved plans shall be available on the project site at all times.

Reviewed by: 5/9/11
Hans Henneberque
Senior Deputy State Fire Marshal

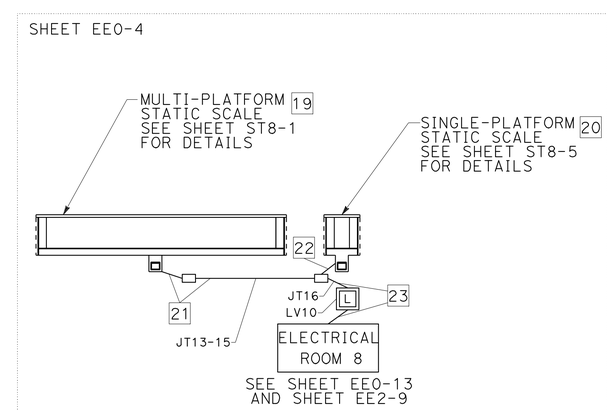

STATIC SCALES

IDENTIFICATION STAMP DIV. OF THE STATE ARCHITECT
02 111744
ACCESS BLS — SS —
DATE

NO SCALE

	BY	CHECKED
DESIGN	HEATHER CHARLES	SEAN CHARLES
DETAILS	HEATHER CHARLES	SEAN CHARLES
QUANTITIES	GRACE SIMARD	SEAN CHARLES

PREPARED FOR THE STATE OF CALIFORNIA DEPARTMENT OF TRANSPORTATION

DIVISION OF ENGINEERING SERVICES
ELECTRICAL-MECHANICAL-WATER AND WASTEWATER DESIGN

BRIDGE NO. 23W0001R
POST MILE 14.8

EASTBOUND CORDELIA CVEF

CVEF — SYSTEM INTERCONNECTION PLAN - No. 1

SHEET **EE0-8**

40a535weEE0-08.dgn
DOES SD Imperial Rev.1/07 18-MAY-2011 17:43

ORIGINAL SCALE IN INCHES FOR REDUCED PLANS 0 1 2 3

CU 04264
EA 0A5351

DISREGARD PRINTS BEARING EARLIER REVISION DATES → 03/17/10 03/30/10 07/09/10 08/17/10 10/13/10 11/12/10 11/22/10 05/02/11

REVISION DATES (PRELIMINARY STAGE ONLY) SHEET OF

18-MAY-2011 17:43
40a535weEE0-08.dgn

DIST.	COUNTY	ROUTE	POST MILES TOTAL PROJECT	SHEET NO.	TOTAL SHEETS
04	Sol	12,80	L1.8/L2.0, 13.3/15.7	699	740

REGISTERED CIVIL ENGINEER 05/02/11 DATE

REGISTERED PROFESSIONAL ENGINEER SEAN A. CHARLES No. 50767 Exp. 9/30/11 CIVIL STATE OF CALIFORNIA

5-16-11
PLANS APPROVAL DATE

The State of California or its officers or agents shall not be responsible for the accuracy or completeness of electronic copies of this plan sheet.

WMH CORPORATION
555 12th Street
Suite 1900
Oakland, CA 94607

SOLANO TRANSPORTATION AUTHORITY
ONE HARBOR CENTER, SUITE 130
SUISUN CITY, CA 94585

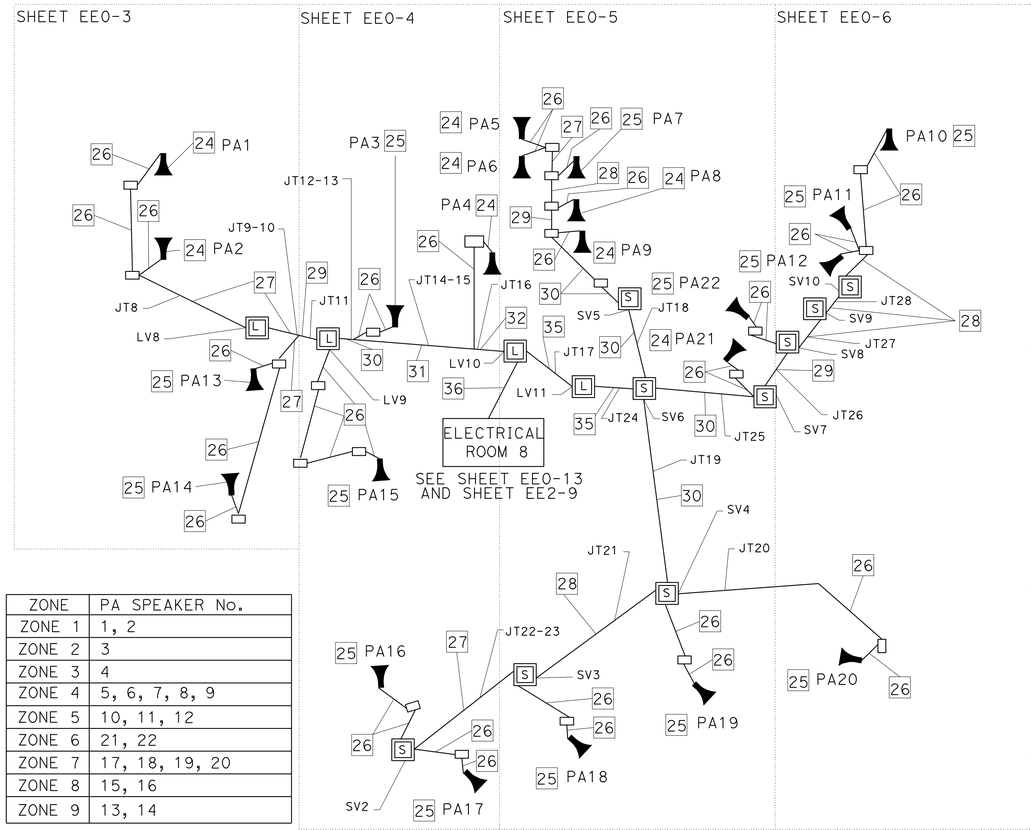

ZONE	PA SPEAKER No.
ZONE 1	1, 2
ZONE 2	3
ZONE 3	4
ZONE 4	5, 6, 7, 8, 9
ZONE 5	10, 11, 12
ZONE 6	21, 22
ZONE 7	17, 18, 19, 20
ZONE 8	15, 16
ZONE 9	13, 14

PUBLIC ADDRESS SYSTEM

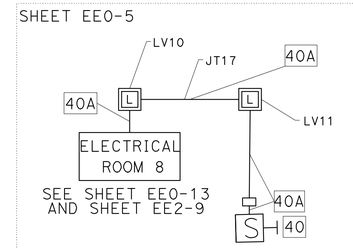

PAGING SYSTEM
SEE BUILDING PLANS

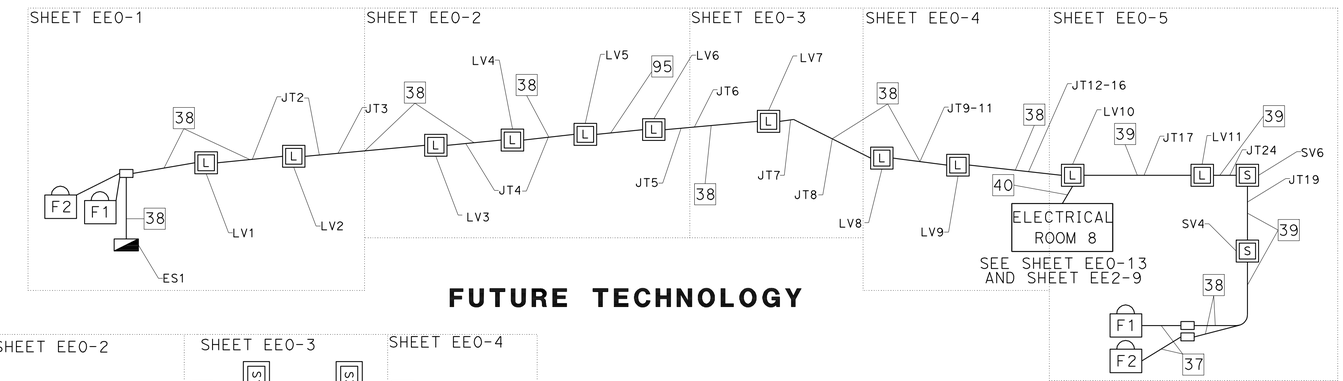

FUTURE TECHNOLOGY

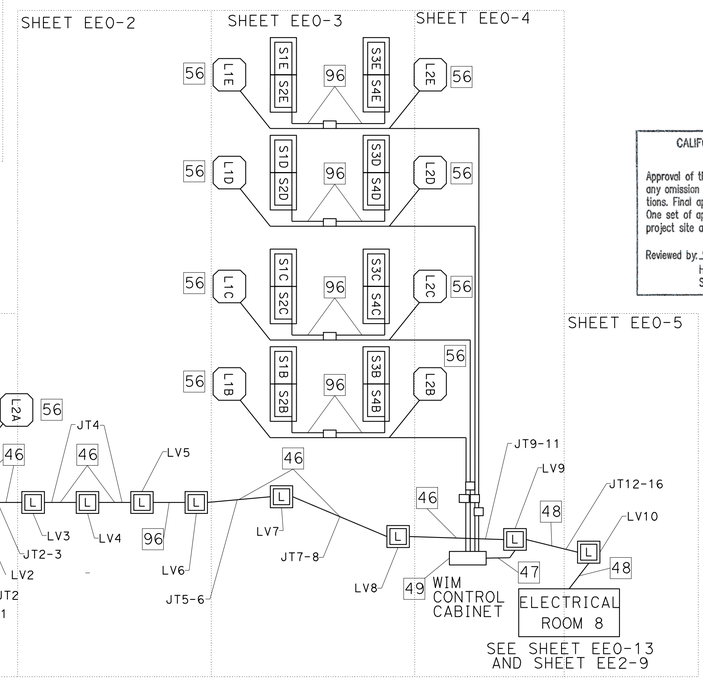

CALIFORNIA STATE FIRE MARSHAL APPROVED

Approval of this plan does not authorize or approve any omission or deviation from applicable regulations. Final approval is subject to field inspection. One set of approved plans shall be available on the project site at all times.

Reviewed by: Hans Henneberque 5/9/11
Hans Henneberque
Senior Deputy State Fire Marshal

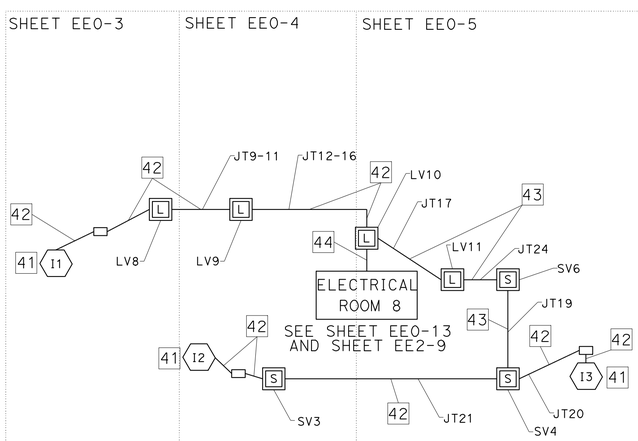

INTERCOM SYSTEM

WEIGH-IN-MOTION SCALES

THIS PLAN IS ACCURATE FOR ELECTRICAL WORK ONLY.

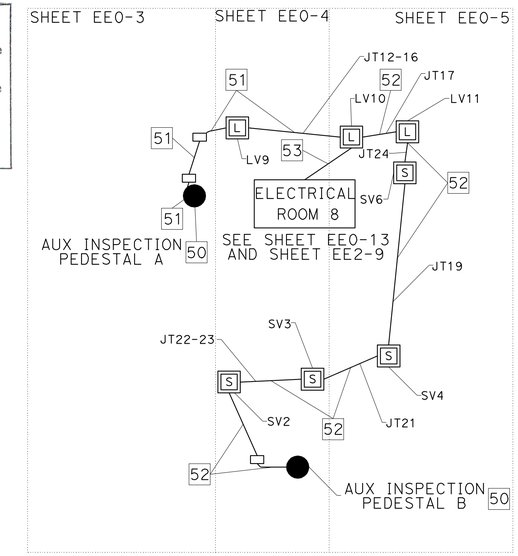

AUX INSPECTION PEDESTAL

NO SCALE

IDENTIFICATION STAMP DIV. OF THE STATE ARCHITECT
02 111744
AC BLS SS
DATE

DESIGN	BY HEATHER CHARLES	CHECKED SEAN CHARLES	
DETAILS	BY HEATHER CHARLES	CHECKED SEAN CHARLES	
QUANTITIES	BY GRACE SIMARD	CHECKED SEAN CHARLES	

PREPARED FOR THE STATE OF CALIFORNIA DEPARTMENT OF TRANSPORTATION

DIVISION OF ENGINEERING SERVICES ELECTRICAL-MECHANICAL-WATER AND WASTEWATER DESIGN

BRIDGE NO. 23W0001R
POST MILE 14.8

EASTBOUND CORDELIA CVEF
CVEF SYSTEM INTERCONNECTION PLAN - No. 2

SHEET EE0-9

40a535weEE0-09.dgn
DOES SD Imperial Rev.1/07 18-MAY-2011 17:43

ORIGINAL SCALE IN INCHES FOR REDUCED PLANS 0 1 2 3

CU 04264
EA 0A5351

DISREGARD PRINTS BEARING EARLIER REVISION DATES → 03/17/10 03/30/10 07/09/10 08/17/10 10/13/10 11/12/10 11/22/10 05/02/11

REVISION DATES (PRELIMINARY STAGE ONLY) SHEET OF

18-MAY-2011 17:43

40a535weEE0-09.dgn

DIST.	COUNTY	ROUTE	POST MILES TOTAL PROJECT	SHEET NO.	TOTAL SHEETS
04	Sol	12,80	L1.8/L2.0, 13.3/15.7	700	740

REGISTERED CIVIL ENGINEER 05/02/11 DATE

REGISTERED PROFESSIONAL ENGINEER SEAN A. CHARLES No. 50767 Exp. 9/30/11 CIVIL STATE OF CALIFORNIA

5-16-11
PLANS APPROVAL DATE

The State of California or its officers or agents shall not be responsible for the accuracy or completeness of electronic copies of this plan sheet.

WMH CORPORATION
555 12th Street
Suite 1900
Oakland, CA 94607

SOLANO TRANSPORTATION AUTHORITY
ONE HARBOR CENTER, SUITE 130
SUISUN CITY, CA 94585

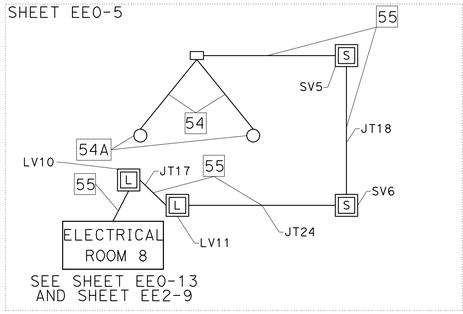

FLAG POLE LIGHTING

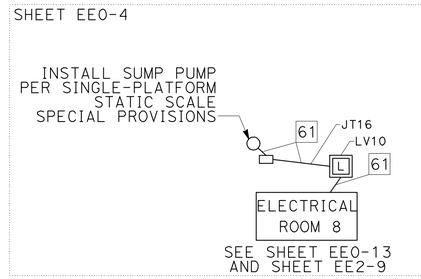

SUMP PUMP

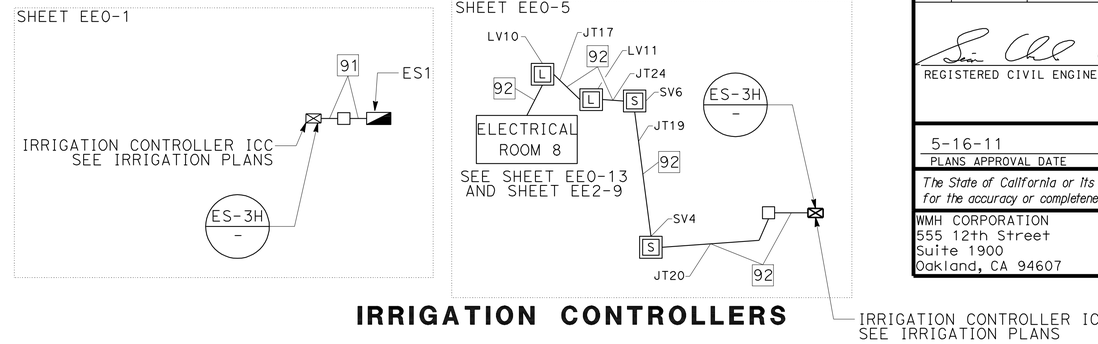

IRRIGATION CONTROLLERS

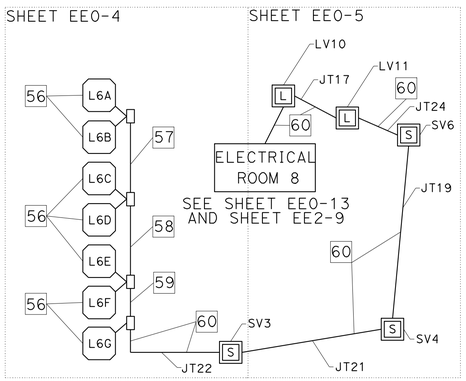

INSPECTION BAY ENTRANCE

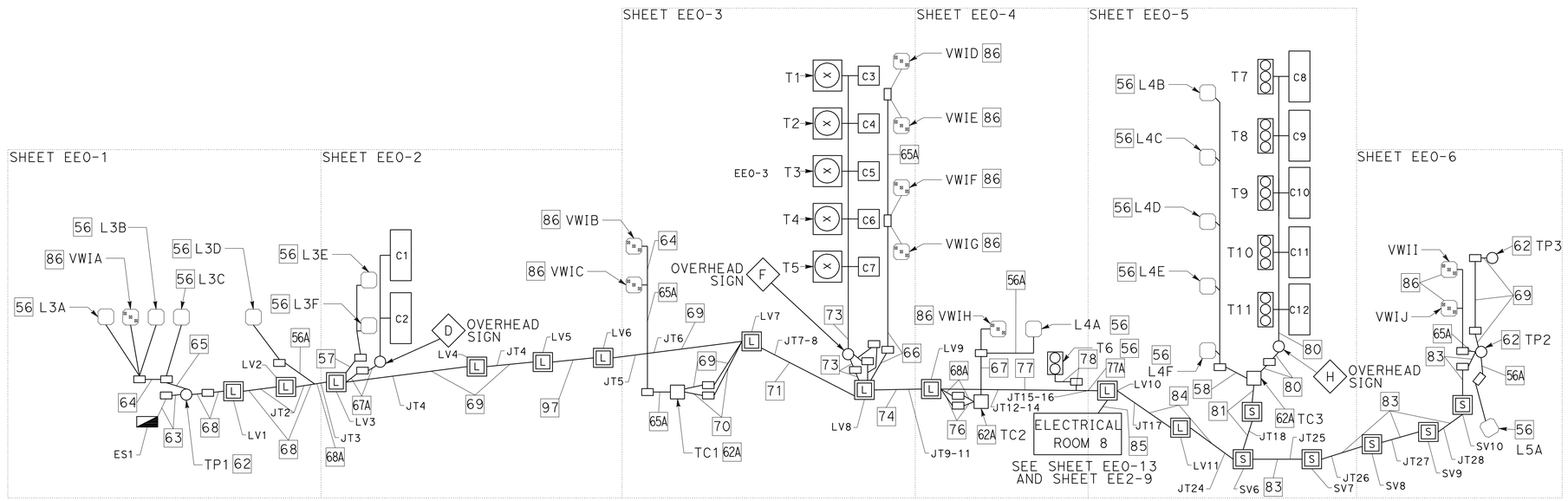

CVMS TECHNOLOGY

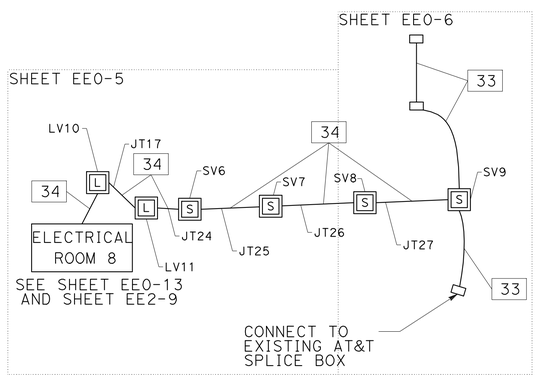

TELEPHONE SERVICE

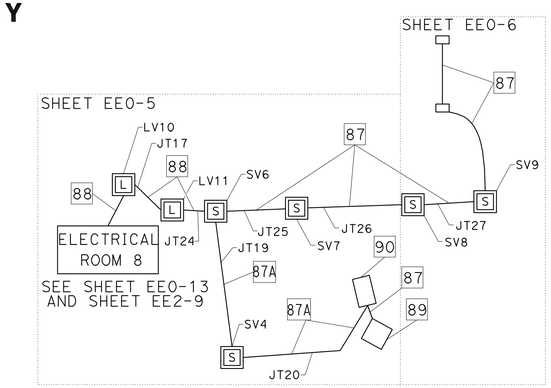

COMMUNICATION TOWER

CALIFORNIA STATE FIRE MARSHAL APPROVED

Approval of this plan does not authorize or approve any omission or deviation from applicable regulations. Final approval is subject to field inspection. One set of approved plans shall be available on the project site at all times.

Reviewed by: Hans Henneberque 5/9/11
Hans Henneberque
Senior Deputy State Fire Marshal

IDENTIFICATION STAMP DIV. OF THE STATE ARCHITECT
02 1117 44
ACP ELS — SS —
DATE 05-05-11

THIS PLAN IS ACCURATE FOR ELECTRICAL WORK ONLY.

NO SCALE

	BY	CHECKED
DESIGN	HEATHER CHARLES	SEAN CHARLES
DETAILS	HEATHER CHARLES	SEAN CHARLES
QUANTITIES	GRACE SIMARD	SEAN CHARLES

PREPARED FOR THE STATE OF CALIFORNIA DEPARTMENT OF TRANSPORTATION

DIVISION OF ENGINEERING SERVICES
ELECTRICAL-MECHANICAL-WATER AND WASTEWATER DESIGN

BRIDGE NO. 23W0001R
POST MILE 14.8

EASTBOUND CORDELIA CVEF

CVEF SYSTEM INTERCONNECTION PLAN - No. 3

SHEET **EE0-10**

40a535weEE0-10.dgn
DOES SD imperial Rev.1/07 18-MAY-2011 17:43

ORIGINAL SCALE IN INCHES FOR REDUCED PLANS 0 1 2 3

CU 04264
EA 0A5351

DISREGARD PRINTS BEARING EARLIER REVISION DATES → 03/17/10 03/30/10 07/09/10 08/17/10 10/13/10 11/12/10 11/22/10 05/02/11

REVISION DATES (PRELIMINARY STAGE ONLY) SHEET OF

18-MAY-2011 17:43

40a535weEE0-10.dgn