DIST.	COUNTY	ROUTE	POST MILES TOTAL PROJECT	SHEET NO.	TOTAL SHEETS
04	Sol	12,80	L1.8/L2.0, 13.3/15.7	501	740

LICENSED ARCHITECT 05/03/11 DATE

LICENSED ARCHITECT GREG A. ROBLEY No. C-30986 Exp. 02/05/13 STATE OF CALIFORNIA

5-16-11
PLANS APPROVAL DATE

The State of California or its officers or agents shall not be responsible for the accuracy or completeness of electronic copies of this plan sheet.

KENNEDY/JENKS CONSULTANTS 303 SECOND STREET SUITE 300 SOUTH SAN FRANCISCO, CA 94960	SOLANO TRANSPORTATION AUTHORITY ONE HARBOR CENTER, SUITE 130 SUISUN CITY, CA 94585

INDEX OF DRAWINGS

ARCHITECTURAL

SHEET NO	TITLE
A0-0	ARCHITECTURAL ABBREVIATIONS & SYMBOLS
A0-0.1	INDEX OF DRAWINGS
A0-1	CODE ANALYSIS - SITE
A0-2	CODE ANALYSIS - BUILDING
A0-3	ACCESSIBILITY STANDARD DETAILS NO. 1
A0-4	ACCESSIBILITY STANDARD DETAILS NO. 2
A0-5	ACCESSIBILITY STANDARD DETAILS NO. 3
A0-6	ACCESSIBILITY STANDARD DETAILS NO. 4
A0-7	ACCESSIBILITY STANDARD DETAILS NO. 5
A0-8	ACCESSIBILITY STANDARD DETAILS
A1-1	GENERAL FLOOR PLAN
A1-2	OFFICE FLOOR PLAN
A1-3	INSPECTION AREA FLOOR PLAN NO. 1
A1-4	INSPECTION AREA FLOOR PLAN NO. 2
A1-5	OFFICE REFLECTED CEILING PLAN
A1-6	INSPECTION AREA REFLECTED CEILING PLAN
A1-7	OFFICE ROOF PLAN
A1-8	INSPECTION AREA ROOF PLAN
A1-9	GENERATOR BUILDING PLANS & EXTERIOR ELEVATIONS
A2-1	EXTERIOR ELEVATIONS NO. 1
A2-2	EXTERIOR ELEVATIONS NO. 2
A3-1	BUILDING SECTIONS NO. 1
A3-2	BUILDING SECTIONS NO. 2
A4-1	ENLARGED PLANS NO. 1
A4-2	ENLARGED PLANS NO. 2
A4-3	ENLARGED PLANS NO. 3
A4-4	ENLARGED PLANS NO. 4
A4-5	PLAN DETAILS NO. 1
A4-6	PLAN DETAILS NO. 2
A5-1	WALL SECTIONS NO. 1
A5-2	WALL SECTIONS NO. 2
A5-3	WALL SECTIONS NO. 3
A5-4	WALL SECTIONS NO. 4
A5-5	WALL SECTIONS NO. 5
A5-6	WALL SECTIONS NO. 6
A5-7	SECTION DETAILS NO. 1
A5-8	SECTION DETAILS NO. 2
A5-9	SECTION DETAILS NO. 3
A5-10	SECTION DETAILS NO. 4
A5-11	SECTION DETAILS NO. 5
A5-12	SECTION DETAILS NO. 6
A5-13	SECTION DETAILS NO. 7
A5-14	SECTION DETAILS NO. 8
A5-15	SECTION DETAILS NO. 8
A5-16	SECTION DETAILS NO. 8
A5-17	SECTION DETAILS NO. 9
A5-18	SECTION DETAILS NO. 10
A5-19	SECTION DETAILS NO. 11
A5-20	DOOR & WINDOW DETAILS NO. 1
A5-21	DOOR & WINDOW DETAILS NO. 2
A5-22	DOOR & WINDOW DETAILS NO. 3
A5-23	DOOR & WINDOW DETAILS NO. 4
A5-24	MISCELLANEOUS DETAILS
A6-1	FINISH SCHEDULE
A6-2	SIGN SCHEDULE
A6-3	DOOR SCHEDULE
A6-4	WINDOW SCHEDULE
A6-5	PARTITION TYPES NO. 1
A6-6	PARTITION TYPES NO. 2
A7-1	INTERIOR ELEVATIONS NO. 1
A7-2	INTERIOR ELEVATIONS NO. 2
A7-3	INTERIOR ELEVATIONS NO. 3
A7-4	INTERIOR ELEVATIONS NO. 4
A8-1	DEMOLITION PLAN 1
A8-2	DEMOLITION PLAN 2
A8-3	SCALE HOUSE REMOVAL ELEVATIONS
A8-4	SCALE HOUSE REMOVAL PLAN AND SECTIONS 1
A8-5	SCALE HOUSE REMOVAL PLAN AND SECTIONS 2
A8-6	SCALE HOUSE REMOVAL PLAN AND SECTIONS 3
A8-7	SCALE HOUSE REMOVAL UTILITY PLAN
A8-8	RESTROOM BUILDING REMOVAL PLAN AND ELEVATION
A8-9	TRUCK INSPECTION SHELTER REMOVAL PLAN AND ELEVATION
A8-10	STATIC SCALE REMOVAL PLAN AND ELEVATIONS
A8-11	SANITARY SEWER TANK REMOVAL DETAILS

STRUCTURAL

SHEET NO	TITLE
ST-0-1	PROJECT DATA AND DRAWING INDEX
ST-0-2	ABBREVIATIONS AND SYMBOLS
ST-0-3	GENERAL NOTES AND SPECIFICATIONS
ST1-1	TYPICAL CONCRETE DETAILS NO. 1
ST1-2	TYPICAL CONCRETE DETAILS NO. 2
ST1-3	TYPICAL CONCRETE DETAILS NO. 3
ST1-4	TYPICAL STEEL DETAILS NO. 1
ST1-5	TYPICAL STEEL DETAILS NO. 2
ST1-6	TYPICAL STEEL DETAILS NO. 3
ST1-7	TYPICAL STEEL DETAILS NO. 4
ST1-8	TYPICAL MASONRY DETAILS
ST2-1	OFFICE BLDG FOUNDATION PLAN
ST2-2	INSPECTION BLDG FOUNDATION PLAN - NORTH
ST2-3	INSPECTION BLDG FOUNDATION PLAN - SOUTH
ST2-4	TYPICAL PIT AND TUNNEL PLANS
ST2-5	OFFICE BLDG ROOF/SECOND FLOOR PLAN
ST2-6	INSPECTION BLDG ROOF PLAN - NORTH
ST2-7	INSPECTION BLDG ROOF PLAN - SOUTH
ST3-1	BRACED FRAME ELEVATIONS NO. 1
ST3-2	BRACED FRAME ELEVATIONS NO. 2
ST3-3	MOMENT FRAME ELEVATIONS
ST4-1	FOUNDATION DETAILS NO. 1
ST4-2	FOUNDATION DETAILS NO.2
ST4-3	FOUNDATION DETAILS NO. 3
ST4-4	FOUNDATION DETAILS NO. 4
ST5-1	STEEL MOMENT FRAME DETAILS
ST5-2	STEEL BRACED FRAME DETAILS NO. 1
ST5-3	STEEL BRACED FRAME DETAILS NO. 2
ST5-4	OFFICE BLDG STEEL DETAILS
ST5-5	INSPECTION BLDG STEEL DETAILS
ST6-1	GENERATOR BLDG PLANS AND ELEVATIONS
ST6-2	GENERATOR BLDG DETAILS
ST7-1	CANOPY FRAMING PLANS
ST7-2	CANOPY DETAILS NO. 1
ST7-3	CANOPY DETAILS NO. 2
ST7-4	CANOPY DETAILS NO. 3
ST7-5	OBSERVATION ROOM ROOF FRAMING PLANS
ST7-6	OBSERVATION ROOM ROOF FRAMING DETAILS
ST8-1	MULTI-PLATFORM STATIC SCALE PIT DETAILS NO. 1
ST8-2	MULTI-PLATFORM STATIC SCALE PIT DETAILS NO. 2
ST8-3	MULTI-PLATFORM STATIC SCALE PIT DETAILS NO. 3
ST8-4	MULTI-PLATFORM STATIC SCALE PIT DETAILS NO. 4
ST8-5	SINGLE-PLATFORM STATIC SCALE PIT DETAILS NO. 1
ST8-6	SINGLE-PLATFORM STATIC SCALE PIT DETAILS NO. 2
ST8-7	SINGLE-PLATFORM STATIC SCALE PIT DETAILS NO. 3
ST8-8	SINGLE-PLATFORM STATIC SCALE PIT DETAILS NO. 4
ST9-1	LOTB SOIL LEGEND SHEET 1 OF 2
ST9-2	LOTB SOIL LEGEND SHEET 2 OF 2
ST9-3	LOG OF TEST BORINGS 1 OF 5
ST9-4	LOG OF TEST BORINGS 2 OF 5
ST9-5	LOG OF TEST BORINGS 3 OF 5
ST9-6	LOG OF TEST BORINGS 4 OF 5
ST9-7	LOG OF TEST BORINGS 5 OF 5

MECHANICAL

SHEET NO	TITLE
M0-1	LEGENDS AND ABBREVIATIONS
M0-1.1	TITLE 24 MANDATORY MEASURES
M0-1.2	TITLE 24 BUILDING ENVELOPE COMPLIANCE FORMS
M0-1.3	TITLE 24 BUILDING ENVELOPE COMPLIANCE FORMS
M0-1.4	TITLE 24 BUILDING ENVELOPE COMPLIANCE FORMS
M0-1.5	TITLE 24 BUILDING ENVELOPE COMPLIANCE FORMS
M0-1.6	TITLE 24 BUILDING ENVELOPE COMPLIANCE FORMS
M0-1.7	TITLE 24 BUILDING ENVELOPE COMPLIANCE FORMS
M0-1.8	TITLE 24 MECHANICAL COMPLIANCE FORMS
M0-1.09	TITLE 24 MECHANICAL COMPLIANCE FORMS
M0-1.10	TITLE 24 MECHANICAL COMPLIANCE FORMS
M0-1.11	TITLE 24 MECHANICAL COMPLIANCE FORMS
M0-1.12	TITLE 24 MECHANICAL COMPLIANCE FORMS
M0-1.13	LOCAL FIRE DEPARTMENT ACCESS APPROVAL
M0-2	PLUMBING NOTES AND SCHEDULES
M0-3	FIRE PROTECTION NOTES AND SCHEDULES
M0-4	HVAC NOTES AND EQUIPMENT SCHEDULES
M1-1	SITE UTILITIES NO. 1
M1-2	SITE UTILITIES NO. 2
M1-3	SITE UTILITIES NO. 3
M1-4	SITE UTILITIES NO. 4
M1-5	SITE UTILITIES NO. 5
M1-6	SITE UTILITIES NO. 6
M1-7	SITE UTILITIES NO. 7
M1-8	SITE UTILITIES NO. 8
M1-9	SITE UTILITIES NO. 9
M1-10	FACILITY SITE UTILITY PLAN
M1-11	WATER SUPPLY CONNECTIONS
M1-12	SITE UTILITY DETAILS NO. 1
M1-13	SITE UTILITY DETAILS NO. 2
M1-14	SITE UTILITY DETAILS NO. 3
M1-15	SITE UTILITY DETAILS NO. 4
M1-16	SITE UTILITY DETAILS NO. 5
M1-17	SITE UTILITY DETAILS NO. 6
M1-18	SITE UTILITY DETAILS NO. 7
M1-19	SITE UTILITY DETAILS NO. 8
M2-1	CVEF - OFFICE PLUMBING PLAN
M2-2	CVEF - INSPECTION BAY PLUMBING PLAN - NORTH
M2-3	CVEF - INSPECTION BAY PLUMBING PLAN - SOUTH
M2-4	CVEF - ENLARGED PLUMBING PLANS
M2-5	CVEF - OFFICE FIRE PROTECTION PLAN
M2-6	CVEF - INSPECTION BAY FIRE PROTECTION PLAN - NORTH
M2-7	CVEF - INSPECTION BAY FIRE PROTECTION PLAN - SOUTH
M2-8	CVEF - OFFICE HVAC KEY PLAN
M2-9	CVEF - OFFICE HVAC PLAN - WEST
M2-10	CVEF - OFFICE HVAC PLAN - CENTRAL
M2-11	CVEF - OFFICE HVAC PLAN - EAST
M2-12	CVEF - INSPECTION BAY HVAC PLAN - NORTH
M2-13	CVEF - INSPECTION BAY HVAC PLAN - SOUTH
M2-14	CVEF - OFFICE ROOF PLAN
M2-15	CVEF - MECHANICAL DETAILS NO. 1
M2-16	CVEF - MECHANICAL SECTIONS
M2-17	CVEF - MECHANICAL SECTIONS AND DETAILS
M2-18	CVEF - MECHANICAL DETAILS NO. 2
M2-19	CVEF - PLUMBING ISOMETRIC SCHEMATICS
M2-20	CVEF - CONTROL SCHEMATICS
M3-1	GENERATOR BUILDING -PLAN AND SECTION
M3-2	GENERATOR BUILDING - MECHANICAL DETAILS

ELECTRICAL

SHEET NO	TITLE
EE0-0	ELECTRICAL ABBREVIATIONS AND SYMBOLS
EE0-0.1	TITLE 24 ELECTRICAL COMPLIANCE FORMS
EE0-0.2	TITLE 24 ELECTRICAL COMPLIANCE FORMS
EE0-0.3	TITLE 24 ELECTRICAL COMPLIANCE FORMS
EE0-0.4	TITLE 24 ELECTRICAL COMPLIANCE FORMS
EE0-0.5	TITLE 24 ELECTRICAL COMPLIANCE FORMS
EE0-1	ELECTRICAL SITE PLAN NO. 1
EE0-2	ELECTRICAL SITE PLAN NO. 2
EE0-3	ELECTRICAL SITE PLAN NO. 3
EE0-4	ELECTRICAL SITE PLAN NO. 4
EE0-5	ELECTRICAL SITE PLAN NO. 5
EE0-6	ELECTRICAL SITE PLAN NO. 6
EE0-7	SYSTEM INTERCONNECTION PLAN NO. 1
EE0-8	SYSTEM INTERCONNECTION PLAN NO. 2
EE0-9	SYSTEM INTERCONNECTION PLAN NO. 3
EE0-10	SYSTEM INTERCONNECTION PLAN NO. 4
EE0-11	WIM SCALES (SORTER) ENLARGED PLAN
EE0-12	WIM SCALES (VERIFICATION) ENLARGED PLAN
EE0-13	ELECTRICAL ROOM 8 ENLARGED PLAN
EE0-14	MISCELLANEOUS ELECTRICAL DETAILS
EE1-1	SINGLE LINE DIAGRAM
EE1-2	SWITCHBOARD ELEVATION
EE2-1	ELECTRICAL SITE PLAN
EE2-2	OFFICE BUILDING LIGHTING PLAN NO. 1
EE2-3	OFFICE BUILDING LIGHTING PLAN NO. 2
EE2-4	INSPECTION BUILDING LIGHTING PLAN NO. 1
EE2-5	INSPECTION BUILDING LIGHTING PLAN NO. 2
EE2-6	OFFICE BUILDING POWER PLAN NO. 1
EE2-7	OFFICE BUILDING POWER PLAN NO. 2
EE2-8	OFFICE BUILDING SIGNAL PLAN NO. 1
EE2-9	OFFICE BUILDING SIGNAL PLAN NO. 2
EE2-10	INSPECTION BUILDING POWER AND SIGNAL PLAN NO. 1
EE2-11	INSPECTION BUILDING POWER AND SIGNAL PLAN NO. 2
EE2-12	OFFICE BUILDING ROOF ELECTRICAL PLAN
EE2-13	INSPECTION BAY BUILDING ROOF ELECTRICAL PLAN
EE3-1	GENERATOR BUILDING ELECTRICAL PLANS
EE4-1	PANELBOARD SCHEDULES
EE4-2	PANELBOARD SCHEDULES
EE4-3	CONDUIT AND WIRE SCHEDULE
EE4-4	FIRE ALARM BLOCK DIAGRAM
EE4-5	INTRUSION AND SECURITY PLAN
EE4-6	FIXTURE SCHEDULE
EE5-1	DETAILS NO. 1
EE5-2	DETAILS NO. 2
EE5-3	DETAILS NO. 3
EE5-4	DIAGRAMS
EE5-5	CLIMATE CONTROLS CONDUIT AND WIRING DIAGRAM
ES1-10	VERHEAD SIGN STRUCTURE D
ES1-20	VERHEAD SIGN STRUCTURE F
ES1-30	VERHEAD SIGN STRUCTURE H
ES1-4	CCTV AND SPEAKER DETAILS
ES1-5	COMMUNICATION TOWER
ES1-6	AUX INSPECTION PEDESTAL AND CALLBOX DETAILS
ES1-7	TRANSFORMER PAD AND ELECTRICAL VAULT DETAILS
ES1-8	SMALL VAULT DETAILS AND ELECTRICAL VAULT COVER DETAILS
ES1-9	LARGE VAULT DETAILS

CALIFORNIA STATE FIRE MARSHAL
APPROVED
Approval of this plan does not authorize or approve any omission or deviation from applicable regulations. Final approval is subject to field inspection. One set of approved plans shall be available on the project site at all times. 5/9/11
Reviewed by: Hans Henneberque
Senior Deputy State Fire Marshal

IDENTIFICATION STAMP
DIV. OF THE STATE ARCHITECT
02 111744
AC FLS — SS —
DATE 5-5-11

DESIGN	G.ROBLEY		W.RAMROTH
DETAILS	BY G.ROBLEY	CHECKED	D.WRIGHT
QUANTITIES	BY G.ROBLEY	CHECKED	W.RAMROTH

PREPARED FOR THE STATE OF CALIFORNIA DEPARTMENT OF TRANSPORTATION

DIVISION OF ENGINEERING SERVICES
ARCHITECTURAL AND STRUCTURAL DESIGN

BRIDGE NO. 23W0001R
POST MILE 14.8

EASTBOUND CORDELIA CVEF

CVEF — INDEX OF DRAWINGS

SHEET **A0-0.1**

ORIGINAL SCALE IN INCHES FOR REDUCED PLANS 0 1 2 3

CU 04264
EA 0A5351

DISREGARD PRINTS BEARING EARLIER REVISION DATES → REVISION DATES (PRELIMINARY STAGE ONLY) 04/04/11 05/03/11

SHEET OF

40a535wba0-00-01.dgn
DS OSD imperial Rev. 10/07 18-MAY-2011 08:40

18-MAY-2011 08:40

40a535wba0-00-01.dgn

DIST.	COUNTY	ROUTE	POST MILES TOTAL PROJECT	SHEET NO.	TOTAL SHEETS
04	Sol	12,80	L1.8/L2.0, 13.3/15.7	502	740

LICENSED ARCHITECT — DATE 05/03/11

LICENSED ARCHITECT GREG A. ROBLEY No. C-30986 Exp. 02/05/13 STATE OF CALIFORNIA

5-16-11
PLANS APPROVAL DATE

The State of California or its officers or agents shall not be responsible for the accuracy or completeness of electronic copies of this plan sheet.

KENNEDY/JENKS CONSULTANTS
303 SECOND STREET
SUITE 300 SOUTH
SAN FRANCISCO, CA 94960

SOLANO TRANSPORTATION AUTHORITY
ONE HARBOR CENTER, SUITE 130
SUISUN CITY, CA 94585

CODE ANALYSIS

APPLICABLE CODES INCLUDE:

2007 CALIFORNIA BUILDING CODE (CBC)
2007 CALIFORNIA MECHANICAL CODE
2007 CALIFORNIA PLUMBING CODE
2007 CALIFORNIA ELECTRICAL CODE
2007 CALIFORNIA FIRE CODE
2007 CALIFORNIA ENERGY CODE
2007 NFPA 10, NFPA 13, NFPA 24, NFPA 25, NFPA 72
USGBC LEED V2.2 NEW CONSTRUCTION

BUILDING ANALYSIS

COMMERCIAL VEHICLE ENFORCEMENT FACILITY (CVEF)

BUILDING OCCUPANCY CLASSIFICATION:
B, I-3, S-1, & A-3

CONSTRUCTION TYPE (CBC TABLE 503):
TYPE IIB, FULLY FIRE SPRINKLERED

BUILDING HEIGHT:
OFFICE/ASSEMBLY AREA - 27'-6", 1 STORY
TRUCK INSPECTION AREA - 31'-6", 1 STORY
ALLOWABLE HEIGHT - 55'-0", 2 STORIES

BUILDING FLOOR AREA PER OCCUPANCY:

B OFFICE - 8,144 SF
I-3 INSTITUTIONAL - 174 SF
A-3 ASSEMBLY - 4,313 SF
S-1 TRUCK INSPECTION AREA - 18,716 SF

PROPORTIONAL ALLOWABLE AREA LIMITATION (PER TABLE 503):

AUTOMATIC SPRINKLER SYSTEM INCREASE = 300% BASE AREA

	ACTUAL	BASE ALLOWABLE	+	300% BASE	AREA RATIO
S-1	18,005 SF /	(17,500 SF	+	52,500 SF)	0.26
B	6,986SF /	(23,000 SF	+	69,000 SF)	0.09
I-3	174 SF /	(5,200 SF	+	15,600 SF)	0.01
A-3	3,887 SF /	(9,500 SF	+	28,500 SF)	0.11
TOT	29,052 SF GROSS BUILDING AREA				0.47

ALLOWABLE AREA CALCULATION:
0.47 < 1 = OK

BUILDING ANALYSIS

GENERATOR BUILDING

BUILDING OCCUPANCY CLASSIFICATION:
S-1

CONSTRUCTION TYPE (CBC TABLE 503):
TYPE IIB, NON-SPRINKLERED

BUILDING HEIGHT:
GENERATOR BLDG - 13'-6", 1 STORY
ALLOWABLE HEIGHT - 55'-0", 3 STORIES

BUILDING FLOOR AREA:
784 SF

ALLOWABLE AREA LIMITATION:
17,500 SF BASE ALLOWABLE FOR S-1
784 SF < 17,500 SF = OK

HAZARDOUS STORAGE:
125 LBS OF FLARES IN STORAGE ROOM (FLAMMIBLE SOLID BELOW EXEMPTED QUANTITY PER CBC TABLE 307.1)
500 GALLONS DIESEL FUEL IN OUTDOOR TANK

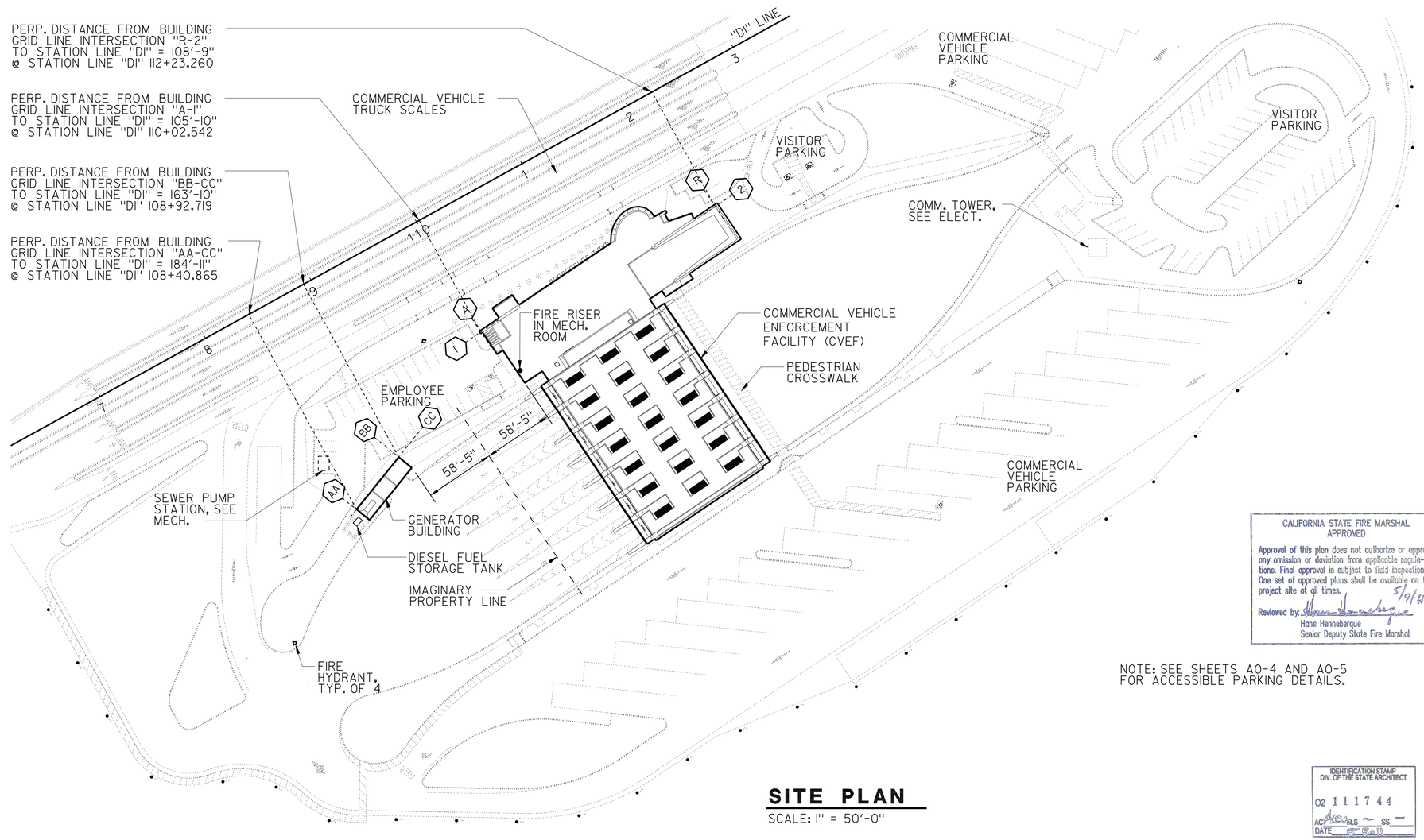

CALIFORNIA STATE FIRE MARSHAL APPROVED

Approval of this plan does not authorize or approve any omission or deviation from applicable regulations. Final approval is subject to field inspection. One set of approved plans shall be available on the project site at all times.

Reviewed by: Hans Henneberque 5/9/11
Hans Henneberque
Senior Deputy State Fire Marshal

NOTE: SEE SHEETS AO-4 AND AO-5 FOR ACCESSIBLE PARKING DETAILS.

IDENTIFICATION STAMP DIV. OF THE STATE ARCHITECT
02 111744
AC ARCH BLS — SS —
DATE 5-5-11

SITE PLAN

SCALE: 1" = 50'-0"

	BY	CHECKED
DESIGN	G.ROBLEY	W.RAMROTH
DETAILS	G.ROBLEY	D.WRIGHT
QUANTITIES	G.ROBLEY	W.RAMROTH

PREPARED FOR THE STATE OF CALIFORNIA DEPARTMENT OF TRANSPORTATION

DIVISION OF ENGINEERING SERVICES
ARCHITECTURAL AND STRUCTURAL DESIGN

BRIDGE NO. 23W000IR
POST MILE 14.8

EASTBOUND CORDELIA CVEF

CVEF — CODE ANALYSIS - SITE

SHEET AO-1

40a535wba0-01.dgn
DS OSD imperialRev.10/07 18-MAY-2011 08:40

ORIGINAL SCALE IN INCHES FOR REDUCED PLANS 0 1 2 3

CU 04264
EA 0A5351

DISREGARD PRINTS BEARING EARLIER REVISION DATES → 10/19/09 03/22/10 05/06/10 08/23/10 11/22/10 05/03/11

REVISION DATES (PRELIMINARY STAGE ONLY) SHEET OF

18-MAY-2011 08:40
40a535wba0-01.dgn

ROOM NO.	ROOM NAME	OCCUPANCY CLASS	AREA (SF)	OCCUPANCY LOAD FACTOR	OCCUPANT LOAD	NUMBER EXITS REQUIRED	REMARKS
GENERATOR BUILDING							
40	DUMPSTER ENCLOSURE	S-1	201	300	1	1	
41	KENNEL	S-1	123	100	2	1	
42	STORAGE	S-1	102	300	1	1	
43	GENERATOR	S-1	247	300	1	1	
TOTAL OCCUPANT LOAD					5		
NET USEABLE BLDG AREA			673				

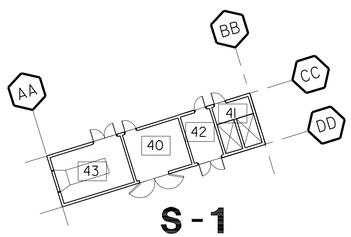

GENERATOR BUILDING

SCALE: 1" = 20'-0"

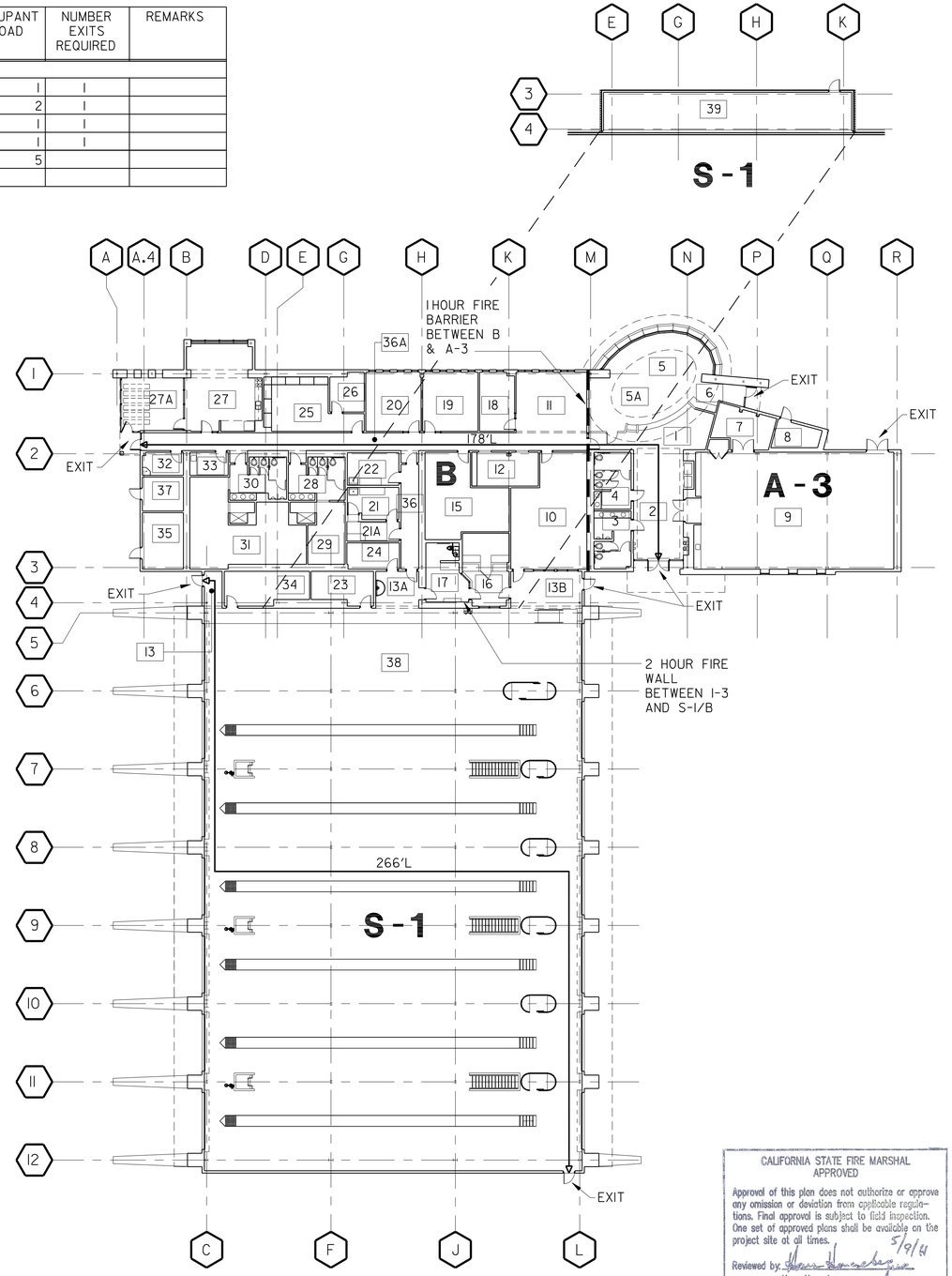

COMMERCIAL VEHICLE INSPECTION FACILITY

SCALE: 1" = 20'-0"

OCCUPANT LOAD CALCULATIONS

PER CBC TABLE 1004.1.1

CORRIDORS WITH 30 OCCCUPANT LOAD REQUIRING 1 HOUR FIRE BARRIER: NONE

MAXIMUM ALLOWABLE TRAVEL DISTANCE: 250 FT
ACTUAL DISTANCE LESS THAN 250 FT.

EXIT LOCATIONS: LESS THAN ONE THIRD THE DIAGONAL DISTANCE CONDITION MET, AND NO DEAD ENDS > 20 FT.

EXIT AND CORRIDOR WIDTH:
44-INCH MINIMUM WIDTH
36-INCH DOORS WIDTH 33-INCH CLEAR OPG.

PLAN NORTH

DIST.	COUNTY	ROUTE	POST MILES TOTAL PROJECT	SHEET NO.	TOTAL SHEETS
04	Sol	12,80	L1.8/L2.0, 13.3/15.7	503	740

LICENSED ARCHITECT — DATE 05/02/11

LICENSED ARCHITECT GREG A. ROBLEY No. C-30986 Exp. 02/05/13 STATE OF CALIFORNIA

5-16-11
PLANS APPROVAL DATE

The State of California or its officers or agents shall not be responsible for the accuracy or completeness of electronic copies of this plan sheet.

KENNEDY/JENKS CONSULTANTS
303 SECOND STREET
SUITE 300 SOUTH
SAN FRANCISCO, CA 94960

SOLANO TRANSPORTATION AUTHORITY
ONE HARBOR CENTER, SUITE 130
SUISUN CITY, CA 94585

IDENTIFICATION STAMP DIV. OF THE STATE ARCHITECT
02 111744
AC ARCH BLS — SS —
DATE 05-05-11

ROOM NO.	ROOM NAME	OCCUPANCY CLASS	AREA (SF)	OCCUPANCY LOAD FACTOR	OCCUPANT LOAD (EXIT LOAD)	NUMBER EXITS REQUIRED	REMARKS
COMMERCIAL VEHICLE ENFORCEMENT FACILITY							
1	LOBBY	A-3	191	15	13	1	
2	FOYER	A-3	476	-	82	1	PANIC HDWR EXIT DOOR
3	MEN	A-3	145	-	-	1	
4	WOMEN	A-3	161	-	-	1	
5	OBSERVATION	A-3	319	100	4	1	
5A	TRANSACTION	A-3	319	100	4	1	
6	PURSUIT	A-3	122	100	2	1	PANIC HDWR EXIT DOOR
7	STORAGE	A-3	189	300	1	1	
8	ELECTRICAL	A-3	86	300	1	1	
9	CONFERENCE TRAINING	A-3	1,879	15	126	2	PANIC HDWR EXIT DOOR
10	SERGEANT OFFICE	B	623	100	7	1	
11	CLERICAL OFFICE	B	337	100	4	1	
12	MAIL/CLERICAL STOR.	B	181	100	2	1	
13	VESTIBULE	S-1	75	-	61	1	PANIC HDWR EXIT DOOR
13A	VESTIBULE	S-1	125	-	4	1	
13B	VESTIBULE	S-1	181	-	63	1	PANIC HDWR EXIT DOOR
14	NOT USED	-	-	-	-	-	
15	ELEC/COMM	B	467	300	2	1	
16	ENFORCEMENT OFFICE	B	209	100	3	1	
17	INTOX	1-3	174	100	2	1	
18	CLERICAL SUPERVISOR	B	162	100	2	1	
19	LIEUTENANT	B	259	100	3	1	
20	SPECIAL DUTY OFFICE	B	259	100	3	1	
21	EVIDENCE	B	136	100	2	1	
21A	EVIDENCE VESTIBULE	B	81	100	1	1	
22	WEAPONS	B	131	100	2	1	
23	INTERAGENCY	B	164	100	2	1	
24	UNIFORM	B	110	100	2	1	
25	CHP EQUIPMENT	B	324	100	4	1	
26	STORAGE	B	101	300	1	1	
27	BREAK ROOM	B	504	15	34	1	
27A	PATIO	B	260	100	3	1	
28	STAFF WOMEN	B	198	-	-	1	
29	WOMEN LOCKER	B	208	50	5	1	
30	STAFF MEN	B	191	-	-	1	
31	MEN LOCKER	B	621	50	13	1	
32	JANITOR	B	76	300	1	1	
33	LACTATION	B	71	100	1	1	
34	TOOL STORAGE	B	219	300	1	1	
35	MECHANICAL	B	185	300	1	1	
36	HALLWAY	B	148	-	5	1	PANIC HDWR EXIT DOOR
36A	HALLWAY	B	650	-	72	1	PANIC HDWR EXIT DOOR
37	ELECTRICAL	B	111	300	1	1	
38	INSPECTION BAYS	S-1	16,822	100	169	2	PANIC HDWR EXIT DOOR
39	ROOF MECHANICAL	S-1	798	300	3	1	
TOTAL OCCUPANT LOAD					455		
NET USEABLE BLDG AREA			29,052				

CALIFORNIA STATE FIRE MARSHAL APPROVED

Approval of this plan does not authorize or approve any omission or deviation from applicable regulations. Final approval is subject to field inspection. One set of approved plans shall be available on the project site at all times.

Reviewed by: 5/9/11
Hans Hennebarque
Senior Deputy State Fire Marshal

	BY	CHECKED
DESIGN	G.ROBLEY	W.RAMROTH
DETAILS	G.ROBLEY	D.WRIGHT
QUANTITIES	G.ROBLEY	W.RAMROTH

PREPARED FOR THE STATE OF CALIFORNIA DEPARTMENT OF TRANSPORTATION

DIVISION OF ENGINEERING SERVICES
ARCHITECTURAL AND STRUCTURAL DESIGN

CU 04264
EA 0A5351

BRIDGE NO. 23W000IR
POST MILE 14.8

EASTBOUND CORDELIA CVEF

CVEF — CODE ANALYSIS - BUILDING

SHEET A0-2

ORIGINAL SCALE IN INCHES FOR REDUCED PLANS 0 1 2 3

DISREGARD PRINTS BEARING EARLIER REVISION DATES → 10/19/09 03/22/10 05/06/10 08/23/10 11/22/10 05/02/11

REVISION DATES (PRELIMINARY STAGE ONLY) SHEET OF

40a535wba0-02.dgn
DS OSD imperialRev.10/07 18-MAY-2011 08:40

18-MAY-2011 08:40
40a535wba0-02.dgn

DIST.	COUNTY	ROUTE	POST MILES TOTAL PROJECT	SHEET NO.	TOTAL SHEETS
04	Sol	12,80	L1.8/L2.0, 13.3/15.7	504	740

REGISTERED CIVIL ENGINEER 05/02/11 DATE

REGISTERED PROFESSIONAL ENGINEER SEAN A. CHARLES No. 50767 Exp. 9/30/11 CIVIL STATE OF CALIFORNIA

5-16-11
PLANS APPROVAL DATE

The State of California or its officers or agents shall not be responsible for the accuracy or completeness of electronic copies of this plan sheet.

WMH CORPORATION
555 12th Street
Suite 1900
Oakland, CA 94607

SOLANO TRANSPORTATION AUTHORITY
ONE HARBOR CENTER, SUITE 130
SUISUN CITY, CA 94585

NOTES:

1. MAXIMUM SLOPE ON PARKING STALL PAVEMENT IS TO BE 2%
2. FOR CURB RAMP DIMENSIONS SEE CVEF CURB LAYOUTS ON THE CONSTRUCTION DETAIL SHEETS
3. ACCESSIBLE TRAVEL PATH IS DEFINED AS FOLLOWS:
   - AT LEAST 48" IN WIDTH
   - WITHOUT ABRUPT LEVEL CHANGES EXCEEDING ½" IF BEVELED AT 1:2 MAXIMUM SLOPE, OR VERTICAL LEVEL CHANGES EXCEEDING ¼"
   - WITH A FIRM, STABLE, AND SLIP RESISTANT WALKING SURFACE
   - WITH A RUNNING SLOPE OF 1:20 OR LESS, UNLESS OTHERWISE INDICATED, AND A CROSS SLOPE OF 1:50 OR LESS
   - IS FREE OF OVERHEAD OBSTRUCTION WITHIN 80" ABOVE THE WAKING SURFACE
   - IS FREE OF OBJECTS WHICH PROTRUDE MORE THAN 4" BETWEEN THE HEIGHTS OF 27" AND 80" ABOVE THE WAKING SURFACE
4. ALL STRIPING DIMENSIONS ARE REFERENCED FROM THE CENTERLINE OF THE STRIPE UNLESS NOTED OTHERWISE

LEGEND:

ACCESSIBLE TRAVEL PATH ● ● ● ●

ACCESSIBLE ENTRANCE TO BUILDING X

ENLARGED PLAN SEE SHEET AO-4 (A)

ACCESSIBILITY AND SIGNING DETAILS, SEE SHEET AO-5 [#]

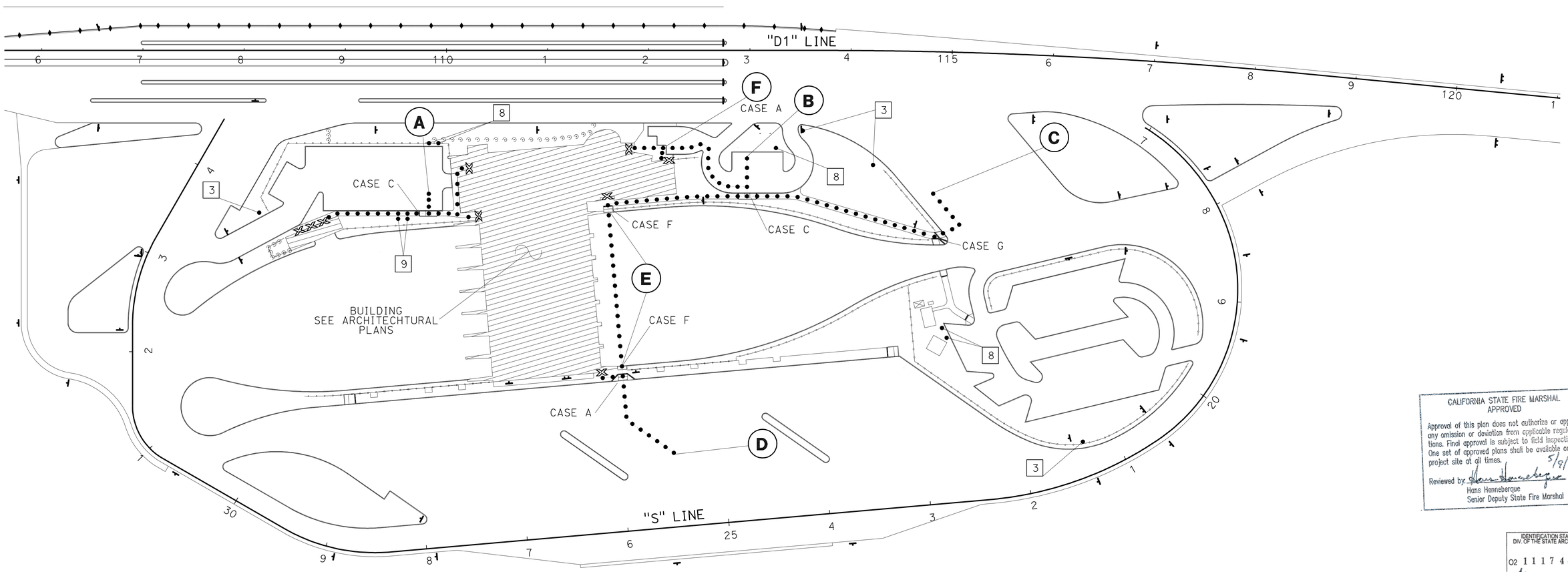

NO SCALE

CALIFORNIA STATE FIRE MARSHAL
APPROVED

Approval of this plan does not authorize or approve any omission or deviation from applicable regulations. Final approval is subject to field inspection. One set of approved plans shall be available on the project site at all times.

Reviewed by 5/9/11
Hans Henneberque
Senior Deputy State Fire Marshal

IDENTIFICATION STAMP
DIV. OF THE STATE ARCHITECT
02 111744
ACC ___ DLS ___ SS ___
DATE ___

DESIGN	BY BEN GRIMM	CHECKED SEAN CHARLES	
DETAILS	BY BEN GRIMM	CHECKED SEAN CHARLES	
QUANTITIES	BY BEN GRIMM	CHECKED SEAN CHARLES	

PREPARED FOR THE STATE OF CALIFORNIA DEPARTMENT OF TRANSPORTATION

DIVISION OF ENGINEERING SERVICES
ARCHITECTURAL AND STRUCTURAL DESIGN

BRIDGE NO. 23W0001R
POST MILE 14.8

EASTBOUND CORDELIA CVEF

CVEF — ACCESSIBILITY STANDARD DETAILS No.1

SHEET AO-3

40a535wbAO-03.dgn
DS OSD Imperial Rev. 10/07 18-MAY-2011 08:40

ORIGINAL SCALE IN INCHES FOR REDUCED PLANS 0 1 2 3

CU 04264
EA 0A5351

DISREGARD PRINTS BEARING EARLIER REVISION DATES →

REVISION DATES (PRELIMINARY STAGE ONLY) 03/15/10 04/14/10 07/09/10 10/13/10 11/22/10 05/02/11 SHEET OF

18-MAY-2011 08:40
40a535wbAO-03.dgn

DIST.	COUNTY	ROUTE	POST MILES TOTAL PROJECT	SHEET NO.	TOTAL SHEETS
04	Sol	12,80	L1.8/L2.0, 13.3/15.7	505	740

REGISTERED CIVIL ENGINEER 05/02/11 DATE

REGISTERED PROFESSIONAL ENGINEER SEAN A. CHARLES No. 50767 Exp. 9/30/11 CIVIL STATE OF CALIFORNIA

5-16-11
PLANS APPROVAL DATE

The State of California or its officers or agents shall not be responsible for the accuracy or completeness of electronic copies of this plan sheet.

WMH CORPORATION
555 12th Street
Suite 1900
Oakland, CA 94607

SOLANO TRANSPORTATION AUTHORITY
ONE HARBOR CENTER, SUITE 130
SUISUN CITY, CA 94585

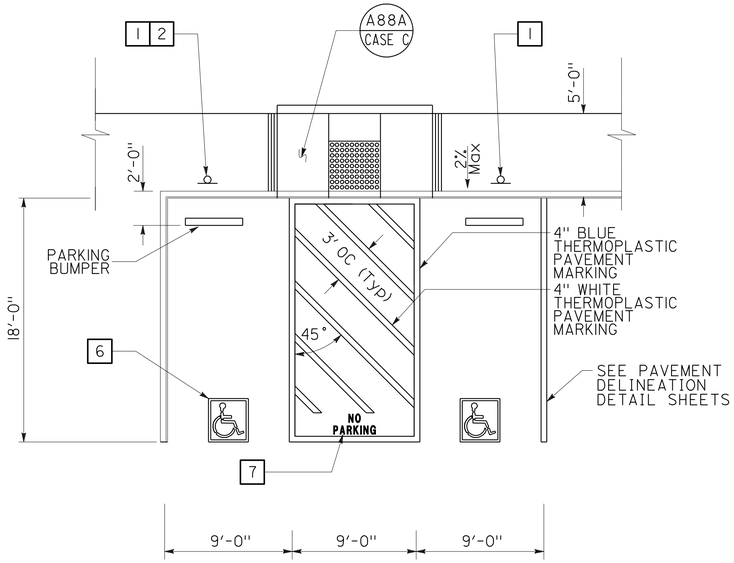

A EMPLOYEE ACCESSIBLE PARKING STALLS

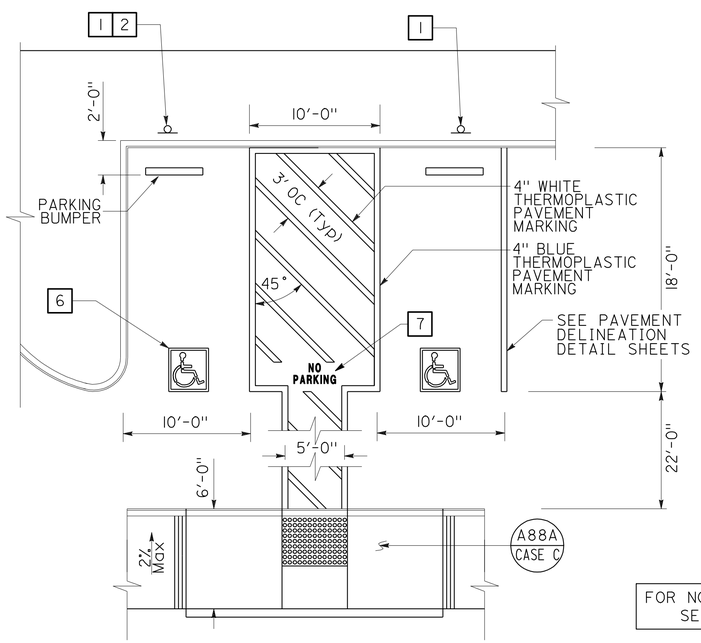

FOR NOTES AND LEGEND, SEE SHEET A0-3

B VISITOR ACCESSIBLE PARKING STALLS

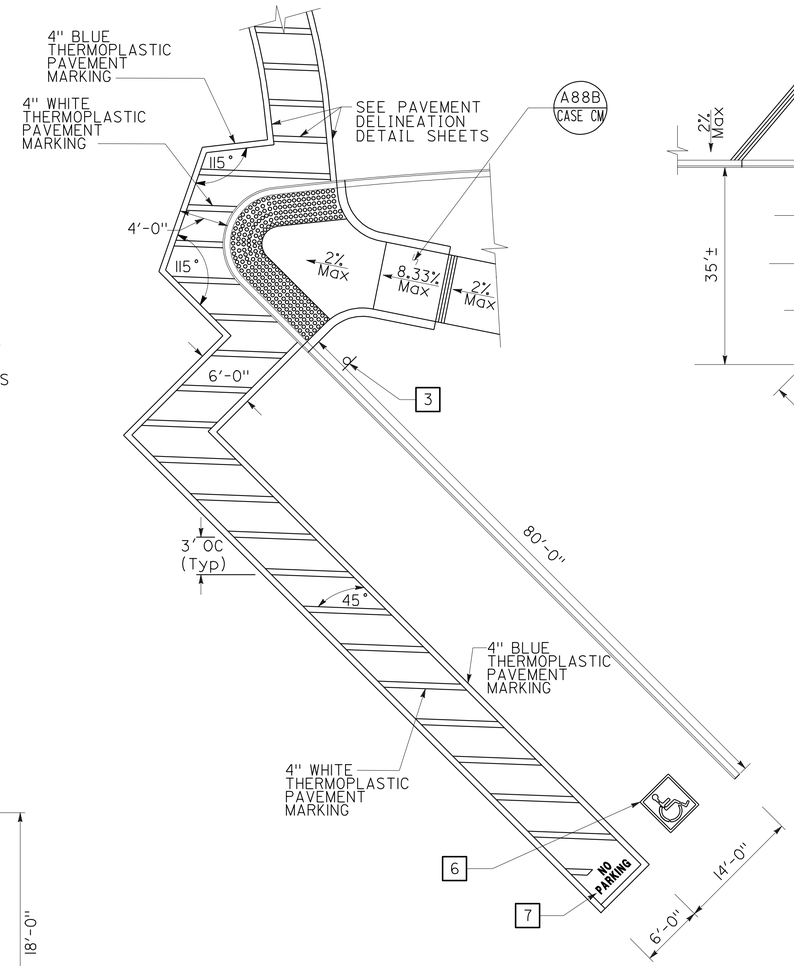

C SHORT TERM TRUCK ACCESSIBLE PARKING STALL

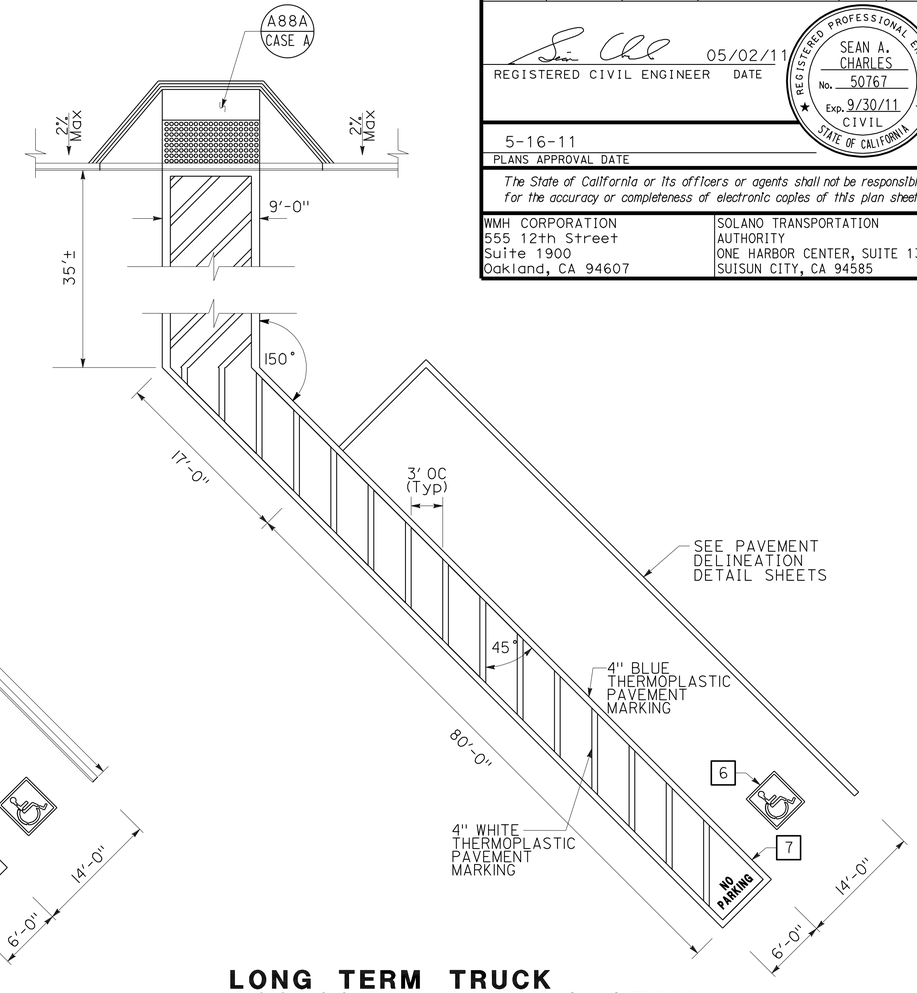

D LONG TERM TRUCK ACCESSIBLE PARKING STALL

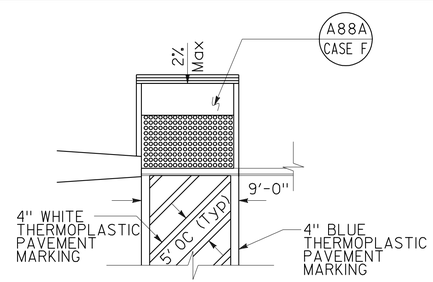

E INSPECTION BAY CROSSWALK

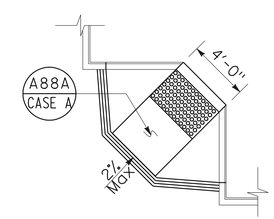

F PURSUIT PARKING RAMP

CALIFORNIA STATE FIRE MARSHAL APPROVED

Approval of this plan does not authorize or approve any omission or deviation from applicable regulations. Final approval is subject to field inspection. One set of approved plans shall be available on the project site at all times.

Reviewed by: 5/9/11
Hans Henneberque
Senior Deputy State Fire Marshal

IDENTIFICATION STAMP DIV. OF THE STATE ARCHITECT
02 1117 44
AC ARCHS — SS —
DATE 5-5-11

NO SCALE

	BY	CHECKED
DESIGN	BEN GRIMM	SEAN CHARLES
DETAILS	BEN GRIMM	SEAN CHARLES
QUANTITIES	BEN GRIMM	SEAN CHARLES

PREPARED FOR THE STATE OF CALIFORNIA DEPARTMENT OF TRANSPORTATION

DIVISION OF ENGINEERING SERVICES ARCHITECTURAL AND STRUCTURAL DESIGN

BRIDGE NO. 23W000IR
POST MILE 14.8

EASTBOUND CORDELIA CVEF

CVEF ACCESSIBILITY STANDARD DETAILS No.2

SHEET A0-4

ORIGINAL SCALE IN INCHES FOR REDUCED PLANS 0 1 2 3

CU 04264
EA 0A5351

DISREGARD PRINTS BEARING EARLIER REVISION DATES → 03/15/10 04/14/10 07/09/10 11/22/10 05/02/11

REVISION DATES (PRELIMINARY STAGE ONLY) SHEET OF

40a535wbA0-04.dgn
DS OSD Imperial Rev. 10/07 18-MAY-2011 08:41

18-MAY-2011 08:41
40a535wbA0-04.dgn

DIST.	COUNTY	ROUTE	POST MILES TOTAL PROJECT	SHEET NO.	TOTAL SHEETS
04	Sol	12,80	L1.8/L2.0, 13.3/15.7	506	740

REGISTERED CIVIL ENGINEER 05/02/11 DATE

REGISTERED PROFESSIONAL ENGINEER SEAN A. CHARLES No. 50767 Exp. 9/30/11 CIVIL STATE OF CALIFORNIA

5-16-11
PLANS APPROVAL DATE

The State of California or its officers or agents shall not be responsible for the accuracy or completeness of electronic copies of this plan sheet.

WMH CORPORATION
555 12th Street
Suite 1900
Oakland, CA 94607

SOLANO TRANSPORTATION AUTHORITY
ONE HARBOR CENTER, SUITE 130
SUISUN CITY, CA 94585

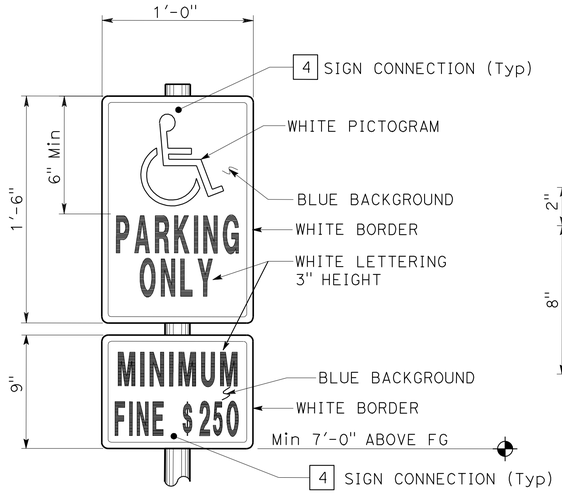

1 ACCESSIBLE PARKING SIGN

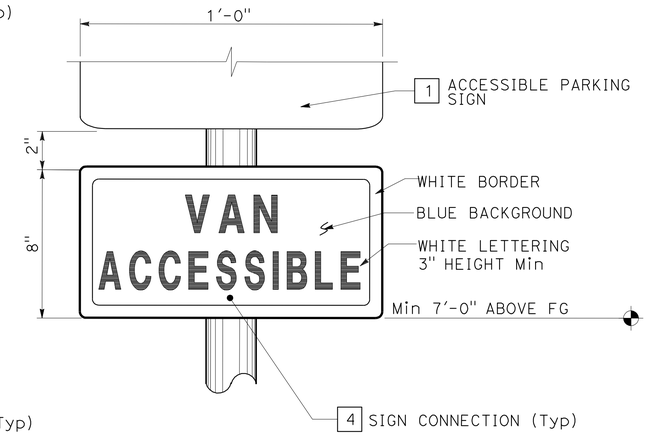

2 ACCESSIBLE PARKING SIGN

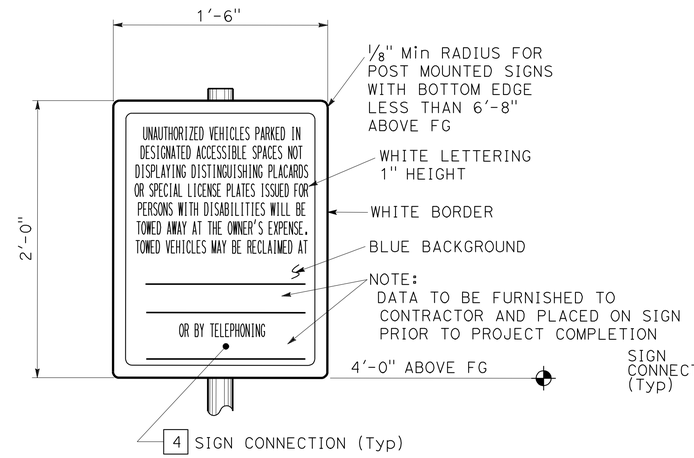

3 PARKING AREA ENTRANCE SIGN

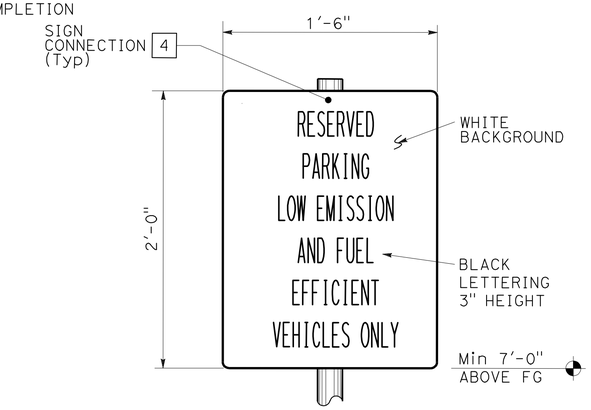

8 LOW EMISSION VEHICLE PARKING SIGN

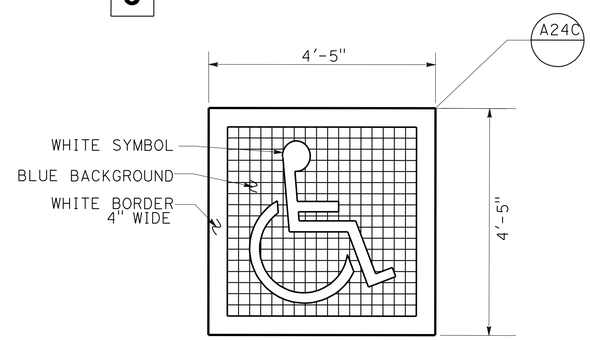

6 ACCESSIBLE PARKING SURFACE IDENTIFICATION

THERMOPLASTIC PAVEMENT MARKING

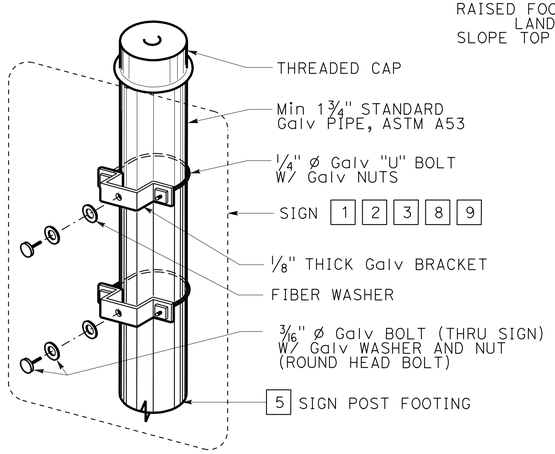

4 SIGN CONNECTION

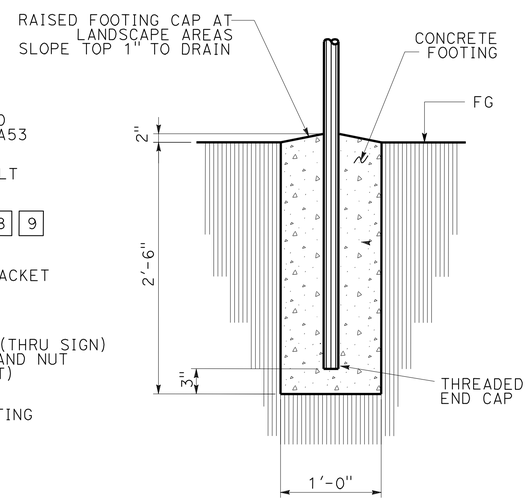

5 SIGN POST FOOTING

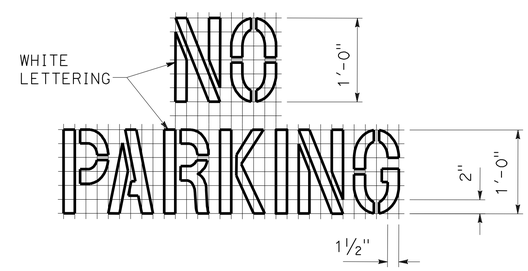

7 ACCESS AISLE PAVEMENT MARKING

THERMOPLASTIC PAVEMENT MARKING

CALIFORNIA STATE FIRE MARSHAL APPROVED

Approval of this plan does not authorize or approve any omission or deviation from applicable regulations. Final approval is subject to field inspection. One set of approved plans shall be available on the project site at all times.

Reviewed by: Hans Hennebergue 5/9/11
Hans Hennebergue
Senior Deputy State Fire Marshal

IDENTIFICATION STAMP DIV. OF THE STATE ARCHITECT
02 111744
AC AR ES — SS —
DATE 5-9-11

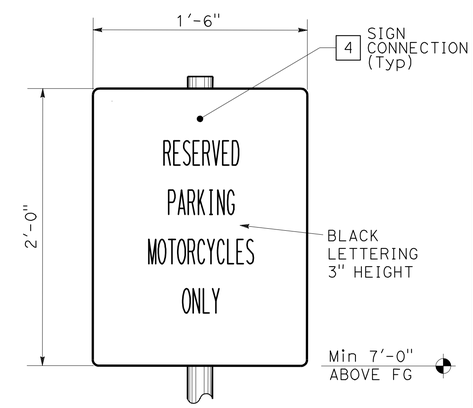

9 MOTORCYCLE PARKING

FOR NOTES AND LEGEND, SEE SHEET A0-3

NO SCALE

DESIGN	BY BEN GRIMM	CHECKED SEAN CHARLES	PREPARED FOR THE STATE OF CALIFORNIA DEPARTMENT OF TRANSPORTATION
DETAILS	BY BEN GRIMM	CHECKED SEAN CHARLES	
QUANTITIES	BY BEN GRIMM	CHECKED SEAN CHARLES	

DIVISION OF ENGINEERING SERVICES
ARCHITECTURAL AND STRUCTURAL DESIGN

BRIDGE NO. 23W000IR
POST MILE 14.8

EASTBOUND CORDELIA CVEF
CVEF
ACCESSIBILITY AND SIGNING DETAILS No.3

SHEET A0-5

40a535wbA0-05.dgn
DS OSD imperialRev.10/07 18-MAY-2011 08:41

ORIGINAL SCALE IN INCHES FOR REDUCED PLANS 0 1 2 3

CU 04264
EA 0A5351

DISREGARD PRINTS BEARING EARLIER REVISION DATES

REVISION DATES (PRELIMINARY STAGE ONLY) 03/15/10 04/14/10 07/09/10 10/13/10 11/22/10 05/02/11 SHEET OF

18-MAY-2011 08:41
40a535wbA0-05.dgn

DIST.	COUNTY	ROUTE	POST MILES TOTAL PROJECT	SHEET NO.	TOTAL SHEETS
04	Sol	12,80	L1.8/L2.0, 13.3/15.7	507	740

LICENSED ARCHITECT — 05/02/11 DATE

LICENSED ARCHITECT GREG A. ROBLEY No. C-30986 Exp. 02/05/13 STATE OF CALIFORNIA

5-16-11
PLANS APPROVAL DATE

The State of California or its officers or agents shall not be responsible for the accuracy or completeness of electronic copies of this plan sheet.

KENNEDY/JENKS CONSULTANTS
303 SECOND STREET
SUITE 300 SOUTH
SAN FRANCISCO, CA 94960

SOLANO TRANSPORTATION AUTHORITY
ONE HARBOR CENTER, SUITE 130
SUISUN CITY, CA 94585

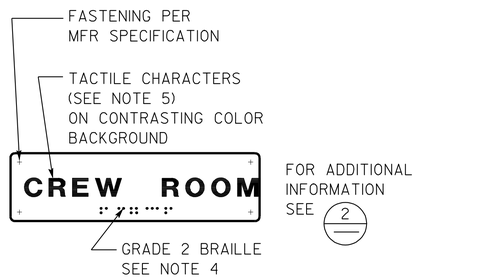

1 ROOM IDENTIFICATION SIGN

INSTALL PER DETAIL 5
TEXT VARIES
SEE SIGN SCHEDULE AND DOOR SCHEDULE FOR LOCATIONS AND TEXT

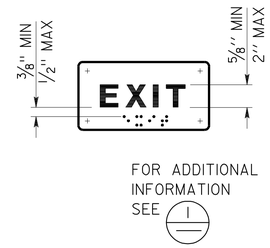

2 EXIT SIGN

INSTALL PER DETAIL 5
TEXT MAY VARY
SEE SIGN SCHEDULE AND DOOR SCHEDULE FOR LOCATIONS AND TEXT

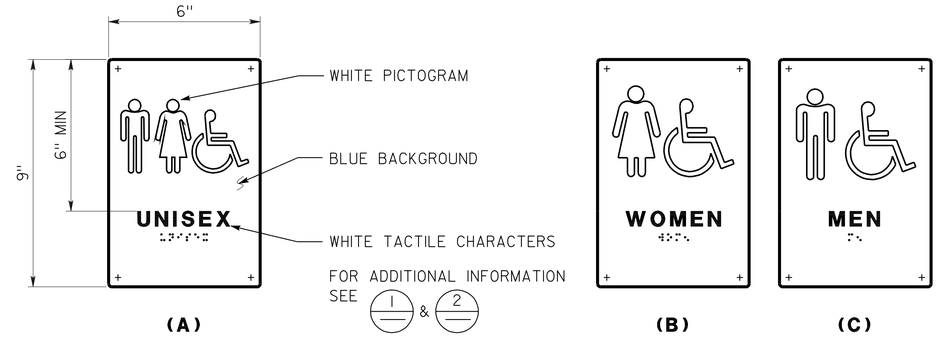

3 RESTROOM SIGNS

INSTALL PER DETAIL 5

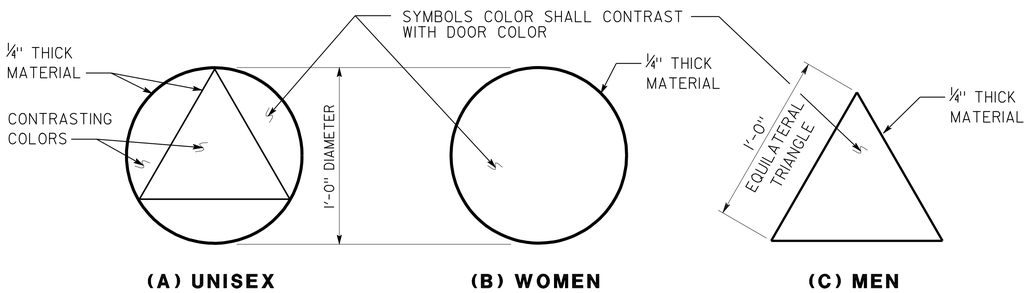

4 RESTROOM IDENTIFICATION SYMBOLS

INSTALL PER DETAIL 5
ANY PICTOGRAM AND TEXT ARE NOT REQUIRED

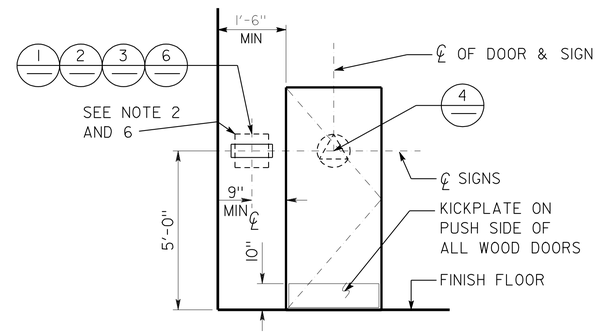

5 SIGN LOCATIONS

REFER TO SIGNAGE NOTES
FOR ADDITIONAL INFORMATION

SIGNAGE NOTES:

1. LOCATE ROOM IDENTIFICATION SIGNS, EXIT SIGNS, AND RESTROOM SIGNS ON WALL ADJACENT TO DOOR ON LATCH SIDE. IF WALL SPACE IS NOT AVAILABLE ON LATCH SIDE, LOCATE ON NEAREST ADJACENT WALL.
2. REFER TO SPECIFICATIONS FOR SIGN MATERIAL. SIGN COLORS AS SHOWN ON THE DRAWINGS. COLORS NOT SHOWN SELECTED FROM MANUFACTURER'S STANDARD RANGE.
3. SEE SIGN SCHEDULE AND DOOR SCHEDULE FOR TEXT AND SIGN LOCATIONS, SHEET A6-1 AND A6-2.
4. GRADE 2 BRAILLE: DOTS SHALL BE 1/10" OC IN EACH CELL WITH 2/10" SPACE BETWEEN CELLS MEASURED FROM THE SECOND COLUMN OF DOTS IN THE FIRST CELL TO THE FIRST COLUMN OF DOTS IN THE SECOND CELL. DOTS SHALL BE DOTTED OR ROUNDED AND RAISED A MINIMUM OF 1/40" ABOVE THE BACKGROUND.
5. TACTILE CHARACTERS SHALL BE UPPERCASE SANS SERIF RAISED 1/32" MIN WITH A WIDTH TO HEIGHT RATIO BETWEEN 3:5 AND 1:1 AND A STROKE WIDTH TO HEIGHT RATIO BETWEEN 1:5 AND 1:10.
6. PROVIDE 18"×18" MIN CLEAR FLOOR SPACE IN FRONT OF AND CENTERED ON THE SIGN.

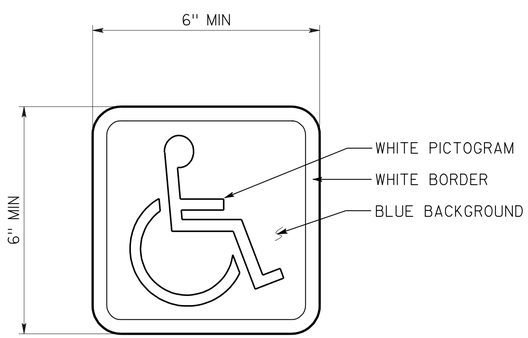

6 INTERNATIONAL SYMBOL OF ACCESSIBILITY

INSTALL PER DETAIL 5
SEE SIGN SCHEDULE FOR SIGN LOCATIONS
SYMBOL MAY BE ON DOOR OR WALLS.
DECAL MAY BE USED ON DOORS OR SMOOTH WALLS

NOTE: NO SCALE UNLESS OTHERWISE NOTED

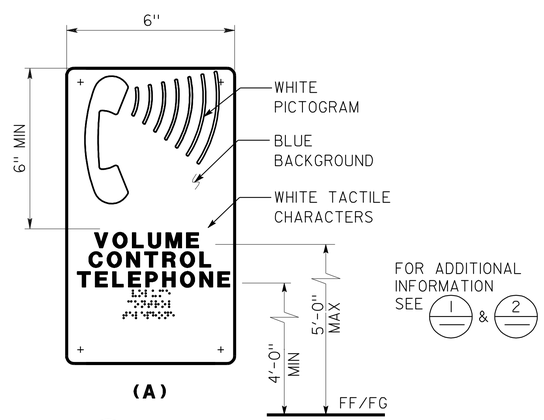

7 TELEPHONE SIGNS

SEE SIGN SCHEDULE FOR SIGN LOCATIONS

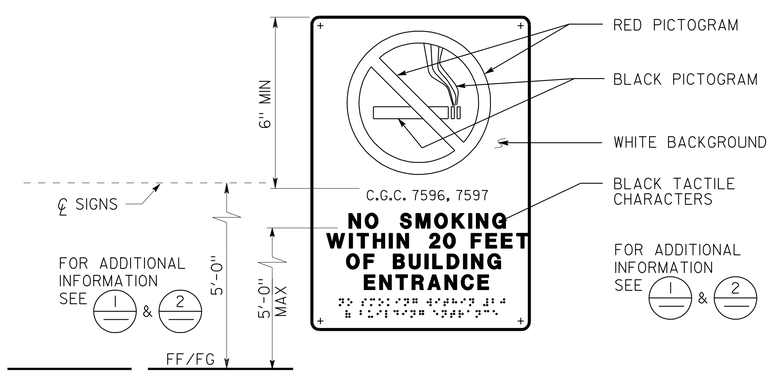

9 NO SMOKING SIGN

SEE SIGN SCHEDULE FOR LOCATIONS

CALIFORNIA STATE FIRE MARSHAL APPROVED
Approval of this plan does not authorize or approve any omission or deviation from applicable regulations. Final approval is subject to field inspection. One set of approved plans shall be available on the project site at all times.
Reviewed by: Hans Henneberque 5/9/11
Hans Henneberque
Senior Deputy State Fire Marshal

IDENTIFICATION STAMP DIV. OF THE STATE ARCHITECT
02 111744
ACCESS — SS —
DATE

NOTE: SPECIFIC DETAILS OR NOTES ON OTHER SHEETS SHALL PREVAIL OVER STANDARD DETAILS AND NOTES ON THIS SHEET

	BY	CHECKED
DESIGN	G.ROBLEY	W.RAMROTH
DETAILS	G.ROBLEY	D.WRIGHT
QUANTITIES	G.ROBLEY	W.RAMROTH

PREPARED FOR THE STATE OF CALIFORNIA DEPARTMENT OF TRANSPORTATION

DIVISION OF ENGINEERING SERVICES
ARCHITECTURAL AND STRUCTURAL DESIGN

BRIDGE NO. 23W000IR
POST MILE 14.8

EASTBOUND CORDELIA CVEF
CVEF — ACCESSIBILITY STANDARD DETAILS NO. 4

SHEET A0-6

40a535wba0-06.dgn
DS OSD Imperial Rev. 10/07 18-MAY-2011 08:41

ORIGINAL SCALE IN INCHES FOR REDUCED PLANS 0 1 2 3

CU 04264
EA 0A5351

DISREGARD PRINTS BEARING EARLIER REVISION DATES → 10/19/09 03/22/10 05/06/10 08/23/10 11/22/10 05/02/11

REVISION DATES (PRELIMINARY STAGE ONLY) SHEET OF

18-MAY-2011 08:41

40a535wba0-06.dgn

DIST.	COUNTY	ROUTE	POST MILES TOTAL PROJECT	SHEET NO.	TOTAL SHEETS
04	Sol	12,80	L1.8/L2.0, 13.3/15.7	508	740

LICENSED ARCHITECT — DATE 05/02/11

LICENSED ARCHITECT GREG A. ROBLEY No. C-30986 Exp. 02/05/13 STATE OF CALIFORNIA

5-16-11
PLANS APPROVAL DATE

The State of California or its officers or agents shall not be responsible for the accuracy or completeness of electronic copies of this plan sheet.

KENNEDY/JENKS CONSULTANTS
303 SECOND STREET
SUITE 300 SOUTH
SAN FRANCISCO, CA 94960

SOLANO TRANSPORTATION AUTHORITY
ONE HARBOR CENTER, SUITE 130
SUISUN CITY, CA 94585

CALIFORNIA STATE FIRE MARSHAL APPROVED
Approval of this plan does not authorize or approve any omission or deviation from applicable regulations. Final approval is subject to field inspection. One set of approved plans shall be available on the project site at all times.
Reviewed by: Hans Henneberque 5/9/11
Hans Henneberque
Senior Deputy State Fire Marshal

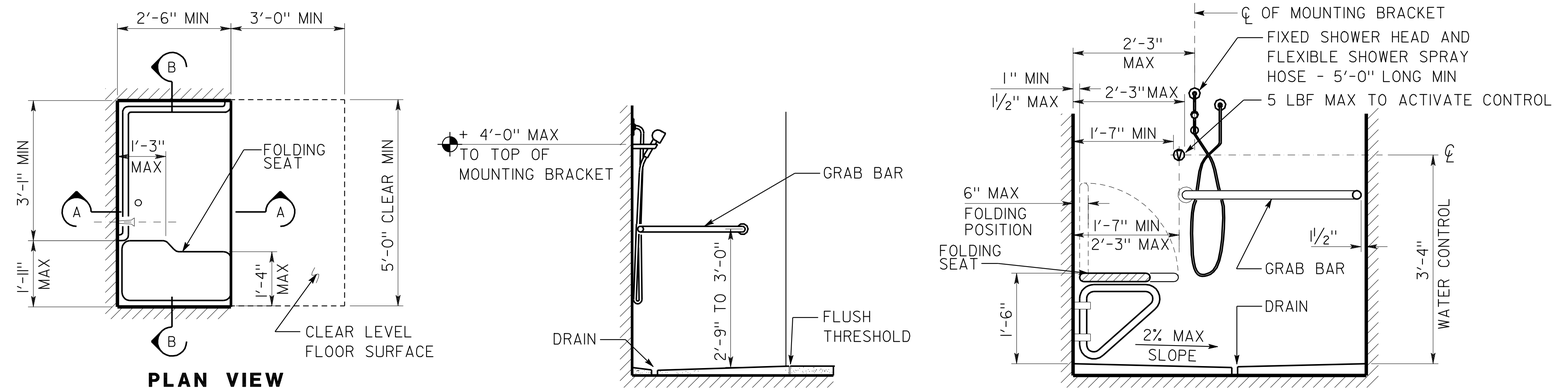

1 SHOWER STALL

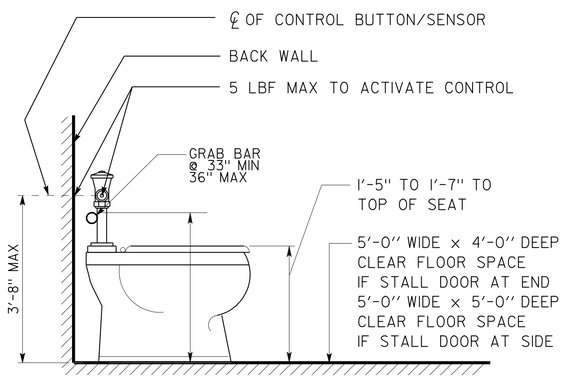

2 WATER CLOSET

SEE SPEC FOR FIXTURE TYPE

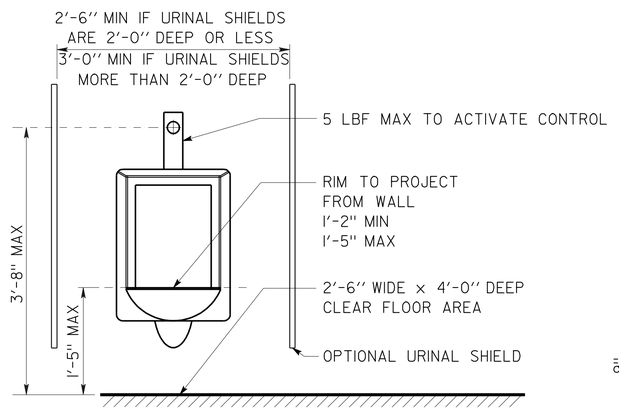

3 URINAL

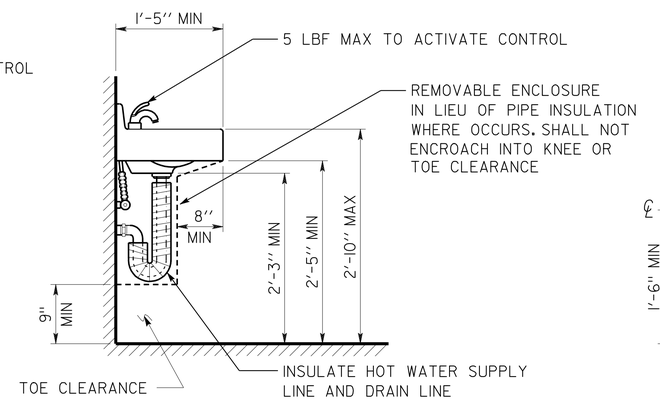

4 LAVATORY

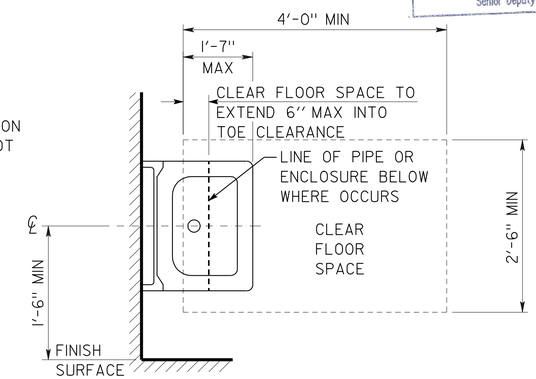

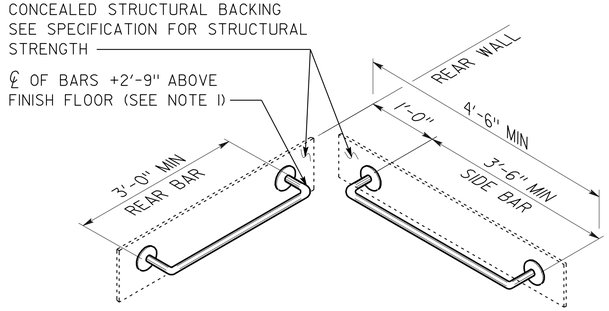

5 GRAB BARS/ WATER CLOSET

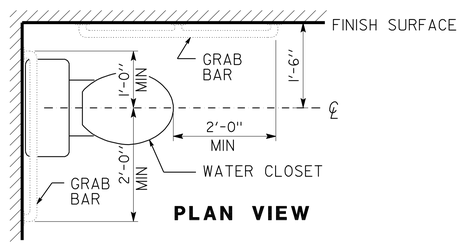

GRAB BAR NOTE:
1. IF TANK TYPE TOILET IS USED, TOP OF REAR BAR MAY BE SET TO 3'-0" MAX ABOVE FINISH FLOOR. SIDE BAR TO REMAIN AS SHOWN ABOVE.
2. GRAB BARS TO BE 1 ¼" TO 1 ½" DIAMETER WITH CLEAR SPACE OF 1 ½" TO SMOOTH WALL SURFACE.

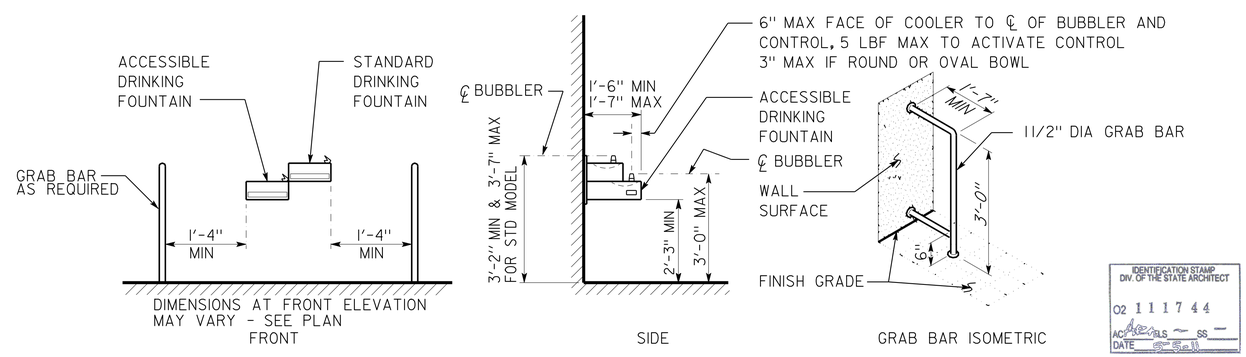

IDENTIFICATION STAMP DIV. OF THE STATE ARCHITECT
02 1117 44
AC ABLS — SS —
DATE 5-5-11

6 ELECTRIC WATER COOLER

FOR PROJECTS WITH APPROVED UNREASONABLE HARDSHIPS ONLY
FIXTURE TYPE MAY VARY

NOTE: NO SCALE UNLESS OTHERWISE NOTED

NOTE: SPECIFIC DETAILS OR NOTES ON OTHER SHEETS SHALL PREVAIL OVER STANDARD DETAILS AND NOTES ON THIS SHEET

	BY	CHECKED
DESIGN	G.ROBLEY	W.RAMROTH
DETAILS	G.ROBLEY	D.WRIGHT
QUANTITIES	G.ROBLEY	W.RAMROTH

PREPARED FOR THE STATE OF CALIFORNIA DEPARTMENT OF TRANSPORTATION

DIVISION OF ENGINEERING SERVICES ARCHITECTURAL AND STRUCTURAL DESIGN

BRIDGE NO. 23W000IR
POST MILE 14.8

EASTBOUND CORDELIA CVEF

CVEF — ACCESSIBILITY STANDARD DETAILS NO. 5

SHEET AO-7

40a535wba0-07.dgn
DS OSD ImperialRev.10/07 18-MAY-2011 08:41

ORIGINAL SCALE IN INCHES FOR REDUCED PLANS 0 1 2 3

CU 04264
EA 0A5351

DISREGARD PRINTS BEARING EARLIER REVISION DATES → 10/19/09 03/22/10 05/06/10 08/23/10 11/22/10 05/02/11

REVISION DATES (PRELIMINARY STAGE ONLY) SHEET OF

18-MAY-2011 08:41
40a535wba0-07.dgn

DIST.	COUNTY	ROUTE	POST MILES TOTAL PROJECT	SHEET NO.	TOTAL SHEETS
04	Sol	12,80	L1.8/L2.0, 13.3/15.7	509	740

LICENSED ARCHITECT — DATE 05/02/11

LICENSED ARCHITECT GREG A. ROBLEY No. C-30986 Exp. 02/05/13 STATE OF CALIFORNIA

5-16-11
PLANS APPROVAL DATE

The State of California or its officers or agents shall not be responsible for the accuracy or completeness of electronic copies of this plan sheet.

KENNEDY/JENKS CONSULTANTS
303 SECOND STREET
SUITE 300 SOUTH
SAN FRANCISCO, CA 94960

SOLANO TRANSPORTATION AUTHORITY
ONE HARBOR CENTER, SUITE 130
SUISUN CITY, CA 94585

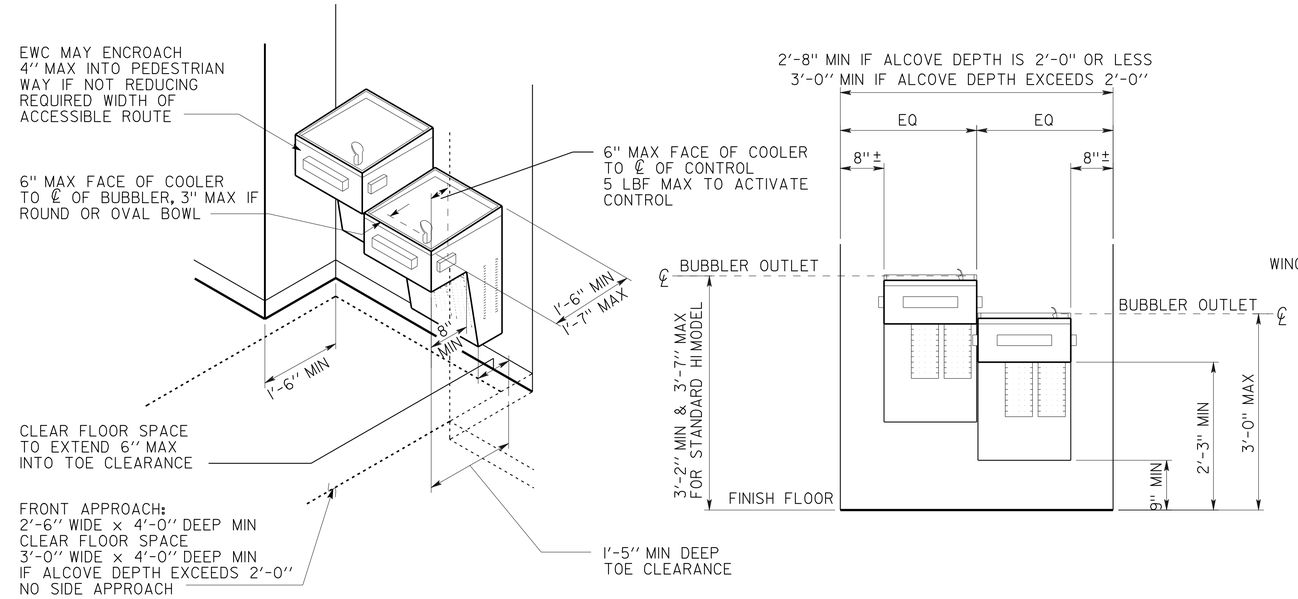

1 ALCOVE ELECTRIC WATER COOLER

FIXTURE TYPE MAY VARY

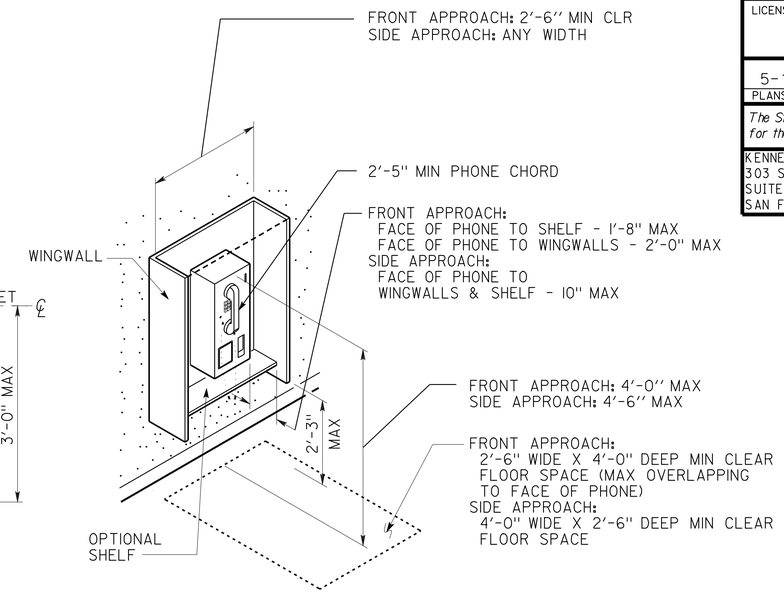

2 TELEPHONE

CALIFORNIA STATE FIRE MARSHAL APPROVED
Approval of this plan does not authorize or approve any omission or deviation from applicable regulations. Final approval is subject to field inspection. One set of approved plans shall be available on the project site at all times.
Reviewed by: Hans Henneberque 5/9/11
Hans Henneberque
Senior Deputy State Fire Marshal

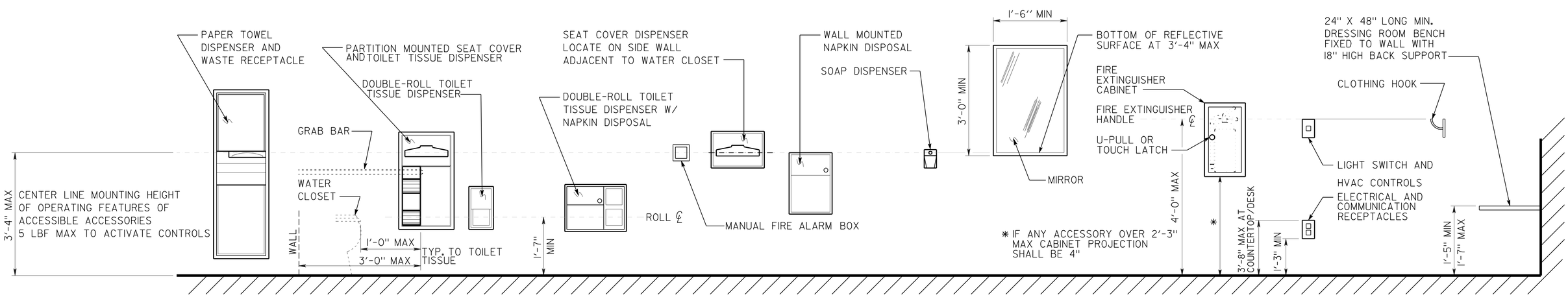

3 ACCESSORIES

IDENTIFICATION STAMP DIV. OF THE STATE ARCHITECT
02 1117 44
AC ABLS — SS —
DATE 5-9-11

NOTE: NO SCALE UNLESS OTHERWISE NOTED

NOTE: SPECIFIC DETAILS OR NOTES ON OTHER SHEETS SHALL PREVAIL OVER STANDARD DETAILS AND NOTES ON THIS SHEET

	BY	CHECKED
DESIGN	G.ROBLEY	W.RAMROTH
DETAILS	G.ROBLEY	D.WRIGHT
QUANTITIES	G.ROBLEY	W.RAMROTH

PREPARED FOR THE STATE OF CALIFORNIA DEPARTMENT OF TRANSPORTATION

DIVISION OF ENGINEERING SERVICES ARCHITECTURAL AND STRUCTURAL DESIGN

BRIDGE NO. 23W000IR
POST MILE 14.8

EASTBOUND CORDELIA CVEF

CVEF — ACCESSIBILITY STANDARD DETAILS

SHEET AO-8

40a535wba0-08.dgn
DS OSD Imperial Rev. 10/07 18-MAY-2011 08:41

ORIGINAL SCALE IN INCHES FOR REDUCED PLANS 0 1 2 3

CU 04264
EA 0A5351

DISREGARD PRINTS BEARING EARLIER REVISION DATES → 10/19/09 03/22/10 05/06/10 08/23/10 11/22/10 05/02/11

REVISION DATES (PRELIMINARY STAGE ONLY) SHEET OF

18-MAY-2011 08:41

40a535wba0-08.dgn

DIST.	COUNTY	ROUTE	POST MILES TOTAL PROJECT	SHEET NO.	TOTAL SHEETS
04	Sol	12,80	L1.8/L2.0, 13.3/15.7	510	740

LICENSED ARCHITECT — DATE 05/02/11

LICENSED ARCHITECT GREG A. ROBLEY No. C-30986 Exp. 02/05/13 STATE OF CALIFORNIA

5-16-11
PLANS APPROVAL DATE

The State of California or its officers or agents shall not be responsible for the accuracy or completeness of electronic copies of this plan sheet.

KENNEDY/JENKS CONSULTANTS
303 SECOND STREET
SUITE 300 SOUTH
SAN FRANCISCO, CA 94960

SOLANO TRANSPORTATION AUTHORITY
ONE HARBOR CENTER, SUITE 130
SUISUN CITY, CA 94585

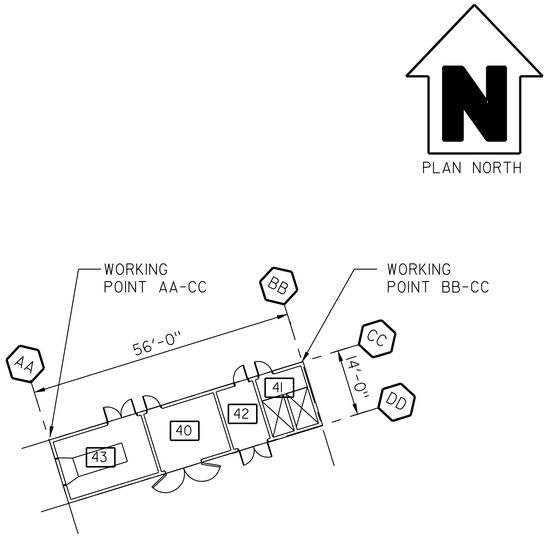

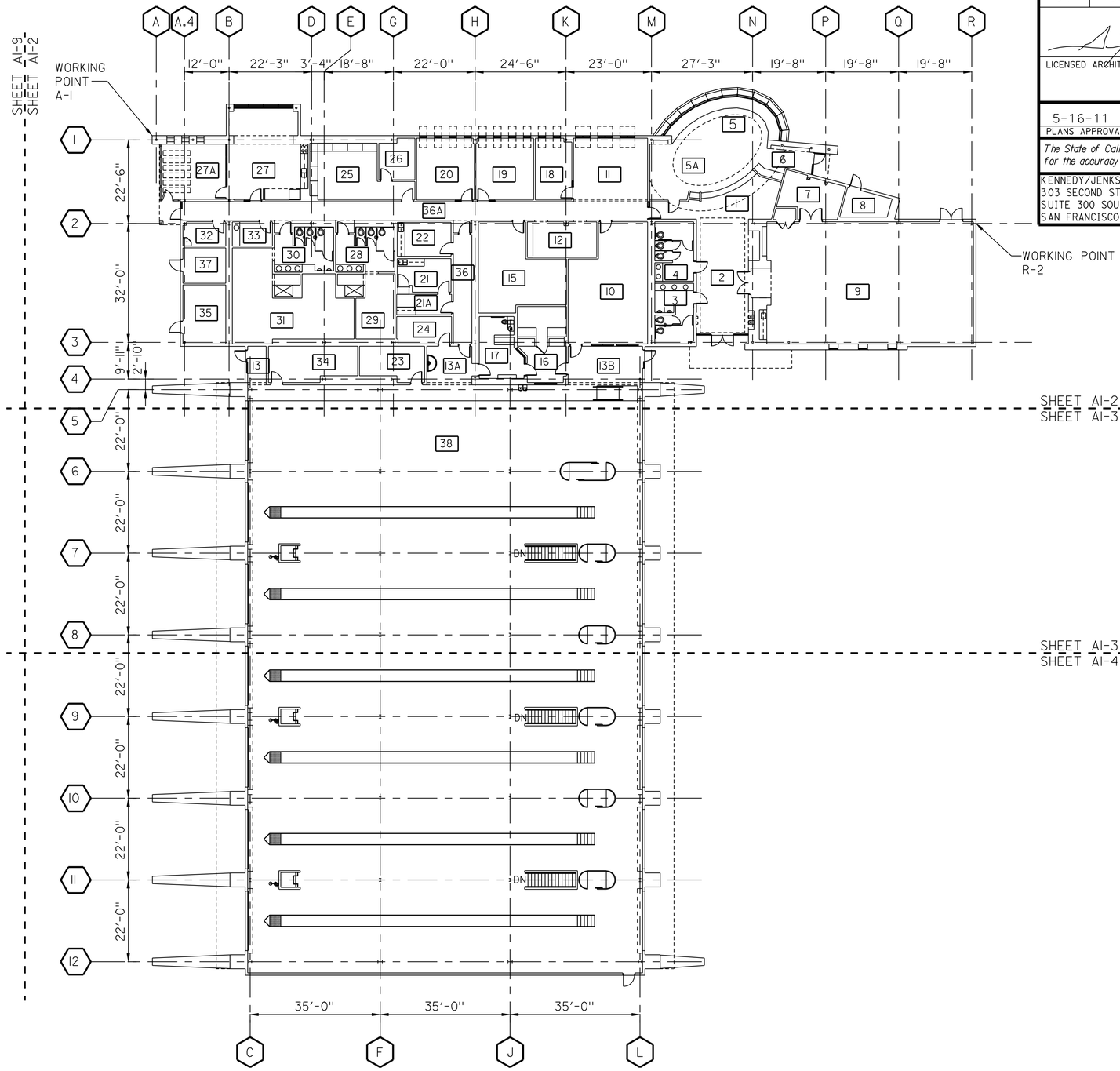

PLAN SHEET NOTES

1. INTERIOR PARTITONS ARE TYPE "A" U.O.N. SEE SHEET A6-5 AND A6-6 FOR PARTITION TYPES

2. DIMENSIONS ARE TO COLUMN CENTERLINE OR FACE OF STUD OR CMU, U.O.N.

3. SEE SHEETS A7-1 TO A7-4 FOR INTERIOR ELEVATIONS

GENERAL FLOOR PLAN

SCALE: 1/16" = 1'-0"

CALIFORNIA STATE FIRE MARSHAL APPROVED

Approval of this plan does not authorize or approve any omission or deviation from applicable regulations. Final approval is subject to field inspection. One set of approved plans shall be available on the project site at all times.

Reviewed by: 5/9/11
Hans Henneberque
Senior Deputy State Fire Marshal

IDENTIFICATION STAMP DIV. OF THE STATE ARCHITECT
02 1117 44
ACCESS ALS — SS —
DATE

	BY	CHECKED
DESIGN	G.ROBLEY	W.RAMROTH
DETAILS	G.ROBLEY	D.WRIGHT
QUANTITIES	G.ROBLEY	W.RAMROTH

PREPARED FOR THE STATE OF CALIFORNIA DEPARTMENT OF TRANSPORTATION

DIVISION OF ENGINEERING SERVICES
ARCHITECTURAL AND STRUCTURAL DESIGN

BRIDGE NO. 23W0001R
POST MILE 14.8

EASTBOUND CORDELIA CVEF

CVEF — GENERAL FLOOR PLAN

SHEET **A1-1**

40a535wba1-01.dgn
DS OSD Imperial Rev. 10/07 18-MAY-2011 08:41

ORIGINAL SCALE IN INCHES FOR REDUCED PLANS 0 1 2 3

CU 04264
EA 0A5351

DISREGARD PRINTS BEARING EARLIER REVISION DATES →

REVISION DATES (PRELIMINARY STAGE ONLY): 10/19/09 03/22/10 05/06/10 08/23/10 11/22/10 05/02/11

SHEET OF

18-MAY-2011 08:41
40a535wba1-01.dgn

DIST.	COUNTY	ROUTE	POST MILES TOTAL PROJECT	SHEET NO.	TOTAL SHEETS
04	Sol	12,80	L1.8/L2.0, 13.3/15.7	511	740

LICENSED ARCHITECT — DATE 05/02/11

LICENSED ARCHITECT GREG A. ROBLEY No. C-30986 Exp. 02/05/13 STATE OF CALIFORNIA

5-16-11
PLANS APPROVAL DATE

The State of California or its officers or agents shall not be responsible for the accuracy or completeness of electronic copies of this plan sheet.

KENNEDY/JENKS CONSULTANTS
303 SECOND STREET
SUITE 300 SOUTH
SAN FRANCISCO, CA 94960

SOLANO TRANSPORTATION AUTHORITY
ONE HARBOR CENTER, SUITE 130
SUISUN CITY, CA 94585

PLAN NORTH

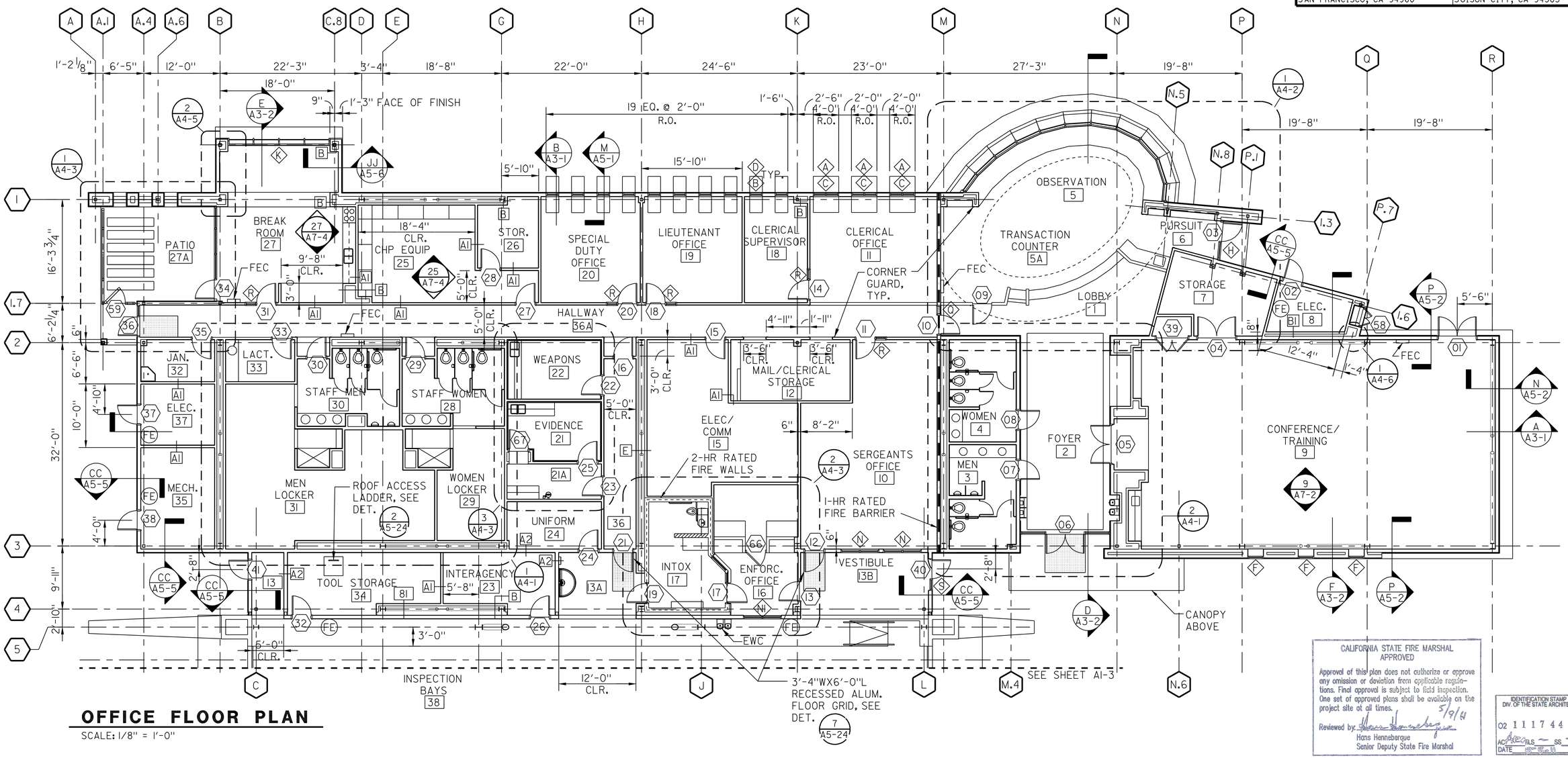

OFFICE FLOOR PLAN

SCALE: 1/8" = 1'-0"

CALIFORNIA STATE FIRE MARSHAL APPROVED

Approval of this plan does not authorize or approve any omission or deviation from applicable regulations. Final approval is subject to field inspection. One set of approved plans shall be available on the project site at all times.

Reviewed by: Hans Henneberque 5/9/11
Hans Henneberque
Senior Deputy State Fire Marshal

IDENTIFICATION STAMP DIV. OF THE STATE ARCHITECT
02 111744
AC ALS — SS —
DATE 5-9-11

	BY	CHECKED
DESIGN	G.ROBLEY	W.RAWROTH
DETAILS	G.ROBLEY	D.WRIGHT
QUANTITIES	G.ROBLEY	W.RAWROTH

PREPARED FOR THE STATE OF CALIFORNIA DEPARTMENT OF TRANSPORTATION

DIVISION OF ENGINEERING SERVICES ARCHITECTURAL AND STRUCTURAL DESIGN

CU 04264
EA 0A5351

BRIDGE NO. 23W0001R
POST MILE 14.8

EASTBOUND CORDELIA CVEF

CVEF — OFFICE FLOOR PLAN

SHEET **A1-2**

40a535wba1-02.dgn
DS OSD Imperial Rev. 10/07 18-MAY-2011 08:42

ORIGINAL SCALE IN INCHES FOR REDUCED PLANS 0 1 2 3

DISREGARD PRINTS BEARING EARLIER REVISION DATES → 10/19/09 03/22/10 05/06/10 08/23/10 11/22/10 05/02/11

REVISION DATES (PRELIMINARY STAGE ONLY) SHEET OF

18-MAY-2011 08:42

40a535wba1-02.dgn

DIST.	COUNTY	ROUTE	POST MILES TOTAL PROJECT	SHEET NO.	TOTAL SHEETS
04	Sol	12,80	L1.8/L2.0, 13.3/15.7	512	740

LICENSED ARCHITECT — DATE 05/02/11

LICENSED ARCHITECT GREG A. ROBLEY No. C-30986 Exp. 02/05/13 STATE OF CALIFORNIA

5-16-11
PLANS APPROVAL DATE

The State of California or its officers or agents shall not be responsible for the accuracy or completeness of electronic copies of this plan sheet.

KENNEDY/JENKS CONSULTANTS
303 SECOND STREET
SUITE 300 SOUTH
SAN FRANCISCO, CA 94960

SOLANO TRANSPORTATION AUTHORITY
ONE HARBOR CENTER, SUITE 130
SUISUN CITY, CA 94585

PLAN NORTH

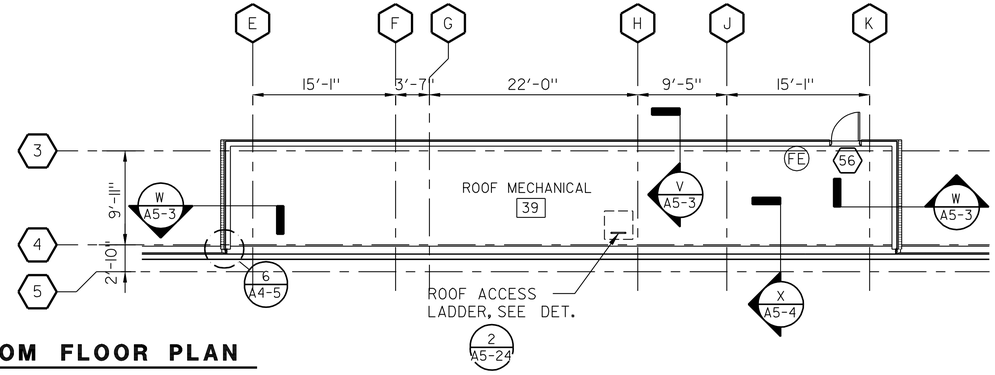

MECHANICAL ROOM FLOOR PLAN

SCALE: 1/8" = 1'-0"

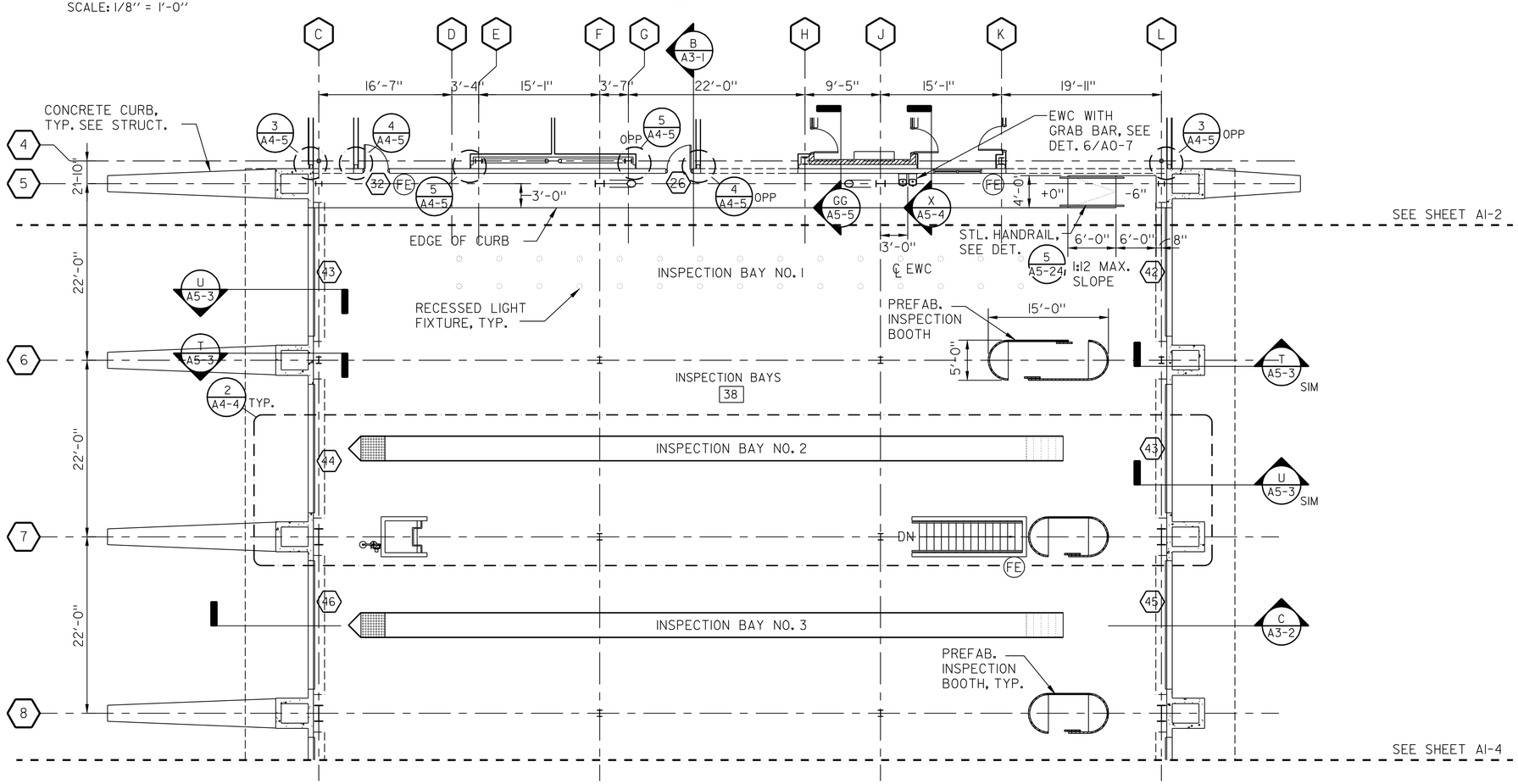

INSPECTION AREA FLOOR PLAN NO. 1

SCALE: 1/8" = 1'-0"

CALIFORNIA STATE FIRE MARSHAL APPROVED

Approval of this plan does not authorize or approve any omission or deviation from applicable regulations. Final approval is subject to field inspection. One set of approved plans shall be available on the project site at all times.

Reviewed by: 5/9/11
Hans Henneberque
Senior Deputy State Fire Marshal

IDENTIFICATION STAMP DIV. OF THE STATE ARCHITECT
02 111744
AC ALS — SS —
DATE

DESIGN	BY G.ROBLEY	CHECKED W.RAMROTH	
DETAILS	BY G.ROBLEY	CHECKED D.WRIGHT	
QUANTITIES	BY G.ROBLEY	CHECKED W.RAMROTH	

PREPARED FOR THE STATE OF CALIFORNIA DEPARTMENT OF TRANSPORTATION

DIVISION OF ENGINEERING SERVICES ARCHITECTURAL AND STRUCTURAL DESIGN

BRIDGE NO. 23W0001R
POST MILE 14.8

EASTBOUND CORDELIA CVEF

CVEF — INSPECTION AREA FLOOR PLAN NO. 1

SHEET A1-3

40a535wba1-03.dgn
DS OSD Imperial Rev. 10/07 18-MAY-2011 08:42

ORIGINAL SCALE IN INCHES FOR REDUCED PLANS 0 1 2 3

CU 04264
EA 0A5351

DISREGARD PRINTS BEARING EARLIER REVISION DATES → REVISION DATES (PRELIMINARY STAGE ONLY) 10/19/09 03/22/10 05/06/10 08/23/10 11/22/10 05/02/11 SHEET OF

18-MAY-2011 08:42

40a535wba1-03.dgn

DIST.	COUNTY	ROUTE	POST MILES TOTAL PROJECT	SHEET NO.	TOTAL SHEETS
04	Sol	12,80	L1.8/L2.0, 13.3/15.7	513	740

LICENSED ARCHITECT — DATE 05/02/11

LICENSED ARCHITECT GREG A. ROBLEY No. C-30986 Exp. 02/05/13 STATE OF CALIFORNIA

5-16-11
PLANS APPROVAL DATE

The State of California or its officers or agents shall not be responsible for the accuracy or completeness of electronic copies of this plan sheet.

KENNEDY/JENKS CONSULTANTS
303 SECOND STREET
SUITE 300 SOUTH
SAN FRANCISCO, CA 94960

SOLANO TRANSPORTATION AUTHORITY
ONE HARBOR CENTER, SUITE 130
SUISUN CITY, CA 94585

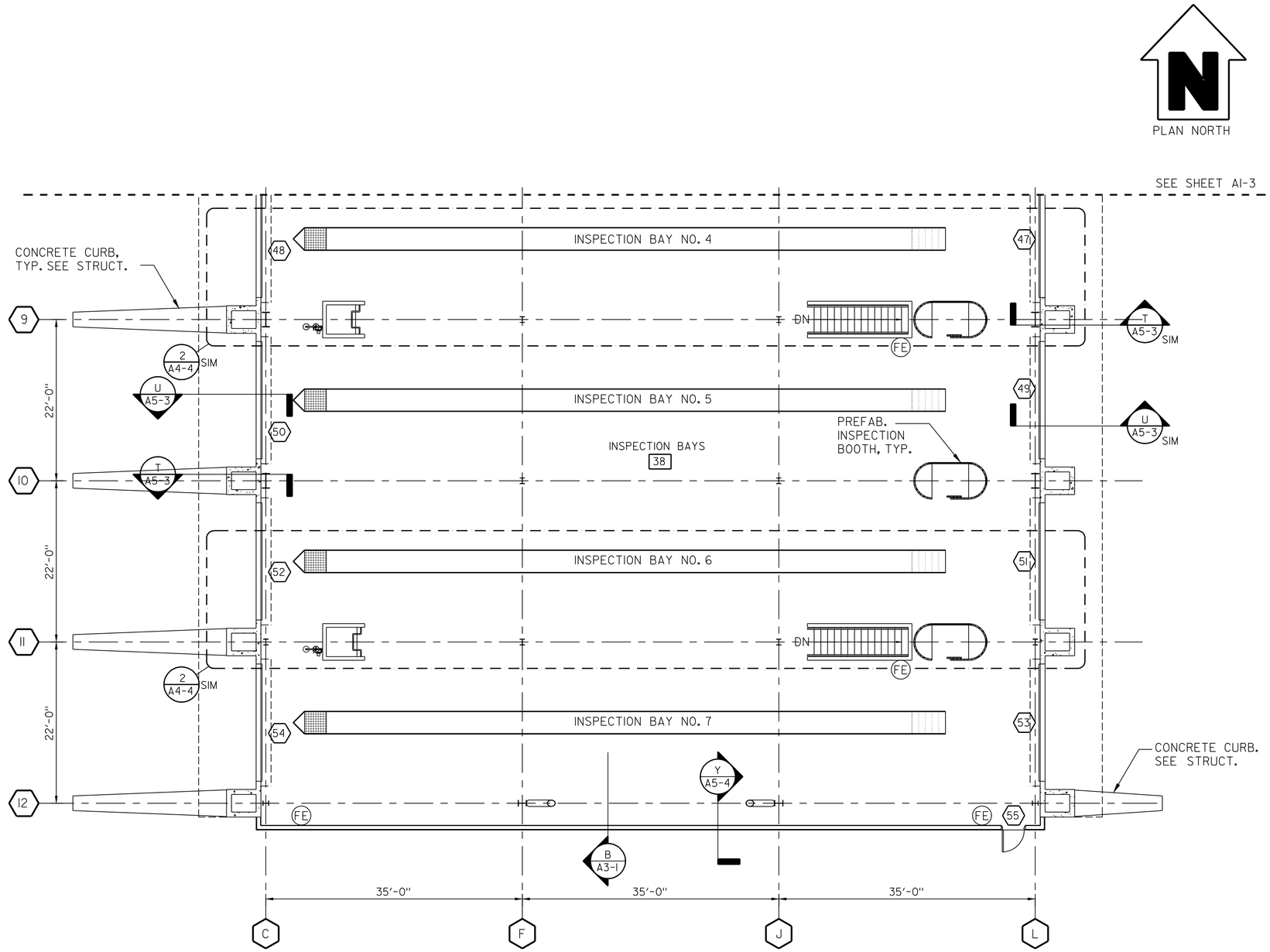

INSPECTION AREA FLOOR PLAN NO. 2

SCALE: 1/8" = 1'-0"

CALIFORNIA STATE FIRE MARSHAL APPROVED

Approval of this plan does not authorize or approve any omission or deviation from applicable regulations. Final approval is subject to field inspection. One set of approved plans shall be available on the project site at all times.

Reviewed by: Hans Henneberque 5/9/11
Hans Henneberque
Senior Deputy State Fire Marshal

IDENTIFICATION STAMP DIV. OF THE STATE ARCHITECT
02 111744
ACP REVIEWS — SS —
DATE 5-9-11

DESIGN	BY G.ROBLEY	CHECKED W.RAMROTH	
DETAILS	BY G.ROBLEY	CHECKED D.WRIGHT	
QUANTITIES	BY G.ROBLEY	CHECKED W.RAMROTH	

ORIGINAL SCALE IN INCHES FOR REDUCED PLANS 0 1 2 3

PREPARED FOR THE STATE OF CALIFORNIA DEPARTMENT OF TRANSPORTATION

DIVISION OF ENGINEERING SERVICES
ARCHITECTURAL AND STRUCTURAL DESIGN

CU 04264
EA 0A5351

BRIDGE NO. 23W000IR
POST MILE 14.8

EASTBOUND CORDELIA CVEF

CVEF — INSPECTION AREA FLOOR PLAN NO. 2

SHEET **A1-4**

DISREGARD PRINTS BEARING EARLIER REVISION DATES → REVISION DATES (PRELIMINARY STAGE ONLY) 10/19/09 03/22/10 05/06/10 08/23/10 11/22/10 05/02/11 SHEET OF

DS OSD Imperial Rev. 10/07 18-MAY-2011 08:42

40a535wba1-04.dgn

18-MAY-2011 08:42

DIST.	COUNTY	ROUTE	POST MILES TOTAL PROJECT	SHEET NO.	TOTAL SHEETS
04	Sol	12,80	L1.8/L2.0, 13.3/15.7	514	740

LICENSED ARCHITECT — DATE 05/02/11

LICENSED ARCHITECT GREG A. ROBLEY No. C-30986 Exp. 02/05/13 STATE OF CALIFORNIA

5-16-11
PLANS APPROVAL DATE

The State of California or its officers or agents shall not be responsible for the accuracy or completeness of electronic copies of this plan sheet.

KENNEDY/JENKS CONSULTANTS
303 SECOND STREET
SUITE 300 SOUTH
SAN FRANCISCO, CA 94960

SOLANO TRANSPORTATION AUTHORITY
ONE HARBOR CENTER, SUITE 130
SUISUN CITY, CA 94585

LEGEND

- 24"x 48" RECESSED FLUORESCENT LIGHT FIXTURE
- 12"x 48" RECESSED FLUORESCENT LIGHT FIXTURE
- SUSPENDED FLUORESCENT LIGHT FIXTURE
- WALL MOUNTED FLUORESCENT LIGHT FIXTURE
- RECESSED FLUORESCENT LIGHT FIXTURE
- SUSPENDED FLUORESCENT LIGHT FIXTURE
- SUSPENDED ACOUSTICAL TILE CEILING SYSTEM, C-1
- MTL. PLANK CEILING SYSTEM, C-4
- 5/8" GYPSUM BOARD CEILING, C-2 U.O.N.
- CAVITY ABOVE BUILT-IN MILLWORK
- HVAC AIR SUPPLY
- HVAC AIR RETURN

NOTES

1. LOCATE FIRE SPRINKLER HEADS IN CENTER OF ACOUSTIC TILES AND METAL PLANKS.

PLAN NORTH

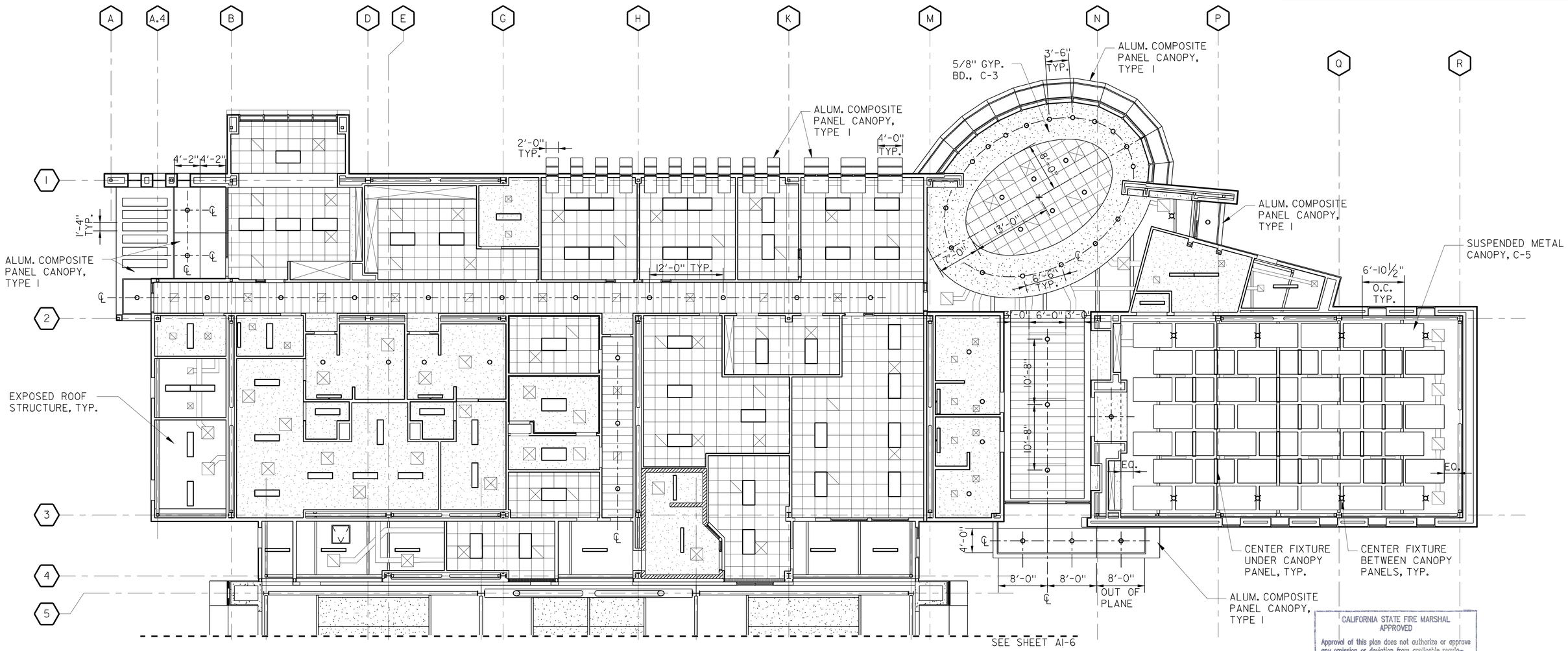

OFFICE REFLECTED CEILING PLAN

SCALE: 1/8" = 1'-0"

CALIFORNIA STATE FIRE MARSHAL APPROVED

Approval of this plan does not authorize or approve any omission or deviation from applicable regulations. Final approval is subject to field inspection. One set of approved plans shall be available on the project site at all times.

Reviewed by: 5/9/11
Hans Henneberque
Senior Deputy State Fire Marshal

IDENTIFICATION STAMP DIV. OF THE STATE ARCHITECT
02 1117 44
AC ARCH ELS — SS —
DATE 5-5-11

	BY	CHECKED
DESIGN	G.ROBLEY	W.RAMROTH
DETAILS	G.ROBLEY	D.WRIGHT
QUANTITIES	G.ROBLEY	W.RAMROTH

ORIGINAL SCALE IN INCHES FOR REDUCED PLANS 0 1 2 3

PREPARED FOR THE STATE OF CALIFORNIA DEPARTMENT OF TRANSPORTATION

DIVISION OF ENGINEERING SERVICES
ARCHITECTURAL AND STRUCTURAL DESIGN

CU 04264
EA 0A5351

BRIDGE NO. 23W000IR
POST MILE 14.8

EASTBOUND CORDELIA CVEF

CVEF — OFFICE REFLECTED CEILING PLAN

SHEET **A1-5**

DISREGARD PRINTS BEARING EARLIER REVISION DATES → 10/19/09 03/22/10 05/06/10 08/23/10 11/22/10 05/02/11

REVISION DATES (PRELIMINARY STAGE ONLY) SHEET OF

DS OSD Imperial Rev. 10/07 18-MAY-2011 08:42

40a535wba1-05.dgn

18-MAY-2011 08:42

DIST.	COUNTY	ROUTE	POST MILES TOTAL PROJECT	SHEET NO.	TOTAL SHEETS
04	Sol	12,80	L1.8/L2.0, 13.3/15.7	515	740

LICENSED ARCHITECT — DATE 11/22/10

LICENSED ARCHITECT GREG A. ROBLEY No. C-30986 Exp. 02/05/13 STATE OF CALIFORNIA

5-16-11
PLANS APPROVAL DATE

The State of California or its officers or agents shall not be responsible for the accuracy or completeness of electronic copies of this plan sheet.

KENNEDY/JENKS CONSULTANTS
303 SECOND STREET
SUITE 300 SOUTH
SAN FRANCISCO, CA 94960

SOLANO TRANSPORTATION AUTHORITY
ONE HARBOR CENTER, SUITE 130
SUISUN CITY, CA 94585

LEGEND

- SUSPENDED FLUORESCENT LIGHT FIXTURE
- RECESSED FLUORESCENT LIGHT FIXTURE
- SUSPENDED FLUORESCENT LIGHT FIXTURE
- GYPSUM BOARD CEILING

PLAN NORTH

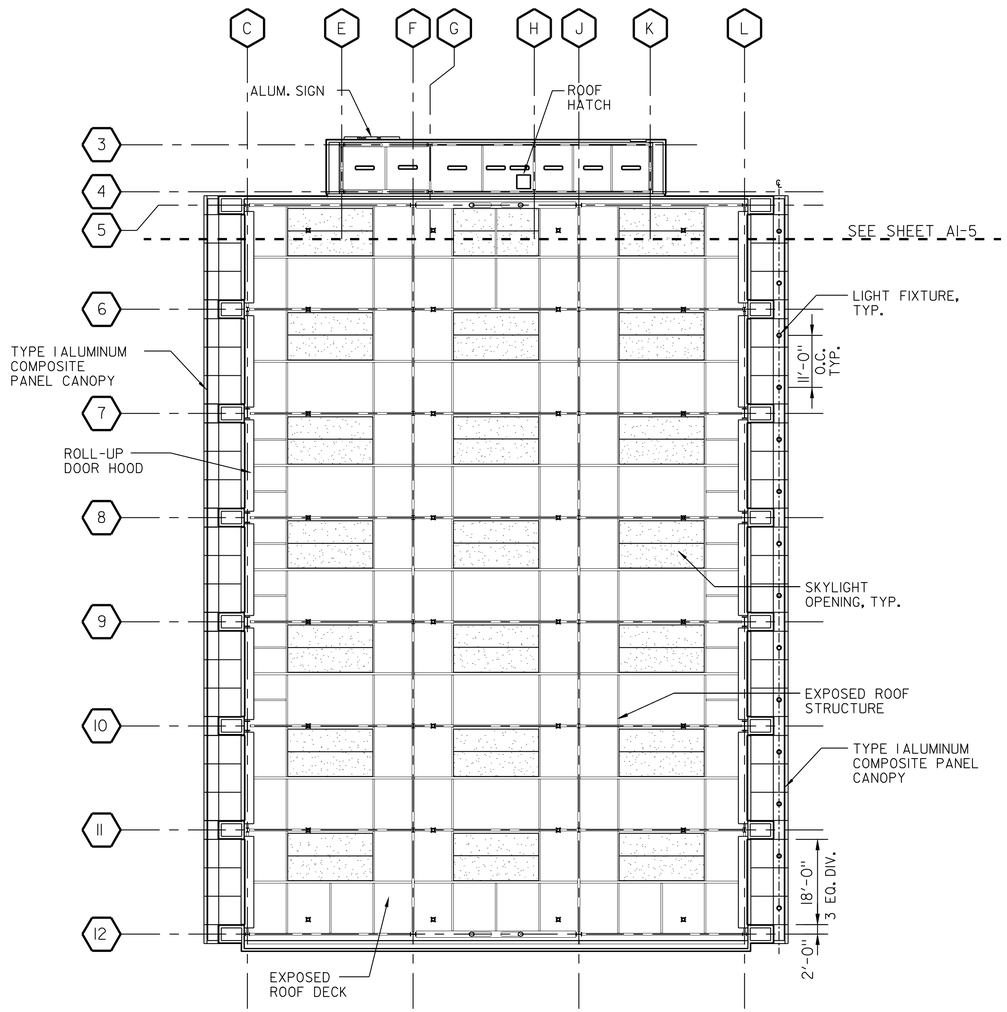

INSPECTION AREA REFLECTED CEILING PLAN

SCALE: 1/16" = 1'-0"

CALIFORNIA STATE FIRE MARSHAL
APPROVED

Approval of this plan does not authorize or approve any omission or deviation from applicable regulations. Final approval is subject to field inspection. One set of approved plans shall be available on the project site at all times.

Reviewed by: 5/9/11
Hans Hennebergue
Senior Deputy State Fire Marshal

IDENTIFICATION STAMP
DIV. OF THE STATE ARCHITECT
02 111744
AC DATE

DESIGN	BY G.ROBLEY	CHECKED W.RAMROTH	
DETAILS	BY G.ROBLEY	CHECKED D.WRIGHT	
QUANTITIES	BY G.ROBLEY	CHECKED W.RAMROTH	

ORIGINAL SCALE IN INCHES FOR REDUCED PLANS 0 1 2 3

PREPARED FOR THE STATE OF CALIFORNIA DEPARTMENT OF TRANSPORTATION

DIVISION OF ENGINEERING SERVICES
ARCHITECTURAL AND STRUCTURAL DESIGN

CU 04264
EA 0A5351

BRIDGE NO. 23W0001R
POST MILE 14.8

EASTBOUND CORDELIA CVEF

CVEF — INSPECTION AREA REFLECTED CEILING PLAN

SHEET **A1-6**

DISREGARD PRINTS BEARING EARLIER REVISION DATES →
REVISION DATES (PRELIMINARY STAGE ONLY) 10/19/09 03/22/10 05/06/10 08/23/10 11/22/10 05/02/11
SHEET OF

DS OSD Imperial Rev. 10/07 9/17/10 10:04:12 AM

4/20/10 10:04:12 AM

DIST.	COUNTY	ROUTE	POST MILES TOTAL PROJECT	SHEET NO.	TOTAL SHEETS
04	Sol	12,80	L1.8/L2.0, 13.3/15.7	516	740

LICENSED ARCHITECT — DATE 05/02/11

LICENSED ARCHITECT GREG A. ROBLEY No. C-30986 Exp. 02/05/13 STATE OF CALIFORNIA

5-16-11
PLANS APPROVAL DATE

The State of California or its officers or agents shall not be responsible for the accuracy or completeness of electronic copies of this plan sheet.

KENNEDY/JENKS CONSULTANTS
303 SECOND STREET
SUITE 300 SOUTH
SAN FRANCISCO, CA 94960

SOLANO TRANSPORTATION AUTHORITY
ONE HARBOR CENTER, SUITE 130
SUISUN CITY, CA 94585

NOTES:

1. SLOPE ROOFING 1/4"/FT MIN.

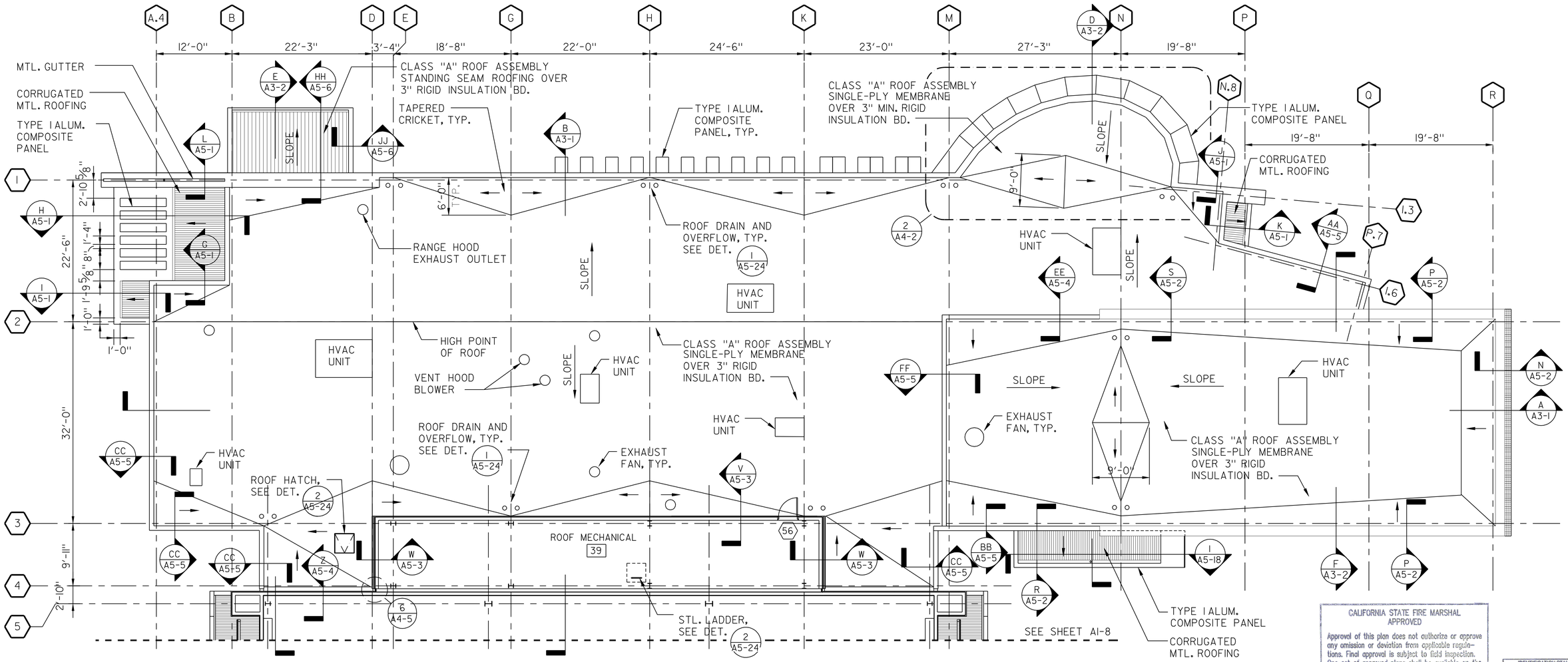

OFFICE ROOF PLAN

SCALE: 1/8" = 1'-0"

CALIFORNIA STATE FIRE MARSHAL APPROVED

Approval of this plan does not authorize or approve any omission or deviation from applicable regulations. Final approval is subject to field inspection. One set of approved plans shall be available on the project site at all times.

Reviewed by: Hans Hennebergue 5/9/11
Hans Hennebergue
Senior Deputy State Fire Marshal

IDENTIFICATION STAMP DIV. OF THE STATE ARCHITECT
02 1 1 1 7 4 4
AC ALS — SS —
DATE 5-9-11

	BY	CHECKED
DESIGN	G.ROBLEY	W.RAMROTH
DETAILS	G.ROBLEY	D.WRIGHT
QUANTITIES	G.ROBLEY	W.RAMROTH

PREPARED FOR THE STATE OF CALIFORNIA DEPARTMENT OF TRANSPORTATION

DIVISION OF ENGINEERING SERVICES ARCHITECTURAL AND STRUCTURAL DESIGN

BRIDGE NO. 23W000IR
POST MILE 14.8

EASTBOUND CORDELIA CVEF

CVEF — OFFICE ROOF PLAN

SHEET A1-7

40a535wba1-07.dgn
DS OSD ImperialRev.10/07 18-MAY-2011 08:43

ORIGINAL SCALE IN INCHES FOR REDUCED PLANS 0 1 2 3

CU 04264
EA 0A5351

DISREGARD PRINTS BEARING EARLIER REVISION DATES → 10/19/09 03/22/10 05/06/10 08/23/10 11/22/10 05/02/11

REVISION DATES (PRELIMINARY STAGE ONLY) SHEET OF

18-MAY-2011 08:43

40a535wba1-07.dgn

DIST.	COUNTY	ROUTE	POST MILES TOTAL PROJECT	SHEET NO.	TOTAL SHEETS
04	Sol	12,80	L1.8/L2.0, 13.3/15.7	517	740

LICENSED ARCHITECT — DATE 05/02/11

LICENSED ARCHITECT GREG A. ROBLEY No. C-30986 Exp. 02/05/13 STATE OF CALIFORNIA

5-16-11
PLANS APPROVAL DATE

The State of California or its officers or agents shall not be responsible for the accuracy or completeness of electronic copies of this plan sheet.

KENNEDY/JENKS CONSULTANTS
303 SECOND STREET
SUITE 300 SOUTH
SAN FRANCISCO, CA 94960

SOLANO TRANSPORTATION AUTHORITY
ONE HARBOR CENTER, SUITE 130
SUISUN CITY, CA 94585

NOTES:

1. SLOPE ROOFING 1/4"/FT MIN.

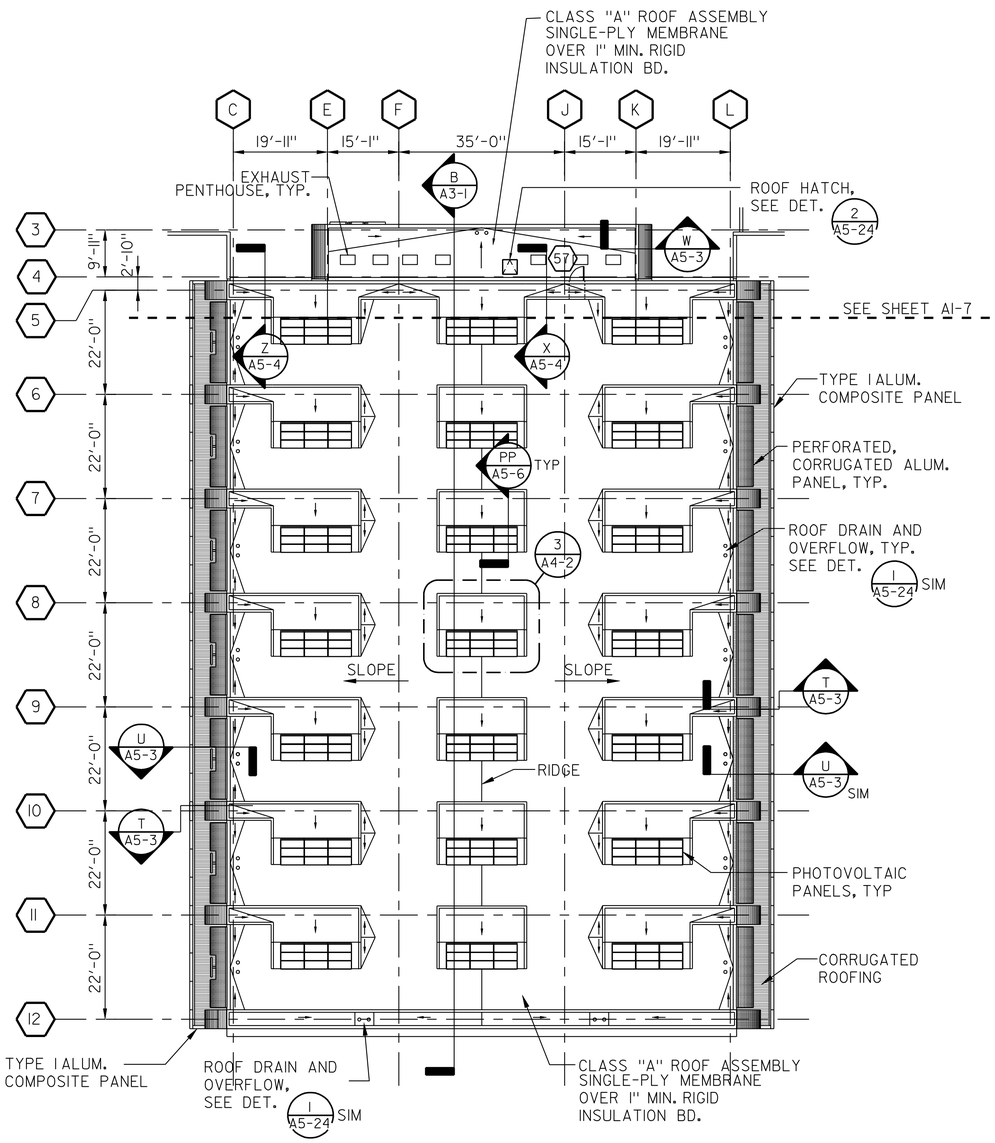

INSPECTION AREA ROOF PLAN

SCALE: 1/16" = 1'-0"

CALIFORNIA STATE FIRE MARSHAL APPROVED

Approval of this plan does not authorize or approve any omission or deviation from applicable regulations. Final approval is subject to field inspection. One set of approved plans shall be available on the project site at all times.

Reviewed by: Hans Hennebarque 5/9/11
Hans Hennebarque
Senior Deputy State Fire Marshal

IDENTIFICATION STAMP DIV. OF THE STATE ARCHITECT
02 1 1 1 7 4 4
AC ALS — SS —
DATE 5-9-11

	BY	CHECKED
DESIGN	G.ROBLEY	W.RAMROTH
DETAILS	G.ROBLEY	D.WRIGHT
QUANTITIES	G.ROBLEY	W.RAMROTH

PREPARED FOR THE STATE OF CALIFORNIA DEPARTMENT OF TRANSPORTATION

DIVISION OF ENGINEERING SERVICES ARCHITECTURAL AND STRUCTURAL DESIGN

BRIDGE NO. 23W000IR
POST MILE 14.8

EASTBOUND CORDELIA CVEF

CVEF — INSPECTION AREA ROOF PLAN

SHEET **A1-8**

40a535wba1-08.dgn
DS OSD imperialRev.10/07 18-MAY-2011 08:43

ORIGINAL SCALE IN INCHES FOR REDUCED PLANS 0 1 2 3

CU 04264
EA 0A5351

DISREGARD PRINTS BEARING EARLIER REVISION DATES → 10/19/09 03/22/10 05/06/10 08/23/10 11/22/10 05/02/11

REVISION DATES (PRELIMINARY STAGE ONLY) SHEET OF

18-MAY-2011 08:43
40a535wba1-08.dgn

DIST.	COUNTY	ROUTE	POST MILES TOTAL PROJECT	SHEET NO.	TOTAL SHEETS
04	Sol	12,80	L1.8/L2.0, 13.3/15.7	518	740

LICENSED ARCHITECT — DATE 05/02/11

LICENSED ARCHITECT GREG A. ROBLEY No. C-30986 Exp. 02/05/13 STATE OF CALIFORNIA

5-16-11
PLANS APPROVAL DATE

The State of California or its officers or agents shall not be responsible for the accuracy or completeness of electronic copies of this plan sheet.

KENNEDY/JENKS CONSULTANTS
303 SECOND STREET
SUITE 300 SOUTH
SAN FRANCISCO, CA 94960

SOLANO TRANSPORTATION AUTHORITY
ONE HARBOR CENTER, SUITE 130
SUISUN CITY, CA 94585

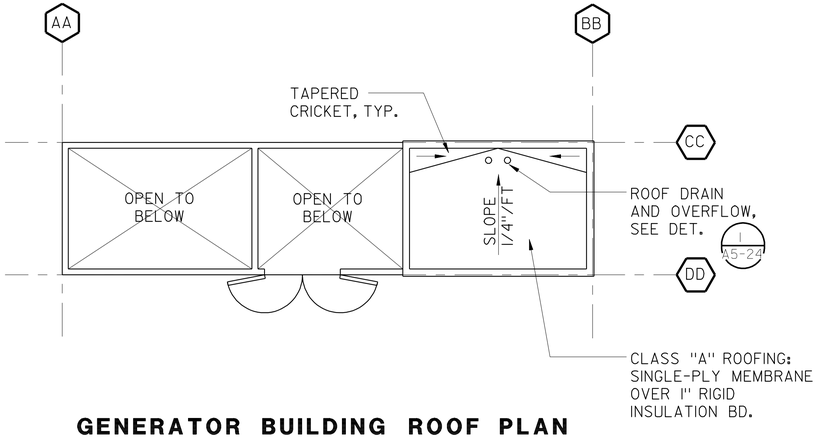

GENERATOR BUILDING ROOF PLAN

SCALE: 1/8" = 1'-0"

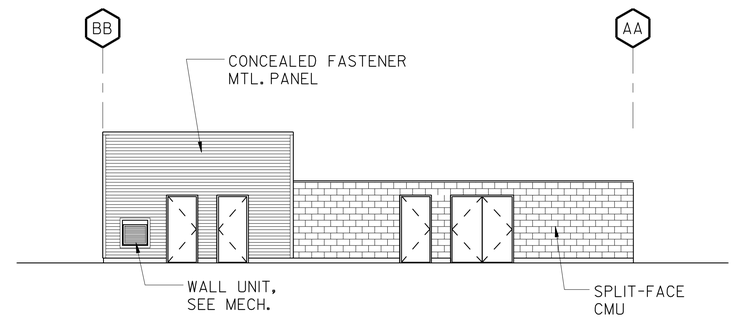

NORTH ELEVATION

SCALE: 1/8" = 1'-0"

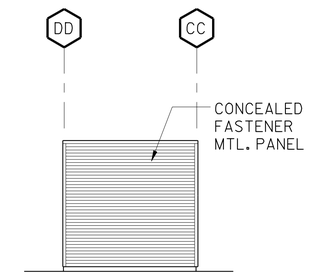

EAST ELEVATION

SCALE: 1/8" = 1'-0"

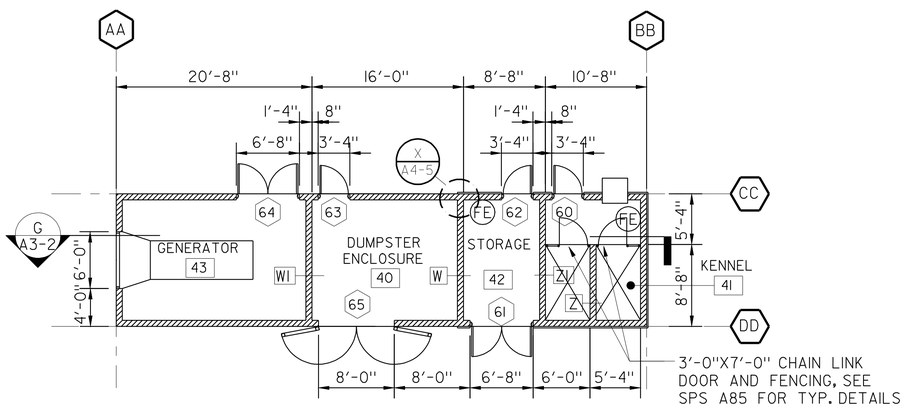

GENERATOR BUILDING FLOOR PLAN

SCALE: 1/8" = 1'-0"

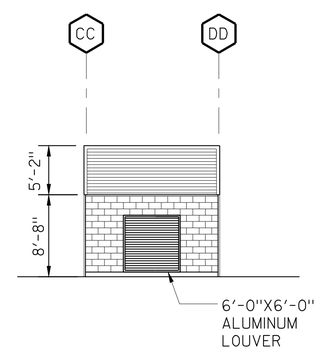

WEST ELEVATION

SCALE: 1/8" = 1'-0"

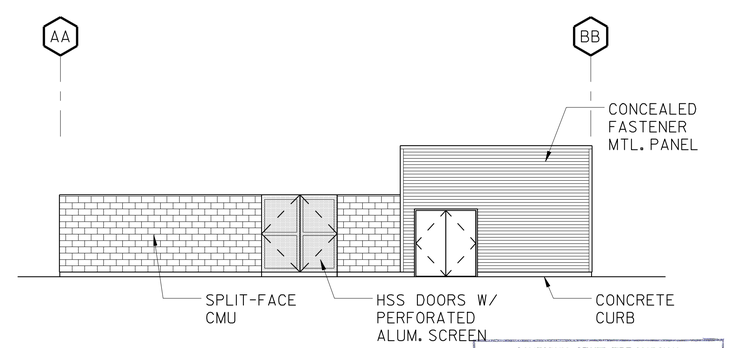

SOUTH ELEVATION

SCALE: 1/8" = 1'-0"

CALIFORNIA STATE FIRE MARSHAL APPROVED

Approval of this plan does not authorize or approve any omission or deviation from applicable regulations. Final approval is subject to field inspection. One set of approved plans shall be available on the project site at all times.

Reviewed by: 5/9/11
Hans Hennebergue
Senior Deputy State Fire Marshal

IDENTIFICATION STAMP DIV. OF THE STATE ARCHITECT
02 111744
ACCESS — SS —
DATE

DESIGN	BY G.ROBLEY	CHECKED W.RAMROTH	
DETAILS	BY G.ROBLEY	CHECKED D.WRIGHT	
QUANTITIES	BY G.ROBLEY	CHECKED W.RAMROTH	

PREPARED FOR THE STATE OF CALIFORNIA DEPARTMENT OF TRANSPORTATION

DIVISION OF ENGINEERING SERVICES
ARCHITECTURAL AND STRUCTURAL DESIGN

BRIDGE NO. 23W000IR
POST MILE 14.8

EASTBOUND CORDELIA CVEF

CVEF — GENERATOR BUILDING PLANS & EXTERIOR ELEVATIONS

SHEET A1-9

40a535wba1-09.dgn
DS OSD Imperial Rev. 10/07 18-MAY-2011 08:43

ORIGINAL SCALE IN INCHES FOR REDUCED PLANS 0 1 2 3

CU 04264
EA 0A5351

DISREGARD PRINTS BEARING EARLIER REVISION DATES → 10/19/09 03/22/10 05/06/10 08/23/10 11/22/10 05/02/11

REVISION DATES (PRELIMINARY STAGE ONLY) SHEET OF

18-MAY-2011 08:43

40a535wba1-09.dgn

DIST.	COUNTY	ROUTE	POST MILES TOTAL PROJECT	SHEET NO.	TOTAL SHEETS
04	Sol	12,80	L1.8/L2.0, 13.3/15.7	519	740

LICENSED ARCHITECT — 05/02/11 DATE

LICENSED ARCHITECT GREG A. ROBLEY No. C-30986 Exp. 02/05/13 STATE OF CALIFORNIA

5-16-11
PLANS APPROVAL DATE

The State of California or its officers or agents shall not be responsible for the accuracy or completeness of electronic copies of this plan sheet.

KENNEDY/JENKS CONSULTANTS
303 SECOND STREET
SUITE 300 SOUTH
SAN FRANCISCO, CA 94960

SOLANO TRANSPORTATION AUTHORITY
ONE HARBOR CENTER, SUITE 130
SUISUN CITY, CA 94585

NOTES

1. PROVIDE FULL SIZE MOCK-UP OR SAMPLE INSTALLATION OF DESIGNATED AREAS FOR REVIEW BY THE OWNER. INCLUDE ALL STRUCTURE, SUBSTRATE, FASTENERS, AND ADJACENT FINISH MATERIALS REQUIRED FOR A COMPLETE INSTALLATION. MOCK-UP WILL SERVE AS A BASIS FOR ACCEPTABLE DETAILING AND CONSTRUCTION TOLERENCES.

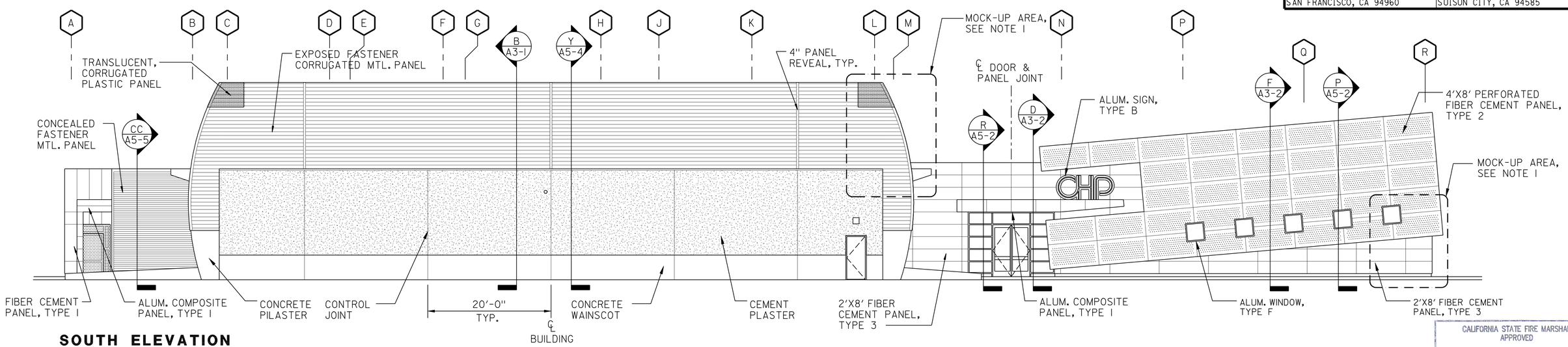

SOUTH ELEVATION

SCALE: 1/8" = 1'-0"

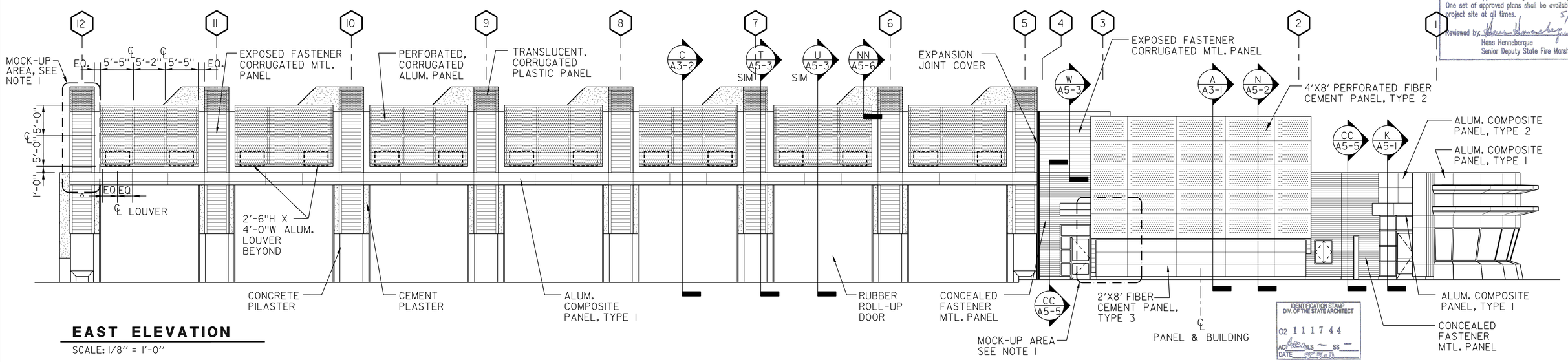

EAST ELEVATION

SCALE: 1/8" = 1'-0"

CALIFORNIA STATE FIRE MARSHAL APPROVED

Approval of this plan does not authorize or approve any omission or deviation from applicable regulations. Final approval is subject to field inspection. One set of approved plans shall be available on the project site at all times.

Reviewed by: Hans Henneberque 5/9/11
Hans Henneberque
Senior Deputy State Fire Marshal

IDENTIFICATION STAMP DIV. OF THE STATE ARCHITECT
02 1117 44
ACCEPTS — SS —
DATE 5-5-11

	BY	CHECKED
DESIGN	G.ROBLEY	W.RAMROTH
DETAILS	G.ROBLEY	D.WRIGHT
QUANTITIES	G.ROBLEY	W.RAMROTH

PREPARED FOR THE STATE OF CALIFORNIA DEPARTMENT OF TRANSPORTATION

DIVISION OF ENGINEERING SERVICES
ARCHITECTURAL AND STRUCTURAL DESIGN

CU 04264
EA 0A5351

BRIDGE NO. 23W0001R
POST MILE 14.8

EASTBOUND CORDELIA CVEF

CVEF — EXTERIOR ELEVATIONS NO. 1

SHEET A2-1

ORIGINAL SCALE IN INCHES FOR REDUCED PLANS 0 1 2 3

DISREGARD PRINTS BEARING EARLIER REVISION DATES → 10/19/09 03/22/10 05/06/10 08/23/10 11/22/10 05/02/11

REVISION DATES (PRELIMINARY STAGE ONLY) | SHEET | OF

DS OSD Imperial Rev. 10/07 18-MAY-2011 09:29

18-MAY-2011 09:29

40a535wba2-01.dgn

DIST.	COUNTY	ROUTE	POST MILES TOTAL PROJECT	SHEET NO.	TOTAL SHEETS
04	Sol	12,80	L1.8/L2.0, 13.3/15.7	520	740

LICENSED ARCHITECT — DATE 05/02/11

LICENSED ARCHITECT GREG A. ROBLEY No. C-30986 Exp. 02/05/13 STATE OF CALIFORNIA

5-16-11
PLANS APPROVAL DATE

The State of California or its officers or agents shall not be responsible for the accuracy or completeness of electronic copies of this plan sheet.

KENNEDY/JENKS CONSULTANTS
303 SECOND STREET
SUITE 300 SOUTH
SAN FRANCISCO, CA 94960

SOLANO TRANSPORTATION AUTHORITY
ONE HARBOR CENTER, SUITE 130
SUISUN CITY, CA 94585

CALIFORNIA STATE FIRE MARSHAL APPROVED

Approval of this plan does not authorize or approve any omission or deviation from applicable regulations. Final approval is subject to field inspection. One set of approved plans shall be available on the project site at all times.

Reviewed by: 5/9/11
Hans Henneberque
Senior Deputy State Fire Marshal

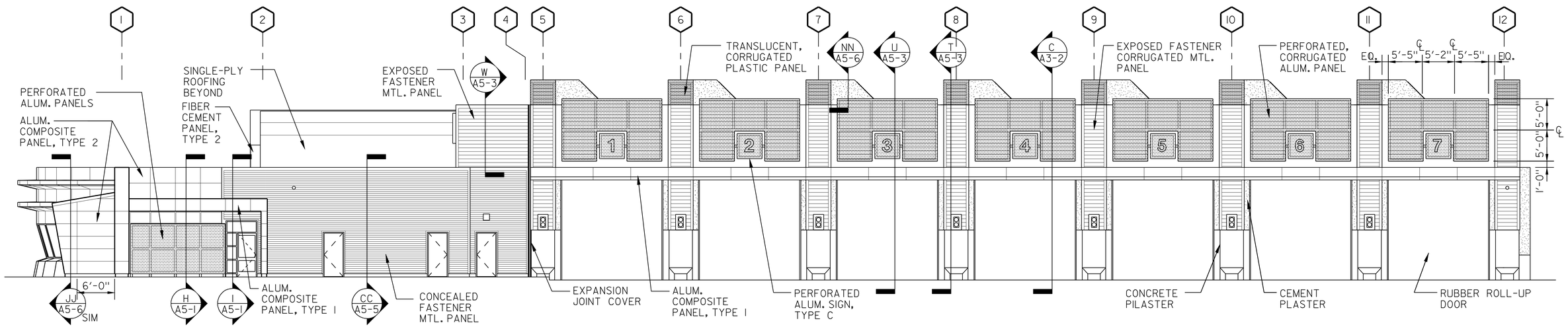

WEST ELEVATION

SCALE: 1/8" = 1'-0"

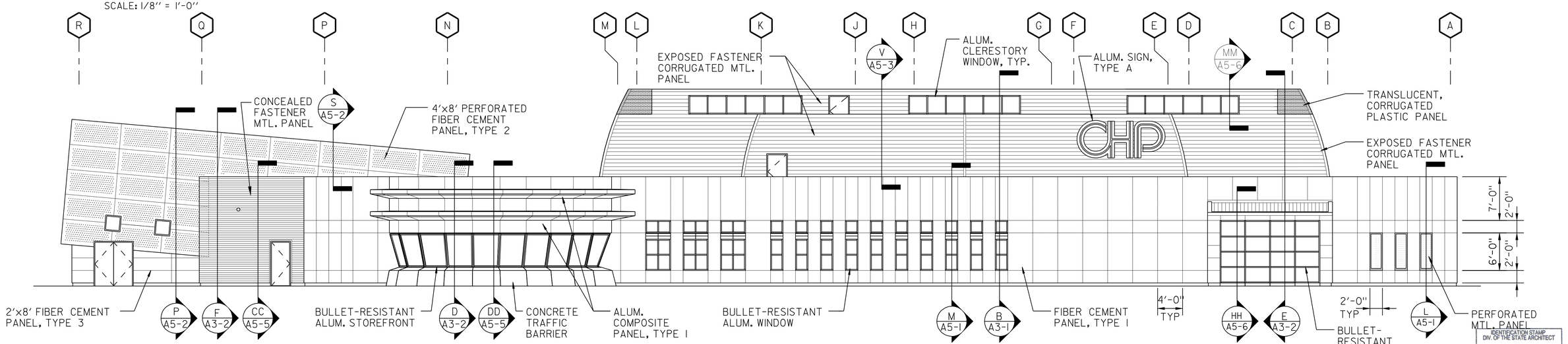

NORTH ELEVATION

SCALE: 1/8" = 1'-0"

IDENTIFICATION STAMP DIV. OF THE STATE ARCHITECT
02 1117 44
ACCESS CLS ~ SS ~
DATE

DESIGN	BY G.ROBLEY	CHECKED W.RAMROTH	
DETAILS	BY G.ROBLEY	CHECKED D.WRIGHT	
QUANTITIES	BY G.ROBLEY	CHECKED W.RAMROTH	

18-MAY-2011

PREPARED FOR THE STATE OF CALIFORNIA DEPARTMENT OF TRANSPORTATION

DIVISION OF ENGINEERING SERVICES ARCHITECTURAL AND STRUCTURAL DESIGN

BRIDGE NO. 23W000IR
POST MILE 14.8

EASTBOUND CORDELIA CVEF

CVEF — EXTERIOR ELEVATIONS NO. 2

SHEET **A2-2**

40a535wba2-02.dgn
DS OSD Imperial Rev. 10/07 18-MAY-2011 08:44

ORIGINAL SCALE IN INCHES FOR REDUCED PLANS 0 1 2 3

CU 04264
EA 0A5351

DISREGARD PRINTS BEARING EARLIER REVISION DATES →

REVISION DATES (PRELIMINARY STAGE ONLY) 10/19/09 03/22/10 05/06/10 08/23/10 11/22/10 05/02/11 — SHEET — OF

18-MAY-2011 08:44
40a535wba2-02.dgn

DIST.	COUNTY	ROUTE	POST MILES TOTAL PROJECT	SHEET NO.	TOTAL SHEETS
04	Sol	12,80	L1.8/L2.0, 13.3/15.7	521	740

LICENSED ARCHITECT — DATE 05/02/11

LICENSED ARCHITECT GREG A. ROBLEY No. C-30986 Exp. 02/05/13 STATE OF CALIFORNIA

5-16-11
PLANS APPROVAL DATE

The State of California or its officers or agents shall not be responsible for the accuracy or completeness of electronic copies of this plan sheet.

KENNEDY/JENKS CONSULTANTS
303 SECOND STREET
SUITE 300 SOUTH
SAN FRANCISCO, CA 94960

SOLANO TRANSPORTATION AUTHORITY
ONE HARBOR CENTER, SUITE 130
SUISUN CITY, CA 94585

CALIFORNIA STATE FIRE MARSHAL
APPROVED

Approval of this plan does not authorize or approve any omission or deviation from applicable regulations. Final approval is subject to field inspection. One set of approved plans shall be available on the project site at all times.

Reviewed by: Hans Henneberque 5/9/11
Hans Henneberque
Senior Deputy State Fire Marshal

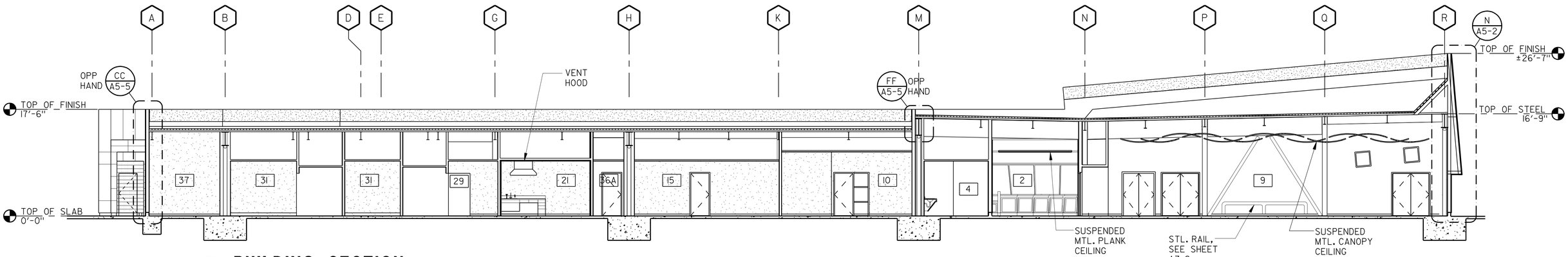

A BUILDING SECTION

SCALE: 1/8"=1'-0"

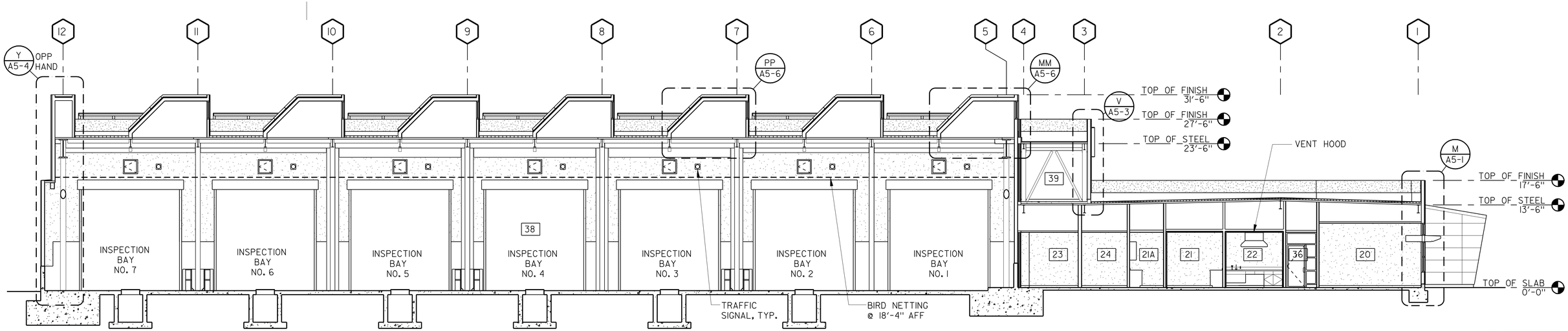

B BUILDING SECTION

SCALE: 1/8"=1'-0"

IDENTIFICATION STAMP DIV. OF THE STATE ARCHITECT
02 111744
ACCEPTALS — SS —
DATE

DESIGN	BY G.ROBLEY	CHECKED W.RAMROTH	
DETAILS	BY G.ROBLEY	CHECKED D.WRIGHT	
QUANTITIES	BY G.ROBLEY	CHECKED W.RAMROTH	

PREPARED FOR THE STATE OF CALIFORNIA DEPARTMENT OF TRANSPORTATION

DIVISION OF ENGINEERING SERVICES
ARCHITECTURAL AND STRUCTURAL DESIGN

BRIDGE NO. 23W000IR
POST MILE 14.8

EASTBOUND CORDELIA CVEF

CVEF — BUILDING SECTIONS NO. 1

SHEET **A3-1**

40a535wba3-01.dgn
DS OSD Imperial Rev. 10/07 18-MAY-2011 08:44

ORIGINAL SCALE IN INCHES FOR REDUCED PLANS 0 1 2 3

CU 04264
EA 0A5351

DISREGARD PRINTS BEARING EARLIER REVISION DATES → 10/19/09 03/22/10 05/06/10 08/23/10 11/22/10 05/02/11

REVISION DATES (PRELIMINARY STAGE ONLY) SHEET OF

18-MAY-2011 08:44
40a535wba3-01.dgn

DIST.	COUNTY	ROUTE	POST MILES TOTAL PROJECT	SHEET NO.	TOTAL SHEETS
04	Sol	12,80	L1.8/L2.0, 13.3/15.7	522	740

LICENSED ARCHITECT — DATE 05/02/11

LICENSED ARCHITECT GREG A. ROBLEY No. C-30986 Exp. 02/05/13 STATE OF CALIFORNIA

5-16-11
PLANS APPROVAL DATE

The State of California or its officers or agents shall not be responsible for the accuracy or completeness of electronic copies of this plan sheet.

KENNEDY/JENKS CONSULTANTS
303 SECOND STREET
SUITE 300 SOUTH
SAN FRANCISCO, CA 94960

SOLANO TRANSPORTATION AUTHORITY
ONE HARBOR CENTER, SUITE 130
SUISUN CITY, CA 94585

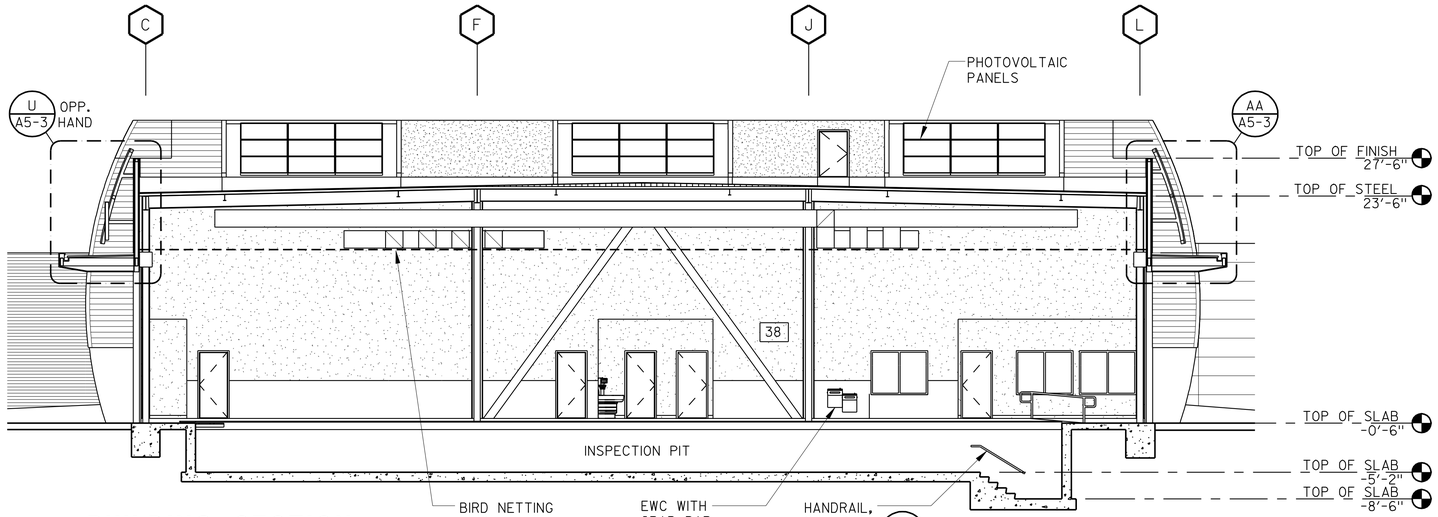

C BUILDING SECTION
SCALE: 1/8" = 1'-0"

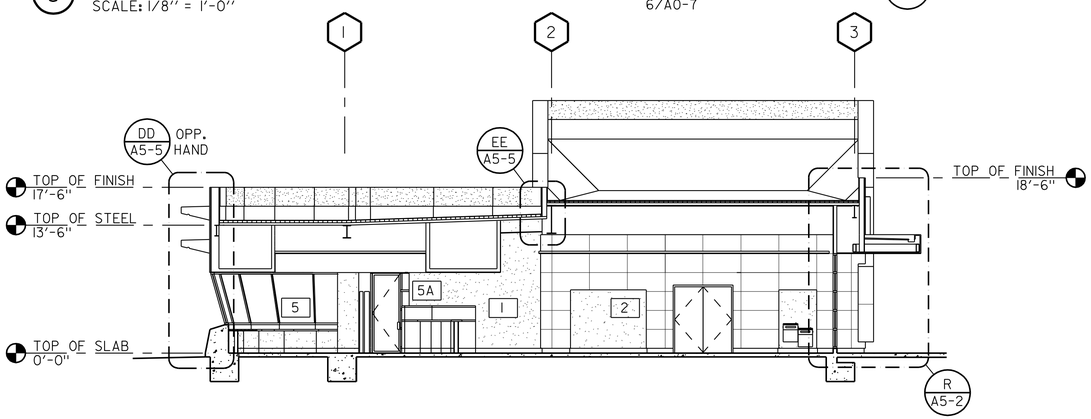

D BUILDING SECTION
SCALE: 1/8" = 1'-0"

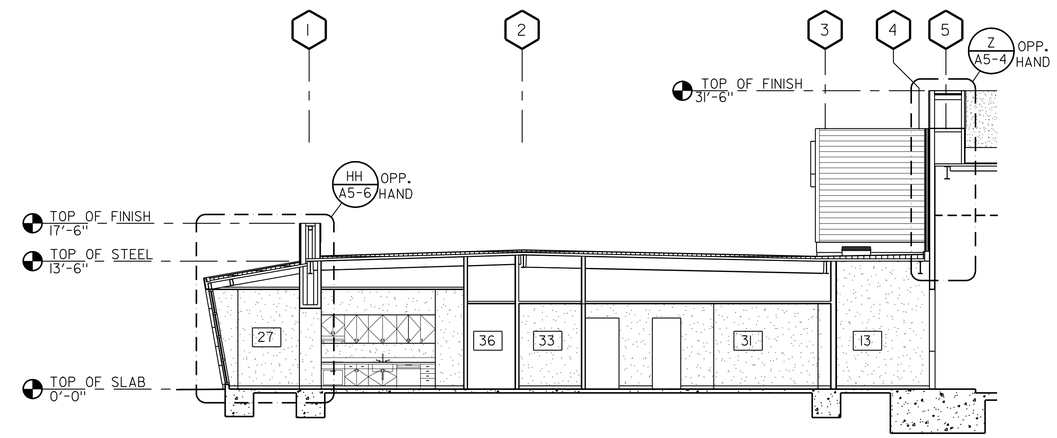

E BUILDING SECTION
SCALE: 1/8" = 1'-0"

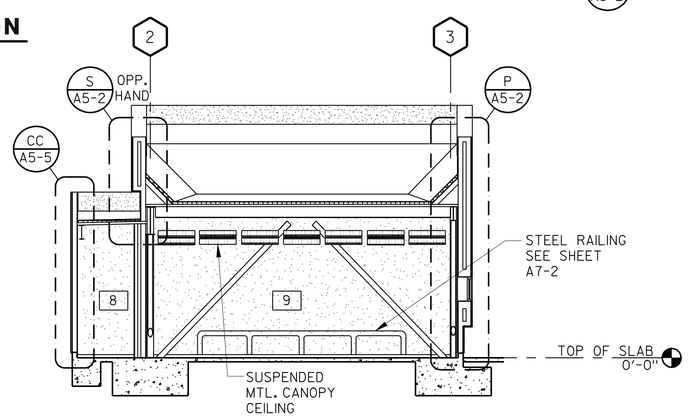

F BUILDING SECTION
SCALE: 1/8" = 1'-0"

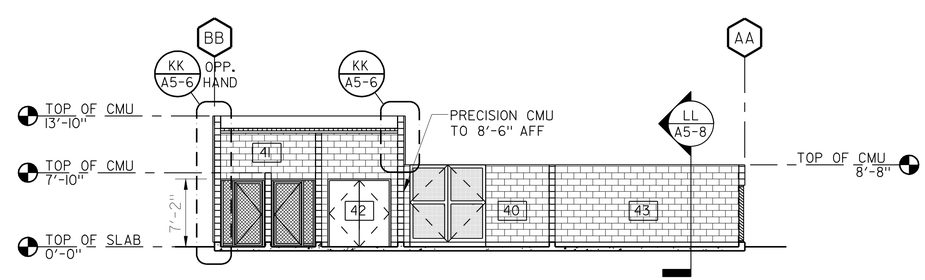

G BUILDING SECTION
SCALE: 1/8" = 1'-0"

CALIFORNIA STATE FIRE MARSHAL APPROVED

Approval of this plan does not authorize or approve any omission or deviation from applicable regulations. Final approval is subject to field inspection. One set of approved plans shall be available on the project site at all times.

Reviewed by: Hans Henneberque 5/9/11
Hans Henneberque
Senior Deputy State Fire Marshal

IDENTIFICATION STAMP DIV. OF THE STATE ARCHITECT
02 111744
AC ARLS — SS —
DATE

	BY	CHECKED
DESIGN	G.ROBLEY	W.RAMROTH
DETAILS	G.ROBLEY	D.WRIGHT
QUANTITIES	G.ROBLEY	W.RAMROTH

PREPARED FOR THE STATE OF CALIFORNIA DEPARTMENT OF TRANSPORTATION

DIVISION OF ENGINEERING SERVICES
ARCHITECTURAL AND STRUCTURAL DESIGN

BRIDGE NO. 23W000IR
POST MILE 14.8

EASTBOUND CORDELIA CVEF
CVEF — BUILDING SECTIONS NO. 2

SHEET **A3-2**

40a535wba3-02.dgn
DS OSD Imperial Rev. 10/07 18-MAY-2011 08:44

ORIGINAL SCALE IN INCHES FOR REDUCED PLANS 0 1 2 3

CU 04264
EA 0A5351

DISREGARD PRINTS BEARING EARLIER REVISION DATES →

REVISION DATES (PRELIMINARY STAGE ONLY) 10/19/09 03/22/10 05/06/10 08/23/10 11/22/10 05/02/11 — SHEET — OF

18-MAY-2011 08:44
40a535wba3-02.dgn

DIST.	COUNTY	ROUTE	POST MILES TOTAL PROJECT	SHEET NO.	TOTAL SHEETS
04	Sol	12,80	L1.8/L2.0, 13.3/15.7	523	740

LICENSED ARCHITECT — DATE 05/02/11

LICENSED ARCHITECT GREG A. ROBLEY No. C-30986 Exp. 02/05/13 STATE OF CALIFORNIA

5-16-11
PLANS APPROVAL DATE

The State of California or its officers or agents shall not be responsible for the accuracy or completeness of electronic copies of this plan sheet.

KENNEDY/JENKS CONSULTANTS
303 SECOND STREET
SUITE 300 SOUTH
SAN FRANCISCO, CA 94960

SOLANO TRANSPORTATION AUTHORITY
ONE HARBOR CENTER, SUITE 130
SUISUN CITY, CA 94585

PLAN NORTH

ENLARGED PLAN NOTES

1. INTERIOR PARTITONS ARE TYPE "A" U.O.N. SEE SHEETS A6-5 AND A6-6 FOR PARTITION TYPES.
2. SEE SHEET A7-2 FOR INTERIOR ELEVATIONS AND ADDITIONAL DIMENSIONS.
3. SLOPE FLOOR IN 3'-0" RADIUS AROUND DRAINS AT 1% SLOPE MAX.
4. SEE SHEETS A0-7 AND A0-8 FOR ADDITIONAL ACCESIBILITY REQUREMENTS.
5. PROVIDE INTERNATIONAL ACCESSIBILITY DECAL ON EACH LOCKER, SEE DETAIL 6/A0-6.

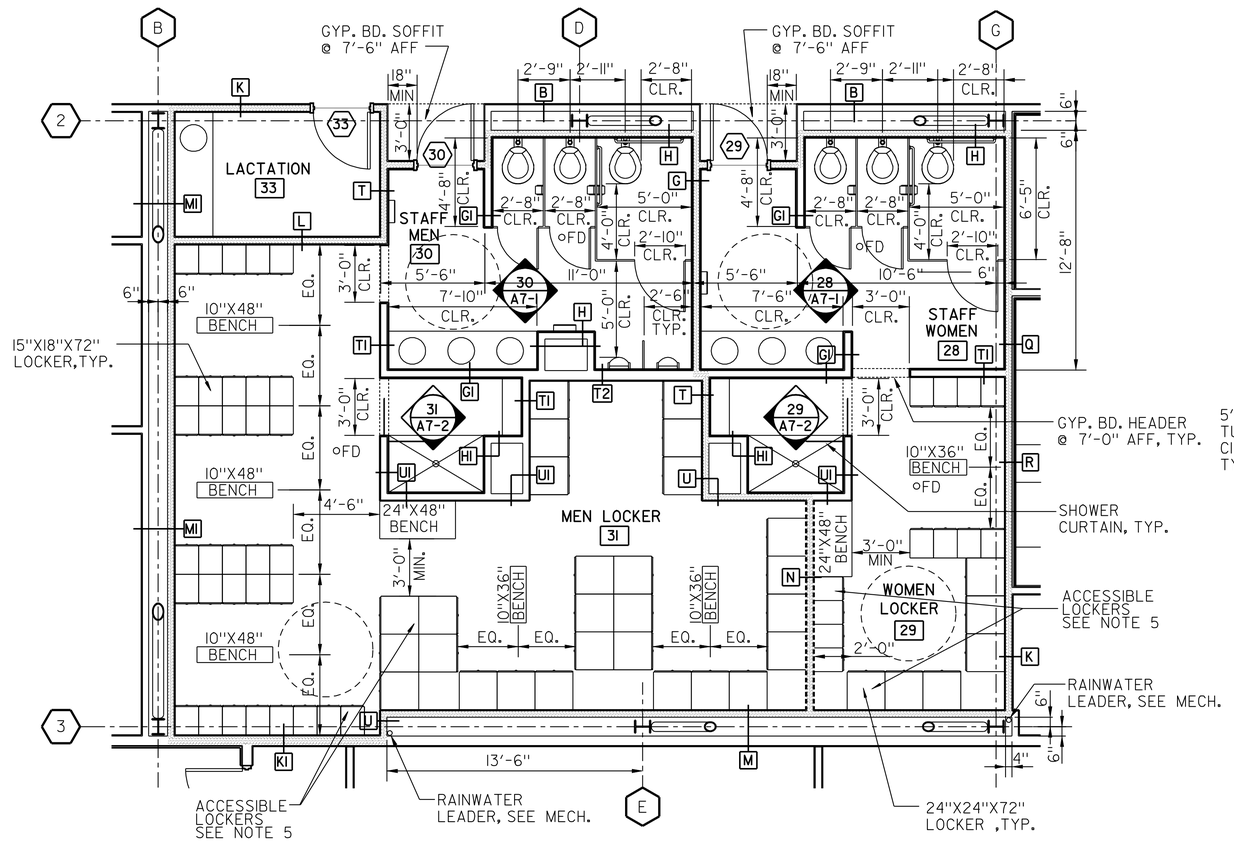

1 **ENLARGED LOCKER ROOM PLAN**
SCALE: 1/4"=1'-0"

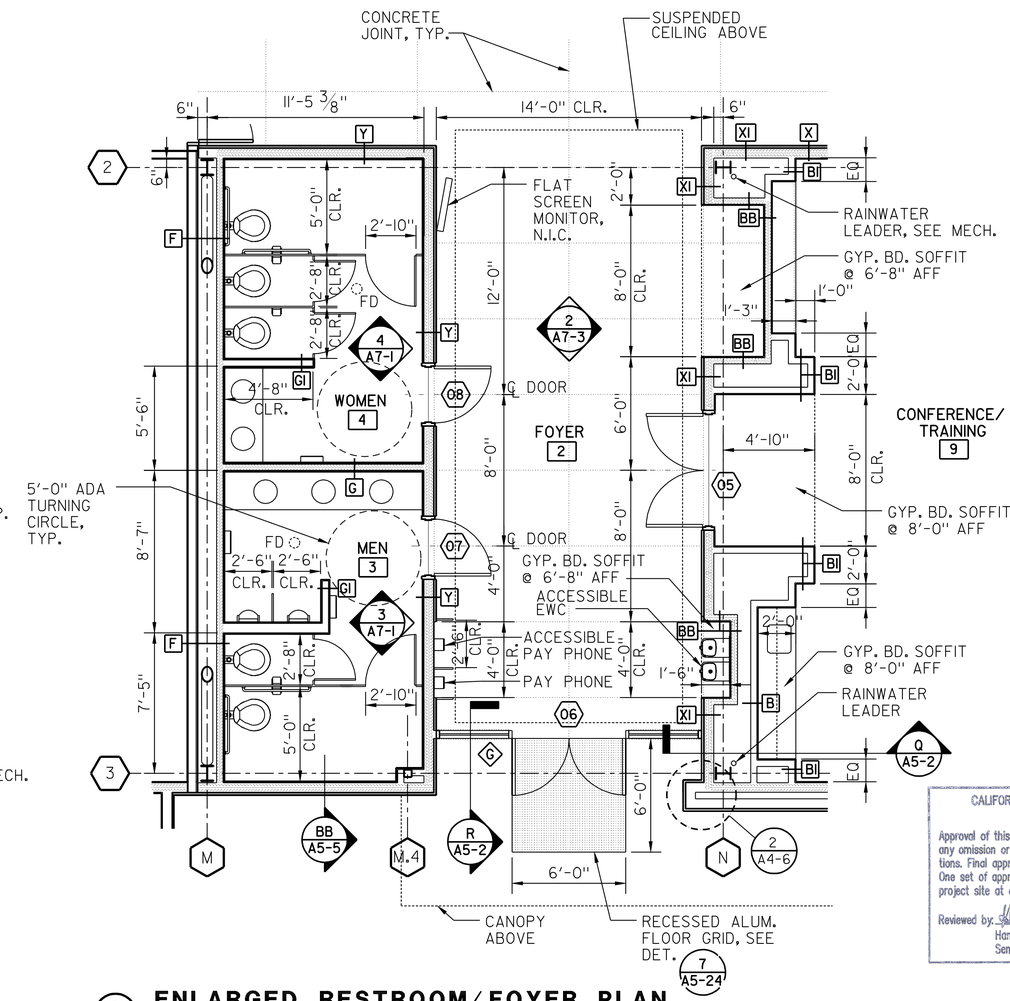

2 **ENLARGED RESTROOM/FOYER PLAN**
SCALE: 1/4"=1'-0"

CALIFORNIA STATE FIRE MARSHAL APPROVED

Approval of this plan does not authorize or approve any omission or deviation from applicable regulations. Final approval is subject to field inspection. One set of approved plans shall be available on the project site at all times.

Reviewed by: Hans Henneberque 5/9/11
Hans Henneberque
Senior Deputy State Fire Marshal

IDENTIFICATION STAMP DIV. OF THE STATE ARCHITECT
02 111744
AC ALS — SS —
DATE 5-9-11

	BY	CHECKED
DESIGN	G.ROBLEY	W.RAMROTH
DETAILS	G.ROBLEY	D.WRIGHT
QUANTITIES	G.ROBLEY	W.RAMROTH

PREPARED FOR THE STATE OF CALIFORNIA DEPARTMENT OF TRANSPORTATION

DIVISION OF ENGINEERING SERVICES ARCHITECTURAL AND STRUCTURAL DESIGN

BRIDGE NO. 23W000IR
POST MILE 14.8

EASTBOUND CORDELIA CVEF
CVEF — ENLARGED PLANS NO. 1

SHEET A4-1

40a535wba4-01.dgn
DS OSD Imperial Rev. 10/07 18-MAY-2011 08:44

ORIGINAL SCALE IN INCHES FOR REDUCED PLANS 0 1 2 3

CU 04264
EA 0A5351

DISREGARD PRINTS BEARING EARLIER REVISION DATES → 10/19/09 03/22/10 05/06/10 08/23/10 11/22/10 05/02/11

REVISION DATES (PRELIMINARY STAGE ONLY) SHEET OF

18-MAY-2011 08:44
40a535wba4-01.dgn

DIST.	COUNTY	ROUTE	POST MILES TOTAL PROJECT	SHEET NO.	TOTAL SHEETS
04	Sol	12,80	L1.8/L2.0, 13.3/15.7	524	740

LICENSED ARCHITECT — DATE 05/02/11

LICENSED ARCHITECT GREG A. ROBLEY No. C-30986 Exp. 02/05/13 STATE OF CALIFORNIA

5-16-11
PLANS APPROVAL DATE

The State of California or its officers or agents shall not be responsible for the accuracy or completeness of electronic copies of this plan sheet.

KENNEDY/JENKS CONSULTANTS
303 SECOND STREET
SUITE 300 SOUTH
SAN FRANCISCO, CA 94960

SOLANO TRANSPORTATION AUTHORITY
ONE HARBOR CENTER, SUITE 130
SUISUN CITY, CA 94585

PLAN NORTH

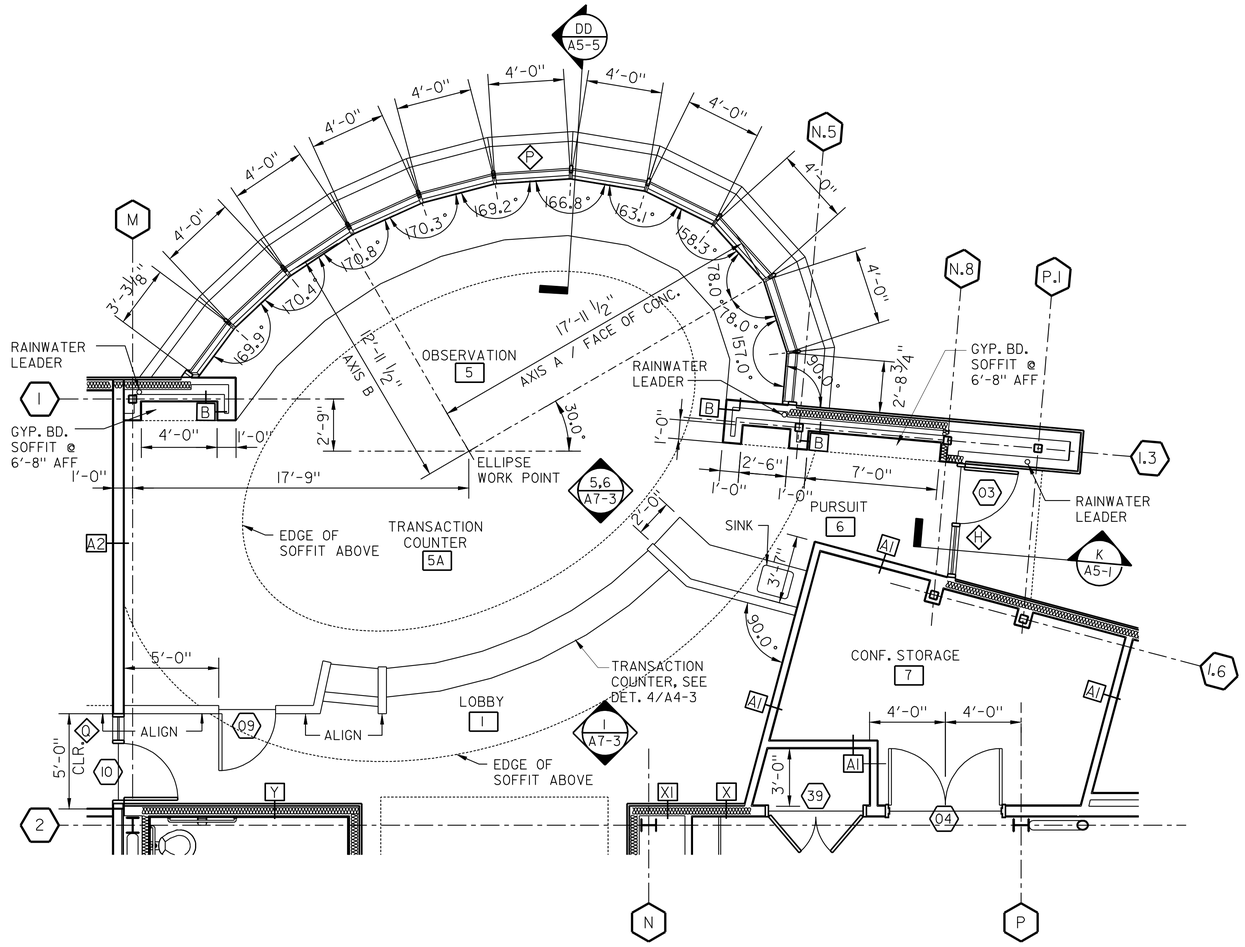

1 ENLARGED OBSERVATION/TRANSACTION/LOBBY PLAN

SCALE: 1/4" = 1'-0"

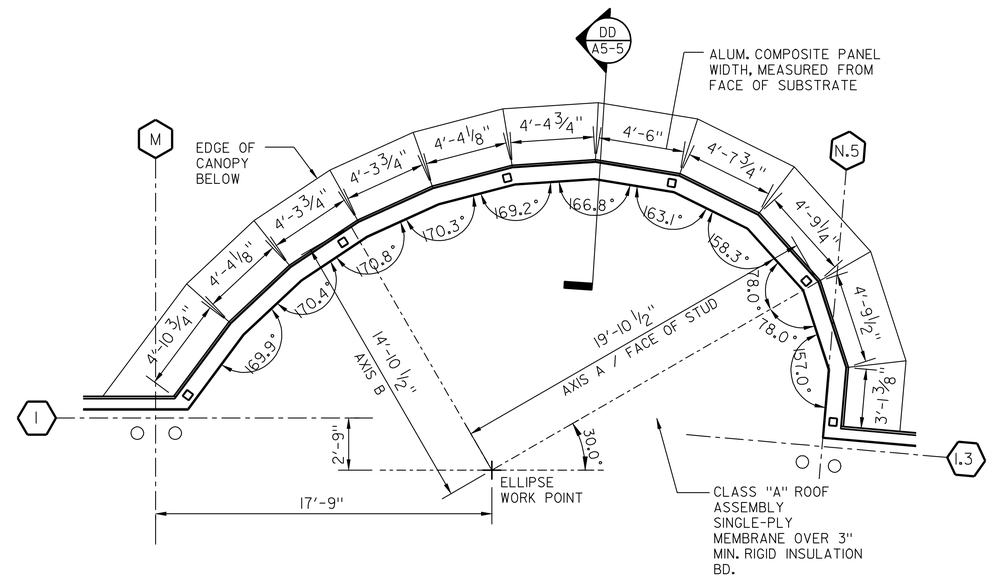

2 ENLARGED OBSERVATION ROOF PLAN

SCALE: 1/4" = 1'-0"

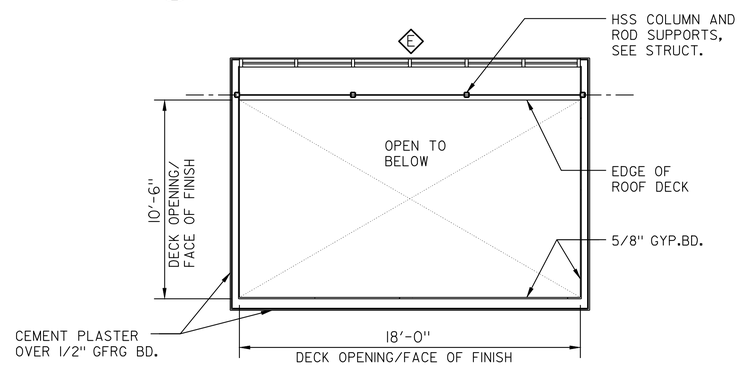

3 ENLARGED SKYLIGHT PLAN, TYP.

SCALE: 1/4" = 1'-0"

CALIFORNIA STATE FIRE MARSHAL APPROVED

Approval of this plan does not authorize or approve any omission or deviation from applicable regulations. Final approval is subject to field inspection. One set of approved plans shall be available on the project site at all times.

Reviewed by: Hans Henneberque 5/9/11
Hans Henneberque
Senior Deputy State Fire Marshal

IDENTIFICATION STAMP DIV. OF THE STATE ARCHITECT
02 111744
AC ALS SS
DATE

DESIGN	BY G.ROBLEY	CHECKED W.RAMROTH	
DETAILS	BY G.ROBLEY	CHECKED D.WRIGHT	
QUANTITIES	BY G.ROBLEY	CHECKED W.RAMROTH	

PREPARED FOR THE STATE OF CALIFORNIA DEPARTMENT OF TRANSPORTATION

DIVISION OF ENGINEERING SERVICES ARCHITECTURAL AND STRUCTURAL DESIGN

BRIDGE NO. 23W0001R
POST MILE 14.8

EASTBOUND CORDELIA CVEF

CVEF — ENLARGED PLANS NO. 2

SHEET A4-2

40a535wba4-02.dgn
DS OSD ImperialRev.10/07 18-MAY-2011 08:45

ORIGINAL SCALE IN INCHES FOR REDUCED PLANS 0 1 2 3

CU 04264
EA 0A5351

DISREGARD PRINTS BEARING EARLIER REVISION DATES → 10/19/09 03/22/10 05/06/10 08/23/10 05/02/11

REVISION DATES (PRELIMINARY STAGE ONLY) SHEET OF

18-MAY-2011 08:45

40a535wba4-02.dgn

DIST.	COUNTY	ROUTE	POST MILES TOTAL PROJECT	SHEET NO.	TOTAL SHEETS
04	Sol	12,80	L1.8/L2.0, 13.3/15.7	525	740

LICENSED ARCHITECT — DATE 05/02/11

LICENSED ARCHITECT GREG A. ROBLEY No. C-30986 Exp. 02/05/13 STATE OF CALIFORNIA

5-16-11
PLANS APPROVAL DATE

The State of California or its officers or agents shall not be responsible for the accuracy or completeness of electronic copies of this plan sheet.

KENNEDY/JENKS CONSULTANTS
303 SECOND STREET
SUITE 300 SOUTH
SAN FRANCISCO, CA 94960

SOLANO TRANSPORTATION AUTHORITY
ONE HARBOR CENTER, SUITE 130
SUISUN CITY, CA 94585

PLAN NORTH

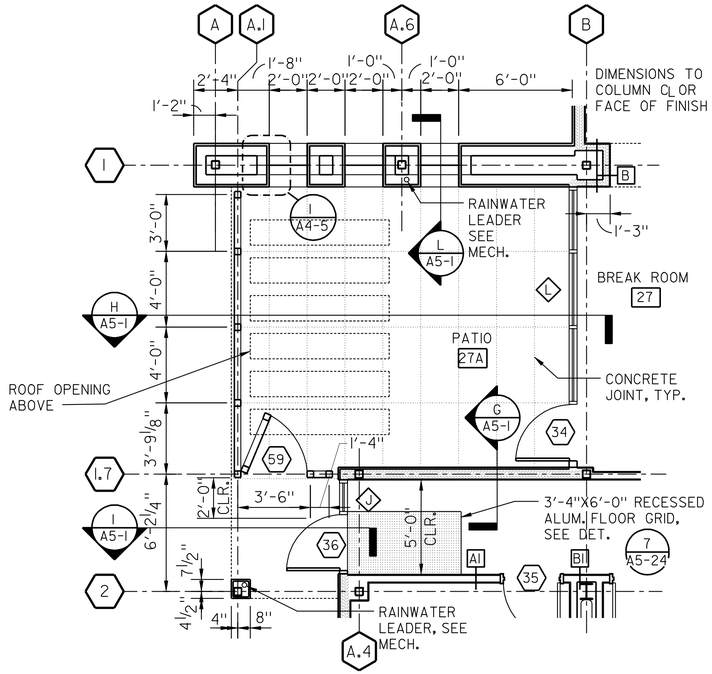

1 PATIO PLAN
SCALE: 1/4" = 1'-0"

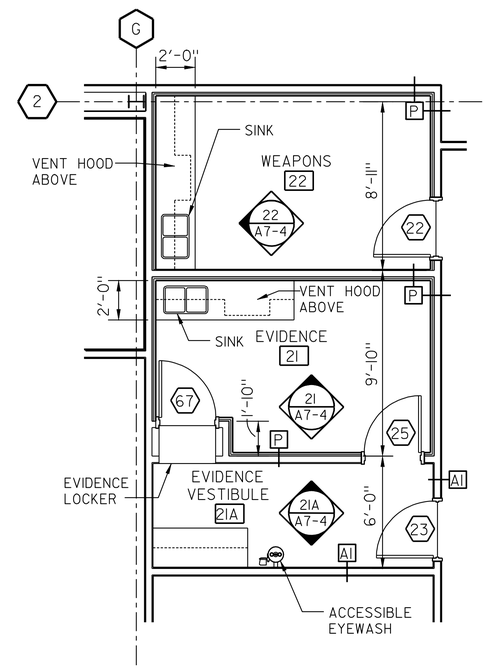

3 WEAPONS/EVIDENCE PLAN
SCALE: 1/2" = 1'-0"

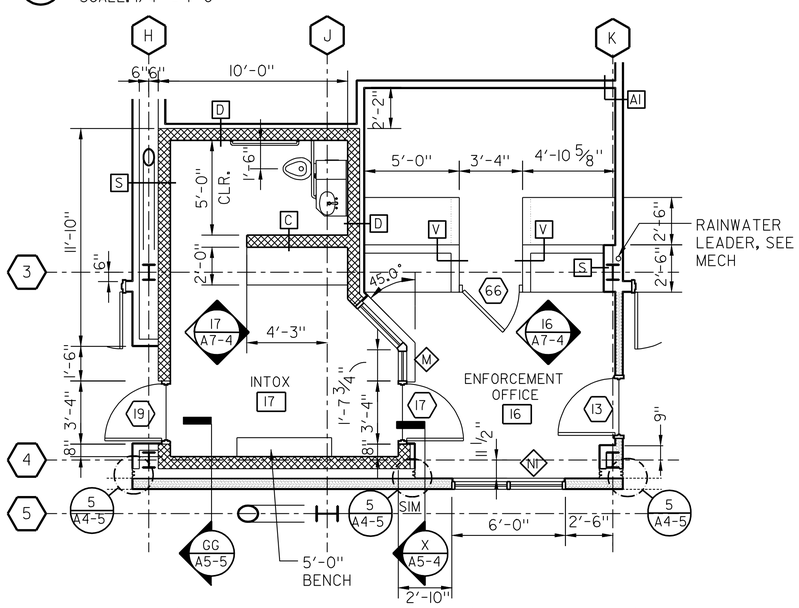

2 ENLARGED ENFORCEMENT OFFICE/INTOX PLAN
SCALE: 1/4" = 1'-0"

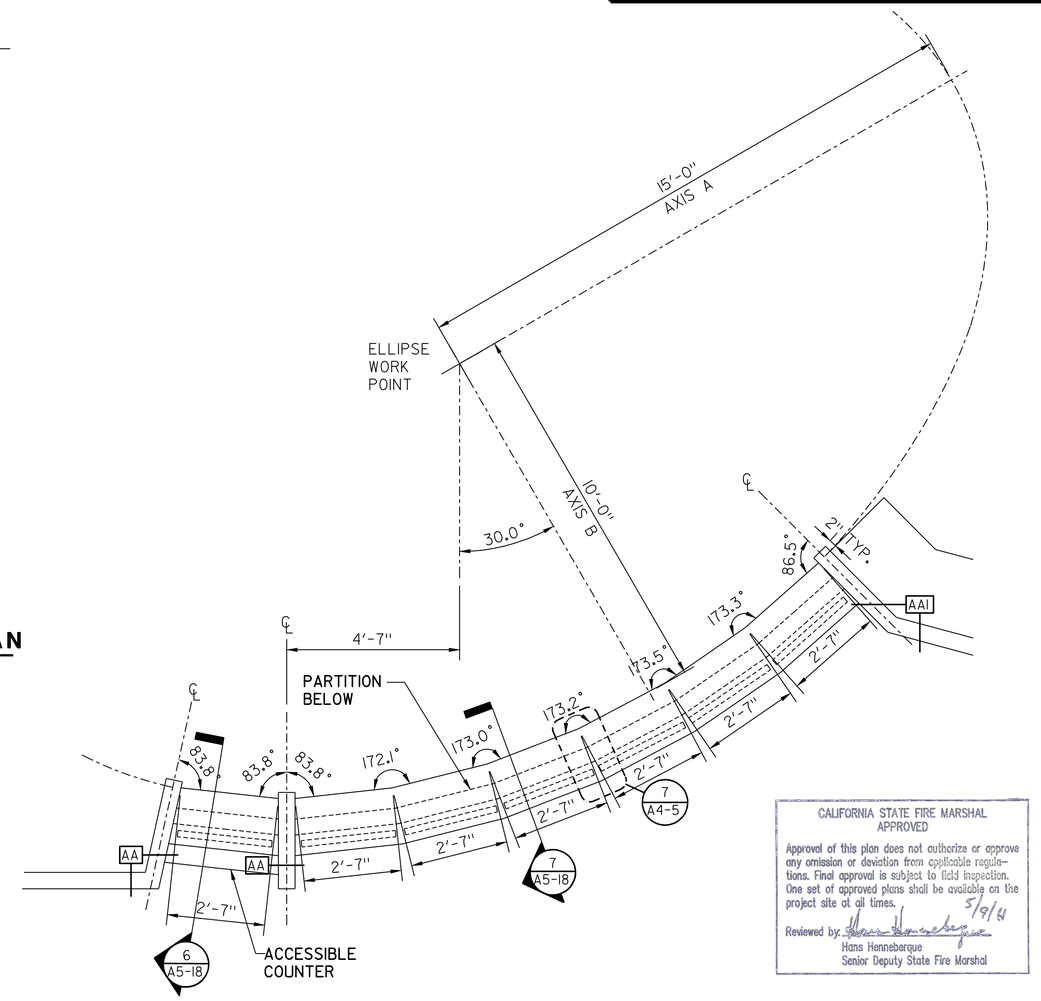

4 TRANSACTION COUNTER PLAN
SCALE: 1/2" = 1'-0"

CALIFORNIA STATE FIRE MARSHAL APPROVED

Approval of this plan does not authorize or approve any omission or deviation from applicable regulations. Final approval is subject to field inspection. One set of approved plans shall be available on the project site at all times.

Reviewed by: 5/9/11
Hans Henneberque
Senior Deputy State Fire Marshal

IDENTIFICATION STAMP DIV. OF THE STATE ARCHITECT
02 1117 44
ACCESS SLS — SS —
DATE 5-5-11

DESIGN	BY G.ROBLEY	CHECKED W.RAMROTH	
DETAILS	BY G.ROBLEY	CHECKED D.WRIGHT	
QUANTITIES	BY G.ROBLEY	CHECKED W.RAMROTH	

PREPARED FOR THE STATE OF CALIFORNIA DEPARTMENT OF TRANSPORTATION

DIVISION OF ENGINEERING SERVICES ARCHITECTURAL AND STRUCTURAL DESIGN

BRIDGE NO. 23W000IR
POST MILE 14.8

EASTBOUND CORDELIA CVEF
CVEF — ENLARGED PLANS NO. 3

SHEET A4-3

40a535wba4-03.dgn
DS OSD Imperial Rev. 10/07 18-MAY-2011 08:45

ORIGINAL SCALE IN INCHES FOR REDUCED PLANS 0 1 2 3

CU 04264
EA 0A5351

DISREGARD PRINTS BEARING EARLIER REVISION DATES → 10/19/09 03/22/10 05/06/10 08/23/10 11/22/10 05/02/11

REVISION DATES (PRELIMINARY STAGE ONLY) SHEET OF

18-MAY-2011 08:45
40a535wba4-03.dgn

DIST.	COUNTY	ROUTE	POST MILES TOTAL PROJECT	SHEET NO.	TOTAL SHEETS
04	Sol	12,80	L1.8/L2.0, 13.3/15.7	526	740

LICENSED ARCHITECT — DATE 05/02/11

LICENSED ARCHITECT GREG A. ROBLEY No. C-30986 Exp. 02/05/13 STATE OF CALIFORNIA

5-16-11
PLANS APPROVAL DATE

The State of California or its officers or agents shall not be responsible for the accuracy or completeness of electronic copies of this plan sheet.

KENNEDY/JENKS CONSULTANTS
303 SECOND STREET
SUITE 300 SOUTH
SAN FRANCISCO, CA 94960

SOLANO TRANSPORTATION AUTHORITY
ONE HARBOR CENTER, SUITE 130
SUISUN CITY, CA 94585

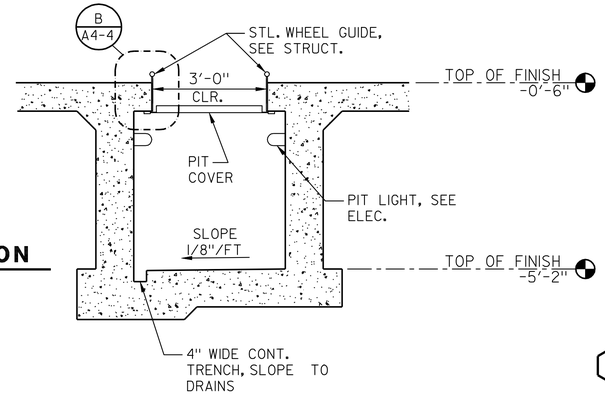

A PIT SECTION
SCALE: 1/2" = 1'-0"

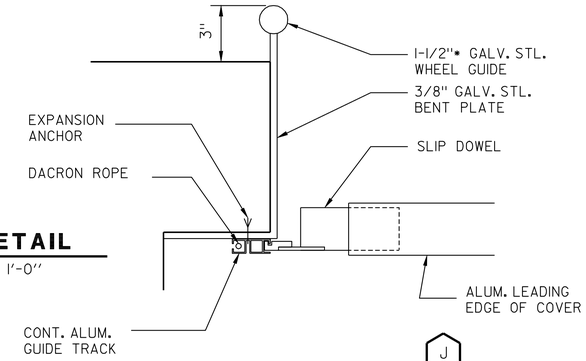

B PIT DETAIL
SCALE: 3" = 1'-0"

PLAN NORTH

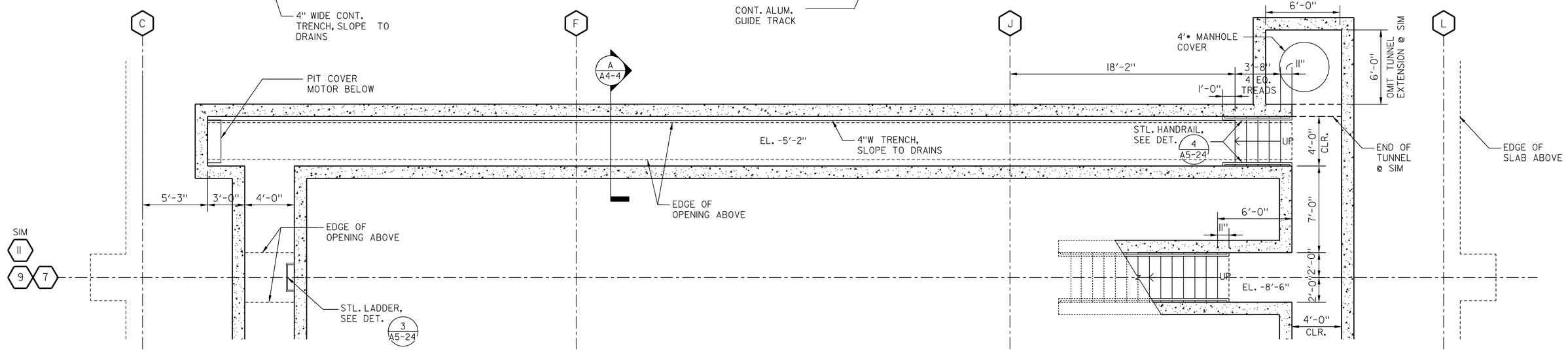

1 ENLARGED PIT PLAN @ -8'-6"
SCALE: 1/4" = 1'-0"

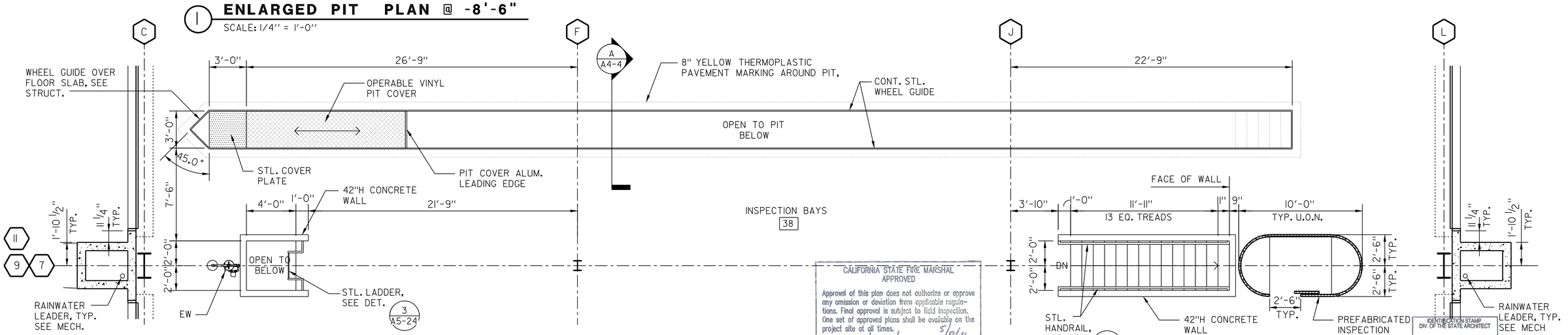

2 ENLARGED PIT PLAN @ -6"
SCALE: 1/4" = 1'-0"

CALIFORNIA STATE FIRE MARSHAL APPROVED

Approval of this plan does not authorize or approve any omission or deviation from applicable regulations. Final approval is subject to field inspection. One set of approved plans shall be available on the project site at all times.

Reviewed by: Hans Hennebarque 5/9/11
Hans Hennebarque
Senior Deputy State Fire Marshal

IDENTIFICATION STAMP DIV. OF THE STATE ARCHITECT
02 1117 44
AC GLS — SS —
DATE 5-5-11

	BY	CHECKED
DESIGN	G.ROBLEY	W.RAMROTH
DETAILS	G.ROBLEY	D.WRIGHT
QUANTITIES	G.ROBLEY	W.RAMROTH

PREPARED FOR THE STATE OF CALIFORNIA DEPARTMENT OF TRANSPORTATION

DIVISION OF ENGINEERING SERVICES
ARCHITECTURAL AND STRUCTURAL DESIGN

BRIDGE NO. 23W000IR
POST MILE 14.8

EASTBOUND CORDELIA CVEF

CVEF — ENLARGED PLANS NO. 4

SHEET A4-4

40a535wba4-04.dgn
DS OSD ImperialRev.10/07 18-MAY-2011 09:23

ORIGINAL SCALE IN INCHES FOR REDUCED PLANS 0 1 2 3

CU 04264
EA 0A5351

DISREGARD PRINTS BEARING EARLIER REVISION DATES → 10/19/09 03/22/10 05/06/10 08/23/10 11/22/10 05/02/11

REVISION DATES (PRELIMINARY STAGE ONLY) SHEET OF

18-MAY-2011 09:23

40a535wba4-04.dgn

DIST.	COUNTY	ROUTE	POST MILES TOTAL PROJECT	SHEET NO.	TOTAL SHEETS
04	Sol	12,80	L1.8/L2.0, 13.3/15.7	527	740

LICENSED ARCHITECT — DATE 05/02/11

LICENSED ARCHITECT GREG A. ROBLEY No. C-30986 Exp. 02/05/13 STATE OF CALIFORNIA

5-16-11
PLANS APPROVAL DATE

The State of California or its officers or agents shall not be responsible for the accuracy or completeness of electronic copies of this plan sheet.

KENNEDY/JENKS CONSULTANTS
303 SECOND STREET
SUITE 300 SOUTH
SAN FRANCISCO, CA 94960

SOLANO TRANSPORTATION AUTHORITY
ONE HARBOR CENTER, SUITE 130
SUISUN CITY, CA 94585

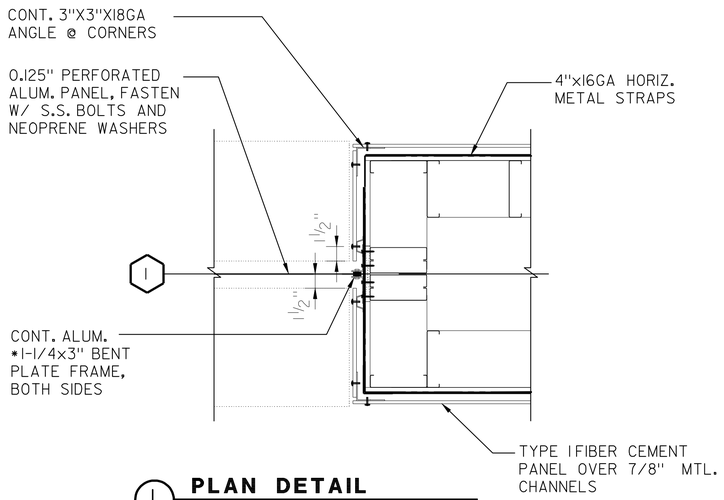

1 **PLAN DETAIL**
SCALE: 1-1/2" = 1'-0"

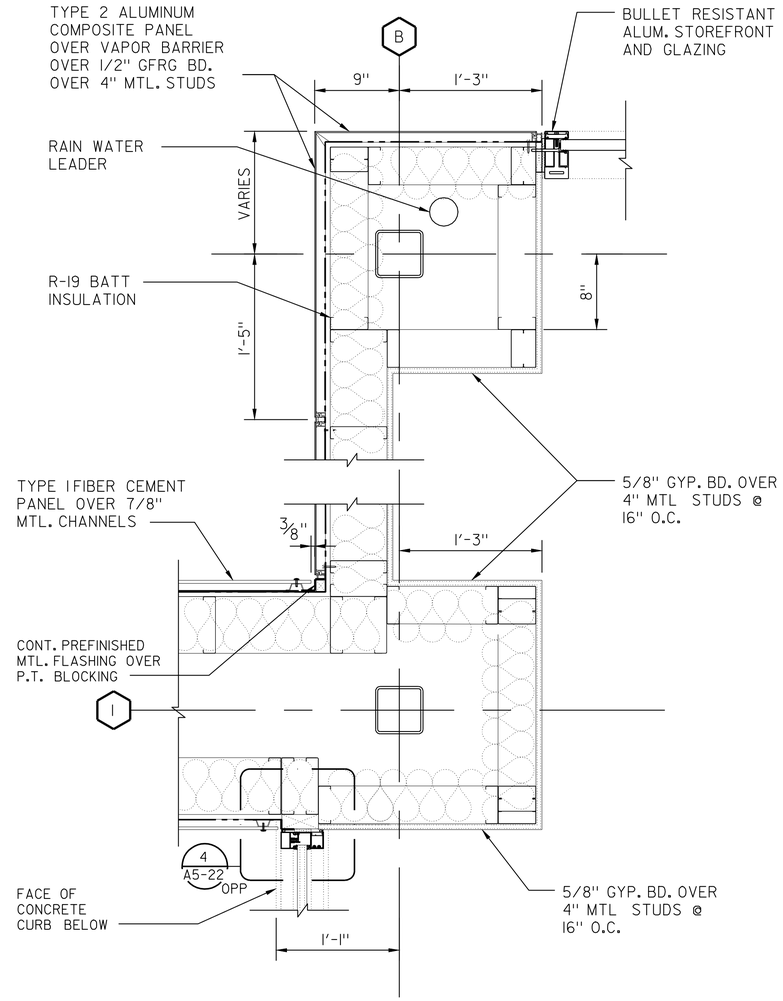

2 **PLAN DETAIL**
SCALE: 1-1/2" = 1'-0"

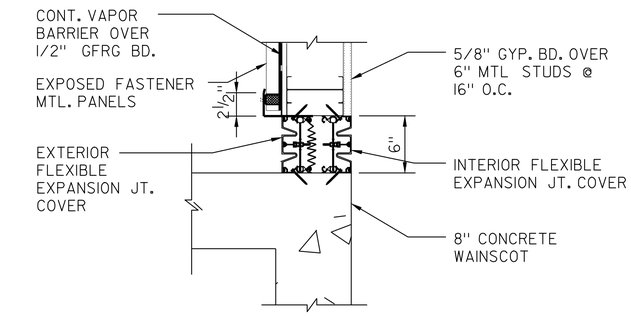

3 **PLAN DETAIL**
SCALE: 1-1/2" = 1'-0"

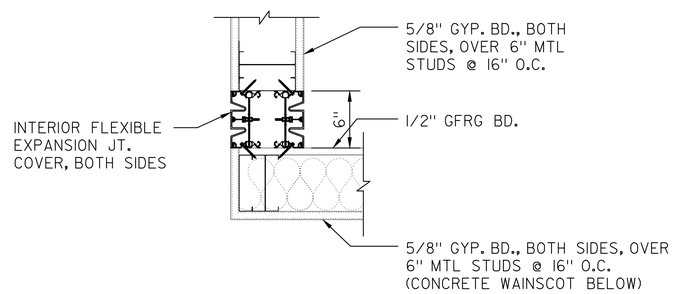

4 **PLAN DETAIL**
SCALE: 1-1/2" = 1'-0"

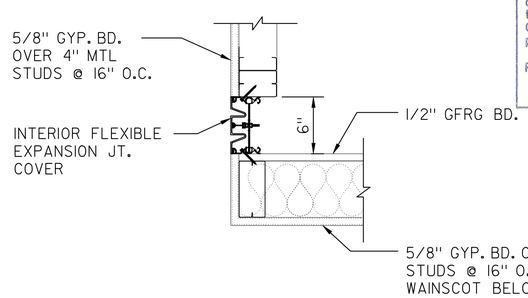

5 **PLAN DETAIL**
SCALE: 1-1/2" = 1'-0"

CALIFORNIA STATE FIRE MARSHAL APPROVED

Approval of this plan does not authorize or approve any omission or deviation from applicable regulations. Final approval is subject to field inspection. One set of approved plans shall be available on the project site at all times.

Reviewed by: Hans Hannebergue 5/9/11
Hans Hannebergue
Senior Deputy State Fire Marshal

IDENTIFICATION STAMP DIV. OF THE STATE ARCHITECT
02 1117 44
AC ALS — SS —
DATE 5-9-11

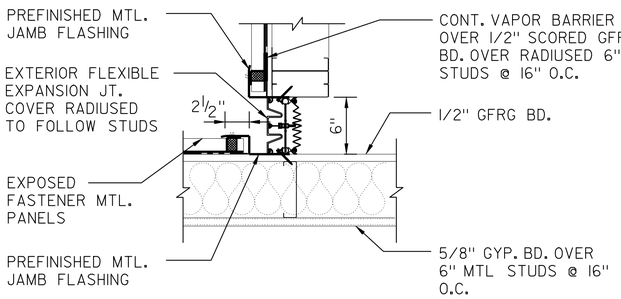

6 **PLAN DETAIL**
SCALE: 1-1/2" = 1'-0"

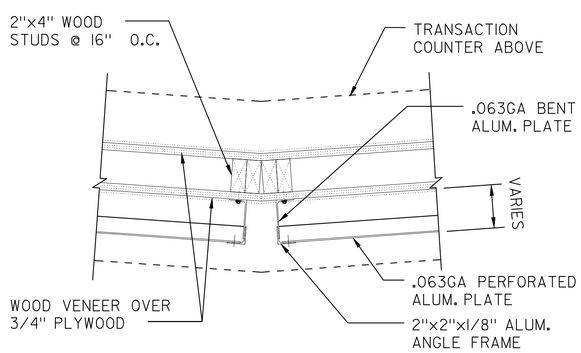

7 **PLAN DETAIL**
SCALE: 1-1/2" = 1'-0"

	BY	CHECKED
DESIGN	G.ROBLEY	W.RAMROTH
DETAILS	G.ROBLEY	D.WRIGHT
QUANTITIES	G.ROBLEY	W.RAMROTH

PREPARED FOR THE STATE OF CALIFORNIA DEPARTMENT OF TRANSPORTATION

DIVISION OF ENGINEERING SERVICES
ARCHITECTURAL AND STRUCTURAL DESIGN

BRIDGE NO. 23W000IR
POST MILE 14.8

EASTBOUND CORDELIA CVEF
CVEF — PLAN DETAILS NO. 1

SHEET **A4-5**

40a535wba4-05.dgn
DS OSD Imperial Rev. 10/07 18-MAY-2011 09:05

ORIGINAL SCALE IN INCHES FOR REDUCED PLANS 0 1 2 3

CU 04264
EA 0A5351

DISREGARD PRINTS BEARING EARLIER REVISION DATES → 10/19/09 03/22/10 05/06/10 08/23/10 11/22/10 05/02/11

REVISION DATES (PRELIMINARY STAGE ONLY) SHEET OF

18-MAY-2011 09:05

40a535wba4-05.dgn

DIST.	COUNTY	ROUTE	POST MILES TOTAL PROJECT	SHEET NO.	TOTAL SHEETS
04	Sol	12,80	L1.8/L2.0, 13.3/15.7	528	740

LICENSED ARCHITECT — DATE 05/02/11

LICENSED ARCHITECT GREG A. ROBLEY No. C-30986 Exp. 02/05/13 STATE OF CALIFORNIA

5-16-11
PLANS APPROVAL DATE

The State of California or its officers or agents shall not be responsible for the accuracy or completeness of electronic copies of this plan sheet.

KENNEDY/JENKS CONSULTANTS
303 SECOND STREET
SUITE 300 SOUTH
SAN FRANCISCO, CA 94960

SOLANO TRANSPORTATION AUTHORITY
ONE HARBOR CENTER, SUITE 130
SUISUN CITY, CA 94585

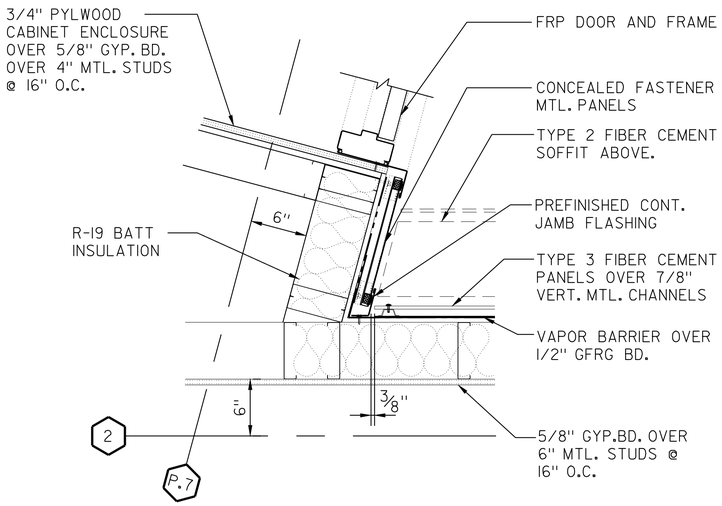

1 PLAN DETAIL
SCALE: 1-1/2" = 1'-0"

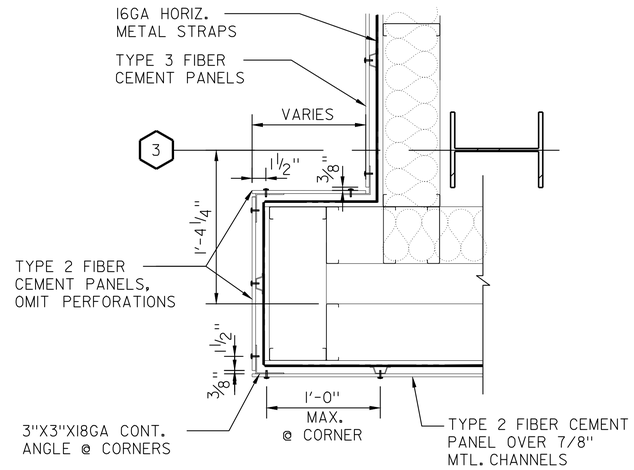

2 PLAN DETAIL
SCALE: 1-1/2" = 1'-0"

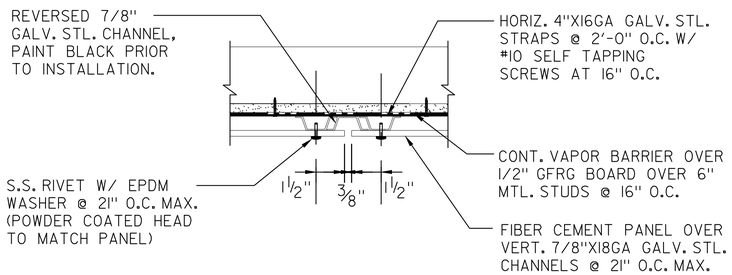

3 VERTICAL FIBER CEMENT JOINT DETAIL
SCALE: 3" = 1'-0"

CALIFORNIA STATE FIRE MARSHAL APPROVED

Approval of this plan does not authorize or approve any omission or deviation from applicable regulations. Final approval is subject to field inspection. One set of approved plans shall be available on the project site at all times. 5/9/11

Reviewed by: Hans Hennebarque
Hans Hennebarque
Senior Deputy State Fire Marshal

IDENTIFICATION STAMP DIV. OF THE STATE ARCHITECT
02 1 1 1 7 4 4
AC ___ RLS ___ SS ___
DATE 5-5-11

DESIGN	BY G.ROBLEY	CHECKED W.RAMROTH	
DETAILS	BY G.ROBLEY	CHECKED D.WRIGHT	
QUANTITIES	BY G.ROBLEY	CHECKED W.RAMROTH	

ORIGINAL SCALE IN INCHES FOR REDUCED PLANS 0 1 2 3

PREPARED FOR THE STATE OF CALIFORNIA DEPARTMENT OF TRANSPORTATION

DIVISION OF ENGINEERING SERVICES
ARCHITECTURAL AND STRUCTURAL DESIGN

CU 04264
EA 0A5351

BRIDGE NO. 23W000IR
POST MILE 14.8

EASTBOUND CORDELIA CVEF

CVEF — PLAN DETAILS NO. 2

SHEET **A4-6**

DISREGARD PRINTS BEARING EARLIER REVISION DATES → REVISION DATES (PRELIMINARY STAGE ONLY) ~~10/19/09~~ ~~03/22/10~~ ~~05/06/10~~ ~~08/23/10~~ ~~11/22/10~~ 05/02/11 SHEET OF

DS OSD Imperial Rev. 10/07 9/17/10 09:05

18-MAY-2011 09:05

DIST.	COUNTY	ROUTE	POST MILES TOTAL PROJECT	SHEET NO.	TOTAL SHEETS
04	Sol	12,80	L1.8/L2.0, 13.3/15.7	529	740

LICENSED ARCHITECT — DATE 05/02/11

LICENSED ARCHITECT GREG A. ROBLEY No. C-30986 Exp. 02/05/13 STATE OF CALIFORNIA

5-16-11
PLANS APPROVAL DATE

The State of California or its officers or agents shall not be responsible for the accuracy or completeness of electronic copies of this plan sheet.

KENNEDY/JENKS CONSULTANTS
303 SECOND STREET
SUITE 300 SOUTH
SAN FRANCISCO, CA 94960

SOLANO TRANSPORTATION AUTHORITY
ONE HARBOR CENTER, SUITE 130
SUISUN CITY, CA 94585

CALIFORNIA STATE FIRE MARSHAL APPROVED

Approval of this plan does not authorize or approve any omission or deviation from applicable regulations. Final approval is subject to field inspection. One set of approved plans shall be available on the project site at all times.

Reviewed by: Hans Henneberque 5/9/11
Hans Henneberque
Senior Deputy State Fire Marshal

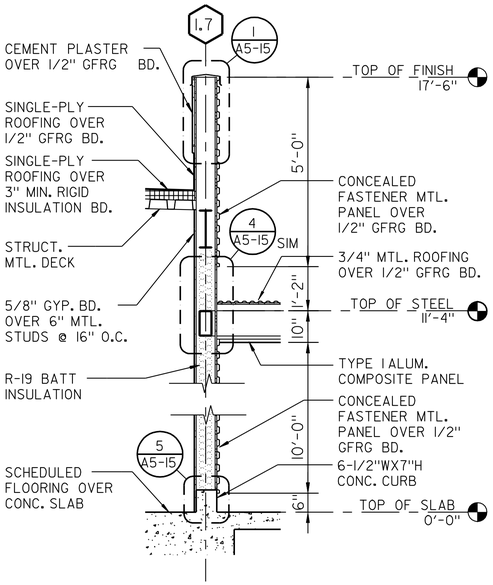

G **WALL SECTION**
SCALE: 1/2" = 1'-0"

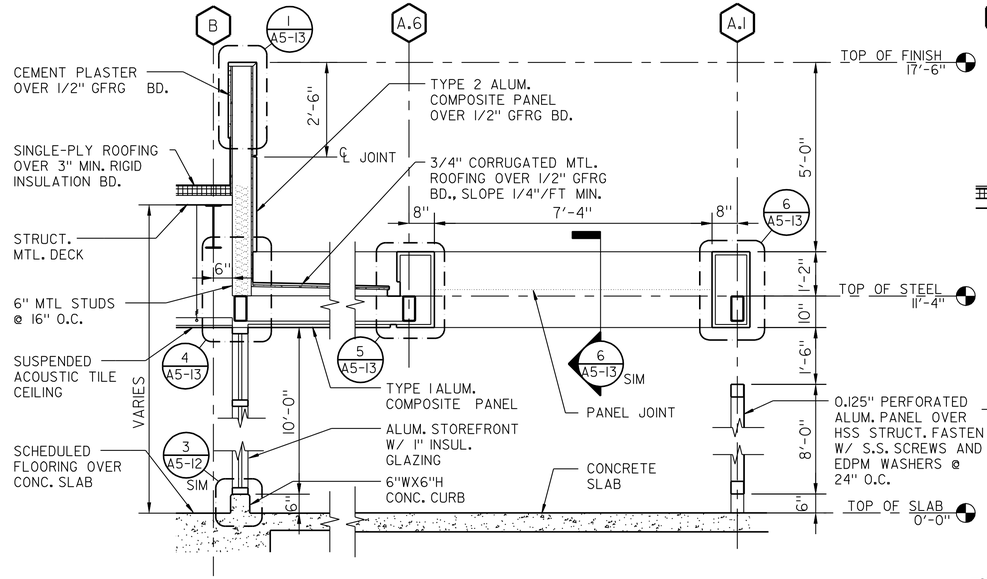

H **WALL SECTION**
SCALE: 1/2" = 1'-0"

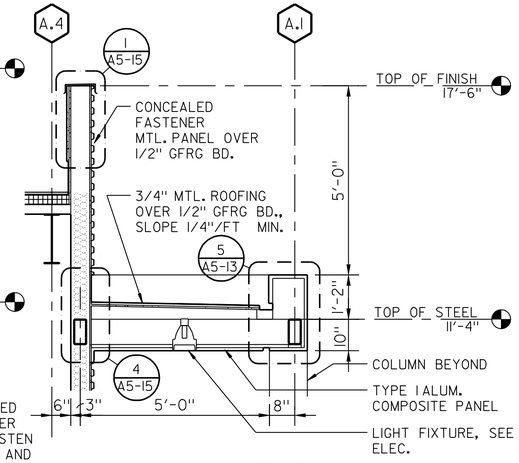

I **WALL SECTION**
SCALE: 1/2" = 1'-0"

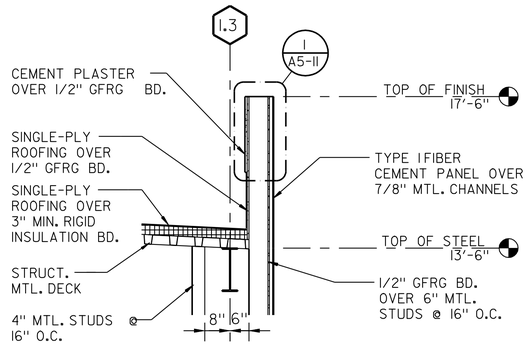

J **WALL SECTION**
SCALE: 1/2" = 1'-0"

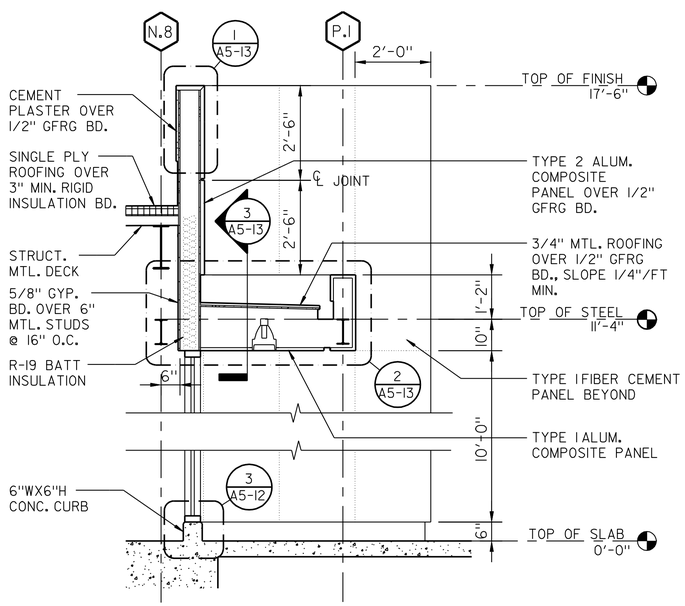

K **WALL SECTION**
SCALE: 1/2" = 1'-0"

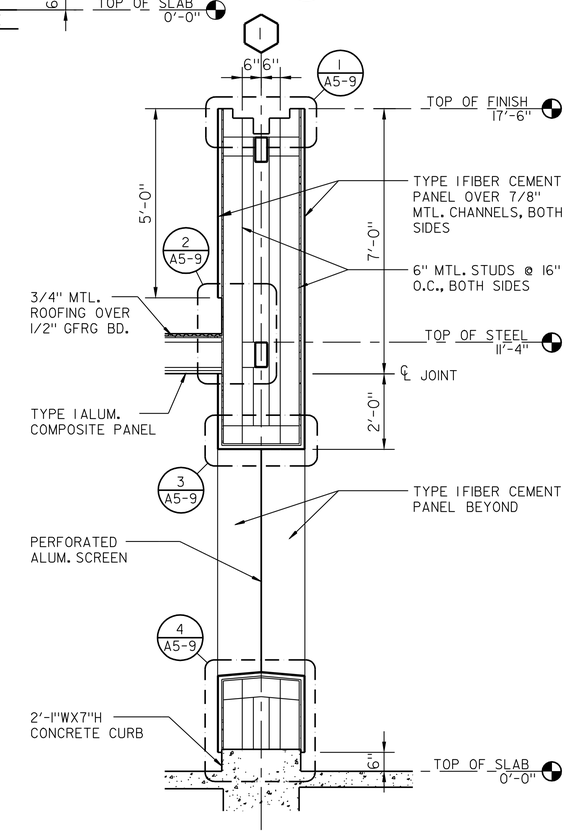

L **WALL SECTION**
SCALE: 1/2" = 1'-0"

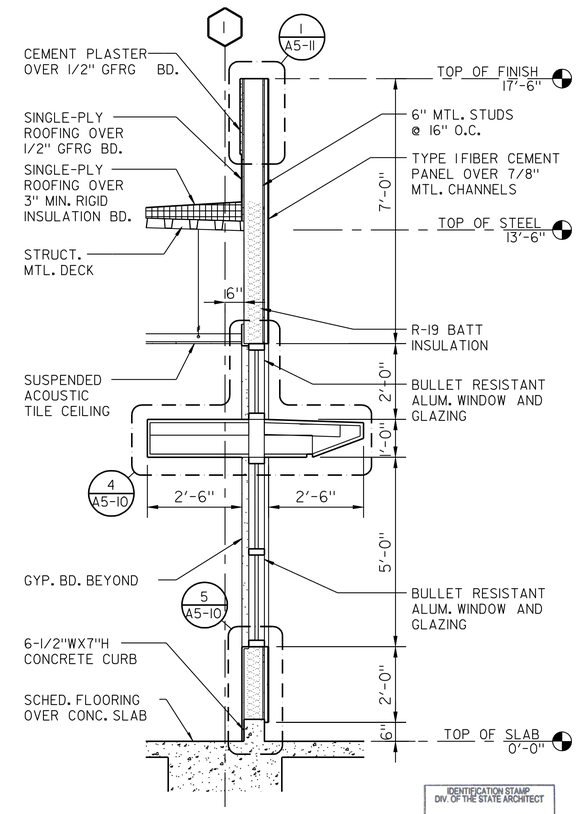

M **WALL SECTION**
SCALE: 1/2" = 1'-0"

IDENTIFICATION STAMP DIV. OF THE STATE ARCHITECT
02 111744
AC BLS SS
DATE

DESIGN	BY G.ROBLEY	CHECKED W.RAMROTH	
DETAILS	BY G.ROBLEY	CHECKED D.WRIGHT	
QUANTITIES	BY G.ROBLEY	CHECKED W.RAMROTH	

PREPARED FOR THE STATE OF CALIFORNIA DEPARTMENT OF TRANSPORTATION

DIVISION OF ENGINEERING SERVICES ARCHITECTURAL AND STRUCTURAL DESIGN

BRIDGE NO. 23W000IR
POST MILE 14.8

EASTBOUND CORDELIA CVEF

CVEF — WALL SECTIONS NO. 1

SHEET **A5-1**

ORIGINAL SCALE IN INCHES FOR REDUCED PLANS 0 1 2 3

CU 04264
EA 0A5351

DISREGARD PRINTS BEARING EARLIER REVISION DATES → 10/19/09 03/22/10 05/06/10 08/23/10 11/22/10 05/02/11

REVISION DATES (PRELIMINARY STAGE ONLY) SHEET OF

DS OSD Imperial Rev. 10/07 9/17/10 09:05

18-MAY-2011 09:05

DIST.	COUNTY	ROUTE	POST MILES TOTAL PROJECT	SHEET NO.	TOTAL SHEETS
04	Sol	12,80	L1.8/L2.0, 13.3/15.7	530	740

LICENSED ARCHITECT — DATE 05/02/11

LICENSED ARCHITECT GREG A. ROBLEY No. C-30986 Exp. 02/05/13 STATE OF CALIFORNIA

5-16-11
PLANS APPROVAL DATE

The State of California or its officers or agents shall not be responsible for the accuracy or completeness of electronic copies of this plan sheet.

KENNEDY/JENKS CONSULTANTS
303 SECOND STREET
SUITE 300 SOUTH
SAN FRANCISCO, CA 94960

SOLANO TRANSPORTATION AUTHORITY
ONE HARBOR CENTER, SUITE 130
SUISUN CITY, CA 94585

CALIFORNIA STATE FIRE MARSHAL APPROVED

Approval of this plan does not authorize or approve any omission or deviation from applicable regulations. Final approval is subject to field inspection. One set of approved plans shall be available on the project site at all times.

Reviewed by: Hans Hennebarque 5/9/11
Hans Hennebarque
Senior Deputy State Fire Marshal

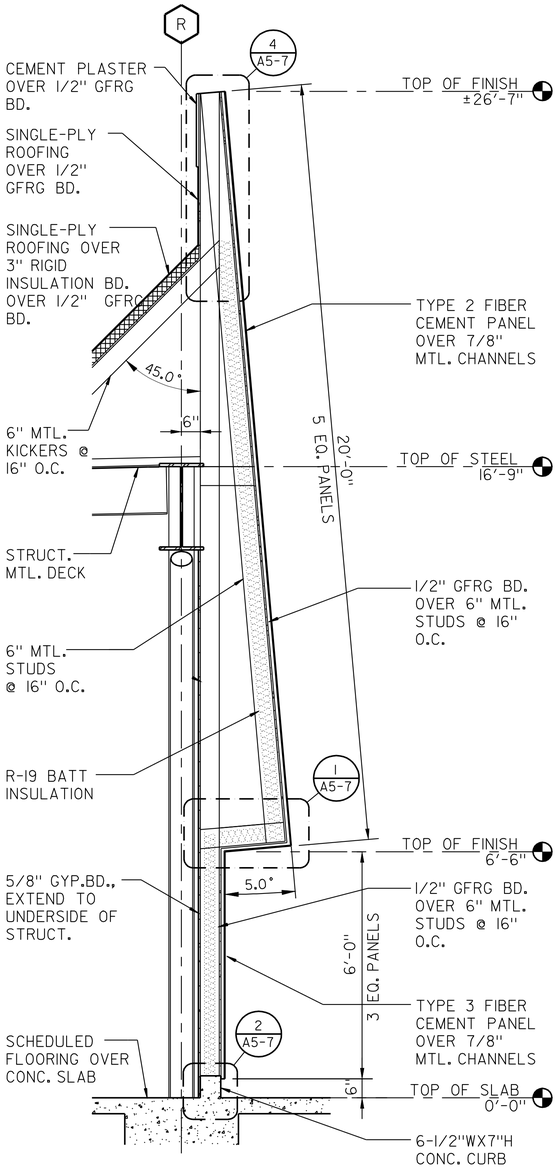

N **WALL SECTION**
SCALE: 1/2" = 1'-0"

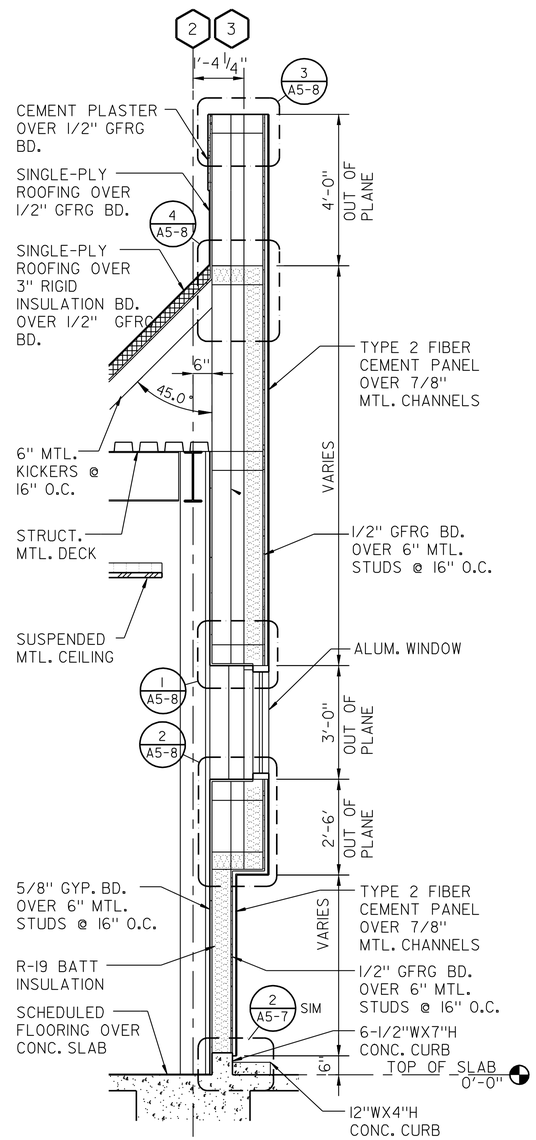

P **WALL SECTION**
SCALE: 1/2" = 1'-0"

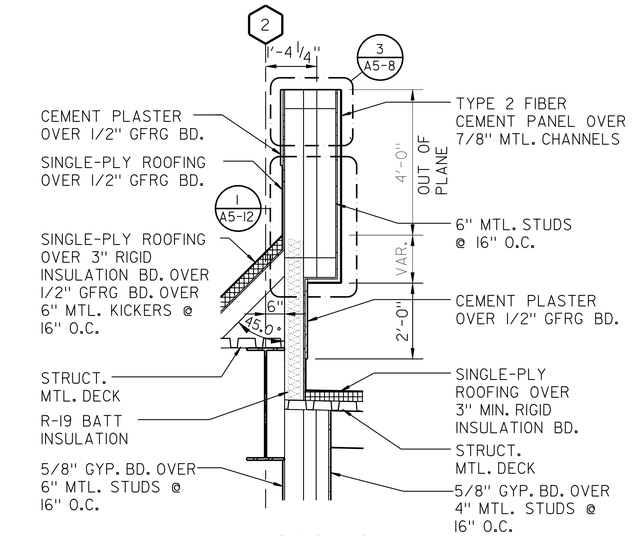

S **WALL SECTION**
SCALE: 1/2" = 1'-0"

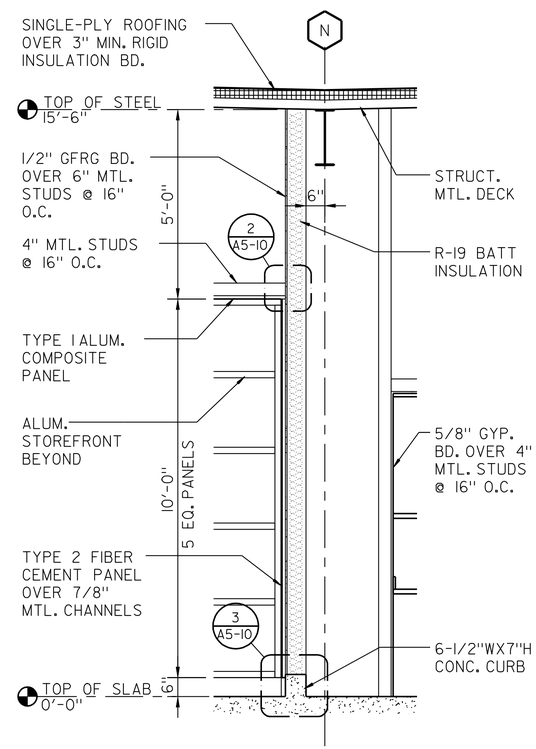

Q **WALL SECTION**
SCALE: 1/2" = 1'-0"

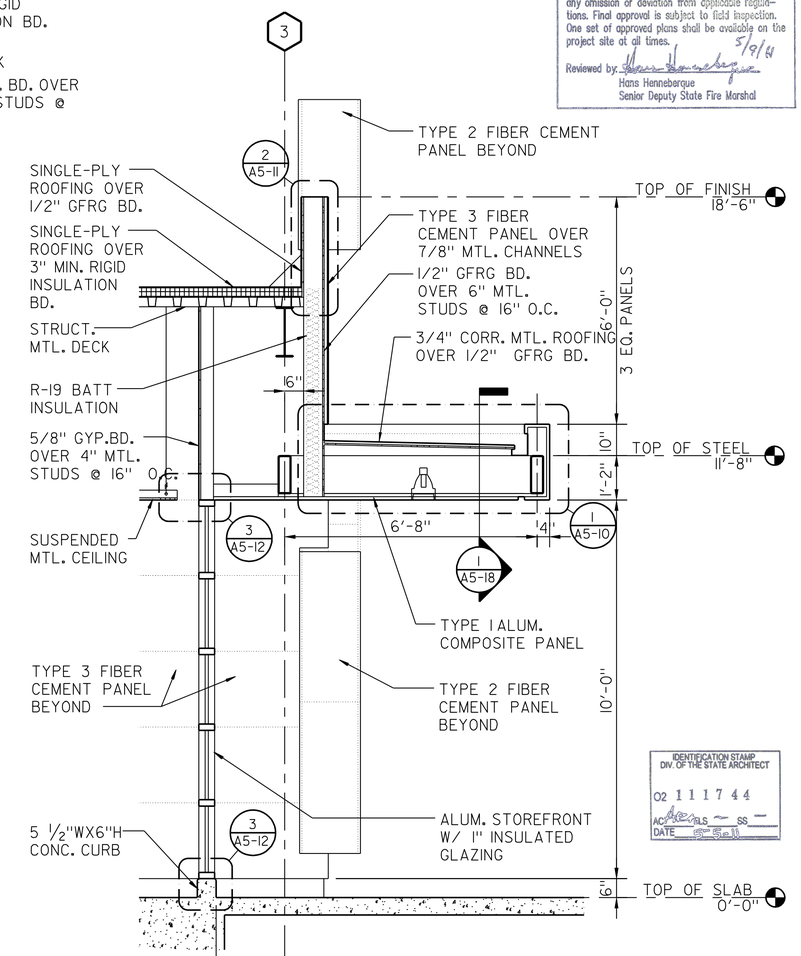

R **WALL SECTION**
SCALE: 1/2" = 1'-0"

IDENTIFICATION STAMP DIV. OF THE STATE ARCHITECT
02 1117 44
AC ALS SS
DATE

	BY	CHECKED
DESIGN	G.ROBLEY	W.RAMROTH
DETAILS	G.ROBLEY	D.WRIGHT
QUANTITIES	G.ROBLEY	W.RAMROTH

ORIGINAL SCALE IN INCHES FOR REDUCED PLANS 0 1 2 3

PREPARED FOR THE STATE OF CALIFORNIA DEPARTMENT OF TRANSPORTATION

DIVISION OF ENGINEERING SERVICES ARCHITECTURAL AND STRUCTURAL DESIGN

CU 04264
EA 0A5351

BRIDGE NO. 23W0001R
POST MILE 14.8

EASTBOUND CORDELIA CVEF

CVEF — WALL SECTIONS NO. 2

SHEET A5-2

DISREGARD PRINTS BEARING EARLIER REVISION DATES → 10/19/09 03/22/10 05/06/10 08/23/10 11/22/10 05/02/11

SHEET OF

DS OSD Imperial Rev. 10/07 9/17/10 09:05

18-MAY-2011 09:05

DIST.	COUNTY	ROUTE	POST MILES TOTAL PROJECT	SHEET NO.	TOTAL SHEETS
04	Sol	12,80	L1.8/L2.0, 13.3/15.7	531	740

LICENSED ARCHITECT — DATE 05/02/11

LICENSED ARCHITECT GREG A. ROBLEY No. C-30986 Exp. 02/05/13 STATE OF CALIFORNIA

5-16-11
PLANS APPROVAL DATE

The State of California or its officers or agents shall not be responsible for the accuracy or completeness of electronic copies of this plan sheet.

KENNEDY/JENKS CONSULTANTS
303 SECOND STREET
SUITE 300 SOUTH
SAN FRANCISCO, CA 94960

SOLANO TRANSPORTATION AUTHORITY
ONE HARBOR CENTER, SUITE 130
SUISUN CITY, CA 94585

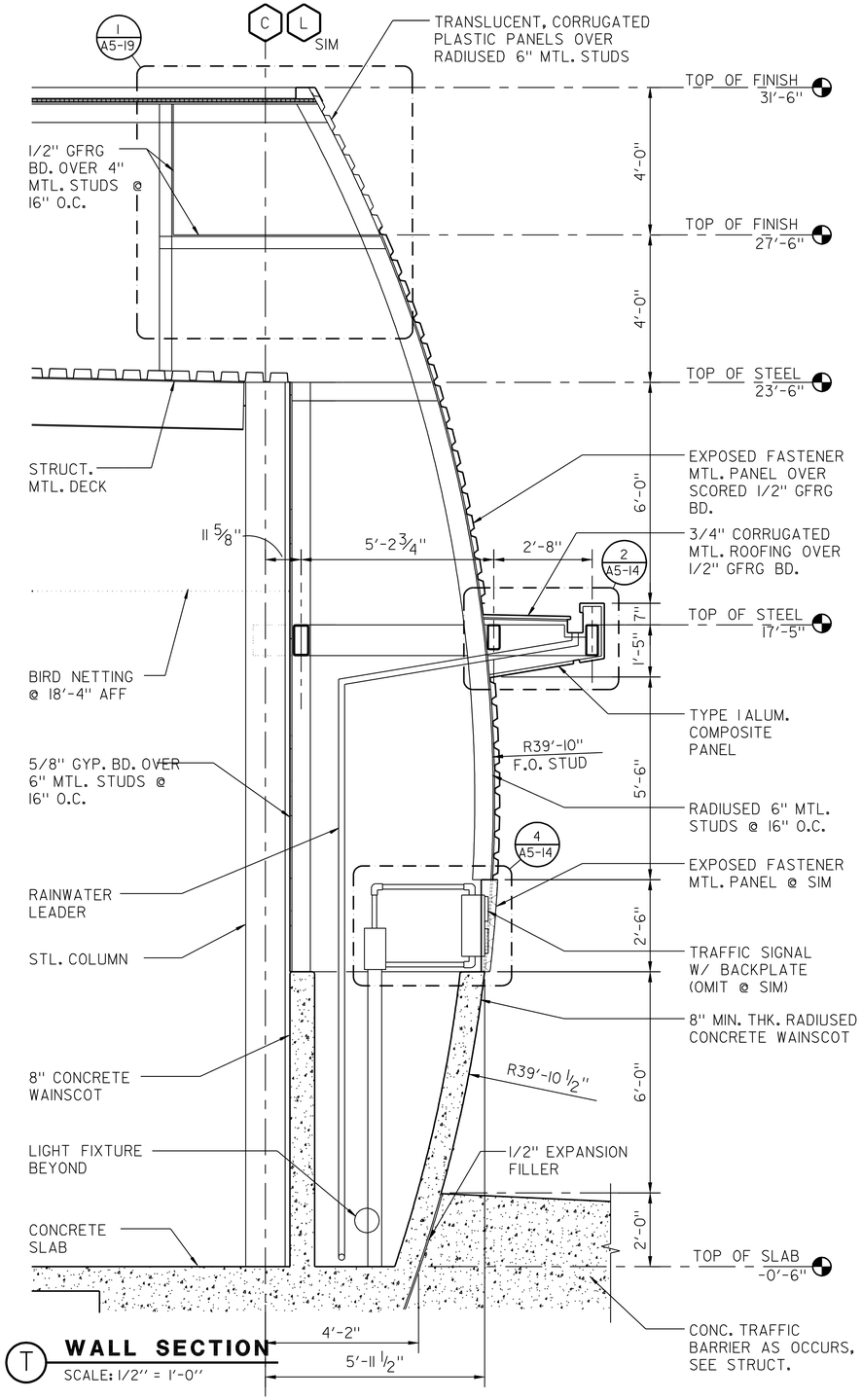

T WALL SECTION
SCALE: 1/2" = 1'-0"

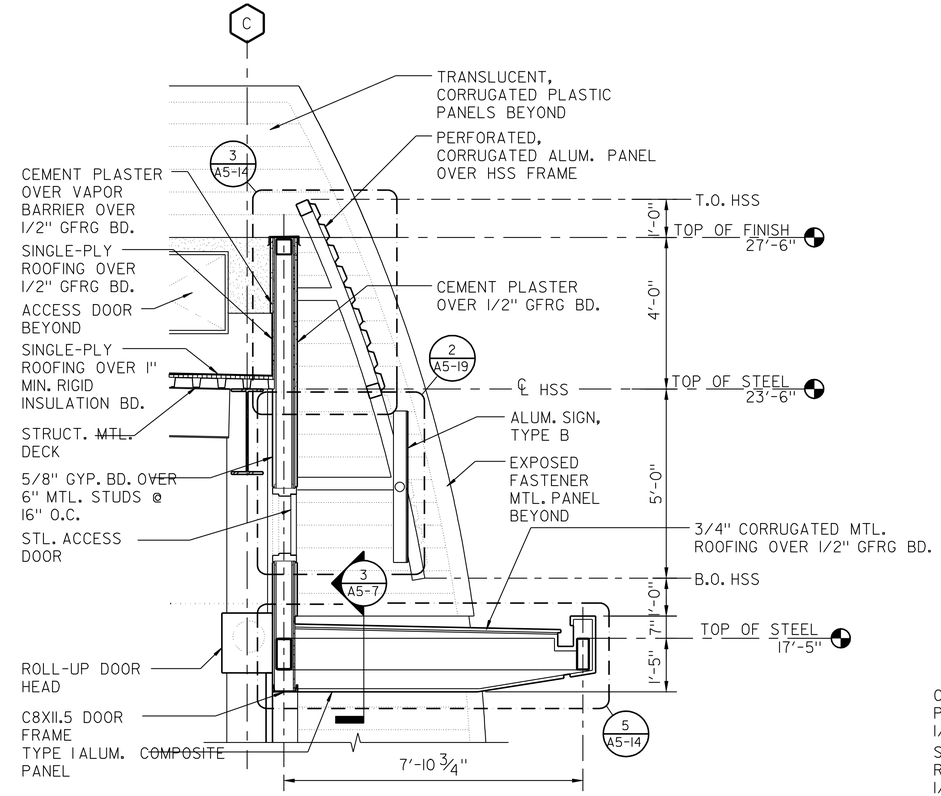

U WALL SECTION
SCALE: 1/2" = 1'-0"

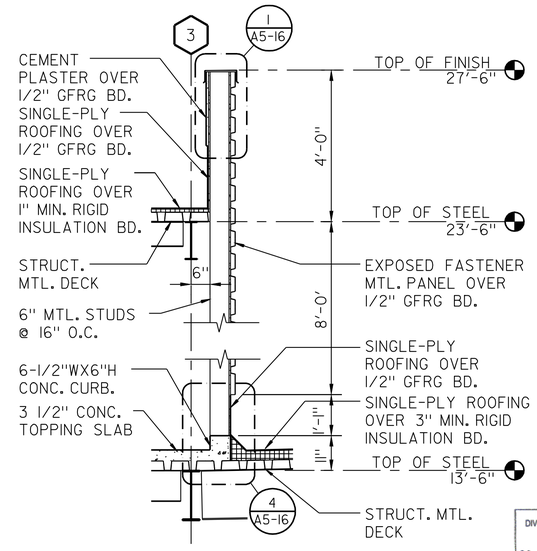

V WALL SECTION
SCALE: 1/2" = 1'-0"

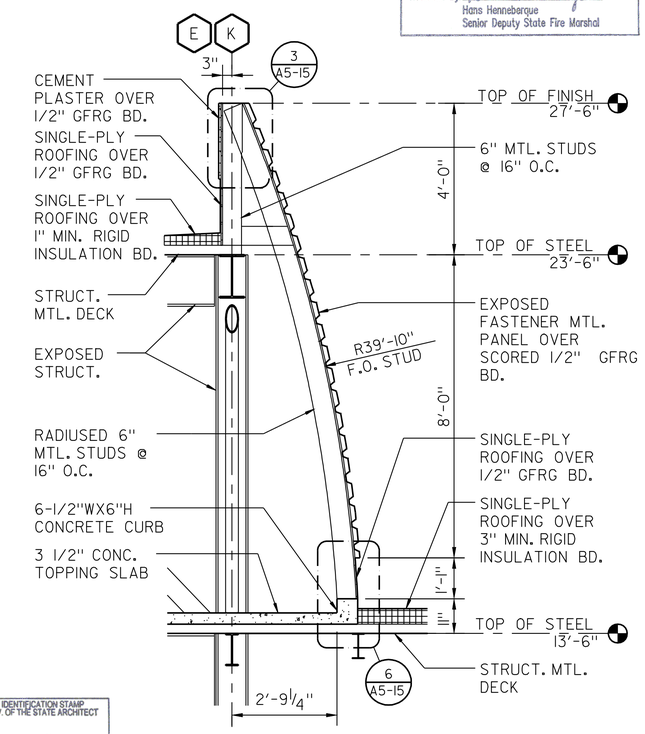

W WALL SECTION
SCALE: 1/2" = 1'-0"

CALIFORNIA STATE FIRE MARSHAL APPROVED

Approval of this plan does not authorize or approve any omission or deviation from applicable regulations. Final approval is subject to field inspection. One set of approved plans shall be available on the project site at all times.

Reviewed by: Hans Hannebarque 5/9/11
Hans Hannebarque
Senior Deputy State Fire Marshal

IDENTIFICATION STAMP DIV. OF THE STATE ARCHITECT
02 111744
AC ALS — SS —
DATE 5-5-11

	BY	CHECKED
DESIGN	G.ROBLEY	W.RAMROTH
DETAILS	G.ROBLEY	D.WRIGHT
QUANTITIES	G.ROBLEY	W.RAMROTH

ORIGINAL SCALE IN INCHES FOR REDUCED PLANS 0 1 2 3

PREPARED FOR THE STATE OF CALIFORNIA DEPARTMENT OF TRANSPORTATION

DIVISION OF ENGINEERING SERVICES
ARCHITECTURAL AND STRUCTURAL DESIGN

CU 04264
EA 0A5351

BRIDGE NO. 23W0001R
POST MILE 14.8

EASTBOUND CORDELIA CVEF

CVEF — WALL SECTIONS NO. 3

SHEET **A5-3**

DISREGARD PRINTS BEARING EARLIER REVISION DATES → 10/19/09 03/22/10 05/06/10 08/23/10 11/22/10 05/02/11

REVISION DATES (PRELIMINARY STAGE ONLY) SHEET OF

DS OSD Imperial Rev. 10/07 9/17/10 09:06

18-MAY-2011 09:06

DIST.	COUNTY	ROUTE	POST MILES TOTAL PROJECT	SHEET NO.	TOTAL SHEETS
04	Sol	12,80	L1.8/L2.0, 13.3/15.7	532	740

LICENSED ARCHITECT — DATE 05/02/11

LICENSED ARCHITECT GREG A. ROBLEY No. C-30986 Exp. 02/05/13 STATE OF CALIFORNIA

5-16-11
PLANS APPROVAL DATE

The State of California or its officers or agents shall not be responsible for the accuracy or completeness of electronic copies of this plan sheet.

KENNEDY/JENKS CONSULTANTS
303 SECOND STREET
SUITE 300 SOUTH
SAN FRANCISCO, CA 94960

SOLANO TRANSPORTATION AUTHORITY
ONE HARBOR CENTER, SUITE 130
SUISUN CITY, CA 94585

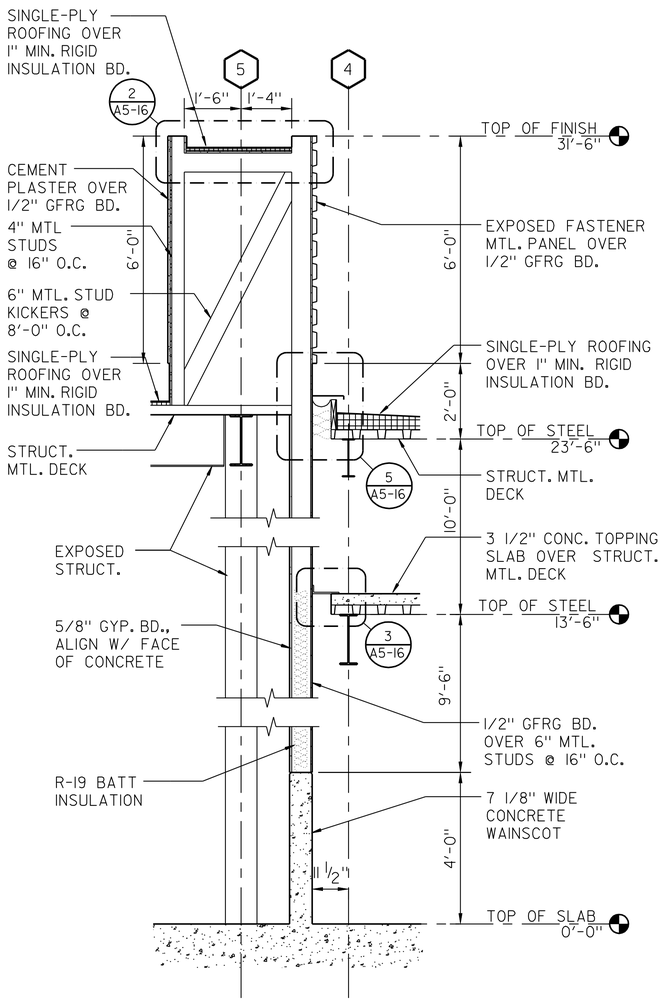

X WALL SECTION
SCALE: 1/2" = 1'-0"

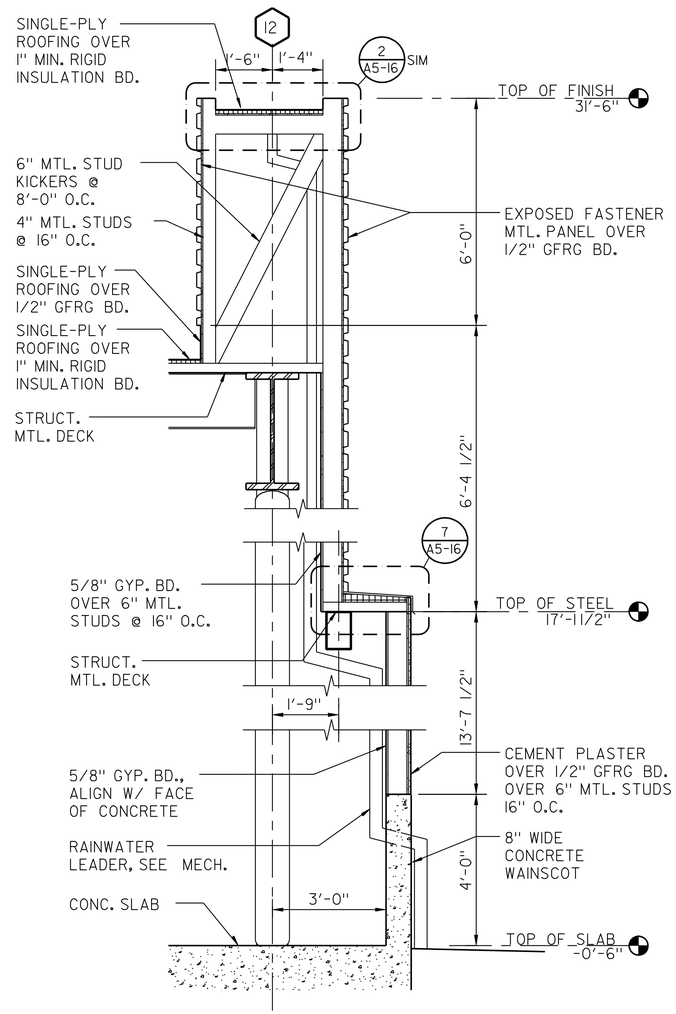

Y WALL SECTION
SCALE: 1/2" = 1'-0"

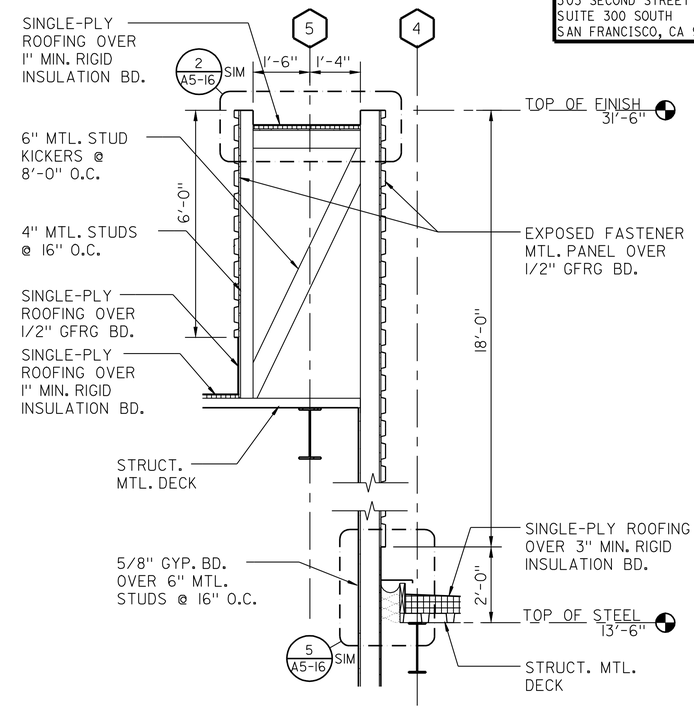

Z WALL SECTION
SCALE: 1/2" = 1'-0"

CALIFORNIA STATE FIRE MARSHAL APPROVED

Approval of this plan does not authorize or approve any omission or deviation from applicable regulations. Final approval is subject to field inspection. One set of approved plans shall be available on the project site at all times. 5/9/11

Reviewed by: Hans Henneberque
Hans Henneberque
Senior Deputy State Fire Marshal

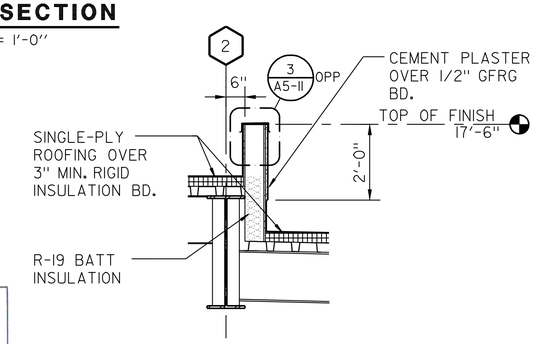

EE WALL SECTION
SCALE: 1/2" = 1'-0"

IDENTIFICATION STAMP DIV. OF THE STATE ARCHITECT
02 111744
ACCEPTABLE — SS —
DATE 5-5-11

DESIGN	BY G.ROBLEY	CHECKED W.RAMROTH	
DETAILS	BY G.ROBLEY	CHECKED D.WRIGHT	
QUANTITIES	BY G.ROBLEY	CHECKED W.RAMROTH	

PREPARED FOR THE STATE OF CALIFORNIA DEPARTMENT OF TRANSPORTATION

DIVISION OF ENGINEERING SERVICES ARCHITECTURAL AND STRUCTURAL DESIGN

BRIDGE NO. 23W000IR
POST MILE 14.8

EASTBOUND CORDELIA CVEF

CVEF — WALL SECTIONS NO. 4

SHEET **A5-4**

ORIGINAL SCALE IN INCHES FOR REDUCED PLANS 0 1 2 3

CU 04264
EA 0A5351

DISREGARD PRINTS BEARING EARLIER REVISION DATES → 10/19/09 03/22/10 05/06/10 08/23/10 11/22/10 05/02/11

REVISION DATES (PRELIMINARY STAGE ONLY) SHEET OF

DS OSD imperialRev.10/07 9/17/10 09:06

18-MAY-2011 09:06

DIST.	COUNTY	ROUTE	POST MILES TOTAL PROJECT	SHEET NO.	TOTAL SHEETS
04	Sol	12,80	L1.8/L2.0, 13.3/15.7	533	740

LICENSED ARCHITECT — DATE 05/02/11

LICENSED ARCHITECT GREG A. ROBLEY No. C-30986 Exp. 02/05/13 STATE OF CALIFORNIA

5-16-11
PLANS APPROVAL DATE

The State of California or its officers or agents shall not be responsible for the accuracy or completeness of electronic copies of this plan sheet.

KENNEDY/JENKS CONSULTANTS
303 SECOND STREET
SUITE 300 SOUTH
SAN FRANCISCO, CA 94960

SOLANO TRANSPORTATION AUTHORITY
ONE HARBOR CENTER, SUITE 130
SUISUN CITY, CA 94585

CALIFORNIA STATE FIRE MARSHAL APPROVED

Approval of this plan does not authorize or approve any omission or deviation from applicable regulations. Final approval is subject to field inspection. One set of approved plans shall be available on the project site at all times.

Reviewed by: Hans Henneberque 5/9/11
Hans Henneberque
Senior Deputy State Fire Marshal

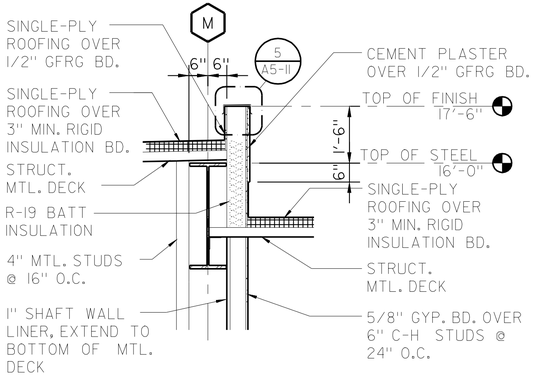

FF **WALL SECTION**
SCALE: 1/2" = 1'-0"

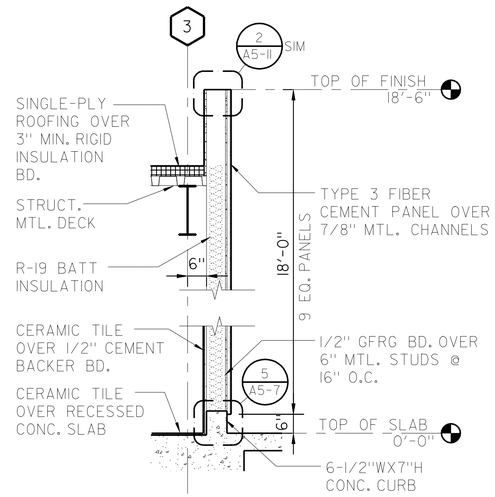

BB **WALL SECTION**
SCALE: 1/2" = 1'-0"

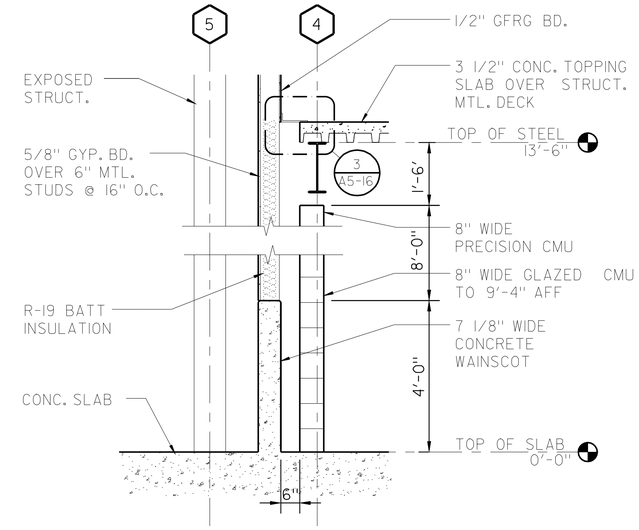

GG **WALL SECTION**
SCALE: 1/2" = 1'-0"

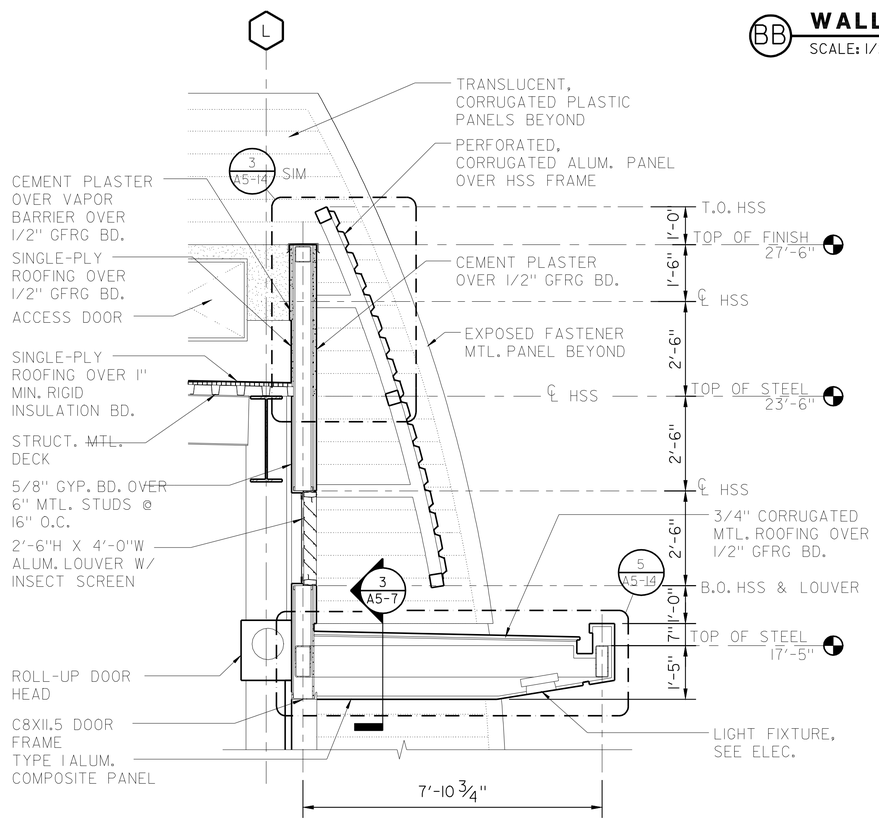

AA **WALL SECTION**
SCALE: 1/2" = 1'-0"

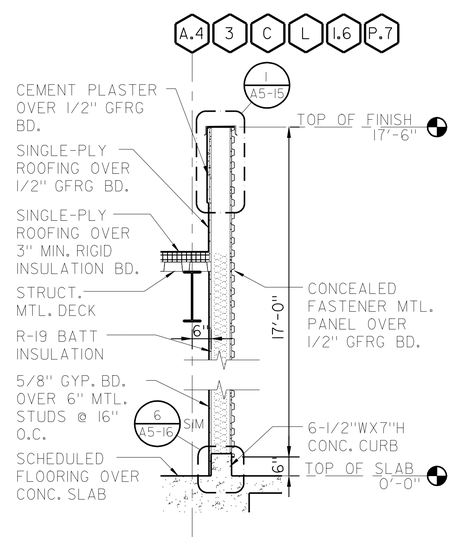

CC **WALL SECTION**
SCALE: 1/2" = 1'-0"

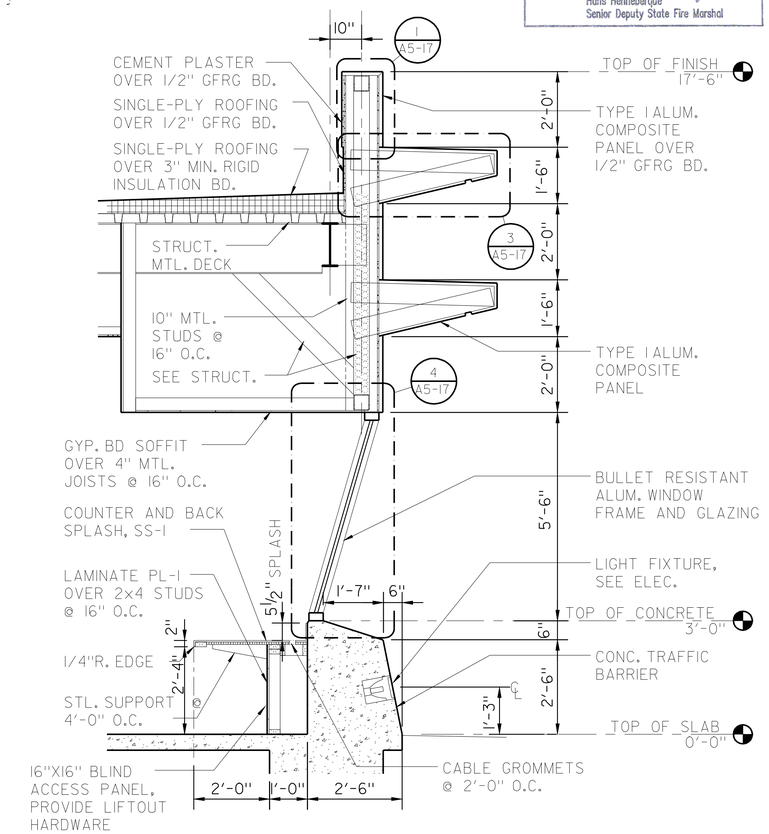

DD **WALL SECTION**
SCALE: 1/2" = 1'-0"

IDENTIFICATION STAMP DIV. OF THE STATE ARCHITECT
02 111744
ACT DLS SS
DATE

DESIGN	BY G.ROBLEY	CHECKED W.RAMROTH	
DETAILS	BY G.ROBLEY	CHECKED D.WRIGHT	
QUANTITIES	BY G.ROBLEY	CHECKED W.RAMROTH	

PREPARED FOR THE STATE OF CALIFORNIA DEPARTMENT OF TRANSPORTATION

DIVISION OF ENGINEERING SERVICES
ARCHITECTURAL AND STRUCTURAL DESIGN

BRIDGE NO. 23W000IR
POST MILE 14.8

EASTBOUND CORDELIA CVEF

CVEF — WALL SECTIONS NO. 5

SHEET A5-5

ORIGINAL SCALE IN INCHES FOR REDUCED PLANS 0 1 2 3

CU 04264
EA 0A5351

DISREGARD PRINTS BEARING EARLIER REVISION DATES → 10/19/09 03/22/10 05/06/10 08/23/10 11/22/10 05/02/11

REVISION DATES (PRELIMINARY STAGE ONLY) SHEET OF

DS OSD Imperial Rev. 10/07 9/17/10 09:06

18-MAY-2011 09:06

DIST.	COUNTY	ROUTE	POST MILES TOTAL PROJECT	SHEET NO.	TOTAL SHEETS
04	Sol	12,80	L1.8/L2.0, 13.3/15.7	534	740

LICENSED ARCHITECT — DATE 05/02/11

LICENSED ARCHITECT GREG A. ROBLEY No. C-30986 Exp. 02/05/13 STATE OF CALIFORNIA

5-16-11
PLANS APPROVAL DATE

The State of California or its officers or agents shall not be responsible for the accuracy or completeness of electronic copies of this plan sheet.

KENNEDY/JENKS CONSULTANTS
303 SECOND STREET
SUITE 300 SOUTH
SAN FRANCISCO, CA 94960

SOLANO TRANSPORTATION AUTHORITY
ONE HARBOR CENTER, SUITE 130
SUISUN CITY, CA 94585

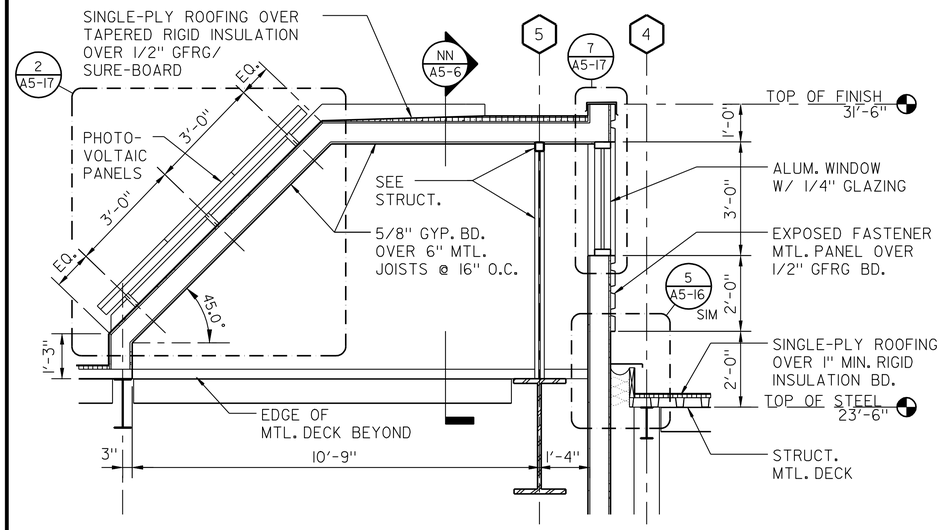

MM **WALL SECTION**
SCALE: 1/2" = 1'-0"

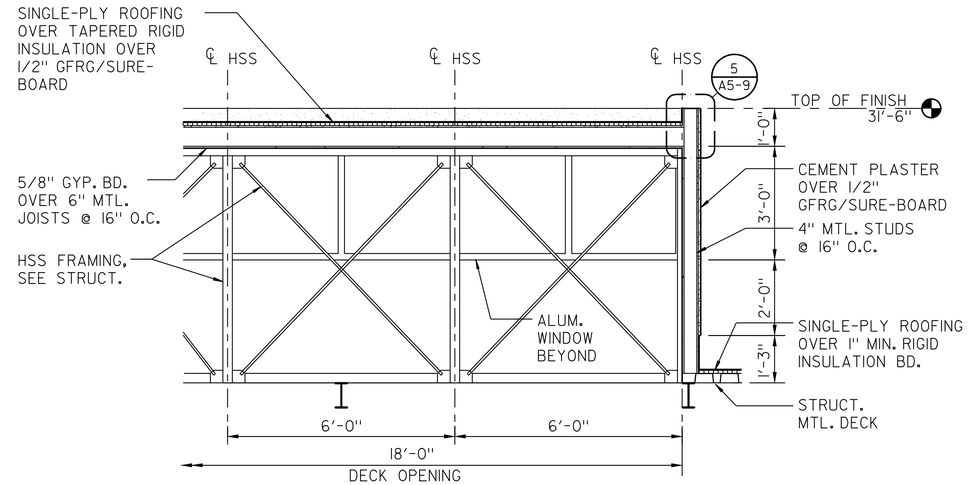

NN **WALL SECTION**
SCALE: 1/2" = 1'-0"

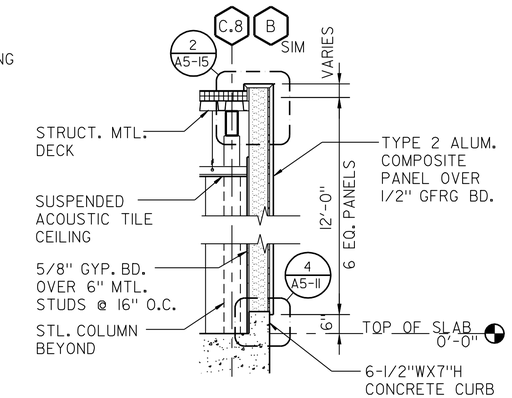

JJ **WALL SECTION**
SCALE: 1/2" = 1'-0"

CALIFORNIA STATE FIRE MARSHAL APPROVED

Approval of this plan does not authorize or approve any omission or deviation from applicable regulations. Final approval is subject to field inspection. One set of approved plans shall be available on the project site at all times.

Reviewed by: Hans Hanneberque 5/9/11
Hans Hanneberque
Senior Deputy State Fire Marshal

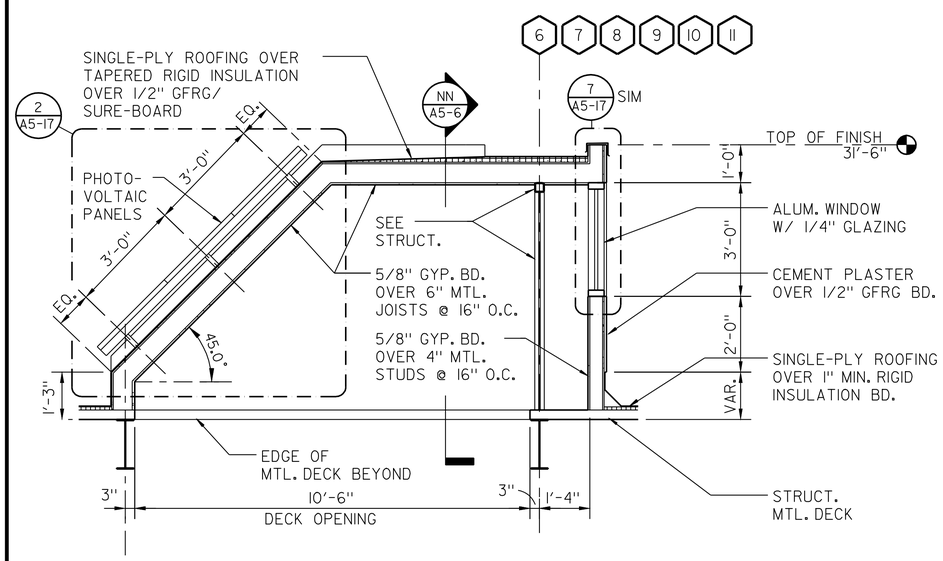

PP **WALL SECTION**
SCALE: 1/2" = 1'-0"

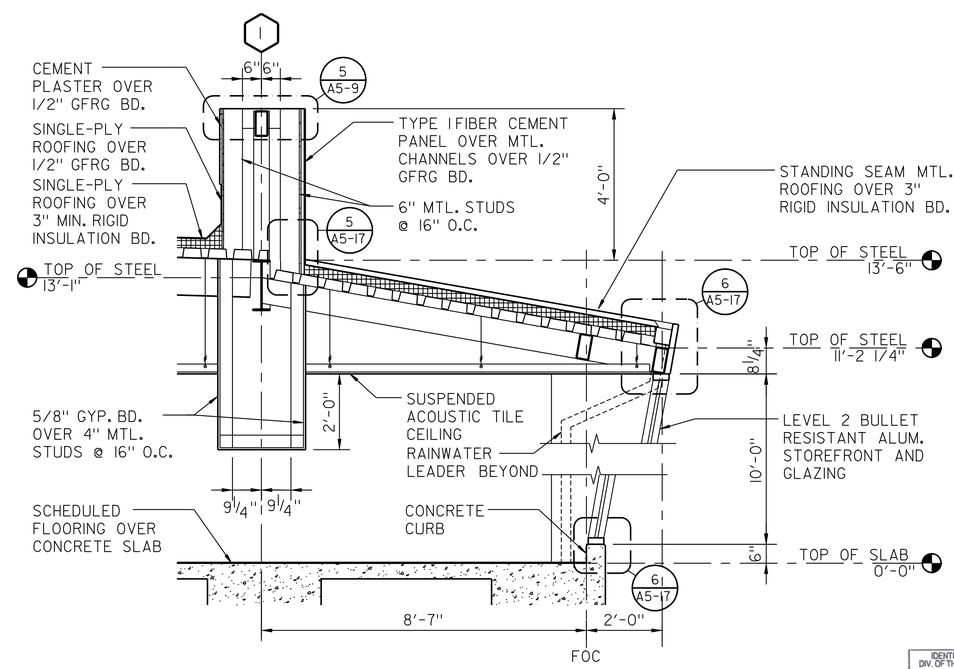

HH **WALL SECTION**
SCALE: 1/2" = 1'-0"

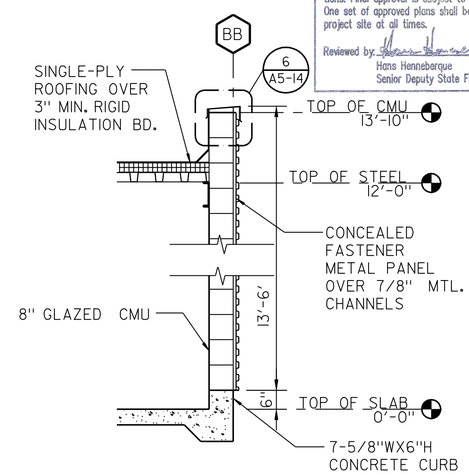

KK **WALL SECTION**
SCALE: 1/2" = 1'-0"

IDENTIFICATION STAMP DIV. OF THE STATE ARCHITECT
02 1117 44
AC ALS SS
DATE 5-5-11

	BY	CHECKED
DESIGN	G.ROBLEY	W.RAMROTH
DETAILS	G.ROBLEY	D.WRIGHT
QUANTITIES	G.ROBLEY	W.RAMROTH

ORIGINAL SCALE IN INCHES FOR REDUCED PLANS 0 1 2 3

PREPARED FOR THE STATE OF CALIFORNIA DEPARTMENT OF TRANSPORTATION

DIVISION OF ENGINEERING SERVICES
ARCHITECTURAL AND STRUCTURAL DESIGN

CU 04264
EA 0A5351

BRIDGE NO. 23W0001R
POST MILE 14.8

EASTBOUND CORDELIA CVEF

CVEF — WALL SECTIONS NO. 6

SHEET **A5-6**

DISREGARD PRINTS BEARING EARLIER REVISION DATES → REVISION DATES (PRELIMINARY STAGE ONLY) 10/19/09 03/22/10 05/06/10 08/23/10 11/22/10 05/02/11 SHEET OF

DS OSD Imperial Rev. 10/07 9/17/10 09:06

18-MAY-2011 09:06

DIST.	COUNTY	ROUTE	POST MILES TOTAL PROJECT	SHEET NO.	TOTAL SHEETS
04	Sol	12,80	L1.8/L2.0, 13.3/15.7	535	740

LICENSED ARCHITECT — DATE 05/02/11

LICENSED ARCHITECT GREG A. ROBLEY No. C-30986 Exp. 02/05/13 STATE OF CALIFORNIA

5-16-11
PLANS APPROVAL DATE

The State of California or its officers or agents shall not be responsible for the accuracy or completeness of electronic copies of this plan sheet.

KENNEDY/JENKS CONSULTANTS
303 SECOND STREET
SUITE 300 SOUTH
SAN FRANCISCO, CA 94960

SOLANO TRANSPORTATION AUTHORITY
ONE HARBOR CENTER, SUITE 130
SUISUN CITY, CA 94585

NOTE:
SEE STRUCTURAL DRAWINGS FOR STUD BRACING REQUIREMENTS

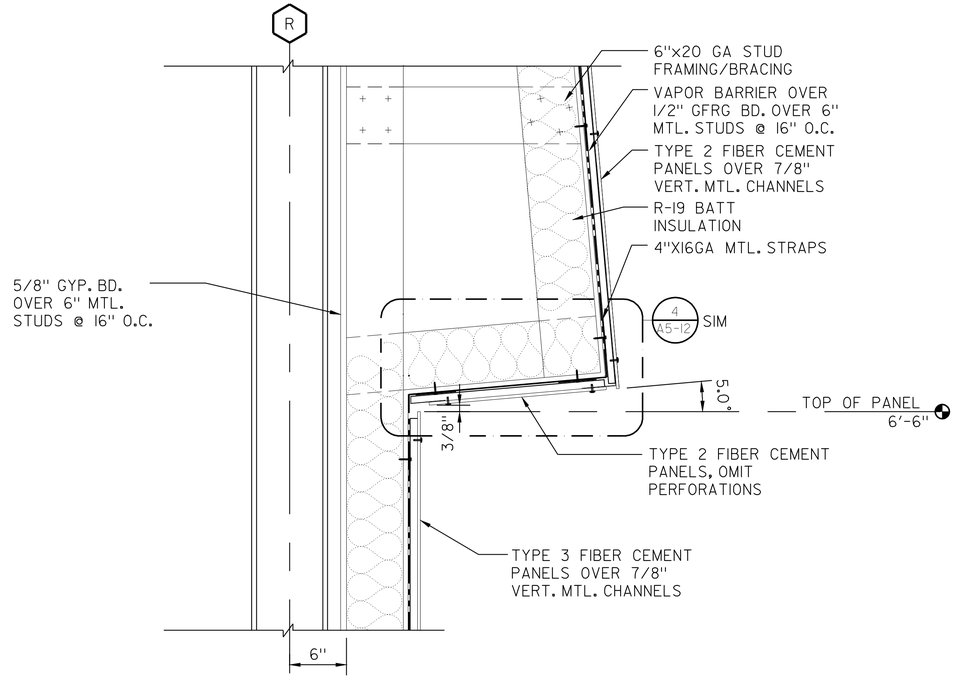

1 WALL SECTION
SCALE: 1-1/2" = 1'-0"

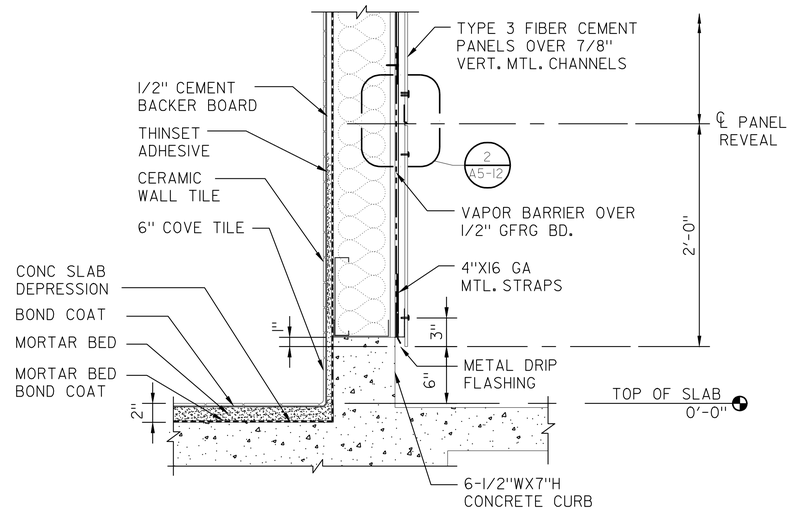

5 WALL SECTION
SCALE: 1-1/2" = 1'-0"

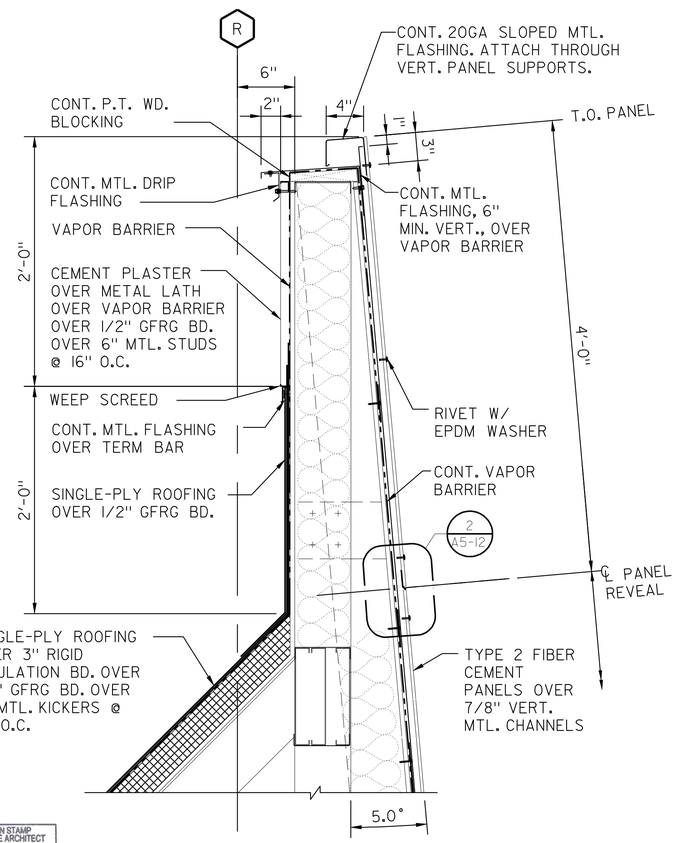

4 WALL SECTION
SCALE: 1-1/2" = 1'-0"

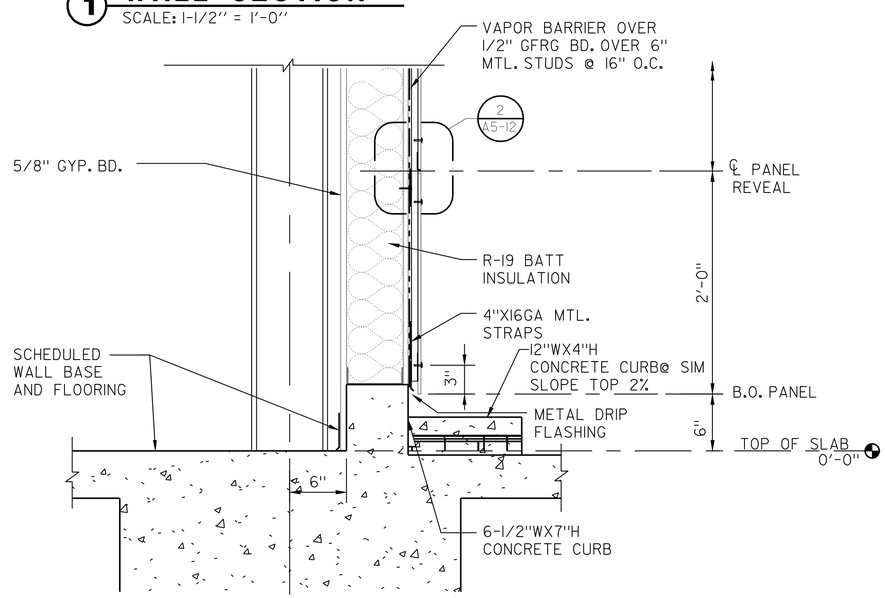

2 WALL SECTION
SCALE: 1-1/2" = 1'-0"

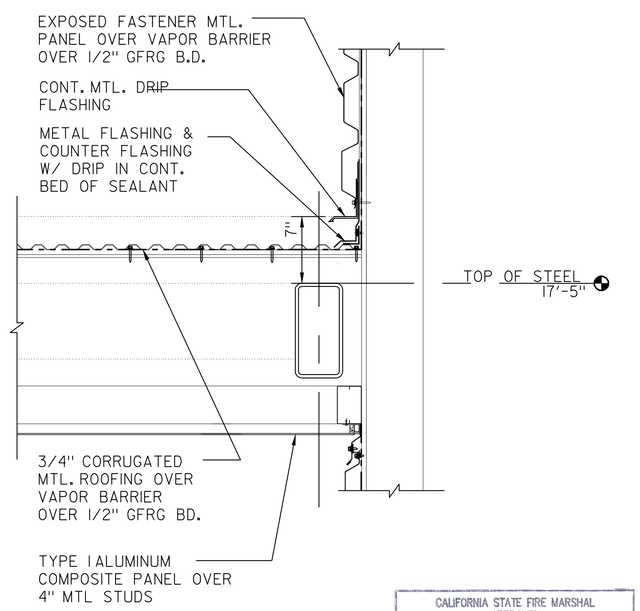

3 WALLSECTION
SCALE: 1-1/2" = 1'-0"

CALIFORNIA STATE FIRE MARSHAL APPROVED

Approval of this plan does not authorize or approve any omission or deviation from applicable regulations. Final approval is subject to field inspection. One set of approved plans shall be available on the project site at all times.

Reviewed by: 5/9/11
Hans Hennebarque
Senior Deputy State Fire Marshal

IDENTIFICATION STAMP
DIV. OF THE STATE ARCHITECT
02 1 1 1 7 4 4
AC ALS — SS —
DATE

DESIGN	BY G.ROBLEY	CHECKED W.RAMROTH	
DETAILS	BY G.ROBLEY	CHECKED D.WRIGHT	
QUANTITIES	BY G.ROBLEY	CHECKED W.RAMROTH	

PREPARED FOR THE STATE OF CALIFORNIA DEPARTMENT OF TRANSPORTATION

DIVISION OF ENGINEERING SERVICES
ARCHITECTURAL AND STRUCTURAL DESIGN

BRIDGE NO. 23W0001R
POST MILE 14.8

EASTBOUND CORDELIA CVEF
CVEF — SECTION DETAILS NO. 1

SHEET A5-7

40a535wba5-07.dgn
DS OSD Imperial Rev. 10/07 18-MAY-2011 09:06

ORIGINAL SCALE IN INCHES FOR REDUCED PLANS 0 1 2 3

CU 04264
EA 0A5351

DISREGARD PRINTS BEARING EARLIER REVISION DATES → 10/19/09 03/22/10 05/06/10 08/23/10 11/22/10 05/02/11

REVISION DATES (PRELIMINARY STAGE ONLY) SHEET OF

18-MAY-2011 09:06
40a535wba5-07.dgn

DIST.	COUNTY	ROUTE	POST MILES TOTAL PROJECT	SHEET NO.	TOTAL SHEETS
04	Sol	12,80	L1.8/L2.0, 13.3/15.7	536	740

LICENSED ARCHITECT — DATE 05/02/11

LICENSED ARCHITECT GREG A. ROBLEY No. C-30986 Exp. 02/05/13 STATE OF CALIFORNIA

5-16-11
PLANS APPROVAL DATE

The State of California or its officers or agents shall not be responsible for the accuracy or completeness of electronic copies of this plan sheet.

KENNEDY/JENKS CONSULTANTS
303 SECOND STREET
SUITE 300 SOUTH
SAN FRANCISCO, CA 94960

SOLANO TRANSPORTATION AUTHORITY
ONE HARBOR CENTER, SUITE 130
SUISUN CITY, CA 94585

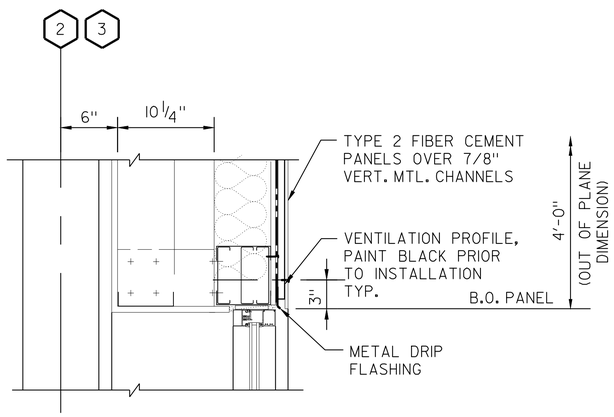

1 **WALL DETAIL**
SCALE: 1-1/2" = 1'-0"

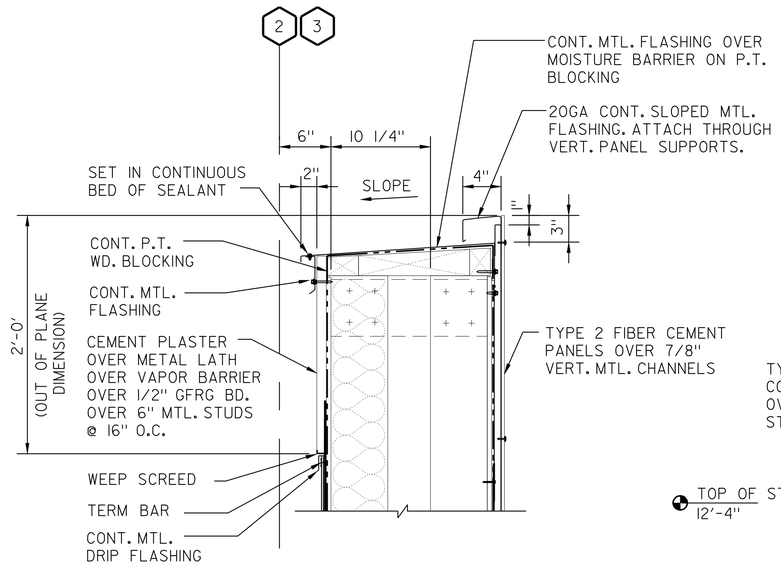

3 **WALL DETAIL**
SCALE: 1-1/2" = 1'-0"

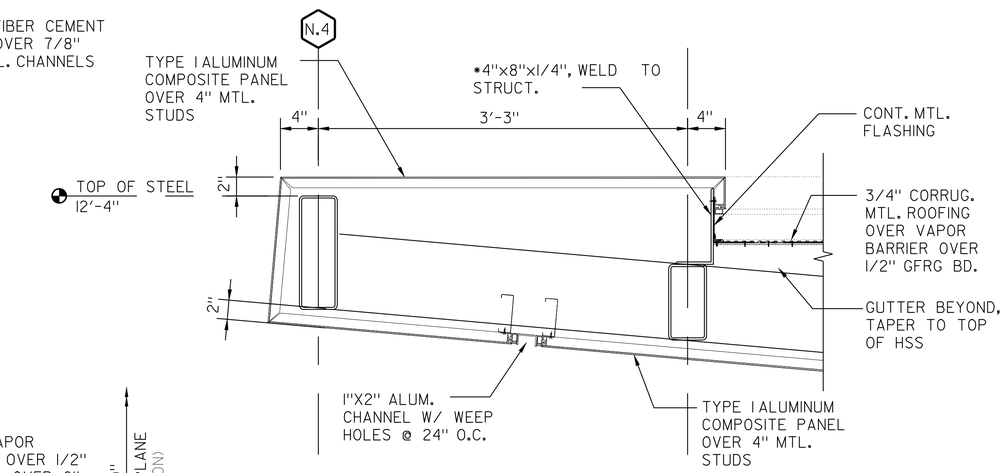

5 **WALL DETAIL**
SCALE: 11/2" = 1'-0"

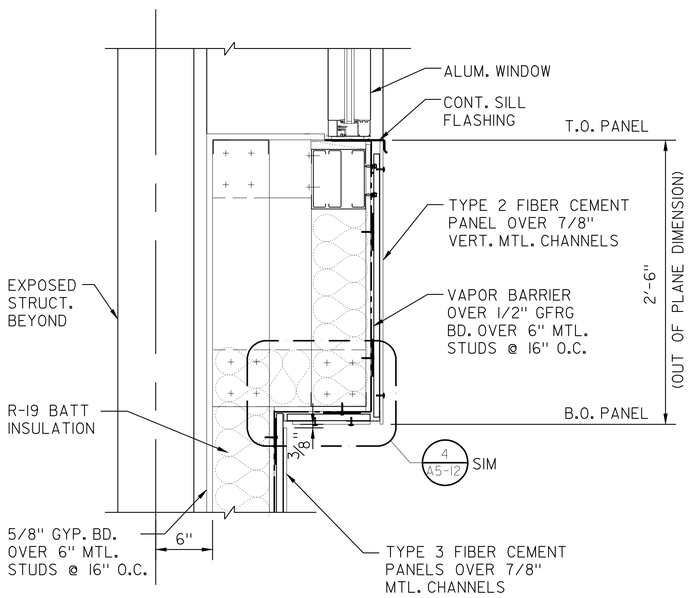

2 **WALL DETAIL**
SCALE: 1-1/2" = 1'-0"

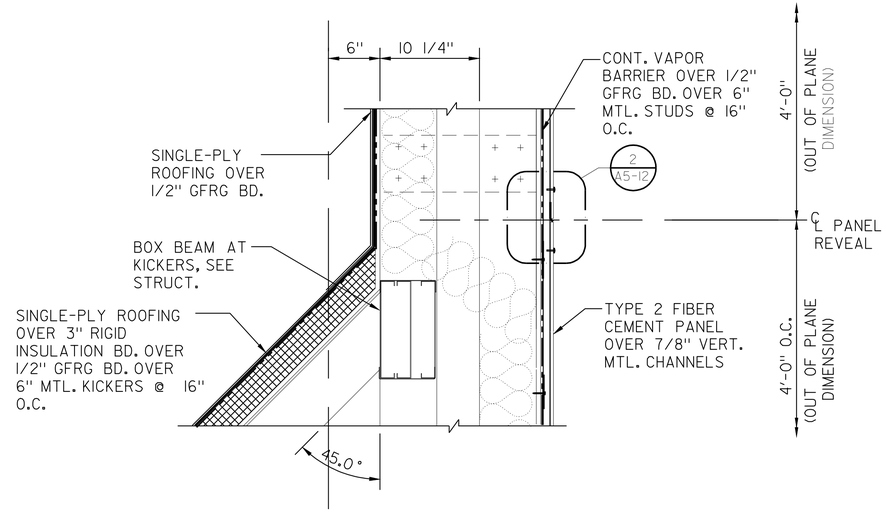

4 **WALL DETAIL**
SCALE: 1-1/2" = 1'-0"

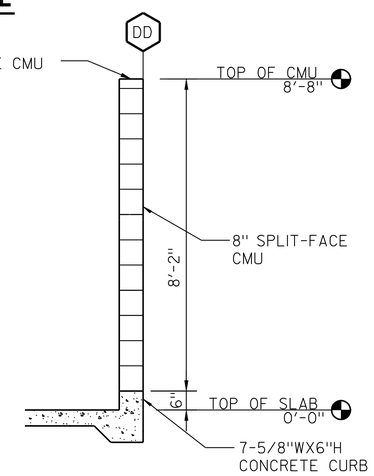

LL **WALL SECTION**
SCALE: 1/2" = 1'-0"

CALIFORNIA STATE FIRE MARSHAL APPROVED
Approval of this plan does not authorize or approve any omission or deviation from applicable regulations. Final approval is subject to field inspection. One set of approved plans shall be available on the project site at all times.
Reviewed by: 5/9/11
Hans Henneberque
Senior Deputy State Fire Marshal

IDENTIFICATION STAMP
DIV. OF THE STATE ARCHITECT
02 1117 44
AC ___ PLS ___ SS ___
DATE 5-5-11

DESIGN	BY G.ROBLEY	CHECKED W.RAMROTH	
DETAILS	BY G.ROBLEY	CHECKED D.WRIGHT	
QUANTITIES	BY G.ROBLEY	CHECKED W.RAMROTH	

PREPARED FOR THE STATE OF CALIFORNIA DEPARTMENT OF TRANSPORTATION

DIVISION OF ENGINEERING SERVICES ARCHITECTURAL AND STRUCTURAL DESIGN

BRIDGE NO. 23W000IR
POST MILE 14.8

EASTBOUND CORDELIA CVEF
CVEF — SECTION DETAILS NO. 2

SHEET **A5-8**

ORIGINAL SCALE IN INCHES FOR REDUCED PLANS 0 1 2 3

CU 04264
EA 0A5351

DISREGARD PRINTS BEARING EARLIER REVISION DATES → 10/19/09 03/22/10 05/06/10 08/23/10 11/22/10 05/02/11

REVISION DATES (PRELIMINARY STAGE ONLY) SHEET OF

DS OSD ImperialRev.10/07 9/17/10 09:07

18-MAY-2011 09:07

DIST.	COUNTY	ROUTE	POST MILES TOTAL PROJECT	SHEET NO.	TOTAL SHEETS
04	Sol	12,80	L1.8/L2.0, 13.3/15.7	537	740

LICENSED ARCHITECT — DATE 05/02/11

LICENSED ARCHITECT GREG A. ROBLEY No. C-30986 Exp. 02/05/13 STATE OF CALIFORNIA

5-16-11
PLANS APPROVAL DATE

The State of California or its officers or agents shall not be responsible for the accuracy or completeness of electronic copies of this plan sheet.

KENNEDY/JENKS CONSULTANTS
303 SECOND STREET
SUITE 300 SOUTH
SAN FRANCISCO, CA 94960

SOLANO TRANSPORTATION AUTHORITY
ONE HARBOR CENTER, SUITE 130
SUISUN CITY, CA 94585

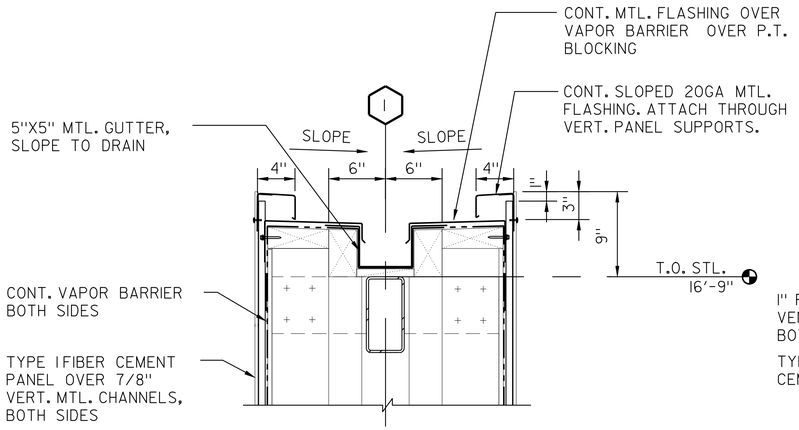

1 **WALL DETAIL**
SCALE: 1-1/2" = 1'-0"

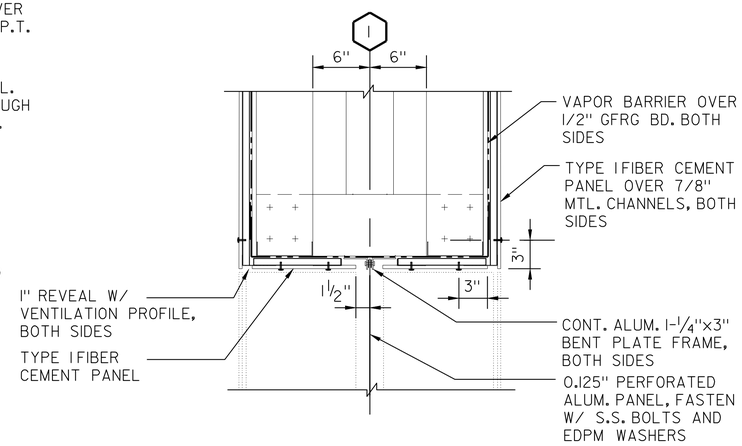

3 **WALL DETAIL**
SCALE: 1-1/2" = 1'-0"

CALIFORNIA STATE FIRE MARSHAL
APPROVED

Approval of this plan does not authorize or approve any omission or deviation from applicable regulations. Final approval is subject to field inspection. One set of approved plans shall be available on the project site at all times.

Reviewed by: 5/9/11
Hans Henneberque
Senior Deputy State Fire Marshal

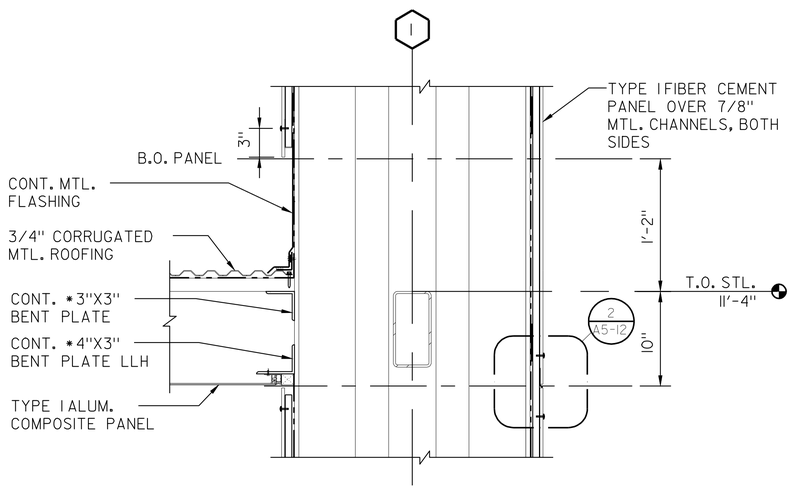

2 **WALL DETAIL**
SCALE: 1-1/2" = 1'-0"

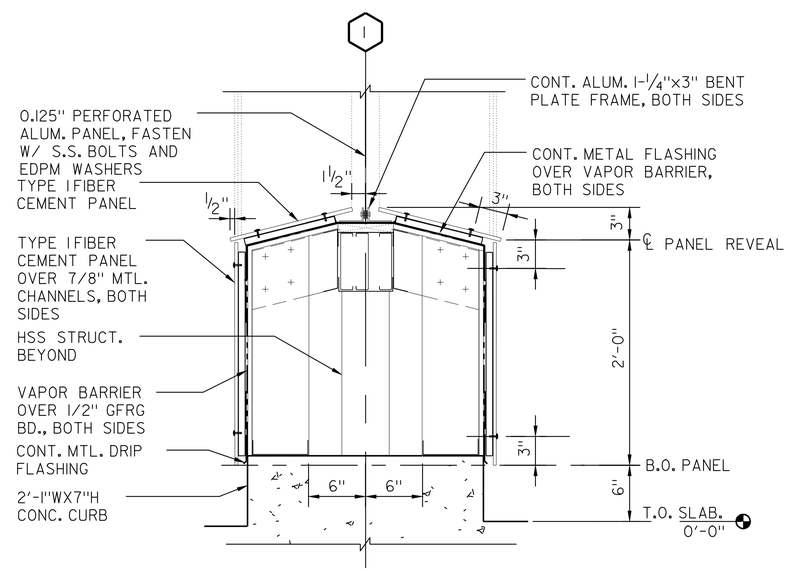

4 **WALL DETAIL**
SCALE: 1-1/2" = 1'-0"

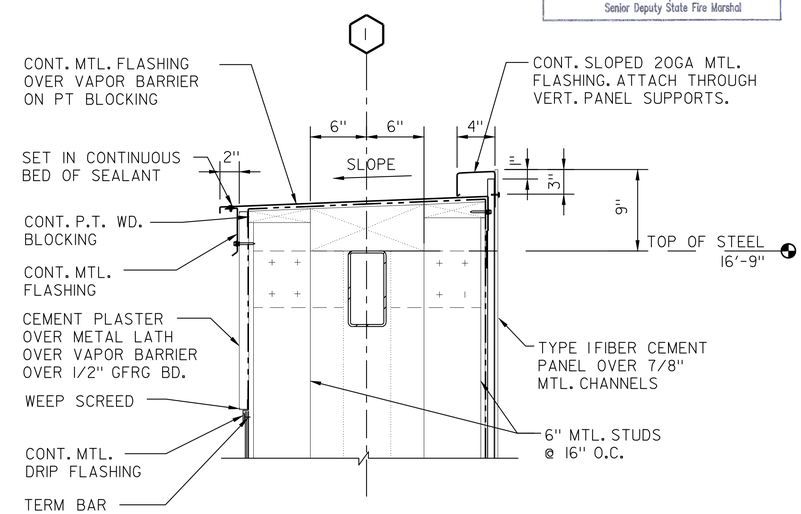

5 **WALL DETAIL**
SCALE: 1-1/2" = 1'-0"

IDENTIFICATION STAMP
DIV. OF THE STATE ARCHITECT
02 111744
ACCESS CLS — SS —
DATE 5-9-11

	BY	CHECKED
DESIGN	G.ROBLEY	W.RAMROTH
DETAILS	G.ROBLEY	D.WRIGHT
QUANTITIES	G.ROBLEY	W.RAMROTH

PREPARED FOR THE STATE OF CALIFORNIA DEPARTMENT OF TRANSPORTATION

DIVISION OF ENGINEERING SERVICES
ARCHITECTURAL AND STRUCTURAL DESIGN

CU 04264
EA 0A5351

BRIDGE NO. 23W0001R
POST MILE 14.8

EASTBOUND CORDELIA CVEF
CVEF — SECTION DETAILS NO. 3

SHEET **A5-9**

ORIGINAL SCALE IN INCHES FOR REDUCED PLANS 0 1 2 3

DISREGARD PRINTS BEARING EARLIER REVISION DATES → REVISION DATES (PRELIMINARY STAGE ONLY) 10/19/09 03/22/10 05/06/10 08/23/10 11/22/10 05/02/11 SHEET OF

DS OSD Imperial Rev. 10/07 9/17/10 09:07

18-MAY-2011 09:07

DIST.	COUNTY	ROUTE	POST MILES TOTAL PROJECT	SHEET NO.	TOTAL SHEETS
04	Sol	12,80	L1.8/L2.0, 13.3/15.7	538	740

LICENSED ARCHITECT — DATE 05/02/11

LICENSED ARCHITECT GREG A. ROBLEY No. C-30986 Exp. 02/05/13 STATE OF CALIFORNIA

5-16-11
PLANS APPROVAL DATE

The State of California or its officers or agents shall not be responsible for the accuracy or completeness of electronic copies of this plan sheet.

KENNEDY/JENKS CONSULTANTS
303 SECOND STREET
SUITE 300 SOUTH
SAN FRANCISCO, CA 94960

SOLANO TRANSPORTATION AUTHORITY
ONE HARBOR CENTER, SUITE 130
SUISUN CITY, CA 94585

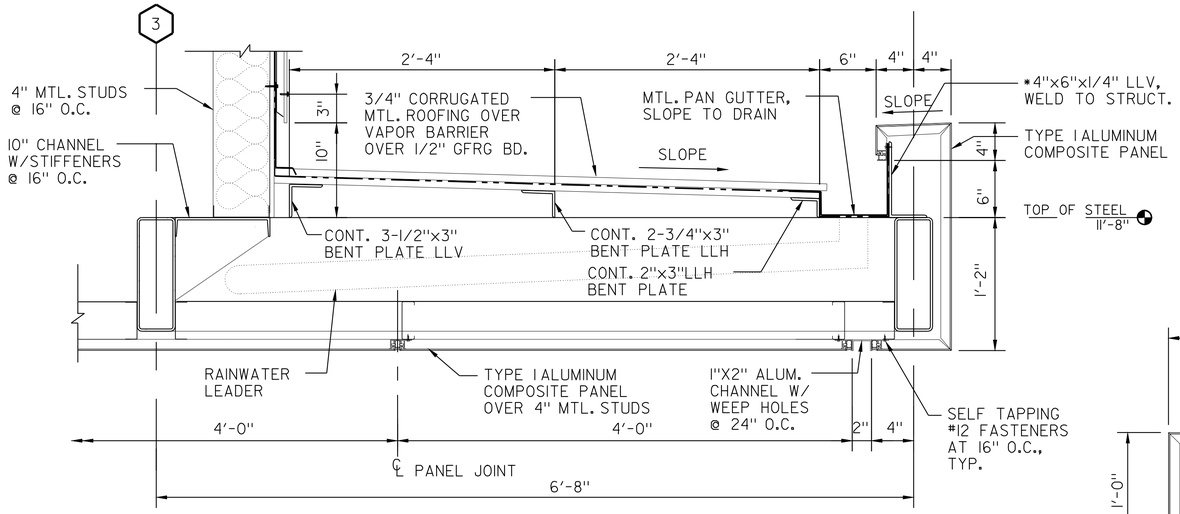

1 WALL DETAIL
SCALE: 1-1/2" = 1'-0"

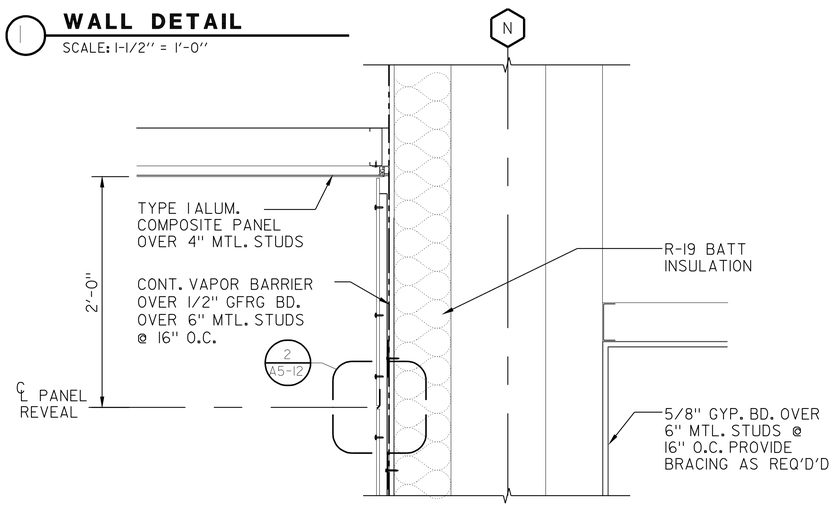

2 WALL DETAIL
SCALE: 1-1/2" = 1'-0"

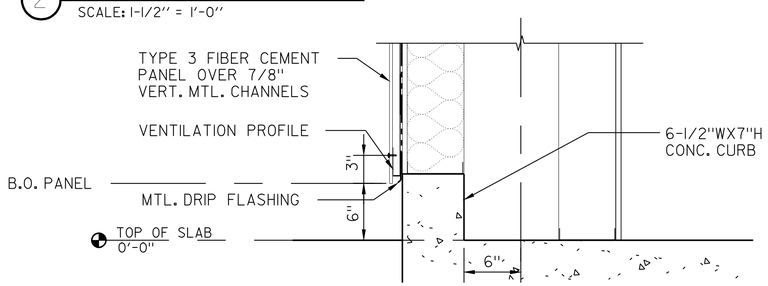

3 WALL DETAIL
SCALE: 1-1/2" = 1'-0"

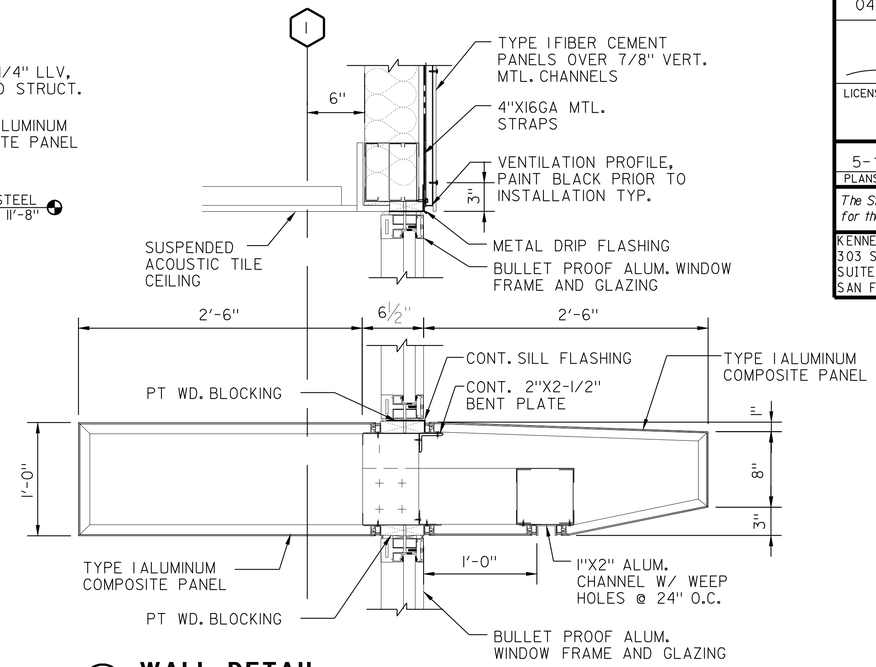

4 WALL DETAIL
SCALE: 1-1/2" = 1'-0"

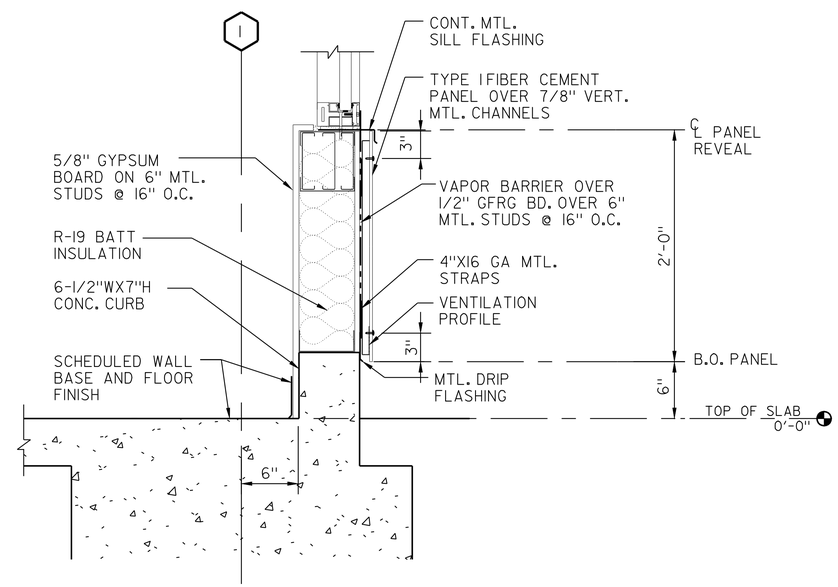

5 WALL DETAIL
SCALE: 1-1/2" = 1'-0"

CALIFORNIA STATE FIRE MARSHAL APPROVED

Approval of this plan does not authorize or approve any omission or deviation from applicable regulations. Final approval is subject to field inspection. One set of approved plans shall be available on the project site at all times.

Reviewed by: 5/9/11
Hans Henneberque
Senior Deputy State Fire Marshal

IDENTIFICATION STAMP DIV. OF THE STATE ARCHITECT
02 1117 44
ACCESS PLS — SS —
DATE

	BY	CHECKED
DESIGN	G.ROBLEY	W.RAMROTH
DETAILS	G.ROBLEY	D.WRIGHT
QUANTITIES	G.ROBLEY	W.RAMROTH

PREPARED FOR THE STATE OF CALIFORNIA DEPARTMENT OF TRANSPORTATION

DIVISION OF ENGINEERING SERVICES ARCHITECTURAL AND STRUCTURAL DESIGN

BRIDGE NO. 23W0001R
POST MILE 14.8

EASTBOUND CORDELIA CVEF

CVEF — SECTION DETAILS NO. 4

SHEET A5-10

ORIGINAL SCALE IN INCHES FOR REDUCED PLANS 0 1 2 3

CU 04264
EA 0A5351

DISREGARD PRINTS BEARING EARLIER REVISION DATES → 10/19/09 03/22/10 05/06/10 08/23/10 11/22/10 05/02/11

SHEET OF

DS OSD Imperial Rev. 10/07 9/17/10 09:07

18-MAY-2011 09:07

DIST.	COUNTY	ROUTE	POST MILES TOTAL PROJECT	SHEET NO.	TOTAL SHEETS
04	Sol	12,80	L1.8/L2.0, 13.3/15.7	539	740

LICENSED ARCHITECT — DATE 05/02/11

LICENSED ARCHITECT GREG A. ROBLEY No. C-30986 Exp. 02/05/13 STATE OF CALIFORNIA

5-16-11
PLANS APPROVAL DATE

The State of California or its officers or agents shall not be responsible for the accuracy or completeness of electronic copies of this plan sheet.

KENNEDY/JENKS CONSULTANTS
303 SECOND STREET
SUITE 300 SOUTH
SAN FRANCISCO, CA 94960

SOLANO TRANSPORTATION AUTHORITY
ONE HARBOR CENTER, SUITE 130
SUISUN CITY, CA 94585

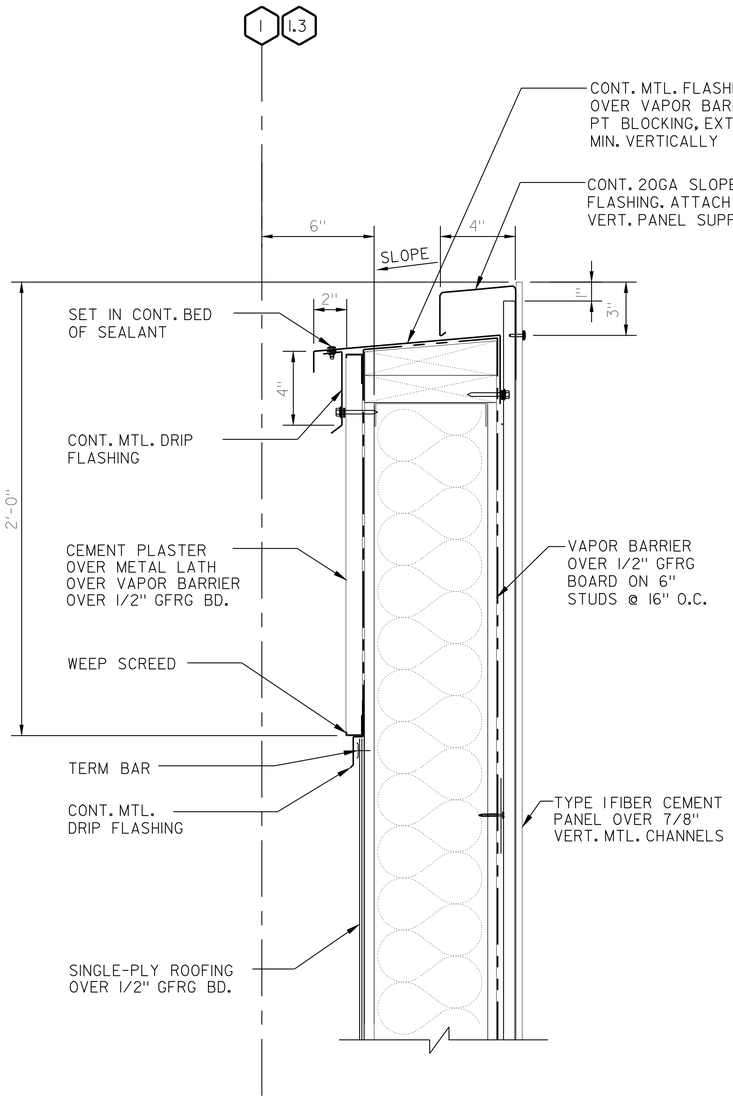

1 **PARAPET DETAIL**
SCALE: 3" = 1'-0"

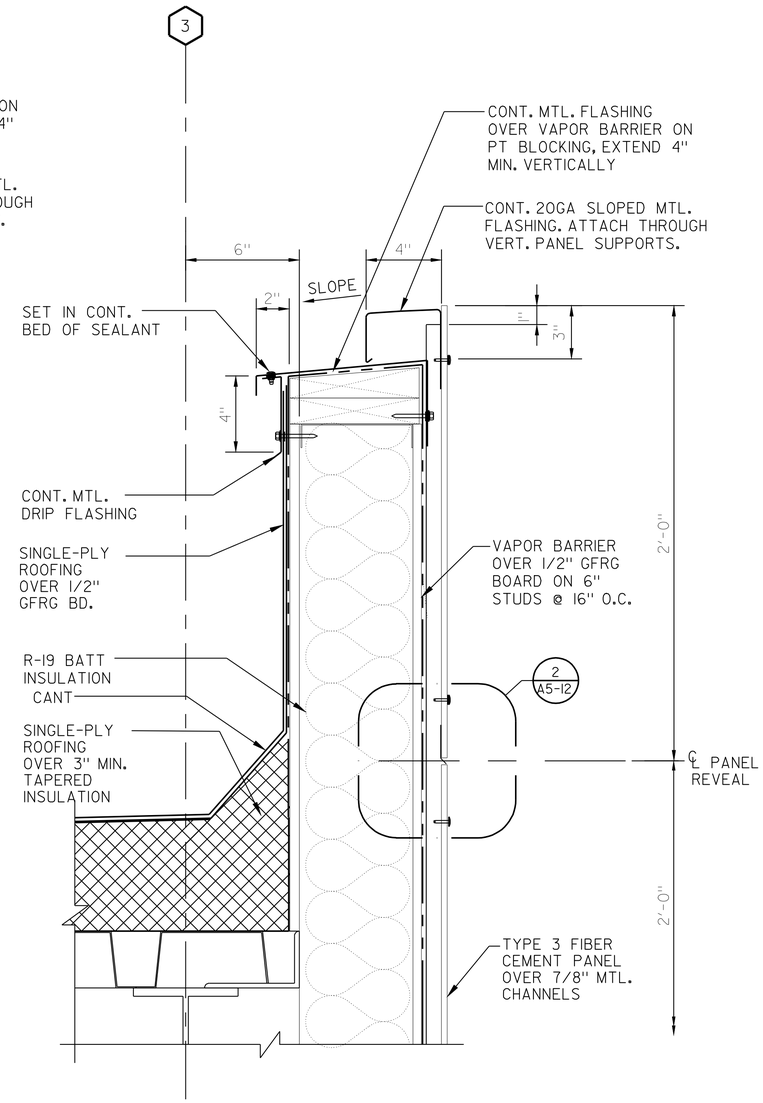

2 **PARAPET DETAIL**
SCALE: 3" = 1'-0"

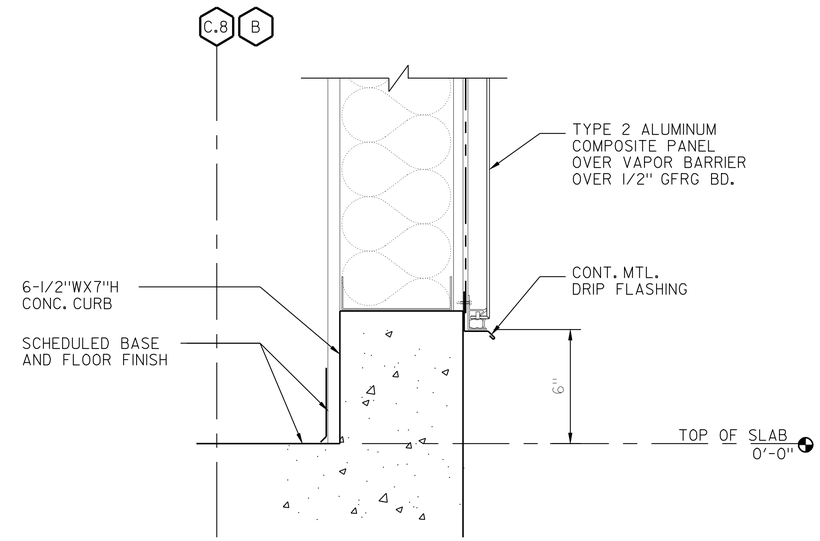

4 **WALL DETAIL**
SCALE: 3' = 1'-0"

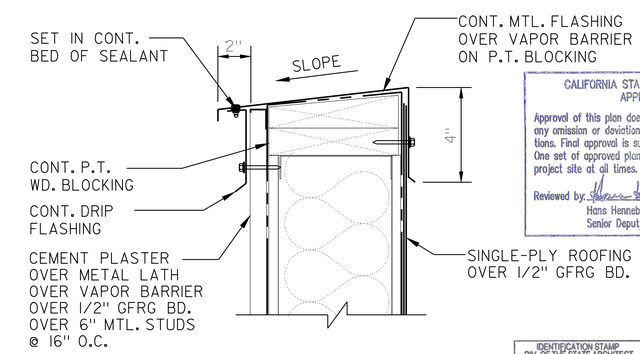

CALIFORNIA STATE FIRE MARSHAL APPROVED

Approval of this plan does not authorize or approve any omission or deviation from applicable regulations. Final approval is subject to field inspection. One set of approved plans shall be available on the project site at all times.

Reviewed by: 5/9/11
Hans Hennebarque
Senior Deputy State Fire Marshal

3 **PARAPET DETAIL**
SCALE: 3' = 1'-0"

IDENTIFICATION STAMP DIV. OF THE STATE ARCHITECT
02 111744
ACCEPTS ~ SS ~
DATE

	DESIGN	BY G.ROBLEY	CHECKED W.RAMROTH
	DETAILS	BY G.ROBLEY	CHECKED D.WRIGHT
	QUANTITIES	BY G.ROBLEY	CHECKED W.RAMROTH

PREPARED FOR THE STATE OF CALIFORNIA DEPARTMENT OF TRANSPORTATION

DIVISION OF ENGINEERING SERVICES
ARCHITECTURAL AND STRUCTURAL DESIGN

BRIDGE NO. 23W0001R
POST MILE 14.8

EASTBOUND CORDELIA CVEF

CVEF — SECTION DETAILS NO. 5

SHEET **A5-11**

40a535wba5-11.dgn
DS OSD imperialRev.10/07 18-MAY-2011 09:07

ORIGINAL SCALE IN INCHES FOR REDUCED PLANS 0 1 2 3

CU 04264
EA 0A5351

DISREGARD PRINTS BEARING EARLIER REVISION DATES → REVISION DATES (PRELIMINARY STAGE ONLY) 10/19/09 03/22/10 05/06/10 08/23/10 11/22/10 05/02/11 SHEET OF

18-MAY-2011 09:07
40a535wba5-11.dgn

DIST.	COUNTY	ROUTE	POST MILES TOTAL PROJECT	SHEET NO.	TOTAL SHEETS
04	Sol	12,80	L1.8/L2.0, 13.3/15.7	540	740

LICENSED ARCHITECT — 05/02/11 DATE

LICENSED ARCHITECT GREG A. ROBLEY No. C-30986 Exp. 02/05/13 STATE OF CALIFORNIA

5-16-11
PLANS APPROVAL DATE

The State of California or its officers or agents shall not be responsible for the accuracy or completeness of electronic copies of this plan sheet.

KENNEDY/JENKS CONSULTANTS
303 SECOND STREET
SUITE 300 SOUTH
SAN FRANCISCO, CA 94960

SOLANO TRANSPORTATION AUTHORITY
ONE HARBOR CENTER, SUITE 130
SUISUN CITY, CA 94585

CALIFORNIA STATE FIRE MARSHAL APPROVED

Approval of this plan does not authorize or approve any omission or deviation from applicable regulations. Final approval is subject to field inspection. One set of approved plans shall be available on the project site at all times.

Reviewed by: Hans Hennebarque 5/9/11
Hans Hennebarque
Senior Deputy State Fire Marshal

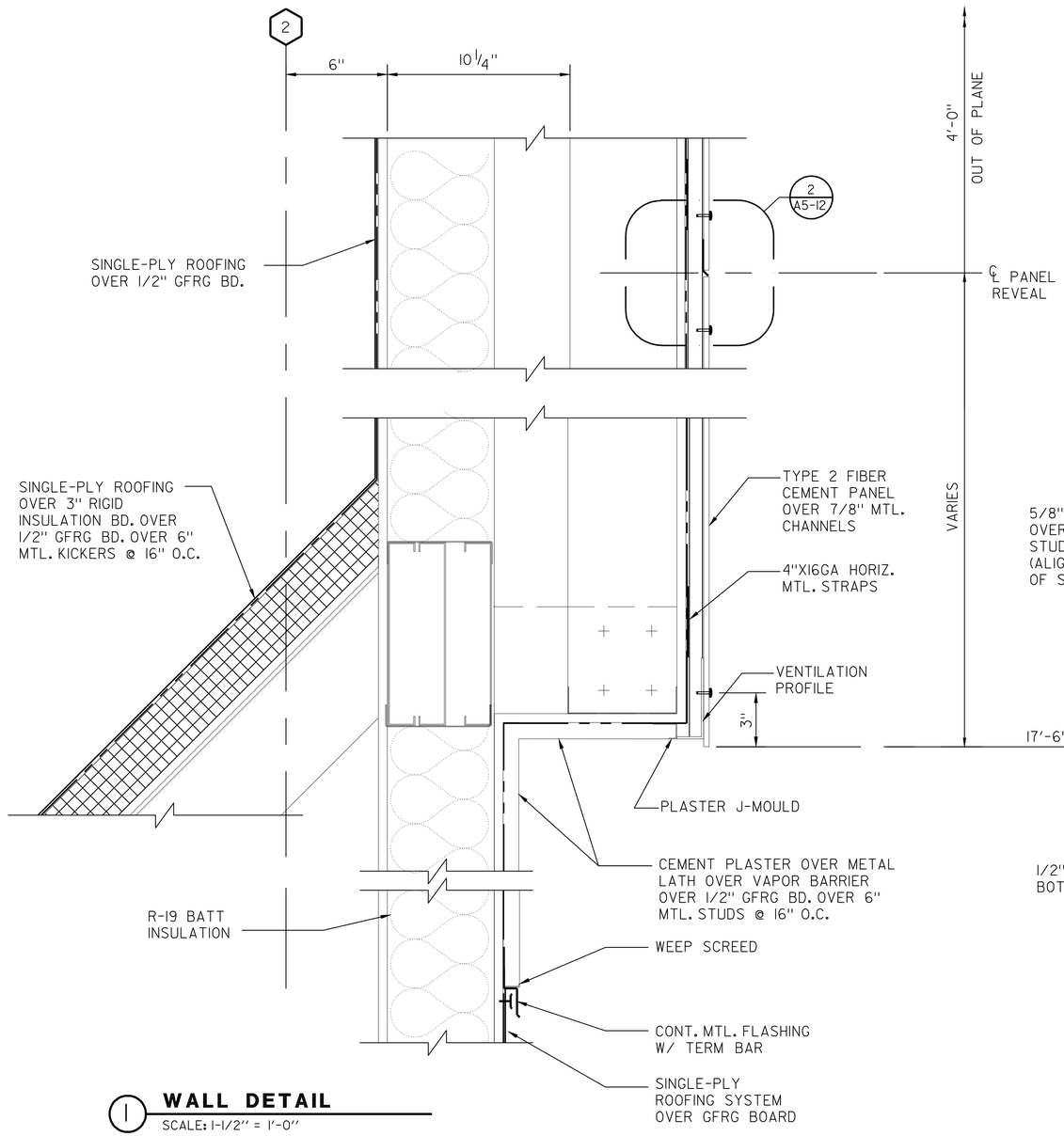

1 WALL DETAIL

SCALE: 1-1/2" = 1'-0"

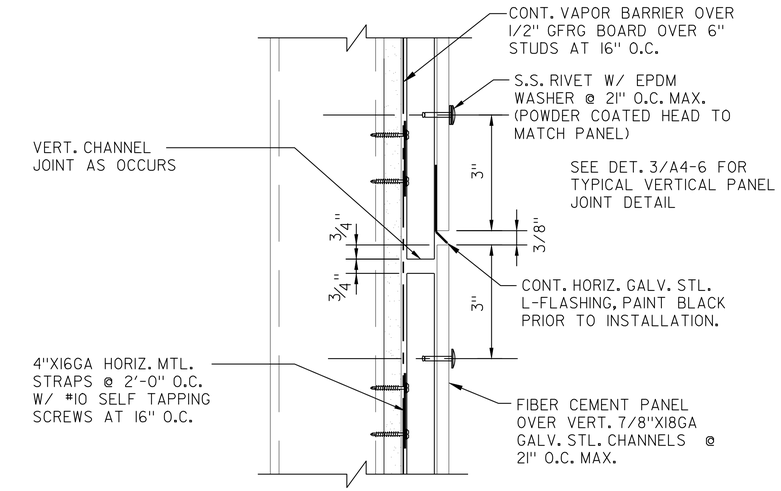

2 HORIZONTAL FIBER CEMENT JOINT DETAIL

SCALE: 3" = 1'-0"

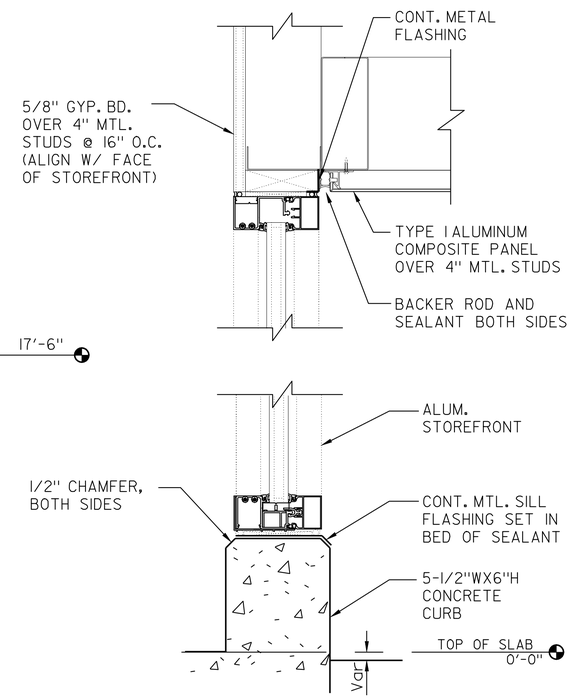

3 STOREFRONT DETAIL

SCALE: 1-1/2" = 1'-0"

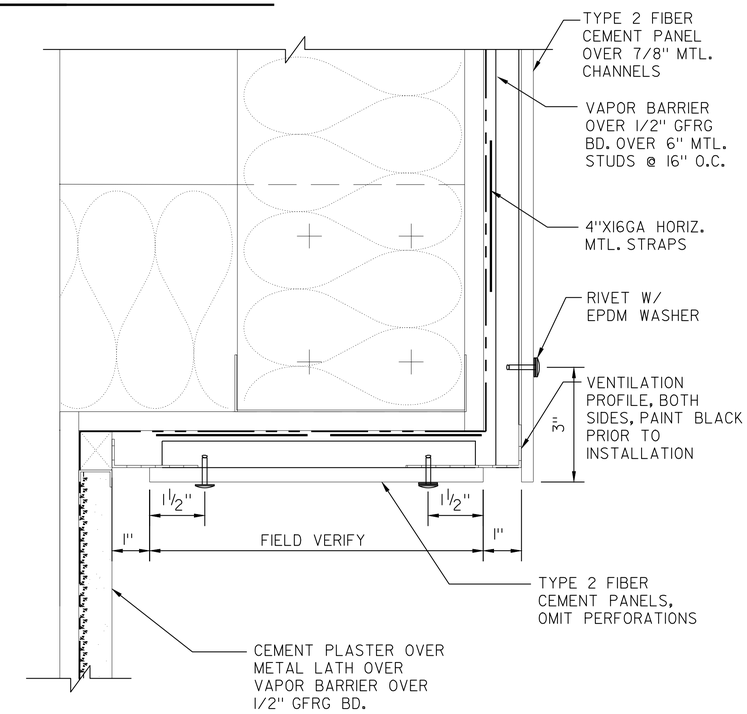

4 ENLARGED FIBER CEMENT SOFFIT DETAIL

SCALE: 3" = 1'-0"

IDENTIFICATION STAMP DIV. OF THE STATE ARCHITECT
02 111744
AC ALS — SS —
DATE 5-5-11

DESIGN	BY G.ROBLEY	CHECKED W.RAMROTH	
DETAILS	BY G.ROBLEY	CHECKED D.WRIGHT	
QUANTITIES	BY G.ROBLEY	CHECKED W.RAMROTH	

PREPARED FOR THE STATE OF CALIFORNIA DEPARTMENT OF TRANSPORTATION

DIVISION OF ENGINEERING SERVICES ARCHITECTURAL AND STRUCTURAL DESIGN

BRIDGE NO. 23W000IR
POST MILE 14.8

EASTBOUND CORDELIA CVEF

CVEF — SECTION DETAILS NO. 6

SHEET A5-12

ORIGINAL SCALE IN INCHES FOR REDUCED PLANS 0 1 2 3

CU 04264
EA 0A5351

DISREGARD PRINTS BEARING EARLIER REVISION DATES → REVISION DATES (PRELIMINARY STAGE ONLY) 10/19/09 03/22/10 05/06/10 08/23/10 11/22/10 05/02/11 SHEET OF

DS OSD Imperial Rev. 10/07 9/17/10 09:07

18-MAY-2011 09:07

DIST.	COUNTY	ROUTE	POST MILES TOTAL PROJECT	SHEET NO.	TOTAL SHEETS
04	Sol	12,80	L1.8/L2.0, 13.3/15.7	541	740

LICENSED ARCHITECT — DATE 05/02/11

LICENSED ARCHITECT GREG A. ROBLEY No. C-30986 Exp. 02/05/13 STATE OF CALIFORNIA

5-16-11
PLANS APPROVAL DATE

The State of California or its officers or agents shall not be responsible for the accuracy or completeness of electronic copies of this plan sheet.

KENNEDY/JENKS CONSULTANTS
303 SECOND STREET
SUITE 300 SOUTH
SAN FRANCISCO, CA 94960

SOLANO TRANSPORTATION AUTHORITY
ONE HARBOR CENTER, SUITE 130
SUISUN CITY, CA 94585

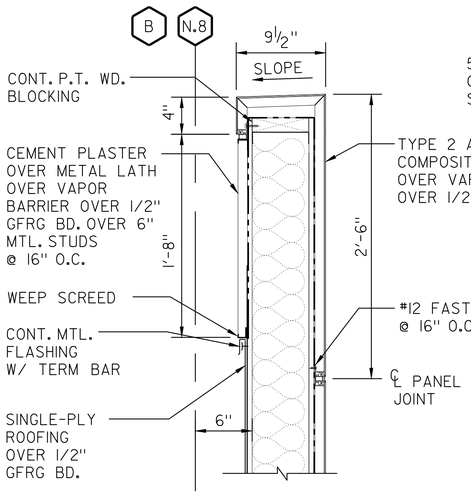

1 **WALL DETAIL**
SCALE: 1-1/2" = 1'-0"

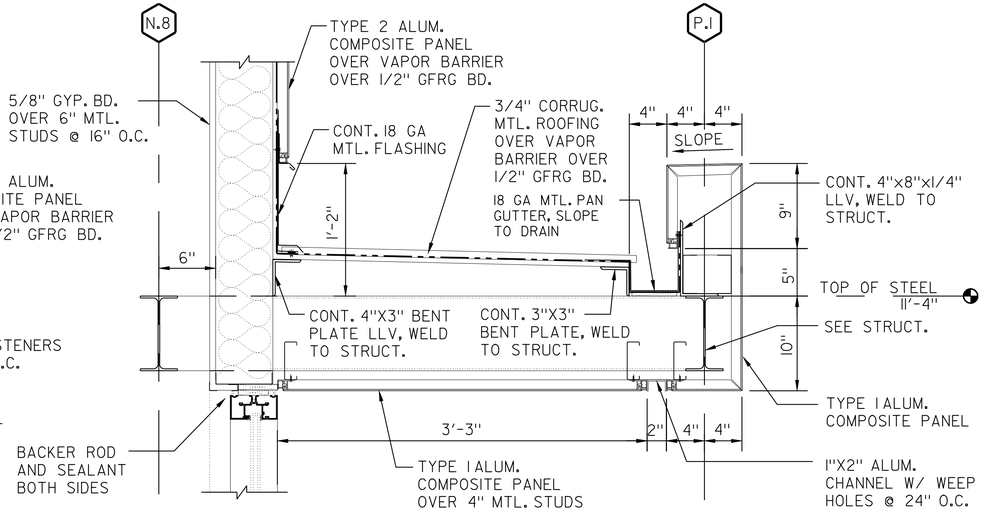

2 **WALL DETAIL**
SCALE: 1-1/2" = 1'-0"

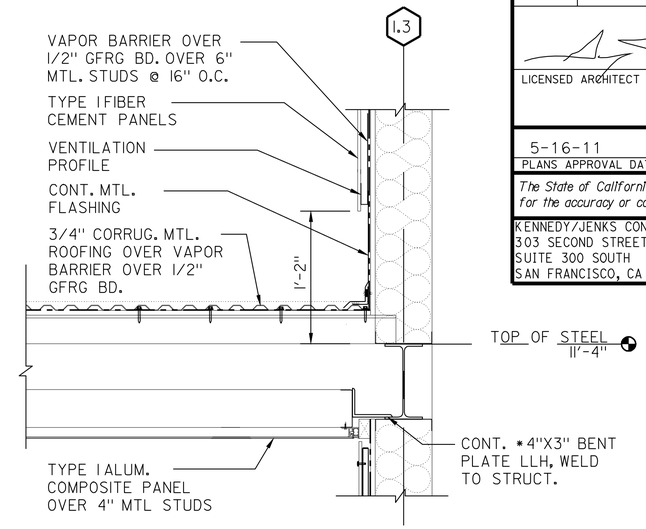

3 **WALL DETAIL**
SCALE: 1-1/2" = 1'-0"

CALIFORNIA STATE FIRE MARSHAL
APPROVED

Approval of this plan does not authorize or approve any omission or deviation from applicable regulations. Final approval is subject to field inspection. One set of approved plans shall be available on the project site at all times.

Reviewed by: Hans Henneberque 5/9/11
Hans Henneberque
Senior Deputy State Fire Marshal

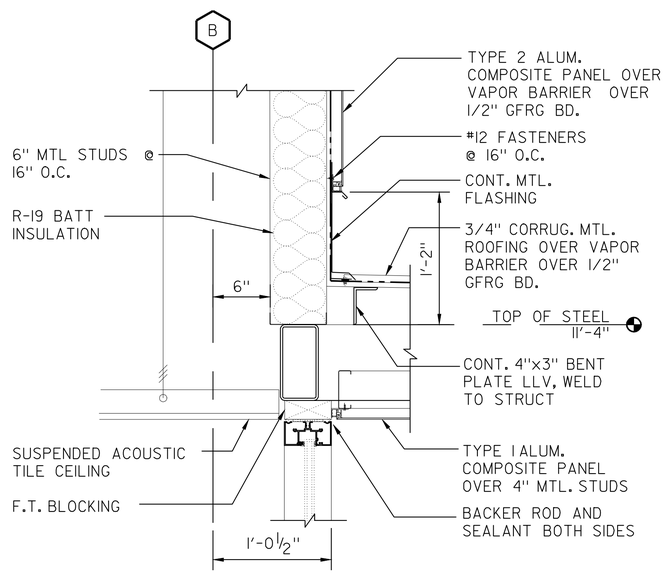

4 **WALL DETAIL**
SCALE: 1-1/2" = 1'-0"

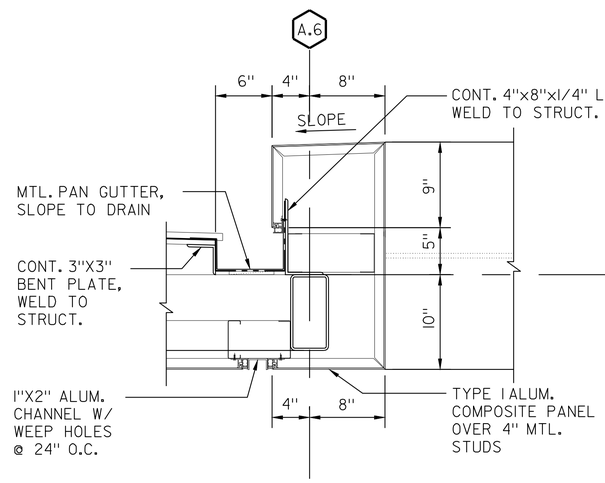

5 **WALL DETAIL**
SCALE: 1-1/2" = 1'-0"

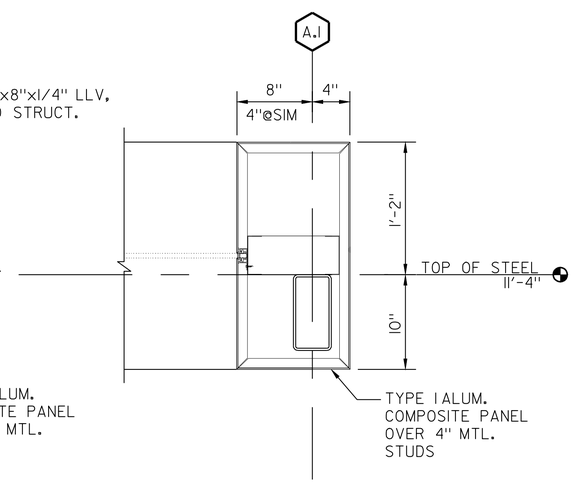

6 **WALL DETAIL**
SCALE: 1-1/2" = 1'-0"

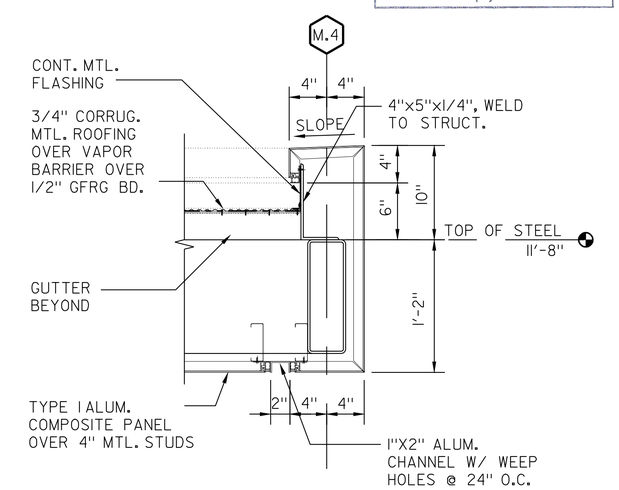

7 **WALL DETAIL**
SCALE: 11/2" = 1'-0"

IDENTIFICATION STAMP
DIV. OF THE STATE ARCHITECT
02 1117 44
AC ALS SS
DATE 5-5-11

	BY	CHECKED
DESIGN	G.ROBLEY	W.RAMROTH
DETAILS	G.ROBLEY	D.WRIGHT
QUANTITIES	G.ROBLEY	W.RAMROTH

ORIGINAL SCALE IN INCHES FOR REDUCED PLANS 0 1 2 3

PREPARED FOR THE STATE OF CALIFORNIA DEPARTMENT OF TRANSPORTATION

DIVISION OF ENGINEERING SERVICES
ARCHITECTURAL AND STRUCTURAL DESIGN

CU 04264
EA 0A5351

BRIDGE NO. 23W000IR
POST MILE 14.8

EASTBOUND CORDELIA CVEF

CVEF — SECTION DETAILS NO. 7

SHEET **A5-13**

DISREGARD PRINTS BEARING EARLIER REVISION DATES → ~~10/19/09~~ ~~03/22/10~~ ~~05/06/10~~ ~~08/23/10~~ ~~11/22/10~~ 05/02/11

REVISION DATES (PRELIMINARY STAGE ONLY) SHEET OF

DS OSD Imperial Rev. 10/07 9/17/10 09:07

18-MAY-2011 09:07

DIST.	COUNTY	ROUTE	POST MILES TOTAL PROJECT	SHEET NO.	TOTAL SHEETS
04	Sol	12,80	L1.8/L2.0, 13.3/15.7	542	740

LICENSED ARCHITECT — DATE 05/02/11

LICENSED ARCHITECT GREG A. ROBLEY No. C-30986 Exp. 02/05/13 STATE OF CALIFORNIA

5-16-11
PLANS APPROVAL DATE

The State of California or its officers or agents shall not be responsible for the accuracy or completeness of electronic copies of this plan sheet.

KENNEDY/JENKS CONSULTANTS
303 SECOND STREET
SUITE 300 SOUTH
SAN FRANCISCO, CA 94960

SOLANO TRANSPORTATION AUTHORITY
ONE HARBOR CENTER, SUITE 130
SUISUN CITY, CA 94585

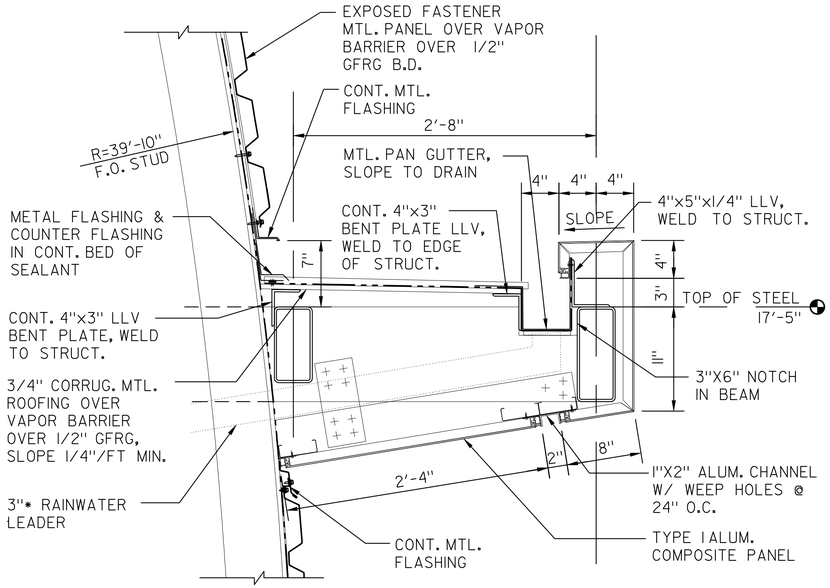

2 WALL DETAIL
SCALE: 1-1/2" = 1'-0"

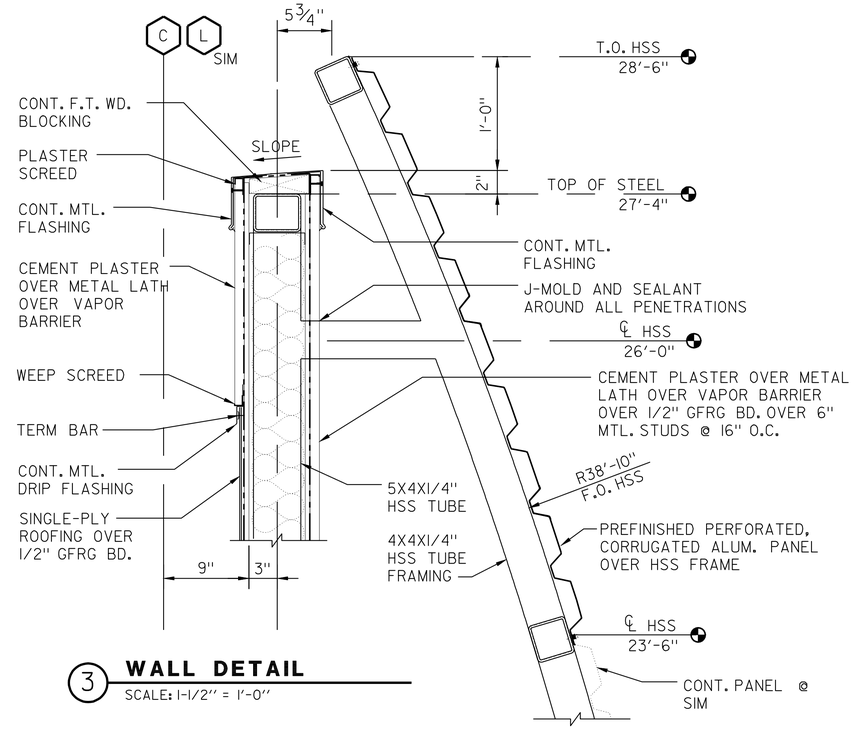

3 WALL DETAIL
SCALE: 1-1/2" = 1'-0"

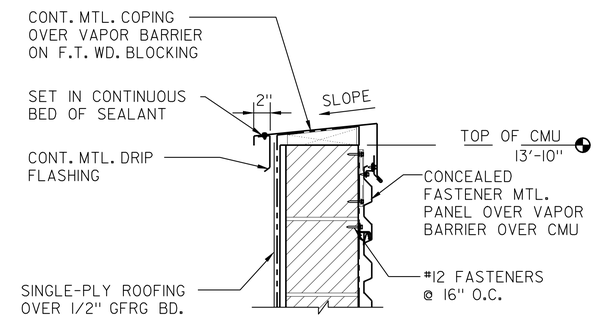

6 WALL DETAIL
SCALE: 1-1/2" = 1'-0"

CALIFORNIA STATE FIRE MARSHAL APPROVED

Approval of this plan does not authorize or approve any omission or deviation from applicable regulations. Final approval is subject to field inspection. One set of approved plans shall be available on the project site at all times.

Reviewed by: 5/9/11
Hans Hennebergue
Senior Deputy State Fire Marshal

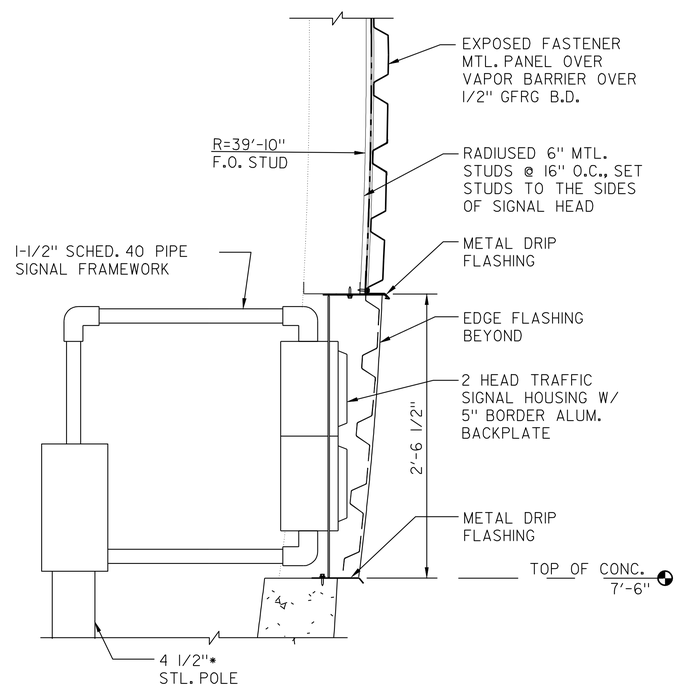

4 WALL DETAIL
SCALE: 1-1/2" = 1'-0"

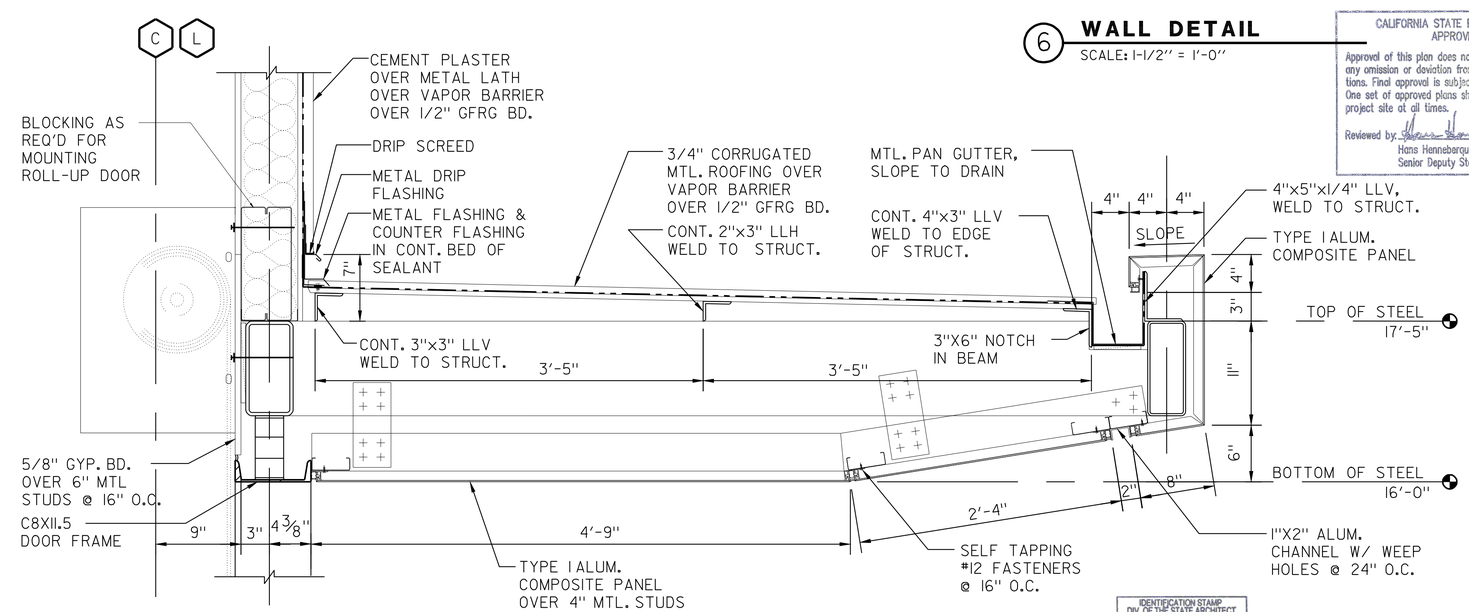

5 WALL DETAIL
SCALE: 1-1/2" = 1'-0"

IDENTIFICATION STAMP DIV. OF THE STATE ARCHITECT
02 111744
ACCESS CALS ~ SS ~
DATE

	BY	CHECKED
DESIGN	G.ROBLEY	W.RAMROTH
DETAILS	G.ROBLEY	D.WRIGHT
QUANTITIES	G.ROBLEY	W.RAMROTH

ORIGINAL SCALE IN INCHES FOR REDUCED PLANS 0 1 2 3

PREPARED FOR THE STATE OF CALIFORNIA DEPARTMENT OF TRANSPORTATION

DIVISION OF ENGINEERING SERVICES
ARCHITECTURAL AND STRUCTURAL DESIGN

CU 04264
EA 0A5351

BRIDGE NO. 23W0001R
POST MILE 14.8

EASTBOUND CORDELIA CVEF

CVEF — SECTION DETAILS NO. 8

SHEET **A5-14**

DISREGARD PRINTS BEARING EARLIER REVISION DATES → 10/19/09 03/22/10 05/06/10 08/23/10 11/22/10 05/02/11

REVISION DATES (PRELIMINARY STAGE ONLY) SHEET OF

DS OSD Imperial Rev. 10/07 9/17/10 09:08

18-MAY-2011 09:08

DIST.	COUNTY	ROUTE	POST MILES TOTAL PROJECT	SHEET NO.	TOTAL SHEETS
04	Sol	12,80	L1.8/L2.0, 13.3/15.7	543	740

LICENSED ARCHITECT — 5/2/11 DATE

LICENSED ARCHITECT GREG A. ROBLEY No. C-30986 Exp. 02/05/13 STATE OF CALIFORNIA

5-16-11
PLANS APPROVAL DATE

The State of California or its officers or agents shall not be responsible for the accuracy or completeness of electronic copies of this plan sheet.

KENNEDY/JENKS CONSULTANTS
303 SECOND STREET
SUITE 300 SOUTH
SAN FRANCISCO, CA 94960

SOLANO TRANSPORTATION AUTHORITY
ONE HARBOR CENTER, SUITE 130
SUISUN CITY, CA 94585

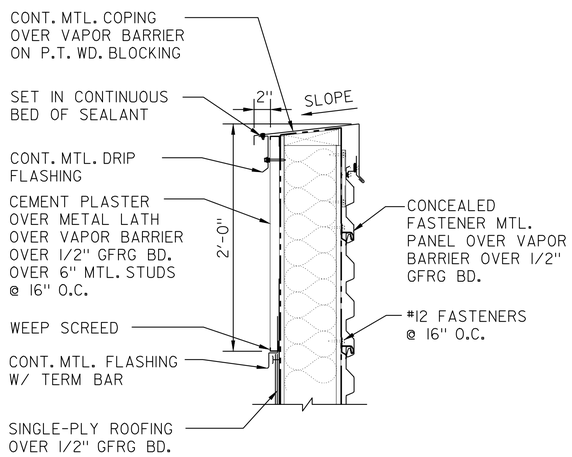

1 **WALL DETAIL**
SCALE: 1-1/2" = 1'-0"

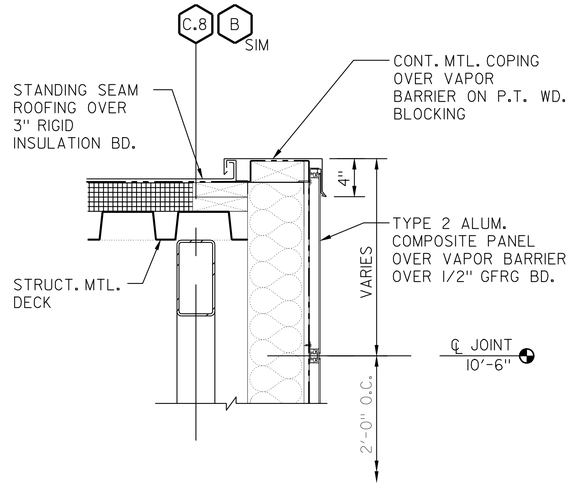

2 **WALL DETAIL**
SCALE: 1-1/2" = 1'-0"

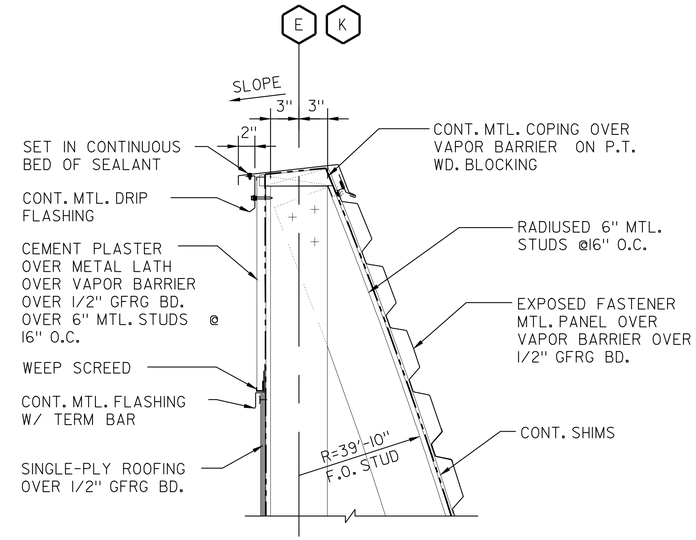

3 **WALL DETAIL**
SCALE: 1-1/2" = 1'-0"

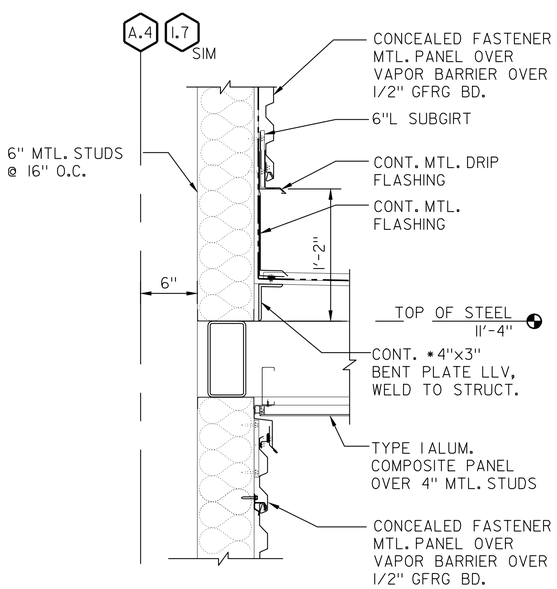

4 **WALL DETAIL**
SCALE: 1-1/2" = 1'-0"

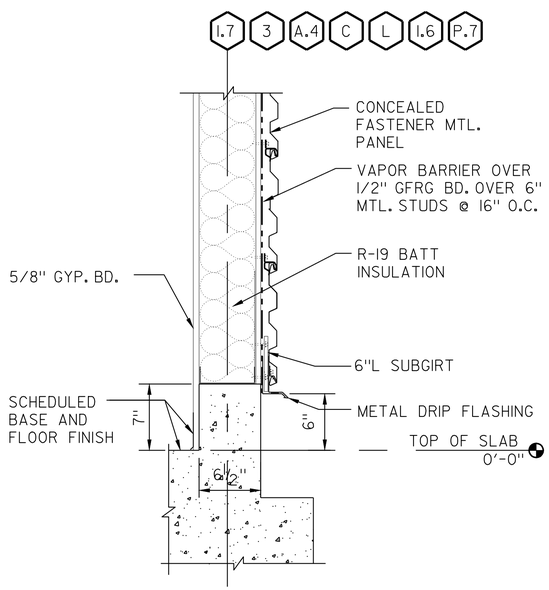

5 **WALL DETAIL**
SCALE: 1-1/2" = 1'-0"

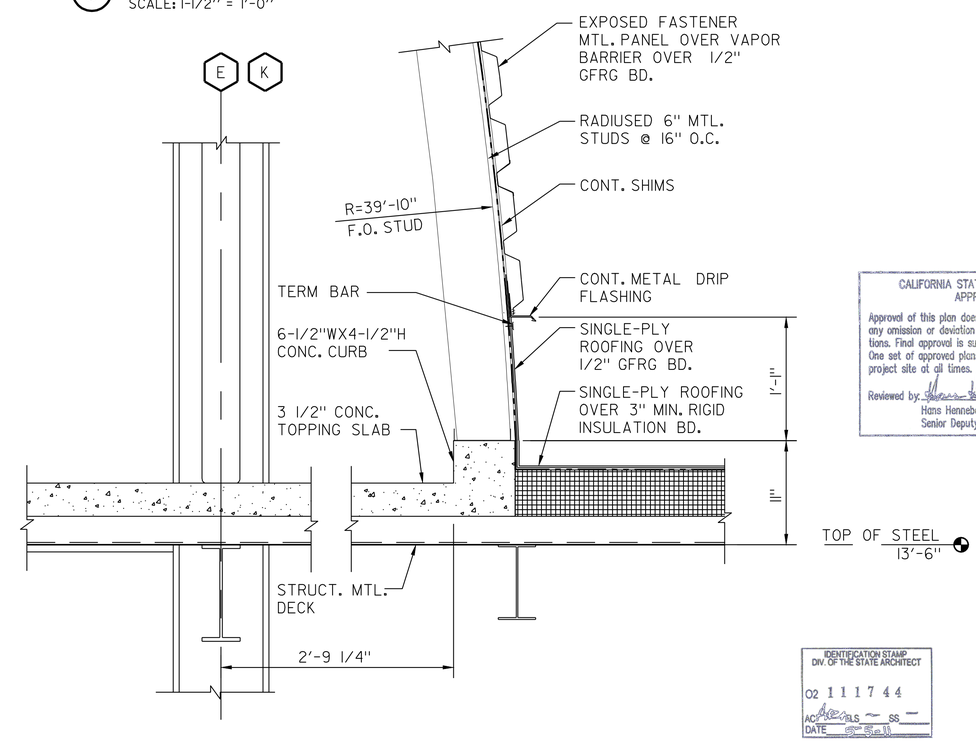

6 **WALL DETAIL**
SCALE: 1-1/2" = 1'-0"

CALIFORNIA STATE FIRE MARSHAL APPROVED

Approval of this plan does not authorize or approve any omission or deviation from applicable regulations. Final approval is subject to field inspection. One set of approved plans shall be available on the project site at all times.

Reviewed by: Hans Henneberque 5/9/11
Hans Henneberque
Senior Deputy State Fire Marshal

IDENTIFICATION STAMP DIV. OF THE STATE ARCHITECT
02 111744
AC ALS SS
DATE 5-5-11

	BY	CHECKED
DESIGN	G.ROBLEY	W.RAMROTH
DETAILS	G.ROBLEY	D.WRIGHT
QUANTITIES	G.ROBLEY	W.RAMROTH

PREPARED FOR THE STATE OF CALIFORNIA DEPARTMENT OF TRANSPORTATION

DIVISION OF ENGINEERING SERVICES
ARCHITECTURAL AND STRUCTURAL DESIGN

BRIDGE NO. 23W0001R
POST MILE 14.8

EASTBOUND CORDELIA CVEF
CVEF — SECTION DETAILS NO. 8

SHEET **A5-15**

40a535wba5-15.dgn
DS OSD imperialRev.10/07 18-MAY-2011 09:08

ORIGINAL SCALE IN INCHES FOR REDUCED PLANS 0 1 2 3

CU 04264
EA 0A5351

DISREGARD PRINTS BEARING EARLIER REVISION DATES → 10/19/09 03/22/10 05/06/10 08/23/10 11/22/10 05/02/11

REVISION DATES (PRELIMINARY STAGE ONLY) SHEET OF

18-MAY-2011 09:08
40a535wba5-15.dgn

DIST.	COUNTY	ROUTE	POST MILES TOTAL PROJECT	SHEET NO.	TOTAL SHEETS
04	Sol	12,80	L1.8/L2.0, 13.3/15.7	544	740

LICENSED ARCHITECT — DATE 05/02/11

LICENSED ARCHITECT GREG A. ROBLEY No. C-30986 Exp. 02/05/13 STATE OF CALIFORNIA

5-16-11
PLANS APPROVAL DATE

The State of California or its officers or agents shall not be responsible for the accuracy or completeness of electronic copies of this plan sheet.

KENNEDY/JENKS CONSULTANTS
303 SECOND STREET
SUITE 300 SOUTH
SAN FRANCISCO, CA 94960

SOLANO TRANSPORTATION AUTHORITY
ONE HARBOR CENTER, SUITE 130
SUISUN CITY, CA 94585

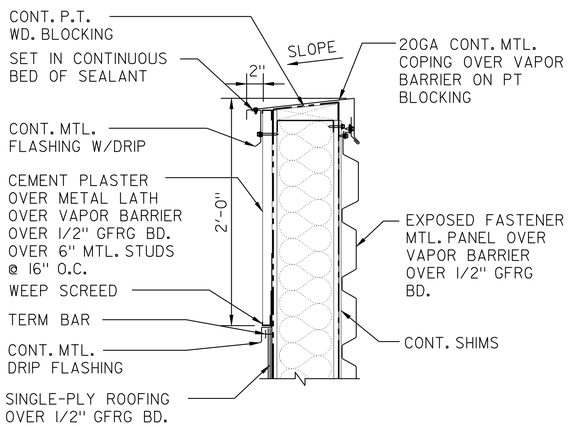

1 **WALL DETAIL**
SCALE: 1-1/2" = 1'-0"

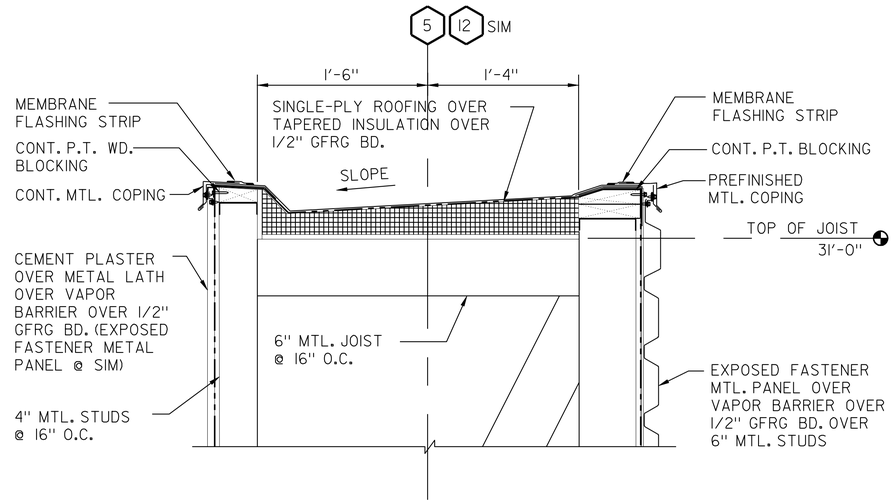

2 **WALL DETAIL**
SCALE: 1-1/2" = 1'-0"

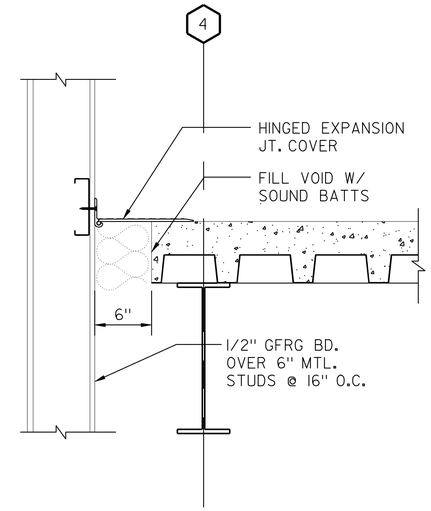

3 **WALL DETAIL**
SCALE: 1-1/2" = 1'-0"

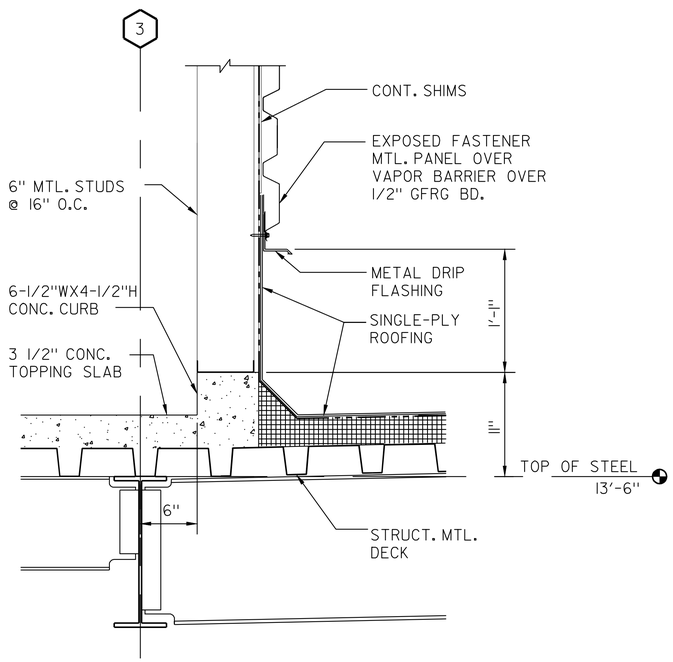

4 **WALL DETAIL**
SCALE: 1-1/2" = 1'-0"

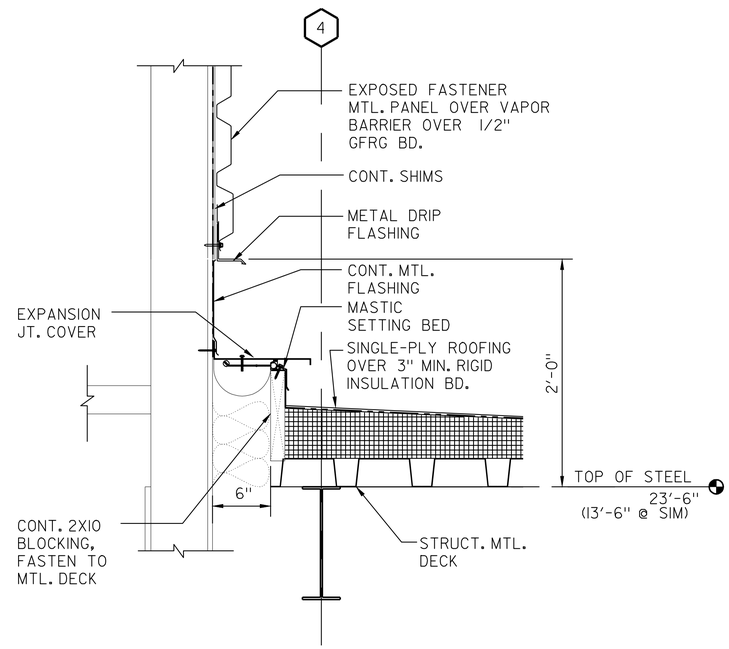

5 **WALL DETAIL**
SCALE: 1-1/2" = 1'-0"

6 **NOT USED**

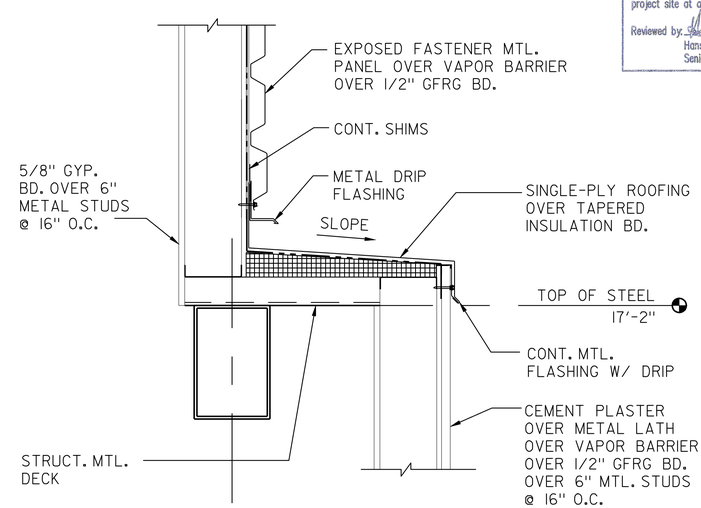

7 **WALL DETAIL**
SCALE: 1-1/2" = 1'-0"

CALIFORNIA STATE FIRE MARSHAL APPROVED

Approval of this plan does not authorize or approve any omission or deviation from applicable regulations. Final approval is subject to field inspection. One set of approved plans shall be available on the project site at all times.

Reviewed by: Hans Henneberque 5/9/11
Hans Henneberque
Senior Deputy State Fire Marshal

IDENTIFICATION STAMP DIV. OF THE STATE ARCHITECT
02 111744
AC ARCHS — SS —
DATE

	BY	CHECKED
DESIGN	G.ROBLEY	W.RAMROTH
DETAILS	G.ROBLEY	D.WRIGHT
QUANTITIES	G.ROBLEY	W.RAMROTH

PREPARED FOR THE STATE OF CALIFORNIA DEPARTMENT OF TRANSPORTATION

DIVISION OF ENGINEERING SERVICES
ARCHITECTURAL AND STRUCTURAL DESIGN

BRIDGE NO. 23W000IR
POST MILE 14.8

EASTBOUND CORDELIA CVEF
CVEF — SECTION DETAILS NO. 8

SHEET **A5-16**

ORIGINAL SCALE IN INCHES FOR REDUCED PLANS 0 1 2 3

CU 04264
EA 0A5351

DISREGARD PRINTS BEARING EARLIER REVISION DATES → 10/19/09 03/22/10 05/06/10 08/23/10 11/22/10 05/02/11

REVISION DATES (PRELIMINARY STAGE ONLY) SHEET OF

DS OSD ImperialRev.10/07 9/17/10 09:08

18-MAY-2011 09:08

DIST.	COUNTY	ROUTE	POST MILES TOTAL PROJECT	SHEET NO.	TOTAL SHEETS
04	Sol	12,80	L1.8/L2.0, 13.3/15.7	545	740

LICENSED ARCHITECT — 05/02/11 DATE

LICENSED ARCHITECT GREG A. ROBLEY No. C-30986 Exp. 02/05/13 STATE OF CALIFORNIA

5-16-11
PLANS APPROVAL DATE

The State of California or its officers or agents shall not be responsible for the accuracy or completeness of electronic copies of this plan sheet.

KENNEDY/JENKS CONSULTANTS
303 SECOND STREET
SUITE 300 SOUTH
SAN FRANCISCO, CA 94960

SOLANO TRANSPORTATION AUTHORITY
ONE HARBOR CENTER, SUITE 130
SUISUN CITY, CA 94585

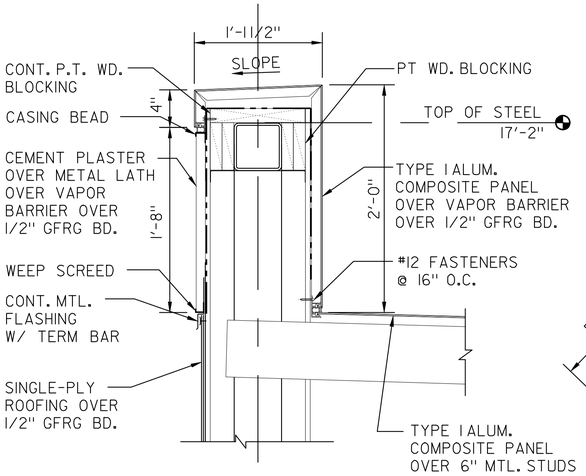

1 **WALL DETAIL**
SCALE: 1-1/2" = 1'-0"

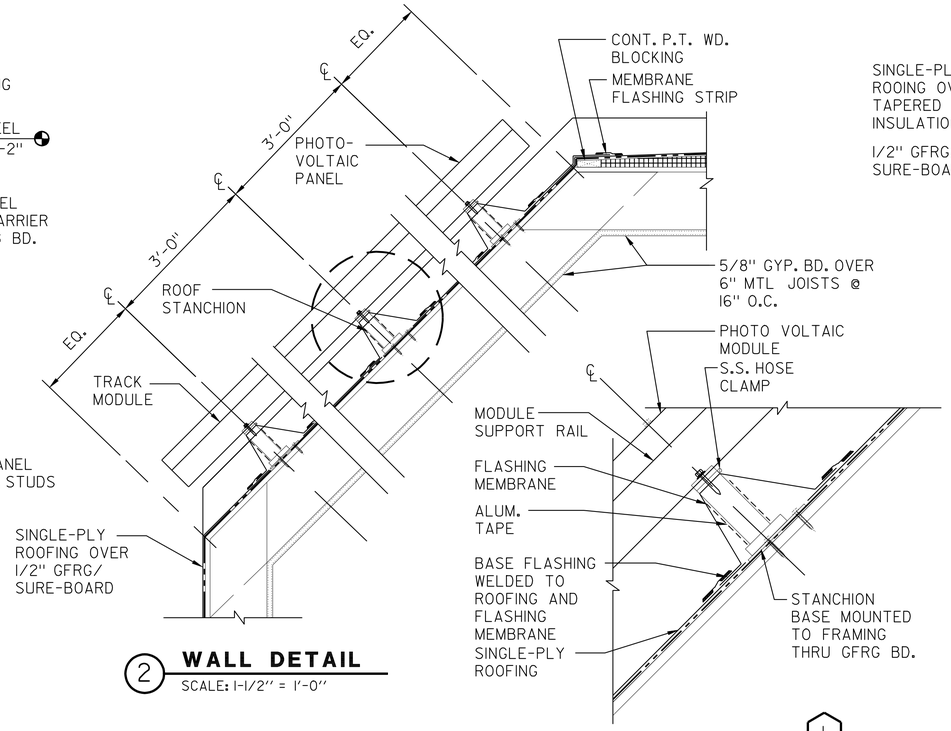

2 **WALL DETAIL**
SCALE: 1-1/2" = 1'-0"

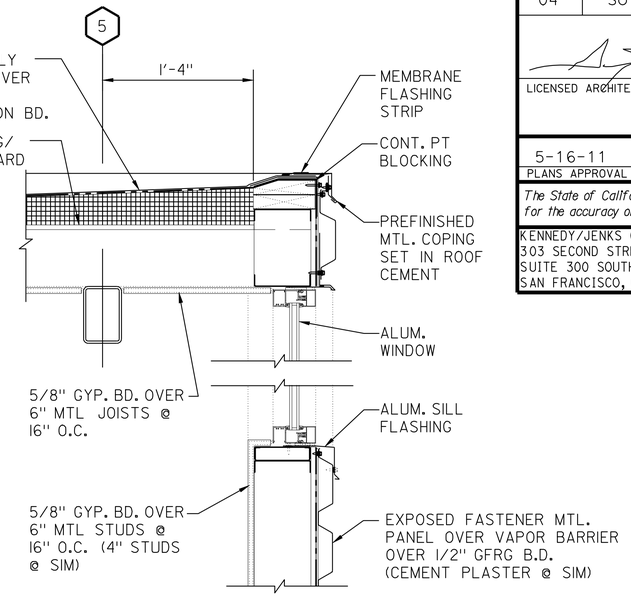

7 **WALL DETAIL**
SCALE: 1-1/2" = 1'-0"

CALIFORNIA STATE FIRE MARSHAL APPROVED

Approval of this plan does not authorize or approve any omission or deviation from applicable regulations. Final approval is subject to field inspection. One set of approved plans shall be available on the project site at all times.

Reviewed by: Hans Henneberque 5/9/11
Hans Henneberque
Senior Deputy State Fire Marshal

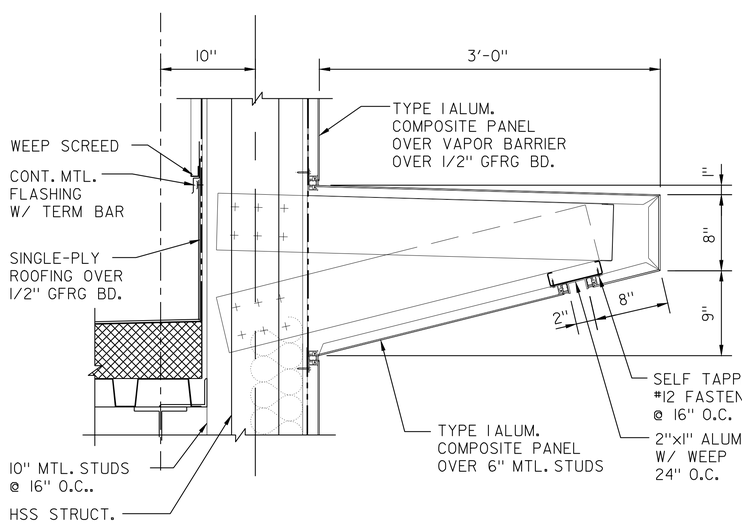

3 **WALL DETAIL**
SCALE: 1-1/2" = 1'-0"

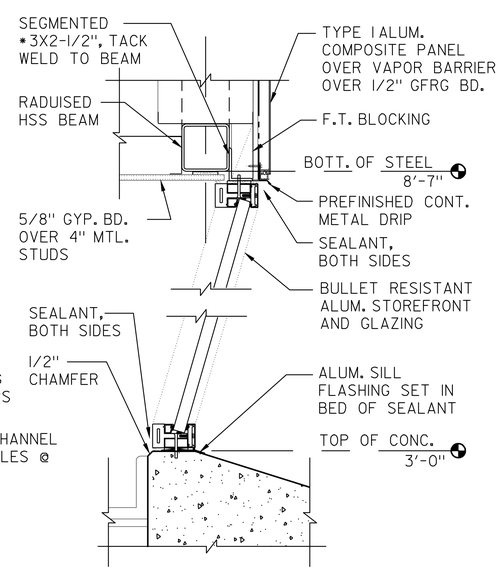

4 **WALL DETAIL**
SCALE: 1-1/2" = 1'-0"

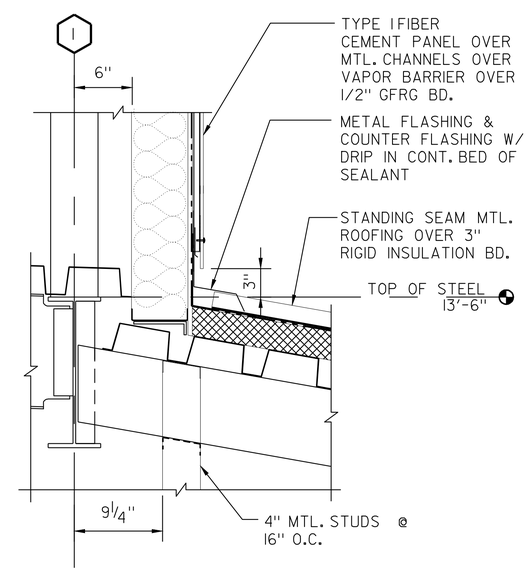

5 **WALL DETAIL**
SCALE: 1-1/2" = 1'-0"

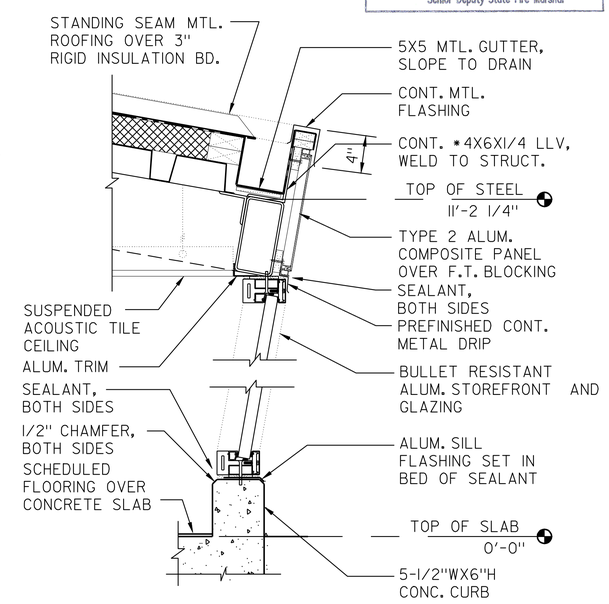

6 **WALL DETAIL**
SCALE: 1-1/2" = 1'-0"

IDENTIFICATION STAMP DIV. OF THE STATE ARCHITECT
02 1 1 1 7 4 4
AC ALS — SS —
DATE 5-5-11

DESIGN	BY G.ROBLEY	CHECKED W.RAMROTH	
DETAILS	BY G.ROBLEY	CHECKED D.WRIGHT	
QUANTITIES	BY G.ROBLEY	CHECKED W.RAMROTH	

ORIGINAL SCALE IN INCHES FOR REDUCED PLANS 0 1 2 3

PREPARED FOR THE STATE OF CALIFORNIA DEPARTMENT OF TRANSPORTATION

DIVISION OF ENGINEERING SERVICES
ARCHITECTURAL AND STRUCTURAL DESIGN

CU 04264
EA 0A5351

BRIDGE NO. 23W0001R
POST MILE 14.8

EASTBOUND CORDELIA CVEF

CVEF — SECTION DETAILS NO. 9

SHEET **A5-17**

DISREGARD PRINTS BEARING EARLIER REVISION DATES → REVISION DATES (PRELIMINARY STAGE ONLY) 10/19/09 03/22/10 05/06/10 08/23/10 11/22/10 05/02/11 SHEET OF

DS OSD Imperial Rev. 10/07 9/17/10 09:08

18-MAY-2011 09:08

DIST.	COUNTY	ROUTE	POST MILES TOTAL PROJECT	SHEET NO.	TOTAL SHEETS
04	Sol	12,80	L1.8/L2.0, 13.3/15.7	546	740

LICENSED ARCHITECT — DATE 05/02/11

LICENSED ARCHITECT GREG A. ROBLEY No. C-30986 Exp. 02/05/13 STATE OF CALIFORNIA

5-16-11
PLANS APPROVAL DATE

The State of California or its officers or agents shall not be responsible for the accuracy or completeness of electronic copies of this plan sheet.

KENNEDY/JENKS CONSULTANTS
303 SECOND STREET
SUITE 300 SOUTH
SAN FRANCISCO, CA 94960

SOLANO TRANSPORTATION AUTHORITY
ONE HARBOR CENTER, SUITE 130
SUISUN CITY, CA 94585

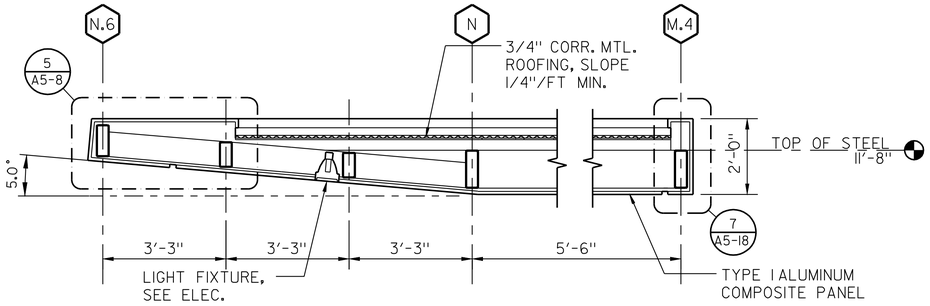

1 WALL SECTION
SCALE: 1/2" = 1'-0"

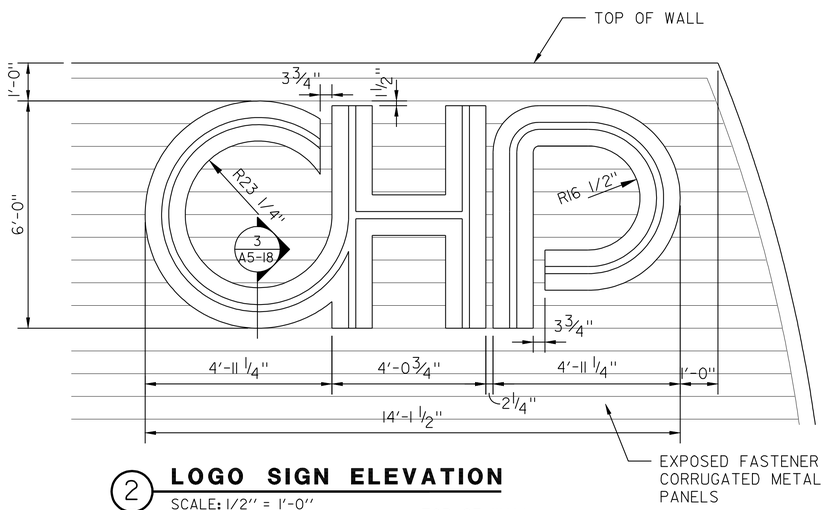

2 LOGO SIGN ELEVATION
SCALE: 1/2" = 1'-0"

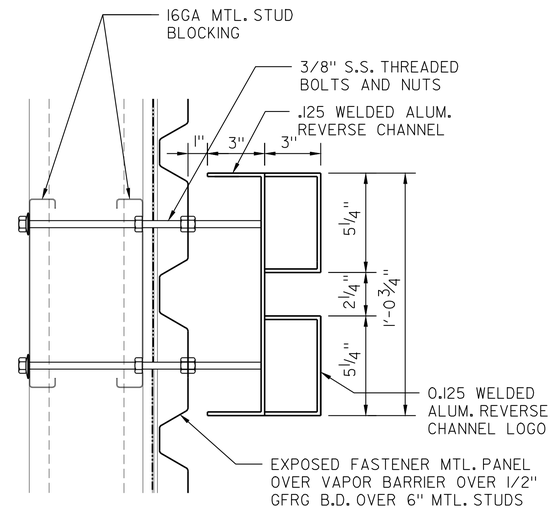

3 SIGN DETAIL
SCALE: 3" = 1'-0"

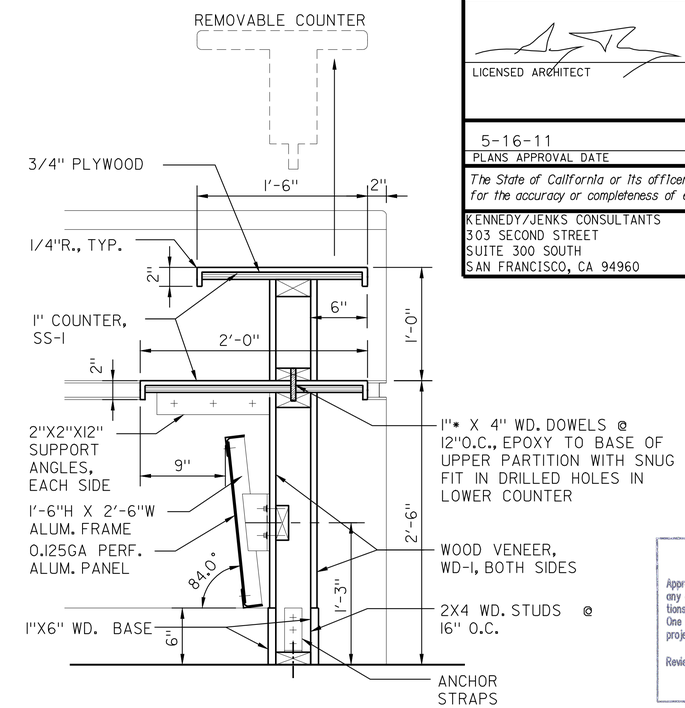

6 COUNTER SECTION
SCALE: 1-1/2" = 1'-0"

CALIFORNIA STATE FIRE MARSHAL APPROVED
Approval of this plan does not authorize or approve any omission or deviation from applicable regulations. Final approval is subject to field inspection. One set of approved plans shall be available on the project site at all times.
Reviewed by: Hans Henneberque 5/9/11
Hans Henneberque
Senior Deputy State Fire Marshal

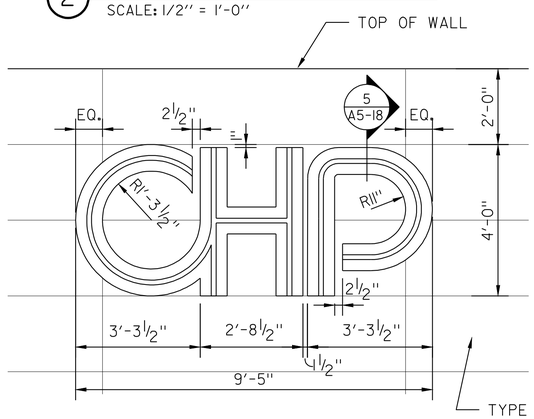

4 LOGO SIGN ELEVATION
SCALE: 1/2" = 1'-0"

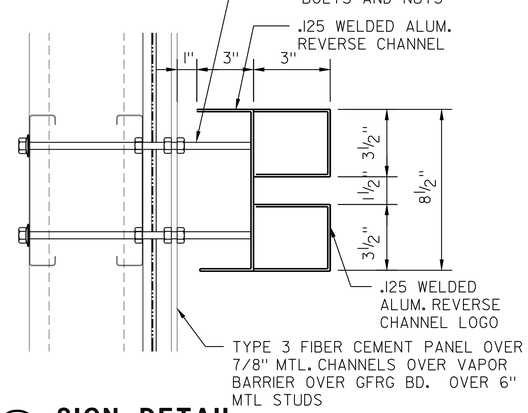

5 SIGN DETAIL
SCALE: 3" = 1'-0"

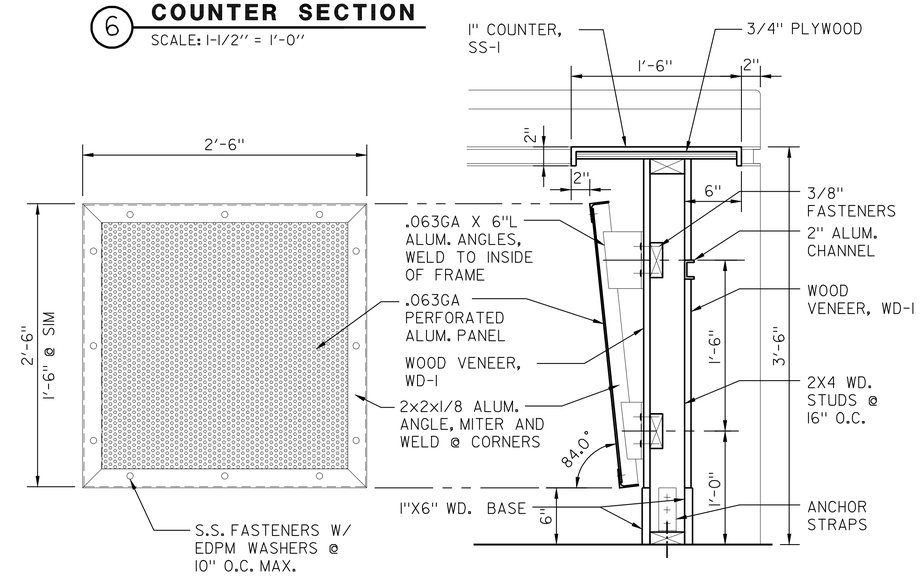

ALUM PANELS TO HAVE 3/8"* STAGGERED PERFORATIONS @ 1/2" O.C.

7 COUNTER SECTION
SCALE: 1-1/2" = 1'-0"

IDENTIFICATION STAMP DIV. OF THE STATE ARCHITECT
02 111744
AC RLS — SS —
DATE 5-5-11

DESIGN	BY G.ROBLEY	CHECKED W.RAMROTH	
DETAILS	BY G.ROBLEY	CHECKED D.WRIGHT	
QUANTITIES	BY G.ROBLEY	CHECKED W.RAMROTH	

PREPARED FOR THE STATE OF CALIFORNIA DEPARTMENT OF TRANSPORTATION

DIVISION OF ENGINEERING SERVICES
ARCHITECTURAL AND STRUCTURAL DESIGN

BRIDGE NO. 23W000IR
POST MILE 14.8

EASTBOUND CORDELIA CVEF
CVEF — SECTION DETAILS NO. 10

SHEET **A5-18**

ORIGINAL SCALE IN INCHES FOR REDUCED PLANS 0 1 2 3

CU 04264
EA 0A5351

DISREGARD PRINTS BEARING EARLIER REVISION DATES → 10/19/09 03/22/10 05/06/10 08/23/10 11/22/10 05/02/11

REVISION DATES (PRELIMINARY STAGE ONLY) SHEET OF

DS OSD Imperial Rev. 10/07 9/17/10 09:45

18-MAY-2011 09:45

DIST.	COUNTY	ROUTE	POST MILES TOTAL PROJECT	SHEET NO.	TOTAL SHEETS
04	Sol	12,80	L1.8/L2.0, 13.3/15.7	547	740

LICENSED ARCHITECT — DATE 05/02/11

LICENSED ARCHITECT GREG A. ROBLEY No. C-30986 Exp. 02/05/13 STATE OF CALIFORNIA

5-16-11
PLANS APPROVAL DATE

The State of California or its officers or agents shall not be responsible for the accuracy or completeness of electronic copies of this plan sheet.

KENNEDY/JENKS CONSULTANTS
303 SECOND STREET
SUITE 300 SOUTH
SAN FRANCISCO, CA 94960

SOLANO TRANSPORTATION AUTHORITY
ONE HARBOR CENTER, SUITE 130
SUISUN CITY, CA 94585

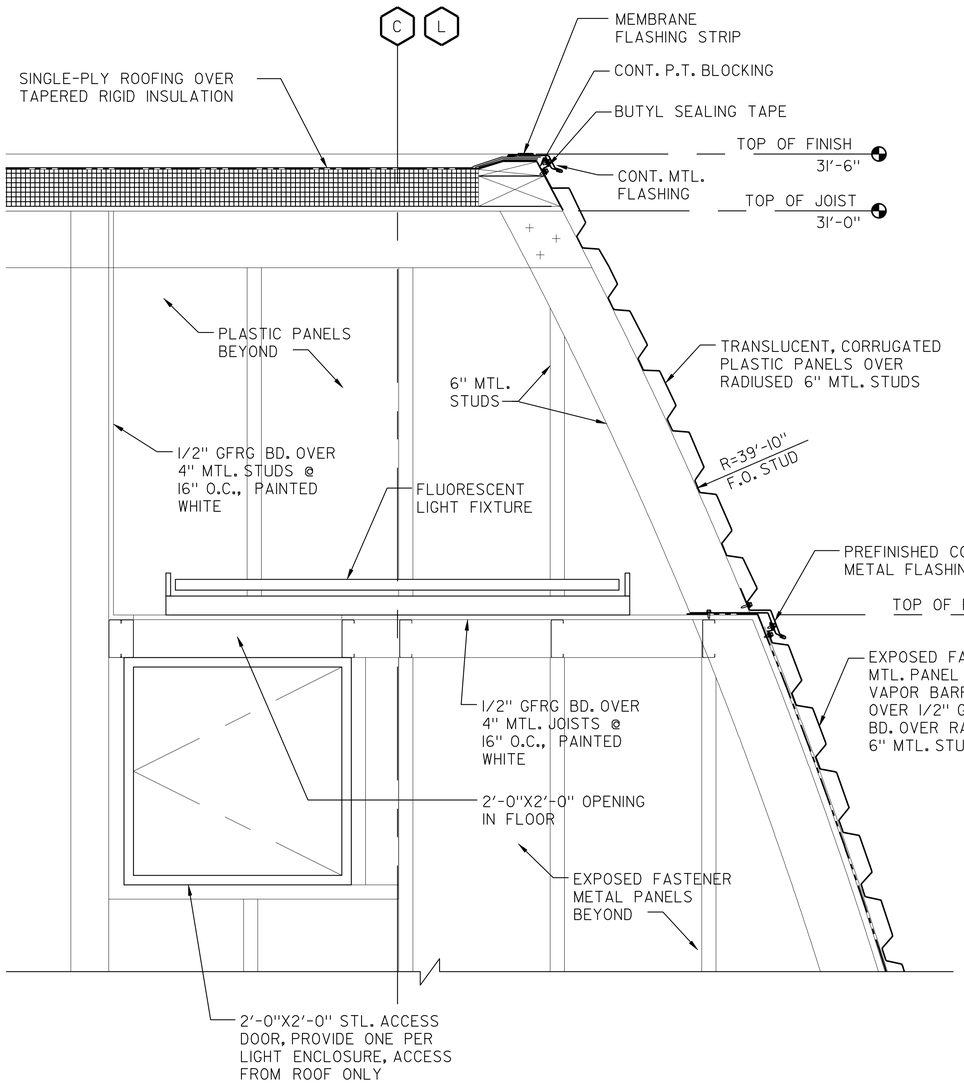

1 **WALL DETAIL**
SCALE: 1-1/2" = 1'-0"

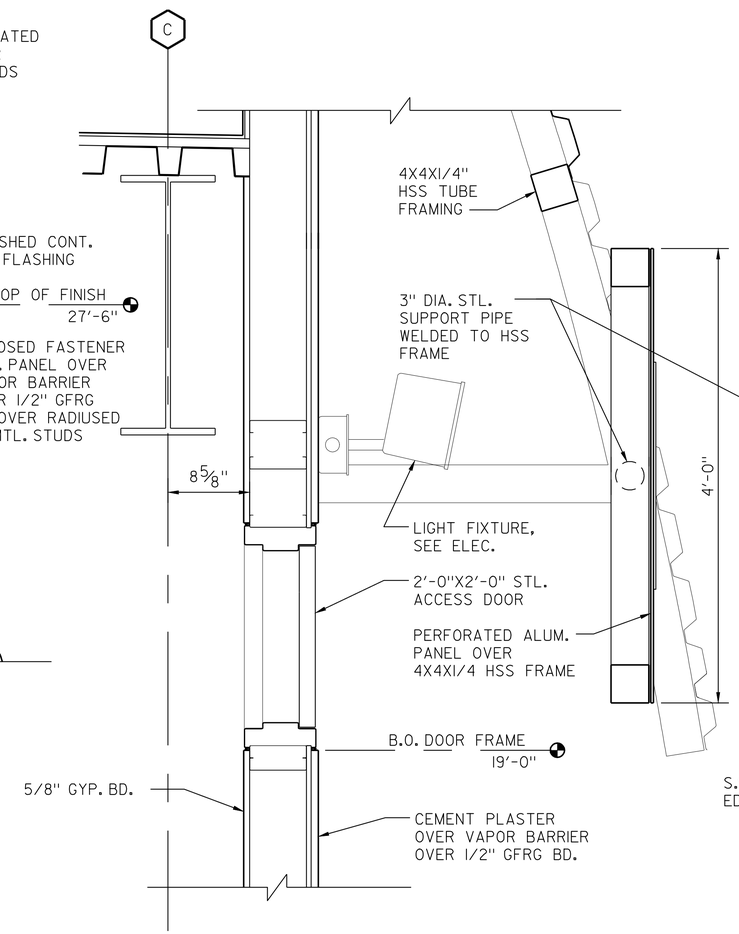

2 **WALL DETAIL**
SCALE: 1-1/2" = 1'-0"

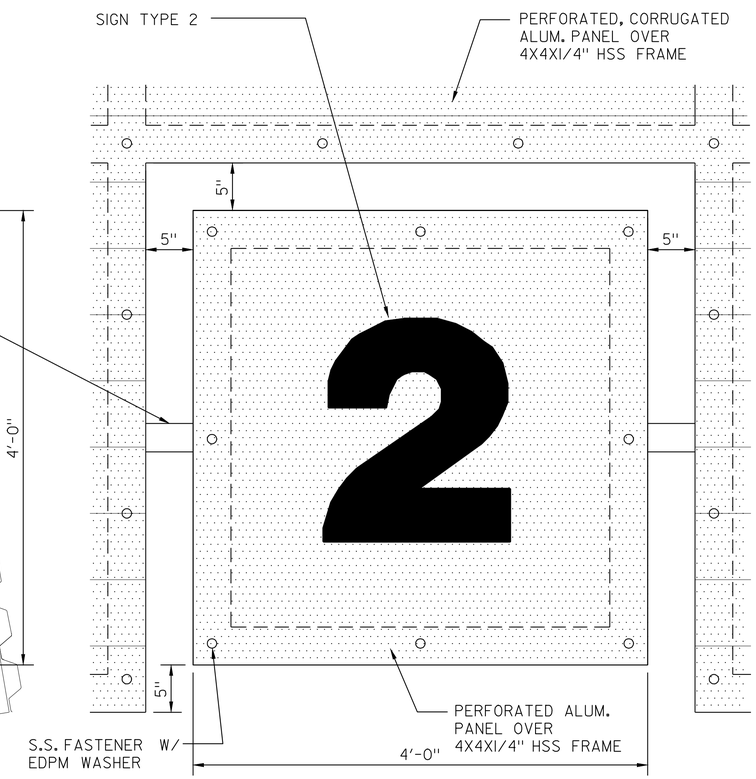

3 **SIGN DETAIL**
SCALE: 1-1/2" = 1'-0"

CALIFORNIA STATE FIRE MARSHAL APPROVED

Approval of this plan does not authorize or approve any omission or deviation from applicable regulations. Final approval is subject to field inspection. One set of approved plans shall be available on the project site at all times.

Reviewed by: 5/9/11
Hans Henneberque
Senior Deputy State Fire Marshal

IDENTIFICATION STAMP DIV. OF THE STATE ARCHITECT
02 111744
AC BLS SS
DATE

	BY	CHECKED
DESIGN	G.ROBLEY	W.RAMROTH
DETAILS	G.ROBLEY	D.WRIGHT
QUANTITIES	G.ROBLEY	W.RAMROTH

PREPARED FOR THE STATE OF CALIFORNIA DEPARTMENT OF TRANSPORTATION

DIVISION OF ENGINEERING SERVICES
ARCHITECTURAL AND STRUCTURAL DESIGN

BRIDGE NO. 23W000IR
POST MILE 14.8

EASTBOUND CORDELIA CVEF
CVEF — SECTION DETAILS NO. II

SHEET **A5-19**

ORIGINAL SCALE IN INCHES FOR REDUCED PLANS 0 1 2 3

CU 04264
EA 0A5351

DISREGARD PRINTS BEARING EARLIER REVISION DATES → 10/19/09 03/22/10 05/06/10 08/23/10 11/22/10 05/02/11

REVISION DATES (PRELIMINARY STAGE ONLY) SHEET OF

DS OSD imperialRev.10/07 9/17/10 09:45

18-MAY-2011 09:45

DIST.	COUNTY	ROUTE	POST MILES TOTAL PROJECT	SHEET NO.	TOTAL SHEETS
04	Sol	12,80	L1.8/L2.0, 13.3/15.7	548	740

LICENSED ARCHITECT — DATE 05/02/11

LICENSED ARCHITECT GREG A. ROBLEY No. C-30986 Exp. 02/05/13 STATE OF CALIFORNIA

5-16-11
PLANS APPROVAL DATE

The State of California or its officers or agents shall not be responsible for the accuracy or completeness of electronic copies of this plan sheet.

KENNEDY/JENKS CONSULTANTS
303 SECOND STREET
SUITE 300 SOUTH
SAN FRANCISCO, CA 94960

SOLANO TRANSPORTATION AUTHORITY
ONE HARBOR CENTER, SUITE 130
SUISUN CITY, CA 94585

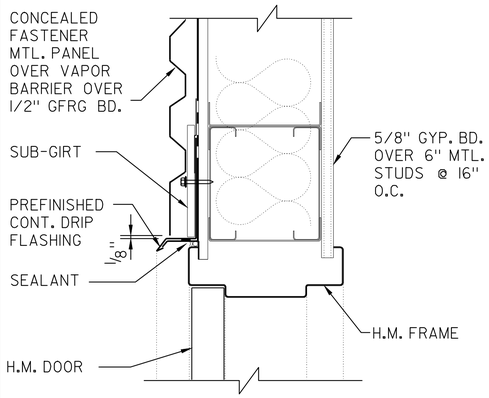

1 **DOOR HEAD DETAIL**
SCALE: 3" = 1'-0"

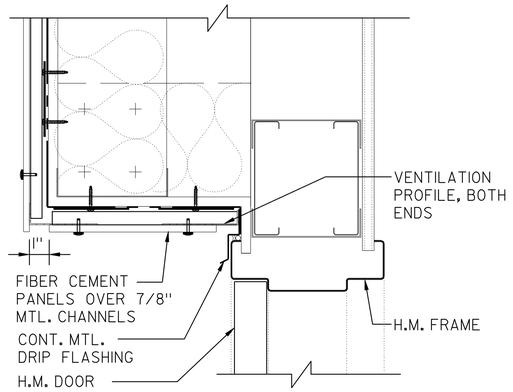

2 **DOOR HEAD DETAIL**
SCALE: 3" = 1'-0"

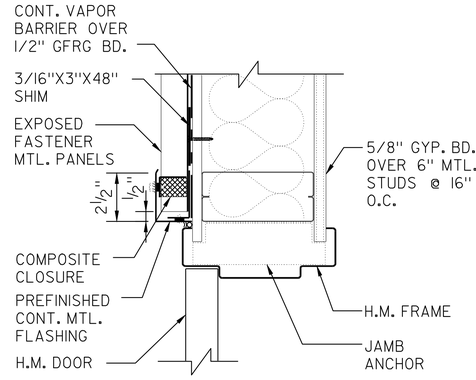

3 **DOOR JAMB DETAIL**
SCALE: 3" = 1'-0"

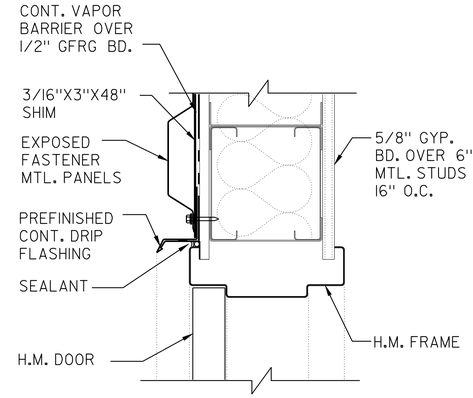

4 **DOOR HEAD DETAIL**
SCALE: 3" = 1'-0"

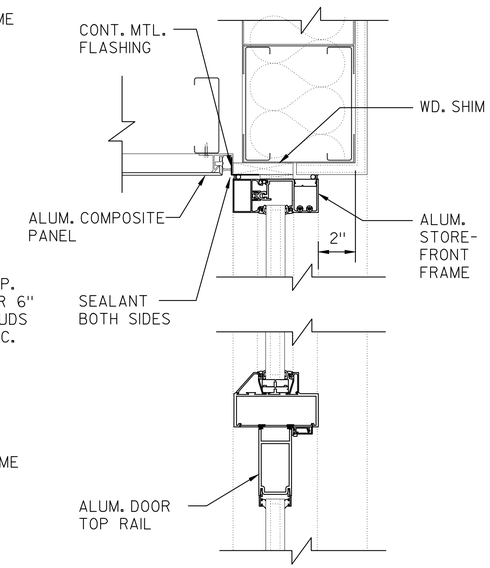

9 **DOOR HEAD DETAIL**
SCALE: 3" = 1'-0"

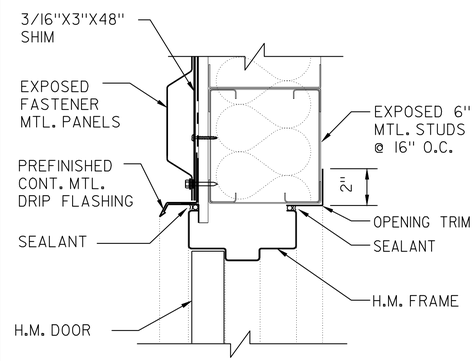

5 **DOOR HEAD DETAIL**
SCALE: 3" = 1'-0"

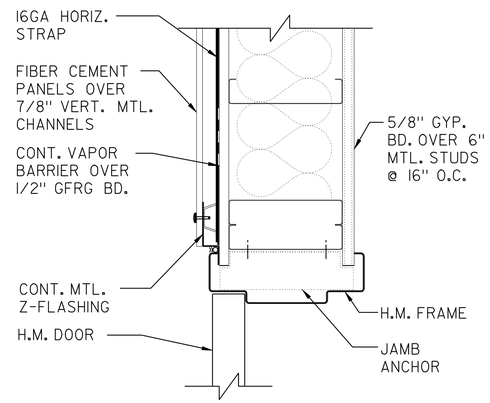

6 **DOOR JAMB DETAIL**
SCALE: 3" = 1'-0"

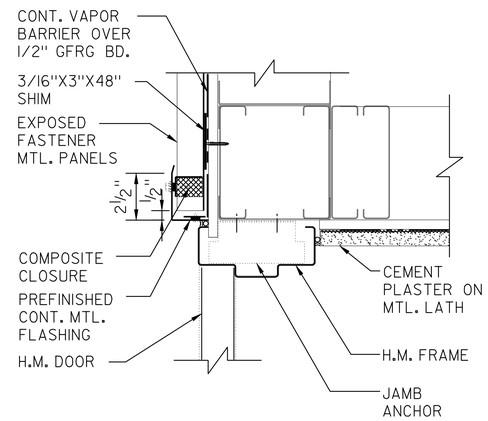

7 **DOOR JAMB DETAIL**
SCALE: 3" = 1'-0"

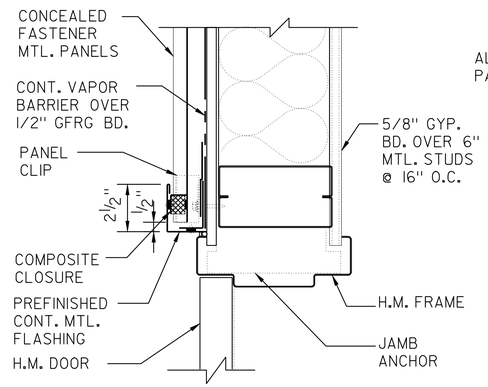

8 **DOOR JAMB DETAIL**
SCALE: 3" = 1'-0"

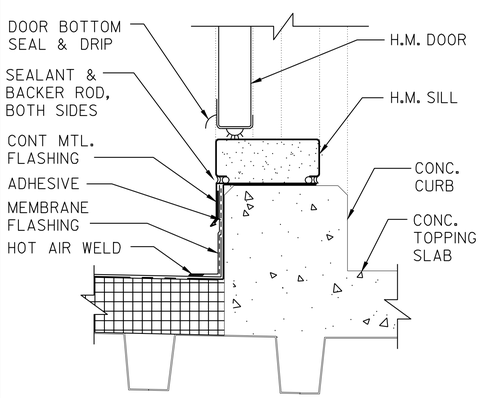

10 **DOOR SILL DETAIL**
SCALE: 3" = 1'-0"

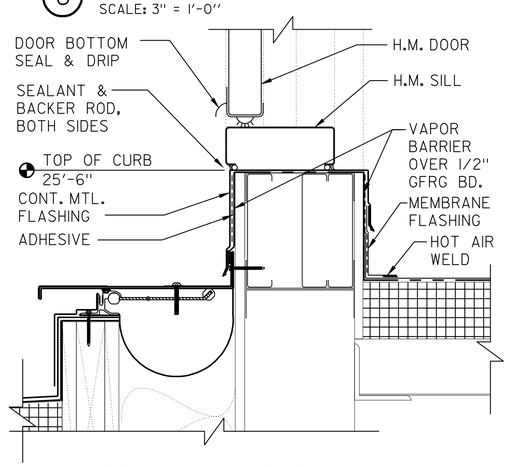

11 **DOOR SILL DETAIL**
SCALE: 3" = 1'-0"

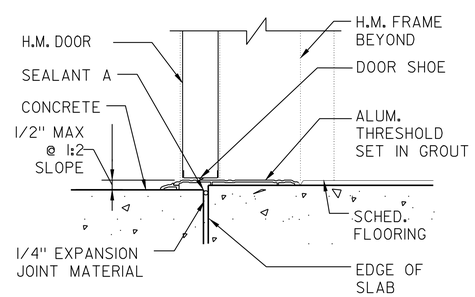

12 **DOOR SILL DETAIL**
SCALE: 3" = 1'-0"

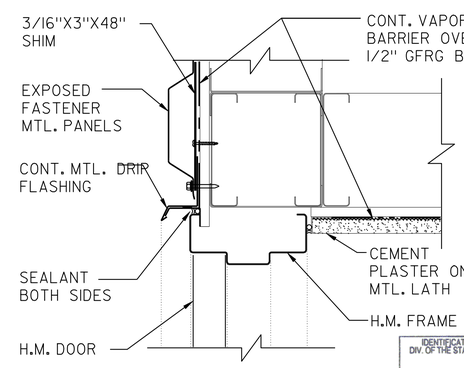

13 **DOOR HEAD DETAIL**
SCALE: 3" = 1'-0"

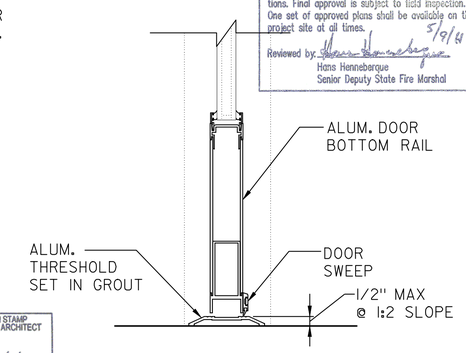

14 **DOOR SILL DETAIL**
SCALE: 3" = 1'-0"

CALIFORNIA STATE FIRE MARSHAL APPROVED
Approval of this plan does not authorize or approve any omission or deviation from applicable regulations. Final approval is subject to field inspection. One set of approved plans shall be available on the project site at all times.
Reviewed by: Hans Hennebarque 5/9/11
Hans Hennebarque
Senior Deputy State Fire Marshal

IDENTIFICATION STAMP DIV. OF THE STATE ARCHITECT
02 111744
AC ARCHS — SS —
DATE 5-5-11

	BY	CHECKED
DESIGN	G.ROBLEY	W.RAMROTH
DETAILS	G.ROBLEY	D.WRIGHT
QUANTITIES	G.ROBLEY	W.RAMROTH

PREPARED FOR THE STATE OF CALIFORNIA DEPARTMENT OF TRANSPORTATION

DIVISION OF ENGINEERING SERVICES
ARCHITECTURAL AND STRUCTURAL DESIGN

BRIDGE NO. 23W000IR
POST MILE 14.8

EASTBOUND CORDELIA CVEF

CVEF — DOOR & WINDOW DETAILS NO. 1

SHEET **A5-20**

ORIGINAL SCALE IN INCHES FOR REDUCED PLANS 0 1 2 3

CU 04264
EA 0A5351

DISREGARD PRINTS BEARING EARLIER REVISION DATES → 10/19/09 03/22/10 05/06/10 08/23/10 11/22/10 05/02/11

REVISION DATES (PRELIMINARY STAGE ONLY) — SHEET — OF

DS OSD ImperialRev.10/07 9/17/10 09:46

18-MAY-2011 09:46

DIST.	COUNTY	ROUTE	POST MILES TOTAL PROJECT	SHEET NO.	TOTAL SHEETS
04	Sol	12,80	L1.8/L2.0, 13.3/15.7	549	740

LICENSED ARCHITECT — DATE 05/02/11

LICENSED ARCHITECT GREG A. ROBLEY No. C-30986 Exp. 02/05/13 STATE OF CALIFORNIA

5-16-11
PLANS APPROVAL DATE

The State of California or its officers or agents shall not be responsible for the accuracy or completeness of electronic copies of this plan sheet.

KENNEDY/JENKS CONSULTANTS
303 SECOND STREET
SUITE 300 SOUTH
SAN FRANCISCO, CA 94960

SOLANO TRANSPORTATION AUTHORITY
ONE HARBOR CENTER, SUITE 130
SUISUN CITY, CA 94585

CALIFORNIA STATE FIRE MARSHAL APPROVED

Approval of this plan does not authorize or approve any omission or deviation from applicable regulations. Final approval is subject to field inspection. One set of approved plans shall be available on the project site at all times.

Reviewed by: 5/9/11
Hans Henneberque
Senior Deputy State Fire Marshal

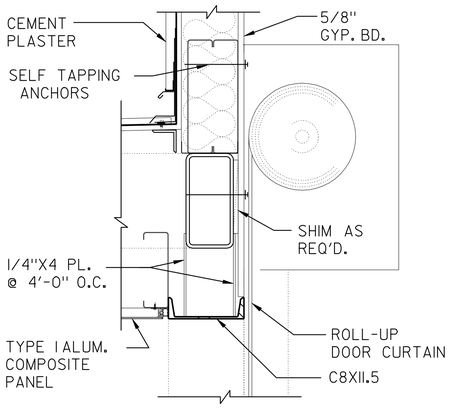

1 **ROLL-UP DOOR HEAD DETAIL**
SCALE: 1-1/2" = 1'-0"

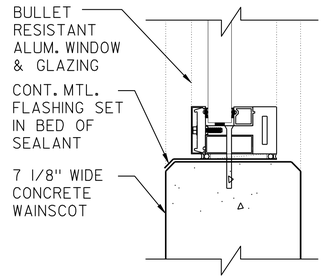

2 **WINDOW SILL DETAIL**
SCALE: 3" = 1'-0"

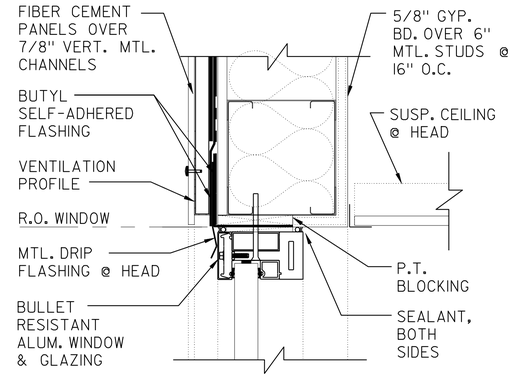

3 **WINDOW HEAD/JAMB DETAIL**
SCALE: 3" = 1'-0"

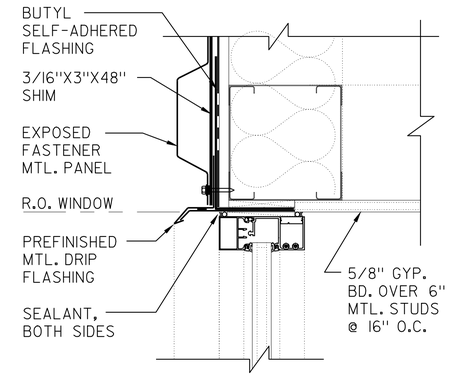

4 **WINDOW HEAD DETAIL**
SCALE: 3" = 1'-0"

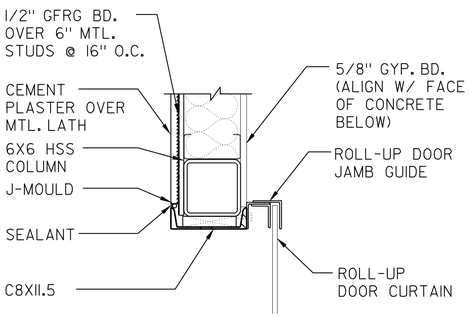

5 **ROLL-UP DOOR JAMB DETAIL**
SCALE: 1-1/2" = 1'-0"

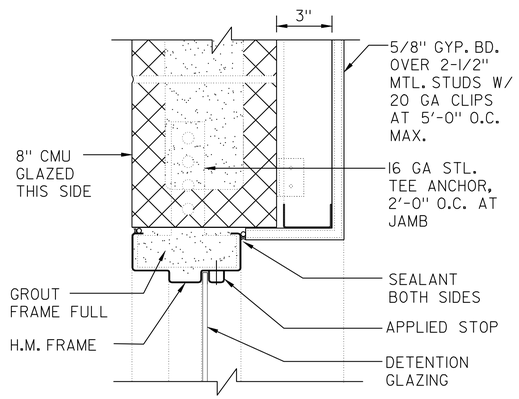

6 **WINDOW JAMB/HEAD DETAIL**
SCALE: 3" = 1'-0"

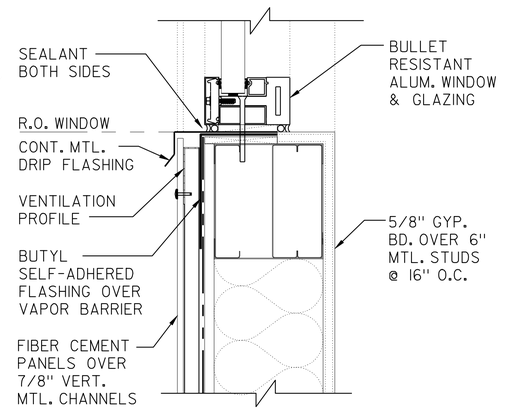

7 **WINDOW SILL DETAIL**
SCALE: 3" = 1'-0"

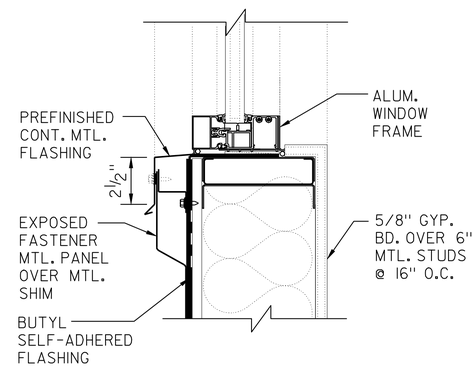

8 **WINDOW SILL DETAIL**
SCALE: 3" = 1'-0"

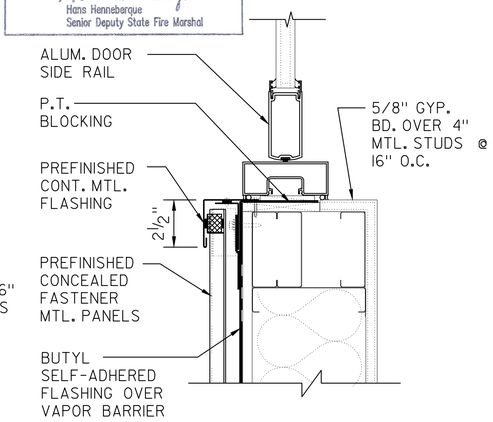

9 **STOREFRONT JAMB DETAIL**
SCALE: 3" = 1'-0"

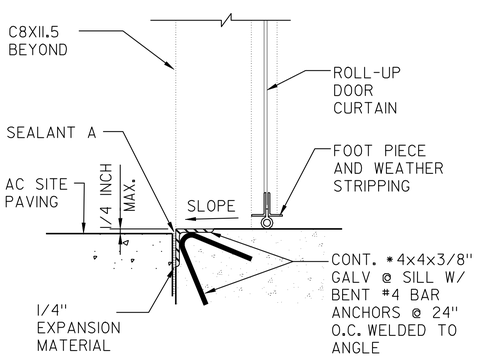

10 **ROLL-UP DOOR SILL DETAIL**
SCALE: 1-1/2" = 1'-0"

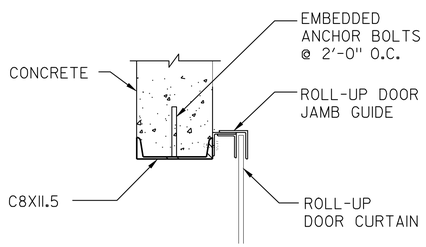

11 **ROLL-UP DOOR JAMB DETAIL**
SCALE: 3" = 1'-0"

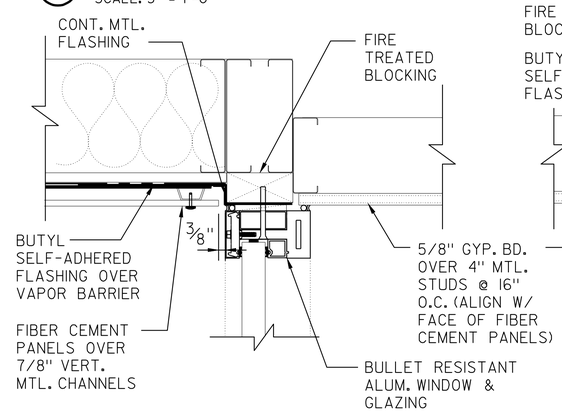

12 **STOREFRONT JAMB DETAIL**
SCALE: 3" = 1'-0"

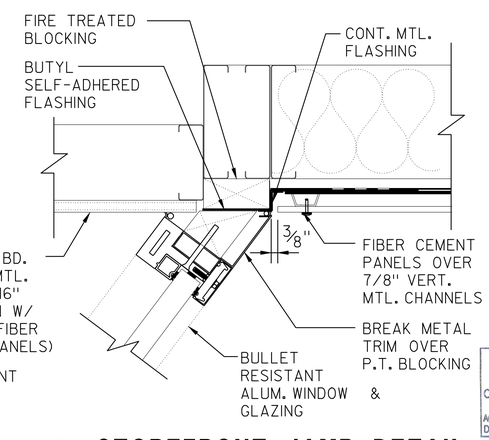

13 **STOREFRONT JAMB DETAIL**
SCALE: 3" = 1'-0"

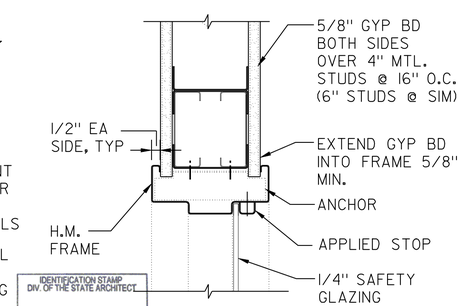

IDENTIFICATION STAMP DIV. OF THE STATE ARCHITECT 02 1117 44 AC ELS SS DATE 5-5-11

14 **WINDOW HEAD/JAMB DETAIL**
SCALE: 3" = 1'-0"

	BY	CHECKED
DESIGN	G.ROBLEY	W.RAMROTH
DETAILS	G.ROBLEY	D.WRIGHT
QUANTITIES	G.ROBLEY	W.RAMROTH

PREPARED FOR THE STATE OF CALIFORNIA DEPARTMENT OF TRANSPORTATION

DIVISION OF ENGINEERING SERVICES
ARCHITECTURAL AND STRUCTURAL DESIGN

BRIDGE NO. 23W000IR
POST MILE 14.8

EASTBOUND CORDELIA CVEF
CVEF — DOOR & WINDOW DETAILS NO. 2

SHEET **A5-21**

ORIGINAL SCALE IN INCHES FOR REDUCED PLANS 0 1 2 3

CU 04264
EA 0A5351

DISREGARD PRINTS BEARING EARLIER REVISION DATES → 10/19/09 03/22/10 05/06/10 08/23/10 11/22/10 05/02/11

REVISION DATES (PRELIMINARY STAGE ONLY) SHEET OF

DS OSD Imperial Rev. 10/07 9/17/10 09:46

18-MAY-2011 09:46

DIST.	COUNTY	ROUTE	POST MILES TOTAL PROJECT	SHEET NO.	TOTAL SHEETS
04	Sol	12,80	L1.8/L2.0, 13.3/15.7	550	740

LICENSED ARCHITECT — DATE 05/02/11

LICENSED ARCHITECT GREG A. ROBLEY No. C-30986 Exp. 02/05/13 STATE OF CALIFORNIA

5-16-11
PLANS APPROVAL DATE

The State of California or its officers or agents shall not be responsible for the accuracy or completeness of electronic copies of this plan sheet.

KENNEDY/JENKS CONSULTANTS
303 SECOND STREET
SUITE 300 SOUTH
SAN FRANCISCO, CA 94960

SOLANO TRANSPORTATION AUTHORITY
ONE HARBOR CENTER, SUITE 130
SUISUN CITY, CA 94585

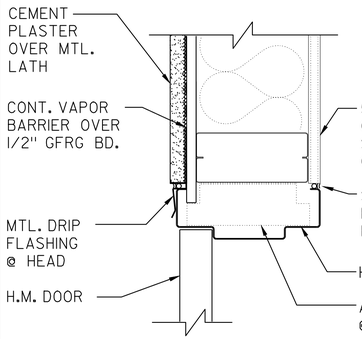

1 DOOR HEAD/JAMB DETAIL
SCALE: 3" = 1'-0"

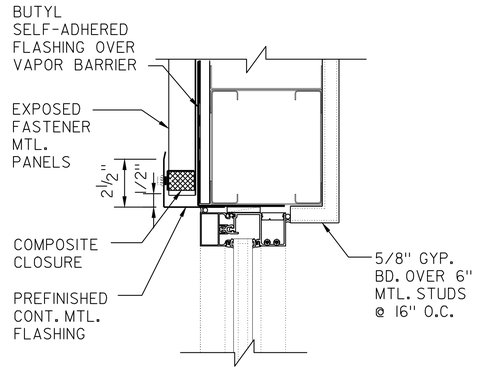

2 WINDOW JAMB DETAIL
SCALE: 3" = 1'-0"

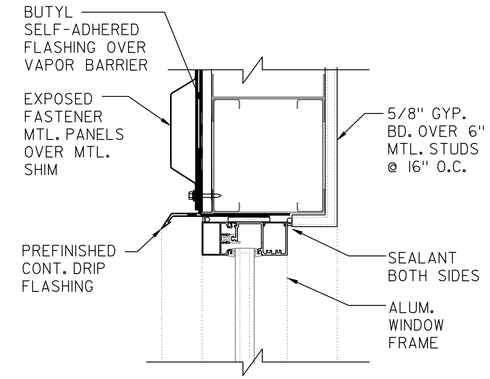

3 WINDOW HEAD DETAIL
SCALE: 3" = 1'-0"

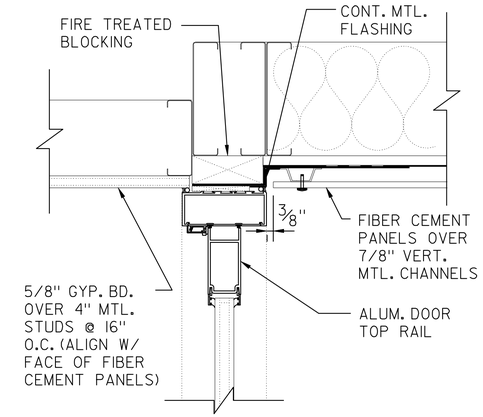

4 STOREFRONT JAMB DETAIL
SCALE: 3" = 1'-0"

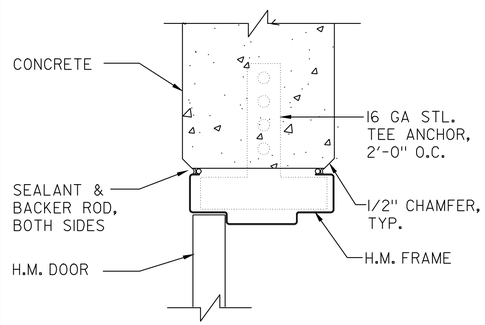

5 DOOR JAMB DETAIL
SCALE: 3" = 1'-0"

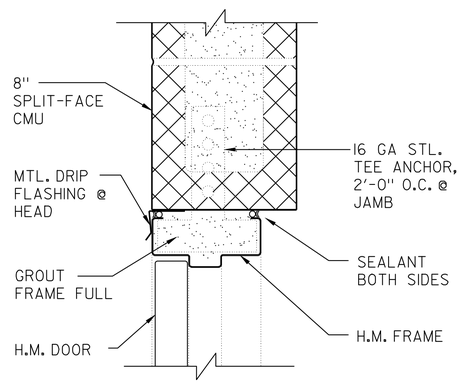

6 DOOR HEAD/JAMB DETAIL
SCALE: 3" = 1'-0"

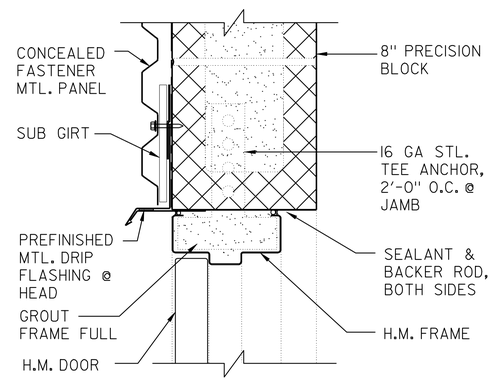

7 DOOR HEAD/JAMB DETAIL
SCALE: 3" = 1'-0"

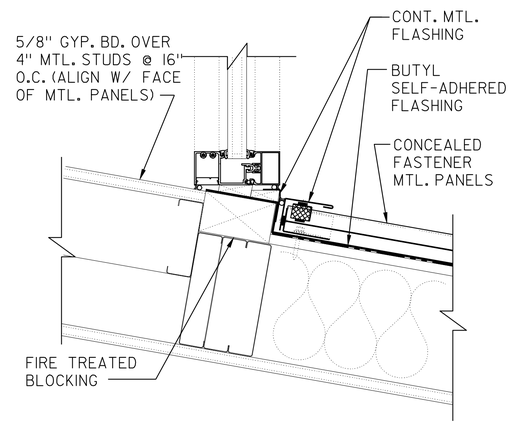

8 STOREFROUNT JAMB DETAIL
SCALE: 3" = 1'-0"

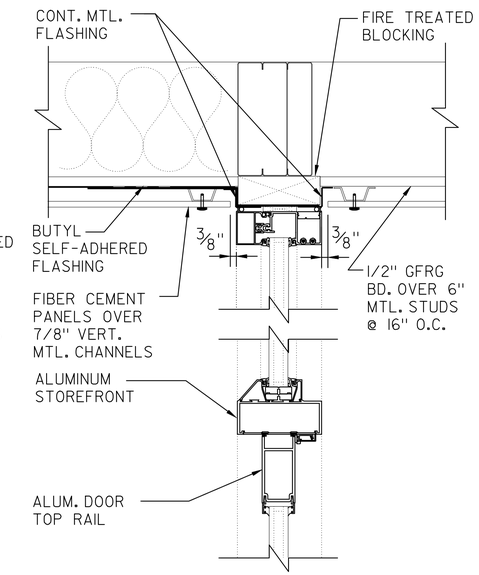

9 STOREFRONT JAMB DETAIL
SCALE: 3" = 1'-0"

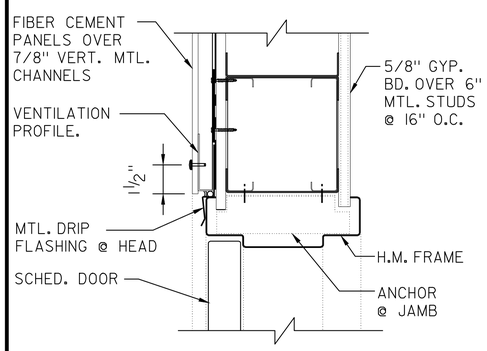

10 DOOR HEAD/JAMB DETAIL
SCALE: 3" = 1'-0"

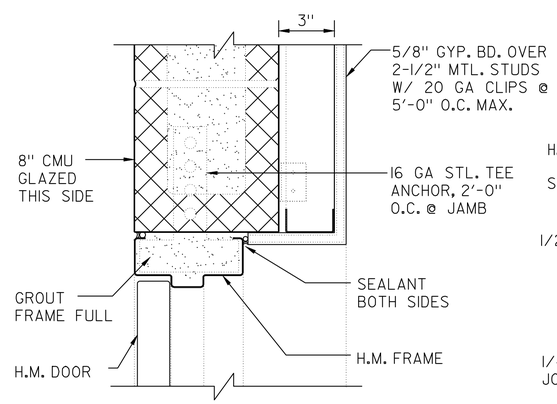

11 DOOR HEAD/JAMB DETAIL
SCALE: 3" = 1'-0"

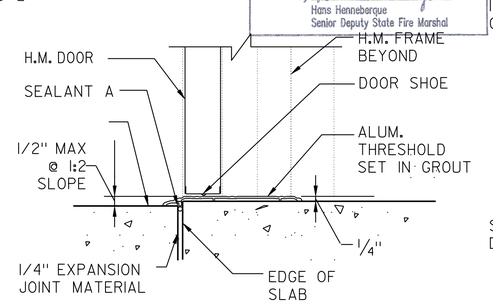

12 DOOR SILL DETAIL
SCALE: 3" = 1'-0"

CALIFORNIA STATE FIRE MARSHAL APPROVED

Approval of this plan does not authorize or approve any omission or deviation from applicable regulations. Final approval is subject to field inspection. One set of approved plans shall be available on the project site at all times.

Reviewed by: 5/9/11
Hans Hanneberque
Senior Deputy State Fire Marshal

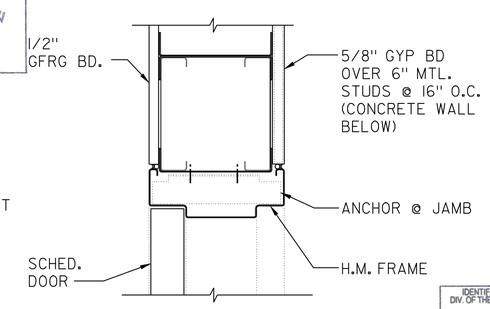

13 DOOR HEAD/JAMB DETAIL
SCALE: 3" = 1'-0"

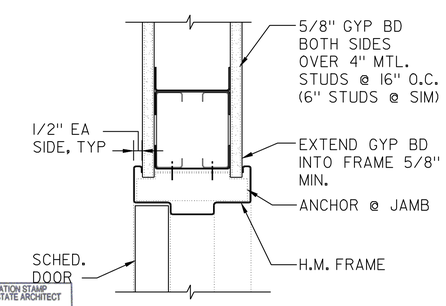

14 DOOR HEAD/JAMB DETAIL
SCALE: 3" = 1'-0"

IDENTIFICATION STAMP DIV. OF THE STATE ARCHITECT
02 111744
AC Areals — SS —
DATE 5-5-11

	BY	CHECKED
DESIGN	G.ROBLEY	W.RAMROTH
DETAILS	G.ROBLEY	D.WRIGHT
QUANTITIES	G.ROBLEY	W.RAMROTH

ORIGINAL SCALE IN INCHES FOR REDUCED PLANS 0 1 2 3

PREPARED FOR THE STATE OF CALIFORNIA DEPARTMENT OF TRANSPORTATION

DIVISION OF ENGINEERING SERVICES
ARCHITECTURAL AND STRUCTURAL DESIGN

CU 04264
EA 0A5351

BRIDGE NO. 23W000IR
POST MILE 14.8

EASTBOUND CORDELIA CVEF

CVEF — DOOR & WINDOW DETAILS NO. 3

SHEET **A5-22**

DISREGARD PRINTS BEARING EARLIER REVISION DATES → REVISION DATES (PRELIMINARY STAGE ONLY) 10/19/09 03/22/10 05/06/10 08/23/10 11/22/10 05/02/11 — SHEET — OF —

DS OSD Imperial Rev. 10/07 9/17/10 09:46

18-MAY-2011 09:46

DIST.	COUNTY	ROUTE	POST MILES TOTAL PROJECT	SHEET NO.	TOTAL SHEETS
04	Sol	12,80	L1.8/L2.0, 13.3/15.7	551	740

LICENSED ARCHITECT — DATE 05/02/11

LICENSED ARCHITECT GREG A. ROBLEY No. C-30986 Exp. 02/05/13 STATE OF CALIFORNIA

5-16-11
PLANS APPROVAL DATE

The State of California or its officers or agents shall not be responsible for the accuracy or completeness of electronic copies of this plan sheet.

KENNEDY/JENKS CONSULTANTS
303 SECOND STREET
SUITE 300 SOUTH
SAN FRANCISCO, CA 94960

SOLANO TRANSPORTATION AUTHORITY
ONE HARBOR CENTER, SUITE 130
SUISUN CITY, CA 94585

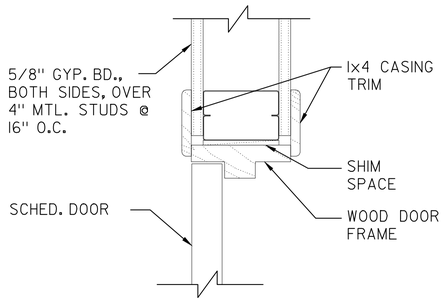

1 **DOOR JAMB DETAIL**
SCALE: 3" = 1'-0"

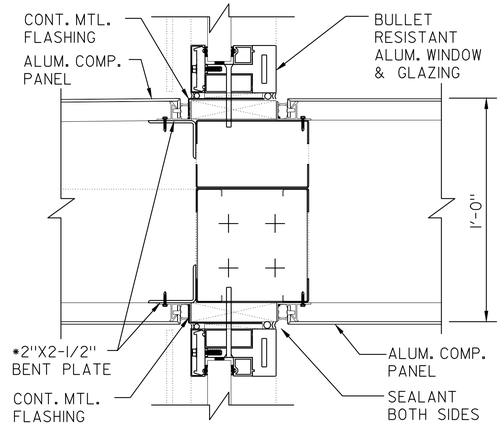

2 **WINDOW HEAD/SILL DETAIL**
SCALE: 3" = 1'-0"

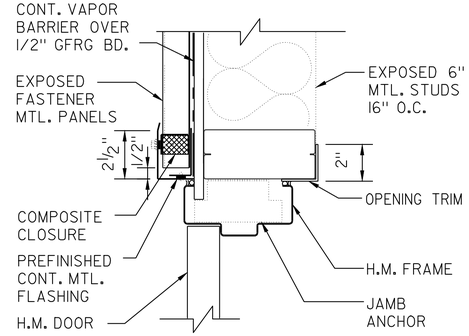

3 **DOOR JAMB DETAIL**
SCALE: 3" = 1'-0"

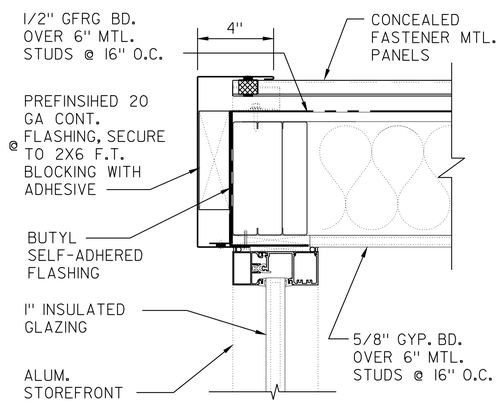

4 **STOREFRONT JAMB DETAIL**
SCALE: 3" = 1'-0"

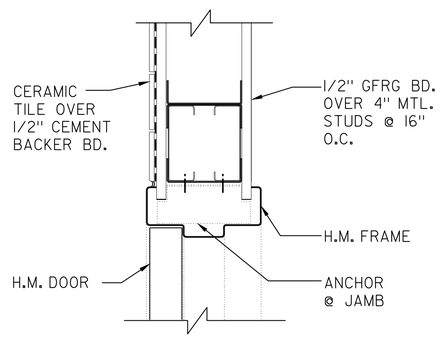

5 **DOOR HEAD/JAMB DETAIL**
SCALE: 3" = 1'-0"

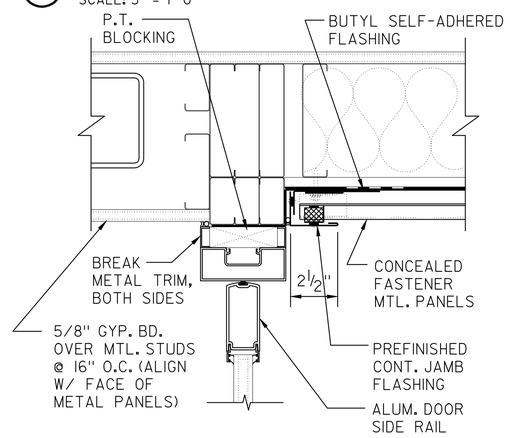

8 **STOREFRONT JAMB DETAIL**
SCALE: 3" = 1'-0"

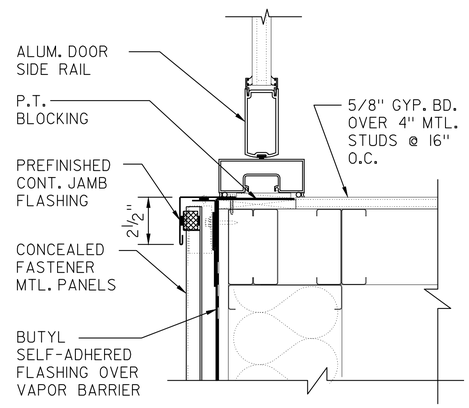

7 **STOREFRONT JAMB DETAIL**
SCALE: 3" = 1'-0"

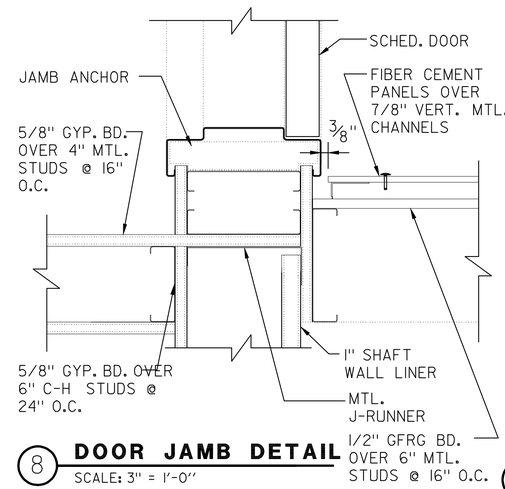

8 **DOOR JAMB DETAIL**
SCALE: 3" = 1'-0"

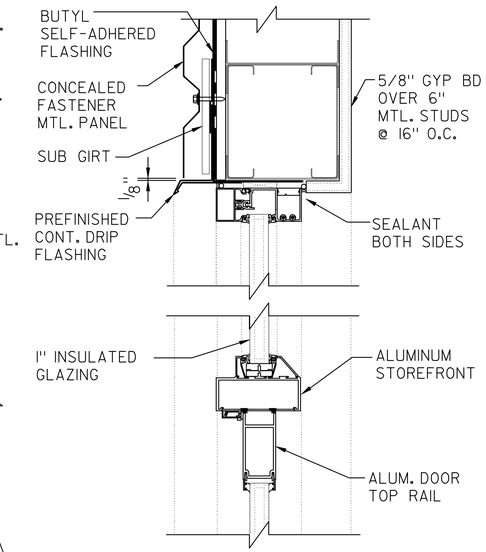

9 **DOOR/TRANSOM HEAD DETAIL**
SCALE: 3" = 1'-0"

CALIFORNIA STATE FIRE MARSHAL APPROVED
Approval of this plan does not authorize or approve any omission or deviation from applicable regulations. Final approval is subject to field inspection. One set of approved plans shall be available on the project site at all times.
Reviewed by: Hans Henneberque 5/9/11
Hans Henneberque
Senior Deputy State Fire Marshal

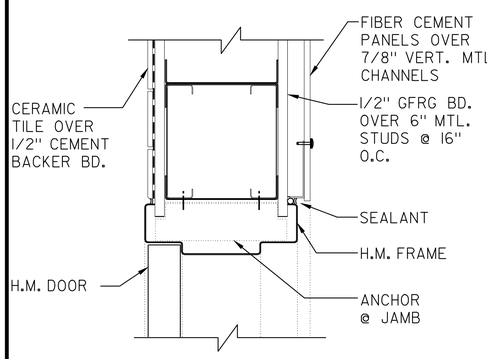

10 **DOOR HEAD/JAMB DETAIL**
SCALE: 3" = 1'-0"

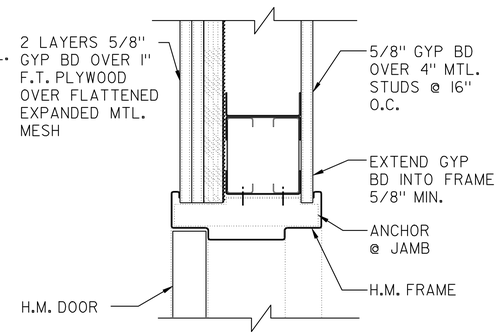

11 **DOOR HEAD/JAMB DETAIL**
SCALE: 3" = 1'-0"

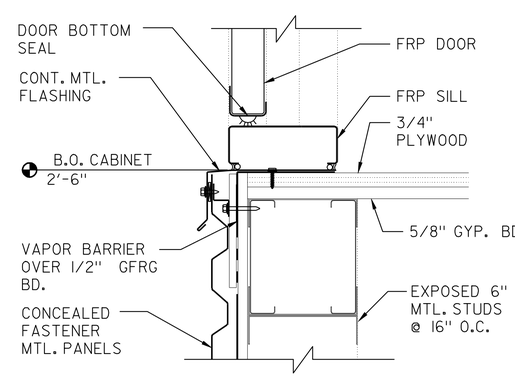

12 **DOOR SILL DETAIL**
SCALE: 3" = 1'-0"

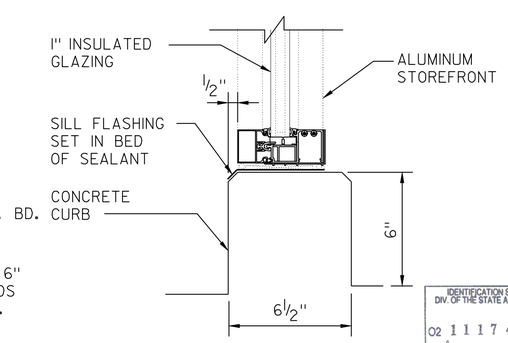

IDENTIFICATION STAMP DIV. OF THE STATE ARCHITECT 02 111744 AC ABLS SS DATE 5-5-11

13 **STOREFRONT SILL DETAIL**
SCALE: 3" = 1'-0"

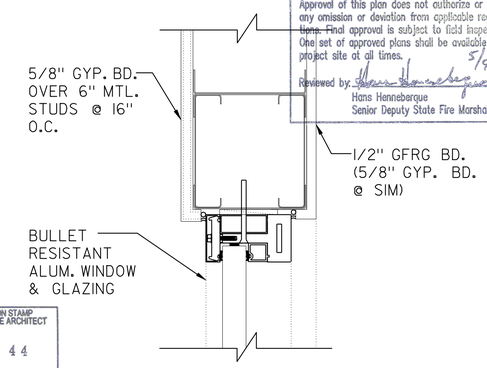

14 **WINDOW HEAD/JAMB DETAIL**
SCALE: 3" = 1'-0"

	BY	CHECKED
DESIGN	G.ROBLEY	W.RAMROTH
DETAILS	G.ROBLEY	D.WRIGHT
QUANTITIES	G.ROBLEY	W.RAMROTH

ORIGINAL SCALE IN INCHES FOR REDUCED PLANS 0 1 2 3

PREPARED FOR THE STATE OF CALIFORNIA DEPARTMENT OF TRANSPORTATION

DIVISION OF ENGINEERING SERVICES
ARCHITECTURAL AND STRUCTURAL DESIGN

CU 04264
EA 0A5351

BRIDGE NO. 23W0001R
POST MILE 14.8

EASTBOUND CORDELIA CVEF

CVEF — DOOR & WINDOW DETAILS NO. 4

SHEET **A5-23**

DISREGARD PRINTS BEARING EARLIER REVISION DATES → 10/19/09 03/22/10 05/06/10 08/23/10 11/22/10 05/02/11

REVISION DATES (PRELIMINARY STAGE ONLY) SHEET OF

DS OSD imperialRev.10/07 9/17/10 09:47

18-MAY-2011 09:47

DIST.	COUNTY	ROUTE	POST MILES TOTAL PROJECT	SHEET NO.	TOTAL SHEETS
04	Sol	12,80	L1.8/L2.0, 13.3/15.7	552	740

LICENSED ARCHITECT — DATE 5/2/11

LICENSED ARCHITECT GREG A. ROBLEY No. C-30986 Exp. 02/05/13 STATE OF CALIFORNIA

5-16-11
PLANS APPROVAL DATE

The State of California or its officers or agents shall not be responsible for the accuracy or completeness of electronic copies of this plan sheet.

KENNEDY/JENKS CONSULTANTS
303 SECOND STREET
SUITE 300 SOUTH
SAN FRANCISCO, CA 94960

SOLANO TRANSPORTATION AUTHORITY
ONE HARBOR CENTER, SUITE 130
SUISUN CITY, CA 94585

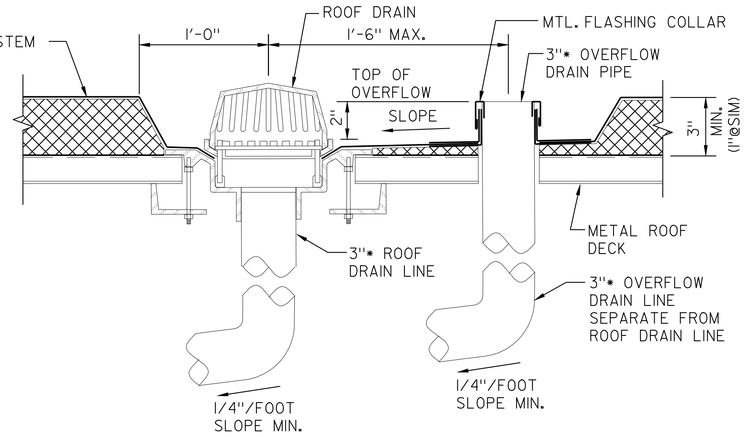

1 ROOF DRAIN DETAIL
SCALE: 1-1/2" = 1'-0"

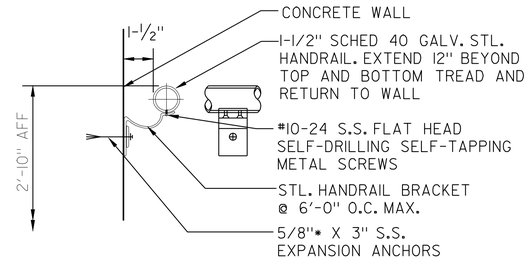

4 HANDRAIL DETAIL
SCALE: 3/4" = 1'-0"

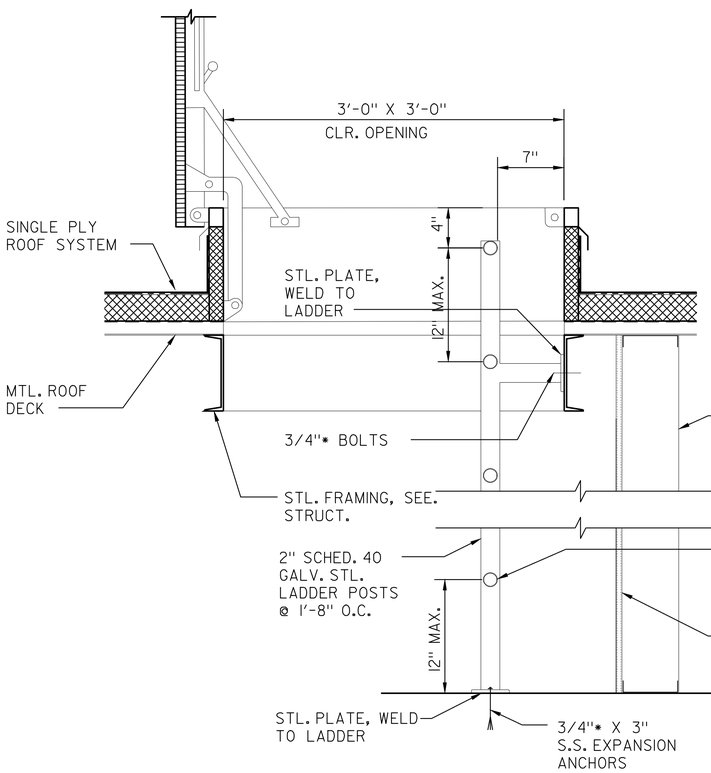

2 HATCH/LADDER DETAIL
SCALE: 1-1/2" = 1'-0"

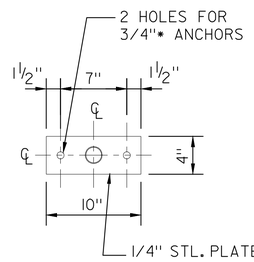

A PLATE DETAIL
SCALE: 1-1/2" = 1'-0"

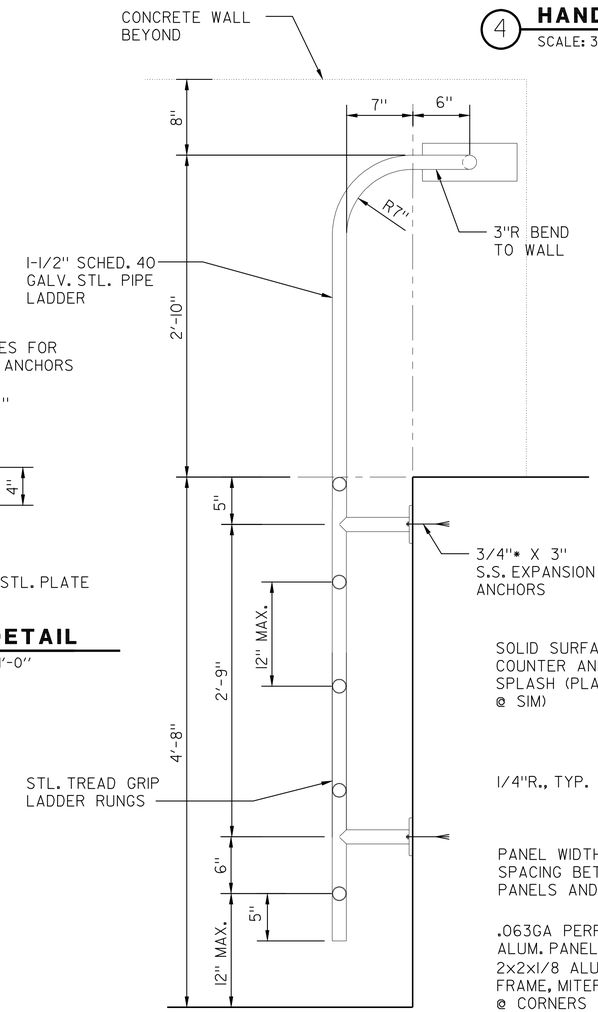

3 PIT LADDER DETAIL
SCALE: 1-1/2" = 1'-0"

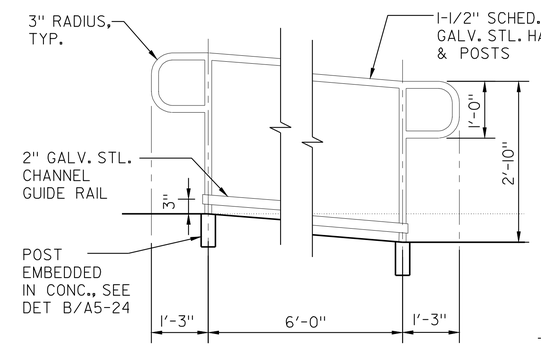

5 RAMP HANDRAIL DETAIL
SCALE: 3/4" = 1'-0"

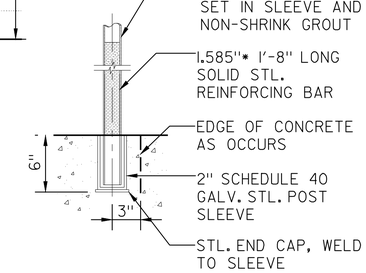

B POST DETAIL
SCALE: 1-1/2" = 1'-0"

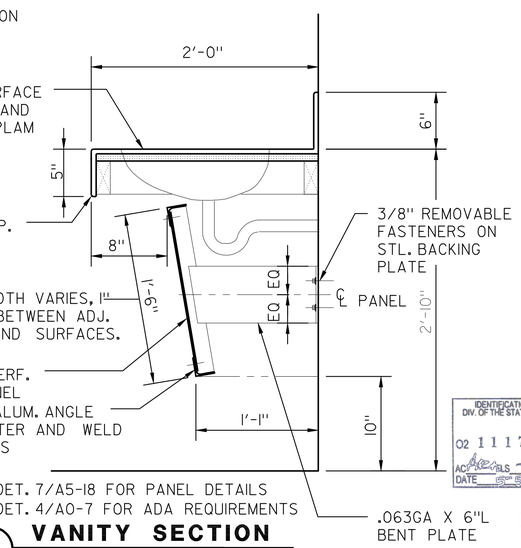

SEE DET. 7/A5-18 FOR PANEL DETAILS
SEE DET. 4/A0-7 FOR ADA REQUIREMENTS

6 VANITY SECTION
SCALE: 1-1/2" = 1'-0"

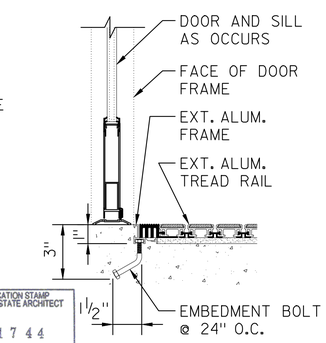

7 FLOOR GRID SECTION
SCALE: 3" = 1'-0"

CALIFORNIA STATE FIRE MARSHAL APPROVED
Approval of this plan does not authorize or approve any omission or deviation from applicable regulations. Final approval is subject to field inspection. One set of approved plans shall be available on the project site at all times.
Reviewed by: Hans Henneberque 5/9/11
Hans Henneberque
Senior Deputy State Fire Marshal

IDENTIFICATION STAMP DIV. OF THE STATE ARCHITECT
02 111744
AC ALS SS
DATE

	BY	CHECKED
DESIGN	G.ROBLEY	W.RAMROTH
DETAILS	G.ROBLEY	D.WRIGHT
QUANTITIES	G.ROBLEY	W.RAMROTH

PREPARED FOR THE STATE OF CALIFORNIA DEPARTMENT OF TRANSPORTATION

DIVISION OF ENGINEERING SERVICES ARCHITECTURAL AND STRUCTURAL DESIGN

BRIDGE NO. 23W0001R
POST MILE 14.8

EASTBOUND CORDELIA CVEF
CVEF — MISCELLANEOUS DETAILS

SHEET A5-24

40a535wba5-24.dgn
DS OSD imperialRev.10/07 18-MAY-2011 09:47

ORIGINAL SCALE IN INCHES FOR REDUCED PLANS 0 1 2 3

CU 04264
EA 0A5351

DISREGARD PRINTS BEARING EARLIER REVISION DATES → 10/19/09 03/22/10 05/06/10 08/23/10 11/22/10 05/02/11

REVISION DATES (PRELIMINARY STAGE ONLY) SHEET OF

18-MAY-2011 09:47
40a535wba5-24.dgn

DIST.	COUNTY	ROUTE	POST MILES TOTAL PROJECT	SHEET NO.	TOTAL SHEETS
04	Sol	12,80	L1.8/L2.0, 13.3/15.7	553	740

LICENSED ARCHITECT — DATE 05/02/11

LICENSED ARCHITECT GREG A. ROBLEY No. C-30986 Exp. 02/05/13 STATE OF CALIFORNIA

5-16-11
PLANS APPROVAL DATE

The State of California or its officers or agents shall not be responsible for the accuracy or completeness of electronic copies of this plan sheet.

KENNEDY/JENKS CONSULTANTS
303 SECOND STREET
SUITE 300 SOUTH
SAN FRANCISCO, CA 94960

SOLANO TRANSPORTATION AUTHORITY
ONE HARBOR CENTER, SUITE 130
SUISUN CITY, CA 94585

CALIFORNIA STATE FIRE MARSHAL APPROVED

Approval of this plan does not authorize or approve any omission or deviation from applicable regulations. Final approval is subject to field inspection. One set of approved plans shall be available on the project site at all times.

Reviewed by: Hans Hanneberque 5/9/11
Hans Henneberque
Senior Deputy State Fire Marshal

INTERIOR FINISH SCHEDULE

NO.	ROOM NAME	FLOOR	BASE	WALL NORTH	WALL EAST	WALL SOUTH	WALL WEST	CEILING	CEILING HEIGHT	MISCELLANEOUS
COMMERCIAL VEHICLE ENFORCEMENT FACILITY										
1	LOBBY	F-2	B-2	-	W-17	W-12/W-16	W-5	C-3/C-6	8'-6"/EXP. STRUCT.	
2	FOYER	F-2	B-2	-	W-12/W-16	-	W-12/W-16	C-4/C-6	10'-6"	
3	MEN	F-3	B-3	W-20	W-20	W-20	W-20	C-10	9'-0"	
4	WOMEN	F-4	B-4	W-20	W-20	W-20	W-20	C-10	9'-0"	
5	OBSERVATION	F-7	B-5	-	W-8	W-8	W-8	C-1/C-3	8'-6"/10'-6"	
5A	TRANSACTION COUNTER	F-7	B-5	W-8	-	-	W-5	C-1/C-3	8'-6"/10'-6"	
6	PURSUIT	F-7	B-5	W-8	-	W-17	-	C-3/C-6	8'-6"/EXP. STRUCT.	
7	CONF. STORAGE	F-1	B-6	W-5	W-5	W-5	W-5	C-2	9'-0"	
8	ELECTRICAL ROOM	F-1	B-1	W-5	W-5	W-5	W-5	-	EXP. STRUCT.	W-14 AS REQ'D PER ELEC.
9	CONFERENCE/TRAINING	F-5	B-6	W-5	W-5	W-5	W-5/W-7	C-5/C-7	12'-0"/EXP. STRUCT.	M-2
10	SERGEANT OFFICE	F-5	B-6	W-5	W-5	W-5	W-5	C-1	10'-6"	
11	CLERICAL OFFICE	F-5	B-6	W-5	W-5	W-5	W-5	C-1	10'-6"	C-8 @ LIGHT SHELVES
12	MAIL/CLERICAL STOR.	F-6	B-6	W-5	W-5	W-5	W-5	C-1	9'-0"	
13	VESTIBULE	F-1	B-6	W-5	W-5	W-5	W-5	-	EXP. STRUCT.	
14	NOT USED	-	-	-	-	-	-	-	-	
15	ELEC/COMM	F-6	B-6	W-5	W-5	W-5	W-5	C-1	9'-0"	W-14 AS REQ'D PER ELEC.
16	ENFORCEMENT OFFICE	F-6	B-6	W-5	W-5	W-5	W-5	C-1	9'-0"	
17	INTOX	F-11	-	W-2	W-2	W-2	W-2	C-2	8'-8"	
18	CLERICAL SUPERVISOR	F-5	B-6	W-5	W-5	W-5	W-5	C-1	10'-6"	C-8 @ LIGHT SHELVES
19	LIEUTENANT OFFICE	F-5	B-6	W-5	W-5	W-5	W-5	C-1	10'-6"	C-8 @ LIGHT SHELVES
20	SPECIAL DUTY OFFICE	F-5	B-6	W-5	W-5	W-5	W-5	C-1	10'-6"	C-8 @ LIGHT SHELVES
21	EVIDENCE	F-8	B-9	W-5	W-5	W-5	W-5	C-2	9'-0"	
21A	EVIDENCE VESTIBULE	F-8	B-9	W-5	W-5	W-5	W-5	C-2	9'-0"	
22	WEAPONS	F-8	B-9	W-5	W-5	W-5	W-5	C-1	9'-0"	
23	INTERAGENCY	F-6	B-6	W-5	W-5	W-5	W-5	C-1	9'-0"	
24	UNIFORM	F-6	B-6	W-5	W-5	W-5	W-5	C-2	9'-0"	
25	CHP EQUIPMENT	F-6	B-6	W-5	W-5	W-5	W-5	C-1	10'-6"	
26	EQUIP. STORAGE	F-6	B-6	W-5	W-5	W-5	W-5	C-2	9'-0"	
27	BREAK ROOM	F-6	B-6	W-8	W-5/W-8	W-5	W-5	C-1	10'-6"	
27A	PATIO	F-2	B-2	W-11	-	W-13	-	C-8	10'-6"	M-2
28	STAFF WOMEN	F-10	B-8	W-4	W-4	W-4	W-4	C-10	9'-0"	
29	WOMEN LOCKER	F-10	B-8	W-19	W-19	W-19	W-19	C-10	9'-0"	W-4 @ SHOWER ROOM
30	STAFF MEN	F-9	B-7	W-3	W-3	W-3	W-3	C-9	9'-0"	
31	MEN LOCKER	F-9	B-7	W-18	W-18	W-18	W-18	C-9	9'-0"	W-3 @ SHOWER ROOM
32	JANITOR	F-1	B-6	W-5	W-5	W-5	W-5	C-2	9'-0"	
33	LACTATION	F-10	B-8	W-19	W-19	W-19	W-19	C-10	9'-0"	
34	TOOL STORAGE	F-1	B-6	W-5	W-5	W-5	W-5	-	EXP. STRUCT.	
35	MECHANICAL ROOM	F-1	B-6	W-5	W-5	W-5	W-5	-	EXP. STRUCT.	
36	HALLWAY	F-6	B-6	W-5	W-5	W-5	W-5	C-4	9'-0"	
36A	HALLWAY	F-6	B-6	W-5	W-5	W-5	W-5	C-4	9'-0"	W-14 AS REQ'D PER ELEC.
37	ELECTRICAL ROOM	F-1	B-6	W-5	W-5	W-5	W-5	-	EXP. STRUCT.	
38	INSPECTION BAYS	F-1	B-1	W-10	W-10	W-10	W-10	-	EXP. STRUCT.	M-1, C2 @ SKYLIGHTS
39	ROOF MECHANICAL	F-1	B-1	-	-	W-10	-	-	EXP. STRUCT.	
GENERATOR BUILDING										
40	DUMPSTER ENCLOSURE	F-1	B-1	W-1	W-1	W-1	W-1	-	-	
41	KENNEL	F-1	B-1	W-2	W-2	W-2	W-2	-	EXP. STRUCT.	
42	STORAGE	F-1	B-1	W-1	W-1	W-1	W-1	-	EXP. STRUCT.	
43	GENERATOR	F-1	B-1	W-1	W-1	W-1	W-1	-	-	

EXTERIOR FINISH SCHEDULE

MATERIAL	FINISH	COLOR	MANUFACTURER	NOTES
EXTERIOR GLAZING	-	SOLARBAN 60	PPG	SEE WINDOW TYPES
EXPOSED STRUCTURAL STEEL	GLOSS	NETWORK GRAY 7073	SHERWIN-WILLIAMS	
EXPOSED FASTENER METAL PANEL	PVDF	CHARCOAL GRAY 9921	CENTRIA	22 GA, 1-1/2" DEEP RIBS @ 7.2" O.C.
CONCEALED FASTENER METAL PANEL	PVDF	SILVERSMITH 9946	CENTRIA	22 GA, 7/8" DEEP RIBS @ 4" O.C.
STANDING SEAM METAL ROOFING	PVDF	DOVE GRAY 9918	CENTRIA	22 GA, 2" HIGH SEAMS @ 16" O.C.
FIBER CEMENT PANEL, TYPE 1	CARAT	ONYX 7093	SWISSPEARL	8MM THK.
FIBER CEMENT PANEL, TYPE 2	REFLEX	PLATINUM 9020	SWISSPEARL	8MM THK., 20MM• STAGGERED PERFS. SEE NOTE 8
FIBER CEMENT PANEL, TYPE 3	REFLEX	NIGHT BLUE 9242	SWISSPEARL	8MM THK.
ALUMINUM COMPOSITE PANEL, TYPE 1	PVDF	BONE WHITE	ALPOLIC	4MM THK.
ALUMINUM COMPOSITE PANEL, TYPE 2	PVDF	AGT ALUMINUM GREY	ALPOLIC	4MM THK.
ACRYLIC COATED CEMENT PLASTER	SANDPEBBLE FINE	DRIFTWOOD 133	DRYVIT	8MM THK.
PERFORATED ALUMINUM PANEL	PVDF	VALSPAR ACRODIZE BRIGHT SILVER	ACCURATE	0.125 GA, 3/8"• STAGGERED PERFS. SEE NOTE 9
PERFORATED, CORRUGATED ALUMINUM PANEL	PVDF	VALSPAR ACRODIZE BRIGHT SILVER	ACCURATE	0.063 GA, 1-1/2" DEEP RIBS @ 7.2" O.C., 3/8"• STAGGERED PERFS.
TRANSLUCENT, CORRUGATED PLASTIC	ACRYLIC RESIN	WHITE/OPAL	ENDURO	1-1/2" DEEP RIBS @ 7.2" O.C.
CONCRETE MASONRY UNITS	SPLIT FACE	BLACK 50	ORCO BLOCK	8X8X16
ALUMINUM LOUVER	PVDF	STONE GRAY	RUSKIN	

INTERIOR FINISHES

FLOOR

F-1 CONCRETE W/ HARDENER AND SEALER
F-2 COLORED CONCRETE W/ COLOR SEALER, DAVIS COLORS SILVERSMOKE
F-3 CERAMIC TILE, 6"X6", DALTILE B932-SUEDE GRAY SPECKLE
F-4 CERAMIC TILE, 6"X6", DALTILE B930-UPTOWN TAUPE SPECKLE
F-5 CARPET, BIGELOW GRIDWORKS III 7826-ARCHITECTURE
F-6 VINYL COMPOSITION TILE, ARMSTRONG EXCELON 51877-EARTH GREEN
F-7 VINYL COMPOSITION TILE, ARMSTRONG EXCELON 51904-STERLING
F-8 CHEMICAL RESISTANT SHEET VINYL, ARMSTRONG MEDINTECH 88463-BLACK GRANITE
F-9 CERAMIC TILE, 6"X6", DALTILE B933-GALAXY SPECKLE
F-10 CERAMIC TILE, 6"X6", DALTILE B928-URBAN PUTTY SPECKLE
F-11 SEAMLESS EPOXY, SIKAFLOOR GRAY

BASE

B-1 CONCRETE CURB W/ HARDENER AND SEALER
B-2 COLORED CONCRETE CURB W/ COLORED SEALER, DAVIS COLORS SILVERSMOKE
B-3 COVED CERAMIC TILE, 6"HX12"W, DALTILE SUEDE GRAY SPECKLE
B-4 COVED CERAMIC TILE, 6"HX12"W, DALTILE UPTOWN TAUPE SPECKLE
B-5 RUBBER COVE BASE, 6"H, JOHNSONITE 38-PEWTER
B-6 RUBBER COVE BASE, 4"H, JOHNSONITE 168-THUNDER
B-7 COVED CERAMIC TILE, 6"HX12"W, DALTILE GALAXY SPECKLE
B-8 COVED CERAMIC TILE, 6"HX12"W, DALTILE URBAN PUTTY SPECKLE
B-9 INTEGRAL SHEET VINYL COVE BASE, 4"H, ARMSTRONG MEDINTECH 88463-BLACK GRANITE

WALL

W-1 CONCRETE MASONRY UNITS, 8X8X16 PRECISION
W-2 CONCRETE MASONRY UNITS, 8X8X16 GLAZED CERAMIC, TRENWYTH ASTRAGLAZE SILVER GRAY
W-3 CERAMIC TILE 1"X1", DALTILE DK07-HORIZON
W-4 CERAMIC TILE 1"X1", DALTILE DK04-BEACH
W-5 GYPSUM BOARD, PAINTED, FLAT, SW 7056-RESERVED WHITE
W-6 GYPSUM BOARD, PAINTED, FLAT, SW 6258-TRICORN BLACK
W-7 GYPSUM BOARD, PAINTED, FLAT, SW 6517-REGATTA
W-8 GYPSUM BOARD, PAINTED, FLAT, SW 6142-MACADAMIA
W-9 GYPSUM BOARD, PAINTED, FLAT, SW 7076-CYBERSPACE
W-10 GYPSUM BOARD, PAINTED, EGGSHELL, SW 7073-NETWORK GRAY
W-11 FIBER CEMENT PANEL, TYPE 1
W-12 FIBER CEMENT PANEL, TYPE 3
W-13 CONCEALED FASTENER METAL PANEL
W-14 PLYWOOD, PAINTED, FLAT, SW 7067-CITYSCAPE
W-15 PERFORATED ALUMINUM PANEL
W-16 GFRG BOARD, FLAT, SW 6258-TRICORN BLACK
W-17 GYPSUM BOARD, PAINTED, FLAT, SW 6254-LAZY GRAY
W-18 GYPSUM BOARD, PAINTED, SEMI-GLOSS, SW 7056-RESERVED WHITE
W-19 GYPSUM BOARD, PAINTED, SEMI-GLOSS, SW 6147-PANDA WHITE
W-20 CERAMIC TILE 1"X1", DALTILE D335-ALMOND

CEILING

C-1 SUSPENDED ACOUSTIC TILE, 24"X24", USG MILLENIA CLIMAPLUS, WHITE
C-2 GYPSUM BOARD, PAINTED, FLAT, SW 7056-RESERVED WHITE
C-3 GYPSUM BOARD, PAINTED, FLAT, SW 7073-NETWORK GRAY
C-4 SUSPENDED METAL PLANK, ARMSTRONG METALWORKS, SILVER GREY
C-5 SUSPENDED MICROPERFORATED METAL CANOPY, ARMSTRONG METALWORKS, WHITE
C-6 EXPOSED STRUCTURE, PAINTED, FLAT, SW 6258-TRICORN BLACK
C-7 EXPOSED STRUCTURE, PAINTED, GLOSS, SW 7073-NETWORK GRAY
C-8 ALUMINUM COMPOSITE PANEL, TYPE 1
C-9 GYPSUM BOARD, PAINTED, SEMI-GLOSS, SW 7056-RESERVED WHITE
C-10 GYPSUM BOARD, PAINTED, SEMI-GLOSS, SW 6417-PANDA WHITE

MILLWORK

SS-1 1/2" THK. SOLID SURFACE COUNTER (AND BACK SPLASH AS OCCURS), CORAIN SILVERLITE
SS-2 1/2" THK. SOLID SURFACE COUNTER AND BACK SPLASH, CORAIN ANTARCTICA
SS-3 1/2"THK. SOLID SURFACE COUNTER AND BACK SPLASH, CORAIN BISQUE
SS-4 1/2" THK. SOLID SURFACE COUNTER AND BACK SPLASH, CORAIN PLATINUM
PL-1 PLASTIC LAMINATE OVER 3/4" PARTICLEBOARD, WILSONART TUSCAN OLIVE
PL-2 PLASTIC LAMINATE OVER 3/4" PARTICLEBOARD, WILSONART NORTH SEA
WD-1 MAPLE VENEER OVER 3/4" PLYWOOD, CLEAR SEMI-GLOSS VARNISH

MISCELLANEOUS

M-1 EXPOSED STRUCTURAL STEEL, PAINTED, GLOSS, SW 6882-DAREDEVIL
M-2 EXPOSED STRUCTURAL STEEL, PAINTED, GLOSS, SW 7073-NETWORK GRAY

IDENTIFICATION STAMP DIV. OF THE STATE ARCHITECT
02 111744
ACCEPTABLE — SS —
DATE 5-9-11

FINISH NOTES

1. PAINT ALL VISIBLE METAL SUB-FRAMING, FLASHING, AND SUBSTRATE BEHIND FIBER CEMENT PANELS, FLAT, SW 6258-TRICORN BLACK PRIOR TO INSTALLATION.
2. HARDWOOD TRIM TO BE MAPLE W/ CLEAR SATIN VARNISH, U.O.N.
3. MANUFACTURER'S DESIGNATIONS ARE LISTED TO INDICATE COLOR AND FINISH AND ARE FOR REFERENCE ONLY.
4. EXPOSED PIPE, DUCTWORK, AND CONDUIT TO BE PAINTED TO MATCH ADJACENT PAINTED SURFACES.
5. COLOR AND FINISH OF ANY MATERIAL NOT LISTED TO BE SELETED BY THE ARCHITECT.
6. ALL EXPOSED METAL FLASHING TO BE PREFINISHED OR PAINTED TO MATCH ADJACENT SURFACE.
7. PAINT ALL STEEL PIT WHEEL GUIDES, HANDRAILS, AND LADDERS, GLOSS SAFETY YELLOW.
8. TYPE 2 FIBER CEMENT PANELS TO HAVE 6" MIN. SOLID BORDER AROUND ALL EDGES. OMIT PERFORATIONS AT SOFFITS AND SMALL VERTICAL PANELS.
9. COORDINATE ELEC. OUTLET AND FIXTURE LOCATIONS WITH FIBER CEMENT PANEL FASTENERS AND SUB-FRAMING.
10. EASE EDGES OF ALL PERF. ALUM. PANELS MOUNTED BELOW 8'-0" AFF.

	BY	CHECKED
DESIGN	G.ROBLEY	W.RAMROTH
DETAILS	G.ROBLEY	D.WRIGHT
QUANTITIES	G.ROBLEY	W.RAMROTH

PREPARED FOR THE STATE OF CALIFORNIA DEPARTMENT OF TRANSPORTATION

DIVISION OF ENGINEERING SERVICES ARCHITECTURAL AND STRUCTURAL DESIGN

BRIDGE NO. 23W000IR
POST MILE 14.8

EASTBOUND CORDELIA CVEF
CVEF — FINISH SCHEDULE

SHEET A6-1

ORIGINAL SCALE IN INCHES FOR REDUCED PLANS 0 1 2 3

CU 04264
EA 0A5351

DISREGARD PRINTS BEARING EARLIER REVISION DATES → 10/19/09 03/22/10 05/06/10 08/23/10 11/22/10 05/02/11

REVISION DATES (PRELIMINARY STAGE ONLY) SHEET OF

DS OSD Imperial Rev. 10/07 9/17/10 09:47

18-MAY-2011 09:47

DIST.	COUNTY	ROUTE	POST MILES TOTAL PROJECT	SHEET NO.	TOTAL SHEETS
04	Sol	12,80	L1.8/L2.0, 13.3/15.7	554	740

LICENSED ARCHITECT — DATE 05/02/11

LICENSED ARCHITECT GREG A. ROBLEY No. C-30986 Exp. 02/05/13 STATE OF CALIFORNIA

5-16-11
PLANS APPROVAL DATE

The State of California or its officers or agents shall not be responsible for the accuracy or completeness of electronic copies of this plan sheet.

KENNEDY/JENKS CONSULTANTS
303 SECOND STREET
SUITE 300 SOUTH
SAN FRANCISCO, CA 94960

SOLANO TRANSPORTATION AUTHORITY
ONE HARBOR CENTER, SUITE 130
SUISUN CITY, CA 94585

SIGN SCHEDULE

TYPE	QUANTITY	LOCATION	SIZE	MATERIAL	COLOR	TEXT/SYMBOL	NOTES
A	1	NORTH EXTERIOR - ROOF MECHANICAL 39	6'-0"H X 14'-11/2"W	0.125GA ALUMINUM	CLEAR ANODIZED	CHP LOGO	SEE DET. 2,3/A5-18
A	1	SOUTH EXTERIOR - CONFERENCE/TRAINING 9	4'-0"H X 9'-5"W	0.125GA ALUMINUM	CLEAR ANODIZED	CHP LOGO	SEE DET. 4,5/A5-18
B	7	EAST EXTERIOR - INSPECTION BAYS 38	2'-0"H	0.125GA ALUMINUM	ACRODIZE BRIGHT SILVER	0 - 13	HELVETICA BOLD FONT, SEE DET. 2,3/A5-19
C	2	DOOR 03 AND DOOR 36	1-1/2"H LETTERS	FACE ADHESIVE VINYL	WHITE TEXT	NO PUBLIC ENTRY USE MAIN OFFICE ENTRANCE	HELVETICA MEDIUM FONT
C	2	DOOR 41 AND DOOR 55	1-1/2"H LETTERS	BACK ADHESIVE VINYL	WHITE TEXT	NO PUBLIC ENTRY USE MAIN OFFICE ENTRANCE	HELVETICA MEDIUM FONT
C	1	DOOR 01	1-1/2"H LETTERS	BACK ADHESIVE VINYL	WHITE TEXT	EMERGENCY EXIT KEEP CLEAR	HELVETICA MEDIUM FONT
C	1	DOOR 40	2"H LETTERS	FACE ADHESIVE VINYL	WHITE TEXT	ENFORCEMENT OFFICE	HELVETICA MEDIUM FONT
C	1	DOOR 06, RIGHT LEAF	2"H LETTERS	FACE ADHESIVE VINYL	WHITE TEXT	MAIN OFFICE	HELVETICA MEDIUM FONT
C	1	DOOR 10	2"H LETTERS	BACK ADHESIVE VINYL	WHITE TEXT	EMPLOYEES ONLY	HELVETICA MEDIUM FONT
D	1	RIGHT SIDELITE OF DOOR 06	9"H X 6"W	POLYCARBONATE	WHITE ON BLUE	VOLUME TELEPHONE SYMBOL	SEE DET. 7A/A-06
F	3	SIDELITE OF DOORS 06, 36, AND 40	9"H X 6"W	POLYCARBONATE	WHITE ON BLUE	ACCESSIBILTY SYMBOL	SEE DET. 6/A0-6
G	16	LATCHSIDE OF DOOR/OPENING AS OCCURS	9"H X 6"W	POLYCARBONATE	WHITE ON BLUE	ROOM NAMES	SEE DET. 1/A0-6, SEE NOTE 2 & 3
H	4	RESTROOM DOORS	1'-0"	POLYCARBONATE	WHITE ON BLUE	RESTROOM SYMBOLS	SEE DET. 4/A0-6
J	7	EAST INTERIOR - INSPECTION BAYS 38 INTERIOR FACE OF ROLL-UP DOORS	2'-0" X 2'-0"	KYNAR PAINT	YELLOW	PEDESTRIAN CROSSING SYMBOL	
K	2	LEFT SIDELITE OF DOOR 06 AND SIDELITE OF DOOR 36	9"H X 6"W	POLYCARBONATE	BLACK ON WHITE	NO SMOKING SYMBOL	SEE DET. 9/A0-6
L	11	DOORS AS SCHEDULED	3"H X 5"W	POLYCARBONATE	WHITE ON BLUE	EXIT/EXIT ROUTE	SEE DET. 2/A0-6, SEE NOTE 2
M	1	ABOVE DOOR 5	7"H X 10"W	POLYCARBONATE	BLACK ON WHITE	MAXIMUM OCCUPANCY 126 PERSONS	MOUNT ABOVE DOOR
N	4	LATCHSIDE OF DOOR	9"H X 6"W	POLYCARBONATE	WHITE ON BLUE	RESTROOM SIGNS	SEE DET. 3/A0-6

SIGN NOTES

1. REFER TO DETAIL 5/A-06 FOR GENERAL DOOR SIGN MOUNTING HEIGHT AND LOCATION.
2. REFER TO DOOR SCHEDULE FOR ROOM SIGN LOCATIONS, SHEET A6-3.
3. REFER TO FINISH SCHEDULE FOR ROOM NAMES, SHEET A6-1.

SIGN TYPES

NOT TO SCALE

A

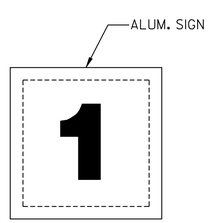

B

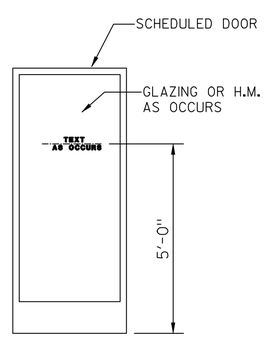

C

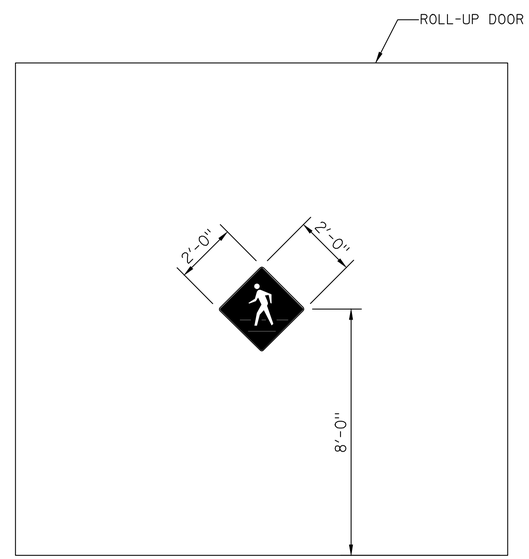

J

CALIFORNIA STATE FIRE MARSHAL APPROVED

Approval of this plan does not authorize or approve any omission or deviation from applicable regulations. Final approval is subject to field inspection. One set of approved plans shall be available on the project site at all times.

Reviewed by: Hans Henneberque 5/9/11
Hans Henneberque
Senior Deputy State Fire Marshal

IDENTIFICATION STAMP DIV. OF THE STATE ARCHITECT
02 1 1 1 7 4 4
ACCESS ALS — SS —
DATE 5-9-11

DESIGN	BY G.ROBLEY	CHECKED W.RAMROTH	
DETAILS	BY G.ROBLEY	CHECKED D.WRIGHT	
QUANTITIES	BY G.ROBLEY	CHECKED W.RAMROTH	

ORIGINAL SCALE IN INCHES FOR REDUCED PLANS 0 1 2 3

PREPARED FOR THE STATE OF CALIFORNIA DEPARTMENT OF TRANSPORTATION

DIVISION OF ENGINEERING SERVICES ARCHITECTURAL AND STRUCTURAL DESIGN

CU 04264
EA 0A5351

BRIDGE NO. 23W000R
POST MILE 14.8

EASTBOUND CORDELIA CVEF

CVEF — SIGN SCHEDULE

SHEET A6-2

DISREGARD PRINTS BEARING EARLIER REVISION DATES → REVISION DATES (PRELIMINARY STAGE ONLY) ~~10/19/09~~ ~~03/22/10~~ ~~05/06/10~~ ~~08/23/10~~ ~~11/22/10~~ 05/02/11 SHEET OF

DS OSD Imperial Rev. 10/07 9/17/10 09:47

18-MAY-2011 09:47

DIST.	COUNTY	ROUTE	POST MILES TOTAL PROJECT	SHEET NO.	TOTAL SHEETS
04	Sol	12,80	L1.8/L2.0, 13.3/15.7	555	740

LICENSED ARCHITECT — 5/2/11 DATE

LICENSED ARCHITECT GREG A. ROBLEY No. C-30986 Exp. 02/05/13 STATE OF CALIFORNIA

5-16-11
PLANS APPROVAL DATE

The State of California or its officers or agents shall not be responsible for the accuracy or completeness of electronic copies of this plan sheet.

KENNEDY/JENKS CONSULTANTS
303 SECOND STREET
SUITE 300 SOUTH
SAN FRANCISCO, CA 94960

SOLANO TRANSPORTATION AUTHORITY
ONE HARBOR CENTER, SUITE 130
SUISUN CITY, CA 94585

DOOR SCHEDULE

NO.	DOOR WIDTH	DOOR HEIGHT	DOOR TYPE	DOOR MAT.	DOOR FINISH	FRAME WIDTH	FRAME MAT.	FRAME FINISH	DETAILS HEAD	DETAILS JAMB	DETAILS SILL	ASSEMBLY FIRE RATING	ASSEMBLY HARDWARE GROUP	SIGN	NOTES
01	6'-0"	7'-0"	B	H.M.	P-3	8 1/8"	H.M.	P-3	2/A5-20	6/A5-20	12/A5-20	-	1	TYPE C, L	PANIC HARDWARE, "EXIT"
02	3'-0"	7'-0"	A	H.M.	P-2	8 1/8"	H.M.	P-2	4/A5-20	3/A5-20	12/A5-20	-	2		
03	3'-0"	8'-5"	C	ALUM.	A-1	4 1/2"	ALUM.	A-1	9/A5-20	4/A5-22	14/A5-20	-	17	TYPE C, L	WINDOW TYPE H, "EXIT"
04	6'-0"	7'-0"	B	H.M.	P-5	8 1/8"	H.M.	P-5	14/A5-22 SIM	14/A5-22 SIM	-	-	4	TYPE G	
05	6'-0"	7'-0"	B	H.M.	P-3	8 1/8"	H.M.	P-3	10/A5-22	10/A5-22	-	-	5	TYPE G,L+M	PANIC HARDWARE, "EXIT ROUTE"
06	6'-0"	8'-5"	D	ALUM.	A-1	4 1/2"	ALUM.	A-1	3/A5-12	9/A5-22	14/A5-20	-	6	TYPE C,L+F	WINDOW TYPE G, "EXIT"
07	3'-0"	7'-0"	A	H.M.	P-3	8"	H.M.	P-3	10/A5-23	10/A5-23	-	-	7	TYPE G,H+N	
08	3'-0"	7'-0"	A	H.M.	P-3	8"	H.M.	P-3	10/A5-23	10/A5-23	-	-	7	TYPE G,H+N	
09	3'-0"	3'-4"	A	WOOD	P-1	6 1/4"	WOOD	P-1	-	1/A5-23	-	-	8		PANIC HARDWARE
10	3'-0"	7'-0"	A	WOOD	P-1	8 1/4"	H.M.	P-6	14/A5-22 SIM	14/A5-22 SIM	-	3/4 HR	9	TYPE C, L	PANIC HARDWARE, WINDOW TYPE Q, "EXIT ROUTE"
11	3'-0"	7'-0"	A	WOOD	P-1	6 1/4"	H.M.	P-6	14/A5-22	14/A5-22	-	-	10	TYPE G	WINDOW TYPE R
12	3'-0"	7'-0"	F	H.M.	P-5	8 1/4"	H.M.	P-5	14/A5-22 SIM	14/A5-22 SIM	-	-	11	TYPE G	
13	3'-0"	7'-0"	F	H.M.	P-4	6 1/4"	H.M.	P-4	14/A5-22	14/A5-22	-	-	10	TYPE G	
14	3'-0"	7'-0"	A	WOOD	P-1	6 1/4"	H.M.	P-6	14/A5-22	14/A5-22	-	-	10	TYPE G	WINDOW TYPE R
15	3'-0"	7'-0"	A	H.M.	P-5	6 1/4"	H.M.	P-5	14/A5-22	14/A5-22	-	-	14	TYPE G	
16	3'-0"	7'-0"	F	H.M.	P-4	5 3/4"	H.M.	P-4	14/A5-22	14/A5-22	-	-	12	TYPE L	"EXIT ROUTE"
17	3'-0"	7'-2"	A	H.M.	P-4	5 3/4"	H.M.	P-4	11/A5-22	11/A5-22	-	1-1/2HR	15		WINDOW TYPE M
18	3'-0"	7'-0"	A	WOOD	P-1	6 1/4"	H.M.	P-6	14/A5-22	14/A5-22	-	-	10	TYPE G	WINDOW TYPE R
19	3'-0"	7'-0"	A	H.M.	P-4	5 3/4"	H.M.	P-4	11/A5-22 SIM	11/A5-22 SIM	-	1-1/2HR	15		
20	3'-0"	7'-0"	A	WOOD	P-1	6 1/4"	H.M.	P-6	14/A5-22	14/A5-22	-	-	10	TYPE G	WINDOW TYPE R
21	3'-0"	7'-0"	F	H.M.	P-4	8 1/4"	H.M.	P-4	14/A5-22 SIM	14/A5-22 SIM	-	-	11	TYPE L	"EXIT ROUTE"
22	3'-0"	7'-0"	A	H.M.	P-4	8"	H.M.	P-4	11/A5-23	11/A5-23	-	-	11		
23	3'-0"	7'-0"	A	H.M.	P-4	6 1/4"	H.M.	P-4	14/A5-22	14/A5-22	-	-	11		
24	3'-0"	7'-0"	A	H.M.	P-4	8 1/4"	H.M.	P-4	14/A5-22 SIM	14/A5-22 SIM	-	-	11	TYPE G	
25	3'-0"	7'-0"	A	H.M.	P-4	8"	H.M.	P-4	11/A5-23	11/A5-23	-	-	10		
26	3'-0"	7'-0"	A	H.M.	P-4	7 1/8"	H.M.	P-4	13/A5-22	13/A5-22	-	-	11	TYPE G	
27	3'-0"	7'-0"	A	H.M.	P-5	6 1/4"	H.M.	P-5	14/A5-22	14/A5-22	-	-	10	TYPE G	
28	3'-0"	7'-0"	A	H.M.	P-5	6 1/4"	H.M.	P-5	14/A5-22	14/A5-22	-	-	10		
29	3'-0"	7'-0"	A	H.M.	P-4	6 1/4"	H.M.	P-4	14/A5-22	14/A5-22	-	-	7	TYPE H, N	
30	3'-0"	7'-0"	A	H.M.	P-4	6 1/4"	H.M.	P-4	5/A5-23	5/A5-23	-	-	7	TYPE H, N	
31	3'-0"	7'-0"	A	WOOD	P-1	6 1/4"	H.M.	P-6	5/A5-23	5/A5-23	-	-	12	TYPE G	WINDOW TYPE R
32	3'-0"	7'-0"	A	H.M.	P-4	7 1/8"	H.M.	P-4	13/A5-22	13/A5-22	-	-	14	TYPE G	
33	3'-0"	7'-0"	A	WOOD	P-1	6 1/4"	H.M.	P-6	14/A5-22	14/A5-22	-	-	13	TYPE G	
34	3'-0"	8'-5"	C	ALUM.	A-1	4 1/2"	ALUM.	A-1	4/A5-13	8/A5-23	14/A5-20	-	18		WINDOW TYPE L
35	3'-0"	7'-0"	A	H.M.	P-5	6 1/4"	H.M.	P-5	14/A5-22	14/A5-22	-	-	14	TYPE G	
36	3'-0"	7'-0"	C	ALUM.	A-1	4 1/2"	ALUM.	A-1	9/A5-23	7/A5-23	14/A5-20	-	17	TYPE C,L+F	WINDOW TYPE J, "EXIT"
37	3'-0"	7'-0"	A	H.M.	P-4	8 1/8"	H.M.	P-4	1/A5-20	8/A5-20	12/A5-20	-	2		
38	3'-0"	7'-0"	A	H.M.	P-4	8 1/8"	H.M.	P-4	1/A5-20	8/A5-20	12/A5-20	-	2		
39	5'-0"	7'-0"	B	H.M.	P-5	8 1/4"	H.M.	P-5	14/A5-22 SIM	14/A5-22 SIM	-	-	16		
40	3'-0"	7'-0"	C	ALUM.	A-1	4 1/2"	ALUM.	A-1	9/A5-23	9/A5-21	14/A5-20	-	17	TYPE C,L+F	PANIC HARDWARE, "EXIT"
41	3'-0"	7'-0"	A	H.M.	P-4	8 1/8"	H.M.	P-4	1/A5-20	8/A5-20	12/A5-20	-	3	TYPE C,L+F	PANIC HARDWARE, "EXIT"
42	16'-0"	16'-0"	E	RUBBER	R-1	-	STL.	P-4	1/A5-21	5,11/A5-21	10/A5-21	-	-		CLEAR OPENING DIMENSIONS
43	16'-0"	16'-0"	E	RUBBER	R-1	-	STL.	P-4	1/A5-21	5,11/A5-21	10/A5-21	-	-	TYPE J	CLEAR OPENING DIMENSIONS
44	16'-0"	16'-0"	E	RUBBER	R-1	-	STL.	P-4	1/A5-21	5,11/A5-21	10/A5-21	-	-		CLEAR OPENING DIMENSIONS
45	16'-0"	16'-0"	E	RUBBER	R-1	-	STL.	P-4	1/A5-21	5,11/A5-21	10/A5-21	-	-	TYPE J	CLEAR OPENING DIMENSIONS
46	16'-0"	16'-0"	E	RUBBER	R-1	-	STL.	P-4	1/A5-21	5,11/A5-21	10/A5-21	-	-		CLEAR OPENING DIMENSIONS
47	16'-0"	16'-0"	E	RUBBER	R-1	-	STL.	P-4	1/A5-21	5,11/A5-21	10/A5-21	-	-	TYPE J	CLEAR OPENING DIMENSIONS
48	16'-0"	16'-0"	E	RUBBER	R-1	-	STL.	P-4	1/A5-21	5,11/A5-21	10/A5-21	-	-		CLEAR OPENING DIMENSIONS
49	16'-0"	16'-0"	E	RUBBER	R-1	-	STL.	P-4	1/A5-21	5,11/A5-21	10/A5-21	-	-	TYPE J	CLEAR OPENING DIMENSIONS
50	16'-0"	16'-0"	E	RUBBER	R-1	-	STL.	P-4	1/A5-21	5,11/A5-21	10/A5-21	-	-		CLEAR OPENING DIMENSIONS
51	16'-0"	16'-0"	E	RUBBER	R-1	-	STL.	P-4	1/A5-21	5,11/A5-21	10/A5-21	-	-	TYPE J	CLEAR OPENING DIMENSIONS
52	16'-0"	16'-0"	E	RUBBER	R-1	-	STL.	P-4	1/A5-21	5,11/A5-21	10/A5-21	-	-		CLEAR OPENING DIMENSIONS
53	16'-0"	16'-0"	E	RUBBER	R-1	-	STL.	P-4	1/A5-21	5,11/A5-21	10/A5-21	-	-	TYPE J	CLEAR OPENING DIMENSIONS
54	16'-0"	16'-0"	E	RUBBER	R-1	-	STL.	P-4	1/A5-21	5,11/A5-21	10/A5-21	-	-		CLEAR OPENING DIMENSIONS
55	3'-0"	7'-0"	A	H.M.	P-4	7 5/8"	H.M.	P-4	1/A5-22	1,5/A5-22	12/A5-20	-	3	TYPE C, L	PANIC HARDWARE, "EXIT"
56	3'-0"	6'-6"	A	H.M.	P-2	5 3/4"	H.M.	P-2	5/A5-20	3/A5-23	10/A5-20	-	2		
57	3'-0"	4'-10"	A	H.M.	P-2	5 3/4"	H.M.	P-2	13/A5-20	7/A5-20	11/A5-20	-	2		ROOF ACCESS
58	2'-8"	3'-8"	AA	FRP	F-1	5 3/4"	FRP	F-1	1/A5-20 SIM	2/A4-6	12/A5-23	-	19		
59	3'-2"R.O.	6'-6"	H	STL.	P-4	-	-	-	-	-	-	-	23		SEE NOTE 7
60	3'-0"	7'-0"	A	H.M.	P-4	5 3/4"	H.M.	P-4	7/A5-22	7/A5-22	12/A5-22	-	20		
61	6'-4"	7'-0"	B	H.M.	P-4	5 3/4"	H.M.	P-4	7/A5-22	7/A5-22	12/A5-22	-	21		
62	3'-0"	7'-0"	A	H.M.	P-4	5 3/4"	H.M.	P-4	7/A5-22	7/A5-22	12/A5-22	-	20		
63	3'-0"	7'-0"	A	H.M.	P-4	5 3/4"	H.M.	P-4	6/A5-22	6/A5-22	12/A5-22	-	20		
64	6'-4"	7'-0"	B	H.M.	P-4	5 3/4"	H.M.	P-4	6/A5-22	6/A5-22	12/A5-22	-	21		
65	8'-0"R.O.	8'-2"	G	STL.	P-4	-	-	-	-	-	-	-	22		SEE NOTE 6
66	3'-0"	3'-10"	A	WOOD	P-7	6 1/4"	WOOD	P-6	-	1/A5-23	-	-	24		
67	3'-0"	6'-10"	A	H.M.	P-4	7 3/8"	H.M.	P-4	11/A5-23	11/A5-23	-	-	10		

DOOR TYPES

NOT TO SCALE

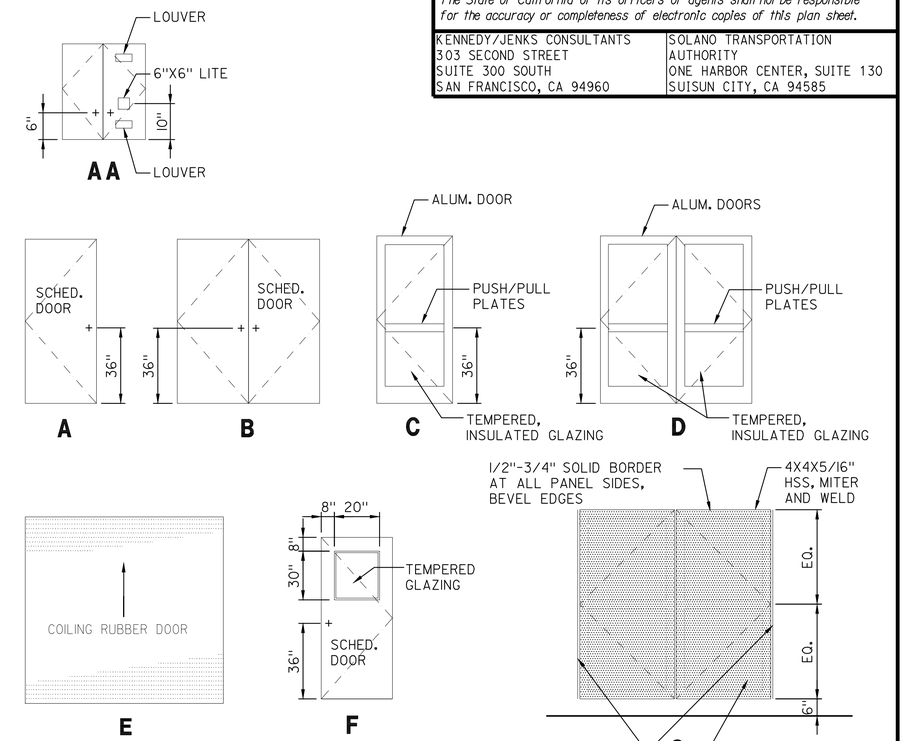

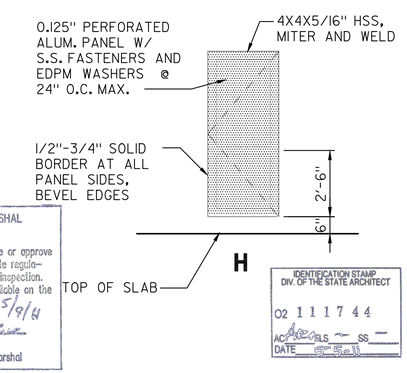

DOOR NOTES

1. PROVIDE 10" OF SMOOTH UNINTERRUPTED SURFACE AT BOTTOM OF ALL DOORS PER CBC SECTION 1133B.2.6
2. ALL H.M. FRAMES SHALL BE 2" DEEP, U.N.O.
3. ALL WD. AND H.M. DOORS SHALL BE 1-3/4" THK., U.N.O.
4. SEE SIGN SCHEDULE ON SHEET A6-2 FOR SIGN TYPES
5. ALL WOOD DOOR JAMBS TO BE SOLID MAPLE
6. PROVIDE 1-1/2"X24" SCHEDULE 40 STL. PIPE SLEEVES SET IN 12" ROUND X 30 DEEP CONCRETE FOOTINGS FOR CANE BOLT KEEPERS.
7. DOOR WIDTH TO ALLOW FOR OPERATION OF PANIC HARDWARE.

FINISHES

P-1 CLEAR SATIN VARNISH
P-2 PAINT, GLOSS, SW 7076-CYBERSPACE
P-3 PAINT, GLOSS, SW 6517-REGATTA
P-4 PAINT, GLOSS, SW 6254-LAZY GRAY
P-5 PAINT, GLOSS, SW 6186-DRIED THYME
P-6 PAINT, GLOSS, SW 7008-ALABASTER
P-7 PLASTIC LAMINATE, PL-2
A-1 ALUMINUM, CLEAR ANODIZED
R-1 RUBBER, GRAY
F-1 FRP, CHEM-PRUF LIGHT GRAY

CALIFORNIA STATE FIRE MARSHAL APPROVED
Approval of this plan does not authorize or approve any omission or deviation from applicable regulations. Final approval is subject to field inspection. One set of approved plans shall be available on the project site at all times.
Reviewed by: 5/9/11
Hans Hennebarque
Senior Deputy State Fire Marshal

IDENTIFICATION STAMP DIV. OF THE STATE ARCHITECT
02 111744
AC ARS SS
DATE

	BY	CHECKED
DESIGN	G.ROBLEY	W.RAMROTH
DETAILS	G.ROBLEY	D.WRIGHT
QUANTITIES	G.ROBLEY	W.RAMROTH

PREPARED FOR THE STATE OF CALIFORNIA DEPARTMENT OF TRANSPORTATION

DIVISION OF ENGINEERING SERVICES ARCHITECTURAL AND STRUCTURAL DESIGN

BRIDGE NO. 23W000IR
POST MILE 14.8

EASTBOUND CORDELIA CVEF
CVEF — DOOR SCHEDULE

SHEET A6-3

ORIGINAL SCALE IN INCHES FOR REDUCED PLANS 0 1 2 3

CU 04264
EA 0A5351

DISREGARD PRINTS BEARING EARLIER REVISION DATES → 10/19/09 03/22/10 05/06/10 08/23/10 11/22/10 05/02/11

REVISION DATES (PRELIMINARY STAGE ONLY) SHEET OF

40a535wba6-03.dgn
DS OSD ImperialRev.10/07 18-MAY-2011 09:47

18-MAY-2011 09:47
40a535wba6-03.dgn

DIST.	COUNTY	ROUTE	POST MILES TOTAL PROJECT	SHEET NO.	TOTAL SHEETS
04	Sol	12,80	L1.8/L2.0, 13.3/15.7	556	740

LICENSED ARCHITECT — DATE 05/02/11

LICENSED ARCHITECT GREG A. ROBLEY No. C-30986 Exp. 02/05/13 STATE OF CALIFORNIA

5-16-11
PLANS APPROVAL DATE

The State of California or its officers or agents shall not be responsible for the accuracy or completeness of electronic copies of this plan sheet.

KENNEDY/JENKS CONSULTANTS
303 SECOND STREET
SUITE 300 SOUTH
SAN FRANCISCO, CA 94960

SOLANO TRANSPORTATION AUTHORITY
ONE HARBOR CENTER, SUITE 130
SUISUN CITY, CA 94585

WINDOW TYPES

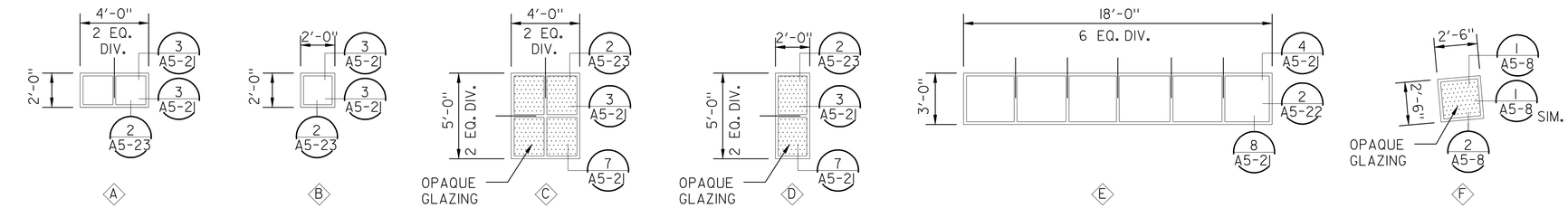

A — BULLET RESISTANT ALUM. FRAME AND GLAZING

B — BULLET RESISTANT ALUM. FRAME AND GLAZING

C — BULLET RESISTANT ALUM. FRAME AND GLAZING

D — BULLET RESISTANT ALUM. FRAME AND GLAZING

E — ALUM. STOREFRONT FRAME AND 1/4" LAMINATED GLAZING

F — ALUM. STOREFRONT FRAME AND 1" INSULATED GLAZING

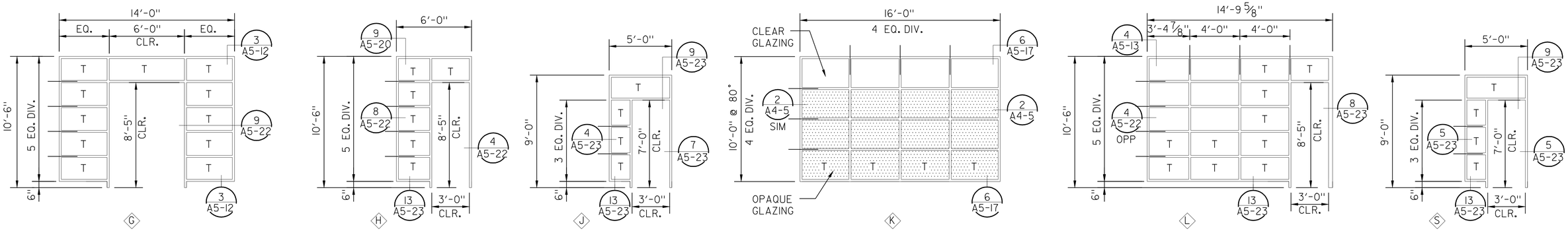

G — ALUM. STOREFRONT FRAME AND 1" INSULATED GLAZING

H — ALUM. STOREFRONT FRAME AND 1" INSULATED GLAZING

J — ALUM. STOREFRONT FRAME AND 1" INSULATED GLAZING

K — SLOPED BULLET RESISTANT ALUM. FRAME AND GLAZING

L — ALUM. STOREFRONT FRAME AND 1" INSULATED GLAZING

S — ALUM. STOREFRONT FRAME AND 1" INSULATED GLAZING

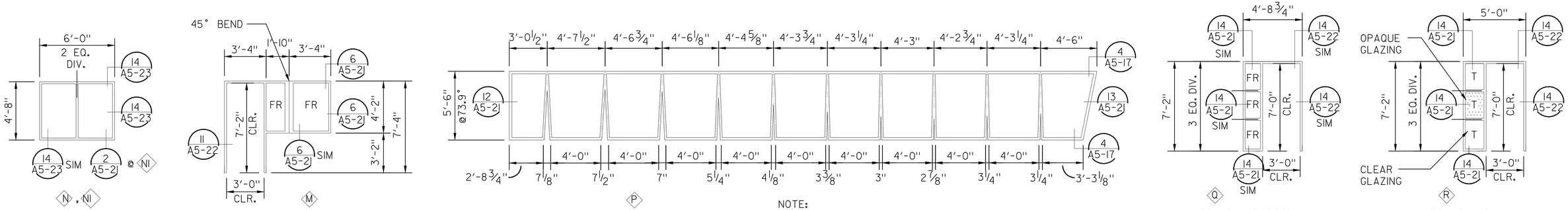

N, NI — BULLET RESISTANT ALUM. FRAME AND GLAZING

M — H.M. FRAME AND FIRE RATED GLAZING (1-½HR RATED)

P — SLOPED BULLET RESISTANT ALUM. FRAME AND GLAZING

Q — H.M. FRAME AND FIRE RATED GLAZING (3/4-HOUR RATED)

R — H.M. FRAME AND 1/4" GLAZING

NOTE:
1. HORIZONTAL DIMENSIONS ARE TO CENTERLINE OF VERTICAL MULLIONS
2. REFER TO ENLARGED PLAN FOR ANGULAR RELATIONSHIP OF PANELS

IDENTIFICATION STAMP DIV. OF THE STATE ARCHITECT
02 111744
ACS — BLS — SS —
DATE 5-9-11

WINDOW NOTES

1. VERIFY ALL OPENINGS IN FIELD.
2. REFER TO SHEET A6-3 FOR DOOR SCHEDULE.
3. CLEAR DOOR OPENINGS ARE MEASURED FROM FACE OF JAMB.
4. INSTALL 12"W 25MIL SELF-ADHERING BUTYL FLASHING AT ALL WINDOW AND STOREFRONT PENETRATIONS IN ACCORDANCE WITH AAMA STANDARDS.

WINDOW ABBREVIATIONS

ALUM = ALUMINUM
HM = HOLLOW METAL
T = TEMPERED
CLR = CLEAR
SIM = SIMILAR
FR = FIRE RATED

CALIFORNIA STATE FIRE MARSHAL APPROVED

Approval of this plan does not authorize or approve any omission or deviation from applicable regulations. Final approval is subject to field inspection. One set of approved plans shall be available on the project site at all times.

Reviewed by: Hans Hennebergue 5/9/11
Hans Hennebergue
Senior Deputy State Fire Marshal

	BY	CHECKED
DESIGN	G.ROBLEY	W.RAMROTH
DETAILS	G.ROBLEY	D.WRIGHT
QUANTITIES	G.ROBLEY	W.RAMROTH

ORIGINAL SCALE IN INCHES FOR REDUCED PLANS 0 1 2 3

PREPARED FOR THE STATE OF CALIFORNIA DEPARTMENT OF TRANSPORTATION

DIVISION OF ENGINEERING SERVICES
ARCHITECTURAL AND STRUCTURAL DESIGN

CU 04264
EA 0A5351

BRIDGE NO. 23W000IR
POST MILE 14.8

EASTBOUND CORDELIA CVEF

CVEF — WINDOW SCHEDULE

SHEET A6-4

DISREGARD PRINTS BEARING EARLIER REVISION DATES → 10/19/09 03/22/10 05/06/10 08/23/10 11/22/10 05/02/11

REVISION DATES (PRELIMINARY STAGE ONLY) SHEET OF

DS OSD Imperial Rev. 10/07 9/17/10 10:11

18-MAY-2011 10:11

DIST.	COUNTY	ROUTE	POST MILES TOTAL PROJECT	SHEET NO.	TOTAL SHEETS
04	Sol	12,80	L1.8/L2.0, 13.3/15.7	557	740

LICENSED ARCHITECT — DATE 5/2/11

LICENSED ARCHITECT GREG A. ROBLEY No. C-30986 Exp. 02/05/13 STATE OF CALIFORNIA

5-16-11
PLANS APPROVAL DATE

The State of California or its officers or agents shall not be responsible for the accuracy or completeness of electronic copies of this plan sheet.

KENNEDY/JENKS CONSULTANTS
303 SECOND STREET
SUITE 300 SOUTH
SAN FRANCISCO, CA 94960

SOLANO TRANSPORTATION AUTHORITY
ONE HARBOR CENTER, SUITE 130
SUISUN CITY, CA 94585

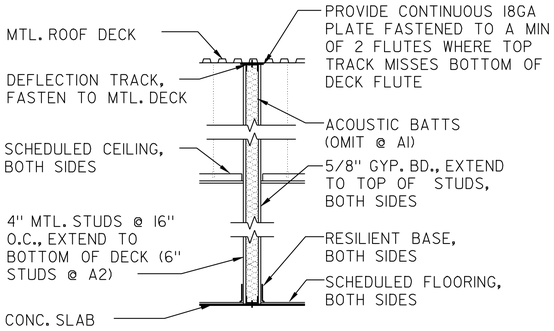

WHERE USED FOR 1HOUR ASSEMBLY COMPLIES WITH UL DESIGN U419

WALL TYPE A, A1, A2

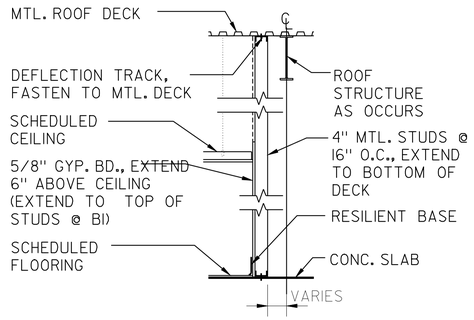

WALL TYPE B, B1

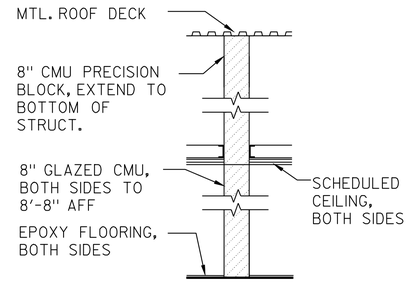

WALL TYPE C

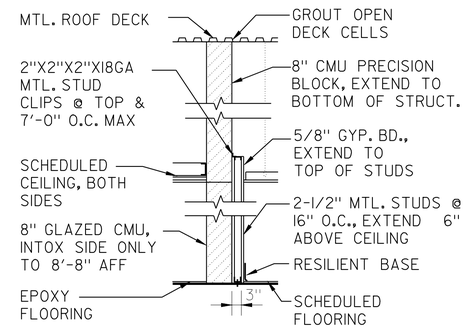

2 HOUR ASSEMBLY COMPLIES WITH UL DESIGN U905

WALL TYPE D

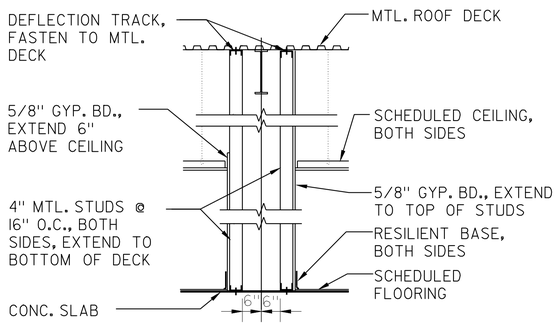

WALL TYPE E

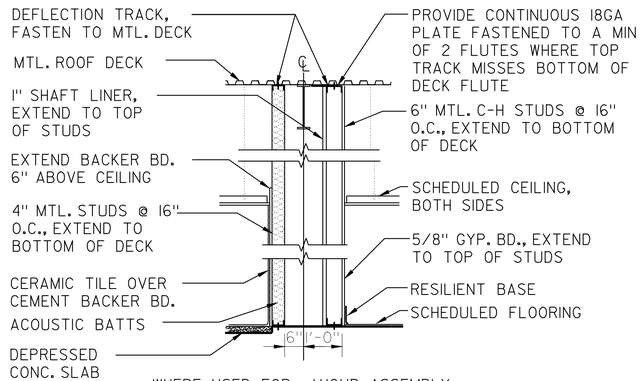

WHERE USED FOR 1HOUR ASSEMBLY COMPLIES WITH UL DESIGN U499

WALL TYPE F

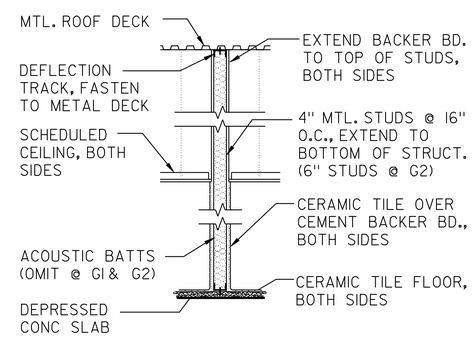

WALL TYPE G, G1, G2

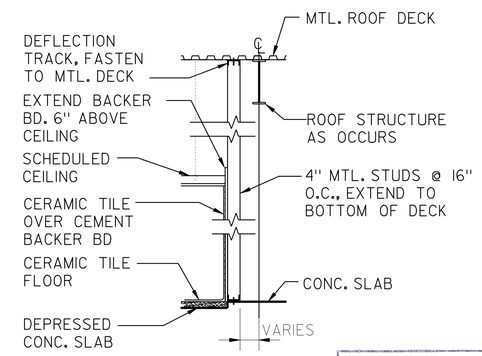

WALL TYPE H

CALIFORNIA STATE FIRE MARSHAL APPROVED

Approval of this plan does not authorize or approve any omission or deviation from applicable regulations. Final approval is subject to field inspection. One set of approved plans shall be available on the project site at all times.

Reviewed by: 5/9/11
Hans Henneberque
Senior Deputy State Fire Marshal

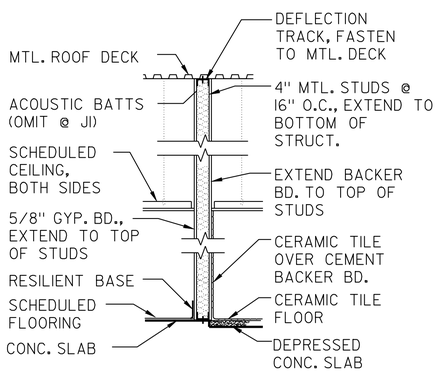

WALL TYPE J, J1

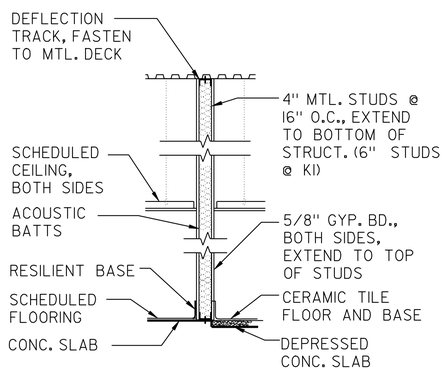

WALL TYPE K, K1

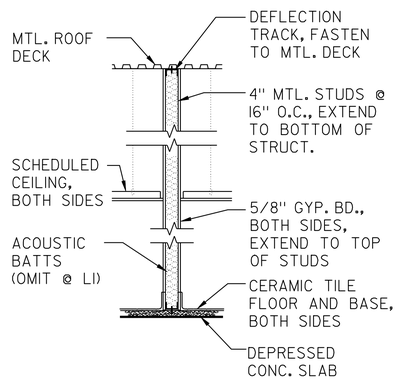

WALL TYPE L, L1

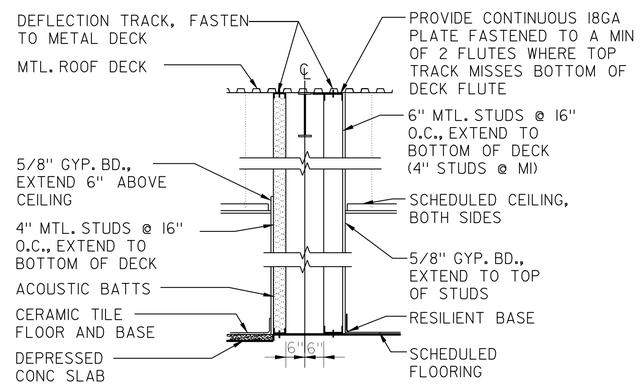

WALL TYPE M, M1

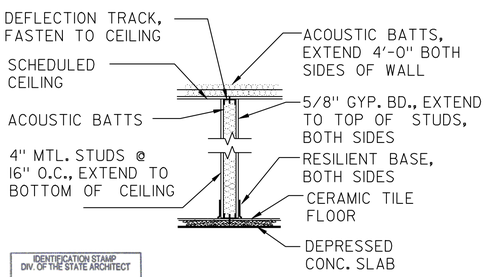

WALL TYPE N

IDENTIFICATION STAMP DIV. OF THE STATE ARCHITECT
02 111744
AC ALS SS
DATE

NOTES

1. SEE SHEET A6-1 FOR SCHEDULED FLOORING AND CEILINGS
2. SEE FLOOR PLANS FOR LOCATION OF FIRE RATED PARTITIONS.

	BY	CHECKED
DESIGN	G.ROBLEY	W.RAMROTH
DETAILS	G.ROBLEY	D.WRIGHT
QUANTITIES	G.ROBLEY	W.RAMROTH

PREPARED FOR THE STATE OF CALIFORNIA DEPARTMENT OF TRANSPORTATION

DIVISION OF ENGINEERING SERVICES ARCHITECTURAL AND STRUCTURAL DESIGN

BRIDGE NO. 23W000IR
POST MILE 14.8

EASTBOUND CORDELIA CVEF

CVEF — PARTITION TYPES NO. 1

SHEET **A6-5**

40a535wba6-05.dgn
DS OSD Imperial Rev. 10/07 18-MAY-2011 09:48

ORIGINAL SCALE IN INCHES FOR REDUCED PLANS 0 1 2 3

CU 04264
EA 0A5351

DISREGARD PRINTS BEARING EARLIER REVISION DATES → 10/19/09 03/22/10 05/06/10 08/23/10 11/22/10 05/02/11

REVISION DATES (PRELIMINARY STAGE ONLY) SHEET OF

18-MAY-2011 09:48
40a535wba6-05.dgn

DIST.	COUNTY	ROUTE	POST MILES TOTAL PROJECT	SHEET NO.	TOTAL SHEETS
04	Sol	12,80	L1.8/L2.0, 13.3/15.7	558	740

LICENSED ARCHITECT — 5/2/11 DATE

LICENSED ARCHITECT GREG A. ROBLEY No. C-30986 Exp. 02/05/13 STATE OF CALIFORNIA

5-16-11
PLANS APPROVAL DATE

The State of California or its officers or agents shall not be responsible for the accuracy or completeness of electronic copies of this plan sheet.

KENNEDY/JENKS CONSULTANTS
303 SECOND STREET
SUITE 300 SOUTH
SAN FRANCISCO, CA 94960

SOLANO TRANSPORTATION AUTHORITY
ONE HARBOR CENTER, SUITE 130
SUISUN CITY, CA 94585

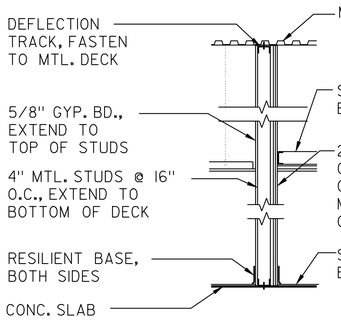

WALL TYPE P

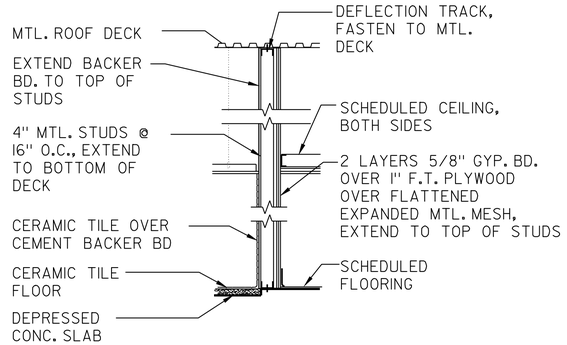

WALL TYPE Q

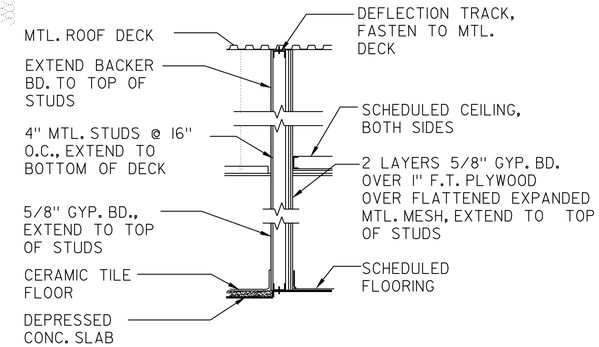

WALL TYPE R

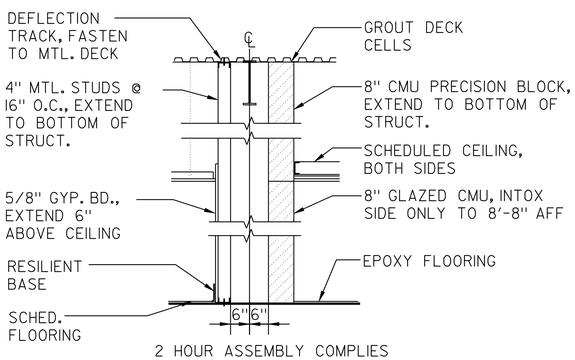

2 HOUR ASSEMBLY COMPLIES WITH UL DESIGN U905

WALL TYPE S

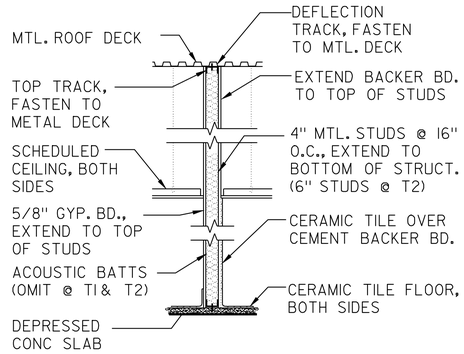

WALL TYPE T, T1, T2

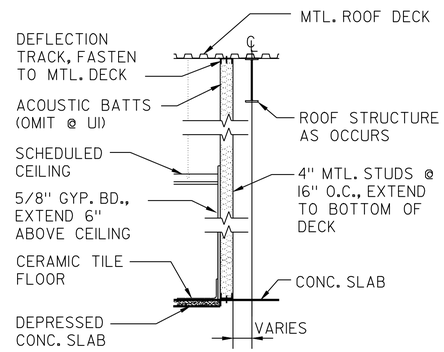

WALL TYPE U, U1

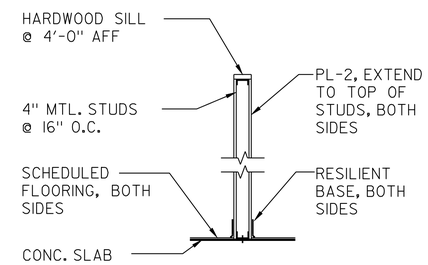

WALL TYPE V

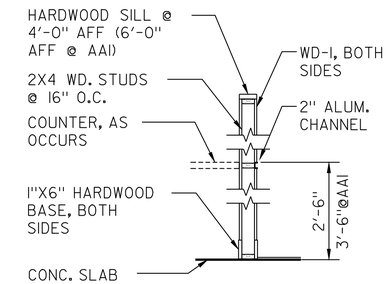

WALL TYPE AA, AA1

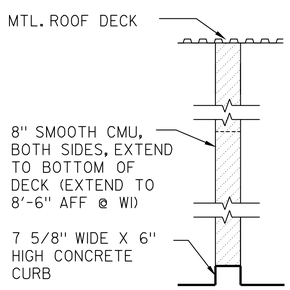

WALL TYPE W, W1

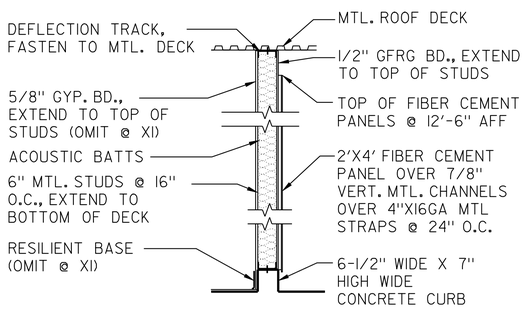

WALL TYPE X, X1

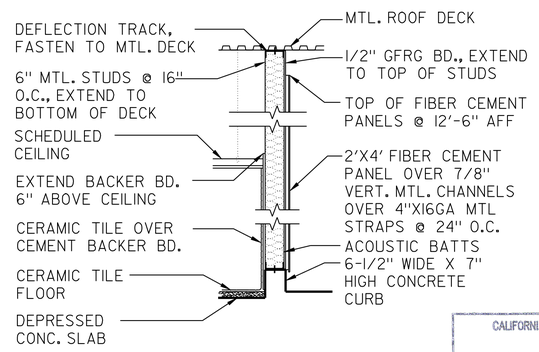

WALL TYPE Y

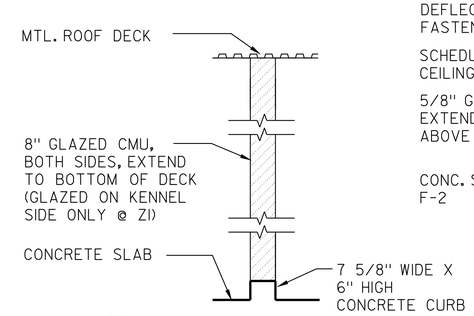

WALL TYPE Z, Z1

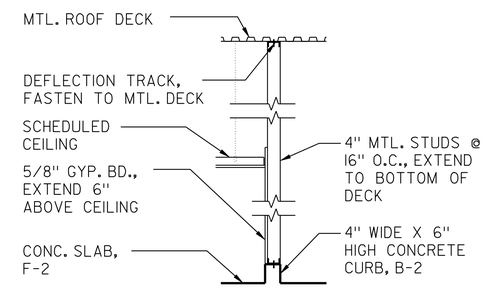

WALL TYPE BB

CALIFORNIA STATE FIRE MARSHAL APPROVED

Approval of this plan does not authorize or approve any omission or deviation from applicable regulations. Final approval is subject to field inspection. One set of approved plans shall be available on the project site at all times.

Reviewed by: Hans Henneberque 5/9/11
Hans Henneberque
Senior Deputy State Fire Marshal

IDENTIFICATION STAMP DIV. OF THE STATE ARCHITECT
02 1117 44
ACCEPTS BLS — SS —
DATE

NOTES

1. SEE SHEET A6-1 FOR SCHEDULED FLOORING AND CEILINGS
2. SEE FLOOR PLANS FOR LOCATION OF FIRE RATED PARTITIONS.

	BY	CHECKED
DESIGN	G.ROBLEY	W.RAMROTH
DETAILS	G.ROBLEY	D.WRIGHT
QUANTITIES	G.ROBLEY	W.RAMROTH

PREPARED FOR THE STATE OF CALIFORNIA DEPARTMENT OF TRANSPORTATION

DIVISION OF ENGINEERING SERVICES ARCHITECTURAL AND STRUCTURAL DESIGN

BRIDGE NO. 23W000IR
POST MILE 14.8

EASTBOUND CORDELIA CVEF
CVEF — PARTITION TYPES NO. 2

SHEET A6-6

40a535wba6-06.dgn
DS OSD Imperial Rev. 10/07 18-MAY-2011 09:48

ORIGINAL SCALE IN INCHES FOR REDUCED PLANS 0 1 2 3

CU 04264
EA 0A5351

DISREGARD PRINTS BEARING EARLIER REVISION DATES →

REVISION DATES (PRELIMINARY STAGE ONLY) 10/19/09 03/22/10 05/06/10 08/23/10 11/22/10 05/02/11 SHEET OF

18-MAY-2011 09:48
40a535wba6-06.dgn

DIST.	COUNTY	ROUTE	POST MILES TOTAL PROJECT	SHEET NO.	TOTAL SHEETS
04	Sol	12,80	L1.8/L2.0, 13.3/15.7	559	740

LICENSED ARCHITECT — 5/2/11 DATE

LICENSED ARCHITECT GREG A. ROBLEY No. C-30986 Exp. 02/05/13 STATE OF CALIFORNIA

5-16-11
PLANS APPROVAL DATE

The State of California or its officers or agents shall not be responsible for the accuracy or completeness of electronic copies of this plan sheet.

KENNEDY/JENKS CONSULTANTS
303 SECOND STREET
SUITE 300 SOUTH
SAN FRANCISCO, CA 94960

SOLANO TRANSPORTATION AUTHORITY
ONE HARBOR CENTER, SUITE 130
SUISUN CITY, CA 94585

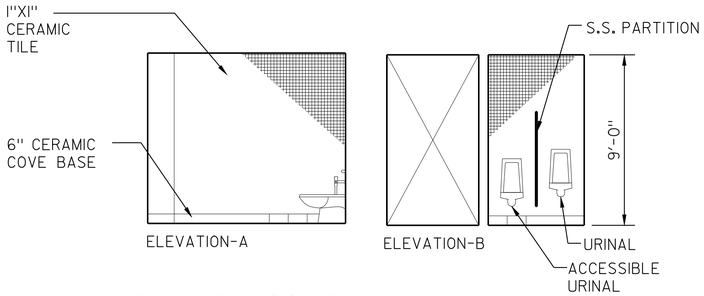

3 - MEN SOUTH

SCALE: 1/4" = 1'-0"

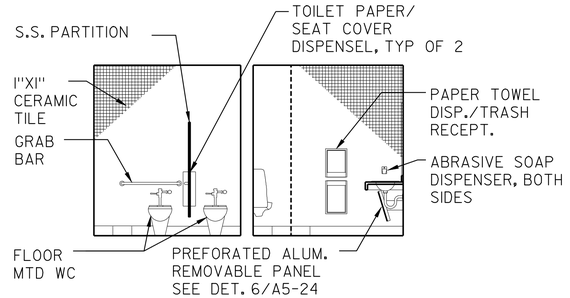

3 - MEN WEST

SCALE: 1/4" = 1'-0"

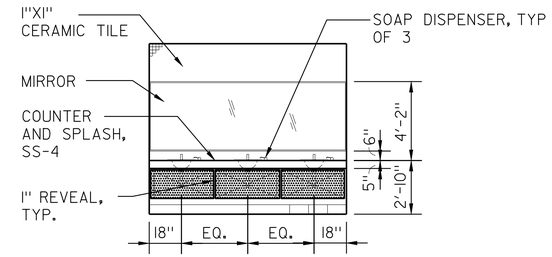

3 - MEN NORTH

SCALE: 1/4" = 1'-0"

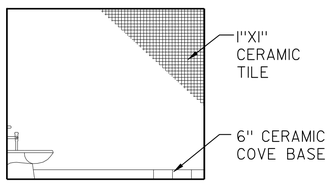

4 - WOMEN NORTH

SCALE: 1/4" = 1'-0"

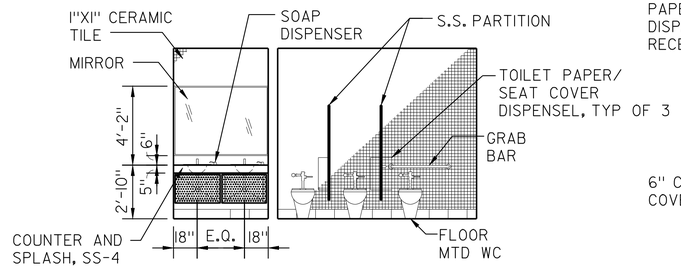

4 - WOMEN WEST

SCALE: 1/4" = 1'-0"

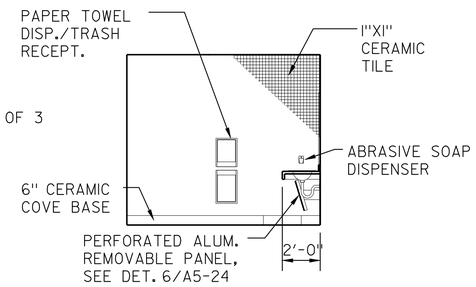

4 - WOMEN SOUTH

SCALE: 1/4" = 1'-0"

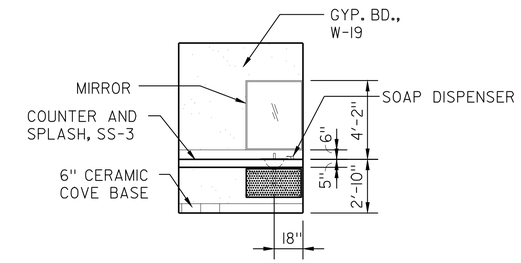

33 - LACTATION WEST

SCALE: 1/4" = 1'-0"

CALIFORNIA STATE FIRE MARSHAL APPROVED

Approval of this plan does not authorize or approve any omission or deviation from applicable regulations. Final approval is subject to field inspection. One set of approved plans shall be available on the project site at all times.

Reviewed by: 5/9/11
Hans Henneberque
Senior Deputy State Fire Marshal

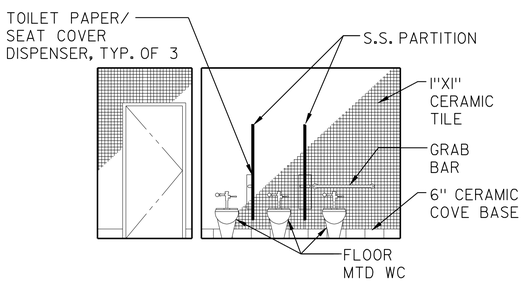

30 - STAFF MEN NORTH

SCALE: 1/4" = 1'-0"

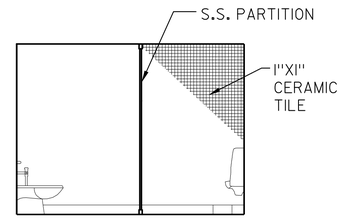

30 - STAFF MEN EAST

SCALE: 1/4" = 1'-0"

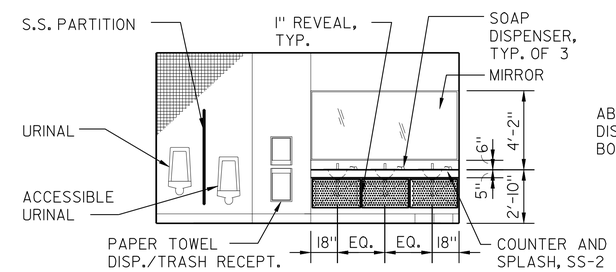

30 - STAFF MEN SOUTH

SCALE: 1/4" = 1'-0"

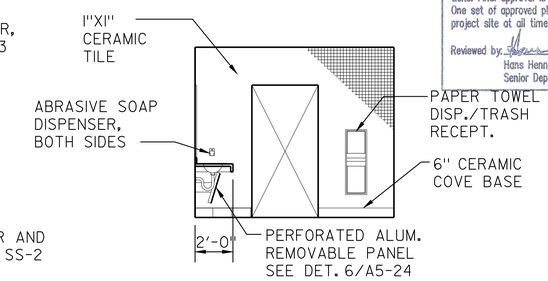

30 - STAFF MEN WEST

SCALE: 1/4" = 1'-0"

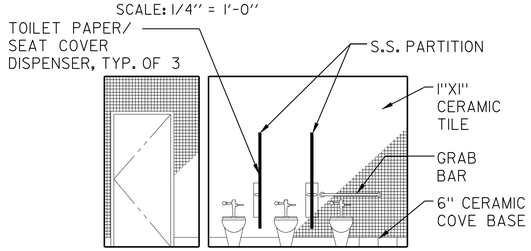

28 - STAFF WOMEN NORTH

SCALE: 1/4" = 1'-0"

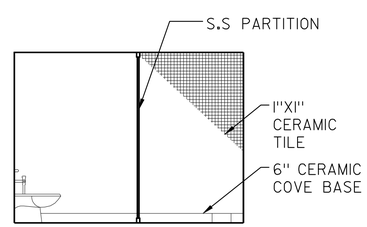

28 - STAFF WOMEN EAST

SCALE: 1/4" = 1'-0"

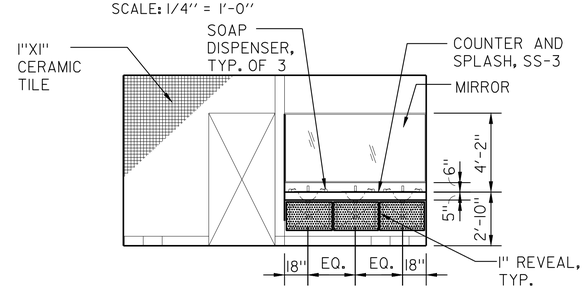

28 - STAFF WOMEN SOUTH

SCALE: 1/4" = 1'-0"

IDENTIFICATION STAMP DIV. OF THE STATE ARCHITECT
02 111744
ACP ARCHITECT/RLS — SS
DATE 5-5-11

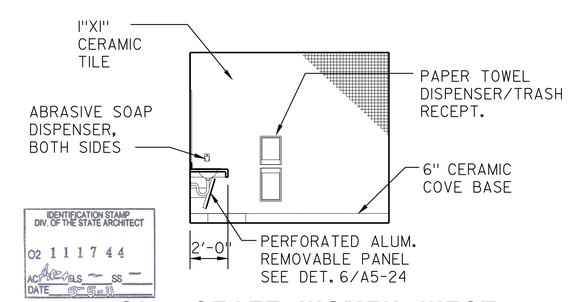

28 - STAFF WOMEN WEST

SCALE: 1/4" = 1'-0"

NOTE: SEE SHEET A0-7 AND A0-8 FOR ACCESSIBILITY HEIGHTS AND DIMENSIONS

	BY	CHECKED
DESIGN	G.ROBLEY	W.RAMROTH
DETAILS	G.ROBLEY	D.WRIGHT
QUANTITIES	G.ROBLEY	W.RAMROTH

PREPARED FOR THE STATE OF CALIFORNIA DEPARTMENT OF TRANSPORTATION

DIVISION OF ENGINEERING SERVICES ARCHITECTURAL AND STRUCTURAL DESIGN

CU 04264
EA 0A5351

BRIDGE NO. 23W000IR
POST MILE 14.8

EASTBOUND CORDELIA CVEF

CVEF — INTERIOR ELEVATIONS NO. 1

SHEET **A7-1**

40a535wba7-01.dgn
DS OSD imperialRev.10/07 18-MAY-2011 09:48

ORIGINAL SCALE IN INCHES FOR REDUCED PLANS 0 1 2 3

DISREGARD PRINTS BEARING EARLIER REVISION DATES

REVISION DATES (PRELIMINARY STAGE ONLY) 10/19/09 03/22/10 05/06/10 08/23/10 11/22/10 05/02/11 SHEET OF

18-MAY-2011 09:48
40a535wba7-01.dgn

DIST.	COUNTY	ROUTE	POST MILES TOTAL PROJECT	SHEET NO.	TOTAL SHEETS
04	Sol	12,80	L1.8/L2.0, 13.3/15.7	560	740

LICENSED ARCHITECT — 5/2/11 DATE

LICENSED ARCHITECT GREG A. ROBLEY No. C-30986 Exp. 02/05/13 STATE OF CALIFORNIA

5-16-11
PLANS APPROVAL DATE

The State of California or its officers or agents shall not be responsible for the accuracy or completeness of electronic copies of this plan sheet.

KENNEDY/JENKS CONSULTANTS
303 SECOND STREET
SUITE 300 SOUTH
SAN FRANCISCO, CA 94960

SOLANO TRANSPORTATION AUTHORITY
ONE HARBOR CENTER, SUITE 130
SUISUN CITY, CA 94585

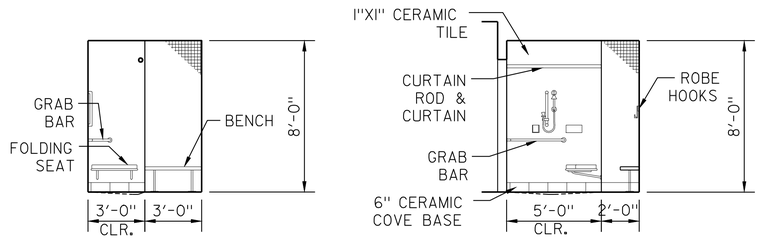

29 - WOMEN ACCESSIBLE SHOWER

SCALE: 1/4" = 1'-0"

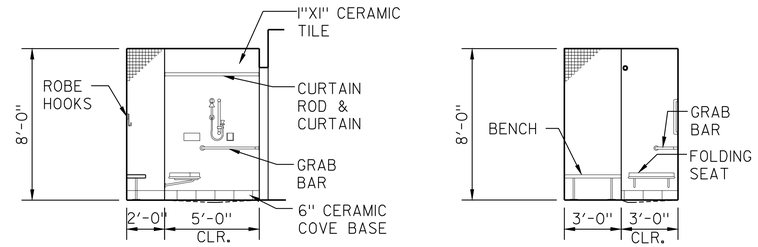

31 - MEN ACCESSIBLE SHOWER

SCALE: 1/4" = 1'-0"

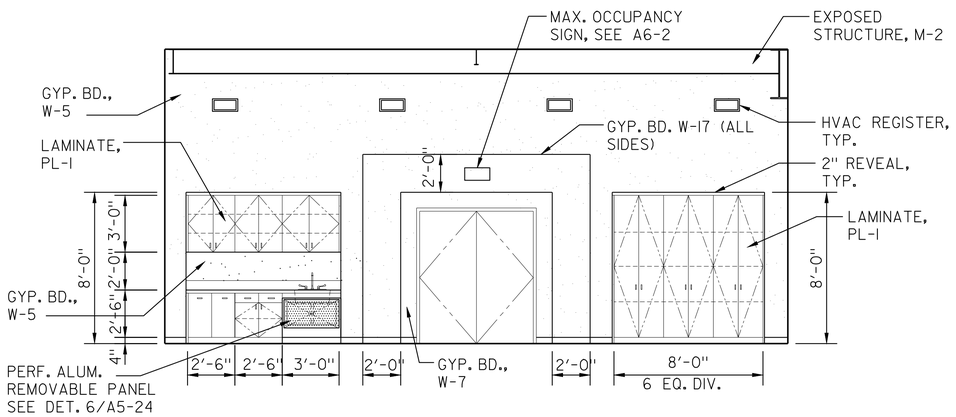

9 - CONFERENCE/TRAINING WEST

SCALE: 1/4" = 1'-0"

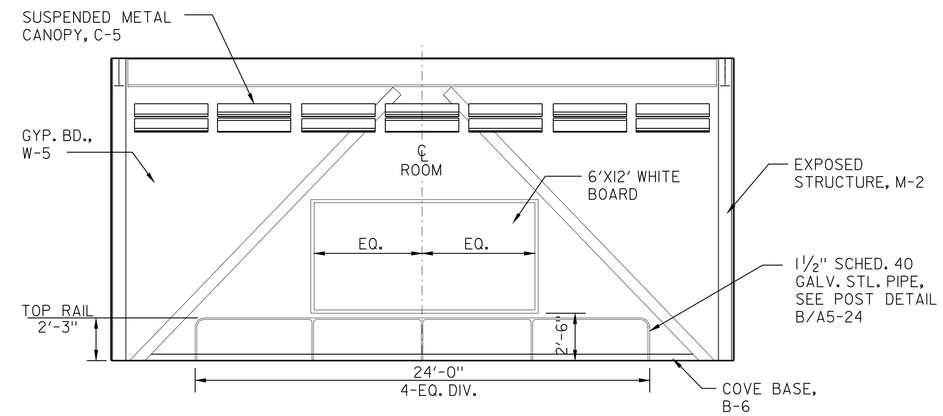

9 - CONFERENCE/TRAINING EAST

SCALE: 1/4" = 1'-0"

CALIFORNIA STATE FIRE MARSHAL APPROVED

Approval of this plan does not authorize or approve any omission or deviation from applicable regulations. Final approval is subject to field inspection. One set of approved plans shall be available on the project site at all times.

Reviewed by: Hans Henneberque 5/9/11
Hans Henneberque
Senior Deputy State Fire Marshal

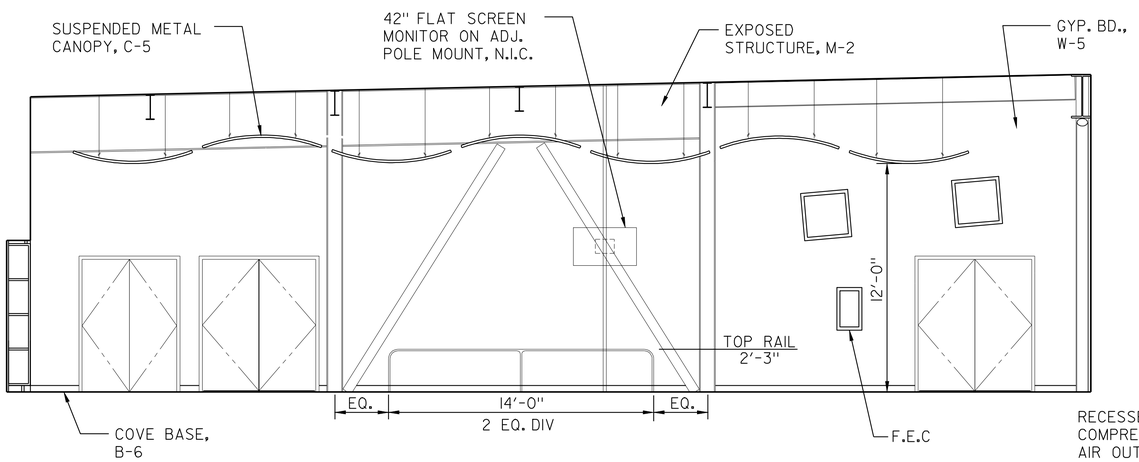

9 - CONFERENCE/TRAINING NORTH

SCALE: 1/4" = 1'-0"

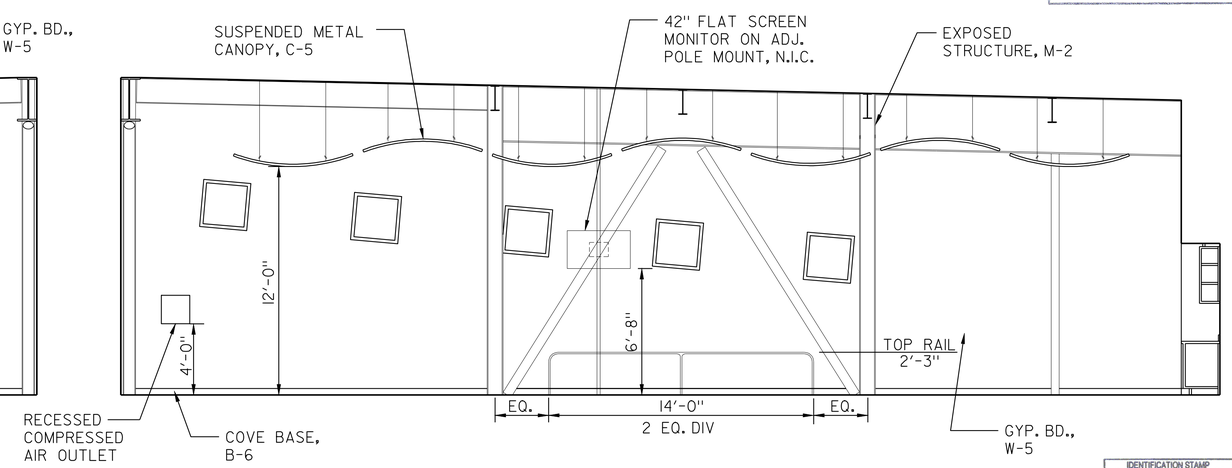

9 - CONFERENCE/TRAINING SOUTH

SCALE: 1/4" = 1'-0"

IDENTIFICATION STAMP DIV. OF THE STATE ARCHITECT
02 1117 44
AC — BLS — SS —
DATE 5-5-11

NOTE: SEE SHEETS, A0-7 AND A0-8 FOR ACCESSIBLITY HEIGHTS AND DIMENSIONS

	BY	CHECKED
DESIGN	G.ROBLEY	W.RAMROTH
DETAILS	G.ROBLEY	D.WRIGHT
QUANTITIES	G.ROBLEY	W.RAMROTH

PREPARED FOR THE STATE OF CALIFORNIA DEPARTMENT OF TRANSPORTATION

DIVISION OF ENGINEERING SERVICES ARCHITECTURAL AND STRUCTURAL DESIGN

BRIDGE NO. 23W000IR
POST MILE 14.8

EASTBOUND CORDELIA CVEF

CVEF — INTERIOR ELEVATIONS NO. 2

SHEET A7-2

40a535wba7-02.dgn
DS OSD Imperial Rev. 10/07 18-MAY-2011 09:48

ORIGINAL SCALE IN INCHES FOR REDUCED PLANS 0 1 2 3

CU 04264
EA 0A5351

DISREGARD PRINTS BEARING EARLIER REVISION DATES

REVISION DATES (PRELIMINARY STAGE ONLY) 10/19/09 03/22/10 05/06/10 08/23/10 11/22/10 05/02/11 SHEET OF

18-MAY-2011 09:48

40a535wba7-02.dgn

DIST.	COUNTY	ROUTE	POST MILES TOTAL PROJECT	SHEET NO.	TOTAL SHEETS
04	Sol	12,80	L1.8/L2.0, 13.3/15.7	561	740

LICENSED ARCHITECT — DATE 05/02/11

LICENSED ARCHITECT GREG A. ROBLEY No. C-30986 Exp. 02/05/13 STATE OF CALIFORNIA

5-16-11
PLANS APPROVAL DATE

The State of California or its officers or agents shall not be responsible for the accuracy or completeness of electronic copies of this plan sheet.

KENNEDY/JENKS CONSULTANTS
303 SECOND STREET
SUITE 300 SOUTH
SAN FRANCISCO, CA 94960

SOLANO TRANSPORTATION AUTHORITY
ONE HARBOR CENTER, SUITE 130
SUISUN CITY, CA 94585

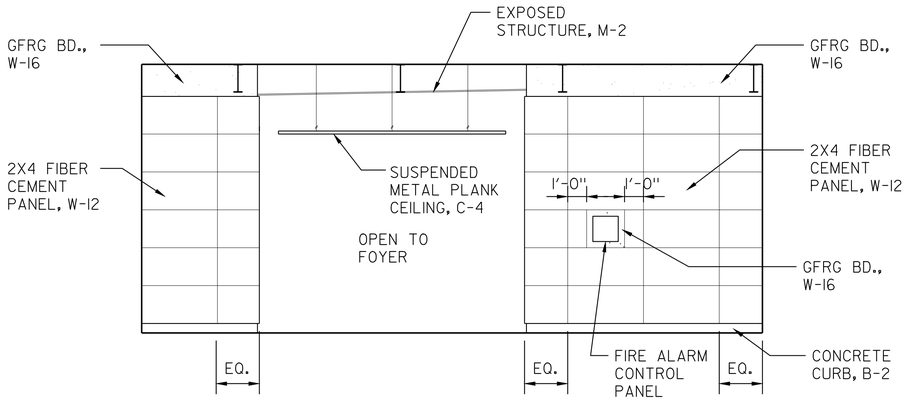

1- LOBBY SOUTH

SCALE: 1/4" = 1'-0"

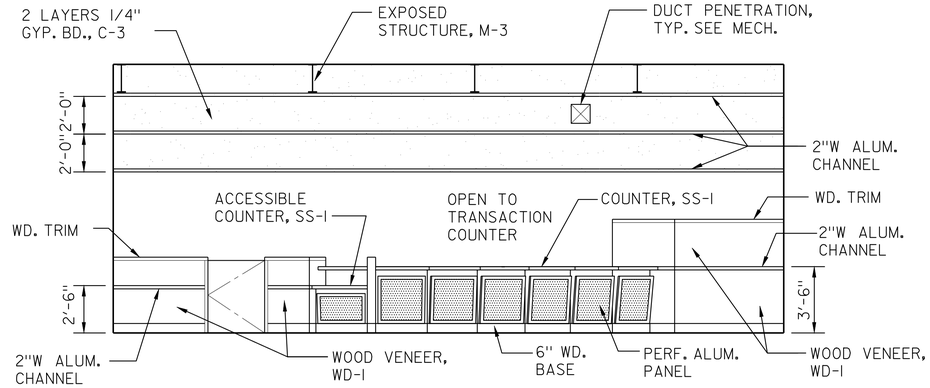

1 - LOBBY NORTH

SCALE: 1/4" = 1'-0"

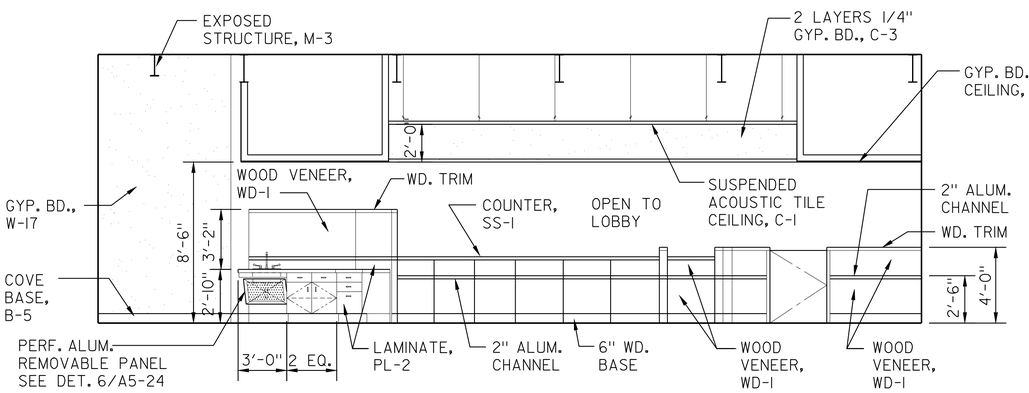

5A/6 - TRANSACTION COUNTER/PURSUIT SOUTH

SCALE: 1/4" = 1'-0"

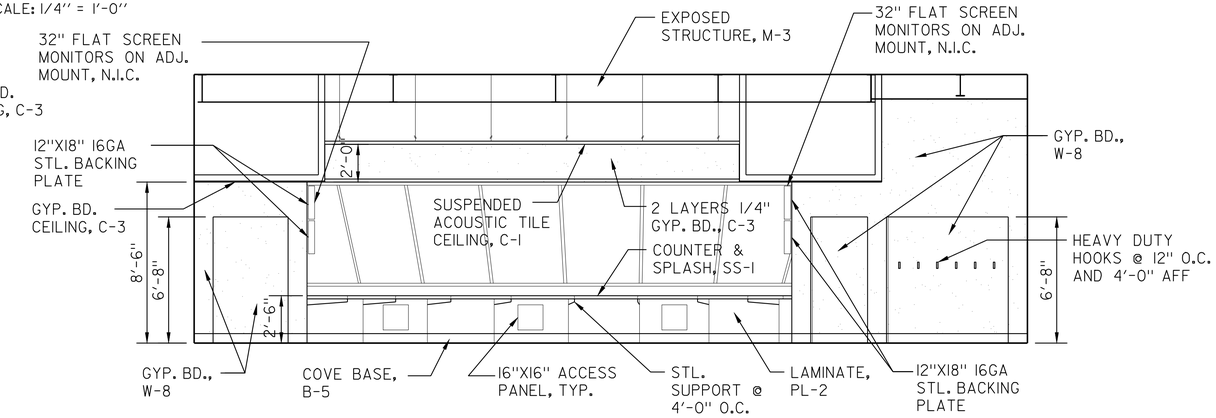

5/6 - OBSERVATION/PURSUIT NORTH

SCALE: 1/4" = 1'-0"

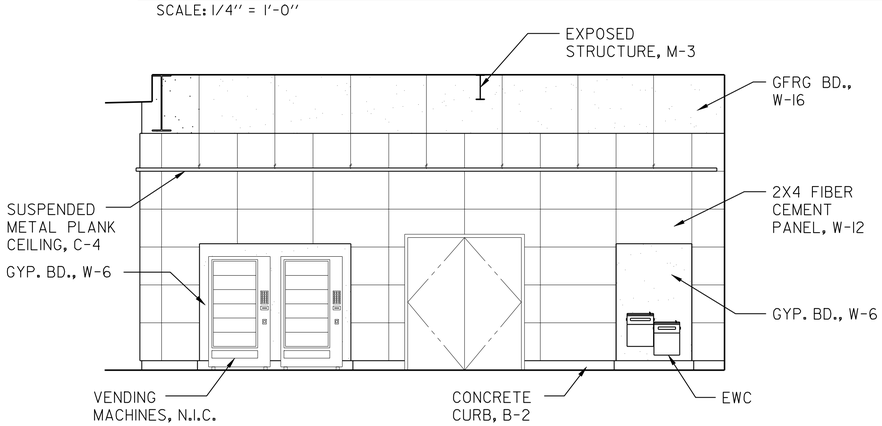

2 - FOYER EAST

SCALE: 1/4" = 1'-0"

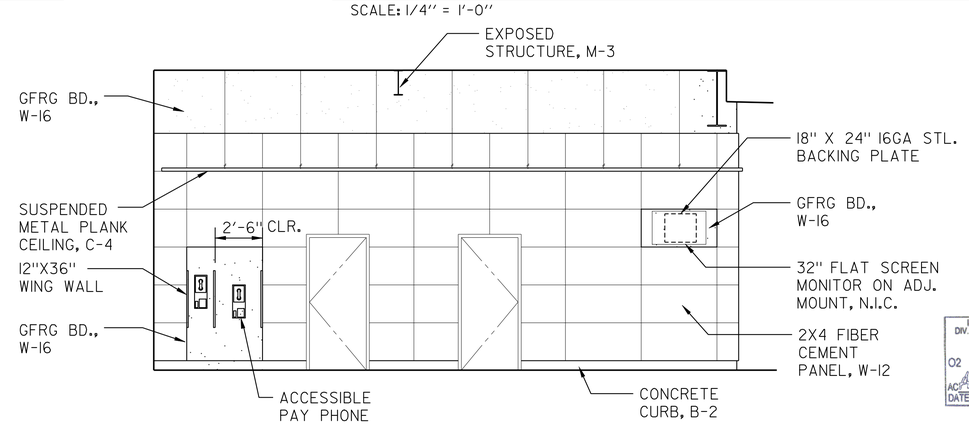

2 - FOYER WEST

SCALE: 1/4" = 1'-0"

CALIFORNIA STATE FIRE MARSHAL APPROVED

Approval of this plan does not authorize or approve any omission or deviation from applicable regulations. Final approval is subject to field inspection. One set of approved plans shall be available on the project site at all times.

Reviewed by: Hans Hennebarque 5/9/11
Hans Hennebarque
Senior Deputy State Fire Marshal

IDENTIFICATION STAMP DIV. OF THE STATE ARCHITECT
02 111744
ACC ELS SS
DATE

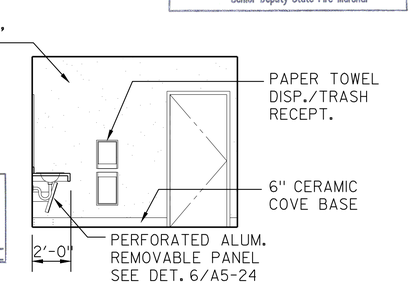

33 - LACTATION NORTH

SCALE: 1/4" = 1'-0"

NOTE: SEE SHEETS A0-7 AND A0-8 FOR ACCESSIBILITY HEIGHTS AND DIMENSIONS

	BY	CHECKED
DESIGN	G.ROBLEY	W.RAMROTH
DETAILS	G.ROBLEY	D.WRIGHT
QUANTITIES	G.ROBLEY	W.RAMROTH

PREPARED FOR THE STATE OF CALIFORNIA DEPARTMENT OF TRANSPORTATION

DIVISION OF ENGINEERING SERVICES
ARCHITECTURAL AND STRUCTURAL DESIGN

CU 04264
EA 0A5351

BRIDGE NO. 23W000IR
POST MILE 14.8

EASTBOUND CORDELIA CVEF

CVEF — INTERIOR ELEVATIONS NO. 3

SHEET **A7-3**

ORIGINAL SCALE IN INCHES FOR REDUCED PLANS 0 1 2 3

DISREGARD PRINTS BEARING EARLIER REVISION DATES → REVISION DATES (PRELIMINARY STAGE ONLY) 10/19/09 03/22/10 05/06/10 08/23/10 11/22/10 05/02/11 SHEET OF

DS OSD Imperial Rev. 10/07 9/17/10 10:02

18-MAY-2011 10:02

DIST.	COUNTY	ROUTE	POST MILES TOTAL PROJECT	SHEET NO.	TOTAL SHEETS
04	Sol	12,80	L1.8/L2.0, 13.3/15.7	562	740

LICENSED ARCHITECT — DATE 05/02/11

LICENSED ARCHITECT GREG A. ROBLEY No. C-30986 Exp. 02/05/13 STATE OF CALIFORNIA

5-16-11
PLANS APPROVAL DATE

The State of California or its officers or agents shall not be responsible for the accuracy or completeness of electronic copies of this plan sheet.

KENNEDY/JENKS CONSULTANTS
303 SECOND STREET
SUITE 300 SOUTH
SAN FRANCISCO, CA 94960

SOLANO TRANSPORTATION AUTHORITY
ONE HARBOR CENTER, SUITE 130
SUISUN CITY, CA 94585

CALIFORNIA STATE FIRE MARSHAL APPROVED

Approval of this plan does not authorize or approve any omission or deviation from applicable regulations. Final approval is subject to field inspection. One set of approved plans shall be available on the project site at all times.

Reviewed by: Hans Henneberque 5/9/11
Hans Henneberque
Senior Deputy State Fire Marshal

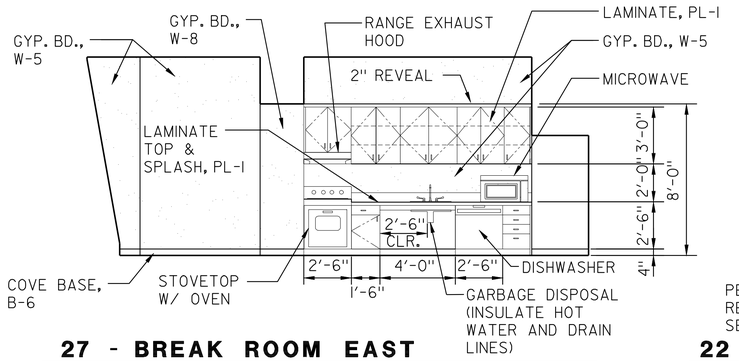

27 - BREAK ROOM EAST

SCALE: 1/4" = 1'-0"

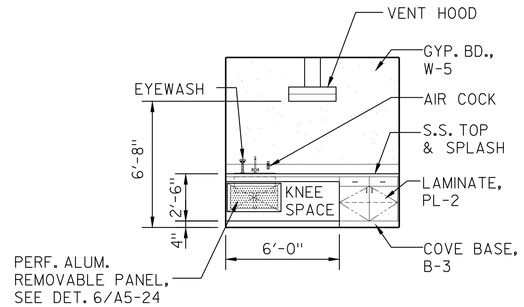

22 - WEAPONS ROOM WEST

SCALE: 1/4" = 1'-0"

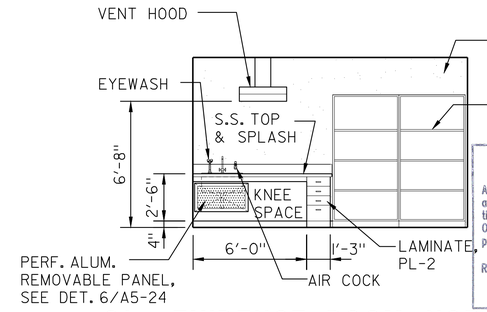

21 - EVIDENCE ROOM NORTH

SCALE: 1/4" = 1'-0"

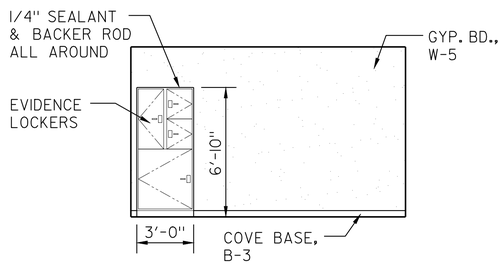

21A - EVIDENCE VESTIBULE NORTH

SCALE: 1/4" = 1'-0"

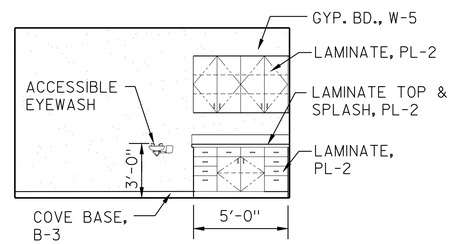

21A - EVIDENCE VESTIBULE SOUTH

SCALE: 1/4" = 1'-0"

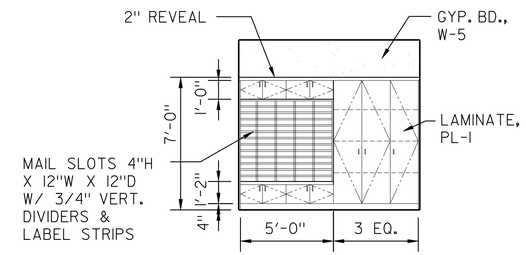

12 - MAIL/CLERICAL WEST

SCALE: 1/4" = 1'-0"

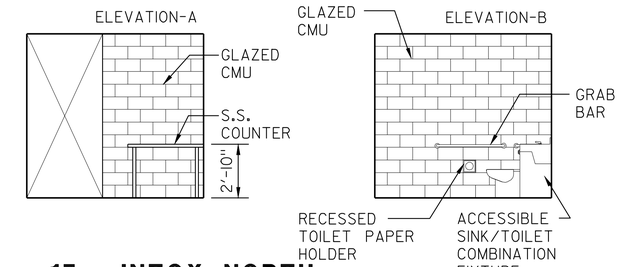

17 - INTOX NORTH

SCALE: 1/4" = 1'-0"

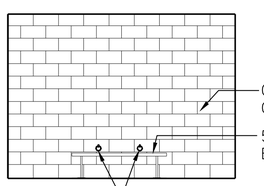

17 - INTOX SOUTH

SCALE: 1/4" = 1'-0"

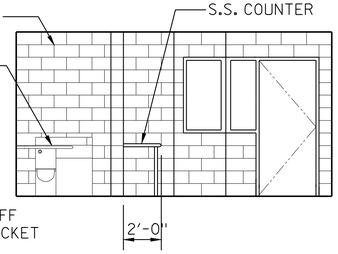

17 - INTOX EAST

SCALE: 1/4" = 1'-0"

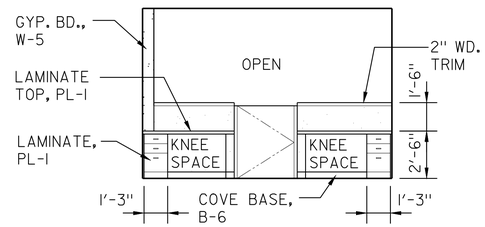

16 - ENFORCEMENT SOUTH

SCALE: 1/4" = 1'-0"

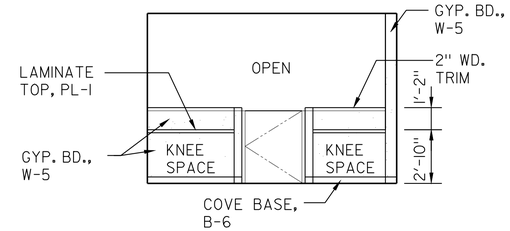

16 - ENFORCEMENT NORTH

SCALE: 1/4" = 1'-0"

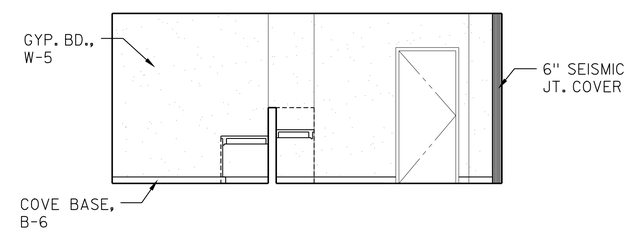

16 - ENFORCEMENT EAST

SCALE: 1/4" = 1'-0"

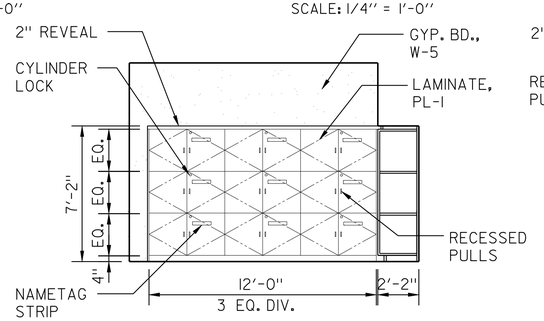

25 - CHP EQUIPMENT WEST

SCALE: 1/4" = 1'-0"

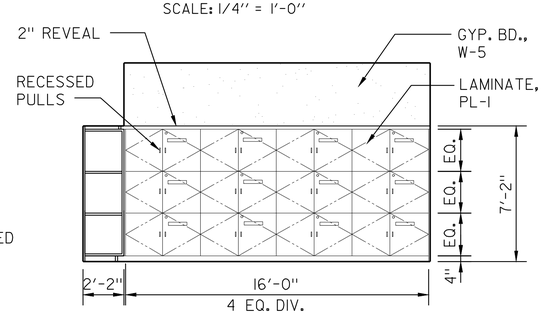

25 - CHP EQUIPMENT NORTH

SCALE: 1/4" = 1'-0"

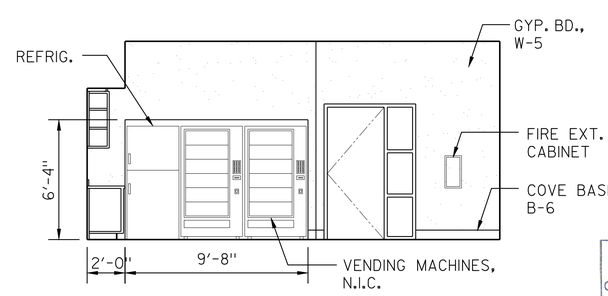

27 - BREAK ROOM SOUTH

SCALE: 1/4" = 1'-0"

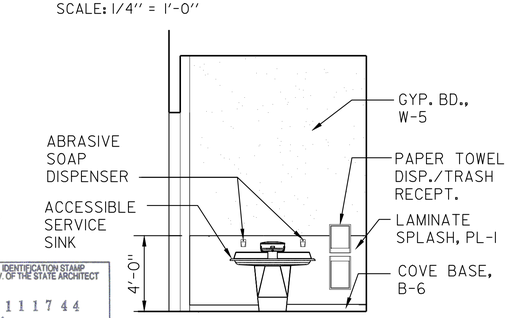

13A - VESTIBULE WEST

SCALE: 1/4" = 1'-0"

IDENTIFICATION STAMP DIV. OF THE STATE ARCHITECT 02 111744 ACCEPTS ~ SS DATE

NOTE: SEE SHEETS A0-7 AND A0-8 FOR ACCESSIBILITY HEIGHTS AND DIMENSIONS.

	BY	CHECKED
DESIGN	G.ROBLEY	W.RAMROTH
DETAILS	G.ROBLEY	D.WRIGHT
QUANTITIES	G.ROBLEY	W.RAMROTH

ORIGINAL SCALE IN INCHES FOR REDUCED PLANS 0 1 2 3

PREPARED FOR THE STATE OF CALIFORNIA DEPARTMENT OF TRANSPORTATION

DIVISION OF ENGINEERING SERVICES ARCHITECTURAL AND STRUCTURAL DESIGN

CU 04264
EA 0A5351

BRIDGE NO. 23W0001R
POST MILE 14.8

EASTBOUND CORDELIA CVEF

CVEF — INTERIOR ELEVATIONS NO. 4

SHEET **A7-4**

DISREGARD PRINTS BEARING EARLIER REVISION DATES → REVISION DATES (PRELIMINARY STAGE ONLY) 10/19/09 03/22/10 05/06/10 08/23/10 11/22/10 04/05/11 05/02/11

SHEET OF

DS OSD Imperial Rev. 10/07 9/17/10 10:02

18-MAY-2011 10:02

DIST.	COUNTY	ROUTE	POST MILES TOTAL PROJECT	SHEET NO.	TOTAL SHEETS
04	Sol	12,80	L1.8/L2.0, 13.3/15.7	563	740

REGISTERED CIVIL ENGINEER — DATE 05/11/11

REGISTERED PROFESSIONAL ENGINEER BRIAN M. STEWART No. C-73328 Exp. 12/31/12 CIVIL STATE OF CALIFORNIA

5-16-11
PLANS APPROVAL DATE

The State of California or its officers or agents shall not be responsible for the accuracy or completeness of electronic copies of this plan sheet.

HDR ENGINEERING, INC.
2121 N CALIFORNIA BLVD
SUITE 475
WALNUT CREEK, CA 94596

SOLANO TRANSPORTATION AUTHORITY
ONE HARBOR CENTER, SUITE 130
SUISUN CITY, CA 94585

EASTBOUND CORDELIA TRUCK INSPECTION FACILITY DEMO NOTES

1. SEE CIVIL SHEETS FOR REMOVAL OF ADDITIONAL SITE FEATURES.
2. REMOVE 48'x36' SCALE HOUSE BUILDING. BUILDING DEMOLITION SHALL INCLUDE ALL ACCESS COMPONENTS INCLUDING SIDEWALKS, STAIRS, RAMPS AND CURBS. REMOVE ALL ELEMENTS OF THE BUILDING TO AND INCLUDING THE FOUNDATIONS. BACKFILL AREA TO EXISTING GRADE WITH EARTH FILL COMPACTED TO 95%. SEE SHEETS A8-3 TO A8-7.
3. REMOVE 17'x13' RESTROOM BUILDING. REMOVE ALL ELEMENTS OF THE BUILDING TO AND INCLUDING THE FOUNDATION SLAB. BACK FILL AREA TO EXISTING GRADE WITH EARTH FILL COMPACTED TO 95%. SEE SHEET A8-8.
4. REMOVE 127'x82' TRUCK INSPECTION SHELTER BUILDING. BUILDING DEMOLITION SHALL INCLUDE STEEL CANOPY, STEEL COLUMNS, STEEL SIDING, STEEL PREFABRICATED KIOSK BOOTH, METAL STORAGE SHED AND CONCRETE SLABS. REMOVE ALL ELEMENTS OF THE BUILDING TO AND INCLUDING THE FOUNDATIONS. BACKFILL AREA TO EXISTING GRADE WITH EARTH FILL COMPACTED TO 95%. SEE SHEET A8-9.
5. REMOVE 12x10' STATIC SCALE PITS. REMOVE ALL ELEMENTS OF THE STATIC SCALES TO AND INCLUDING THE EQUIPMENT AND CONCRETE FOUNDATIONS. BACKFILL AREAS TO EXISTING GRADE WITH EARTH FILL COMPACTED TO 95%. SEE SHEET A8-10.
6. REMOVE INLET, SEE CIVIL PLANS.
7. REMOVE SIGN STRUCTURE AND/OR POLE, SEE CIVIL PLANS.
8. MOBILE STORAGE UNITS AND ACCESS RAMPS TO BE REMOVED BY CALIFORNIA HIGHWAY PATROL PRIOR TO DEMOLITION WORK. NOT INCLUDED IN CONTRACT.

1. FOR ACCURATE RIGHT OF WAY DATA, CONTACT RIGHT OF WAY ENGINEERING AT THE DISTRICT OFFICE.
2. ALL DIMENSIONS ARE APPROXIMATE AND SHOULD BE VERIFIED IN THE FIELD.

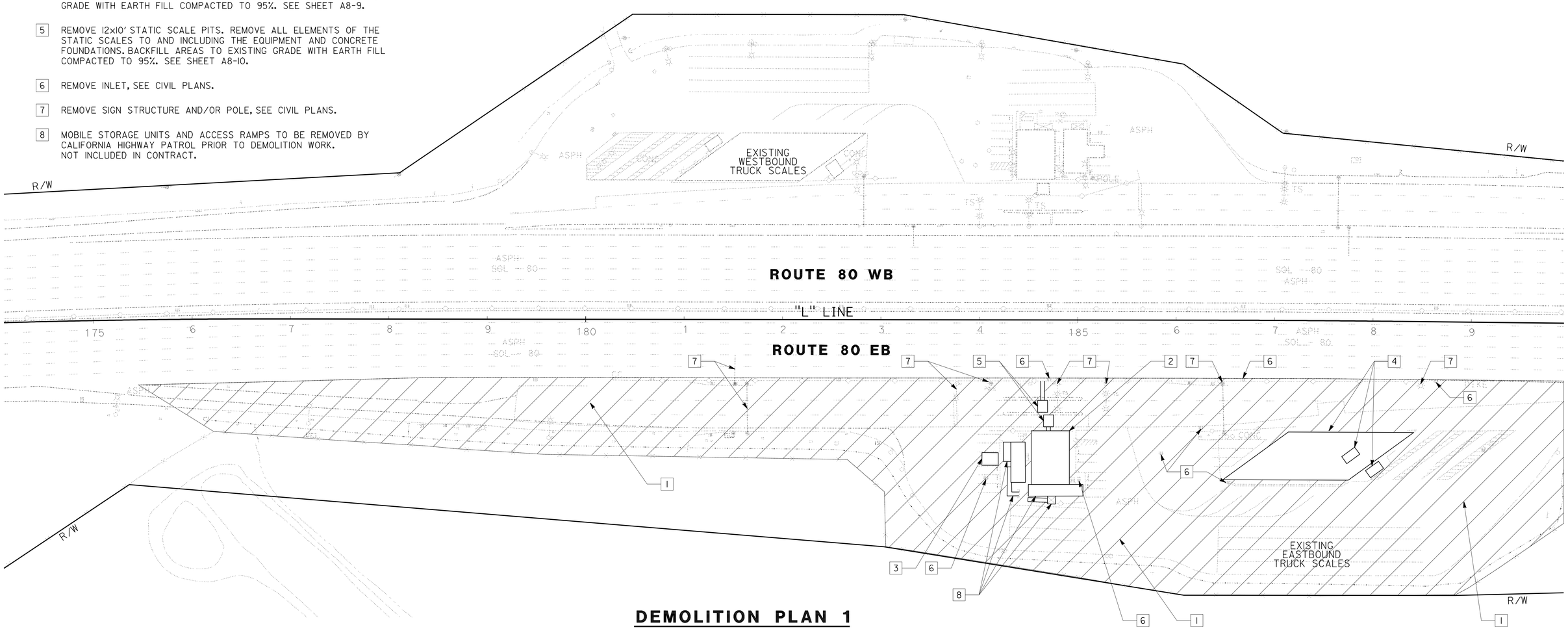

DEMOLITION PLAN 1

SCALE: 1" = 50'

NOTE: THIS DRAWING IS FOR DEMOLITION REFERENCE ONLY AND NOT TO ANY SCALE.

	BY	CHECKED
DESIGN	B. STEWART	M. SHIPPEN
DETAILS	B. STEWART	M. SHIPPEN
QUANTITIES	B. STEWART	M. SHIPPEN

PREPARED FOR THE STATE OF CALIFORNIA DEPARTMENT OF TRANSPORTATION

DIVISION OF ENGINEERING SERVICES
ARCHITECTURAL AND STRUCTURAL DESIGN

BRIDGE NO. 23W0001R
POST MILE 14.8

EASTBOUND CORDELIA CVEF
CVEF — DEMOLITION PLAN 1

SHEET A8-1

40a535wba8-01.dgn
DS OSD imperial Rev. 10/07 18-MAY-2011 10:02

ORIGINAL SCALE IN INCHES FOR REDUCED PLANS 0 1 2 3

CU 04264
EA 0A5351

DISREGARD PRINTS BEARING EARLIER REVISION DATES → 05/11/11

REVISION DATES (PRELIMINARY STAGE ONLY) SHEET OF

18-MAY-2011 10:02

40a535wba8-01.dgn

DIST.	COUNTY	ROUTE	POST MILES TOTAL PROJECT	SHEET NO.	TOTAL SHEETS
04	Sol	12,80	L1.8/L2.0, 13.3/15.7	564	740

REGISTERED CIVIL ENGINEER — DATE 05/11/11

REGISTERED PROFESSIONAL ENGINEER BRIAN M. STEWART No. C-73328 Exp.12/31/12 CIVIL STATE OF CALIFORNIA

5-16-11
PLANS APPROVAL DATE

The State of California or its officers or agents shall not be responsible for the accuracy or completeness of electronic copies of this plan sheet.

HDR ENGINEERING, INC.
2121 N CALIFORNIA BLVD
SUITE 475
WALNUT CREEK, CA 94596

SOLANO TRANSPORTATION AUTHORITY
ONE HARBOR CENTER, SUITE 130
SUISUN CITY, CA 94585

EASTBOUND CORDELIA TRUCK INSPECTION FACILITY DEMO NOTES

1. DISCONNECT ELECTRICAL SERVICE FOR THE SITE BEFORE DEMOLITION. REMOVE SERVICE EQUIPMENT, AS NECESSARRY, PER UTILITY COMPANY REQUIREMENTS.
2. DISCONNECT TELEPHONE/COMMUNICATION SERVICE FOR THE SITE BEFORE DEMOLITION. REMOVE SERVICE EQUIPMENT, AS NECESSARRY, PER UTILITY COMPANY REQUIREMENTS.
3. REMOVE SERVICE CONDUITS, CONDUCTORS AND CABLES.
4. REMOVE 2" PVC WATER SERVICE LINE.
5. REMOVE 3" PVC SANITARY SEWER FORCE MAIN SERVICE LINE.
6. REMOVE SANITARY SEWER FORCE MAIN CLEANOUT.
7. REMOVE SANITARY SEWER 1600-GALLON CONCRETE TANK AND PUMP ENCLOSURE UNIT. SEE SHEET A8-11.

1. THE ELECTRICAL SERVICE AND ELECTRICAL SYSTEM SHALL BE DE-ENERGIZED BEFORE DEMOLITION.
2. REMOVE ALL ABOVE GROUND CONDUITS AND CONDUCTORS SYSTEM AT THE EASTBOUND SCALE FACILITY. REMOVE ALL UNDERGROUND CONDUCTORS AND CONDUITS SYSTEM AT THE EASTBOUND SCALE FACILITY TO THE SAWCUT LINE. PLUG AND CAP CONDUITS AT SAWCUT LINE AS REQUIRED. SEE CIVIL PLANS (LAYOUTS) FOR SAWCUT DELINEATION.
3. REMOVE ELECTRICAL/ELECTRONIC EQUIPMENT, DEVICES AND SYSTEM AS REQUIRED FOR DEMOLITION. SEE CIVIL SHEETS FOR REMOVAL OF ADDITIONAL SITE FEATURES.
4. REMOVE AND DISPOSE ALL HAZARDOUS MATERIAL PRIOR TO DEMOLITION. FOR DISPOSAL DIRECTION, SEE SPECIFICATIONS.
5. FACILTIES AND OPERATIONS AT THE WESTBOUND FACILITY SHOULD NOT BE DISTRUBTED DURING DEMOLITION WORK.
6. LOCATIONS OF EXISITING UTILITIES SHOWN ON THESE PLANS WERE OBTAINED FROM AS-BUILT DRAWINGS AND/OR FROM FIELD SURVEY. VERIFY LOCATION OF ALL UTILITIES BEFORE STARTING DEMOLITION WORK.
7. SEE MECHANICAL PLANS FOR NEW LIMITS OF THE WATER AND SANITARY SEWER SERVICE LINES. NEW WATER AND SANITARY SEWER SERVICES ARE TO BE IN PLACE BEFORE EXISTING SERVICES ARE TO BE REMOVED.

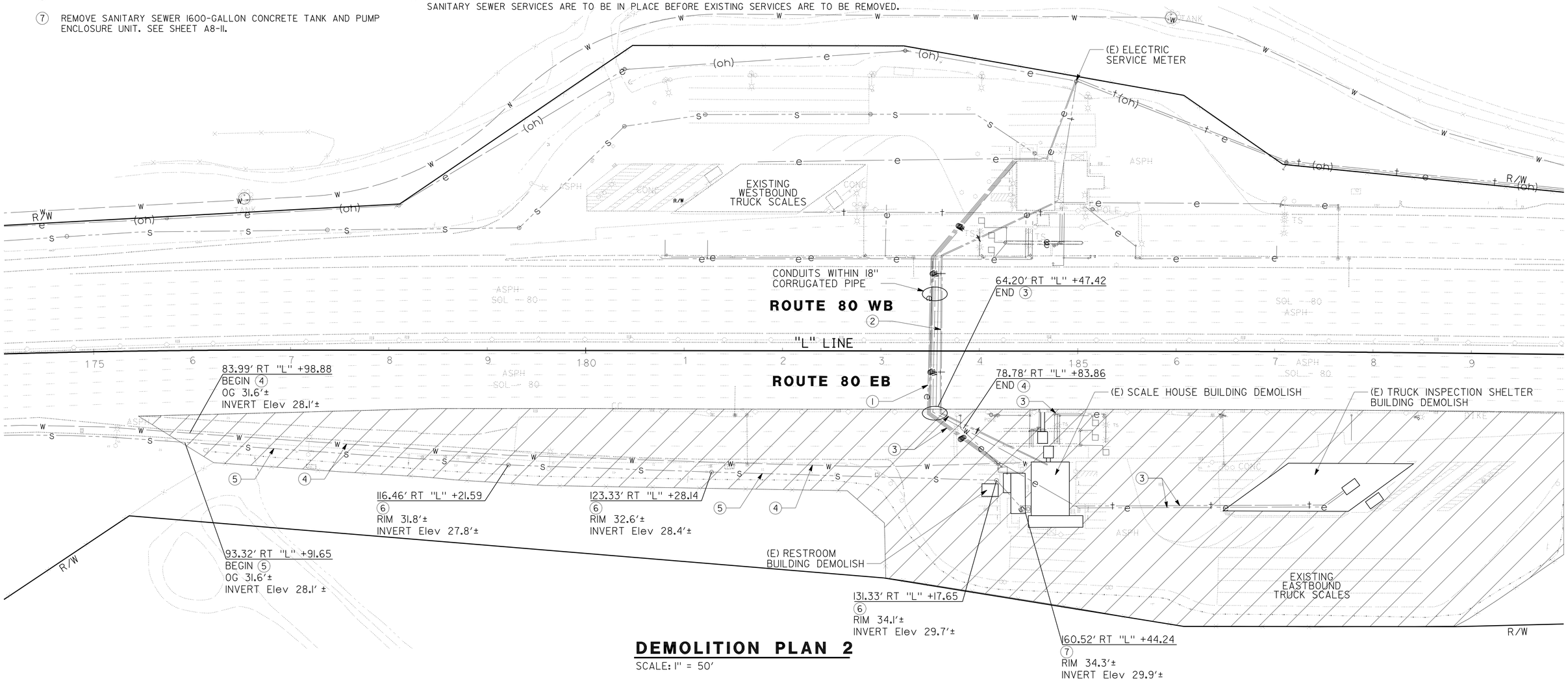

DEMOLITION PLAN 2

SCALE: 1" = 50'

NOTE: THIS DRAWING IS FOR DEMOLITION REFERENCE ONLY AND NOT TO ANY SCALE.

	BY	CHECKED
DESIGN	B. STEWART	M. SHIPPEN
DETAILS	B. STEWART	M. SHIPPEN
QUANTITIES	B. STEWART	M. SHIPPEN

PREPARED FOR THE STATE OF CALIFORNIA DEPARTMENT OF TRANSPORTATION

DIVISION OF ENGINEERING SERVICES ARCHITECTURAL AND STRUCTURAL DESIGN

BRIDGE NO. 23W0001R
POST MILE 14.8

EASTBOUND CORDELIA CVEF
CVEF — DEMOLITION PLAN 2

SHEET A8-2

40a535wba8-02.dgn
DS OSD imperial Rev. 10/07 18-MAY-2011 10:02

ORIGINAL SCALE IN INCHES FOR REDUCED PLANS 0 1 2 3

CU 04264
EA 0A5351

DISREGARD PRINTS BEARING EARLIER REVISION DATES → 05/11/11

REVISION DATES (PRELIMINARY STAGE ONLY) SHEET OF

18-MAY-2011 10:02

40a535wba8-02.dgn

DIST.	COUNTY	ROUTE	POST MILES TOTAL PROJECT	SHEET NO.	TOTAL SHEETS
04	Sol	12,80	L1.8/L2.0, 13.3/15.7	565	740

REGISTERED CIVIL ENGINEER — DATE 05/11/11

REGISTERED PROFESSIONAL ENGINEER — BRIAN M. STEWART — No. C-73328 — Exp. 12/31/12 — CIVIL — STATE OF CALIFORNIA

5-16-11
PLANS APPROVAL DATE

The State of California or its officers or agents shall not be responsible for the accuracy or completeness of electronic copies of this plan sheet.

HDR ENGINEERING, INC. 2121 N CALIFORNIA BLVD SUITE 475 WALNUT CREEK, CA 94596	SOLANO TRANSPORTATION AUTHORITY ONE HARBOR CENTER, SUITE 130 SUISUN CITY, CA 94585

NOTE:
REMOVAL OF EXISTING SCALE HOUSE BUILDING, SEE NOTE 2 SHEET A8-1.

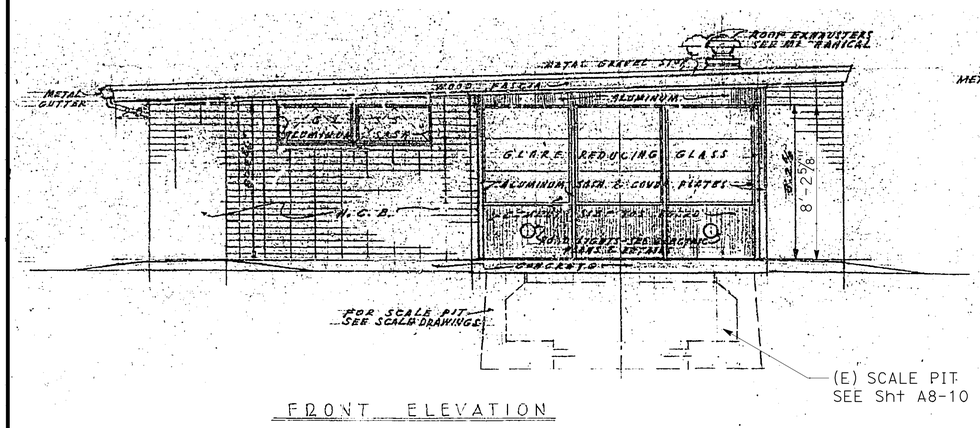

FRONT ELEVATION

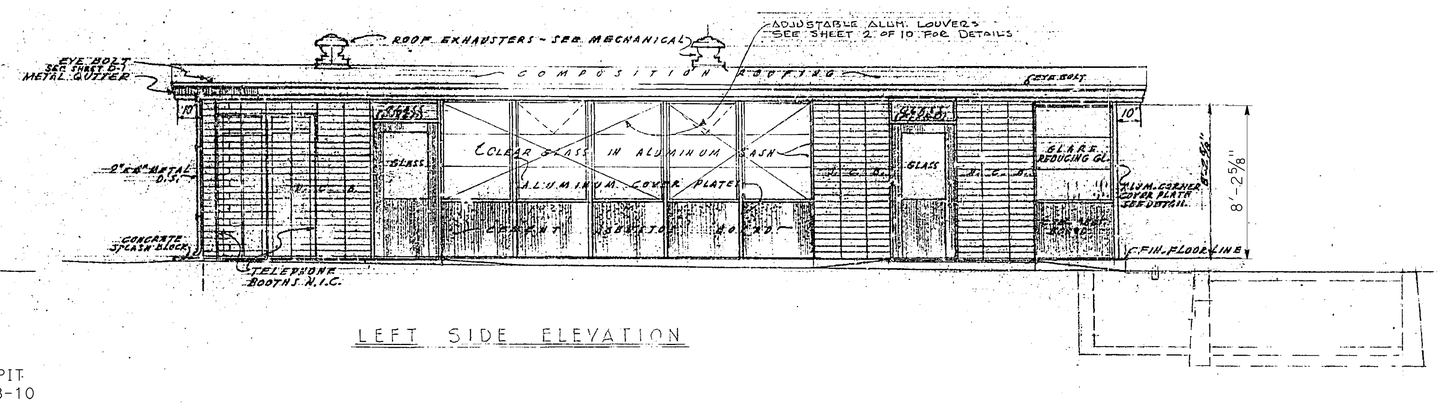

LEFT SIDE ELEVATION

SCALE: 1/4" = 1'-0"

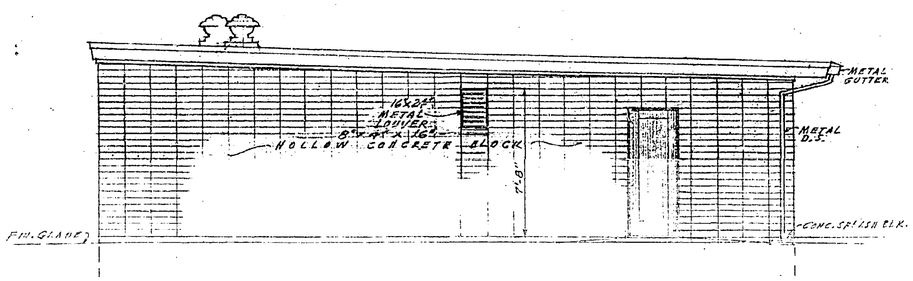

REAR ELEVATION

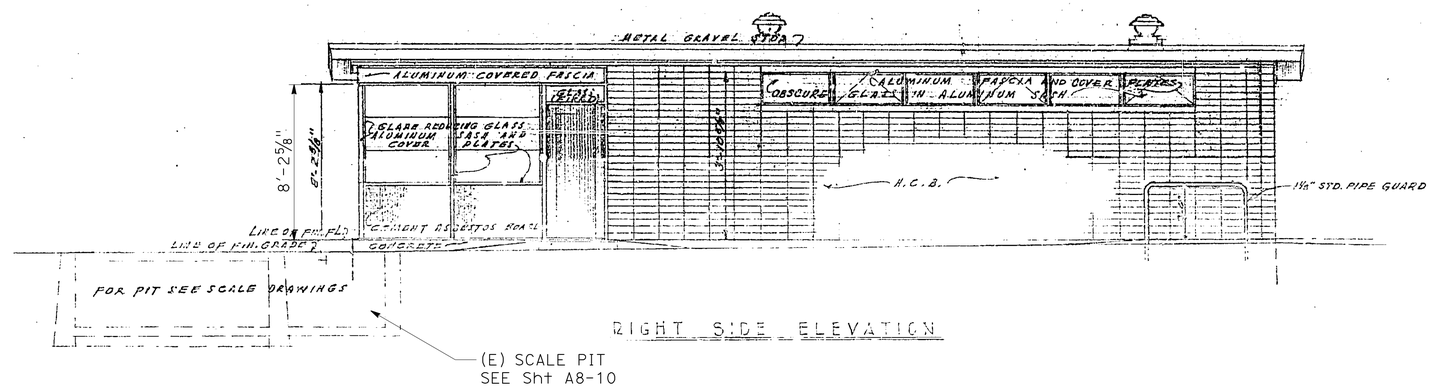

RIGHT SIDE ELEVATION

SCALE HOUSE REMOVAL ELEVATIONS

NO SCALE

NOTE: THIS DRAWING IS FOR DEMOLITION REFERENCE ONLY AND NOT TO ANY SCALE.

DESIGN	BY B. STEWART	CHECKED M. SHIPPEN	PREPARED FOR THE STATE OF CALIFORNIA DEPARTMENT OF TRANSPORTATION
DETAILS	BY B. STEWART	CHECKED M. SHIPPEN	
QUANTITIES	BY B. STEWART	CHECKED M. SHIPPEN	

DIVISION OF ENGINEERING SERVICES
ARCHITECTURAL AND STRUCTURAL DESIGN

BRIDGE NO. 23W0001R
POST MILE 14.8

EASTBOUND CORDELIA CVEF

CVEF — SCALE HOUSE REMOVAL ELEVATIONS

SHEET **A8-3**

40a535wba8-03.dgn
DS OSD imperial Rev. 10/07 18-MAY-2011 10:02

ORIGINAL SCALE IN INCHES FOR REDUCED PLANS 0 1 2 3

CU 04264
EA 0A5351

DISREGARD PRINTS BEARING EARLIER REVISION DATES → 05/11/11

REVISION DATES (PRELIMINARY STAGE ONLY) SHEET OF

18-MAY-2011 10:02

40a535wba8-03.dgn

DIST.	COUNTY	ROUTE	POST MILES TOTAL PROJECT	SHEET NO.	TOTAL SHEETS
04	Sol	12,80	L1.8/L2.0, 13.3/15.7	566	740

REGISTERED CIVIL ENGINEER — DATE 05/11/11

REGISTERED PROFESSIONAL ENGINEER BRIAN M. STEWART No. C-73328 Exp. 12/31/12 CIVIL STATE OF CALIFORNIA

5-16-11
PLANS APPROVAL DATE

The State of California or its officers or agents shall not be responsible for the accuracy or completeness of electronic copies of this plan sheet.

HDR ENGINEERING, INC.
2121 N CALIFORNIA BLVD
SUITE 475
WALNUT CREEK, CA 94596

SOLANO TRANSPORTATION AUTHORITY
ONE HARBOR CENTER, SUITE 130
SUISUN CITY, CA 94585

NOTE:
REMOVAL OF EXISTING SCALE HOUSE BUILDING, SEE NOTE 2 SHEET A8-1.

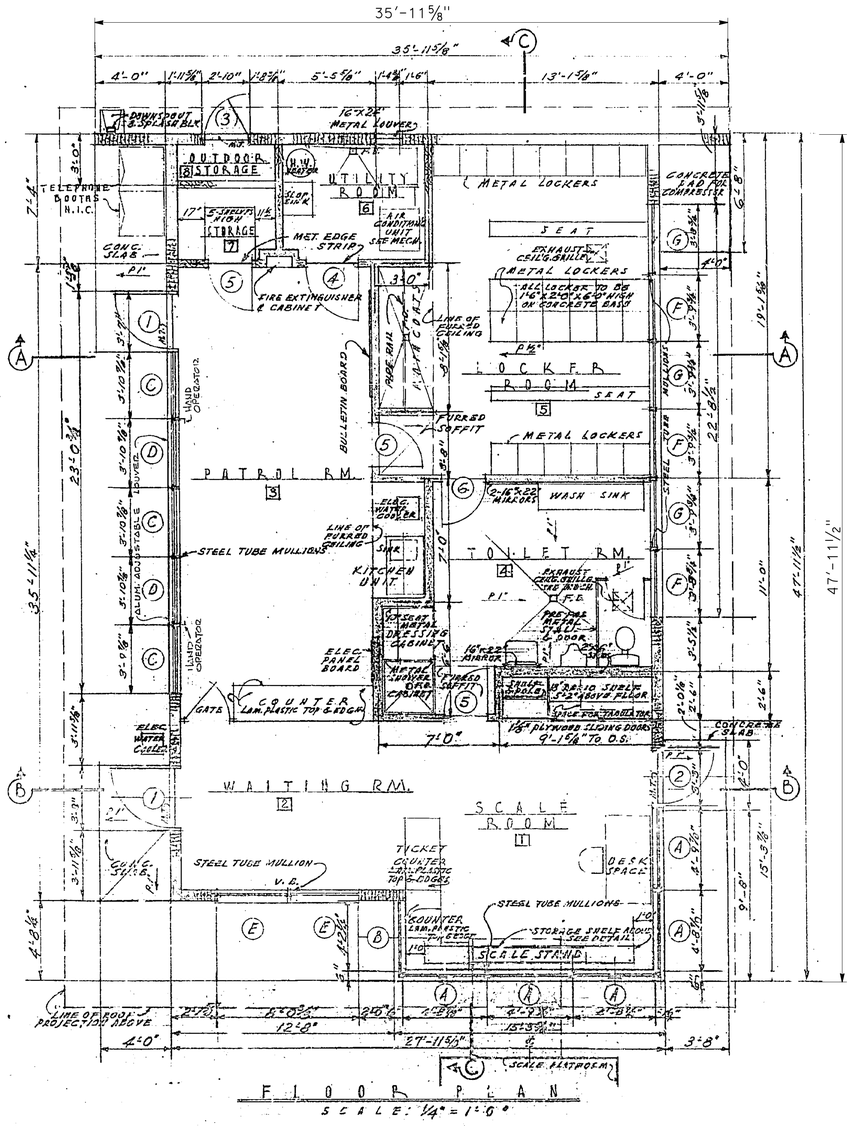

SCALE HOUSE REMOVAL PLAN

NO SCALE

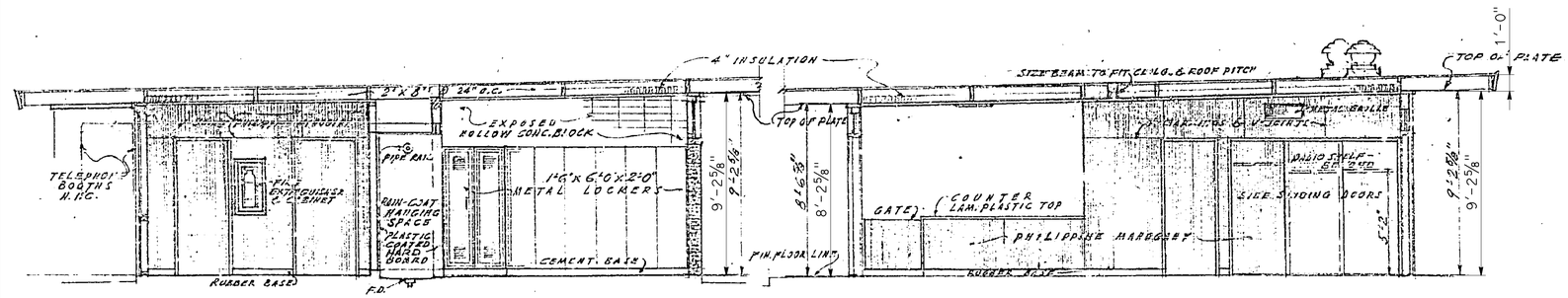

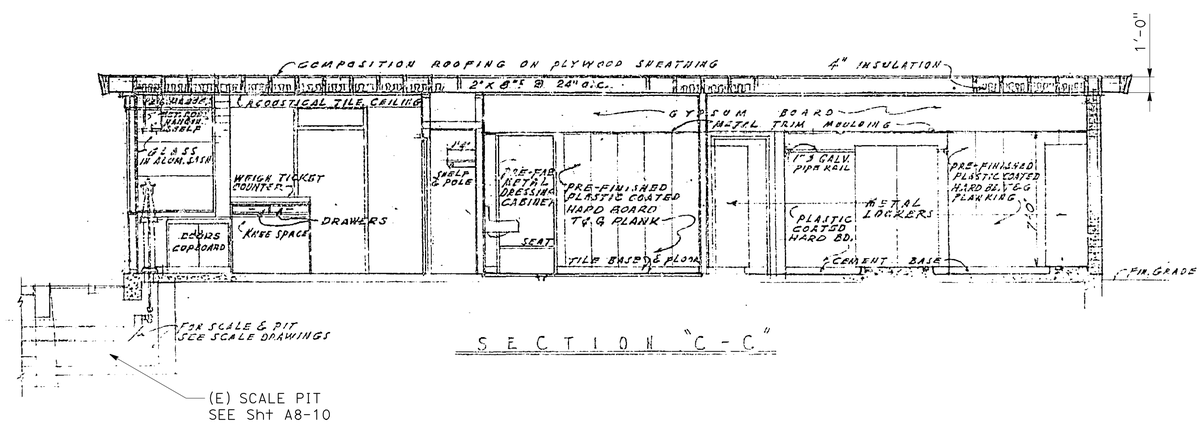

SCALE HOUSE REMOVAL SECTIONS

NO SCALE

NOTE: THIS DRAWING IS FOR DEMOLITION REFERENCE ONLY AND NOT TO ANY SCALE.

	BY	CHECKED
DESIGN	B. STEWART	M. SHIPPEN
DETAILS	B. STEWART	M. SHIPPEN
QUANTITIES	B. STEWART	M. SHIPPEN

PREPARED FOR THE STATE OF CALIFORNIA DEPARTMENT OF TRANSPORTATION

DIVISION OF ENGINEERING SERVICES
ARCHITECTURAL AND STRUCTURAL DESIGN

BRIDGE NO. 23W0001R
POST MILE 14.8

EASTBOUND CORDELIA CVEF

CVEF — SCALE HOUSE REMOVAL PLAN AND SECTIONS 1

SHEET A8-4

40a535wba8-04.dgn
DS OSD imperial Rev. 10/07 18-MAY-2011 10:03

ORIGINAL SCALE IN INCHES FOR REDUCED PLANS 0 1 2 3

CU 04264
EA 0A5351

DISREGARD PRINTS BEARING EARLIER REVISION DATES → 05/11/11

REVISION DATES (PRELIMINARY STAGE ONLY) SHEET OF

18-MAY-2011 10:03

40a535wba8-04.dgn

DIST.	COUNTY	ROUTE	POST MILES TOTAL PROJECT	SHEET NO.	TOTAL SHEETS
04	Sol	12,80	L1.8/L2.0, 13.3/15.7	567	740

REGISTERED CIVIL ENGINEER 05/11/11 DATE

REGISTERED PROFESSIONAL ENGINEER BRIAN M. STEWART No. C-73328 Exp. 12/31/12 CIVIL STATE OF CALIFORNIA

5-16-11
PLANS APPROVAL DATE

The State of California or its officers or agents shall not be responsible for the accuracy or completeness of electronic copies of this plan sheet.

HDR ENGINEERING, INC.
2121 N CALIFORNIA BLVD
SUITE 475
WALNUT CREEK, CA 94596

SOLANO TRANSPORTATION AUTHORITY
ONE HARBOR CENTER, SUITE 130
SUISUN CITY, CA 94585

NOTE:
REMOVAL OF EXISTING SCALE HOUSE BUILDING, SEE NOTE 2 SHEET A8-1.

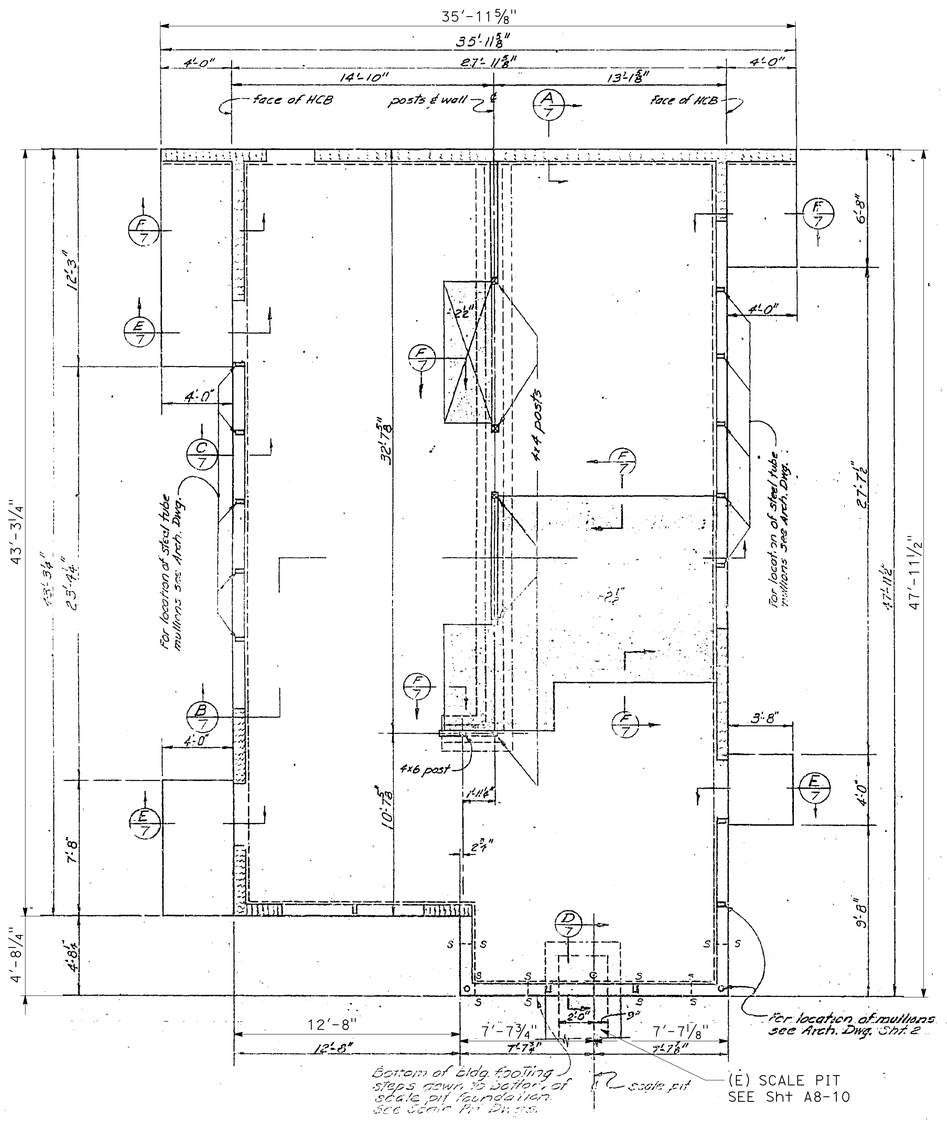

FOUNDATION AND FLOOR PLAN
Scale: 1/4" = 1'-0"

SCALE HOUSE REMOVAL FOUNDATION AND FLOOR PLAN

NO SCALE

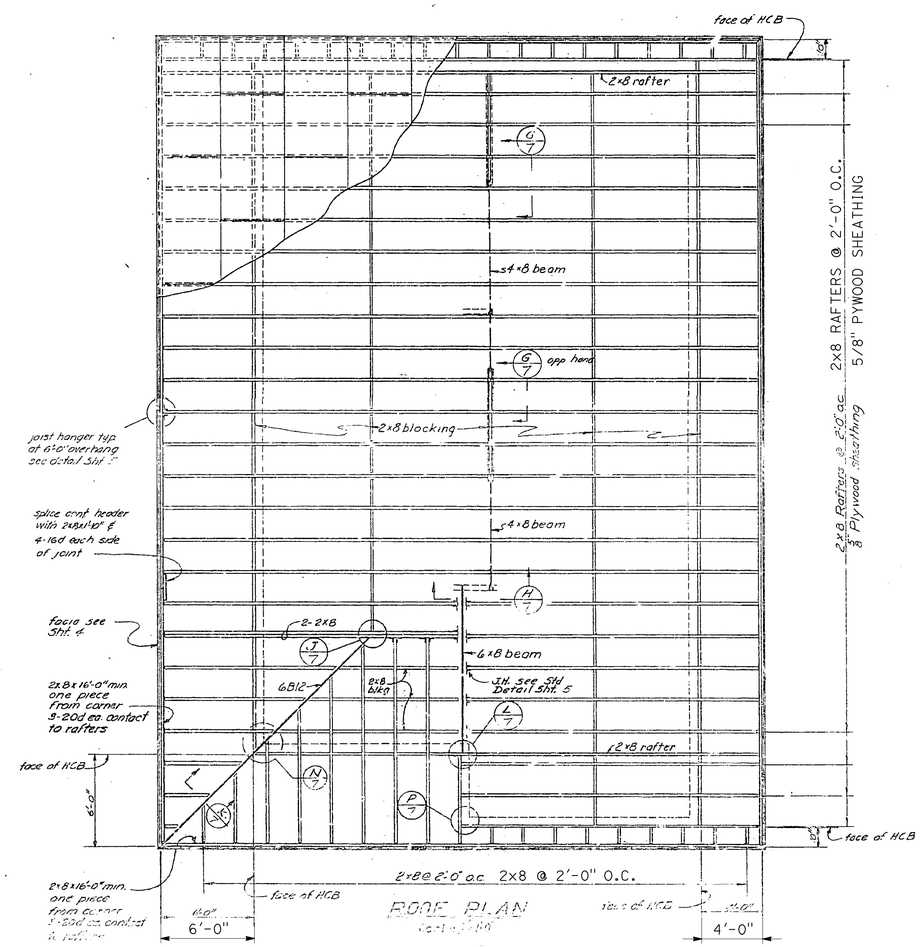

SCALE HOUSE REMOVAL ROOF PLAN

NO SCALE

NOTE: THIS DRAWING IS FOR DEMOLITION REFERENCE ONLY AND NOT TO ANY SCALE.

	BY	CHECKED
DESIGN	B. STEWART	M. SHIPPEN
DETAILS	B. STEWART	M. SHIPPEN
QUANTITIES	B. STEWART	M. SHIPPEN

PREPARED FOR THE STATE OF CALIFORNIA DEPARTMENT OF TRANSPORTATION

DIVISION OF ENGINEERING SERVICES ARCHITECTURAL AND STRUCTURAL DESIGN

BRIDGE NO. 23W0001R
POST MILE 14.8

EASTBOUND CORDELIA CVEF

CVEF

SCALE HOUSE REMOVAL PLAN AND SECTIONS 2

SHEET A8-5

40a535wba8-05.dgn
DS OSD imperial Rev. 10/07 18-MAY-2011 10:03

ORIGINAL SCALE IN INCHES FOR REDUCED PLANS 0 1 2 3

CU 04264
EA 0A5351

DISREGARD PRINTS BEARING EARLIER REVISION DATES → 05/11/11

REVISION DATES (PRELIMINARY STAGE ONLY) SHEET OF

18-MAY-2011 10:03

40a535wba8-05.dgn

NOTE:
REMOVAL OF EXISTING SCALE HOUSE BUILDING, SEE NOTE 2 SHEET A8-1.

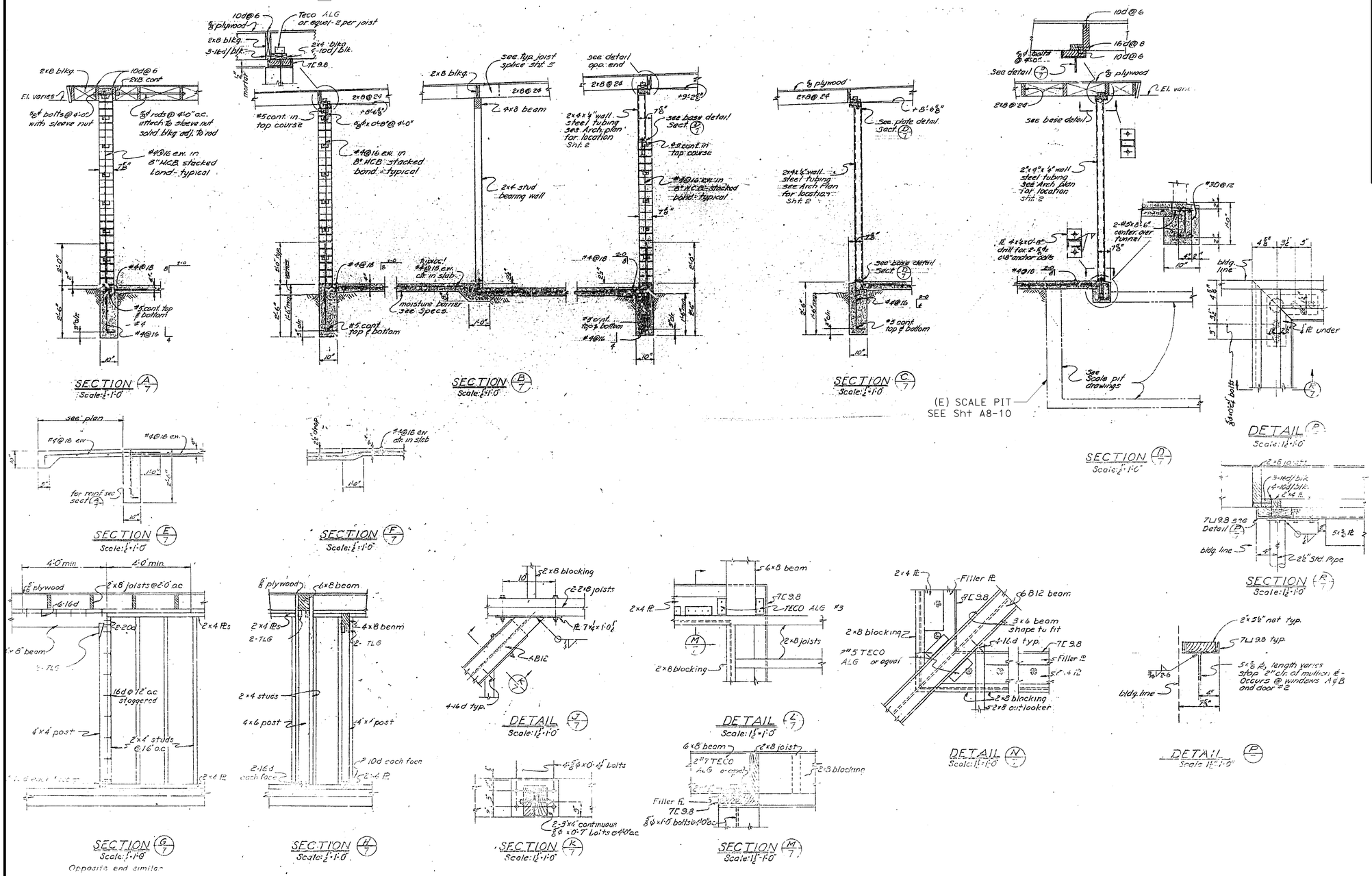

SCALE HOUSE REMOVAL SECTIONS

NO SCALE

NOTE: THIS DRAWING IS FOR DEMOLITION REFERENCE ONLY AND NOT TO ANY SCALE.

DIST.	COUNTY	ROUTE	POST MILES TOTAL PROJECT	SHEET NO.	TOTAL SHEETS
04	Sol	12,80	L1.8/L2.0, 13.3/15.7	568	740

REGISTERED CIVIL ENGINEER — DATE 05/11/11

REGISTERED PROFESSIONAL ENGINEER — BRIAN M. STEWART — No. C-73328 — Exp. 12/31/12 — CIVIL — STATE OF CALIFORNIA

PLANS APPROVAL DATE 5-16-11

The State of California or its officers or agents shall not be responsible for the accuracy or completeness of electronic copies of this plan sheet.

HDR ENGINEERING, INC.
2121 N CALIFORNIA BLVD
SUITE 475
WALNUT CREEK, CA 94596

SOLANO TRANSPORTATION AUTHORITY
ONE HARBOR CENTER, SUITE 130
SUISUN CITY, CA 94585

	BY		CHECKED	
DESIGN	B. STEWART		M. SHIPPEN	
DETAILS	B. STEWART		M. SHIPPEN	
QUANTITIES	B. STEWART		M. SHIPPEN	

PREPARED FOR THE STATE OF CALIFORNIA DEPARTMENT OF TRANSPORTATION

DIVISION OF ENGINEERING SERVICES ARCHITECTURAL AND STRUCTURAL DESIGN

BRIDGE NO. 23W0001R
POST MILE 14.8

EASTBOUND CORDELIA CVEF

CVEF — SCALE HOUSE REMOVAL PLAN AND SECTIONS 3

SHEET A8-6

40a535wba8-06.dgn
DS OSD imperial Rev. 10/07 18-MAY-2011 10:03

ORIGINAL SCALE IN INCHES FOR REDUCED PLANS 0 1 2 3

CU 04264
EA 0A5351

DISREGARD PRINTS BEARING EARLIER REVISION DATES → 05/11/11

REVISION DATES (PRELIMINARY STAGE ONLY) SHEET OF

18-MAY-2011 10:03

40a535wba8-06.dgn

NOTE:

REMOVAL OF EXISTING SCALE HOUSE BUILDING, SEE NOTE [2] SHEET A8-1.

DIST.	COUNTY	ROUTE	POST MILES TOTAL PROJECT	SHEET NO.	TOTAL SHEETS
04	Sol	12,80	L1.8/L2.0, 13.3/15.7	569	740

REGISTERED CIVIL ENGINEER — DATE 05/11/11

REGISTERED PROFESSIONAL ENGINEER — BRIAN M. STEWART No. C-73328 Exp. 12/31/12 CIVIL STATE OF CALIFORNIA

PLANS APPROVAL DATE 5-16-11

The State of California or its officers or agents shall not be responsible for the accuracy or completeness of electronic copies of this plan sheet.

HDR ENGINEERING, INC.
2121 N CALIFORNIA BLVD
SUITE 475
WALNUT CREEK, CA 94596

SOLANO TRANSPORTATION AUTHORITY
ONE HARBOR CENTER, SUITE 130
SUISUN CITY, CA 94585

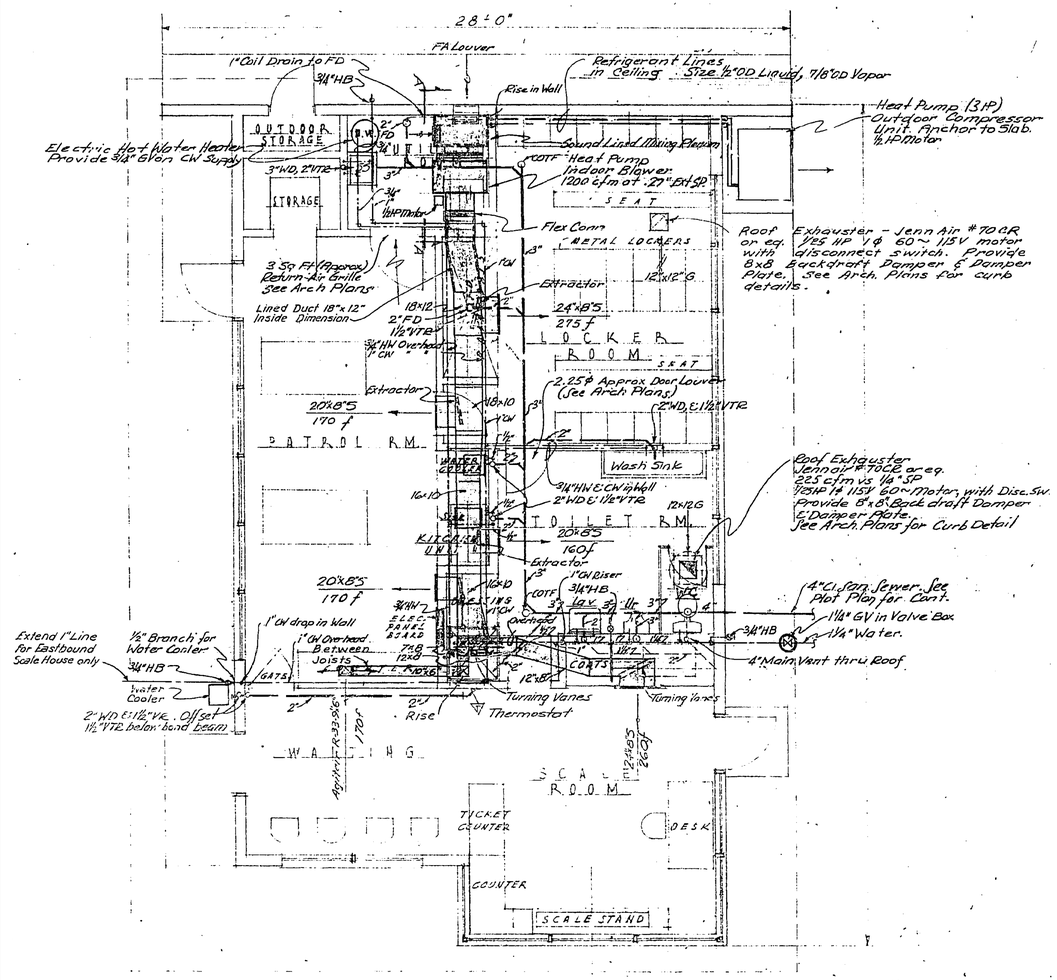

FLOOR PLAN
SCALE: 1/4" = 1'-0"

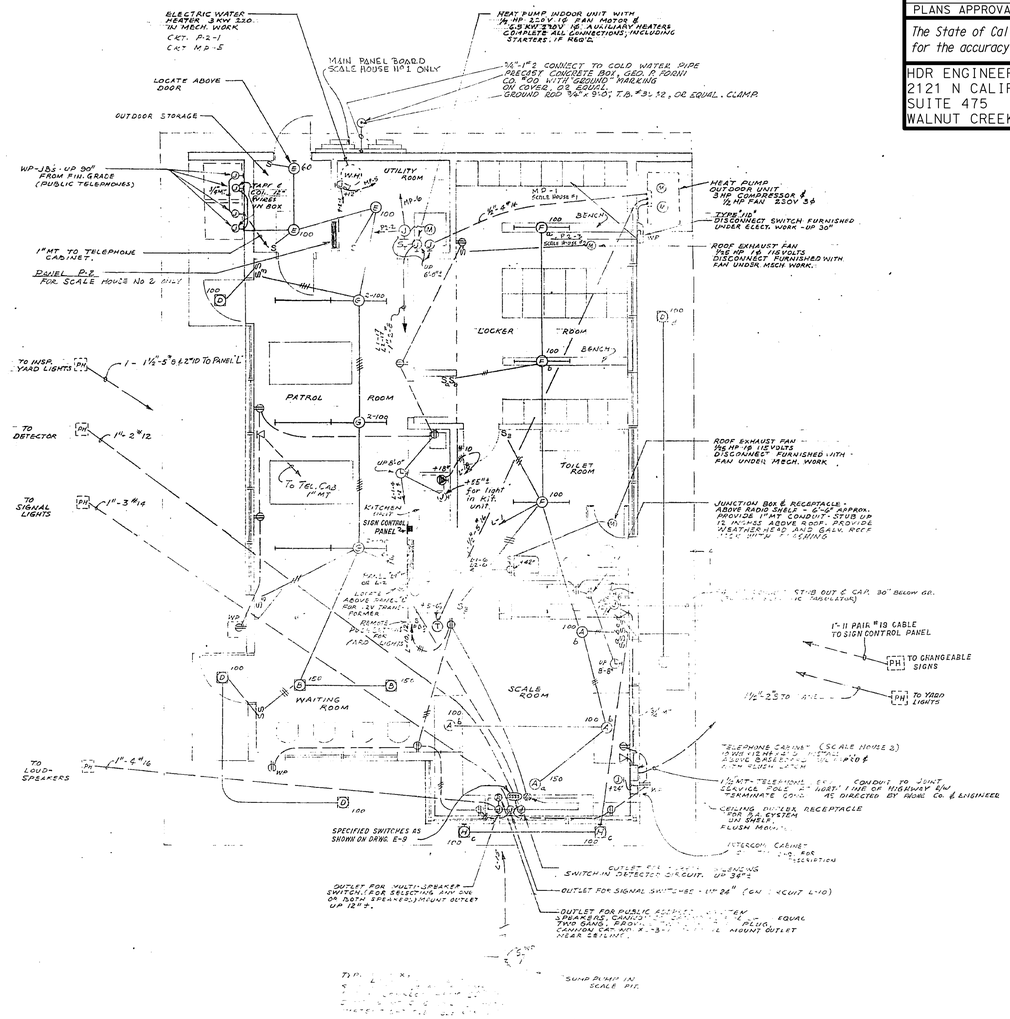

PLAN FOR SCALE HOUSE No 1
SCALE 1/8" = 1'-0"

SCALE HOUSE REMOVAL UTILITY PLAN

NO SCALE

NOTE: THIS DRAWING IS FOR DEMOLITION REFERENCE ONLY AND NOT TO ANY SCALE.

	BY	CHECKED
DESIGN	B. STEWART	M. SHIPPEN
DETAILS	B. STEWART	M. SHIPPEN
QUANTITIES	B. STEWART	M. SHIPPEN

PREPARED FOR THE STATE OF CALIFORNIA DEPARTMENT OF TRANSPORTATION

DIVISION OF ENGINEERING SERVICES ARCHITECTURAL AND STRUCTURAL DESIGN

BRIDGE NO. 23W0001R
POST MILE 14.8

EASTBOUND CORDELIA CVEF

CVEF — SCALE HOUSE REMOVAL UTILITY PLAN

SHEET A8-7

40a535wba8-07.dgn
DS OSD imperial Rev. 10/07 18-MAY-2011 10:03

ORIGINAL SCALE IN INCHES FOR REDUCED PLANS 0 1 2 3

CU 04264
EA 0A5351

DISREGARD PRINTS BEARING EARLIER REVISION DATES → 05/11/11

REVISION DATES (PRELIMINARY STAGE ONLY) SHEET OF

18-MAY-2011 10:03

40a535wba8-07.dgn

DIST.	COUNTY	ROUTE	POST MILES TOTAL PROJECT	SHEET NO.	TOTAL SHEETS
04	Sol	12,80	L1.8/L2.0, 13.3/15.7	570	740

REGISTERED CIVIL ENGINEER 05/11/11 DATE

REGISTERED PROFESSIONAL ENGINEER BRIAN M. STEWART No. C-73328 Exp. 12/31/12 CIVIL STATE OF CALIFORNIA

5-16-11
PLANS APPROVAL DATE

The State of California or its officers or agents shall not be responsible for the accuracy or completeness of electronic copies of this plan sheet.

HDR ENGINEERING, INC.
2121 N CALIFORNIA BLVD
SUITE 475
WALNUT CREEK, CA 94596

SOLANO TRANSPORTATION AUTHORITY
ONE HARBOR CENTER, SUITE 130
SUISUN CITY, CA 94585

NOTE:
REMOVAL OF EXISTING RESTROOM BUILDING, SEE NOTE 3 SHEET A8-1.

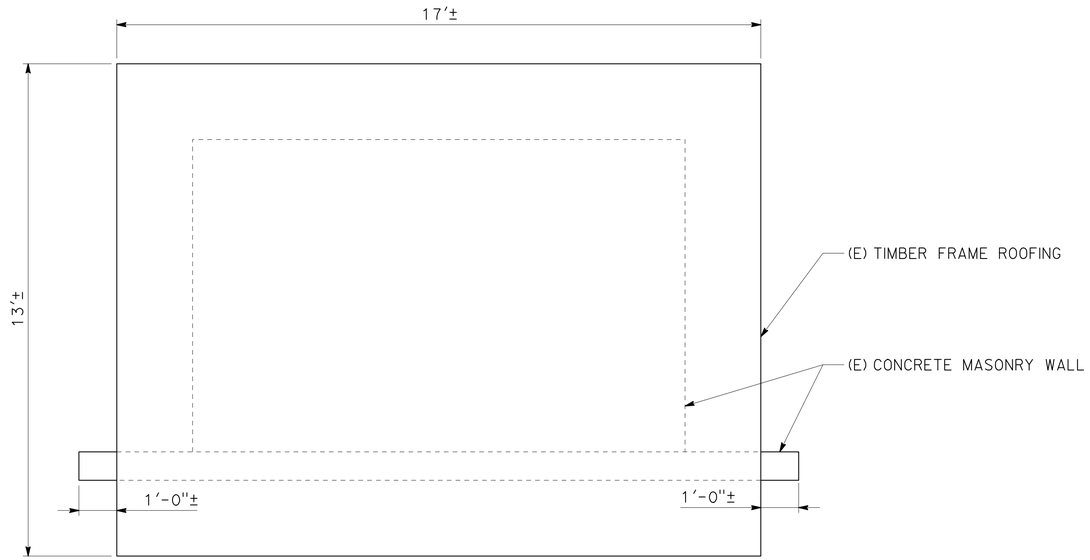

RESTROOM BUILDING REMOVAL PLAN
NO SCALE

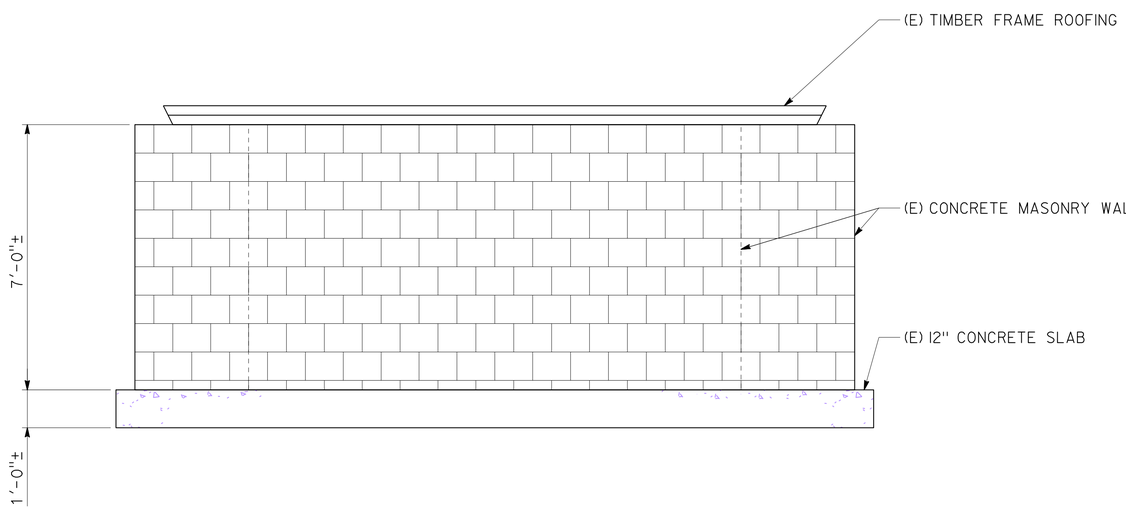

RESTROOM BUILDING REMOVAL ELEVATION
NO SCALE

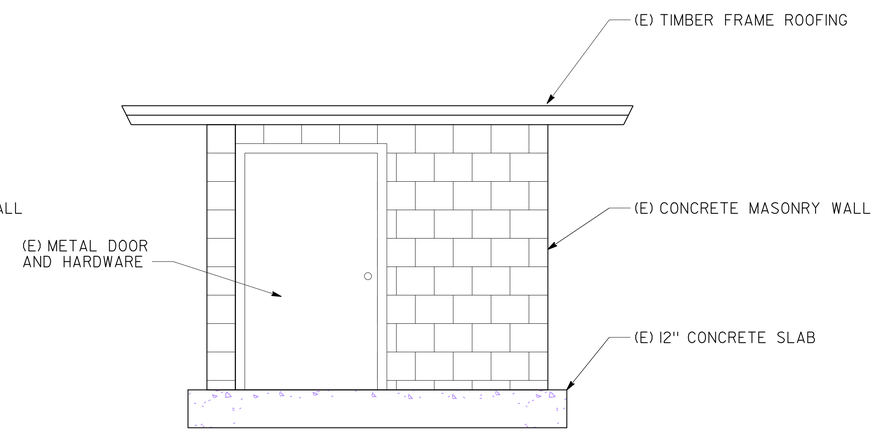

RESTROOM BUILDING REMOVAL ELEVATION
NO SCALE

NOTE: THIS DRAWING IS FOR DEMOLITION REFERENCE ONLY AND NOT TO ANY SCALE.

	BY	CHECKED
DESIGN	B. STEWART	M. SHIPPEN
DETAILS	B. STEWART	M. SHIPPEN
QUANTITIES	B. STEWART	M. SHIPPEN

PREPARED FOR THE STATE OF CALIFORNIA DEPARTMENT OF TRANSPORTATION

DIVISION OF ENGINEERING SERVICES
ARCHITECTURAL AND STRUCTURAL DESIGN

BRIDGE NO. 23W0001R
POST MILE 14.8

EASTBOUND CORDELIA CVEF
CVEF
RESTROOM BUILDING REMOVAL PLAN AND ELEVATION

SHEET A8-8

40a535wba8-08.dgn
DS OSD imperial Rev. 10/07 18-MAY-2011 10:03

ORIGINAL SCALE IN INCHES FOR REDUCED PLANS 0 1 2 3

CU 04264
EA 0A5351

DISREGARD PRINTS BEARING EARLIER REVISION DATES → 05/11/11

REVISION DATES (PRELIMINARY STAGE ONLY) SHEET OF

18-MAY-2011 10:03

40a535wba8-08.dgn

DIST.	COUNTY	ROUTE	POST MILES TOTAL PROJECT	SHEET NO.	TOTAL SHEETS
04	Sol	12,80	L1.8/L2.0, 13.3/15.7	571	740

REGISTERED CIVIL ENGINEER — DATE 05/11/11

REGISTERED PROFESSIONAL ENGINEER BRIAN M. STEWART No. C-73328 Exp. 12/31/12 CIVIL STATE OF CALIFORNIA

5-16-11
PLANS APPROVAL DATE

The State of California or its officers or agents shall not be responsible for the accuracy or completeness of electronic copies of this plan sheet.

HDR ENGINEERING, INC.
2121 N CALIFORNIA BLVD
SUITE 475
WALNUT CREEK, CA 94596

SOLANO TRANSPORTATION AUTHORITY
ONE HARBOR CENTER, SUITE 130
SUISUN CITY, CA 94585

NOTE:
REMOVAL OF EXISTING TRUCK INSPECTION SHELTER BUILDING, SEE NOTE 4 SHEET A8-1.

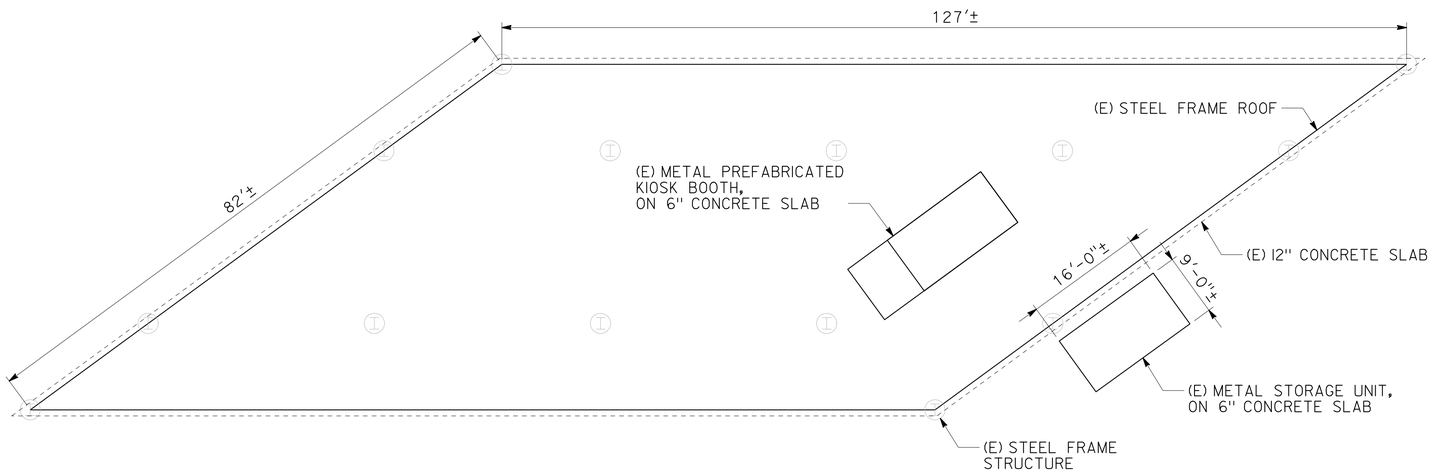

TRUCK INSPECTION SHELTER REMOVAL PLAN
NO SCALE

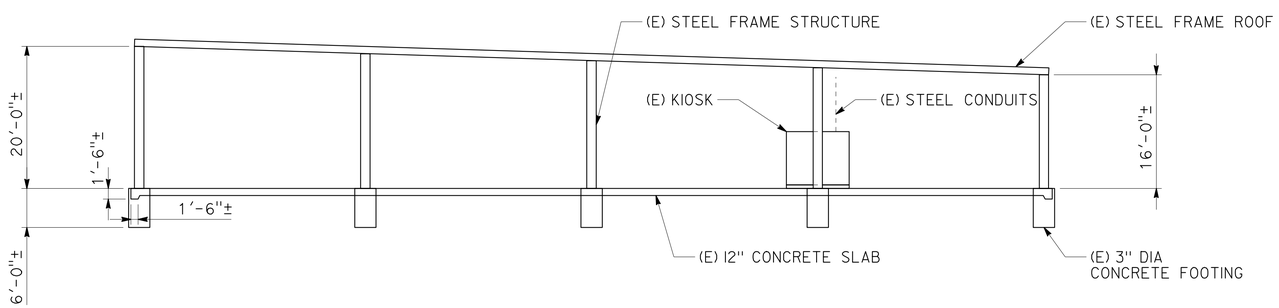

TRUCK INSPECTION SHELTER REMOVAL ELEVATION
NO SCALE

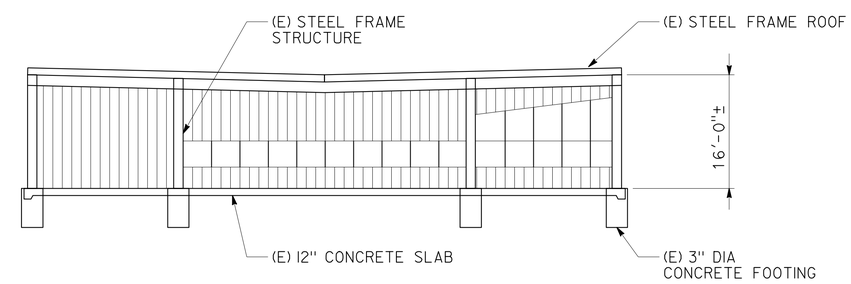

TRUCK INSPECTION SHELTER REMOVAL ELEVATION
NO SCALE

NOTE: THIS DRAWING IS FOR DEMOLITION REFERENCE ONLY AND NOT TO ANY SCALE.

	BY	CHECKED
DESIGN	B. STEWART	M. SHIPPEN
DETAILS	B. STEWART	M. SHIPPEN
QUANTITIES	B. STEWART	M. SHIPPEN

PREPARED FOR THE STATE OF CALIFORNIA DEPARTMENT OF TRANSPORTATION

DIVISION OF ENGINEERING SERVICES
ARCHITECTURAL AND STRUCTURAL DESIGN

BRIDGE NO. 23W0001R
POST MILE 14.8

EASTBOUND CORDELIA CVEF
CVEF — TRUCK INSPECTION SHELTER REMOVAL PLAN AND ELEVATION

SHEET **A8-9**

40a535wba8-09.dgn
DS OSD imperial Rev. 10/07 18-MAY-2011 10:03

ORIGINAL SCALE IN INCHES FOR REDUCED PLANS 0 1 2 3

CU 04264
EA 0A5351

DISREGARD PRINTS BEARING EARLIER REVISION DATES → 05/11/11

REVISION DATES (PRELIMINARY STAGE ONLY) SHEET OF

18-MAY-2011 10:03

40a535wba8-09.dgn

DIST.	COUNTY	ROUTE	POST MILES TOTAL PROJECT	SHEET NO.	TOTAL SHEETS
04	Sol	12,80	L1.8/L2.0, 13.3/15.7	572	740

REGISTERED CIVIL ENGINEER — DATE 05/11/11

REGISTERED PROFESSIONAL ENGINEER BRIAN M. STEWART No. C-73328 Exp. 12/31/12 CIVIL STATE OF CALIFORNIA

5-16-11
PLANS APPROVAL DATE

The State of California or its officers or agents shall not be responsible for the accuracy or completeness of electronic copies of this plan sheet.

HDR ENGINEERING, INC.
2121 N CALIFORNIA BLVD
SUITE 475
WALNUT CREEK, CA 94596

SOLANO TRANSPORTATION AUTHORITY
ONE HARBOR CENTER, SUITE 130
SUISUN CITY, CA 94585

NOTE:
REMOVAL OF EXISTING STATIC SCALES, SEE NOTE 5 SHEET A8-1.

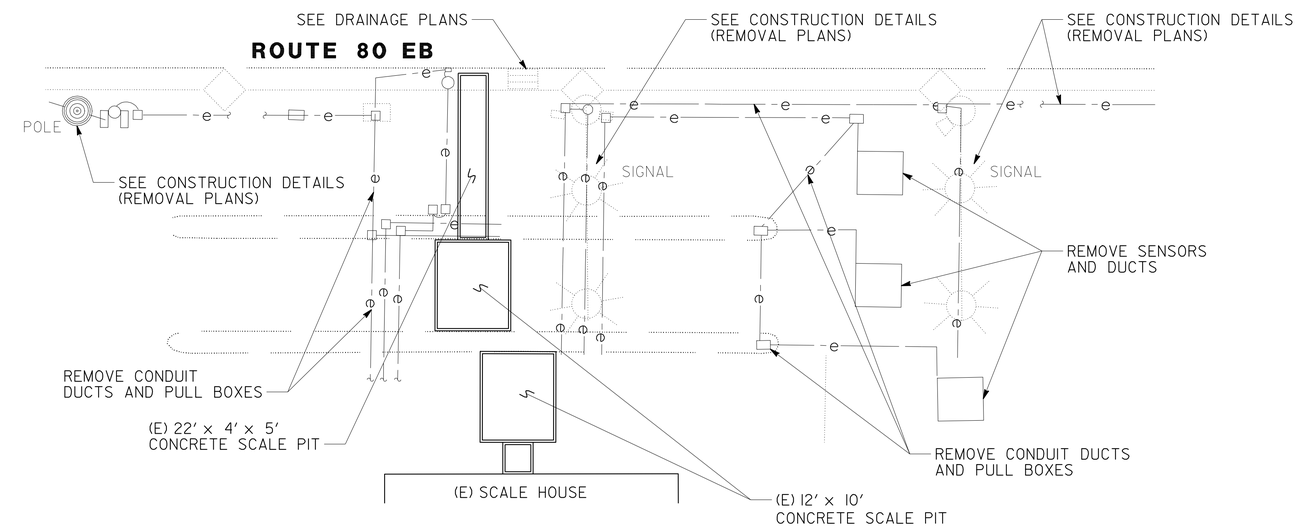

STATIC SCALE REMOVAL PLAN

NO SCALE

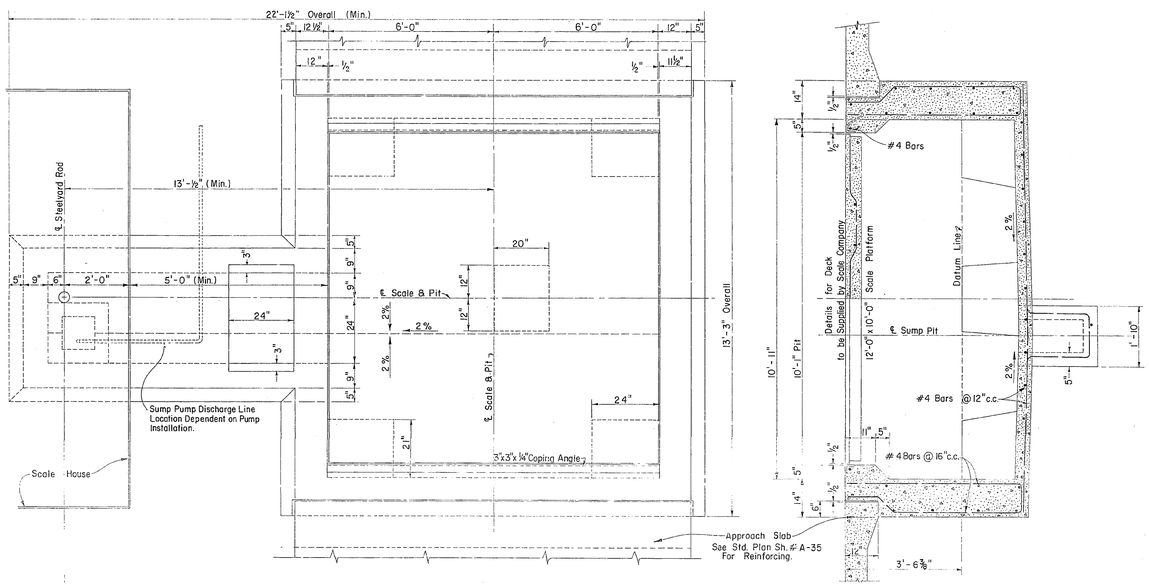

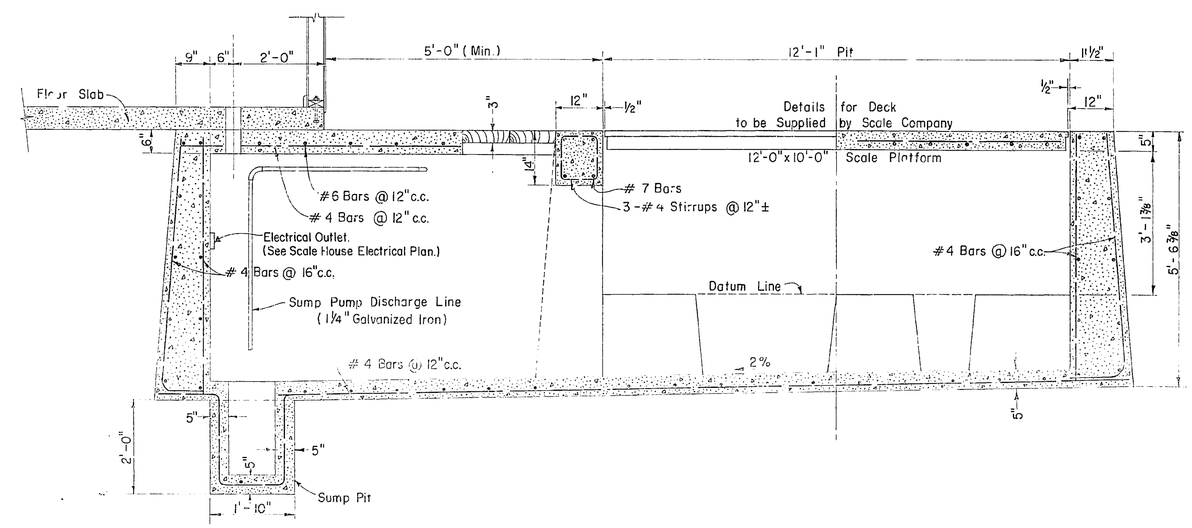

STATIC SCALE REMOVAL ELEVATIONS

NO SCALE

NOTE: THIS DRAWING IS FOR DEMOLITION REFERENCE ONLY AND NOT TO ANY SCALE.

	BY		CHECKED	
DESIGN	BY	B. STEWART	CHECKED	M. SHIPPEN
DETAILS	BY	B. STEWART	CHECKED	M. SHIPPEN
QUANTITIES	BY	B. STEWART	CHECKED	M. SHIPPEN

PREPARED FOR THE STATE OF CALIFORNIA DEPARTMENT OF TRANSPORTATION

DIVISION OF ENGINEERING SERVICES
ARCHITECTURAL AND STRUCTURAL DESIGN

BRIDGE NO. 23W0001R
POST MILE 14.8

EASTBOUND CORDELIA CVEF

CVEF — STATIC SCALES REMOVAL PLAN AND ELEVATIONS

SHEET A8-10

40a535wba8-10.dgn
DS OSD imperial Rev. 10/07 18-MAY-2011 10:03

ORIGINAL SCALE IN INCHES FOR REDUCED PLANS 0 1 2 3

CU 04264
EA 0A5351

DISREGARD PRINTS BEARING EARLIER REVISION DATES → 05/11/11

REVISION DATES (PRELIMINARY STAGE ONLY) SHEET OF

18-MAY-2011 10:03

40a535wba8-10.dgn

DIST.	COUNTY	ROUTE	POST MILES TOTAL PROJECT	SHEET NO.	TOTAL SHEETS
04	Sol	12,80	L1.8/L2.0, 13.3/15.7	573	740

REGISTERED CIVIL ENGINEER — DATE 05/11/11

REGISTERED PROFESSIONAL ENGINEER BRIAN M. STEWART No. C-73328 Exp. 12/31/12 CIVIL STATE OF CALIFORNIA

5-16-11
PLANS APPROVAL DATE

The State of California or its officers or agents shall not be responsible for the accuracy or completeness of electronic copies of this plan sheet.

HDR ENGINEERING, INC.
2121 N CALIFORNIA BLVD
SUITE 475
WALNUT CREEK, CA 94596

SOLANO TRANSPORTATION AUTHORITY
ONE HARBOR CENTER, SUITE 130
SUISUN CITY, CA 94585

NOTE:
REMOVAL OF EXISTING SANITARY SEWER CONCRETE TANK, SEE NOTE 7 SHEET A8-2.

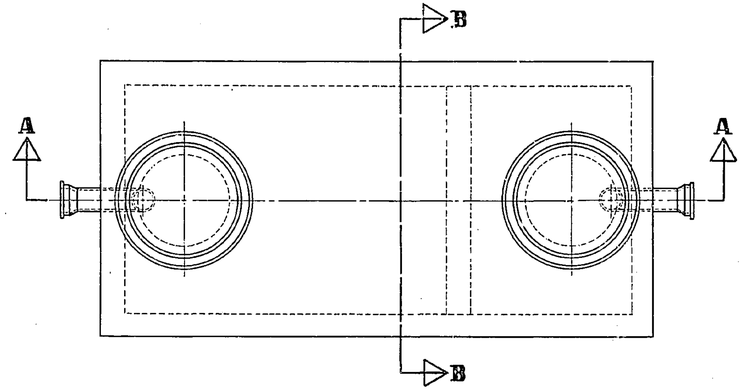

PLAN

SANITARY SEWER TANK REMOVAL PLAN

NO SCALE

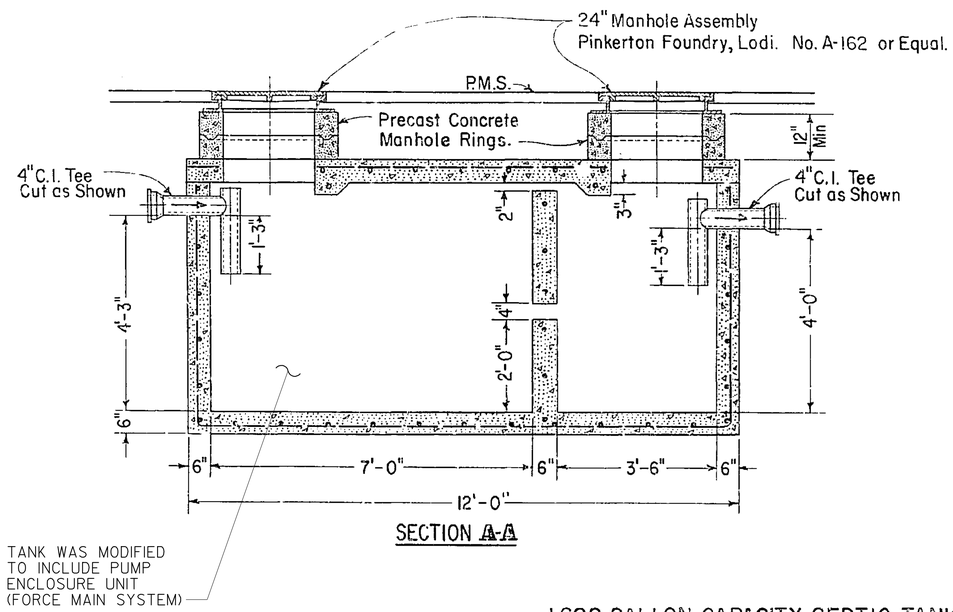

SECTION A-A

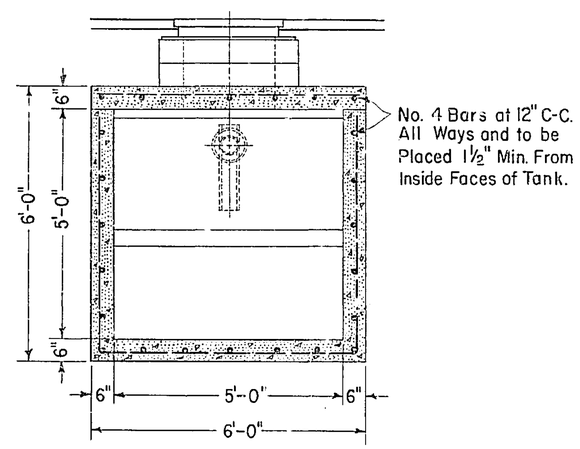

SECTION B-B

1,600 GALLON CAPACITY SEPTIC TANK
Or Equivalent Precast Concrete T[illegible] Approved Manufacturing Firms.

SCALE: ½" = 1'-0"

SANITARY SEWER TANK REMOVAL ELEVATIONS

NO SCALE

NOTE: THIS DRAWING IS FOR DEMOLITION REFERENCE ONLY AND NOT TO ANY SCALE.

	BY	CHECKED
DESIGN	B. STEWART	M. SHIPPEN
DETAILS	B. STEWART	M. SHIPPEN
QUANTITIES	B. STEWART	M. SHIPPEN

PREPARED FOR THE STATE OF CALIFORNIA DEPARTMENT OF TRANSPORTATION

DIVISION OF ENGINEERING SERVICES
ARCHITECTURAL AND STRUCTURAL DESIGN

BRIDGE NO. 23W0001R
POST MILE 14.8

EASTBOUND CORDELIA CVEF

CVEF — SANITARY SEWER TANK REMOVAL DETAILS

SHEET A8-11

40a535wba8-11.dgn
DS OSD imperial Rev. 10/07 18-MAY-2011 10:04

ORIGINAL SCALE IN INCHES FOR REDUCED PLANS 0 1 2 3

CU 04264
EA 0A5351

DISREGARD PRINTS BEARING EARLIER REVISION DATES → 05/11/11

REVISION DATES (PRELIMINARY STAGE ONLY) SHEET OF

18-MAY-2011 10:04

40a535wba8-11.dgn

DIST.	COUNTY	ROUTE	POST MILES TOTAL PROJECT	SHEET NO.	TOTAL SHEETS
04	Sol	12,80	L1.8/L2.0, 13.3/15.7	574	740

REGISTERED STRUCTURAL ENGINEER — DATE 05/03/11

REGISTERED PROFESSIONAL ENGINEER MAHVASH M. HARRIS No. 2639 Exp. 12/31/12 STRUCTURAL STATE OF CALIFORNIA

5-16-11
PLANS APPROVAL DATE

The State of California or its officers or agents shall not be responsible for the accuracy or completeness of electronic copies of this plan sheet.

BIGGS CARDOSA ASSOCIATES
865 THE ALAMEDA
SAN JOSE, CA 95126
408-296-5515

SOLANO TRANSPORTATION AUTHORITY
ONE HARBOR CENTER, SUITE 130
SUISUN CITY, CA 94585

PROJECT DATA

Reference documents
Structural plans and calculations are based on the following governing codes and reference documents:
1. 2007 California Building Code (CBC).
2. ASCE 7-05, Minimum Design Loads for Buildings and Other Structures.
3. Geotechnical investigation, see Foundation Design Parameters.

Design Gravity Loads
1. Office Building:

Roof Dead Load	33	psf	
Mech Floor Dead Load	80	psf	
Floor Partition Load	20	psf	
Roof Live Load	20	psf	(Reducible per code)
Floor Live Load	50	psf	(Reducible per code)
Lobbies and Corridors	100	psf	(Reducible per code)
Mech Floor Live Load	100	psf	(Non-reducible)

2. Inspection Building:

Roof Dead Load	32	psf	
Roof Live Load	20	psf	(Reducible per code)
Floor Live Load	250	psf	(Reducible per code)
Floor Truck Live Load, HS20-44 truck loading			

3. Generator Building:

Roof Dead Load	18	psf	
Roof Live Load	20	psf	(Reducible per code)

Design Seismic Loads
1. Seismic Design Parameters:
   Site Class D
   Seismic Design Category D
   Occupancy Category II
   Seismic Importance Factor, I = 1.0
   Equivalent Lateral Force Procedure
   Ss = 1.702 S1 = 0.604
   Fa = 1.0 Fv = 1.5
   Sms = 1.702 Sm1 = 0.906
   Sds = 1.135 Sd1 = 0.604

2. Office Building:
   SFRS: Steel SCBF
   R = 6.0 Ω_0 = 2.0
   Cd= 5.0 CS = 0.189
   V = CsW = 0.189W

3. Inspection Building:
   EAST-WEST SFRS: Steel SCBF
   R = 6.0 Ω_0 = 2.0
   Cd= 5.0 CS = 0.189
   V = CsW = 0.189W

   NORTH-SOUTH SFRS: Steel SMRF
   R = 8.0 Ω_0 = 3.0
   Cd= 5.5 CS = 0.142
   V = CsW = 0.142W

4. Generator Building:
   SFRS: Special reinforced masonry shear walls
   R = 5.0 Ω_0 = 2.5
   Cd= 3.5 CS = 0.227
   V = CsW = 0.227W

Design Wind Loads
1. Wind Design Parameters:
   Basic Wind Speed, V = 85 mph
   Wind Directionality Factor, Kd = 0.85
   Exposure Category C
   Occupancy Category II
   Wind Importance Factor, I = 1.0
   Topographic Factor, Kzt = 1.0
   Mean roof height < 60 feet
   Internal pressure coefficient, GCpi = +/- 0.18

Deflection Criteria
1. Allowable deflection:
   L/360 Live Load
   L/240 Total Load
   where, L is span length

Displacement Criteria
1. Allowable Story Drift (Occupancy Category II):
   0.020 H (Office Bldg and Inspection Bldg)
   0.007 H (Generator Bldg)
   where, H is story height

Foundation Design Parameters
Foundation Report: Commercial Vehicle Enforcement Facility (I-80 EB Cordelia Truck Sales Relocation Project), Solano County, CA (Draft), by Parikh Consultants, dated December 14, 2009.
1. Bearing Pressures - Bldg Spread Footings
   2750 psf dead + live load
   3667 psf total loads
2. Bearing Pressures - Pit/Tunnel Strip Footings
   2500 psf dead + live load
   3333 psf total loads
3. Coefficient of friction = 0.3
4. Equivalent active pressure
   45 pcf native soil
   36 pcf structure backfill
5. Equivalent passive pressure = 340 pcf
6. At-rest pressure
   60 pcf native soil
   50 pcf structure backfill
7. HS 20-44 Truck Loading Surcharge = 250 psf

DRAWING INDEX

ST0-1 PROJECT DATA AND DRAWING INDEX
ST0-2 ABBREVIATIONS AND SYMBOLS
ST0-3 GENERAL NOTES AND SPECIFICATIONS

ST1-1 TYPICAL CONCRETE DETAILS No. 1
ST1-2 TYPICAL CONCRETE DETAILS No. 2
ST1-3 TYPICAL CONCRETE DETAILS No. 3
ST1-4 TYPICAL STEEL DETAILS No. 1
ST1-5 TYPICAL STEEL DETAILS No. 2
ST1-6 TYPICAL STEEL DETAILS No. 3
ST1-7 TYPICAL STEEL DETAILS No. 4
ST1-8 TYPICAL MASONRY DETAILS

ST2-1 OFFICE BLDG FOUNDATION PLAN
ST2-2 INSPECTION BLDG FOUNDATION PLAN - NORTH
ST2-3 INSPECTION BLDG FOUNDATION PLAN - SOUTH
ST2-4 TYPICAL PIT AND TUNNEL PLANS
ST2-5 OFFICE BLDG ROOF/SECOND FLOOR PLAN
ST2-6 INSPECTION BLDG ROOF PLAN - NORTH
ST2-7 INSPECTION BLDG ROOF PLAN - SOUTH

ST3-1 BRACED FRAME ELEVATIONS No. 1
ST3-2 BRACED FRAME ELEVATIONS No. 2
ST3-3 MOMENT FRAME ELEVATIONS

ST4-1 FOUNDATION DETAILS No. 1
ST4-2 FOUNDATION DETAILS No. 2
ST4-3 FOUNDATION DETAILS No. 3
ST4-4 FOUNDATION DETAILS No. 4

ST5-1 STEEL MOMENT FRAME DETAILS
ST5-2 STEEL BRACED FRAME DETAILS No. 1
ST5-3 STEEL BRACED FRAME DETAILS No. 2
ST5-4 OFFICE BLDG STEEL DETAILS
ST5-5 INSPECTION BLDG STEEL DETAILS

ST6-1 GENERATOR BLDG PLANS AND ELEVATIONS
ST6-2 GENERATOR BLDG DETAILS

ST7-1 CANOPY FRAMING PLANS
ST7-2 CANOPY DETAILS No. 1
ST7-3 CANOPY DETAILS No. 2
ST7-4 CANOPY DETAILS No. 3
ST7-5 OBSERVATION ROOM ROOF FRAMING PLANS
ST7-6 OBSERVATION ROOM ROOF FRAMING DETAILS

ST8-1 MULTI-PLATFORM STATIC SCALE PIT DETAILS No. 1
ST8-2 MULTI-PLATFORM STATIC SCALE PIT DETAILS No. 2
ST8-3 MULTI-PLATFORM STATIC SCALE PIT DETAILS No. 3
ST8-4 MULTI-PLATFORM STATIC SCALE PIT DETAILS No. 4
ST8-5 SINGLE-PLATFORM STATIC SCALE PIT DETAILS No. 1
ST8-6 SINGLE-PLATFORM STATIC SCALE PIT DETAILS No. 2
ST8-7 SINGLE-PLATFORM STATIC SCALE PIT DETAILS No. 3
ST8-8 SINGLE-PLATFORM STATIC SCALE PIT DETAILS No. 4

ST9-1 SOIL LEGEND SHEET 1 OF 2
ST9-2 SOIL LEGEND SHEET 2 OF 2
ST9-3 LOG OF TEST BORINGS 1 OF 5
ST9-4 LOG OF TEST BORINGS 2 OF 5
ST9-5 LOG OF TEST BORINGS 3 OF 5
ST9-6 LOG OF TEST BORINGS 4 OF 5
ST9-7 LOG OF TEST BORINGS 5 OF 5

CALIFORNIA STATE FIRE MARSHAL APPROVED
Approval of this plan does not authorize or approve any omission or deviation from applicable regulations. Final approval is subject to field inspection. One set of approved plans shall be available on the project site at all times.
Reviewed by: 5/9/11
Hans Hennebarque
Senior Deputy State Fire Marshal

DESIGN	BY S. HAYAT	CHECKED D. FURIA	
DETAILS	BY A. RICHARDSON	CHECKED D. FURIA	
QUANTITIES	BY G. TOLAN	CHECKED S. HAYAT	

PREPARED FOR THE STATE OF CALIFORNIA DEPARTMENT OF TRANSPORTATION

DIVISION OF ENGINEERING SERVICES
ARCHITECTURAL AND STRUCTURAL DESIGN

BRIDGE NO. 23W0001R
POST MILE 14.8

EASTBOUND CORDELIA CVEF
CVEF
PROJECT DATA AND DRAWING INDEX

SHEET ST0-1

40a535wcST0-01.dgn
DS OSD imperial Rev. 10/07 18-MAY-2011 11:00

ORIGINAL SCALE IN INCHES FOR REDUCED PLANS 0 1 2 3

CU 04264
EA 0A5351

DISREGARD PRINTS BEARING EARLIER REVISION DATES
REVISION DATES (PRELIMINARY STAGE ONLY) 10/19/09 3/22/10 5/6/10 8/23/10 11/22/10 05/03/11
SHEET OF

20081178 (20081785T-1)
18-MAY-2011 11:00
40a535wcST0-0

DIST.	COUNTY	ROUTE	POST MILES TOTAL PROJECT	SHEET NO.	TOTAL SHEETS
04	Sol	12,80	L1.8/L2.0, 13.3/15.7	575	740

Mahvash Harris 05/03/11
REGISTERED STRUCTURAL ENGINEER DATE

REGISTERED PROFESSIONAL ENGINEER MAHVASH M. HARRIS No. 2639 Exp. 12/31/12 STRUCTURAL STATE OF CALIFORNIA

5-16-11
PLANS APPROVAL DATE

The State of California or its officers or agents shall not be responsible for the accuracy or completeness of electronic copies of this plan sheet.

BIGGS CARDOSA ASSOCIATES
865 THE ALAMEDA
SAN JOSE, CA 95126
408-296-5515

SOLANO TRANSPORTATION AUTHORITY
ONE HARBOR CENTER, SUITE 130
SUISUN CITY, CA 94585

ABBREVIATIONS

@	AT
#	NUMBER
AB	ANCHOR BOLT
AISC	AMERICAN INSTITUTE OF STEEL CONSTRUCTION
APPROX	APPROXIMATE(LY)
ARCH	ARCHITECTURAL PLAN(S)
BF	BOUNDARY FASTENING
BLK	BLOCK
BLKG	BLOCKING
BLDG	BUILDING
BM	BEAM
BN	BOUNDARY NAILING
BOT	BOTTOM
BOF	BOTTOM OF FOOTING
℄	CENTER LINE
CIDH	CAST IN DRILLED HOLE
CJ	CONSTRUCTION JOINT
CJP	COMPLETE JT PENETRATION
CLR	CLEAR
CLG	CEILING
CMU	CONCRETE MASONRY UNIT
COL	COLUMN
CONC	CONCRETE
CONN	CONNECTION
CONST	CONSTRUCTION
CONT	CONTINUOUS
CSK	COUNTERSINK
DBL	DOUBLE
DCW	DEMAND CRITICAL WELD
DET	DETAIL
DF	DOUGLAS FIR
DIA	DIAMETER
DIAG	DIAGONAL
DIM(S)	DIMENSION(S)
DN	DOWN
DO	DITTO
DWG	DRAWING
(E)	EXISTING
EA	EACH
EF	EDGE FASTENING
EL	ELEVATION
ELEV	ELEVATOR
EN	EDGE NAILING
EQ	EQUAL
EW	EACH WAY
E/W	EAST WEST
FBC	FRAMED BEAM CONN
FFE	FINISH FLOOR ELEVATION
FG	FINISHED GRADE
FIN	FINISH(ED)
FND	FOUNDATION
FOC	FACE OF CONCRETE
FOM	FACE OF MASONRY
FOS	FACE OF STUD(S)
FP	FULL PENETRATION
FS	FAR SIDE
FTG	FOOTING
Ga	GAUGE
GALV	GALVANIZED
GL	GLUED LAMINATED BEAM
HDR	HEADER
HEX	HEXAGONAL
HGR	HANGER
HORIZ	HORIZONTAL
HSB	HIGH STRENGTH BOLT
HSS	HOLLOW STRUCT SECTION
HT	HEIGHT
ID	INSIDE DIAMETER
INSP	INSPECTION/INSPECTOR
INSUL	INSULATION
JT	JOINT
LS	LAG SCREW(S)
LL	LIVE LOAD
LLBB	LONG LEGS BACK TO BACK
LLH	LONG LEG HORIZONTAL
LLV	LONG LEG VERTICAL
LOC	LOCATION
LONGIT	LONGITUDINAL
LW	LIGHT WEIGHT
LWC	LIGHT WEIGHT CONCRETE
MB	MACHINE BOLT(S)
MAX	MAXIMUM
MECH	MECHANICAL PLAN(S)
MFR	MANUFACTURER
MIN	MINIMUM
MISC	MISCELLANEOUS
(N)	NEW
NDT	NON-DESTRUCTIVE TESTING
NIC	NOT IN CONTRACT
No.	NUMBER
NOM	NOMINAL
NS	NEAR SIDE
N/S	NORTH/SOUTH
NTS	NOT TO SCALE
NWC	NORMAL WEIGHT CONCRETE
OC	ON CENTER
OD	OUTSIDE DIAMETER
OH	OPPOSITE HAND
OPP	OPPOSITE
OWSJ	OPEN WEB STEEL JOIST
ℙ	METAL PLATE
PDF	POWDER DRIVEN FASTENER
PTDF	PRESS. TREATED DOUG. FIR
PLY	PLYWOOD
PJP	PARTIAL JOINT PENETRATION
PQR	PROCEDURE QUALIFYING REPORT
PSF	POUNDS PER SQUARE FOOT
PSI	POUNDS PER SQUARE INCH
PT	POINT OR POST TENSION
RAD OR R	RADIUS
RCP	REINF CONC PIPE
REINF	REINFORCED, REINFORCING
REQ'D	REQUIRED
REV	REVISION
RS	ROUGH SAWN
RWD	REDWOOD
SCBF	SPECIAL CONCENTRICALLY BRACED FRAME
SCHED	SCHEDULE
SEC	SECTION
SFRS	SEISMIC FORCE RESISTING SYSTEM
SHT	SHEET
SHTG	SHEATHING
SIM	SIMILAR
SM	SHEETMETAL
SMRF	SPECIAL MOMENT RESISTING FRAME
SMS	SHEET METAL SCREW
S.O.G.	SLAB-ON-GRADE
SPEC(S)	SPECIFICATION(S)
SQ	SQUARE
STAG	STAGGERED
STD	STANDARD
STL	STEEL
STS	SELF TAPPING SCREW
STRUCT	STRUCTURAL PLAN(S)
SYM	SYMMETRICAL
T&B	TOP AND BOTTOM
T&G	TONGUE AND GROOVE
TBR	TO BE REMOVED
T.O.	TOP OF
T.O.CONC	TOP OF CONCRETE
T.O.FTG	TOP OF FOOTING
T.O.PL	TOP OF PLATE
T.O.STL	TOP OF STEEL
T.O.WALL	TOP OF WALL
TRANS	TRANSVERSE
TYP	TYPICAL
U.N.O.	UNLESS NOTED OTHERWISE
VERT	VERTICAL
V.S.C.	VERCO SIDELAP CONNECTION
W/	WITH
WF	WIDE FLANGE
WIM	WEIGH IN MOTION
WP	WATERPROOF OR WORK POINT
WPS	WELDING PROCEDURE SPECIFICATIONS
WT	WEIGHT
WWF	WELDED WIRE FABRIC

SYMBOLS:

1 / ST5-1	Section letter or detail number Sheet number where section or detail is shown
	Indicates concrete
	Indicates concrete block masonry
	Indicates footing
F1	Indicates footing type. See schedule on sheet ST4-1
[-2'-0"]	Indicates top of footing elevation = [-2'-0"], U.N.O.
0'-0"	Indicates top of concrete elevation
T.O.Stl +16'-0"	Indicates top of steel elevation
BF-1	Indicates Braced Frame type. See ST3.1 and ST3.2
MF-1	Indicates Moment Frame type. See ST3.3
	Indicates complete penetration welded moment connection
SD1	Indicates steel decking type and direction
C=1" (12)	Indicates upward camber at mid-span of beam Indicates number of equally spaced shear studs
	Indicates bracing for beam bottom flange. See 1/ST1-6, 2/ST1-6 Brace slopes down in direction of arrow
	Indicates diagonal brace above, in vertical plane
	Indicates diagonal brace below, in vertical plane
	Indicates step in slab
S-----S	Indicates step in footing
	Indicates depressed slab-on-grade
	Indicates gridlines (If blank-condition occurs in multiple locations)

CALIFORNIA STATE FIRE MARSHAL APPROVED

Approval of this plan does not authorize or approve any omission or deviation from applicable regulations. Final approval is subject to field inspection. One set of approved plans shall be available on the project site at all times.

Reviewed by: 5/9/11
Hans Henneberque
Senior Deputy State Fire Marshal

20081178 (20081785T-2)

DESIGN	BY S. HAYAT	CHECKED D. FURIA	
DETAILS	BY A. RICHARDSON	CHECKED D. FURIA	
QUANTITIES	BY G. TOLAN	CHECKED S. HAYAT	

PREPARED FOR THE STATE OF CALIFORNIA DEPARTMENT OF TRANSPORTATION

DIVISION OF ENGINEERING SERVICES ARCHITECTURAL AND STRUCTURAL DESIGN

BRIDGE NO. 23W0001R
POST MILE 14.8

EASTBOUND CORDELIA CVEF

CVEF — ABBREVIATIONS AND SYMBOLS

SHEET ST0-2

40a535wcST0-02.dgn
DS OSD imperial Rev. 10/07 18-MAY-2011 11:00

ORIGINAL SCALE IN INCHES FOR REDUCED PLANS 0 1 2 3

CU 04624
EA 0A5351

DISREGARD PRINTS BEARING EARLIER REVISION DATES

REVISION DATES (PRELIMINARY STAGE ONLY): 10/19/09 3/22/10 5/6/10 8/23/10 11/22/10 05/03/11

SHEET OF

18-MAY-2011 11:00

40a535wcST0-0

DIST.	COUNTY	ROUTE	POST MILES TOTAL PROJECT	SHEET NO.	TOTAL SHEETS
04	Sol	12,80	L1.8/L2.0, 13.3/15.7	576	740

Mahvash Harris 05/03/10
REGISTERED STRUCTURAL ENGINEER DATE

REGISTERED PROFESSIONAL ENGINEER MAHVASH M. HARRIS No. 2639 Exp. 12/31/12 STRUCTURAL STATE OF CALIFORNIA

5-16-11
PLANS APPROVAL DATE

The State of California or its officers or agents shall not be responsible for the accuracy or completeness of electronic copies of this plan sheet.

BIGGS CARDOSA ASSOCIATES
865 THE ALAMEDA
SAN JOSE, CA 95126
408-296-5515

SOLANO TRANSPORTATION AUTHORITY
ONE HARBOR CENTER, SUITE 130
SUISUN CITY, CA 94585

General Notes:

1. Prior to requesting a foundation inspection by the inspector, the soil engineer of record shall provide field report which shall state the following:
   - The building pad was prepared and compacted in accordance with the soil report recommendations.
   - The foundation excavation depth and backfill materials, and drainage, substantially conform with the soil report and approved plans.
2. Prior to final inspection for any building or structure, the soil engineer of record shall issue a final report stating the completed pad, foundation, finish grading, drainage and associated site work substantially conform to the approved plans and specifications.
3. Concrete slabs shall meet the flatness and levelness tolerances of ACI 117 for flat floors.
   - Level slab: FF = 30 FL = 20
   - Sloping slab: FF = 30
4. For dimensions not shown on Structural drawings, see Architectural drawings.

Material Properties

The material properties outlined below are intended to provide general information only. Refer to project specifications for detailed information. In the event of any conflict between the material properties listed here and the project specifications, the project specifications shall govern.

Concrete

1. Footings, walls & beams	f'c = 3000 psi
2. Slabs on grade	f'c = 3000 psi
3. Yards, sidewalks & curbs	f'c = 2500 psi
4. Steel deck topping	f'c = 3000 psi
5. All other concrete	f'c = 3000 psi

Reinforcing steel

1. Chords, bars to be welded	ASTM A706, Grade 60
2. All other bars	ASTM A615, Grade 60

Structural steel and misc iron

1. Wide flange and tee shapes	ASTM A992
2. Channels and angles	ASTM A36
3. Structural plates	ASTM A36 or ASTM A572
4. Hollow structural sections	ASTM A500, Grade B fy = 46 ksi for rectangular fy = 42 ksi for round
5. Steel pipes	ASTM A53, Grade B fy = 35 ksi
6. Arc welding electrodes	E70 for A36, A572 & A992 material E80 for A706 reinforcing steel E90 for A615 reinforcing steel
7. Machine bolts, anchor bolts & rods	ASTM A307 (Grade A or B) or A36
8. High strength bolts	ASTM A325-N Slip Critical
9. High strength rods	ASTM A449
10. Hot-dipped galvanizing	ASTM A123
11. Light gage metal framing	ICBO ER-4943 P

Expansion anchors & screw anchors

Expansion anchors	Hilti Kwik Bolt TZ, or equal
Screw anchors	Simpson Titen HD, or equal

Steel deck

1. Type SD1: Verco 3" deep, 16-gage PLN-24, unvented and galvanized, with V.S.C. at 4" oc, without concrete topping.
2. Type SD2: Verco 3" deep, 18-gage PLN-24, unvented and galvanized, with V.S.C. at 4" oc, without concrete topping.
3. Type SD3: Verco 3" deep, 18-gage W3 Formlock, vented and galvanized, with 3.5" NWC topping. Topping reinf: #4 @ 18" oc each way.
4. Parallel supports shall be puddle welds @ 6" oc at all decks.
5. Tansverse supports shall be puddle welds @ 18" oc at all decks.

Slab membrane

1. Stego wrap 10-mil Class A vapor retarder, or equal.

Non-shrink grout

1. Masterflow 928 grout manufactured by Chemrex, or equal, with minimum 7-day compressive strength of 5000 psi.

Concrete block masonry

1. Lightweight units, ASTM C90 Grade N, f'm = 2500 psi.

CALIFORNIA STATE FIRE MARSHAL
APPROVED

Approval of this plan does not authorize or approve any omission or deviation from applicable regulations. Final approval is subject to field inspection. One set of approved plans shall be available on the project site at all times.

Reviewed by: 5/9/11
Hans Henneberque
Senior Deputy State Fire Marshal

	BY	CHECKED
DESIGN	S. HAYAT	D. FURIA
DETAILS	A. RICHARDSON	D. FURIA
QUANTITIES	G. TOLAN	S. HAYAT

PREPARED FOR THE STATE OF CALIFORNIA DEPARTMENT OF TRANSPORTATION

DIVISION OF ENGINEERING SERVICES
ARCHITECTURAL AND STRUCTURAL DESIGN

BRIDGE NO. 23W0001R
POST MILE 14.8

EASTBOUND CORDELIA CVEF

CVEF — GENERAL NOTES AND SPECIFICATIONS

SHEET STO-3

40a535wcSTO-03.dgn
DS OSD imperial Rev. 10/07 18-MAY-2011 11:00

ORIGINAL SCALE IN INCHES FOR REDUCED PLANS 0 1 2 3

CU 04624
EA 0A5351

DISREGARD PRINTS BEARING EARLIER REVISION DATES

REVISION DATES (PRELIMINARY STAGE ONLY) 10/19/09 3/22/10 5/6/10 8/23/10 11/22/10 05/03/11

SHEET OF

18-MAY-2011 11:00 (20081178ST-3) 20081178

40a535wcSTO-0

DIST.	COUNTY	ROUTE	POST MILES TOTAL PROJECT	SHEET NO.	TOTAL SHEETS
04	Sol	12,80	L1.8/L2.0, 13.3/15.7	577	740

REGISTERED STRUCTURAL ENGINEER — DATE 05/03/11

REGISTERED PROFESSIONAL ENGINEER MAHYASH M. HARRIS No. 2639 Exp. 12/31/12 STRUCTURAL STATE OF CALIFORNIA

5-16-11
PLANS APPROVAL DATE

The State of California or its officers or agents shall not be responsible for the accuracy or completeness of electronic copies of this plan sheet.

BIGGS CARDOSA ASSOCIATES
865 THE ALAMEDA
SAN JOSE, CA 95126
408-296-5515

SOLANO TRANSPORTATION AUTHORITY
ONE HARBOR CENTER, SUITE 130
SUISUN CITY, CA 94585

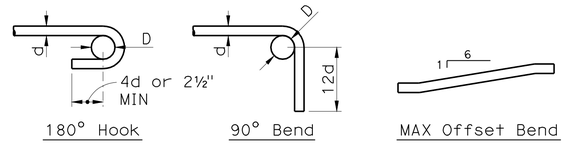

180° Hook — 90° Bend — MAX Offset Bend

D = 6d for #3 thru #8
D = 8d for #9 thru #11
D = 10d for #14 thru #18

Principal Reinforcing

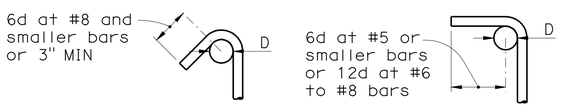

135° Hook Tie or Stirrup — 90° Bend Tie or Stirrup

D = 4d for #5 and smaller
D = 6d for #6 thru #8
D = 8d for #9 thru #11

Tie or Stirrups

Notes:
1. All bends shall be made cold.
2. #14 & #18 bars shall be bend-tested and approved prior to bending.

TYPICAL BAR HOOKS & BENDS (1 / ST1-1)
NO SCALE

Bar Size	f'c=3000 psi		f'c=4000 psi		f'c=5000 psi	
	Bottom	Top	Bottom	Top	Bottom	Top
#3	24"	30"	20"	24"	18"	24"
#4	30"	40"	26"	36"	24"	30"
#5	36"	50"	32"	42"	30"	36"
#6	48"	60"	38"	48"	36"	48"
#7	66"	84"	60"	72"	50"	65"
#8	72"	96"	66"	84"	60"	72"
#9	84"	108"	72"	96"	65"	84"
#10	96"	120"	84"	108"	70"	96"
#11	108"	132"	96"	120"	80"	108"

Notes:
1. Use minimum lap splice length corresponding to specified concrete strength f'c.
2. Lap splice locations shall be approved by the engineer.
3. The top bar lap splice shall be used for horizontal bars where there is 12" or more of fresh concrete below the bar.
4. When two bars of different sizes are spliced, use the shorter lap length.
5. Stagger lap splices of adjacent bars by 24".
6. Increase lap splice lengths by a factor of 1.2 for epoxy coated bars.

LAP SPLICE SCHEDULE (2 / ST1-1)
NO SCALE

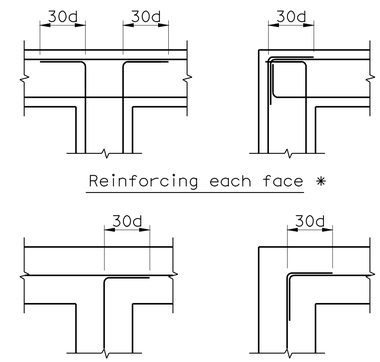

Reinforcing each face *

Reinforcing in center *

Notes:
1. d = bar diameter
2. Typical bar hooks & bends for MIN hook dimensions.

* Vertical reinforcing not shown

FOOTING AND WALL INTERSECTIONS (3 / ST1-1)
3/4" = 1'-0"

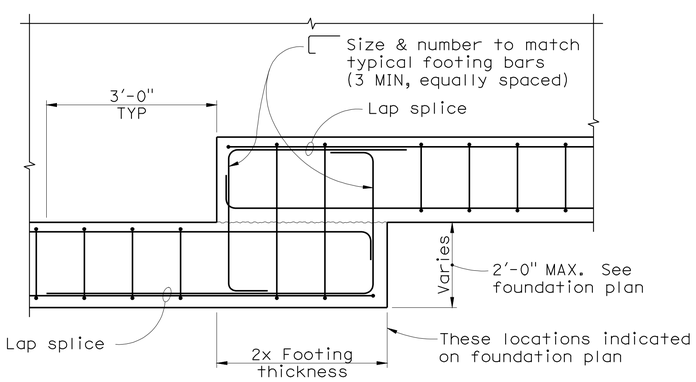

TYPICAL FOOTING STEP (4 / ST1-1)
3/4" = 1'-0"

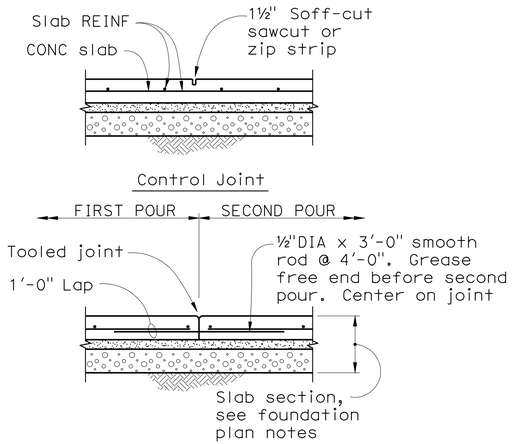

Note:
Control (weakened plane) joint are to be installed @ 20'-0" maximum spacing or as shown on plan. Control joints shall be made by sawcutting slab with the Soff-cut System or approved equal as soon as the surface is firm enough so that it will not be damaged by the blade, usually within 2 to 4 hours after final finishing (no later than 8 hours after placement). Sawcut depth shall be 1 ½".

TYPICAL SLAB JOINTS (5 / ST1-1)
NO SCALE

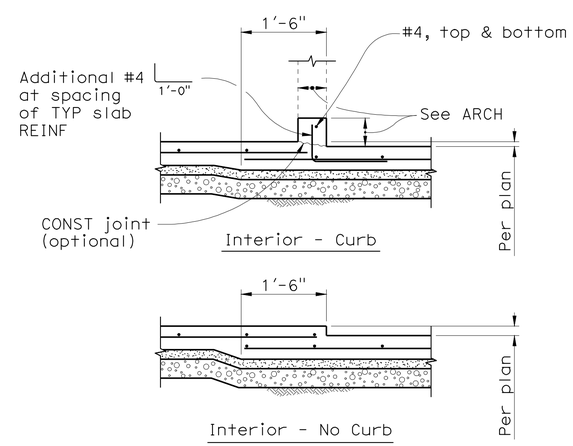

TYPICAL SLAB DEPRESSION (6 / ST1-1)
NO SCALE

CALIFORNIA STATE FIRE MARSHAL APPROVED

Approval of this plan does not authorize or approve any omission or deviation from applicable regulations. Final approval is subject to field inspection. One set of approved plans shall be available on the project site at all times.

Reviewed by: 5/9/11
Hans Hennebarque
Senior Deputy State Fire Marshal

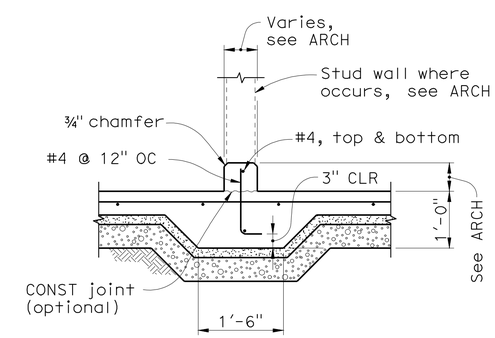

TYPICAL CURB (7 / ST1-1)
3/4" = 1'-0"

DESIGN	BY S. HAYAT	CHECKED D. FURIA	
DETAILS	BY A. RICHARDSON	CHECKED D. FURIA	
QUANTITIES	BY G. TOLAN	CHECKED S. HAYAT	

PREPARED FOR THE STATE OF CALIFORNIA DEPARTMENT OF TRANSPORTATION

DIVISION OF ENGINEERING SERVICES
ARCHITECTURAL AND STRUCTURAL DESIGN

BRIDGE NO. 23W0001R
POST MILE 14.8

EASTBOUND CORDELIA CVEF
CVEF — TYPICAL CONCRETE DETAILS No. 1

SHEET ST1-1

40a535wcST1-01.dgn
DS OSD imperial Rev. 10/07 18-MAY-2011 11:00

ORIGINAL SCALE IN INCHES FOR REDUCED PLANS 0 1 2 3

CU 04264
EA 0A5351

DISREGARD PRINTS BEARING EARLIER REVISION DATES — REVISION DATES (PRELIMINARY STAGE ONLY) 10/19/09 03/22/10 05/07/10 08/23/10 11/22/10 05/03/11

SHEET OF

2008178 (20081785(1-1))

18-MAY-2011 11:00

40a535wcST1-0

DIST.	COUNTY	ROUTE	POST MILES TOTAL PROJECT	SHEET NO.	TOTAL SHEETS
04	Sol	12,80	L1.8/L2.0, 13.3/15.7	578	740

REGISTERED STRUCTURAL ENGINEER — DATE 05/03/11

REGISTERED PROFESSIONAL ENGINEER MAHYASH M. HARRIS No. 2639 Exp. 12/31/12 STRUCTURAL STATE OF CALIFORNIA

5-16-11
PLANS APPROVAL DATE

The State of California or its officers or agents shall not be responsible for the accuracy or completeness of electronic copies of this plan sheet.

BIGGS CARDOSA ASSOCIATES
865 THE ALAMEDA
SAN JOSE, CA 95126
408-296-5515

SOLANO TRANSPORTATION AUTHORITY
ONE HARBOR CENTER, SUITE 130
SUISUN CITY, CA 94585

CALIFORNIA STATE FIRE MARSHAL APPROVED

Approval of this plan does not authorize or approve any omission or deviation from applicable regulations. Final approval is subject to field inspection. One set of approved plans shall be available on the project site at all times.

Reviewed by: 5/9/11
Hans Henneberque
Senior Deputy State Fire Marshal

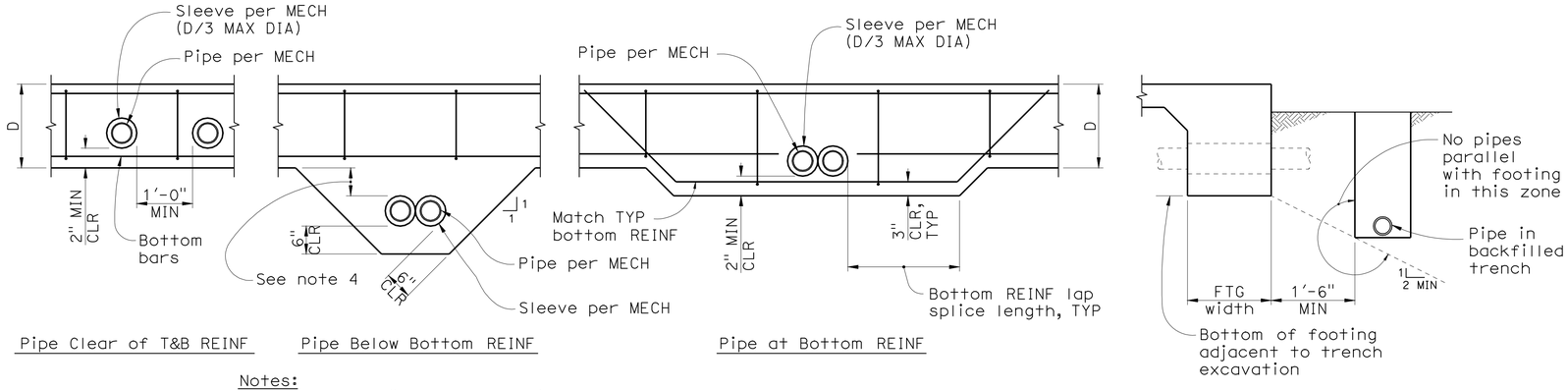

Pipe Clear of T&B REINF — Pipe Below Bottom REINF — Pipe at Bottom REINF

Notes:
1. Sleeve ID 2" larger than pipe OD or bell OD.
2. Seal void between pipe and sleeve with elastic waterproofing material, typical.
3. Detail applicable to maximum 8" diameter sleeve.
4. No footing extension required for pipe deeper than 12" below footing (sleeve still required). Excavate at least 6" under and 18" wider than the pipe sleeve across the width of the footing. The excavation shall be filled with lean concrete.

TYPICAL FOOTING PENETRATIONS (1 / ST1-2)
NO SCALE

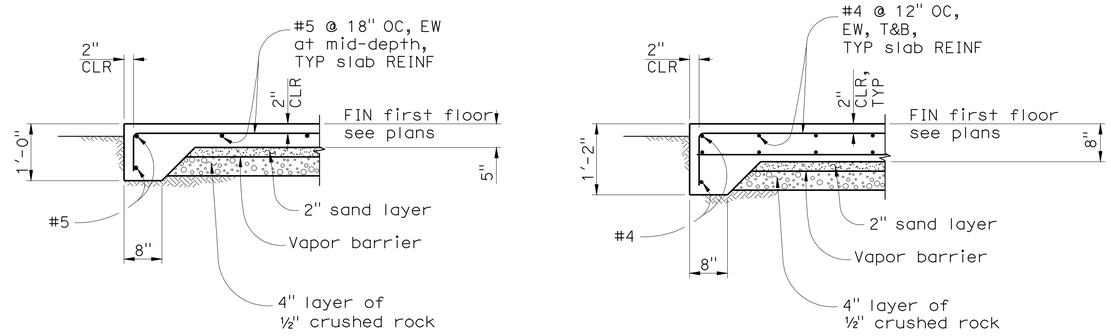

TYP 5-INCH SLAB-ON-GRADE (A / ST1-2)
3/4" = 1'-0"

TYP 8-INCH SLAB-ON-GRADE (B / ST1-2)
3/4" = 1'-0"

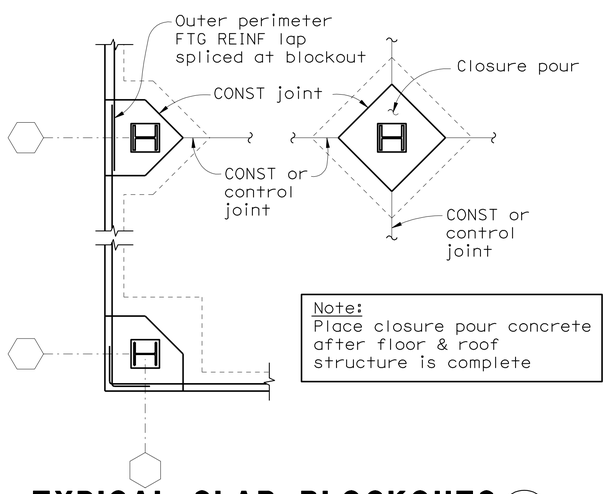

Note:
Place closure pour concrete after floor & roof structure is complete

TYPICAL SLAB BLOCKOUTS (2 / ST1-2)
NO SCALE

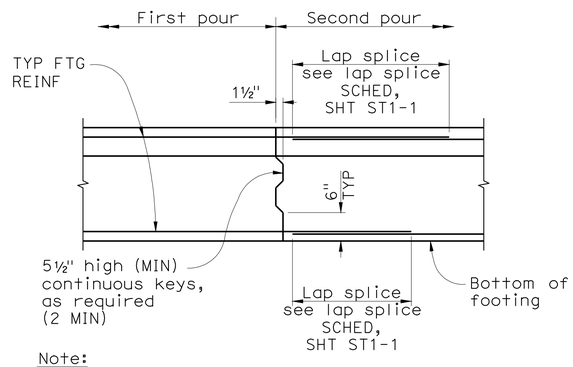

Note:
Locate construction joint in middle 1/3 of the distance between columns. Where continuous footing is under a wall, locate construction joint at 1/4 of the clear opening width above from face of opening.

FOOTING CONSTRUCTION JOINT (3 / ST1-2)
3/4" = 1'-0"

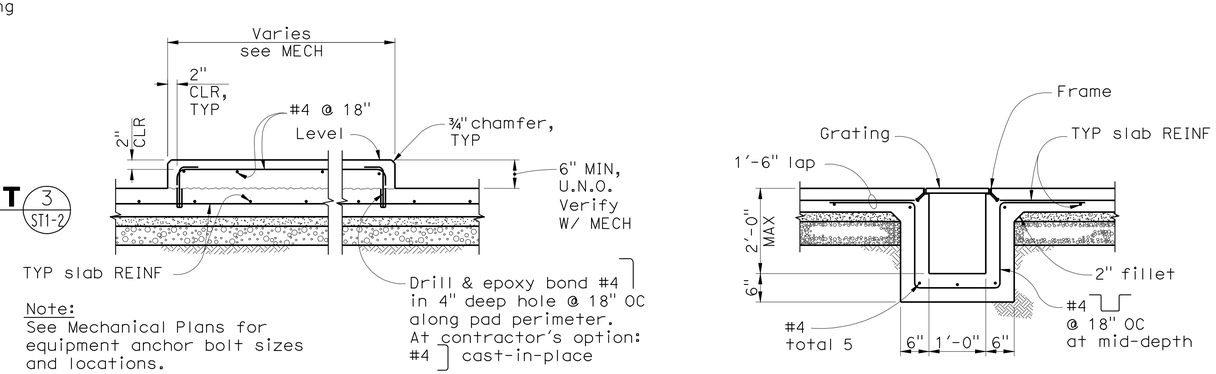

Note:
See Mechanical Plans for equipment anchor bolt sizes and locations.

TYPICAL CONCRETE PAD (C / ST1-2)
3/4" = 1'-0"

TYPICAL TRENCH (D / ST1-2)
3/4" = 1'-0"

DESIGN	BY S. HAYAT	CHECKED D. FURIA	
DETAILS	BY A. RICHARDSON	CHECKED D. FURIA	
QUANTITIES	BY G. TOLAN	CHECKED S. HAYAT	

PREPARED FOR THE STATE OF CALIFORNIA DEPARTMENT OF TRANSPORTATION

DIVISION OF ENGINEERING SERVICES ARCHITECTURAL AND STRUCTURAL DESIGN

BRIDGE NO. 23W0001R
POST MILE 14.8

EASTBOUND CORDELIA CVEF

CVEF — TYPICAL CONCRETE DETAILS No. 2

SHEET ST1-2

40a535wcST1-02.dgn
DS OSD imperial Rev. 10/07 18-MAY-2011 11:01

ORIGINAL SCALE IN INCHES FOR REDUCED PLANS 0 1 2 3

CU 04264
EA 045351

DISREGARD PRINTS BEARING EARLIER REVISION DATES → 10/19/09 3/22/10 5/6/10 8/23/10 11/22/10 05/03/11

REVISION DATES (PRELIMINARY STAGE ONLY) — SHEET — OF

20081718 (20081718S1-2) 18-MAY-2011 11:01

40a535wcST1-0

DIST.	COUNTY	ROUTE	POST MILES TOTAL PROJECT	SHEET NO.	TOTAL SHEETS
04	Sol	12,80	L1.8/L2.0, 13.3/15.7	579	740

Mahrash Harms 05/03/11
REGISTERED STRUCTURAL ENGINEER DATE

REGISTERED PROFESSIONAL ENGINEER MAHRASH M. HARMS No. 2639 Exp.12/31/12 STRUCTURAL STATE OF CALIFORNIA

5-16-11
PLANS APPROVAL DATE

The State of California or its officers or agents shall not be responsible for the accuracy or completeness of electronic copies of this plan sheet.

BIGGS CARDOSA ASSOCIATES
865 THE ALAMEDA
SAN JOSE, CA 95126
408-296-5515

SOLANO TRANSPORTATION AUTHORITY
ONE HARBOR CENTER, SUITE 130
SUISUN CITY, CA 94585

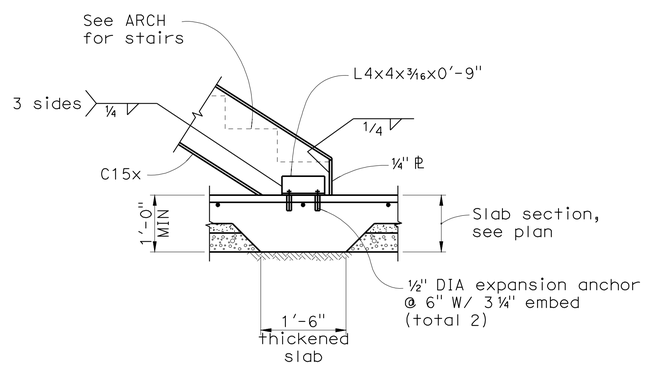

NOT USED (A) ST1-3
NO SCALE

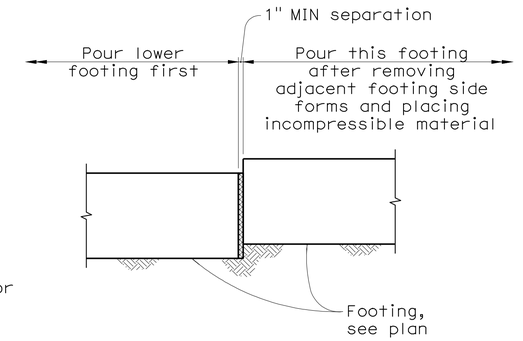

SECTION (B) ST1-3
3/4" = 1'-0"

TYP FOOTING SEPARATION (C) ST1-3
3/4" = 1'-0"

CALIFORNIA STATE FIRE MARSHAL APPROVED

Approval of this plan does not authorize or approve any omission or deviation from applicable regulations. Final approval is subject to field inspection. One set of approved plans shall be available on the project site at all times.

Reviewed by: 5/9/11
Hans Henneberque
Senior Deputy State Fire Marshal

20081178 (20081178S11-3)

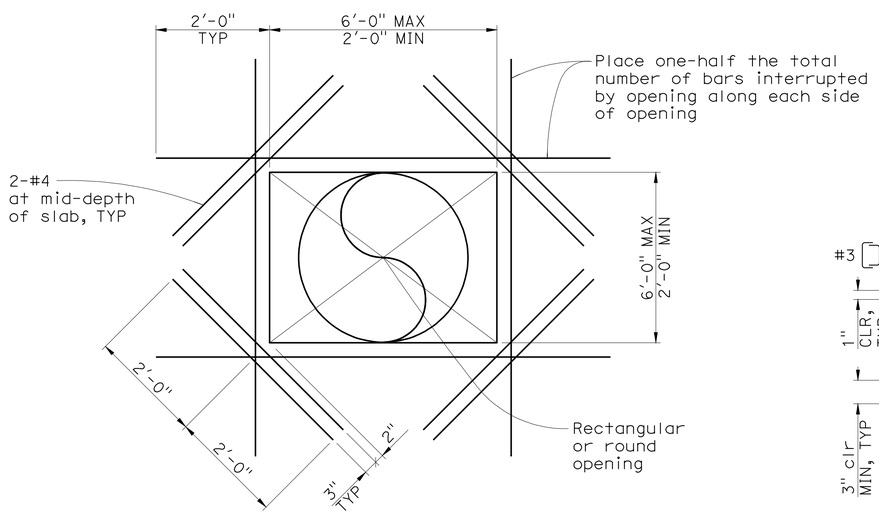

TYP OPENING IN SLAB ON GRADE (D) ST1-3
NO SCALE

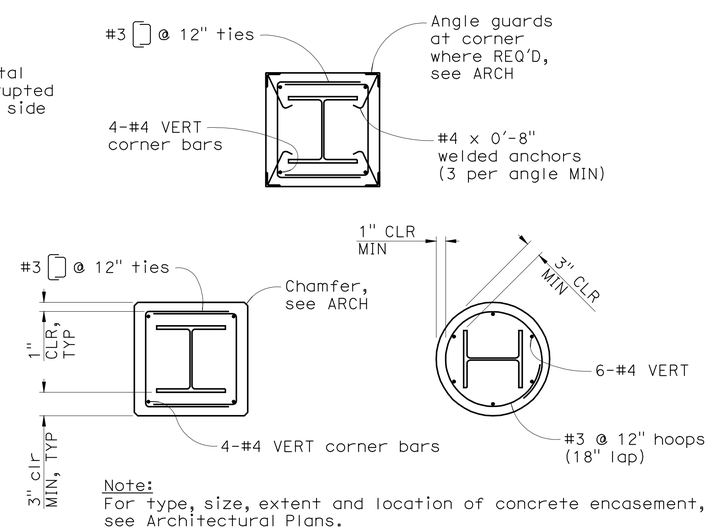

Note:
For type, size, extent and location of concrete encasement, see Architectural Plans.

STEEL COLUMN CONCRETE ENCASEMENT (E) ST1-3
NO SCALE

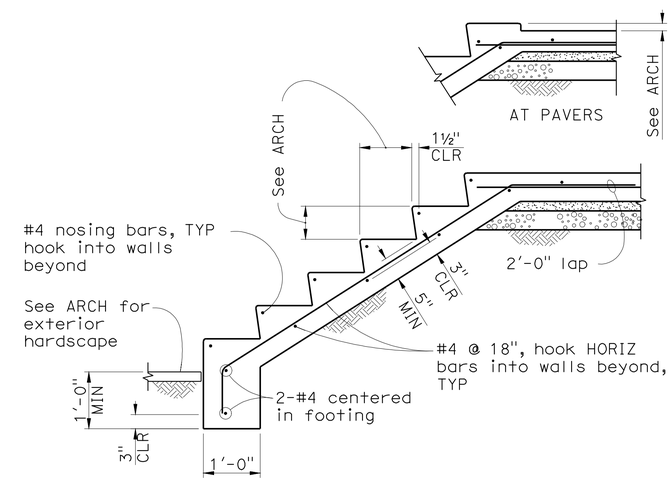

TYPICAL STAIR ON GRADE (F) ST1-3
3/4" = 1'-0"

DESIGN	BY S. HAYAT	CHECKED D. FURIA	PREPARED FOR THE STATE OF CALIFORNIA DEPARTMENT OF TRANSPORTATION	DIVISION OF ENGINEERING SERVICES ARCHITECTURAL AND STRUCTURAL DESIGN	BRIDGE NO. 23W0001R	EASTBOUND CORDELIA CVEF	SHEET ST1-3
DETAILS	BY A. RICHARDSON	CHECKED D. FURIA			POST MILE 14.8	CVEF — TYPICAL CONCRETE DETAILS No. 3	
QUANTITIES	BY G. TOLAN	CHECKED S. HAYAT					

40a535wcST1-03.dgn
DS OSD imperial Rev. 10/07 18-MAY-2011 11:01

ORIGINAL SCALE IN INCHES FOR REDUCED PLANS 0 1 2 3

CU 04264
EA 0A5351

DISREGARD PRINTS BEARING EARLIER REVISION DATES → REVISION DATES (PRELIMINARY STAGE ONLY) 10/19/09 3/22/10 5/6/10 8/23/10 11/22/10 05/03/11

SHEET OF

18-MAY-2011 11:01

40a535wcST1-03.dgn

DIST.	COUNTY	ROUTE	POST MILES TOTAL PROJECT	SHEET NO.	TOTAL SHEETS
04	Sol	12,80	L1.8/L2.0, 13.3/15.7	580	740

REGISTERED STRUCTURAL ENGINEER — DATE 05/03/11

REGISTERED PROFESSIONAL ENGINEER MAHVASH M. HARRIS No. 2639 Exp. 12/31/12 STRUCTURAL STATE OF CALIFORNIA

5-16-11
PLANS APPROVAL DATE

The State of California or its officers or agents shall not be responsible for the accuracy or completeness of electronic copies of this plan sheet.

BIGGS CARDOSA ASSOCIATES
865 THE ALAMEDA
SAN JOSE, CA 95126
408-296-5515

SOLANO TRANSPORTATION AUTHORITY
ONE HARBOR CENTER, SUITE 130
SUISUN CITY, CA 94585

CALIFORNIA STATE FIRE MARSHAL APPROVED

Approval of this plan does not authorize or approve any omission or deviation from applicable regulations. Final approval is subject to field inspection. One set of approved plans shall be available on the project site at all times.

Reviewed by: 5/9/11
Hans Henneberque
Senior Deputy State Fire Marshal

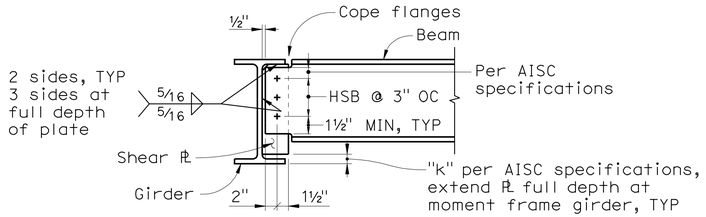

Bolted Plate Connection

Note:
Bolted and welded connections may be interchanged

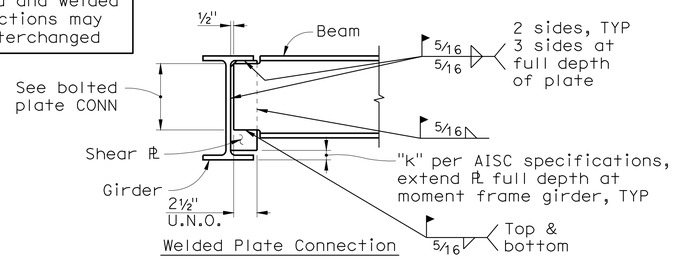

Welded Plate Connection

Beam Size	Number of Bolts	Bolts	Shear Plate Thickness
C8-C12, W8-W10	2	⅞" DIA A325SC	⅜"
C13-C15, W12-W14	3	⅞" DIA A325SC	⅜"
C18, W16	4	⅞" DIA A325SC	⅜"
W18, W21	5	⅞" DIA A325SC	⅜"
W24	6	⅞" DIA A325SC	⅜"
W27	7	⅞" DIA A325SC	⅜"
W30	8	⅞" DIA A325SC	⅜"
W33, W36	9	⅞" DIA A325SC	⅜"

ONE-SIDED PLATE CONNECTION (A / ST1-4)
NO SCALE

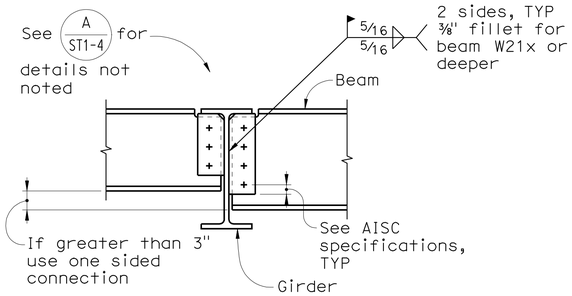

Note:
Use one sided connection at moment frame/braced frame girder or where opposite beams are offset by 12" or more.

TWO-SIDED BOLTED PLATE CONN (B / ST1-4)
1" = 1'-0"

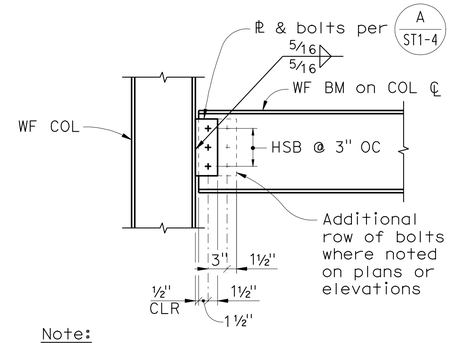

Note:
For bolt edge distance & spacing, see AISC specifications.

BEAM TO COLUMN FLANGE CONN (C / ST1-4)
1" = 1'-0"

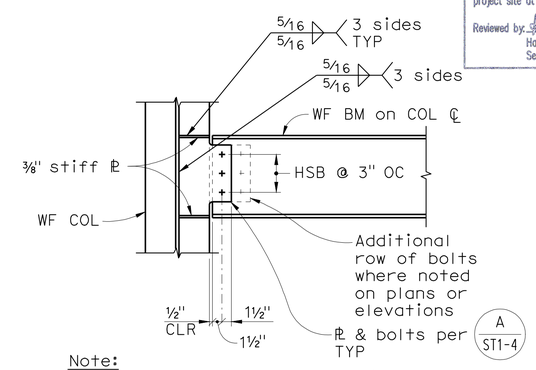

Note:
For bolt edge distance & spacing, see AISC specifications.

BEAM TO COLUMN WEB CONN (D / ST1-4)
1" = 1'-0"

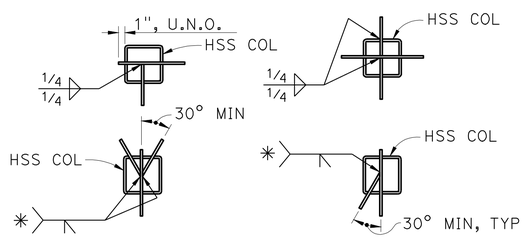

✳ Use ¼" fillet each side of PL where angle noted is between 60° & 90°

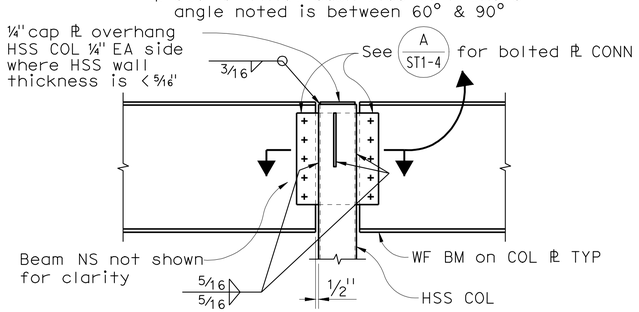

BEAM TO HSS COL CONN (E / ST1-4)
1" = 1'-0"

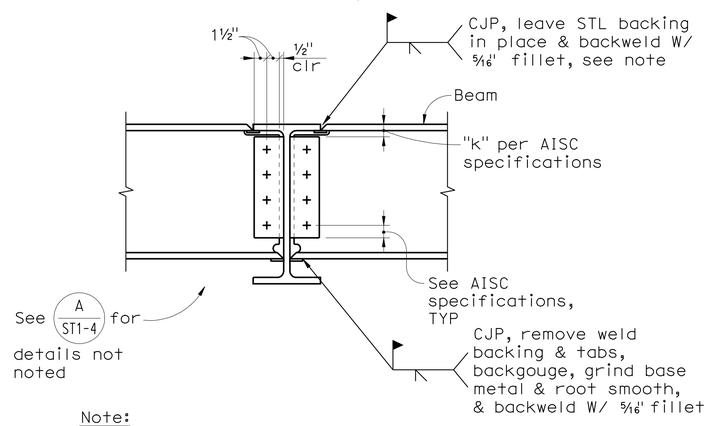

Note:
With nonfusible backing:
Remove backing, backgouge, grind base metal & root smooth and backweld W/ 5/16" fillet.

BEAM TO BEAM MOMENT CONN (F / ST1-4)
1" = 1'-0"

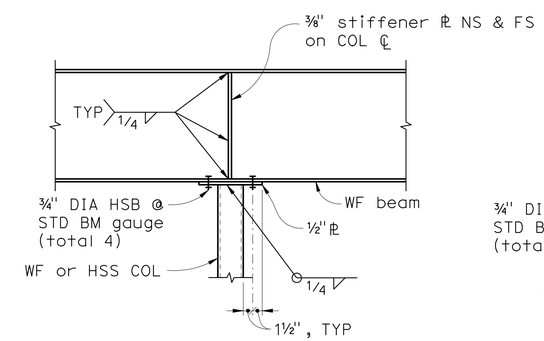

BEAM OVER COLUMN (G / ST1-4)
1" = 1'-0"

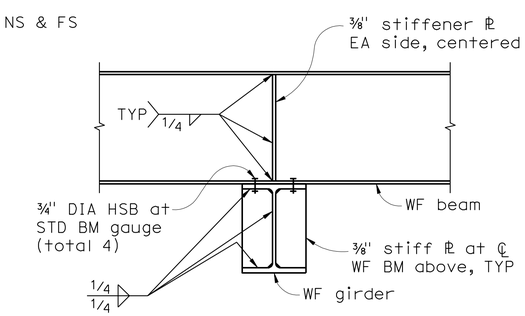

BEAM OVER GIRDER CONN (H / ST1-4)
1" = 1'-0"

DESIGN	BY S. HAYAT	CHECKED D. FURIA	
DETAILS	BY A. RICHARDSON	CHECKED D. FURIA	
QUANTITIES	BY G. TOLAN	CHECKED S. HAYAT	

PREPARED FOR THE STATE OF CALIFORNIA DEPARTMENT OF TRANSPORTATION

DIVISION OF ENGINEERING SERVICES ARCHITECTURAL AND STRUCTURAL DESIGN

BRIDGE NO. 23W0001R
POST MILE 14.8

EASTBOUND CORDELIA CVEF
CVEF — TYPICAL STEEL DETAILS No. 1

SHEET ST1-4

40a535wcST1-04.dgn
DS OSD imperial Rev. 10/07 18-MAY-2011 11:11

ORIGINAL SCALE IN INCHES FOR REDUCED PLANS 0 1 2 3

CU 04264
EA 0A5351

DISREGARD PRINTS BEARING EARLIER REVISION DATES

REVISION DATES (PRELIMINARY STAGE ONLY): 10/18/09 3/22/10 5/6/10 8/23/10 11/22/10 05/03/11

SHEET OF

20081178 (20081785S1-4)

18-MAY-2011 11:11

40a535wcST1-0

DIST.	COUNTY	ROUTE	POST MILES TOTAL PROJECT	SHEET NO.	TOTAL SHEETS
04	Sol	12,80	L1.8/L2.0, 13.3/15.7	581	740

Mahvash Harms 05/03/11
REGISTERED STRUCTURAL ENGINEER DATE

REGISTERED PROFESSIONAL ENGINEER MAHVASH M. HARMS No. 2639 Exp. 12/31/12 STRUCTURAL STATE OF CALIFORNIA

5-16-11
PLANS APPROVAL DATE

The State of California or its officers or agents shall not be responsible for the accuracy or completeness of electronic copies of this plan sheet.

BIGGS CARDOSA ASSOCIATES
865 THE ALAMEDA
SAN JOSE, CA 95126
408-296-5515

SOLANO TRANSPORTATION AUTHORITY
ONE HARBOR CENTER, SUITE 130
SUISUN CITY, CA 94585

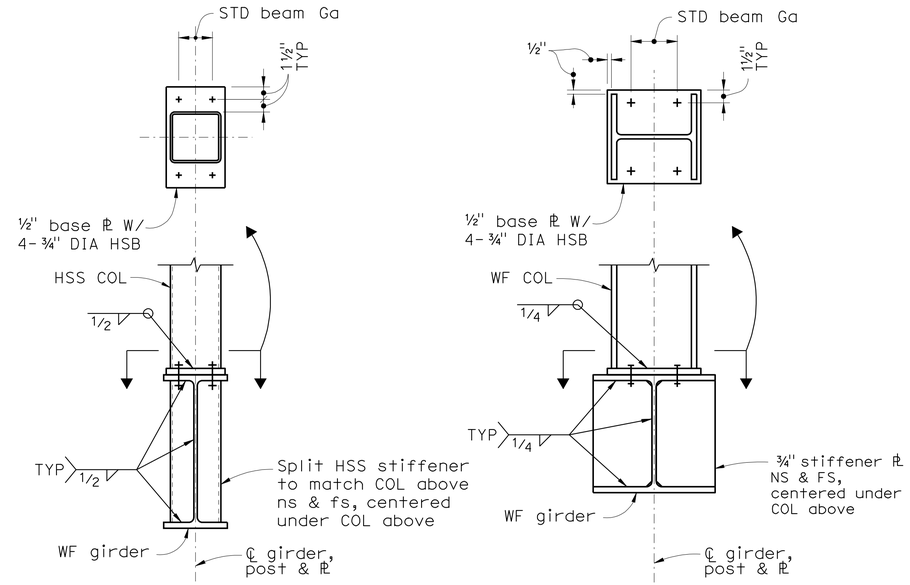

POST AT WF GIRDER (A / ST1-5)
NO SCALE

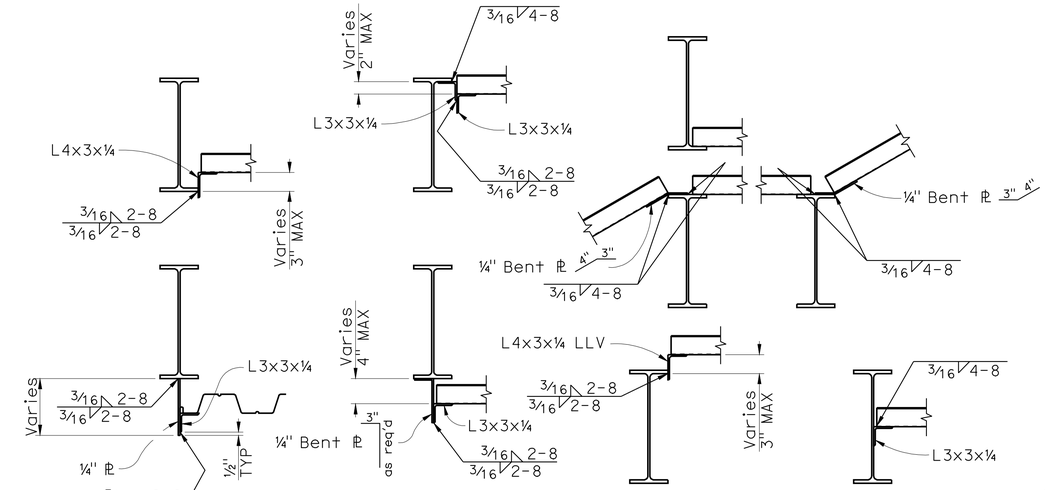

DECK SUPPORT SECTIONS (B / ST1-5)
1" = 1'-0"

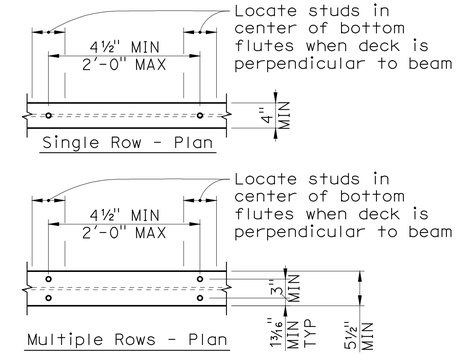

NOTES:
1. Where welded studs fill every flute, remaining studs shall be installed on two or more rows starting at each end of beam or girder.
2. Welded studs are equally spaced unless otherwise noted on plans. If equal spacing is not possible due to deck configuration, the structural engineer must be notified.

WELDED STUD LAYOUT (2 / ST1-5)
1" = 1'-0"

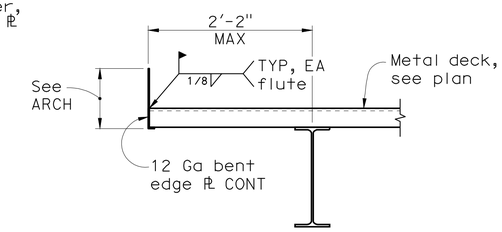

Metal Deck Perpendicular to Edge Beam

SECTION (D / ST1-5)
1" = 1'-0"

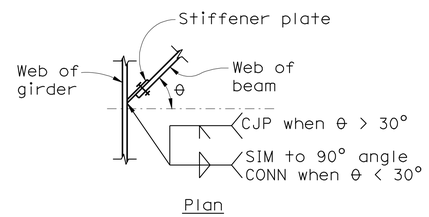

Plan

NOTE:
See bolted plate connection for details not noted.

SKEWED BEAM CONN (1 / ST1-5)
NO SCALE

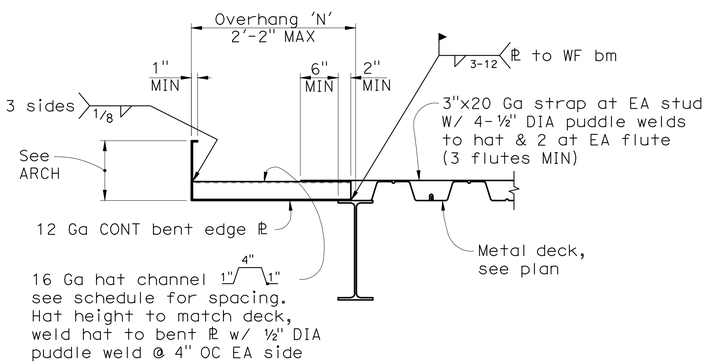

Metal Decking Parallel With Edge Beam

Overhang	Hat Channel & Strap Spacing
N < 8"	Hat & Strap not req'd
8" < N < 1'-6"	6'-0" oc
N > 1'-6"	3'-0" oc

SECTION (C / ST1-5)
1" = 1'-0"

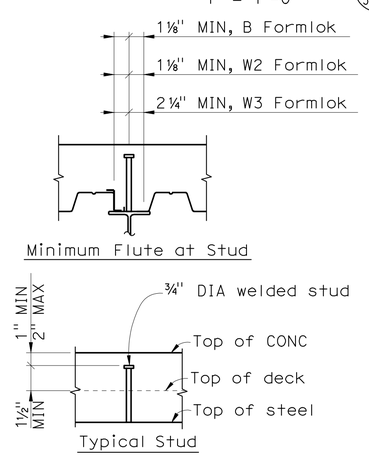

WELDED STUD DETAIL (3 / ST1-5)
1" = 1'-0"

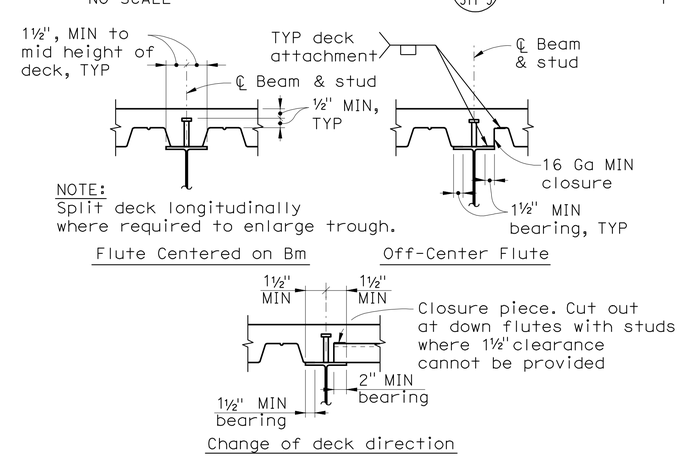

NOTE:
Split deck longitudinally where required to enlarge trough.

DECK & SHEAR STUD PLACEMENT (4 / ST1-5)
1" = 1'-0"

CALIFORNIA STATE FIRE MARSHAL APPROVED
Approval of this plan does not authorize or approve any omission or deviation from applicable regulations. Final approval is subject to field inspection. One set of approved plans shall be available on the project site at all times.
Reviewed by: Hans Henneberque 5/9/11
Hans Henneberque
Senior Deputy State Fire Marshal

DESIGN	BY S. HAYAT	CHECKED D. FURIA	
DETAILS	BY A. RICHARDSON	CHECKED D. FURIA	
QUANTITIES	BY G. TOLAN	CHECKED S. HAYAT	

PREPARED FOR THE STATE OF CALIFORNIA DEPARTMENT OF TRANSPORTATION

DIVISION OF ENGINEERING SERVICES
ARCHITECTURAL AND STRUCTURAL DESIGN

BRIDGE NO. 23W0001R
POST MILE 14.8

EASTBOUND CORDELIA CVEF
CVEF
TYPICAL STEEL DETAILS No. 2

SHEET ST1-5

40a535wcST1-05.dgn
DS OSD imperial Rev. 10/07 18-MAY-2011 11:01

ORIGINAL SCALE IN INCHES FOR REDUCED PLANS 0 1 2 3

CU 04264
EA 0A5351

DISREGARD PRINTS BEARING EARLIER REVISION DATES
REVISION DATES (PRELIMINARY STAGE ONLY) 10/19/09 3/22/10 5/6/10 8/23/10 11/22/10 05/03/11
SHEET OF

18-MAY-2011 11:01 (20081785\1-5) 20081785

40a535wcST1-0

DIST.	COUNTY	ROUTE	POST MILES TOTAL PROJECT	SHEET NO.	TOTAL SHEETS
04	Sol	12,80	L1.8/L2.0, 13.3/15.7	582	740

Mahrash Hayat 05/03/11
REGISTERED STRUCTURAL ENGINEER DATE

REGISTERED PROFESSIONAL ENGINEER MAHRASH M. HAYAT No. 2639 Exp. 12/31/12 STRUCTURAL STATE OF CALIFORNIA

5-16-11
PLANS APPROVAL DATE

The State of California or its officers or agents shall not be responsible for the accuracy or completeness of electronic copies of this plan sheet.

BIGGS CARDOSA ASSOCIATES
865 THE ALAMEDA
SAN JOSE, CA 95126
408-296-5515

SOLANO TRANSPORTATION AUTHORITY
ONE HARBOR CENTER, SUITE 130
SUISUN CITY, CA 94585

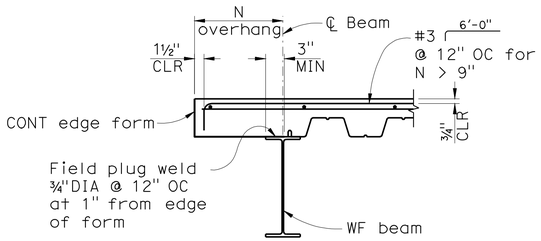

Overhang	Edge Form
N < 6"	14 Gauge
6" < N < 9"	12 Gauge
9" < N < 12"	10 Gauge

N < 1'-0"

NOTES:
1. Locate all added REINF at ¾"CLR from top of concrete.
2. Added REINF at metal deck edge takes precedence over any other REINF and is located at the upper most layer.
3. All gauges shown are minimum. Deck contractor to verify adequacy of edge form.

TYP METAL DECK EDGE (A / ST1-6)
1" = 1'-0" (FLUTES PARALLEL WITH BEAM)

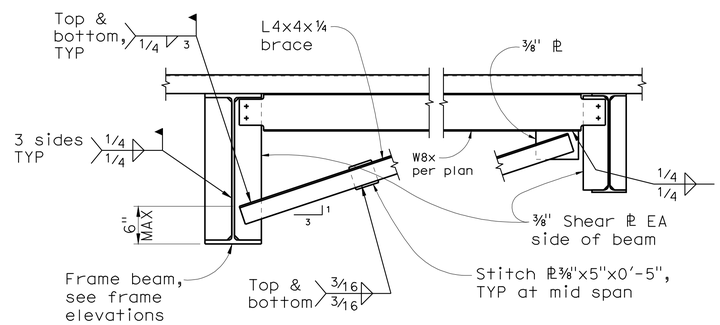

BEAM BRACE DETAIL (1 / ST1-6)
3/4" = 1'-0"

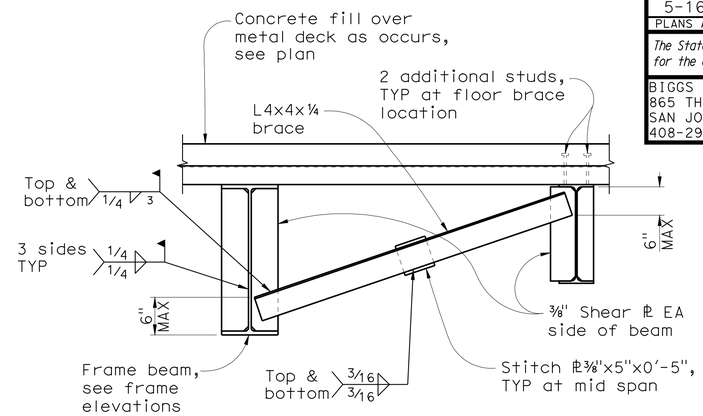

BEAM BRACE DETAIL (2 / ST1-6)
3/4" = 1'-0"

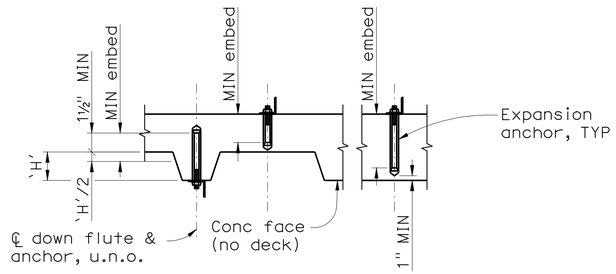

NOTES:
1. See specifications for acceptable expansion anchor products.
2. Do not cut reinforcing steel during drilling of holes.
3. Provide hole depth as required for scheduled embedment. Notify engineer where scheduled embedment cannot be achieved.
4. Core holes instead of drilling as required to prevent spalling.
5. Field test as required thus:

Anchor	¼" DIA	⅜" DIA	½" DIA	5/16" DIA	¾" DIA	1" DIA
Torque (ft lbs)	10	25	50	80	150	250

Anchor Size	MIN Embed
¼" DIA	2"
¼" DIA	2"
⅜" DIA	2½"
½" DIA	3½"
5/16" DIA	4"
¾" DIA	4¾"
1" DIA	6"

TYPICAL WEDGE TYPE EXPANSION ANCHORS (3 / ST1-6)
NO SCALE

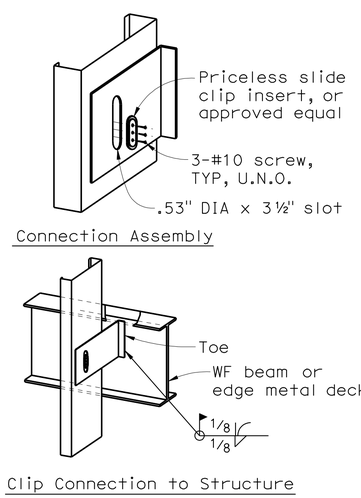

SLIDE CLIP SIDE			
Stud size	A	B	C
10"	8"	6"	2"
8"	5½"	6"	2"
6"	5½"	6"	2"
4"	3½"	6"	1"
3½", 3 5/16"	3½"	6"	1"

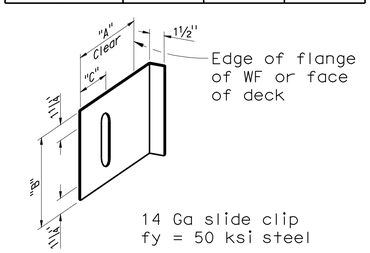

NOTE:
Use 2 clips at jamb studs.

DETAIL (4 / ST1-6)
NO SCALE

CALIFORNIA STATE FIRE MARSHAL APPROVED

Approval of this plan does not authorize or approve any omission or deviation from applicable regulations. Final approval is subject to field inspection. One set of approved plans shall be available on the project site at all times.

Reviewed by: Hans Hennebarque 5/9/11
Hans Hennebarque
Senior Deputy State Fire Marshal

DESIGN	BY S. HAYAT	CHECKED D. FURIA	
DETAILS	BY A. RICHARDSON	CHECKED D. FURIA	
QUANTITIES	BY G. TOLAN	CHECKED S. HAYAT	

PREPARED FOR THE STATE OF CALIFORNIA DEPARTMENT OF TRANSPORTATION

DIVISION OF ENGINEERING SERVICES
ARCHITECTURAL AND STRUCTURAL DESIGN

BRIDGE NO. 23W0001R
POST MILE 14.8

EASTBOUND CORDELIA CVEF
CVEF
TYPICAL STEEL DETAILS No. 3

SHEET ST1-6

40a535wcST1-06.dgn
DS OSD imperial Rev. 10/07 18-MAY-2011 11:01

ORIGINAL SCALE IN INCHES FOR REDUCED PLANS 0 1 2 3

CU 04264
EA 0A5351

DISREGARD PRINTS BEARING EARLIER REVISION DATES

REVISION DATES (PRELIMINARY STAGE ONLY) 10/19/09 3/22/10 5/6/10 8/23/10 11/22/10 05/03/11 SHEET OF

20081178 (20081785T1-6)

18-MAY-2011 11:01

40a535wcST1-0

DIST.	COUNTY	ROUTE	POST MILES TOTAL PROJECT	SHEET NO.	TOTAL SHEETS
04	Sol	12,80	L1.8/L2.0, 13.3/15.7	583	740

Mahrash Harms 05/03/11
REGISTERED STRUCTURAL ENGINEER DATE

REGISTERED PROFESSIONAL ENGINEER MAHRASH M. HARMS No. 2639 Exp.12/31/12 STRUCTURAL STATE OF CALIFORNIA

5-16-11
PLANS APPROVAL DATE

The State of California or its officers or agents shall not be responsible for the accuracy or completeness of electronic copies of this plan sheet.

BIGGS CARDOSA ASSOCIATES
865 THE ALAMEDA
SAN JOSE, CA 95126
408-296-5515

SOLANO TRANSPORTATION AUTHORITY
ONE HARBOR CENTER, SUITE 130
SUISUN CITY, CA 94585

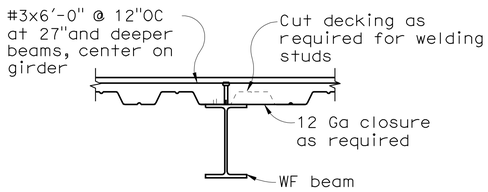

DECK PARALLEL WITH BEAM

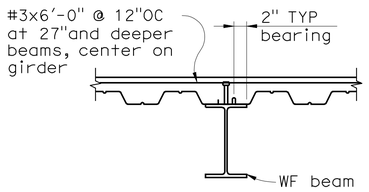

DECK PARALLEL WITH BEAM

SECTION A ST1-7
1" = 1'-0"

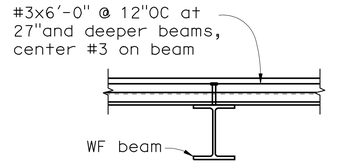

DECK PERPENDICULAR TO BEAM

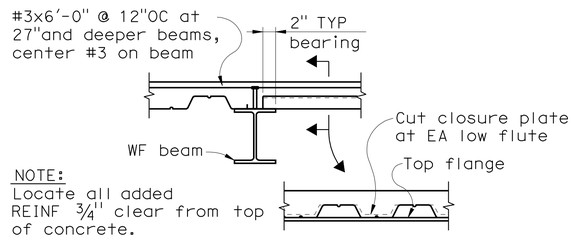

NOTE:
Locate all added REINF 3/4" clear from top of concrete.

DECK DIRECTION CHANGE

SECTION B ST1-7
1" = 1'-0"

CALIFORNIA STATE FIRE MARSHAL
APPROVED
Approval of this plan does not authorize or approve any omission or deviation from applicable regulations. Final approval is subject to field inspection. One set of approved plans shall be available on the project site at all times.
Reviewed by: Hans Hennebergue 5/9/11
Hans Hennebergue
Senior Deputy State Fire Marshal

NOTES:
1. Openings D1 or D2 shall not cut more than 2 webs.
2. Holes less than 6" in greatest dimension & cutting only one web need no reinforcing.
3. Hole groups less than 3'-0" apart shall be reinforced as a single large opening per (3/ST1-7).
4. Deviation from this detail requires structural engineer approval.
5. Remove deck at openings after concrete toppping has cured 7 days MIN.

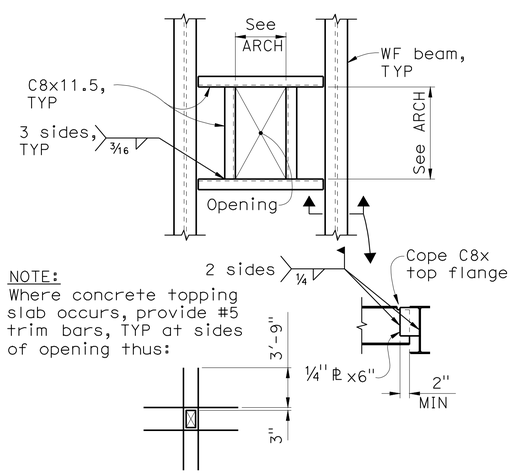

NOTE:
Where concrete topping slab occurs, provide #5 trim bars, TYP at sides of opening thus:

FRAMED DECK OPENING 1 ST1-7
1" = 1'-0"

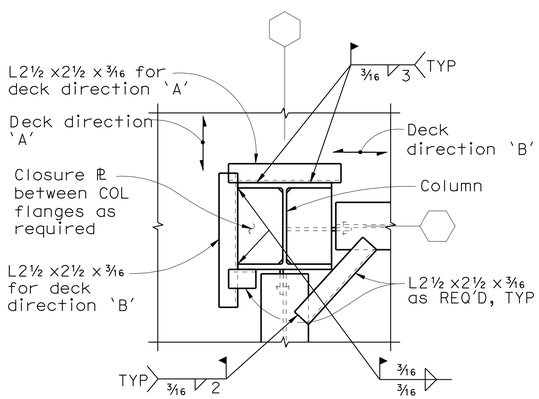

DECK SUPPORT AT COLUMN 2 ST1-7
1" = 1'-0"

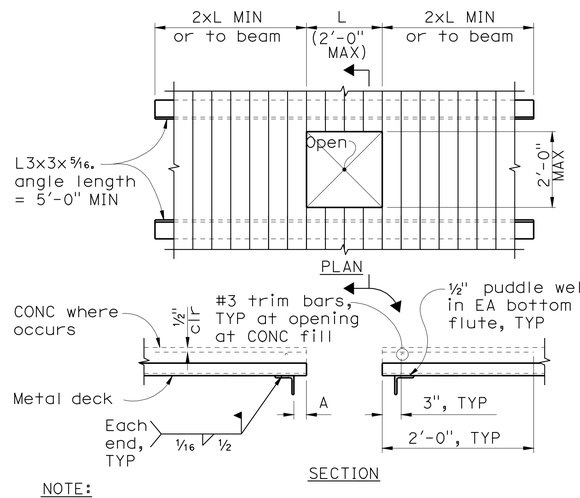

NOTE:
These openings are not shown on framing plans.
A = 2" TYP, adjacent L3x3 may be omitted where distance "A" to a beam flange is 8" or less.

SMALL DECK PENETRATION 3 ST1-7
1" = 1'-0"

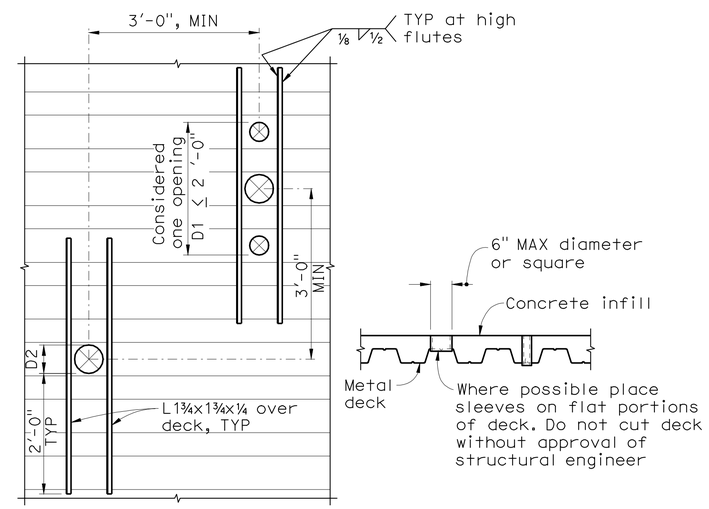

SLEEVE THROUGH METAL DECK 4 ST1-7
3/4" = 1'-0"

DESIGN	BY S. HAYAT	CHECKED D. FURIA	
DETAILS	BY A. RICHARDSON	CHECKED D. FURIA	
QUANTITIES	BY G. TOLAN	CHECKED S. HAYAT	

PREPARED FOR THE STATE OF CALIFORNIA DEPARTMENT OF TRANSPORTATION

DIVISION OF ENGINEERING SERVICES
ARCHITECTURAL AND STRUCTURAL DESIGN

BRIDGE NO. 23W0001R
POST MILE 14.8

EASTBOUND CORDELIA CVEF
CVEF
TYPICAL STEEL DETAILS No. 4

SHEET ST1-7

40a535wcST1-07.dgn
DS OSD imperial Rev. 10/07 18-MAY-2011 11:01

ORIGINAL SCALE IN INCHES FOR REDUCED PLANS 0 1 2 3

CU 04264
EA 0A5351

DISREGARD PRINTS BEARING EARLIER REVISION DATES
REVISION DATES (PRELIMINARY STAGE ONLY) 10/19/09 03/22/10 05/26/10 08/23/10 11/22/10 05/03/11
SHEET OF

20081178 (20081785S1-7)
18-MAY-2011 11:01
40a535wcST1-0

DIST.	COUNTY	ROUTE	POST MILES TOTAL PROJECT	SHEET NO.	TOTAL SHEETS
04	Sol	12,80	L1.8/L2.0, 13.3/15.7	584	740

Mahvash Harms 05/03/11
REGISTERED STRUCTURAL ENGINEER DATE

REGISTERED PROFESSIONAL ENGINEER MAHVASH M. HARMS No. 2639 Exp. 12/31/12 STRUCTURAL STATE OF CALIFORNIA

5-16-11
PLANS APPROVAL DATE

The State of California or its officers or agents shall not be responsible for the accuracy or completeness of electronic copies of this plan sheet.

BIGGS CARDOSA ASSOCIATES
865 THE ALAMEDA
SAN JOSE, CA 95126
408-296-5515

SOLANO TRANSPORTATION AUTHORITY
ONE HARBOR CENTER, SUITE 130
SUISUN CITY, CA 94585

REINFORCED STRUCTURAL MASONRY NOTES:

1. All cells in concrete block construction shall be fully grouted.
2. All vertical steel in walls and columns shall be lapped with dowels of the same size and spacing into the footing unless noted otherwise. Dowels shall be detailed similar to typical wall dowels.
3. Concrete block walls shall have vertical control joints at a spacing approximately equal to the wall height but no greater than 20 feet on center, unless noted otherwise on the plans. Control joints are not to be placed within 4'-0" from any door or window opening. Coordinate all control joint locations with architect prior to construction.
4. Cleanouts shall be provided at the bottom course of every grout pour at each vertical bar.
5. The standard width of both horizontal and vertical mortar joints joints shall be ⅜".
6. Concrete block construction shall be running bond with open ended block.

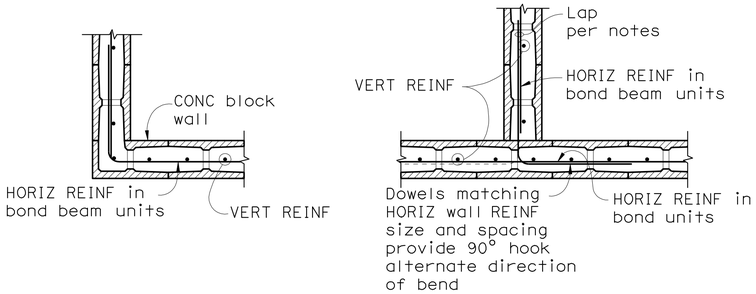

At Corner — At Wall Intersection — At Wall End

SECTION A ST1-8
3/4" = 1'-0"

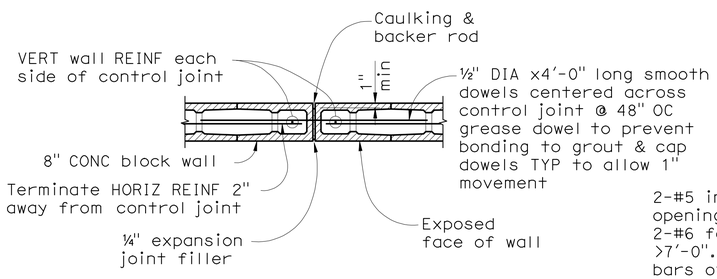

Typ VERT Control Joint
Max control joint spacing = 20'-0" oc

SECTION B ST1-8
3/4" = 1'-0"

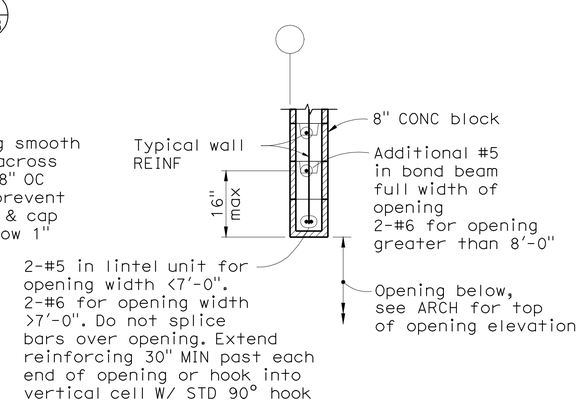

SECTION C ST1-8
3/4" = 1'-0"

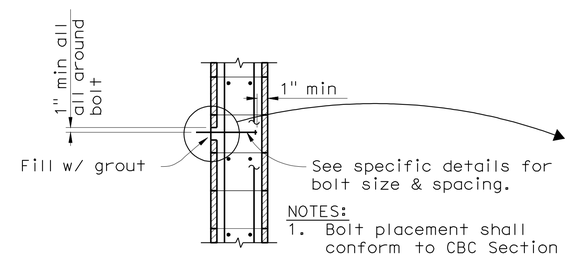

BOLT SIZE	EMBEDMENT
⅛" DIA	4"
5/16" DIA	4½"
¾" DIA	5"
⅞" DIA	6"
1" DIA	7"

NOTES:

1. Bolt placement shall conform to CBC Section 2106.2.14.
2. Use welded washer where oversized or slotted holes are used at contractor's option where a standard round hole would otherwise be required.

SECTION D ST1-8
3/4" = 1'-0"

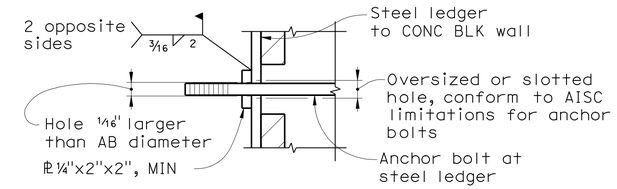

Welded washer option at steel ledger

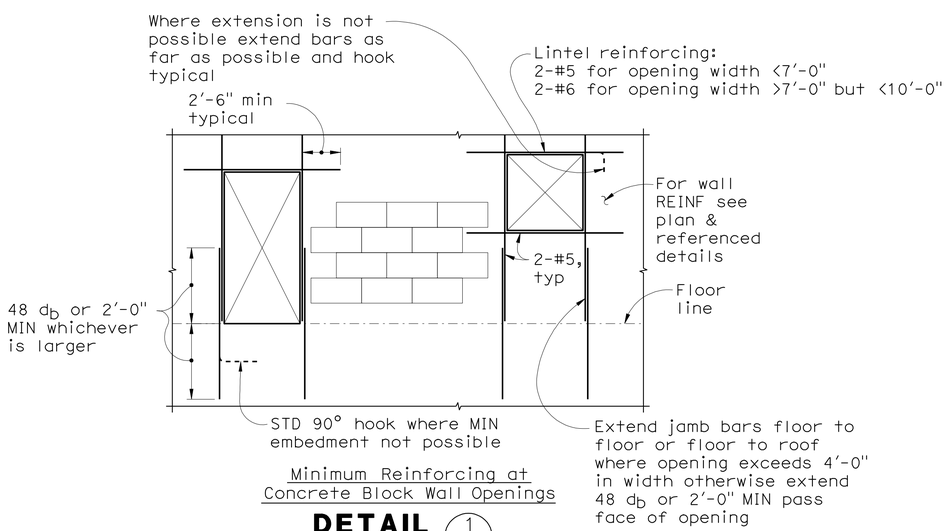

Minimum Reinforcing at Concrete Block Wall Openings

DETAIL 1 ST1-8
1/2" = 1'-0"

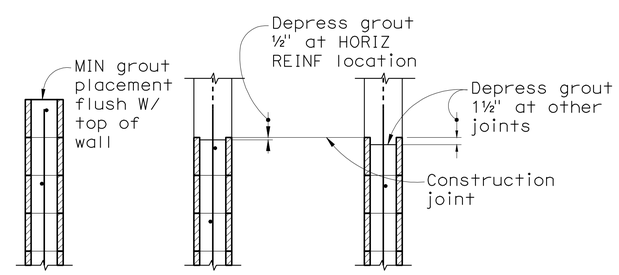

Grout Construction Joints

DETAIL 2 ST1-8
3/4" = 1'-0"

CALIFORNIA STATE FIRE MARSHAL APPROVED

Approval of this plan does not authorize or approve any omission or deviation from applicable regulations. Final approval is subject to field inspection. One set of approved plans shall be available on the project site at all times.

Reviewed by: Hans Hennebarque 5/9/11
Hans Hennebarque
Senior Deputy State Fire Marshal

DESIGN	BY S. HAYAT	CHECKED D. FURIA	
DETAILS	BY A. RICHARDSON	CHECKED D. FURIA	
QUANTITIES	BY G. TOLAN	CHECKED S. HAYAT	

PREPARED FOR THE STATE OF CALIFORNIA DEPARTMENT OF TRANSPORTATION

DIVISION OF ENGINEERING SERVICES
ARCHITECTURAL AND STRUCTURAL DESIGN

BRIDGE NO. 23W0001R
POST MILE 14.8

EASTBOUND CORDELIA CVEF

CVEF — TYPICAL MASONRY DETAILS

SHEET ST1-8

40a535wcST1-08.dgn
DS OSD imperial Rev. 10/07 18-MAY-2011 11:02

ORIGINAL SCALE IN INCHES FOR REDUCED PLANS 0 1 2 3

CU 04264
EA 0A5351

DISREGARD PRINTS BEARING EARLIER REVISION DATES → 10/19/09 3/22/10 5/6/10 8/23/10 11/22/10 05/03/11

REVISION DATES (PRELIMINARY STAGE ONLY) SHEET OF

20081785 (20081785T1-8) 18-MAY-2011 11:02

40a535wcST1-0

NOTES:

1. Top of footing ELEV at office BLDG = [-1'-0"], U.N.O.
   Top of footing ELEV at inspection BLDG = [-1'-8"], U.N.O.
2. For footing schedule, see sheet ST4-1.
3. For typical slab-on-grade sections, see sheets ST1-1 & ST1-2.
4. Centerline of footing is centerline of gridline and column, typical, U.N.O.
5. For steel embedments and blockouts in depressed slab-on-grade areas (shown shaded), see ARCH.
6. For size and location of mechanical unit CONC pads and valve boxes, see MECH.
   For CONC pad REINF, see (C / ST1-2). For valve box anchorage to slab/footing, see (C / ST4-4)
7. For size and location of CONC curbs and openings in CONC walls, see ARCH.
8. For wheel guide layout around inspection pits, see ARCH.
   For wheel guide details, see (D / ST4-3).

DIST.	COUNTY	ROUTE	POST MILES TOTAL PROJECT	SHEET NO.	TOTAL SHEETS
04	Sol	12,80	L1.8/L2.0, 13.3/15.7	585	740

Mahrash Harms 05/03/11
REGISTERED STRUCTURAL ENGINEER DATE

REGISTERED PROFESSIONAL ENGINEER MAHRASH M. HARMS No. 2639 Exp. 12/31/12 STRUCTURAL STATE OF CALIFORNIA

5-16-11
PLANS APPROVAL DATE

The State of California or its officers or agents shall not be responsible for the accuracy or completeness of electronic copies of this plan sheet.

BIGGS CARDOSA ASSOCIATES
865 THE ALAMEDA
SAN JOSE, CA 95126
408-296-5515

SOLANO TRANSPORTATION AUTHORITY
ONE HARBOR CENTER, SUITE 130
SUISUN CITY, CA 94585

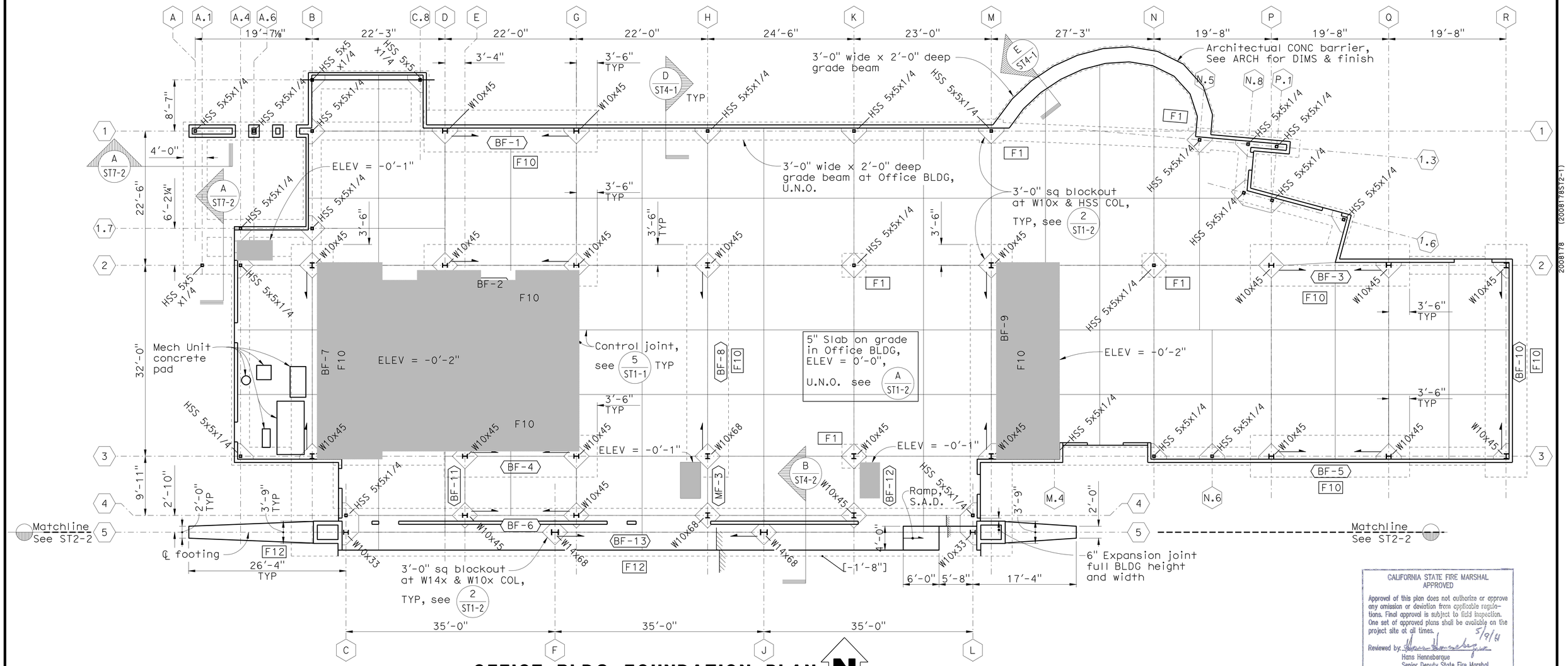

OFFICE BLDG FOUNDATION PLAN

1/8" = 1'-0"

CALIFORNIA STATE FIRE MARSHAL APPROVED

Approval of this plan does not authorize or approve any omission or deviation from applicable regulations. Final approval is subject to field inspection. One set of approved plans shall be available on the project site at all times.

Reviewed by 5/9/11
Hans Henneberque
Senior Deputy State Fire Marshal

DESIGN	BY S. HAYAT	CHECKED D. FURIA	
DETAILS	BY A. RICHARDSON	CHECKED D. FURIA	
QUANTITIES	BY G. TOLAN	CHECKED S. HAYAT	

PREPARED FOR THE STATE OF CALIFORNIA DEPARTMENT OF TRANSPORTATION

DIVISION OF ENGINEERING SERVICES
ARCHITECTURAL AND STRUCTURAL DESIGN

BRIDGE NO. 23W0001R
POST MILE 14.8

EASTBOUND CORDELIA CVEF

CVEF — OFFICE BLDG FOUNDATION PLAN

SHEET **ST2-1**

40a535wcST2-01.dgn
DS OSD imperial Rev. 10/07 18-MAY-2011 11:02

ORIGINAL SCALE IN INCHES FOR REDUCED PLANS 0 1 2 3

CU 04264
EA 0A5351

DISREGARD PRINTS BEARING EARLIER REVISION DATES

REVISION DATES (PRELIMINARY STAGE ONLY) 10/18/09 3/22/10 5/6/10 8/23/10 11/22/10 05/03/11

SHEET OF

18-MAY-2011 11:02 (20081178 ST2-1)

40a535wcST2-0

NOTE:
For notes, see sheet ST2-1.

DIST.	COUNTY	ROUTE	POST MILES TOTAL PROJECT	SHEET NO.	TOTAL SHEETS
04	Sol	12,80	L1.8/L2.0, 13.3/15.7	586	740

Mahvash Harms 05/03/11
REGISTERED STRUCTURAL ENGINEER DATE

REGISTERED PROFESSIONAL ENGINEER MAHVASH M. HARMS No. 2639 Exp. 12/31/12 STRUCTURAL STATE OF CALIFORNIA

5-16-11
PLANS APPROVAL DATE

The State of California or its officers or agents shall not be responsible for the accuracy or completeness of electronic copies of this plan sheet.

BIGGS CARDOSA ASSOCIATES
865 THE ALAMEDA
SAN JOSE, CA 95126
408-296-5515

SOLANO TRANSPORTATION AUTHORITY
ONE HARBOR CENTER, SUITE 130
SUISUN CITY, CA 94585

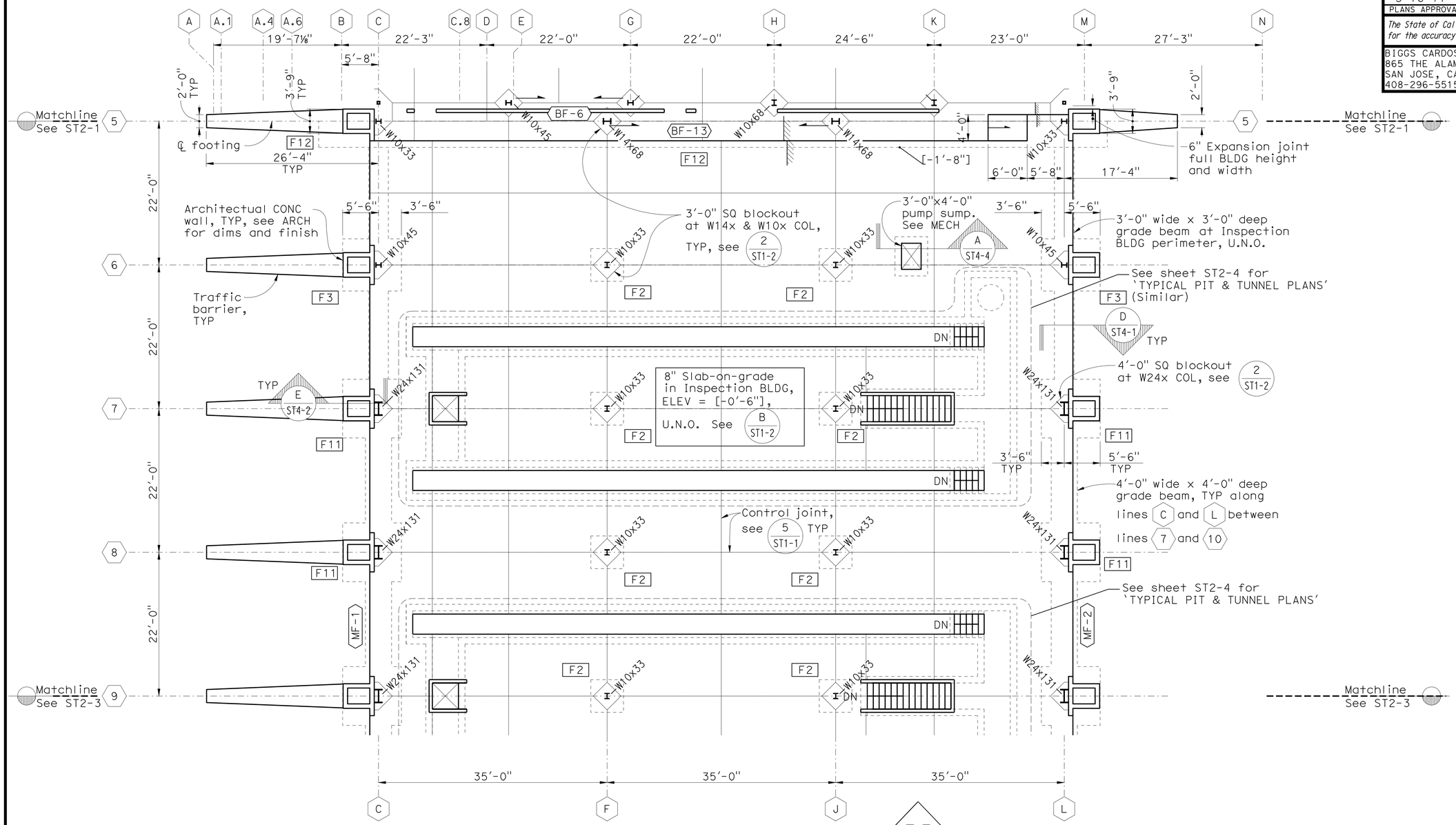

INSPECTION BLDG FOUNDATION PLAN

1/8" = 1'-0"

CALIFORNIA STATE FIRE MARSHAL APPROVED
Approval of this plan does not authorize or approve any omission or deviation from applicable regulations. Final approval is subject to field inspection. One set of approved plans shall be available on the project site at all times.
Reviewed by: 5/9/11
Hans Henneberque
Senior Deputy State Fire Marshal

DESIGN	BY S. HAYAT	CHECKED D. FURIA	
DETAILS	BY A. RICHARDSON	CHECKED D. FURIA	
QUANTITIES	BY G. TOLAN	CHECKED S. HAYAT	

PREPARED FOR THE STATE OF CALIFORNIA DEPARTMENT OF TRANSPORTATION

DIVISION OF ENGINEERING SERVICES
ARCHITECTURAL AND STRUCTURAL DESIGN

BRIDGE NO. 23W0001R
POST MILE 14.8

EASTBOUND CORDELIA CVEF

CVEF | INSPECTION BLDG FOUNDATION PLAN - NORTH

SHEET ST2-2

40a535wcST2-02.dgn
DS OSD imperial Rev. 10/07 18-MAY-2011 11:02

ORIGINAL SCALE IN INCHES FOR REDUCED PLANS 0 1 2 3

CU 04264
EA 0A5351

DISREGARD PRINTS BEARING EARLIER REVISION DATES → 10/19/09 03/22/10 05/07/10 08/23/10 11/22/10 05/03/11

REVISION DATES (PRELIMINARY STAGE ONLY) SHEET OF

20081178 (20081178S12-2)

18-MAY-2011 11:02

40a535wcST2-0

NOTE:
For notes, see sheet ST2-1.

DIST.	COUNTY	ROUTE	POST MILES TOTAL PROJECT	SHEET NO.	TOTAL SHEETS
04	Sol	12,80	L1.8/L2.0, 13.3/15.7	587	740

Mahrash Harris 05/03/11
REGISTERED STRUCTURAL ENGINEER DATE

REGISTERED PROFESSIONAL ENGINEER MAHRASH M. HARRIS No. 2639 Exp. 12/31/12 STRUCTURAL STATE OF CALIFORNIA

5-16-11
PLANS APPROVAL DATE

The State of California or its officers or agents shall not be responsible for the accuracy or completeness of electronic copies of this plan sheet.

BIGGS CARDOSA ASSOCIATES
865 THE ALAMEDA
SAN JOSE, CA 95126
408-296-5515

SOLANO TRANSPORTATION AUTHORITY
ONE HARBOR CENTER, SUITE 130
SUISUN CITY, CA 94585

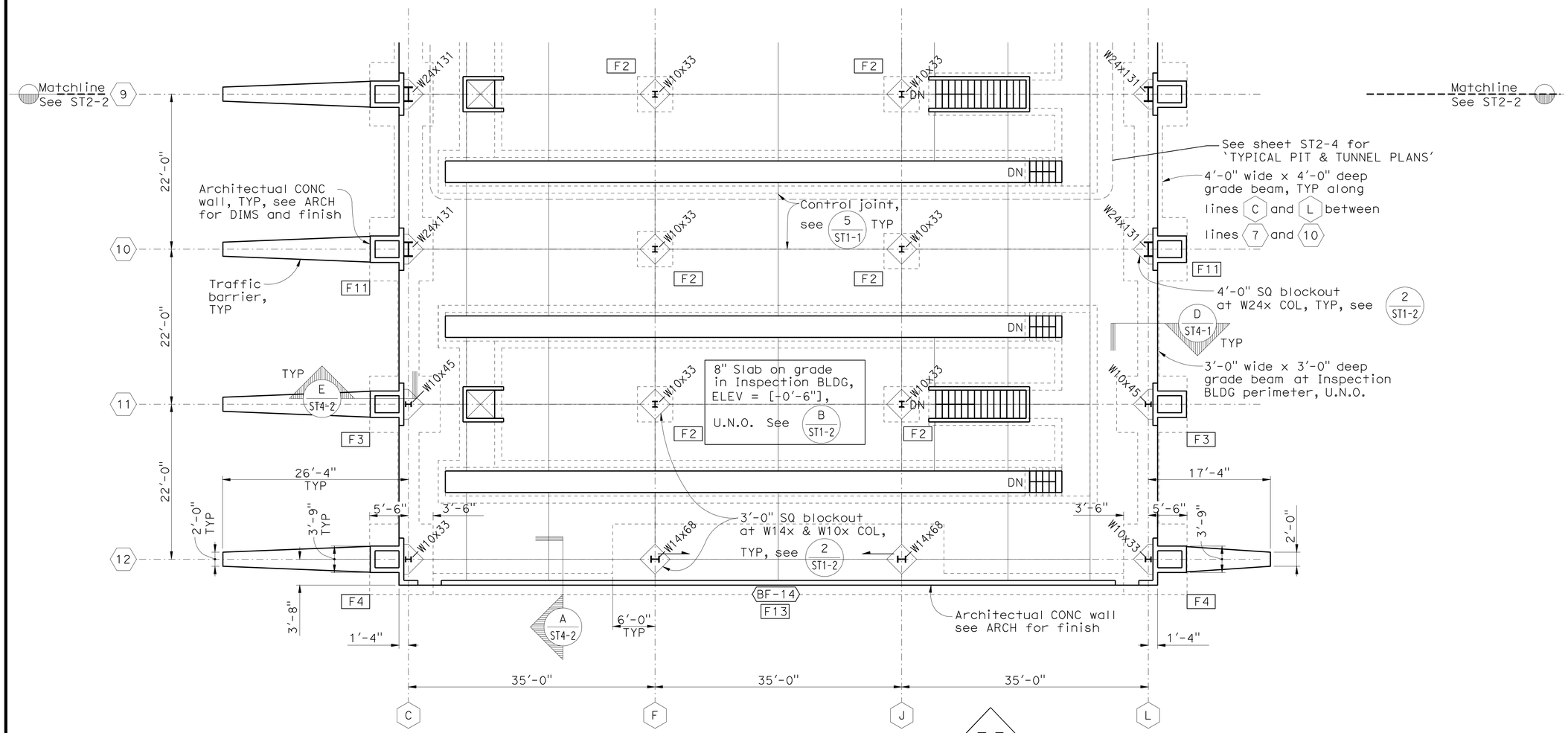

INSPECTION BLDG FOUNDATION PLAN

1/8" = 1'-0"

CALIFORNIA STATE FIRE MARSHAL APPROVED

Approval of this plan does not authorize or approve any omission or deviation from applicable regulations. Final approval is subject to field inspection. One set of approved plans shall be available on the project site at all times.

Reviewed by: 5/9/11
Hans Hennebergue
Senior Deputy State Fire Marshal

DESIGN	BY S. HAYAT	CHECKED D. FURIA	
DETAILS	BY A. RICHARDSON	CHECKED D. FURIA	
QUANTITIES	BY G. TOLAN	CHECKED S. HAYAT	

PREPARED FOR THE STATE OF CALIFORNIA DEPARTMENT OF TRANSPORTATION

DIVISION OF ENGINEERING SERVICES
ARCHITECTURAL AND STRUCTURAL DESIGN

BRIDGE NO. 23W0001R
POST MILE 14.8

EASTBOUND CORDELIA CVEF

CVEF | INSPECTION BLDG FOUNDATION PLAN - SOUTH

SHEET **ST2-3**

40a535wcST2-03.dgn
DS OSD imperial Rev. 10/07 18-MAY-2011 11:02

ORIGINAL SCALE IN INCHES FOR REDUCED PLANS 0 1 2 3

CU 04264
EA 0A5351

DISREGARD PRINTS BEARING EARLIER REVISION DATES

REVISION DATES (PRELIMINARY STAGE ONLY) 10/19/09 3/22/10 5/6/10 8/23/10 11/22/10 05/03/11

SHEET OF

18-MAY-2011 11:02

40a535wcST2-0

(20081785\2-3) 20081785

DIST.	COUNTY	ROUTE	POST MILES TOTAL PROJECT	SHEET NO.	TOTAL SHEETS
04	Sol	12,80	L1.8/L2.0, 13.3/15.7	588	740

Mahvash Harris 05/03/11
REGISTERED STRUCTURAL ENGINEER DATE

REGISTERED PROFESSIONAL ENGINEER MAHVASH M. HARRIS No. 2639 Exp. 12/31/12 STRUCTURAL STATE OF CALIFORNIA

5-16-11
PLANS APPROVAL DATE

The State of California or its officers or agents shall not be responsible for the accuracy or completeness of electronic copies of this plan sheet.

BIGGS CARDOSA ASSOCIATES
865 THE ALAMEDA
SAN JOSE, CA 95126
408-296-5515

SOLANO TRANSPORTATION AUTHORITY
ONE HARBOR CENTER, SUITE 130
SUISUN CITY, CA 94585

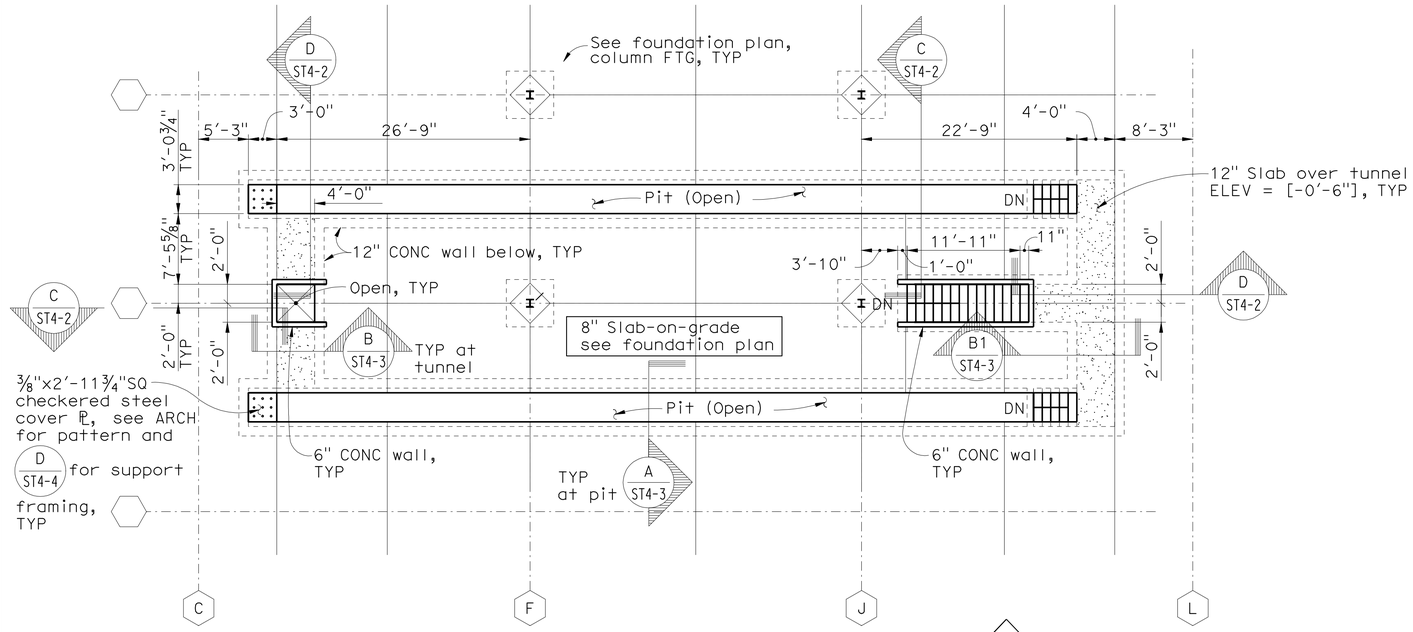

PIT/TUNNEL FIRST FLOOR PLAN

1/8" = 1'-0"

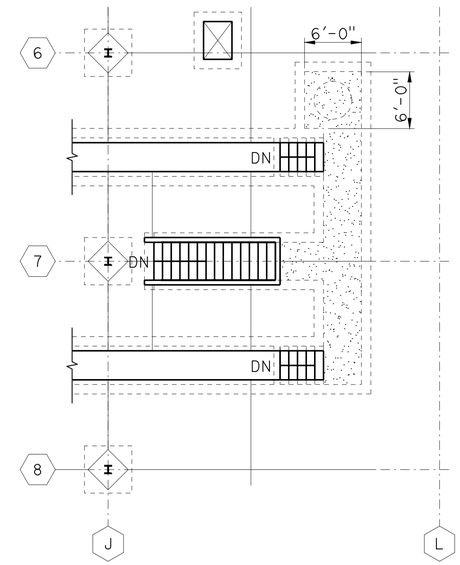

PARTIAL PIT/TUNNEL FIRST FLOOR PLAN

1/8" = 1'-0"

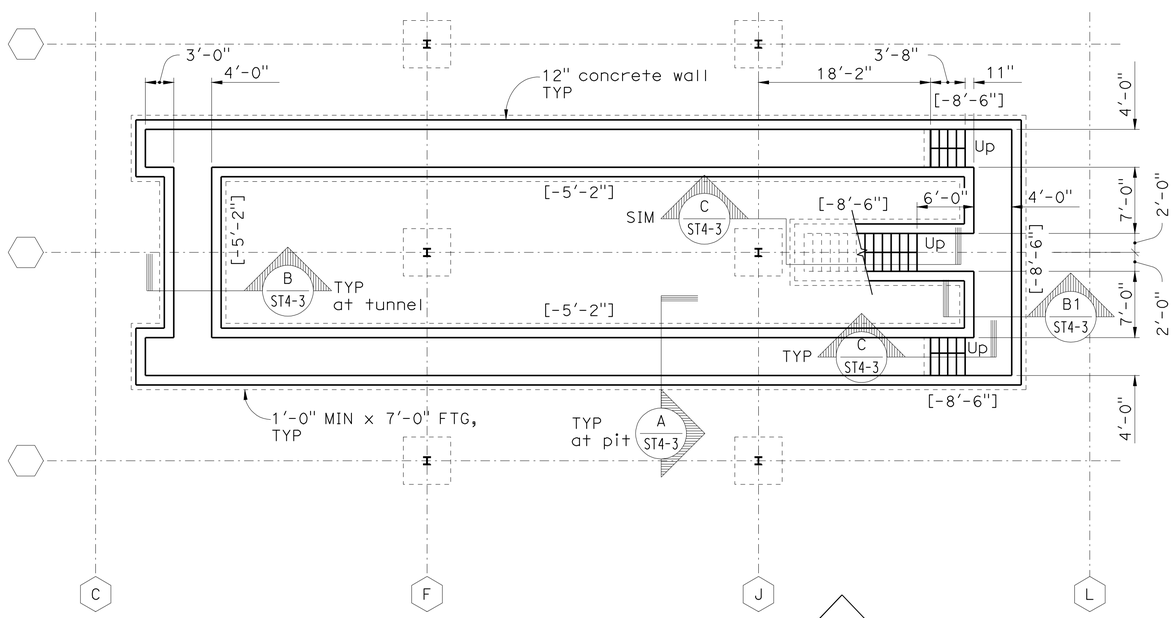

PIT/TUNNEL FLOOR PLAN

1/8" = 1'-0"

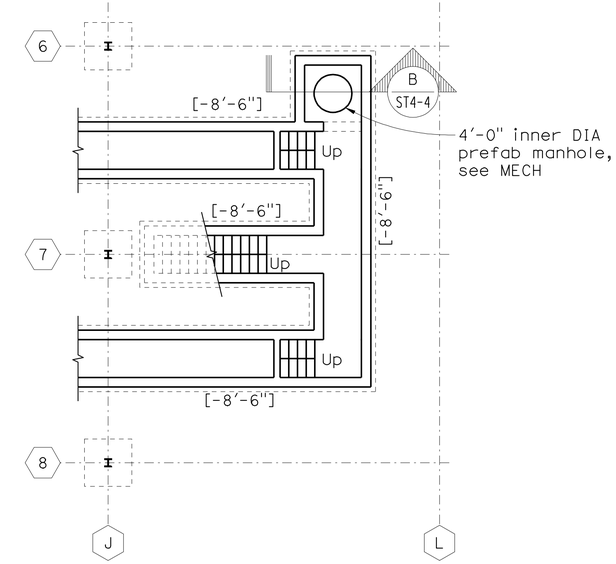

PARTIAL PIT/TUNNEL FLOOR PLAN

1/8" = 1'-0"

CALIFORNIA STATE FIRE MARSHAL APPROVED

Approval of this plan does not authorize or approve any omission or deviation from applicable regulations. Final approval is subject to field inspection. One set of approved plans shall be available on the project site at all times.

Reviewed by: Hans Hennebergue 5/9/11
Hans Hennebergue
Senior Deputy State Fire Marshal

DESIGN	BY S. HAYAT	CHECKED D. FURIA	
DETAILS	BY A. RICHARDSON	CHECKED D. FURIA	
QUANTITIES	BY G. TOLAN	CHECKED S. HAYAT	

PREPARED FOR THE STATE OF CALIFORNIA DEPARTMENT OF TRANSPORTATION

DIVISION OF ENGINEERING SERVICES
ARCHITECTURAL AND STRUCTURAL DESIGN

BRIDGE NO. 23W0001R
POST MILE 14.8

EASTBOUND CORDELIA CVEF

CVEF — TYPICAL PIT AND TUNNEL PLANS

SHEET ST2-4

40a535wcST2-04.dgn
DS OSD imperial Rev. 10/07 18-MAY-2011 11:02

ORIGINAL SCALE IN INCHES FOR REDUCED PLANS 0 1 2 3

CU 04264
EA 0A5351

DISREGARD PRINTS BEARING EARLIER REVISION DATES

REVISION DATES (PRELIMINARY STAGE ONLY) 10/19/09 3/22/10 5/6/10 8/23/10 11/22/10 05/03/11

SHEET OF

20081178

18-MAY-2011 11:02 (20081178S12-4)

40a535wcST2-0

NOTES:

1. Top of steel ELEV at office BLDG = +13'-6", U.N.O.
   Top of steel ELEV at inspection BLDG = +23'-6", U.N.O.
2. For typical steel details, see sheets ST1-4 through ST1-7.
3. Shear studs at beams supporting mechanical room floor (steel deck type SD3): ¾" DIA headed studs @ 12"oc.
4. For roof/floor opening sizes and locations, see ARCH.
5. For mechanical unit sizes, locations, anchorage details, and pads, see MECH.
6. Coordinate beam locations at mechanical units and roof/floor openings with MECH and ARCH.
7. For details of screen frames above doors on Line C & L, see sheet ST7-2. For screen frame locations and dimensions, see ARCH.

DIST.	COUNTY	ROUTE	POST MILES TOTAL PROJECT	SHEET NO.	TOTAL SHEETS
04	Sol	12,80	L1.8/L2.0, 13.3/15.7	589	740

Mahrash Harms 05/03/11
REGISTERED STRUCTURAL ENGINEER DATE

REGISTERED PROFESSIONAL ENGINEER MAHRASH M. HARMS No. 2639 Exp. 12/31/12 STRUCTURAL STATE OF CALIFORNIA

5-16-11
PLANS APPROVAL DATE

The State of California or its officers or agents shall not be responsible for the accuracy or completeness of electronic copies of this plan sheet.

BIGGS CARDOSA ASSOCIATES
865 THE ALAMEDA
SAN JOSE, CA 95126
408-296-5515

SOLANO TRANSPORTATION AUTHORITY
ONE HARBOR CENTER, SUITE 130
SUISUN CITY, CA 94585

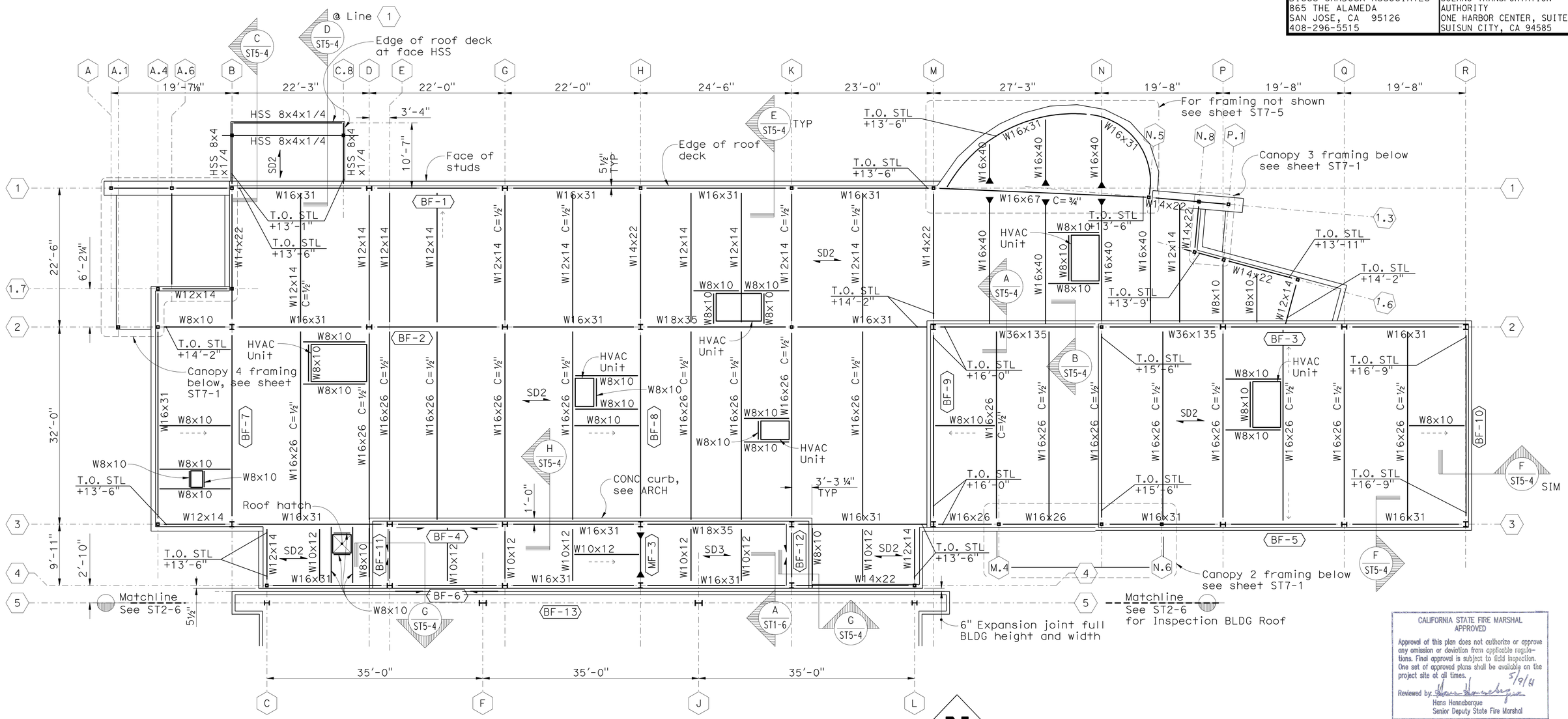

OFFICE BLDG ROOF/2ND FLOOR PLAN

1/8" = 1'-0"

CALIFORNIA STATE FIRE MARSHAL APPROVED

Approval of this plan does not authorize or approve any omission or deviation from applicable regulations. Final approval is subject to field inspection. One set of approved plans shall be available on the project site at all times.

Reviewed by: Hans Henneberque 5/9/11
Hans Henneberque
Senior Deputy State Fire Marshal

DESIGN	BY S. HAYAT	CHECKED D. FURIA	
DETAILS	BY A. RICHARDSON	CHECKED D. FURIA	
QUANTITIES	BY G. TOLAN	CHECKED S. HAYAT	

PREPARED FOR THE STATE OF CALIFORNIA DEPARTMENT OF TRANSPORTATION

DIVISION OF ENGINEERING SERVICES ARCHITECTURAL AND STRUCTURAL DESIGN

CU 04264
EA 0A5351

BRIDGE NO. 23W0001R
POST MILE 14.8

EASTBOUND CORDELIA CVEF

CVEF — OFFICE BLDG ROOF/SECOND FLOOR PLAN

SHEET ST2-5

DISREGARD PRINTS BEARING EARLIER REVISION DATES → 10/19/09 3/22/10 5/6/10 8/23/10 11/22/10 05/03/11

REVISION DATES (PRELIMINARY STAGE ONLY) SHEET OF

ORIGINAL SCALE IN INCHES FOR REDUCED PLANS 0 1 2 3

40a535wcST2-05.dgn
DS OSD imperial Rev. 10/07 18-MAY-2011 11:02

40a535wcST2-0

20081718 (20081785\2-5)
18-MAY-2011 11:02

NOTE:
For notes, see sheet ST2-5.

DIST.	COUNTY	ROUTE	POST MILES TOTAL PROJECT	SHEET NO.	TOTAL SHEETS
04	Sol	12,80	L1.8/L2.0, 13.3/15.7	590	740

Mahvash Harms 05/03/11
REGISTERED STRUCTURAL ENGINEER DATE

REGISTERED PROFESSIONAL ENGINEER MAHVASH M. HARMS No. 2639 Exp.12/31/12 STRUCTURAL STATE OF CALIFORNIA

5-16-11
PLANS APPROVAL DATE

The State of California or its officers or agents shall not be responsible for the accuracy or completeness of electronic copies of this plan sheet.

BIGGS CARDOSA ASSOCIATES
865 THE ALAMEDA
SAN JOSE, CA 95126
408-296-5515

SOLANO TRANSPORTATION AUTHORITY
ONE HARBOR CENTER, SUITE 130
SUISUN CITY, CA 94585

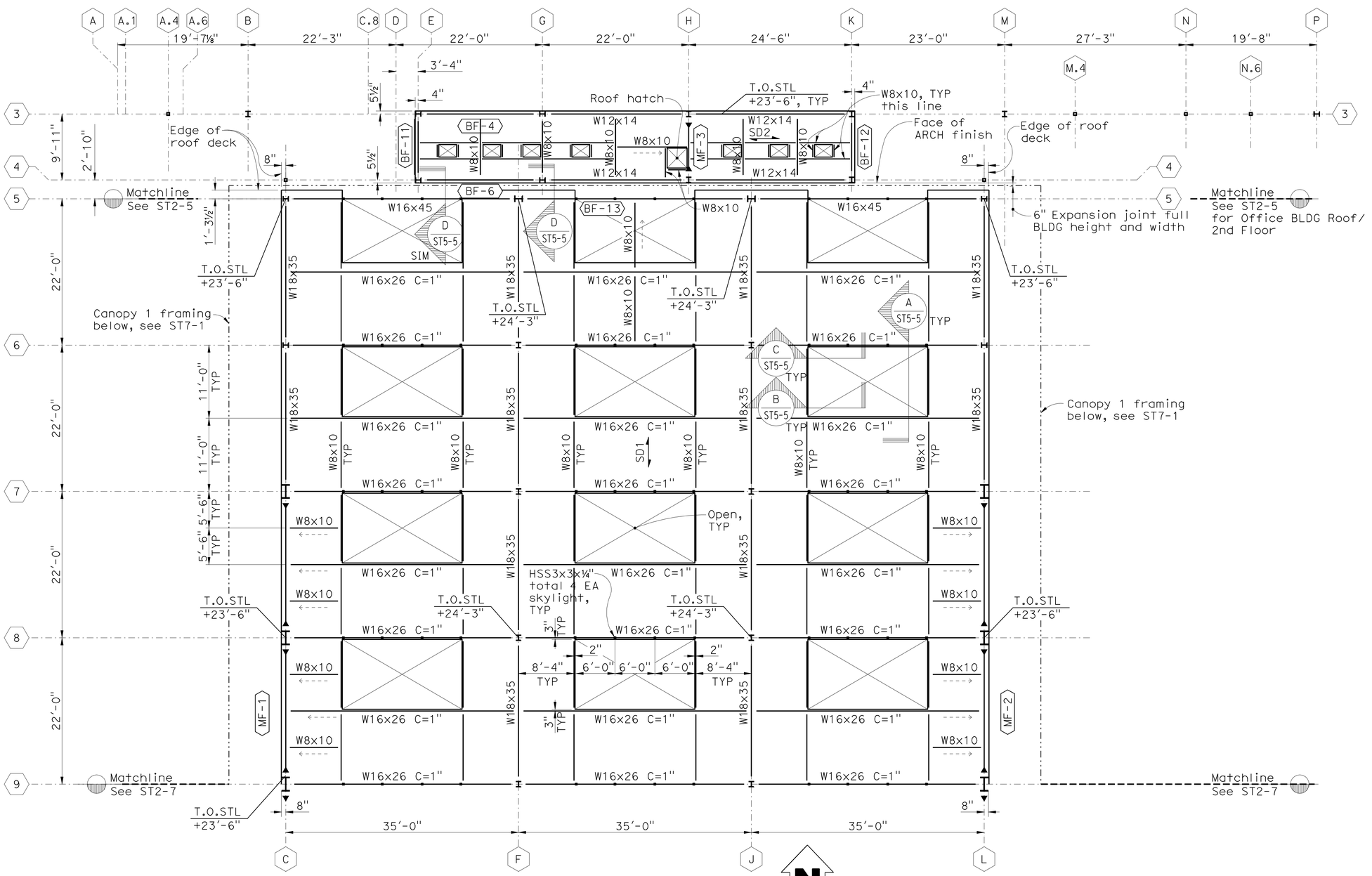

INSPECTION BLDG ROOF PLAN

1/8" = 1'-0"

CALIFORNIA STATE FIRE MARSHAL APPROVED

Approval of this plan does not authorize or approve any omission or deviation from applicable regulations. Final approval is subject to field inspection. One set of approved plans shall be available on the project site at all times.

Reviewed by: Hans Henneberque 5/9/11
Hans Henneberque
Senior Deputy State Fire Marshal

	BY	CHECKED
DESIGN	S. HAYAT	D. FURIA
DETAILS	A. RICHARDSON	D. FURIA
QUANTITIES	G. TOLAN	S. HAYAT

PREPARED FOR THE STATE OF CALIFORNIA DEPARTMENT OF TRANSPORTATION

DIVISION OF ENGINEERING SERVICES
ARCHITECTURAL AND STRUCTURAL DESIGN

BRIDGE NO. 23W0001R
POST MILE 14.8

EASTBOUND CORDELIA CVEF

CVEF

INSPECTION BLDG ROOF PLAN - NORTH

SHEET ST2-6

40a535wcST2-06.dgn
DS OSD imperial Rev. 10/07 18-MAY-2011 11:02

ORIGINAL SCALE IN INCHES FOR REDUCED PLANS 0 1 2 3

CU 04264
EA 0A5351

DISREGARD PRINTS BEARING EARLIER REVISION DATES

REVISION DATES (PRELIMINARY STAGE ONLY) 10/19/09 3/22/10 5/6/10 8/23/10 11/22/10 05/03/11 SHEET OF

20081178 (20081178S12-6)

18-MAY-2011 11:02

40a535wcST2-0

NOTE:
For notes, see sheet ST2-5.

DIST.	COUNTY	ROUTE	POST MILES TOTAL PROJECT	SHEET NO.	TOTAL SHEETS
04	Sol	12,80	L1.8/L2.0, 13.3/15.7	591	740

Mahrash Harris 05/03/11
REGISTERED STRUCTURAL ENGINEER DATE

REGISTERED PROFESSIONAL ENGINEER MAHRASH M. HARRIS No. 2639 Exp.12/31/12 STRUCTURAL STATE OF CALIFORNIA

5-16-11
PLANS APPROVAL DATE

The State of California or its officers or agents shall not be responsible for the accuracy or completeness of electronic copies of this plan sheet.

BIGGS CARDOSA ASSOCIATES
865 THE ALAMEDA
SAN JOSE, CA 95126
408-296-5515

SOLANO TRANSPORTATION AUTHORITY
ONE HARBOR CENTER, SUITE 130
SUISUN CITY, CA 94585

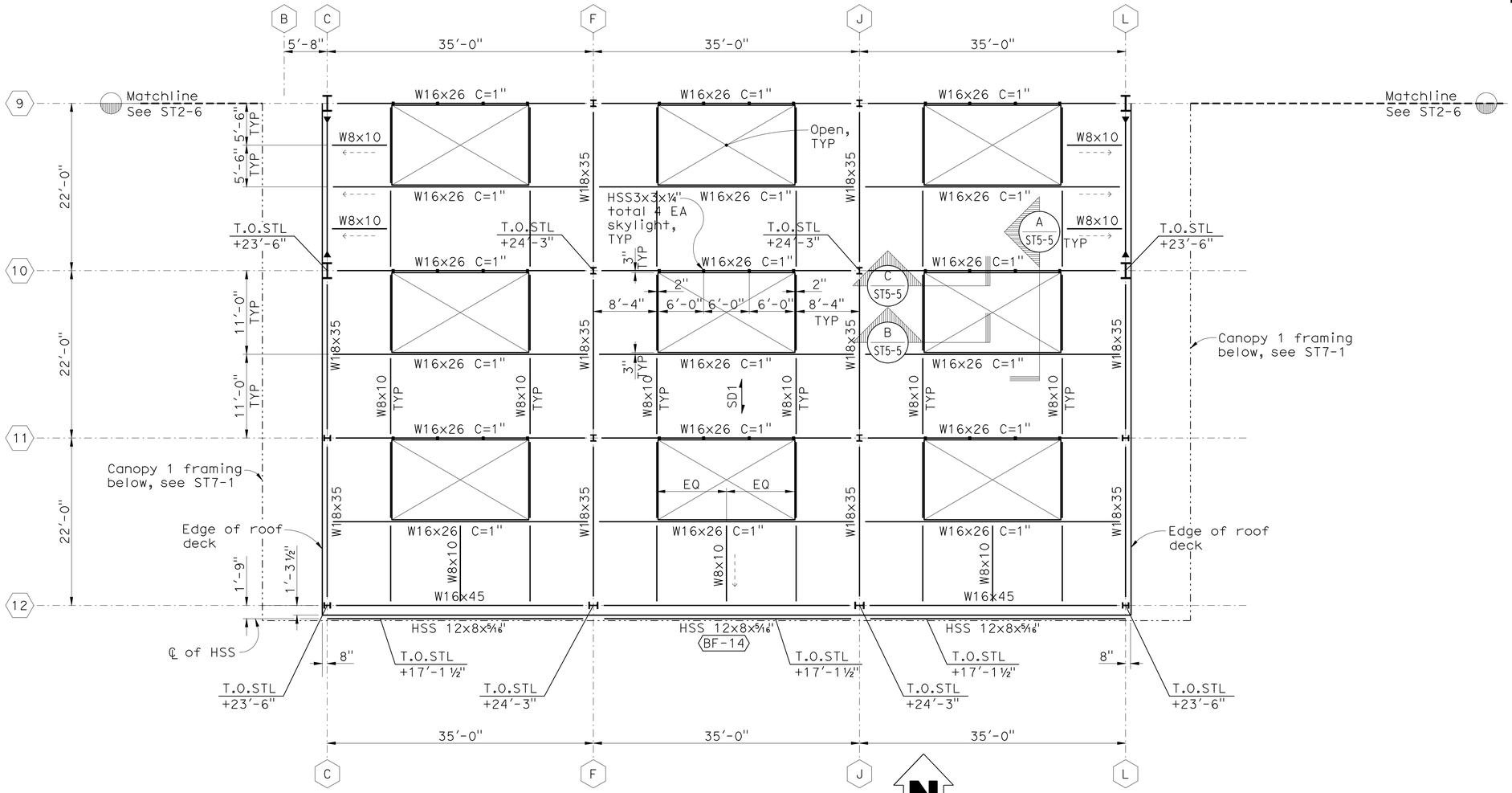

INSPECTION BLDG ROOF PLAN

1/8" = 1'-0"

CALIFORNIA STATE FIRE MARSHAL APPROVED

Approval of this plan does not authorize or approve any omission or deviation from applicable regulations. Final approval is subject to field inspection. One set of approved plans shall be available on the project site at all times.

Reviewed by: Hans Henneberque 5/9/11
Hans Henneberque
Senior Deputy State Fire Marshal

DESIGN	BY S. HAYAT	CHECKED D. FURIA	
DETAILS	BY A. RICHARDSON	CHECKED D. FURIA	
QUANTITIES	BY G. TOLAN	CHECKED S. HAYAT	

PREPARED FOR THE STATE OF CALIFORNIA DEPARTMENT OF TRANSPORTATION

DIVISION OF ENGINEERING SERVICES
ARCHITECTURAL AND STRUCTURAL DESIGN

BRIDGE NO. 23W0001R
POST MILE 14.8

EASTBOUND CORDELIA CVEF

CVEF — INSPECTION BLDG ROOF PLAN - SOUTH

SHEET ST2-7

40a535wcST2-07.dgn
DS OSD imperial Rev. 10/07 18-MAY-2011 11:02

ORIGINAL SCALE IN INCHES FOR REDUCED PLANS 0 1 2 3

CU 04264
EA 0A5351

DISREGARD PRINTS BEARING EARLIER REVISION DATES → 10/18/09 3/22/10 5/6/10 8/23/10 11/22/10 05/03/11

REVISION DATES (PRELIMINARY STAGE ONLY) SHEET OF

20081178 (20081178S12-7)

18-MAY-2011 11:02

40a535wcST2-0

DIST.	COUNTY	ROUTE	POST MILES TOTAL PROJECT	SHEET NO.	TOTAL SHEETS
04	Sol	12,80	L1.8/L2.0, 13.3/15.7	592	740

Mahrash Harris 05/03/11
REGISTERED STRUCTURAL ENGINEER DATE

REGISTERED PROFESSIONAL ENGINEER MAHRASH M. HARRIS No. 2639 Exp. 12/31/12 STRUCTURAL STATE OF CALIFORNIA

5-16-11
PLANS APPROVAL DATE

The State of California or its officers or agents shall not be responsible for the accuracy or completeness of electronic copies of this plan sheet.

BIGGS CARDOSA ASSOCIATES
865 THE ALAMEDA
SAN JOSE, CA 95126
408-296-5515

SOLANO TRANSPORTATION AUTHORITY
ONE HARBOR CENTER, SUITE 130
SUISUN CITY, CA 94585

Note:

See 2/ST5-3 for extent of braced frames where architectural attachments are prohibited.

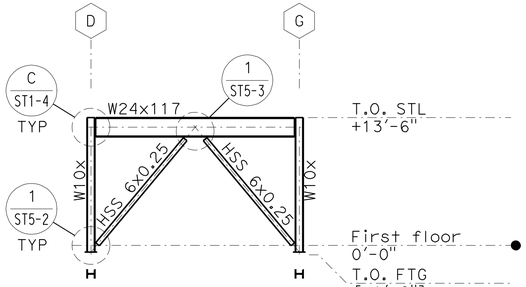

BF ELEVATION BF-1
1/8" = 1'-0"

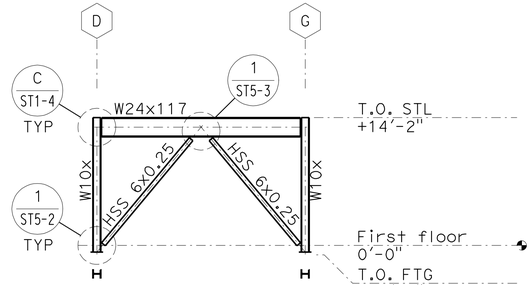

BF ELEVATION BF-2
1/8" = 1'-0"

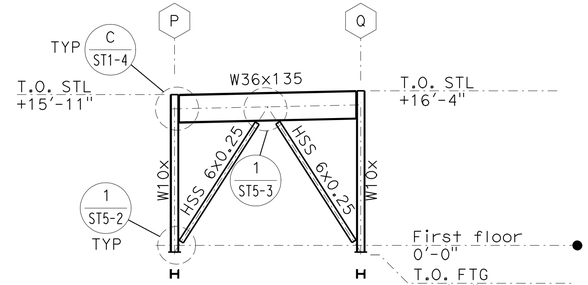

BF ELEVATION BF-3
1/8" = 1'-0"

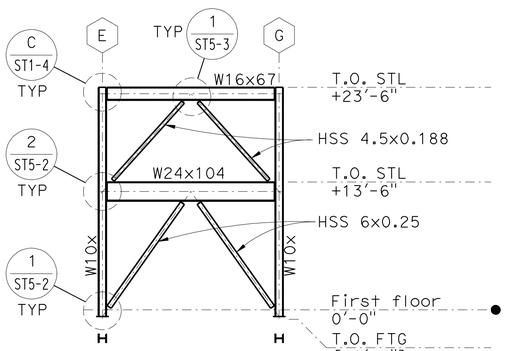

BF ELEVATION BF-4
1/8" = 1'-0"

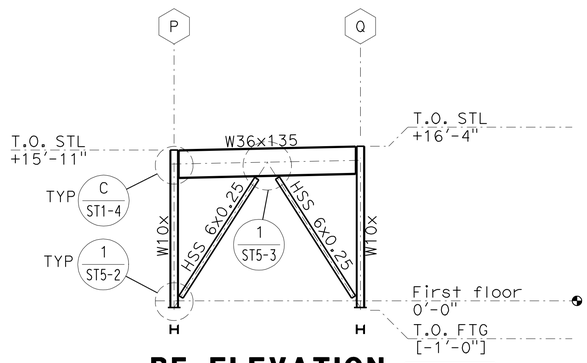

BF ELEVATION BF-5
1/8" = 1'-0"

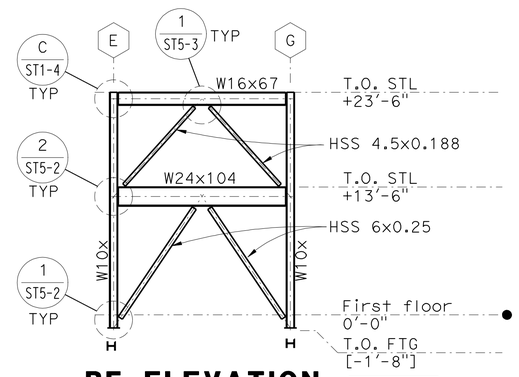

BF ELEVATION BF-6
1/8" = 1'-0"

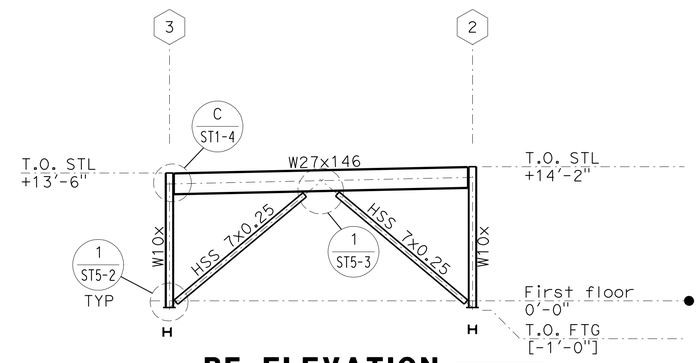

BF ELEVATION BF-7
1/8" = 1'-0"

CALIFORNIA STATE FIRE MARSHAL
APPROVED

Approval of this plan does not authorize or approve any omission or deviation from applicable regulations. Final approval is subject to field inspection. One set of approved plans shall be available on the project site at all times.

Reviewed by: 5/9/11
Hans Hennebergue
Senior Deputy State Fire Marshal

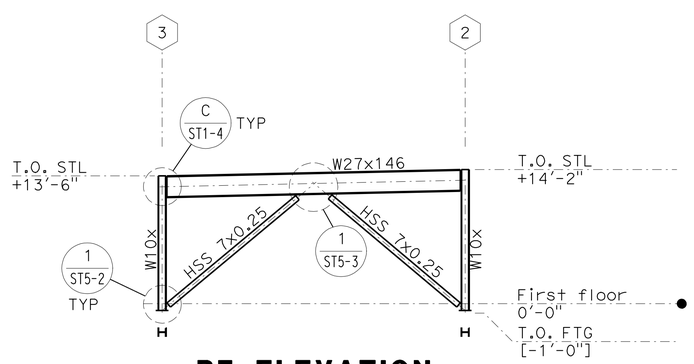

BF ELEVATION BF-8
1/8" = 1'-0"

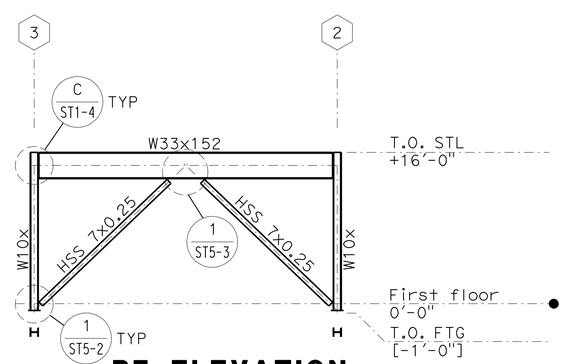

BF ELEVATION BF-9
1/8" = 1'-0"

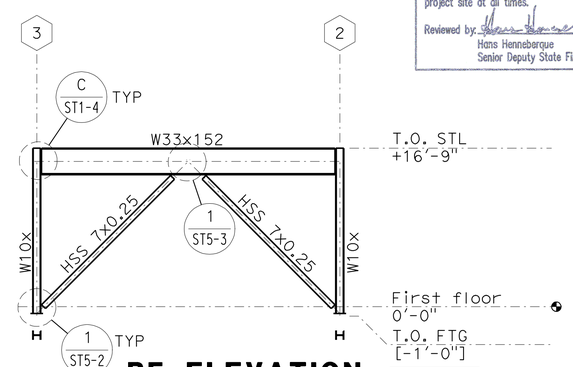

BF ELEVATION BF-10
1/8" = 1'-0"

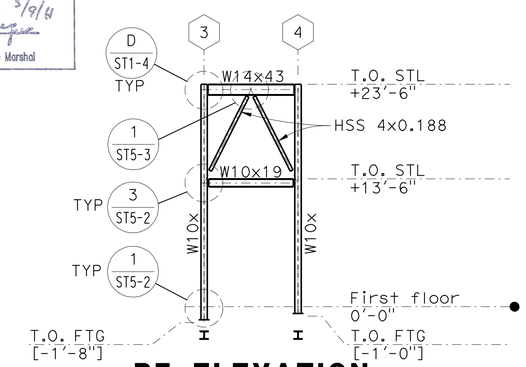

BF ELEVATION BF-11
1/8" = 1'-0"

Note: See 2/ST5-3 for extent of braced frames where architectural attachments are prohibited.

DESIGN	BY S. HAYAT	CHECKED D. FURIA	
DETAILS	BY A. RICHARDSON	CHECKED D. FURIA	
QUANTITIES	BY G. TOLAN	CHECKED S. HAYAT	

PREPARED FOR THE STATE OF CALIFORNIA DEPARTMENT OF TRANSPORTATION

DIVISION OF ENGINEERING SERVICES
ARCHITECTURAL AND STRUCTURAL DESIGN

BRIDGE NO. 23W0001R
POST MILE 14.8

EASTBOUND CORDELIA CVEF
CVEF
BRACED FRAME ELEVATIONS No. 1

SHEET ST3-1

40a535wcST3-01.dgn
DS OSD imperial Rev. 10/07 18-MAY-2011 11:14

ORIGINAL SCALE IN INCHES FOR REDUCED PLANS 0 1 2 3

CU 04264
EA 0A5351

DISREGARD PRINTS BEARING EARLIER REVISION DATES

REVISION DATES (PRELIMINARY STAGE ONLY) 10/19/09 3/22/10 5/6/10 8/23/10 11/22/10 05/03/11

SHEET OF

20081178 (20081785 13-1)

18-MAY-2011 11:14

40a535wcST3-0

DIST.	COUNTY	ROUTE	POST MILES TOTAL PROJECT	SHEET NO.	TOTAL SHEETS
04	Sol	12,80	L1.8/L2.0, 13.3/15.7	593	740

REGISTERED STRUCTURAL ENGINEER 05/03/11 DATE

REGISTERED PROFESSIONAL ENGINEER MAHVASH M. HARRIS No. 2639 Exp.12/31/12 STRUCTURAL STATE OF CALIFORNIA

5-16-11
PLANS APPROVAL DATE

The State of California or its officers or agents shall not be responsible for the accuracy or completeness of electronic copies of this plan sheet.

BIGGS CARDOSA ASSOCIATES
865 THE ALAMEDA
SAN JOSE, CA 95126
408-296-5515

SOLANO TRANSPORTATION AUTHORITY
ONE HARBOR CENTER, SUITE 130
SUISUN CITY, CA 94585

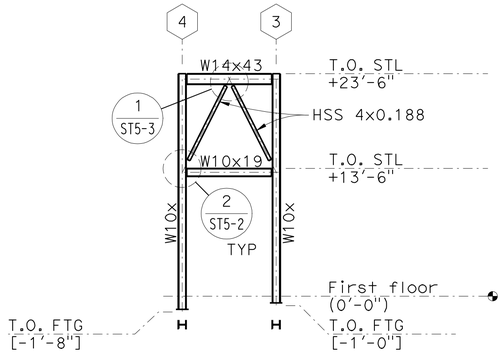

BF ELEVATION BF-12
1/8" = 1'-0"

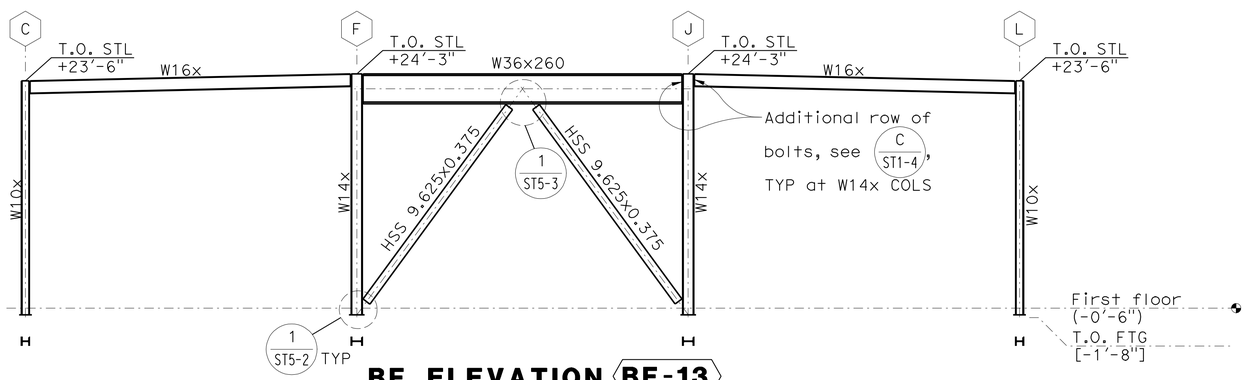

BF ELEVATION BF-13
1/8" = 1'-0"

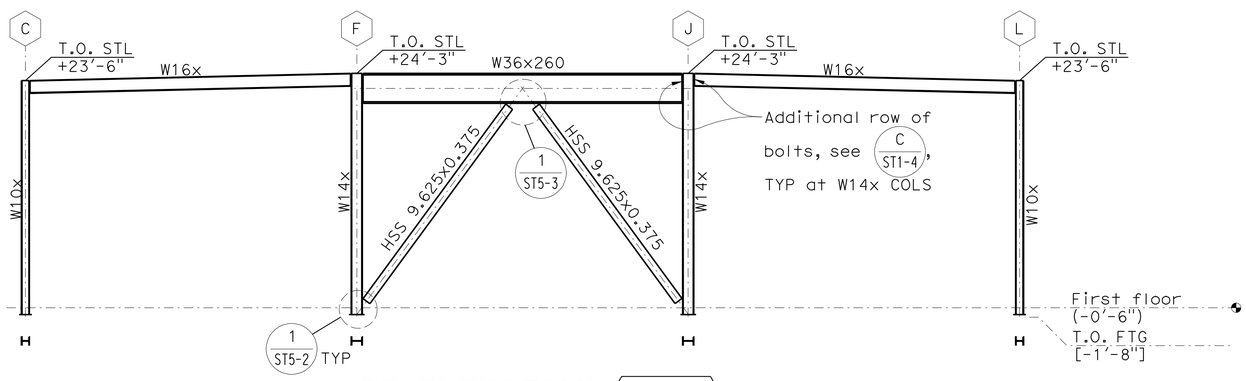

BF ELEVATION BF-14
1/8" = 1'-0"

CALIFORNIA STATE FIRE MARSHAL
APPROVED

Approval of this plan does not authorize or approve any omission or deviation from applicable regulations. Final approval is subject to field inspection. One set of approved plans shall be available on the project site at all times.

Reviewed by 5/9/11
Hans Henneberque
Senior Deputy State Fire Marshal

DESIGN	BY S. HAYAT	CHECKED D. FURIA	
DETAILS	BY A. RICHARDSON	CHECKED D. FURIA	
QUANTITIES	BY G. TOLAN	CHECKED S. HAYAT	

PREPARED FOR THE STATE OF CALIFORNIA DEPARTMENT OF TRANSPORTATION

DIVISION OF ENGINEERING SERVICES
ARCHITECTURAL AND STRUCTURAL DESIGN

BRIDGE NO. 23W0001R
POST MILE 14.8

EASTBOUND CORDELIA CVEF

CVEF — BRACED FRAME ELEVATIONS No. 2

SHEET **ST3-2**

40a535wcST3-02.dgn
DS OSD imperial Rev. 10/07 18-MAY-2011 11:03

ORIGINAL SCALE IN INCHES FOR REDUCED PLANS 0 1 2 3

CU 04264
EA 0A5351

DISREGARD PRINTS BEARING EARLIER REVISION DATES

REVISION DATES (PRELIMINARY STAGE ONLY) 10/19/09 03/22/10 05/07/10 08/23/10 11/22/10 05/03/11 SHEET OF

20081178 (20081785 13-2)

18-MAY-2011 11:03

40a535wcST3-0

DIST.	COUNTY	ROUTE	POST MILES TOTAL PROJECT	SHEET NO.	TOTAL SHEETS
04	Sol	12,80	L1.8/L2.0, 13.3/15.7	594	740

REGISTERED STRUCTURAL ENGINEER — DATE 05/03/11

REGISTERED PROFESSIONAL ENGINEER MAHYAR M. HARRIS No. 2639 Exp. 12/31/12 STRUCTURAL STATE OF CALIFORNIA

5-16-11
PLANS APPROVAL DATE

The State of California or its officers or agents shall not be responsible for the accuracy or completeness of electronic copies of this plan sheet.

BIGGS CARDOSA ASSOCIATES
865 THE ALAMEDA
SAN JOSE, CA 95126
408-296-5515

SOLANO TRANSPORTATION AUTHORITY
ONE HARBOR CENTER, SUITE 130
SUISUN CITY, CA 94585

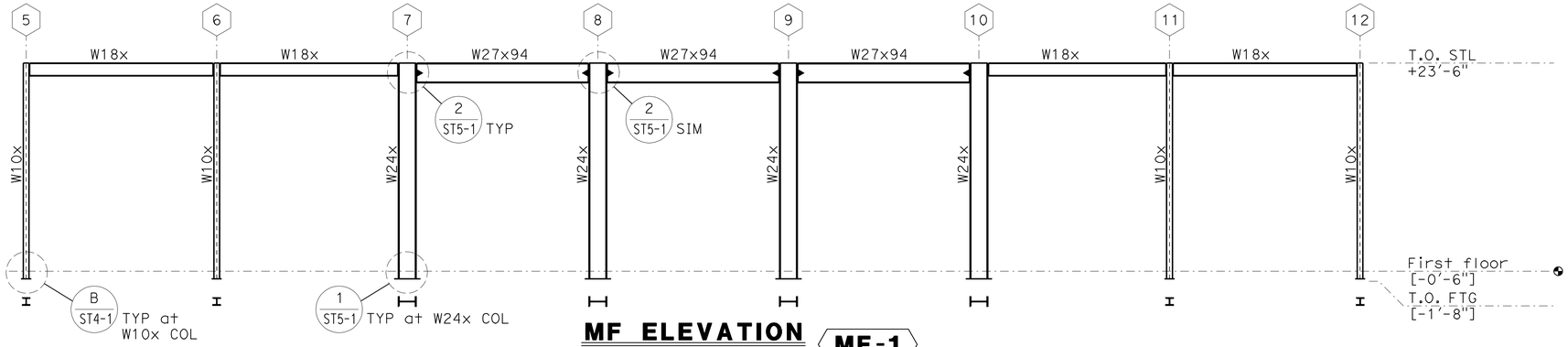

MF ELEVATION **MF-1**
1/8" = 1'-0"

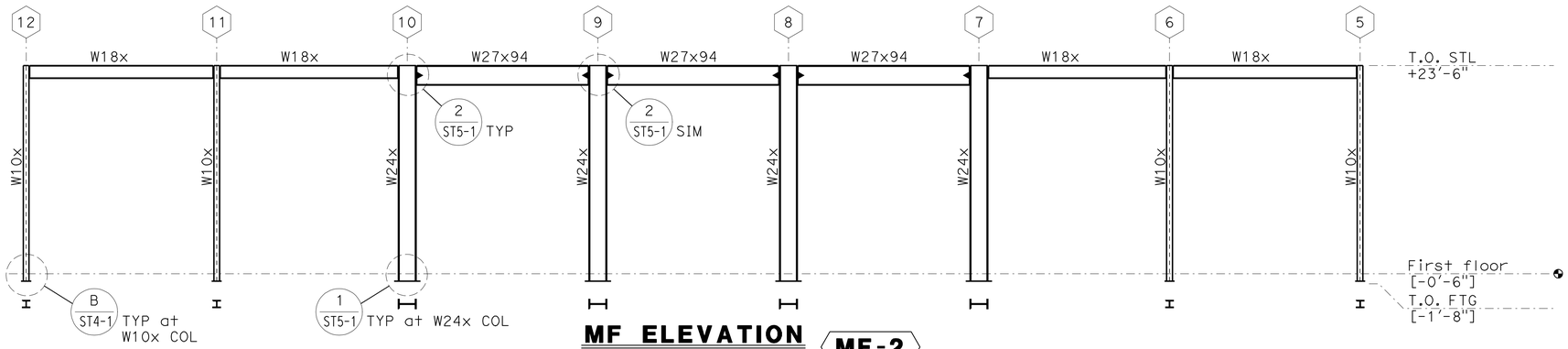

MF ELEVATION **MF-2**
1/8" = 1'-0"

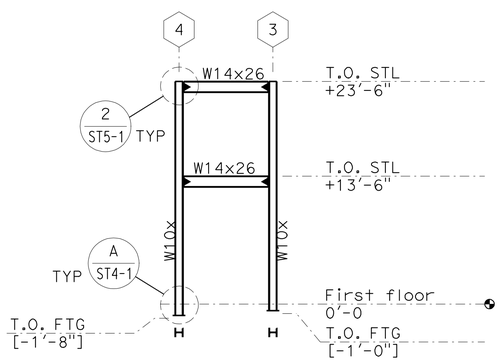

MF ELEVATION **MF-3**
1/8" = 1'-0"

CALIFORNIA STATE FIRE MARSHAL
APPROVED

Approval of this plan does not authorize or approve any omission or deviation from applicable regulations. Final approval is subject to field inspection. One set of approved plans shall be available on the project site at all times.

Reviewed by: 5/9/11
Hans Hennebergue
Senior Deputy State Fire Marshal

DESIGN	BY S. HAYAT	CHECKED D. FURIA	
DETAILS	BY A. RICHARDSON	CHECKED D. FURIA	
QUANTITIES	BY G. TOLAN	CHECKED S. HAYAT	

PREPARED FOR THE STATE OF CALIFORNIA DEPARTMENT OF TRANSPORTATION

DIVISION OF ENGINEERING SERVICES
ARCHITECTURAL AND STRUCTURAL DESIGN

BRIDGE NO. 23W0001R
POST MILE 14.8

EASTBOUND CORDELIA CVEF

CVEF — MOMENT FRAME ELEVATIONS

SHEET ST3-3

40a535wcST3-03.dgn
DS OSD imperial Rev. 10/07 18-MAY-2011 11:03

ORIGINAL SCALE IN INCHES FOR REDUCED PLANS 0 1 2 3

CU 04264
EA 0A5351

DISREGARD PRINTS BEARING EARLIER REVISION DATES

REVISION DATES (PRELIMINARY STAGE ONLY) 10/19/09 3/22/10 5/6/10 8/23/10 11/22/10 05/03/11 SHEET OF

20081178 (20081785 13-3)

18-MAY-2011 11:03

40a535wcST3-0

DIST.	COUNTY	ROUTE	POST MILES TOTAL PROJECT	SHEET NO.	TOTAL SHEETS
04	Sol	12,80	L1.8/L2.0, 13.3/15.7	595	740

Mahvash Harms 05/03/11
REGISTERED STRUCTURAL ENGINEER DATE

REGISTERED PROFESSIONAL ENGINEER MAHVASH M. HARMS No. 2639 Exp. 12/31/12 STRUCTURAL STATE OF CALIFORNIA

5-16-11
PLANS APPROVAL DATE

The State of California or its officers or agents shall not be responsible for the accuracy or completeness of electronic copies of this plan sheet.

BIGGS CARDOSA ASSOCIATES
865 THE ALAMEDA
SAN JOSE, CA 95126
408-296-5515

SOLANO TRANSPORTATION AUTHORITY
ONE HARBOR CENTER, SUITE 130
SUISUN CITY, CA 94585

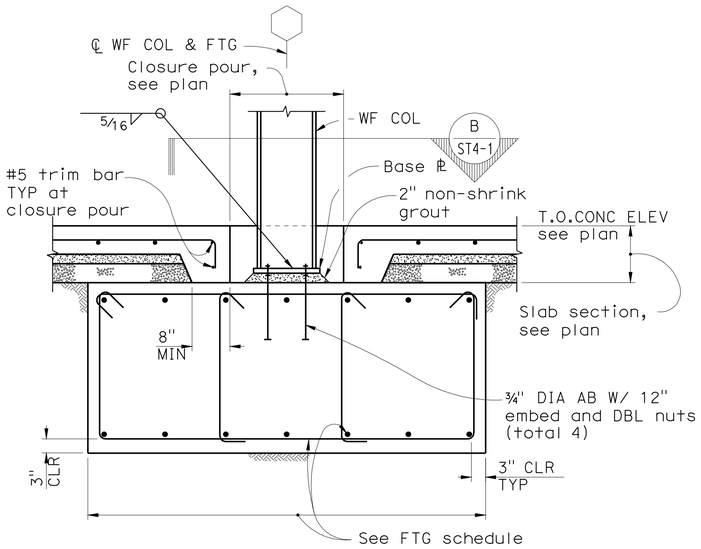

SECTION A ST4-1
3/4" = 1'-0"

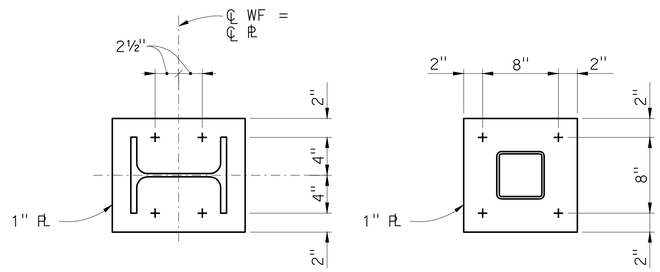

AT W10x COL

AT HSS 5x COL

Note:
For base plate at braced frames and moment frames, see sheets ST5-1 and ST5-2.

SECTION B ST4-1
1 1/2"=1'-0"

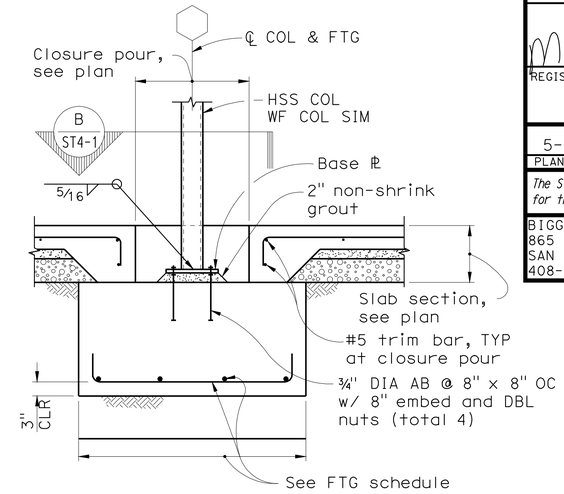

SECTION C ST4-1
3/4" = 1'-0"

CALIFORNIA STATE FIRE MARSHAL
APPROVED

Approval of this plan does not authorize or approve any omission or deviation from applicable regulations. Final approval is subject to field inspection. One set of approved plans shall be available on the project site at all times.

Reviewed by: 5/9/11
Hans Henneberque
Senior Deputy State Fire Marshal

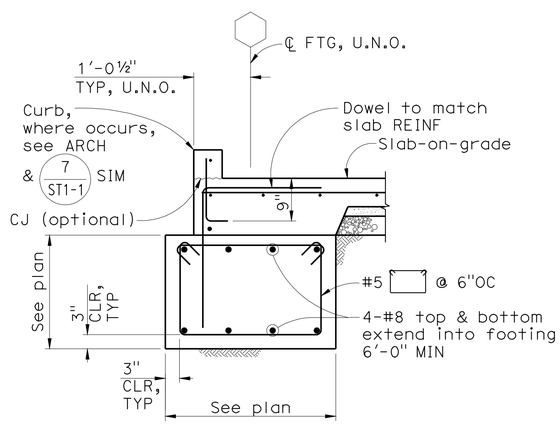

SECTION D ST4-1
3/4" = 1'-0"

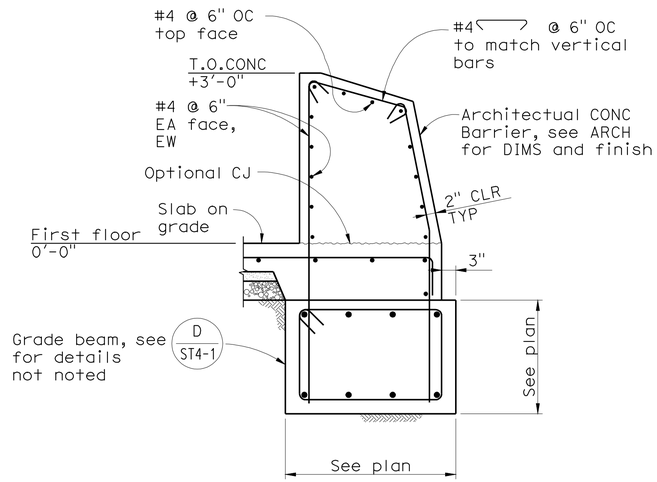

SECTION E ST4-1
3/4" = 1'-0"

FOOTING SCHEDULE

Mark	Footing Size (Length x Width x Thickness)	Reinforcing: Bottom	Reinforcing: Top	Reinforcing: Shear	Reference Detail
F1	4'-0" x 4'-0" x 2'-0"	#6 @ 12" OC EW	--	--	C ST4-1
F2	5'-0" x 5'-0" x 2'-6"	#7 @ 12" OC EW	--	--	C ST4-1
F3	L x 8'-0" x 4'-0"	#8 @ 12" OC EW	#8 @ 12" OC ew	--	E ST4-2
F4	L x 10'-0" x 4'-0"	#8 @ 12" OC EW	#8 @ 12" OC ew	--	E ST4-2
F10	L x 7'-0" x 3'-0"	#7 @ 12" OC	#7 @ 12" OC	#5 @ 9" OC	A ST4-1
F11	L x 9'-0" x 4'-0"	#8 @ 12" OC	#8 @ 12" OC	#5 @ 6" OC	E ST4-2
F12	L x 8'-0" x 3'-0"	#7 @ 12" OC	#7 @ 12" OC	#5 @ 6" OC	B ST4-2
F13	L x 10'-0" x 3'-0"	#7 @ 12" OC	#7 @ 12" OC	#5 @ 6" OC	B ST4-2

Note:
For footing length (L), see foundation plan.

FOOTING SCHEDULE 1 ST4-1
NO SCALE

DESIGN	BY S. HAYAT	CHECKED D. FURIA	
DETAILS	BY A. RICHARDSON	CHECKED D. FURIA	
QUANTITIES	BY G. TOLAN	CHECKED S. HAYAT	

PREPARED FOR THE STATE OF CALIFORNIA DEPARTMENT OF TRANSPORTATION

DIVISION OF ENGINEERING SERVICES
ARCHITECTURAL AND STRUCTURAL DESIGN

BRIDGE NO. 23W0001R
POST MILE 14.8

EASTBOUND CORDELIA CVEF

CVEF — FOUNDATION DETAILS No. 1

SHEET ST4-1

40a535wcST4-01.dgn
DS OSD imperial Rev. 10/07 18-MAY-2011 11:03

ORIGINAL SCALE IN INCHES FOR REDUCED PLANS 0 1 2 3

CU 04264
EA 0A5351

DISREGARD PRINTS BEARING EARLIER REVISION DATES

REVISION DATES (PRELIMINARY STAGE ONLY): 10/14/09 3/22/10 5/6/10 8/23/10 11/22/10 05/03/11

SHEET OF

20081178 (20081178S14-1)

18-MAY-2011 11:03

40a535wcST4-0

DIST.	COUNTY	ROUTE	POST MILES TOTAL PROJECT	SHEET NO.	TOTAL SHEETS
04	Sol	12,80	L1.8/L2.0, 13.3/15.7	596	740

REGISTERED STRUCTURAL ENGINEER — DATE 05/03/11

REGISTERED PROFESSIONAL ENGINEER MAHYAR M. HAYAT No. 2639 Exp. 12/31/12 STRUCTURAL STATE OF CALIFORNIA

5-16-11
PLANS APPROVAL DATE

The State of California or its officers or agents shall not be responsible for the accuracy or completeness of electronic copies of this plan sheet.

BIGGS CARDOSA ASSOCIATES
865 THE ALAMEDA
SAN JOSE, CA 95126
408-296-5515

SOLANO TRANSPORTATION AUTHORITY
ONE HARBOR CENTER, SUITE 130
SUISUN CITY, CA 94585

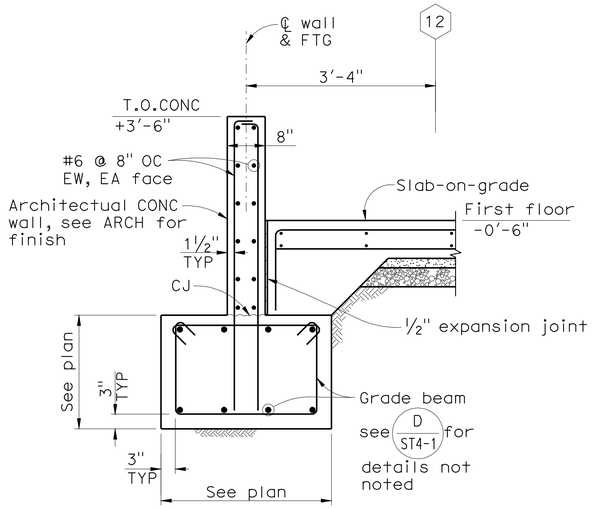

SECTION A ST4-2
3/4"=1'-0"

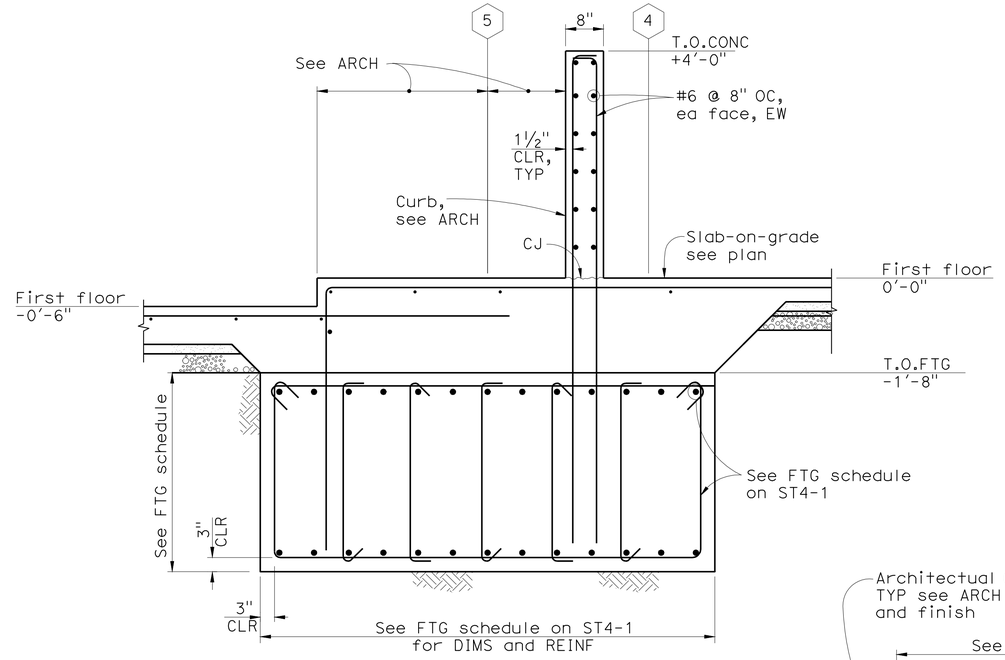

SECTION B ST4-2
3/4" = 1'-0"

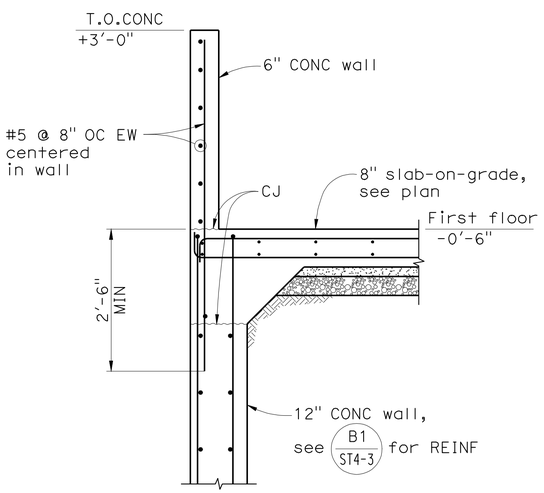

SECTION C ST4-2
3/4"=1'-0"

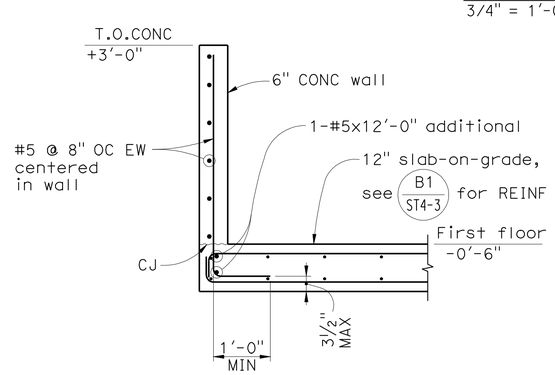

SECTION D ST4-2
3/4"=1'-0"

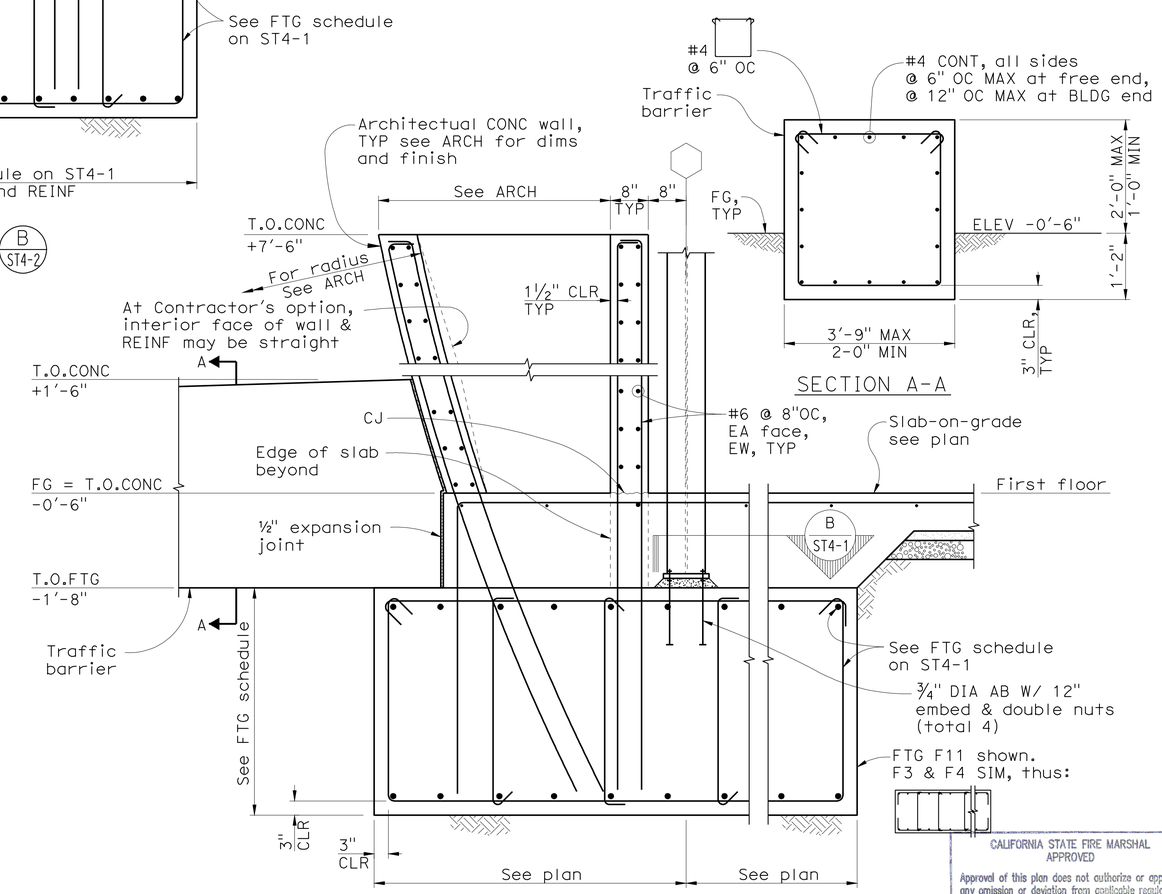

SECTION E ST4-2
3/4" = 1'-0"

CALIFORNIA STATE FIRE MARSHAL APPROVED

Approval of this plan does not authorize or approve any omission or deviation from applicable regulations. Final approval is subject to field inspection. One set of approved plans shall be available on the project site at all times.

Reviewed by: 5/9/11
Hans Henneberque
Senior Deputy State Fire Marshal

DESIGN	BY S. HAYAT	CHECKED D. FURIA	
DETAILS	BY A. RICHARDSON	CHECKED D. FURIA	
QUANTITIES	BY G. TOLAN	CHECKED S. HAYAT	

PREPARED FOR THE STATE OF CALIFORNIA DEPARTMENT OF TRANSPORTATION

DIVISION OF ENGINEERING SERVICES
ARCHITECTURAL AND STRUCTURAL DESIGN

BRIDGE NO. 23W0001R
POST MILE 14.8

EASTBOUND CORDELIA CVEF

CVEF — FOUNDATION DETAILS No. 2

SHEET **ST4-2**

40a535wcST4-02.dgn
DS OSD imperial Rev. 10/07 18-MAY-2011 11:03

ORIGINAL SCALE IN INCHES FOR REDUCED PLANS 0 1 2 3

CU 04624
EA 0A5351

DISREGARD PRINTS BEARING EARLIER REVISION DATES

REVISION DATES (PRELIMINARY STAGE ONLY) 10/19/09 3/22/10 5/6/10 8/23/10 11/22/10 05/03/11 — SHEET OF

20081178 (20081785\4-2)

18-MAY-2011 11:03

40a535wcST4-0

DIST.	COUNTY	ROUTE	POST MILES TOTAL PROJECT	SHEET NO.	TOTAL SHEETS
04	Sol	12,80	L1.8/L2.0, 13.3/15.7	597	740

Mahvash Harris 05/03/11
REGISTERED STRUCTURAL ENGINEER DATE

REGISTERED PROFESSIONAL ENGINEER MAHVASH M. HARRIS No. 2639 Exp. 12/31/12 STRUCTURAL STATE OF CALIFORNIA

5-16-11
PLANS APPROVAL DATE

The State of California or its officers or agents shall not be responsible for the accuracy or completeness of electronic copies of this plan sheet.

BIGGS CARDOSA ASSOCIATES
865 THE ALAMEDA
SAN JOSE, CA 95126
408-296-5515

SOLANO TRANSPORTATION AUTHORITY
ONE HARBOR CENTER, SUITE 130
SUISUN CITY, CA 94585

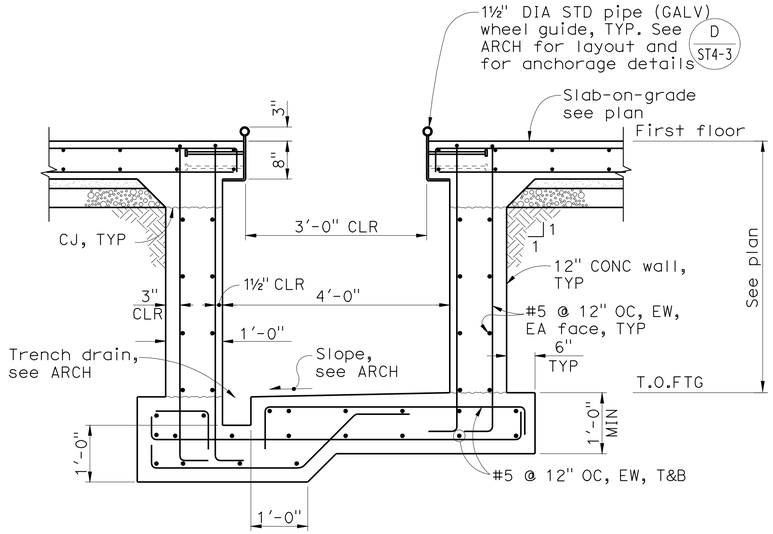

SECTION A ST4-3
3/4" = 1'-0"

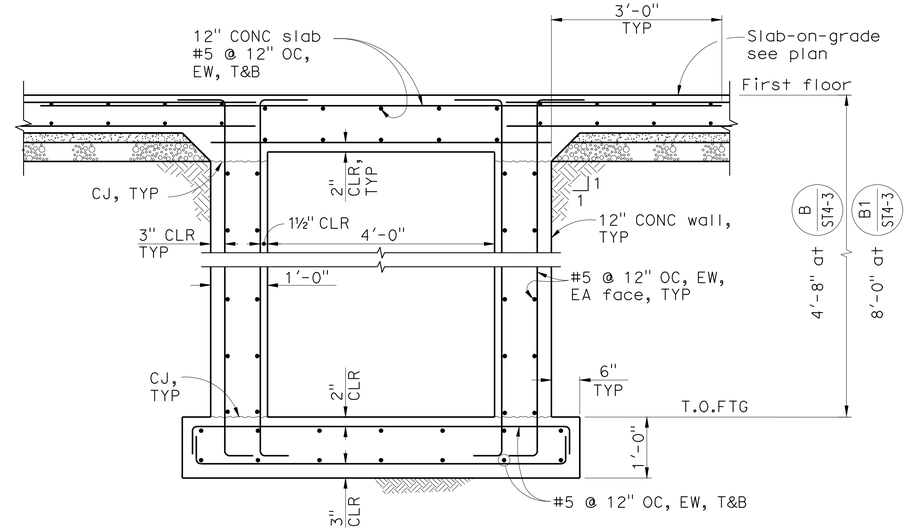

SECTION B B1 ST4-3 ST4-3
3/4" = 1'-0"

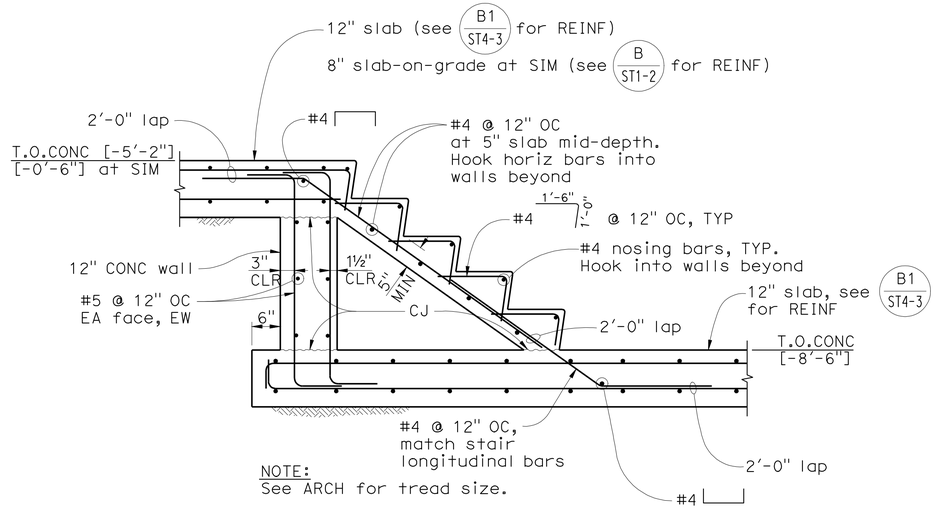

NOTE:
See ARCH for tread size.

SECTION C ST4-3
3/4" = 1'-0"

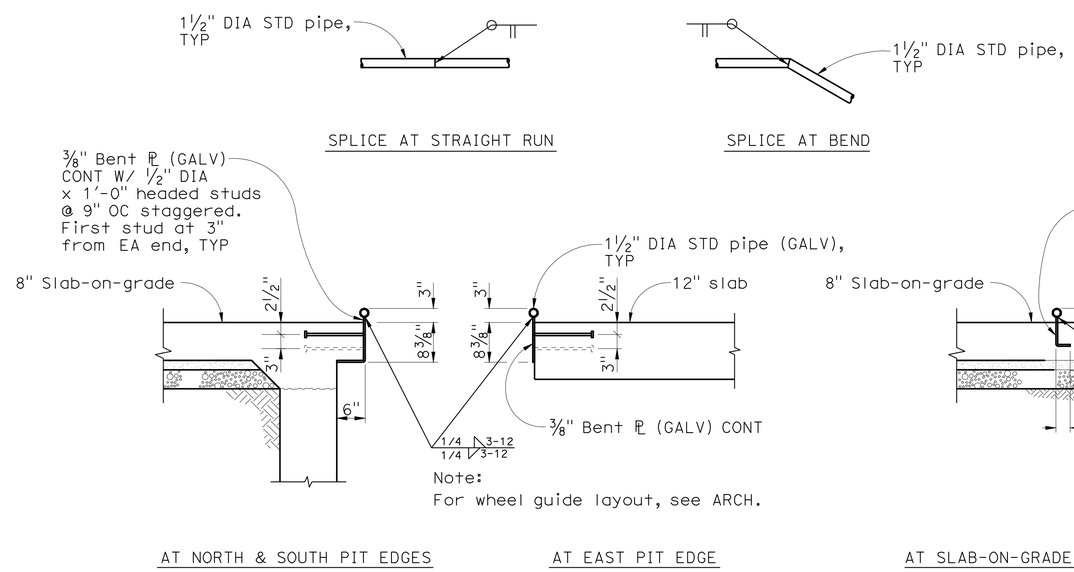

CALIFORNIA STATE FIRE MARSHAL APPROVED
Approval of this plan does not authorize or approve any omission or deviation from applicable regulations. Final approval is subject to field inspection. One set of approved plans shall be available on the project site at all times.
Reviewed by: 5/8/11
Hans Henneberque
Senior Deputy State Fire Marshal

SECTION D ST4-3
3/4" = 1'-0"

DESIGN	BY S. HAYAT	CHECKED D. FURIA	
DETAILS	BY A. RICHARDSON	CHECKED D. FURIA	
QUANTITIES	BY G. TOLAN	CHECKED S. HAYAT	

PREPARED FOR THE STATE OF CALIFORNIA DEPARTMENT OF TRANSPORTATION

DIVISION OF ENGINEERING SERVICES
ARCHITECTURAL AND STRUCTURAL DESIGN

BRIDGE NO. 23W0001R
POST MILE 14.8

EASTBOUND CORDELIA CVEF
CVEF — FOUNDATION DETAILS No. 3

SHEET **ST4-3**

40a535wcST4-03.dgn
DS OSD imperial Rev. 10/07 18-MAY-2011 11:03

ORIGINAL SCALE IN INCHES FOR REDUCED PLANS 0 1 2 3

CU 04264
EA 0A5351

DISREGARD PRINTS BEARING EARLIER REVISION DATES

REVISION DATES (PRELIMINARY STAGE ONLY) 10/19/09 3/22/10 5/6/10 8/23/10 11/22/10 05/03/11 SHEET OF

18-MAY-2011 11:03 (200817&S14-3) 200817&

40a535wcST4-0

DIST.	COUNTY	ROUTE	POST MILES TOTAL PROJECT	SHEET NO.	TOTAL SHEETS
04	Sol	12,80	L1.8/L2.0, 13.3/15.7	598	740

Mahrash Harms 05/03/11
REGISTERED STRUCTURAL ENGINEER DATE

REGISTERED PROFESSIONAL ENGINEER MAHRASH M. HARMS No. 2639 Exp. 12/31/12 STRUCTURAL STATE OF CALIFORNIA

5-16-11
PLANS APPROVAL DATE

The State of California or its officers or agents shall not be responsible for the accuracy or completeness of electronic copies of this plan sheet.

BIGGS CARDOSA ASSOCIATES
865 THE ALAMEDA
SAN JOSE, CA 95126
408-296-5515

SOLANO TRANSPORTATION AUTHORITY
ONE HARBOR CENTER, SUITE 130
SUISUN CITY, CA 94585

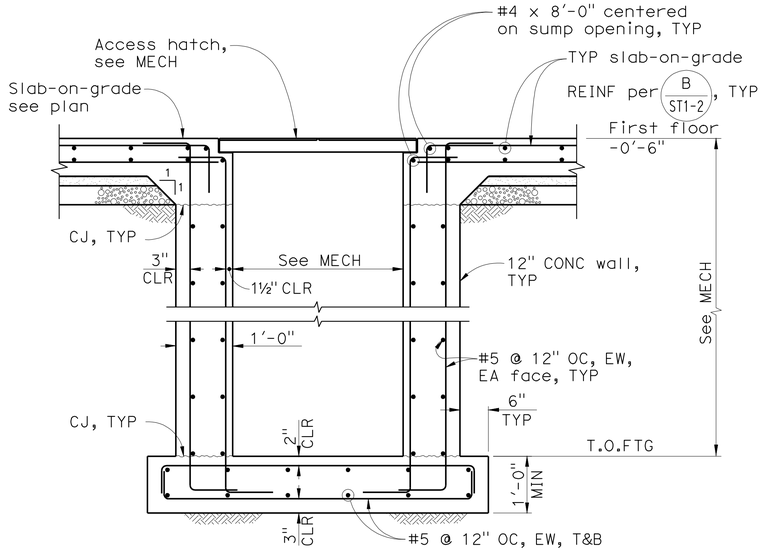

PUMP SUMP

SECTION A/ST4-4
3/4" = 1'-0"

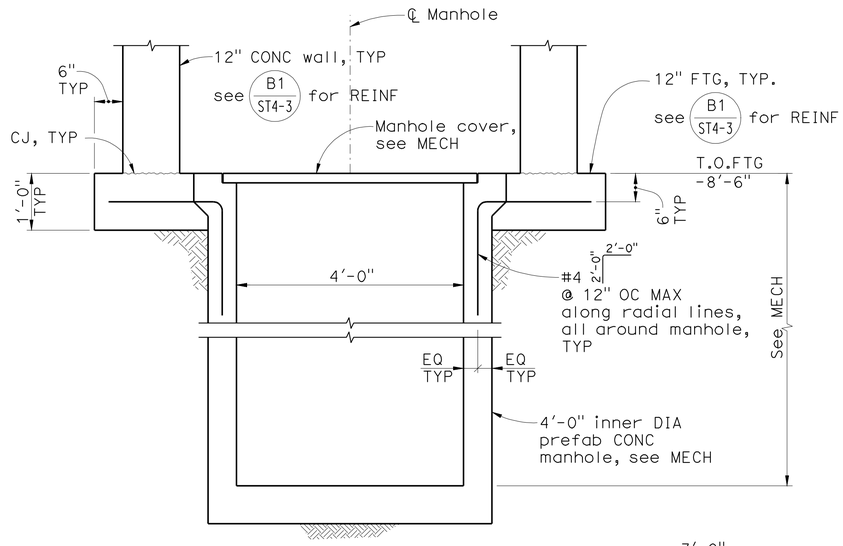

MANHOLE

SECTION B/ST4-4
3/4" = 1'-0"

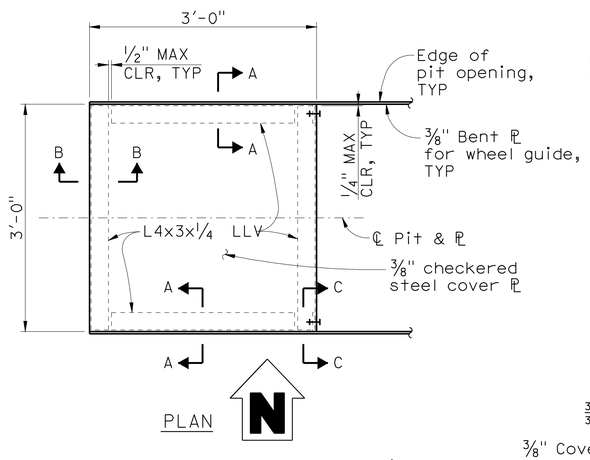

PLAN

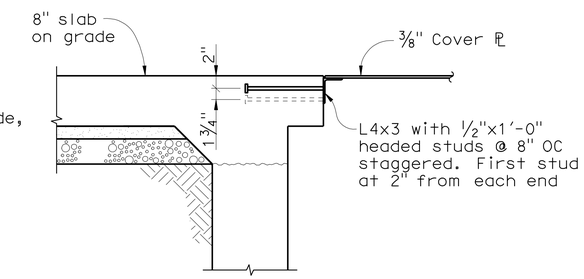

SECTION B-B

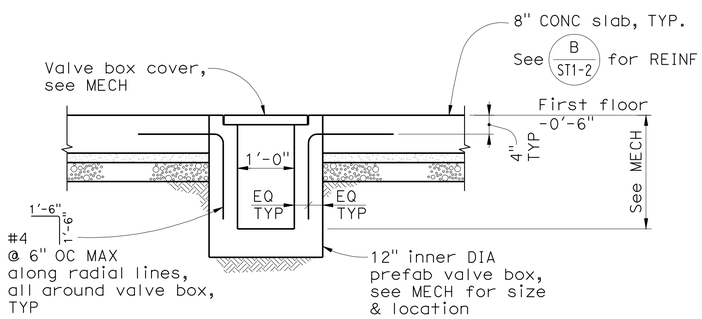

VALVE BOX

SECTION C/ST4-4
3/4" = 1'-0"

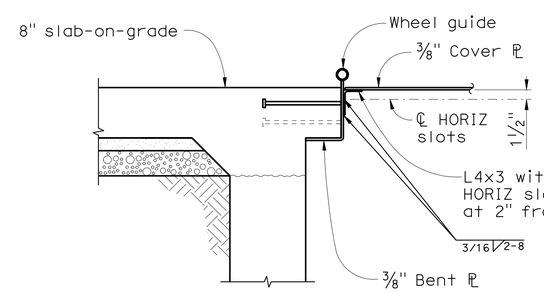

SECTION A-A

Note:
For details not shown, see D/ST4-3.

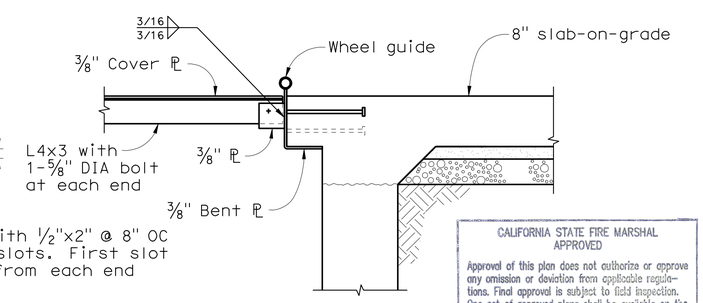

SECTION C-C

CALIFORNIA STATE FIRE MARSHAL APPROVED

Approval of this plan does not authorize or approve any omission or deviation from applicable regulations. Final approval is subject to field inspection. One set of approved plans shall be available on the project site at all times.

Reviewed by: Hans Henneberque 5/9/11
Hans Henneberque
Senior Deputy State Fire Marshal

PIT STEEL COVER PLATE DETAILS D/ST4-4
1" = 1'-0"

DESIGN	BY S. HAYAT	CHECKED D. FURIA	
DETAILS	BY A. RICHARDSON	CHECKED D. FURIA	
QUANTITIES	BY G. TOLAN	CHECKED S. HAYAT	

PREPARED FOR THE STATE OF CALIFORNIA DEPARTMENT OF TRANSPORTATION

DIVISION OF ENGINEERING SERVICES ARCHITECTURAL AND STRUCTURAL DESIGN

BRIDGE NO. 23W0001R
POST MILE 14.8

EASTBOUND CORDELIA CVEF
CVEF — FOUNDATION DETAILS No. 4

SHEET ST4-4

ORIGINAL SCALE IN INCHES FOR REDUCED PLANS 0 1 2 3

CU 04264
EA 0A5351

DISREGARD PRINTS BEARING EARLIER REVISION DATES → 10/18/09 03/22/10 05/07/10 08/23/10 11/22/10 05/03/11

REVISION DATES (PRELIMINARY STAGE ONLY) SHEET OF

40a535wcST4-04.dgn
DS OSD imperial Rev. 10/07 18-MAY-2011 11:03

20081718 (20081718S14-3)

18-MAY-2011 11:03

40a535wcST4-0

DIST.	COUNTY	ROUTE	POST MILES TOTAL PROJECT	SHEET NO.	TOTAL SHEETS
04	Sol	12,80	L1.8/L2.0, 13.3/15.7	599	740

Mahrash Harris 05/03/11
REGISTERED STRUCTURAL ENGINEER DATE

REGISTERED PROFESSIONAL ENGINEER MAHRASH M. HARRIS No. 2639 Exp.12/31/12 STRUCTURAL STATE OF CALIFORNIA

5-16-11
PLANS APPROVAL DATE

The State of California or its officers or agents shall not be responsible for the accuracy or completeness of electronic copies of this plan sheet.

BIGGS CARDOSA ASSOCIATES
865 THE ALAMEDA
SAN JOSE, CA 95126
408-296-5515

SOLANO TRANSPORTATION AUTHORITY
ONE HARBOR CENTER, SUITE 130
SUISUN CITY, CA 94585

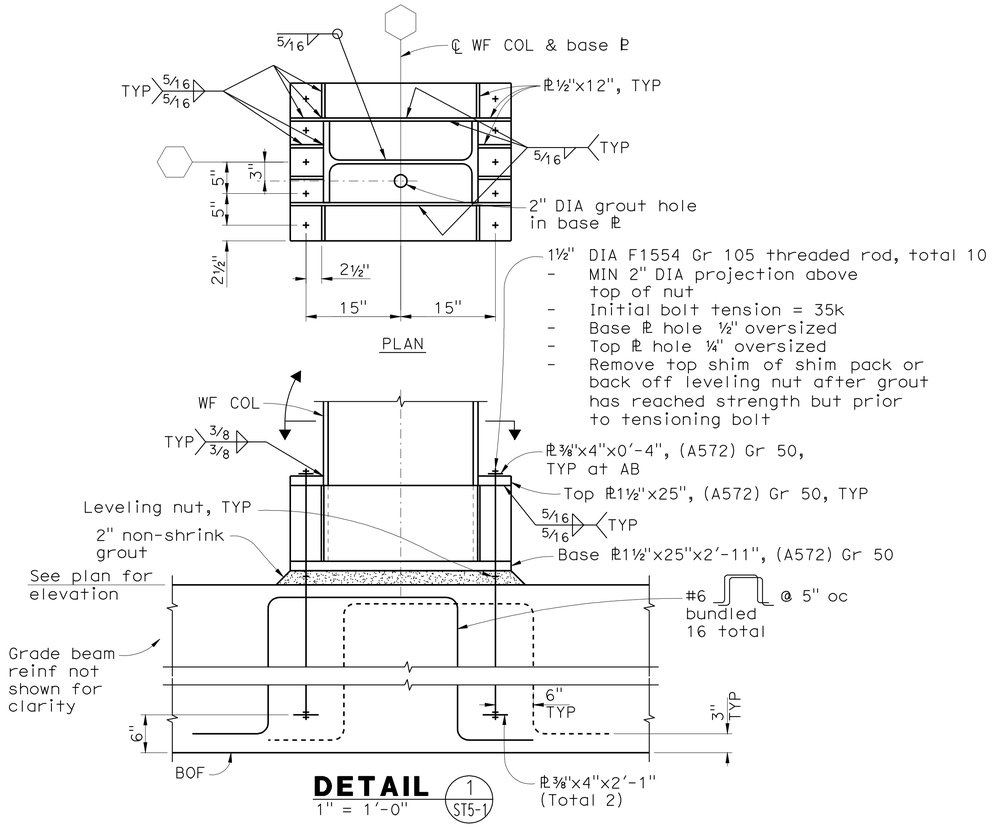

DETAIL 1 ST5-1
1" = 1'-0"

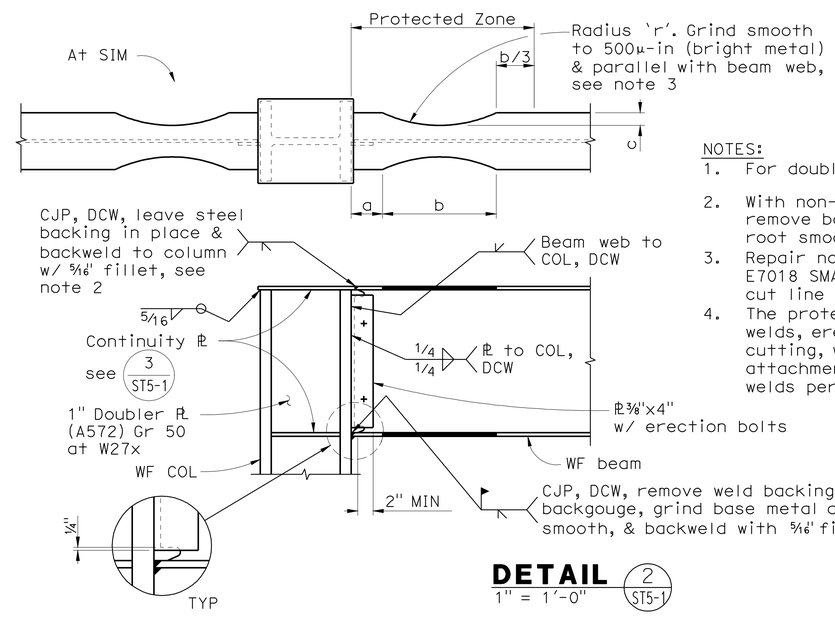

DETAIL 2 ST5-1
1" = 1'-0"

NOTES:
1. For doubler plate, see 4 ST5-1.
2. With non-fusible backing: remove backing, backgouge, grind base metal & root smooth and backweld w/ 5/16" fillet
3. Repair notches & gouges up to ½" deep with E7018 SMAW per approved wps & grind smooth. cut line tolerance: $\frac{3}{16}^{+1}_{-}$.
4. The protected zone shall be free of tack welds, erection aids, gouging, thermal cutting, welded/bolted/screw/ shot pin attachments or holes (deck arc spot welds permitted).

Beam Size	a	b	c	'r'
W27x94	5"	17.5"	2.1"	1'-7"
W14x26	2.5"	9"	1.2"	0'-9"

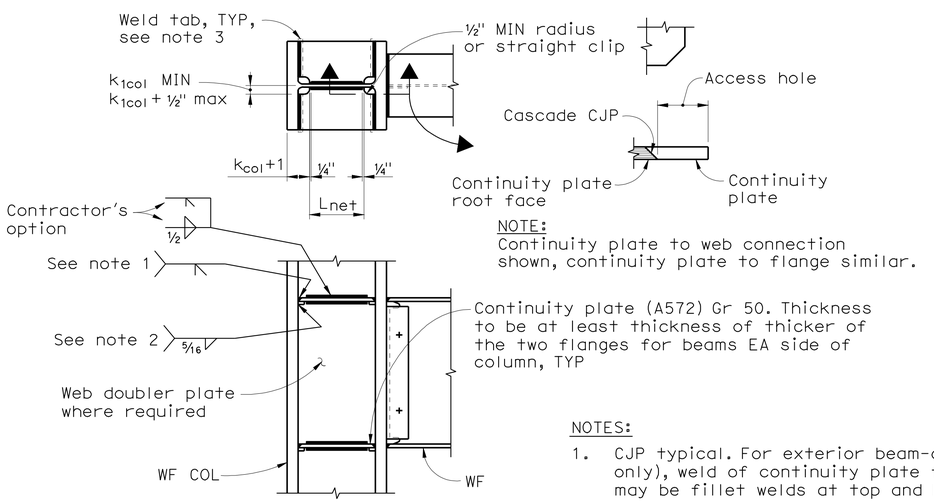

NOTE:
Continuity plate to web connection shown, continuity plate to flange similar.

NOTES:
1. CJP typical. For exterior beam-column connections (beam one side only), weld of continuity plate to column flange at free side may be fillet welds at top and bottom face of plate.
2. Continuous fillet weld under backing, TYP.
3. Weld tabs, if used, shall only be removed to ¼" maximum from edge of continuity plate. Grind end of weld smooth (500μ-in), not flush. Do not gouge column flange.
4. NDT not required on cascade portion of CJP.

DETAIL 3 ST5-1
1" = 1'-0"

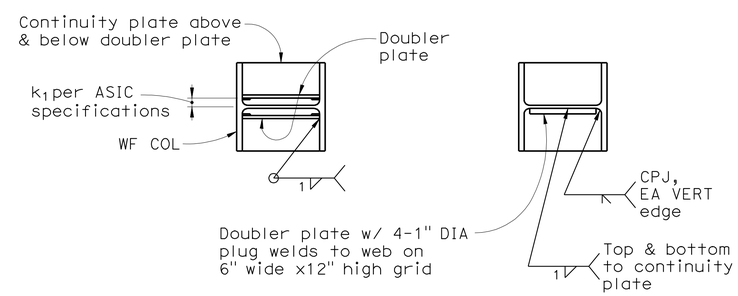

DETAIL 4 ST5-1
1" = 1'-0"

CALIFORNIA STATE FIRE MARSHAL APPROVED
Approval of this plan does not authorize or approve any omission or deviation from applicable regulations. Final approval is subject to field inspection. One set of approved plans shall be available on the project site at all times.
Reviewed by: Hans Hanneberque 5/9/11
Hans Hanneberque
Senior Deputy State Fire Marshal

DESIGN	BY S. HAYAT	CHECKED D. FURIA	
DETAILS	BY A. RICHARDSON	CHECKED D. FURIA	
QUANTITIES	BY G. TOLAN	CHECKED S. HAYAT	

PREPARED FOR THE STATE OF CALIFORNIA DEPARTMENT OF TRANSPORTATION

DIVISION OF ENGINEERING SERVICES
ARCHITECTURAL AND STRUCTURAL DESIGN

BRIDGE NO. 23W0001R
POST MILE 14.8

EASTBOUND CORDELIA CVEF
CVEF STEEL MOMENT FRAME DETAILS

SHEET ST5-1

40a535wcST5-01.dgn
DS OSD imperial Rev. 10/07 18-MAY-2011 11:04

ORIGINAL SCALE IN INCHES FOR REDUCED PLANS 0 1 2 3

CU 04264
EA 0A5351

DISREGARD PRINTS BEARING EARLIER REVISION DATES
REVISION DATES (PRELIMINARY STAGE ONLY) 10/19/09 3/22/10 5/6/10 8/23/10 11/22/10 05/03/11
SHEET OF

20081178 (20081178S15-1)
18-MAY-2011 11:04
40a535wcST5-0

DIST.	COUNTY	ROUTE	POST MILES TOTAL PROJECT	SHEET NO.	TOTAL SHEETS
04	Sol	12,80	L1.8/L2.0, 13.3/15.7	600	740

Mahrash Harris 05/03/11
REGISTERED STRUCTURAL ENGINEER DATE

REGISTERED PROFESSIONAL ENGINEER MAHRASH M. HARRIS No. 2639 Exp. 12/31/12 STRUCTURAL STATE OF CALIFORNIA

5-16-11
PLANS APPROVAL DATE

The State of California or its officers or agents shall not be responsible for the accuracy or completeness of electronic copies of this plan sheet.

BIGGS CARDOSA ASSOCIATES
865 THE ALAMEDA
SAN JOSE, CA 95126
408-296-5515

SOLANO TRANSPORTATION AUTHORITY
ONE HARBOR CENTER, SUITE 130
SUISUN CITY, CA 94585

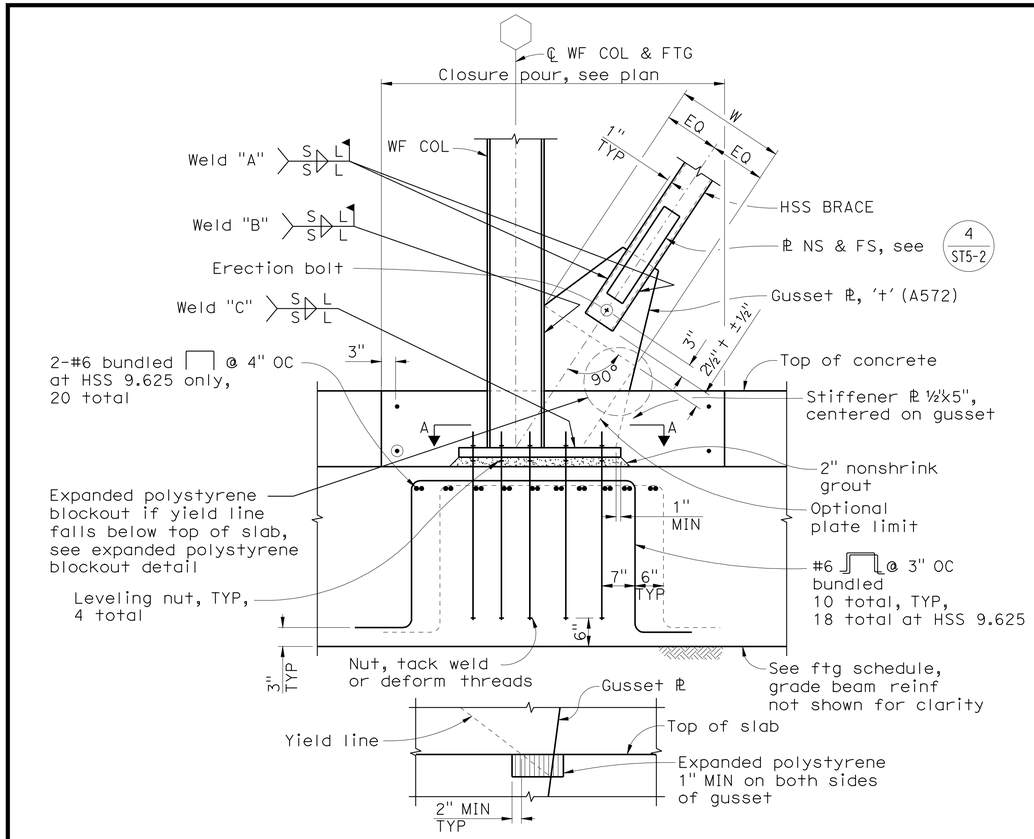

Expanded Polystyrene Blockout Detail

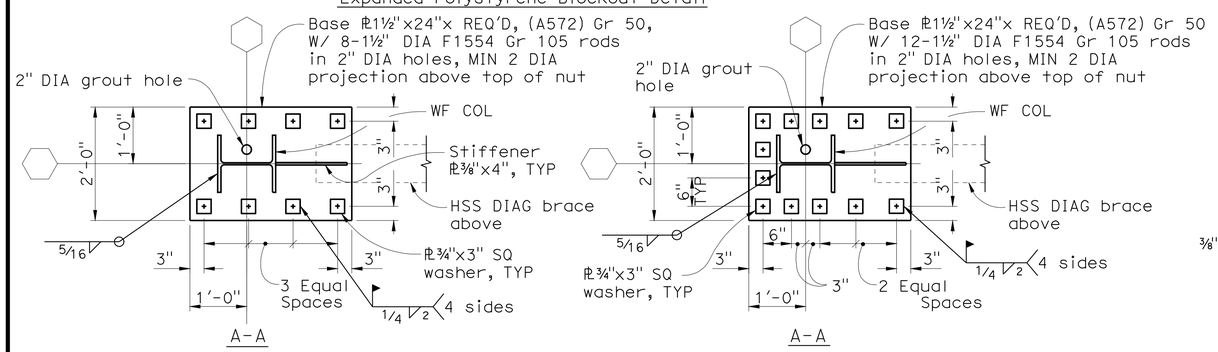

Brace	't'	W	Weld 'A'		Weld 'B'		Weld 'C'		Weld 'D'	Total Rods
			S	L	S	L	S	L	S	
HSS 6x0.25	¾	22	¼	13	¼	21	⅜	14	⅜	8
HSS 7x0.25	¾	21	5/16	14	5/16	20	½	13	⅜	8
HSS 9.625x0.375	1¼	37	5/16	22	5/16	29	⅝	25	½	12

NOTE:
Base plate may be set on steel shim stack.
Shim stacks need not be removed.

DETAIL 1/ST5-2
3/4" = 1'-0"

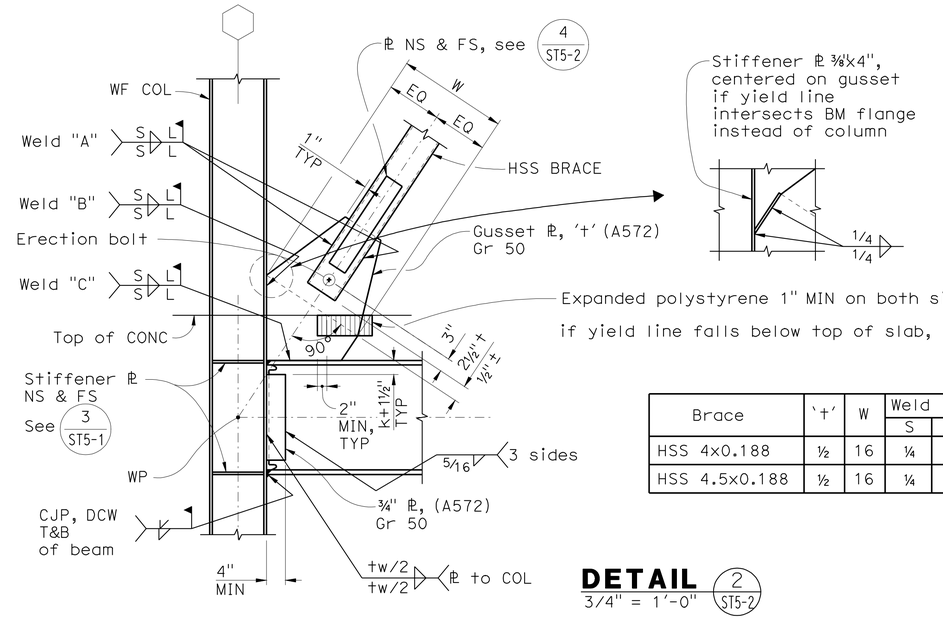

Brace	't'	W	Weld 'A'		Weld 'B'		Weld 'C'		Weld 'D'
			S	L	S	L	S	L	S
HSS 4x0.188	½	16	¼	10	⅜	8	¼	18	5/16
HSS 4.5x0.188	½	16	¼	10	⅜	8	¼	18	5/16

DETAIL 2/ST5-2
3/4" = 1'-0"

CALIFORNIA STATE FIRE MARSHAL APPROVED
Approval of this plan does not authorize or approve any omission or deviation from applicable regulations. Final approval is subject to field inspection. One set of approved plans shall be available on the project site at all times.
Reviewed by: 5/9/11
Hans Hennebergue
Senior Deputy State Fire Marshal

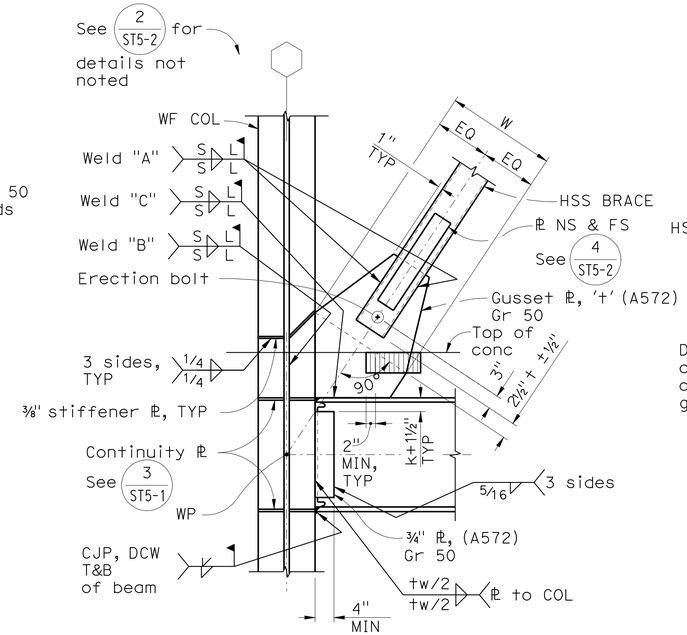

DETAIL 3/2/ST5-2
3/4" = 1'-0"

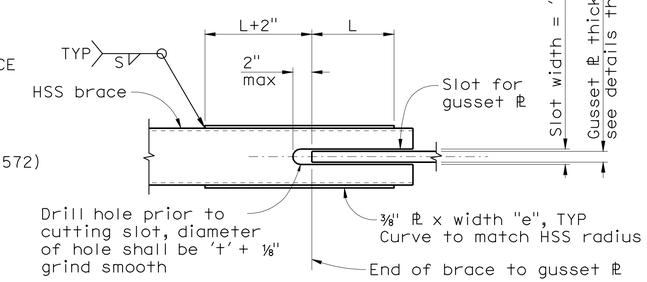

Brace	L	e	S
HSS 4x0.188	4	3.5	¼
HSS 4.5x0.188	4	3.5	¼
HSS 6x0.25	6	4.5	¼
HSS 7x0.25	7	5.25	¼
HSS 9.625x0.375	22	7.5	5/16

TYPICAL BRACE SLOT DETAIL 4/ST5-2
NO SCALE

DESIGN	BY S. HAYAT	CHECKED D. FURIA	
DETAILS	BY A. RICHARDSON	CHECKED D. FURIA	
QUANTITIES	BY G. TOLAN	CHECKED S. HAYAT	

PREPARED FOR THE STATE OF CALIFORNIA DEPARTMENT OF TRANSPORTATION

DIVISION OF ENGINEERING SERVICES ARCHITECTURAL AND STRUCTURAL DESIGN

BRIDGE NO. 23W0001R
POST MILE 14.8

EASTBOUND CORDELIA CVEF
CVEF STEEL BRACED FRAME DETAILS No. 1

SHEET ST5-2

40a535wcST5-02.dgn
DS OSD imperial Rev. 10/07 18-MAY-2011 11:04

ORIGINAL SCALE IN INCHES FOR REDUCED PLANS 0 1 2 3

CU 04624
EA 0A5351

DISREGARD PRINTS BEARING EARLIER REVISION DATES

REVISION DATES (PRELIMINARY STAGE ONLY) 10/19/09 3/22/10 5/6/10 8/23/10 11/22/10 05/03/11

SHEET OF

18-MAY-2011 11:04 (20081785)(5-2)

40a535wcST5-0