DIST	COUNTY	ROUTE	POST MILES TOTAL PROJECT	SHEET No	TOTAL SHEETS
04	Sol	12,80	2.1/2.8, 12.0/13.1	501	597

Michael Painter 11/9/12
DATE

5-6-13
PLANS APPROVAL DATE

REGISTERED LANDSCAPE ARCHITECT
MICHAEL R. PAINTER
C. 3237
M. Painter
Signature
1/31/13
Renewal Date
11/9/12
Date
STATE OF CALIFORNIA

The State of California or its officers or agents shall not be responsible for the accuracy or completeness of electronic copies of this plan sheet.

SOLANO TRANSPORTATION AUTHORITY
ONE HARBOR CENTER, SUITE 130
SUISUN CITY, CA 94585

MPA DESIGN
1801 OAKLAND BOULEVARD SUITE 315
WALNUT CREEK CA 94596

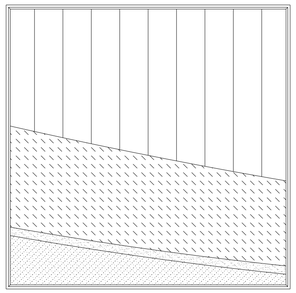

Panel #21 - part of airwave motif

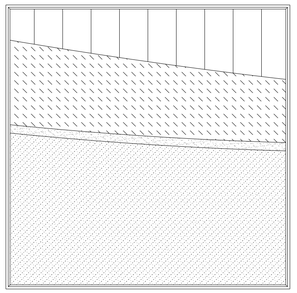

Panel #22 - part of airwave motif

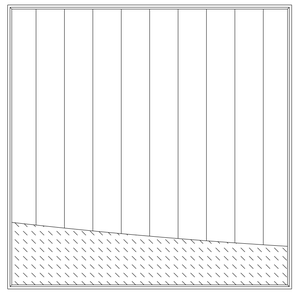

Panel #23 - part of airwave motif

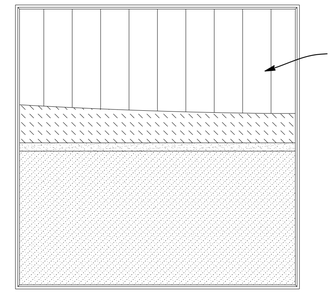

Sky motif
1" Smooth fluted finish.
Typ.

Panel #24 - part of airwave motif

Panel #25 - part of grass motif

Panel #26 - part of grass motif

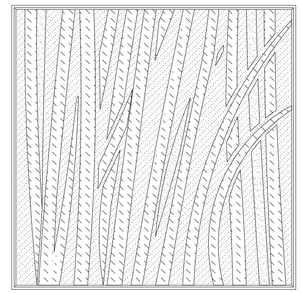

Panel #27 - part of grass motif

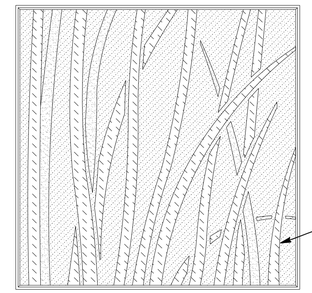

Ridge line on grass blade.
Typ.

Panel #28 - part of grass motif

GENERAL NOTE

For surface relief details refer to "Details No. 3" - KEY TO SURFACE RELIEF - MSE PANELS AND CIP WALLS

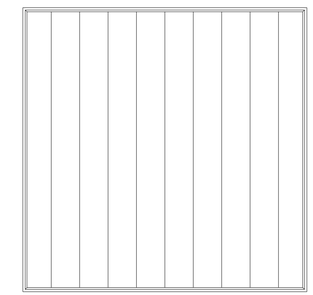

Sky motif panel -used above airwave motif panels
(1" smooth fluted finish)

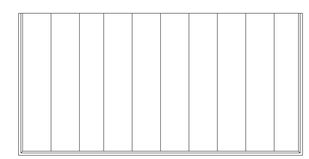

½ Panel used on leveling pad
(1" smooth fluted finish)

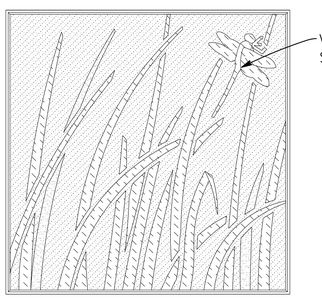

V groves:
See below

Panel #29 - for high visibility motif

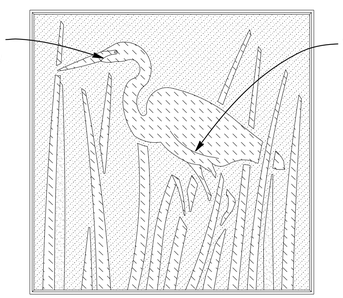

V groves:
See below

Panel #30 - for high visibility motif

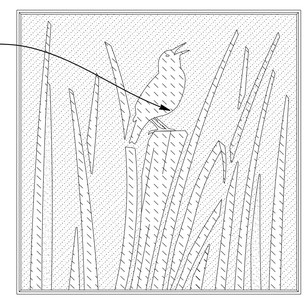

Panel #31 - for high visibility motif

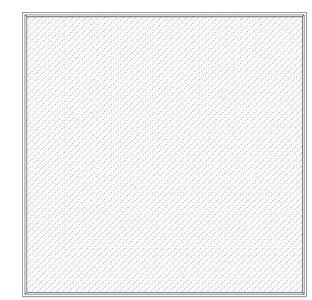

Background panel -used below airwave motif panels
(Heavy sand finish)

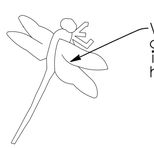

V grove extent
and location
indicated by
heavy line. Typ.

Panel #29 - detail motif

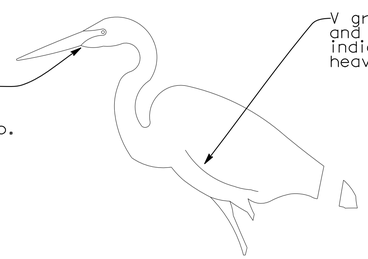

V grove extent
and location
indicated by
heavy line. Typ.

Panel #30 - detail motif

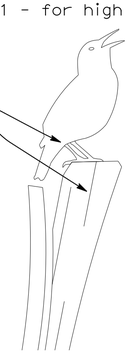

Panel #31 - detail motif

Tracy L. Bertram
DESIGN OVERSIGHT Tracy L Bertram
1-7-13
SIGN OFF DATE

	BY	CHECKED
DESIGN	S KENNEY	R ALCINA
DETAILS	S KENNEY	R ALCINA
QUANTITIES	S KENNEY	R ALCINA

PREPARED FOR THE
STATE OF CALIFORNIA
DEPARTMENT OF TRANSPORTATION

MICHAEL PAINTER
PROJECT LANDSCAPE ARCHITECT

BRIDGE NO.
POST MILES

AESTHETIC TREATMENT
DETAILS No. 2

DESIGN GENERAL PLAN SHEET (ENGLISH) (REV. 3-14-12)

ORIGINAL SCALE IN INCHES FOR REDUCED PLANS 0 1 2 3

UNIT: 0741
PROJECT NUMBER & PHASE: 04000211311 CONTRACT NO.: 04-0A5341

DISREGARD PRINTS BEARING EARLIER REVISION DATES

REVISION DATES				SHEET	OF
09/5/12	10/19/12			40	51

FILE => 04-0a5341-rwall-g-atd02.dgn

USERNAME => s124936 DATE PLOTTED => 08-MAY-2013 TIME PLOTTED => 07:38

DIST	COUNTY	ROUTE	POST MILES TOTAL PROJECT	SHEET No	TOTAL SHEETS
04	Sol	12,80	2.1/2.8, 12.0/13.1	502	597

Michael Painter 11/9/12
DATE

5-6-13
PLANS APPROVAL DATE

REGISTERED LANDSCAPE ARCHITECT
MICHAEL R. PAINTER
M. Painter
Signature
1/31/13
Renewal Date
11/9/12
Date
STATE OF CALIFORNIA

The State of California or its officers or agents shall not be responsible for the accuracy or completeness of electronic copies of this plan sheet.

SOLANO TRANSPORTATION AUTHORITY
ONE HARBOR CENTER, SUITE 130
SUISUN CITY, CA 94585

MPA DESIGN
1801 OAKLAND BOULEVARD SUITE 315
WALNUT CREEK CA 94596

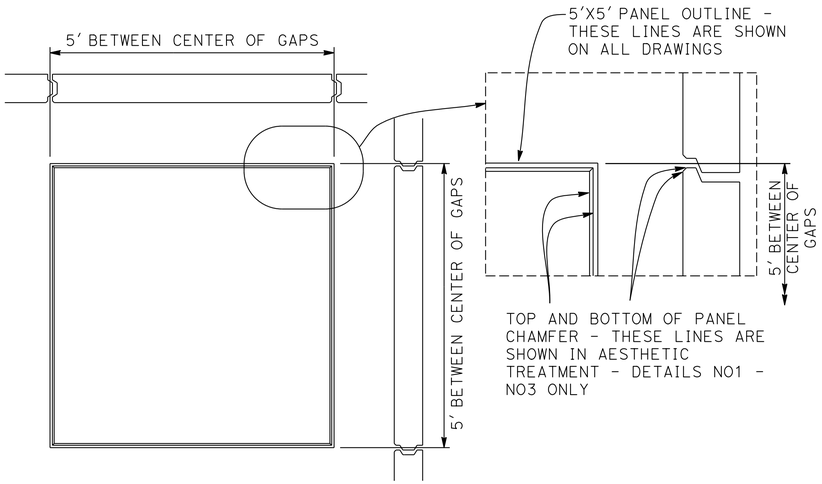

PANELS

3/4"=1'-0"

SAND FINISH AND SKY MOTIF

NTS

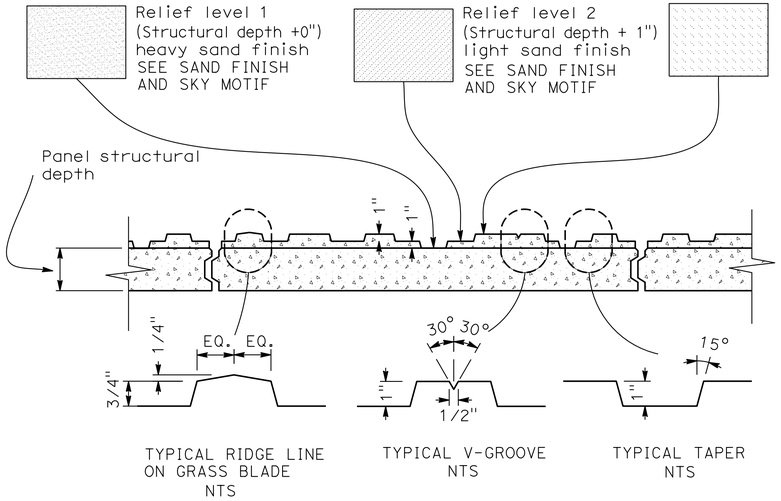

KEY TO SURFACE RELIEF - MSE PANELS AND CIP WALLS

3/8"=1'-0"

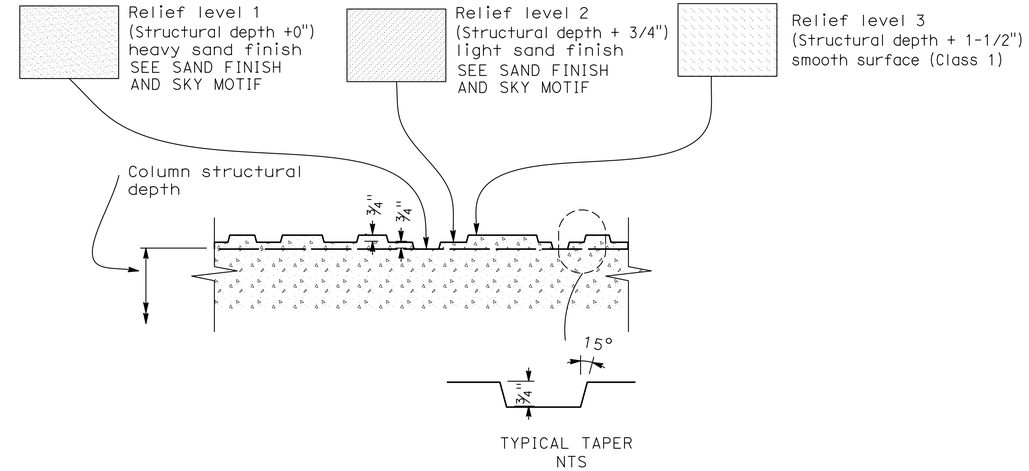

KEY TO SURFACE RELIEF - BRIDGE COLUMNS

3/8"=1'-0"

Tracy L. Bertram
DESIGN OVERSIGHT Tracy L Bertram
1-7-13
SIGN OFF DATE

DESIGN GENERAL PLAN SHEET (ENGLISH) (REV. 3-14-12)

	BY	CHECKED
DESIGN	S KENNEY	R ALCINA
DETAILS	S KENNEY	R ALCINA
QUANTITIES	S KENNEY	R ALCINA

ORIGINAL SCALE IN INCHES FOR REDUCED PLANS 0 1 2 3

PREPARED FOR THE
STATE OF CALIFORNIA
DEPARTMENT OF TRANSPORTATION

MICHAEL PAINTER
PROJECT LANDSCAPE ARCHITECT

BRIDGE NO.
POST MILES

AESTHETIC TREATMENT
DETAILS No. 3

UNIT: 0741
PROJECT NUMBER & PHASE: 04000211311 CONTRACT NO.: 04-0A5341

DISREGARD PRINTS BEARING EARLIER REVISION DATES

REVISION DATES			SHEET	OF
09/5/12	10/19/12		41	51

FILE => 04-0a5341-rwall-g-atd03.dgn

USERNAME => s124936 DATE PLOTTED => 08-MAY-2013 TIME PLOTTED => 07:38

DIST	COUNTY	ROUTE	POST MILES TOTAL PROJECT	SHEET No	TOTAL SHEETS
04	Sol	12,80	2.1/2.8, 12.0/13.1	503	597

GEOTECHNICAL PROFESSIONAL — DATE 9/10/12

5-6-13
PLANS APPROVAL DATE

The State of California or its officers or agents shall not be responsible for the accuracy or completeness of electronic copies of this plan sheet.

REGISTERED PROFESSIONAL ENGINEER — G. PARIKH — No. 666 — Exp. 12/31/13 — GEOTECHNICAL — STATE OF CALIFORNIA

SOLANO TRANSPORTATION AUTHORITY
ONE HARBOR CENTER, SUITE 130
SUISUN CITY, CA 94585

PARIKH CONSULTANTS, INC.
2360 QUME DRIVE, SUITE A
SAN JOSE, CA 95131

BENCH MARKS
BENCHMARK NO. A 1393 (NGS PID JT9519)Brass disc set vertically in the east face of the first concrete pier east ofthe west abutment of the Union Pacific (formerly Southern Pacific) Railroad overcrossing of Interstate Highway 80, 21.7 feet northwest of the center of the most northwesterly westbound lane of the highway. The disc is stamped "A 1393 1987"
Northing: 1837422 Easting: 6518256 (NAD83, CCSII)
Elevation: 67.07 (NAVD 88) Stability: B HPGN D CA 10 LC (NGS PID AC9890)

Survey disc set on aluminum alloy rod encased in a PVC pipe with accesscover set in concrete flush with the parking lot pavement in the Park and Ride Lot, 92 feet west of the centerline of Green Valley Road and 48 feet southeast of the Green Valley Road onramp to westbound Interstate Highway 80. The disc is stamped "CADT 10 LC"
Northing: 1840653.06 Easting: 6521452.79
(HPGN 1991.35, CCSII)
Elevation: 26.35 (NAVD 88) Stability: B

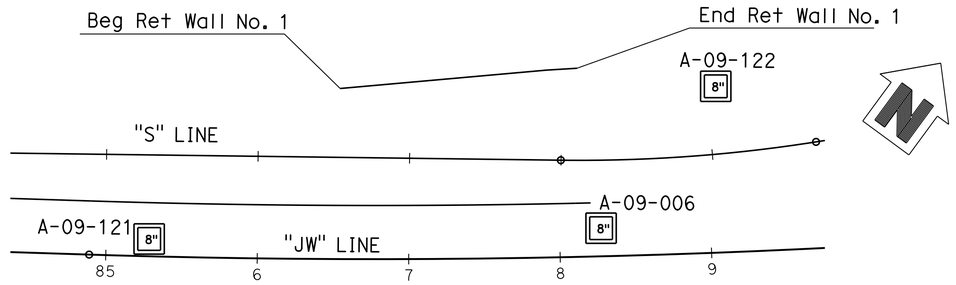

PLAN
1"=50'

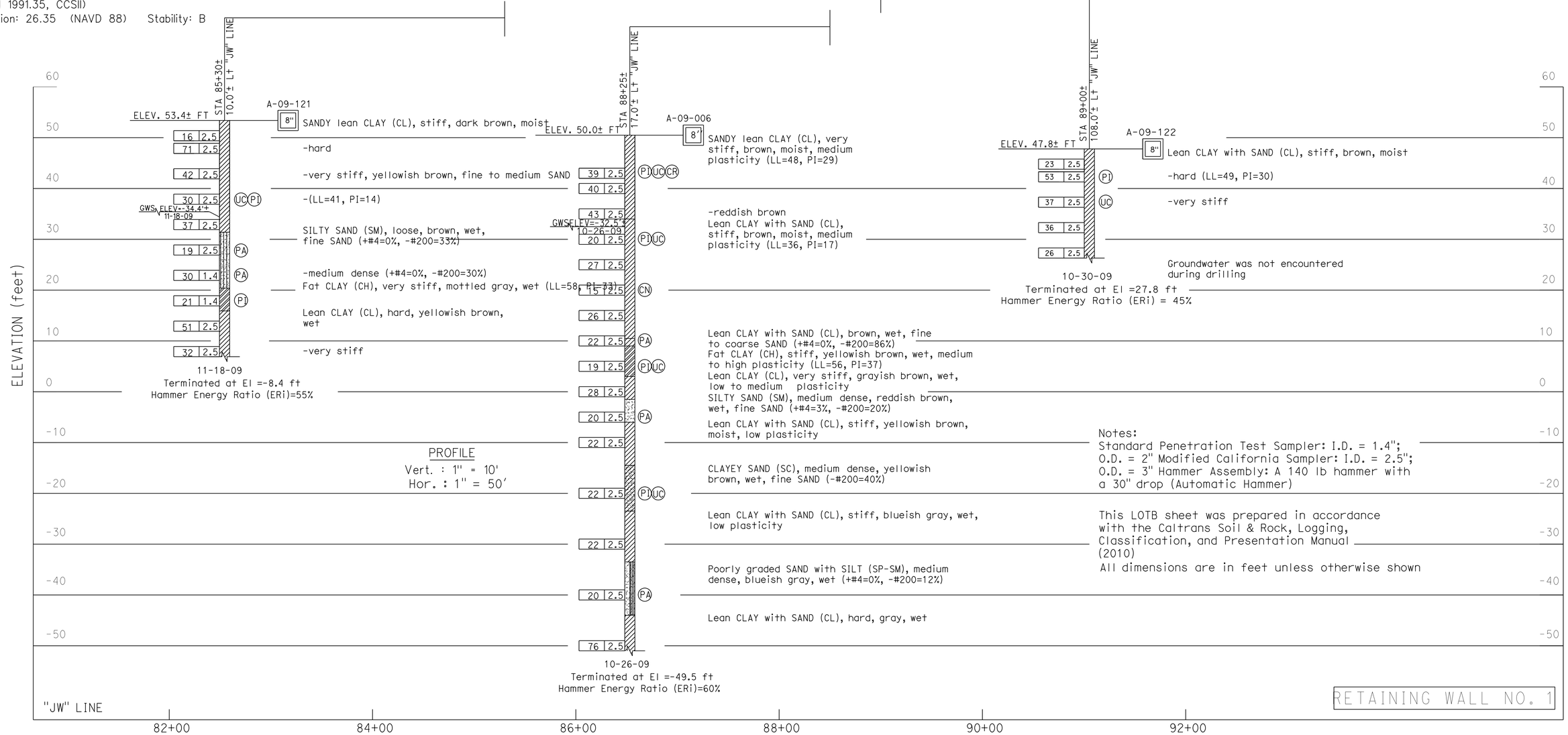

PROFILE
Vert. : 1" = 10'
Hor. : 1" = 50'

Notes:
Standard Penetration Test Sampler: I.D. = 1.4";
O.D. = 2" Modified California Sampler: I.D. = 2.5";
O.D. = 3" Hammer Assembly: A 140 lb hammer with a 30" drop (Automatic Hammer)

This LOTB sheet was prepared in accordance with the Caltrans Soil & Rock, Logging, Classification, and Presentation Manual (2010)
All dimensions are in feet unless otherwise shown

RETAINING WALL NO. 1

DESIGN OVERSIGHT Tracy L Bertram
1-7-13
SIGN OFF DATE

DRAWN BY
CHECKED BY F. WANG

L.S. BHANGOO/A. BHARADWAJ/V. SANTOS
FIELD INVESTIGATION BY:
DATE: OCT-DEC 2009 & MAY 2010 & JAN 2010

PREPARED FOR THE STATE OF CALIFORNIA DEPARTMENT OF TRANSPORTATION

F. WANG
PROJECT ENGINEER

BRIDGE NO. 23-RW01
POST MILES 2.9

I-80/I-680/SR-12 ICP
LOG OF TEST BORINGS (1 OF 10)

GS GEOTECHNICAL LOG OF TEST BORINGS SHEET (ENGLISH) (REV. 7/16/10)

ORIGINAL SCALE IN INCHES FOR REDUCED PLANS 0 1 2 3

UNIT: 0741
PROJECT NUMBER & PHASE: 0400211311 CONTRACT NO.:

DISREGARD PRINTS BEARING EARLIER REVISION DATES

REVISION DATES

SHEET 42 OF 51

FILE => 04-0a5341-rwall-z-lotb01.dgn

USERNAME => s124496 DATE PLOTTED => 08-MAY-2013 TIME PLOTTED => 07:37

DIST	COUNTY	ROUTE	POST MILES TOTAL PROJECT	SHEET No	TOTAL SHEETS
04	Sol	12,80	2.1/2.8, 12.0/13.1	504	597

GEOTECHNICAL PROFESSIONAL — DATE 9/10/12

5-6-13
PLANS APPROVAL DATE

The State of California or its officers or agents shall not be responsible for the accuracy or completeness of electronic copies of this plan sheet.

REGISTERED PROFESSIONAL ENGINEER — G. PARIKH — No. 666 — Exp. 12/31/13 — GEOTECHNICAL — STATE OF CALIFORNIA

SOLANO TRANSPORTATION AUTHORITY
ONE HARBOR CENTER, SUITE 130
SUISUN CITY, CA 94585

PARIKH CONSULTANTS, INC.
2360 QUME DRIVE, SUITE A
SAN JOSE, CA 95131

BENCH MARKS
BENCHMARK NO. A 1393 (NGS PID JT9519)Brass disc set vertically in the east face of the first concrete pier east ofthe west abutment of the Union Pacific (formerly Southern Pacific) Railroad overcrossing of Interstate Highway 80, 21.7 feet northwest of the center of the most northwesterly westbound lane of the highway. The disc is stamped "A 1393 1987"
Northing: 1837422 Easting: 6518256 (NAD83, CCSII)
Elevation: 67.07 (NAVD 88) Stability: B HPGN D CA 10 LC (NGS PID AC9890)

Survey disc set on aluminum alloy rod encased in a PVC pipe with accesscover set in concrete flush with the parking lot pavement in the Park and Ride Lot, 92 feet west of the centerline of Green Valley Road and 48 feet southeast of the Green Valley Road onramp to westbound Interstate Highway 80. The disc is stamped "CADT 10 LC"
Northing: 1840653.06 Easting: 6521452.79
(HPGN 1991.35, CCSII)
Elevation: 26.35 (NAVD 88) Stability: B

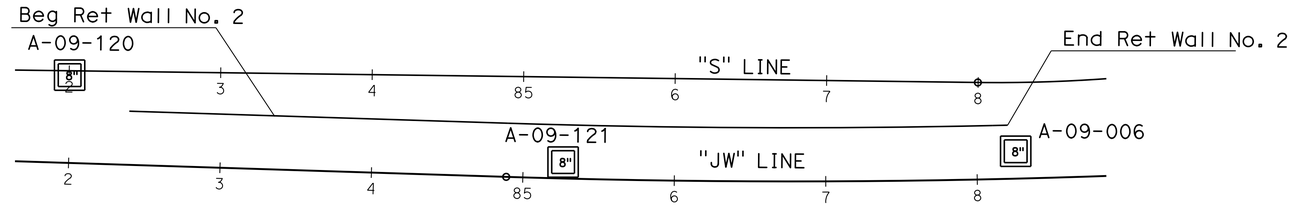

PLAN
1"=50'

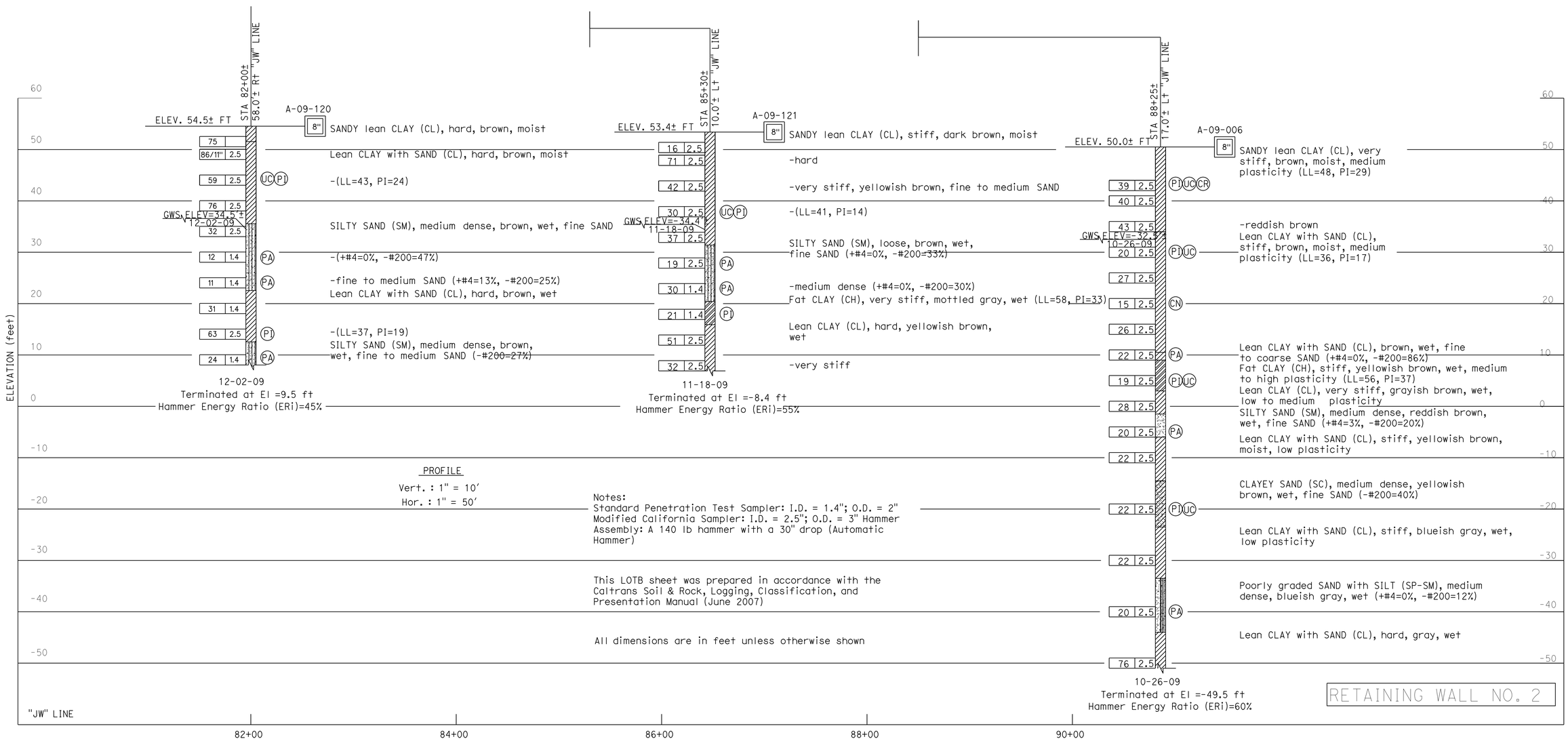

PROFILE
Vert. : 1" = 10'
Hor. : 1" = 50'

Notes:
Standard Penetration Test Sampler: I.D. = 1.4"; O.D. = 2"
Modified California Sampler: I.D. = 2.5"; O.D. = 3" Hammer Assembly: A 140 lb hammer with a 30" drop (Automatic Hammer)

This LOTB sheet was prepared in accordance with the Caltrans Soil & Rock, Logging, Classification, and Presentation Manual (June 2007)

All dimensions are in feet unless otherwise shown

DESIGN OVERSIGHT Tracy L Bertram	DRAWN BY	L.S. BHANGOO/A. BHARADWAJ/V. SANTOS FIELD INVESTIGATION BY:	PREPARED FOR THE STATE OF CALIFORNIA DEPARTMENT OF TRANSPORTATION
1-7-13 SIGN OFF DATE	CHECKED BY F. WANG	DATE: OCT-DEC 2009 & MAY 2010 & JAN 2010	F. WANG PROJECT ENGINEER

BRIDGE NO. 23E0020 — POST MILES 2.9

I-80/I-680/SR-12 ICP
LOG OF TEST BORINGS (2 OF 10)

GS GEOTECHNICAL LOG OF TEST BORINGS SHEET (ENGLISH) (REV. 7/16/10)

ORIGINAL SCALE IN INCHES FOR REDUCED PLANS 0 1 2 3

UNIT: 0741
PROJECT NUMBER & PHASE: 0400211311 CONTRACT NO.:

DISREGARD PRINTS BEARING EARLIER REVISION DATES

REVISION DATES — SHEET 43 OF 51

FILE => 04-0a5341-rwall-z-lotb02.dgn

USERNAME => s124496 DATE PLOTTED => 08-MAY-2013 TIME PLOTTED => 07:37

DIST	COUNTY	ROUTE	POST MILES TOTAL PROJECT	SHEET No	TOTAL SHEETS
04	Sol	12,80	2.1/2.8, 12.0/13.1	505	597

GEOTECHNICAL PROFESSIONAL — DATE 9/10/12

5-6-13
PLANS APPROVAL DATE

The State of California or its officers or agents shall not be responsible for the accuracy or completeness of electronic copies of this plan sheet.

REGISTERED PROFESSIONAL ENGINEER — G. PARIKH — No. 666 — Exp. 12/31/13 — GEOTECHNICAL — STATE OF CALIFORNIA

SOLANO TRANSPORTATION AUTHORITY
ONE HARBOR CENTER, SUITE 130
SUISUN CITY, CA 94585

PARIKH CONSULTANTS, INC.
2360 QUME DRIVE, SUITE A
SAN JOSE, CA 95131

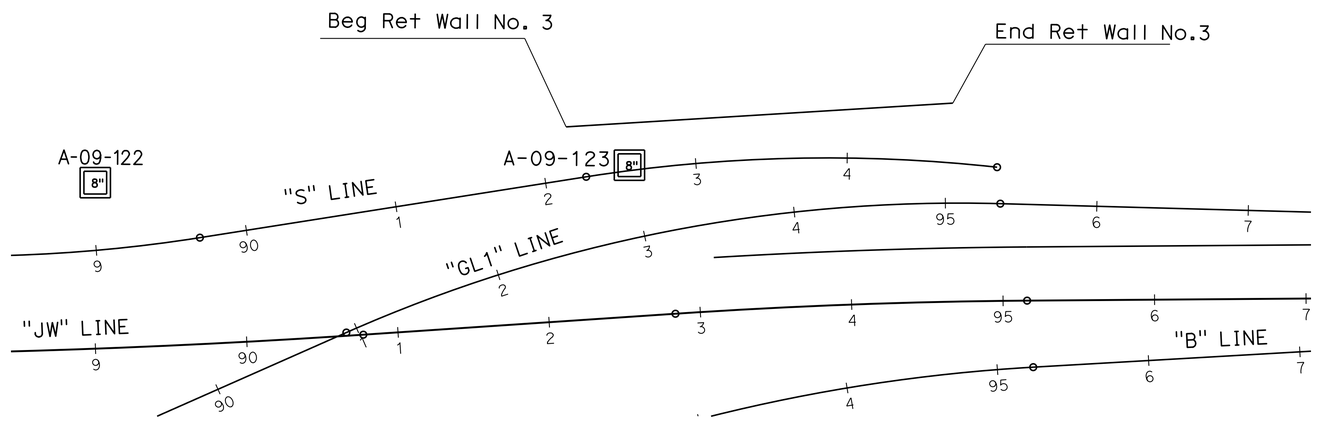

PLAN
1"=50'

BENCH MARKS
BENCHMARK NO. A 1393 (NGS PID JT9519)Brass disc set vertically in the east face of the first concrete pier east ofthe west abutment of the Union Pacific (formerly Southern Pacific) Railroad overcrossing of Interstate Highway 80, 21.7 feet northwest of the center of the most northwesterly westbound lane of the highway. The disc is stamped "A 1393 1987"
Northing: 1837422 Easting: 6518256 (NAD83, CCSII)
Elevation: 67.07 (NAVD 88) Stability: B HPGN D CA 10 LC (NGS PID AC9890)

Survey disc set on aluminum alloy rod encased in a PVC pipe with accesscover set in concrete flush with the parking lot pavement in the Park and Ride Lot, 92 feet west of the centerline of Green Valley Road and 48 feet southeast of the Green Valley Road onramp to westbound Interstate Highway 80. The disc is stamped "CADT 10 LC"
Northing: 1840653.06 Easting: 6521452.79
(HPGN 1991.35, CCSII)
Elevation: 26.35 (NAVD 88) Stability: B

Notes:
Standard Penetration Test Sampler: I.D. = 1.4"; O.D. = 2"
Modified California Sampler: I.D. = 2.5"; O.D. = 3" Hammer Assembly: A 140 lb hammer with a 30" drop (Automatic Hammer)

This LOTB sheet was prepared in accordance with the Caltrans Soil & Rock, Logging, Classification, and Presentation Manual (2010)

All dimensions are in feet unless otherwise shown

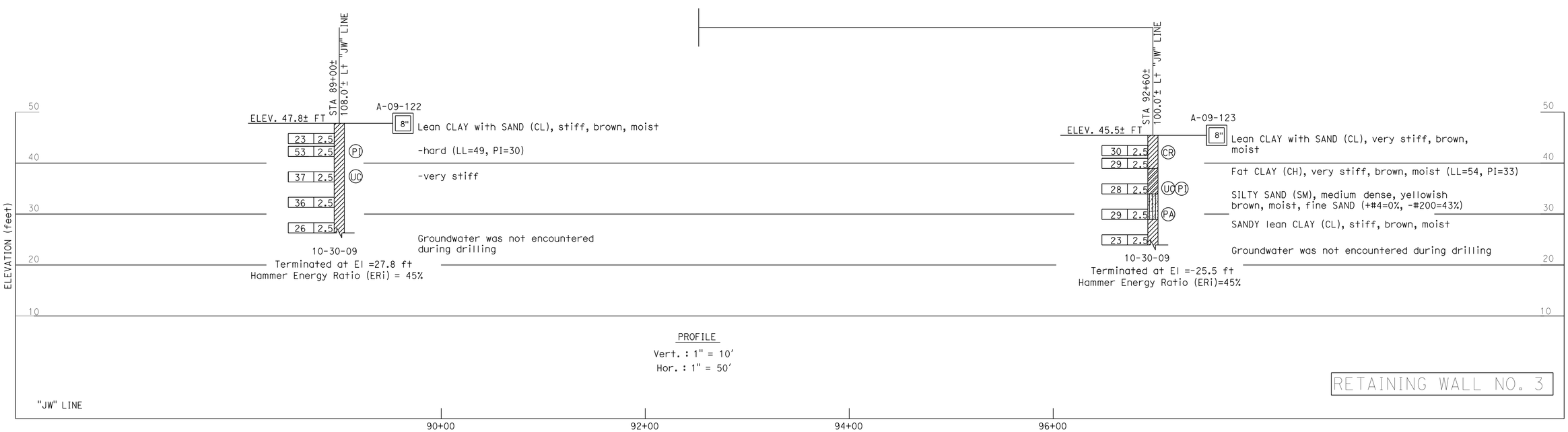

PROFILE
Vert. : 1" = 10'
Hor. : 1" = 50'

RETAINING WALL NO. 3

DESIGN OVERSIGHT Tracy L Bertram — 1-7-13 SIGN OFF DATE	DRAWN BY		L.S. BHANGOO/A. BHARADWAJ/V. SANTOS FIELD INVESTIGATION BY: DATE: OCT-DEC 2009 & MAY 2010 & JAN 2010	PREPARED FOR THE STATE OF CALIFORNIA DEPARTMENT OF TRANSPORTATION	F. WANG PROJECT ENGINEER
	CHECKED BY	F. WANG			

BRIDGE NO. 23-RW03 — POST MILES 3.0

I-80/I-680/SR-12 ICP

LOG OF TEST BORINGS (3 OF 10)

GS GEOTECHNICAL LOG OF TEST BORINGS SHEET (ENGLISH) (REV. 7/16/10)

ORIGINAL SCALE IN INCHES FOR REDUCED PLANS 0 1 2 3

UNIT: 0741
PROJECT NUMBER & PHASE: 0400211311 CONTRACT NO.:

DISREGARD PRINTS BEARING EARLIER REVISION DATES

REVISION DATES

SHEET 44 OF 51

FILE => 04-0a5341-rwall-z-lotb03.dgn

USERNAME => s124496 DATE PLOTTED => 08-MAY-2013 TIME PLOTTED => 07:37

DIST	COUNTY	ROUTE	POST MILES TOTAL PROJECT	SHEET No	TOTAL SHEETS
04	Sol	12,80	2.1/2.8, 12.0/13.1	506	597

GEOTECHNICAL PROFESSIONAL — DATE 9/10/12

5-6-13
PLANS APPROVAL DATE

The State of California or its officers or agents shall not be responsible for the accuracy or completeness of electronic copies of this plan sheet.

REGISTERED PROFESSIONAL ENGINEER — G. PARIKH — No. 666 — Exp. 12/31/13 — GEOTECHNICAL — STATE OF CALIFORNIA

SOLANO TRANSPORTATION AUTHORITY
ONE HARBOR CENTER, SUITE 130
SUISUN CITY, CA 94585

PARIKH CONSULTANTS, INC.
2360 QUME DRIVE, SUITE A
SAN JOSE, CA 95131

BENCH MARKS
BENCHMARK NO. A 1393 (NGS PID JT9519)Brass disc set vertically in the east face of the first concrete pier east ofthe west abutment of the Union Pacific (formerly Southern Pacific) Railroad overcrossing of Interstate Highway 80, 21.7 feet northwest of the center of the most northwesterly westbound lane of the highway. The disc is stamped "A 1393 1987"
Northing: 1837422 Easting: 6518256 (NAD83, CCSII)
Elevation: 67.07 (NAVD 88) Stability: B HPGN D CA 10 LC (NGS PID AC9890)

Survey disc set on aluminum alloy rod encased in a PVC pipe with accesscover set in concrete flush with the parking lot pavement in the Park and Ride Lot, 92 feet west of the centerline of Green Valley Road and 48 feet southeast of the Green Valley Road onramp to westbound Interstate Highway 80. The disc is stamped "CADT 10 LC"
Northing: 1840653.06 Easting: 6521452.79
(HPGN 1991.35, CCSII)
Elevation: 26.35 (NAVD 88) Stability: B

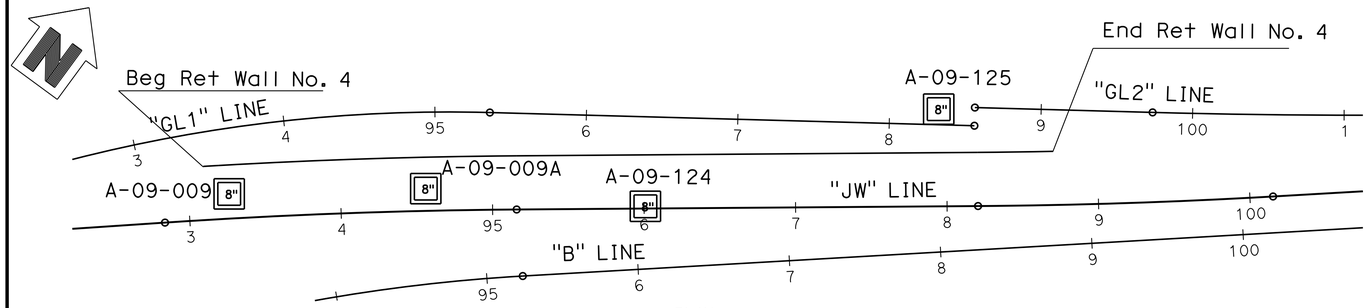

PLAN
1"=50'

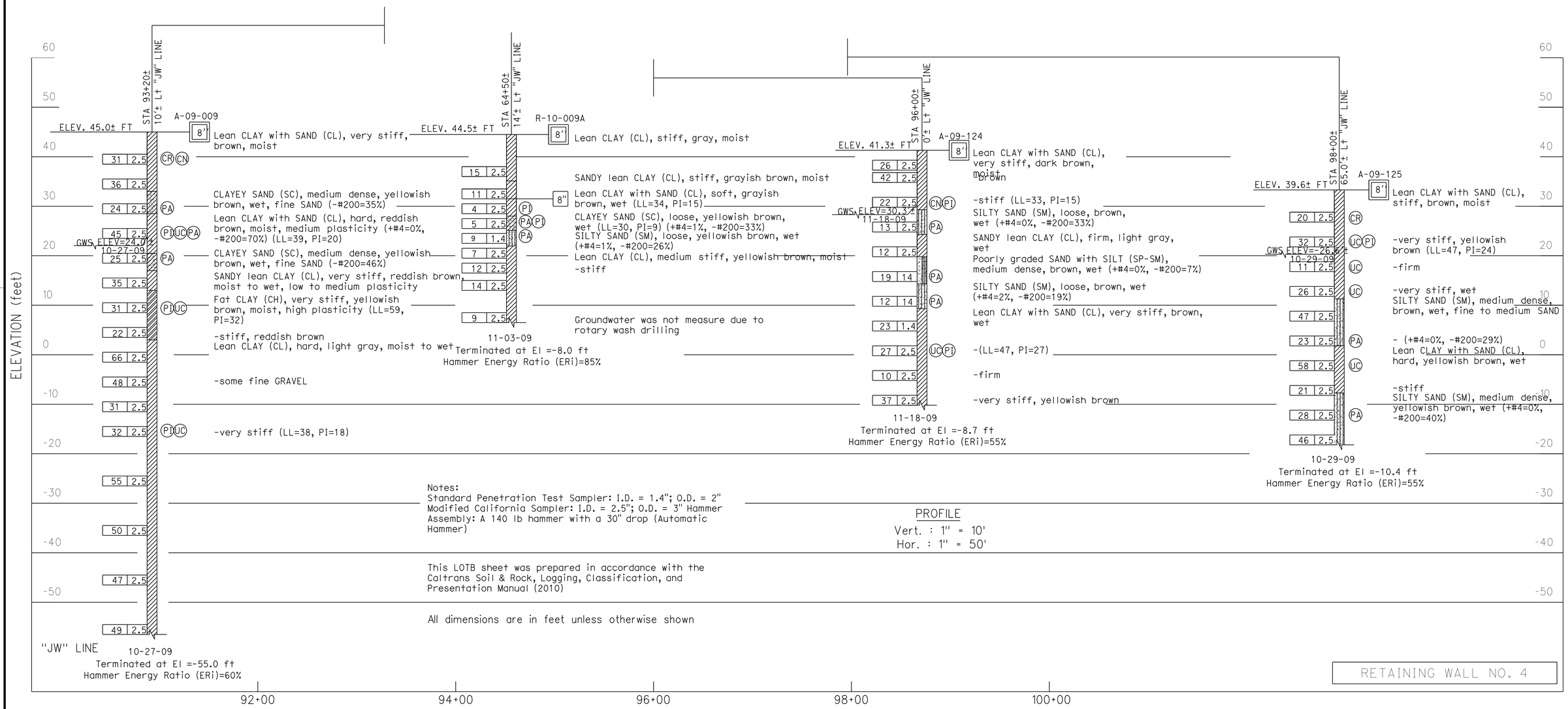

Notes:
Standard Penetration Test Sampler: I.D. = 1.4"; O.D. = 2"
Modified California Sampler: I.D. = 2.5"; O.D. = 3" Hammer Assembly: A 140 lb hammer with a 30" drop (Automatic Hammer)

PROFILE
Vert. : 1" = 10'
Hor. : 1" = 50'

This LOTB sheet was prepared in accordance with the Caltrans Soil & Rock, Logging, Classification, and Presentation Manual (2010)

All dimensions are in feet unless otherwise shown

RETAINING WALL NO. 4

DESIGN OVERSIGHT Tracy L Bertram	DRAWN BY	L.S. BHANGOO/A. BHARADWAJ/V. SANTOS FIELD INVESTIGATION BY:	PREPARED FOR THE STATE OF CALIFORNIA DEPARTMENT OF TRANSPORTATION	F. WANG PROJECT ENGINEER	BRIDGE NO. 23E0021
1-7-13 SIGN OFF DATE	CHECKED BY F. WANG	DATE: OCT-DEC 2009 & MAY 2010 & JAN 2010			POST MILES 3.0

I-80/I-680/SR-12 ICP

LOG OF TEST BORINGS (4 OF 10)

GS GEOTECHNICAL LOG OF TEST BORINGS SHEET (ENGLISH) (REV. 7/16/10)

ORIGINAL SCALE IN INCHES FOR REDUCED PLANS 0 1 2 3

UNIT: 0741
PROJECT NUMBER & PHASE: 0400211311 CONTRACT NO.:

DISREGARD PRINTS BEARING EARLIER REVISION DATES

REVISION DATES

SHEET 45 OF 51

FILE => 04-0a5341-rwall-z-lotb04.dgn

USERNAME => s124436 DATE PLOTTED => 08-MAY-2013 TIME PLOTTED => 07:37

BENCH MARKS
BENCHMARK NO. A 1393 (NGS PID JT9519)Brass disc set vertically in the east face of the first concrete pier east ofthe west abutment of the Union Pacific (formerly Southern Pacific) Railroad overcrossing of Interstate Highway 80, 21.7 feet northwest of the center of the most northwesterly westbound lane of the highway. The disc is stamped "A 1393 1987"
Northing: 1837422 Easting: 6518256 (NAD83, CCSII)
Elevation: 67.07 (NAVD 88) Stability: B HPGN D CA 10 LC (NGS PID AC9890)

Survey disc set on aluminum alloy rod encased in a PVC pipe with accesscover set in concrete flush with the parking lot pavement in the Park and Ride Lot, 92 feet west of the centerline of Green Valley Road and 48 feet southeast of the Green Valley Road onramp to westbound Interstate Highway 80. The disc is stamped "CADT 10 LC"
Northing: 1840653.06 Easting: 6521452.79
(HPGN 1991.35, CCSII)
Elevation: 26.35 (NAVD 88) Stability: B

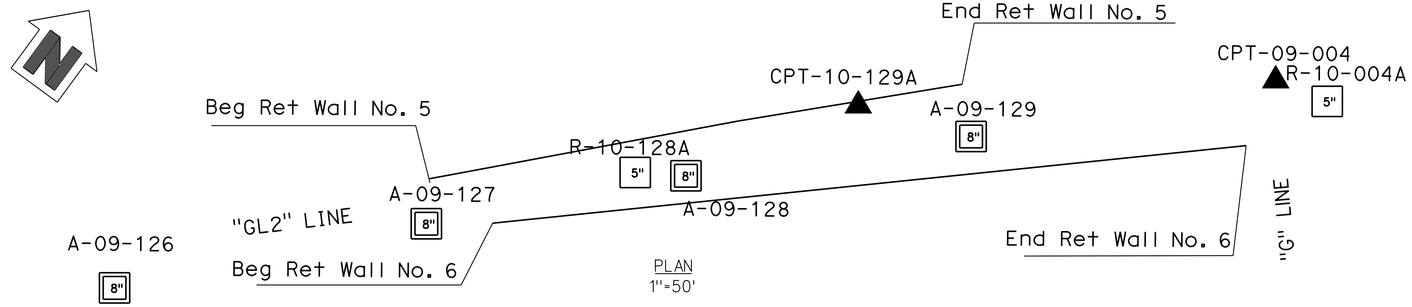

PLAN
1"=50'

DIST	COUNTY	ROUTE	POST MILES TOTAL PROJECT	SHEET No	TOTAL SHEETS
04	Sol	12,80	2.1/2.8, 12.0/13.1	507	597

GEOTECHNICAL PROFESSIONAL — 9/10/12 DATE

5-6-13
PLANS APPROVAL DATE

The State of California or its officers or agents shall not be responsible for the accuracy or completeness of electronic copies of this plan sheet.

REGISTERED PROFESSIONAL ENGINEER — G. PARIKH — No. 666 — Exp. 12/31/13 — GEOTECHNICAL — STATE OF CALIFORNIA

SOLANO TRANSPORTATION AUTHORITY
ONE HARBOR CENTER, SUITE 130
SUISUN CITY, CA 94585
PARIKH CONSULTANTS, INC.
2360 QUME DRIVE, SUITE A
SAN JOSE, CA 95131

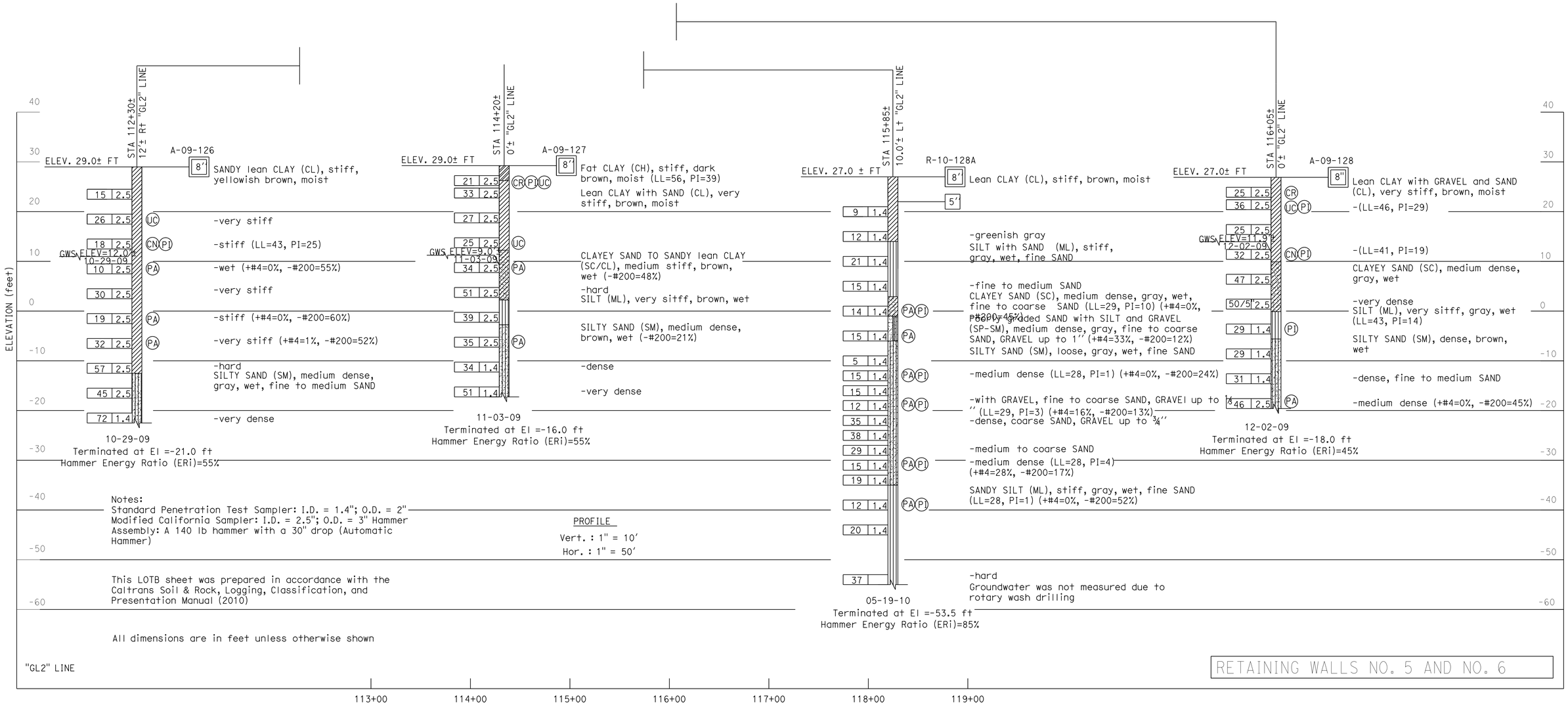

Notes:
Standard Penetration Test Sampler: I.D. = 1.4"; O.D. = 2"
Modified California Sampler: I.D. = 2.5"; O.D. = 3" Hammer Assembly: A 140 lb hammer with a 30" drop (Automatic Hammer)

PROFILE
Vert. : 1" = 10'
Hor. : 1" = 50'

This LOTB sheet was prepared in accordance with the Caltrans Soil & Rock, Logging, Classification, and Presentation Manual (2010)

All dimensions are in feet unless otherwise shown

RETAINING WALLS NO. 5 AND NO. 6

DESIGN OVERSIGHT Tracy L Bertram
1-7-13
SIGN OFF DATE

DRAWN BY
CHECKED BY F. WANG

L.S. BHANGOO/A. BHARADWAJ/V. SANTOS
FIELD INVESTIGATION BY:
DATE: OCT-DEC 2009 & MAY 2010 & JAN 2010

PREPARED FOR THE
STATE OF CALIFORNIA
DEPARTMENT OF TRANSPORTATION

F. WANG
PROJECT ENGINEER

BRIDGE NO. 23-RW05 23E0022
POST MILES 12.7

I-80/I-680/SR-12 ICP

LOG OF TEST BORINGS (5 OF 10)

GS GEOTECHNICAL LOG OF TEST BORINGS SHEET (ENGLISH) (REV. 7/16/10)

ORIGINAL SCALE IN INCHES FOR REDUCED PLANS 0 1 2 3

UNIT: 0741
PROJECT NUMBER & PHASE: 0400211311 CONTRACT NO.:

DISREGARD PRINTS BEARING EARLIER REVISION DATES

REVISION DATES

SHEET 46 OF 51

FILE => 04-0a5341-rwall-z-lotb05.dgn

USERNAME => s124436 DATE PLOTTED => 08-MAY-2013 TIME PLOTTED => 07:37

DIST	COUNTY	ROUTE	POST MILES TOTAL PROJECT	SHEET No	TOTAL SHEETS
04	Sol	12,80	2.1/2.8, 12.0/13.1	508	597

GEOTECHNICAL PROFESSIONAL — 9/10/12 DATE

5-6-13
PLANS APPROVAL DATE

REGISTERED PROFESSIONAL ENGINEER — G. PARIKH — No. 666 — Exp. 12/31/13 — GEOTECHNICAL — STATE OF CALIFORNIA

The State of California or its officers or agents shall not be responsible for the accuracy or completeness of electronic copies of this plan sheet.

SOLANO TRANSPORTATION AUTHORITY
ONE HARBOR CENTER, SUITE 130
SUISUN CITY, CA 94585

PARIKH CONSULTANTS, INC.
2360 QUME DRIVE, SUITE A
SAN JOSE, CA 95131

(See Log of Test Borings 5 of 10 for Boring/CPT locations)

Notes:
Standard Penetration Test Sampler: I.D. = 1.4"; O.D. = 2"
Modified California Sampler: I.D. = 2.5"; O.D. = 3" Hammer Assembly: A 140 lb hammer with a 30" drop (Automatic Hammer)

This LOTB sheet was prepared in accordance with the Caltrans Soil & Rock, Logging, Classification, and Presentation Manual (2010)

All dimensions are in feet unless otherwise shown

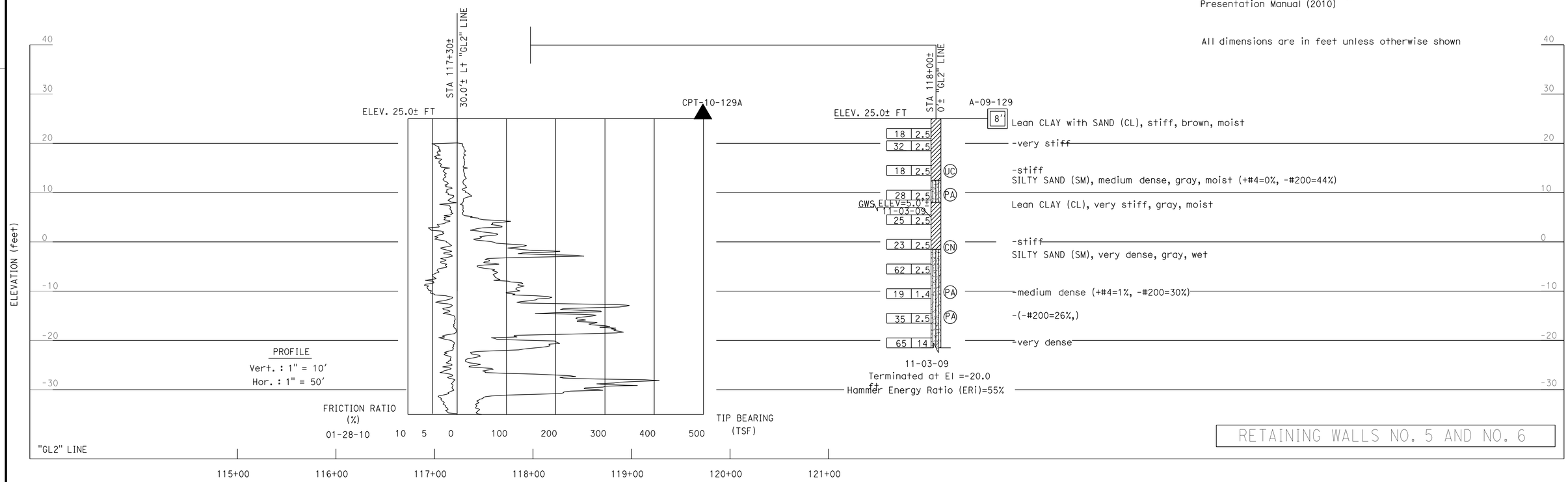

RETAINING WALLS NO. 5 AND NO. 6

DESIGN OVERSIGHT Tracy L Bertram	DRAWN BY		L.S. BHANGOO/A. BHARADWAJ/V. SANTOS FIELD INVESTIGATION BY:	PREPARED FOR THE STATE OF CALIFORNIA DEPARTMENT OF TRANSPORTATION	F. WANG PROJECT ENGINEER	BRIDGE NO. 23E0023 POST MILES 12.7	I-80/I-680/SR-12 ICP
1-7-13 SIGN OFF DATE	CHECKED BY	F. WANG	DATE: OCT-DEC 2009 & MAY 2010 & JAN 2010				LOG OF TEST BORINGS (6 OF 10)

GS GEOTECHNICAL LOG OF TEST BORINGS SHEET (ENGLISH) (REV. 7/16/10)

ORIGINAL SCALE IN INCHES FOR REDUCED PLANS 0 1 2 3

UNIT: 0741
PROJECT NUMBER & PHASE: 0400211311 CONTRACT NO.:

DISREGARD PRINTS BEARING EARLIER REVISION DATES → REVISION DATES

SHEET 47 OF 51

FILE => 04-0a5341-rwall-z-lotb06.dgn

USERNAME => s124436 DATE PLOTTED => 08-MAY-2013 TIME PLOTTED => 07:37

DIST	COUNTY	ROUTE	POST MILES TOTAL PROJECT	SHEET No	TOTAL SHEETS
04	Sol	12,80	2.1/2.8, 12.0/13.1	509	597

GEOTECHNICAL PROFESSIONAL — DATE 9/10/12

5-6-13
PLANS APPROVAL DATE

REGISTERED PROFESSIONAL ENGINEER — G. PARIKH — No. 666 — Exp. 12/31/13 — GEOTECHNICAL — STATE OF CALIFORNIA

The State of California or its officers or agents shall not be responsible for the accuracy or completeness of electronic copies of this plan sheet.

SOLANO TRANSPORTATION AUTHORITY
ONE HARBOR CENTER, SUITE 130
SUISUN CITY, CA 94585

PARIKH CONSULTANTS, INC.
2360 QUME DRIVE, SUITE A
SAN JOSE, CA 95131

(See Log of Test Borings 5 of 10 for Boring/CPT locations)

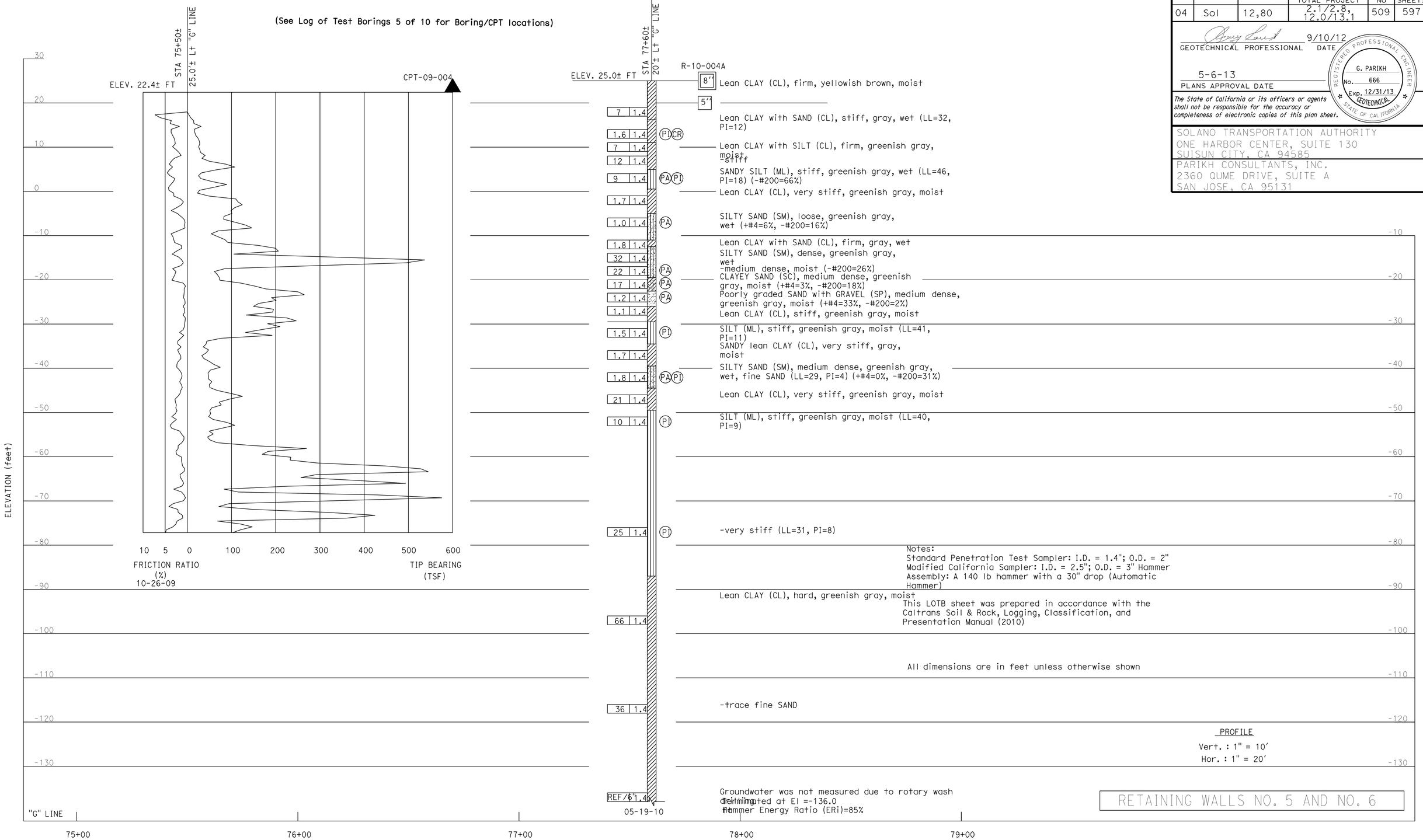

RETAINING WALLS NO. 5 AND NO. 6

DESIGN OVERSIGHT Tracy L Bertram	DRAWN BY	L.S. BHANGOO/A. BHARADWAJ/V. SANTOS	PREPARED FOR THE STATE OF CALIFORNIA DEPARTMENT OF TRANSPORTATION
1-7-13 SIGN OFF DATE	CHECKED BY F. WANG	FIELD INVESTIGATION BY: DATE: OCT-DEC 2009 & MAY 2010 & JAN 2010	F. WANG PROJECT ENGINEER

BRIDGE NO. 23E0023 — POST MILES 12.7

I-80/I-680/SR-12 ICP

LOG OF TEST BORINGS (7 OF 10)

GS GEOTECHNICAL LOG OF TEST BORINGS SHEET (ENGLISH) (REV. 7/16/10)

ORIGINAL SCALE IN INCHES FOR REDUCED PLANS 0 1 2 3

UNIT: 0741
PROJECT NUMBER & PHASE: 0400211311 CONTRACT NO.:

DISREGARD PRINTS BEARING EARLIER REVISION DATES → REVISION DATES

SHEET 48 OF 51

FILE => 04-0a5341-rwall-z-lotb07.dgn

USERNAME => s124936 DATE PLOTTED => 08-MAY-2013 TIME PLOTTED => 07:37

DIST	COUNTY	ROUTE	POST MILES TOTAL PROJECT	SHEET No	TOTAL SHEETS
04	Sol	12,80	2.1/2.8, 12.0/13.1	510	597

GEOTECHNICAL PROFESSIONAL 9/10/12 DATE

5-6-13
PLANS APPROVAL DATE

The State of California or its officers or agents shall not be responsible for the accuracy or completeness of electronic copies of this plan sheet.

REGISTERED PROFESSIONAL ENGINEER G. PARIKH No. 666 Exp. 12/31/13 GEOTECHNICAL STATE OF CALIFORNIA

SOLANO TRANSPORTATION AUTHORITY
ONE HARBOR CENTER, SUITE 130
SUISUN CITY, CA 94585

PARIKH CONSULTANTS, INC.
2360 QUME DRIVE, SUITE A
SAN JOSE, CA 95131

BENCH MARKS
BENCHMARK NO. A 1393 (NGS PID JT9519)Brass disc set vertically in the east face of the first concrete pier east ofthe west abutment of the Union Pacific (formerly Southern Pacific) Railroad overcrossing of Interstate Highway 80, 21.7 feet northwest of the center of the most northwesterly westbound lane of the highway. The disc is stamped "A 1393 1987"
Northing: 1837422 Easting: 6518256 (NAD83, CCSII)
Elevation: 67.07 (NAVD 88) Stability: B HPGN D CA 10 LC (NGS PID AC9890)

Survey disc set on aluminum alloy rod encased in a PVC pipe with accesscover set in concrete flush with the parking lot pavement in the Park and Ride Lot, 92 feet west of the centerline of Green Valley Road and 48 feet southeast of the Green Valley Road onramp to westbound Interstate Highway 80. The disc is stamped "CADT 10 LC"
Northing: 1840653.06 Easting: 6521452.79
(HPGN 1991.35, CCSII)
Elevation: 26.35 (NAVD 88) Stability: B

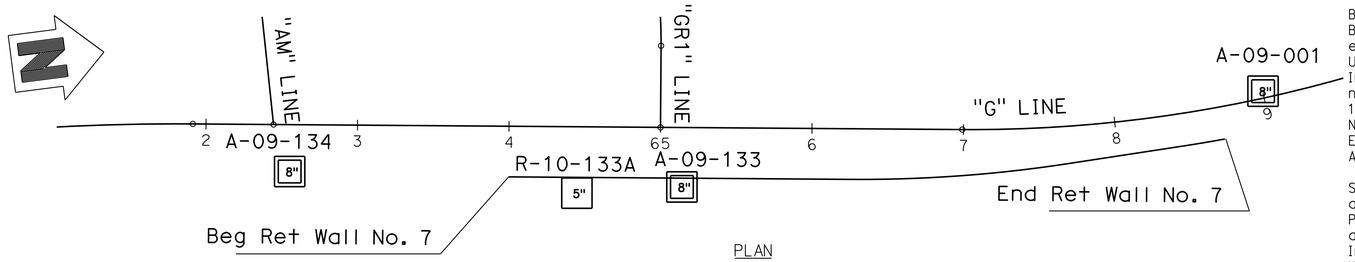

PLAN
1"=50'

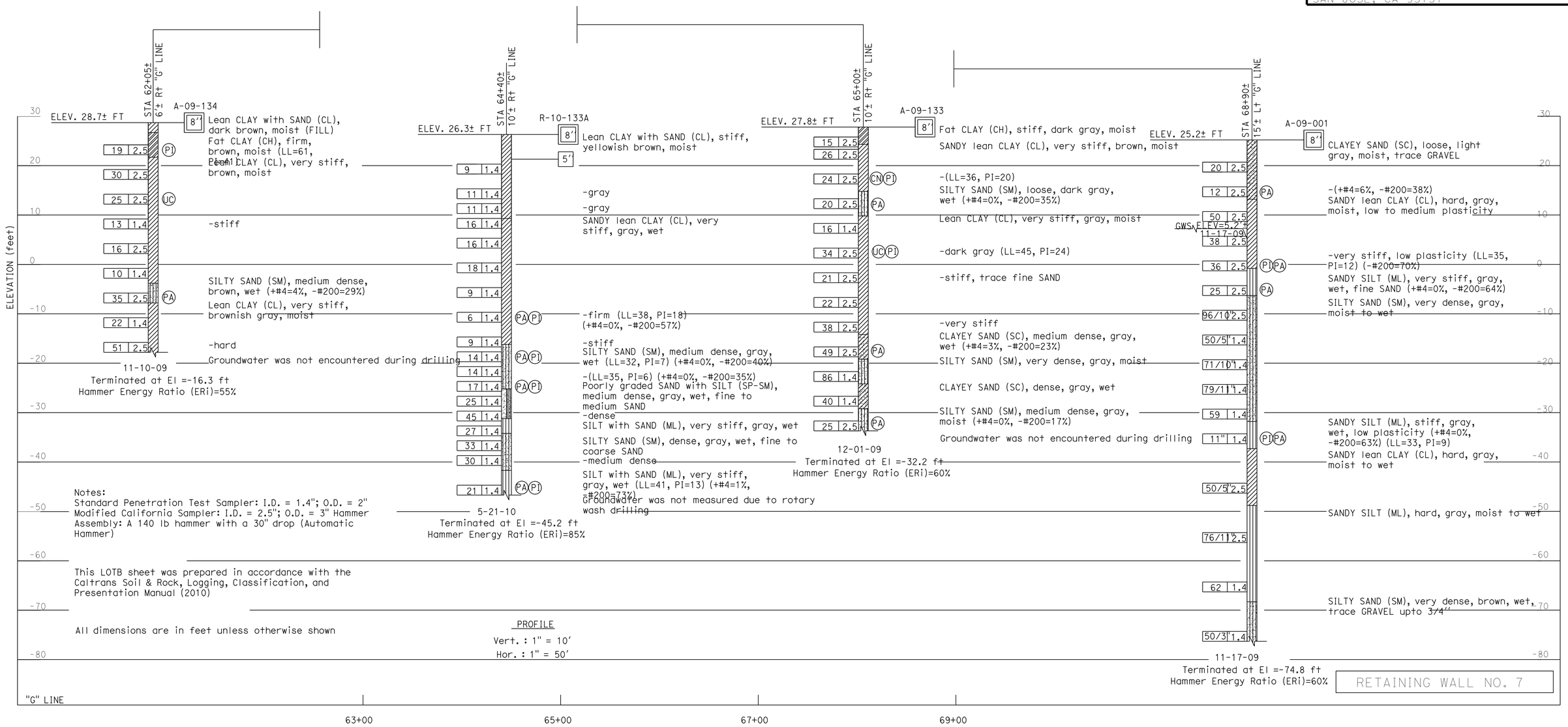

Notes:
Standard Penetration Test Sampler: I.D. = 1.4"; O.D. = 2"
Modified California Sampler: I.D. = 2.5"; O.D. = 3" Hammer Assembly: A 140 lb hammer with a 30" drop (Automatic Hammer)

This LOTB sheet was prepared in accordance with the Caltrans Soil & Rock, Logging, Classification, and Presentation Manual (2010)

All dimensions are in feet unless otherwise shown

PROFILE
Vert. : 1" = 10'
Hor. : 1" = 50'

RETAINING WALL NO. 7

DESIGN OVERSIGHT Tracy L Bertram
1-7-13
SIGN OFF DATE

DRAWN BY
CHECKED BY F. WANG

L.S. BHANGOO/A. BHARADWAJ/V. SANTOS
FIELD INVESTIGATION BY:
DATE: OCT-DEC 2009 & MAY 2010 & JAN 2010

PREPARED FOR THE STATE OF CALIFORNIA DEPARTMENT OF TRANSPORTATION

F. WANG
PROJECT ENGINEER

BRIDGE NO. 23E0024
POST MILES 12.8

I-80/I-680/SR-12 ICP

LOG OF TEST BORINGS (8 OF 10)

GS GEOTECHNICAL LOG OF TEST BORINGS SHEET (ENGLISH) (REV. 7/16/10)

ORIGINAL SCALE IN INCHES FOR REDUCED PLANS 0 1 2 3

UNIT: 0741
PROJECT NUMBER & PHASE: 0400211311 CONTRACT NO.:

DISREGARD PRINTS BEARING EARLIER REVISION DATES

REVISION DATES

SHEET 49 OF 51

FILE => 04-0a5341-rwall-z-lotb08.dgn

USERNAME => s124496 DATE PLOTTED => 08-MAY-2013 TIME PLOTTED => 07:37

DIST	COUNTY	ROUTE	POST MILES TOTAL PROJECT	SHEET No	TOTAL SHEETS
04	Sol	12,80	2.1/2.8, 12.0/13.1	511	597

GEOTECHNICAL PROFESSIONAL — DATE 9/10/12

5-6-13
PLANS APPROVAL DATE

The State of California or its officers or agents shall not be responsible for the accuracy or completeness of electronic copies of this plan sheet.

REGISTERED PROFESSIONAL ENGINEER — G. PARIKH — No. 666 — Exp. 12/31/13 — GEOTECHNICAL — STATE OF CALIFORNIA

SOLANO TRANSPORTATION AUTHORITY
ONE HARBOR CENTER, SUITE 130
SUISUN CITY, CA 94585

PARIKH CONSULTANTS, INC.
2360 QUME DRIVE, SUITE A
SAN JOSE, CA 95131

BENCH MARKS
BENCHMARK NO. A 1393 (NGS PID JT9519)Brass disc set vertically in the east face of the first concrete pier east ofthe west abutment of the Union Pacific (formerly Southern Pacific) Railroad overcrossing of Interstate Highway 80, 21.7 feet northwest of the center of the most northwesterly westbound lane of the highway. The disc is stamped "A 1393 1987"
Northing: 1837422 Easting: 6518256 (NAD83, CCSII)
Elevation: 67.07 (NAVD 88) Stability: B HPGN D CA 10 LC (NGS PID AC9890)

Survey disc set on aluminum alloy rod encased in a PVC pipe with accesscover set in concrete flush with the parking lot pavement in the Park and Ride Lot, 92 feet west of the centerline of Green Valley Road and 48 feet southeast of the Green Valley Road onramp to westbound Interstate Highway 80. The disc is stamped "CADT 10 LC"
Northing: 1840653.06 Easting: 6521452.79
(HPGN 1991.35, CCSII)
Elevation: 26.35 (NAVD 88) Stability: B

Notes:
Standard Penetration Test Sampler: I.D. = 1.4"; O.D. = 2"
Modified California Sampler: I.D. = 2.5"; O.D. = 3" Hammer Assembly: A 140 lb hammer with a 30" drop (Automatic Hammer)

This LOTB sheet was prepared in accordance with the Caltrans Soil & Rock, Logging, Classification, and Presentation Manual (2010)

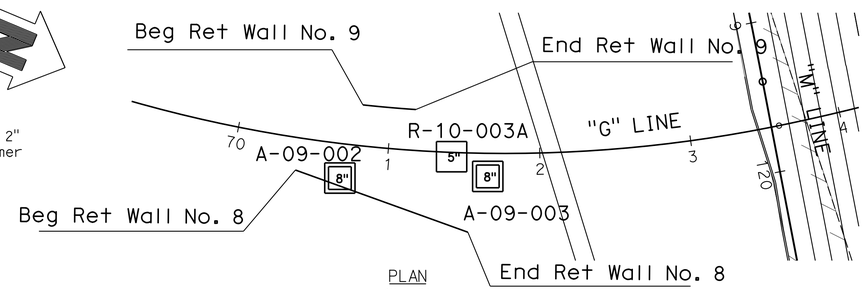

PLAN
1"=50'

All dimensions are in feet unless otherwise shown

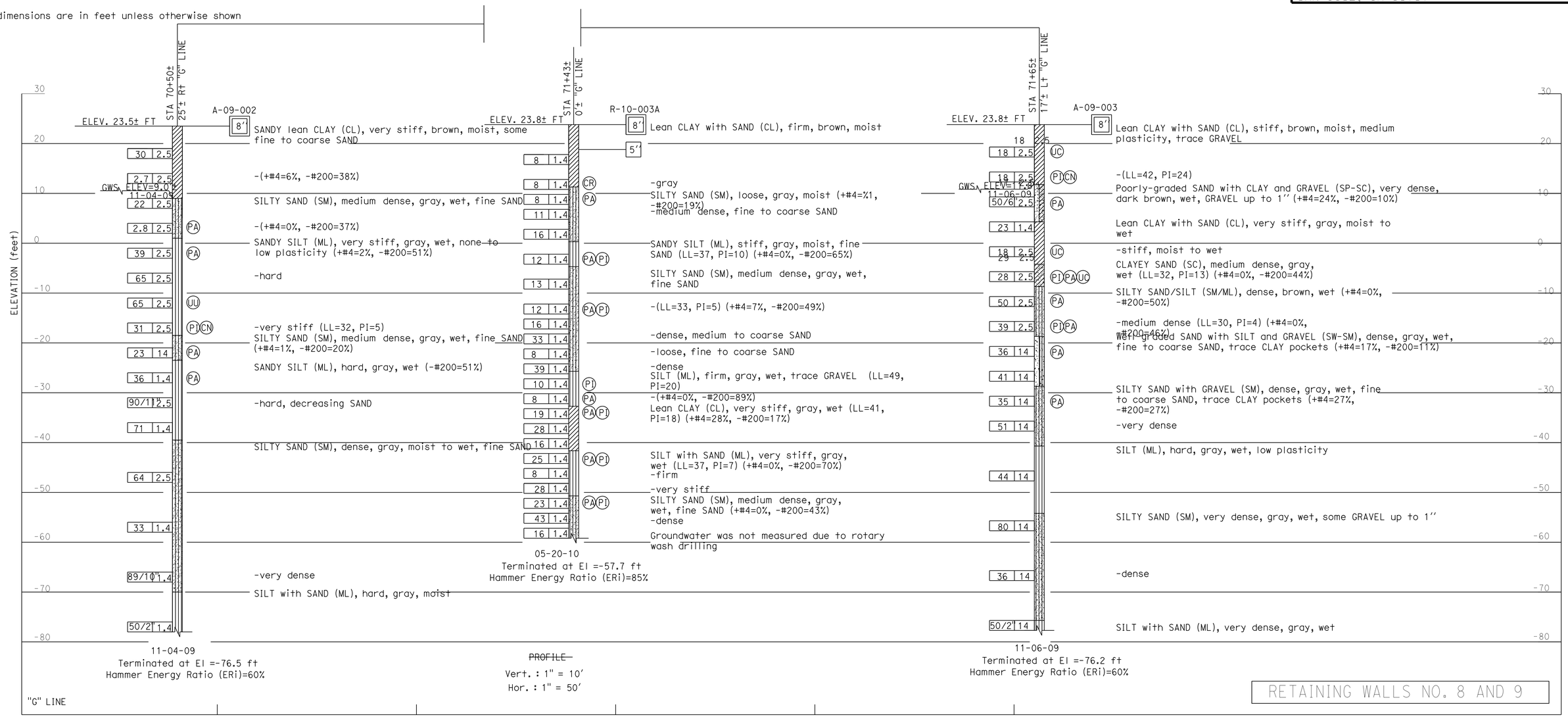

~~PROFILE~~
Vert. : 1" = 10'
Hor. : 1" = 50'

RETAINING WALLS NO. 8 AND 9

DESIGN OVERSIGHT Tracy L Bertram	DRAWN BY		L.S. BHANGOO/A. BHARADWAJ/V. SANTOS FIELD INVESTIGATION BY:	PREPARED FOR THE STATE OF CALIFORNIA DEPARTMENT OF TRANSPORTATION	F. WANG PROJECT ENGINEER
1-7-13 SIGN OFF DATE	CHECKED BY	F. WANG	DATE: OCT-DEC 2009 & MAY 2010 & JAN 2010		

BRIDGE NO. 23-RW09 23E0025
POST MILES 12.8

I-80/I-680/SR-12 ICP

LOG OF TEST BORINGS (9 OF 10)

GS GEOTECHNICAL LOG OF TEST BORINGS SHEET (ENGLISH) (REV. 7/16/10)

ORIGINAL SCALE IN INCHES FOR REDUCED PLANS 0 1 2 3

UNIT: 0741
PROJECT NUMBER & PHASE: 0400211311 CONTRACT NO.:

DISREGARD PRINTS BEARING EARLIER REVISION DATES

REVISION DATES | SHEET 50 | OF 51

FILE => 04-0a5341-rwall-z-lotb09.dgn

USERNAME => s124496 DATE PLOTTED => 08-MAY-2013 TIME PLOTTED => 07:37

DIST	COUNTY	ROUTE	POST MILES TOTAL PROJECT	SHEET No	TOTAL SHEETS
04	Sol	12,80	2.1/2.8, 12.0/13.1	512	597

GEOTECHNICAL PROFESSIONAL — DATE 9/10/12

5-6-13
PLANS APPROVAL DATE

The State of California or its officers or agents shall not be responsible for the accuracy or completeness of electronic copies of this plan sheet.

REGISTERED PROFESSIONAL ENGINEER — G. PARIKH — No. 666 — Exp. 12/31/13 — GEOTECHNICAL — STATE OF CALIFORNIA

SOLANO TRANSPORTATION AUTHORITY
ONE HARBOR CENTER, SUITE 130
SUISUN CITY, CA 94585

PARIKH CONSULTANTS, INC.
2360 QUME DRIVE, SUITE A
SAN JOSE, CA 95131

BENCH MARKS
BENCHMARK NO. A 1393 (NGS PID JT9519)Brass disc set vertically in the east face of the first concrete pier east ofthe west abutment of the Union Pacific (formerly Southern Pacific) Railroad overcrossing of Interstate Highway 80, 21.7 feet northwest of the center of the most northwesterly westbound lane of the highway. The disc is stamped "A 1393 1987"
Northing: 1837422 Easting: 6518256 (NAD83, CCSII)
Elevation: 67.07 (NAVD 88) Stability: B HPGN D CA 10 LC (NGS PID AC9890)

Survey disc set on aluminum alloy rod encased in a PVC pipe with accesscover set in concrete flush with the parking lot pavement in the Park and Ride Lot, 92 feet west of the centerline of Green Valley Road and 48 feet southeast of the Green Valley Road onramp to westbound Interstate Highway 80. The disc is stamped "CADT 10 LC"
Northing: 1840653.06 Easting: 6521452.79
(HPGN 1991.35, CCSII)
Elevation: 26.35 (NAVD 88) Stability: B

Notes:
Standard Penetration Test Sampler: I.D. = 1.4"; O.D. = 2"
Modified California Sampler: I.D. = 2.5"; O.D. = 3" Hammer Assembly: A 140 lb hammer with a 30" drop (Automatic Hammer)

This LOTB sheet was prepared in accordance with the Caltrans Soil & Rock, Logging, Classification, and Presentation Manual (2010)

All dimensions are in feet unless otherwise shown

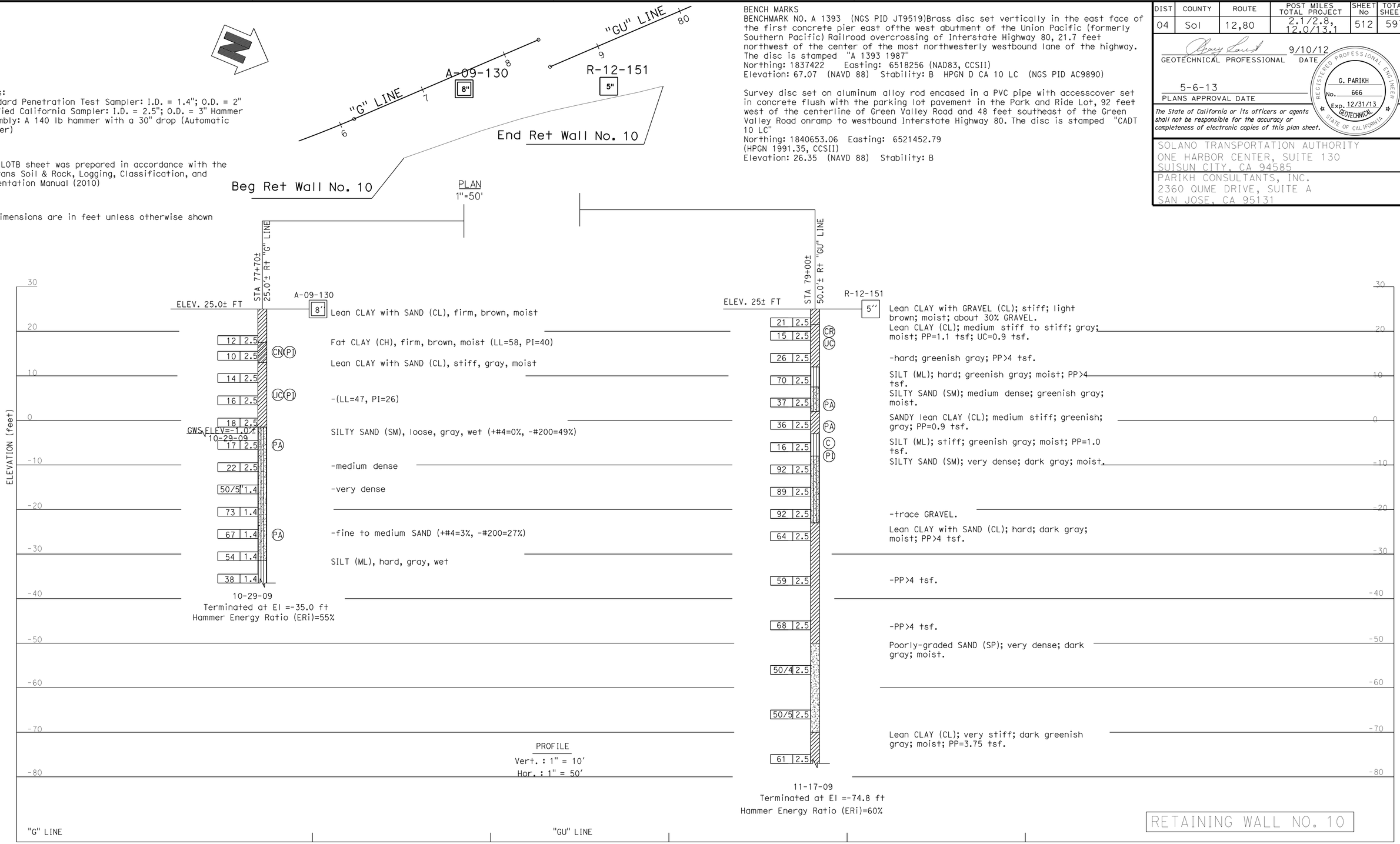

DESIGN OVERSIGHT Tracy L Bertram	DRAWN BY		L.S. BHANGOO/A. BHARADWAJ/V. SANTOS FIELD INVESTIGATION BY:	PREPARED FOR THE STATE OF CALIFORNIA DEPARTMENT OF TRANSPORTATION	F. WANG PROJECT ENGINEER	BRIDGE NO. 23E0025 POST MILES 12.8
1-7-13 SIGN OFF DATE	CHECKED BY	F. WANG	DATE: OCT-DEC 2009 & MAY 2010 & JAN 2010			

I-80/I-680/SR-12 ICP

LOG OF TEST BORINGS (10 OF 10)

GS GEOTECHNICAL LOG OF TEST BORINGS SHEET (ENGLISH) (REV. 7/16/10)

ORIGINAL SCALE IN INCHES FOR REDUCED PLANS 0 1 2 3

UNIT: 0741
PROJECT NUMBER & PHASE: 0400211311 CONTRACT NO.:

DISREGARD PRINTS BEARING EARLIER REVISION DATES

REVISION DATES | SHEET 51 OF 51

FILE => 04-0a5341-rwall-z-lotb10.dgn

USERNAME => s124496 DATE PLOTTED => 08-MAY-2013 TIME PLOTTED => 07:57

DIST	COUNTY	ROUTE	POST MILES TOTAL PROJECT	SHEET No	TOTAL SHEETS
04	Sol	12,80	2.1/2.8, 12.0/13.1	513	597

P.K. Chen 9/12/12
REGISTERED STRUCTURAL ENGINEER DATE

5-6-13
PLANS APPROVAL DATE

REGISTERED PROFESSIONAL ENGINEER PO-KANG CHEN No. S 3112 Exp. 9/30/13 STRUCTURAL STATE OF CALIFORNIA

The State of California or its officers or agents shall not be responsible for the accuracy or completeness of electronic copies of this plan sheet.

SOLANO TRANSPORTATION AUTHORITY
ONE HARBOR CENTER, SUITE 130
SUISUN CITY, CA 94585

MARK THOMAS & COMPANY, INC. + NOLTE ASSOCIATES, INC.
3000 OAK ROAD, SUITE 650
WALNUT CREEK, CA 94597

LEGEND:

- ◕ Indicates Point of Minimum Vertical Clearance
- ——— Indicates New Construction
- - - - - Indicates Future Widening

NOTES:

1. Paint "GREEN VALLEY ROAD O. C."
2. Paint "Br No. 23-0246 and year completed
3. Approach Slab Type EQ(10)
4. Electrolier, see 'ELECTRICAL PLANS'
5. 2" Dia Conduit (Lighting), see 'ROAD PLANS'
6. 2" Dia Conduit (Signal Interconnect), see 'ROAD PLANS'
7. 2" Dia Conduit (Future), see 'ROAD PLANS'
8. 2" Dia Conduit (Loop Detector), see 'ROAD PLANS'

1. For 'INDEX TO PLANS' & 'GENERAL NOTES', see "DECK CONTOURS" sheet.
2. For 'PILE DATA TABLE', see "FOUNDATION PLAN" sheet.
3. For Preformed Loop Detectors in bridge deck, see 'ELECTRICAL PLANS'.

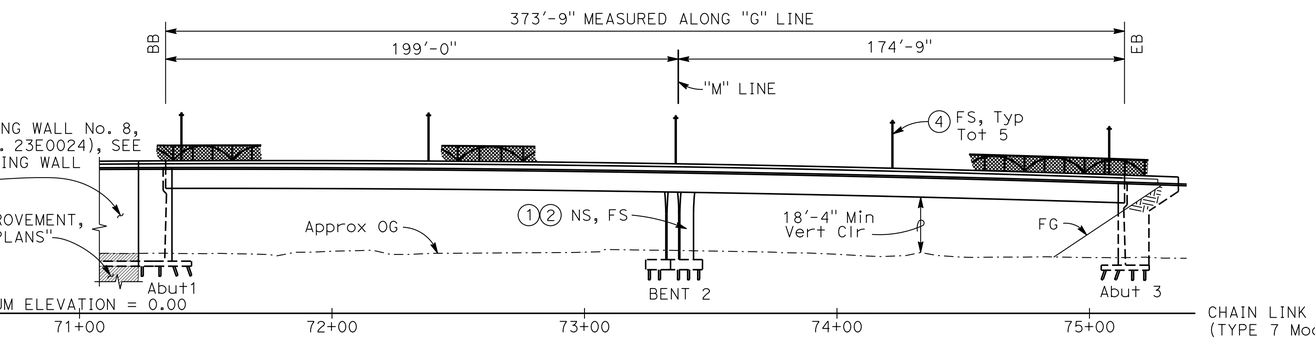

PROFILE GRADE
No scale

ELEVATION
1"= 30'

'G' LINE CURVE DATA

R	Δ	T	L
900.00'	42°01'01"	345.63'	660.00'
1267.00'	11°38'34"	129.17'	257.46'

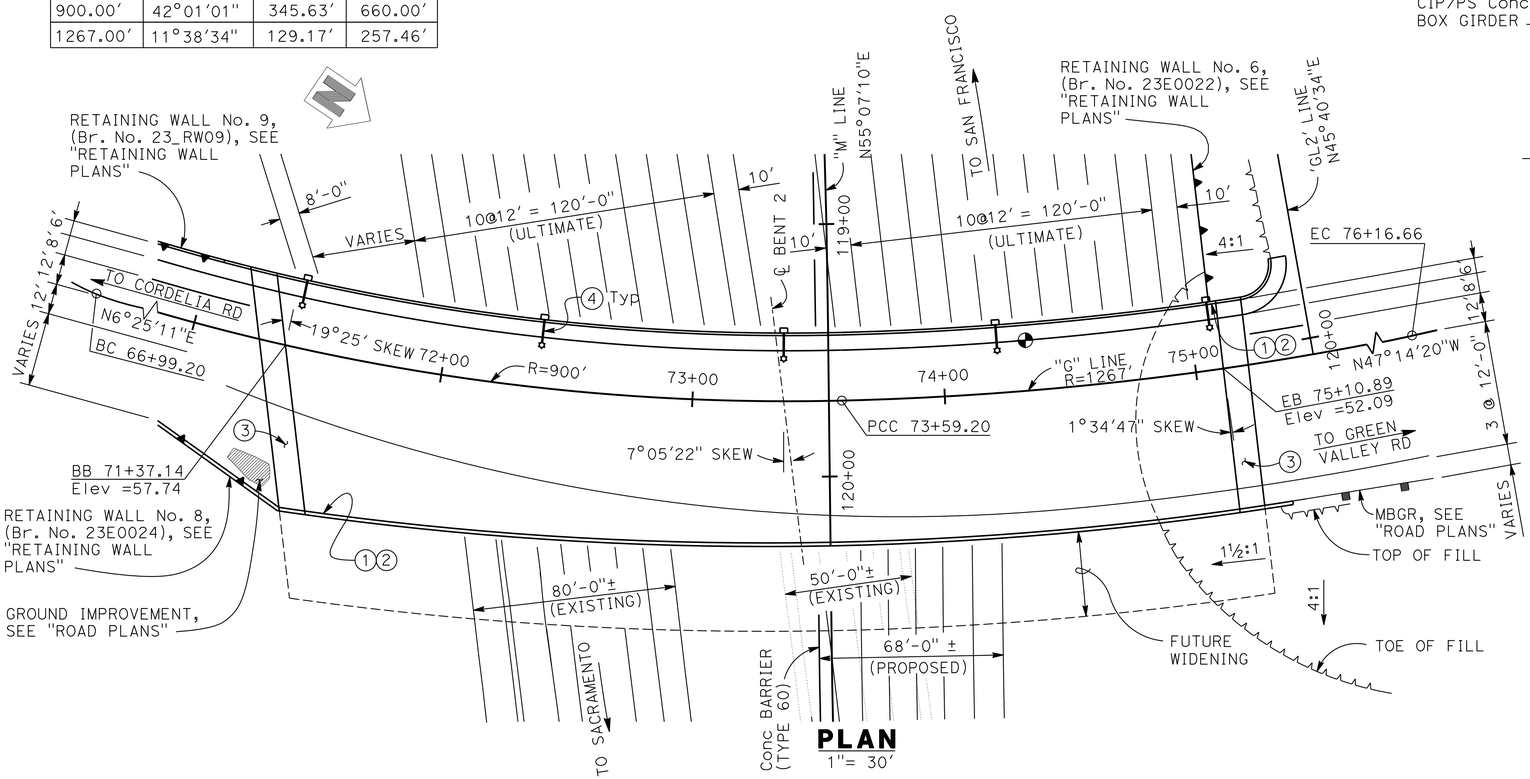

PLAN
1"= 30'

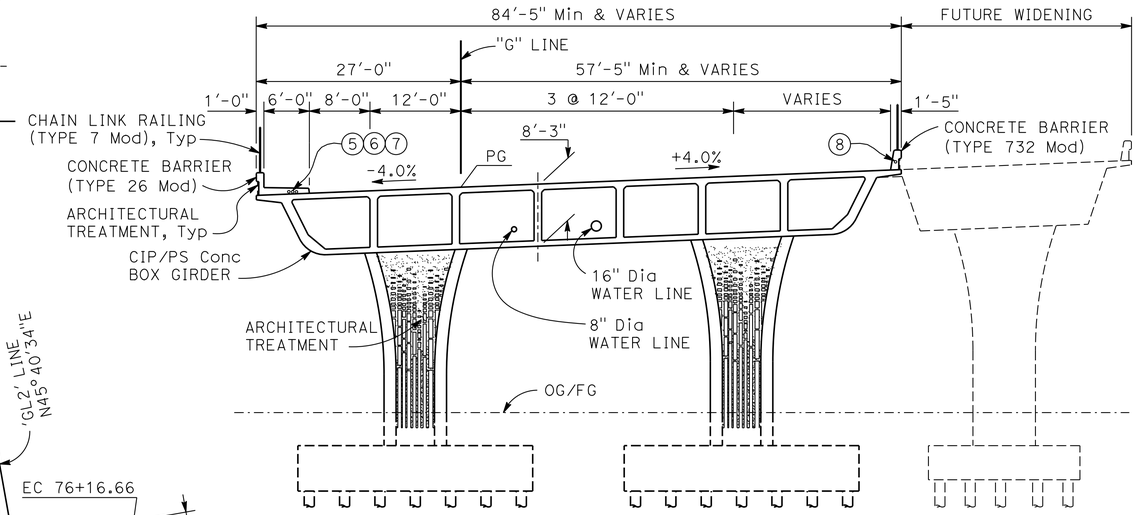

TYPICAL SECTION
1"= 10'

EA 04-0A5341

GREEN VALLEY RD OC #23-0246

QUANTITIES

BRIDGE REMOVAL	LUMP	SUM
STRUCTURE EXCAVATION (BRIDGE)	3,110	CY
STRUCTURE BACKFILL (BRIDGE)	3,390	CY
8" SUPPLY LINE (BRIDGE)	395	LF
16" SUPPLY LINE (BRIDGE)	395	LF
FURNISH PILING (CLASS 200) (ALTERNATIVE W)	15,950	LF
DRIVE PILE (CLASS 200) (ALTERNATIVE W)	171	EA
PRESTRESSING CAST-IN-PLACE CONCRETE	LUMP	SUM
STRUCTURAL CONCRETE, BRIDGE FOOTING	721	CY
STRUCTURAL CONCRETE, BRIDGE	3,900	CY
STRUCTURAL CONCRETE, APPROACH SLAB (TYPE EQ)	52	CY
ARCHITECTURAL TREATMENT	5,570	SQFT
JOINT SEAL ASSEMBLY (MR 2½")	97	LF
JOINT SEAL ASSEMBLY (MR 3")	85	LF
BAR REINFORCING STEEL (BRIDGE)	1,221,100	LB
MISCELLANEOUS METAL (BRIDGE)	675	LB
CHAIN LINK RAILING (TYPE 7 MODIFIED)	801	LF
CONCRETE BARRIER (TYPE 26 MODIFIED)	404	LF
CONCRETE BARRIER (TYPE 732 MODIFIED)	423	LF

Tracy L. Bertram
DESIGN OVERSIGHT Tracy L Bertram
1-7-13
SIGN OFF DATE

	BY	CHECKED
DESIGN	P. CHEN	J. PASSALACQUA
DETAILS	N. PHAM	J. PASSALACQUA
QUANTITIES	N. PHAM	A. HOAC

LOAD & RESISTANCE FACTOR DESIGN — LIVE LOADING: HL93 W/"LOW-BOY"; PERMIT DESIGN VEHICLE

	BY	CHECKED
LAYOUT	N. PHAM	V. SHERBY
SPECIFICATIONS	T. WALKER	PLANS AND SPECS COMPARED P. CHEN

PREPARED FOR THE STATE OF CALIFORNIA DEPARTMENT OF TRANSPORTATION

PO-KANG CHEN
PROJECT ENGINEER

BRIDGE NO. 23-0246
POST MILES 12.8

GREEN VALLEY ROAD OVERCROSSING
GENERAL PLAN

DESIGN GENERAL PLAN SHEET (ENGLISH) (REV.7/16/10)

ORIGINAL SCALE IN INCHES FOR REDUCED PLANS 0 1 2 3

UNIT: 0741
PROJECT NUMBER & PHASE: 04000211311 CONTRACT NO.: 04-0A5341

DISREGARD PRINTS BEARING EARLIER REVISION DATES

REVISION DATES 9/30/11 5/3/12 9/12/12 10/19/12

SHEET 1 OF 28

FILE => 23-0246-a-gp01.dgn

USERNAME => s124496 DATE PLOTTED => 08-MAY-2013 TIME PLOTTED => 07:57

DIST	COUNTY	ROUTE	POST MILES TOTAL PROJECT	SHEET No	TOTAL SHEETS
04	Sol	12,80	2.1/2.8, 12.0/13.1	514	597

P.K. Chen 9/12/12
REGISTERED STRUCTURAL ENGINEER DATE

5-6-13
PLANS APPROVAL DATE

REGISTERED PROFESSIONAL ENGINEER PO-KANG CHEN No. S 3112 Exp. 9/30/13 STRUCTURAL STATE OF CALIFORNIA

The State of California or its officers or agents shall not be responsible for the accuracy or completeness of electronic copies of this plan sheet.

SOLANO TRANSPORTATION AUTHORITY
ONE HARBOR CENTER, SUITE 130
SUISUN CITY, CA 94585

MARK THOMAS & COMPANY, INC. + NOLTE ASSOCIATES, INC.
3000 OAK ROAD, SUITE 650
WALNUT CREEK, CA 94597

GENERAL NOTES
LOAD AND RESISTANCE FACTOR DESIGN

DESIGN: AASHTO LRFD Bridge Design Specifications, 4th edition with California Amendments.

SEISMIC DESIGN: Caltrans Seismic Design Criteria (SDC), Version 1.6 dated November 2010.

DEAD LOAD: Includes 35 psf for Future Wearing Surface.

LIVE LOADING: HL93 and Permit Design Load.

SEISMIC LOADING: Soil Profile: Vs30 = 200 m/s (Liquefaction Case)
Vs30 = 225 m/s (Non-Liquefaction Case)
Moment Magnitude: M_{max}= 6.7 (Cordelia Fault)
M_{max}= 6.9 (Green Valley Fault)
Peak Ground Acceleration 0.7g
See 'ARS Design Curve'.

CONCRETE: fy = 60 ksi
f'c = 3.6 ksi unless otherwise noted
n = 8

PRESTRESSED CONCRETE: See 'PRESTRESSING NOTES' on "GIRDER LAYOUT" sheet

STANDARD PLANS DATED 2010

A10A	ABBREVIATIONS (SHEET 1 OF 2)
A10B	ABBREVIATIONS (SHEET 2 OF 2)
A10C	LINES AND SYMBOLS (SHEET 1 OF 3)
A10D	LINES AND SYMBOLS (SHEET 2 OF 3)
A10E	LINES AND SYMBOLS (SHEET 3 OF 3)
A10F	LEGEND - SOIL (SHEET 1 OF 2)
A10G	LEGEND - SOIL (SHEET 2 OF 2)
A62C	LIMITS OF PAYMENT FOR EXCAVATION AND BACKFILL - BRIDGE
BO-1	BRIDGE DETAILS
BO-3	BRIDGE DETAILS
BO-5	BRIDGE DETAILS
BO-13	BRIDGE DETAILS
B2-8	PILE DETAILS - CLASS 200
RSP B3-1A	RETAINING WALL TYPE 1 (CASE 1)
B7-1	BOX GIRDER DETAILS
B7-10	UTILITY OPENING - BOX GIRDER
B8-5	CAST-IN-PLACE PRESTRESSED GIRDER DETAILS
B11-54	CONCRETE BARRIER TYPE 26
B11-55	CONCRETE BARRIER TYPE 732
B14-3	COMMUNICATION AND SPRINKLER CONTROL CONDUITS (CONDUIT LESS THAN 4")
B14-5	WATER SUPPLY LINE (DETAILS) (PIPE SIZE LESS THAN 4")

Standard Plan Sheet No.
Detail No.

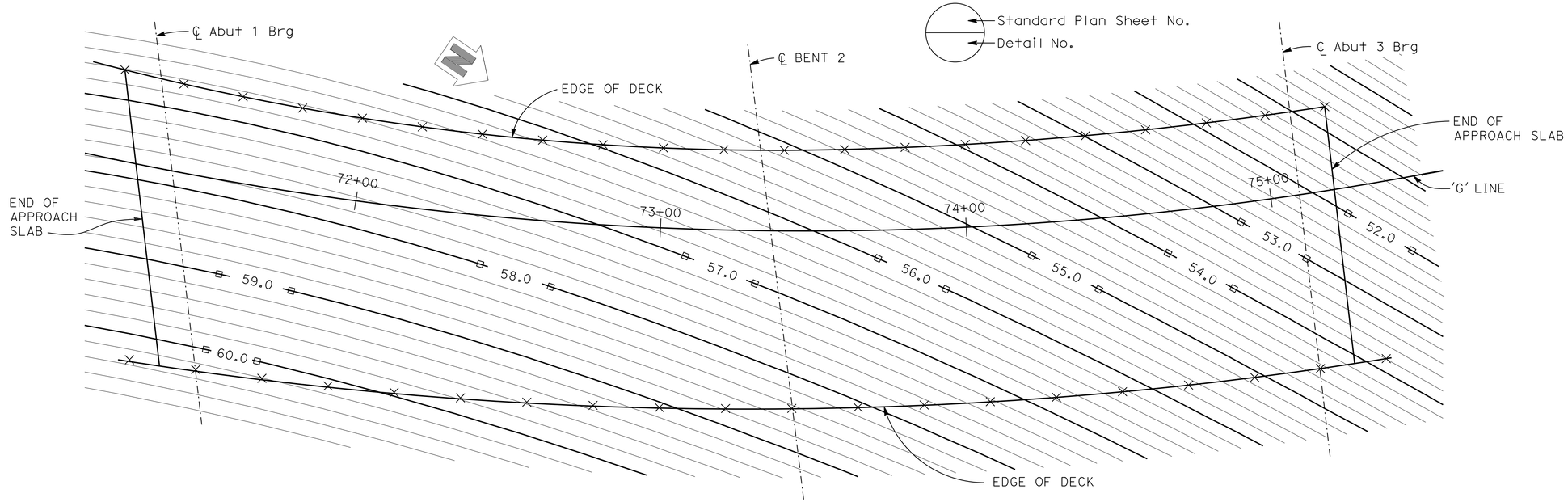

DECK CONTOURS
1"=20'

NOTES:

1. Contour interval is 0.2 ft
2. X Indicates 20 ft intervals measured along 'G' Line
3. Contours do not include camber or falsework settlement
4. □ Indicates even foot contours

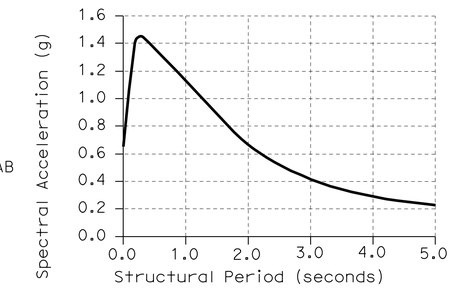

ARS DESIGN CURVE
NO SCALE

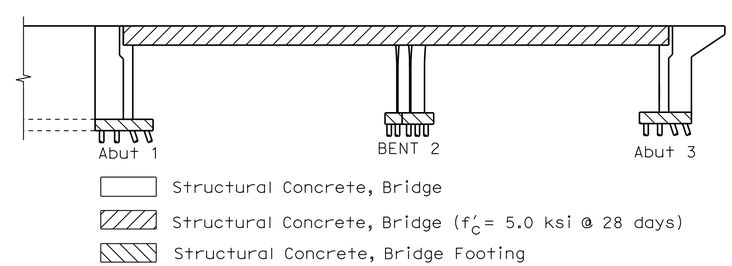

CONCRETE STRENGTH AND TYPE LIMITS
NO SCALE

INDEX TO PLANS

No.	Title
1	GENERAL PLAN
2	DECK CONTOURS
3	FOUNDATION PLAN
4	ABUTMENT 1 LAYOUT
5	ABUTMENT 3 LAYOUT
6	ABUTMENT DETAILS No. 1
7	ABUTMENT DETAILS No. 2
8	ABUTMENT DETAILS No. 3
9	BENT 2 LAYOUT
10	BENT DETAILS No. 1
11	BENT DETAILS No. 2
12	TYPICAL SECTION
13	GIRDER LAYOUT
14	GIRDER REINFORCEMENT
15	MISCELLANEOUS DETAILS
16	BRIDGE AESTHETICS
17	AESTHETIC TREATMENT DETAILS No. 1
18	AESTHETIC TREATMENT DETAILS No. 2
19	AESTHETIC TREATMENT DETAILS No. 3
20	WATER LINE DETAILS
21	STRUCTURE APPROACH SLAB TYPE EQ(10)
22	CHAIN LINK RAILING (TYPE 7 MOD)
23	JOINT SEAL ASSEMBLY (MAXIMUM MOVEMENT RATING = 4")
24	STRUCTURE APPROACH DRAINAGE DETAILS
25	LOG OF TEST BORINGS 1 OF 4
26	LOG OF TEST BORINGS 2 OF 4
27	LOG OF TEST BORINGS 3 OF 4
28	LOG OF TEST BORINGS 4 OF 4

Tracy L. Bertram
DESIGN OVERSIGHT Tracy L Bertram
1-7-13
SIGN OFF DATE

DESIGN DETAIL SHEET (ENGLISH) (REV.7/16/10)

	BY	CHECKED
DESIGN	P. CHEN	J. PASSALACQUA
DETAILS	N. PHAM	J. PASSALACQUA
QUANTITIES	N. PHAM	A. HOAC

ORIGINAL SCALE IN INCHES FOR REDUCED PLANS 0 1 2 3

PREPARED FOR THE STATE OF CALIFORNIA DEPARTMENT OF TRANSPORTATION

PO-KANG CHEN
PROJECT ENGINEER

BRIDGE NO. 23-0246
POST MILES 12.8

GREEN VALLEY ROAD OVERCROSSING
DECK CONTOURS

UNIT: 0741
PROJECT NUMBER & PHASE: 04000211311 CONTRACT NO.: 04-0A5341

DISREGARD PRINTS BEARING EARLIER REVISION DATES

REVISION DATES 9/30/11 5/4/12 9/12/12 10/19/12

SHEET 2 OF 28

FILE => 23-0246-d-dc01.dgn

USERNAME => s124496 DATE PLOTTED => 08-MAY-2013 TIME PLOTTED => 07:57

DIST	COUNTY	ROUTE	POST MILES TOTAL PROJECT	SHEET No	TOTAL SHEETS
04	Sol	12,80	2.1/2.8, 12.0/13.1	515	597

P.K. Chen 9/12/12
REGISTERED STRUCTURAL ENGINEER DATE

5-6-13
PLANS APPROVAL DATE

REGISTERED PROFESSIONAL ENGINEER PO-KANG CHEN No. S 3112 Exp. 9/30/13 STRUCTURAL STATE OF CALIFORNIA

The State of California or its officers or agents shall not be responsible for the accuracy or completeness of electronic copies of this plan sheet.

SOLANO TRANSPORTATION AUTHORITY
ONE HARBOR CENTER, SUITE 130
SUISUN CITY, CA 94585

MARK THOMAS & COMPANY, INC. + NOLTE ASSOCIATES, INC.
3000 OAK ROAD, SUITE 650
WALNUT CREEK, CA 94597

PLAN
1"= 30'

LEGEND:

- Indicates bottom of footing elevation
- ⊕ or ⊕ Indicates pile (not all piles shown)
- 16.50 Indicates spot elevation
- Indicates even contour elevation

NOTES:

Utilities shown are for reference only. For above and below ground utilities, see 'UTILITY PLANS'.

1. Exist City of Vallejo 8" Dia. "Old Cordelia" water line to be relocated to Green Valley Road Overcrossing.
2. Exist PG&E 2-6" Dia. 25kV electrical conduits to be relocated to Green Valley Road Overcrossing.
3. Exist PG&E 6" Dia. gas distribution line to be abandoned by others

'G' LINE ALIGNMENT DATA

		Northing	Easting
A	71+00.00	1840366.284	6521906.255
B	75+37.00	1840732.581	6521674.306

DATUM

North American Vertical Datum of 1988 (NGVD 88)
North American Datum of 1983 (NAD 83)

PILE DATA TABLE

Location	Pile Type	Nominal Resistance (kips)		Design Tip Elev (Ft) *	Specified Tip Elev (Ft)	Nominal Driving Resistance (kips)
		Compression	Tension			
Abut 1	Class 200 Alt "W"	420	0	-72.1(a);-12.1(c);-17.1(d)	-72.1	525
Bent 2	Class 200 Alt "W"	380	0	-61.5(a);-16.1(c);-16.1(d)	-61.5	450
Abut 3	Class 200 Alt "W"	420	0	-88.1(a);-13.1(c);-13.1(d)	-88.1	700

* Design Tip Elevations for Abutments & Bents are controlled by:
(a) Compression; (c) Settlement; (d)Lateral Loads

BENCH MARKS

BENCHMARK NO. A 1393 (NGS PID JT9519)
Brass disc set vertically in the east face of the first concrete pier east of the west abutment of the Union Pacific (formerly Southern Pacific) Railroad overcrossing of Interstate Highway 80, 21.7 feet northwest of the center of the most northwesterly westbound lane of the highway. The disc is stamped "A 1393 1987"
Northing: 1837422 Easting: 6518256
(NAD83, CCSII)
Elevation: 67.07 (NAVD 88) Stability: B

HPGN D CA 10 LC (NGS PID AC9890)
Survey disc set on aluminum alloy rod encased in a PVC pipe with access cover set in concrete flush with the parking lot pavement in the Park and Ride Lot, 92 feet west of the centerline of Green Valley Road and 48 feet southeast of the Green Valley Road onramp to westbound Interstate Highway 80. The disc is stamped "CADT 10 LC"
Northing: 1840653.06 Easting: 6521452.79
(HPGN 1991.35, CCSII)
Elevation: 26.35 (NAVD 88) Stability: B

GEOTECHNICAL PROFESSIONAL APPROVAL DATE 01/12/12

DESIGN OVERSIGHT Tracy L Bertram 1-7-13 SIGN OFF DATE

SCALE: AS SHOWN | VERT.DATUM NGVD 88 | HORZ.DATUM NAD 83
PHOTOGRAMMETRY AS OF: 2010 | ALIGNMENT TIES N/A
SURVEYED BY MTCo | DRAFTED BY MTCo
FIELD CHECKED BY MTCo | CHECKED BY MTCo

DESIGN BY P. CHEN CHECKED J. PASSALACQUA
DETAILS BY N. PHAM CHECKED J. PASSALACQUA
QUANTITIES BY N. PHAM CHECKED A. HOAC

PREPARED FOR THE STATE OF CALIFORNIA DEPARTMENT OF TRANSPORTATION

PO-KANG CHEN
PROJECT ENGINEER

BRIDGE NO. 23-0246
POST MILES 12.8

GREEN VALLEY ROAD OVERCROSSING
FOUNDATION PLAN

FOUNDATION PLAN SHEET (ENGLISH) (REV.7/16/10)

ORIGINAL SCALE IN INCHES FOR REDUCED PLANS 0 1 2 3

UNIT: 0741
PROJECT NUMBER & PHASE: 04000211311 CONTRACT NO.: 04-0A5341

DISREGARD PRINTS BEARING EARLIER REVISION DATES → REVISION DATES 9/30/11 5/4/12 9/12/12 10/19/12 SHEET 3 OF 28

FILE => 23-0246-e-fdp101.dgn

USERNAME => s124496 DATE PLOTTED => 08-MAY-2013 TIME PLOTTED => 07:57

DIST	COUNTY	ROUTE	POST MILES TOTAL PROJECT	SHEET No	TOTAL SHEETS
4	Sol	12,80	2.1/2.8, 12.0/13.1	516	597

P.K. Chen 9/12/12
REGISTERED STRUCTURAL ENGINEER DATE

5-6-13
PLANS APPROVAL DATE

REGISTERED PROFESSIONAL ENGINEER PO-KANG CHEN No. S 3112 Exp. 9/30/13 STRUCTURAL STATE OF CALIFORNIA

The State of California or its officers or agents shall not be responsible for the accuracy or completeness of electronic copies of this plan sheet.

SOLANO TRANSPORTATION AUTHORITY
ONE HARBOR CENTER, SUITE 130
SUISUN CITY, CA 94585

MARK THOMAS & COMPANY, INC. + NOLTE ASSOCIATES, INC.
3000 OAK ROAD, SUITE 650
WALNUT CREEK, CA 94597

NOTES:

1. For 'DETAIL A', 'DETAIL B', 'ELASTOMERIC BEARING PAD DETAIL', and 'SHEAR KEY DETAIL', see "ABUTMENT DETAILS NO. 1" sheet.
2. For wing wall elevation, see "ABUTMENT DETAILS No. 2" sheet.
3. For MSE Wall to Wing Wall connection details, see "MSE DETAILS No. 3" sheet.
4. For Architectural Treatment, see "BRIDGE AESTHETICS" sheet.

LEGEND:

⊕ Indicates vertical pile, Tot 14
⊕ Indicates batter pile 3:1, Tot 51
∝ Indicates bundled bars

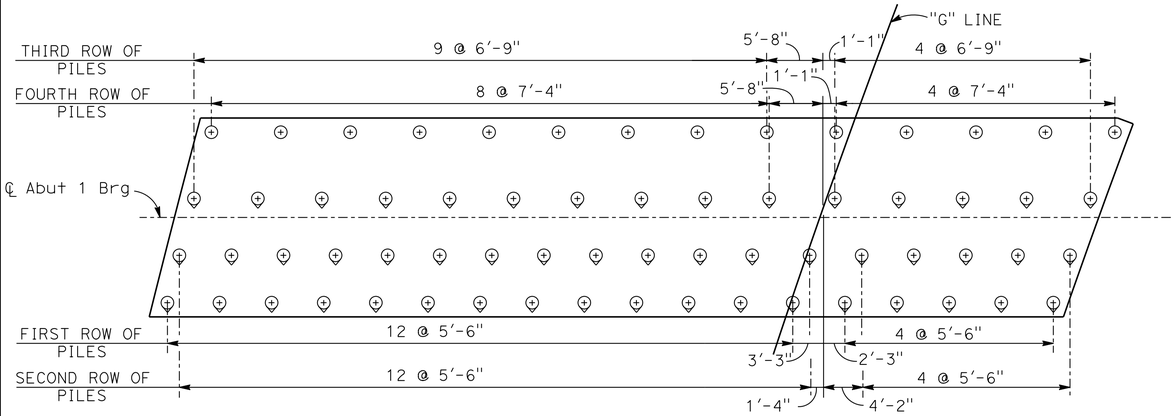

FOOTING PLAN
1/8"=1'-0"

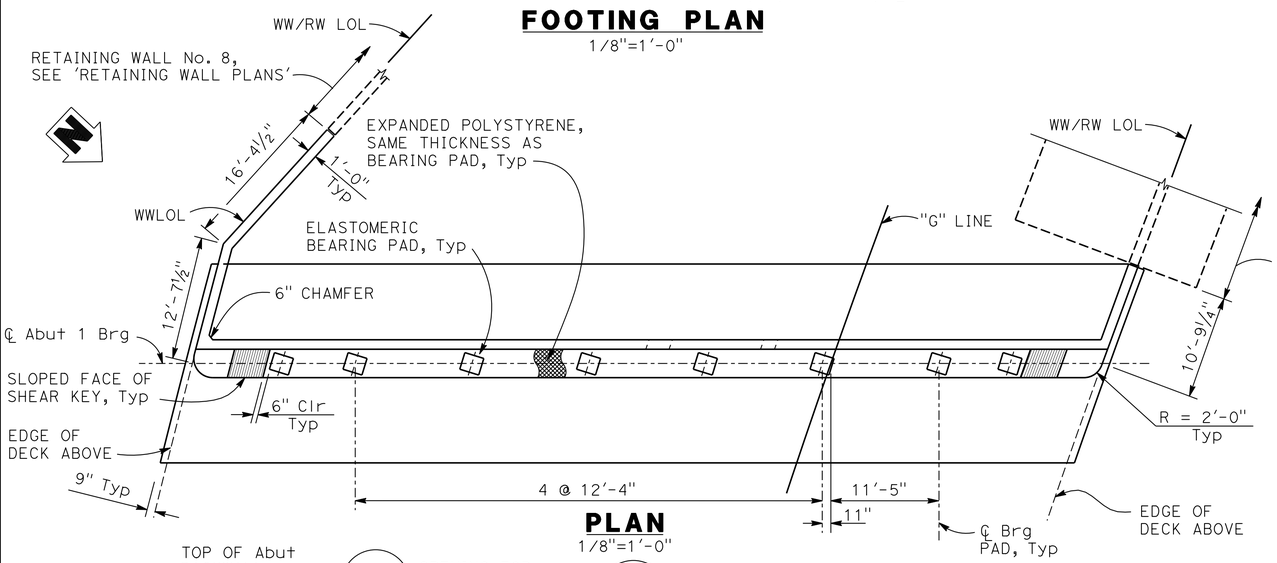

PLAN
1/8"=1'-0"

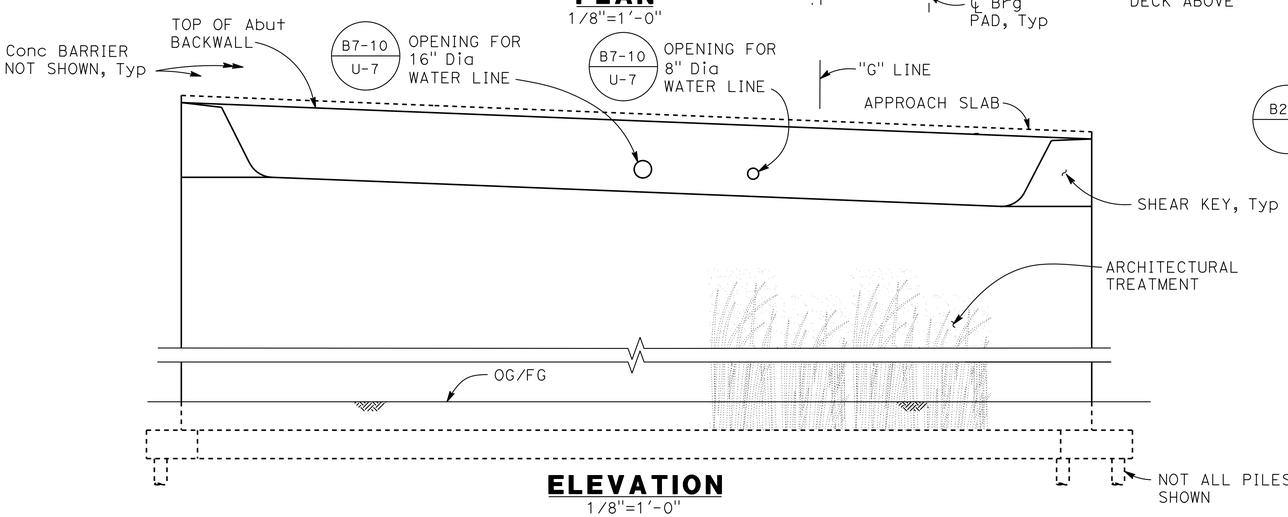

ELEVATION
1/8"=1'-0"

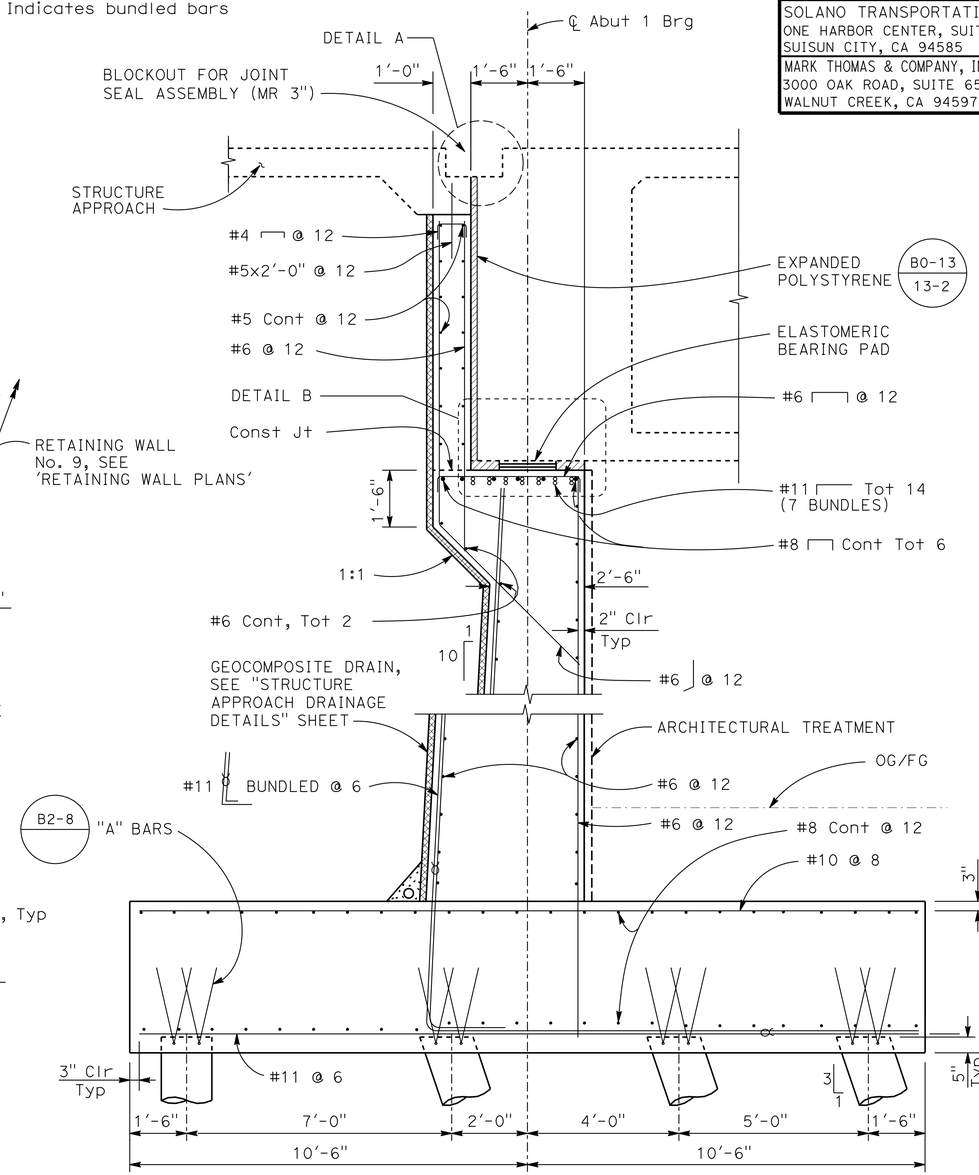

ABUTMENT 1 SECTION
1/2"=1'-0"

DESIGN OVERSIGHT Tracy L Bertram	DESIGN	BY P. CHEN	CHECKED J. PASSALACQUA
1-7-13 SIGN OFF DATE	DETAILS	BY N. PHAM	CHECKED J. PASSALACQUA
	QUANTITIES	BY N. PHAM	CHECKED A. HOAC

PREPARED FOR THE STATE OF CALIFORNIA DEPARTMENT OF TRANSPORTATION

PO-KANG CHEN
PROJECT ENGINEER

BRIDGE NO. 23-0246
POST MILES 12.8

GREEN VALLEY ROAD OVERCROSSING
ABUTMENT 1 LAYOUT

DESIGN DETAIL SHEET (ENGLISH) (REV.7/16/10)

ORIGINAL SCALE IN INCHES FOR REDUCED PLANS 0 1 2 3

UNIT: 0741
PROJECT NUMBER & PHASE: 04000211311 CONTRACT NO.: 04-0A5341

DISREGARD PRINTS BEARING EARLIER REVISION DATES

REVISION DATES 9/30/11 5/4/12 9/12/12 10/19/12

SHEET 4 OF 28

FILE => 23-0246-f-a01_ l o1.dgn

USERNAME => s124496 DATE PLOTTED => 08-MAY-2013 TIME PLOTTED => 07:57

DIST	COUNTY	ROUTE	POST MILES TOTAL PROJECT	SHEET No	TOTAL SHEETS
04	Sol	12,80	2.1/2.8, 12.0/13.1	517	597

P.K. Chen 9/12/12
REGISTERED STRUCTURAL ENGINEER DATE

5-6-13
PLANS APPROVAL DATE

REGISTERED PROFESSIONAL ENGINEER PO-KANG CHEN No. S 3112 Exp. 9/30/13 STRUCTURAL STATE OF CALIFORNIA

The State of California or its officers or agents shall not be responsible for the accuracy or completeness of electronic copies of this plan sheet.

SOLANO TRANSPORTATION AUTHORITY
ONE HARBOR CENTER, SUITE 130
SUISUN CITY, CA 94585

MARK THOMAS & COMPANY, INC. + NOLTE ASSOCIATES, INC.
3000 OAK ROAD, SUITE 650
WALNUT CREEK, CA 94597

NOTES:

1. For 'DETAIL A', 'DETAIL B', 'ELASTOMERIC BEARING PAD DETAIL', and 'SHEAR KEY DETAIL', see "ABUTMENT DETAILS No. 1" sheet.
2. For wing wall elevation, see "ABUTMENT DETAILS No. 2" and "ABUTMENT DETAILS No. 3" sheets.
3. For Architectural Treatment, see "BRIDGE AESTHETICS" sheet.
4. The contractor shall verify all controling dimensions before ordering or fabricating any material.

LEGEND:

⊕ Indicates vertical pile, Tot 18
⊕ Indicates batter pile 3:1, Tot 32
∝ Indicates bundled bars

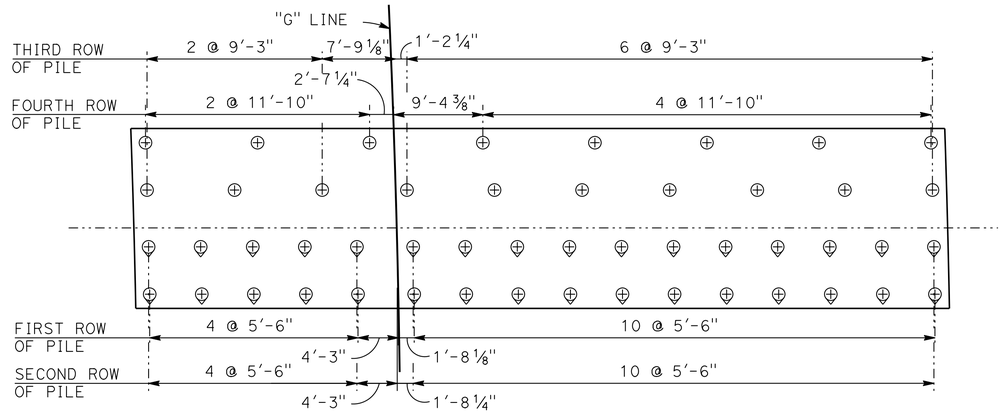

FOOTING PLAN
1/8"=1'-0"

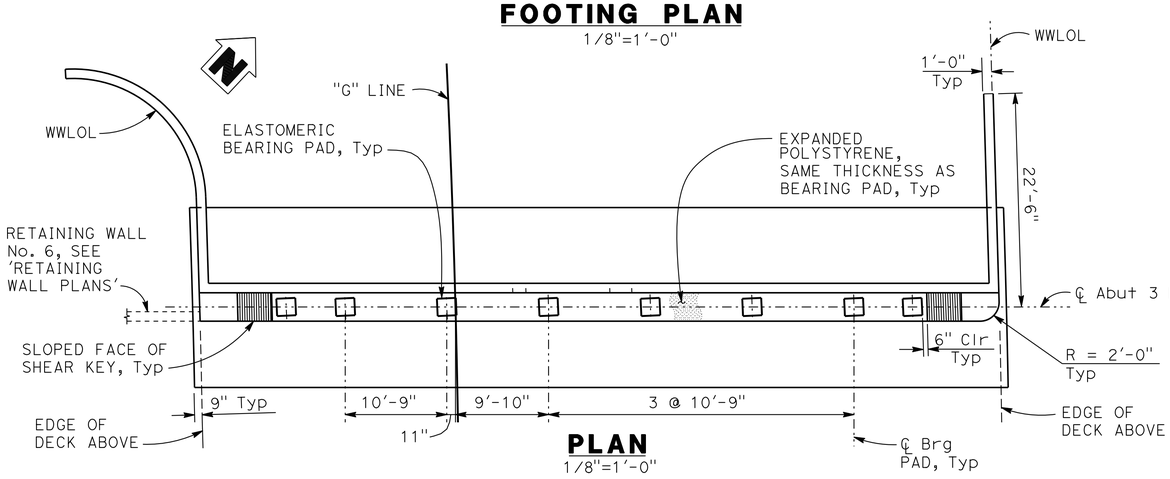

PLAN
1/8"=1'-0"

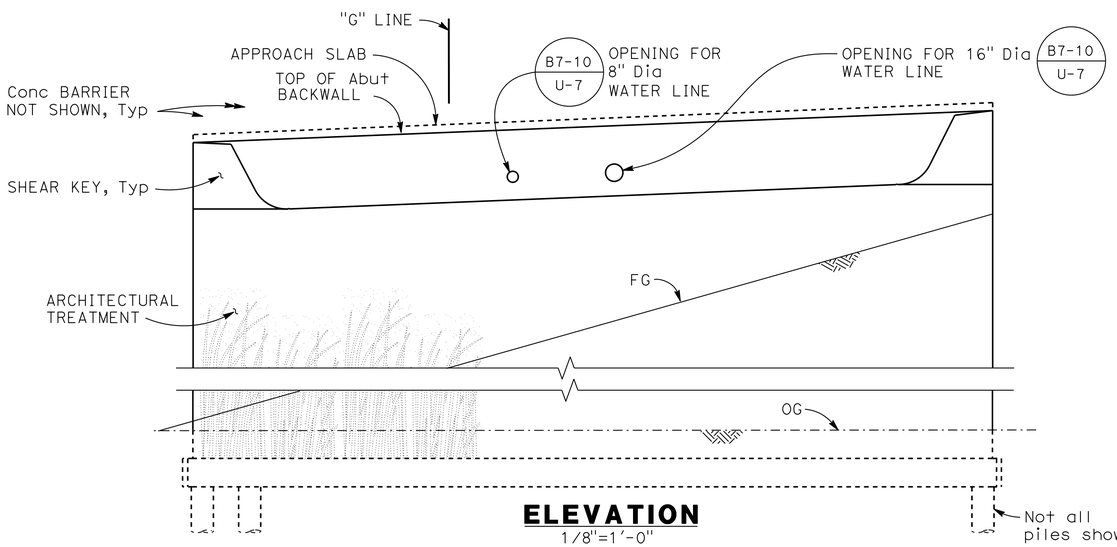

ELEVATION
1/8"=1'-0"

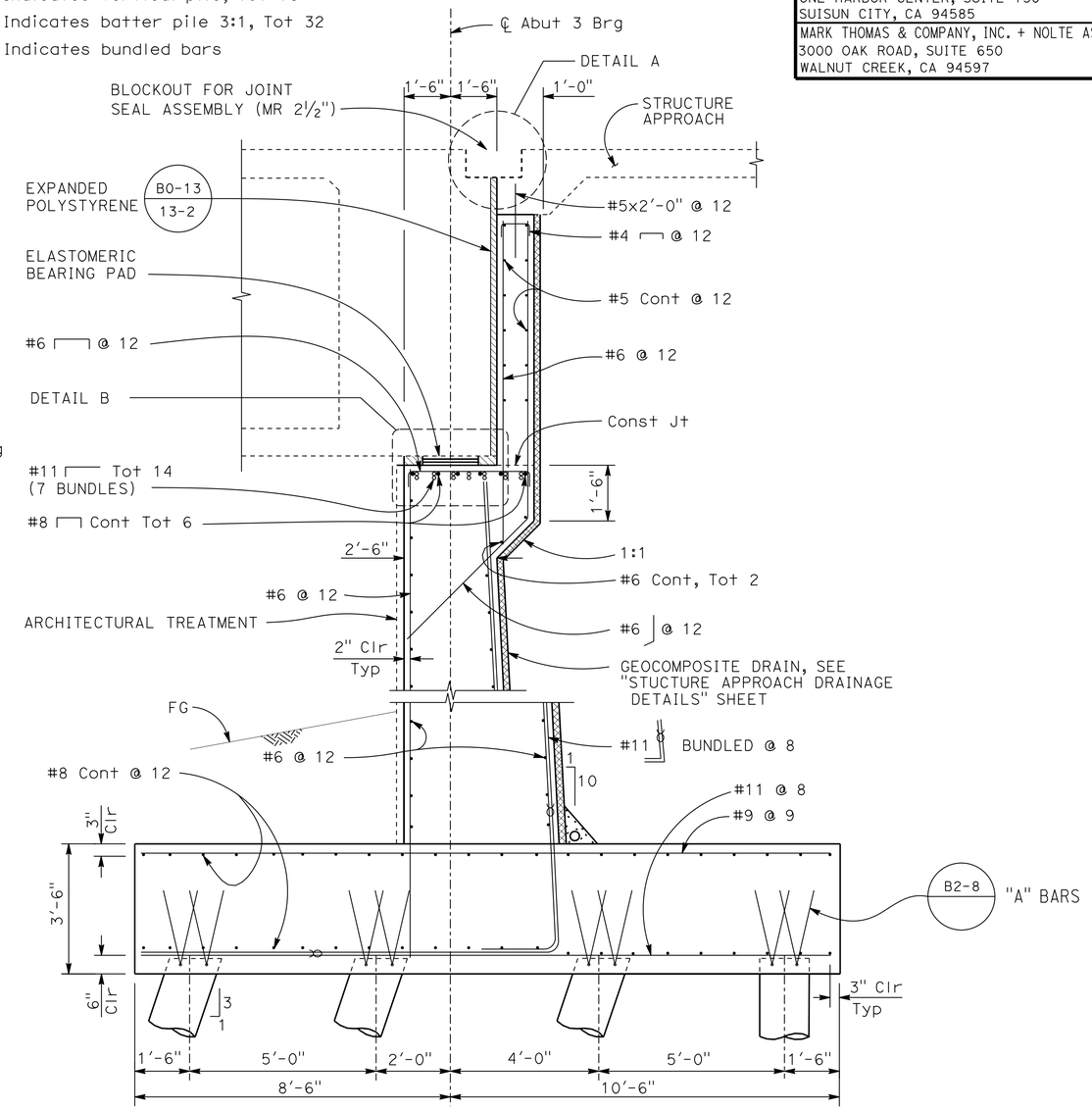

ABUTMENT 3 SECTION
1/2"=1'-0"

DESIGN	BY P. CHEN	CHECKED J. PASSALACQUA	
DETAILS	BY N. PHAM	CHECKED J. PASSALACQUA	
QUANTITIES	BY N. PHAM	CHECKED A. HOAC	

DESIGN OVERSIGHT Tracy L Bertram
1-7-13
SIGN OFF DATE

PREPARED FOR THE STATE OF CALIFORNIA DEPARTMENT OF TRANSPORTATION

PO-KANG CHEN
PROJECT ENGINEER

BRIDGE NO. 23-0246
POST MILES 12.8

GREEN VALLEY ROAD OVERCROSSING
ABUTMENT 3 LAYOUT

DESIGN DETAIL SHEET (ENGLISH) (REV.7/16/10)

ORIGINAL SCALE IN INCHES FOR REDUCED PLANS 0 1 2 3

UNIT: 0741
PROJECT NUMBER & PHASE: 04000211311 CONTRACT NO.: 04-0A5341

DISREGARD PRINTS BEARING EARLIER REVISION DATES

REVISION DATES 9/30/11 5/4/12 9/12/12 10/19/12

SHEET 5 OF 28

FILE => 23-0246-f-a03_1o1.dgn

USERNAME => s124496 DATE PLOTTED => 08-MAY-2013 TIME PLOTTED => 07:57

DIST	COUNTY	ROUTE	POST MILES TOTAL PROJECT	SHEET No	TOTAL SHEETS
04	Sol	12,80	2.1/2.8, 12.0/13.1	518	597

P.K. Chen 9/12/12
REGISTERED STRUCTURAL ENGINEER DATE

5-6-13
PLANS APPROVAL DATE

REGISTERED PROFESSIONAL ENGINEER PO-KANG CHEN No. S 3112 Exp. 9/30/13 STRUCTURAL STATE OF CALIFORNIA

The State of California or its officers or agents shall not be responsible for the accuracy or completeness of electronic copies of this plan sheet.

SOLANO TRANSPORTATION AUTHORITY
ONE HARBOR CENTER, SUITE 130
SUISUN CITY, CA 94585

MARK THOMAS & COMPANY, INC. + NOLTE ASSOCIATES, INC.
3000 OAK ROAD, SUITE 650
WALNUT CREEK, CA 94597

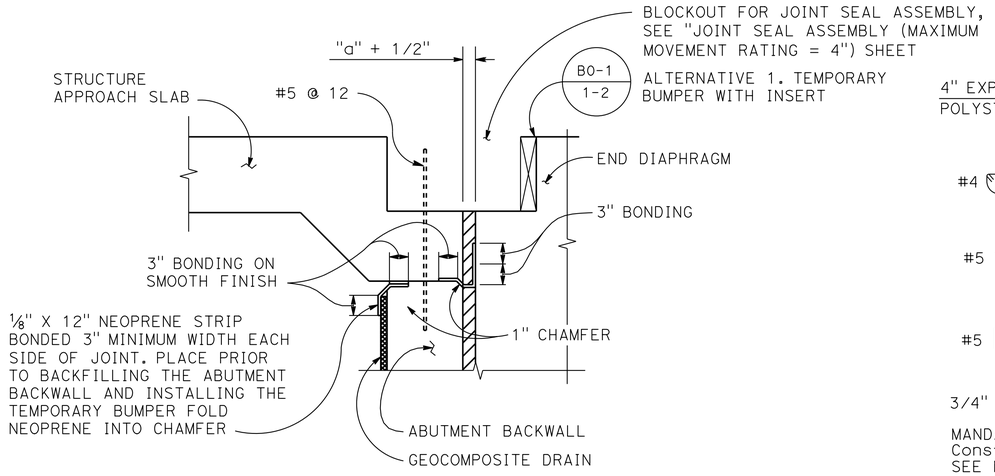

NOTE: For "a" dimension, see "JOINT SEAL ASSEMBLY" sheet.

DETAIL A - JOINT PROTECTION DETAIL
NO SCALE

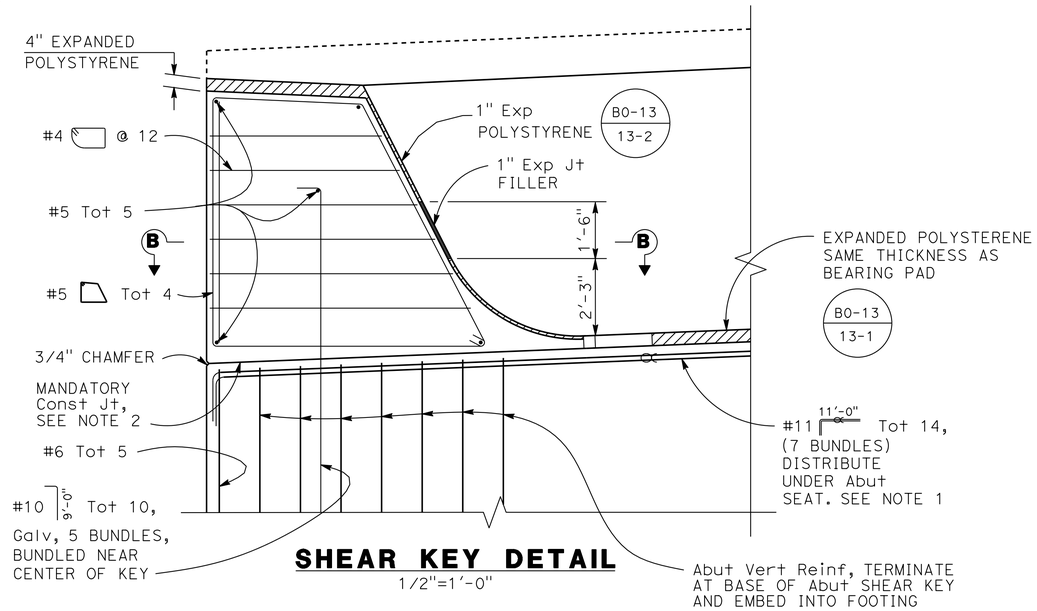

SHEAR KEY DETAIL
1/2"=1'-0"

NOTES:

1. For location of abutment hanger bars, see 'ABUTMENT 1 SECTION' and 'ABUTMENT 3 SECTION' on "ABUTMENT 1 LAYOUT" and "ABUTMENT 3 LAYOUT" sheet.
2. Mandatory construction joint shall be smooth finished and lined with 15 pound construction paper.
3. Terminate vertical abutment front face reinforcement at base of shear keys.
4. Shear key shall be poured separate from abutment seat and backwall.
5. Main vertical shear key Reinf shall be centered transversely in shear key and shall be galvanized.
6. For Architectural Treatment, see "BRIDGE AESTHETICS" sheet.

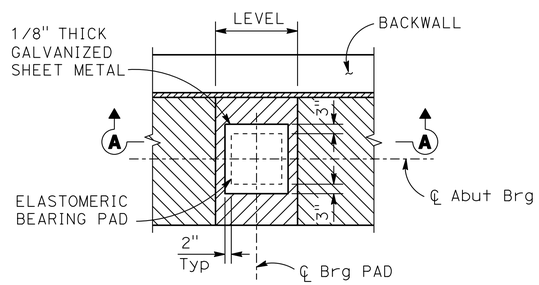

BEARING PAD DETAIL
NO SCALE

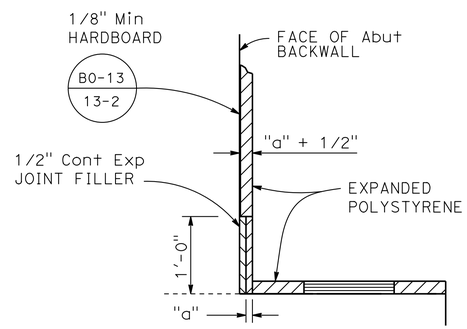

Note: For "a" dimension, see "JOINT SEAL ASSEMBLY" sheet.

DETAIL B
NO SCALE

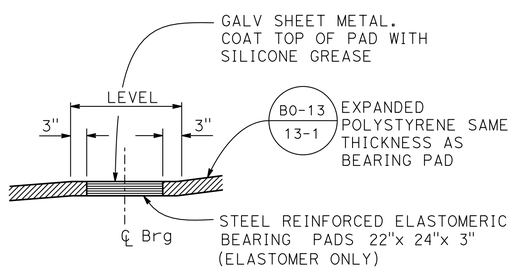

SECTION A-A
NO SCALE

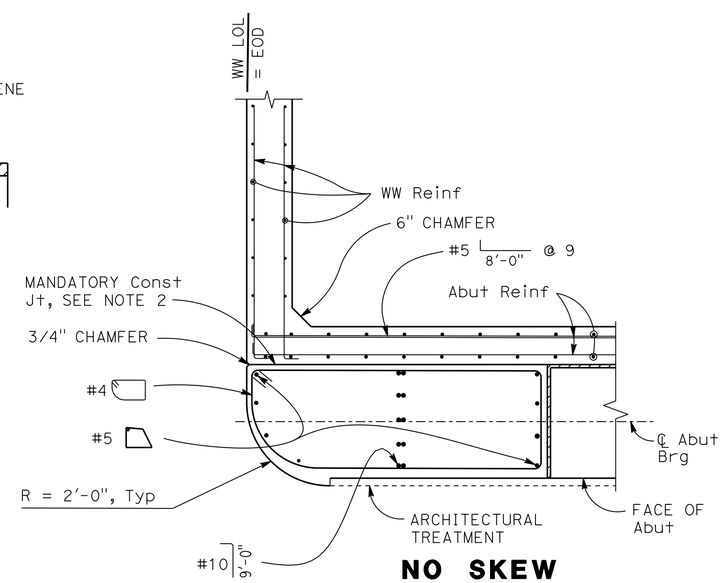

NO SKEW

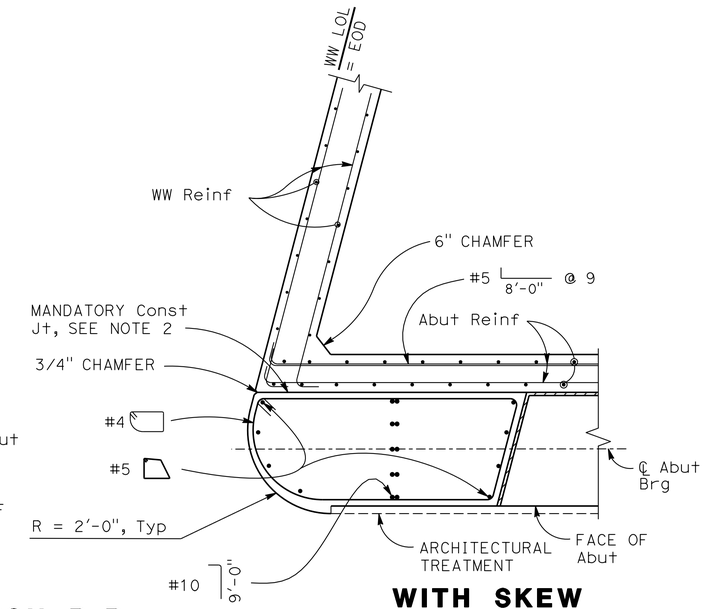

WITH SKEW

SECTION B-B
1/2"= 1'-0"

Tracy L Bertram
DESIGN OVERSIGHT Tracy L Bertram
1-7-13
SIGN OFF DATE

	BY	CHECKED
DESIGN	P. CHEN	J. PASSALACQUA
DETAILS	N. PHAM	J. PASSALACQUA
QUANTITIES	N. PHAM	A. HOAC

PREPARED FOR THE STATE OF CALIFORNIA DEPARTMENT OF TRANSPORTATION

PO-KANG CHEN
PROJECT ENGINEER

BRIDGE NO. 23-0246
POST MILES 12.8

GREEN VALLEY ROAD OVERCROSSING
ABUTMENT DETAILS No. 1

DESIGN DETAIL SHEET (ENGLISH) (REV.7/16/10)

ORIGINAL SCALE IN INCHES FOR REDUCED PLANS 0 1 2 3

UNIT: 0741
PROJECT NUMBER & PHASE: 04000211311 CONTRACT NO.: 04-0A5341

DISREGARD PRINTS BEARING EARLIER REVISION DATES

REVISION DATES 9/30/11 5/4/12 9/12/12 10/19/12

SHEET 6 OF 28

FILE => 23-0246-f-adt01.dgn

USERNAME => s124496 DATE PLOTTED => 08-MAY-2013 TIME PLOTTED => 07:57

DIST	COUNTY	ROUTE	POST MILES TOTAL PROJECT	SHEET No	TOTAL SHEETS
04	Sol	12,80	2.1/2.8, 12.0/13.1	519	597

P.K. Chen 9/12/12
REGISTERED STRUCTURAL ENGINEER DATE

5-6-13
PLANS APPROVAL DATE

REGISTERED PROFESSIONAL ENGINEER PO-KANG CHEN No. S 3112 Exp. 9/30/13 STRUCTURAL STATE OF CALIFORNIA

The State of California or its officers or agents shall not be responsible for the accuracy or completeness of electronic copies of this plan sheet.

SOLANO TRANSPORTATION AUTHORITY
ONE HARBOR CENTER, SUITE 130
SUISUN CITY, CA 94585

MARK THOMAS & COMPANY, INC. + NOLTE ASSOCIATES, INC.
3000 OAK ROAD, SUITE 650
WALNUT CREEK, CA 94597

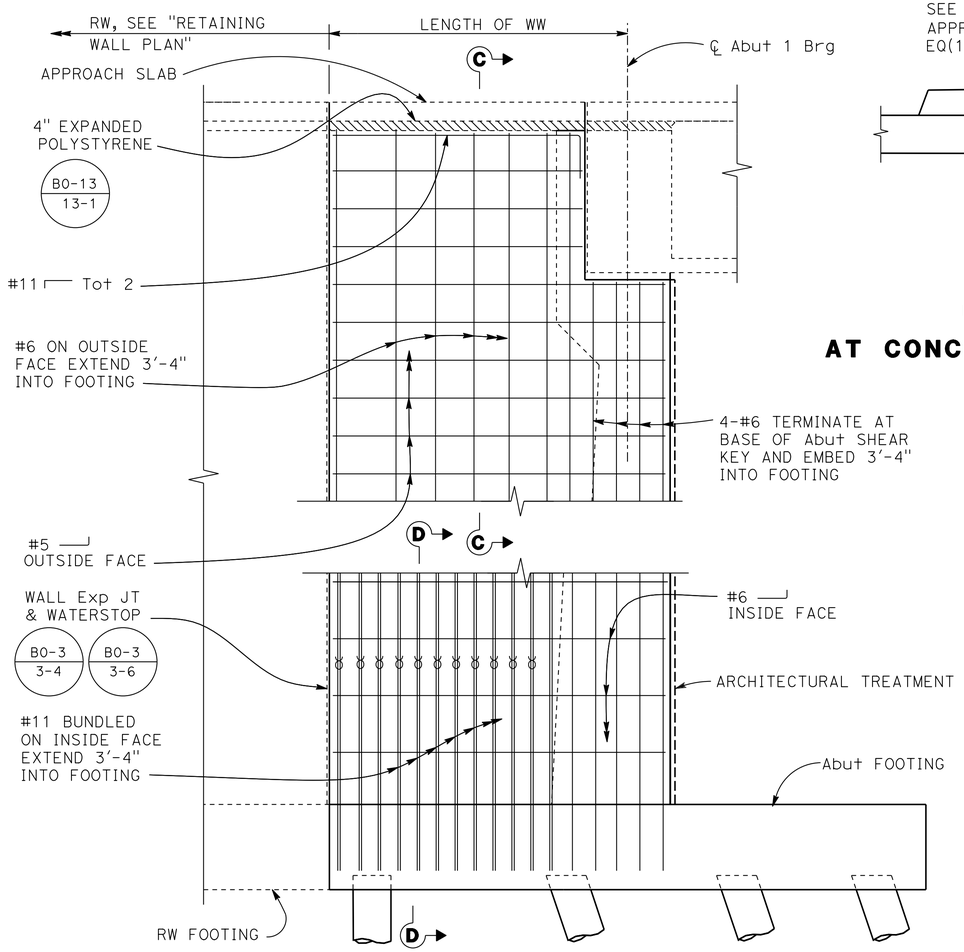

ABUTMENT 1 WINGWALL ELEVATION
3/8" = 1'-0"

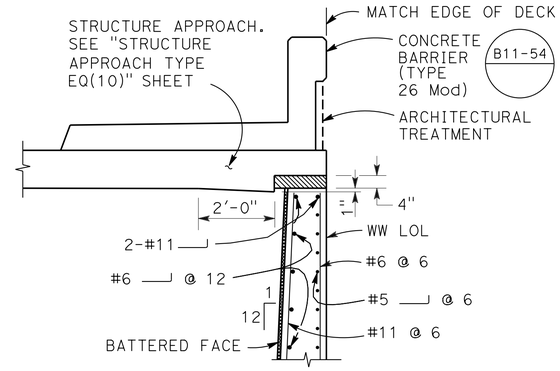

AT CONCRETE BARRIER (TYPE 26 Mod)

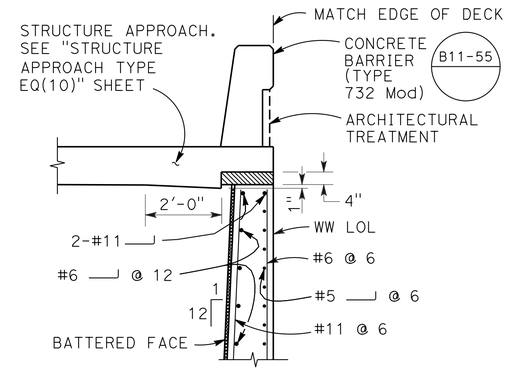

AT CONCRETE BARRIER (TYPE 732 Mod)

SECTION C-C
1/2"= 1'-0"

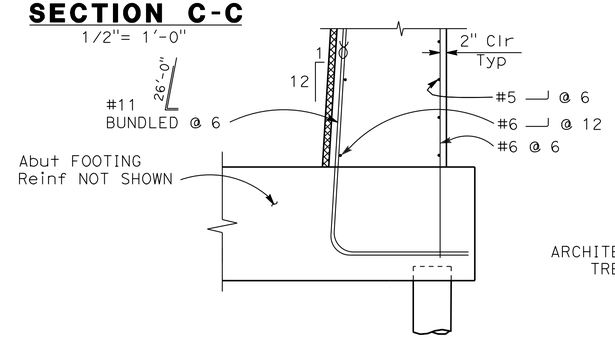

NOTE: For Architectural Treatment, SEE "BRIDGE AESTHETICS" SHEET.

SECTION D-D
1"= 1'-0"

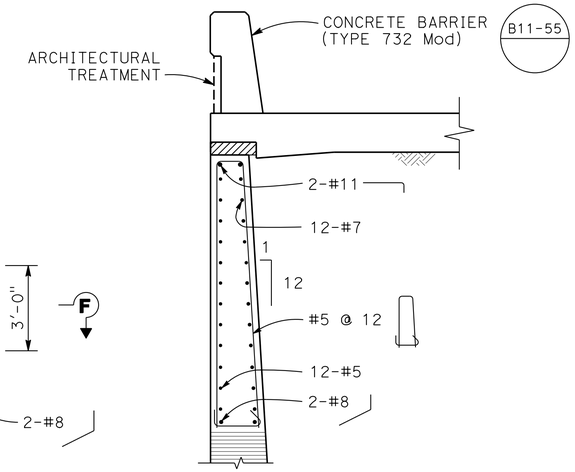

NOTE: For details not shown, see 'SECTION C-C'.

SECTION E-E
1/2"= 1'-0"

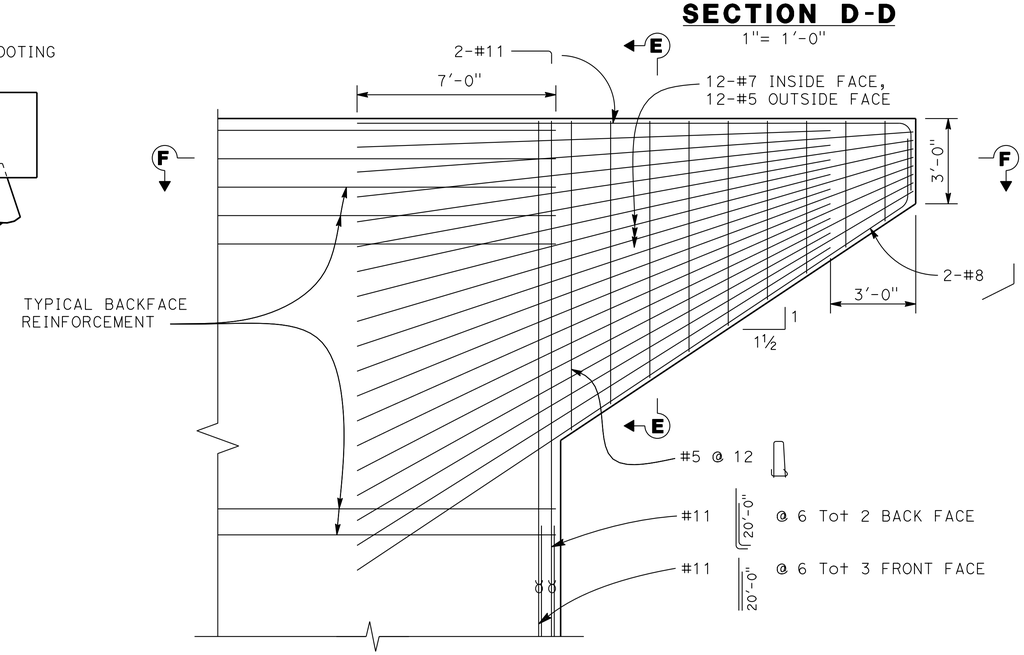

ABUTMENT 3 CANTILIVER EAST WINGWALL ELEVATION
3/8" = 1'-0"

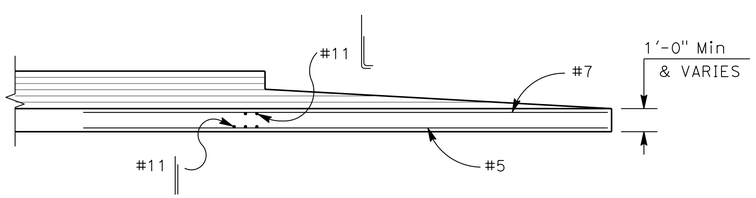

NOTE: Not all reinforcement shown

SECTION F-F
3/8"=1'-0"

DESIGN OVERSIGHT Tracy L Bertram 1-7-13 SIGN OFF DATE	DESIGN	BY P. CHEN	CHECKED J. PASSALACQUA	PREPARED FOR THE STATE OF CALIFORNIA DEPARTMENT OF TRANSPORTATION	PO-KANG CHEN PROJECT ENGINEER
	DETAILS	BY N. PHAM	CHECKED J. PASSALACQUA		BRIDGE NO. 23-0246
	QUANTITIES	BY N. PHAM	CHECKED A. HOAC		POST MILES 12.8

GREEN VALLEY ROAD OVERCROSSING
ABUTMENT DETAILS No. 2

DESIGN DETAIL SHEET (ENGLISH) (REV.7/16/10)

ORIGINAL SCALE IN INCHES FOR REDUCED PLANS 0 1 2 3

UNIT: 0741
PROJECT NUMBER & PHASE: 04000211311 CONTRACT NO.: 04-0A5341

DISREGARD PRINTS BEARING EARLIER REVISION DATES → 9/30/11 5/8/12 9/30/12 10/19/12

SHEET 7 OF 28

FILE => 23-0246-f-adt02.dgn

USERNAME => s124296 DATE PLOTTED => 08-MAY-2013 TIME PLOTTED => 07:57

DIST	COUNTY	ROUTE	POST MILES TOTAL PROJECT	SHEET No	TOTAL SHEETS
04	Sol	12,80	2.1/2.8, 12.0/13.1	520	597

P.K. Chen 9/12/12
REGISTERED STRUCTURAL ENGINEER DATE

5-6-13
PLANS APPROVAL DATE

REGISTERED PROFESSIONAL ENGINEER PO-KANG CHEN No. S 3112 Exp. 9/30/13 STRUCTURAL STATE OF CALIFORNIA

The State of California or its officers or agents shall not be responsible for the accuracy or completeness of electronic copies of this plan sheet.

SOLANO TRANSPORTATION AUTHORITY
ONE HARBOR CENTER, SUITE 130
SUISUN CITY, CA 94585

MARK THOMAS & COMPANY, INC. + NOLTE ASSOCIATES, INC.
3000 OAK ROAD, SUITE 650
WALNUT CREEK, CA 94597

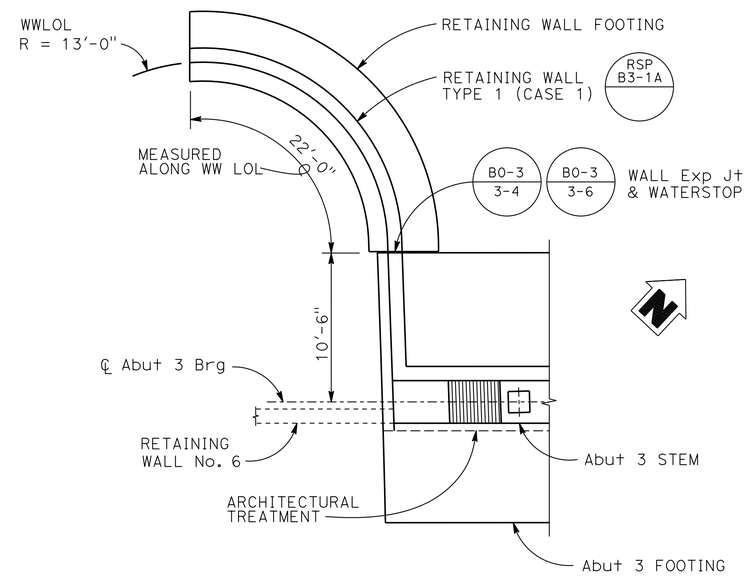

PLAN - ABUTMENT 3 WEST WINGWALL

3/16" = 1'-0"

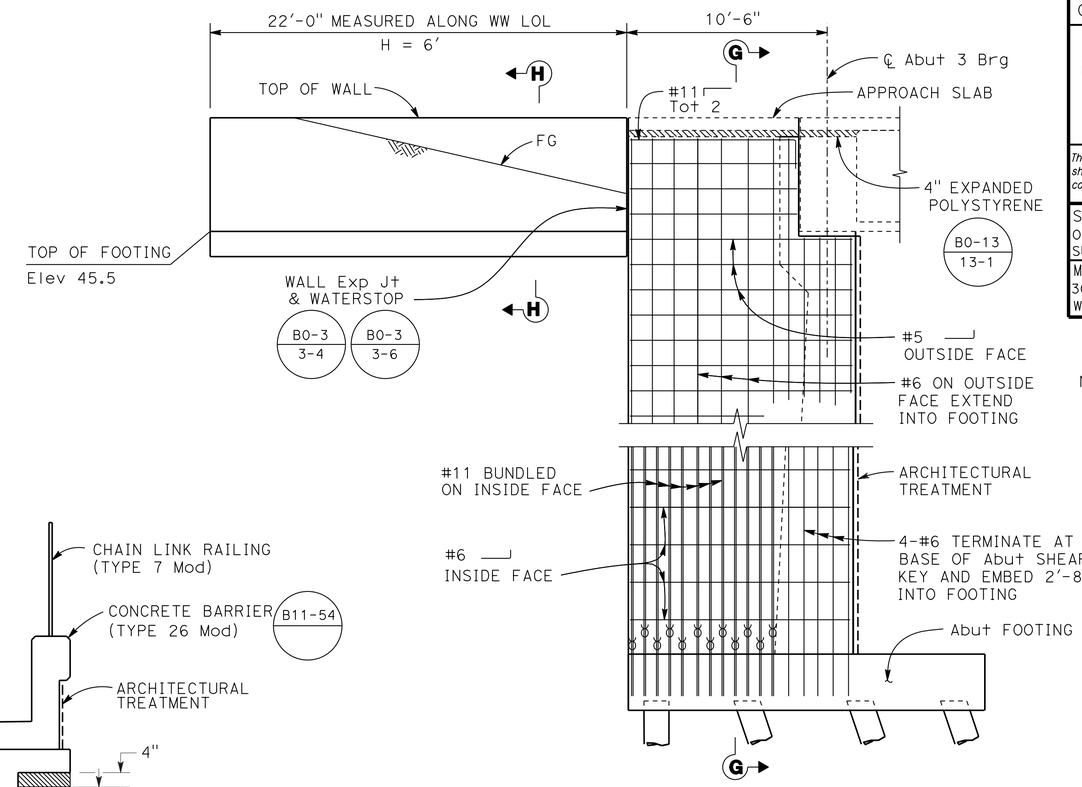

NOTE: For Architectural Treatment, see "BRIDGE AESTHETICS" sheet.

DEVELOPED ELEVATION - ABUTMENT 3 WEST WINGWALL

3/8" = 1'-0"

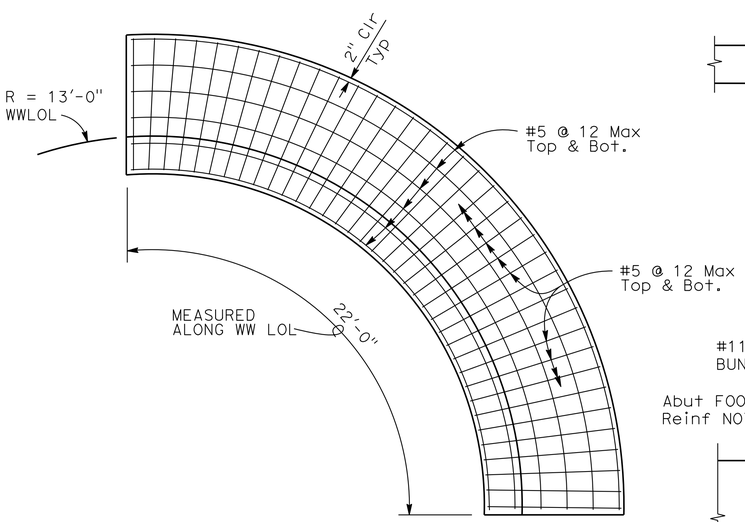

FOOTING - ABUTMENT 3 WEST WINGWALL

3/8" = 1'-0"

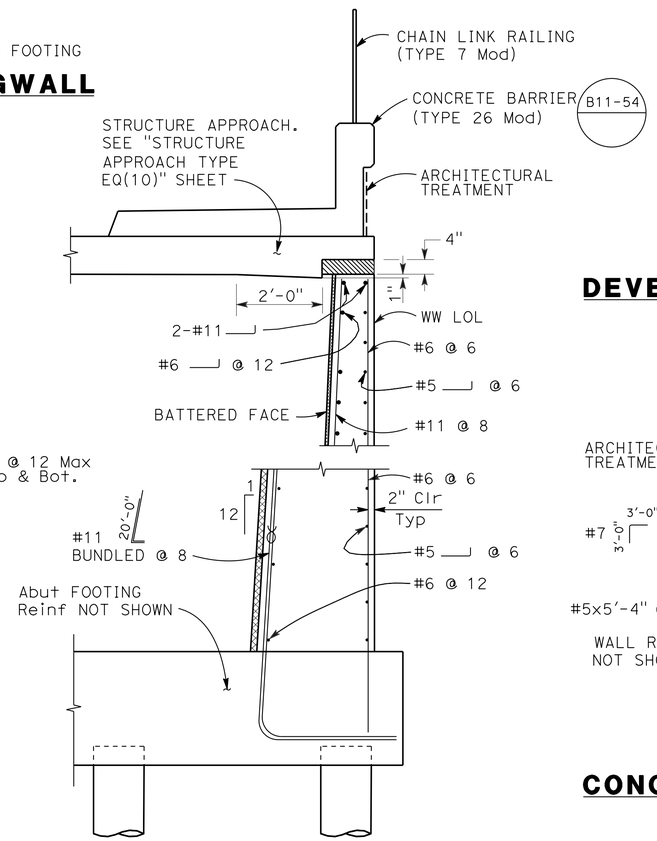

SECTION G-G

1/4" = 1'-0"

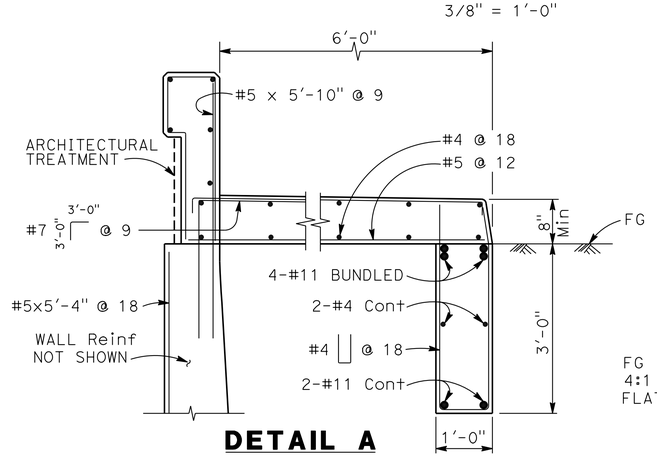

DETAIL A

CONCRETE BARRIER TYPE 26 (Mod) ON RETAINING WALL

NO SCALE

NOTE: For barrier information not shown, see B11-54

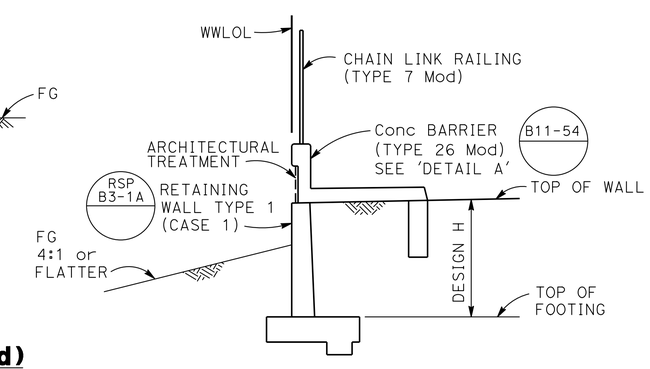

SECTION H-H

1/4" = 1'-0"

Tracy L. Bertram
DESIGN OVERSIGHT Tracy L Bertram
1-7-13
SIGN OFF DATE

	BY	CHECKED
DESIGN	P. CHEN	J. PASSALACQUA
DETAILS	N. PHAM	J. PASSALACQUA
QUANTITIES	N. PHAM	A. HOAC

PREPARED FOR THE STATE OF CALIFORNIA DEPARTMENT OF TRANSPORTATION

PO-KANG CHEN
PROJECT ENGINEER

BRIDGE NO. 23-0246
POST MILES 12.8

GREEN VALLEY ROAD OVERCROSSING
ABUTMENT DETAILS No. 3

DESIGN DETAIL SHEET (ENGLISH) (REV.7/16/10)

ORIGINAL SCALE IN INCHES FOR REDUCED PLANS 0 1 2 3

UNIT: 0741
PROJECT NUMBER & PHASE: 04000211311 CONTRACT NO.: 04-0A5341

DISREGARD PRINTS BEARING EARLIER REVISION DATES

REVISION DATES 9/30/11 5/4/12 9/12/12 10/19/12

SHEET 8 OF 28

FILE => 23-0246-f-adt03.dgn

USERNAME => s124496 DATE PLOTTED => 08-MAY-2013 TIME PLOTTED => 07:57

DIST	COUNTY	ROUTE	POST MILES TOTAL PROJECT	SHEET No	TOTAL SHEETS
04	Sol	12,80	2.1/2.8, 12.0/13.1	521	597

P.K. Chen 9/12/12
REGISTERED STRUCTURAL ENGINEER DATE

5-6-13
PLANS APPROVAL DATE

REGISTERED PROFESSIONAL ENGINEER PO-KANG CHEN No. S 3112 Exp. 9/30/13 STRUCTURAL STATE OF CALIFORNIA

The State of California or its officers or agents shall not be responsible for the accuracy or completeness of electronic copies of this plan sheet.

SOLANO TRANSPORTATION AUTHORITY
ONE HARBOR CENTER, SUITE 130
SUISUN CITY, CA 94585

MARK THOMAS & COMPANY, INC. + NOLTE ASSOCIATES, INC.
3000 OAK ROAD, SUITE 650
WALNUT CREEK, CA 94597

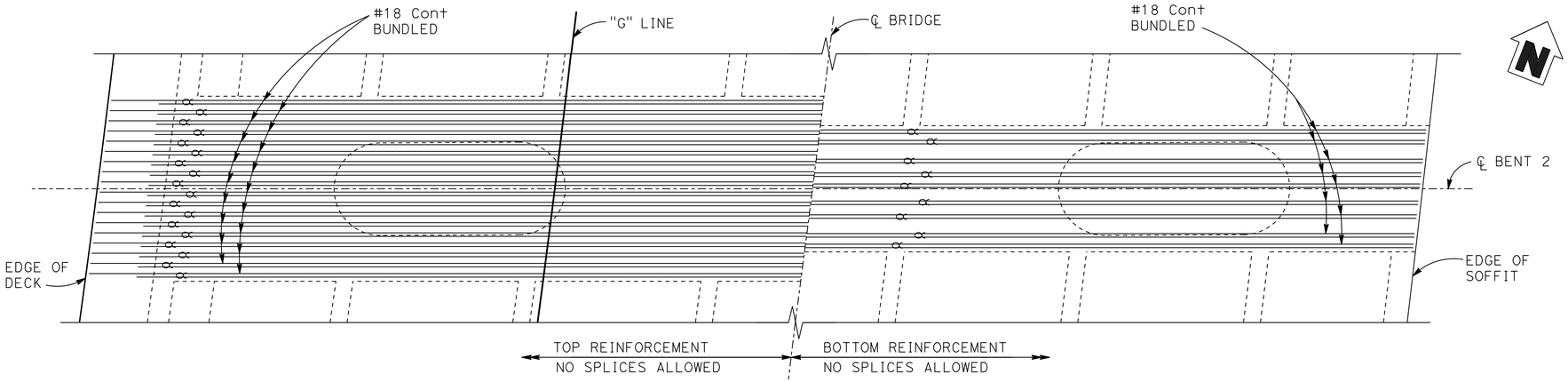

PLAN
1/4"= 1'-0"

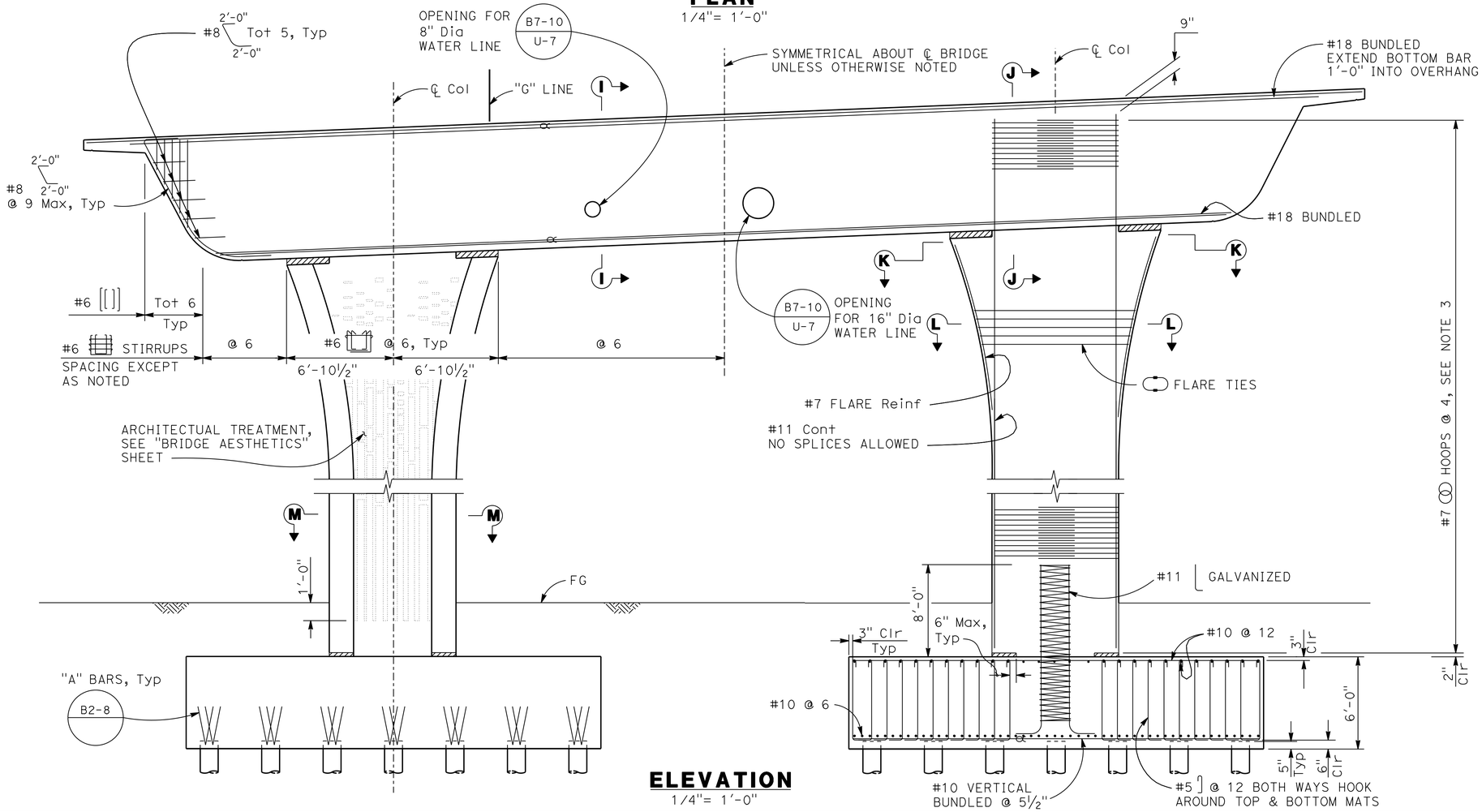

ELEVATION
1/4"= 1'-0"

NOTES:

1. For 'SECTION I-I', 'SECTION J-J', 'SECTION K-K', 'SECTION L-L',& 'SECTION M-M', see "BENT DETAILS NO. 1" sheet.
2. For 'COLUMN FLARE GEOMETRY' & 'COLUMN HOOP & TIE DETAIL', see "BENT DETAILS No. 2" sheet.
3. All hoops shall be "Ultimate Butt Splice".
4. Stop Column ties where Flare Ties start.

LEGEND:

∝ Indicates bundles bars

Tracy L. Bertram
DESIGN OVERSIGHT Tracy L Bertram
1-7-13
SIGN OFF DATE

	BY	CHECKED
DESIGN	P. CHEN	J. PASSALACQUA
DETAILS	N. PHAM	J. PASSALACQUA
QUANTITIES	N. PHAM	A. HOAC

PREPARED FOR THE STATE OF CALIFORNIA DEPARTMENT OF TRANSPORTATION

PO-KANG CHEN
PROJECT ENGINEER

BRIDGE NO. 23-0246
POST MILES 12.8

GREEN VALLEY ROAD OVERCROSSING
BENT 2 LAYOUT

DESIGN DETAIL SHEET (ENGLISH) (REV.7/16/10)

ORIGINAL SCALE IN INCHES FOR REDUCED PLANS 0 1 2 3

UNIT: 0741
PROJECT NUMBER & PHASE: 04000211311 CONTRACT NO.: 04-0A5341

DISREGARD PRINTS BEARING EARLIER REVISION DATES

REVISION DATES 9/30/11 5/3/12 9/12/12 10/19/12

SHEET 9 OF 28

FILE => 23-0246-h-b02_1o01.dgn

USERNAME => s124496 DATE PLOTTED => 09-MAY-2013 TIME PLOTTED => 07:35

DIST	COUNTY	ROUTE	POST MILES TOTAL PROJECT	SHEET No	TOTAL SHEETS
04	Sol	12,80	2.1/2.8, 12.0/13.1	522	597

P.K. Chen 9/12/12
REGISTERED STRUCTURAL ENGINEER DATE

5-6-13
PLANS APPROVAL DATE

REGISTERED PROFESSIONAL ENGINEER PO-KANG CHEN No. S 3112 Exp. 9/30/13 STRUCTURAL STATE OF CALIFORNIA

The State of California or its officers or agents shall not be responsible for the accuracy or completeness of electronic copies of this plan sheet.

SOLANO TRANSPORTATION AUTHORITY
ONE HARBOR CENTER, SUITE 130
SUISUN CITY, CA 94585

MARK THOMAS & COMPANY, INC. + NOLTE ASSOCIATES, INC.
3000 OAK ROAD, SUITE 650
WALNUT CREEK, CA 94597

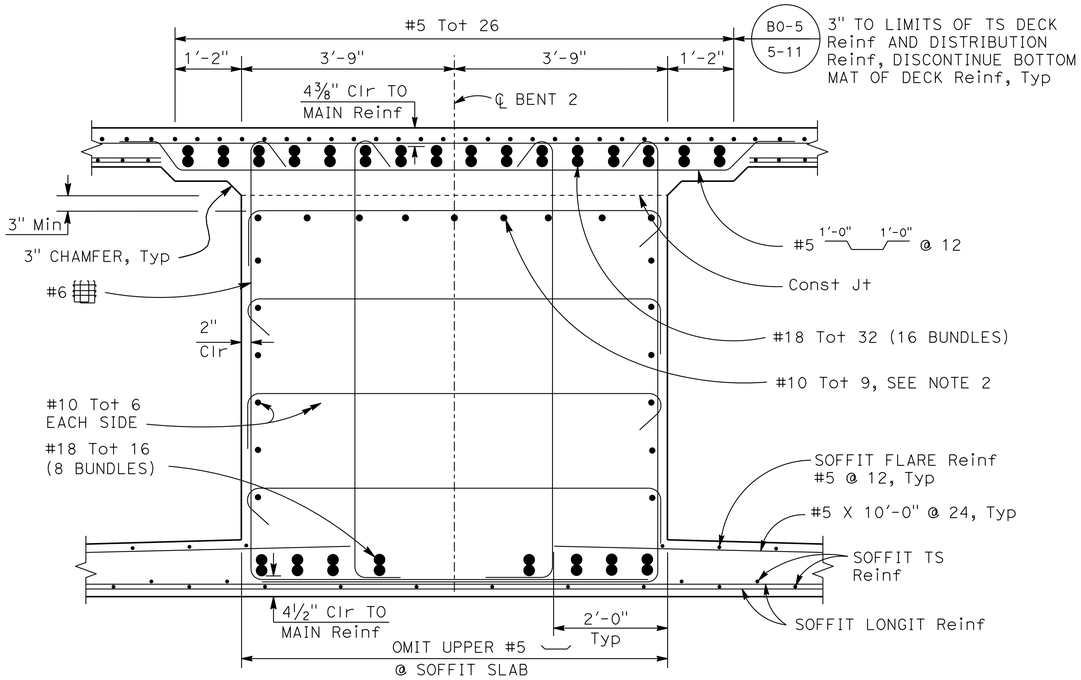

SECTION I-I
3/4"=1'-0"

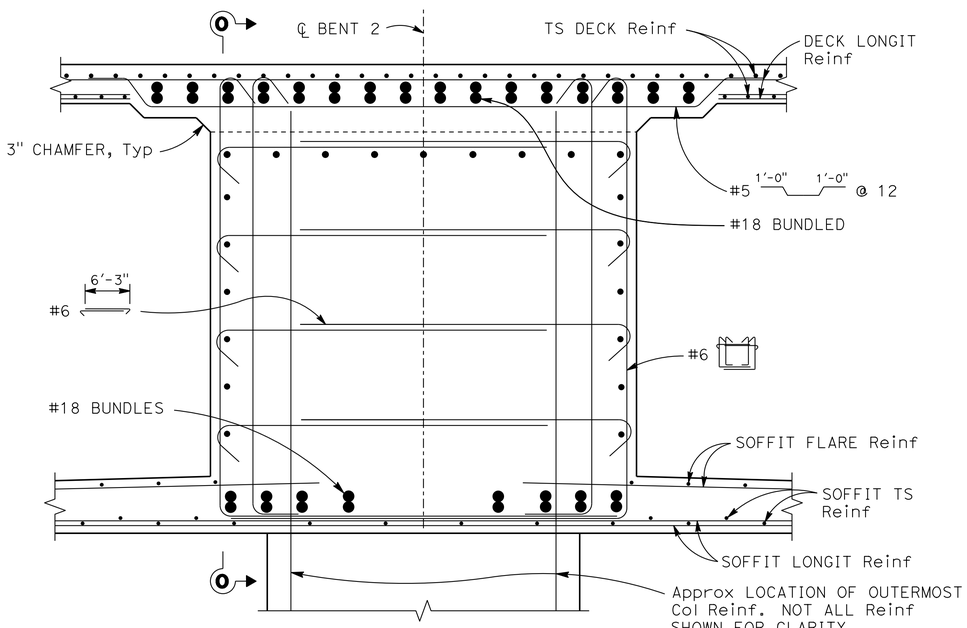

NOTE: For details and notes not shown, see 'SECTION I-I'

SECTION J-J
3/4"=1'-0"

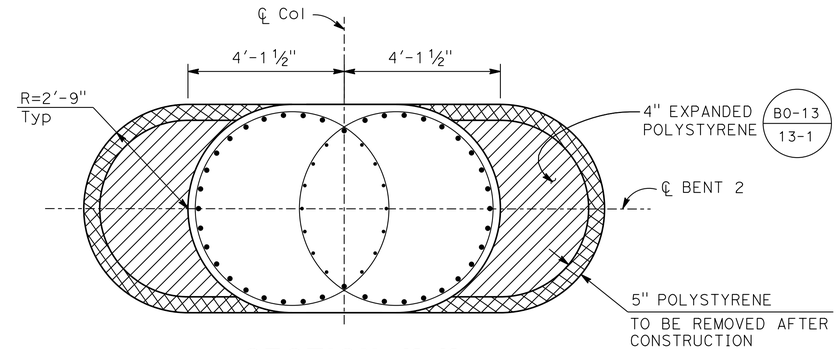

SECTION K-K
1/2" = 1'-0"

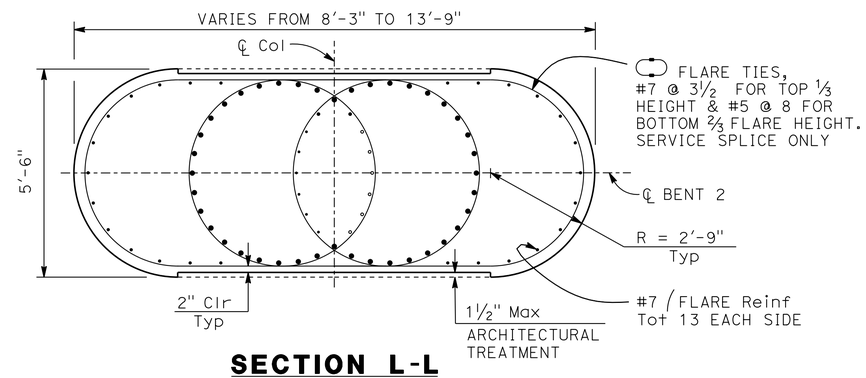

SECTION L-L
1/2" = 1'-0"

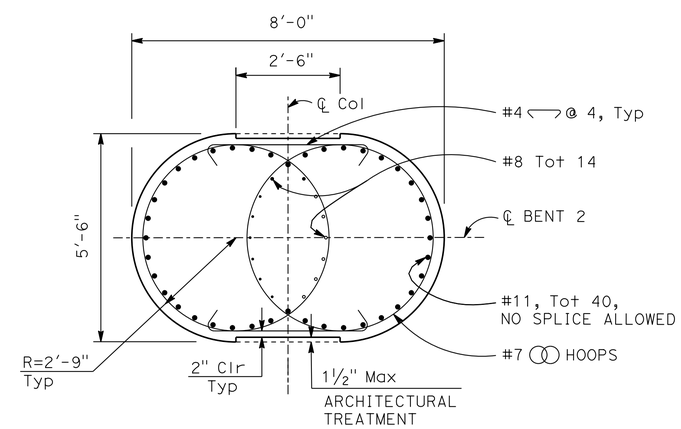

SECTION M-M
1/2" = 1'-0"

NOTES:

1. For 'VIEW O-O', see "BENT DETAILS No. 2" sheet.
2. For Architectural Treatment, see "BRIDGE AESTHETICS" sheet.

Tracy L. Bertram
DESIGN OVERSIGHT Tracy L Bertram
1-7-13
SIGN OFF DATE

	BY	CHECKED
DESIGN	P. CHEN	J. PASSALACQUA
DETAILS	N. PHAM	J. PASSALACQUA
QUANTITIES	N. PHAM	A. HOAC

PREPARED FOR THE STATE OF CALIFORNIA DEPARTMENT OF TRANSPORTATION

PO-KANG CHEN
PROJECT ENGINEER

BRIDGE NO. 23-0246
POST MILES 12.8

GREEN VALLEY ROAD OVERCROSSING
BENT DETAILS No. 1

DESIGN DETAIL SHEET (ENGLISH) (REV.7/16/10)

ORIGINAL SCALE IN INCHES FOR REDUCED PLANS 0 1 2 3

UNIT: 0741
PROJECT NUMBER & PHASE: 04000211311 CONTRACT NO.: 04-0A5341

DISREGARD PRINTS BEARING EARLIER REVISION DATES

REVISION DATES: 3/30/11 5/3/12 9/12/12 10/19/12

SHEET 10 OF 28

FILE => 23-0246-h-b02dt01.dgn

USERNAME => s124496 DATE PLOTTED => 08-MAY-2013 TIME PLOTTED => 07:57

DIST	COUNTY	ROUTE	POST MILES TOTAL PROJECT	SHEET No	TOTAL SHEETS
04	Sol	12,80	2.1/2.8, 12.0/13.1	523	597

P.K. Chen 9/12/12
REGISTERED STRUCTURAL ENGINEER DATE

5-6-13
PLANS APPROVAL DATE

REGISTERED PROFESSIONAL ENGINEER
PO-KANG CHEN
No. S 3112
Exp. 9/30/13
STRUCTURAL
STATE OF CALIFORNIA

The State of California or its officers or agents shall not be responsible for the accuracy or completeness of electronic copies of this plan sheet.

SOLANO TRANSPORTATION AUTHORITY
ONE HARBOR CENTER, SUITE 130
SUISUN CITY, CA 94585

MARK THOMAS & COMPANY, INC. + NOLTE ASSOCIATES, INC.
3000 OAK ROAD, SUITE 650
WALNUT CREEK, CA 94597

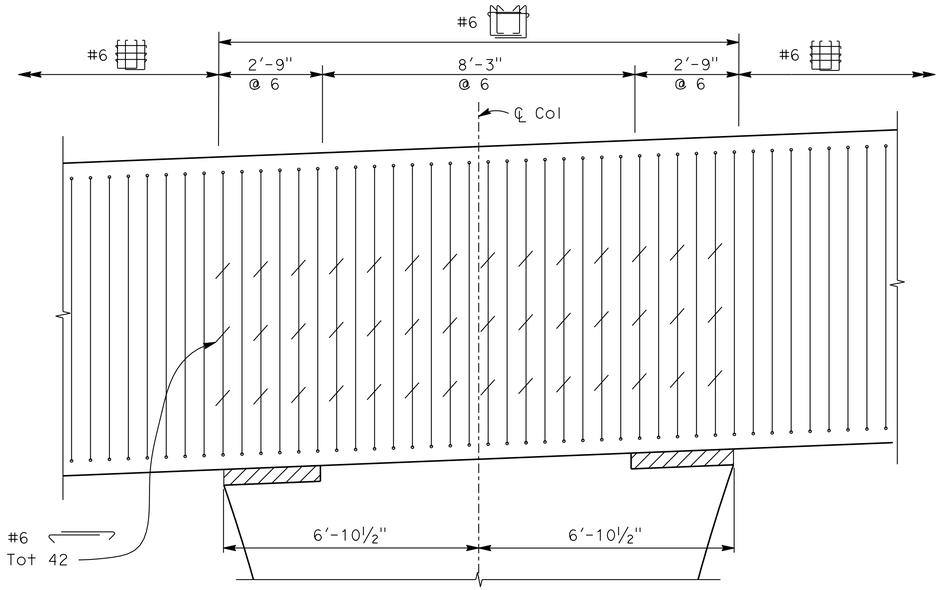

VIEW O-O
1/2"=1'-0"

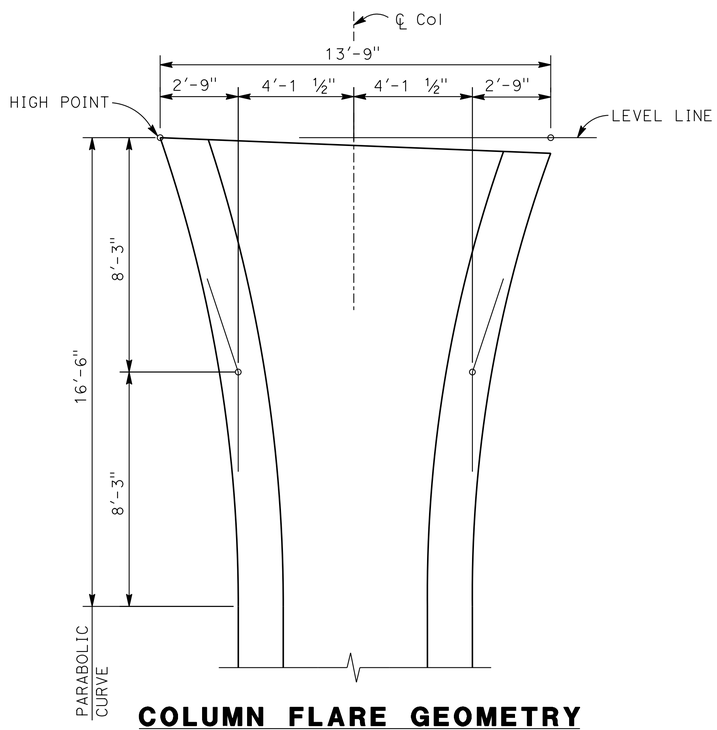

COLUMN FLARE GEOMETRY
3/8" = 1'-0"

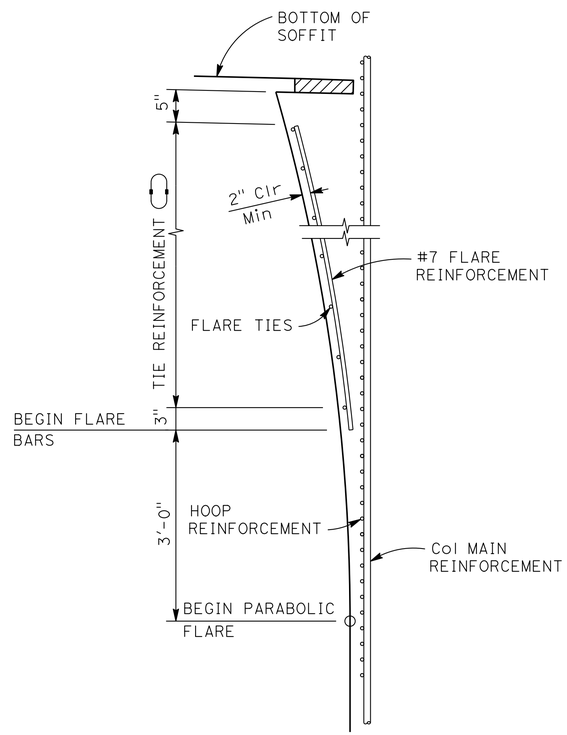

HOOP & TIE DETAIL
NO SCALE

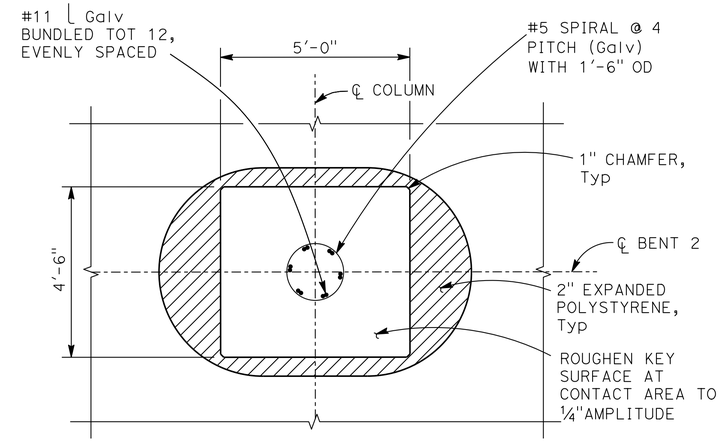

FOOTING PLAN AT COLUMN KEY
1/2" = 1'-0"

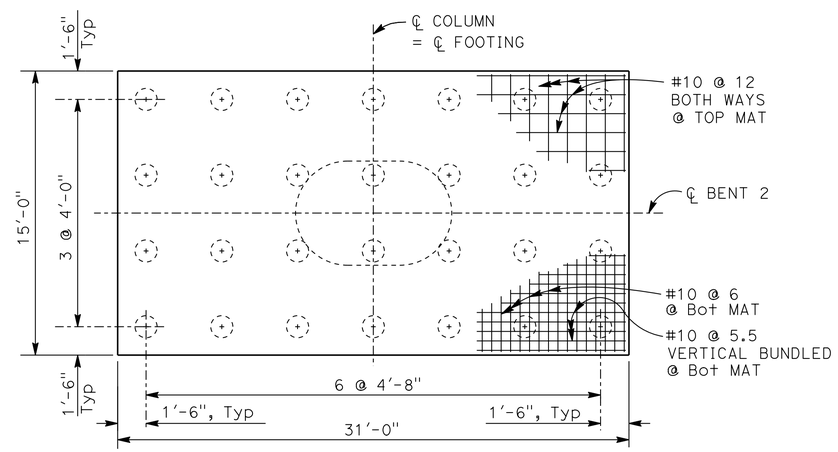

FOOTING PLAN
1/4" = 1'-0"

Tracy L. Bertram
DESIGN OVERSIGHT Tracy L Bertram
1-7-13
SIGN OFF DATE

	BY	CHECKED
DESIGN	P. CHEN	J. PASSALACQUA
DETAILS	N. PHAM	J. PASSALACQUA
QUANTITIES	N. PHAM	A. HOAC

PREPARED FOR THE STATE OF CALIFORNIA DEPARTMENT OF TRANSPORTATION

PO-KANG CHEN
PROJECT ENGINEER

BRIDGE NO. 23-0246
POST MILES 12.8

GREEN VALLEY ROAD OVERCROSSING
BENT DETAILS No. 2

DESIGN DETAIL SHEET (ENGLISH) (REV.7/16/10)

ORIGINAL SCALE IN INCHES FOR REDUCED PLANS 0 1 2 3

UNIT: 0741
PROJECT NUMBER & PHASE: 04000211311 CONTRACT NO.: 04-0A5341

DISREGARD PRINTS BEARING EARLIER REVISION DATES
REVISION DATES 9/30/11 5/4/12 9/27/12 10/19/12

SHEET 11 OF 28

FILE => 23-0246-h-b02dt02.dgn

USERNAME => s124496 DATE PLOTTED => 08-MAY-2013 TIME PLOTTED => 07:58

DIST	COUNTY	ROUTE	POST MILES TOTAL PROJECT	SHEET No	TOTAL SHEETS
04	Sol	12,80	2.1/2.8, 12.0/13.1	524	597

P.K. Chen 9/12/12
REGISTERED STRUCTURAL ENGINEER DATE

5-6-13
PLANS APPROVAL DATE

REGISTERED PROFESSIONAL ENGINEER PO-KANG CHEN No. S 3112 Exp. 9/30/13 STRUCTURAL STATE OF CALIFORNIA

The State of California or its officers or agents shall not be responsible for the accuracy or completeness of electronic copies of this plan sheet.

SOLANO TRANSPORTATION AUTHORITY
ONE HARBOR CENTER, SUITE 130
SUISUN CITY, CA 94585

MARK THOMAS & COMPANY, INC. + NOLTE ASSOCIATES, INC.
3000 OAK ROAD, SUITE 650
WALNUT CREEK, CA 94597

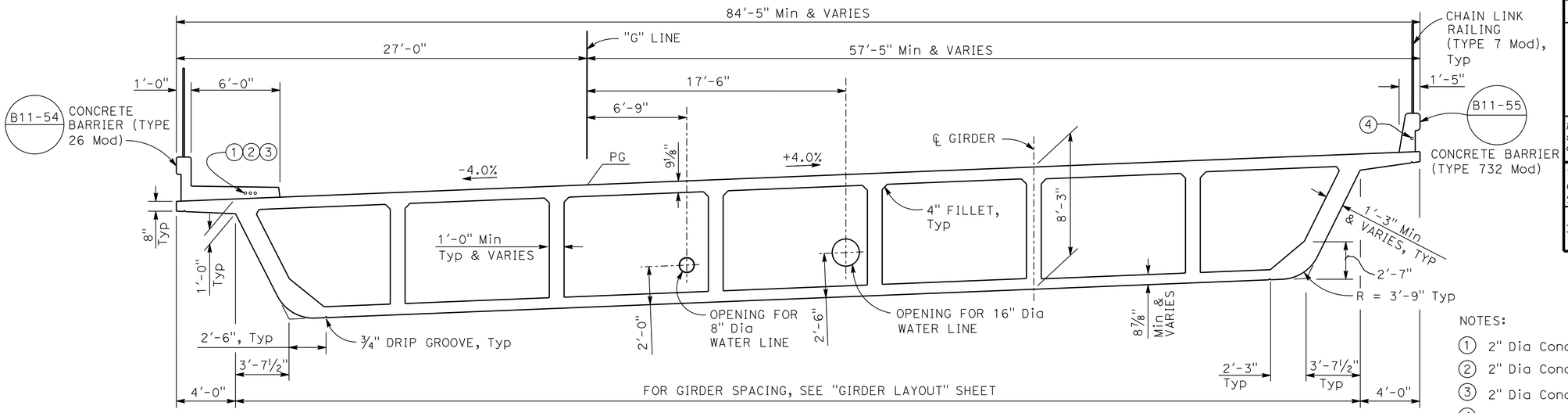

NOTES:

1. 2" Dia Conduit (Lighting), see 'ROAD PLANS'
2. 2" Dia Conduit (Signal Interconnect), see 'ROAD PLANS'
3. 2" Dia Conduit (Future), see 'ROAD PLANS'
4. 2" Dia Conduit (Loop Detector), see 'ROAD PLANS'

TYPICAL SECTION

1/4" = 1'-0"

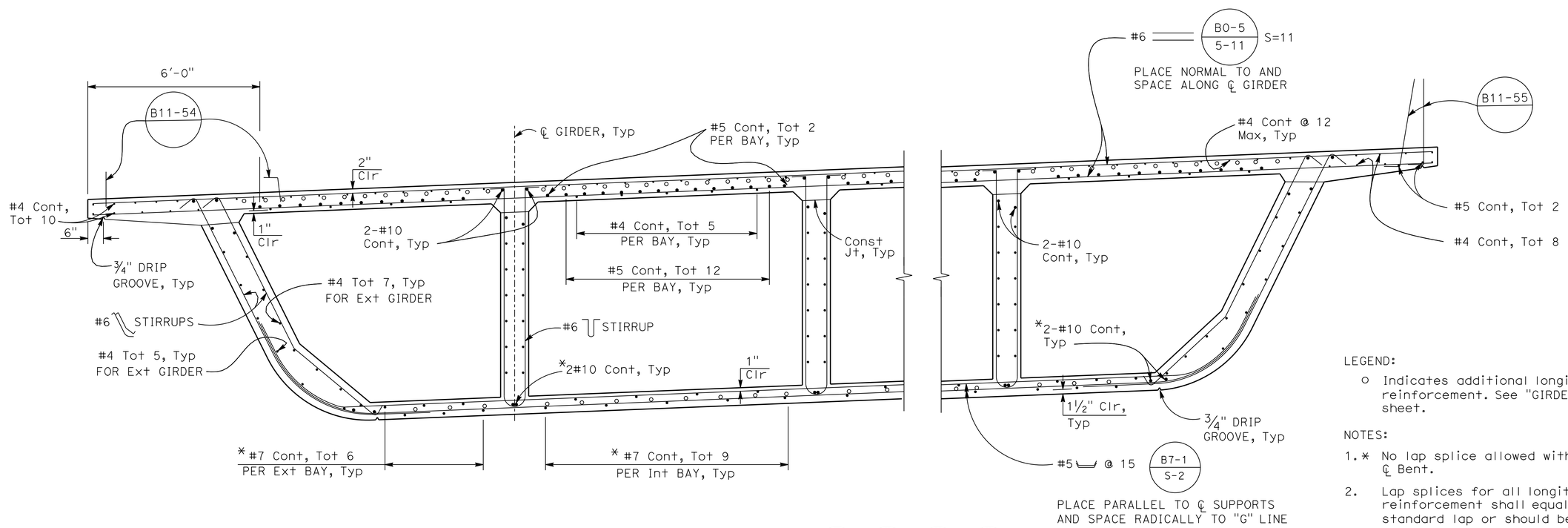

LEGEND:

○ Indicates additional longitudinal girder reinforcement. See "GIRDER REINFORCEMENT" sheet.

NOTES:

1. * No lap splice allowed within 30'-0" of ℄ Bent.
2. Lap splices for all longitudinal reinforcement shall equal to two times the standard lap or should be "service plices".

PART TYPICAL SECTION

1/2"=1'-0"

B0-5 B7-1 B11-54 B11-55

Tracy L. Bertram DESIGN OVERSIGHT Tracy L Bertram	DESIGN	BY P. CHEN	CHECKED J. PASSALACQUA	PREPARED FOR THE STATE OF CALIFORNIA DEPARTMENT OF TRANSPORTATION	PO-KANG CHEN PROJECT ENGINEER
1-7-13 SIGN OFF DATE	DETAILS	BY N. PHAM	CHECKED J. PASSALACQUA		
	QUANTITIES	BY N. PHAM	CHECKED A. HOAC		

BRIDGE NO. 23-0246
POST MILES 12.8

GREEN VALLEY ROAD OVERCROSSING

TYPICAL SECTION

DESIGN DETAIL SHEET (ENGLISH) (REV.7/16/10)

ORIGINAL SCALE IN INCHES FOR REDUCED PLANS 0 1 2 3

UNIT: 0741
PROJECT NUMBER & PHASE: 04000211311 CONTRACT NO.: 04-0A5341

DISREGARD PRINTS BEARING EARLIER REVISION DATES

REVISION DATES 9/30/11 5/9/12 9/12/12 10/19/12

SHEET 12 OF 28

FILE => 23-0246-k-ts01.dgn

USERNAME => s124496 DATE PLOTTED => 08-MAY-2013 TIME PLOTTED => 07:58

DIST	COUNTY	ROUTE	POST MILES TOTAL PROJECT	SHEET No	TOTAL SHEETS
04	Sol	12,80	2.1/2.8, 12.0/13.1	525	597

P.K. Chen 9/12/12
REGISTERED STRUCTURAL ENGINEER DATE

5-6-13
PLANS APPROVAL DATE

REGISTERED PROFESSIONAL ENGINEER PO-KANG CHEN No. S 3112 Exp. 9/30/13 STRUCTURAL STATE OF CALIFORNIA

The State of California or its officers or agents shall not be responsible for the accuracy or completeness of electronic copies of this plan sheet.

SOLANO TRANSPORTATION AUTHORITY
ONE HARBOR CENTER, SUITE 130
SUISUN CITY, CA 94585

MARK THOMAS & COMPANY, INC. + NOLTE ASSOCIATES, INC.
3000 OAK ROAD, SUITE 650
WALNUT CREEK, CA 94597

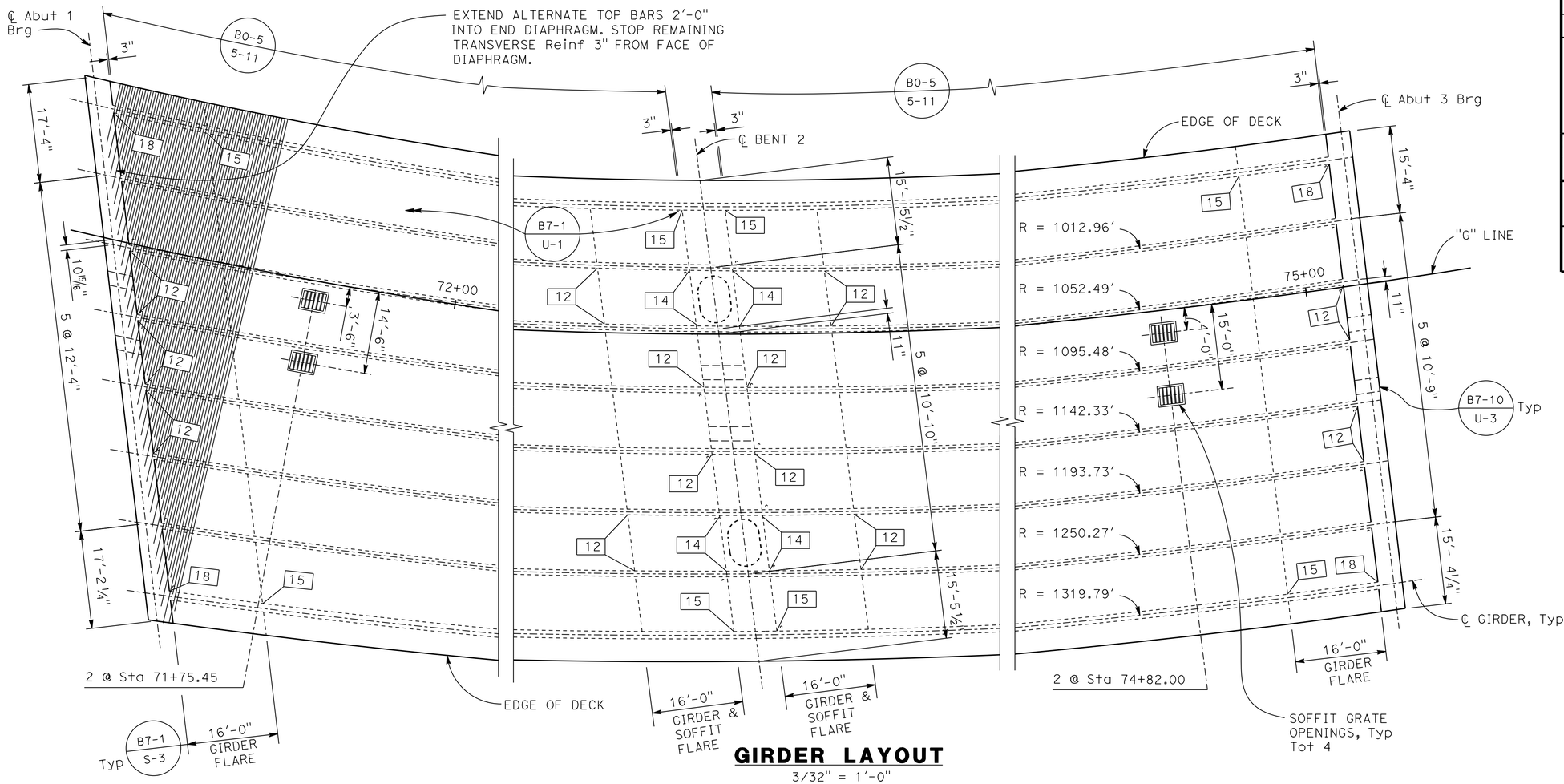

GIRDER LAYOUT

3/32" = 1'-0"

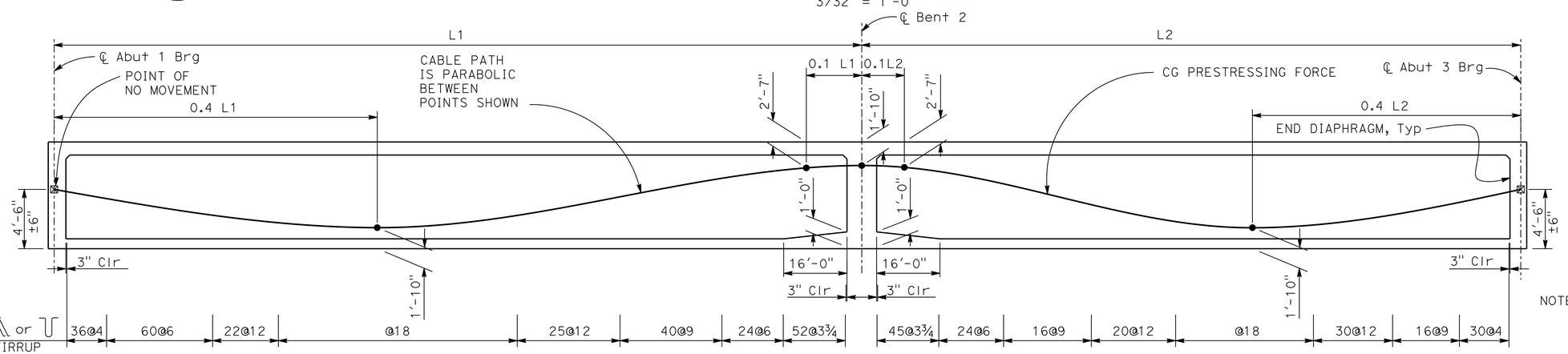

LONGITUDINAL SECTION

NO SCALE

NOTE: For 'END DIAPHRAGM' details, see "MISCELLANEOUS DETAILS" sheet.

PRESTRESSING NOTES

270 ksi Low Relaxation Strand:
Pjack = 29,000 kips
Anchor Set = 3/8"
Friction Coefficients (rigid galvanized duct):
Curvature (μ) = 0.15
Wobble (k) = 0.0002
Total Number of Girders = 8
Distribution of prestress force (Pjack) between girders shall not exceed the ratio of 3:2.

Maximum final force variation between girders shall not exceed 725 kips.

Concrete: f'c = 5.0 ksi @ 28 days
f'ci = 3.6 ksi @ time of stressing

Contractor shall submit elongation calculations based on initial stress at ⊠ = 0.880 times jacking stress.

One end prestressing shall be performed from Abutment 3

LEGEND:

⊠ Indicates point of No. movement

Denotes girder stem width in inches. Girder stem width = 12 inches unless otherwise noted.

L1 & L2 Length of girders measured at centerline of each girder.

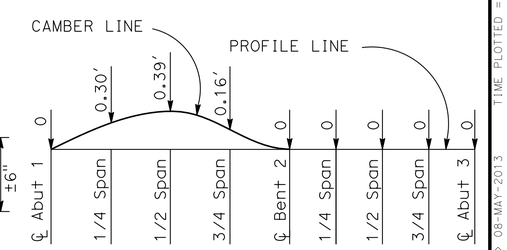

NOTE: Does not include allowance for falsework settlement or falsework deflection.

CAMBER DIAGRAM

NO SCALE

DESIGN OVERSIGHT Tracy L Bertram	DESIGN	BY P. CHEN	CHECKED J. PASSALACQUA
1-7-13 SIGN OFF DATE	DETAILS	BY N. PHAM	CHECKED J. PASSALACQUA
	QUANTITIES	BY N. PHAM	CHECKED A. HOAC

PREPARED FOR THE STATE OF CALIFORNIA DEPARTMENT OF TRANSPORTATION

PO-KANG CHEN
PROJECT ENGINEER

BRIDGE NO. 23-0246
POST MILES 12.8

GREEN VALLEY ROAD OVERCROSSING
GIRDER LAYOUT

DESIGN DETAIL SHEET (ENGLISH) (REV.7/16/10)

ORIGINAL SCALE IN INCHES FOR REDUCED PLANS 0 1 2 3

UNIT: 0741
PROJECT NUMBER & PHASE: 04000211311 CONTRACT NO.: 04-0A5341

DISREGARD PRINTS BEARING EARLIER REVISION DATES → REVISION DATES 3/30/11 3/9/12 3/12/12 10/19/12

SHEET 13 OF 28

FILE => 23-0246-1-g_lo01.dgn

USERNAME => s124936 DATE PLOTTED => 08-MAY-2013 TIME PLOTTED => 07:58

DIST	COUNTY	ROUTE	POST MILES TOTAL PROJECT	SHEET No	TOTAL SHEETS
04	Sol	12,80	2.1/2.8, 12.0/13.1	526	597

P.K. Chen 9/12/12
REGISTERED STRUCTURAL ENGINEER DATE

5-6-13
PLANS APPROVAL DATE

REGISTERED PROFESSIONAL ENGINEER
PO-KANG CHEN
No. S 3112
Exp. 9/30/13
STRUCTURAL
STATE OF CALIFORNIA

The State of California or its officers or agents shall not be responsible for the accuracy or completeness of electronic copies of this plan sheet.

SOLANO TRANSPORTATION AUTHORITY
ONE HARBOR CENTER, SUITE 130
SUISUN CITY, CA 94585

MARK THOMAS & COMPANY, INC. + NOLTE ASSOCIATES, INC.
3000 OAK ROAD, SUITE 650
WALNUT CREEK, CA 94597

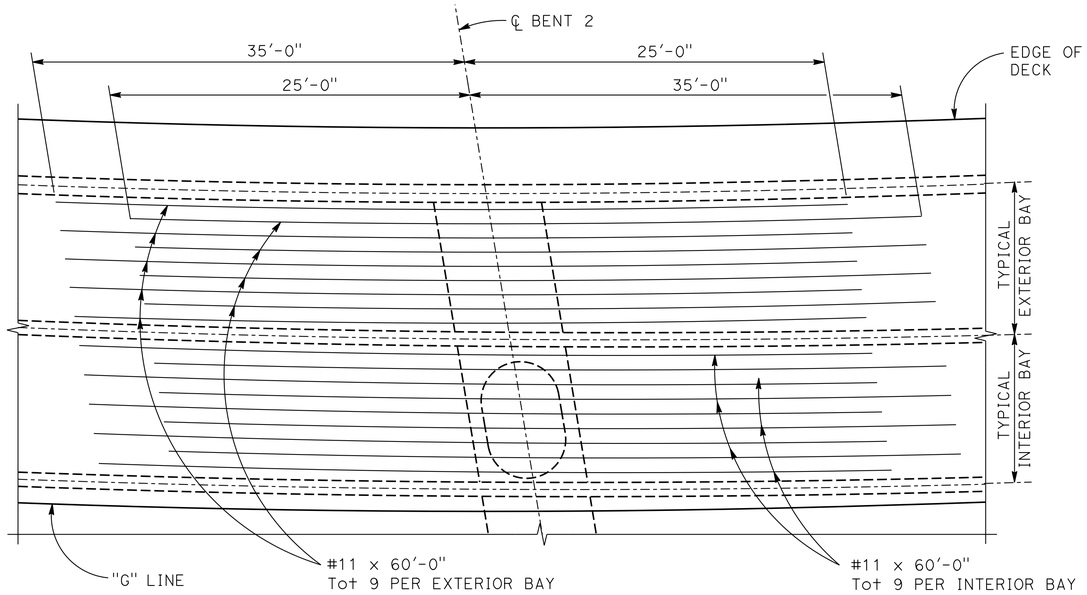

TOP REINFORCEMENT
3/16" = 1'-0"

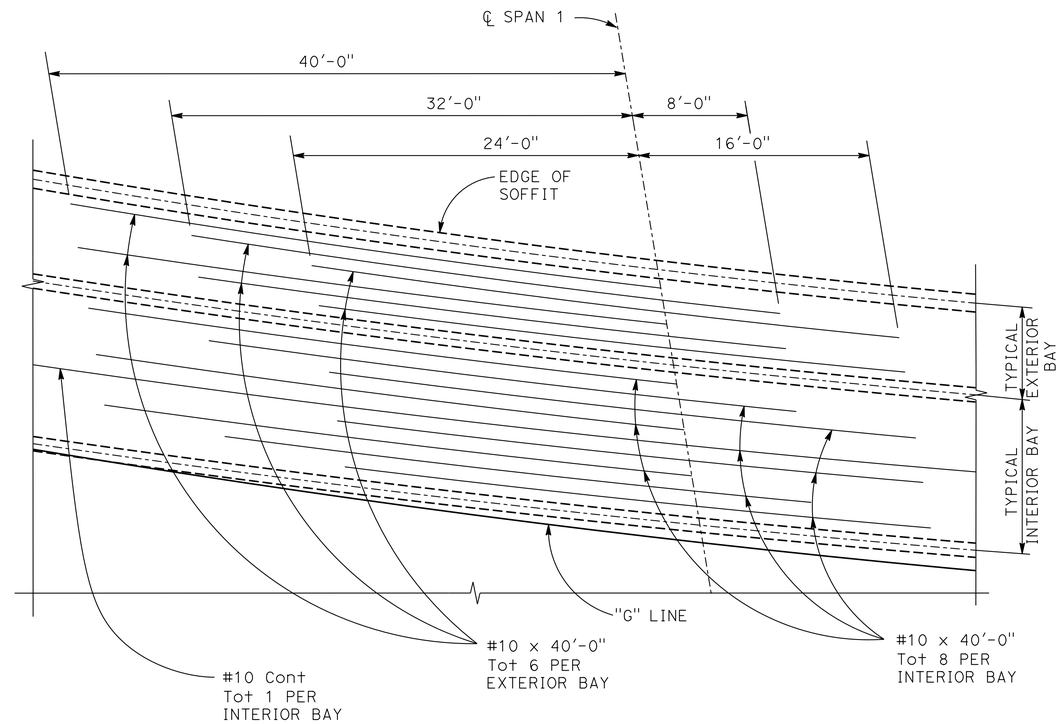

BOTTOM REINFORCEMENT AT SPAN 1
3/16" = 1'-0"

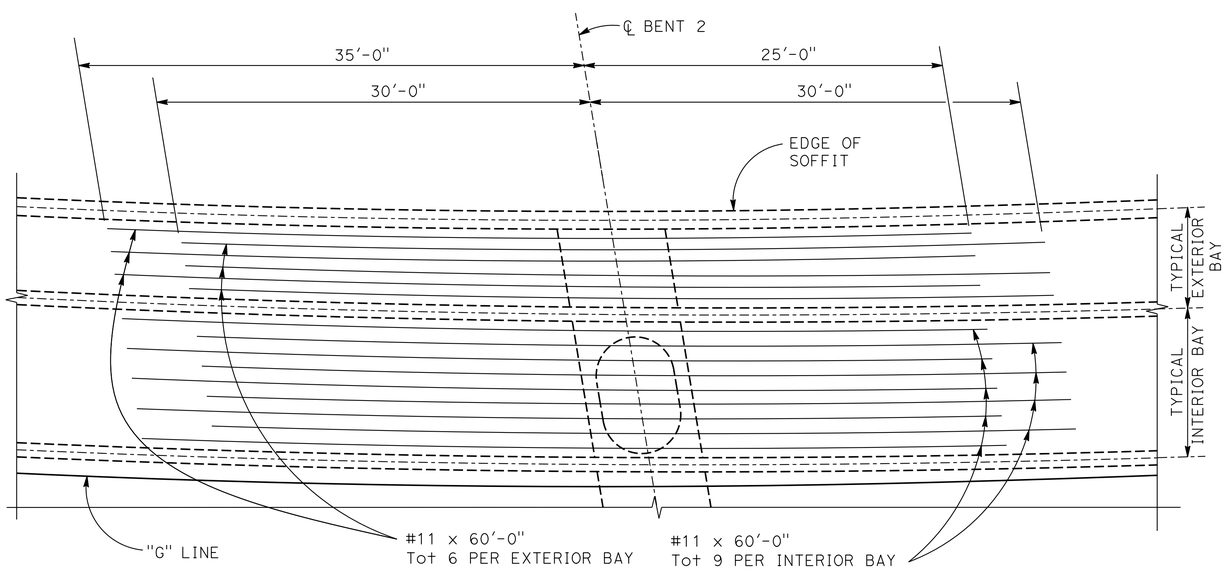

BOTTOM REINFORCEMENT
3/16" = 1'-0"

Tracy L. Bertram
DESIGN OVERSIGHT Tracy L Bertram
1-7-13
SIGN OFF DATE

	BY	CHECKED
DESIGN	P. CHEN	J. PASSALACQUA
DETAILS	N. PHAM	J. PASSALACQUA
QUANTITIES	N. PHAM	A. HOAC

PREPARED FOR THE
STATE OF CALIFORNIA
DEPARTMENT OF TRANSPORTATION

PO-KANG CHEN
PROJECT ENGINEER

BRIDGE NO. 23-0246
POST MILES 12.8

GREEN VALLEY ROAD OVERCROSSING
GIRDER REINFORCEMENT

DESIGN DETAIL SHEET (ENGLISH) (REV.7/16/10)

ORIGINAL SCALE IN INCHES FOR REDUCED PLANS 0 1 2 3

UNIT: 0741
PROJECT NUMBER & PHASE: 04000211311 CONTRACT NO.: 04-0A5341

DISREGARD PRINTS BEARING EARLIER REVISION DATES

REVISION DATES 3/30/11 3/9/12 9/12/12 10/19/12

SHEET 14 OF 28

FILE => 23-0246-o-gir_rf01.dgn

USERNAME => s124936 DATE PLOTTED => 08-MAY-2013 TIME PLOTTED => 07:58

DIST	COUNTY	ROUTE	POST MILES TOTAL PROJECT	SHEET No	TOTAL SHEETS
04	Sol	12,80	2.1/2.8, 12.0/13.1	527	597

P.K. Chen 9/12/12
REGISTERED STRUCTURAL ENGINEER DATE

5-6-13
PLANS APPROVAL DATE

REGISTERED PROFESSIONAL ENGINEER PO-KANG CHEN No. S 3112 Exp. 9/30/13 STRUCTURAL STATE OF CALIFORNIA

The State of California or its officers or agents shall not be responsible for the accuracy or completeness of electronic copies of this plan sheet.

SOLANO TRANSPORTATION AUTHORITY
ONE HARBOR CENTER, SUITE 130
SUISUN CITY, CA 94585

MARK THOMAS & COMPANY, INC. + NOLTE ASSOCIATES, INC.
3000 OAK ROAD, SUITE 650
WALNUT CREEK, CA 94597

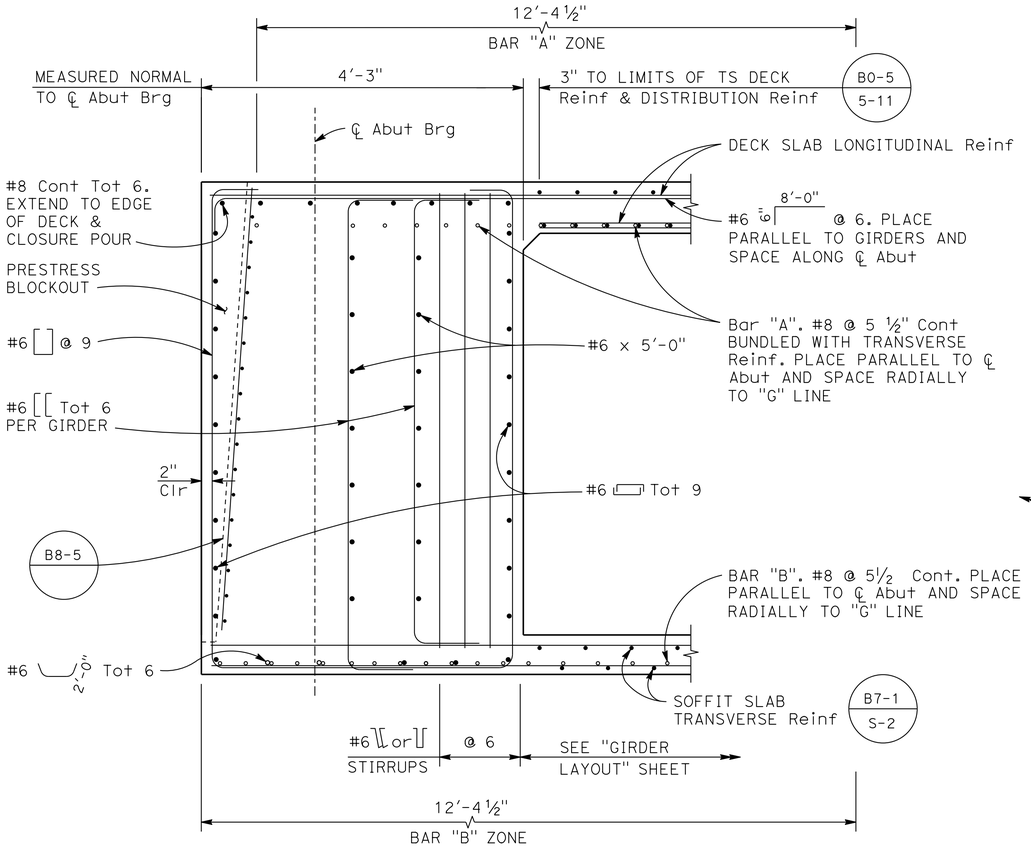

END DIAPHRAGM

1"=1'-0"

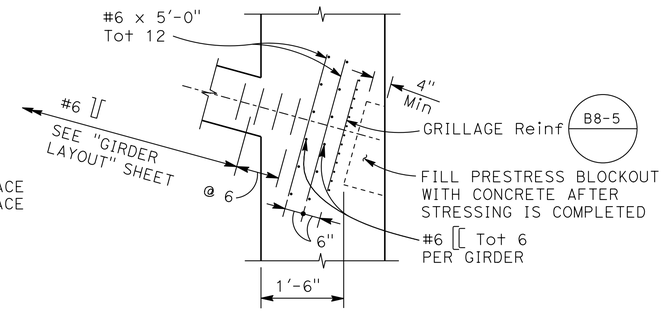

AT INTERIOR GIRDER

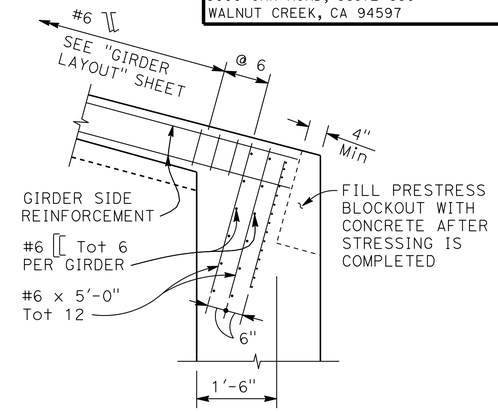

AT EXTERIOR GIRDER

PRESTRESS ANCHORAGE DETAILS

3/4"=1'-0"

NOTE: Abut 1 shown, Abut 3 similar

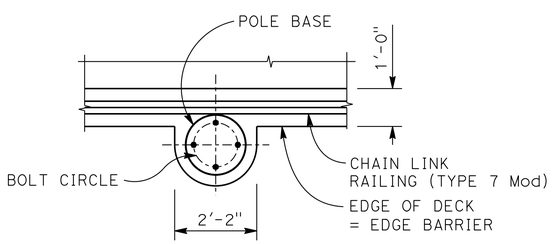

PLAN

1/2" = 1'-0"

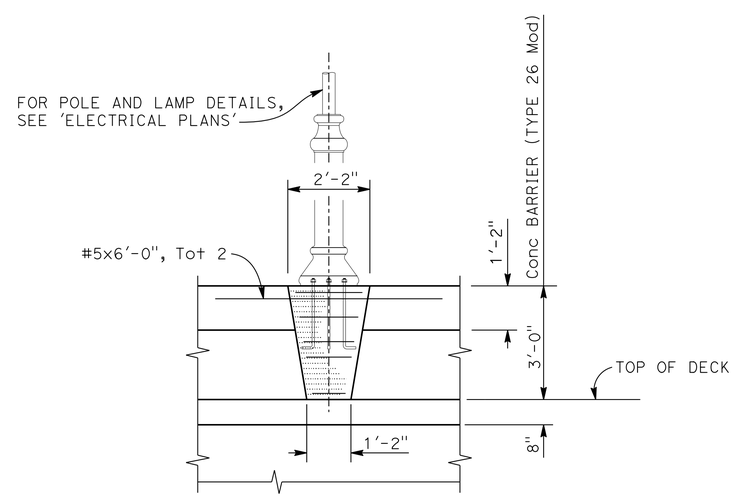

ELEVATION AT ELECTROLIER

1/2" = 1'-0"

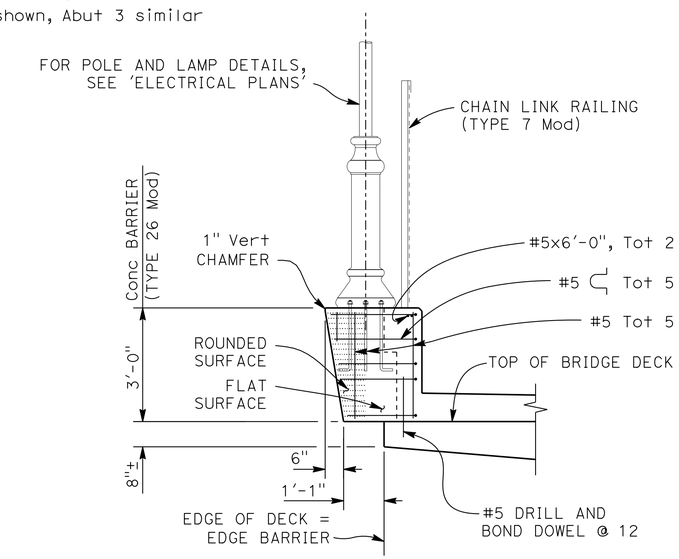

SIDE VIEW FOR TYPE 26 BARRIER

1/2" = 1'-0"

Tracy L. Bertram
DESIGN OVERSIGHT Tracy L Bertram
1-7-13
SIGN OFF DATE

	BY	CHECKED
DESIGN	P. CHEN	J. PASSALACQUA
DETAILS	N. PHAM	J. PASSALACQUA
QUANTITIES	N. PHAM	A. HOAC

PREPARED FOR THE STATE OF CALIFORNIA DEPARTMENT OF TRANSPORTATION

PO-KANG CHEN
PROJECT ENGINEER

BRIDGE NO. 23-0246
POST MILES 12.8

GREEN VALLEY ROAD OVERCROSSING
MISCELLANEOUS DETAILS

DESIGN DETAIL SHEET (ENGLISH) (REV.7/16/10)

ORIGINAL SCALE IN INCHES FOR REDUCED PLANS 0 1 2 3

UNIT: 0741
PROJECT NUMBER & PHASE: 04000211311 CONTRACT NO.: 04-0A5341

DISREGARD PRINTS BEARING EARLIER REVISION DATES

REVISION DATES: 9/20/11 5/4/12 9/12/12 10/19/12

SHEET 15 OF 28

FILE => 23-0246-q-misdt01.dgn

USERNAME => s124496 DATE PLOTTED => 08-MAY-2013 TIME PLOTTED => 07:58

DIST	COUNTY	ROUTE	POST MILES TOTAL PROJECT	SHEET No	TOTAL SHEETS
04	Sol	12,80	2.1/2.8, 12.0/13.1	528	597

Michael Painter 11/9/12 DATE

5-6-13
PLANS APPROVAL DATE

REGISTERED LANDSCAPE ARCHITECT — MICHAEL R. PAINTER — C. 3232 — Signature — 12/31/13 Renewal Date — 11/9/12 Date — STATE OF CALIFORNIA

The State of California or its officers or agents shall not be responsible for the accuracy or completeness of electronic copies of this plan sheet.

SOLANO TRANSPORTATION AUTHORITY
ONE HARBOR CENTER, SUITE 130
SUISUN CITY, CA 94585

MPA DESIGN
1801 OAKLAND BOULEVARD SUITE 315
WALNUT CREEK CA 94596

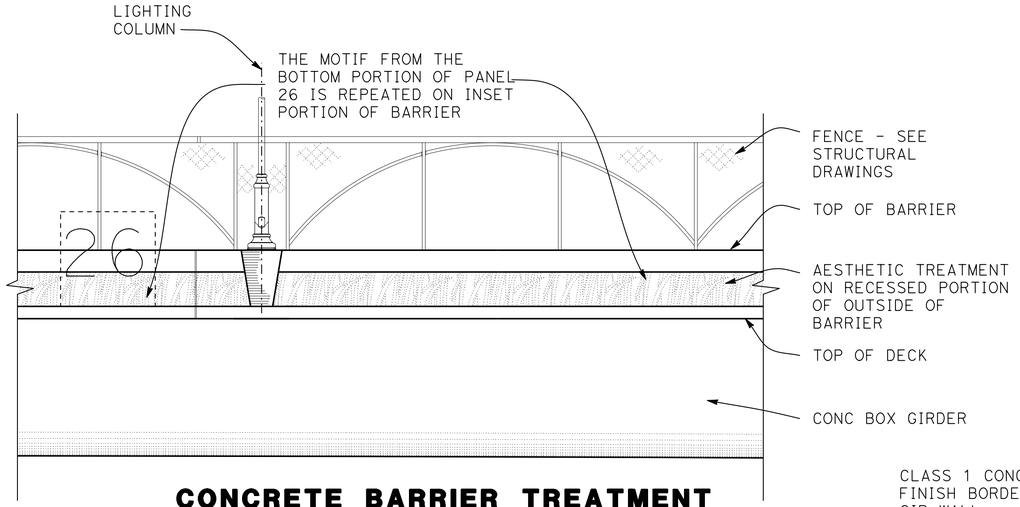

CONCRETE BARRIER TREATMENT

3"= 1'-0"

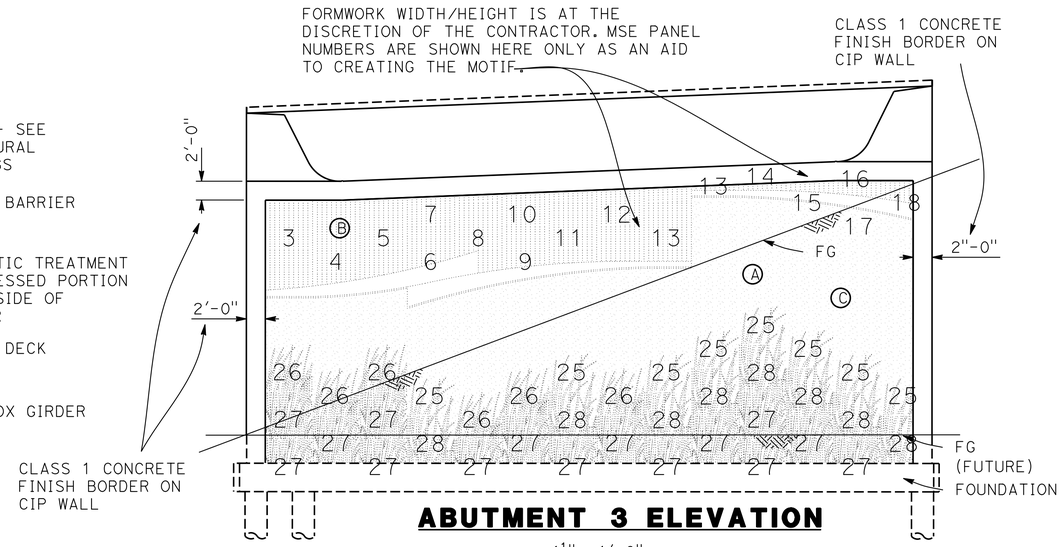

ABUTMENT 3 ELEVATION

1½"= 1'-0"

KEYED NOTES

(A) Permanently protect buried portion of abutment from soil staining and physical damage from backfill and backfilling process.

(B) 1" Smooth fluted finish: Refer to details on "AESTHETIC TREATMENT DETAILS No.3" sheet.

(C) Light sand finish: Refer to details on "AESTHETIC TREATMENT DETAILS No.3" sheet.

NOTES

1. For CIP walls the motif is arranged in the same way as 5'x5' MSE panel units in an MSE wall.
2. The gap that exists between MSE wall panels shall be infilled on CIP walls by extending the motif smoothly and continuously to join with it's neighbor.
3. This drawing shall be used for structural aesthetic treatment only. All other structural elements are shown here for reference only and are specified else where in this drawing set.
4. All CIP wall surfaces not shown as receiving aesthetic treatment shall be class 1 concrete finish.
5. For surface relief details refer to "AESTHETIC TREATMENT DETAILS No.1,2 and 3" sheets.
6. CAD files of the motifs are available from Solano Transportation Authority

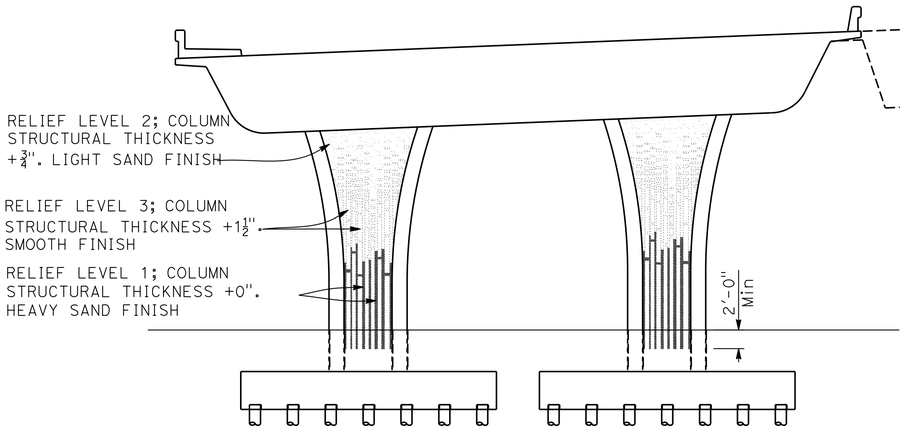

NOTES

1. For surface relief details refer to "KEY TO SURFACE RELIEF - BRIDGE COLUMNS" details on "AESTHETIC TREATMENT DETAILS No.3" sheet.
2. Aesthetic treatment applied to recessed portions on both column faces

BENT 2 ELEVATION

1½"= 1'-0"

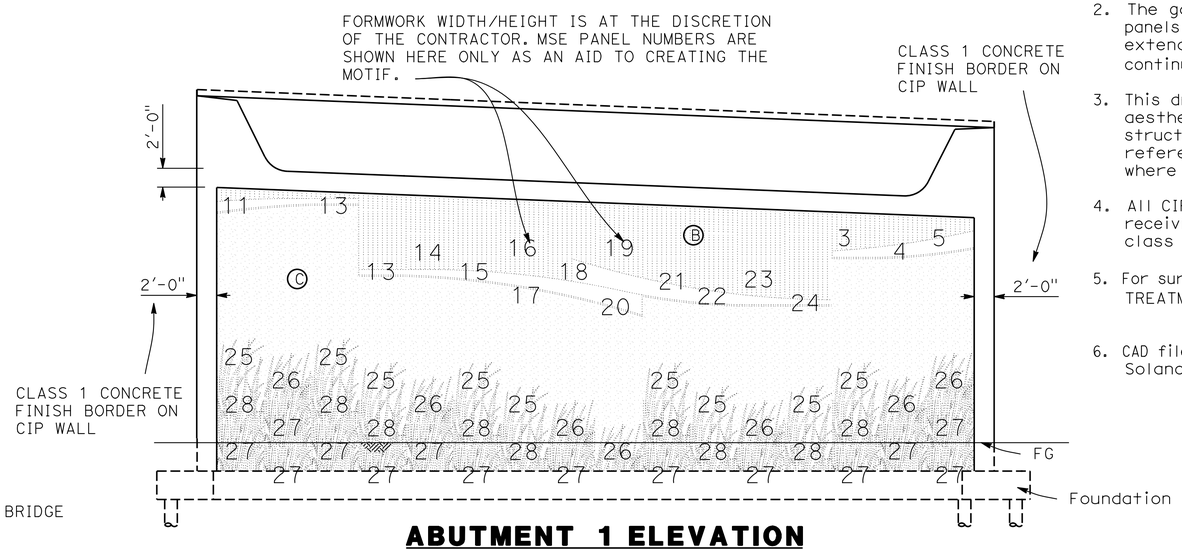

ABUTMENT 1 ELEVATION

1½"= 1'-0"

Tracy L Bertram
DESIGN OVERSIGHT
1-7-13
SIGN OFF DATE

	BY	CHECKED
DESIGN	T WALKER	J PASSALACQUA
DETAILS	S KENNEY	R ALCINA
QUANTITIES	P PARK	E FELIX

PREPARED FOR THE STATE OF CALIFORNIA DEPARTMENT OF TRANSPORTATION

MICHAEL PAINTER
PROJECT LANDSCAPE ARCHITECT

BRIDGE NO. 23-0246
POST MILES 12.8

GREEN VALLEY ROAD OVERCROSSING
BRIDGE AESTHETICS

DESIGN GENERAL PLAN SHEET (ENGLISH) (REV. 3-14-12)

ORIGINAL SCALE IN INCHES FOR REDUCED PLANS 0 1 2 3

UNIT: 0741
PROJECT NUMBER & PHASE: 04000211311 CONTRACT NO.: 04-0A5341

DISREGARD PRINTS BEARING EARLIER REVISION DATES

REVISION DATES				SHEET	OF
09/07/12	10/19/12			16	28

FILE => 23-0246-r-at.dgn

USERNAME => s124496 DATE PLOTTED => 08-MAY-2013 TIME PLOTTED => 07:58

DIST	COUNTY	ROUTE	POST MILES TOTAL PROJECT	SHEET No	TOTAL SHEETS
04	Sol	12,80	2.1/2.8, 12.0/13.1	529	597

Michael Painter 11/9/12
DATE

5-6-13
PLANS APPROVAL DATE

REGISTERED LANDSCAPE ARCHITECT
MICHAEL R. PAINTER
C. 2822
M. Painter
Signature
1/31/13
Renewal Date
11/9/12
Date
STATE OF CALIFORNIA

The State of California or its officers or agents shall not be responsible for the accuracy or completeness of electronic copies of this plan sheet.

SOLANO TRANSPORTATION AUTHORITY
ONE HARBOR CENTER, SUITE 130
SUISUN CITY, CA 94585

MPA DESIGN
1801 OAKLAND BOULEVARD SUITE 315
WALNUT CREEK CA 94596

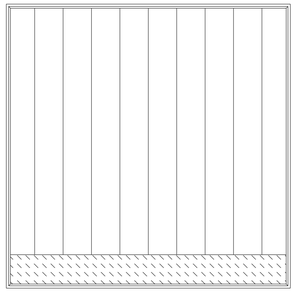
Panel #1 - part of airwave motif

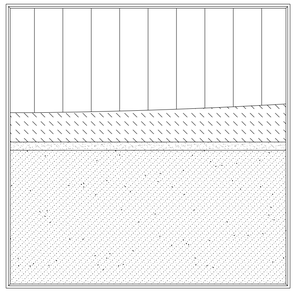
Panel #2 - part of airwave motif

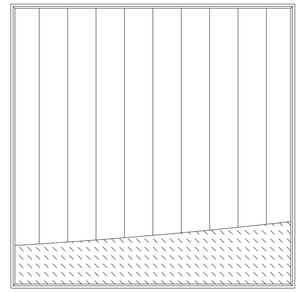
Panel #3 - part of airwave motif

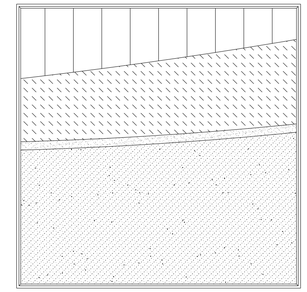
Panel #4 - part of airwave motif

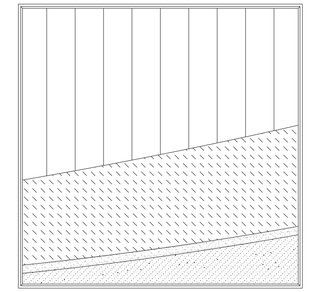
Panel #5 - part of airwave motif

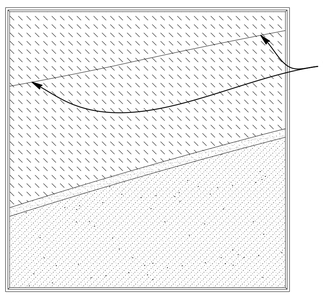

Panel #6 - part of airwave motif

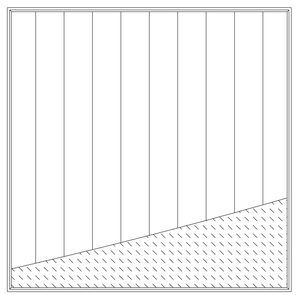
Panel #7 - part of airwave motif

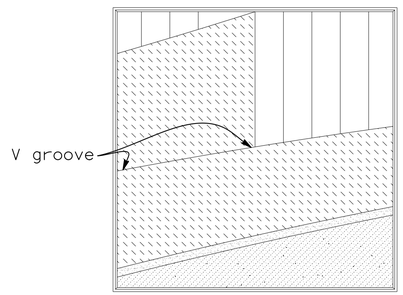

Panel #8 - part of airwave motif

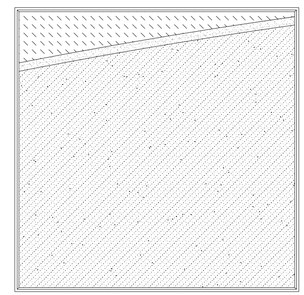
Panel #9 - part of airwave motif

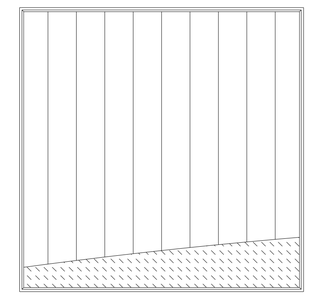
Panel #10 - part of airwave motif

GENERAL NOTE

For surface relief details refer to "Details No. 3" - KEY TO SURFACE RELIEF - MSE PANELS AND CIP WALLS

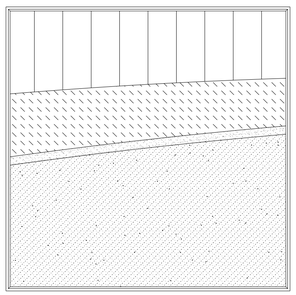
Panel #11 - part of airwave motif

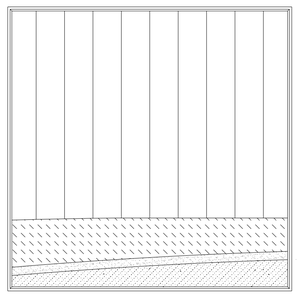
Panel #12 - part of airwave motif

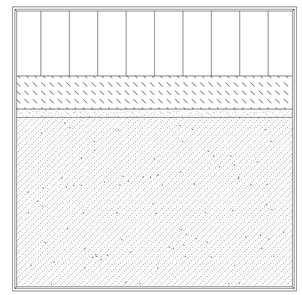
Panel #13 - part of airwave motif

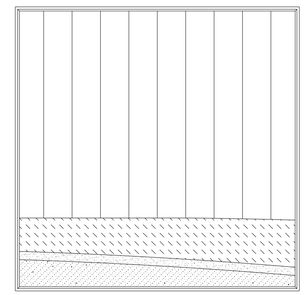
Panel #14 - part of airwave motif

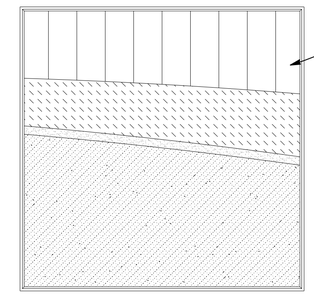

Panel #15 - part of airwave motif

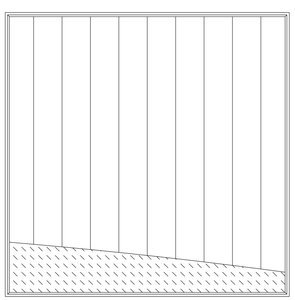
Panel #16 - part of airwave motif

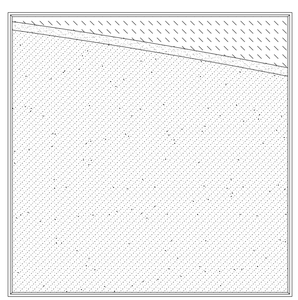
Panel #17 - part of airwave motif

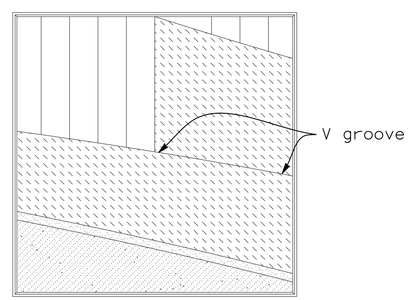

Panel #18 - part of airwave motif

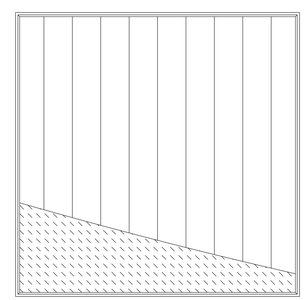
Panel #19 - part of airwave motif

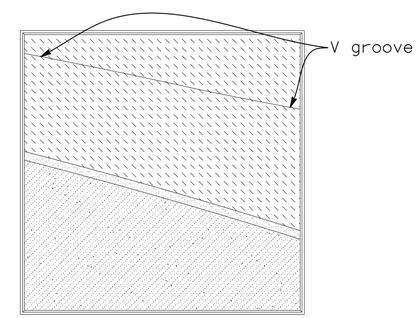

Panel #20 - part of airwave motif

Scale 3/4" = 1'-0"

Tracy L. Bertram
DESIGN OVERSIGHT Tracy L Bertram
1-7-13
SIGN OFF DATE

	BY		CHECKED
DESIGN	BY	S KENNEY	CHECKED R ALCINA
DETAILS	BY	S KENNEY	CHECKED R ALCINA
QUANTITIES	BY	S KENNEY	CHECKED R ALCINA

PREPARED FOR THE STATE OF CALIFORNIA DEPARTMENT OF TRANSPORTATION

MICHAEL PAINTER
PROJECT LANDSCAPE ARCHITECT

BRIDGE NO. 23-0246
POST MILES 12.8

GREEN VALLEY ROAD OVERCROSSING
AESTHETIC TREATMENT DETAILS No. 1

DESIGN GENERAL PLAN SHEET (ENGLISH) (REV. 3-14-12)

ORIGINAL SCALE IN INCHES FOR REDUCED PLANS 0 1 2 3

UNIT: 0741
PROJECT NUMBER & PHASE: 04000211311 CONTRACT NO.: 04-0A5341

DISREGARD PRINTS BEARING EARLIER REVISION DATES

REVISION DATES 09/06/12 10/19/12

SHEET 17 OF 28

FILE => 23-0246-r-atd01.dgn

USERNAME => s124496 DATE PLOTTED => 08-MAY-2013 TIME PLOTTED => 12:40

DIST	COUNTY	ROUTE	POST MILES TOTAL PROJECT	SHEET No	TOTAL SHEETS
04	Sol	12,80	2.1/2.8, 12.0/13.1	530	597

Michael Painter 11/9/12
DATE

5-6-13
PLANS APPROVAL DATE

REGISTERED LANDSCAPE ARCHITECT
MICHAEL R. PAINTER
No. 3225
M. Painter
Signature
1/31/13
Renewal Date
11/9/12
Date
STATE OF CALIFORNIA

The State of California or its officers or agents shall not be responsible for the accuracy or completeness of electronic copies of this plan sheet.

SOLANO TRANSPORTATION AUTHORITY
ONE HARBOR CENTER, SUITE 130
SUISUN CITY, CA 94585

MPA DESIGN
1801 OAKLAND BOULEVARD SUITE 315
WALNUT CREEK CA 94596

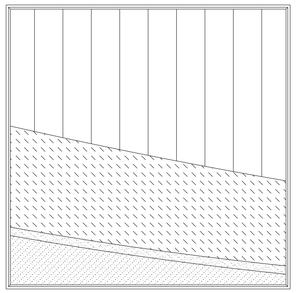

Panel #21 - part of airwave motif

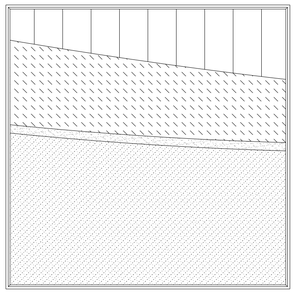

Panel #22 - part of airwave motif

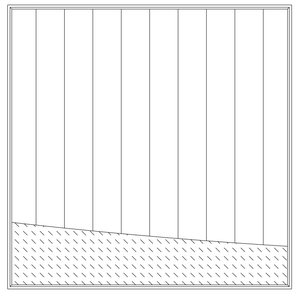

Panel #23 - part of airwave motif

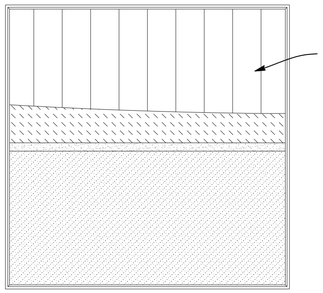

Panel #24 - part of airwave motif

Panel #25 - part of grass motif

Panel #26 - part of grass motif

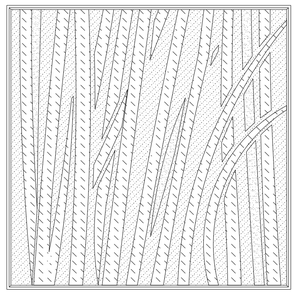

Panel #27 - part of grass motif

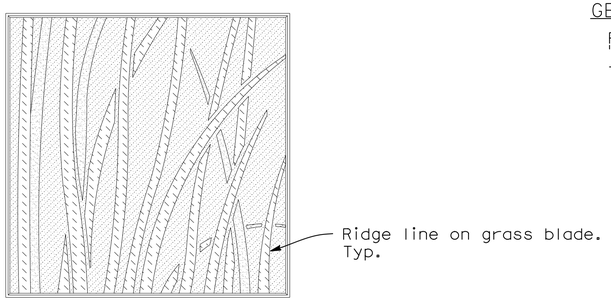

Panel #28 - part of grass motif

GENERAL NOTE

For surface relief details refer to "Details No. 3" - KEY TO SURFACE RELIEF - MSE PANELS AND CIP WALLS

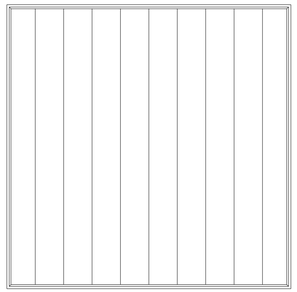

Sky motif panel -used above airwave motif panels (1" smooth fluted finish)

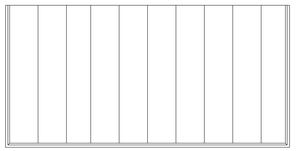

½ Panel used on leveling pad (1" smooth fluted finish)

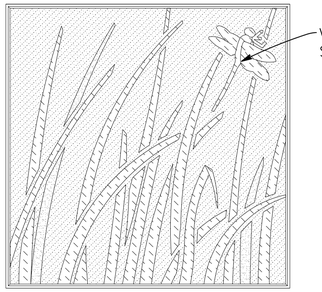

Panel #29 - for high visibility motif

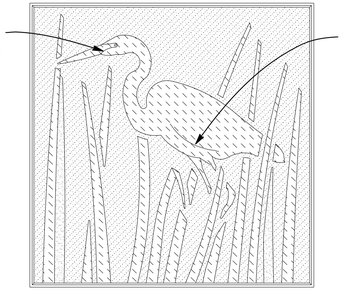

Panel #30 - for high visibility motif

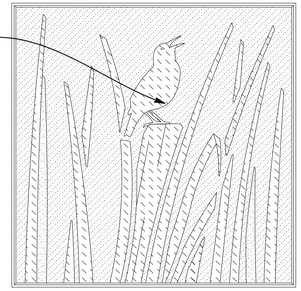

Panel #31 - for high visibility motif

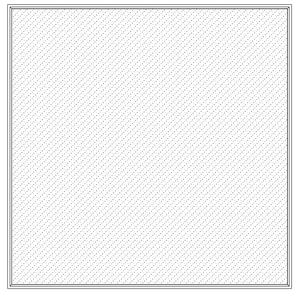

Background panel -used below airwave motif panels (Heavy sand finish)

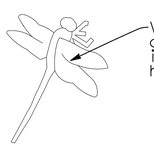

Panel #29 - detail motif

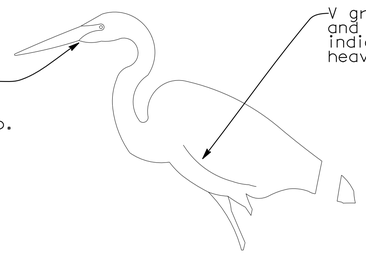

Panel #30 - detail motif

Panel #31 - detail motif

Tracy L. Bertram
DESIGN OVERSIGHT Tracy L Bertram
1-7-13
SIGN OFF DATE

	BY	CHECKED
DESIGN	S KENNEY	R ALCINA
DETAILS	S KENNEY	R ALCINA
QUANTITIES	S KENNEY	R ALCINA

PREPARED FOR THE
STATE OF CALIFORNIA
DEPARTMENT OF TRANSPORTATION

MICHAEL PAINTER
PROJECT LANDSCAPE ARCHITECT

BRIDGE NO. 23-0246
POST MILES 12.8

GREEN VALLEY ROAD OVERCROSSING
AESTHETIC TREATMENT DETAILS No. 2

DESIGN GENERAL PLAN SHEET (ENGLISH) (REV. 3-14-12)

ORIGINAL SCALE IN INCHES FOR REDUCED PLANS 0 1 2 3

UNIT: 0741
PROJECT NUMBER & PHASE: 04000211311 CONTRACT NO.: 04-0A5341

DISREGARD PRINTS BEARING EARLIER REVISION DATES

REVISION DATES				SHEET	OF
09/5/12	10/19/12			18	28

FILE => 23-0246-r-atd02.dgn

USERNAME => s124436 DATE PLOTTED => 08-MAY-2013 TIME PLOTTED => 07:58

DIST	COUNTY	ROUTE	POST MILES TOTAL PROJECT	SHEET No	TOTAL SHEETS
04	Sol	12,80	2.1/2.8, 12.0/13.1	531	597

Michael Painter 11/9/12
DATE

5-6-13
PLANS APPROVAL DATE

REGISTERED LANDSCAPE ARCHITECT
MICHAEL R. PAINTER
C 2837
Signature
1/31/13
Renewal Date
11/9/12
Date
STATE OF CALIFORNIA

The State of California or its officers or agents shall not be responsible for the accuracy or completeness of electronic copies of this plan sheet.

SOLANO TRANSPORTATION AUTHORITY
ONE HARBOR CENTER, SUITE 130
SUISUN CITY, CA 94585

MPA DESIGN
1801 OAKLAND BOULEVARD SUITE 315
WALNUT CREEK CA 94596

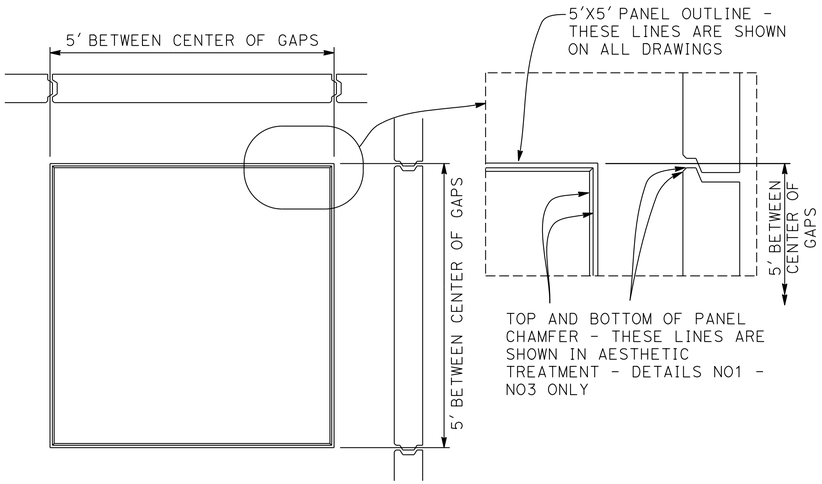

PANELS
3/4"=1'-0"

SAND FINISH AND SKY MOTIF
NTS

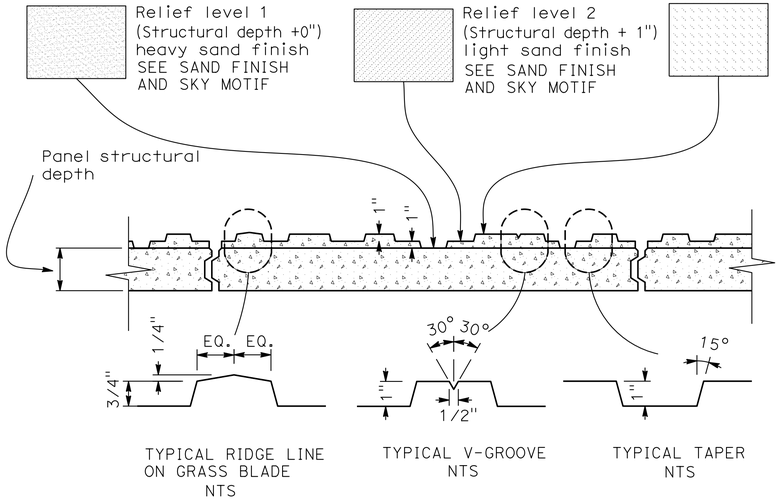

KEY TO SURFACE RELIEF - MSE PANELS AND CIP WALLS
3/8"=1'-0"

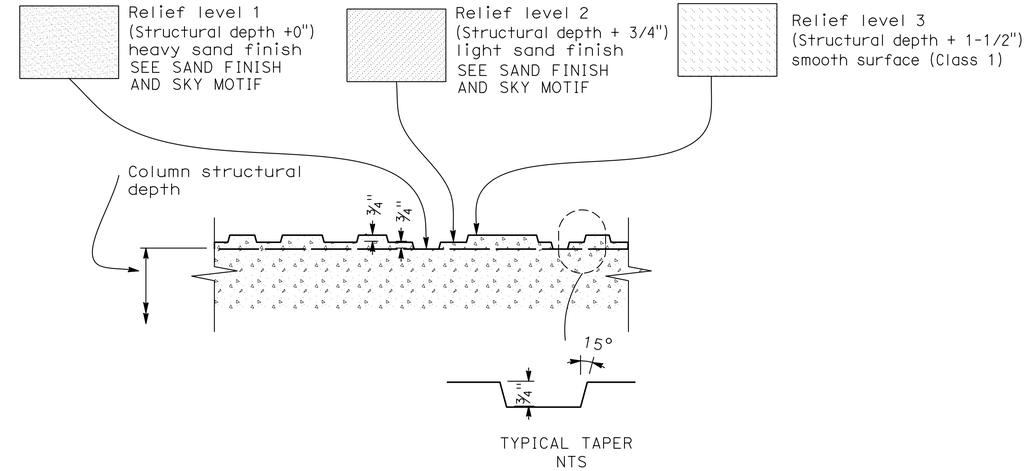

KEY TO SURFACE RELIEF - BRIDGE COLUMNS
3/8"=1'-0"

Tracy L. Bertram
DESIGN OVERSIGHT Tracy L Bertram
1-7-13
SIGN OFF DATE

DESIGN GENERAL PLAN SHEET (ENGLISH) (REV. 3-14-12)

	BY	CHECKED
DESIGN	S KENNEY	R ALCINA
DETAILS	S KENNEY	R ALCINA
QUANTITIES	S KENNEY	R ALCINA

ORIGINAL SCALE IN INCHES FOR REDUCED PLANS 0 1 2 3

PREPARED FOR THE
STATE OF CALIFORNIA
DEPARTMENT OF TRANSPORTATION

MICHAEL PAINTER
PROJECT LANDSCAPE ARCHITECT

BRIDGE NO. 23-0246
POST MILES 12.8

GREEN VALLEY ROAD OVERCROSSING
AESTHETIC TREATMENT DETAILS No. 3

UNIT: 0741
PROJECT NUMBER & PHASE: 04000211311 CONTRACT NO.: 04-0A5341

DISREGARD PRINTS BEARING EARLIER REVISION DATES

REVISION DATES: 09/5/12 10/19/12

SHEET 19 OF 28

FILE => 23-0246-r-atd03.dgn

USERNAME => s124436 DATE PLOTTED => 08-MAY-2013 TIME PLOTTED => 07:58

DIST	COUNTY	ROUTE	POST MILES TOTAL PROJECT	SHEET No	TOTAL SHEETS
04	Sol	12,80	2.1/2.8, 12.0/13.1	532	597

P.K. Chen 9/12/12
REGISTERED STRUCTURAL ENGINEER DATE

5-6-13
PLANS APPROVAL DATE

REGISTERED PROFESSIONAL ENGINEER PO-KANG CHEN No. S 3112 Exp. 9/30/13 STRUCTURAL STATE OF CALIFORNIA

The State of California or its officers or agents shall not be responsible for the accuracy or completeness of electronic copies of this plan sheet.

SOLANO TRANSPORTATION AUTHORITY
ONE HARBOR CENTER, SUITE 130
SUISUN CITY, CA 94585

MARK THOMAS & COMPANY, INC. + NOLTE ASSOCIATES, INC.
3000 OAK ROAD, SUITE 650
WALNUT CREEK, CA 94597

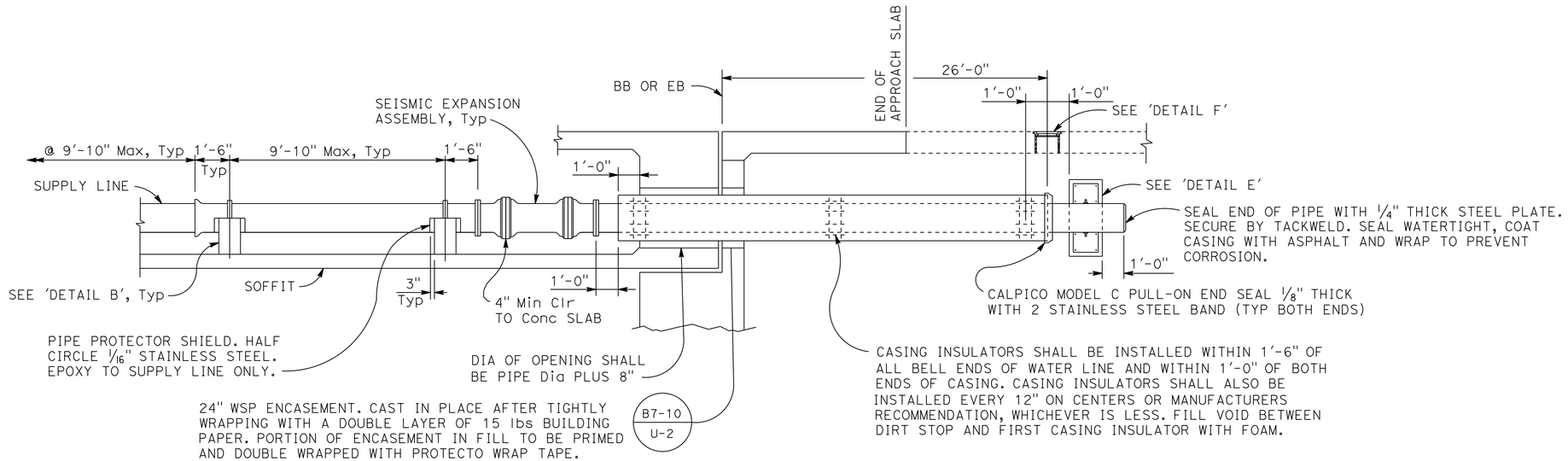

PIPE INSTALLATION DETAILS
NO SCALE

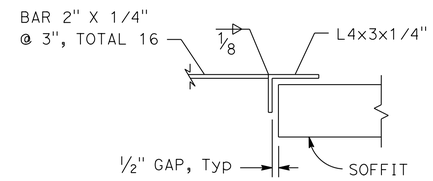

SECTION A - A
NO SCALE

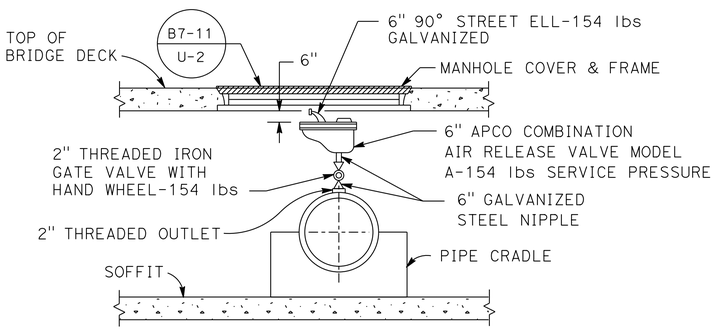

AIR RELEASE VALVE ASSEMBLY
DETAIL A
NO SCALE

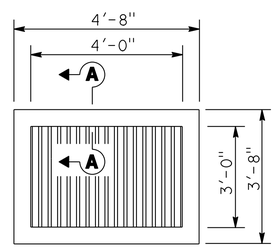

PLAN - SOFFIT GRATE

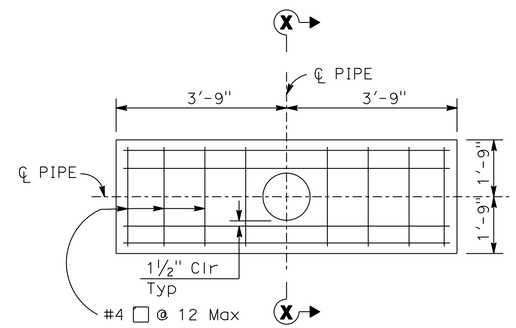

ELEVATION

PIPE SUPPORT DETAIL
FOR WATER LINE @ 125 psi
DETAIL E
NO SCALE

SECTION X-X
NO SCALE

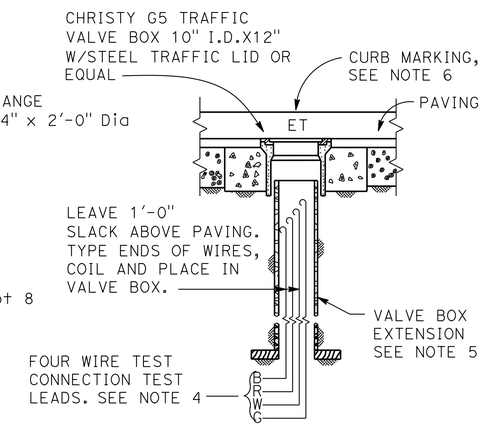

FOUR WIRE TEST STATION
DETAIL F
NO SCALE

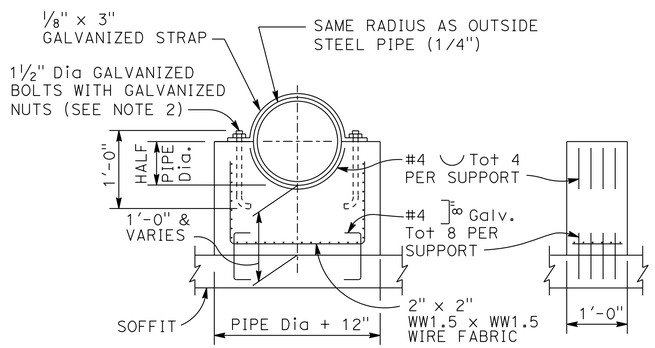

PIPE CRADLE
DETAIL B
NO SCALE

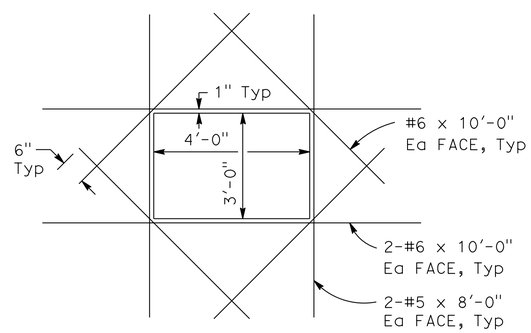

PLAN - SOFFIT GRATE OPENING
SOFFIT GRATE OPENING DETAIL
NO SCALE

NOTES:

1. All pipe to be installed under Zone 7 Standard Specifications or as directed by District Engineer.
2. Pile shall be tightly clamped at the two pipe supports nearest the center of any two Expansion Assemblies. At all other pipe supports the pipe clamp shall be shimmed with steel washer plates to provide 1/4" clearance between supply line and pipe clamp
3. Utility to be placed before Top Deck.
4. For Electrolysis Test (ET) Connection and Leads Details, see "PIPE AND ENCASEMENT DETAIL" on 'UTILITY PLANS'.
5. Valve box extension shall be not less than 8" dia PVC pipe, one or two pieces.
6. Electrolysis station shall be marked. Reference letters & numbers shall be chiseled into concrete curb and painted red. See "MARKER POST DETAIL" on 'UTILITY PLANS'.

Tracy L. Bertram
DESIGN OVERSIGHT Tracy L Bertram
1-7-13
SIGN OFF DATE

	BY	CHECKED
DESIGN	P. CHEN	J. PASSALACQUA
DETAILS	N. PHAM	J. PASSALACQUA
QUANTITIES	N. PHAM	A. HOAC

PREPARED FOR THE STATE OF CALIFORNIA DEPARTMENT OF TRANSPORTATION

PO-KANG CHEN
PROJECT ENGINEER

BRIDGE NO. 23-0246
POST MILES 12.8

GREEN VALLEY ROAD OVERCROSSING
WATER LINE DETAILS

DESIGN DETAIL SHEET (ENGLISH) (REV.7/16/10)

ORIGINAL SCALE IN INCHES FOR REDUCED PLANS 0 1 2 3

UNIT: 0741
PROJECT NUMBER & PHASE: 04000211311 CONTRACT NO.: 04-0A5341

DISREGARD PRINTS BEARING EARLIER REVISION DATES
REVISION DATES 9/30/11 5/4/12 9/12/12 10/19/12
SHEET 20 OF 28

FILE => 23-0246-r-wdt01.dgn

USERNAME => s124496 DATE PLOTTED => 08-MAY-2013 TIME PLOTTED => 07:58

DIST	COUNTY	ROUTE	POST MILES TOTAL PROJECT	SHEET No.	TOTAL SHEETS
04	Sol	12,80	2.1/2.8, 12.0/13.1	533	597

P.K. Chen 9/12/12
REGISTERED STRUCTURAL ENGINEER DATE

5-6-13
PLANS APPROVAL DATE

The State of California or its officers or agents shall not be responsible for the accuracy or completeness of electronic copies of this plan sheet.

REGISTERED PROFESSIONAL ENGINEER PO-KANG CHEN No. S3112 Exp. 9/30/13 STRUCTURAL STATE OF CALIFORNIA

SOLANO TRANSPORTATION AUTHORITY
ONE HARBOR CENTER, SUITE 130
SUISUN CITY, CA 94585

MARK THOMAS & COMPANY, INC. + NOLTE ASSOCIATES, INC.
3000 OAK ROAD, SUITE 650
WALNUT CREEK, CA 94597

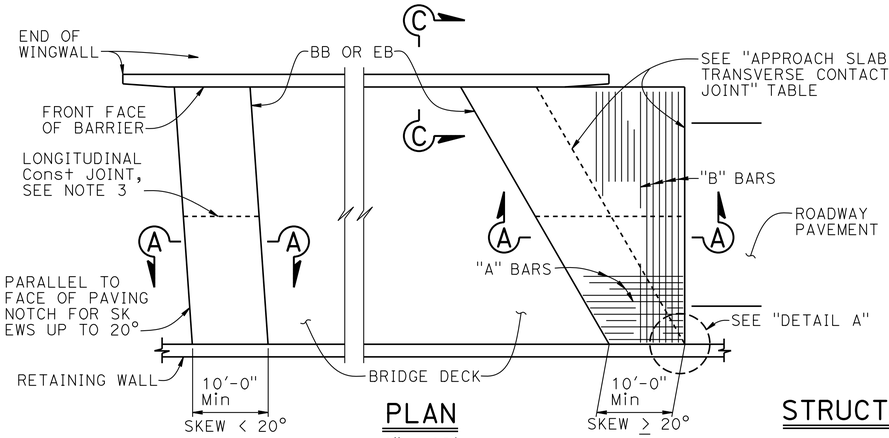

PLAN
1" = 10'

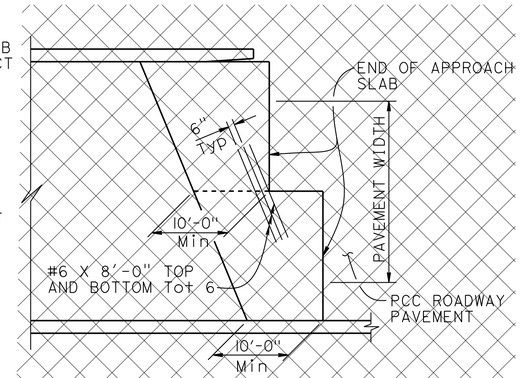

STRUCTURE APPROACH - END STAGGER DETAIL
NO SCALE

APPROACH SLAB TRANSVERSE CONTACT JOINT		
APPROACH SKEW	AC ROADWAY PAVEMENT	WITH PCC ROADWAY PAVEMENT
< 20°	PARALLEL TO FACE OF PN	PARALLEL TO FACE OF PN
20° - 45°	PARALLEL TO FACE OF PN USE "DETAIL A"	STAGGER LINES 24' TO 36' APART
> 45°	PARALLEL TO FACE OF PN USE "DETAIL A"	STAGGER AT EACH LANE LINE

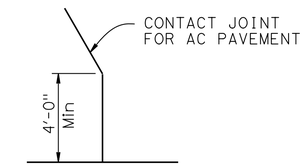

DETAIL A
NO SCALE

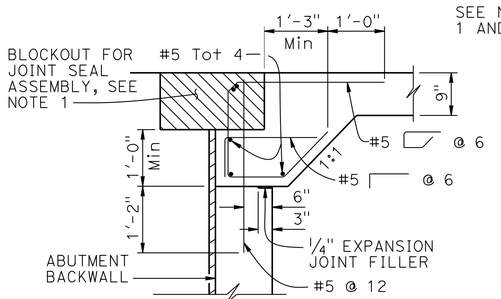

MR > 2"

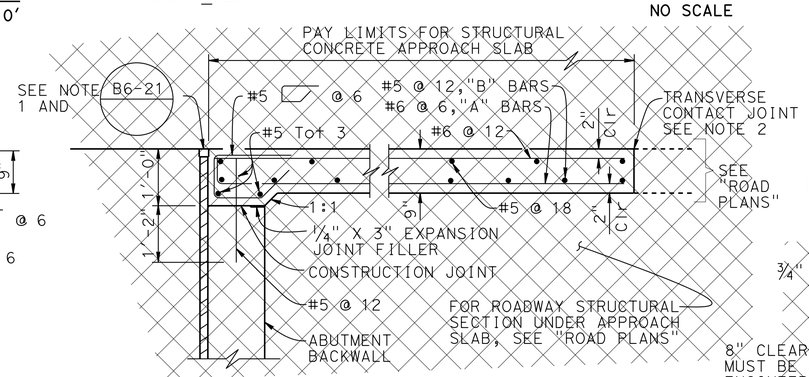

MR ≤ 2"

SEAT TYPE ABUTMENT
SECTION A-A
3/4" = 1'-0"

NOTE: Seat type abutment shown, for diaphragm type abutment, see "ABUTMENT TIE DETAILS"

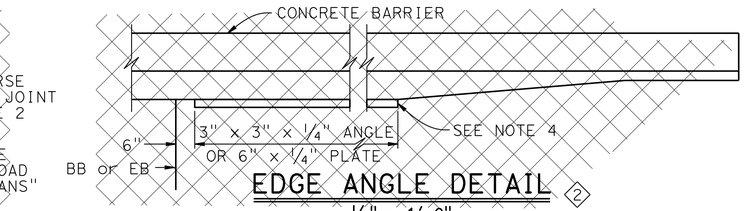

EDGE ANGLE DETAIL
1/2" = 1'-0"

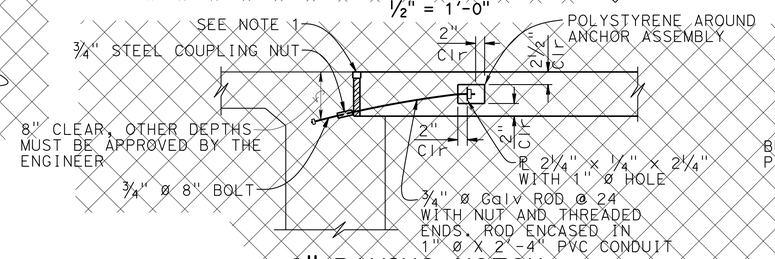

9" PAVING NOTCH

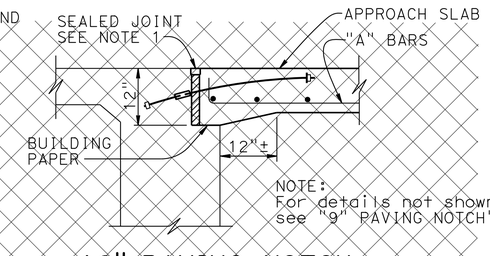

12" PAVING NOTCH

DIAPHRAGM TYPE ABUTMENT
ABUTMENT TIE DETAILS
3/4" = 1'-0"

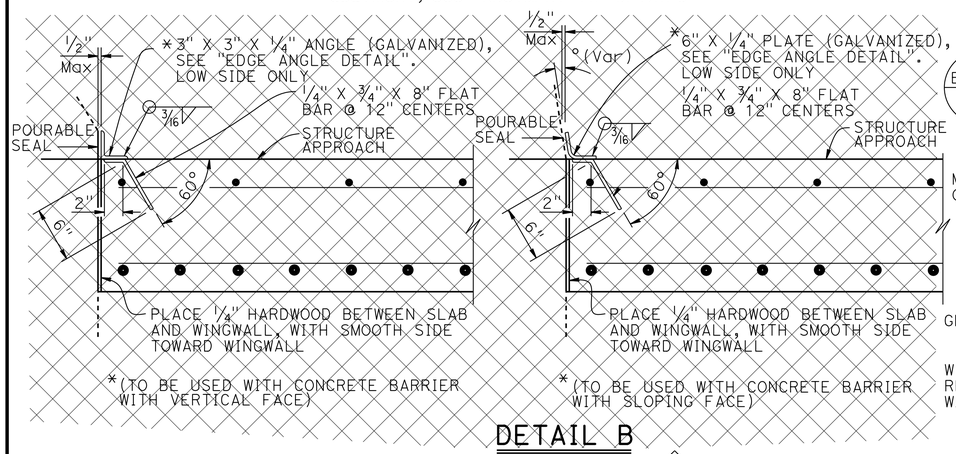

DETAIL B
1 1/2" = 1'-0"

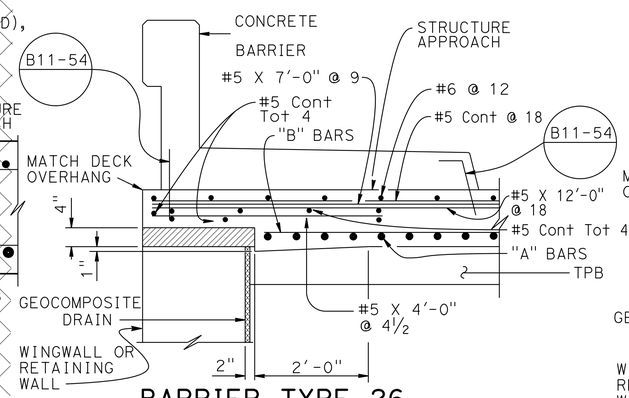

BARRIER TYPE 26
SECTION C-C
NO SCALE

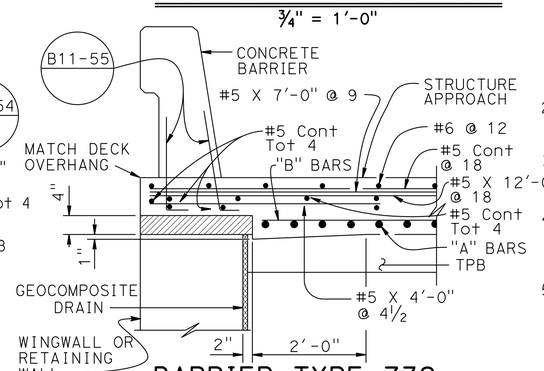

BARRIER TYPE 732
SECTION C-C
NO SCALE

NOTES:

1. For details not noted or shown, see Structure Plans. Adjust bar reinforcement to clear a sawcut for sealed joint, when required
2. For transverse contact joint with new PCC paving, refer to Standard Plan P10
3. Longitudinal construction joints, when permitted by the Engineer, shall be located on lane lines
4. End angle or plate at beginning of barrier transition, end of wingwall or end of structure approach as applicable
5. At the Contractor's option, approach slab transverse reinforcement may be placed parallel to paving notch. Spacing of transverse reinforcement is measured along ℄ roadway
6. For drainage details, see Structure Plans.

SPECIAL DETAILS

REVISED STANDARD DRAWING
FILE NO. xs3-160
APPROVAL DATE July 2011

1 Revised Detail
2 Does Not Apply
3 Added Detail

STATE OF CALIFORNIA
DEPARTMENT OF TRANSPORTATION

DIVISION OF ENGINEERING SERVICES

BRIDGE NO. 23-0246
POST MILE 12.8

GREEN VALLEY ROAD OVERCROSSING
STRUCTURE APPROACH TYPE EQ(10)

DS OSD 2147A (ENGLISH STANDARD DRAWING "XS" BORDER REV. (02-02-11)

ORIGINAL SCALE IN INCHES FOR REDUCED PLANS 0 1 2 3

UNIT: 0741
PROJECT NUMBER & PHASE: 04000211311
CONTRACT NO.: 04-0A5341

DISREGARD PRINTS BEARING EARLIER REVISION DATES
REVISION DATES 1/25/12 5/24/12 9/28/12 10/19/12
SHEET 21 OF 28

FILE => 23-0246-s-sat(eq10).dgn

USERNAME => s124496 DATE PLOTTED => 08-MAY-2013 TIME PLOTTED => 07:58

DIST	COUNTY	ROUTE	POST MILES TOTAL PROJECT	SHEET No	TOTAL SHEETS
04	Sol	12,80	2.1/2.8, 12.0/13.1	534	597

P.K. Chen 9/12/12
REGISTERED STRUCTURAL ENGINEER DATE

5-6-13
PLANS APPROVAL DATE

REGISTERED PROFESSIONAL ENGINEER PO-KANG CHEN No. S 3112 Exp. 9/30/13 STRUCTURAL STATE OF CALIFORNIA

The State of California or its officers or agents shall not be responsible for the accuracy or completeness of electronic copies of this plan sheet.

SOLANO TRANSPORTATION AUTHORITY
ONE HARBOR CENTER, SUITE 130
SUISUN CITY, CA 94585

MARK THOMAS & COMPANY, INC. + NOLTE ASSOCIATES, INC.
3000 OAK ROAD, SUITE 650
WALNUT CREEK, CA 94597

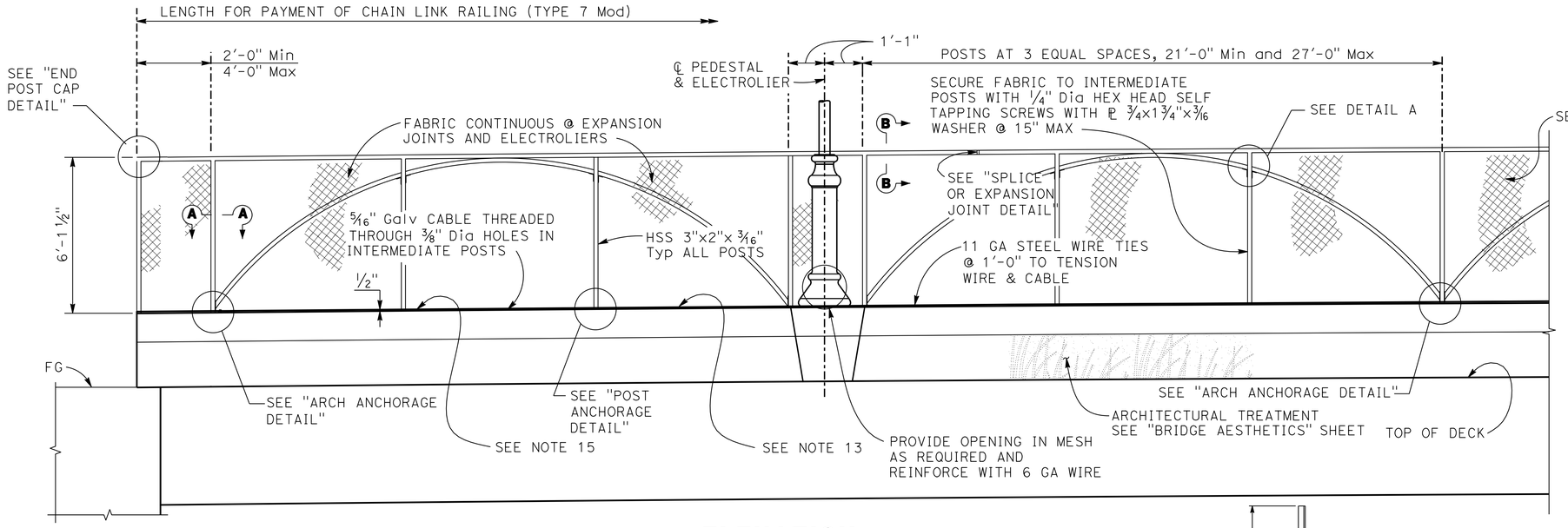

ELEVATION
3/8"=1'-0"

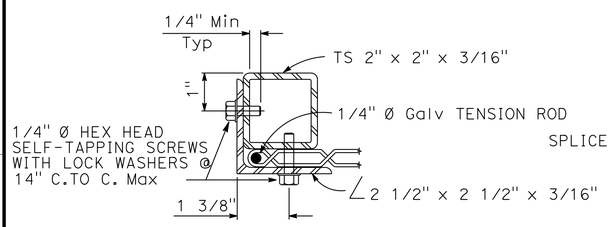

SECTION A-A

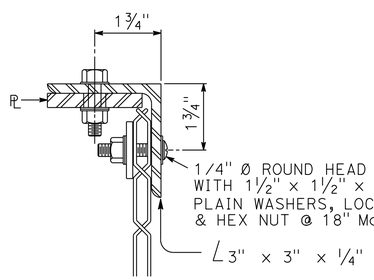

SECTION B-B

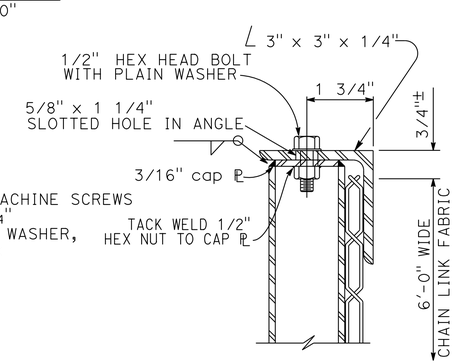

SECTION C-C

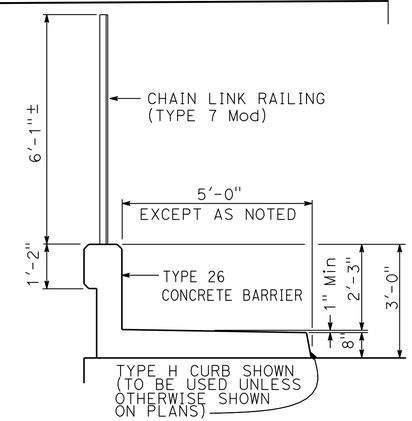

NOTE: Concrete Barrier Type 26 shown, Barrier Type 732 similar.

TYPICAL SECTION

NOTES:

1. Horizontal angle shall be continuous over not less than two intermediate posts except that a shorter length is permitted at expansion joints,electroliers and other rail discontinuities
2. One post may be embedded 6" minimum to accomodate grade changes, otherwise fabricate post lengths as required.
3. Curved posts may be rotated in plan within its post pocket to accomodate curved horizontal alignment.
4. Straight posts and straight portions of curved posts shall be installed normal to bridge profile grade.
5. Top horizontal angle shall be parallel to bridge profile grade and shall be shop bent to fit horizontal curves.
6. When railing is on slope, fabric shall be placed parallel to slope.
7. Alternative details may be submitted by Contractor for Engineer's approval.
8. Railing assembly except chain link fabric shall be galvanized after fabrication.
9. For details and reinforcement not shown, see "CONCRETE BARRIER TYPE 26" sheet on Std Plans.
10. See Bridge Plans for limits of Chain Link Railing Type 7
11. Provide thimbles at all cable loops.
12. Chain link fabric to be 6'-0" wide with 1" mesh and with knuckled selvage top and bottom.
13. When railing is placed on a horizontal alignment with a radius of 150'-0" or less, thread 5/16" cable through 3/8" Ø welded eye rods embedded 4" into the top of the concrete parapet and equally spaced to limit the middle ordinate distance between the 5/16" cable and the curve to 1" max.
14. Splices and expansion joints shall be located at C panel.
15. Holes in posts for 5/16" cable and its anchorage may be field drilled and painted with zinc rich paint.

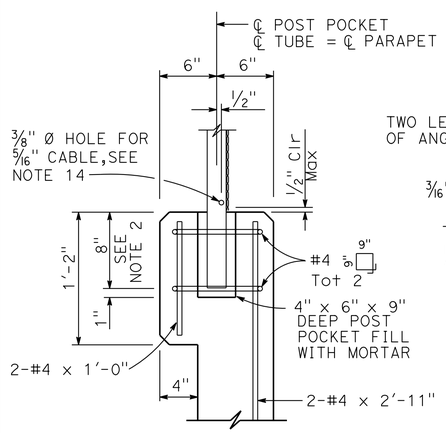

NOTE: Concrete Barrier Type 26A shown, Barrier Type 732A similar.

POST ANCHORAGE DETAIL

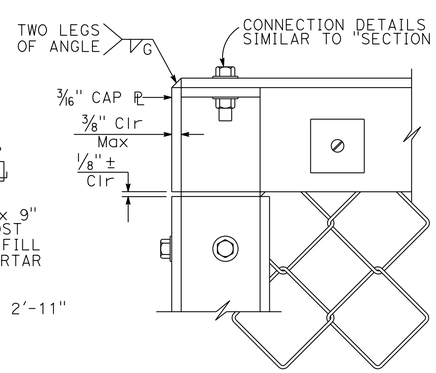

END POST CAP DETAIL

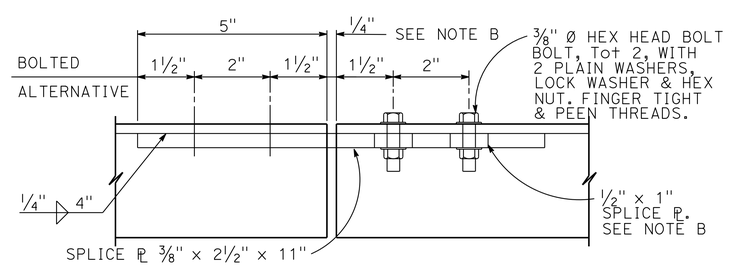

NOTE B: Expansion joint same dimension as expansion joint in deck or wall. Increase slotted hole length and splice ℙ length correspondingly.

SPLICE OR EXPANSION JOINT DETAIL

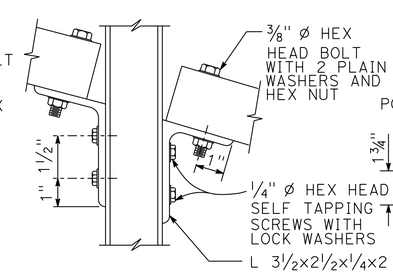

DETAIL A

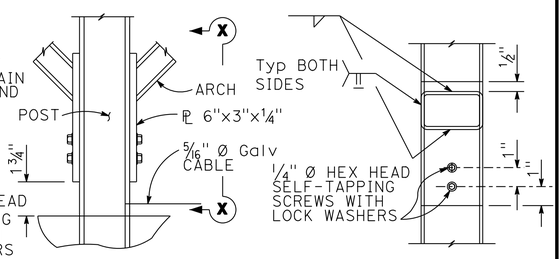

VIEW X-X

ARCH ANCHORAGE DETAIL
NO SCALE

Tracy L. Bertram
DESIGN OVERSIGHT Tracy L Bertram

1-7-13
SIGN OFF DATE

	BY	CHECKED
DESIGN	P. CHEN	J. PASSALACQUA
DETAILS	N. PHAM	J. PASSALACQUA
QUANTITIES	N. PHAM	A. HOAC

PREPARED FOR THE STATE OF CALIFORNIA DEPARTMENT OF TRANSPORTATION

PO-KANG CHEN
PROJECT ENGINEER

BRIDGE NO. 23-0246
POST MILES 12.8

GREEN VALLEY ROAD OVERCROSSING
CHAIN LINK RAILING (TYPE 7 MOD)

DESIGN DETAIL SHEET (ENGLISH) (REV.7/16/10)

ORIGINAL SCALE IN INCHES FOR REDUCED PLANS 0 1 2 3

UNIT: 0741
PROJECT NUMBER & PHASE: 04000211311 CONTRACT NO.: 04-0A5341

DISREGARD PRINTS BEARING EARLIER REVISION DATES

REVISION DATES 5/14/12 8/10/12 9/27/12 10/19/12

SHEET 22 OF 28

FILE => 23-0246-t-clr7.dgn

USERNAME => s124496 DATE PLOTTED => 08-MAY-2013 TIME PLOTTED => 07:58

DIST	COUNTY	ROUTE	POST MILES TOTAL PROJECT	SHEET No.	TOTAL SHEETS
04	Sol	12,80	2.1/2.8, 12.0/13.1	535	597

P.K. Chen 9/12/12
REGISTERED STRUCTURAL ENGINEER DATE

5-6-13
PLANS APPROVAL DATE

REGISTERED PROFESSIONAL ENGINEER PO-KANG CHEN No. S 3112 Exp. 9/30/13 STRUCTURAL STATE OF CALIFORNIA

The State of California or its officers or agents shall not be responsible for the accuracy or completeness of electronic copies of this plan sheet.

SOLANO TRANSPORTATION AUTHORITY
ONE HARBOR CENTER, SUITE 130
SUISUN CITY, CA 94585

MARK THOMAS & COMPANY, INC. + NOLTE ASSOCIATES, INC.
3000 OAK ROAD, SUITE 650
WALNUT CREEK, CA 94597

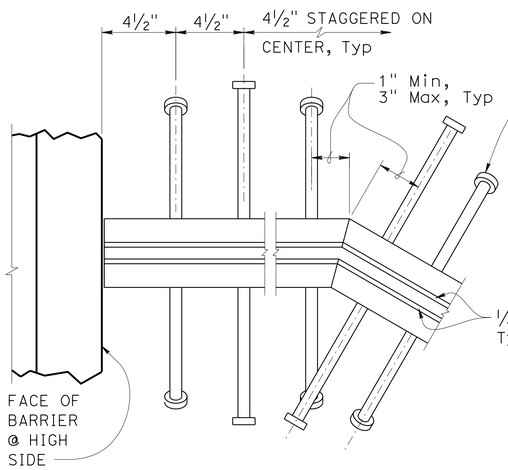

PLAN
SKEW > 20°

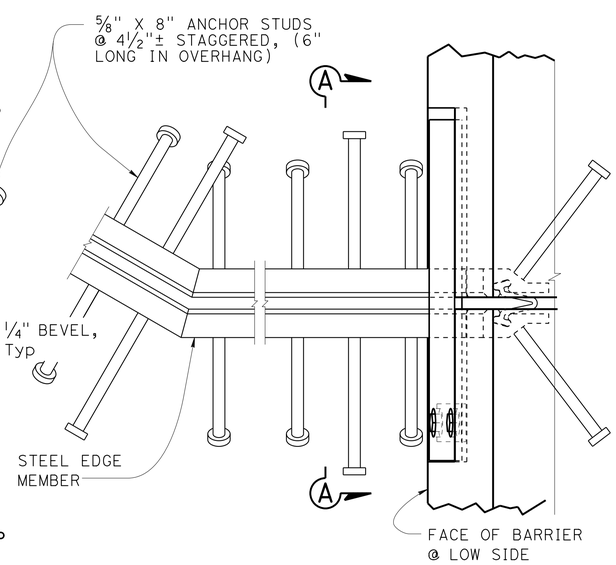

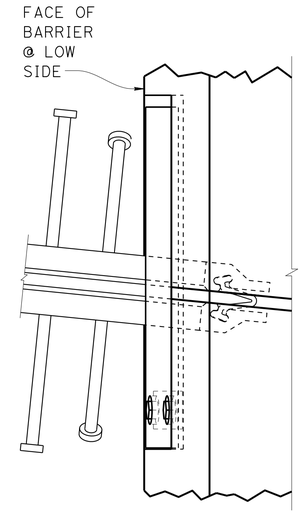

PLAN
SKEW ≤ 20°

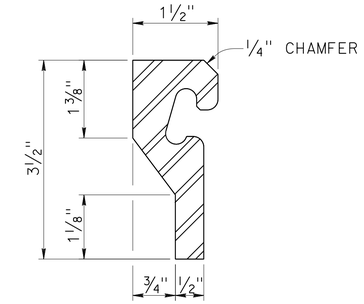

STEEL EDGE MEMBER

NOTES:

1. Alternatively, fillet or full penetration welds may be used at anchor studs.
2. Alternate types of anchor studs may be permitted subject to the approval by the Engineer
3. Joint seal assembly to be used in conjunction with closure pour. (See other sheets for limits). Closure pour shall not be placed until final deck surface is within the tolerances specified
4. Use joint at crown of roadway, at any change in traverse slope in deck and at changes in horizontal direction. Place other joints at or near lanes. All metal parts to be painted or galvanized after fabrication
5. Sheet Neoprene shall be fabricated in one continuous piece and shall be fabricated to bend around corners. Field splices of the neoprene are not allowed.
6. Insert assembly or expansion anchorage for ⅝" x 1¾" bolts. Use installation bolts extended ½" minimum past nut and coat with bond breaker, after concrete has cured, remove installation bolts, install A325 bolts and sheet neoprene
7. Sidewalk Detail similar to Barrier Detail on low side at both sides if the roadway is crowned or if the difference in elevation between the ends of the seal is 0.5′ or less
8. a_c, a_s, are the thermal expansion coefficients for concrete and steel respectively.

◇

JOINT INFORMATION			"a" DIMENSIONS		
LOCATION	MOVEMENT RATING (MR)	SKEW	WINTER	SPRING & FALL	SUMMER
Abut 1	3.0"	19°25′00"	2.0"	1.5"	1.0"
Abut 3	2.5"	1°34′47"	1.5"	1.25"	0.75"

✳ TO SET MINIMUM JOINT OPENING "W"

"W" = ½"+[(Max Str temperature in F°)-(actual Str temperature in F°)]*(a_c or a_s)(12)(contributory L in feet)

½" Minimum
a_c = 0.0000060
a_s = 0.0000065

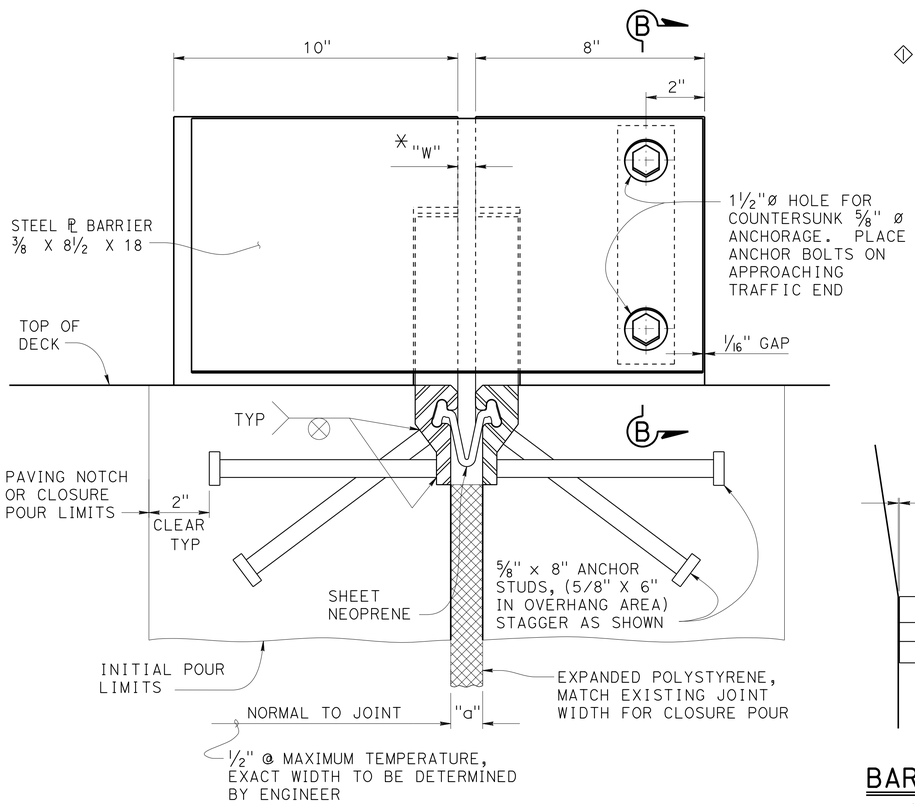

SECTION A-A

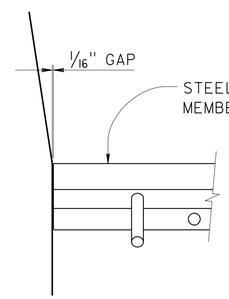

BARRIER DETAIL
HIGH SIDE

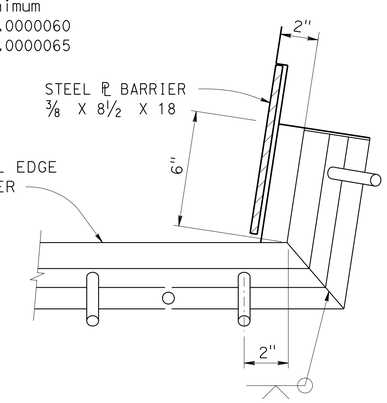

BARRIER DETAIL
LOW SIDE

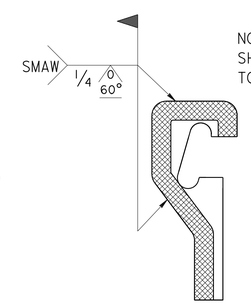

FIELD WELD DETAIL

NOTE:
SHADED AREAS TO BE WELDED

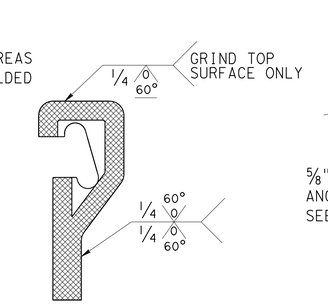

SHOP WELD DETAIL

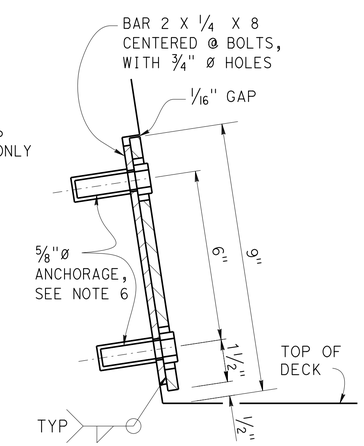

SECTION B-B

SPECIAL DETAILS

NO SCALE

REVISED STANDARD DRAWING

FILE NO. xs8-010

APPROVAL DATE June 2012

◇ Added Joint Information

STATE OF CALIFORNIA
DEPARTMENT OF TRANSPORTATION

DIVISION OF ENGINEERING SERVICES

BRIDGE NO. 23-0246
POST MILE 12.8

GREEN VALLEY ROAD OVERCROSSING
JOINT SEAL ASSEMBLY
MAXIMUM MOVEMENT RATING = 4"

DS OSD 2147A (ENGLISH STANDARD DRAWING "XS" BORDER REV. (02-02-11)

ORIGINAL SCALE IN INCHES FOR REDUCED PLANS 0 1 2 3

UNIT: 0741
PROJECT NUMBER & PHASE: 04000211311
CONTRACT NO.: 04-0A5341

DISREGARD PRINTS BEARING EARLIER REVISION DATES → 2/28/12 5/30/12 6/29/12 10/19/12

SHEET 23 OF 28

FILE => 23-0246-u-jsa.dgn

USERNAME => s124936 DATE PLOTTED => 08-MAY-2013 TIME PLOTTED => 07:58

DIST	COUNTY	ROUTE	POST MILES TOTAL PROJECT	SHEET No.	TOTAL SHEETS
04	Sol	12,80	2.1/2.8, 12.0/13.1	536	597

P.K. Chen 9/12/12
REGISTERED STRUCTURAL ENGINEER DATE

5-6-13
PLANS APPROVAL DATE

REGISTERED PROFESSIONAL ENGINEER PO-KANG CHEN No. S3112 Exp. 9/30/13 STRUCTURAL STATE OF CALIFORNIA

The State of California or its officers or agents shall not be responsible for the accuracy or completeness of electronic copies of this plan sheet.

SOLANO TRANSPORTATION AUTHORITY
ONE HARBOR CENTER, SUITE 130
SUISUN CITY, CA 94585

MARK THOMAS & COMPANY, INC. + NOLTE ASSOCIATES, INC.
3000 OAK ROAD, SUITE 650
WALNUT CREEK, CA 94597

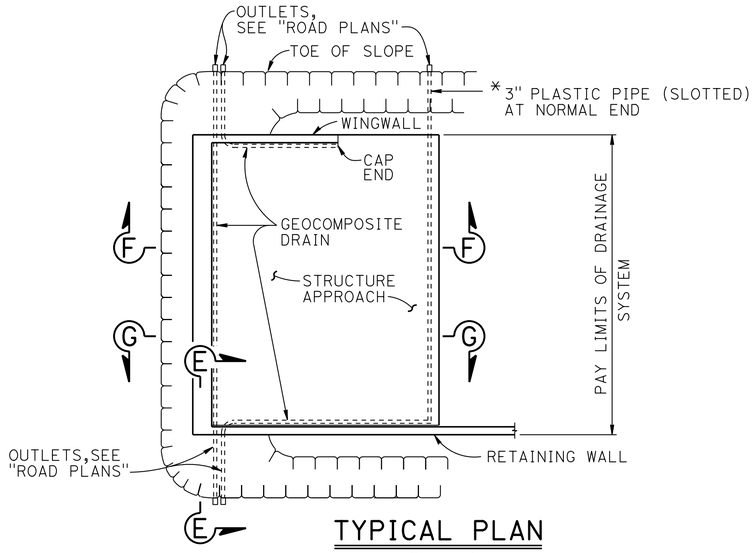

TYPICAL PLAN

1" = 10'

* FOR PIPE LAYOUT AT STAGGERED END, SEE "DETAIL B"

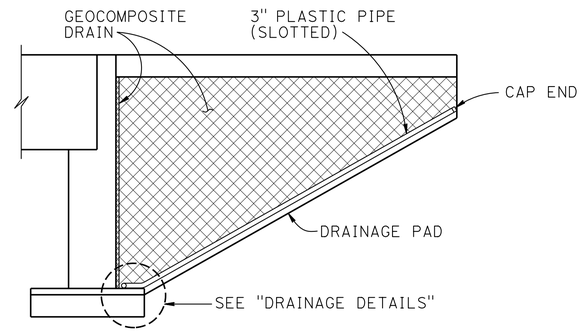

CANTILEVER WINGWALL

SECTION F-F

1/4" = 1'-0"

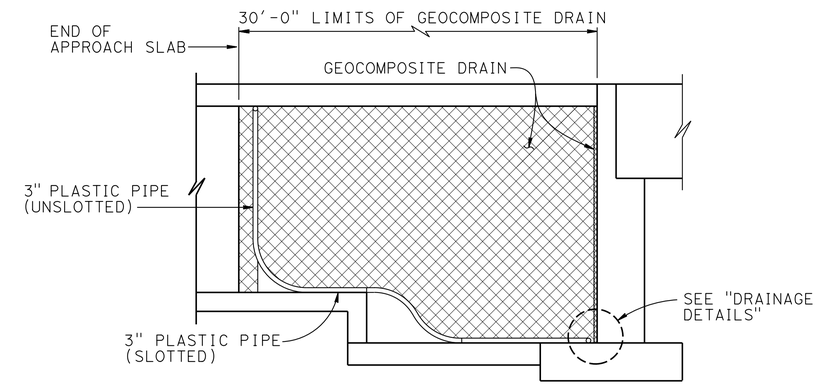

RETAINING WALL WINGWALL DRAINAGE DETAILS

SECTION G-G

1/4" = 1'-0"

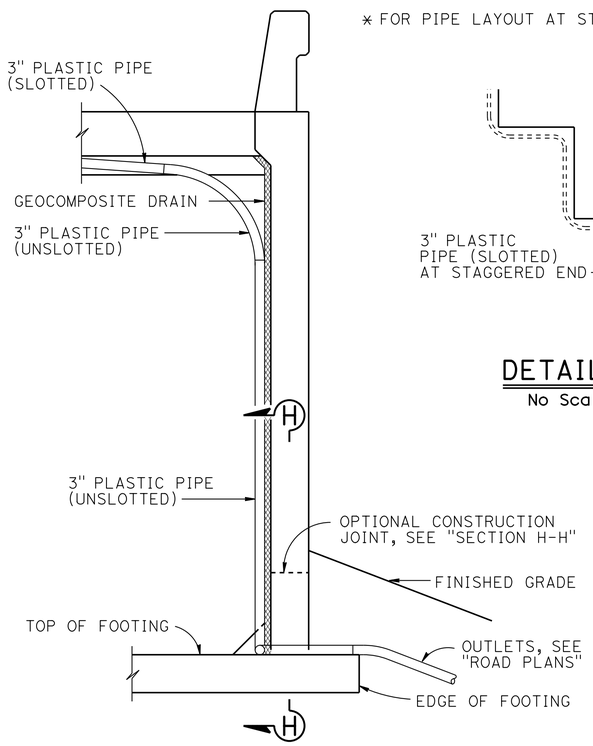

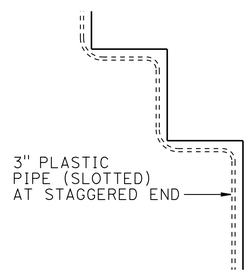

DETAIL B

No Scale

SECTION E-E

1/2" = 1'-0"

NOTE: Bends and junctions in 3" plastic pipe are 30" radius Min

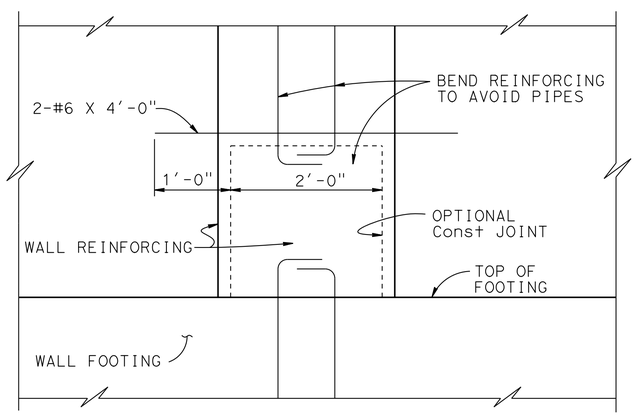

SECTION H-H

1" = 1'-0"

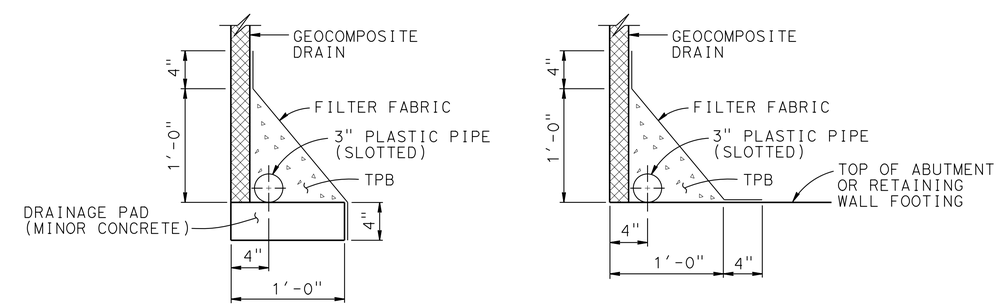

WITHOUT FOOTING

WITH FOOTING

DRAINAGE DETAILS

1 1/2" = 1'-0"

STANDARD DRAWING

FILE NO. xs3-110

APPROVAL DATE July 2011

STATE OF CALIFORNIA
DEPARTMENT OF TRANSPORTATION

DIVISION OF ENGINEERING SERVICES

BRIDGE NO. 23-0246
POST MILE 12.8

GREEN VALLEY ROAD OVERCROSSING

STRUCTURE APPROACH DRAINAGE DETAILS

DS OSD 2147A (ENGLISH STANDARD DRAWING "XS" BORDER REV. (02-02-11)

ORIGINAL SCALE IN INCHES FOR REDUCED PLANS 0 1 2 3

UNIT: 0741
PROJECT NUMBER & PHASE: 04000211311
CONTRACT NO.: 04-0A5341

DISREGARD PRINTS BEARING EARLIER REVISION DATES

REVISION DATES 09/25/11 1/27/11 3/16/12 10/19/12

SHEET 24 OF 28

FILE => 23-0246-u-sadd.dgn

USERNAME => s124496 DATE PLOTTED => 08-MAY-2013 TIME PLOTTED => 07:58

DIST	COUNTY	ROUTE	POST MILES TOTAL PROJECT	SHEET No	TOTAL SHEETS
04	Sol	12,80	2.1/2.8, 12.0/13.1	537	597

GEOTECHNICAL PROFESSIONAL — DATE 9/10/12

5-6-13
PLANS APPROVAL DATE

The State of California or its officers or agents shall not be responsible for the accuracy or completeness of electronic copies of this plan sheet.

REGISTERED PROFESSIONAL ENGINEER G. PARIKH No. 666 Exp. 12/31/13 GEOTECHNICAL STATE OF CALIFORNIA

SOLANO TRANSPORTATION AUTHORITY
ONE HARBOR CENTER, SUITE 130
SUISUN CITY, CA 94585

PARIKH CONSULTANTS, INC.
2360 QUME DRIVE, SUITE A
SAN JOSE, CA 95131

BENCH MARKS

BENCHMARK NO. A 1393 (NGS PID JT9519)
Brass disc set vertically in the east face of the first concrete pier east of the west abutment of the Union Pacific (formerly Southern Pacific) Railroad overcrossing of Interstate Highway 80, 217 feet northwest of the center of the most northwesterly westbound lane of the highway. The disc is stamped "A 1393 1987"
Northing: 1837422 Easting: 6518256
(NAD83, CCSII)
Elevation: 67.07 (NAVD 88) Stability: B

HPGN D CA 10 LC (NGS PID AC9890)
Survey disc set on aluminum alloy rod encased in a PVC pipe with access cover set in concrete flush with the parking lot pavement in the Park and Ride Lot, 92 feet west of the centerline of Green Valley Road and 48 feet southeast of the Green Valley Road onramp to westbound Interstate Highway 80. The disc is stamped "CADT 10 LC"
Northing: 1840653.06 Easting: 6521452.79
(HPGN 1991.35, CCSII)
Elevation: 26.35 (NAVD 88) Stability: B

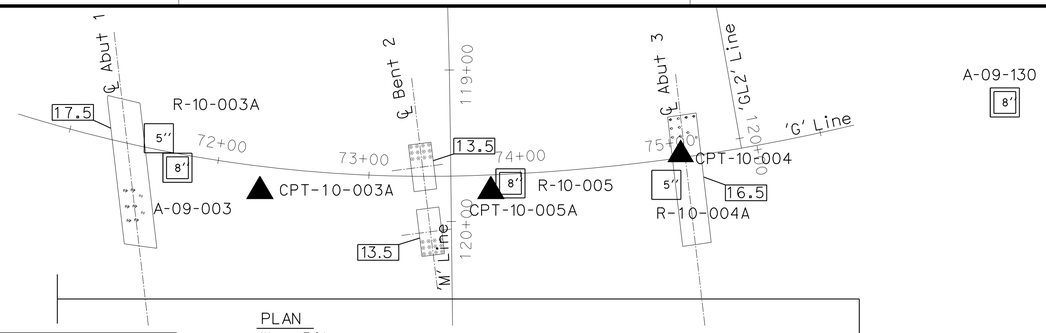

PLAN
1" = 50'

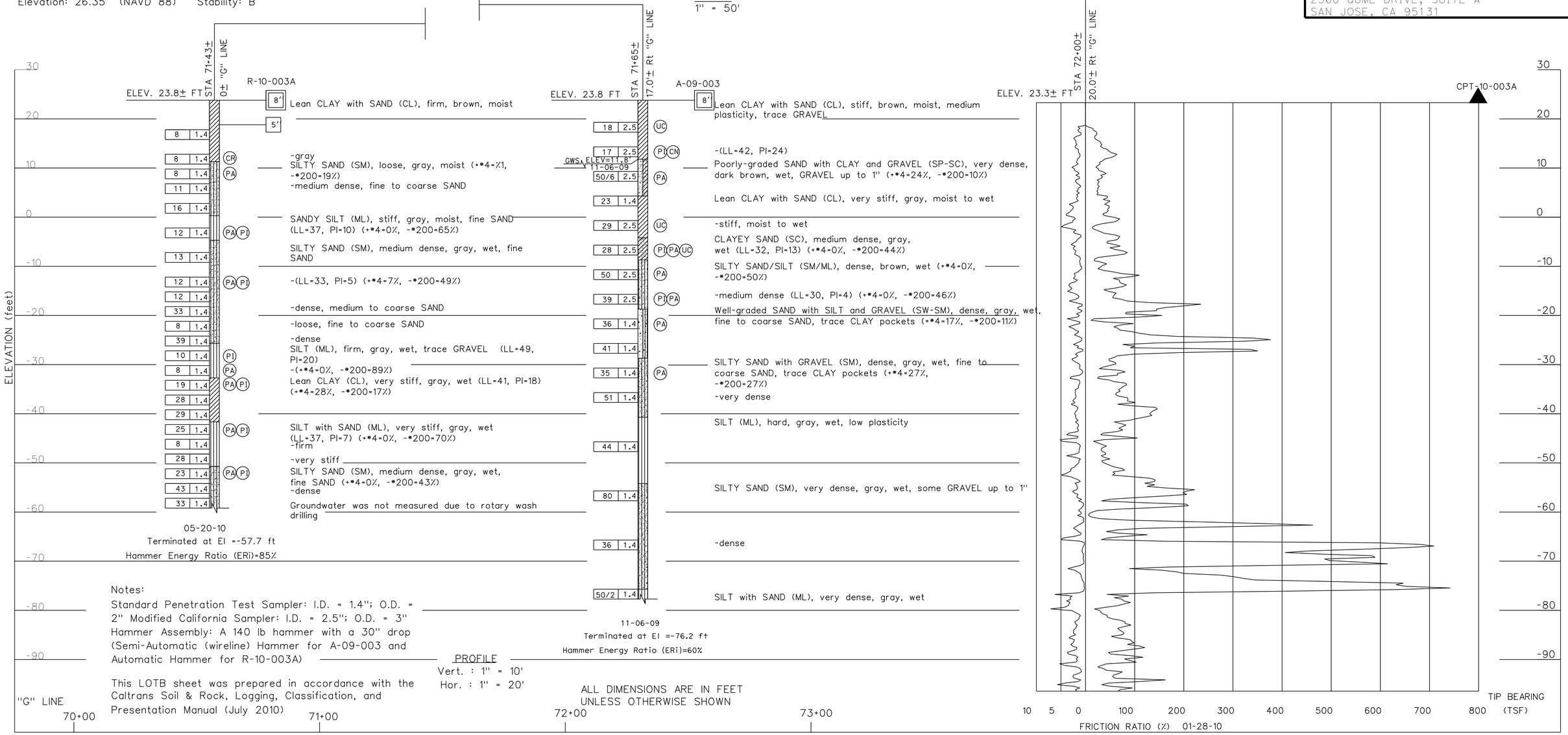

Notes:
Standard Penetration Test Sampler: I.D. = 1.4"; O.D. = 2"
Modified California Sampler: I.D. = 2.5"; O.D. = 3"
Hammer Assembly: A 140 lb hammer with a 30" drop (Semi-Automatic (wireline) Hammer for A-09-003 and Automatic Hammer for R-10-003A)

This LOTB sheet was prepared in accordance with the Caltrans Soil & Rock, Logging, Classification, and Presentation Manual (July 2010)

PROFILE
Vert. : 1" = 10'
Hor. : 1" = 20'

ALL DIMENSIONS ARE IN FEET UNLESS OTHERWISE SHOWN

DESIGN OVERSIGHT Tracy L Bertram
1-7-13
SIGN OFF DATE

DRAWN BY L. DUDDU
CHECKED BY F. WANG

L.S. BHANGOO
FIELD INVESTIGATION BY:
DATE: NOVEMBER 2009 & MAY 2010

PREPARED FOR THE STATE OF CALIFORNIA DEPARTMENT OF TRANSPORTATION

F. WANG
PROJECT ENGINEER

BRIDGE NO. 23-0246
POST MILES 12.8

GREEN VALLEY ROAD OVERCROSSING
LOG OF TEST BORINGS 1 OF 4

GS GEOTECHNICAL LOG OF TEST BORINGS SHEET (ENGLISH) (REV. 7/16/10)

ORIGINAL SCALE IN INCHES FOR REDUCED PLANS 0 1 2 3

UNIT: 0741
PROJECT NUMBER & PHASE: 04000211311 CONTRACT NO.: 04-0A5341

DISREGARD PRINTS BEARING EARLIER REVISION DATES 01/18/12 09/10/12 10/19/12

SHEET 25 OF 28

FILE => 23-0246-z-1tb01.dgn

USERNAME => s124496 DATE PLOTTED => 08-MAY-2013 TIME PLOTTED => 07:58

DIST	COUNTY	ROUTE	POST MILES TOTAL PROJECT	SHEET No	TOTAL SHEETS
04	Sol	12,80	2.1/2.8, 12.0/13.1	538	597

GEOTECHNICAL PROFESSIONAL — DATE 9/10/12

5-6-13
PLANS APPROVAL DATE

The State of California or its officers or agents shall not be responsible for the accuracy or completeness of electronic copies of this plan sheet.

REGISTERED PROFESSIONAL ENGINEER — G. PARIKH — No. 666 — Exp. 12/31/13 — GEOTECHNICAL — STATE OF CALIFORNIA

SOLANO TRANSPORTATION AUTHORITY
ONE HARBOR CENTER, SUITE 130
SUISUN CITY, CA 94585

PARIKH CONSULTANTS, INC.
2360 QUME DRIVE, SUITE A
SAN JOSE, CA 95131

Notes:
Standard Penetration Test Sampler: I.D. = 1.4"; O.D. = 2" Modified California Sampler: I.D. = 2.5"; O.D. = 3"
Hammer Assembly: A 140 lb hammer with a 30" drop (Semi-Automatic (wireline) Hammer)

This LOTB sheet was prepared in accordance with the Caltrans Soil & Rock, Logging, Classification, and Presentation Manual (2010)

(SEE BORING/CPT LOCATIONS AND BENCH MARKS ON SHEET 1 OF 4)

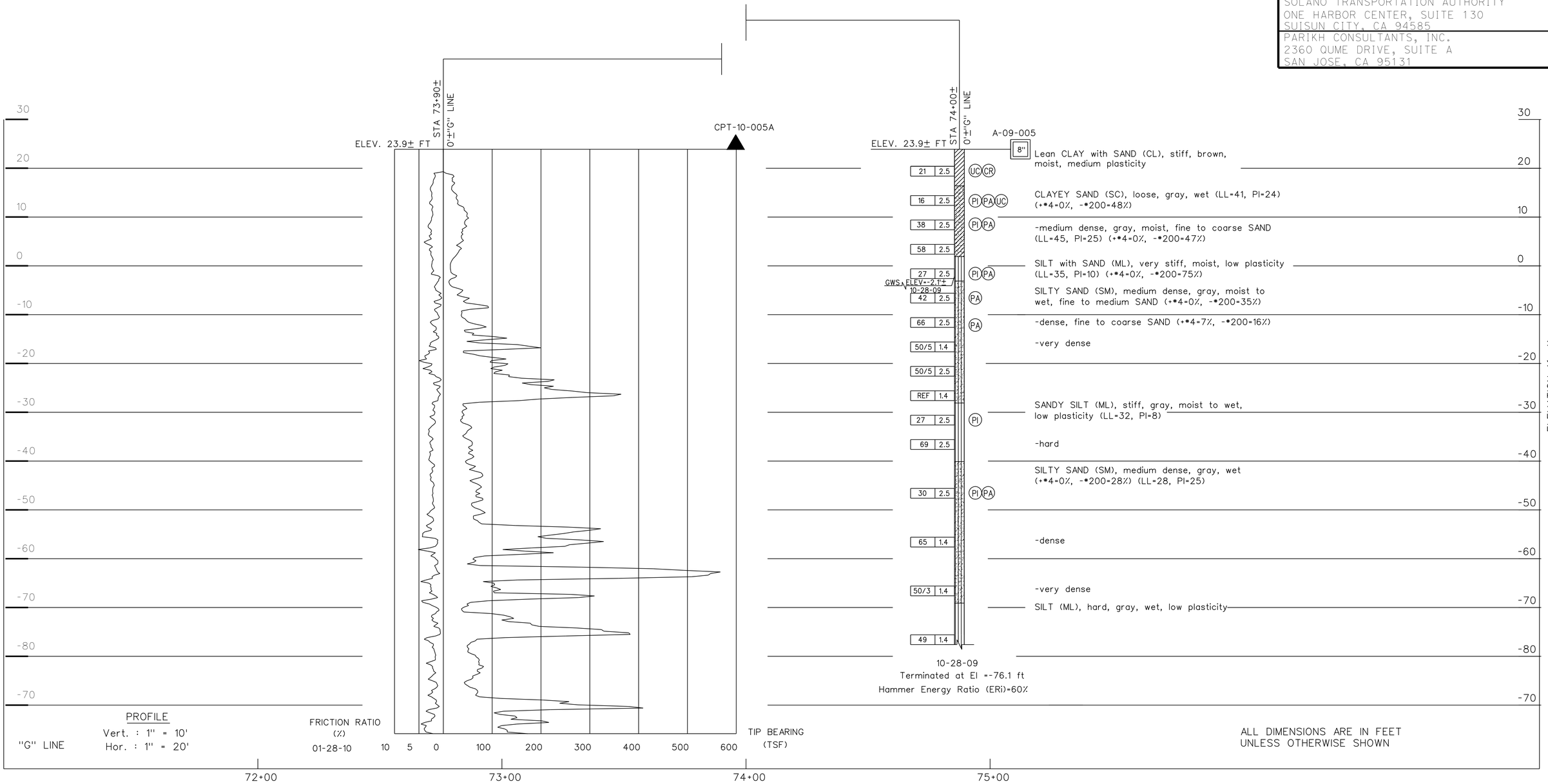

ALL DIMENSIONS ARE IN FEET UNLESS OTHERWISE SHOWN

DESIGN OVERSIGHT Tracy L Bertram	DRAWN BY	L. DUDDU	L.S. BHANGOO FIELD INVESTIGATION BY:	PREPARED FOR THE STATE OF CALIFORNIA DEPARTMENT OF TRANSPORTATION	F. WANG PROJECT ENGINEER	BRIDGE NO. 23-0246
1-7-13 SIGN OFF DATE	CHECKED BY	F. WANG	DATE: OCTOBER 2009			POST MILES 12.8

GREEN VALLEY ROAD OVERCROSSING
LOG OF TEST BORINGS 2 OF 4

GS GEOTECHNICAL LOG OF TEST BORINGS SHEET (ENGLISH) (REV. 7/16/10)

ORIGINAL SCALE IN INCHES FOR REDUCED PLANS 0 1 2 3

UNIT: 0741
PROJECT NUMBER & PHASE: 04000211311 CONTRACT NO.: 04-0A5341

DISREGARD PRINTS BEARING EARLIER REVISION DATES → 01/12/12 09/14/12 10/19/12

SHEET 26 OF 28

FILE => 23-0246-z-1tb02.dgn

USERNAME => s124496 DATE PLOTTED => 08-MAY-2013 TIME PLOTTED => 07:58

DIST	COUNTY	ROUTE	POST MILES TOTAL PROJECT	SHEET No	TOTAL SHEETS
04	Sol	12,80	2.1/2.8, 12.0/13.1	539	597

GEOTECHNICAL PROFESSIONAL — DATE 9/10/12

5-6-13
PLANS APPROVAL DATE

REGISTERED PROFESSIONAL ENGINEER — G. PARIKH No. 666 Exp. 12/31/13 GEOTECHNICAL STATE OF CALIFORNIA

The State of California or its officers or agents shall not be responsible for the accuracy or completeness of electronic copies of this plan sheet.

SOLANO TRANSPORTATION AUTHORITY
ONE HARBOR CENTER, SUITE 130
SUISUN CITY, CA 94585

PARIKH CONSULTANTS, INC.
2360 QUME DRIVE, SUITE A
SAN JOSE, CA 95131

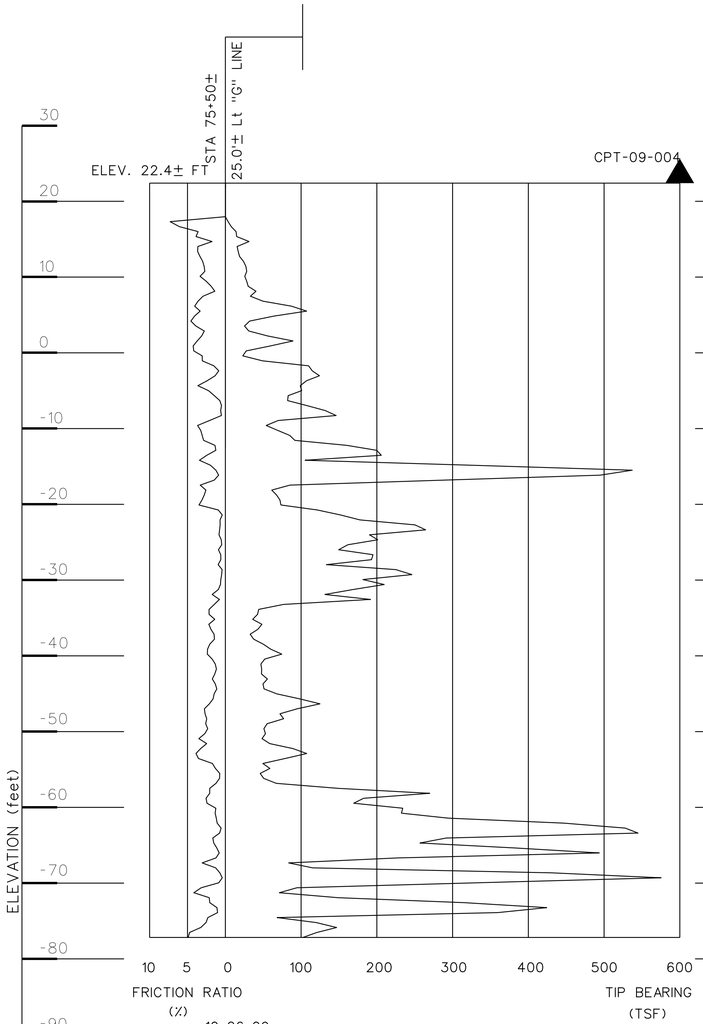

(SEE BORING/CPT LOCATIONS AND BENCH MARKS ON SHEET 1 OF 4)

R-10-004A — ELEV. 25.0± FT — STA 77+60± — 20.0'± Lt "G" LINE

8" Lean CLAY (CL), firm, yellowish brown, moist

5"

Blows	Penetration (in)	Sample	Description
7	1.4		Lean CLAY with SAND (CL), stiff, gray, wet (LL=32, PI=12)
16	1.4	PI CR	
7	1.4		Lean CLAY with SILT (CL), firm, greenish gray, moist
12	1.4		-stiff
9	1.4	PA PI	SANDY SILT (ML), stiff, greenish gray, wet (LL=46, PI=18) (-#200=66%)
17	1.4		Lean CLAY (CL), very stiff, greenish gray, moist
10	1.4	PA	SILTY SAND (SM), loose, greenish gray, wet (+#4=6%, -#200=16%)
8	1.4		Lean CLAY with SAND (CL), firm, gray, wet
32	1.4		SILTY SAND (SM), dense, greenish gray, wet
22	1.4	PA	-medium dense, moist (-#200=26%)
17	1.4	PA	CLAYEY SAND (SC), medium dense, greenish gray, moist (+#4=3%, -#200=18%)
12	1.4	PA	Poorly graded SAND with GRAVEL (SP), medium dense, greenish gray, moist (+#4=33%, -#200=2%)
11	1.4		Lean CLAY (CL), stiff, greenish gray, moist
15	1.4	PI	SILT (ML), stiff, greenish gray, moist (LL=41, PI=11)
17	1.4		SANDY lean CLAY (CL), very stiff, gray, moist
18	1.4	PA PI	SILTY SAND (SM), medium dense, greenish gray, wet, fine SAND (LL=29, PI=4) (+#4=0%, -#200=31%)
21	1.4		Lean CLAY (CL), very stiff, greenish gray, moist
10	1.4	PI	SILT (ML), stiff, greenish gray, moist (LL=40, PI=9)
25	1.4	PI	-very stiff (LL=31, PI=8)
66	1.4		Lean CLAY (CL), hard, greenish gray, moist
36	1.4		-trace fine SAND
REF	1.4		

Groundwater was not measured due to rotary wash drilling

Terminated at El =-136.0 ft
Hammer Energy Ratio (ERi)=85%

05-19-10

A-09-130 — ELEV. 25.0± FT — STA 77+70± — 25.0'± Rt "G" LINE

8" Lean CLAY with SAND (CL), firm, brown, moist

Blows	Penetration (in)	Sample	Description
12	2.5		Fat CLAY (CH), firm, brown, moist (LL=58, PI=40)
10	2.5	CN PI	Lean CLAY with SAND (CL), stiff, gray, moist
14	2.5		
16	2.5	UC PI	-(LL=47, PI=26)
18	2.5		
17	2.5	PA	SILTY SAND (SM), loose, gray, wet (+#4=0%, -#200=49%)
22	2.5		-medium dense
50/5	1.4		-very dense
73	1.4		
67	1.4	PA	-fine to medium SAND (+#4=3%, -#200=27%)
54	1.4		SILT (ML), hard, gray, wet
38	1.4		

ELEV=-1.0'± GWS 10-29-09

10-29-09
Terminated at El =-35.0 ft
Hammer Energy Ratio (ERi)=55%

Notes:
Standard Penetration Test Sampler: I.D. = 1.4"; O.D. = 2" Modified California Sampler: I.D. = 2.5"; O.D. = 3"
Hammer Assembly: A 140 lb hammer with a 30" drop (Semi-Automatic (wireline) Hammer for A-09-130 and Automatic Hammer for R-10-004A)

This LOTB sheet was prepared in accordance with the Caltrans Soil & Rock, Logging, Classification, and Presentation Manual (July 2010)

PROFILE
Vert. : 1" = 10'
Hor. : 1" = 20'

ALL DIMENSIONS ARE IN FEET UNLESS OTHERWISE SHOWN

"G" LINE — 75+00 — 76+00 — 77+00 — 78+00 — 79+00

DESIGN OVERSIGHT Tracy L Bertram	DRAWN BY	L. DUDDU	L.S. BHANGOO — FIELD INVESTIGATION BY:
1-7-13 SIGN OFF DATE	CHECKED BY	F. WANG	DATE: NOVEMBER 2009 & MAY 2010

PREPARED FOR THE STATE OF CALIFORNIA DEPARTMENT OF TRANSPORTATION

F. WANG — PROJECT ENGINEER

BRIDGE NO. 23-0246 — POST MILES 12.8

GREEN VALLEY ROAD OVERCROSSING
LOG OF TEST BORINGS 3 OF 4

GS GEOTECHNICAL LOG OF TEST BORINGS SHEET (ENGLISH) (REV. 7/16/10)

ORIGINAL SCALE IN INCHES FOR REDUCED PLANS 0 1 2 3

UNIT: 0741
PROJECT NUMBER & PHASE: 04000211311 CONTRACT NO.: 04-0A5341

DISREGARD PRINTS BEARING EARLIER REVISION DATES — REVISION DATES 01/13/12 09/10/12 10/19/12

SHEET 27 OF 28

FILE => 23-0246-z-ltb03.dgn

USERNAME => s124496 DATE PLOTTED => 08-MAY-2013 TIME PLOTTED => 07:58

I-080-2(11)43

FED. ROAD DIV. NO.	STATE	PROJ. No.	FISCAL YEAR	SHEET No.	TOTAL SHEETS
7	CAL.			160	239

DIST.	COUNTY	ROUTE	SECTION	SHEET No.	TOTAL SHEETS
X	Sol	80	B	70	70

BRIDGE ENGINEER — CIVIL ENGINEER — LICENSE 8065

DATE APPROVED January 18, 1960

DIVISION OF ENGINEERING SERVICES – GEOTECHNICAL SERVICES

As-Built Log of Test Borings sheet is considered an informational document only. As such, the State of California registration seal with signature, license number and registration certificate expiration date confirm that this is a true and accurate copy of the original document. This drawing is available and presented only for the convenience of any bidder, contractor or other interested party.

DIST.	COUNTY	ROUTE	POST MILES – TOTAL PROJECT	Sheet No.	Total Sheets
04	Sol	12,80	2.1/2.8,12.0/13.1	540	597

CERTIFIED ENGINEER — DATE 9/10/12

REGISTERED PROFESSIONAL ENGINEER — GARY PARIKH — No. G.E. 666 — Exp. 12/31/13 — GEOTECHNICAL — STATE OF CALIFORNIA

GREEN VALLEY ROAD OVERCROSSING

LOG OF TEST BORINGS 4 OF 4

NOTE: A COPY OF THIS LOG OF TEST BORINGS IS AVAILABLE AT OFFICE OF STRUCTURE MAINTENANCE AND INVESTIGATIONS, SACRAMENTO, CALIFORNIA

CU: EA:04-0A5341

BRIDGE No. 23-0246

Sheet 28 of 28

TO ACCOMPANY PLANS DATED 5-6-13

AS BUILT PLANS
Contract No. 60-10TC21
Date Completed
Document No. 00001122

BRIDGE DEPARTMENT

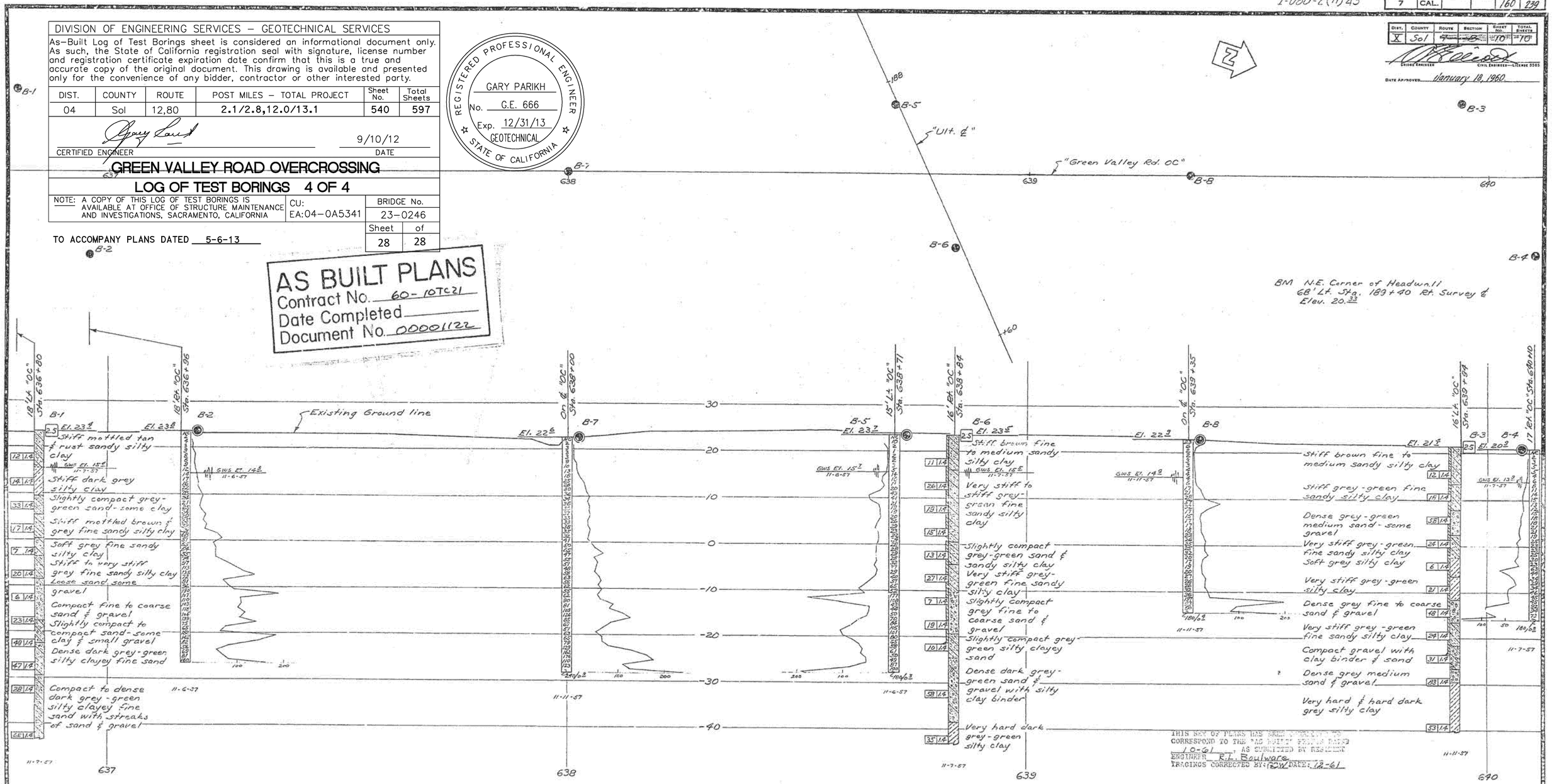

THIS SET OF PLANS HAS BEEN CHANGED TO CORRESPOND TO THE "AS BUILT" PLANS DATED 10-61, AS SUBMITTED BY RESIDENT ENGINEER R.T. Boulware
TRACINGS CORRECTED BY: BOW DATE: 12-61

FIELD STUDY	
DRAWN	by Wm. Strawhorn
CHECKED	by M. Abadey 1-30-58; by C. Hinckley 2-3-58

Approval Recommended by: Engineering Geologist; Soil Mechanics Engineer

CLASSIFICATION OF MATERIAL BASED ON STANDARD GRADE SIZE LIMITS

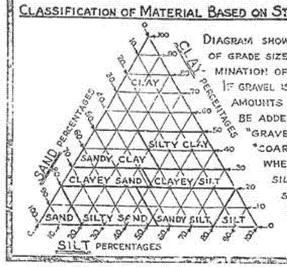

DIAGRAM SHOWING THE BASIS FOR ESTIMATES OF GRADE SIZE DISTRIBUTION USED IN DETERMINATION OF CLASS NAMES.

IF GRAVEL IS PRESENT IN APPRECIABLE AMOUNTS THE TERM "GRAVELLY" MAY BE ADDED TO THE CLASS NAME, VIZ. "GRAVELLY SAND." THE TERMS "COARSE", "MEDIUM" AND "FINE" WHEN USED TO DESCRIBE SAND, SILT AND GRAVEL REFER TO STANDARD GRADE SIZE LIMITS.

LEGEND OF EARTH MATERIALS

- GRAVEL
- SAND
- SILT
- CLAY
- SANDY CLAY OR CLAYEY SAND
- SANDY SILT OR SILTY SAND
- SILTY CLAY OR CLAYEY SILT
- PEAT AND/OR ORGANIC MATTER
- FILL MATERIAL
- IGNEOUS ROCK
- SEDIMENTARY ROCK
- METAMORPHIC ROCK

LEGEND OF BORING OPERATIONS

- PLAN OF ANY BORING
- PENETROMETER
- 2½" CONE PENETROMETER
- SAMPLER BORING (LRV)
- ROTARY BORING (WE'r)
- AUGER BORING (DRY)
- JET BORING
- CORE BORING
- TEST PIT

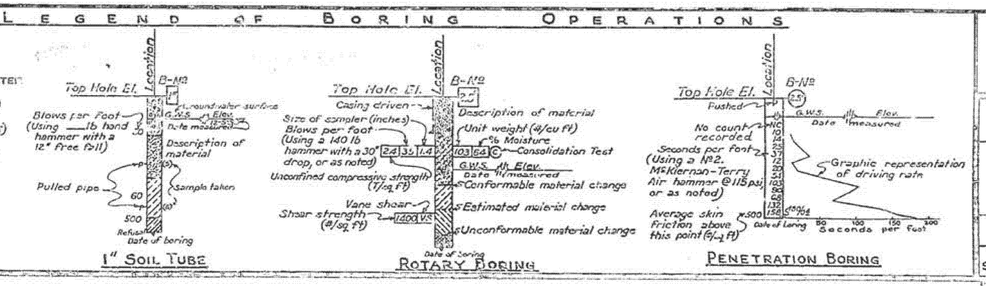

NOTES

Classification of earth materials as shown on this sheet is based upon field inspection and is not to be construed to imply mechanical analysis.

STATE OF CALIFORNIA
DEPARTMENT OF PUBLIC WORKS
DIVISION OF HIGHWAYS

GREEN VALLEY ROAD OVERCROSSING

LOG OF TEST BORINGS

SCALE	BRIDGE	FILE	DRAWING
1" = 10'	23-138	E-23	C-5801-10

PREL. DRAWING No. 1-5801 (Sh 19)

23-0246-z-ltb04.tif

DIST	COUNTY	ROUTE	POST MILES TOTAL PROJECT	SHEET No	TOTAL SHEETS
04	Sol	12,80	2.1/2.8, 12.0/13.1	541	597

P.K. Chen 9/12/12
REGISTERED STRUCTURAL ENGINEER DATE

5-6-13
PLANS APPROVAL DATE

REGISTERED PROFESSIONAL ENGINEER PO-KANG CHEN No. S 3112 Exp. 9/30/13 STRUCTURAL STATE OF CALIFORNIA

The State of California or its officers or agents shall not be responsible for the accuracy or completeness of electronic copies of this plan sheet.

SOLANO TRANSPORTATION AUTHORITY
ONE HARBOR CENTER, SUITE 130
SUISUN CITY, CA 94585

MARK THOMAS & COMPANY, INC. + NOLTE ASSOCIATES, INC.
3000 OAK ROAD, SUITE 650
WALNUT CREEK, CA 94597

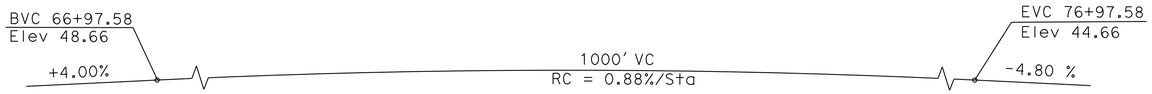

PROFILE GRADE
NO SCALE

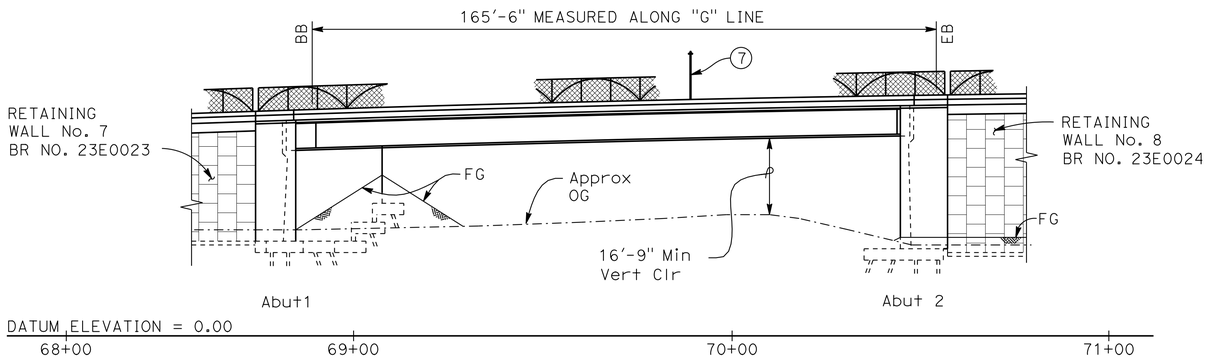

ELEVATION
1"= 20'

LEGEND:

- Indicates Point of Minimum Vertical Clearance
- Indicates New Construction
- Indicates direction of traffic

NOTES:

1. Paint "GREEN VALLEY ROAD OVERCROSSING"
2. Paint "BR NO. 23-0247" AND YEAR COMPLETED
3. Concrete Barrier (Type 732 Mod)
4. Concrete Barrier (Type 26 Mod)
5. Chain Link Railing (Type 7 Mod)
6. Approach Slab Type EQ(10)
7. Electrolier, see 'ROAD PLANS'. For 'ELECTROLIER PEDESTAL DETAILS' see "GIRDER LAYOUT" sheet.

1. For Index to Plans & General Notes, see "DECK CONTOURS" sheet.
2. For Pile Data Table, see "FOUNDATION PLAN" sheet.

UTILITIES:

- A 2" Dia Conduit (Lighting), see 'ROAD PLANS'
- B 2" Dia Conduit (Signal Interconnect), see 'ROAD PLANS'
- C 2" Dia Conduit (Future), see 'ROAD PLANS'
- D 2" Dia Conduit (Loop Detector), see 'ROAD PLANS'
- E 16" Dia Water Line in 24" Casing
- F 8" Dia Water Line in 16" Casing

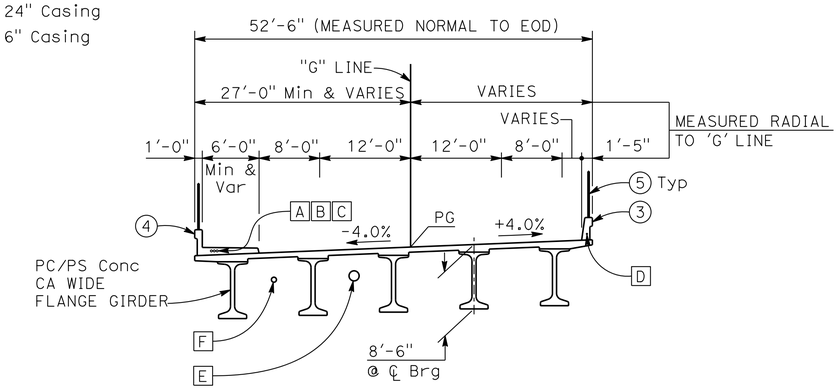

TYPICAL SECTION
1"= 10'

GREEN VALLEY RD OC (OVER SB 680 ON-RAMP) #23-0247

QUANTITIES

STRUCTURE EXCAVATION (BRIDGE)	685	CY
STRUCTURE BACKFILL (BRIDGE)	1,210	CY
8" SUPPLY LINE (BRIDGE)	190	LF
16" SUPPLY LINE (BRIDGE)	190	LF
FURNISH PILING (CLASS 200) (ALTERNATIVE W)	5,040	LF
DRIVE PILE (CLASS 200) (ALTERNATIVE W)	59	EA
STRUCTURAL CONCRETE, BRIDGE FOOTING	282	CY
STRUCTURAL CONCRETE, BRIDGE	710	CY
STRUCTURAL CONCRETE, APPROACH SLAB (TYPE EQ)	41	CY
ARCHITECTURAL TREATMENT	2,000	SQFT
FURNISH PRECAST PRESTRESSED CONCRETE WIDE-FLANGE GIRDER (160'-170')	5	EA
ERECT PRECAST PRESTRESSED CONCRETE GIRDER	5	EA
JOINT SEAL (MR 1 1/2")	116	LF
BAR REINFORCING STEEL (BRIDGE)	190,200	LB
CHAIN LINK RAILING (TYPE 7 MODIFIED)	380	LF
CONCRETE BARRIER (TYPE 26 MODIFIED)	193	LF
CONCRETE BARRIER (TYPE 732 MODIFIED)	186	LF

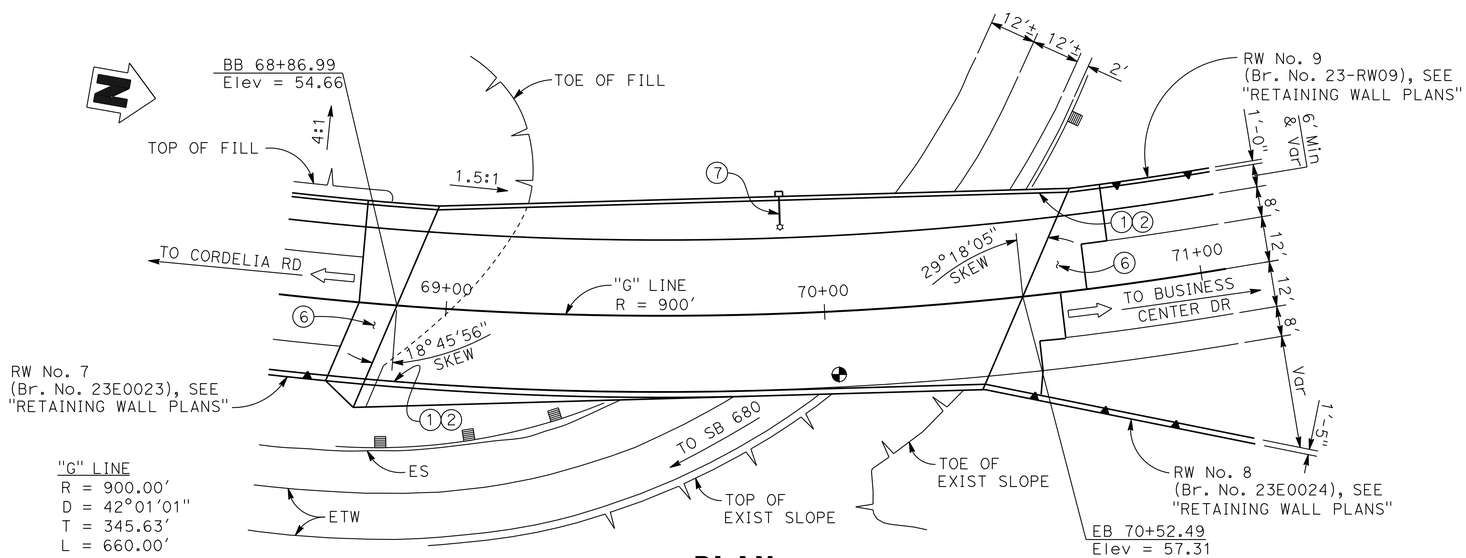

"G" LINE
R = 900.00'
D = 42°01'01"
T = 345.63'
L = 660.00'

PLAN
1"= 20'

DESIGN OVERSIGHT Tracy L Bertram	DESIGN	BY K. MICHALSKI	CHECKED J. HICKEY	LOAD & RESISTANCE FACTOR DESIGN	LIVE LOADING: HL93 W/"LOW-BOY"; PERMIT DESIGN VEHICLE
1-7-13 SIGN OFF DATE	DETAILS	BY K. MICHALSKI	CHECKED J. HICKEY	LAYOUT BY K. MICHALSKI	CHECKED J. HICKEY
	QUANTITIES	BY P. PARK	CHECKED E. FELIX	SPECIFICATIONS BY T. WALKER	PLANS AND SPECS COMPARED P. CHEN

PREPARED FOR THE STATE OF CALIFORNIA DEPARTMENT OF TRANSPORTATION

PO-KANG CHEN
PROJECT ENGINEER

BRIDGE NO. 23-0247
POST MILES 12.8

GREEN VALLEY ROAD OC (OVER SB 680 ON-RAMP)
GENERAL PLAN

DESIGN GENERAL PLAN SHEET (ENGLISH) (REV.7/16/10)

ORIGINAL SCALE IN INCHES FOR REDUCED PLANS 0 1 2 3

UNIT: 0741
PROJECT NUMBER & PHASE: 04000211311 CONTRACT NO.: 04-0A5341

DISREGARD PRINTS BEARING EARLIER REVISION DATES

REVISION DATES 01/12/12 5/4/12 9/12/12 10/19/12

SHEET 1 OF 27

FILE => 23-0247-a-gp01.dgn

USERNAME => s124436 DATE PLOTTED => 08-MAY-2013 TIME PLOTTED => 08:24

DIST	COUNTY	ROUTE	POST MILES TOTAL PROJECT	SHEET No	TOTAL SHEETS
04	Sol	12,80	2.1/2.8, 12.0/13.1	542	597

P.K. Chen 9/12/12
REGISTERED STRUCTURAL ENGINEER DATE

5-6-13
PLANS APPROVAL DATE

REGISTERED PROFESSIONAL ENGINEER PO-KANG CHEN No. S 3112 Exp. 9/30/13 STRUCTURAL STATE OF CALIFORNIA

The State of California or its officers or agents shall not be responsible for the accuracy or completeness of electronic copies of this plan sheet.

SOLANO TRANSPORTATION AUTHORITY
ONE HARBOR CENTER, SUITE 130
SUISUN CITY, CA 94585

MARK THOMAS & COMPANY, INC. + NOLTE ASSOCIATES, INC.
3000 OAK ROAD, SUITE 650
WALNUT CREEK, CA 94597

GENERAL NOTES
LOAD AND RESISTANCE FACTOR DESIGN

DESIGN: AASHTO LRFD Bridge Design Specifications, 4th edition and the California Amendments, preface dated December 2008 ; except that earth retaining systems and bridge barriers are designed using Bridge Design Specifications ('96 AASHTO w/ Revisions by Caltrans)

SEISMIC DESIGN: Caltrans Seismic Design Criteria (SDC), Version 1.6 dated 2010

DEAD LOAD: Includes 35 psf for future wearing surface

LIVE LOADING: HL93 and permit design load

SEISMIC LOADING: Soil Profile: V_{s30} = 205 m/sec (Liquefaction Case)
V_{s30} = 285 m/sec (Non-Liquefaction Case)

Moment Magnitude: M_{max} = 6.9
Peak Ground Acceleration 0.7g

See 'ARS DESIGN CURVE'

REINFORCED CONCRETE: f'c = 3.6 ksi unless otherwise noted
fy = 60 ksi
n = 8

WELDED WIRE REINFORCEMENT: fy = 75 ksi

PRESTRESSED CONCRETE: See 'PRESTRESSING NOTES' on "GIRDER DETAILS No. 1" sheet.

STANDARD PLANS DATED 2010

A-10A	ABBREVIATIONS (SHEET 1 OF 2)
A-10B	ABBREVIATIONS (SHEET 2 OF 2)
A-10C	LINES AND SYMBOLS (SHEET 1 OF 3)
A-10D	LINES AND SYMBOLS (SHEET 2 OF 3)
A-10E	LINES AND SYMBOLS (SHEET 3 OF 3)
A-10F	LEGEND - SOIL (SHEET 1 OF 2)
A-10G	LEGEND - SOIL (SHEET 2 OF 2)
A-62C	LIMITS OF PAYMENT FOR EXCAVATION AND BACKFILL - BRIDGE
BO-1	BRIDGE DETAILS
BO-3	BRIDGE DETAILS
BO-5	BRIDGE DETAILS
BO-13	BRIDGE DETAILS
B2-8	PILE DETAILS - CLASS 200
B6-10	UTILITY OPENINGS, T-BEAM
B6-21	JOINT SEALS (MAXIMUM MOVEMENT RATING = 2")
B7-11	UTILITY DETAILS
B11-54	CONCRETE BARRIER TYPE 26
B11-55	CONCRETE BARRIER TYPE 732
B14-3	COMMUNICATION AND SPRINKLER CONTROL CONDUITS (CONDUITS LESS THAN 4")
ES-9A	ELECTRICAL SYSTEMS (ELECTRICAL DETAILS STRUCTURE INSTALLATIONS)
ES-9B	ELECTRICAL SYSTEMS (ELECTRICAL DETAILS STRUCTURE INSTALLATIONS)
ES-9C	ELECTRICAL SYSTEMS (ELECTRICAL DETAILS STRUCTURE INSTALLATIONS)
ES-9D	ELECTRICAL SYSTEMS (ELECTRICAL DETAILS STRUCTURE INSTALLATIONS)

INDEX TO PLANS

No.	Title
1	GENERAL PLAN
2	DECK CONTOURS
3	FOUNDATION PLAN
4	ABUTMENT 1 LAYOUT
5	ABUTMENT 2 LAYOUT
6	ABUTMENT DETAILS No. 1
7	ABUTMENT DETAILS No. 2
8	ABUTMENT DETAILS No. 3
9	ABUTMENT DETAILS No. 4
10	ABUTMENT DETAILS No. 5
11	TYPICAL SECTION
12	GIRDER LAYOUT
13	GIRDER DETAILS No. 1
14	GIRDER DETAILS No. 2
15	GIRDER DETAILS No. 3
16	BRIDGE AESTHETICS
17	AESTHETIC TREATMENT DETAILS No. 1
18	AESTHETIC TREATMENT DETAILS No. 2
19	AESTHETIC TREATMENT DETAILS No. 3
20	UTILITY DETAILS
21	STRUCTURE APPROACH TYPE EQ(10)
22	STRUCTURE APPROACH DRAINAGE DETAILS
23	CHAIN LINK RAILING (TYPE 7 MOD)
24	LOG OF TEST BORINGS 1 OF 4
25	LOG OF TEST BORINGS 2 OF 4
26	LOG OF TEST BORINGS 3 OF 4
27	LOG OF TEST BORINGS 4 OF 4

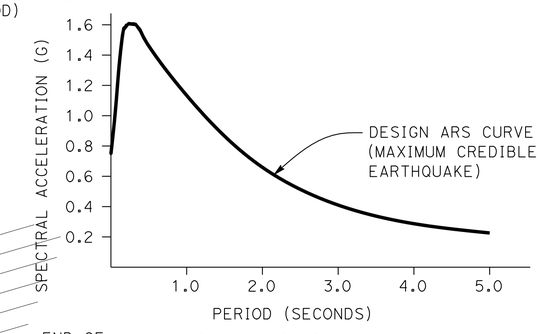

ARS DESIGN CURVE
NO SCALE

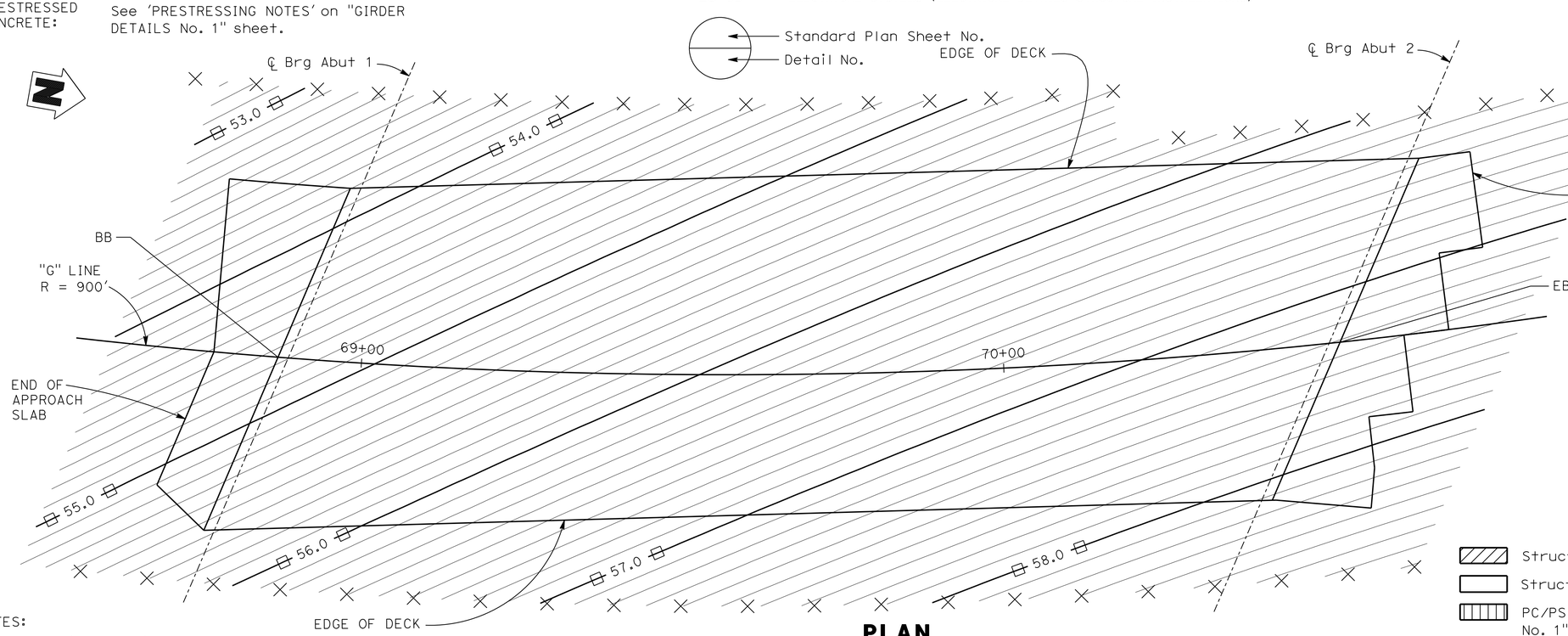

PLAN
1"= 10'

NOTES:
1. Contour interval is 0.1 ft
2. X - Indicates 10 ft intervals measured along "G" Line
3. Contours do not include camber or falsework settlement.
4. □ - Indicates even foot contours.

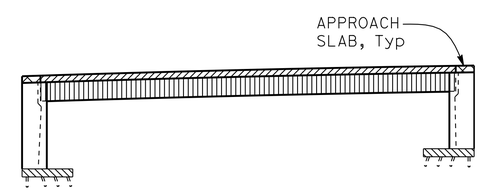

- Structural Concrete, Bridge (f'c = 5.0 Ksi @ 28 Days)
- Structural Concrete, Bridge
- PC/PS Concrete CA Wide Flange Girder, See "GIRDER DETAILS No. 1" sheet for strength
- Structural Concrete, Bridge Footing
- Structural Concrete, Approach Slab

CONCRETE STRENGTH AND TYPE LIMITS
NO SCALE

Tracy L Bertram
DESIGN OVERSIGHT Tracy L Bertram
1-7-13
SIGN OFF DATE

	BY	CHECKED
DESIGN	K. MICHALSKI	J. HICKEY
DETAILS	K. MICHALSKI	J. HICKEY
QUANTITIES	P. PARK	E. FELIX

PREPARED FOR THE STATE OF CALIFORNIA DEPARTMENT OF TRANSPORTATION

PO-KANG CHEN
PROJECT ENGINEER

BRIDGE NO. 23-0247
POST MILES 12.8

GREEN VALLEY ROAD OC (OVER SB 680 ON-RAMP)
DECK CONTOURS

DESIGN DETAIL SHEET (ENGLISH) (REV.7/16/10)

ORIGINAL SCALE IN INCHES FOR REDUCED PLANS 0 1 2 3

UNIT: 0741
PROJECT NUMBER & PHASE: 04000211311 CONTRACT NO.: 04-0A5341

DISREGARD PRINTS BEARING EARLIER REVISION DATES

REVISION DATES 01/12/12 5/4/12 9/12/12 10/19/12 SHEET 2 OF 27

FILE => 23-0247-d-dc01.dgn

USERNAME => s124496 DATE PLOTTED => 08-MAY-2013 TIME PLOTTED => 08:24

DIST	COUNTY	ROUTE	POST MILES TOTAL PROJECT	SHEET No	TOTAL SHEETS
04	Sol	12,80	2.1/2.8, 12.0/13.1	543	597

P.K. Chen 9/12/12
REGISTERED STRUCTURAL ENGINEER DATE

5-6-13
PLANS APPROVAL DATE

REGISTERED PROFESSIONAL ENGINEER PO-KANG CHEN No. S 3112 Exp. 9/30/13 STRUCTURAL STATE OF CALIFORNIA

The State of California or its officers or agents shall not be responsible for the accuracy or completeness of electronic copies of this plan sheet.

SOLANO TRANSPORTATION AUTHORITY
ONE HARBOR CENTER, SUITE 130
SUISUN CITY, CA 94585

MARK THOMAS & COMPANY, INC. + NOLTE ASSOCIATES, INC.
3000 OAK ROAD, SUITE 650
WALNUT CREEK, CA 94597

PILE DATA TABLE

Location	Pile Type	Nominal Resistance (kips)		Design Tip Elevations (ft)	Specified Tip Elevation (ft)	Nominal Driving Resistance (kips)
		Compression	Tension			
Abut 1	Class 200 Alt "W"	400	0	-53.0 (a) -3.5 (c) -20.0 (d)	-53.0	550
Abut 2	Class 200 Alt "W"	400	0	-65.0 (a) -15.5 (c) -35.0 (d)	-65.0	525

NOTE:
Design Tip Elevation is controlled by the following demands:
(a) Compression; (c) Settlement; (d) Lateral Loads;

BENCH MARKS

BENCHMARK NO. A 1393 (NGS PID JT9519)
Brass disc set vertically in the east face of the first concrete pier east of the west abutment of the Union Pacific (formerly Southern Pacific) Railroad overcrossing of Interstate Highway 80, 21.7 feet northwest of the center of the most northwesterly westbound lane of the highway. The disc is stamped "A 1393 1987"
Northing: 1837422 Easting: 6518256
(NAD83, CCSII)
Elevation: 67.07 (NAVD 88) Stability: B

HPGN D CA 10 LC (NGS PID AC9890)
Survey disc set on aluminum alloy rod encased in a PVC pipe with access cover set in concrete flush with the parking lot pavement in the Park and Ride Lot, 92 feet west of the centerline of Green Valley Road and 48 feet southeast of the Green Valley Road onramp to westbound Interstate Highway 80. The disc is stamped "CADT 10 LC"
Northing: 1840653.06 Easting: 6521452.79
(HPGN 1991.35, CCSII)
Elevation: 26.35 (NAVD 88) Stability: B

"G" LINE ALIGNMENT DATA

		Northing	Easting
A	68+50.00	1840121.7853	6521954.3935
B	71+00.00	1840366.2840	6521906.2545

LEGEND:

Indicates bottom of footing elevation

Indicates Vertical Pile

Indicates Battered Pile

24.8 Indicates spot elevation

NOTE:

1. All piles not shown

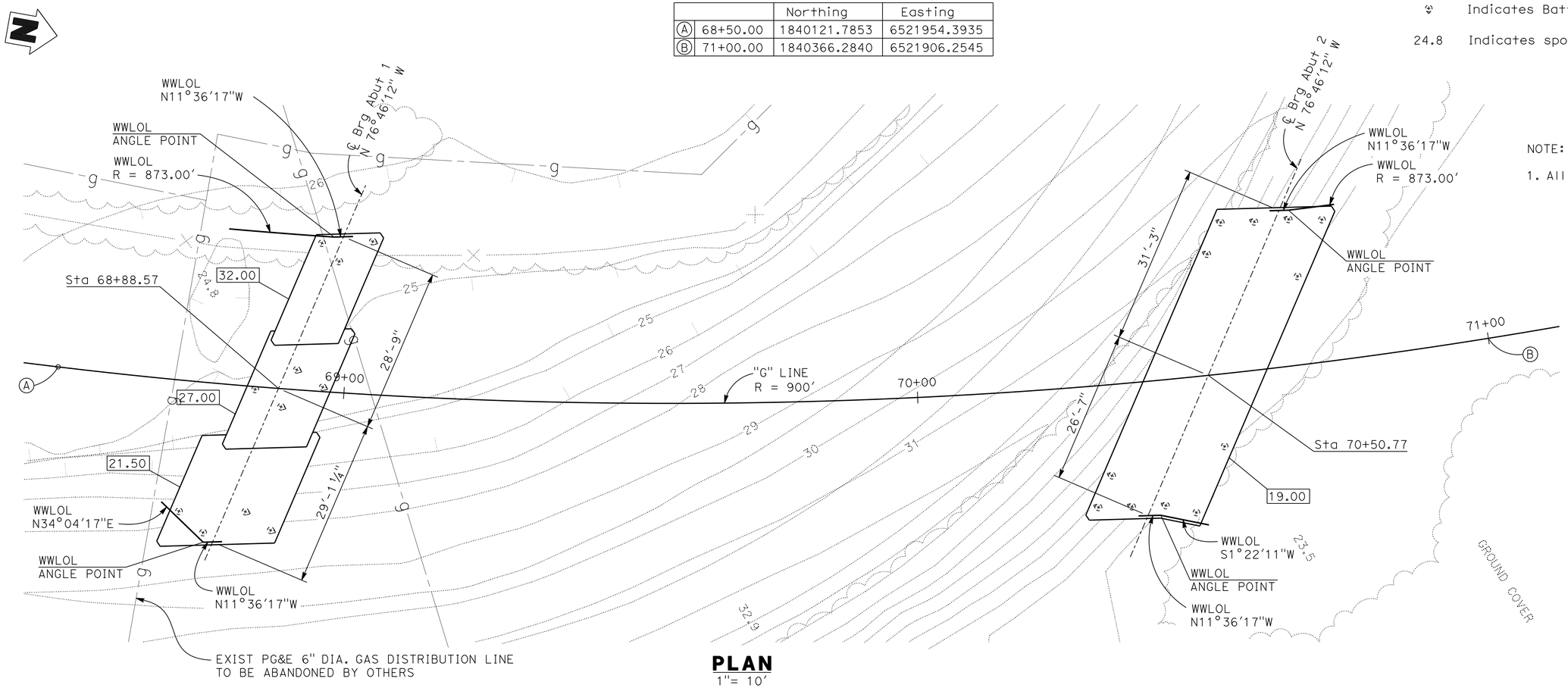

PLAN
1"= 10'

GEOTECHNICAL PROFESSIONAL APPROVAL DATE 09/23/11

DESIGN OVERSIGHT Tracy L Bertram
1-7-13
SIGN OFF DATE

SCALE: AS SHOWN	VERT.DATUM NGVD 29	HORZ.DATUM NAD 83	
PHOTOGRAMMETRY AS OF:		ALIGNMENT TIES	
SURVEYED	BY	DRAFTED	BY
FIELD CHECKED	BY	CHECKED	BY

DESIGN	BY K. MICHALSKI	CHECKED J. HICKEY
DETAILS	BY K. MICHALSKI	CHECKED J. HICKEY
QUANTITIES	BY P. PARK	CHECKED E. FELIX

PREPARED FOR THE STATE OF CALIFORNIA DEPARTMENT OF TRANSPORTATION

PO-KANG CHEN
PROJECT ENGINEER

BRIDGE NO. 23-0247
POST MILES 12.8

GREEN VALLEY ROAD OC (OVER SB 680 ON-RAMP)
FOUNDATION PLAN

FOUNDATION PLAN SHEET (ENGLISH) (REV.7/16/10)

ORIGINAL SCALE IN INCHES FOR REDUCED PLANS 0 1 2 3

UNIT: 0741
PROJECT NUMBER & PHASE: 04000211311 CONTRACT NO.: 04-0A5341

DISREGARD PRINTS BEARING EARLIER REVISION DATES

REVISION DATES 01/12/12 5/8/12 9/12/12 10/19/12

SHEET 3 OF 27

FILE => 23-0247-e-fdp101.dgn

USERNAME => s1224396 DATE PLOTTED => 08-MAY-2013 TIME PLOTTED => 08:24

DIST	COUNTY	ROUTE	POST MILES TOTAL PROJECT	SHEET No	TOTAL SHEETS
04	Sol	12,80	2.1/2.8, 12.0/13.1	544	597

P.K. Chen 9/12/12
REGISTERED STRUCTURAL ENGINEER DATE

5-6-13
PLANS APPROVAL DATE

REGISTERED PROFESSIONAL ENGINEER PO-KANG CHEN No. S 3112 Exp. 9/30/13 STRUCTURAL STATE OF CALIFORNIA

The State of California or its officers or agents shall not be responsible for the accuracy or completeness of electronic copies of this plan sheet.

SOLANO TRANSPORTATION AUTHORITY
ONE HARBOR CENTER, SUITE 130
SUISUN CITY, CA 94585

MARK THOMAS & COMPANY, INC. + NOLTE ASSOCIATES, INC.
3000 OAK ROAD, SUITE 650
WALNUT CREEK, CA 94597

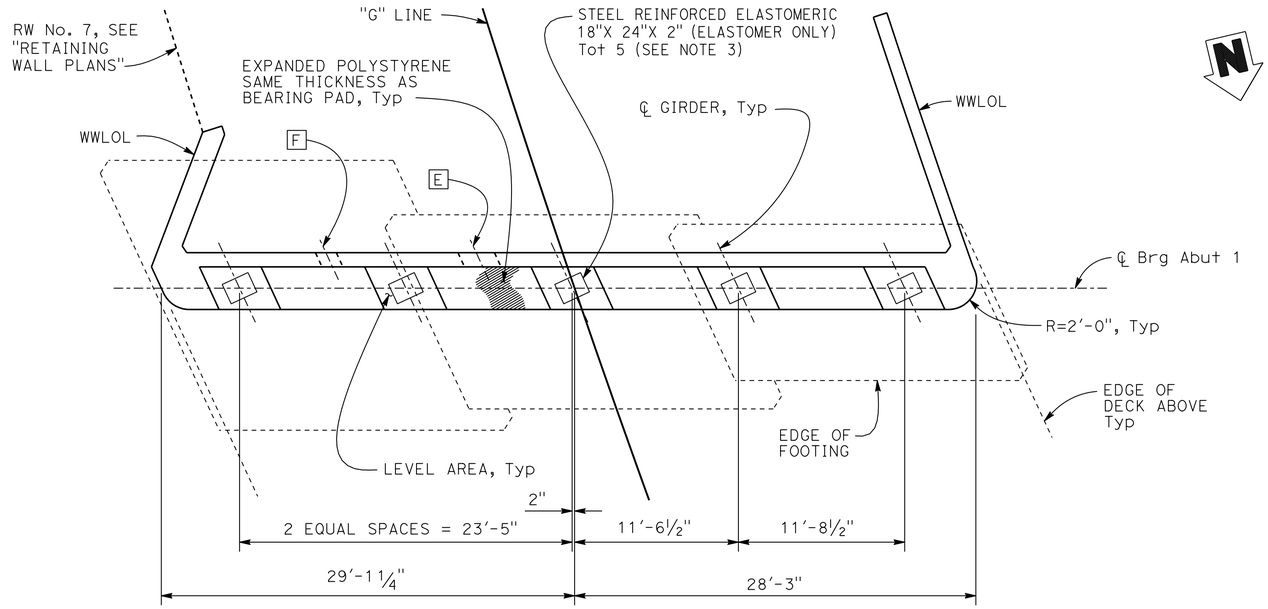

PLAN
3/16"= 1'-0"

UTILITIES:

E 2'-4" Dia opening for 16" Dia Water Line

F 1'-8" Dia opening for 8" Dia Water Line

NOTES:

1. For Abutment Typical Sections, see "ABUTMENT DETAILS No. 1" sheet.
2. For wingwall details, see "ABUTMENT DETAILS No. 2" sheet.
3. For Typical Bearing Pad detail, see "ABUTMENT DETAILS No. 4" sheet.
4. For MSE Wall to Wing Wall connection details, see "MECHANICALLY STABILIZED EMBANKMENT DETAILS No. 3" sheet.
5. For architectural treatment details, see "BRIDGE AESTHETICS" sheet.

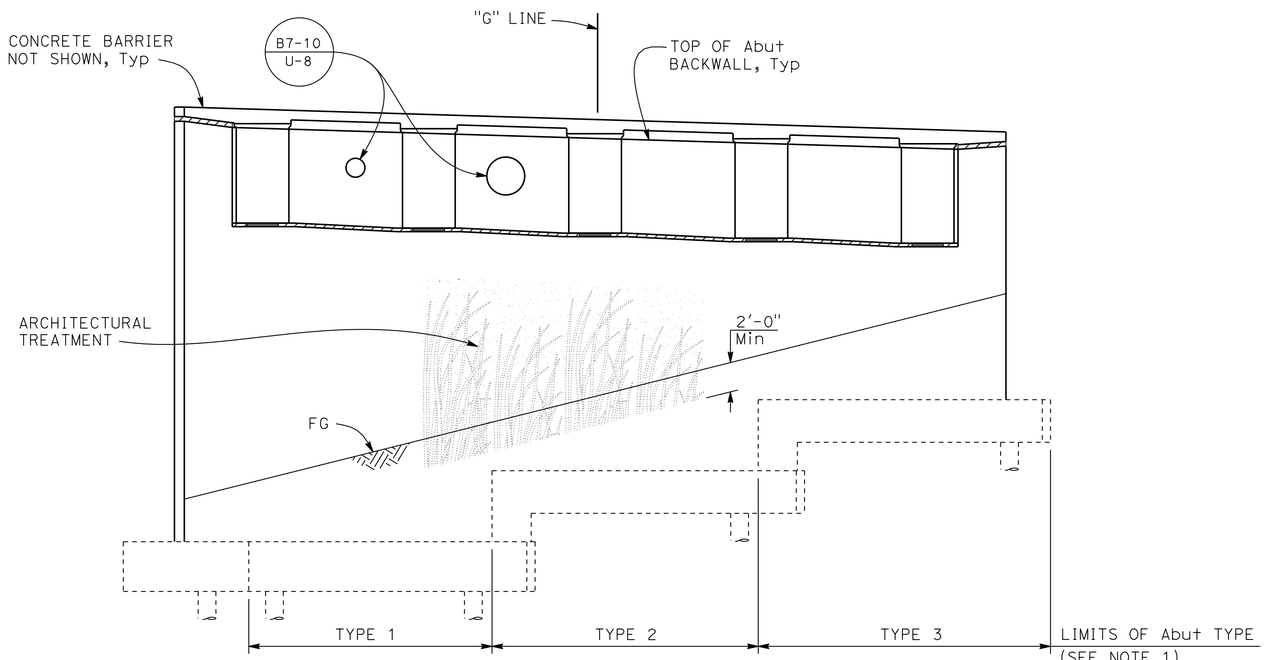

NOTE:
Not all piles shown

ELEVATION
3/16"= 1'-0"

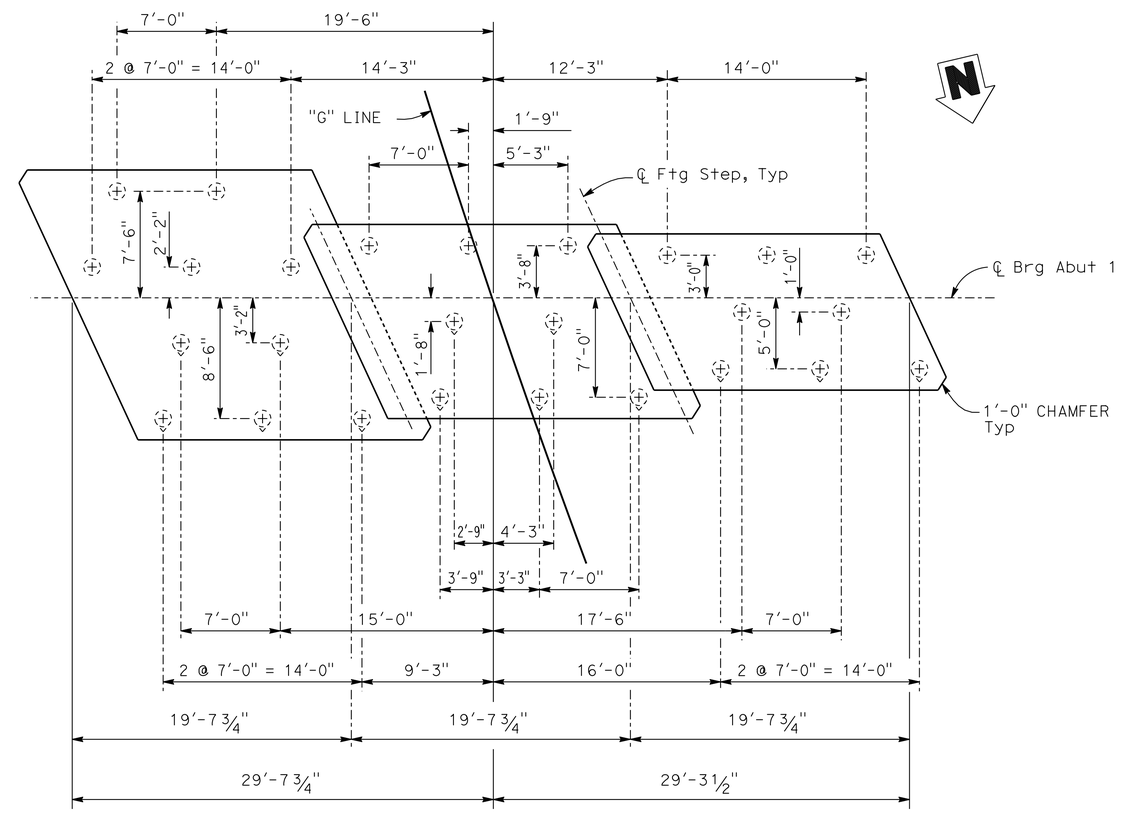

FOOTING PLAN
3/16"= 1'-0"

LEGEND:

⊕ Indicates vertical pile, Tot 13

⊕ Indicates batter pile 3:1, Tot 13

Tracy L. Bertram
DESIGN OVERSIGHT Tracy L Bertram
1-7-13
SIGN OFF DATE

	BY	CHECKED
DESIGN	K. MICHALSKI	J. HICKEY
DETAILS	K. MICHALSKI	J. HICKEY
QUANTITIES	P. PARK	E. FELIX

PREPARED FOR THE STATE OF CALIFORNIA DEPARTMENT OF TRANSPORTATION

PO-KANG CHEN
PROJECT ENGINEER

BRIDGE NO. 23-0247
POST MILES 12.8

GREEN VALLEY ROAD OC (OVER SB 680 ON-RAMP)
ABUTMENT 1 LAYOUT

DESIGN DETAIL SHEET (ENGLISH) (REV.7/16/10)

ORIGINAL SCALE IN INCHES FOR REDUCED PLANS 0 1 2 3

UNIT: 0741
PROJECT NUMBER & PHASE: 04000211311 CONTRACT NO.: 04-0A5341

DISREGARD PRINTS BEARING EARLIER REVISION DATES

REVISION DATES 01/12/12 5/4/12 9/12/12 10/19/12

SHEET 4 OF 27

FILE => 23-0247-f-a01_lo1.dgn

USERNAME => s124496 DATE PLOTTED => 09-MAY-2013 TIME PLOTTED => 07:37

DIST	COUNTY	ROUTE	POST MILES TOTAL PROJECT	SHEET No	TOTAL SHEETS
04	Sol	12,80	2.1/2.8, 12.0/13.1	545	597

P.K. Chen 9/12/12
REGISTERED STRUCTURAL ENGINEER DATE

5-6-13
PLANS APPROVAL DATE

REGISTERED PROFESSIONAL ENGINEER PO-KANG CHEN No. S 3112 Exp. 9/30/13 STRUCTURAL STATE OF CALIFORNIA

The State of California or its officers or agents shall not be responsible for the accuracy or completeness of electronic copies of this plan sheet.

SOLANO TRANSPORTATION AUTHORITY
ONE HARBOR CENTER, SUITE 130
SUISUN CITY, CA 94585

MARK THOMAS & COMPANY, INC. + NOLTE ASSOCIATES, INC.
3000 OAK ROAD, SUITE 650
WALNUT CREEK, CA 94597

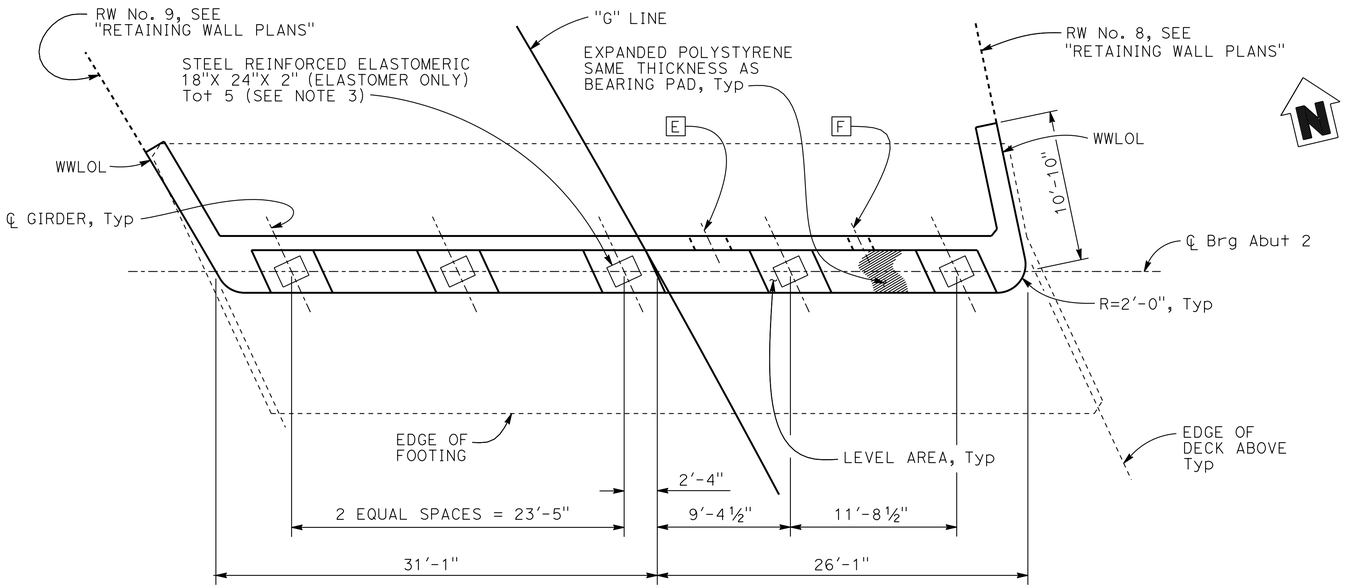

PLAN
3/16"= 1'-0"

UTILITIES:

E 2'-4" Dia opening for 16" Dia Water Line

F 1'-8" Dia opening for 8" Dia Water Line

NOTES:

1. For Abutment Typical Sections, see "ABUTMENT DETAILS No. 1" sheet.
2. For wingwall details, see "ABUTMENT DETAILS No. 2" sheet.
3. For Typical Bearing Pad detail, see "ABUTMENT DETAILS No. 4" sheet.
4. For MSE Wall to Wing Wall connection details, see "MECHANICALLY STABILIZED EMBANKMENT DETAILS No. 3" sheet.
5. For architectural treatment details, see "BRIDGE AESTHETICS" sheet.

LEGEND:

⊕ Indicates vertical pile, Tot 6

⊕ Indicates batter pile 3:1, Tot 27

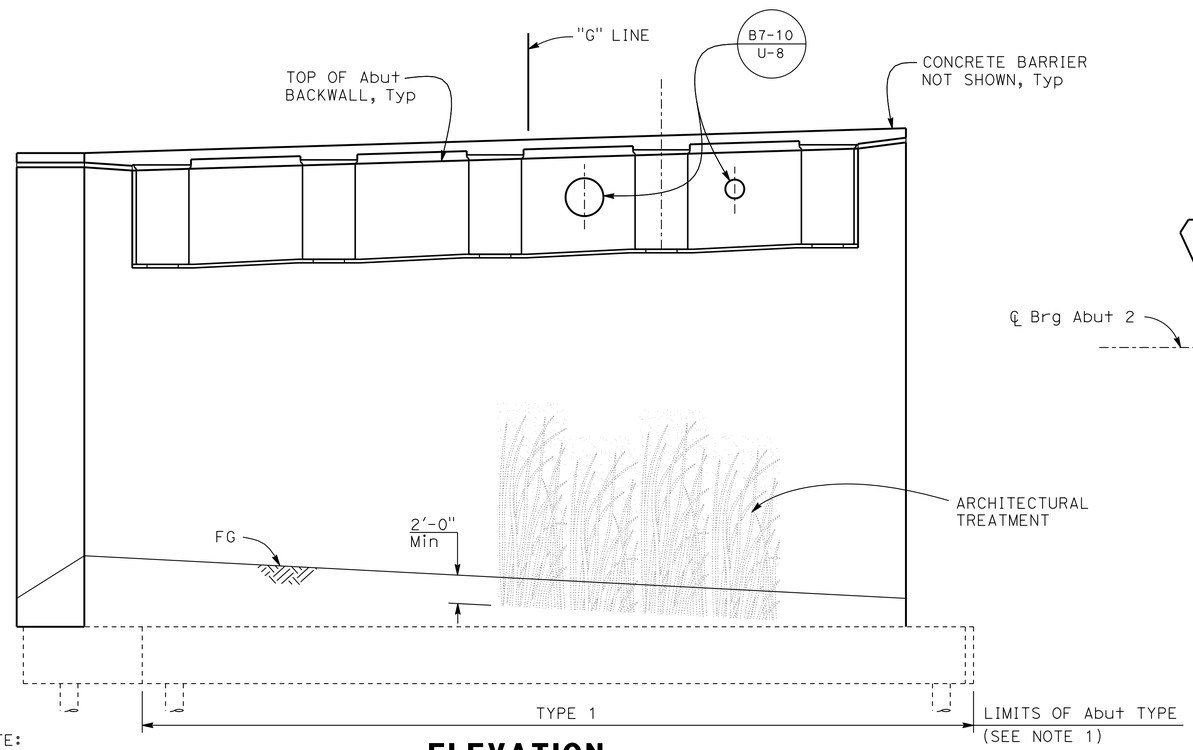

NOTE:
Not all piles shown

ELEVATION
3/16"= 1'-0"

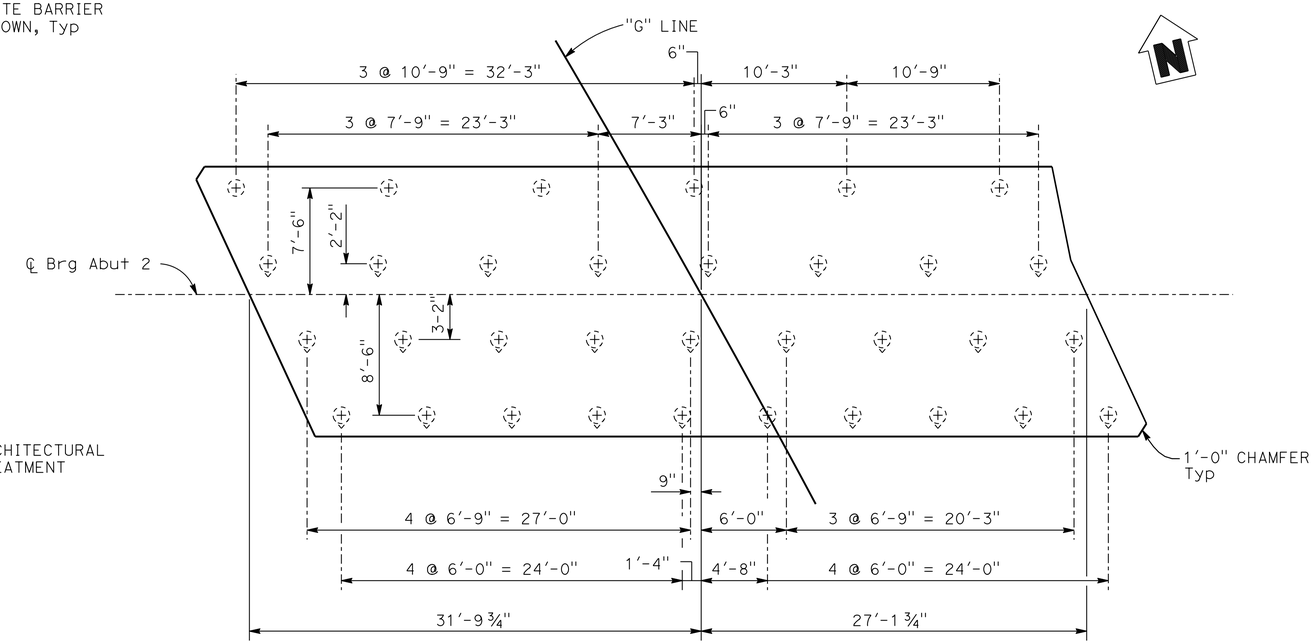

FOOTING PLAN
3/16"= 1'-0"

Tracy L. Bertram
DESIGN OVERSIGHT Tracy L Bertram
1-7-13
SIGN OFF DATE

	BY	CHECKED
DESIGN	K. MICHALSKI	J. HICKEY
DETAILS	K. MICHALSKI	J. HICKEY
QUANTITIES	P. PARK	E. FELIX

PREPARED FOR THE STATE OF CALIFORNIA DEPARTMENT OF TRANSPORTATION

PO-KANG CHEN
PROJECT ENGINEER

BRIDGE NO. 23-0247
POST MILES 12.8

GREEN VALLEY ROAD OC (OVER SB 680 ON-RAMP)
ABUTMENT 2 LAYOUT

DESIGN DETAIL SHEET (ENGLISH) (REV.7/16/10)

ORIGINAL SCALE IN INCHES FOR REDUCED PLANS 0 1 2 3

UNIT: 0741
PROJECT NUMBER & PHASE: 04000211311 CONTRACT NO.: 04-0A5341

DISREGARD PRINTS BEARING EARLIER REVISION DATES

REVISION DATES 01/28/12 5/4/12 9/12/12 10/19/12

SHEET 5 OF 27

FILE => 23-0247-f-a02_lo1.dgn

USERNAME => s124496 DATE PLOTTED => 08-MAY-2013 TIME PLOTTED => 08:24

DIST	COUNTY	ROUTE	POST MILES TOTAL PROJECT	SHEET No	TOTAL SHEETS
04	Sol	12,80	2.1/2.8, 12.0/13.1	546	597

P.K. Chen 9/12/12
REGISTERED STRUCTURAL ENGINEER DATE

5-6-13
PLANS APPROVAL DATE

The State of California or its officers or agents shall not be responsible for the accuracy or completeness of electronic copies of this plan sheet.

REGISTERED PROFESSIONAL ENGINEER PO-KANG CHEN No. S 3112 Exp. 9/30/13 STRUCTURAL STATE OF CALIFORNIA

SOLANO TRANSPORTATION AUTHORITY
ONE HARBOR CENTER, SUITE 130
SUISUN CITY, CA 94585

MARK THOMAS & COMPANY, INC. + NOLTE ASSOCIATES, INC.
3000 OAK ROAD, SUITE 650
WALNUT CREEK, CA 94597

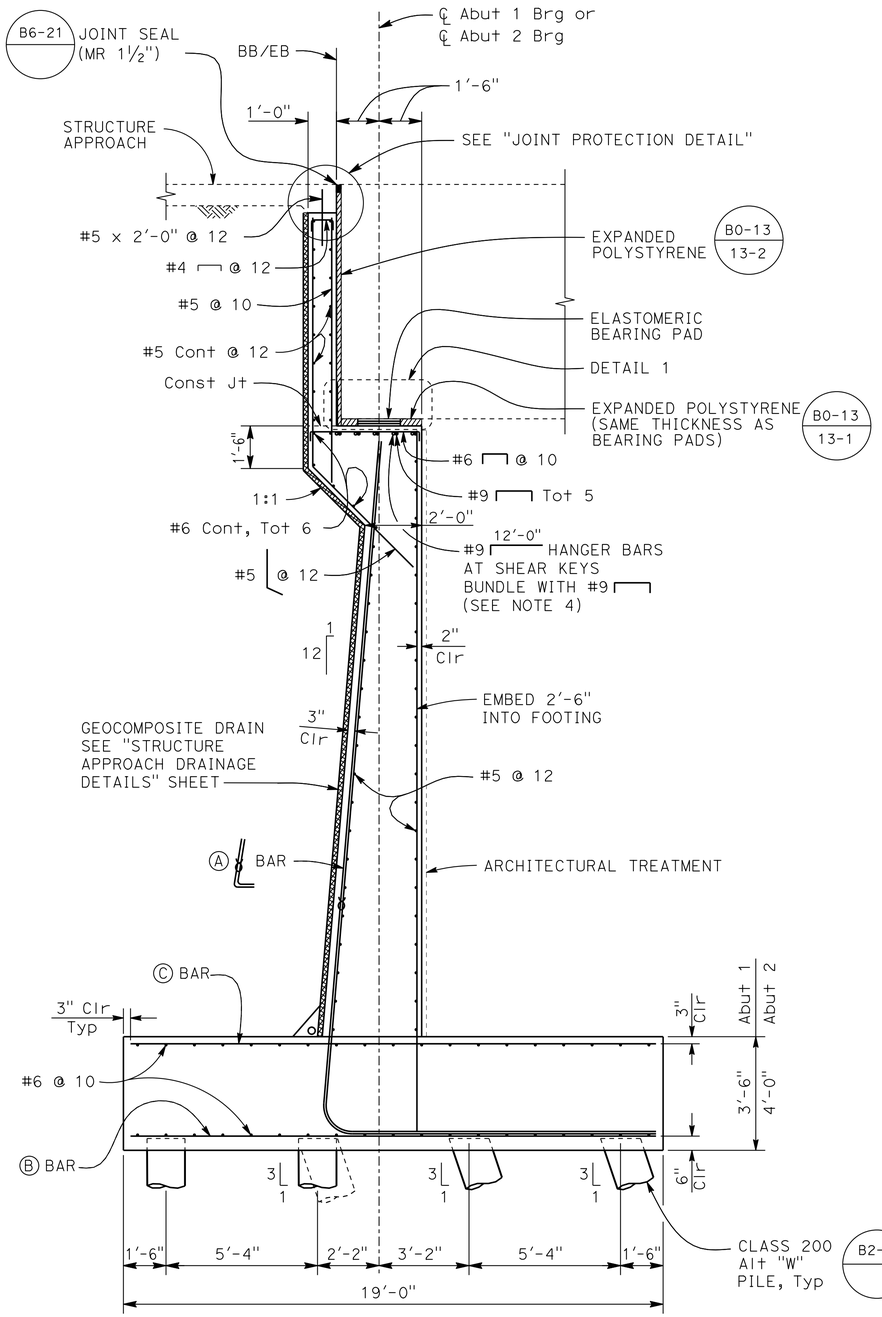

ABUTMENT TYPICAL SECTION (TYPE 1)

3/8"=1'-0"

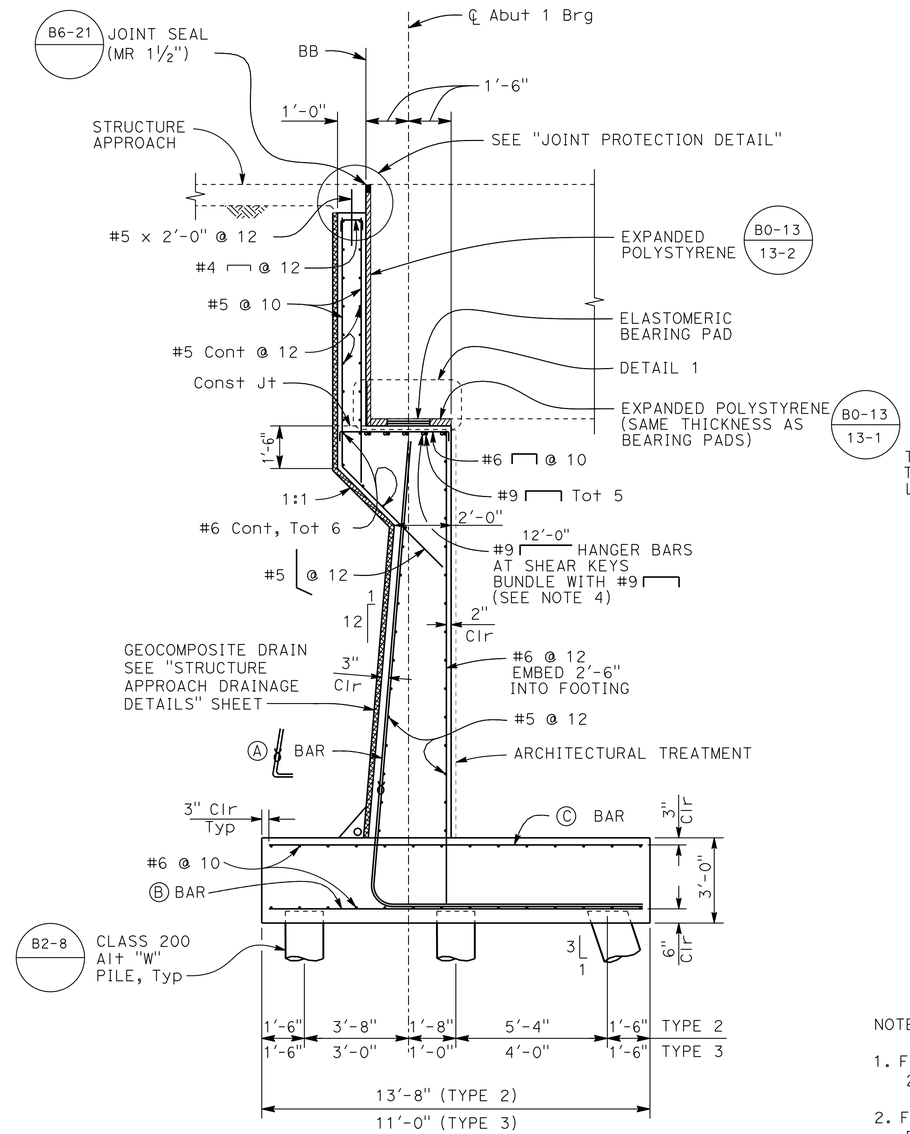

ABUTMENT TYPICAL SECTION (TYPES 2 & 3)

3/8"=1'-0"

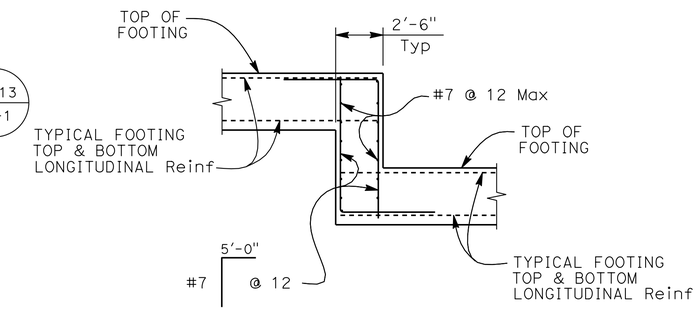

FOOTING STEP DETAIL

NO SCALE

REINFORCING SCHEDULE (SEE NOTE 3)

Type #	Ⓐ bars	Ⓑ bars	Ⓒ bars
1	2-#11 @ 10	#9 @ 10	#9 @ 10
2	2-#9 @ 10	#8 @ 10	#8 @ 10
3	2-#8 @ 10	#7 @ 10	#6 @ 10

NOTES:

1. For pile locations, see "ABUTMENT 1 LAYOUT" and "ABUTMENT 2 LAYOUT" sheets.
2. For Detail 1 and Joint Protection Detail, see "ABUTMENT DETAILS No. 4" sheet.
3. For location of Abutment Typical Section Types, see "ABUTMENT 1 LAYOUT" and "ABUTMENT 2 LAYOUT" sheets.
4. For additional abutment reinforcement, see Sections D-D and E-E on "ABUTMENT DETAILS No. 5" sheet.
5. For abutment hanger bars at shear keys, see Typical Shear Key Elevation detail on "ABUTMENT DETAILS No. 5" sheet.
6. For architectural treatment details, see "BRIDGE AESTHETICS" sheet.

LEGEND:

∝ Bundled bars

Tracy L. Bertram
DESIGN OVERSIGHT Tracy L Bertram
1-7-13
SIGN OFF DATE

	BY	CHECKED
DESIGN	K. MICHALSKI	J. HICKEY
DETAILS	K. MICHALSKI	J. HICKEY
QUANTITIES	P. PARK	E. FELIX

PREPARED FOR THE STATE OF CALIFORNIA DEPARTMENT OF TRANSPORTATION

PO-KANG CHEN
PROJECT ENGINEER

BRIDGE NO. 23-0247
POST MILES 12.8

GREEN VALLEY ROAD OC (OVER SB 680 ON-RAMP)
ABUTMENT DETAILS No. 1

DESIGN DETAIL SHEET (ENGLISH) (REV.7/16/10)

ORIGINAL SCALE IN INCHES FOR REDUCED PLANS 0 1 2 3

UNIT: 0741
PROJECT NUMBER & PHASE: 04000211311 CONTRACT NO.: 04-0A5341

DISREGARD PRINTS BEARING EARLIER REVISION DATES

REVISION DATES 01/12/12 5/4/12 9/12/12 10/19/12

SHEET 6 OF 27

FILE => 23-0247-f-adt01.dgn

USERNAME => s121614 DATE PLOTTED => 23-MAY-2013 TIME PLOTTED => 07:42

DIST	COUNTY	ROUTE	POST MILES TOTAL PROJECT	SHEET No	TOTAL SHEETS
04	Sol	12,80	2.1/2.8, 12.0/13.1	547	597

P.K. Chen 9/12/12
REGISTERED STRUCTURAL ENGINEER DATE

5-6-13
PLANS APPROVAL DATE

REGISTERED PROFESSIONAL ENGINEER PO-KANG CHEN No. S 3112 Exp. 9/30/13 STRUCTURAL STATE OF CALIFORNIA

The State of California or its officers or agents shall not be responsible for the accuracy or completeness of electronic copies of this plan sheet.

SOLANO TRANSPORTATION AUTHORITY
ONE HARBOR CENTER, SUITE 130
SUISUN CITY, CA 94585

MARK THOMAS & COMPANY, INC. + NOLTE ASSOCIATES, INC.
3000 OAK ROAD, SUITE 650
WALNUT CREEK, CA 94597

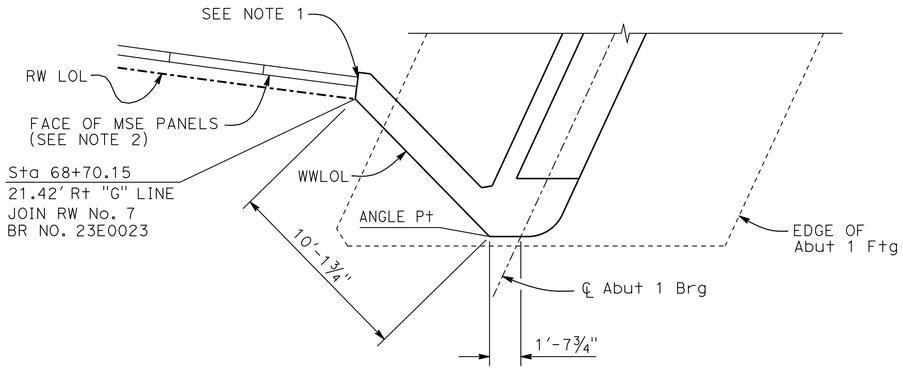

ABUTMENT 1 - PLAN
EASTERLY WINGWALL

1/4"=1'-0"

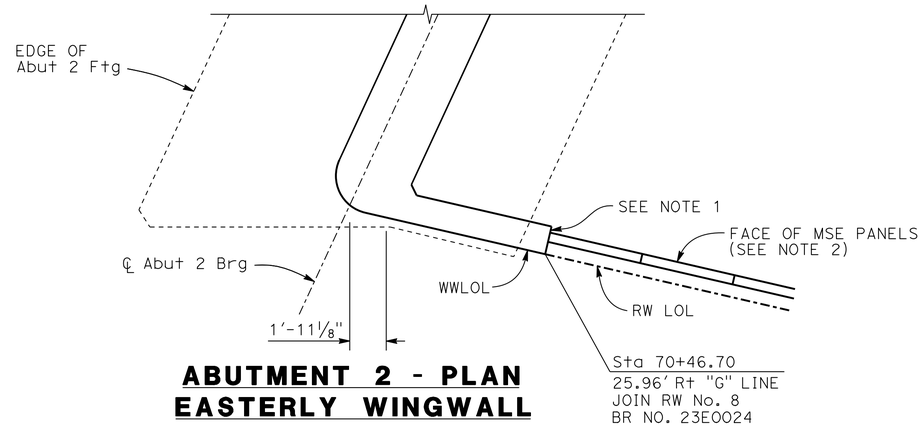

ABUTMENT 2 - PLAN
EASTERLY WINGWALL

1/4"=1'-0"

NOTE:

Conc barrier (Type 732) shown,
Conc barrier (Type 26) similar

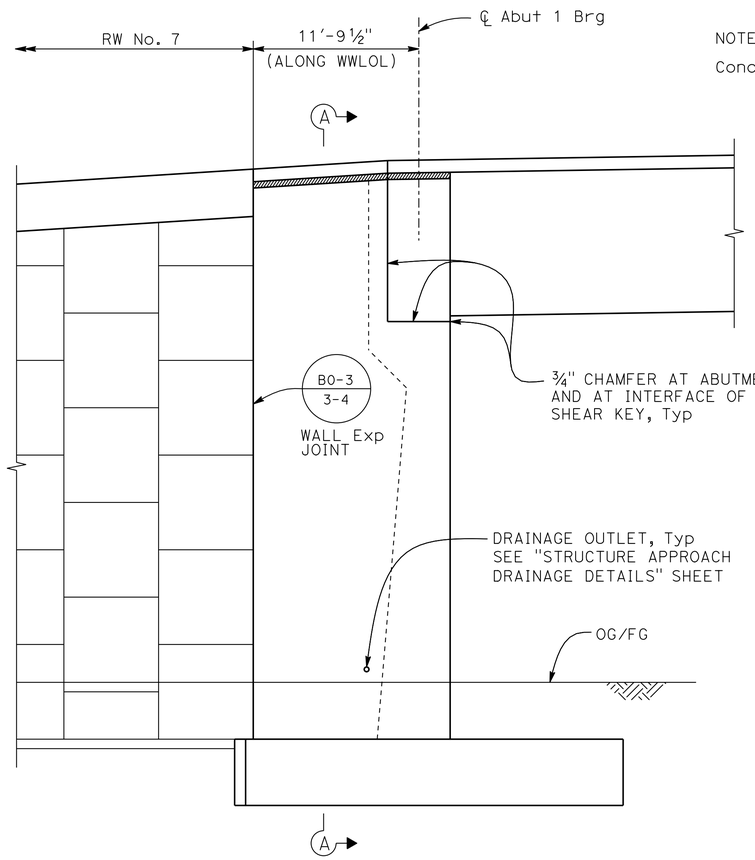

ABUTMENT 1 - ELEVATION
EASTERLY WINGWALL

1/4"=1'-0"

NOTE:

Abut piles not shown for clarity

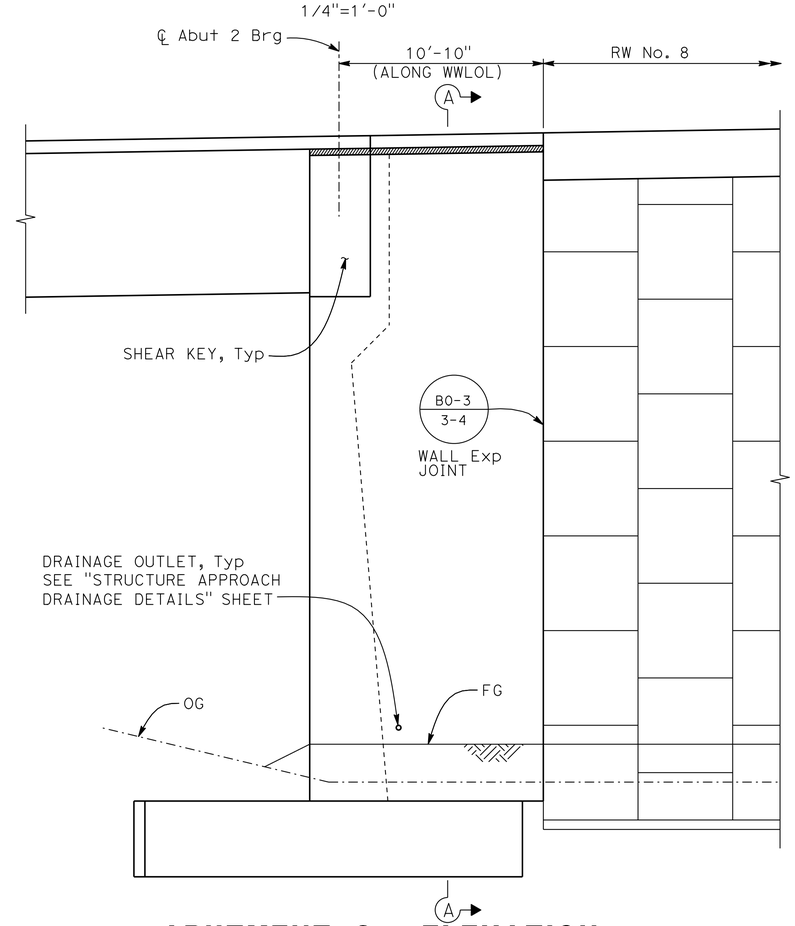

ABUTMENT 2 - ELEVATION
EASTERLY WINGWALL

1/4"=1'-0"

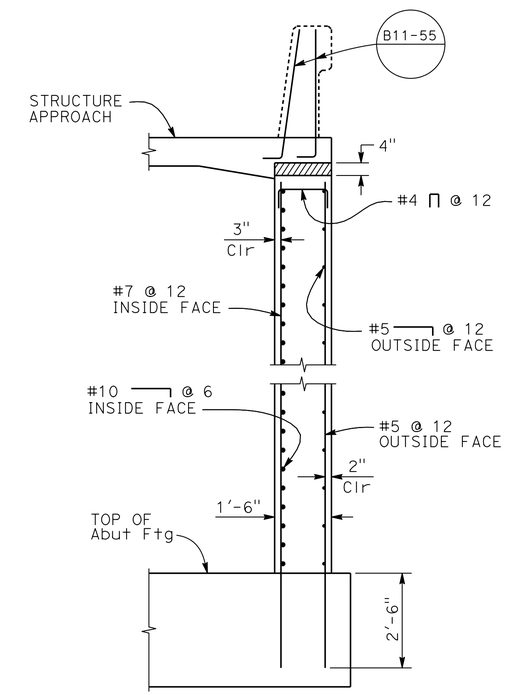

SECTION A-A

1/2"=1'-0"

NOTES:

1. See Retaining Wall Plans for connection details between MSE panel and concrete wingwall.
2. Offset between face of MSE panel and face of the concrete wingwall as dictated by location layout lines shown elsewhere in the Project Plans.

Tracy L. Bertram
DESIGN OVERSIGHT Tracy L Bertram
1-7-13
SIGN OFF DATE

	BY	CHECKED
DESIGN	K. MICHALSKI	J. HICKEY
DETAILS	K. MICHALSKI	J. HICKEY
QUANTITIES	P. PARK	E. FELIX

PREPARED FOR THE STATE OF CALIFORNIA DEPARTMENT OF TRANSPORTATION

PO-KANG CHEN
PROJECT ENGINEER

BRIDGE NO. 23-0247
POST MILES 12.8

GREEN VALLEY ROAD OC (OVER SB 680 ON-RAMP)
ABUTMENT DETAILS NO. 2

DESIGN DETAIL SHEET (ENGLISH) (REV.7/16/10)

ORIGINAL SCALE IN INCHES FOR REDUCED PLANS 0 1 2 3

UNIT: 0741
PROJECT NUMBER & PHASE: 04000211311 CONTRACT NO.: 04-0A5341

DISREGARD PRINTS BEARING EARLIER REVISION DATES

REVISION DATES 01/12/12 5/4/12 9/27/12 10/19/12

SHEET 7 OF 27

FILE => 23-0247-f-adt02.dgn

USERNAME => s12614 DATE PLOTTED => 23-MAY-2013 TIME PLOTTED => 07:42

DIST	COUNTY	ROUTE	POST MILES TOTAL PROJECT	SHEET No	TOTAL SHEETS
04	Sol	12,80	2.1/2.8, 12.0/13.1	548	597

P.K. Chen 9/12/12
REGISTERED STRUCTURAL ENGINEER DATE

5-6-13
PLANS APPROVAL DATE

REGISTERED PROFESSIONAL ENGINEER
PO-KANG CHEN
No. S 3112
Exp. 9/30/13
STRUCTURAL
STATE OF CALIFORNIA

The State of California or its officers or agents shall not be responsible for the accuracy or completeness of electronic copies of this plan sheet.

SOLANO TRANSPORTATION AUTHORITY
ONE HARBOR CENTER, SUITE 130
SUISUN CITY, CA 94585

MARK THOMAS & COMPANY, INC. + NOLTE ASSOCIATES, INC.
3000 OAK ROAD, SUITE 650
WALNUT CREEK, CA 94597

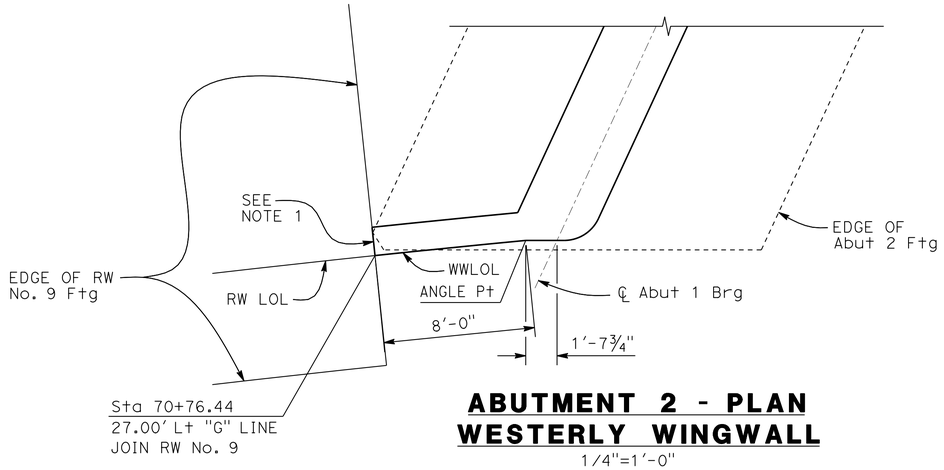

ABUTMENT 2 - PLAN
WESTERLY WINGWALL
1/4"=1'-0"

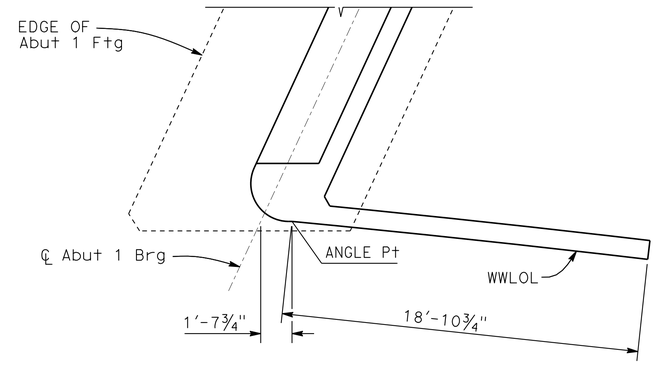

ABUTMENT 1 - PLAN
WESTERLY WINGWALL
1/4"=1'-0"

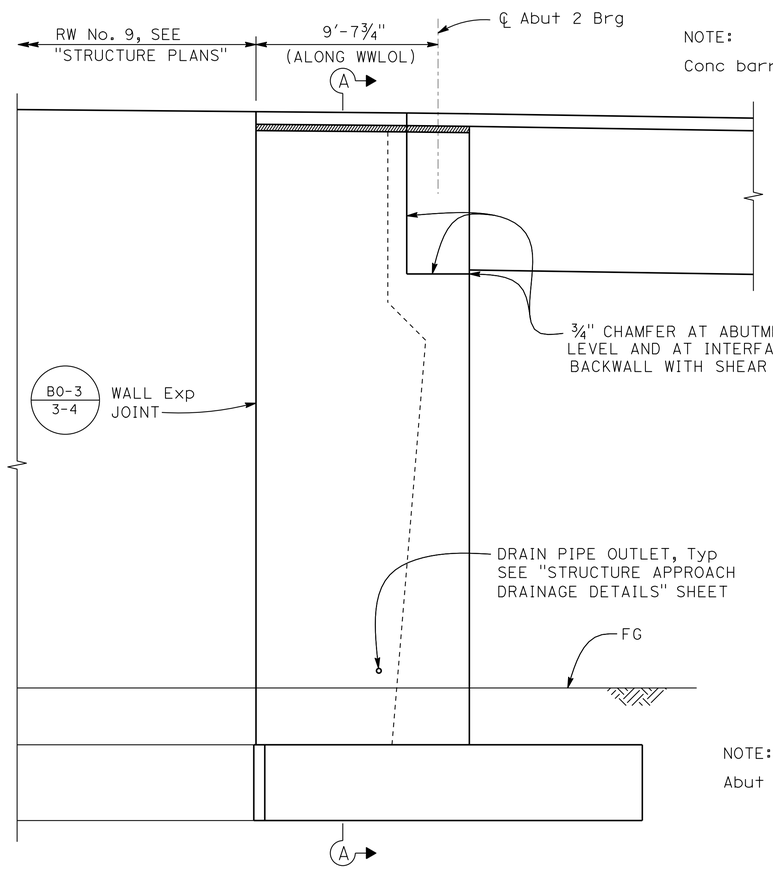

NOTE:
Conc barrier not shown

NOTE:
Abut piles not shown for clarity

ABUTMENT 2 - ELEVATION
WESTERLY WINGWALL
1/4"=1'-0"

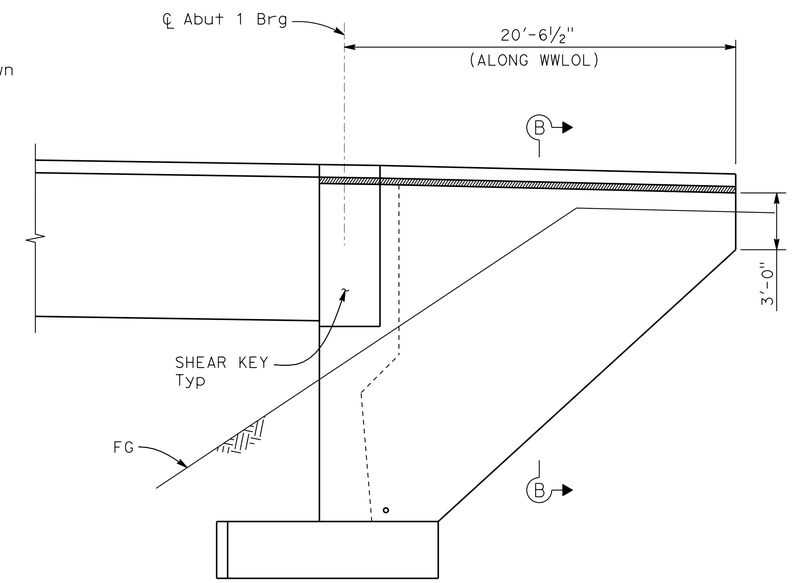

ABUTMENT 1 - ELEVATION
WESTERLY WINGWALL
1/4"=1'-0"

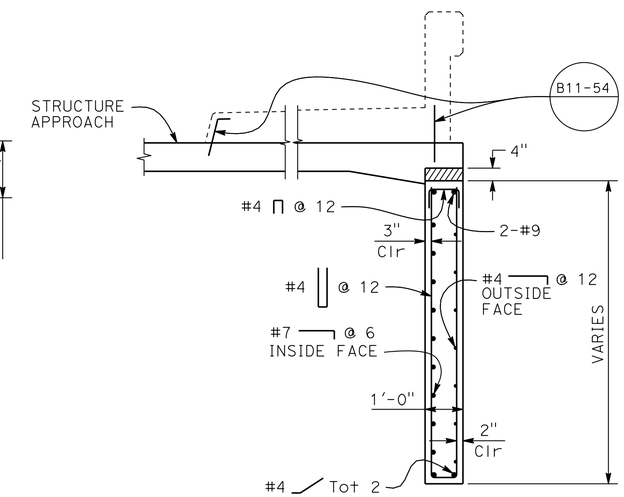

SECTION B-B
1/2"=1'-0"

NOTES:

1. See Retaining Wall Plans for connection details between Type 1 wall stem and concrete wingwall.
2. For 'Section A-A', see "ABUTMENT DETAILS No. 2" sheet.

Tracy L. Bertram
DESIGN OVERSIGHT Tracy L Bertram
1-7-13
SIGN OFF DATE

	BY	CHECKED
DESIGN	K. MICHALSKI	J. HICKEY
DETAILS	K. MICHALSKI	J. HICKEY
QUANTITIES	P. PARK	E. FELIX

PREPARED FOR THE STATE OF CALIFORNIA DEPARTMENT OF TRANSPORTATION

PO-KANG CHEN
PROJECT ENGINEER

BRIDGE NO. 23-0247
POST MILES 12.8

GREEN VALLEY ROAD OC (OVER SB 680 ON-RAMP)
ABUTMENT DETAILS NO. 3

DESIGN DETAIL SHEET (ENGLISH) (REV.7/16/10)

ORIGINAL SCALE IN INCHES FOR REDUCED PLANS 0 1 2 3

UNIT: 0741
PROJECT NUMBER & PHASE: 04000211311 CONTRACT NO.: 04-0A5341

DISREGARD PRINTS BEARING EARLIER REVISION DATES

REVISION DATES: 01/12/12 5/8/12 9/12/12 10/19/12

SHEET 8 OF 27

FILE => 23-0247-f-adt03.dgn

USERNAME => s124296 DATE PLOTTED => 08-MAY-2013 TIME PLOTTED => 08:24

DIST	COUNTY	ROUTE	POST MILES TOTAL PROJECT	SHEET No	TOTAL SHEETS
04	Sol	12,80	2.1/2.8, 12.0/13.1	549	597

P.K. Chen 9/12/12
REGISTERED STRUCTURAL ENGINEER DATE

5-6-13
PLANS APPROVAL DATE

REGISTERED PROFESSIONAL ENGINEER PO-KANG CHEN No. S 3112 Exp. 9/30/13 STRUCTURAL STATE OF CALIFORNIA

The State of California or its officers or agents shall not be responsible for the accuracy or completeness of electronic copies of this plan sheet.

SOLANO TRANSPORTATION AUTHORITY
ONE HARBOR CENTER, SUITE 130
SUISUN CITY, CA 94585

MARK THOMAS & COMPANY, INC. + NOLTE ASSOCIATES, INC.
3000 OAK ROAD, SUITE 650
WALNUT CREEK, CA 94597

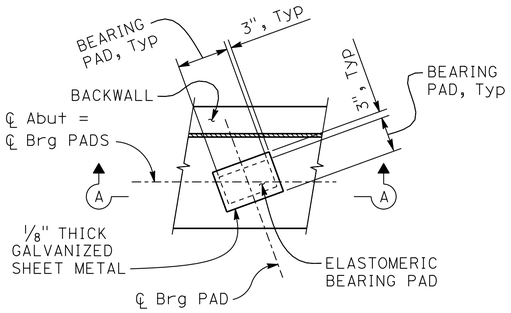

PLAN

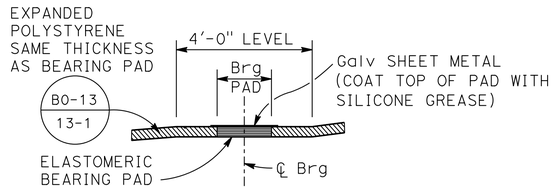

SECTION A-A

TYPICAL BEARING PAD DETAIL

NO SCALE

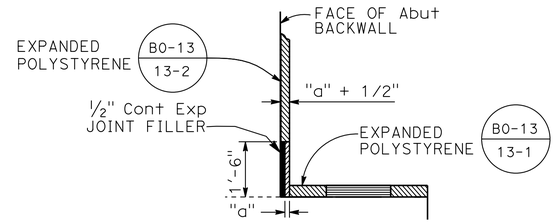

DETAIL 1

NO SCALE

NOTE: For "a" dimension, see B6-21

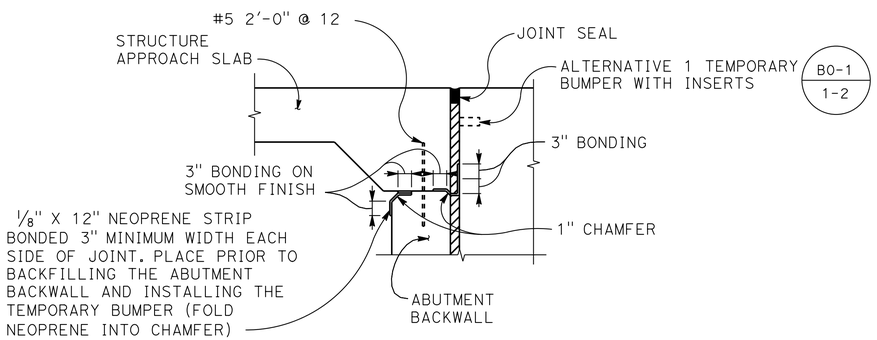

JOINT PROTECTION DETAIL

NO SCALE

Tracy L. Bertram
DESIGN OVERSIGHT Tracy L Bertram
1-7-13
SIGN OFF DATE

	BY	CHECKED
DESIGN	K. MICHALSKI	J. HICKEY
DETAILS	K. MICHALSKI	J. HICKEY
QUANTITIES	P. PARK	E. FELIX

PREPARED FOR THE STATE OF CALIFORNIA DEPARTMENT OF TRANSPORTATION

PO-KANG CHEN
PROJECT ENGINEER

BRIDGE NO. 23-0247
POST MILES 12.8

GREEN VALLEY ROAD OC (OVER SB 680 ON-RAMP)
ABUTMENT DETAILS No. 4

DESIGN DETAIL SHEET (ENGLISH) (REV.7/16/10)

ORIGINAL SCALE IN INCHES FOR REDUCED PLANS 0 1 2 3

UNIT: 0741
PROJECT NUMBER & PHASE: 04000211311 CONTRACT NO.: 04-0A5341

DISREGARD PRINTS BEARING EARLIER REVISION DATES

REVISION DATES 01/12/12 5/8/12 9/12/12 10/19/12

SHEET 9 OF 27

FILE => 23-0247-f-adt04.dgn

USERNAME => s124436 DATE PLOTTED => 08-MAY-2013 TIME PLOTTED => 08:24

DIST	COUNTY	ROUTE	POST MILES TOTAL PROJECT	SHEET No	TOTAL SHEETS
04	Sol	12,80	2.1/2.8, 12.0/13.1	550	597

P.K. Chen 9/12/12
REGISTERED STRUCTURAL ENGINEER DATE

5-6-13
PLANS APPROVAL DATE

REGISTERED PROFESSIONAL ENGINEER PO-KANG CHEN No. S 3112 Exp. 9/30/13 STRUCTURAL STATE OF CALIFORNIA

The State of California or its officers or agents shall not be responsible for the accuracy or completeness of electronic copies of this plan sheet.

SOLANO TRANSPORTATION AUTHORITY
ONE HARBOR CENTER, SUITE 130
SUISUN CITY, CA 94585

MARK THOMAS & COMPANY, INC. + NOLTE ASSOCIATES, INC.
3000 OAK ROAD, SUITE 650
WALNUT CREEK, CA 94597

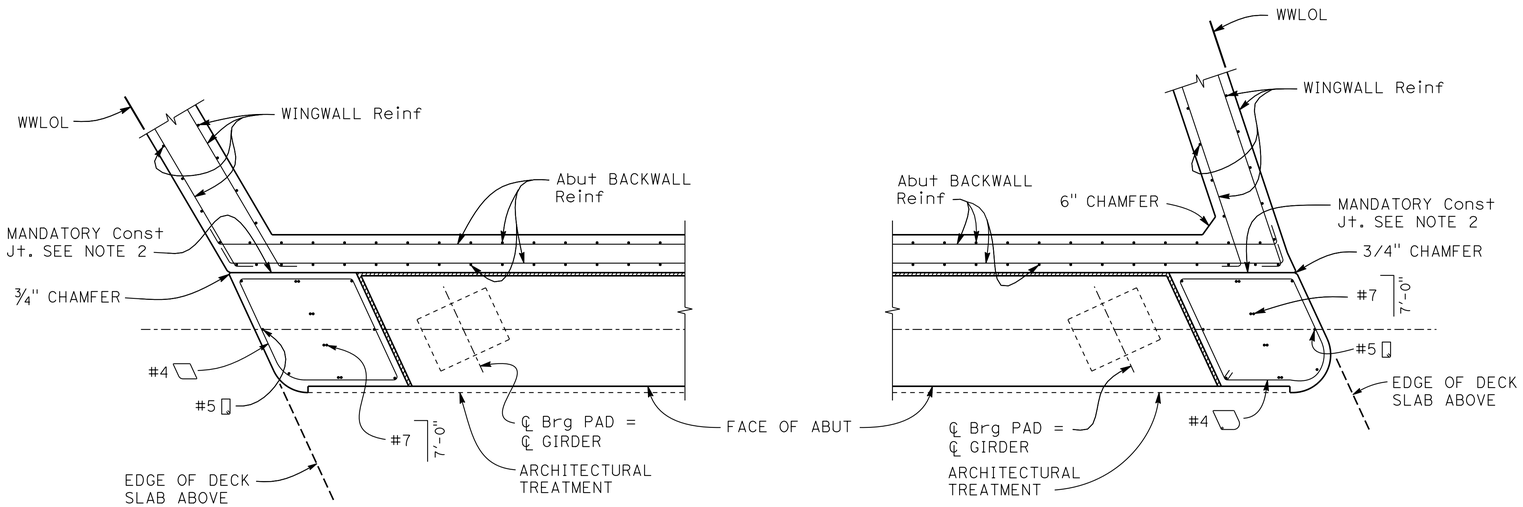

SECTION D-D

1/2"=1'-0"

NOTE: Abut 2 shown, Abut 1 similar

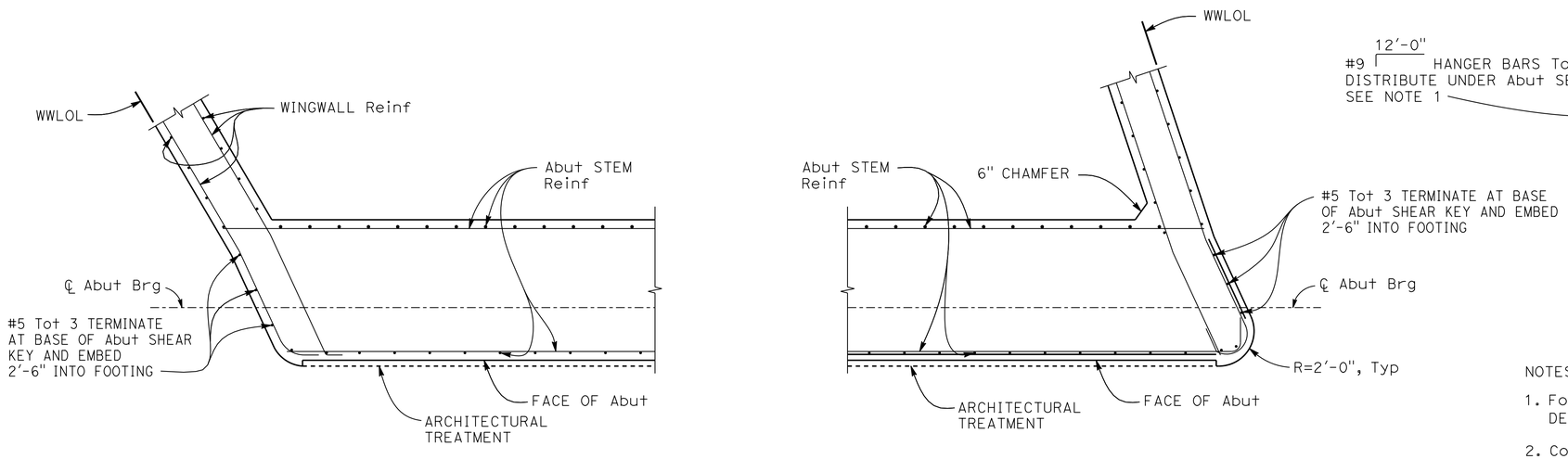

SECTION E-E

1/2"=1'-0"

NOTE: Abut 2 shown, Abut 1 similar

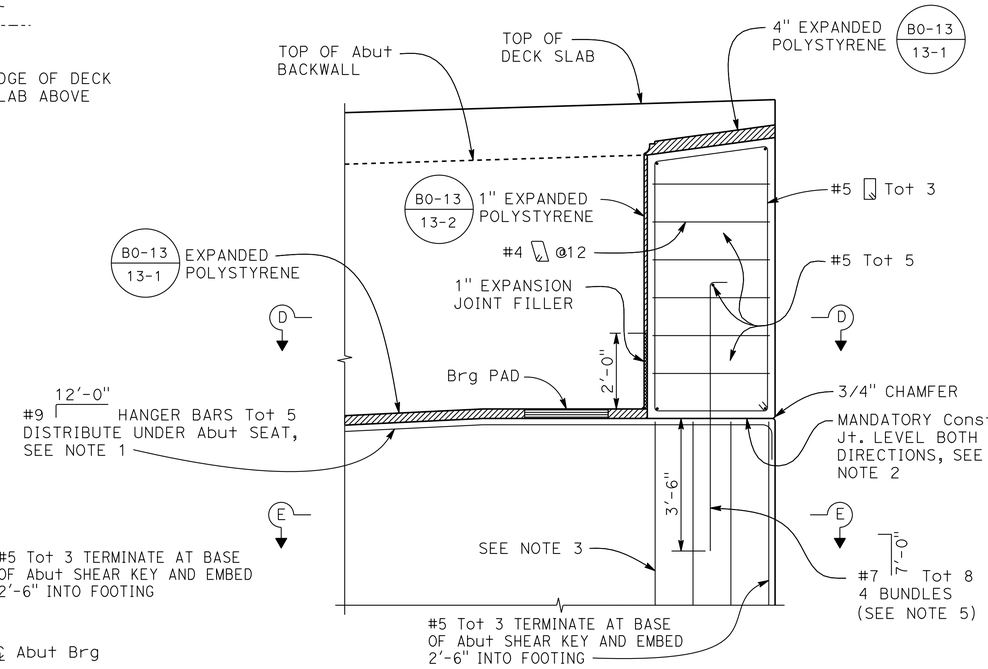

TYPICAL SHEAR KEY ELEVATION

1/2"=1'-0"

NOTES:

1. For location of abutment hanger bars, see "ABUTMENT DETAILS No. 1" sheet.
2. Contact surfaces of mandatory construction joint shall be smooth finished and lined with 15 pound construction paper.
3. Terminate typical abutment front face reinforcement at base of shear keys.
4. Shear key shall be poured separate from abutment seat and backwall.
5. Main vertical shear key reinf shall be centered transversely in the shear key, and shall be galvanized.
6. For achitectural treatment details, see "BRIDGE AESTHETICS" sheet.

Tracy L. Bertram
DESIGN OVERSIGHT Tracy L Bertram
1-7-13
SIGN OFF DATE

	BY	CHECKED
DESIGN	K. MICHALSKI	J. HICKEY
DETAILS	K. MICHALSKI	J. HICKEY
QUANTITIES	P. PARK	E. FELIX

PREPARED FOR THE STATE OF CALIFORNIA DEPARTMENT OF TRANSPORTATION

PO-KANG CHEN
PROJECT ENGINEER

BRIDGE NO. 23-0247
POST MILES 12.8

GREEN VALLEY ROAD OC (OVER SB 680 ON-RAMP)
ABUTMENT DETAILS No. 5

DESIGN DETAIL SHEET (ENGLISH) (REV.7/16/10)

ORIGINAL SCALE IN INCHES FOR REDUCED PLANS 0 1 2 3

UNIT: 0741
PROJECT NUMBER & PHASE: 04000211311 CONTRACT NO.: 04-0A5341

DISREGARD PRINTS BEARING EARLIER REVISION DATES
REVISION DATES 01/12/12 5/4/12 9/12/12 10/19/12

SHEET 10 OF 27

FILE => 23-0247-f-adt05.dgn

USERNAME => s124496 DATE PLOTTED => 09-MAY-2013 TIME PLOTTED => 06:43

DIST	COUNTY	ROUTE	POST MILES TOTAL PROJECT	SHEET No	TOTAL SHEETS
04	Sol	12,80	2.1/2.8, 12.0/13.1	551	597

P.K. Chen 9/12/12
REGISTERED STRUCTURAL ENGINEER DATE

5-6-13
PLANS APPROVAL DATE

REGISTERED PROFESSIONAL ENGINEER PO-KANG CHEN No. S 3112 Exp. 9/30/13 STRUCTURAL STATE OF CALIFORNIA

The State of California or its officers or agents shall not be responsible for the accuracy or completeness of electronic copies of this plan sheet.

SOLANO TRANSPORTATION AUTHORITY
ONE HARBOR CENTER, SUITE 130
SUISUN CITY, CA 94585

MARK THOMAS & COMPANY, INC. + NOLTE ASSOCIATES, INC.
3000 OAK ROAD, SUITE 650
WALNUT CREEK, CA 94597

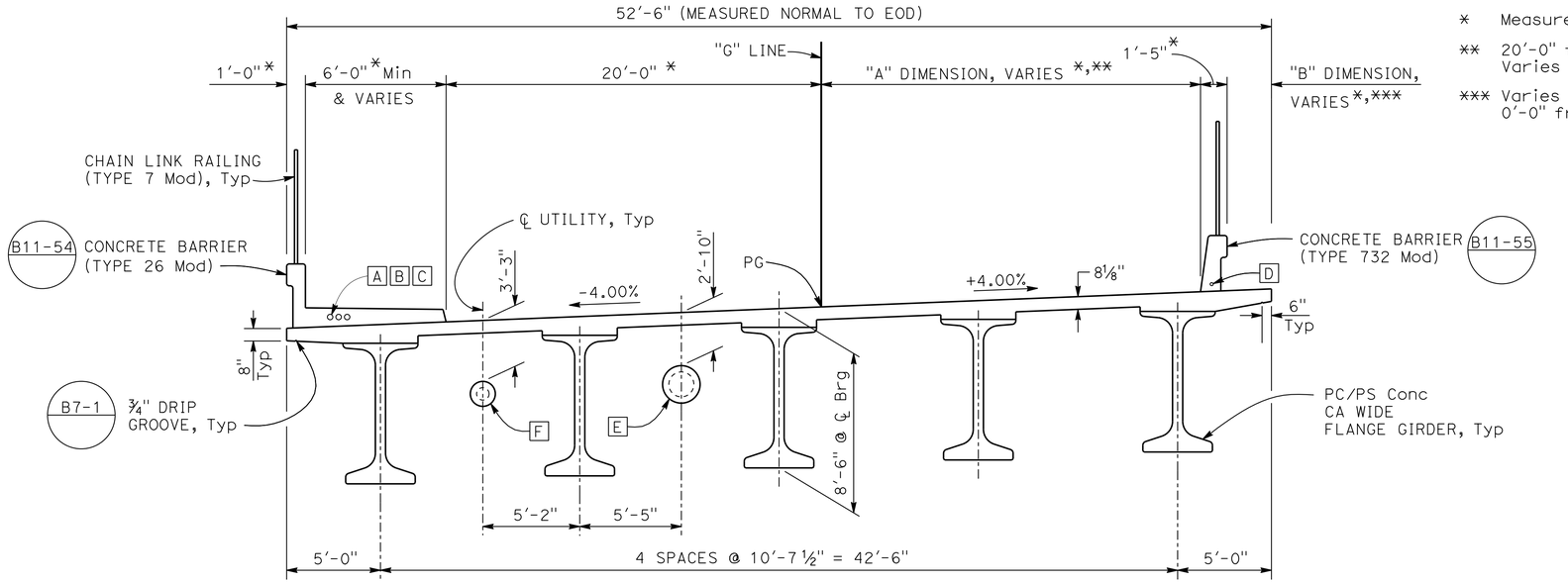

* Measured radial to "G" Line

** 20'-0" from BB to Sta 69+79.88
Varies from Sta 69+79.88 to EB

*** Varies from BB to Sta 69+79.88
0'-0" from Sta 69+79.88 to EB

UTILITIES:

- A 2" Dia Conduit (Lighting), see 'ROAD PLANS'
- B 2" Dia Conduit (Signal Interconnect), see 'ROAD PLANS'
- C 2" Dia Conduit (Future), see 'ROAD PLANS'
- D 2" Dia Conduit (Loop Detector), see 'ROAD PLANS'
- E 16" Dia Water Line in 24" Casing
- F 8" Dia Water Line in 16" Casing

TYPICAL SECTION

1/4"= 1'-0"

NOTE:

Dimensions shown are Normal to EOD unless noted otherwise

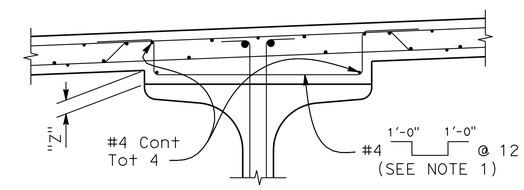

HAUNCH DETAIL

NO SCALE

(Reinf shown is in addition to Typ Section Reinf)

NOTE:

1. Reinforcement shown shall be provided at all locations where the height of haunch concrete, "Z", is 3" or more.

NOTE:

Conc barriers not shown

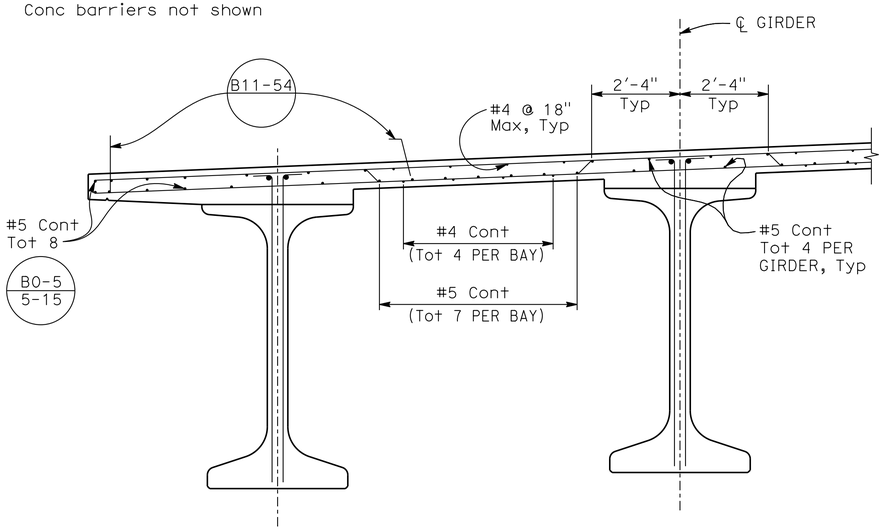

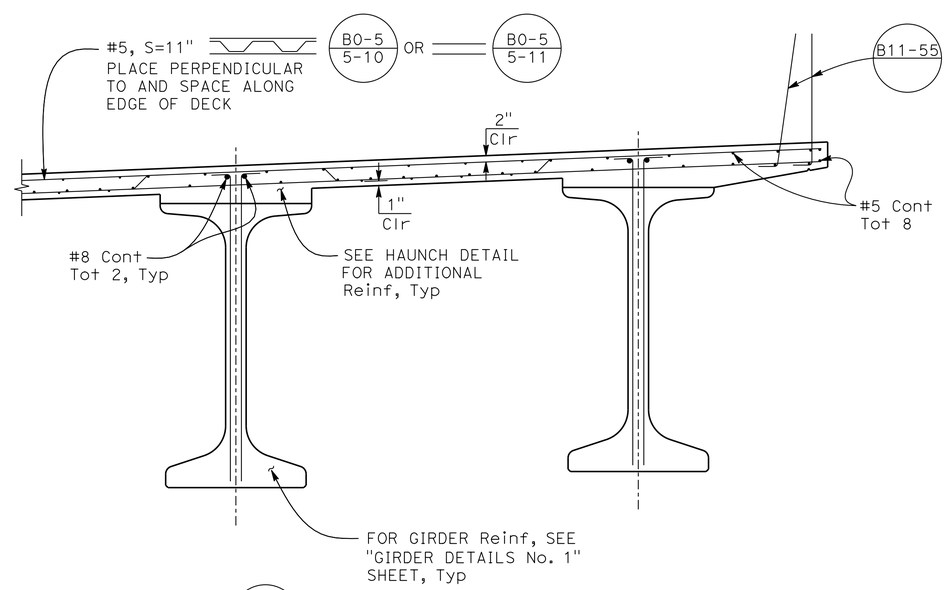

PARTIAL TYPICAL SECTION B0-5

1/2"= 1'-0"

Tracy L. Bertram
DESIGN OVERSIGHT Tracy L Bertram

1-7-13
SIGN OFF DATE

	BY	CHECKED
DESIGN	K. MICHALSKI	J. HICKEY
DETAILS	K. MICHALSKI	J. HICKEY
QUANTITIES	P. PARK	E. FELIX

PREPARED FOR THE STATE OF CALIFORNIA DEPARTMENT OF TRANSPORTATION

PO-KANG CHEN
PROJECT ENGINEER

BRIDGE NO. 23-0247
POST MILES 12.8

GREEN VALLEY ROAD OC (OVER SB 680 ON-RAMP)
TYPICAL SECTION

DESIGN DETAIL SHEET (ENGLISH) (REV.7/16/10)

ORIGINAL SCALE IN INCHES FOR REDUCED PLANS 0 1 2 3

UNIT: 0741
PROJECT NUMBER & PHASE: 04000211311 CONTRACT NO.: 04-0A5341

DISREGARD PRINTS BEARING EARLIER REVISION DATES

REVISION DATES 01/12/12 5/4/12 9/12/12 10/19/12

SHEET 11 OF 27

FILE => 23-0247-k-ts01.dgn

USERNAME => s124436 DATE PLOTTED => 08-MAY-2013 TIME PLOTTED => 08:24

DIST	COUNTY	ROUTE	POST MILES TOTAL PROJECT	SHEET No	TOTAL SHEETS
04	Sol	12,80	2.1/2.8, 12.0/13.1	552	597

P.K. Chen 9/12/12
REGISTERED STRUCTURAL ENGINEER DATE

5-6-13
PLANS APPROVAL DATE

REGISTERED PROFESSIONAL ENGINEER PO-KANG CHEN No. S 3112 Exp. 9/30/13 STRUCTURAL STATE OF CALIFORNIA

The State of California or its officers or agents shall not be responsible for the accuracy or completeness of electronic copies of this plan sheet.

SOLANO TRANSPORTATION AUTHORITY
ONE HARBOR CENTER, SUITE 130
SUISUN CITY, CA 94585

MARK THOMAS & COMPANY, INC. + NOLTE ASSOCIATES, INC.
3000 OAK ROAD, SUITE 650
WALNUT CREEK, CA 94597

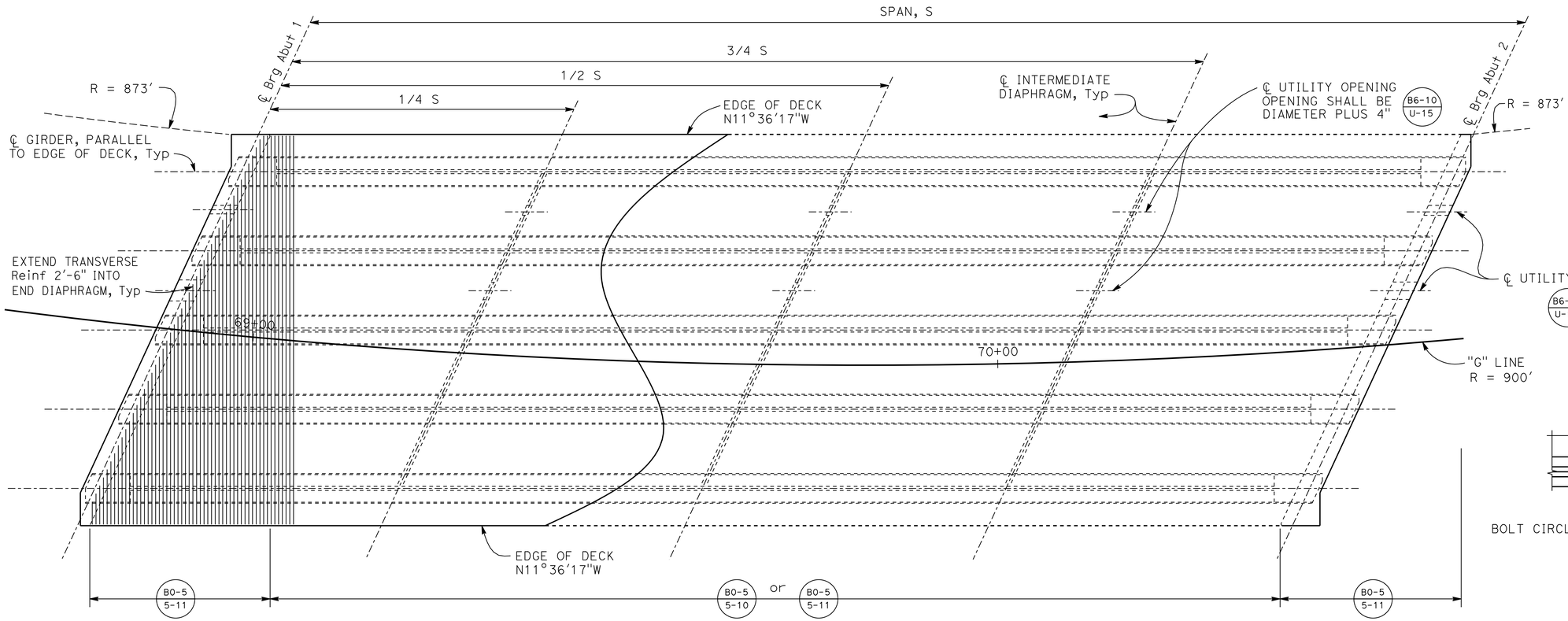

GIRDER LAYOUT
1/8" = 1′-0"

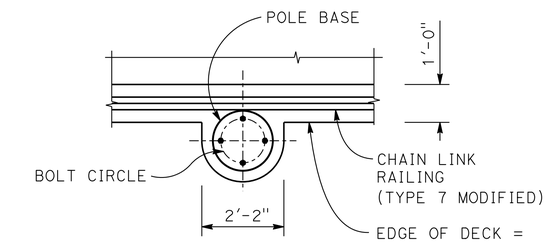

PLAN
1/2" = 1′-0"

NOTE:

1. For utility opening details at intermediate and end diaphragms, see "GIRDER DETAILS No. 3" sheet.

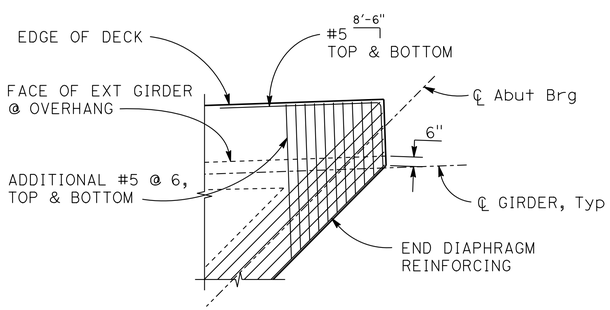

ACUTE CORNER

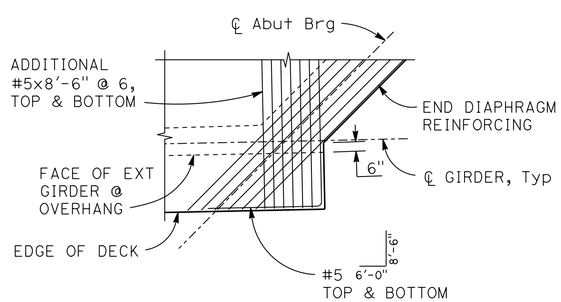

OBTUSE CORNER

DECK REINFORCEMENT AT CORNERS
NO SCALE

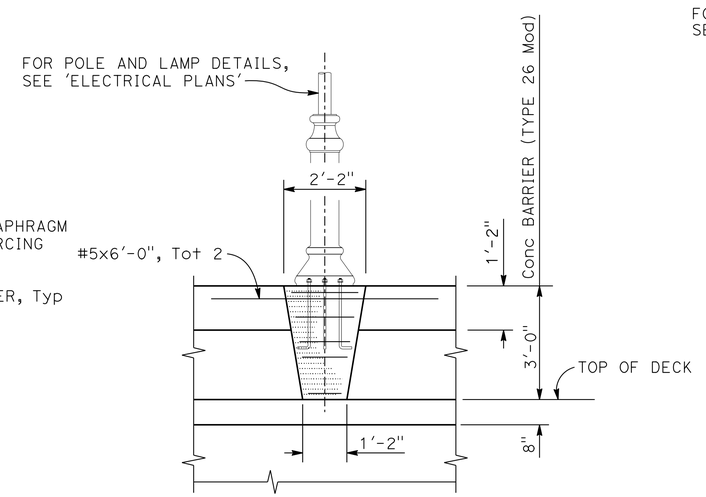

ELEVATION AT ELECTROLIER
1/2" = 1′-0"

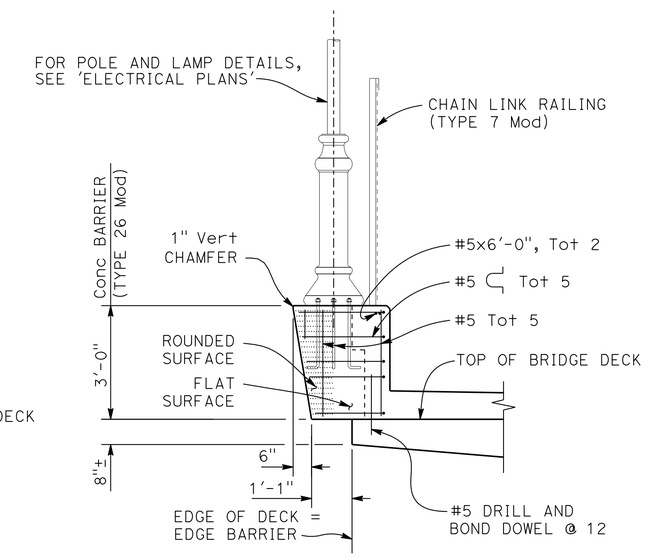

SIDE VIEW FOR TYPE 26 BARRIER
1/2" = 1′-0"

Tracy L. Bertram
DESIGN OVERSIGHT Tracy L Bertram
1-7-13
SIGN OFF DATE

	BY	CHECKED
DESIGN	K. MICHALSKI	J. HICKEY
DETAILS	K. MICHALSKI	J. HICKEY
QUANTITIES	P. PARK	E. FELIX

PREPARED FOR THE STATE OF CALIFORNIA DEPARTMENT OF TRANSPORTATION

PO-KANG CHEN
PROJECT ENGINEER

BRIDGE NO. 23-0247
POST MILES 12.8

GREEN VALLEY ROAD OC (OVER SB 680 ON-RAMP)
GIRDER LAYOUT

DESIGN DETAIL SHEET (ENGLISH) (REV.7/16/10)

ORIGINAL SCALE IN INCHES FOR REDUCED PLANS 0 1 2 3

UNIT: 0741
PROJECT NUMBER & PHASE: 04000211311 CONTRACT NO.: 04-0A5341

DISREGARD PRINTS BEARING EARLIER REVISION DATES

REVISION DATES 01/27/12 5/4/12 9/12/12 10/19/12

SHEET 12 OF 27

FILE => 23-0247-1-g_lo01.dgn

USERNAME => s124496 DATE PLOTTED => 08-MAY-2013 TIME PLOTTED => 08:24

DIST	COUNTY	ROUTE	POST MILES TOTAL PROJECT	SHEET No	TOTAL SHEETS
04	Sol	12,80	2.1/2.8, 12.0/13.1	553	597

P.K. Chen 9/12/12
REGISTERED STRUCTURAL ENGINEER DATE

5-6-13
PLANS APPROVAL DATE

REGISTERED PROFESSIONAL ENGINEER PO-KANG CHEN No. S 3112 Exp. 9/30/13 STRUCTURAL STATE OF CALIFORNIA

The State of California or its officers or agents shall not be responsible for the accuracy or completeness of electronic copies of this plan sheet.

SOLANO TRANSPORTATION AUTHORITY
ONE HARBOR CENTER, SUITE 130
SUISUN CITY, CA 94585

MARK THOMAS & COMPANY, INC. + NOLTE ASSOCIATES, INC.
3000 OAK ROAD, SUITE 650
WALNUT CREEK, CA 94597

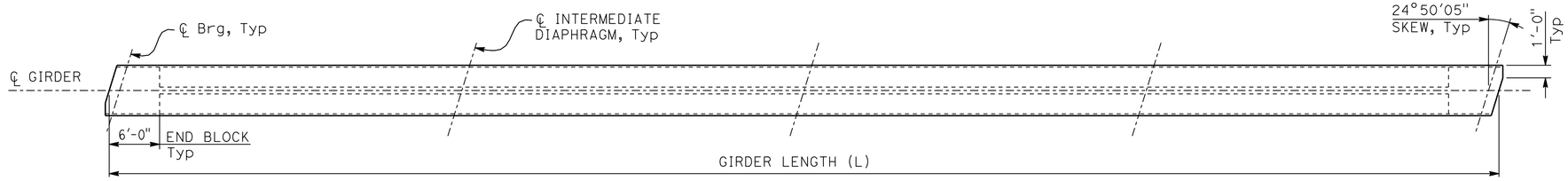

PLAN
No Scale

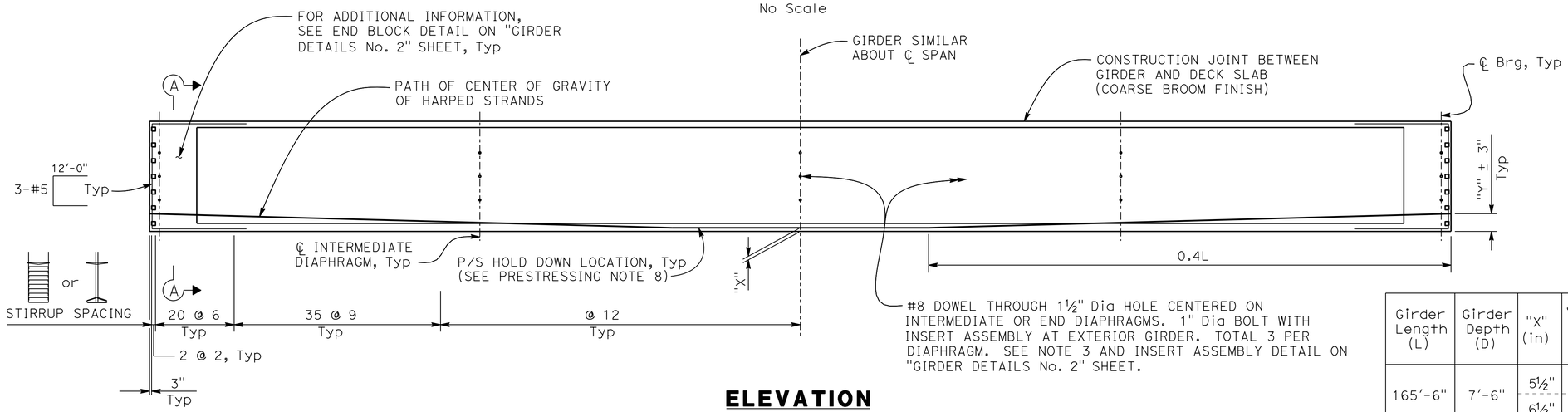

ELEVATION
NO SCALE

NOTES:

1. Girder ends to be cast such that a level surface is provided at bearing pads.
2. Girder stirrups shall be field bent after girder erection.
3. Formed holes and insert assemblies shall be parallel to ℄ intermediate diaphragms and ℄ abutment.

Girder Length (L)	Girder Depth (D)	"X" (in)	Jacking Force (P) (kips)	As, min (in^2)	"Y" (in)	Concrete Strength (ksi)		Midspan Dead Load Deflection (in)	
						f'ci	f'c	Deck	Rail
165'-6"	7'-6"	5½"	2980	14.76	14"	7.5	8.5	3.00"	0.40"
		6½"	3076	15.19					

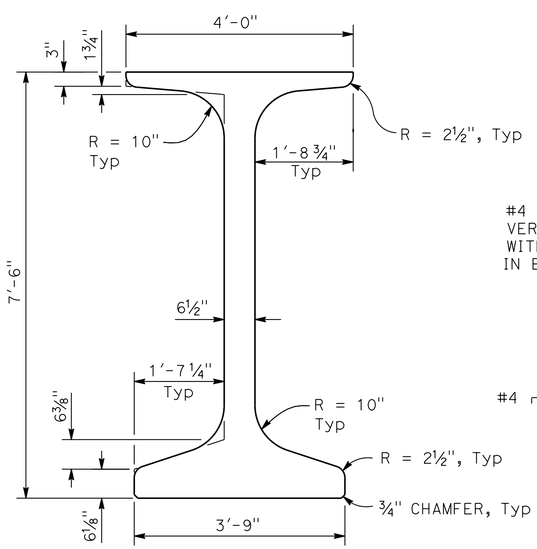

GIRDER TYPICAL SECTION
3/4" = 1'-0"

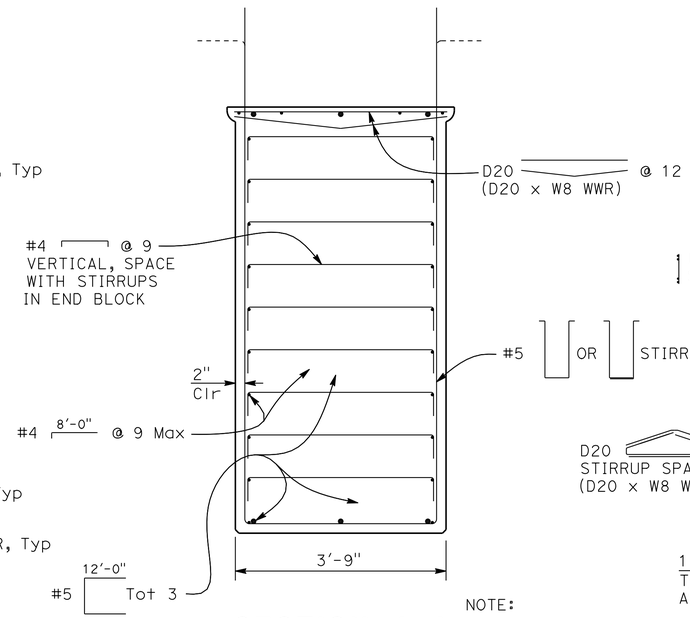

SECTION A-A
3/4" = 1'-0"

NOTE:
W8 WWR not shown

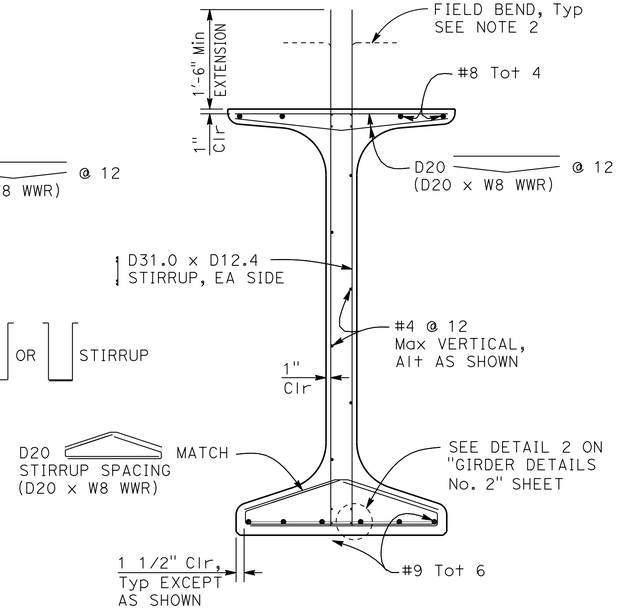

TYPICAL GIRDER SECTION
3/4" = 1'-0"

PRESTRESSING NOTES

1. The Jacking Force (P) is the jacking force required at the point of control along the span. The jacking force does not include any fabrication specific losses
2. The maximum tensile stress in the prestressing steel upon release shall not exceed 75% of thespecified minimum ultimate tensile strength of the prestressing steel
3. The maximum temporary tensile stress (jacking stress) in the prestressing steel shall not exceed 80% of the specified minimum ultimate tensile strength of the prestressing steel
4. Concrete strength:
   f'ci is at time of initial stressing
   f'c is at 28 days
5. Deflection components are informational and will be used to set screed line elevations
6. Screed line elevations for deck concrete will be determined by the Engineer
7. Contractor may interpolate "P" and "X" values between the limits shown, as approved by the Engineer
8. There shall be a minimum of two hold downs per girder for the prestressing
9. Prestressing strand shall be 270 ksi low relaxation
10. As, Min is the minimum area required of prestressing steel

Tracy L. Bertram
DESIGN OVERSIGHT Tracy L Bertram
1-7-13
SIGN OFF DATE

	BY	CHECKED
DESIGN	K. MICHALSKI	J. HICKEY
DETAILS	K. MICHALSKI	J. HICKEY
QUANTITIES	P. PARK	E. FELIX

PREPARED FOR THE STATE OF CALIFORNIA DEPARTMENT OF TRANSPORTATION

PO-KANG CHEN
PROJECT ENGINEER

BRIDGE NO. 23-0247
POST MILES 12.8

GREEN VALLEY ROAD OC (OVER SB 680 ON-RAMP)
GIRDER DETAILS No. 1

DESIGN DETAIL SHEET (ENGLISH) (REV.7/16/10)

ORIGINAL SCALE IN INCHES FOR REDUCED PLANS 0 1 2 3

UNIT: 0741
PROJECT NUMBER & PHASE: 04000211311 CONTRACT NO.: 04-0A5341

DISREGARD PRINTS BEARING EARLIER REVISION DATES
REVISION DATES 01/24/12 5/14/12 9/12/12 10/19/12

SHEET 13 OF 27

FILE => 23-0247-1-gdt01.dgn

USERNAME => s124496 DATE PLOTTED => 08-MAY-2013 TIME PLOTTED => 08:24

DIST	COUNTY	ROUTE	POST MILES TOTAL PROJECT	SHEET No	TOTAL SHEETS
04	Sol	12,80	2.1/2.8, 12.0/13.1	554	597

P.K. Chen 9/12/12
REGISTERED STRUCTURAL ENGINEER DATE

5-6-13
PLANS APPROVAL DATE

REGISTERED PROFESSIONAL ENGINEER PO-KANG CHEN No. S 3112 Exp. 9/30/13 STRUCTURAL STATE OF CALIFORNIA

The State of California or its officers or agents shall not be responsible for the accuracy or completeness of electronic copies of this plan sheet.

SOLANO TRANSPORTATION AUTHORITY
ONE HARBOR CENTER, SUITE 130
SUISUN CITY, CA 94585

MARK THOMAS & COMPANY, INC. + NOLTE ASSOCIATES, INC.
3000 OAK ROAD, SUITE 650
WALNUT CREEK, CA 94597

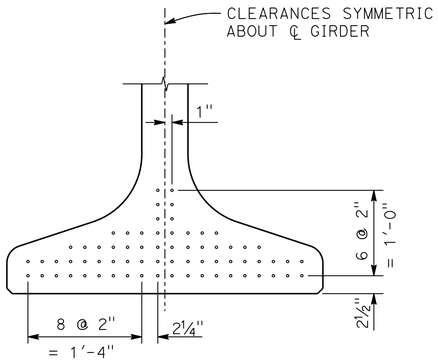

CLEARANCES FOR PRETENSIONED STRANDS

NO SCALE

NOTES:

1. Clearances shown are for 0.6" nominal diameter strands.
2. Approval by the Engineer is required for deviation.

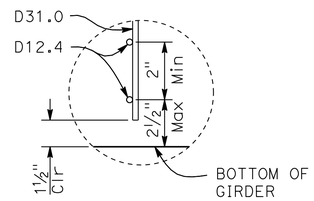

DETAIL 2

NO SCALE

NOTES:

1. Bottom of stirrup WWR detail shown, top similar
2. Longitudinal wire area shall be 40% greater of vertical deformed wire's area

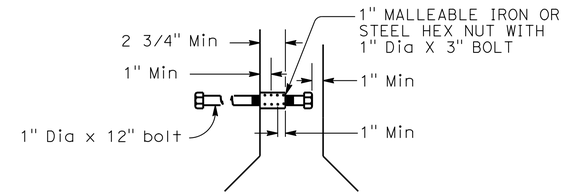

INSERT ASSEMBLY

NO SCALE

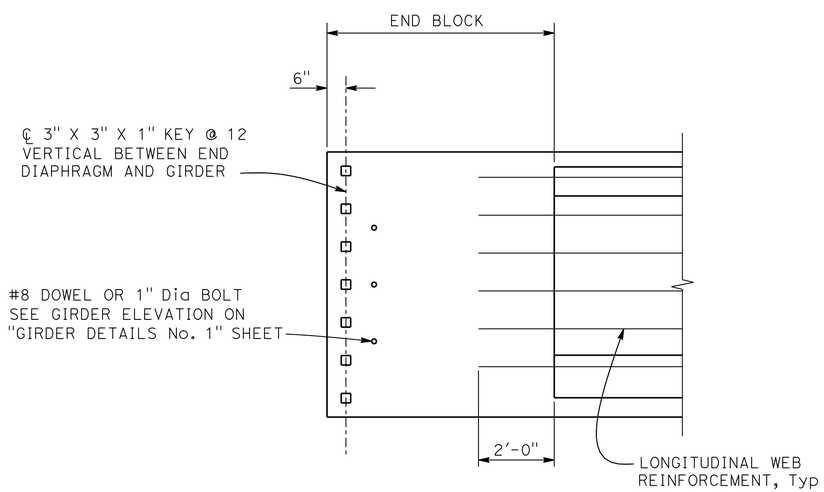

END BLOCK - ELEVATION

NO SCALE

Tracy L. Bertram
DESIGN OVERSIGHT Tracy L Bertram
1-7-13
SIGN OFF DATE

	BY	CHECKED
DESIGN	K. MICHALSKI	J. HICKEY
DETAILS	K. MICHALSKI	J. HICKEY
QUANTITIES	P. PARK	E. FELIX

PREPARED FOR THE STATE OF CALIFORNIA DEPARTMENT OF TRANSPORTATION

PO-KANG CHEN
PROJECT ENGINEER

BRIDGE NO. 23-0247
POST MILES 12.8

GREEN VALLEY ROAD OC (OVER SB 680 ON-RAMP)
GIRDER DETAILS No. 2

DESIGN DETAIL SHEET (ENGLISH) (REV.7/16/10)

ORIGINAL SCALE IN INCHES FOR REDUCED PLANS 0 1 2 3

UNIT: 0741
PROJECT NUMBER & PHASE: 04000211311 CONTRACT NO.: 04-0A5341

DISREGARD PRINTS BEARING EARLIER REVISION DATES → REVISION DATES 01/12/12 5/14/12 9/12/12 10/19/12

SHEET 14 OF 27

FILE => 23-0247-1-gdt02.dgn

USERNAME => s124936 DATE PLOTTED => 08-MAY-2013 TIME PLOTTED => 08:24

DIST	COUNTY	ROUTE	POST MILES TOTAL PROJECT	SHEET No	TOTAL SHEETS
04	Sol	12,80	2.1/2.8, 12.0/13.1	555	597

P.K. Chen 9/12/12
REGISTERED STRUCTURAL ENGINEER DATE

5-6-13
PLANS APPROVAL DATE

REGISTERED PROFESSIONAL ENGINEER PO-KANG CHEN No. S 3112 Exp. 9/30/13 STRUCTURAL STATE OF CALIFORNIA

The State of California or its officers or agents shall not be responsible for the accuracy or completeness of electronic copies of this plan sheet.

SOLANO TRANSPORTATION AUTHORITY
ONE HARBOR CENTER, SUITE 130
SUISUN CITY, CA 94585

MARK THOMAS & COMPANY, INC. + NOLTE ASSOCIATES, INC.
3000 OAK ROAD, SUITE 650
WALNUT CREEK, CA 94597

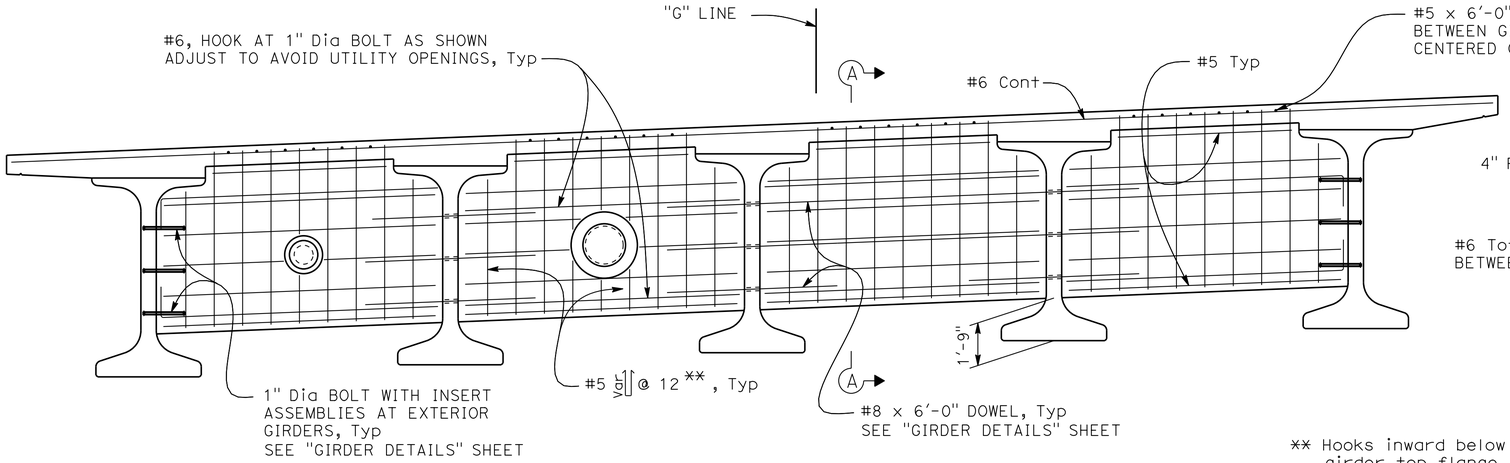

INTERMEDIATE DIAPHRAGM
3/8" = 1'-0"

** Hooks inward below girder top flange

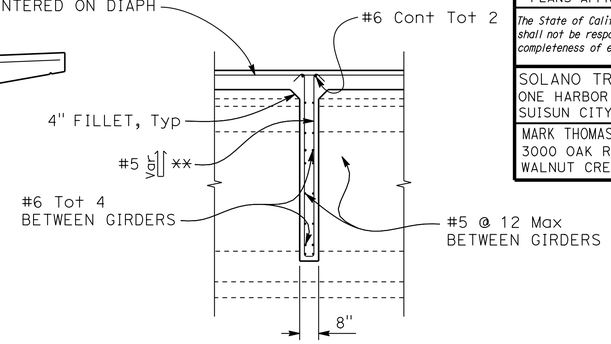

SECTION A-A
3/8" = 1'-0"

NOTES:

1. Diaphragm may be vertical or normal to deck grade
2. For additional reinf at utility openings, see B6-10 / U-15

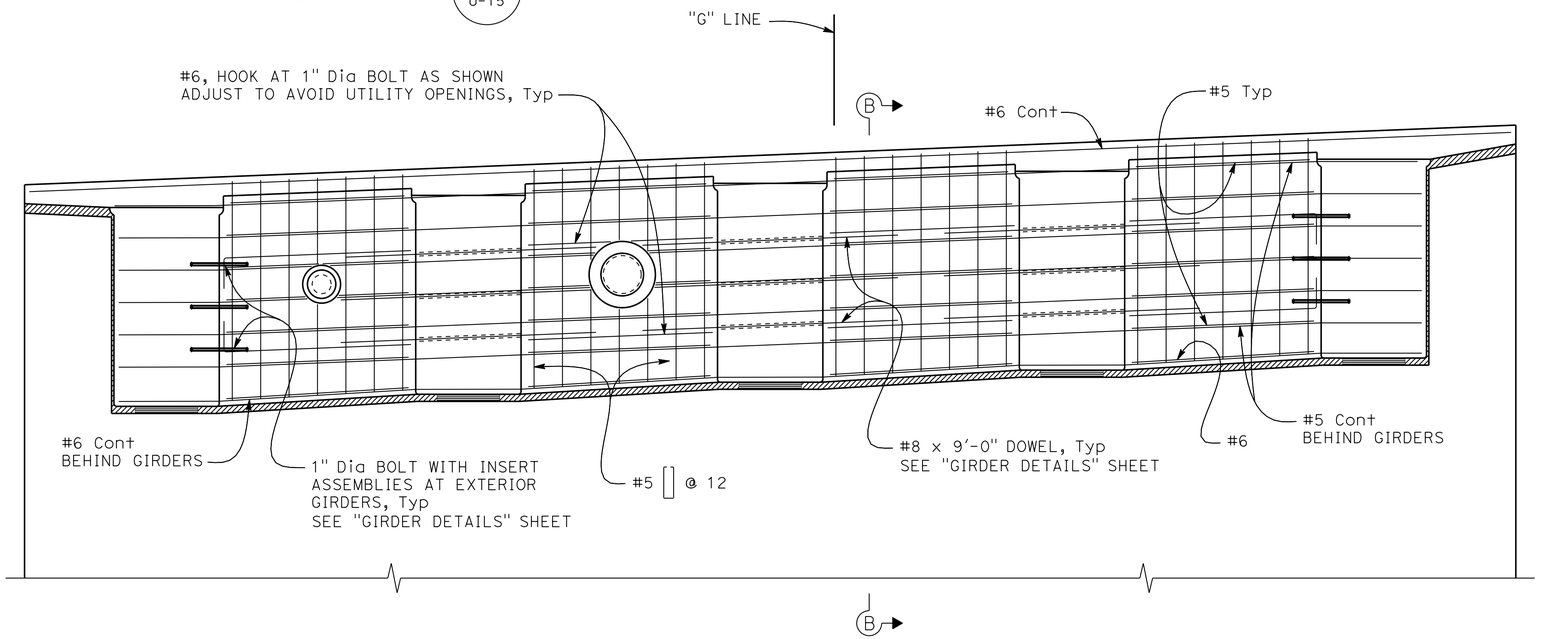

END DIAPHRAGM
3/8" = 1'-0"

NOTES:

1. Abut 2 shown, Abut 1 similar
2. For additional reinf at utility openings, see B6-10 / U-13

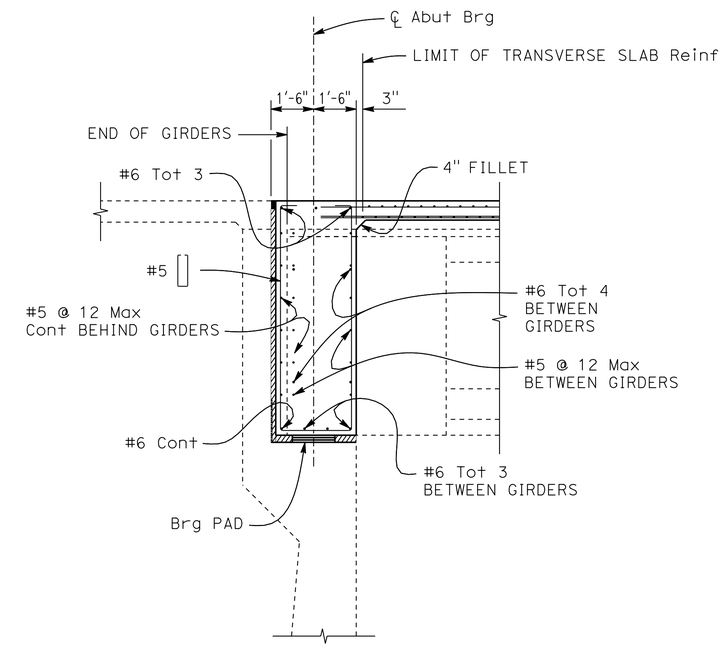

SECTION B-B
3/8" = 1'-0"

Tracy L. Bertram
DESIGN OVERSIGHT Tracy L Bertram
1-7-13
SIGN OFF DATE

	BY	CHECKED
DESIGN	K. MICHALSKI	J. HICKEY
DETAILS	K. MICHALSKI	J. HICKEY
QUANTITIES	P. PARK	E. FELIX

PREPARED FOR THE STATE OF CALIFORNIA DEPARTMENT OF TRANSPORTATION

PO-KANG CHEN
PROJECT ENGINEER

BRIDGE NO. 23-0247
POST MILES 12.8

GREEN VALLEY ROAD OC (OVER SB 680 ON-RAMP)
GIRDER DETAILS No. 3

DESIGN DETAIL SHEET (ENGLISH) (REV.7/16/10)

ORIGINAL SCALE IN INCHES FOR REDUCED PLANS 0 1 2 3

UNIT: 0741
PROJECT NUMBER & PHASE: 04000211311 CONTRACT NO.: 04-0A5341

DISREGARD PRINTS BEARING EARLIER REVISION DATES
REVISION DATES 01/12/12 5/8/12 9/12/12 10/19/12

SHEET 15 OF 27

FILE => 23-0247-1-gdt03.dgn

USERNAME => s124436 DATE PLOTTED => 08-MAY-2013 TIME PLOTTED => 08:24

DIST	COUNTY	ROUTE	POST MILES TOTAL PROJECT	SHEET No	TOTAL SHEETS
04	Sol	12,80	2.1/2.8, 12.0/13.1	556	597

Michael Painter 11/9/12
DATE

5-6-13
PLANS APPROVAL DATE

REGISTERED LANDSCAPE ARCHITECT
MICHAEL R. PAINTER
No. 3232
Signature
1/31/13
Renewal Date
11/9/12
Date
STATE OF CALIFORNIA

The State of California or its officers or agents shall not be responsible for the accuracy or completeness of electronic copies of this plan sheet.

SOLANO TRANSPORTATION AUTHORITY
ONE HARBOR CENTER, SUITE 130
SUISUN CITY, CA 94585

MPA DESIGN
1801 OAKLAND BOULEVARD SUITE 315
WALNUT CREEK CA 94596

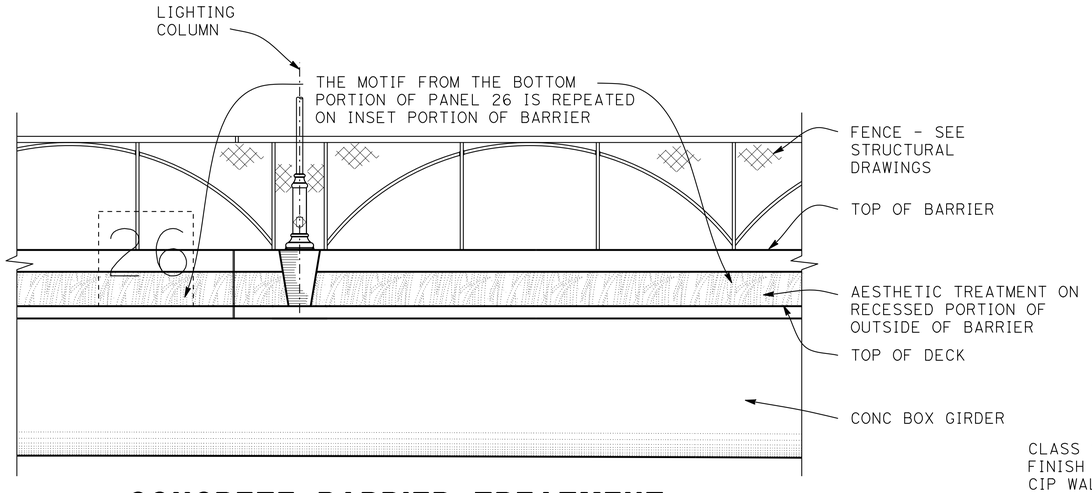

CONCRETE BARRIER TREATMENT

3"= 1'-0"

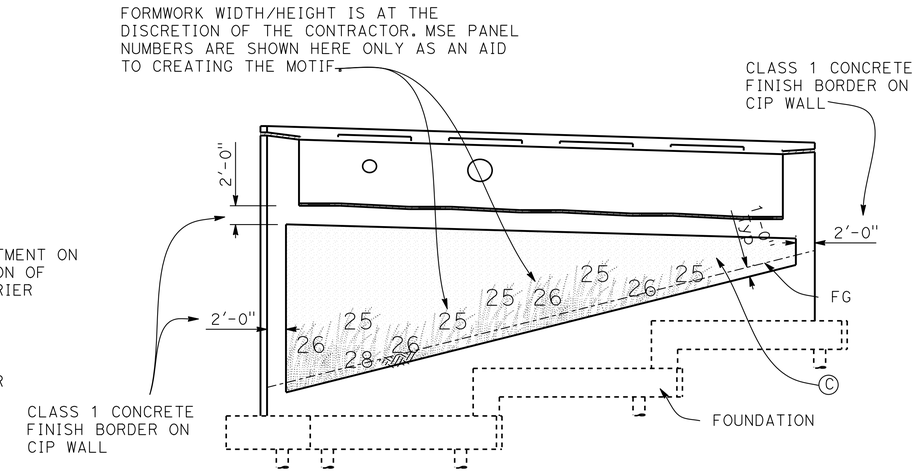

ABUTMENT 1 ELEVATION

$1\frac{1}{2}$"= 1'-0"

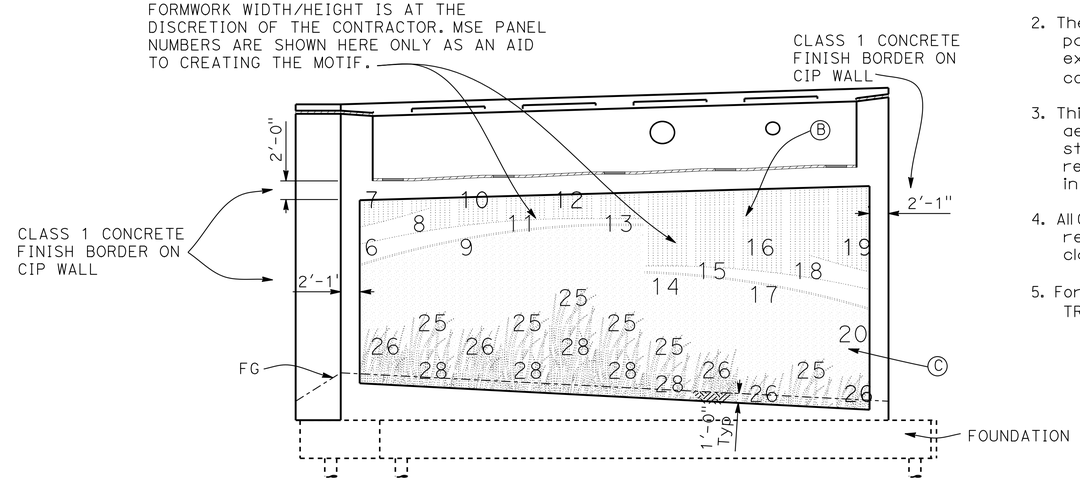

ABUTMENT 2 ELEVATION

$1\frac{1}{2}$"= 1'-0"

KEYED NOTES

Ⓐ MSE panel number: Refer to "AESTHETIC TREATMENT DETAILS No. 1, 2 and 3" sheets.

Ⓑ 1" Smooth fluted finish: Refer to "AESTHETIC TREATMENT DETAILS No. 3" sheet.

Ⓒ Light sand finish: Refer to details on "AESTHETIC TREATMENT DETAILS No. 3" sheet.

NOTES

1. The motif is arranged in the same way as 5'x5' MSE panel units in an MSE wall.
2. The gap that exists between MSE wall panels shall be infilled on CIP walls by extending the motif smoothly and continuously to join with it's neighbor.
3. This drawing shall be used for structural aesthetic treatment only. All other structural elements are shown here for reference only and are specified elsewhere in this drawing set.
4. All CIP wall surfaces not shown as receiving aesthetic treatment shall be class 1 concrete finish.
5. For surface relief details refer to "AESTHETIC TREATMENT DETAILS No. 1, 2 and 3" sheets.

Tracy L. Bertram
DESIGN OVERSIGHT Tracy L Bertram
1-7-13
SIGN OFF DATE

DESIGN GENERAL PLAN SHEET (ENGLISH) (REV. 3-14-12)

	BY	CHECKED
DESIGN	T WALKER	J PASSALACQUA
DETAILS	S KENNEY	R ALCINA
QUANTITIES	P PARK	E FELIX

ORIGINAL SCALE IN INCHES FOR REDUCED PLANS 0 1 2 3

PREPARED FOR THE STATE OF CALIFORNIA DEPARTMENT OF TRANSPORTATION

MICHAEL PAINTER
PROJECT LANDSCAPE ARCHITECT

BRIDGE NO. 23-0247
POST MILES 12.8

GREEN VALLEY ROAD OC (OVER SB 680 ON-RAMP)

BRIDGE AESTHETICS

UNIT: 0741
PROJECT NUMBER & PHASE: 04000211311 CONTRACT NO.: 04-0A5341

DISREGARD PRINTS BEARING EARLIER REVISION DATES

REVISION DATES: 09/18/12 10/19/12

SHEET 16 OF 27

FILE => 23-0247-r-at.dgn

USERNAME => s124496 DATE PLOTTED => 08-MAY-2013 TIME PLOTTED => 08:24

DIST	COUNTY	ROUTE	POST MILES TOTAL PROJECT	SHEET No	TOTAL SHEETS
04	Sol	12,80	2.1/2.8, 12.0/13.1	557	597

Michael Painter 11/9/12
DATE

5-6-13
PLANS APPROVAL DATE

REGISTERED LANDSCAPE ARCHITECT
MICHAEL R. PAINTER
No. 2324
M. Painter
Signature
1/31/13
Renewal Date
11/9/12
Date
STATE OF CALIFORNIA

The State of California or its officers or agents shall not be responsible for the accuracy or completeness of electronic copies of this plan sheet.

SOLANO TRANSPORTATION AUTHORITY
ONE HARBOR CENTER, SUITE 130
SUISUN CITY, CA 94585

MPA DESIGN
1801 OAKLAND BOULEVARD SUITE 315
WALNUT CREEK CA 94596

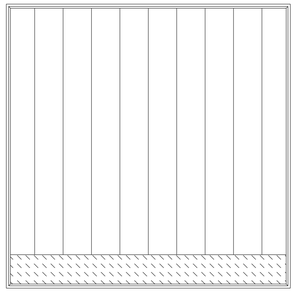
Panel #1 - part of airwave motif

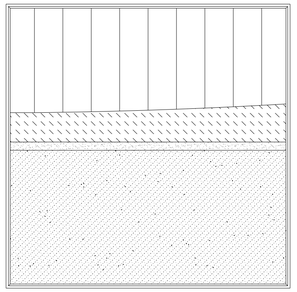
Panel #2 - part of airwave motif

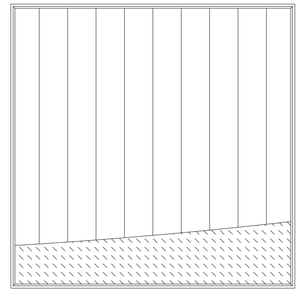
Panel #3 - part of airwave motif

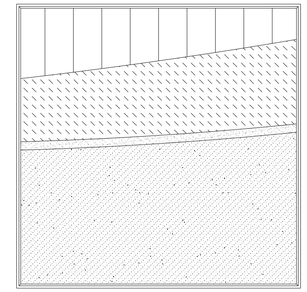
Panel #4 - part of airwave motif

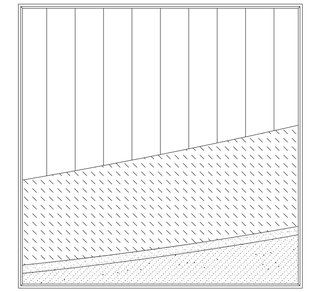
Panel #5 - part of airwave motif

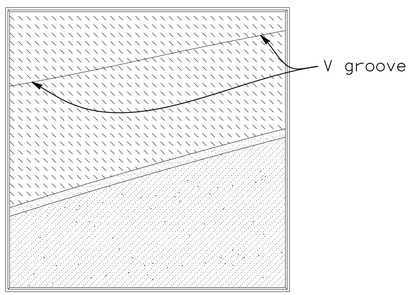

Panel #6 - part of airwave motif

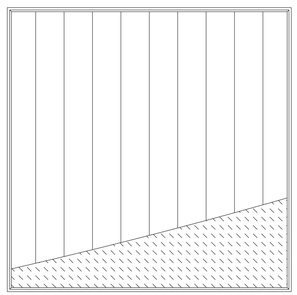
Panel #7 - part of airwave motif

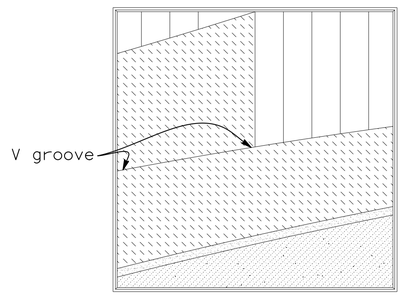

Panel #8 - part of airwave motif

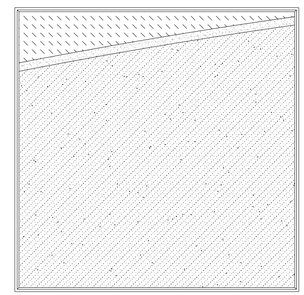
Panel #9 - part of airwave motif

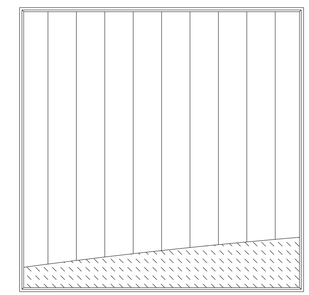
Panel #10 - part of airwave motif

GENERAL NOTE

For surface relief details refer to "Details No. 3" - KEY TO SURFACE RELIEF - MSE PANELS AND CIP WALLS

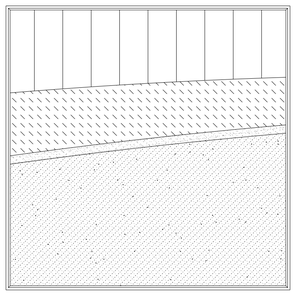
Panel #11 - part of airwave motif

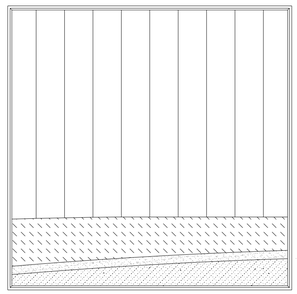
Panel #12 - part of airwave motif

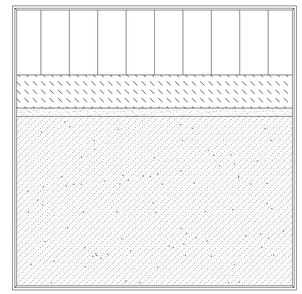
Panel #13 - part of airwave motif

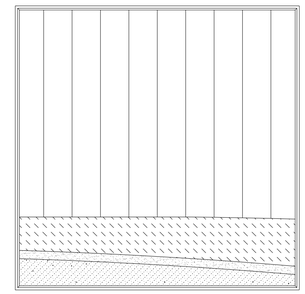
Panel #14 - part of airwave motif

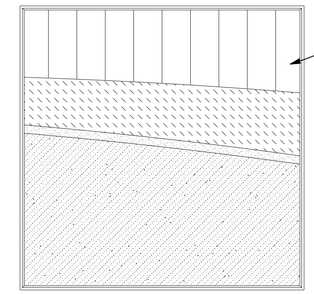

Panel #15 - part of airwave motif

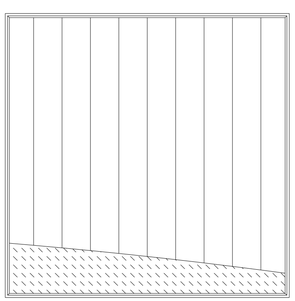
Panel #16 - part of airwave motif

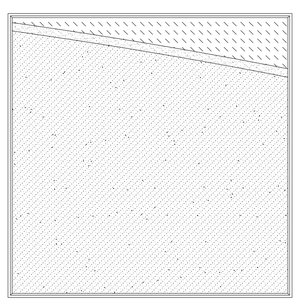
Panel #17 - part of airwave motif

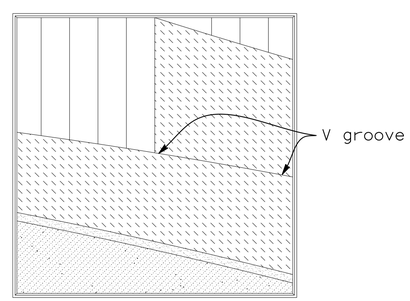

Panel #18 - part of airwave motif

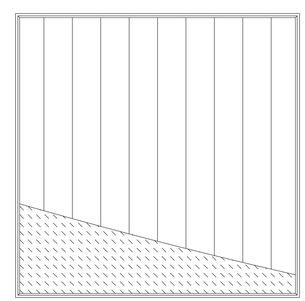
Panel #19 - part of airwave motif

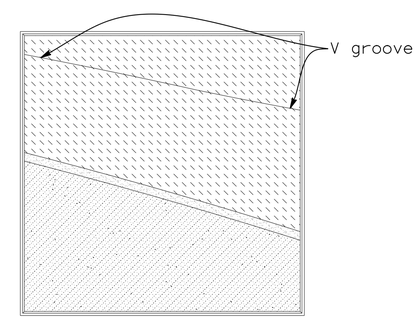

Panel #20 - part of airwave motif

Scale 3/4" = 1'-0"

Tracy L. Bertram
DESIGN OVERSIGHT Tracy L Bertram
1-7-13
SIGN OFF DATE

	BY		CHECKED	
DESIGN	BY	S KENNEY	CHECKED	R ALCINA
DETAILS	BY	S KENNEY	CHECKED	R ALCINA
QUANTITIES	BY	S KENNEY	CHECKED	R ALCINA

PREPARED FOR THE
STATE OF CALIFORNIA
DEPARTMENT OF TRANSPORTATION

MICHAEL PAINTER
PROJECT LANDSCAPE ARCHITECT

BRIDGE NO. 23-0247
POST MILES 12.8

GREEN VALLEY ROAD OC (OVER SB 680 ON-RAMP)
AESTHETIC TREATMENT DETAILS No. 1

DESIGN GENERAL PLAN SHEET (ENGLISH) (REV. 3-14-12)

ORIGINAL SCALE IN INCHES FOR REDUCED PLANS 0 1 2 3

UNIT: 0741
PROJECT NUMBER & PHASE: 04000211311 CONTRACT NO.: 04-0A5341

DISREGARD PRINTS BEARING EARLIER REVISION DATES

REVISION DATES: 09/06/12 10/19/12

SHEET 17 OF 27

FILE => 23-0247-r-atd01.dgn

USERNAME => s124496 DATE PLOTTED => 08-MAY-2013 TIME PLOTTED => 08:24

DIST	COUNTY	ROUTE	POST MILES TOTAL PROJECT	SHEET No	TOTAL SHEETS
04	Sol	12,80	2.1/2.8, 12.0/13.1	558	597

Michael Painter 11/9/12
DATE

5-6-13
PLANS APPROVAL DATE

REGISTERED LANDSCAPE ARCHITECT
MICHAEL R. PAINTER
No. 3237
M. Painter
Signature
1/31/13
Renewal Date
11/9/12
Date
STATE OF CALIFORNIA

The State of California or its officers or agents shall not be responsible for the accuracy or completeness of electronic copies of this plan sheet.

SOLANO TRANSPORTATION AUTHORITY
ONE HARBOR CENTER, SUITE 130
SUISUN CITY, CA 94585

MPA DESIGN
1801 OAKLAND BOULEVARD SUITE 315
WALNUT CREEK CA 94596

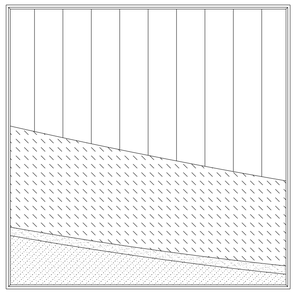

Panel #21 - part of airwave motif

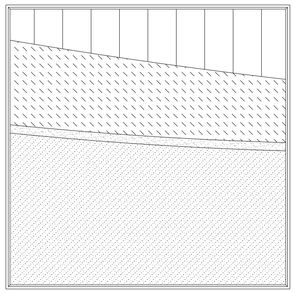

Panel #22 - part of airwave motif

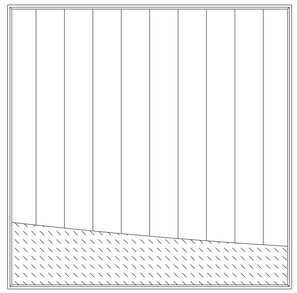

Panel #23 - part of airwave motif

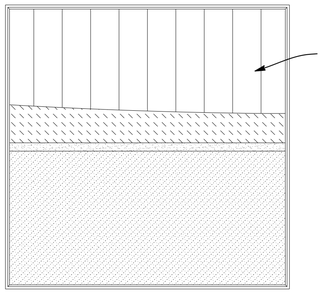

Sky motif
1" Smooth fluted finish.
Typ.

Panel #24 - part of airwave motif

Panel #25 - part of grass motif

Panel #26 - part of grass motif

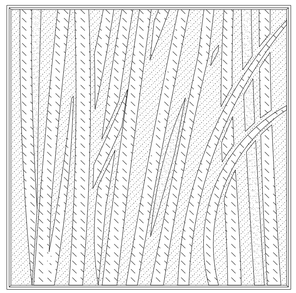

Panel #27 - part of grass motif

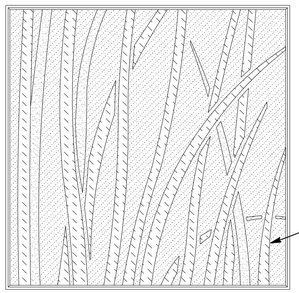

Ridge line on grass blade.
Typ.

Panel #28 - part of grass motif

GENERAL NOTE

For surface relief details refer to "Details No. 3" - KEY TO SURFACE RELIEF - MSE PANELS AND CIP WALLS

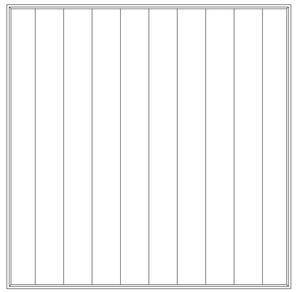

Sky motif panel -used above airwave motif panels
(1" smooth fluted finish)

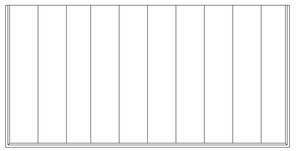

½ Panel used on leveling pad
(1" smooth fluted finish)

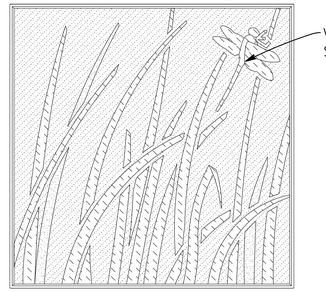

V groves:
See below

Panel #29 - for high visibility motif

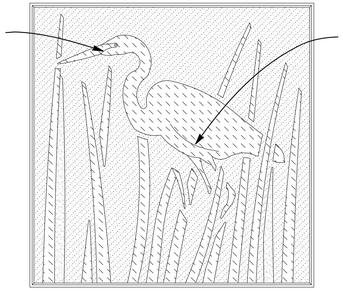

V groves:
See below

Panel #30 - for high visibility motif

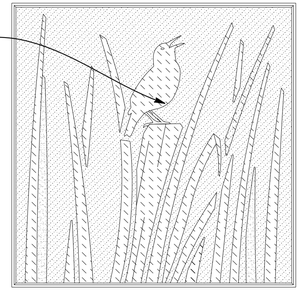

Panel #31 - for high visibility motif

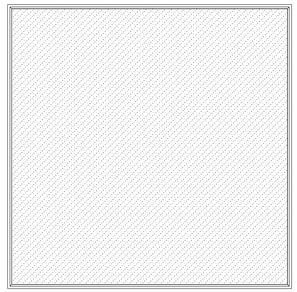

Background panel -used below airwave motif panels
(Heavy sand finish)

V grove extent and location indicated by heavy line. Typ.

Panel #29 - detail motif

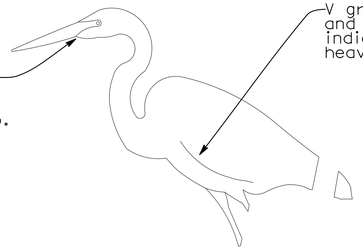

V grove extent and location indicated by heavy line. Typ.

Panel #30 - detail motif

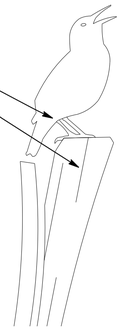

Panel #31 - detail motif

Tracy L. Bertram
DESIGN OVERSIGHT Tracy L Bertram
1-7-13
SIGN OFF DATE

	BY	CHECKED
DESIGN	S KENNEY	R ALCINA
DETAILS	S KENNEY	R ALCINA
QUANTITIES	S KENNEY	R ALCINA

PREPARED FOR THE
STATE OF CALIFORNIA
DEPARTMENT OF TRANSPORTATION

MICHAEL PAINTER
PROJECT LANDSCAPE ARCHITECT

BRIDGE NO. 23-0247
POST MILES 12.8

GREEN VALLEY ROAD OC (OVER SB 680 ON-RAMP)
AESTHETIC TREATMENT DETAILS No. 2

DESIGN GENERAL PLAN SHEET (ENGLISH) (REV. 3-14-12)

ORIGINAL SCALE IN INCHES FOR REDUCED PLANS 0 1 2 3

UNIT: 0741
PROJECT NUMBER & PHASE: 04000211311 CONTRACT NO.: 04-0A5341

DISREGARD PRINTS BEARING EARLIER REVISION DATES

REVISION DATES: 09/5/12 10/19/12

SHEET 18 OF 27

FILE => 23-0247-r-atd02.dgn

USERNAME => s124936 DATE PLOTTED => 08-MAY-2013 TIME PLOTTED => 08:24

DIST	COUNTY	ROUTE	POST MILES TOTAL PROJECT	SHEET No	TOTAL SHEETS
04	Sol	12,80	2.1/2.8, 12.0/13.1	559	597

Michael Painter 11/9/12
DATE

5-6-13
PLANS APPROVAL DATE

REGISTERED LANDSCAPE ARCHITECT
MICHAEL R. PAINTER
M. Painter
Signature
1/31/13
Renewal Date
11/9/12
Date
STATE OF CALIFORNIA

The State of California or its officers or agents shall not be responsible for the accuracy or completeness of electronic copies of this plan sheet.

SOLANO TRANSPORTATION AUTHORITY
ONE HARBOR CENTER, SUITE 130
SUISUN CITY, CA 94585

MPA DESIGN
1801 OAKLAND BOULEVARD SUITE 315
WALNUT CREEK CA 94596

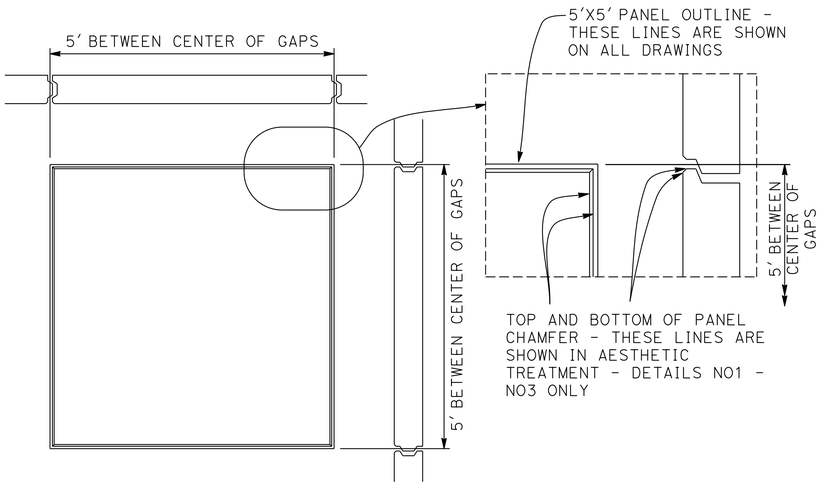

PANELS

3/4"=1'-0"

SAND FINISH AND SKY MOTIF

NTS

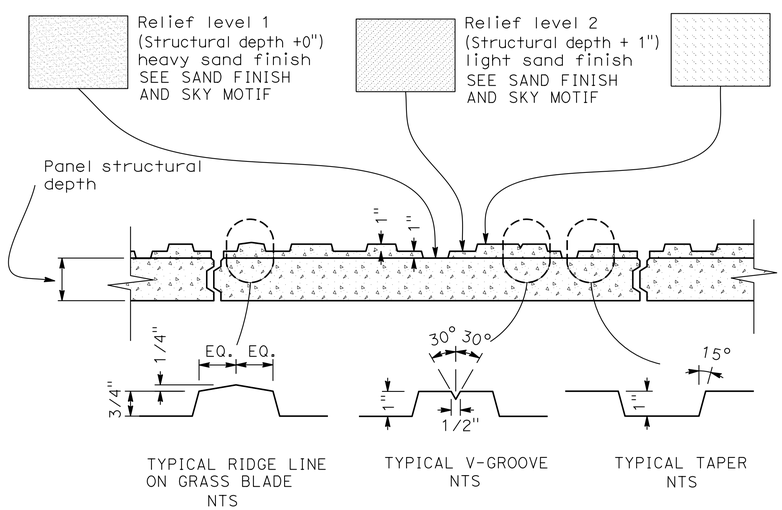

KEY TO SURFACE RELIEF - MSE PANELS AND CIP WALLS

3/8"=1'-0"

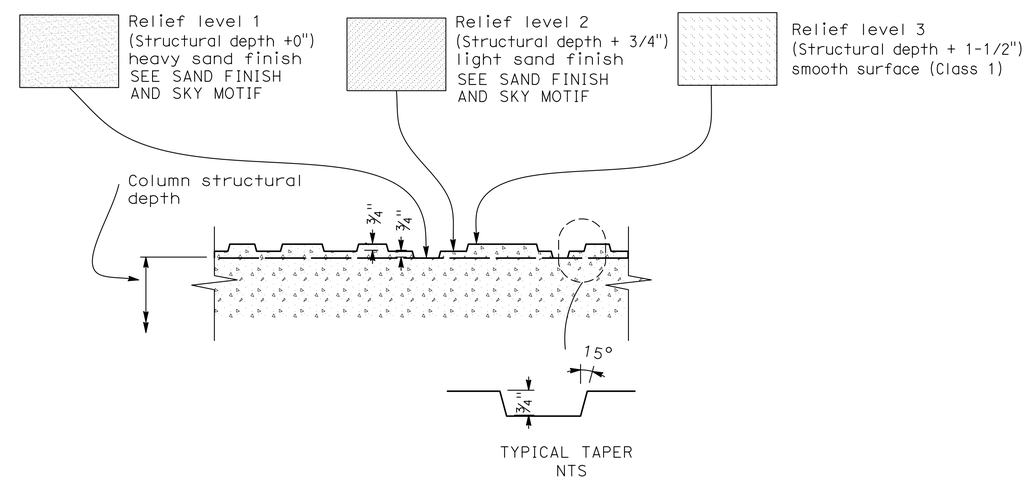

KEY TO SURFACE RELIEF - BRIDGE COLUMNS

3/8"=1'-0"

Tracy L Bertram
DESIGN OVERSIGHT
1-7-13
SIGN OFF DATE

DESIGN GENERAL PLAN SHEET (ENGLISH) (REV. 3-14-12)

	BY	CHECKED
DESIGN	S KENNEY	R ALCINA
DETAILS	S KENNEY	R ALCINA
QUANTITIES	S KENNEY	R ALCINA

ORIGINAL SCALE IN INCHES FOR REDUCED PLANS 0 1 2 3

PREPARED FOR THE
STATE OF CALIFORNIA
DEPARTMENT OF TRANSPORTATION

MICHAEL PAINTER
PROJECT LANDSCAPE ARCHITECT

BRIDGE NO. 23-0247
POST MILES 12.8

GREEN VALLEY ROAD OC (OVER SB 680 ON-RAMP)
AESTHETIC TREATMENT DETAILS No. 3

UNIT: 0741
PROJECT NUMBER & PHASE: 04000211311
CONTRACT NO.: 04-0A5341

DISREGARD PRINTS BEARING EARLIER REVISION DATES

REVISION DATES: 09/5/12 10/19/12

SHEET 19 OF 27

FILE => 23-0247-r-atd03.dgn

USERNAME => s124436 DATE PLOTTED => 08-MAY-2013 TIME PLOTTED => 08:25

DIST	COUNTY	ROUTE	POST MILES TOTAL PROJECT	SHEET No	TOTAL SHEETS
04	Sol	12,80	2.1/2.8, 12.0/13.1	560	597

P.K. Chen 9/12/12
REGISTERED STRUCTURAL ENGINEER DATE

5-6-13
PLANS APPROVAL DATE

REGISTERED PROFESSIONAL ENGINEER PO-KANG CHEN No. S 3112 Exp. 9/30/13 STRUCTURAL STATE OF CALIFORNIA

The State of California or its officers or agents shall not be responsible for the accuracy or completeness of electronic copies of this plan sheet.

SOLANO TRANSPORTATION AUTHORITY
ONE HARBOR CENTER, SUITE 130
SUISUN CITY, CA 94585

MARK THOMAS & COMPANY, INC. + NOLTE ASSOCIATES, INC.
3000 OAK ROAD, SUITE 650
WALNUT CREEK, CA 94597

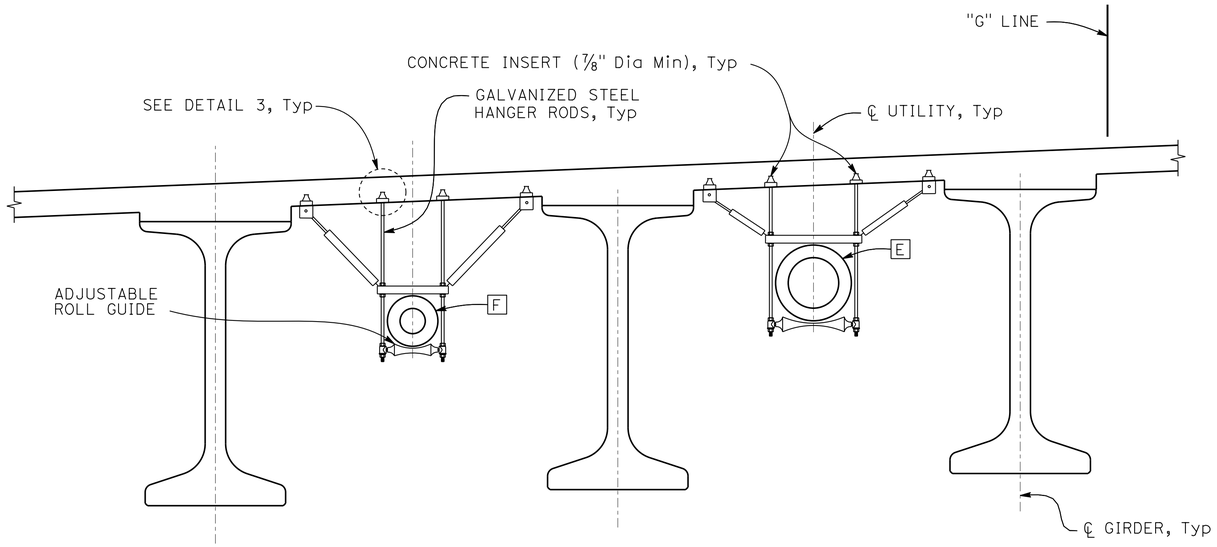

UTILITY HANGER DETAIL
NO SCALE

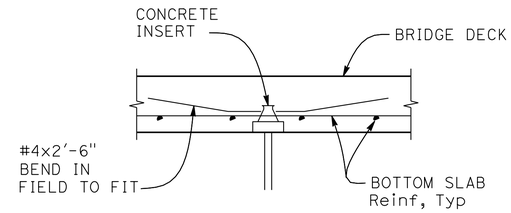

DETAIL 3
NO SCALE

UTILITIES:

E 16" Dia Water Line in 24" Casing

F 8" Dia Water Line in 16" Casing

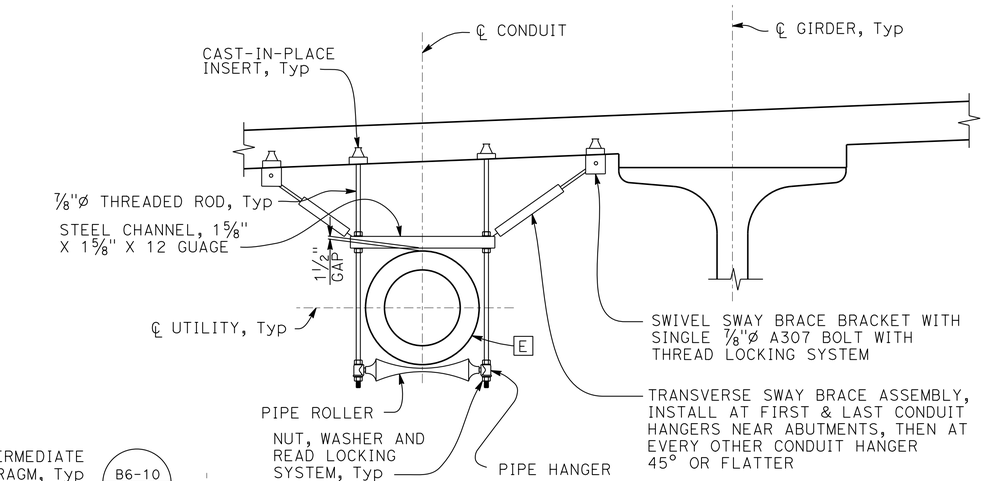

NOTE:
UTILITY E SHOWN, UTILITY F SIMILAR

SECTION G-G
NO SCALE

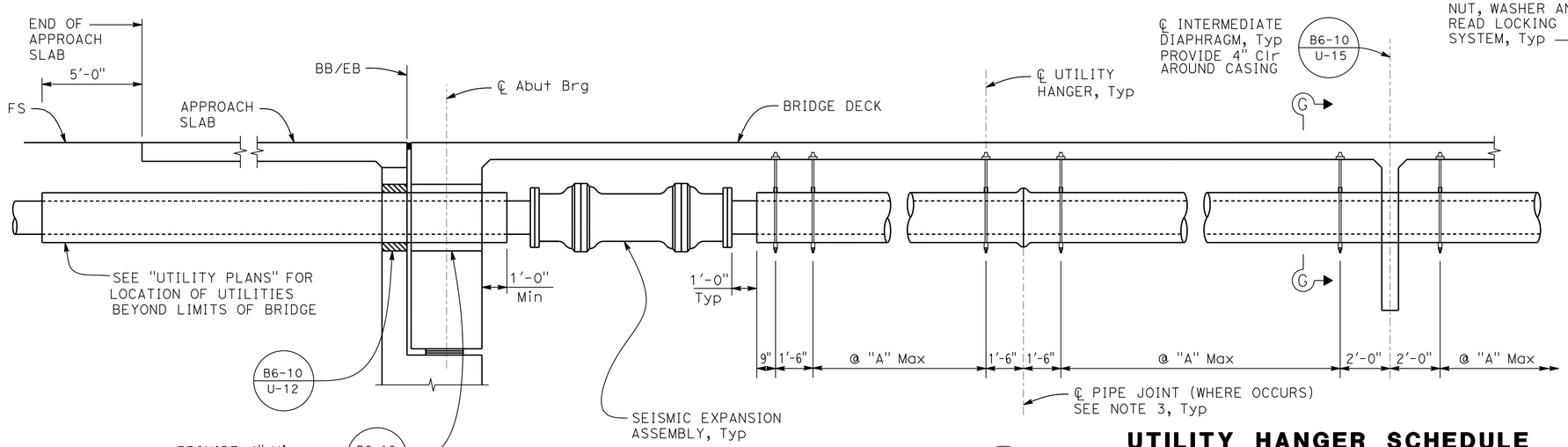

LONGITUDINAL HANGER ELEVATION
NO SCALE

UTILITY HANGER SCHEDULE

Utility	Max Pipe Support Spacing "A"
E	6'-0"
F	12'-0"

NOTES:

1. The Contractor shall verify all controlling field dimensions before ordering or fabricating any material.
2. For additional utility information, see "TYPICAL SECTION" sheet.
3. Pipe joints shall be laid out such that there will not be interference with the intermediate and end diaphragms.

Tracy L. Bertram
DESIGN OVERSIGHT Tracy L Bertram
1-7-13
SIGN OFF DATE

	BY	CHECKED
DESIGN	K. MICHALSKI	J. HICKEY
DETAILS	K. MICHALSKI	J. HICKEY
QUANTITIES	P. PARK	E. FELIX

PREPARED FOR THE STATE OF CALIFORNIA DEPARTMENT OF TRANSPORTATION

PO-KANG CHEN
PROJECT ENGINEER

BRIDGE NO. 23-0247
POST MILES 12.8

GREEN VALLEY ROAD OC (OVER SB 680 ON-RAMP)
UTILITY DETAILS

DESIGN DETAIL SHEET (ENGLISH) (REV.7/16/10)

ORIGINAL SCALE IN INCHES FOR REDUCED PLANS 0 1 2 3

UNIT: 0741
PROJECT NUMBER & PHASE: 04000211311 CONTRACT NO.: 04-0A5341

DISREGARD PRINTS BEARING EARLIER REVISION DATES

REVISION DATES: 9/20/11 01/20/12 9/20/12 10/19/12

SHEET 20 OF 27

FILE => 23-0247-r-udt01.dgn

USERNAME => s124496 DATE PLOTTED => 08-MAY-2013 TIME PLOTTED => 08:25

DIST	COUNTY	ROUTE	POST MILES TOTAL PROJECT	SHEET No.	TOTAL SHEETS
04	Sol	12,80	2.1/2.8, 12.0/13.1	561	597

P.K. Chen 9/12/12
REGISTERED STRUCTURAL ENGINEER DATE

5-6-13
PLANS APPROVAL DATE

REGISTERED PROFESSIONAL ENGINEER PO-KANG CHEN No. S3112 Exp. 9/30/13 STRUCTURAL STATE OF CALIFORNIA

The State of California or its officers or agents shall not be responsible for the accuracy or completeness of electronic copies of this plan sheet.

SOLANO TRANSPORTATION AUTHORITY
ONE HARBOR CENTER, SUITE 130
SUISUN CITY, CA 94585

MARK THOMAS & COMPANY, INC. + NOLTE ASSOCIATES, INC.
3000 OAK ROAD, SUITE 650
WALNUT CREEK, CA 94597

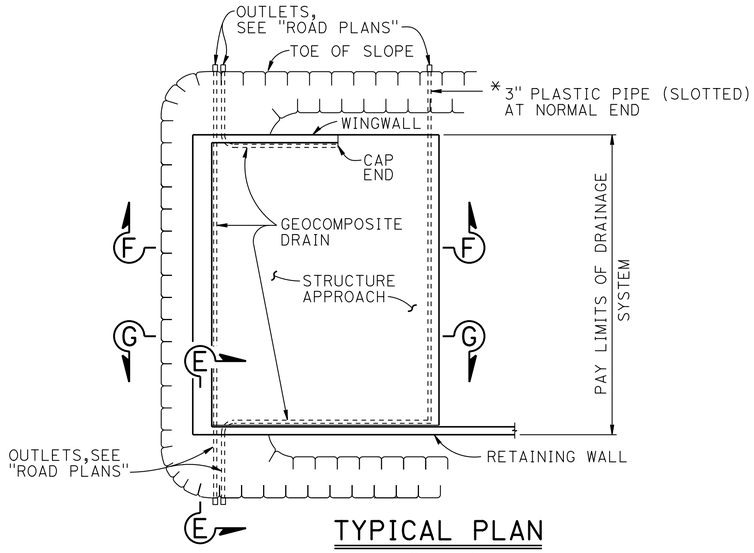

TYPICAL PLAN

1" = 10'

* FOR PIPE LAYOUT AT STAGGERED END, SEE "DETAIL B"

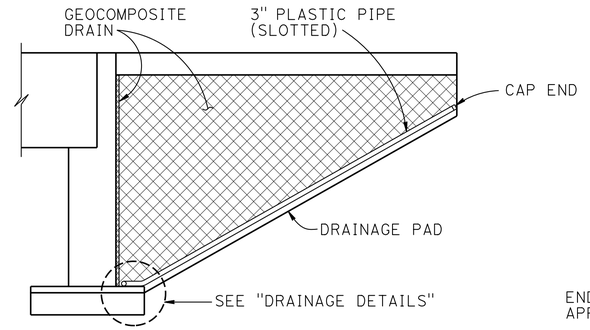

CANTILEVER WINGWALL

SECTION F-F

1/4" = 1'-0"

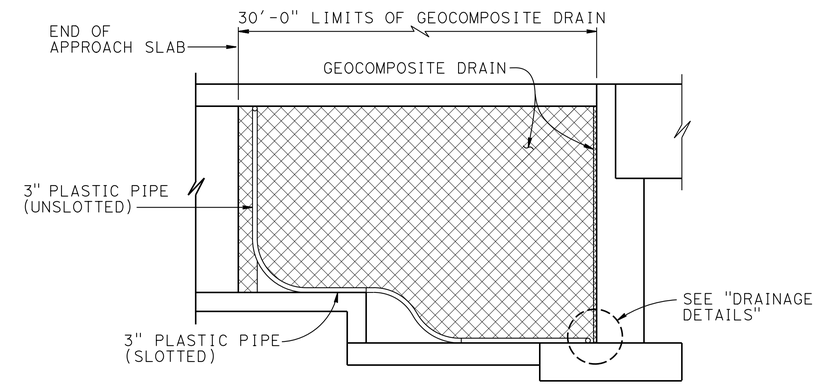

RETAINING WALL WINGWALL DRAINAGE DETAILS

SECTION G-G

1/4" = 1'-0"

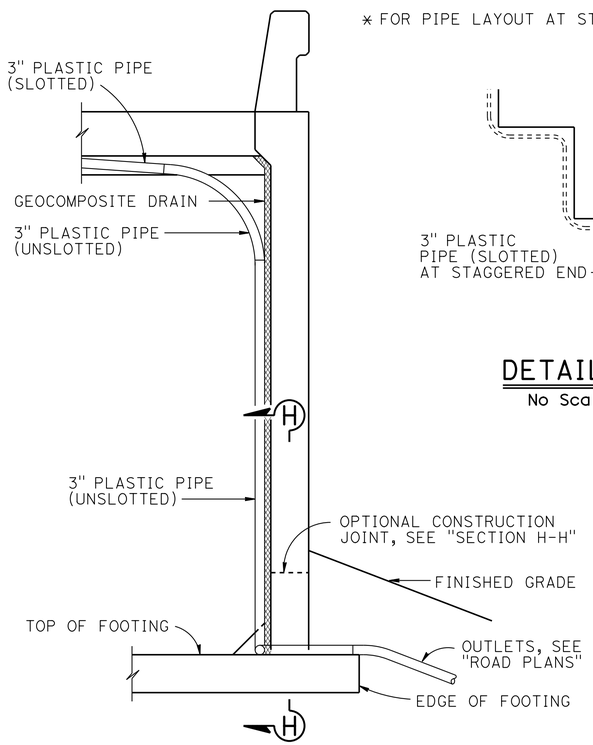

SECTION E-E

1/2" = 1'-0"

NOTE: Bends and junctions in 3" plastic pipe are 30" radius Min

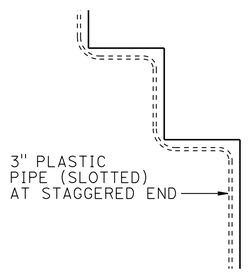

DETAIL B

No Scale

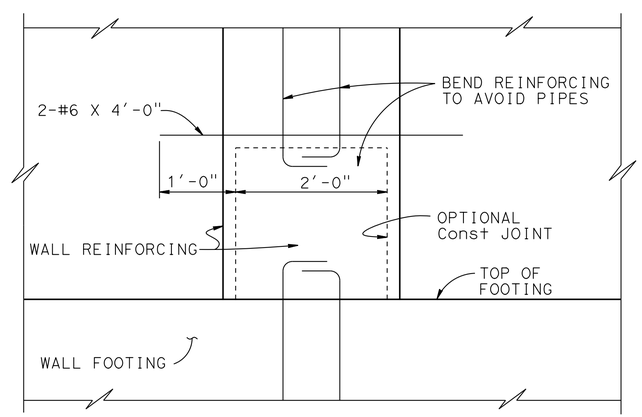

SECTION H-H

1" = 1'-0"

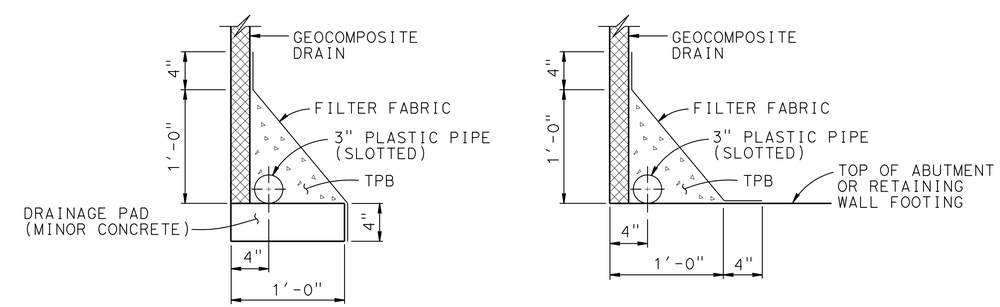

WITHOUT FOOTING

WITH FOOTING

DRAINAGE DETAILS

1 1/2" = 1'-0"

STANDARD DRAWING		STATE OF CALIFORNIA DEPARTMENT OF TRANSPORTATION	DIVISION OF ENGINEERING SERVICES	BRIDGE NO. 23-0247 / POST MILE 12.8	GREEN VALLEY ROAD OC (OVER SB 680 ON-RAMP)
FILE NO. xs3-110	APPROVAL DATE July 2011				STRUCTURE APPROACH DRAINAGE DETAILS

DS OSD 2147A (ENGLISH STANDARD DRAWING "XS" BORDER REV. (02-02-11)

ORIGINAL SCALE IN INCHES FOR REDUCED PLANS 0 1 2 3

UNIT: 0741
PROJECT NUMBER & PHASE: 04000211311 CONTRACT NO.: 04-0A5341

DISREGARD PRINTS BEARING EARLIER REVISION DATES

REVISION DATES 1/12/11 5/18/12 9/12/12 10/19/12 SHEET 22 OF 27

FILE => 23-0247-s-sadd.dgn

USERNAME => s124936 DATE PLOTTED => 08-MAY-2013 TIME PLOTTED => 08:25

DIST	COUNTY	ROUTE	POST MILES TOTAL PROJECT	SHEET No.	TOTAL SHEETS
04	Sol	12,80	2.1/2.8, 12.0/13.1	562	597

P.K. Chen 9/12/12
REGISTERED STRUCTURAL ENGINEER DATE

5-6-13
PLANS APPROVAL DATE

REGISTERED PROFESSIONAL ENGINEER PO-KANG CHEN No. S3112 Exp. 9/30/13 STRUCTURAL STATE OF CALIFORNIA

The State of California or its officers or agents shall not be responsible for the accuracy or completeness of electronic copies of this plan sheet.

SOLANO TRANSPORTATION AUTHORITY
ONE HARBOR CENTER, SUITE 130
SUISUN CITY, CA 94585

MARK THOMAS & COMPANY, INC. + NOLTE ASSOCIATES, INC.
3000 OAK ROAD, SUITE 650
WALNUT CREEK, CA 94597

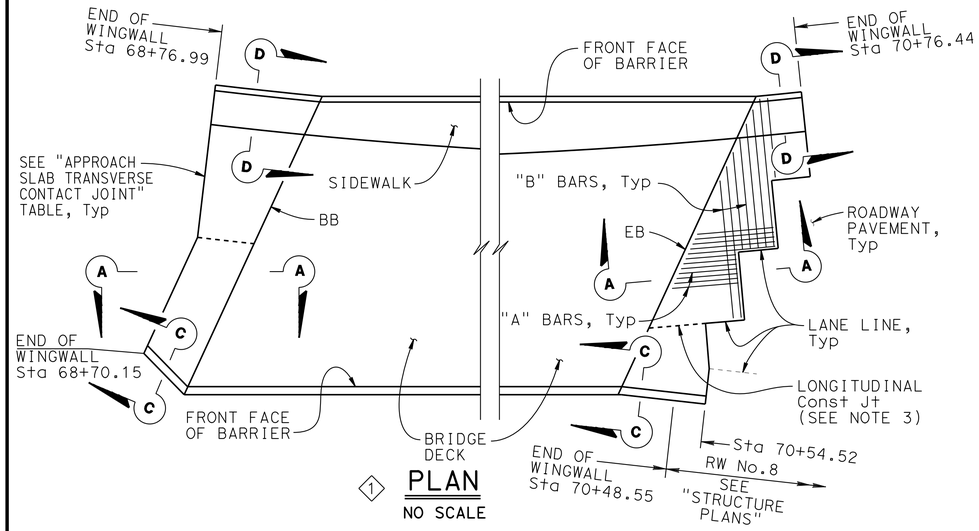

1 PLAN
NO SCALE

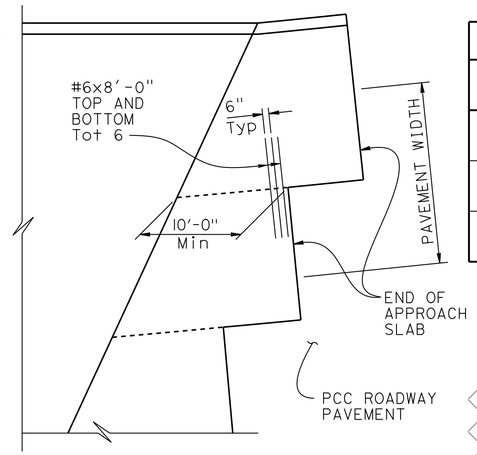

STRUCTURE APPROACH - END STAGGER DETAIL
NO SCALE
1

APPROACH SLAB TRANSVERSE CONTACT JOINT		
APPROACH SKEW	AC ROADWAY PAVEMENT	WITH PCC ROADWAY PAVEMENT
< 20°	PARALLEL TO FACE OF PN	PARALLEL TO FACE OF PN
20° - 45°	PARALLEL TO FACE OF PN USE "DETAIL A"	STAGGER LINES 24' TO 36' APART
> 45°	PARALLEL TO FACE OF PN USE "DETAIL A"	STAGGER AT EACH LANE LINE

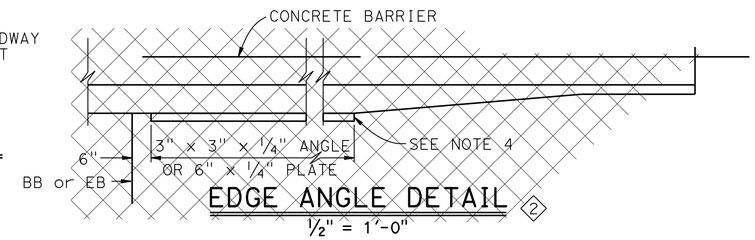

EDGE ANGLE DETAIL 2
1/2" = 1'-0"

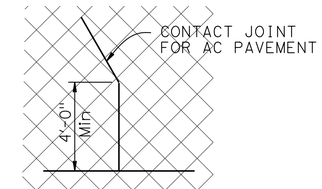

DETAIL A 2
No Scale

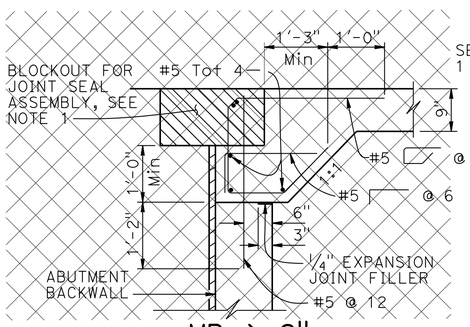

2 MR > 2"

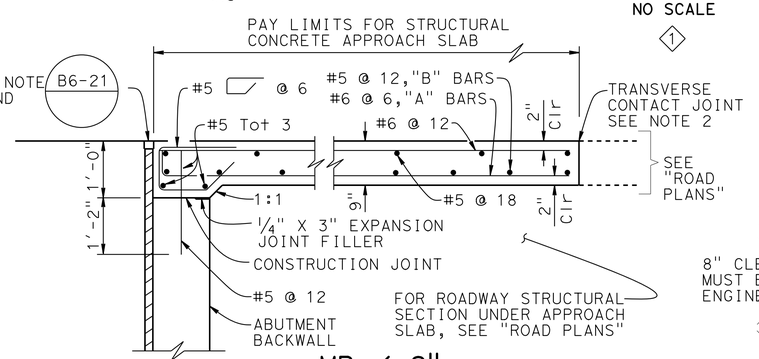

MR ≤ 2"

SEAT TYPE ABUTMENT
SECTION A-A
3/4" = 1'-0"

NOTE: Seat type abutment shown, for diaphragm type abutment, see "ABUTMENT TIE DETAILS"

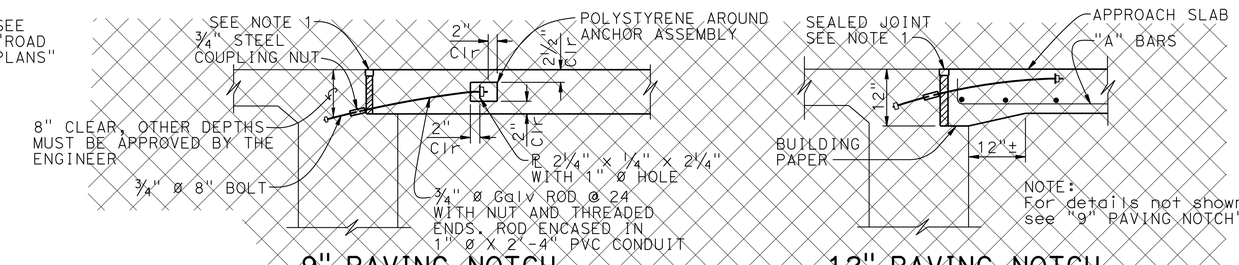

9" PAVING NOTCH
12" PAVING NOTCH

DIAPHRAGM TYPE ABUTMENT
ABUTMENT TIE DETAILS
3/4" = 1'-0"

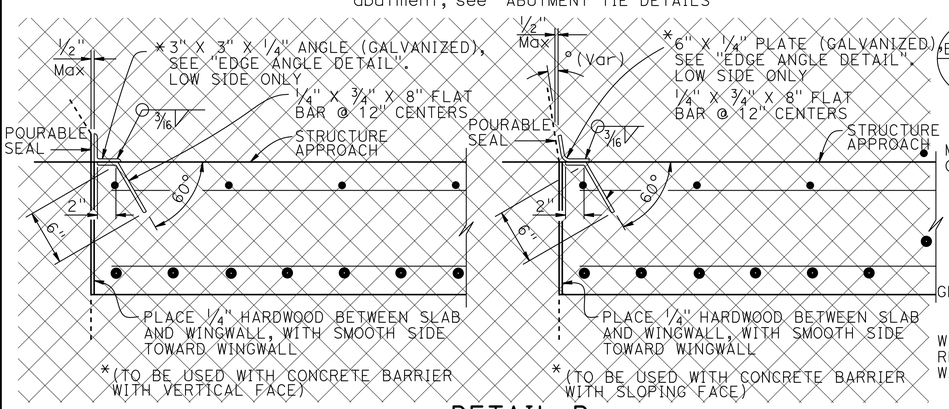

DETAIL B 2
1 1/2" = 1'-0"

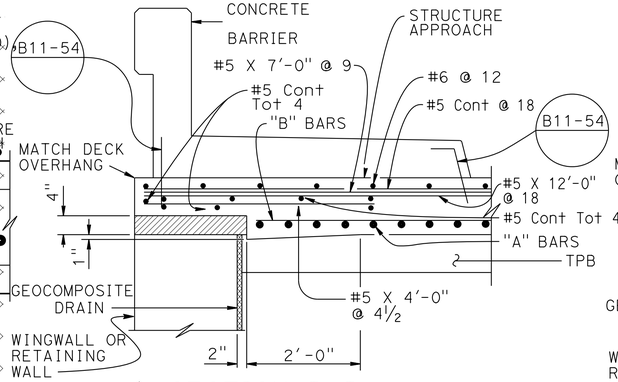

3 SECTION D-D
NO SCALE

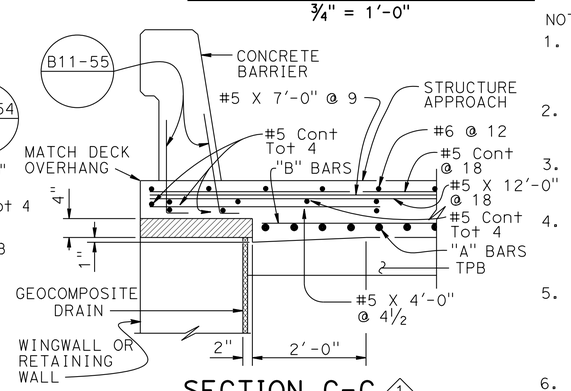

SECTION C-C 1
NO SCALE

NOTES:

1. For details not noted or shown, see Structure Plans. Adjust bar reinforcement to clear a sawcut for sealed joint, when required
2. For transverse contact joint with new PCC paving, refer to Standard Plan P10
3. Longitudinal construction joints, when permitted by the Engineer, shall be located on lane lines
4. End angle or plate at beginning of barrier transition, end of wingwall or end of structure approach as applicable
5. At the Contractor's option, approach slab transverse reinforcement may be placed parallel to paving notch. Spacing of transverse reinforcement is measured along ℄ roadway
6. For drainage details, see Structure Plans.

SPECIAL DETAILS

REVISED STANDARD DRAWING

FILE NO. xs3-160

APPROVAL DATE July 2011

1 Revised Detail
2 Does Not Apply
3 Added Detail

STATE OF CALIFORNIA
DEPARTMENT OF TRANSPORTATION

DIVISION OF ENGINEERING SERVICES

BRIDGE NO. 23-0247
POST MILE 12.8

GREEN VALLEY ROAD OC (OVER SB 680 ON-RAMP)
STRUCTURE APPROACH TYPE EQ(10)

DS OSD 2147A (ENGLISH STANDARD DRAWING "XS" BORDER REV. (02-02-11)

ORIGINAL SCALE IN INCHES FOR REDUCED PLANS 0 1 2 3

UNIT: 0741
PROJECT NUMBER & PHASE: 04000211311
CONTRACT NO.: 04-0A5341

DISREGARD PRINTS BEARING EARLIER REVISION DATES

REVISION DATES 1/12/11 5/4/12 9/12/12 10/19/12

SHEET 21 OF 27

FILE => 23-0247-s-sat(eq10).dgn

USERNAME => s124496 DATE PLOTTED => 08-MAY-2013 TIME PLOTTED => 08:25

DIST	COUNTY	ROUTE	POST MILES TOTAL PROJECT	SHEET No	TOTAL SHEETS
04	Sol	12,80	2.1/2.8, 12.0/13.1	563	597

P.K. Chen 9/12/12
REGISTERED STRUCTURAL ENGINEER DATE

5-6-13
PLANS APPROVAL DATE

REGISTERED PROFESSIONAL ENGINEER PO-KANG CHEN No. S 3112 Exp. 9/30/13 STRUCTURAL STATE OF CALIFORNIA

The State of California or its officers or agents shall not be responsible for the accuracy or completeness of electronic copies of this plan sheet.

SOLANO TRANSPORTATION AUTHORITY
ONE HARBOR CENTER, SUITE 130
SUISUN CITY, CA 94585

MARK THOMAS & COMPANY, INC. + NOLTE ASSOCIATES, INC.
3000 OAK ROAD, SUITE 650
WALNUT CREEK, CA 94597

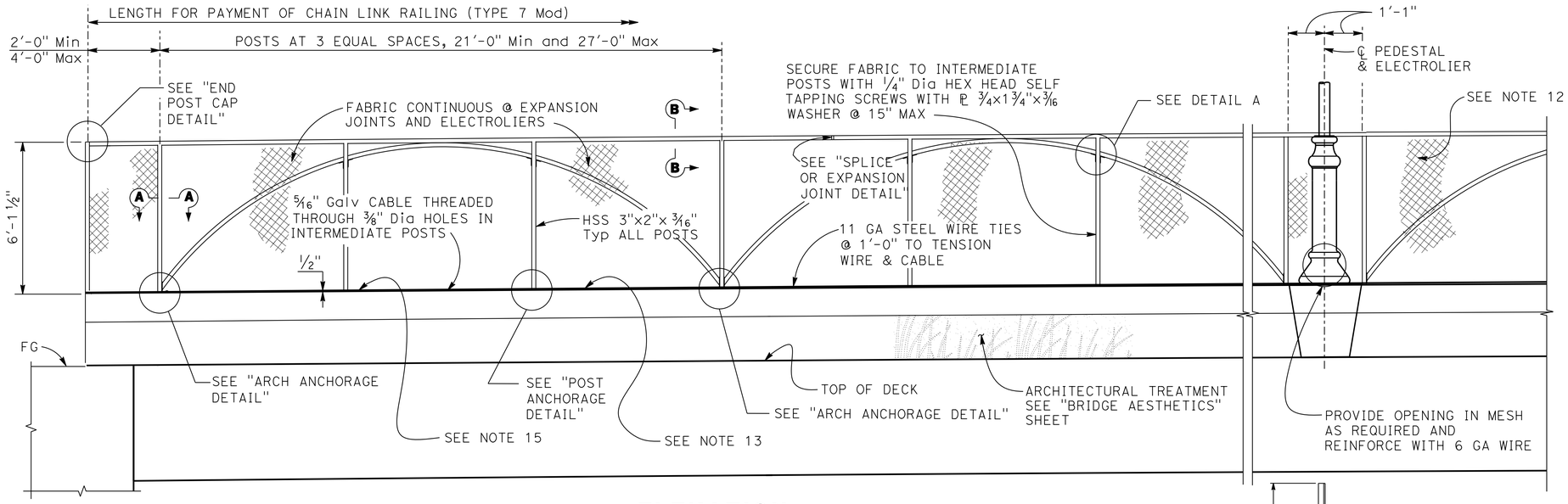

ELEVATION
3/8"=1'-0"

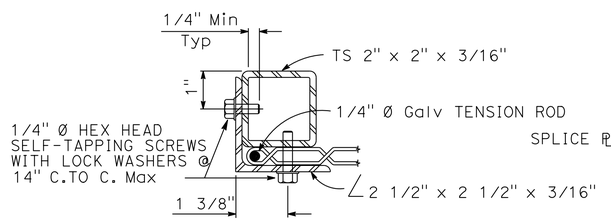

SECTION A-A

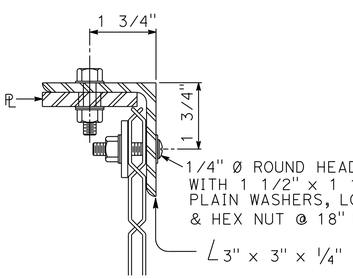

SECTION B-B

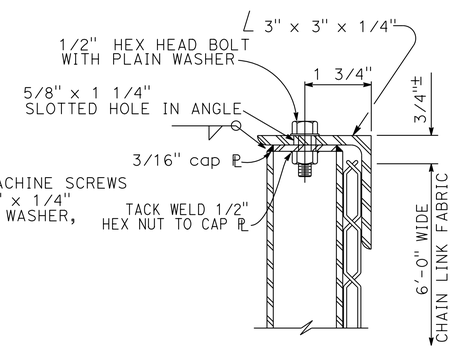

SECTION C-C

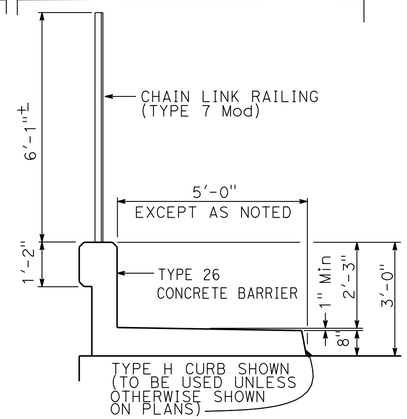

NOTE: Concrete Barrier Type 26 shown, Barrier Type 732 similar.

TYPICAL SECTION

NOTES:

1. Horizontal angle shall be continuous over not less than two intermediate posts except that a shorter length is permitted at expansion joints,electroliers and other rail discontinuities
2. One post may be embedded 6" minimum to accomodate grade changes, otherwise fabricate post lengths as required.
3. Curved posts may be rotated in plan within its post pocket to accomodate curved horizontal alignment.
4. Straight posts and straight portions of curved posts shall be installed normal to bridge profile grade.
5. Top horizontal angle shall be parallel to bridge profile grade and shall be shop bent to fit horizontal curves.
6. When railing is on slope, fabric shall be placed parallel to slope.
7. Alternative details may be submitted by Contractor for Engineer's approval.
8. Railing assembly except chain link fabric shall be galvanized after fabrication.
9. For details and reinforcement not shown, see "CONCRETE BARRIER TYPE 26" sheet on Std Plans.
10. See Bridge Plans for limits of Chain Link Railing Type 7
11. Provide thimbles at all cable loops.
12. Chain link fabric to be 6'-0" wide with 1" mesh and with knuckled selvage top and bottom.
13. When railing is placed on a horizontal alignment with a radius of 150'-0" or less, thread 5/16" cable through 3/8" Ø welded eye rods embedded 4" into the top of the concrete parapet and equally spaced to limit the middle ordinate distance between the 5/16" cable and the curve to 1" max.
14. Splices and expansion joints shall be located at ℄ panel.
15. Holes in posts for 5/16" cable and its anchorage may be field drilled and painted with zinc rich paint.

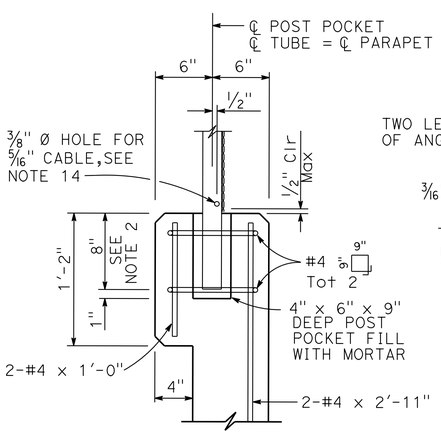

NOTE: Concrete Barrier Type 26A shown, Barrier Type 732A similar.

POST ANCHORAGE DETAIL

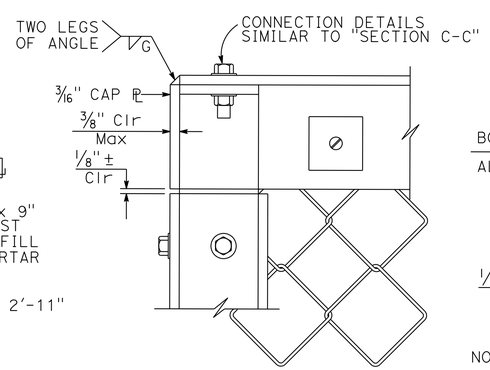

END POST CAP DETAIL

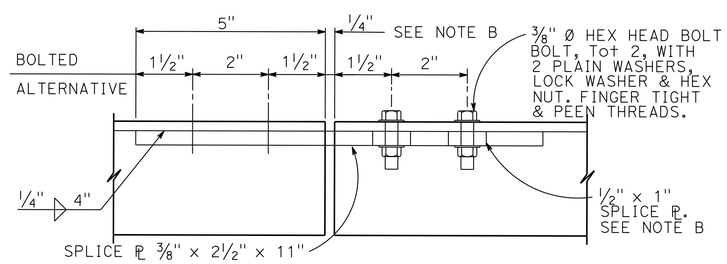

NOTE B: Expansion joint same dimension as expansion joint in deck or wall. Increase slotted hole length and splice PL length correspondingly.

SPLICE OR EXPANSION JOINT DETAIL

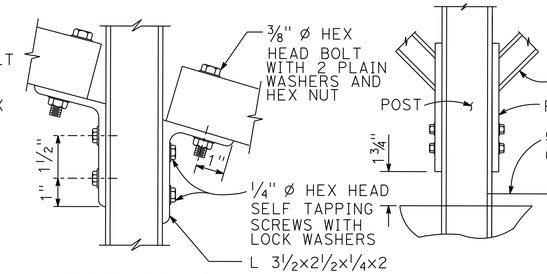

DETAIL A

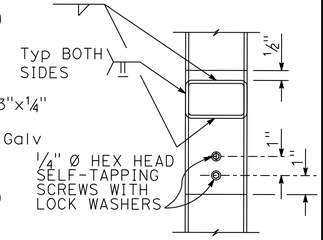

VIEW X-X

ARCH ANCHORAGE DETAIL
NO SCALE

Tracy L. Bertram
DESIGN OVERSIGHT Tracy L Bertram
1-7-13
SIGN OFF DATE

DESIGN	BY K. MICHALSKI	CHECKED J. HICKEY	
DETAILS	BY K. MICHALSKI	CHECKED J. HICKEY	
QUANTITIES	BY P. PARK	CHECKED E. FELIX	

PREPARED FOR THE STATE OF CALIFORNIA DEPARTMENT OF TRANSPORTATION

PO-KANG CHEN
PROJECT ENGINEER

BRIDGE NO. 23-0247
POST MILES 12.8

GREEN VALLEY ROAD OC (OVER SB 680 ON-RAMP)
CHAIN LINK RAILING (TYPE 7 MOD)

DESIGN DETAIL SHEET (ENGLISH) (REV.7/16/10)

ORIGINAL SCALE IN INCHES FOR REDUCED PLANS 0 1 2 3

UNIT: 0741
PROJECT NUMBER & PHASE: 04000211311 CONTRACT NO.: 04-0A5341

DISREGARD PRINTS BEARING EARLIER REVISION DATES

REVISION DATES 9/20/11 1/12/12 9/12/12 10/19/12

SHEET 23 OF 27

FILE => 23-0247-t-clr7.dgn

USERNAME => s124496 DATE PLOTTED => 08-MAY-2013 TIME PLOTTED => 08:25

DIST	COUNTY	ROUTE	POST MILES TOTAL PROJECT	SHEET No	TOTAL SHEETS
04	Sol	12,80	2.1/2.8, 12.0/13.1	564	597

GEOTECHNICAL PROFESSIONAL — DATE 9/10/12

5-6-13
PLANS APPROVAL DATE

REGISTERED PROFESSIONAL ENGINEER — G. PARIKH No. 666 Exp. 12/31/13 GEOTECHNICAL — STATE OF CALIFORNIA

The State of California or its officers or agents shall not be responsible for the accuracy or completeness of electronic copies of this plan sheet.

SOLANO TRANSPORTATION AUTHORITY
ONE HARBOR CENTER, SUITE 130
SUISUN CITY, CA 94585

PARIKH CONSULTANTS, INC.
2360 QUME DRIVE, SUITE A
SAN JOSE, CA 95131

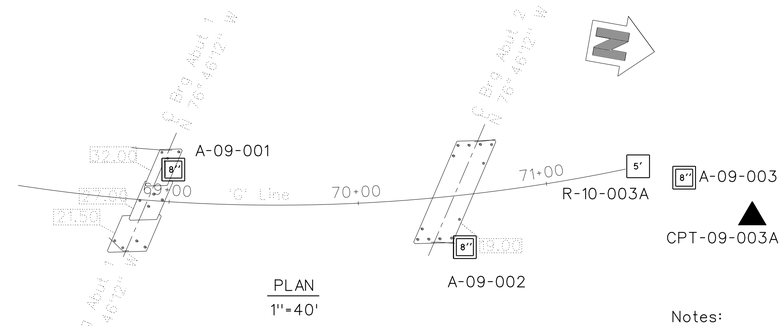

PLAN
1"=40'

Notes:
Standard Penetration Test Sampler: I.D. = 1.4"; O.D. = 2"
Modified California Sampler: I.D. = 2.5"; O.D. = 3"
Hammer Assembly: A 140 lb hammer with a 30" drop (Semi-Automatic (wireline) Hammer)

This LOTB sheet was prepared in accordance with the Caltrans Soil & Rock, Logging, Classification, and Presentation Manual (July 2010)

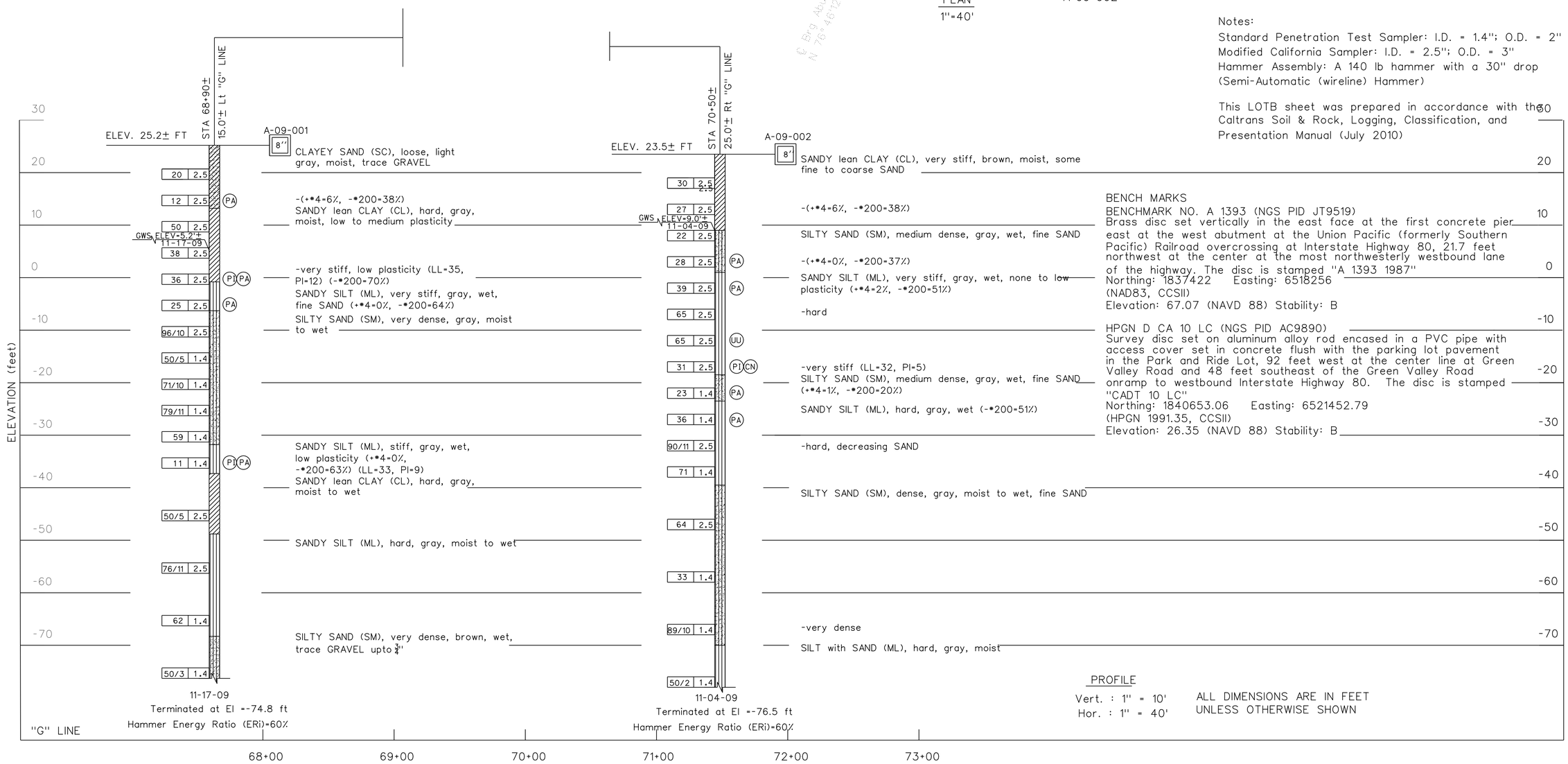

BENCH MARKS

BENCHMARK NO. A 1393 (NGS PID JT9519)
Brass disc set vertically in the east face at the first concrete pier east at the west abutment at the Union Pacific (formerly Southern Pacific) Railroad overcrossing at Interstate Highway 80, 21.7 feet northwest at the center at the most northwesterly westbound lane of the highway. The disc is stamped "A 1393 1987"
Northing: 1837422 Easting: 6518256
(NAD83, CCSII)
Elevation: 67.07 (NAVD 88) Stability: B

HPGN D CA 10 LC (NGS PID AC9890)
Survey disc set on aluminum alloy rod encased in a PVC pipe with access cover set in concrete flush with the parking lot pavement in the Park and Ride Lot, 92 feet west at the center line at Green Valley Road and 48 feet southeast of the Green Valley Road onramp to westbound Interstate Highway 80. The disc is stamped "CADT 10 LC"
Northing: 1840653.06 Easting: 6521452.79
(HPGN 1991.35, CCSII)
Elevation: 26.35 (NAVD 88) Stability: B

PROFILE
Vert. : 1" = 10'
Hor. : 1" = 40'

ALL DIMENSIONS ARE IN FEET UNLESS OTHERWISE SHOWN

Tracy L Bertram
DESIGN OVERSIGHT
1-7-13
SIGN OFF DATE

DRAWN BY L. DUDDU
CHECKED BY F. WANG

L.S. BHANGOO
FIELD INVESTIGATION BY:
DATE: NOVEMBER 2009

PREPARED FOR THE STATE OF CALIFORNIA DEPARTMENT OF TRANSPORTATION

F. WANG
PROJECT ENGINEER

BRIDGE NO. 23-0247
POST MILES 12.8

GREEN VALLEY ROAD OC (OVER SB 680 ON-RAMP)
LOG OF TEST BORINGS1 OF 4

GS GEOTECHNICAL LOG OF TEST BORINGS SHEET (ENGLISH) (REV. 7/16/10)

ORIGINAL SCALE IN INCHES FOR REDUCED PLANS 0 1 2 3

UNIT: 0741
PROJECT NUMBER & PHASE: 04000211311 CONTRACT NO.: 04-0A5341

DISREGARD PRINTS BEARING EARLIER REVISION DATES 01/13/12 09/10/12 10/19/12

SHEET 24 OF 27

FILE => 23-0247-z-lotb1.dgn

USERNAME => s124496 DATE PLOTTED => 08-MAY-2013 TIME PLOTTED => 08:25

DIST	COUNTY	ROUTE	POST MILES TOTAL PROJECT	SHEET No	TOTAL SHEETS
04	Sol	12,80	2.1/2.8, 12.0/13.1	565	597

GEOTECHNICAL PROFESSIONAL — DATE 9/10/12

5-6-13
PLANS APPROVAL DATE

REGISTERED PROFESSIONAL ENGINEER — G. PARIKH — No. 666 — Exp. 12/31/13 — GEOTECHNICAL — STATE OF CALIFORNIA

The State of California or its officers or agents shall not be responsible for the accuracy or completeness of electronic copies of this plan sheet.

SOLANO TRANSPORTATION AUTHORITY
ONE HARBOR CENTER, SUITE 130
SUISUN CITY, CA 94585

PARIKH CONSULTANTS, INC.
2360 QUME DRIVE, SUITE A
SAN JOSE, CA 95131

(SEE BORING LOCATIONS AND BENCH MARKS ON SHEET 1 OF 4)

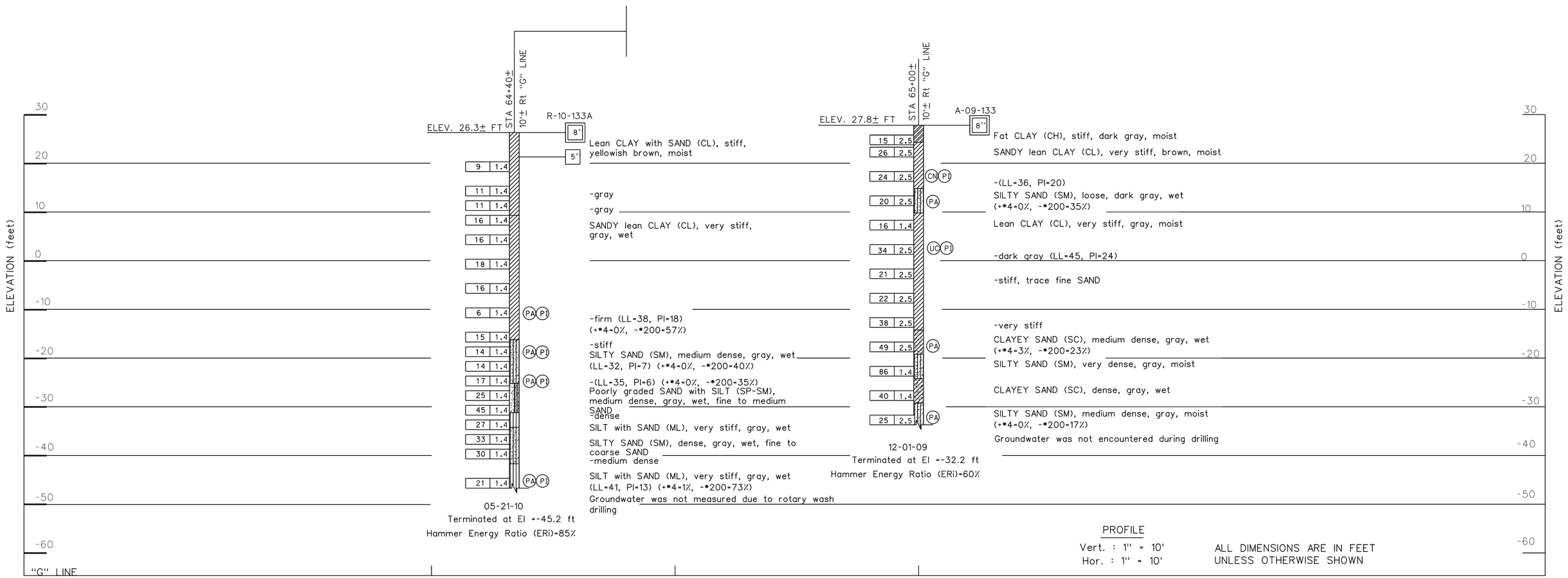

DESIGN OVERSIGHT Tracy L Bertram	DRAWN BY	L. DUDDU	L.S. BHANGOO FIELD INVESTIGATION BY:
1-7-13 SIGN OFF DATE	CHECKED BY	F. WANG	DATE: NOVEMBER 2009

PREPARED FOR THE STATE OF CALIFORNIA DEPARTMENT OF TRANSPORTATION

F. WANG — PROJECT ENGINEER

BRIDGE NO. 23-0247 — POST MILES 12.8

GREEN VALLEY ROAD OC (OVER SB 680 ON-RAMP)

LOG OF TEST BORINGS2 OF 4

GS GEOTECHNICAL LOG OF TEST BORINGS SHEET (ENGLISH) (REV. 7/16/10)

ORIGINAL SCALE IN INCHES FOR REDUCED PLANS 0 1 2 3

UNIT: 0741
PROJECT NUMBER & PHASE: 04000211311 CONTRACT NO.: 04-0A5341

DISREGARD PRINTS BEARING EARLIER REVISION DATES → 01/15/12 09/10/12 10/19/12

SHEET 25 OF 27

FILE => 23-0247-z-lotb2.dgn

USERNAME => s124196 DATE PLOTTED => 08-MAY-2013 TIME PLOTTED => 08:25

DIST	COUNTY	ROUTE	POST MILES TOTAL PROJECT	SHEET No	TOTAL SHEETS
04	Sol	12,80	2.1/2.8, 12.0/13.1	566	597

GEOTECHNICAL PROFESSIONAL — DATE 9/10/12

5-6-13
PLANS APPROVAL DATE

REGISTERED PROFESSIONAL ENGINEER — G. PARIKH — No. 666 — Exp. 12/31/13 — GEOTECHNICAL — STATE OF CALIFORNIA

The State of California or its officers or agents shall not be responsible for the accuracy or completeness of electronic copies of this plan sheet.

SOLANO TRANSPORTATION AUTHORITY
ONE HARBOR CENTER, SUITE 130
SUISUN CITY, CA 94585

PARIKH CONSULTANTS, INC.
2360 QUME DRIVE, SUITE A
SAN JOSE, CA 95131

Notes:

Standard Penetration Test Sampler: I.D. = 1.4"; O.D. = 2" Modified California Sampler: I.D. = 2.5"; O.D. = 3" Hammer Assembly: A 140 lb hammer with a 30" drop (Semi-Automatic (wireline) Hammer for A-09-003 and Automatic Hammer for R-10-003A)

This LOTB sheet was prepared in accordance with the Caltrans Soil & Rock, Logging, Classification, and Presentation Manual (July 2010)

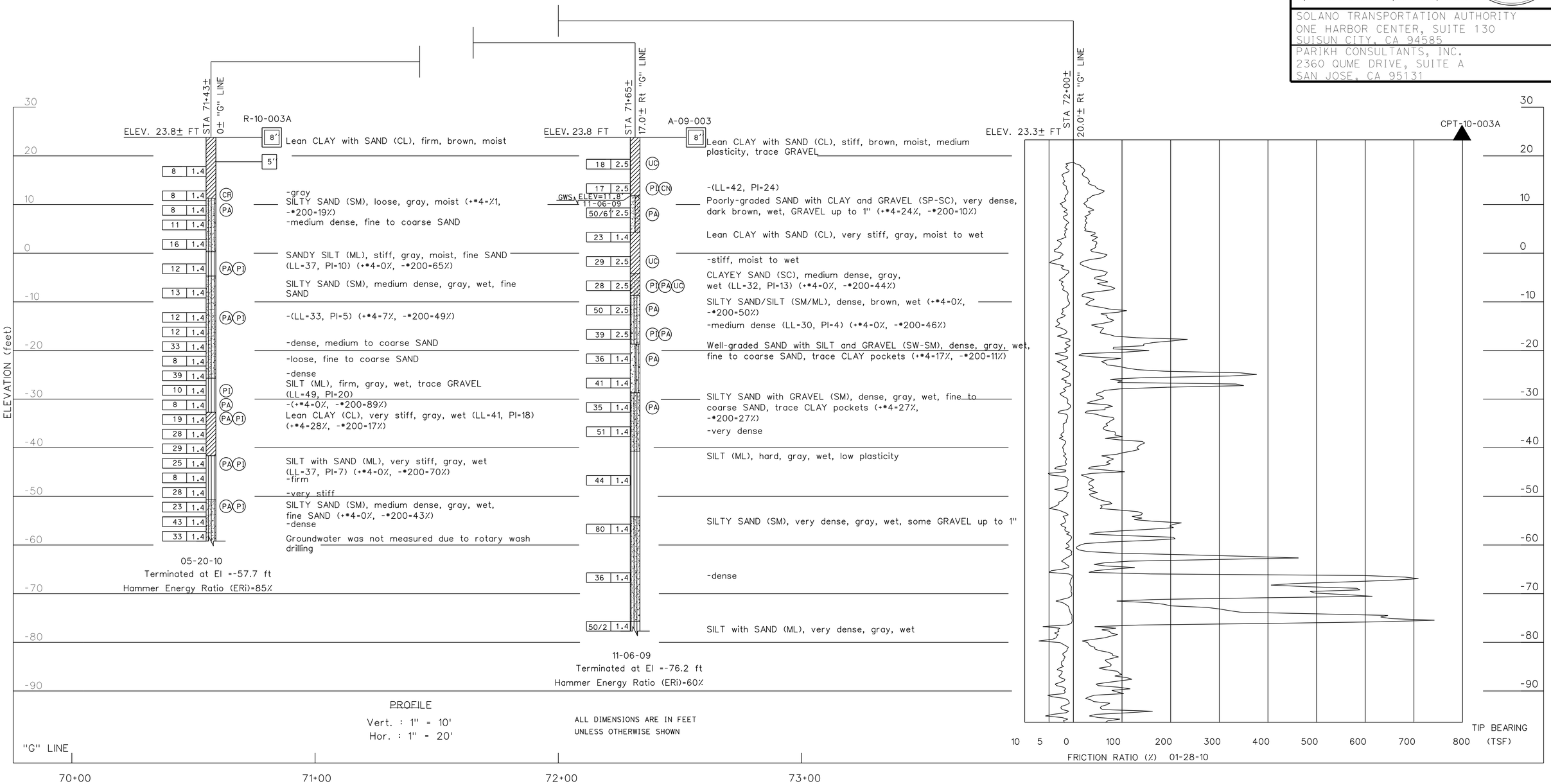

DESIGN OVERSIGHT Tracy L Bertram — 1-7-13 SIGN OFF DATE	DRAWN BY L. DUDDU	L.S. BHANGOO FIELD INVESTIGATION BY:	PREPARED FOR THE STATE OF CALIFORNIA DEPARTMENT OF TRANSPORTATION	F. WANG PROJECT ENGINEER	BRIDGE NO. 23-0247 POST MILES 12.8
	CHECKED BY F. WANG	DATE: NOVEMBER 2009			GREEN VALLEY ROAD OC (OVER SB 680 ON-RAMP) LOG OF TEST BORINGS3 OF 4

GS GEOTECHNICAL LOG OF TEST BORINGS SHEET (ENGLISH) (REV. 7/16/10)

ORIGINAL SCALE IN INCHES FOR REDUCED PLANS 0 1 2 3

UNIT: 0741
PROJECT NUMBER & PHASE: 04000211311 CONTRACT NO.: 04-0A5341

DISREGARD PRINTS BEARING EARLIER REVISION DATES → 01/13/12 09/10/12 10/19/12

SHEET 26 OF 27

FILE => 23-0247-z-lotb3.dgn

USERNAME => S124496 DATE PLOTTED => 08-MAY-2013 TIME PLOTTED => 08:25

I-080-2(11)43

FED. ROAD DIV. NO.	STATE	PROJ. No.	FISCAL YEAR	SHEET No.	TOTAL SHEETS
7	CAL.			160	239

DIST.	COUNTY	ROUTE	SECTION	SHEET No.	TOTAL SHEETS
X	Sol	80	B	10	70

BRIDGE ENGINEER — CIVIL ENGINEER—LICENSE 8065

DATE APPROVED January 18, 1960

DIVISION OF ENGINEERING SERVICES – GEOTECHNICAL SERVICES

As-Built Log of Test Borings sheet is considered an informational document only. As such, the State of California registration seal with signature, license number and registration certificate expiration date confirm that this is a true and accurate copy of the original document. This drawing is available and presented only for the convenience of any bidder, contractor or other interested party.

DIST.	COUNTY	ROUTE	KILOMETER POST–TOTAL PROJECT	Sheet No.	Total Sheets
04	Sol	12,80	2.1/2.8,12.0/13.1	567	597

CERTIFIED ENGINEER — DATE

REGISTERED PROFESSIONAL ENGINEER — GARY PARIKH — G.E. 666 — Exp. 12/31/13 — GEOTECHNICAL — STATE OF CALIFORNIA

GREEN VALLEY ROAD OC (OVER SB 680 ON-RAMP)

LOG OF TEST BORINGS 4 OF 4

NOTE: A COPY OF THIS LOG OF TEST BORINGS IS AVAILABLE AT OFFICE OF STRUCTURE MAINTENANCE AND INVESTIGATIONS, SACRAMENTO, CALIFORNIA

CU: EA:04–0A5341

BRIDGE No. 23-0247

Sheet 27 of 27

TO ACCOMPANY PLANS DATED 5-6-13

Note:
For this as built log of test borings, the vertical datum is not NAVD 88, which is used for the proposed project.7

AS BUILT PLANS
Contract No. 60-10TC21
Date Completed
Document No. 00001122

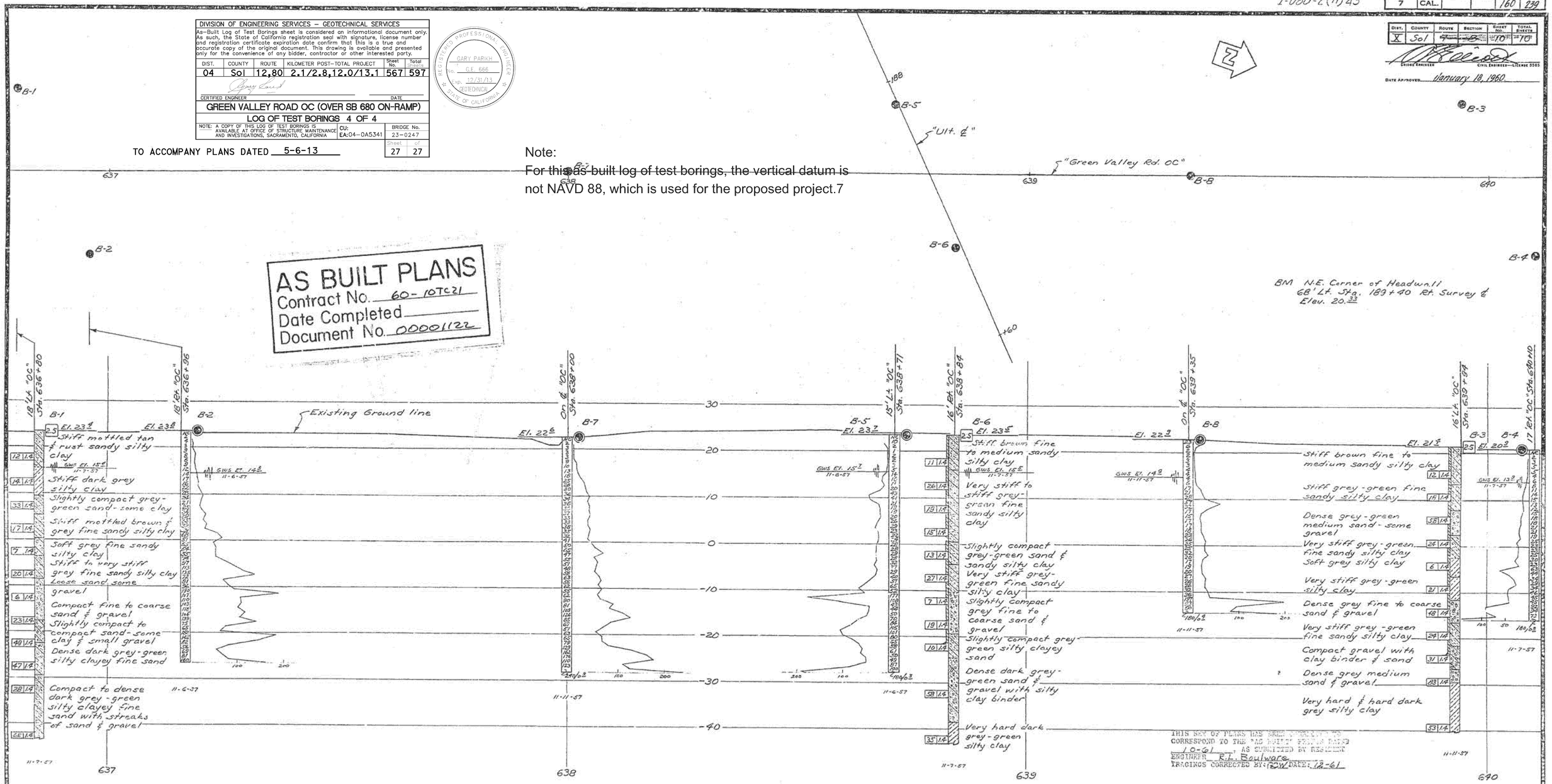

BRIDGE DEPARTMENT

FIELD STUDY	
DRAWN	by Wm. Strawhor
CHECKED	by M. Abacay 1-30-58 / by C. Alexander 2-3-58

Approval Recommended by: Engineering Geologist / Supervising Engineer

CLASSIFICATION OF MATERIAL BASED ON STANDARD GRADE SIZE LIMITS

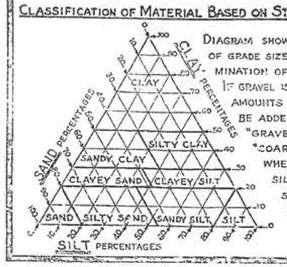

DIAGRAM SHOWING THE BASIS FOR ESTIMATES OF GRADE SIZE DISTRIBUTION USED IN DETERMINATION OF CLASS NAMES.

IF GRAVEL IS PRESENT IN APPRECIABLE AMOUNTS THE TERM "GRAVELLY" MAY BE ADDED TO THE CLASS NAME, VIZ. "GRAVELLY SAND". THE TERMS "COARSE", "MEDIUM" AND "FINE" WHEN USED TO DESCRIBE SAND, SILT AND GRAVEL REFER TO STANDARD GRADE SIZE LIMITS.

LEGEND OF EARTH MATERIALS

- GRAVEL
- SAND
- SILT
- CLAY
- SANDY CLAY OR CLAYEY SAND
- SANDY SILT OR SILTY SAND
- SILTY CLAY OR CLAYEY SILT
- PEAT AND/OR ORGANIC MATTER
- FILL MATERIAL
- IGNEOUS ROCK
- SEDIMENTARY ROCK
- METAMORPHIC ROCK

LEGEND OF BORING OPERATIONS

- PLAN OF ANY BORING
- PENETROMETER
- 2½" CONE PENETROMETER
- SAMPLER BORING (LRV)
- ROTARY BORING (WE'r)
- AUGER BORING (DRY)
- JET BORING
- CORE BORING
- TEST PIT

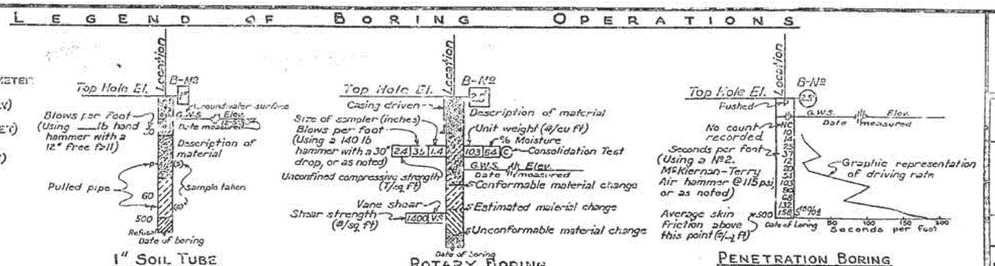

NOTES

Classification of earth materials as shown on this sheet is based upon field inspection and is not to be construed to imply mechanical analysis.

STATE OF CALIFORNIA
DEPARTMENT OF PUBLIC WORKS
DIVISION OF HIGHWAYS

GREEN VALLEY ROAD OVERCROSSING

LOG OF TEST BORINGS

SCALE 1" = 10'	BRIDGE 23-138	FILE E-23	DRAWING C-5801-10

PREL. DRAWING No 1-5801 | 19

23-0247-z-lotb4.tif

DIST	COUNTY	ROUTE	POST MILES TOTAL PROJECT	SHEET NO	TOTAL SHEETS
04	Sol	12,80	2.1/2.8, 12.0/13.1	568	597

Chandu Shenoy 9/12/12
REGISTERED CIVIL ENGINEER DATE

5-6-13
PLANS APPROVAL DATE

REGISTERED PROFESSIONAL ENGINEER CHANDU V. SHENOY NO. C-53636 EXP. 6/30/13 CIVIL STATE OF CALIFORNIA

THE STATE OF CALIFORNIA OR ITS OFFICERS OR AGENTS SHALL NOT BE RESPONSIBLE FOR THE ACCURACY OR COMPLETENESS OF ELECTRONIC COPIES OF THIS PLAN SHEET.

SOLANO TRANSPORTATION AUTHORITY
ONE HARBOR CENTER, SUITE 130
SUISUN CITY, CA 94585

MARK THOMAS & COMPANY, INC. + NOLTE ASSOCIATES, INC.
3000 OAK ROAD, SUITE 650
WALNUT CREEK, CA 94597

LEGEND:

1. PAINT BRIDGE NO. & YEAR COMPLETED.
2. PAINT BRIDGE NAME "WB80 TO WB12 SEPARATION"
3. STRUCTURE APPROACH TYPE N(30S)
4. CONCRETE BARRIER, TYPE 732
5. MBGR
6. BARRIER SLAB AT APPROACH, SEE "I-80/I-680/SR-12 ICP" "MECHANICALLY STABILIZED EMBANKMENT", "DETAILS NO. 4" SHEET

INDICATES POINT OF MINIMUM VERTICAL CLEARANCE
INDICATES DIRECTION OF TRAFFIC
DECK DRAINS, FOR LOCATIONS, SEE "GIRDER LAYOUT" SHEETS.

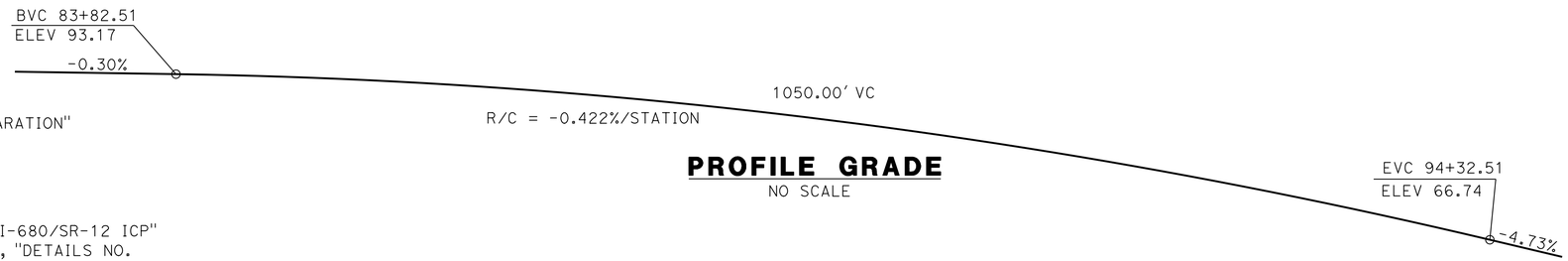

PROFILE GRADE
NO SCALE

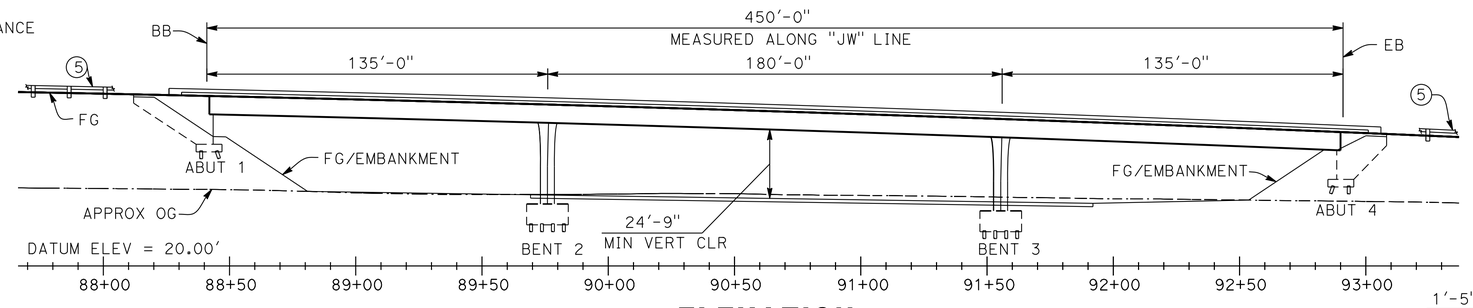

ELEVATION
1" = 30'

NOTE:
FOR PILE DATA TABLE, QUANTITIES, GENERAL NOTES AND INDEX TO PLANS, SEE "INDEX TO PLANS" SHEET.

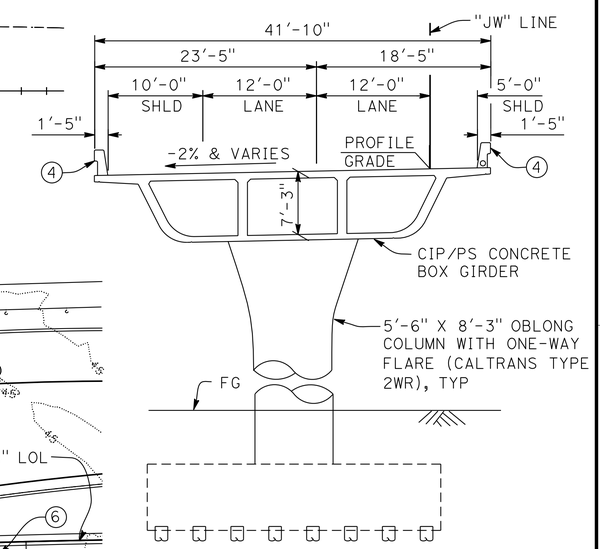

TYPICAL SECTION
1/8" = 1'-0"

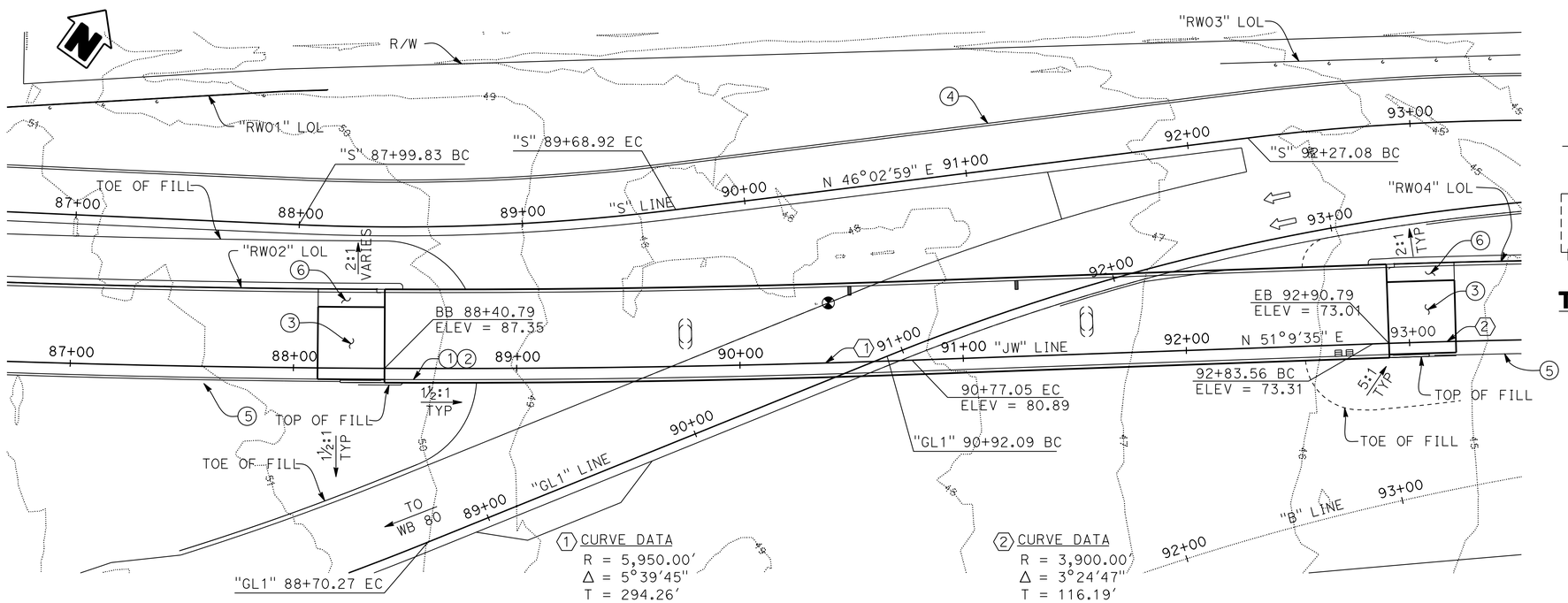

1 CURVE DATA
R = 5,950.00'
Δ = 5°39'45"
T = 294.26'
L = 588.04'

2 CURVE DATA
R = 3,900.00'
Δ = 3°24'47"
T = 116.19'
L = 232.31'

PLAN
1" = 30'

Tracy L Bertram
DESIGN OVERSIGHT Tracy L Bertram
1-7-13
SIGN OFF DATE

	BY	CHECKED			
DESIGN	L. KINNEBREW	C. SHENOY	LOAD RESISTANCE FACTOR DESIGN	LIVE LOADING: HL93 W/ "LOW-BOY" AND PERMIT DESIGN VEHICLE	
DETAILS	L. KINNEBREW	C. SHENOY	LAYOUT	BY B. ROCK	CHECKED C. SHENOY
QUANTITIES	L. KINNEBREW	C. SHENOY	SPECIFICATIONS	BY T. WALKER	PLANS AND SPECS COMPARED C. SHENOY

DESIGN GENERAL PLAN SHEET (ENGLISH) (REV.3/14/12)

ORIGINAL SCALE IN INCHES FOR REDUCED PLANS 0 1 2 3

PREPARED FOR THE STATE OF CALIFORNIA DEPARTMENT OF TRANSPORTATION

C. SHENOY
PROJECT ENGINEER

BRIDGE NO. 23-0248
POST MILES 3.0./12.2

WB 80 TO WB 12 SEPARATION (OVER WB 80 ON-RAMP)
GENERAL PLAN

UNIT: 0741
PROJECT NUMBER & PHASE: 04000211311 CONTRACT NO.: 04-0A5341

DISREGARD PRINTS BEARING EARLIER REVISION DATES → 09/12/12 12/21/12

SHEET 1 OF 30

FILE => 23-0248-a-gp01.dgn

CONTRACT NO.: 04-0A5341 PROJECT ID: 1234567890

USERNAME => s124496 DATE PLOTTED => 08-MAY-2013 TIME PLOTTED => 09:02

DIST	COUNTY	ROUTE	POST MILES TOTAL PROJECT	SHEET NO	TOTAL SHEETS
04	Sol	12,80	2.1/2.8, 12.0/13.1	569	597

Chandu Shenoy 9/12/12
REGISTERED CIVIL ENGINEER DATE

5-6-13
PLANS APPROVAL DATE

REGISTERED PROFESSIONAL ENGINEER CHANDU V. SHENOY NO. C-53636 EXP. 6/30/13 CIVIL STATE OF CALIFORNIA

THE STATE OF CALIFORNIA OR ITS OFFICERS OR AGENTS SHALL NOT BE RESPONSIBLE FOR THE ACCURACY OR COMPLETENESS OF ELECTRONIC COPIES OF THIS PLAN SHEET.

SOLANO TRANSPORTATION AUTHORITY
ONE HARBOR CENTER, SUITE 130
SUISUN CITY, CA 94585

MARK THOMAS & COMPANY, INC. + NOLTE ASSOCIATES, INC.
3000 OAK ROAD, SUITE 650
WALNUT CREEK, CA 94597

INDEX TO PLANS

SHEET NO.	TITLE
1	GENERAL PLAN
2	INDEX TO PLANS
3	DECK CONTOURS
4	FOUNDATION PLAN
5	ABUTMENT 1 LAYOUT
6	ABUTMENT 4 LAYOUT
7	ABUTMENT DETAILS NO. 1
8	ABUTMENT DETAILS NO. 2
9	ABUTMENT DETAILS NO. 3
10	PTFE ELASTOMERIC BEARING PAD DETAILS
11	BENT DETAILS NO.1
12	BENT DETAILS NO. 2
13	BENT DETAILS NO. 3
14	TYPICAL SECTION
15	LONGITUDINAL DECK REINFORCEMENT
16	GIRDER LAYOUT NO. 1
17	GIRDER LAYOUT NO. 2
18	GIRDER LAYOUT NO. 3
19	AESTHETIC TREATMENT
20	AESTHETIC TREATMENT DETAILS No. 1
21	AESTHETIC TREATMENT DETAILS No. 2
22	AESTHETIC TREATMENT DETAILS No. 3
23	JOINT SEAL ASSEMBLY (MAXIMUM MOVEMENT RATING = 4")
24	DECK DRAIN - TYPE C
25	STRUCTURE APPROACH DRAINAGE DETAILS
26	STRUCTURE APPROACH TYPE N(30S)
27	LOG OF TEST BORINGS 1 OF 4
28	LOG OF TEST BORINGS 2 OF 4
29	LOG OF TEST BORINGS 3 OF 4
30	LOG OF TEST BORINGS 4 OF 4

STANDARD PLANS 2010

A10A	ABBREVIATIONS (SHEET 1 OF 2)
A10B	ABBREVIATIONS (SHEET 2 OF 2)
A10C	LINES AND SYMBOLS (SHEET 1 OF 3)
A10D	LINES AND SYMBOLS (SHEET 2 OF 3)
A10E	LINES AND SYMBOLS (SHEET 3 OF 3)
A10F	LEGEND - SOIL (SHEET 1 OF 2)
A10G	LEGEND - SOIL (SHEET 1 OF 2)
A62C	LIMITS OF PAYMENT FOR EXCAVATION AND BACKFILL BRIDGE
B0-1	BRIDGE DETAILS
B0-3	BRIDGE DETAILS
B0-5	BRIDGE DETAILS
B0-13	BRIDGE DETAILS
B2-8	PILE DETAILS - CLASS 200
B7-1	BOX GIRDER DETAILS
B7-6	DECK DRAINS - TYPES D-1 AND D-2
B8-5	CAST-IN-PLACE PRESTRESSED GIRDER DETAILS
B11-55	CONCRETE BARRIER TYPE 732

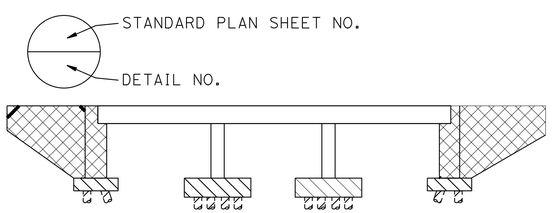

STRUCTURAL CONCRETE, BRIDGE (5000 PSI AT 28 DAYS)
STRUCTURAL CONCRETE, BRIDGE (4000 PSI AT 28 DAYS)
STRUCTURAL CONCRETE, BRIDGE FOOTING (4000 PSI AT 28 DAYS)
CLASS 200 ALT "W" PILE

CONCRETE STRENGTH AND TYPE LIMITS

NO SCALE

GENERAL NOTES
LOAD RESISTANCE FACTOR DESIGN

DESIGN: AASHTO LRFD BRIDGE DESIGN SPECIFICATIONS, 4TH EDITION AND CALIFORNIA AMENDMENTS PREFACE DATED DECEMBER, 2008 EXCEPT DETAILS TAKEN FROM STANDARD PLANS 2010 AND STANDARD BRIDGE DETAILS XS SHEETS ARE DESIGNED USING BRIDGE DESIGN SPECIFICATIONS (96 AASHTO WITH REVISIONS BY CALTRANS)

SEISMIC DESIGN: CALTRANS SEISMIC DESIGN CRITERIA (SDC) VERSION 1.6, NOVEMBER 2010

DEAD LOAD: INCLUDES 35 PSF FOR FUTURE WEARING SURFACE

LIVE LOADING: HL93 AND PERMIT DESIGN LOAD

SEISMIC LOADING: SOIL PROFILE VS_{30M} = 205M/S LIQUEFACTION CASE
VS_{30M} = 255M/S NON-LIQUEFACTION CASE
MAGNITUDE GROUP 7.0± 0.25
PEAK GROUND ACCELERATION 0.70G
SEE 'ARS DESIGN CURVE'

CONCRETE: FY = 60 KSI
F'C = 5 KSI (UNLESS OTHERWISE SHOWN OR SPECIFIED)
N = 8.5
SEE "PRESTRESSING NOTES" ON "GIRDER LAYOUT" SHEETS

PILE DATA TABLE

PILE LOCATION	PILE TYPE	DESIGN LOADING	NOMINAL RESISTANCE		DESIGN PILE TIP ELEVATION (FT)	SPECIFIED PILE TIP ELEVATION (FT)	NOMINAL DRIVING RESISTANCE REQUIRED (KIPS)
			COMPRESSION	TENSION			
ABUT 1 (NOTE 2)	CLASS 200 ALT "W" 16"	170 KIPS	340 KIPS	0 KIPS	-10.0' (A) -5.0' (C) 35.0' (D)	-10.0'	375
BENT 2	CLASS 200 ALT "W" 16"	155 KIPS	390 KIPS	-170 KIPS	-41.5' (A) -18.5' (B) -34.0' (C) 1.0' (D)	-41.5	400
BENT 3	CLASS 200 ALT "W" 16"	150 KIPS	400 KIPS	-180 KIPS	-44.5 (A) -24.5 (B) -37.5' (C) -1.5' (D)	-44.5	400
ABUT 4 (NOTE 2)	CLASS 200 ALT "W" 16"	170 KIPS	360 KIPS	0 KIPS	-27.5' (A) 0.0' (C) 20.0' (D)	-27.5	480

NOTE:
1. DESIGN TIP ELEVATION IS CONTROLLED BY THE FOLLOWING DEMANDS: (A) COMPRESSION, (B) TENSION, (C) SETTLEMENT, (D) LATERAL LOADS
2. PRE-DRILL THROUGH NEW EMBANKMENTS TO NATIVE SUBGRADE AT ALL ABUTMENT PILE LOCATIONS AND INSERT PILES IN PRE-DRILLED HOLES PRIOR TO DRIVING.

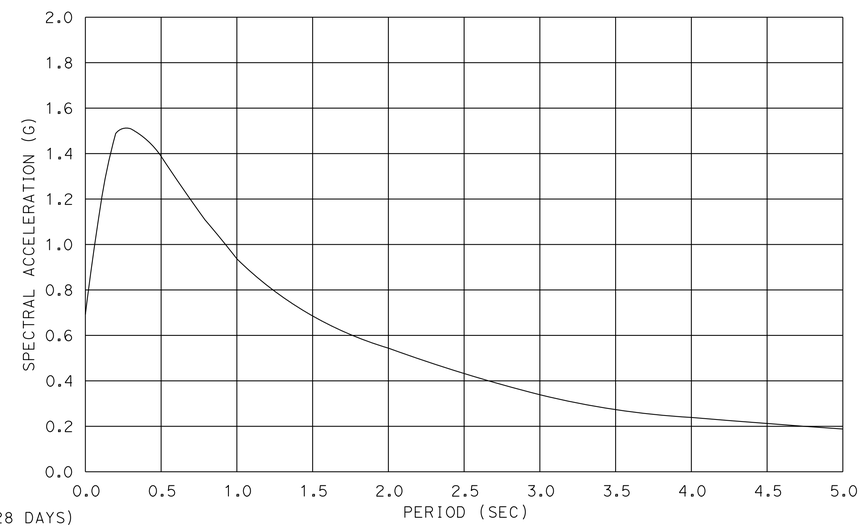

ACCELERATION RESPONSE SPECTRA (5% DAMPING)

NO SCALE

WB 80 TO WB12 SEPARATION (OVER WB 80 ON-RAMP) #23-0248

QUANTITIES

STRUCTURE EXCAVATION (BRIDGE)	1,060	CY
STRUCTURE BACKFILL (BRIDGE)	720	CY
FURNISH PILING (CLASS 200) (ALTERNATIVE W)	7,450	LF
DRIVE PILE (CLASS 200) (ALTERNATIVE W)	96	EA
PRESTRESSING CAST-IN-PLACE CONCRETE	LUMP	SUM
STRUCTURAL CONCRETE, BRIDGE FOOTING	385	CY
STRUCTURAL CONCRETE, BRIDGE	1,665	CY
STRUCTURAL CONCRETE, APPROACH SLAB(TYPE N)	76	CY
ARCHITECTURAL TREATMENT	715	SQFT
PTFE BEARING	8	EA
JOINT SEAL ASSEMBLY (MR 3")	84	LF
BAR REINFORCING STEEL (BRIDGE)	581,900	LB
BRIDGE DECK DRAINAGE SYSTEM	2,100	LB
CONCRETE BARRIER (TYPE 732 MODIFIED)	999	LF

Tracy L. Bertram
DESIGN OVERSIGHT Tracy L Bertram
1-7-13
SIGN OFF DATE

	BY	CHECKED
DESIGN	L. KINNEBREW	C. SHENOY
DETAILS	L. KINNEBREW	C. SHENOY
QUANTITIES	L. KINNEBREW	C. SHENOY

PREPARED FOR THE STATE OF CALIFORNIA DEPARTMENT OF TRANSPORTATION

C. SHENOY
PROJECT ENGINEER

BRIDGE NO. 23-0248
POST MILES 3.0./12.2

WB 80 TO WB 12 SEPARATION (OVER WB 80 ON-RAMP)

INDEX TO PLANS

DESIGN DETAIL SHEET (ENGLISH) (REV.3/14/12)

ORIGINAL SCALE IN INCHES FOR REDUCED PLANS 0 1 2 3

UNIT: 0741
PROJECT NUMBER & PHASE: 04000211311 CONTRACT NO.: 04-0A5341

DISREGARD PRINTS BEARING EARLIER REVISION DATES → 08/12/12 12/21/12

SHEET 2 OF 30

FILE => 23-0248-a-itp.dgn CONTRACT NO.: 04-0A5341 PROJECT ID: 1234567890

USERNAME => s124496 DATE PLOTTED => 08-MAY-2013 TIME PLOTTED => 09:02

DIST	COUNTY	ROUTE	POST MILES TOTAL PROJECT	SHEET NO	TOTAL SHEETS
04	Sol	12,80	2.1/2.8, 12.0/13.1	570	597

Chandu Shenoy 9/12/12
REGISTERED CIVIL ENGINEER DATE

5-6-13
PLANS APPROVAL DATE

REGISTERED PROFESSIONAL ENGINEER CHANDU V. SHENOY NO. C-53636 EXP. 6/30/13 CIVIL STATE OF CALIFORNIA

THE STATE OF CALIFORNIA OR ITS OFFICERS OR AGENTS SHALL NOT BE RESPONSIBLE FOR THE ACCURACY OR COMPLETENESS OF ELECTRONIC COPIES OF THIS PLAN SHEET.

SOLANO TRANSPORTATION AUTHORITY
ONE HARBOR CENTER, SUITE 130
SUISUN CITY, CA 94585

MARK THOMAS & COMPANY, INC. + NOLTE ASSOCIATES, INC.
3000 OAK ROAD, SUITE 650
WALNUT CREEK, CA 94597

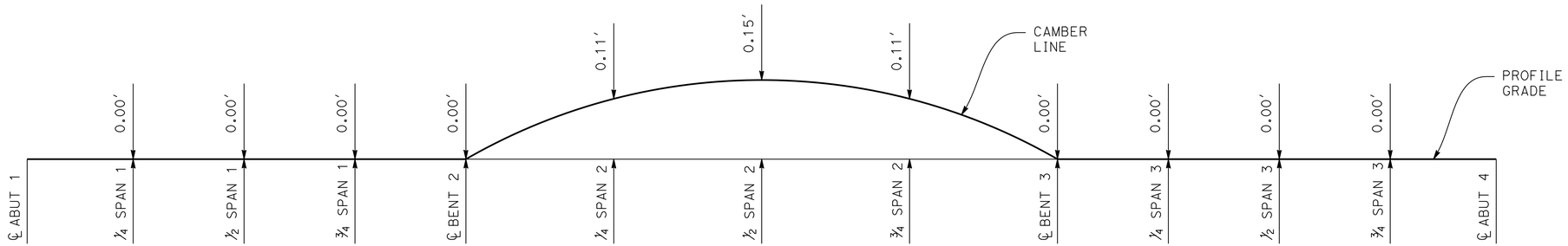

CAMBER DIAGRAM

NO SCALE

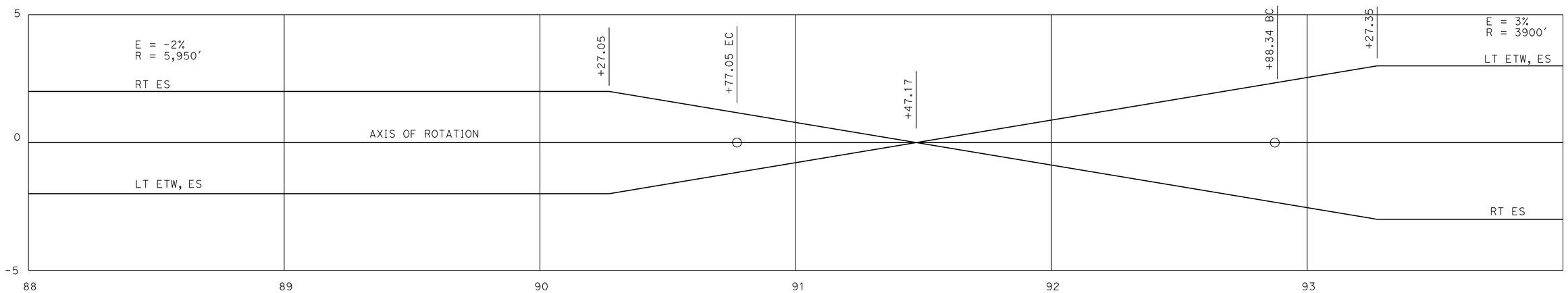

SUPERELEVATION DIAGRAM

NO SCALE

NOTES:

1. ⊡ INDICATES 1 FOOT CONTOURS
2. × = 10′ INTERVALS ALONG STATION LINE.
3. CONTOUR INTERVAL = 0.20′
4. CONTOURS DO NOT INCLUDE CAMBER OR FALSEWORK SETTLEMENT

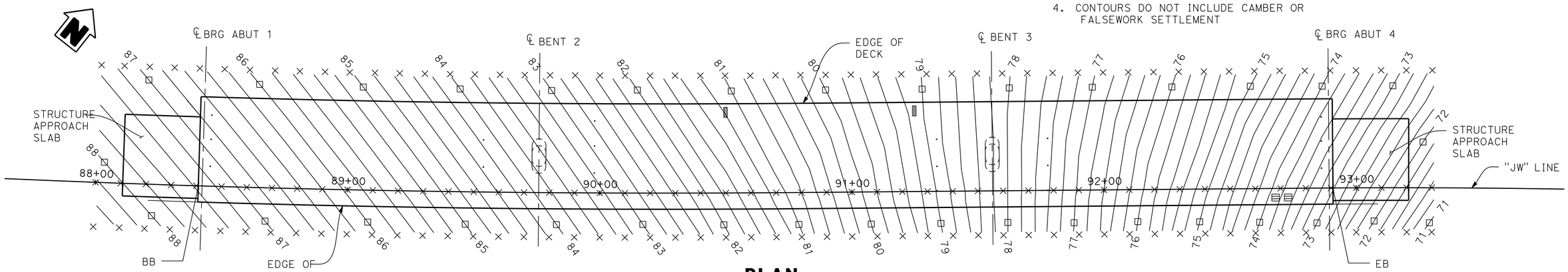

PLAN

1" = 20′

DESIGN OVERSIGHT Tracy L Bertram	DESIGN	BY L. KINNEBREW	CHECKED C. SHENOY
1-7-13 SIGN OFF DATE	DETAILS	BY L. KINNEBREW	CHECKED C. SHENOY
	QUANTITIES	BY L. KINNEBREW	CHECKED C. SHENOY

PREPARED FOR THE STATE OF CALIFORNIA DEPARTMENT OF TRANSPORTATION

C. SHENOY
PROJECT ENGINEER

BRIDGE NO. 23-0248
POST MILES 3.0./12.2

WB 80 TO WB 12 SEPARATION (OVER WB 80 ON-RAMP)

DECK CONTOURS

DESIGN DETAIL SHEET (ENGLISH) (REV.3/14/12)

ORIGINAL SCALE IN INCHES FOR REDUCED PLANS 0 1 2 3

UNIT: 0741
PROJECT NUMBER & PHASE: 04000211311 CONTRACT NO.: 04-0A5341

DISREGARD PRINTS BEARING EARLIER REVISION DATES → 09/12/12 12/21/12

SHEET 3 OF 30

FILE => 23-0248-d-dc01.dgn CONTRACT NO.: 04-0A5341 PROJECT ID: 1234567890

USERNAME => s124496 DATE PLOTTED => 08-MAY-2013 TIME PLOTTED => 09:02

DIST	COUNTY	ROUTE	POST MILES TOTAL PROJECT	SHEET NO	TOTAL SHEETS
04	Sol	12,80	2.1/2.8, 12.0/13.1	571	597

Chandu Shenoy 9/12/12
REGISTERED CIVIL ENGINEER DATE

5-6-13
PLANS APPROVAL DATE

REGISTERED PROFESSIONAL ENGINEER CHANDU V. SHENOY NO. C-53636 EXP. 6/30/13 CIVIL STATE OF CALIFORNIA

THE STATE OF CALIFORNIA OR ITS OFFICERS OR AGENTS SHALL NOT BE RESPONSIBLE FOR THE ACCURACY OR COMPLETENESS OF ELECTRONIC COPIES OF THIS PLAN SHEET.

SOLANO TRANSPORTATION AUTHORITY
ONE HARBOR CENTER, SUITE 130
SUISUN CITY, CA 94585

MARK THOMAS & COMPANY, INC. + NOLTE ASSOCIATES, INC.
3000 OAK ROAD, SUITE 650
WALNUT CREEK, CA 94597

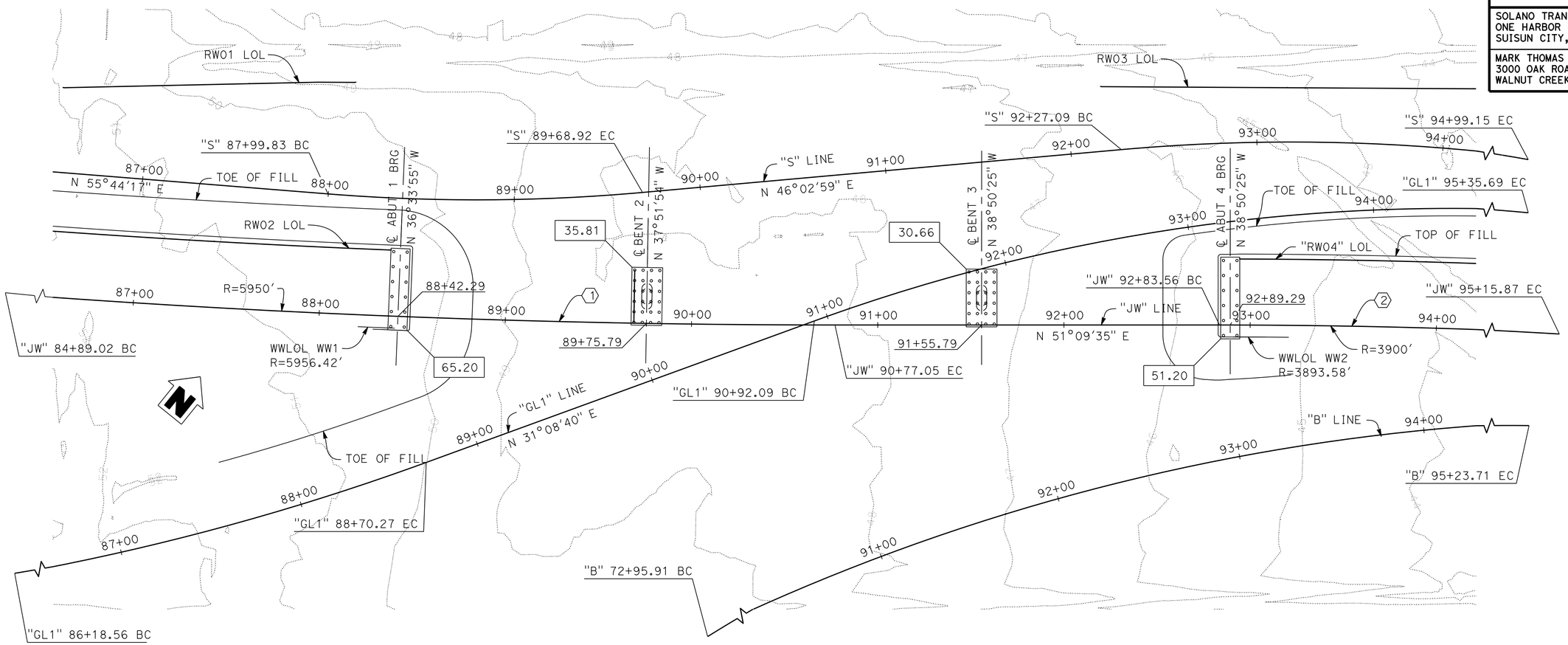

FOUNDATION PLAN
1" = 30'

NOTE:
CONTRACTOR SHALL VERIFY ALL CONTROLLING FIELD DIMENSIONS BEFORE ORDERING OR FABRICATING ANY MATERIALS.

BENCH MARK

BASIS OF BEARINGS AND COORDINATES:
THE HORIZONTAL COORDINATE VALUES ARE IN THE CALIFORNIA COORDINATE SYSTEM (CCS 83) ZONE 2 AND BASED ON THE NORTH AMERICAN DATUM OF 1983 (NAD83), AS ADJUSTED TO THE CALIFORNIA HIGH PRECISION NETWORK (HPGN) 92 EPOCH 1991.35

BASIS OF ELEVATIONS:
THIS PROJECT IS BASED ON THE NORTH VERTICAL DATUM OF 1988 (NAVD88). THE STATIONS AND RESPECTIVE ELEVATIONS CONSTRAINED ARE:
HPGN D CA 10 LC (PID AC 9890, ELEVATION 26.35)
V 1054 (PID JT0185, ELEVATION 46.90)

(1) CURVE DATA
R = 5950.00'
Δ = 5°39'45"
T = 294.26'
L = 588.04'

(2) CURVE DATA
R = 3900.00'
Δ = 3°24'47"
T = 116.19'
L = 232.31'

LEGEND:
XXXX INDICATES BOTTOM FTG ELEV
INDICATES PILES

GEOTECHNICAL PROFESSIONAL APPROVAL DATE

Tracy L Bertram
DESIGN OVERSIGHT Tracy L Bertram
1-7-13
SIGN OFF DATE

SCALE: X	VERT.DATUM X NGVD 29	HORZ.DATUM X NAD 83	
PHOTOGRAMMETRY AS OF:		ALIGNMENT TIES	
SURVEYED	BY	DRAFTED	BY JOSHUA WHITING
FIELD CHECKED	BY	CHECKED	BY

	BY	CHECKED
DESIGN	L. KINNEBREW	C. SHENOY
DETAILS	L. KINNEBREW	C. SHENOY
QUANTITIES	L. KINNEBREW	C. SHENOY

PREPARED FOR THE STATE OF CALIFORNIA DEPARTMENT OF TRANSPORTATION

C. SHENOY
PROJECT ENGINEER

BRIDGE NO. 23-0248
POST MILES 3.0/12.2

WB 80 TO WB 12 SEPARATION (OVER WB 80 ON-RAMP)

FOUNDATION PLAN

FOUNDATION PLAN SHEET (ENGLISH) (REV.3/14/12)

ORIGINAL SCALE IN INCHES FOR REDUCED PLANS

UNIT: 0741
PROJECT NUMBER & PHASE: 04000211311 CONTRACT NO.: 04-0A5341

DISREGARD PRINTS BEARING EARLIER REVISION DATES

REVISION DATES			SHEET	OF
09/12/12			4	30

FILE => 23-0248-e-fdp101.dgn
CONTRACT NO.: 04-0A5341 PROJECT ID: 1234567890

USERNAME => S124496 DATE PLOTTED => 08-MAY-2013 TIME PLOTTED => 09:02

DIST	COUNTY	ROUTE	POST MILES TOTAL PROJECT	SHEET NO	TOTAL SHEETS
04	Sol	12,80	2.1/2.8, 12.0/13.1	572	597

Chandu Shenoy 9/12/12
REGISTERED CIVIL ENGINEER DATE

5-6-13
PLANS APPROVAL DATE

REGISTERED PROFESSIONAL ENGINEER CHANDU V. SHENOY NO. C-53636 EXP. 6/30/13 CIVIL STATE OF CALIFORNIA

THE STATE OF CALIFORNIA OR ITS OFFICERS OR AGENTS SHALL NOT BE RESPONSIBLE FOR THE ACCURACY OR COMPLETENESS OF ELECTRONIC COPIES OF THIS PLAN SHEET.

SOLANO TRANSPORTATION AUTHORITY
ONE HARBOR CENTER, SUITE 130
SUISUN CITY, CA 94585

MARK THOMAS & COMPANY, INC. + NOLTE ASSOCIATES, INC.
3000 OAK ROAD, SUITE 650
WALNUT CREEK, CA 94597

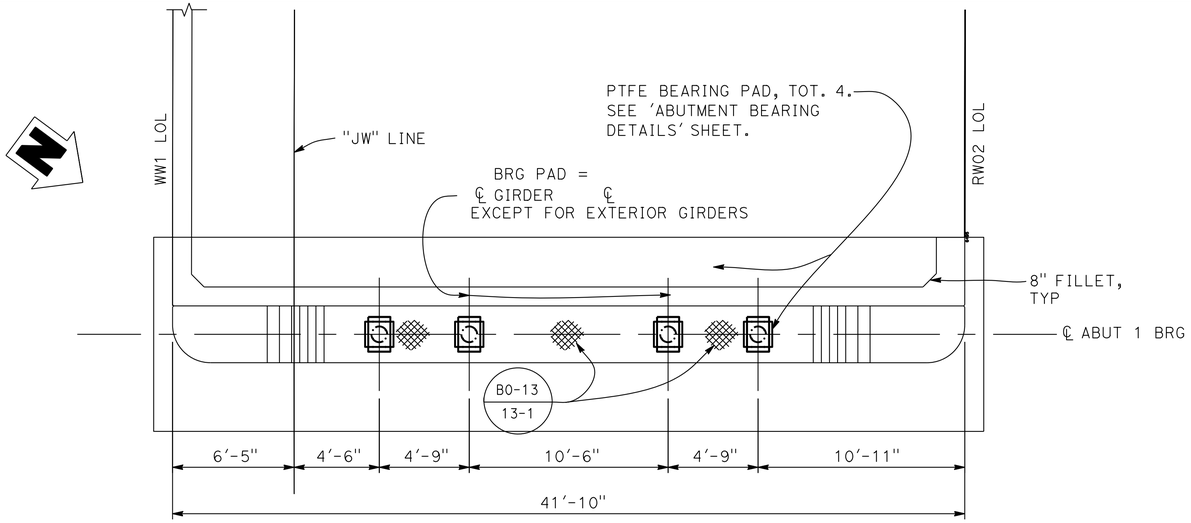

ABUTMENT 1 PLAN

¼"=1'-0"

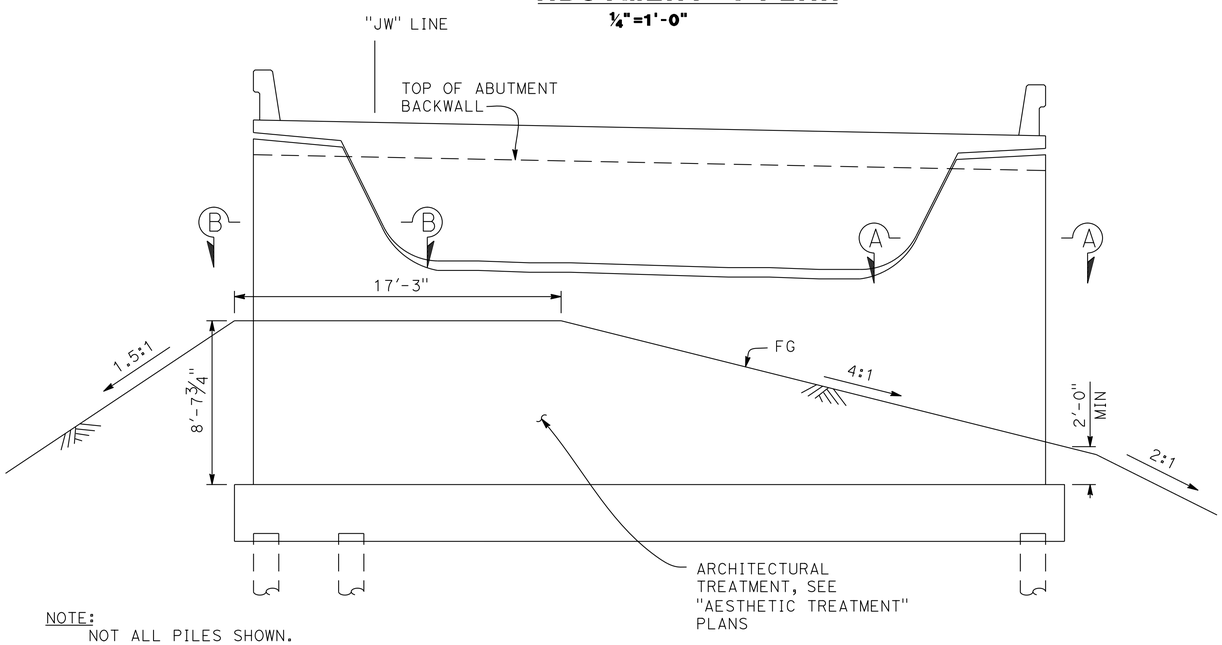

NOTE:
NOT ALL PILES SHOWN.

ABUTMENT 1 ELEVATION

¼"=1'-0"

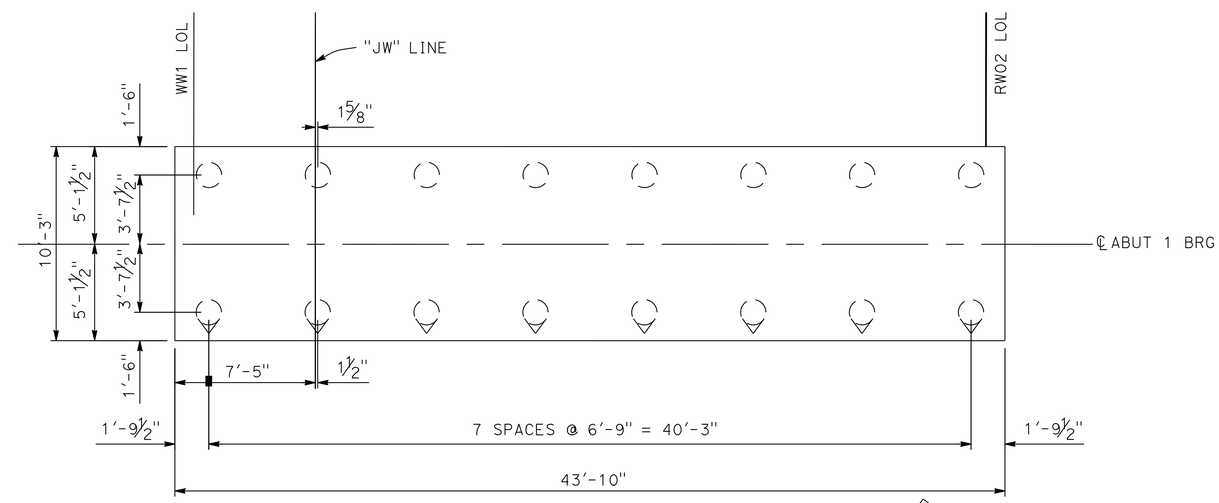

FOOTING PLAN

¼"=1'-0"

NOTE:

1. FOR SECTIONS 'A-A' AND 'B-B', SEE "ABUTMENT DETAILS NO. 2" SHEET.

Tracy L Bertram
DESIGN OVERSIGHT
1-7-13
SIGN OFF DATE

	BY	CHECKED
DESIGN	L. KINNEBREW	C. SHENOY
DETAILS	L. KINNEBREW	C. SHENOY
QUANTITIES	L. KINNEBREW	C. SHENOY

PREPARED FOR THE STATE OF CALIFORNIA DEPARTMENT OF TRANSPORTATION

C. SHENOY
PROJECT ENGINEER

BRIDGE NO. 23-0248
POST MILES 3.0./12.2

WB 80 TO WB 12 SEPARATION (OVER WB 80 ON-RAMP)

ABUTMENT 1 LAYOUT

DESIGN DETAIL SHEET (ENGLISH) (REV.3/14/12)

ORIGINAL SCALE IN INCHES FOR REDUCED PLANS 0 1 2 3

UNIT: 0741
PROJECT NUMBER & PHASE: 04000211311 CONTRACT NO.: 04-0A5341

DISREGARD PRINTS BEARING EARLIER REVISION DATES

REVISION DATES: 08/12/12 12/21/12

SHEET 5 OF 30

FILE => 23-0248-f-a01_lo1.dgn

CONTRACT NO.: 04-0A5341 PROJECT ID: 1234567890

USERNAME => s124496 DATE PLOTTED => 08-MAY-2013 TIME PLOTTED => 09:02

DIST	COUNTY	ROUTE	POST MILES TOTAL PROJECT	SHEET NO	TOTAL SHEETS
04	Sol	12,80	2.1/2.8, 12.0/13.1	573	597

Chandu Shenoy 9/12/12
REGISTERED CIVIL ENGINEER DATE

5-6-13
PLANS APPROVAL DATE

REGISTERED PROFESSIONAL ENGINEER CHANDU V. SHENOY NO. C-53636 EXP. 6/30/13 CIVIL STATE OF CALIFORNIA

THE STATE OF CALIFORNIA OR ITS OFFICERS OR AGENTS SHALL NOT BE RESPONSIBLE FOR THE ACCURACY OR COMPLETENESS OF ELECTRONIC COPIES OF THIS PLAN SHEET.

SOLANO TRANSPORTATION AUTHORITY
ONE HARBOR CENTER, SUITE 130
SUISUN CITY, CA 94585

MARK THOMAS & COMPANY, INC. + NOLTE ASSOCIATES, INC.
3000 OAK ROAD, SUITE 650
WALNUT CREEK, CA 94597

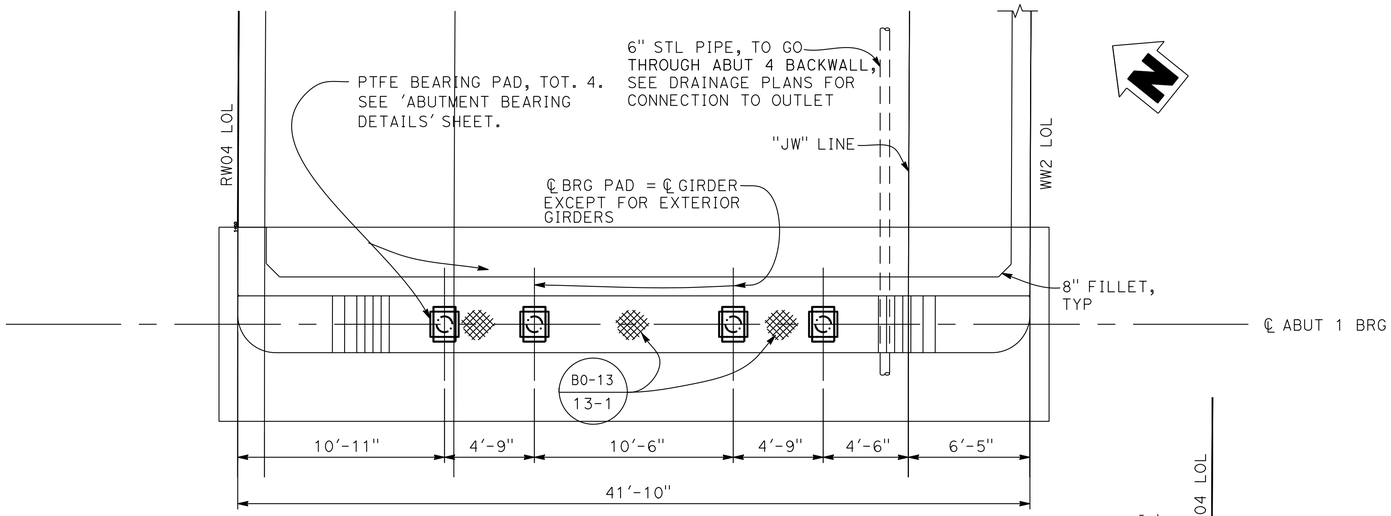

ABUTMENT 4 PLAN

¼"=1'-0"

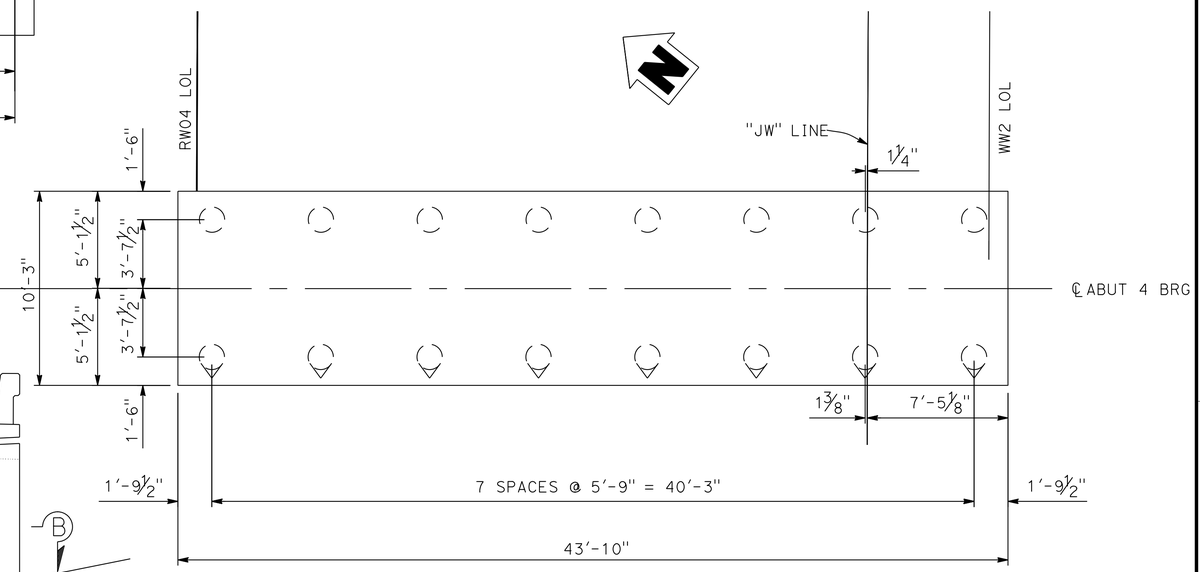

FOOTING PLAN

¼"=1'-0"

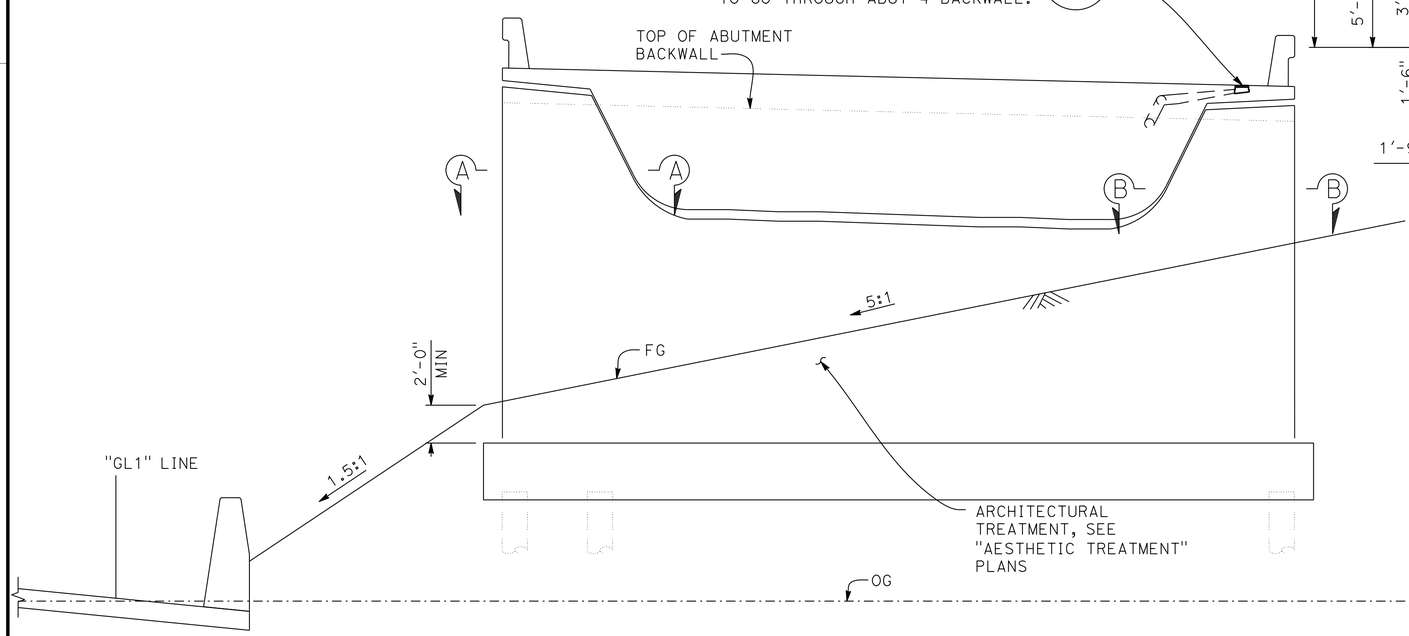

NOTE:
NOT ALL PILES SHOWN.

ABUTMENT 4 ELEVATION

¼"=1'-0"

NOTE:

1. FOR SECTIONS 'A-A' AND 'B-B', SEE "ABUTMENT DETAILS NO. 2" SHEET.

Tracy L. Bertram
DESIGN OVERSIGHT Tracy L Bertram
1-7-13
SIGN OFF DATE

	BY	CHECKED
DESIGN	L. KINNEBREW	C. SHENOY
DETAILS	L. KINNEBREW	C. SHENOY
QUANTITIES	L. KINNEBREW	C. SHENOY

PREPARED FOR THE STATE OF CALIFORNIA DEPARTMENT OF TRANSPORTATION

C. SHENOY
PROJECT ENGINEER

BRIDGE NO. 23-0248
POST MILES 3.0./12.2

WB 80 TO WB 12 SEPARATION (OVER WB 80 ON-RAMP)

ABUTMENT 4 LAYOUT

DESIGN DETAIL SHEET (ENGLISH) (REV.3/14/12)

ORIGINAL SCALE IN INCHES FOR REDUCED PLANS 0 1 2 3

UNIT: 0741
PROJECT NUMBER & PHASE: 04000211311 CONTRACT NO.: 04-0A5341

DISREGARD PRINTS BEARING EARLIER REVISION DATES

REVISION DATES 08/12/12 12/21/12

SHEET 6 OF 30

FILE => 23-0248-f-a01_1o4.dgn

CONTRACT NO.: 04-0A5341 PROJECT ID: 1234567890

USERNAME => S124496 DATE PLOTTED => 08-MAY-2013 TIME PLOTTED => 09:02

DIST	COUNTY	ROUTE	POST MILES TOTAL PROJECT	SHEET NO	TOTAL SHEETS
04	Sol	12,80	2.1/2.8, 12.0/13.1	574	597

Chandu Shenoy 9/12/12
REGISTERED CIVIL ENGINEER DATE

5-6-13
PLANS APPROVAL DATE

REGISTERED PROFESSIONAL ENGINEER CHANDU V. SHENOY NO. C-53636 EXP. 6/30/13 CIVIL STATE OF CALIFORNIA

THE STATE OF CALIFORNIA OR ITS OFFICERS OR AGENTS SHALL NOT BE RESPONSIBLE FOR THE ACCURACY OR COMPLETENESS OF ELECTRONIC COPIES OF THIS PLAN SHEET.

SOLANO TRANSPORTATION AUTHORITY
ONE HARBOR CENTER, SUITE 130
SUISUN CITY, CA 94585

MARK THOMAS & COMPANY, INC. + NOLTE ASSOCIATES, INC.
3000 OAK ROAD, SUITE 650
WALNUT CREEK, CA 94597

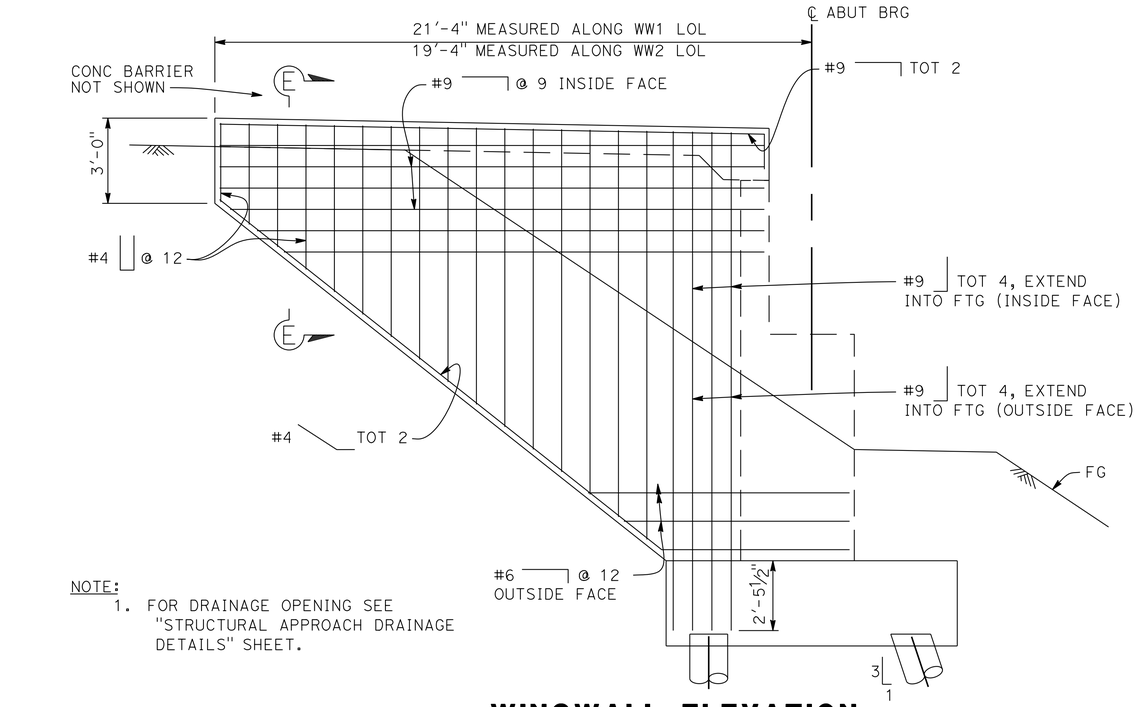

NOTE:
1. FOR DRAINAGE OPENING SEE "STRUCTURAL APPROACH DRAINAGE DETAILS" SHEET.

WINGWALL ELEVATION
NO SCALE

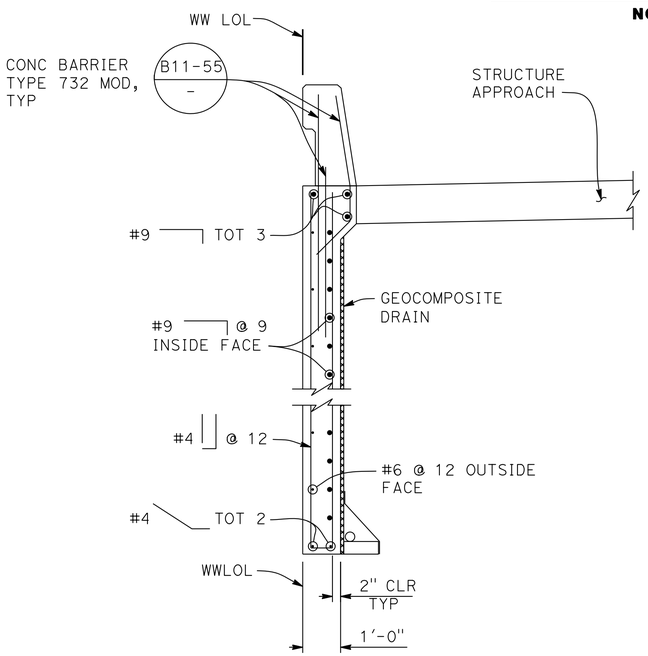

SECTION E-E
NO SCALE

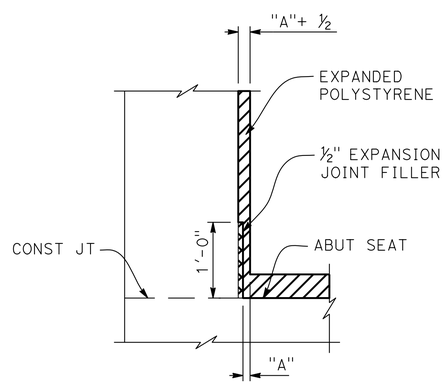

DETAIL 'A'
NO SCALE

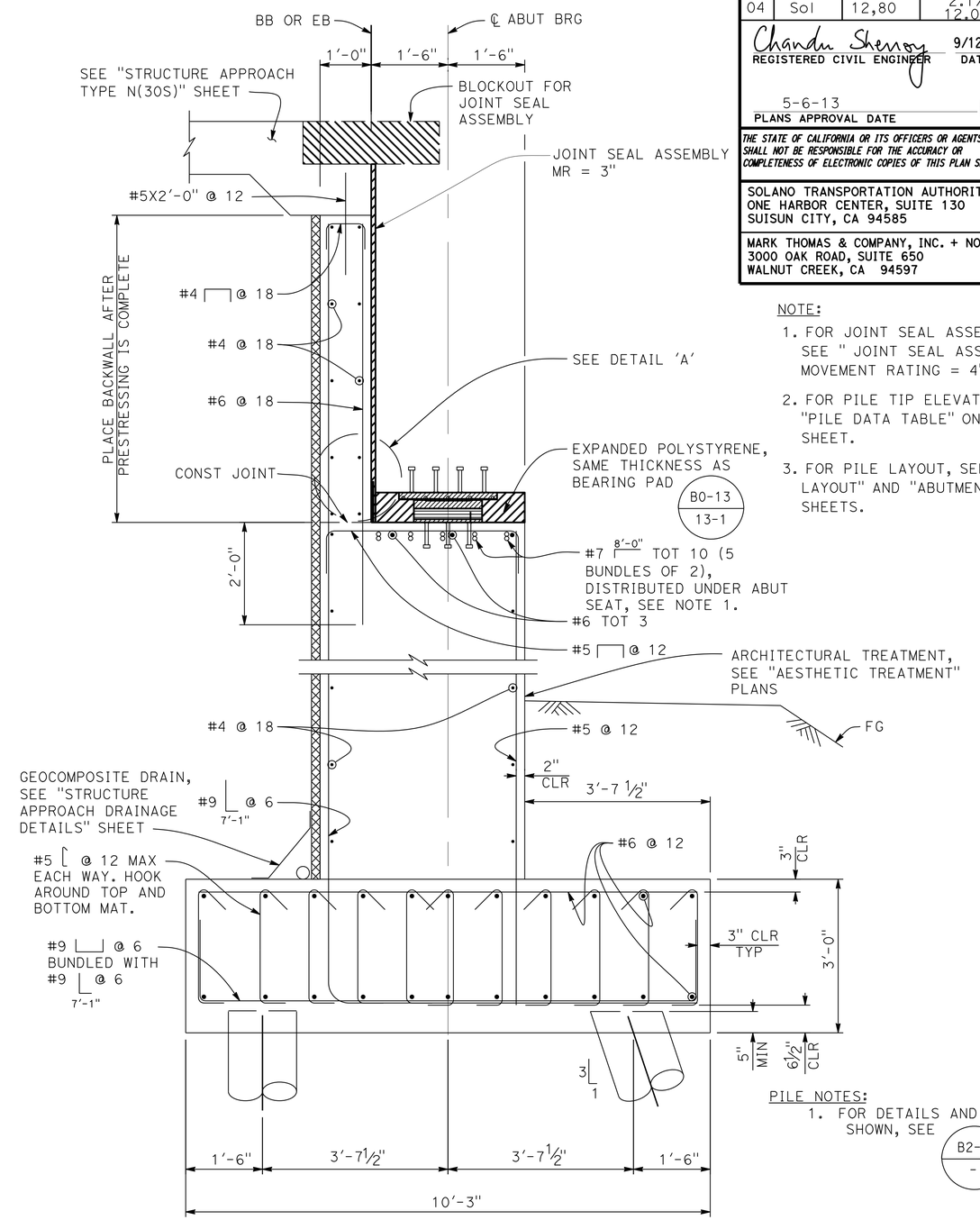

NOTE:
1. FOR JOINT SEAL ASSEMBLY DETAILS, SEE " JOINT SEAL ASSEMBLY (MAXIUM MOVEMENT RATING = 4")" SHEET.
2. FOR PILE TIP ELEVATIONS, SEE "PILE DATA TABLE" ON "INDEX TO PLANS" SHEET.
3. FOR PILE LAYOUT, SEE "ABUTMENT 1 LAYOUT" AND "ABUTMENT 4 LAYOUT" SHEETS.

PILE NOTES:
1. FOR DETAILS AND NOTES NOT SHOWN, SEE B2-8 / -

ABUTMENT TYPICAL SECTION
¾"=1'-0"

Tracy L. Bertram
DESIGN OVERSIGHT Tracy L Bertram
1-7-13
SIGN OFF DATE

DESIGN DETAIL SHEET (ENGLISH) (REV.3/14/12)

	BY	CHECKED
DESIGN	L. KINNEBREW	C. SHENOY
DETAILS	L. KINNEBREW	C. SHENOY
QUANTITIES	L. KINNEBREW	C. SHENOY

ORIGINAL SCALE IN INCHES FOR REDUCED PLANS 0 1 2 3

PREPARED FOR THE STATE OF CALIFORNIA DEPARTMENT OF TRANSPORTATION

C. SHENOY
PROJECT ENGINEER

BRIDGE NO. 23-0248
POST MILES 3.0./12.2

WB 80 TO WB 12 SEPARATION (OVER WB 80 ON-RAMP)
ABUTMENT DETAILS NO. 1

UNIT: 0741
PROJECT NUMBER & PHASE: 04000211311 CONTRACT NO.: 04-0A5341

DISREGARD PRINTS BEARING EARLIER REVISION DATES

REVISION DATES 08/12/12 12/21/12 SHEET 7 OF 30

FILE => 23-0248-f-a01d+01_1.dgn
CONTRACT NO.: 04-0A5341 PROJECT ID: 1234567890

USERNAME => s724496 DATE PLOTTED => 08-MAY-2013 TIME PLOTTED => 09:02

DIST	COUNTY	ROUTE	POST MILES TOTAL PROJECT	SHEET NO	TOTAL SHEETS
04	Sol	12,80	2.1/2.8, 12.0/13.1	575	597

Chandu Shenoy 9/12/12
REGISTERED CIVIL ENGINEER DATE

5-6-13
PLANS APPROVAL DATE

REGISTERED PROFESSIONAL ENGINEER CHANDU V. SHENOY NO. C-53636 EXP. 6/30/13 CIVIL STATE OF CALIFORNIA

THE STATE OF CALIFORNIA OR ITS OFFICERS OR AGENTS SHALL NOT BE RESPONSIBLE FOR THE ACCURACY OR COMPLETENESS OF ELECTRONIC COPIES OF THIS PLAN SHEET.

SOLANO TRANSPORTATION AUTHORITY
ONE HARBOR CENTER, SUITE 130
SUISUN CITY, CA 94585

MARK THOMAS & COMPANY, INC. + NOLTE ASSOCIATES, INC.
3000 OAK ROAD, SUITE 650
WALNUT CREEK, CA 94597

NOTES:

1. FOR LOCATION OF ABUTMENT HANGER BARS, SEE "ABUTMENT TYPICAL SECTION" ON "ABUTMENT DETAILS NO. 1" SHEET.
2. MANDATORY CONSTRUCTION JOINT SHALL BE SMOOTH FINISHED AND LINED WITH 15 POUND CONSTRUCTION PAPER.
3. TERMINATE TYPICAL ABUTMENT FRONT FACE REINFORCEMENT AT BASE OF SHEAR KEYS.
4. SHEAR KEY SHALL BE POURED SEPARATE FROM ABUTMENT SEAT AND BACKWALL.
5. MAIN VERTICAL SHEAR KEY REINF SHALL BE CENTERED TRANSVERSELY IN SHEAR KEY AND SHALL BE GALVANIZED.

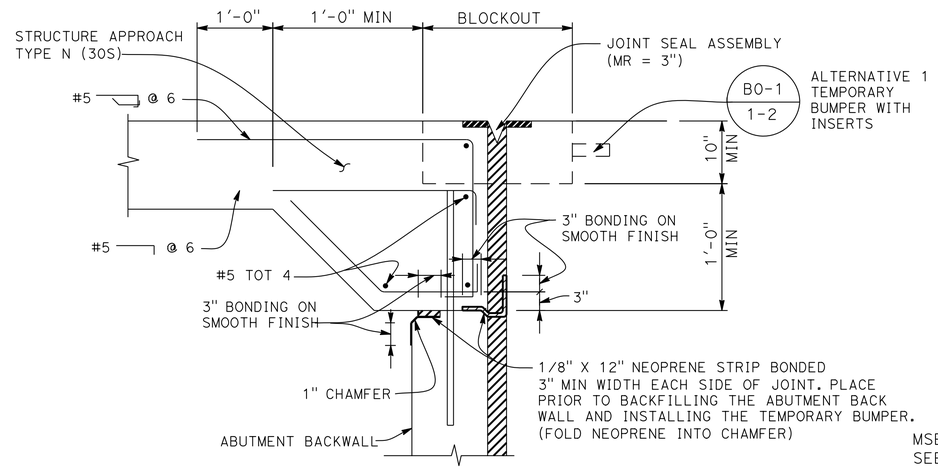

JOINT PROTECTION DETAIL

NO SCALE

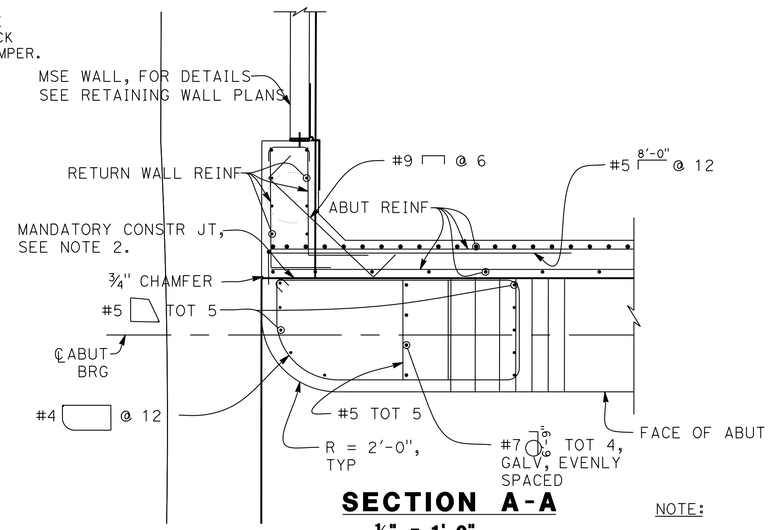

SECTION A-A

½" = 1'-0"

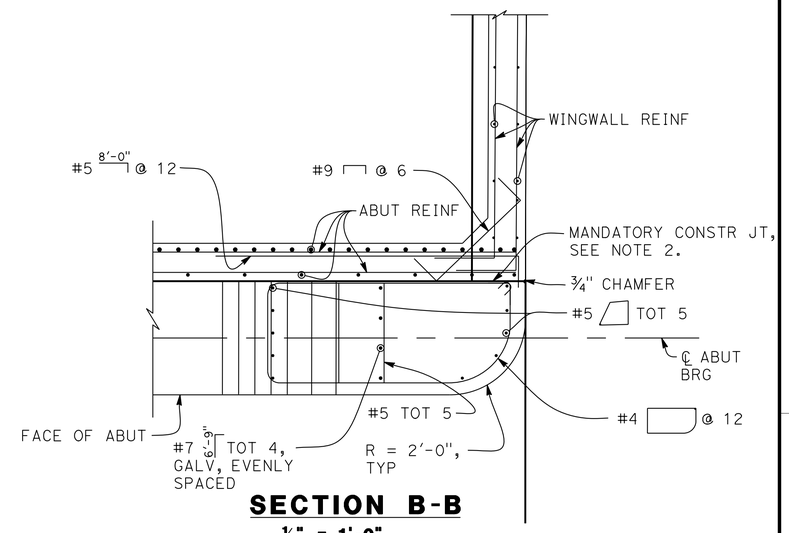

SECTION B-B

½" = 1'-0"

NOTE:

1. ABUTMENT 4 SHOWN, ABUTMENT 1 SIMILAR.

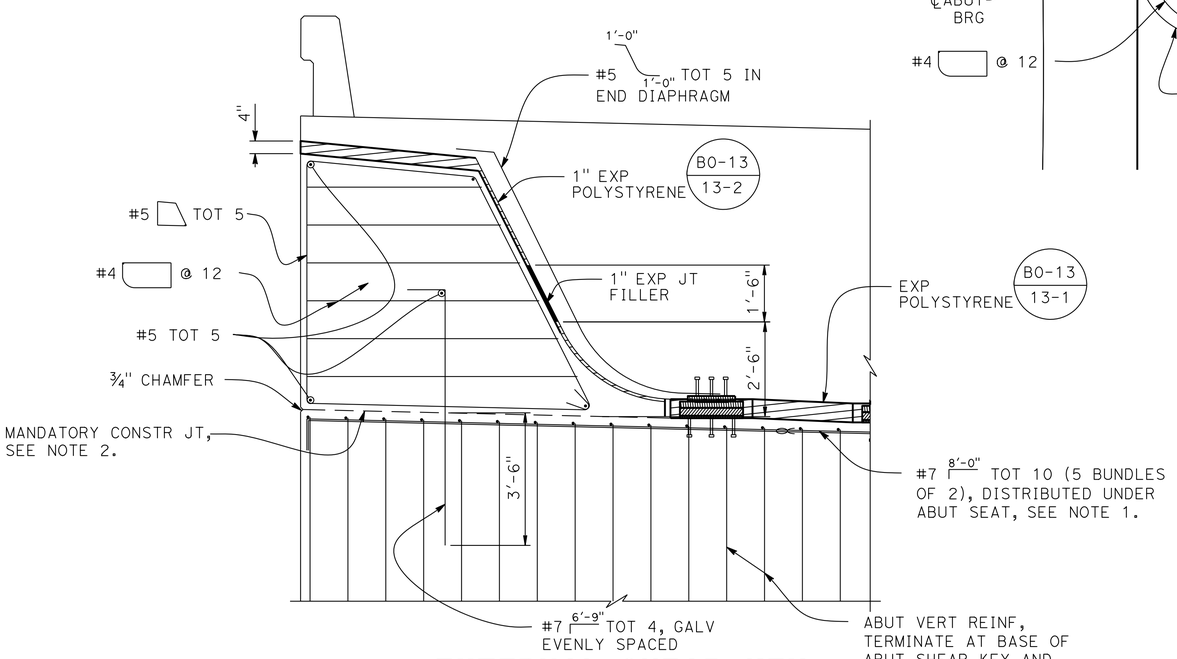

EXTERNAL SHEAR KEY

½" = 1'-0"

Tracy L. Bertram
DESIGN OVERSIGHT Tracy L Bertram
1-7-13
SIGN OFF DATE

	BY	CHECKED
DESIGN	L. KINNEBREW	C. SHENOY
DETAILS	L. KINNEBREW	C. SHENOY
QUANTITIES	L. KINNEBREW	C. SHENOY

PREPARED FOR THE STATE OF CALIFORNIA DEPARTMENT OF TRANSPORTATION

C. SHENOY
PROJECT ENGINEER

BRIDGE NO. 23-0248
POST MILES 3.0./12.2

WB 80 TO WB 12 SEPARATION (OVER WB 80 ON-RAMP)

ABUTMENT DETAILS NO. 2

DESIGN DETAIL SHEET (ENGLISH) (REV.3/14/12)

ORIGINAL SCALE IN INCHES FOR REDUCED PLANS 0 1 2 3

UNIT: 0741
PROJECT NUMBER & PHASE: 04000211311 CONTRACT NO.: 04-0A5341

DISREGARD PRINTS BEARING EARLIER REVISION DATES → REVISION DATES 08/12/12 12/21/12

SHEET 8 OF 30

FILE => 23-0248-f-a01dt01_2.dgn CONTRACT NO.: 04-0A5341 PROJECT ID: 1234567890

USERNAME => s124496 DATE PLOTTED => 08-MAY-2013 TIME PLOTTED => 09:02

DIST	COUNTY	ROUTE	POST MILES TOTAL PROJECT	SHEET NO	TOTAL SHEETS
04	Sol	12,80	2.1/2.8, 12.0/13.1	576	597

Chandu Shenoy 9/12/12
REGISTERED CIVIL ENGINEER DATE

5-6-13
PLANS APPROVAL DATE

REGISTERED PROFESSIONAL ENGINEER
CHANDU V. SHENOY
NO. C-53636
EXP. 6/30/13
CIVIL
STATE OF CALIFORNIA

THE STATE OF CALIFORNIA OR ITS OFFICERS OR AGENTS SHALL NOT BE RESPONSIBLE FOR THE ACCURACY OR COMPLETENESS OF ELECTRONIC COPIES OF THIS PLAN SHEET.

SOLANO TRANSPORTATION AUTHORITY
ONE HARBOR CENTER, SUITE 130
SUISUN CITY, CA 94585

MARK THOMAS & COMPANY, INC. + NOLTE ASSOCIATES, INC.
3000 OAK ROAD, SUITE 650
WALNUT CREEK, CA 94597

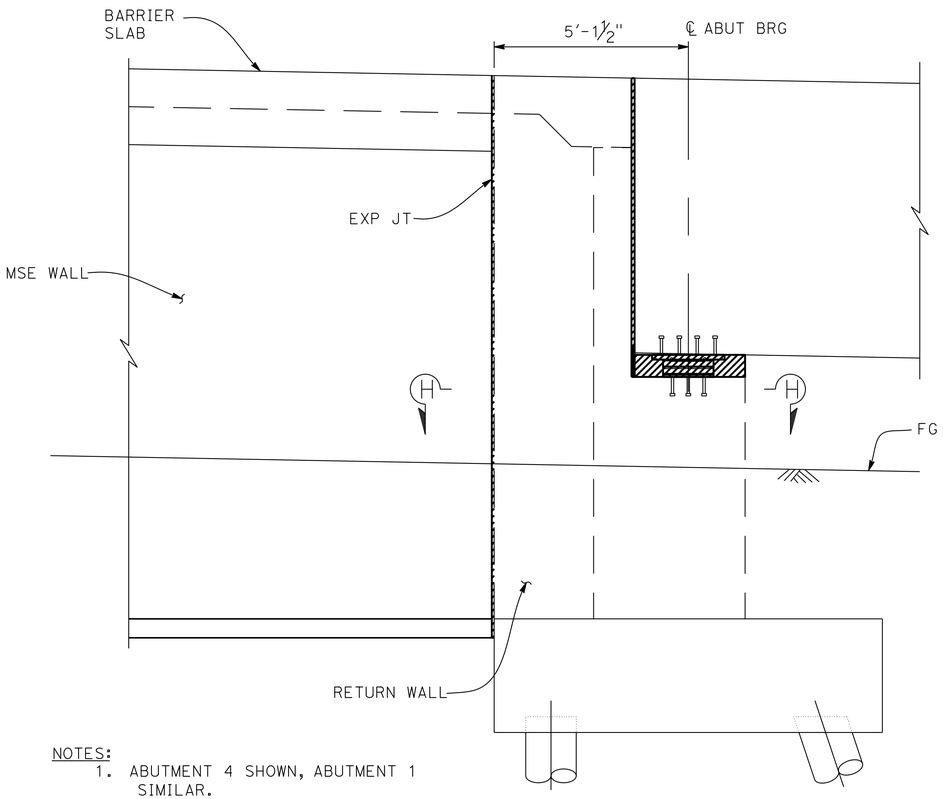

NOTES:
1. ABUTMENT 4 SHOWN, ABUTMENT 1 SIMILAR.
2. FOR BARRIER SLAB DETAILS, SEE "MSE DETAIL NO. 4" SHEET.

RETURN WALL ELEVATION

½" = 1'-0"
(CONCRETE BARRIER NOT SHOWN FOR CLARITY)

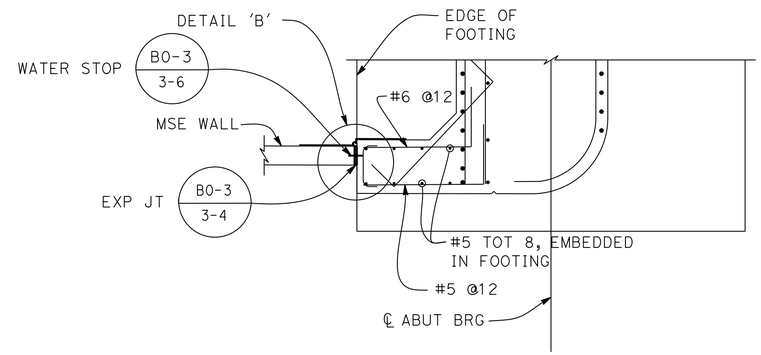

NOTE:
1. FOR ABUTMENT 4 SHOWN, ABUTMENT 1 SIMILAR

SECTION H-H

½" = 1'-0"

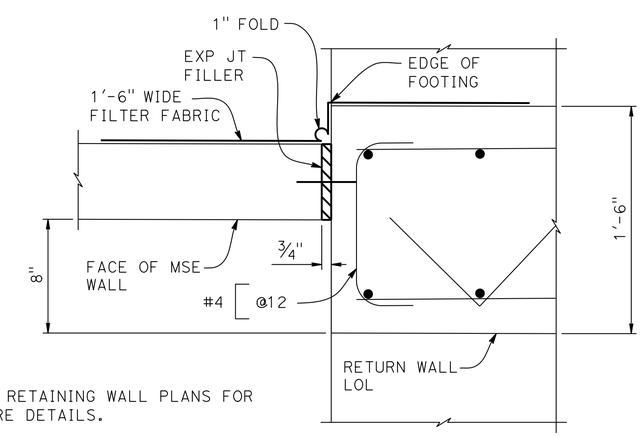

NOTE:
1. SEE RETAINING WALL PLANS FOR MORE DETAILS.

DETAIL 'B'

2" = 1'-0"

Tracy L. Bertram
DESIGN OVERSIGHT Tracy L Bertram
1-7-13
SIGN OFF DATE

	BY	CHECKED
DESIGN	L. KINNEBREW	C. SHENOY
DETAILS	L. KINNEBREW	C. SHENOY
QUANTITIES	L. KINNEBREW	C. SHENOY

PREPARED FOR THE STATE OF CALIFORNIA DEPARTMENT OF TRANSPORTATION

C. SHENOY
PROJECT ENGINEER

BRIDGE NO. 23-0248
POST MILES 3.0./12.2

WB 80 TO WB 12 SEPARATION (OVER WB 80 ON-RAMP)
ABUTMENT DETAILS NO. 3

DESIGN DETAIL SHEET (ENGLISH) (REV.3/14/12)

ORIGINAL SCALE IN INCHES FOR REDUCED PLANS 0 1 2 3

UNIT: 0741
PROJECT NUMBER & PHASE: 04000211311 CONTRACT NO.: 04-0A5341

DISREGARD PRINTS BEARING EARLIER REVISION DATES 09/12/12 12/21/12

REVISION DATES			SHEET	OF
			9	30

FILE => 23-0248-f-a01dt01_3.dgn
CONTRACT NO.: 04-0A5341 PROJECT ID: 1234567890

USERNAME => s124496 DATE PLOTTED => 08-MAY-2013 TIME PLOTTED => 09:02

DIST	COUNTY	ROUTE	POST MILES TOTAL PROJECT	SHEET NO	TOTAL SHEETS
04	Sol	12,80	2.1/2.8, 12.0/13.1	577	597

Chandu Shenoy 9/12/12
REGISTERED CIVIL ENGINEER DATE

5-6-13
PLANS APPROVAL DATE

REGISTERED PROFESSIONAL ENGINEER CHANDU V. SHENOY NO. C-53636 EXP. 6/30/13 CIVIL STATE OF CALIFORNIA

THE STATE OF CALIFORNIA OR ITS OFFICERS OR AGENTS SHALL NOT BE RESPONSIBLE FOR THE ACCURACY OR COMPLETENESS OF ELECTRONIC COPIES OF THIS PLAN SHEET.

SOLANO TRANSPORTATION AUTHORITY
ONE HARBOR CENTER, SUITE 130
SUISUN CITY, CA 94585

MARK THOMAS & COMPANY, INC. + NOLTE ASSOCIATES, INC.
3000 OAK ROAD, SUITE 650
WALNUT CREEK, CA 94597

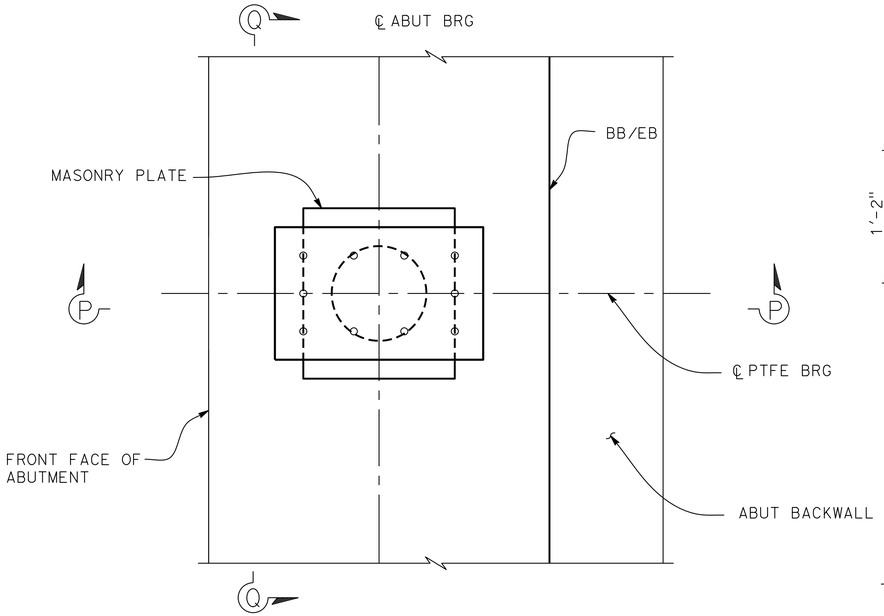

PLAN - BEARING PAD
NO SCALE

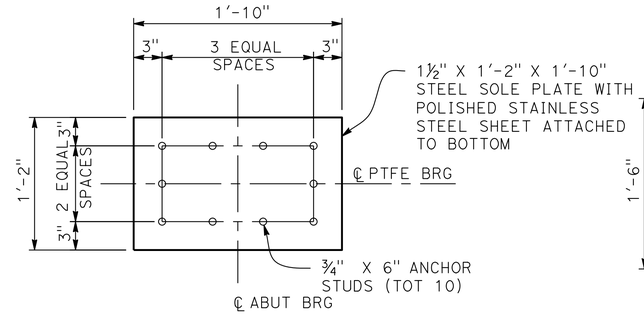

PLAN - SOLE PLATE
NO SCALE

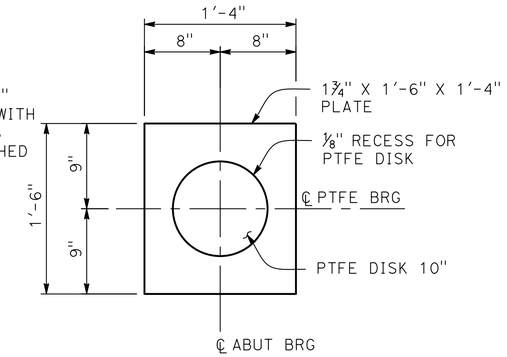

INTERMEDIATE PLATE
NO SCALE

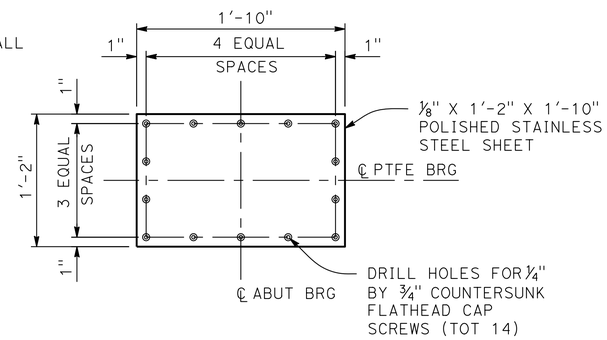

POLISHED STAINLESS STEEL SHEET
NO SCALE

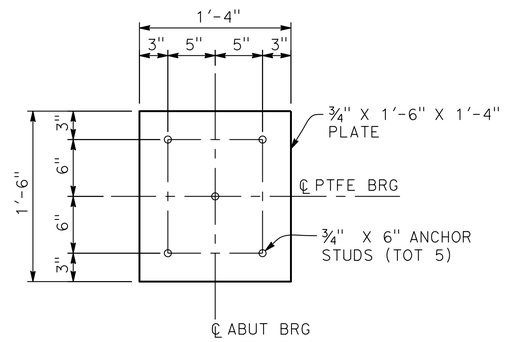

PLAN - MASONRY PLATE
NO SCALE

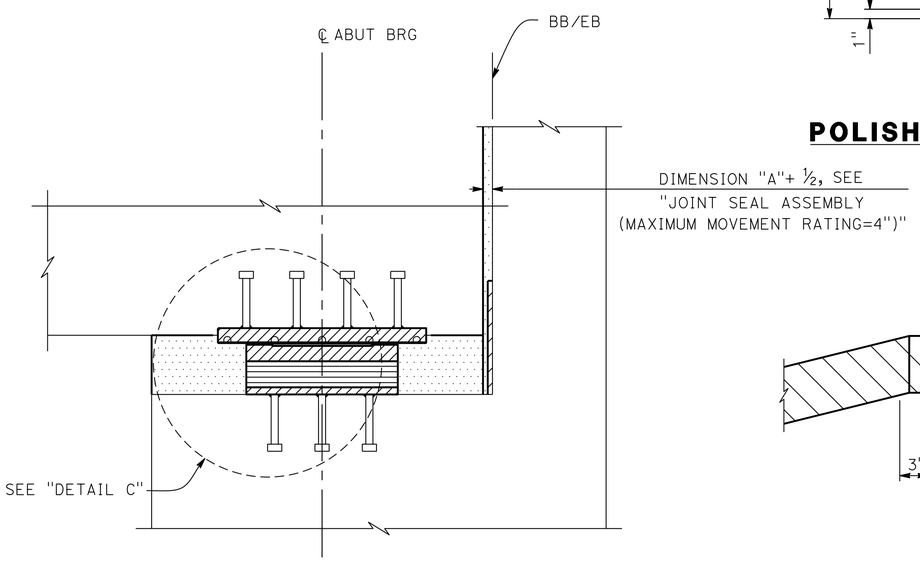

SECTION P-P
NO SCALE

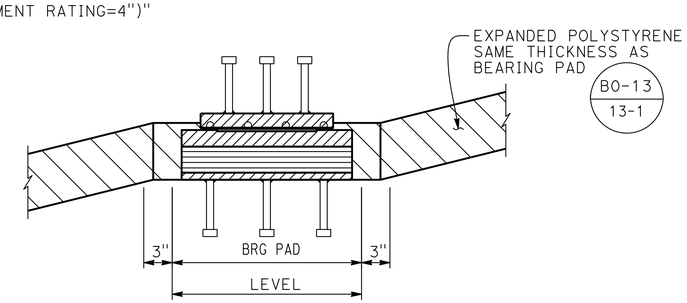

SECTION Q-Q
NO SCALE

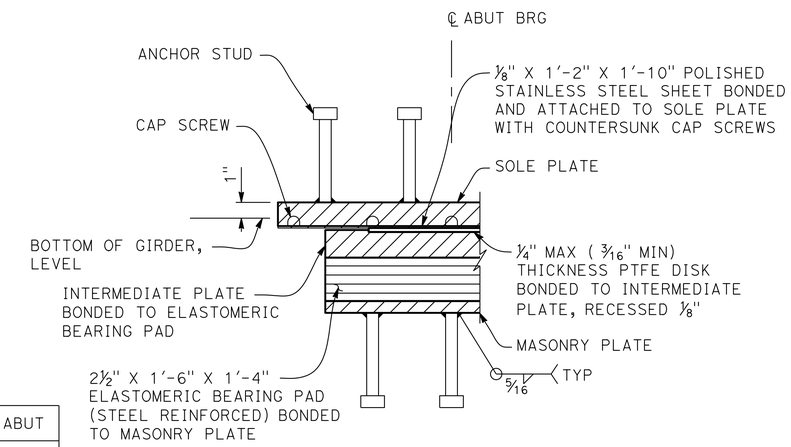

DETAIL "C"
NO SCALE

BEARING PAD TABLE

GIRDER LOCATION	BEARING PAD SIZE WXLXT (IN)			PTFE DISK TX (IN)	INTERMEDIATE PLATE WXLXT (IN)			SOLE PLATE WXLXT (IN)			MASONRY PLATE WXLXT (IN)			TOTAL PER ABUT	
	W	L	T		W	L	T	W	L	T	W	L	T	MAX LOAD (KIPS)	MIN LOAD (KIPS)
ABUT 1	18	16	2½"	¼" X 10"	18	16	1½"	14	22	1½	18	16	¾	963	666
ABUT 4	18	16	2½"	¼" X 10"	18	16	1½"	14	22	1½	18	16	¾	961	664

Tracy L. Bertram
DESIGN OVERSIGHT Tracy L Bertram
1-7-13
SIGN OFF DATE

	BY	CHECKED
DESIGN	L. KINNEBREW	C. SHENOY
DETAILS	L. KINNEBREW	C. SHENOY
QUANTITIES	L. KINNEBREW	C. SHENOY

PREPARED FOR THE STATE OF CALIFORNIA DEPARTMENT OF TRANSPORTATION

C. SHENOY
PROJECT ENGINEER

BRIDGE NO. 23-0248
POST MILES 3.0./12.2

WB 80 TO WB 12 SEPARATION (OVER WB 80 ON-RAMP)
PTFE ELASTOMERIC BEARING PAD DETAILS

DESIGN DETAIL SHEET (ENGLISH) (REV.3/14/12)

ORIGINAL SCALE IN INCHES FOR REDUCED PLANS 0 1 2 3

UNIT: 0741
PROJECT NUMBER & PHASE: 04000211311 CONTRACT NO.: 04-0A5341

DISREGARD PRINTS BEARING EARLIER REVISION DATES

REVISION DATES			SHEET	OF
08/12/12	12/21/12		10	30

FILE => 23-0248-f-brgd01.dgn
CONTRACT NO.: 04-0A5341 PROJECT ID: 1234567890

USERNAME => S1224436 DATE PLOTTED => 08-MAY-2013 TIME PLOTTED => 09:02

DIST	COUNTY	ROUTE	POST MILES TOTAL PROJECT	SHEET NO	TOTAL SHEETS
04	Sol	12,80	2.1/2.8, 12.0/13.1	578	597

Chandu Shenoy 9/12/12
REGISTERED CIVIL ENGINEER DATE

5-6-13
PLANS APPROVAL DATE

REGISTERED PROFESSIONAL ENGINEER CHANDU V. SHENOY NO. C-53636 EXP. 6/30/13 CIVIL STATE OF CALIFORNIA

THE STATE OF CALIFORNIA OR ITS OFFICERS OR AGENTS SHALL NOT BE RESPONSIBLE FOR THE ACCURACY OR COMPLETENESS OF ELECTRONIC COPIES OF THIS PLAN SHEET.

SOLANO TRANSPORTATION AUTHORITY
ONE HARBOR CENTER, SUITE 130
SUISUN CITY, CA 94585

MARK THOMAS & COMPANY, INC. + NOLTE ASSOCIATES, INC.
3000 OAK ROAD, SUITE 650
WALNUT CREEK, CA 94597

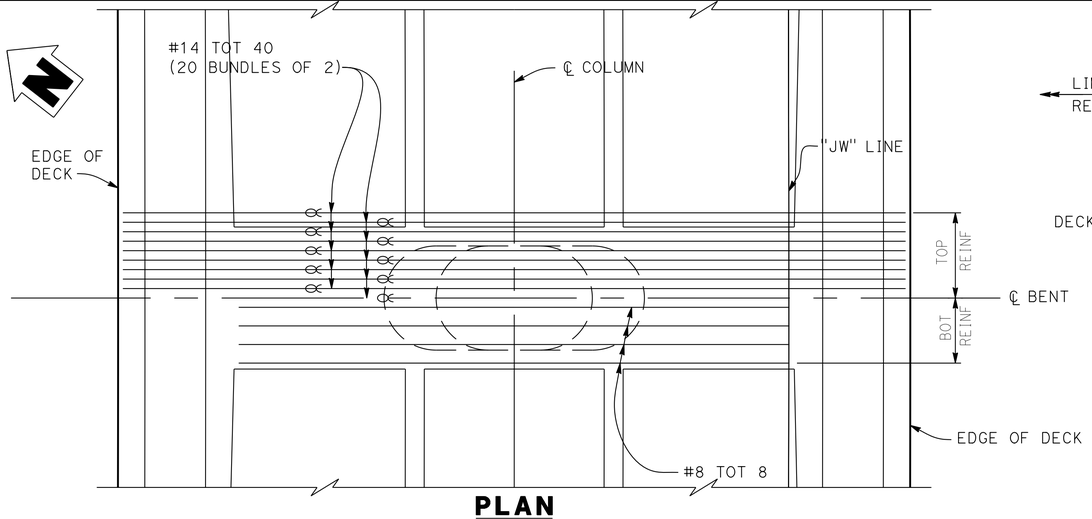

PLAN
¼"=1'-0"

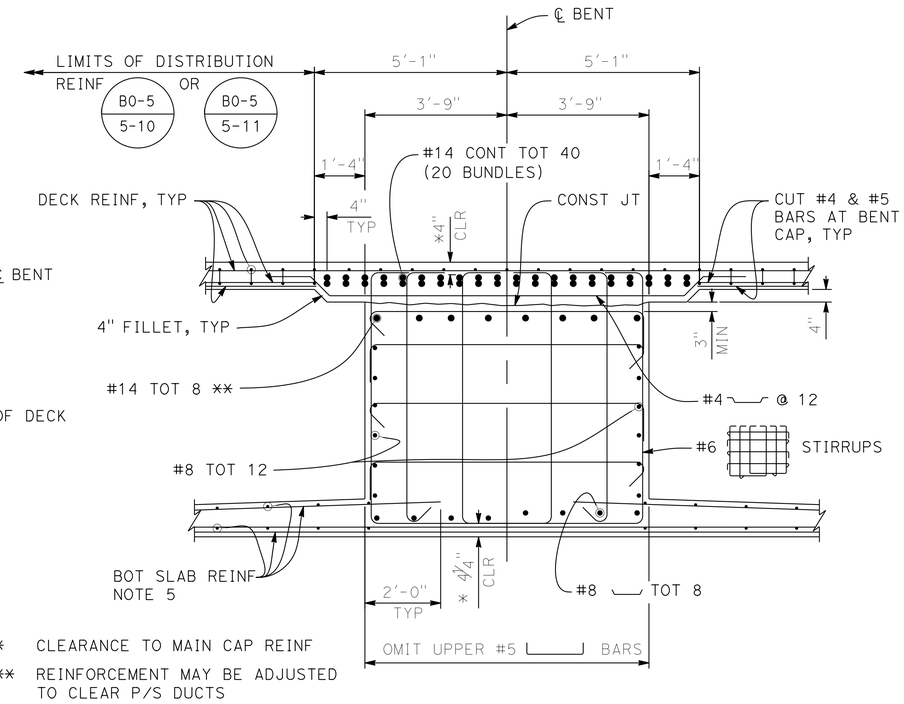

* CLEARANCE TO MAIN CAP REINF

** REINFORCEMENT MAY BE ADJUSTED TO CLEAR P/S DUCTS

SECTION J-J
½"=1'-0"

NOTES:

1. FOR DETAILS NOT SHOWN, SEE "BENT DETAILS NO. 2" SHEET.
2. COLUMN HOOPS SHALL UTILIZE ULTIMATE BUTT SPLICES.
3. NO SPLICES ARE ALLOWED IN MAIN COLUMN VERTICAL REINFORCEMENT.
4. NO SPLICES ARE ALLOWED IN MAIN BENT CAP REINFORCEMENT.
5. ALL BOTTOM SLAB LONGITUDINAL REINFORCING SHALL BE CONTINUOUS THROUGH BENT CAP EXCEPT FOR TOP #6 BAR AS SHOWN.

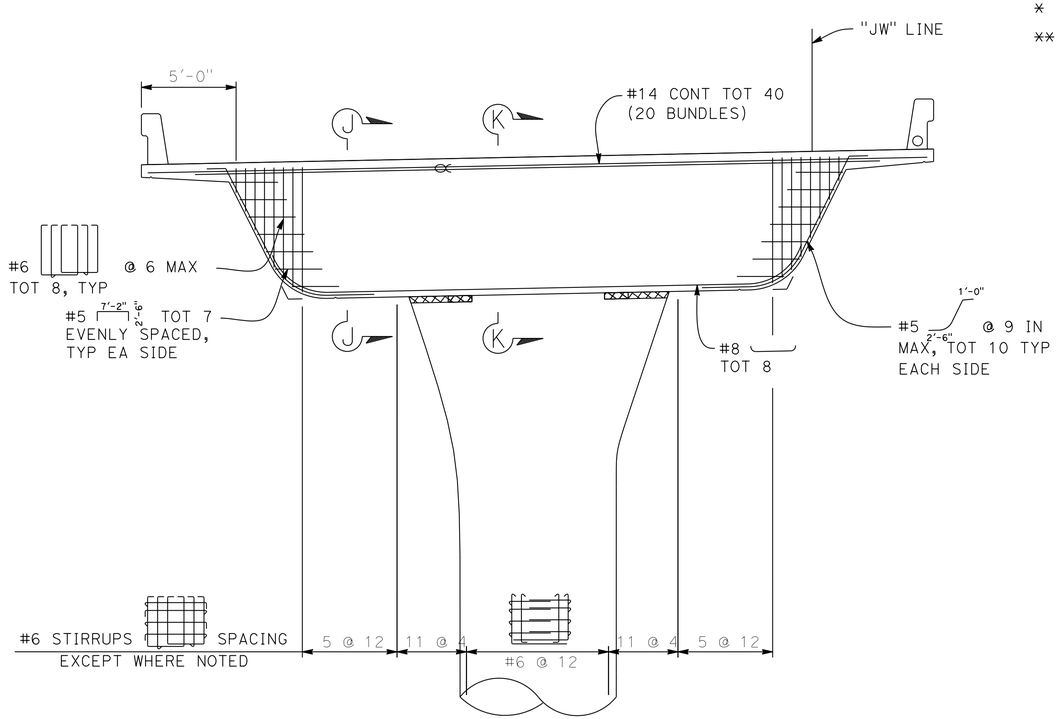

ELEVATION
¼"=1'-0"

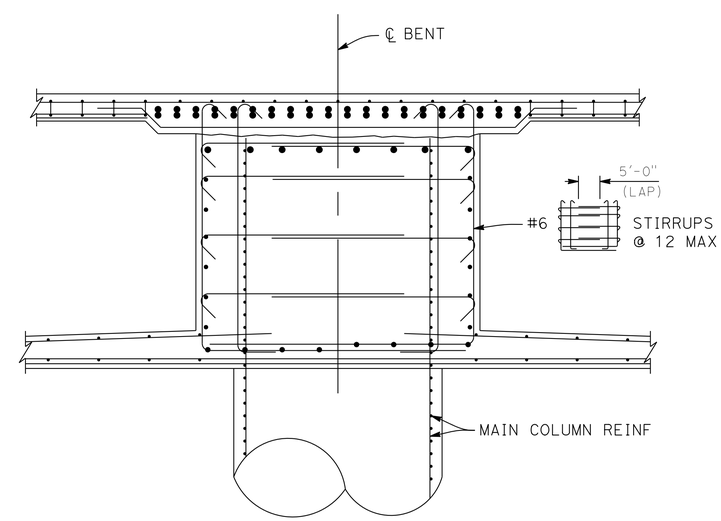

SECTION K-K
½"=1'-0"
FOR DETAILS NOT SHOWN, SEE "SECTION A-A"

LEGEND

DENOTES BUNDLED BARS

Tracy L. Bertram
DESIGN OVERSIGHT Tracy L Bertram
1-7-13
SIGN OFF DATE

	BY	CHECKED
DESIGN	L. KINNEBREW	C. SHENOY
DETAILS	L. KINNEBREW	C. SHENOY
QUANTITIES	L. KINNEBREW	C. SHENOY

PREPARED FOR THE STATE OF CALIFORNIA DEPARTMENT OF TRANSPORTATION

C. SHENOY
PROJECT ENGINEER

BRIDGE NO. 23-0248
POST MILES 3.0./12.2

WB 80 TO WB 12 SEPARATION (OVER WB 80 ON-RAMP

BENT DETAILS NO. 1

DESIGN DETAIL SHEET (ENGLISH) (REV.3/14/12)

ORIGINAL SCALE IN INCHES FOR REDUCED PLANS 0 1 2 3

UNIT: 0741
PROJECT NUMBER & PHASE: 04000211311 CONTRACT NO.: 04-0A5341

DISREGARD PRINTS BEARING EARLIER REVISION DATES

REVISION DATES 09/12/12 12/21/12 SHEET 11 OF 30

FILE => 23-0248-h-b01dt01_11.dgn CONTRACT NO.: 04-0A5341 PROJECT ID: 1234567890

USERNAME => s124496 DATE PLOTTED => 08-MAY-2013 TIME PLOTTED => 09:02

DIST	COUNTY	ROUTE	POST MILES TOTAL PROJECT	SHEET NO	TOTAL SHEETS
04	Sol	12,80	2.1/2.8, 12.0/13.1	579	597

Chandu Shenoy 9/12/12
REGISTERED CIVIL ENGINEER DATE

5-6-13
PLANS APPROVAL DATE

REGISTERED PROFESSIONAL ENGINEER CHANDU V. SHENOY NO. C-53636 EXP. 6/30/13 CIVIL STATE OF CALIFORNIA

THE STATE OF CALIFORNIA OR ITS OFFICERS OR AGENTS SHALL NOT BE RESPONSIBLE FOR THE ACCURACY OR COMPLETENESS OF ELECTRONIC COPIES OF THIS PLAN SHEET.

SOLANO TRANSPORTATION AUTHORITY
ONE HARBOR CENTER, SUITE 130
SUISUN CITY, CA 94585

MARK THOMAS & COMPANY, INC. + NOLTE ASSOCIATES, INC.
3000 OAK ROAD, SUITE 650
WALNUT CREEK, CA 94597

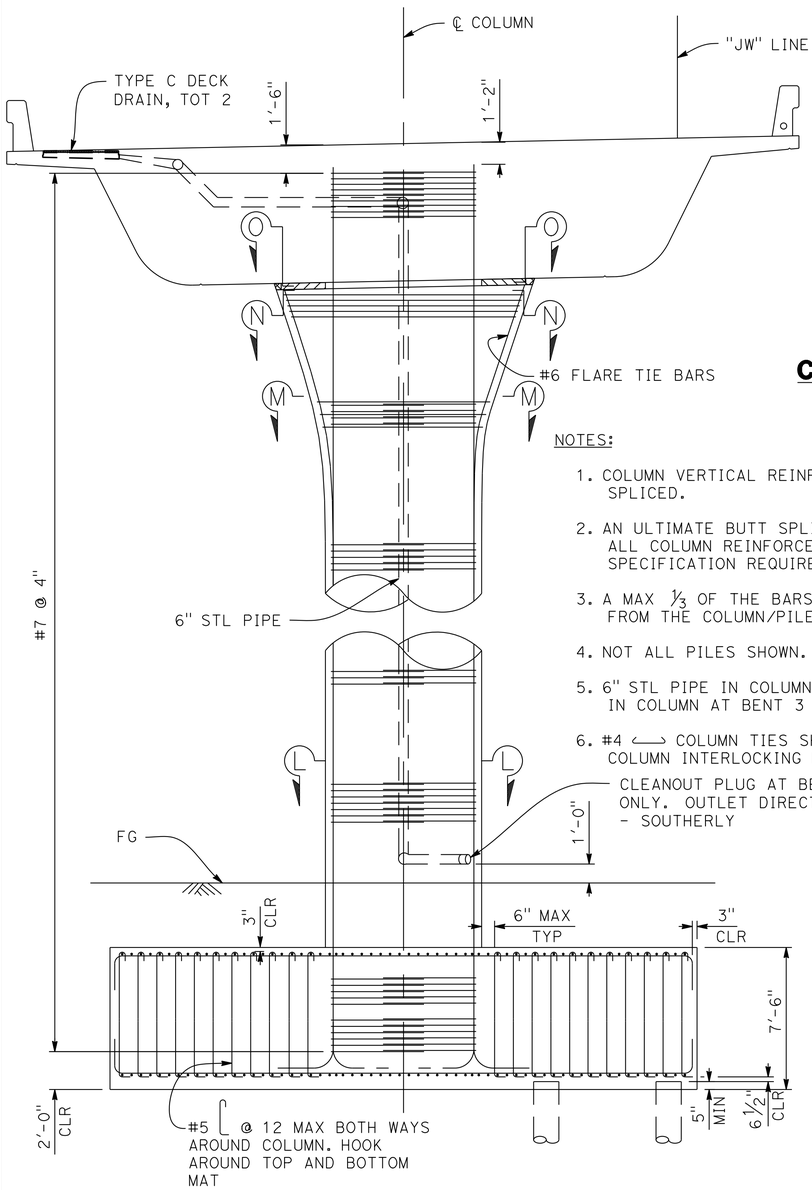

COLUMN ELEVATION
¼"=1'-0"

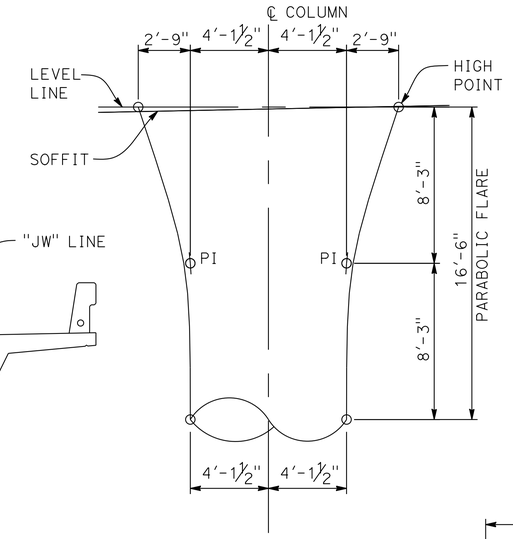

COLUMN GEOMETRICS
NO SCALE

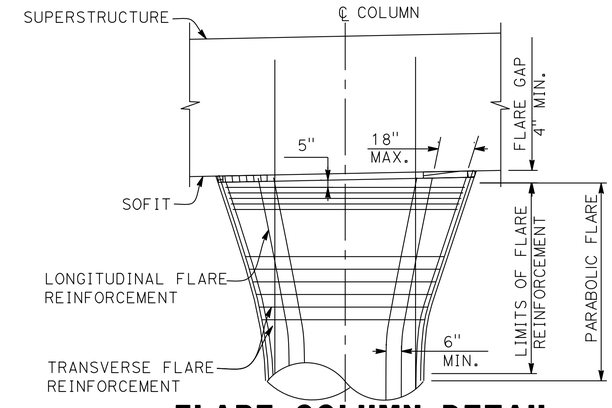

FLARE COLUMN DETAIL
NO SCALE

NOTES:

1. COLUMN VERTICAL REINFORCEMENT SHALL NOT BE SPLICED.
2. AN ULTIMATE BUTT SPLICE SHALL BE USED AT ALL COLUMN REINFORCEMENT HOOPS. SEE SPECIFICATION REQUIREMENTS.
3. A MAX ⅓ OF THE BARS MAY BE TURNED OUT FROM THE COLUMN/PILE CAP JOINT.
4. NOT ALL PILES SHOWN.
5. 6" STL PIPE IN COLUMN FROM TYPE C DRAINS IN COLUMN AT BENT 3 ONLY.
6. #4 ⟷ COLUMN TIES SHALL CONFORM TO COLUMN INTERLOCKING HOOP SPACING.

PILE NOTES:

1. FOR DETAILS AND NOTES NOT SHOWN, SEE B2-8

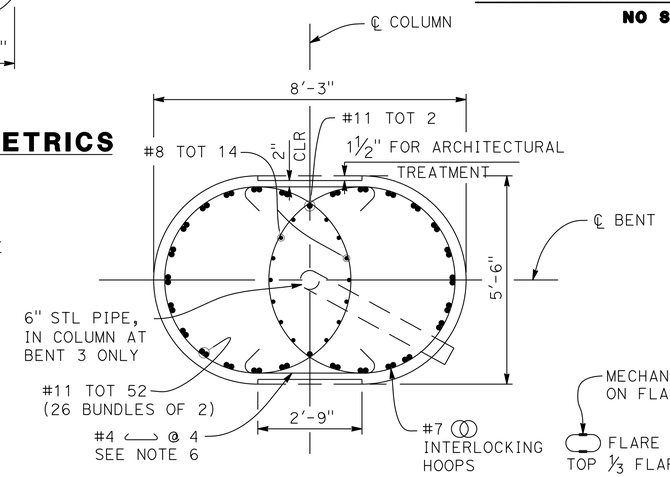

SECTION L-L
½"=1'-0"

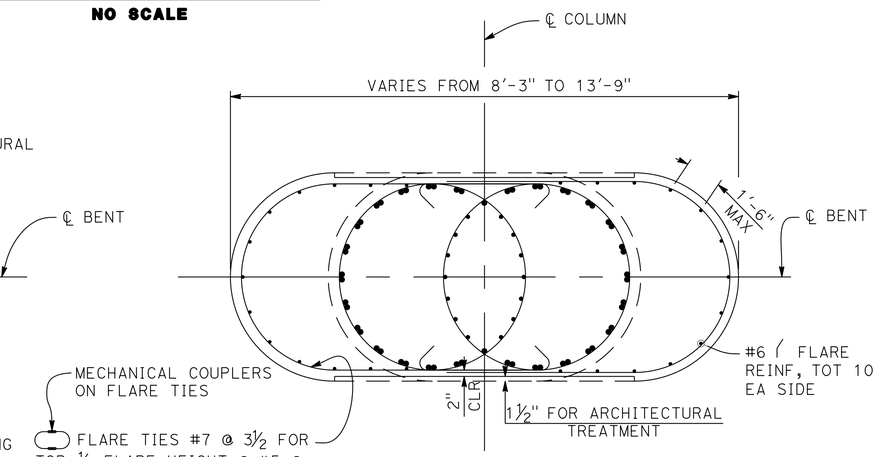

SECTION N-N
½"=1'-0"

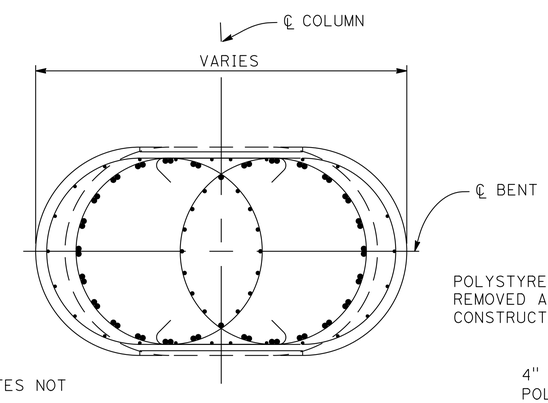

SECTION M-M
½"=1'-0"

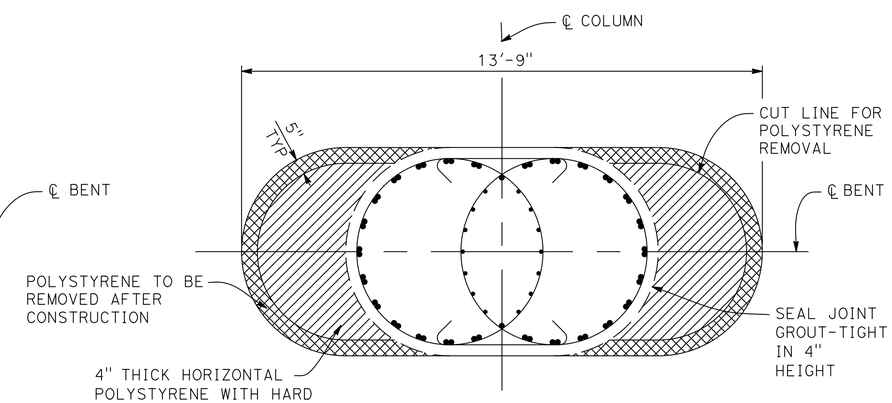

SECTION O-O
½"=1'-0"

Tracy L. Bertram
DESIGN OVERSIGHT Tracy L Bertram
1-7-13
SIGN OFF DATE

	BY	CHECKED
DESIGN	L. KINNEBREW	C. SHENOY
DETAILS	L. KINNEBREW	C. SHENOY
QUANTITIES	L. KINNEBREW	C. SHENOY

PREPARED FOR THE STATE OF CALIFORNIA DEPARTMENT OF TRANSPORTATION

C. SHENOY
PROJECT ENGINEER

BRIDGE NO. 23-0248
POST MILES 3.0./12.2

WB 80 TO WB 12 SEPARATION (OVER WB 80 ON-RAMP)
BENT DETAILS NO. 2

DESIGN DETAIL SHEET (ENGLISH) (REV.3/14/12)

ORIGINAL SCALE IN INCHES FOR REDUCED PLANS 0 1 2 3

UNIT: 0741
PROJECT NUMBER & PHASE: 04000211311 CONTRACT NO.: 04-0A5341

DISREGARD PRINTS BEARING EARLIER REVISION DATES

REVISION DATES 08/12/12 12/21/12 SHEET 12 OF 30

FILE => 23-0248-h-b01dt01_12.dgn CONTRACT NO.: 04-0A5341 PROJECT ID: 1234567890

USERNAME => S724496 DATE PLOTTED => 08-MAY-2013 TIME PLOTTED => 09:02

DIST	COUNTY	ROUTE	POST MILES TOTAL PROJECT	SHEET NO	TOTAL SHEETS
04	Sol	12,80	2.1/2.8, 12.0/13.1	580	597

Chandu Shenoy 9/12/12
REGISTERED CIVIL ENGINEER DATE

5-6-13
PLANS APPROVAL DATE

REGISTERED PROFESSIONAL ENGINEER CHANDU V. SHENOY NO. C-53636 EXP. 6/30/13 CIVIL STATE OF CALIFORNIA

THE STATE OF CALIFORNIA OR ITS OFFICERS OR AGENTS SHALL NOT BE RESPONSIBLE FOR THE ACCURACY OR COMPLETENESS OF ELECTRONIC COPIES OF THIS PLAN SHEET.

SOLANO TRANSPORTATION AUTHORITY
ONE HARBOR CENTER, SUITE 130
SUISUN CITY, CA 94585

MARK THOMAS & COMPANY, INC. + NOLTE ASSOCIATES, INC.
3000 OAK ROAD, SUITE 650
WALNUT CREEK, CA 94597

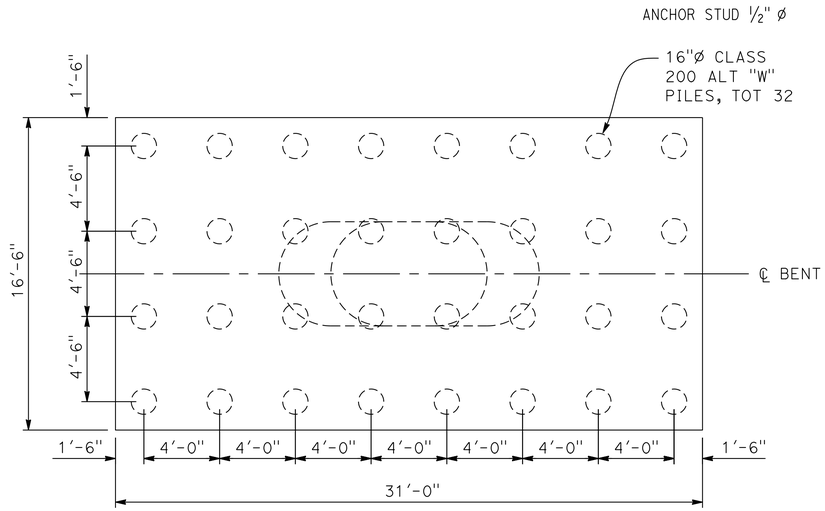

FOOTING LAYOUT
¼"=1'-0"

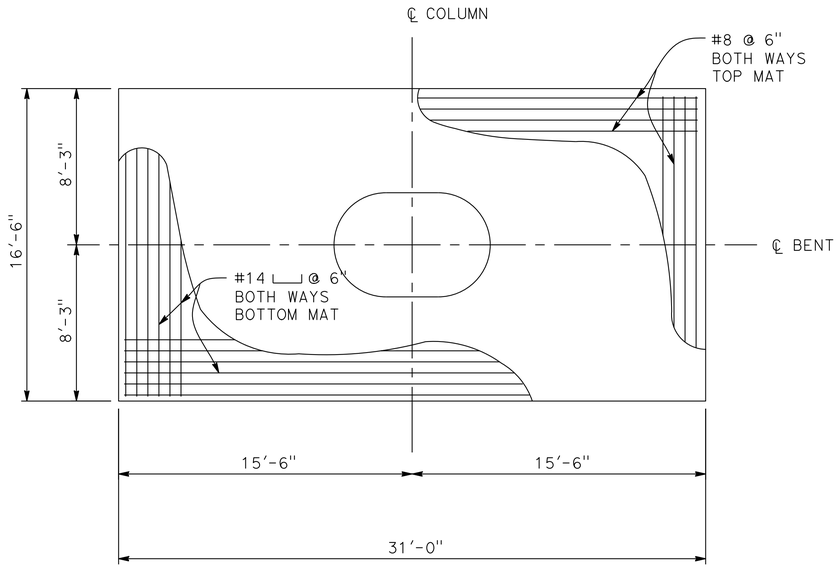

FOOTING PLAN
¼"=1'-0"

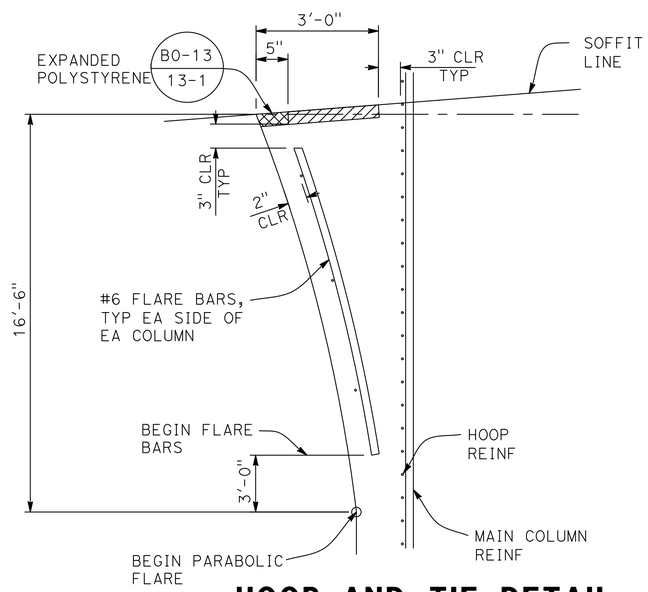

HOOP AND TIE DETAIL
NO SCALE

Tracy L Bertram
DESIGN OVERSIGHT
1-7-13
SIGN OFF DATE

	BY	CHECKED
DESIGN	L. KINNEBREW	C. SHENOY
DETAILS	L. KINNEBREW	C. SHENOY
QUANTITIES	L. KINNEBREW	C. SHENOY

PREPARED FOR THE STATE OF CALIFORNIA DEPARTMENT OF TRANSPORTATION

C. SHENOY
PROJECT ENGINEER

BRIDGE NO. 23-0248
POST MILES 3.0./12.2

WB 80 TO WB 12 SEPARATION (OVER WB 80 ON-RAMP)
BENT DETAILS NO. 3

DESIGN DETAIL SHEET (ENGLISH) (REV.3/14/12)

ORIGINAL SCALE IN INCHES FOR REDUCED PLANS 0 1 2 3

UNIT: 0741
PROJECT NUMBER & PHASE: 04000211311 CONTRACT NO.: 04-0A5341

DISREGARD PRINTS BEARING EARLIER REVISION DATES 09/12/12 12/21/12

SHEET 13 OF 30

FILE => 23-0248-h-b01dt01_13.dgn

CONTRACT NO.: 04-0A5341 PROJECT ID: 1234567890

USERNAME => S124496 DATE PLOTTED => 08-MAY-2013 TIME PLOTTED => 09:02

DIST	COUNTY	ROUTE	POST MILES TOTAL PROJECT	SHEET NO	TOTAL SHEETS
04	Sol	12,80	2.1/2.8, 12.0/13.1	581	597

Chandu Shenoy 9/12/12
REGISTERED CIVIL ENGINEER DATE

5-6-13
PLANS APPROVAL DATE

REGISTERED PROFESSIONAL ENGINEER CHANDU V. SHENOY NO. C-53636 EXP. 6/30/13 CIVIL STATE OF CALIFORNIA

THE STATE OF CALIFORNIA OR ITS OFFICERS OR AGENTS SHALL NOT BE RESPONSIBLE FOR THE ACCURACY OR COMPLETENESS OF ELECTRONIC COPIES OF THIS PLAN SHEET.

SOLANO TRANSPORTATION AUTHORITY
ONE HARBOR CENTER, SUITE 130
SUISUN CITY, CA 94585

MARK THOMAS & COMPANY, INC. + NOLTE ASSOCIATES, INC.
3000 OAK ROAD, SUITE 650
WALNUT CREEK, CA 94597

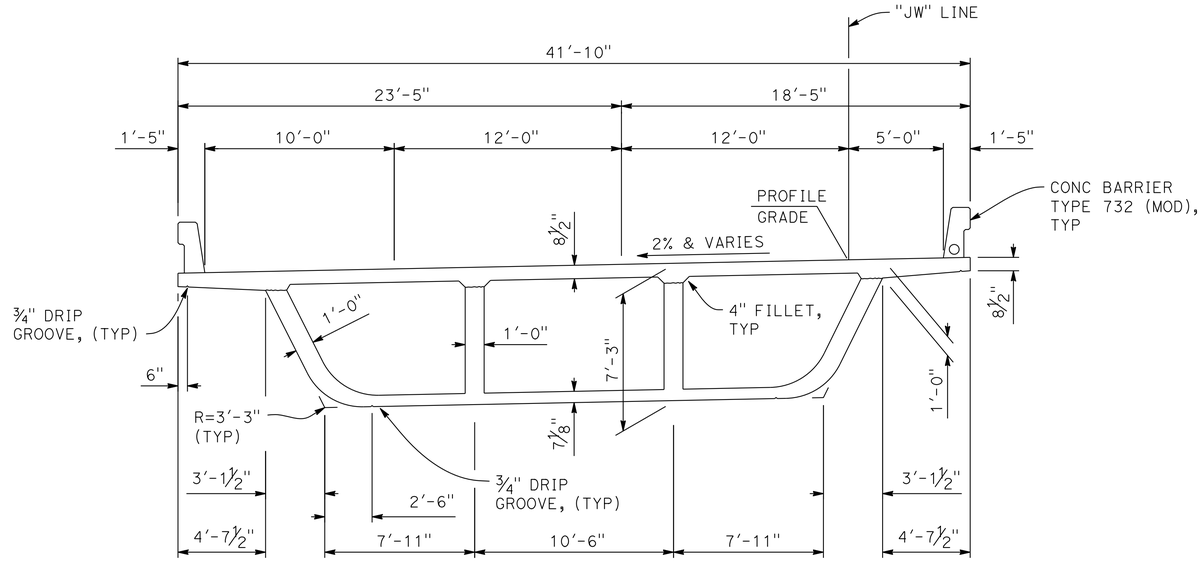

TYPICAL SECTION

¼" = 1'-0"

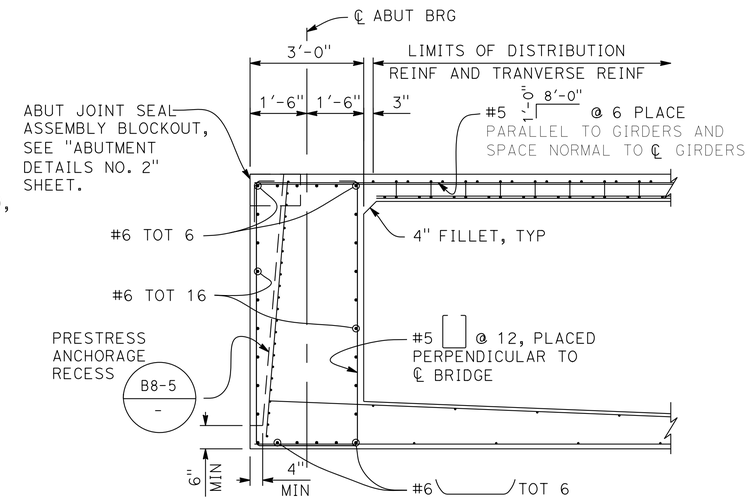

TYPICAL END DIAPHRAGM B8-5 -

½" = 1'-0"

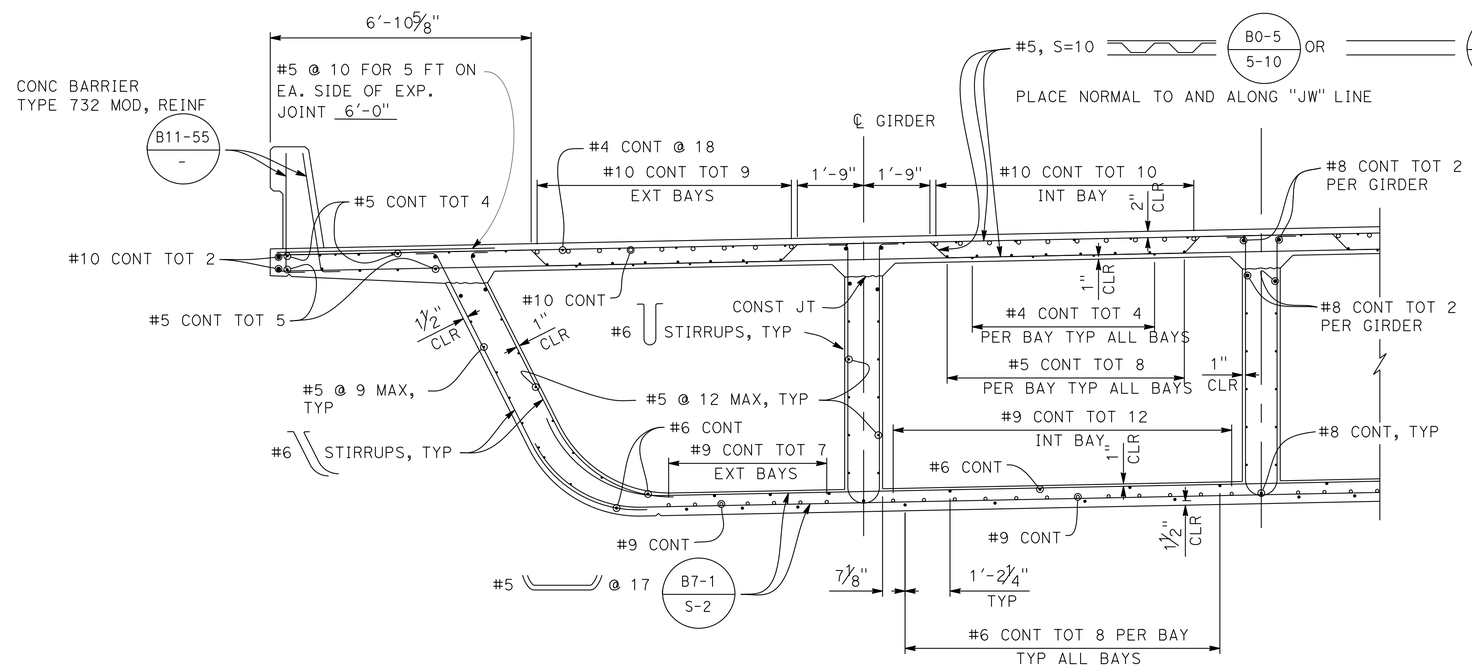

PARTIAL TYPICAL SECTION

½" = 1'-0"

B0-5 - B7-1 - B8-5 -

LEGEND

○ DENOTES ADDITIONAL TOP & BOTTOM REINFORCEMENT.

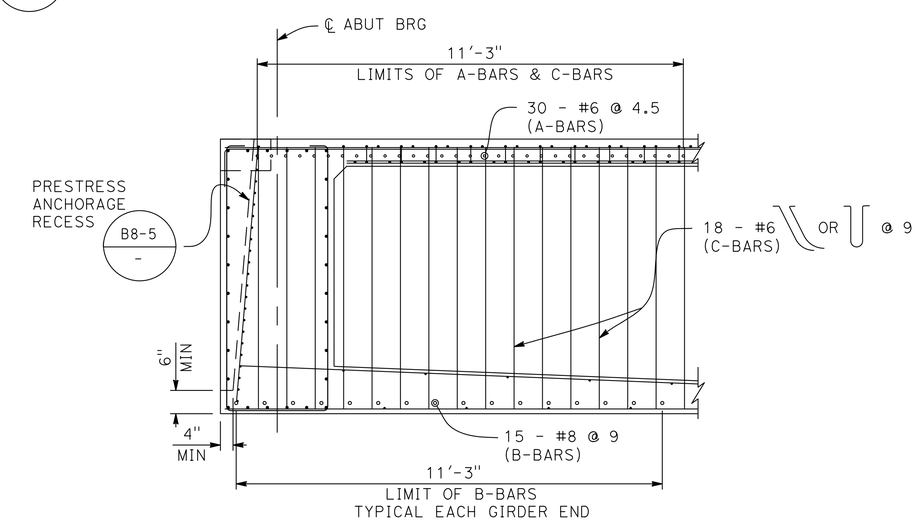

GENERAL ZONE REINFORCEMENT DETAIL

½" = 1'-0"

Tracy L. Bertram
DESIGN OVERSIGHT Tracy L Bertram
1-7-13
SIGN OFF DATE

	BY	CHECKED
DESIGN	L. KINNEBREW	C. SHENOY
DETAILS	L. KINNEBREW	C. SHENOY
QUANTITIES	L. KINNEBREW	C. SHENOY

PREPARED FOR THE STATE OF CALIFORNIA DEPARTMENT OF TRANSPORTATION

C. SHENOY
PROJECT ENGINEER

BRIDGE NO. 23-0248
POST MILES 3.0./12.2

WB 80 TO WB 12 SEPARATION (OVER WB 80 ON-RAMP)

TYPICAL SECTION

DESIGN DETAIL SHEET (ENGLISH) (REV.3/14/12)

ORIGINAL SCALE IN INCHES FOR REDUCED PLANS 0 1 2 3

UNIT: 0741
PROJECT NUMBER & PHASE: 04000211311 CONTRACT NO.: 04-0A5341

DISREGARD PRINTS BEARING EARLIER REVISION DATES

REVISION DATES 09/12/12 12/21/12 SHEET 14 OF 30

FILE => 23-0248-k-tsd01.dgn CONTRACT NO.: 04-0A5341 PROJECT ID: 1234567890

USERNAME => s124496 DATE PLOTTED => 08-MAY-2013 TIME PLOTTED => 09:02

DIST	COUNTY	ROUTE	POST MILES TOTAL PROJECT	SHEET NO	TOTAL SHEETS
04	Sol	12,80	2.1/2.8, 12.0/13.1	582	597

Chandu Shenoy 9/12/12
REGISTERED CIVIL ENGINEER DATE

5-6-13
PLANS APPROVAL DATE

REGISTERED PROFESSIONAL ENGINEER
CHANDU V. SHENOY
NO. C-53636
EXP. 6/30/13
CIVIL
STATE OF CALIFORNIA

THE STATE OF CALIFORNIA OR ITS OFFICERS OR AGENTS SHALL NOT BE RESPONSIBLE FOR THE ACCURACY OR COMPLETENESS OF ELECTRONIC COPIES OF THIS PLAN SHEET.

SOLANO TRANSPORTATION AUTHORITY
ONE HARBOR CENTER, SUITE 130
SUISUN CITY, CA 94585

MARK THOMAS & COMPANY, INC. + NOLTE ASSOCIATES, INC.
3000 OAK ROAD, SUITE 650
WALNUT CREEK, CA 94597

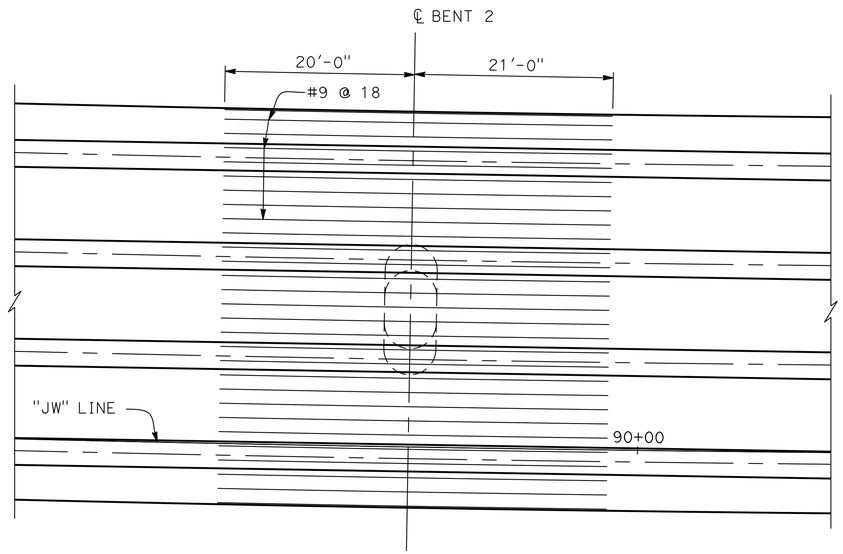

ADDITIONAL LONGITUDINAL REINFORCEMENT AT BENT 2

NO SCALE

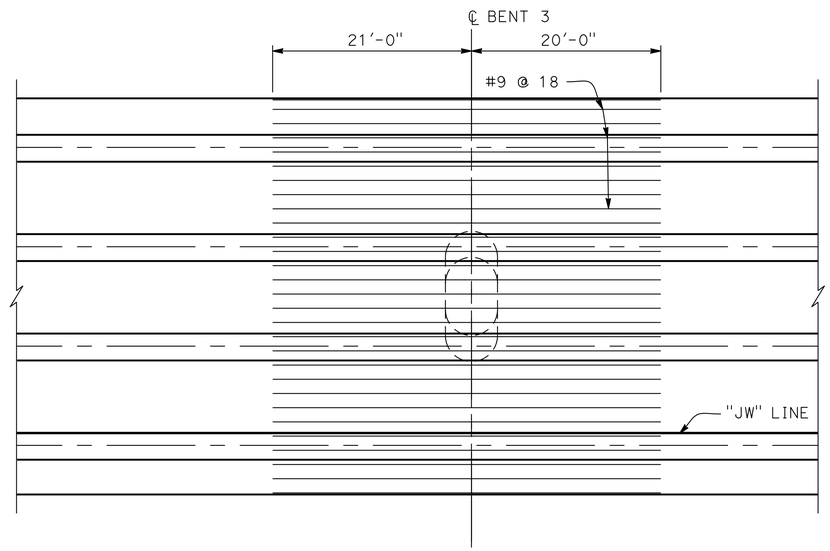

ADDITIONAL LONGITUDINAL REINFORCEMENT AT BENT 3

NO SCALE

NOTE:
FOR ADDITIONAL CONTINUOUS REINFORCEMENT, SEE "PARTIAL TYPICAL SECTION" ON "TYPICAL SECTION" SHEET.

Tracy L. Bertram
DESIGN OVERSIGHT Tracy L Bertram
1-7-13
SIGN OFF DATE

DESIGN DETAIL SHEET (ENGLISH) (REV.3/14/12)

	BY	CHECKED
DESIGN	L. KINNEBREW	C. SHENOY
DETAILS	L. KINNEBREW	C. SHENOY
QUANTITIES	L. KINNEBREW	C. SHENOY

ORIGINAL SCALE IN INCHES FOR REDUCED PLANS 0 1 2 3

PREPARED FOR THE
STATE OF CALIFORNIA
DEPARTMENT OF TRANSPORTATION

C. SHENOY
PROJECT ENGINEER

BRIDGE NO. 23-0248
POST MILES 3.0./12.2

WB 80 TO WB 12 SEPARATION (OVER WB 80 ON-RAMP)
LONGITUDINAL DECK REINFORCEMENT

UNIT: 0741
PROJECT NUMBER & PHASE: 04000211311 CONTRACT NO.: 04-0A5341

DISREGARD PRINTS BEARING EARLIER REVISION DATES → 09/12/12 12/21/12

SHEET 15 OF 30

FILE => 23-0248-1-g_dr01.dgn CONTRACT NO.: 04-0A5341 PROJECT ID: 1234567890

USERNAME => S124496 DATE PLOTTED => 08-MAY-2013 TIME PLOTTED => 09:02

DIST	COUNTY	ROUTE	POST MILES TOTAL PROJECT	SHEET NO	TOTAL SHEETS
04	Sol	12,80	2.1/2.8, 12.0/13.1	583	597

Chandu Shenoy 9/12/12
REGISTERED CIVIL ENGINEER DATE

5-6-13
PLANS APPROVAL DATE

REGISTERED PROFESSIONAL ENGINEER CHANDU V. SHENOY NO. C-53636 EXP. 6/30/13 CIVIL STATE OF CALIFORNIA

THE STATE OF CALIFORNIA OR ITS OFFICERS OR AGENTS SHALL NOT BE RESPONSIBLE FOR THE ACCURACY OR COMPLETENESS OF ELECTRONIC COPIES OF THIS PLAN SHEET.

SOLANO TRANSPORTATION AUTHORITY
ONE HARBOR CENTER, SUITE 130
SUISUN CITY, CA 94585

MARK THOMAS & COMPANY, INC. + NOLTE ASSOCIATES, INC.
3000 OAK ROAD, SUITE 650
WALNUT CREEK, CA 94597

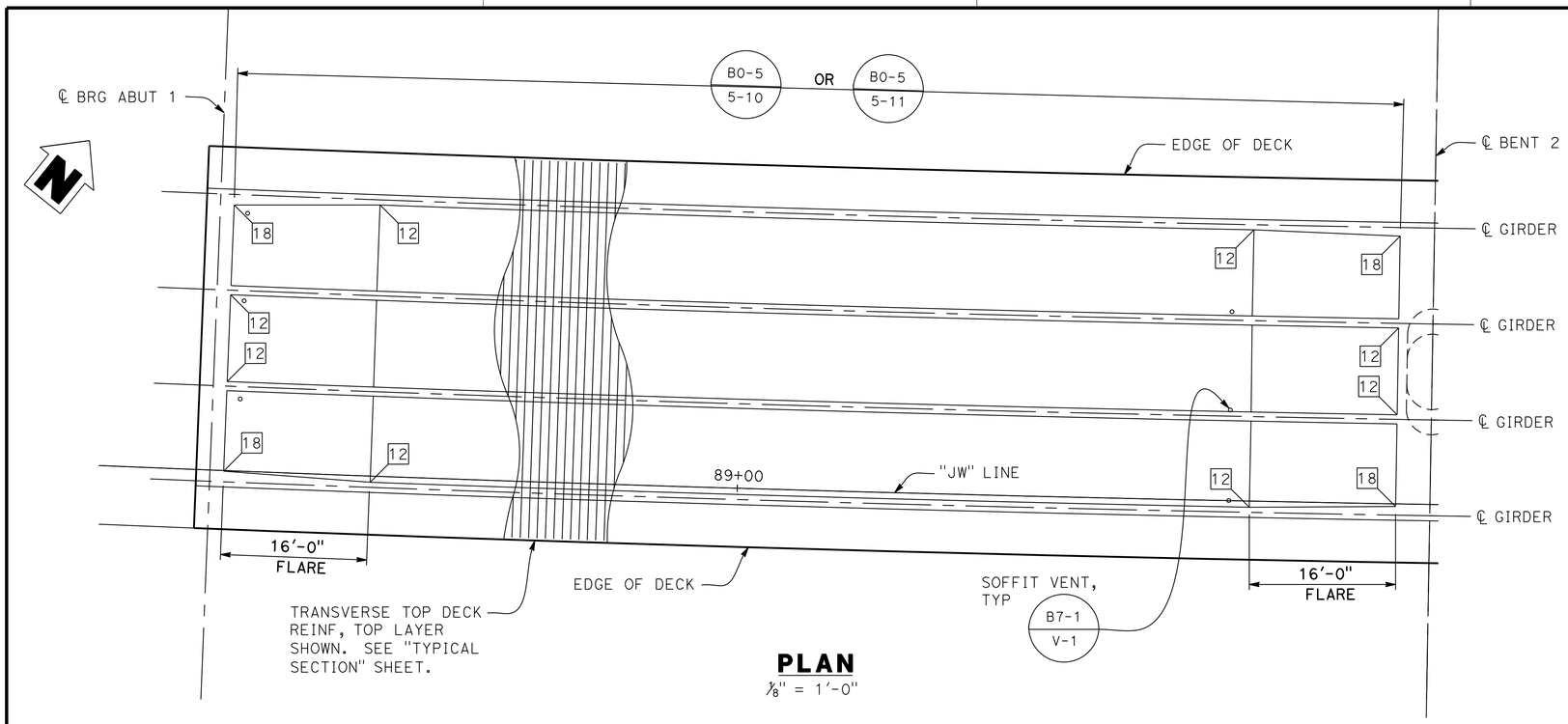

PLAN
1/8" = 1'-0"

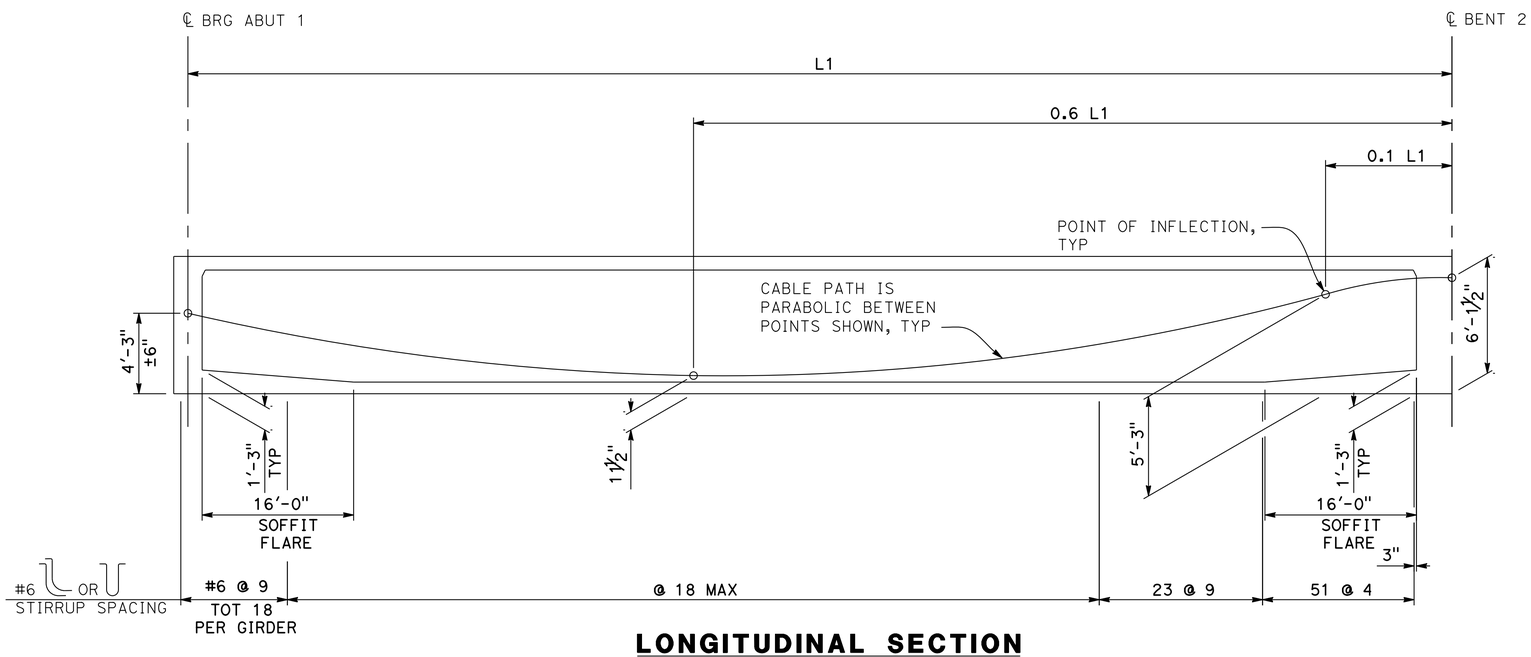

LONGITUDINAL SECTION
NO SCALE

PRESTRESSING NOTES

270 KSI LOW RELAXATION STRAND:
PJACK = 7900 KIPS
ANCHOR SET = 0.375 IN
TOTAL NUMBER OF GIRDERS = 4

DISTRIBUTION OF PRESTRESS FORCE (PJACK) BETWEEN GIRDERS SHALL NOT EXCEED THE RATIO OF 3:2 OR 725 KIPS.
FRICTION WOBBLE COEFFICIENT, K = 0.0002
FRICTION CURVATURE COEFFICIENT, U = 0.15

CONCRETE: F'C = 5000 PSI @ 28 DAYS
F'CI = 3500 PSI @ TIME OF STRESSING
CONTRACTOR SHALL SUBMIT ELONGATION CALCULATIONS BASED ON INITIAL STRESS AT
⊠ = 0.875 TIMES JACKING STRESS.
TWO-END STRESSING SHALL BE PERFORMED.

⊠ INDICATES POINT OF NO MOVEMENT FOR TWO END STRESSING.

NOTE:
1. "LI" IS GIRDER LENGTH MEASURED ALONG ℄ GIRDERS.
2. CABLE PATH IS PARABOLIC BETWEEN POINTS SHOWN.
3. CONCRETE BARRIER NOT SHOWN.

LEGEND

12 INDICATES GIRDER STEM WIDTH

B7-1 / S-3

Tracy L Bertram
DESIGN OVERSIGHT Tracy L Bertram
1-7-13
SIGN OFF DATE

DESIGN DETAIL SHEET (ENGLISH) (REV.3/14/12)

	BY	CHECKED
DESIGN	L. KINNEBREW	C. SHENOY
DETAILS	L. KINNEBREW	C. SHENOY
QUANTITIES	L. KINNEBREW	C. SHENOY

ORIGINAL SCALE IN INCHES FOR REDUCED PLANS 0 1 2 3

PREPARED FOR THE STATE OF CALIFORNIA DEPARTMENT OF TRANSPORTATION

C. SHENOY
PROJECT ENGINEER

BRIDGE NO. 23-0248
POST MILES 3.0./12.2

WB 80 TO WB 12 SEPARATION (OVER WB 80 ON-RAMP

GIRDER LAYOUT NO. 1

UNIT: 0741
PROJECT NUMBER & PHASE: 04000211311
CONTRACT NO.: 04-0A5341

DISREGARD PRINTS BEARING EARLIER REVISION DATES

REVISION DATES				SHEET	OF
09/12/12	12/21/12			16	30

FILE => 23-0248-1-g_1o01_16.dgn
CONTRACT NO.: 04-0A5341 PROJECT ID: 1234567890

USERNAME => s124496 DATE PLOTTED => 08-MAY-2013 TIME PLOTTED => 09:02

DIST	COUNTY	ROUTE	POST MILES TOTAL PROJECT	SHEET NO	TOTAL SHEETS
04	Sol	12,80	2.1/2.8, 12.0/13.1	584	597

Chandu Shenoy 9/12/12
REGISTERED CIVIL ENGINEER DATE

5-6-13
PLANS APPROVAL DATE

REGISTERED PROFESSIONAL ENGINEER CHANDU V. SHENOY NO. C-53636 EXP. 6/30/13 CIVIL STATE OF CALIFORNIA

THE STATE OF CALIFORNIA OR ITS OFFICERS OR AGENTS SHALL NOT BE RESPONSIBLE FOR THE ACCURACY OR COMPLETENESS OF ELECTRONIC COPIES OF THIS PLAN SHEET.

SOLANO TRANSPORTATION AUTHORITY
ONE HARBOR CENTER, SUITE 130
SUISUN CITY, CA 94585

MARK THOMAS & COMPANY, INC. + NOLTE ASSOCIATES, INC.
3000 OAK ROAD, SUITE 650
WALNUT CREEK, CA 94597

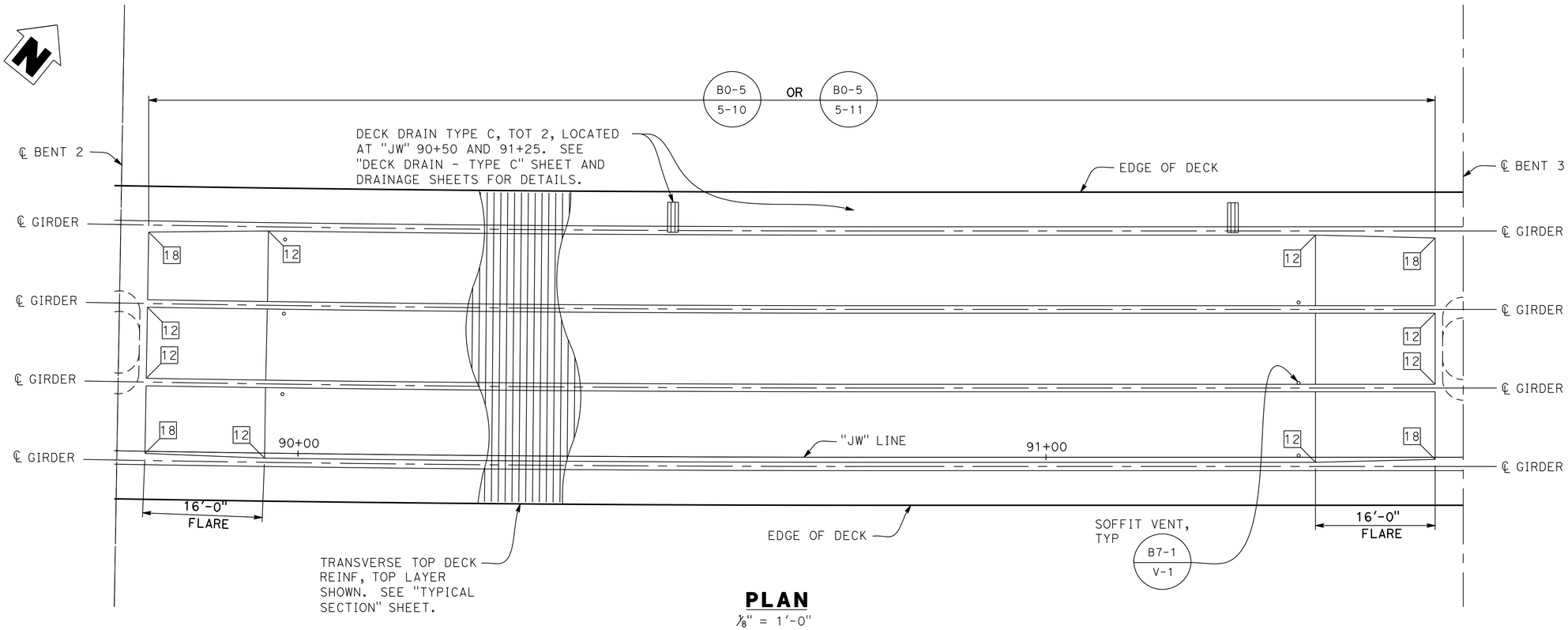

PLAN
⅛" = 1'-0"

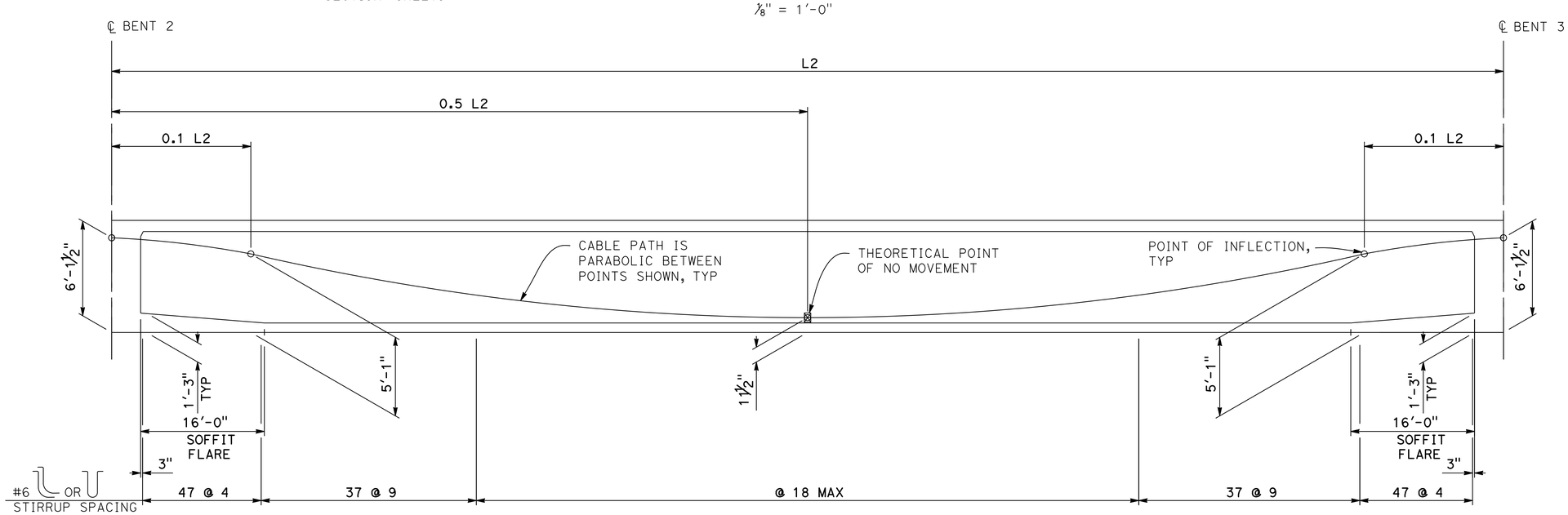

LONGITUDINAL SECTION
NO SCALE

Tracy L. Bertram
DESIGN OVERSIGHT Tracy L Bertram
1-7-13
SIGN OFF DATE

	BY	CHECKED
DESIGN	L. KINNEBREW	C. SHENOY
DETAILS	L. KINNEBREW	C. SHENOY
QUANTITIES	L. KINNEBREW	C. SHENOY

PREPARED FOR THE STATE OF CALIFORNIA DEPARTMENT OF TRANSPORTATION

C. SHENOY
PROJECT ENGINEER

BRIDGE NO. 23-0248
POST MILES 3.0./12.2

WB 80 TO WB 12 SEPARATION (OVER WB 80 ON-RAMP)

GIRDER LAYOUT NO. 2

DESIGN DETAIL SHEET (ENGLISH) (REV.3/14/12)

ORIGINAL SCALE IN INCHES FOR REDUCED PLANS 0 1 2 3

UNIT: 0741
PROJECT NUMBER & PHASE: 04000211311 CONTRACT NO.: 04-0A5341

DISREGARD PRINTS BEARING EARLIER REVISION DATES

REVISION DATES 08/12/12 12/21/12 SHEET 17 OF 30

FILE => 23-0248-1-g_1o01_17.dgn

CONTRACT NO.: 04-0A5341 PROJECT ID: 1234567890

USERNAME => S124496 DATE PLOTTED => 08-MAY-2013 TIME PLOTTED => 09:02

DIST	COUNTY	ROUTE	POST MILES TOTAL PROJECT	SHEET NO	TOTAL SHEETS
04	Sol	12,80	2.1/2.8, 12.0/13.1	585	597

Chandu Shenoy 9/12/12
REGISTERED CIVIL ENGINEER DATE

5-6-13
PLANS APPROVAL DATE

REGISTERED PROFESSIONAL ENGINEER CHANDU V. SHENOY NO. C-53636 EXP. 6/30/13 CIVIL STATE OF CALIFORNIA

THE STATE OF CALIFORNIA OR ITS OFFICERS OR AGENTS SHALL NOT BE RESPONSIBLE FOR THE ACCURACY OR COMPLETENESS OF ELECTRONIC COPIES OF THIS PLAN SHEET.

SOLANO TRANSPORTATION AUTHORITY
ONE HARBOR CENTER, SUITE 130
SUISUN CITY, CA 94585

MARK THOMAS & COMPANY, INC. + NOLTE ASSOCIATES, INC.
3000 OAK ROAD, SUITE 650
WALNUT CREEK, CA 94597

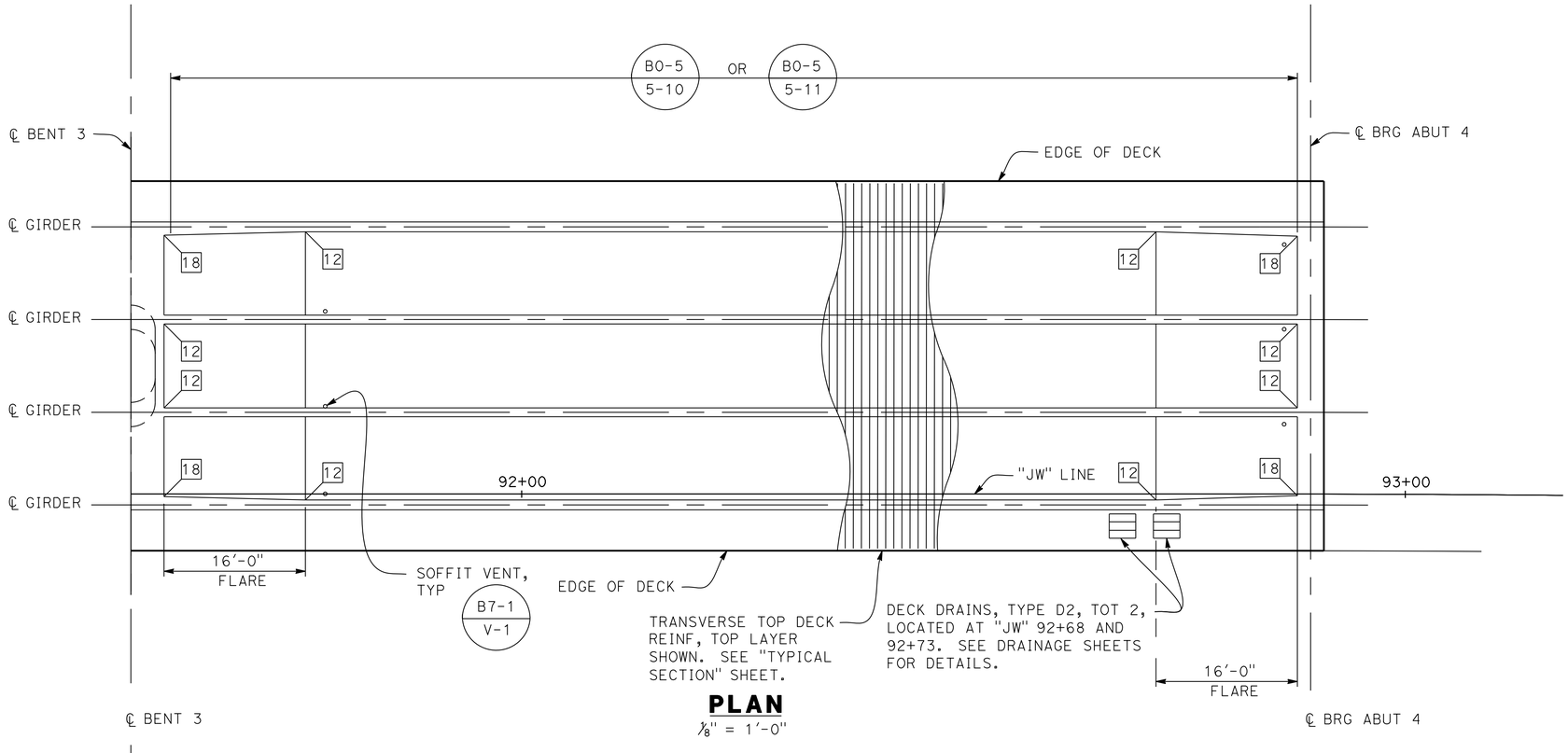

PLAN

1/8" = 1'-0"

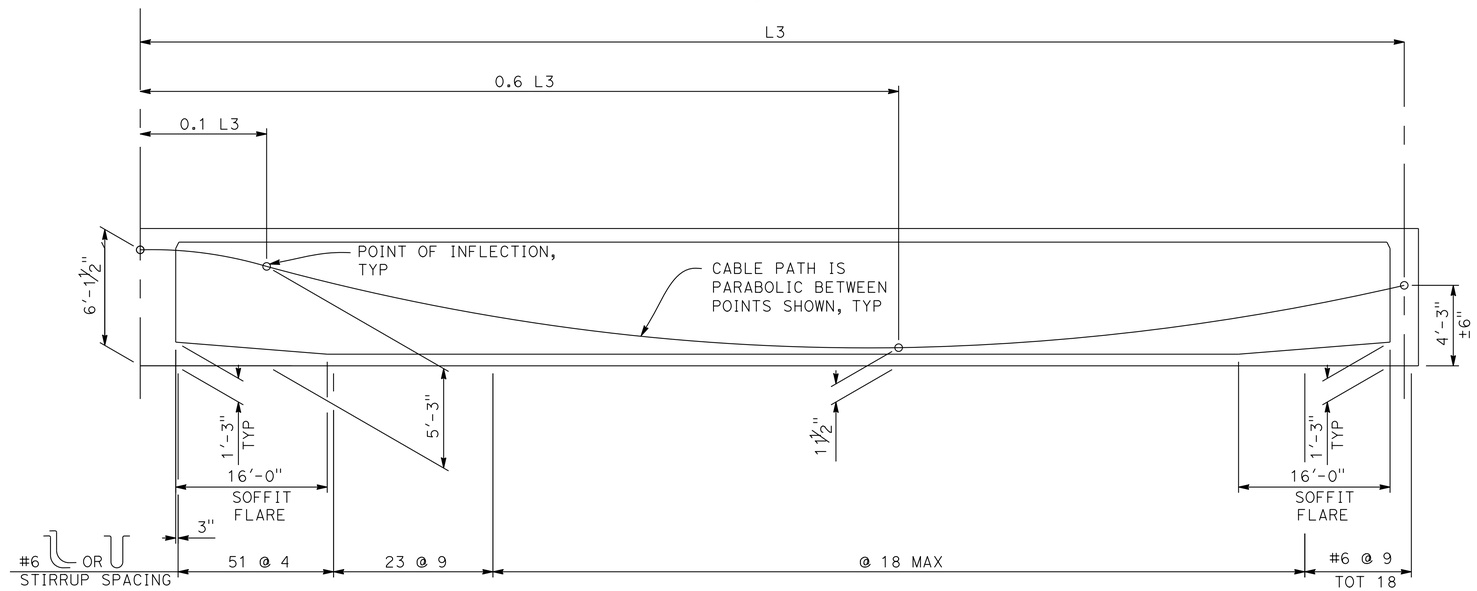

LONGITUDINAL SECTION

NO SCALE

Tracy L. Bertram
DESIGN OVERSIGHT Tracy L Bertram
1-7-13
SIGN OFF DATE

	BY	CHECKED
DESIGN	L. KINNEBREW	C. SHENOY
DETAILS	L. KINNEBREW	C. SHENOY
QUANTITIES	L. KINNEBREW	C. SHENOY

PREPARED FOR THE STATE OF CALIFORNIA DEPARTMENT OF TRANSPORTATION

C. SHENOY
PROJECT ENGINEER

BRIDGE NO. 23-0248
POST MILES 3.0./12.2

WB 80 TO WB 12 SEPARATION (OVER WB 80 ON-RAMP)

GIRDER LAYOUT NO. 3

DESIGN DETAIL SHEET (ENGLISH) (REV.3/14/12)

ORIGINAL SCALE IN INCHES FOR REDUCED PLANS 0 1 2 3

UNIT: 0741
PROJECT NUMBER & PHASE: 04000211311 CONTRACT NO.: 04-0A5341

DISREGARD PRINTS BEARING EARLIER REVISION DATES → 09/12/12 12/21/12

SHEET 18 OF 30

FILE => 23-0248-1-g_1001_18.dgn

CONTRACT NO.: 04-0A5341 PROJECT ID: 1234567890

USERNAME => s124496 DATE PLOTTED => 08-MAY-2013 TIME PLOTTED => 09:02

DIST	COUNTY	ROUTE	POST MILES TOTAL PROJECT	SHEET No	TOTAL SHEETS
04	Sol	12,80	2.1/2.8, 12.0/13.1	586	597

Michael Painter 11/9/12
DATE

5-6-13
PLANS APPROVAL DATE

REGISTERED LANDSCAPE ARCHITECT
MICHAEL R. PAINTER
M. Painter
Signature
1/31/13
Renewal Date
11/9/12
Date
STATE OF CALIFORNIA

The State of California or its officers or agents shall not be responsible for the accuracy or completeness of electronic copies of this plan sheet.

SOLANO TRANSPORTATION AUTHORITY
ONE HARBOR CENTER, SUITE 130
SUISUN CITY, CA 94585

MPA DESIGN
1801 OAKLAND BOULEVARD SUITE 315
WALNUT CREEK CA 94596

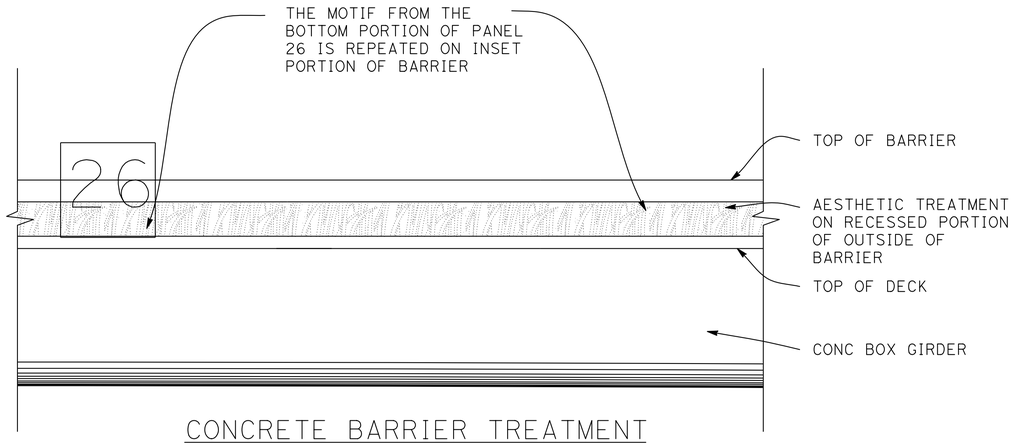

CONCRETE BARRIER TREATMENT
3"= 1'-0"

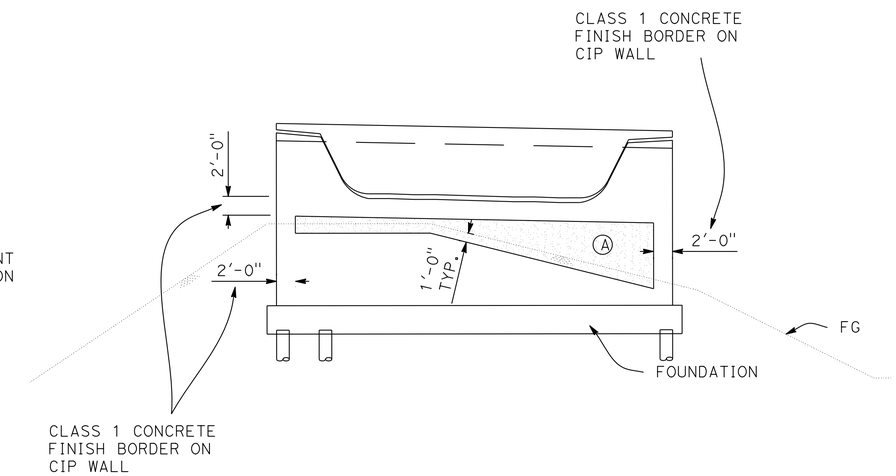

ABUTMENT 1 ELEVATION
$1\frac{1}{2}$"= 1'-0"

KEYED NOTES

(A) Light sand finish: Refer to drawing AESTHETIC TREATMENT - DETAILS No. 3

NOTES

1. This drawing shall be used for structural aesthetic treatment only. All other structural elements are shown here for reference only and are specified else where in this drawing set.
2. All CIP wall surfaces not shown as receiving aesthetic treatment shall be class 1 concrete finish.
3. For surface relief details refer to "AESTHETIC TREATMENT DETAILS No. 1 Through 3" sheets.
4. CAD files of the motifs are available from Solano Transportation Authority

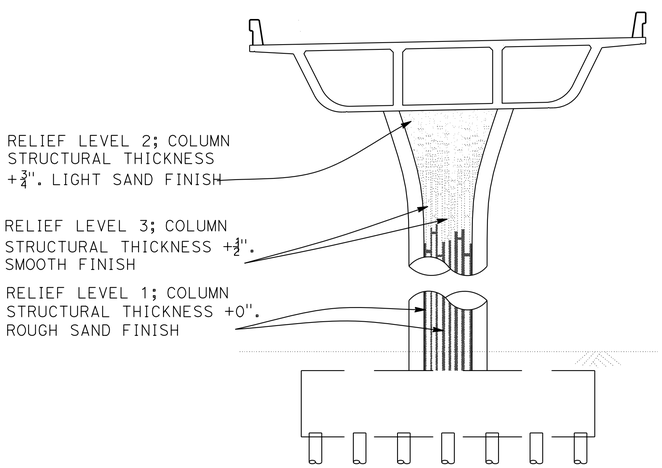

NOTES

1. For surface relief details refer to "KEY TO SURFACE RELIEFT - COLUMN on "AESTHETIC TREATMENT DETAILS No. 3" sheet.
2. Aesthetic treatment applied to recessed portions on both column faces

BENT 2 AND BENT 3 ELEVATION
$1\frac{1}{2}$"= 1'-0"

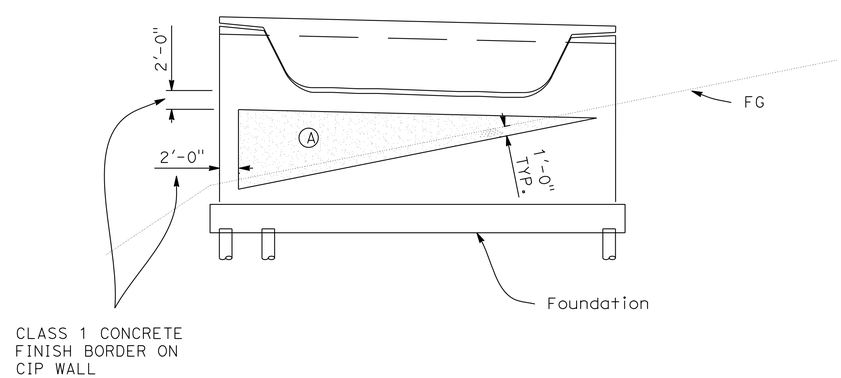

ABUTMENT 4 ELEVATION
$1\frac{1}{2}$"= 1'-0"

Tracy L. Bertram
DESIGN OVERSIGHT Tracy L Bertram
1-7-13
SIGN OFF DATE

	BY	CHECKED
DESIGN	T WALKER	J PASSALACQUA
DETAILS	S KENNEY	R ALCINA
QUANTITIES	N PHAM	A HOAC

PREPARED FOR THE STATE OF CALIFORNIA DEPARTMENT OF TRANSPORTATION

MICHAEL PAINTER
PROJECT LANDSCAPE ARCHITECT

BRIDGE NO. 23-0248
POST MILES 3.0/12.2

WB 80 TO WB 12 SEPARATION
AESTHETIC TREATMENT

DESIGN GENERAL PLAN SHEET (ENGLISH) (REV. 3-14-12)

ORIGINAL SCALE IN INCHES FOR REDUCED PLANS 0 1 2 3

UNIT: 0741
PROJECT NUMBER & PHASE: 04000211311 CONTRACT NO.: 04-0A5341

DISREGARD PRINTS BEARING EARLIER REVISION DATES
REVISION DATES: 09/05/12 10/19/12

SHEET 19 OF 30

FILE => 23-0248-r-at.dgn

USERNAME => s124496 DATE PLOTTED => 08-MAY-2013 TIME PLOTTED => 09:02

DIST	COUNTY	ROUTE	POST MILES TOTAL PROJECT	SHEET No	TOTAL SHEETS
04	Sol	12,80	2.1/2.8, 12.0/13.1	587	597

Michael Painter 11/9/12
DATE

5-6-13
PLANS APPROVAL DATE

REGISTERED LANDSCAPE ARCHITECT
MICHAEL R. PAINTER
No. 2825
Signature
1/31/13
Renewal Date
11/9/12
Date
STATE OF CALIFORNIA

The State of California or its officers or agents shall not be responsible for the accuracy or completeness of electronic copies of this plan sheet.

SOLANO TRANSPORTATION AUTHORITY
ONE HARBOR CENTER, SUITE 130
SUISUN CITY, CA 94585

MPA DESIGN
1801 OAKLAND BOULEVARD SUITE 315
WALNUT CREEK CA 94596

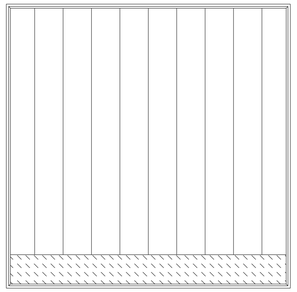
Panel #1 - part of airwave motif

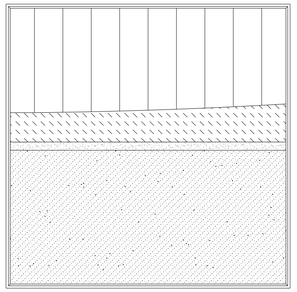
Panel #2 - part of airwave motif

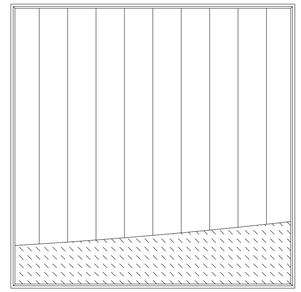
Panel #3 - part of airwave motif

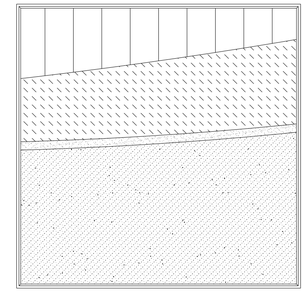
Panel #4 - part of airwave motif

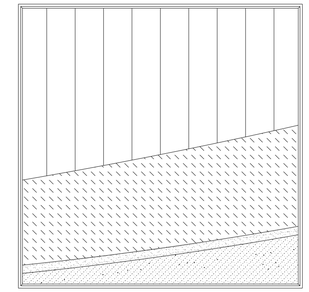
Panel #5 - part of airwave motif

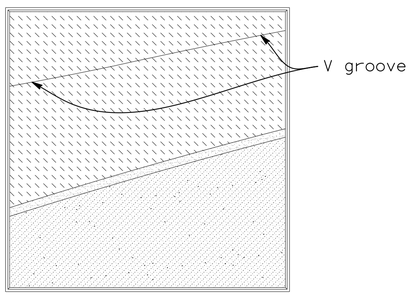

Panel #6 - part of airwave motif

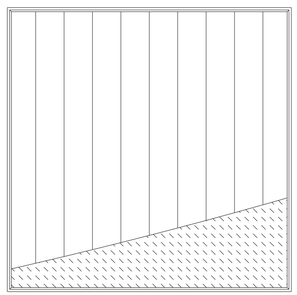
Panel #7 - part of airwave motif

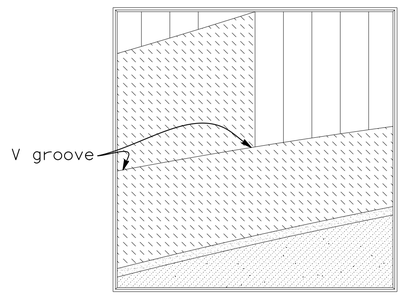

Panel #8 - part of airwave motif

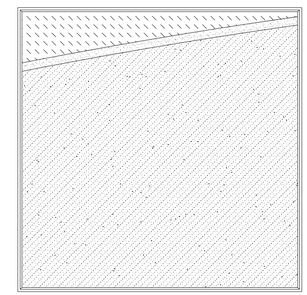
Panel #9 - part of airwave motif

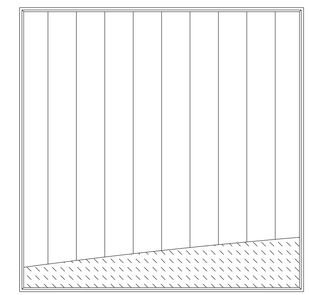
Panel #10 - part of airwave motif

GENERAL NOTE

For surface relief details refer to "Details No. 3" - KEY TO SURFACE RELIEF - MSE PANELS AND CIP WALLS

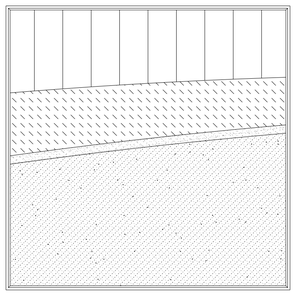
Panel #11 - part of airwave motif

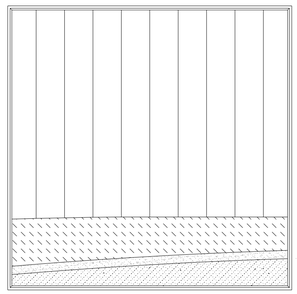
Panel #12 - part of airwave motif

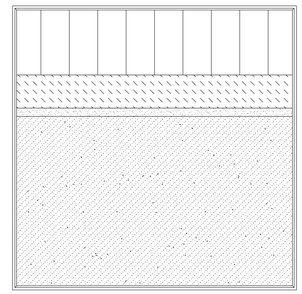
Panel #13 - part of airwave motif

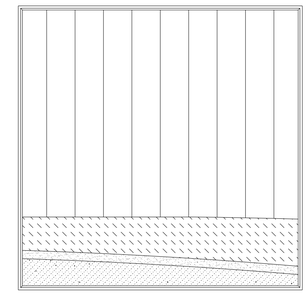
Panel #14 - part of airwave motif

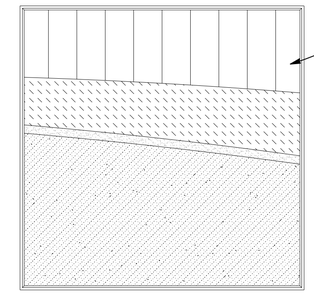

Panel #15 - part of airwave motif

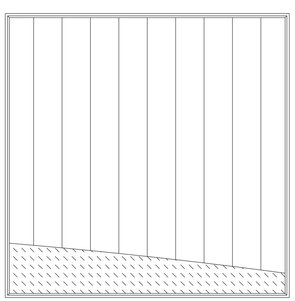
Panel #16 - part of airwave motif

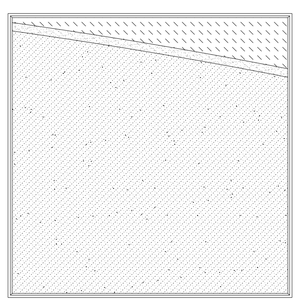
Panel #17 - part of airwave motif

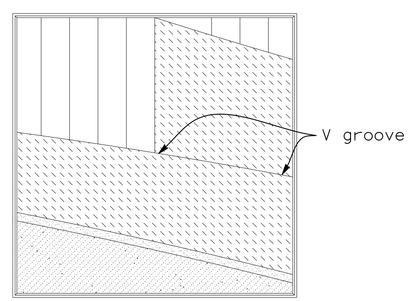

Panel #18 - part of airwave motif

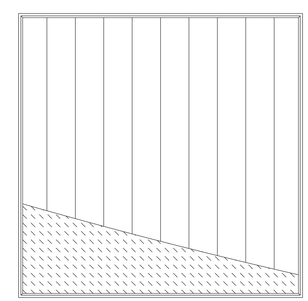
Panel #19 - part of airwave motif

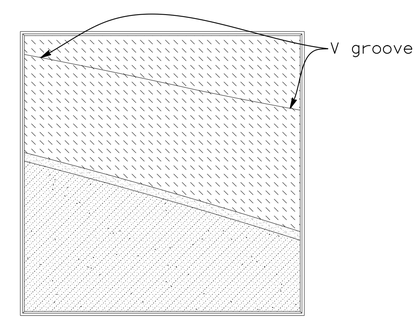

Panel #20 - part of airwave motif

Scale 3/4" = 1'-0"

Tracy L Bertram
DESIGN OVERSIGHT
1-7-13
SIGN OFF DATE

	BY		CHECKED
DESIGN	BY	S KENNEY	CHECKED R ALCINA
DETAILS	BY	S KENNEY	CHECKED R ALCINA
QUANTITIES	BY	S KENNEY	CHECKED R ALCINA

PREPARED FOR THE
STATE OF CALIFORNIA
DEPARTMENT OF TRANSPORTATION

MICHAEL PAINTER
PROJECT LANDSCAPE ARCHITECT

BRIDGE NO. 23-0248
POST MILES 3.0/12.2

WB80 TO WB12 SEPARATION
AESTHETIC TREATMENT DETAIL No. 1

DESIGN GENERAL PLAN SHEET (ENGLISH) (REV. 3-14-12)

ORIGINAL SCALE IN INCHES FOR REDUCED PLANS 0 1 2 3

UNIT: 0741
PROJECT NUMBER & PHASE: 04000211311 CONTRACT NO.: 04-0A5341

DISREGARD PRINTS BEARING EARLIER REVISION DATES

REVISION DATES: 09/06/12 10/19/12

SHEET 20 OF 30

FILE => 23-0248-r-atd01.dgn

USERNAME => s124496 DATE PLOTTED => 08-MAY-2013 TIME PLOTTED => 09:03

DIST	COUNTY	ROUTE	POST MILES TOTAL PROJECT	SHEET No	TOTAL SHEETS
04	Sol	12,80	2.1/2.8, 12.0/13.1	588	597

Michael Painter 11/9/12
DATE

5-6-13
PLANS APPROVAL DATE

REGISTERED LANDSCAPE ARCHITECT
MICHAEL R. PAINTER
No. 2322
M. Painter
Signature
1/31/13
Renewal Date
11/9/12
Date
STATE OF CALIFORNIA

The State of California or its officers or agents shall not be responsible for the accuracy or completeness of electronic copies of this plan sheet.

SOLANO TRANSPORTATION AUTHORITY
ONE HARBOR CENTER, SUITE 130
SUISUN CITY, CA 94585

MPA DESIGN
1801 OAKLAND BOULEVARD SUITE 315
WALNUT CREEK CA 94596

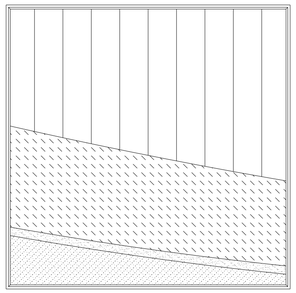

Panel #21 - part of airwave motif

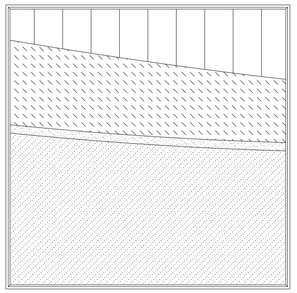

Panel #22 - part of airwave motif

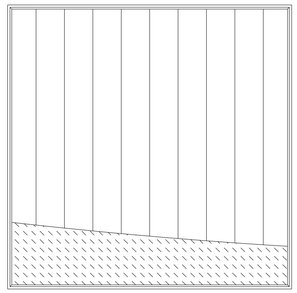

Panel #23 - part of airwave motif

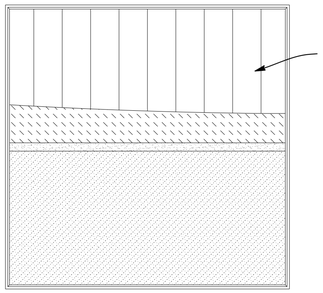

Panel #24 - part of airwave motif

Panel #25 - part of grass motif

Panel #26 - part of grass motif

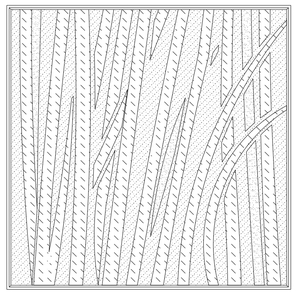

Panel #27 - part of grass motif

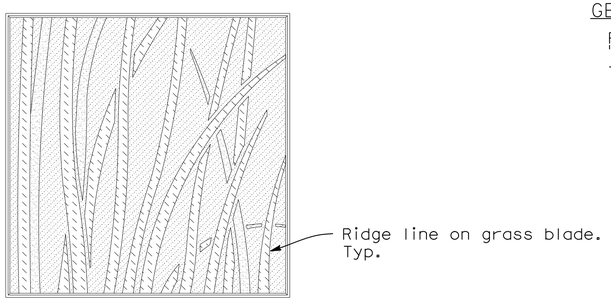

Panel #28 - part of grass motif

GENERAL NOTE

For surface relief details refer to "Details No. 3" - KEY TO SURFACE RELIEF - MSE PANELS AND CIP WALLS

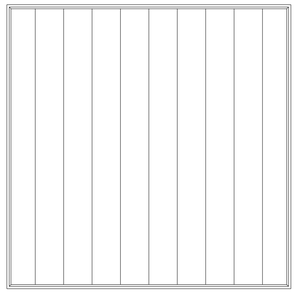

Sky motif panel -used above airwave motif panels (1" smooth fluted finish)

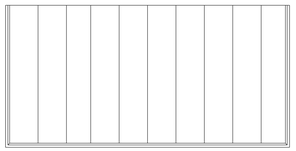

½ Panel used on leveling pad (1" smooth fluted finish)

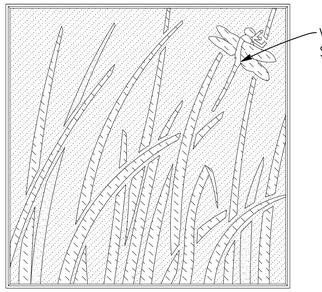

Panel #29 - for high visibility motif

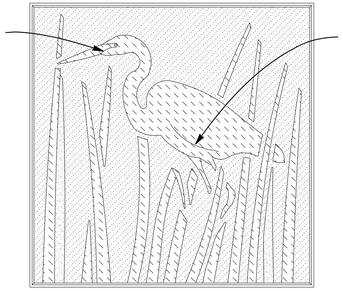

Panel #30 - for high visibility motif

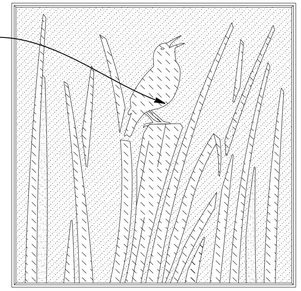

Panel #31 - for high visibility motif

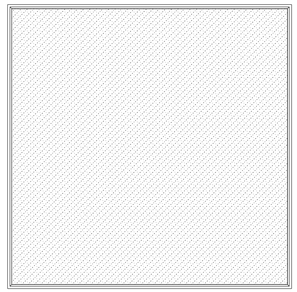

Background panel -used below airwave motif panels (Heavy sand finish)

Panel #29 - detail motif

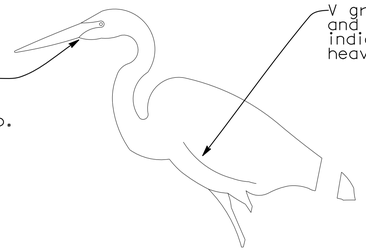

Panel #30 - detail motif

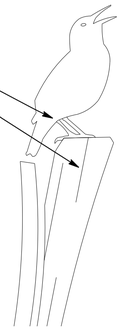

Panel #31 - detail motif

Tracy L. Bertram
DESIGN OVERSIGHT Tracy L Bertram
1-7-13
SIGN OFF DATE

	BY	CHECKED
DESIGN	S KENNEY	R ALCINA
DETAILS	S KENNEY	R ALCINA
QUANTITIES	S KENNEY	R ALCINA

PREPARED FOR THE
STATE OF CALIFORNIA
DEPARTMENT OF TRANSPORTATION

MICHAEL PAINTER
PROJECT LANDSCAPE ARCHITECT

BRIDGE NO. 23-0248
POST MILES 3.0/12.2

WB80 TO WB12 SEPARATION
AESTHETIC TREATMENT DETAIL No. 2

DESIGN GENERAL PLAN SHEET (ENGLISH) (REV. 3-14-12)

ORIGINAL SCALE IN INCHES FOR REDUCED PLANS 0 1 2 3

UNIT: 0741
PROJECT NUMBER & PHASE: 04000211311
CONTRACT NO.: 04-0A5341

DISREGARD PRINTS BEARING EARLIER REVISION DATES

REVISION DATES: 09/5/12 10/19/12

SHEET 21 OF 30

FILE => 23-0248-r-atd02.dgn

USERNAME => s124936 DATE PLOTTED => 08-MAY-2013 TIME PLOTTED => 09:03

DIST	COUNTY	ROUTE	POST MILES TOTAL PROJECT	SHEET No	TOTAL SHEETS
04	Sol	12,80	2.1/2.8, 12.0/13.1	589	597

Michael Painter 11/9/12
DATE

5-6-13
PLANS APPROVAL DATE

REGISTERED LANDSCAPE ARCHITECT
MICHAEL R. PAINTER
C 3837
M. Painter
Signature
1/31/13
Renewal Date
11/9/12
Date
STATE OF CALIFORNIA

The State of California or its officers or agents shall not be responsible for the accuracy or completeness of electronic copies of this plan sheet.

SOLANO TRANSPORTATION AUTHORITY
ONE HARBOR CENTER, SUITE 130
SUISUN CITY, CA 94585

MPA DESIGN
1801 OAKLAND BOULEVARD SUITE 315
WALNUT CREEK CA 94596

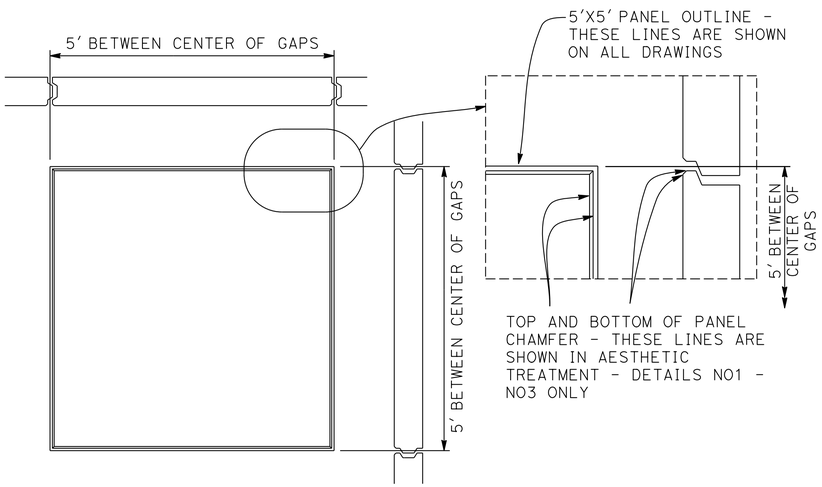

PANELS

3/4"=1'-0"

SAND FINISH AND SKY MOTIF

NTS

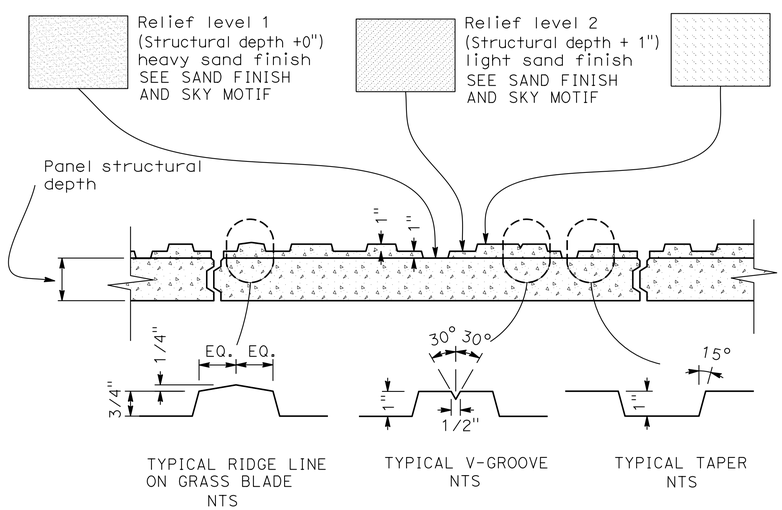

KEY TO SURFACE RELIEF - MSE PANELS AND CIP WALLS

3/8"=1'-0"

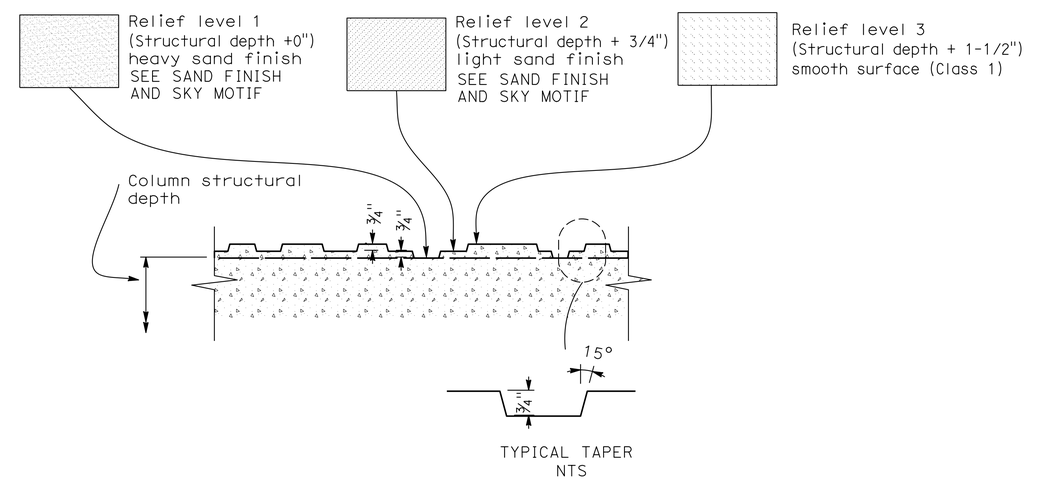

KEY TO SURFACE RELIEF - BRIDGE COLUMNS

3/8"=1'-0"

Tracy L Bertram
DESIGN OVERSIGHT
1-7-13
SIGN OFF DATE

DESIGN GENERAL PLAN SHEET (ENGLISH) (REV. 3-14-12)

	BY	CHECKED
DESIGN	S KENNEY	R ALCINA
DETAILS	S KENNEY	R ALCINA
QUANTITIES	S KENNEY	R ALCINA

ORIGINAL SCALE IN INCHES FOR REDUCED PLANS 0 1 2 3

PREPARED FOR THE
STATE OF CALIFORNIA
DEPARTMENT OF TRANSPORTATION

MICHAEL PAINTER
PROJECT LANDSCAPE ARCHITECT

BRIDGE NO. 23-0248
POST MILES 3.0/12.2

WB80 TO WB12 SEPARATION
AESTHETIC TREATMENT DETAIL No. 3

UNIT: 0741
PROJECT NUMBER & PHASE: 04000211311
CONTRACT NO.: 04-0A5341

DISREGARD PRINTS BEARING EARLIER REVISION DATES

REVISION DATES			SHEET	OF
09/05/12	10/19/12		22	30

FILE => 23-0248-r-atd03.dgn

USERNAME => s124496 DATE PLOTTED => 08-MAY-2013 TIME PLOTTED => 09:03

DIST	COUNTY	ROUTE	POST MILES TOTAL PROJECT	SHEET NO.	TOTAL SHEETS
04	Sol	12,80	2.1/2.8, 12.0/13.1	590	597

Chandu Shenoy 9/12/12
REGISTERED CIVIL ENGINEER DATE

5-6-13
PLANS APPROVAL DATE

REGISTERED PROFESSIONAL ENGINEER CHANDU V. SHENOY NO. C-53636 EXP. 6/30/13 CIVIL STATE OF CALIFORNIA

THE STATE OF CALIFORNIA OR ITS OFFICERS OR AGENTS SHALL NOT BE RESPONSIBLE FOR THE ACCURACY OR COMPLETENESS OF ELECTRONIC COPIES OF THIS PLAN SHEET.

SOLANO TRANSPORTATION AUTHORITY
ONE HARBOR CENTER, SUITE 130
SUISUN CITY, CA 94585

MARK THOMAS & COMPANY, INC. + NOLTE ASSOCIATES, INC.
3000 OAK ROAD, SUITE 650
WALNUT CREEK, CA 94597

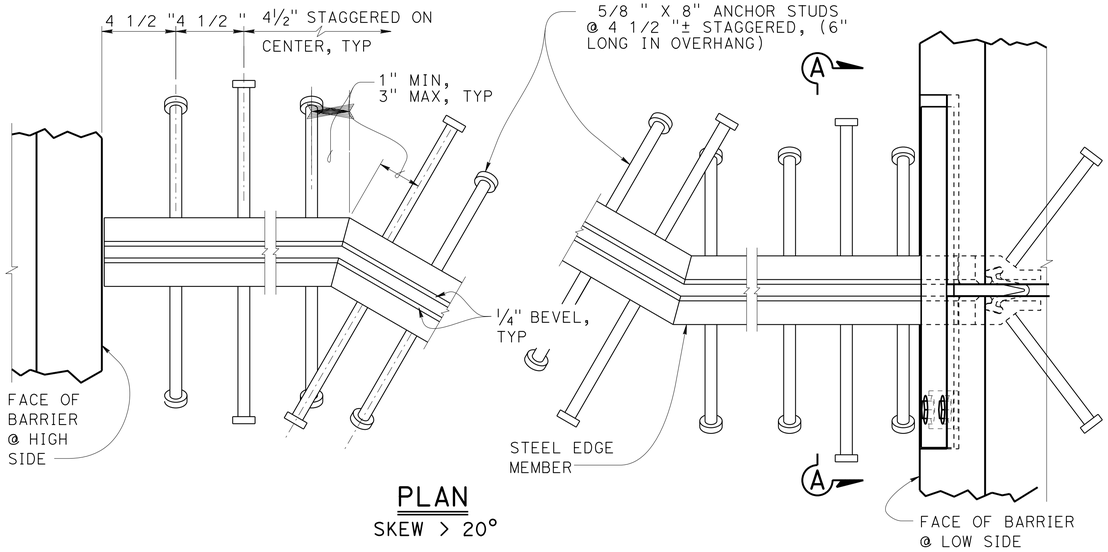

PLAN
SKEW > 20°

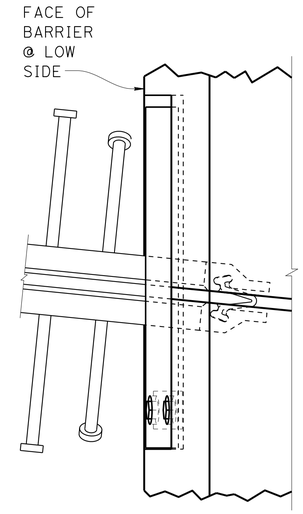

PLAN
SKEW ≤ 20°

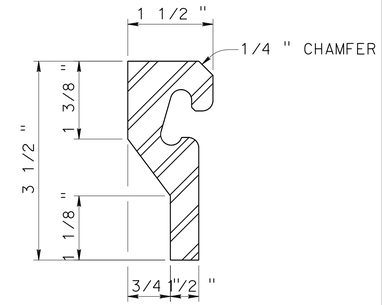

STEEL EDGE MEMBER

NOTES:

1. ALTERNATIVELY, FILLET OR FULL PENETRATION WELDS MAY BE USED AT ANCHOR STUDS.
2. ALTERNATE TYPES OF ANCHOR STUDS MAY BE PERMITTED SUBJECT TO THE APPROVAL BY THE ENGINEER
3. JOINT SEAL ASSEMBLY TO BE USED IN CONJUNCTION WITH CLOSURE POUR. (SEE OTHER SHEETS FOR LIMITS). CLOSURE POUR SHALL NOT BE PLACED UNTIL FINAL DECK SURFACE IS WITHIN THE TOLERANCES SPECIFIED
4. USE JOINT AT CROWN OF ROADWAY, AT ANY CHANGE IN TRAVERSE SLOPE IN DECK AND AT CHANGES IN HORIZONTAL DIRECTION. PLACE OTHER JOINTS AT OR NEAR LANES. ALL METAL PARTS TO BE PAINTED OR GALVANIZED AFTER FABRICATION
5. SHEET NEOPRENE SHALL BE FABRICATED IN ONE CONTINUOUS PIECE AND SHALL BE FABRICATED TO BEND AROUND CORNERS. FIELD SPLICES OF THE NEOPRENE ARE NOT ALLOWED.
6. INSERT ASSEMBLY OR EXPANSION ANCHORAGE FOR ⅝" X 1¾" BOLTS. USE INSTALLATION BOLTS EXTENDED ½" MINIMUM PAST NUT AND COAT WITH BOND BREAKER, AFTER CONCRETE HAS CURED, REMOVE INSTALLATION BOLTS, INSTALL A325 BOLTS AND SHEET NEOPRENE
7. SIDEWALK DETAIL SIMILAR TO BARRIER DETAIL ON LOW SIDE AT BOTH SIDES IF THE ROADWAY IS CROWNED OR IF THE DIFFERENCE IN ELEVATION BETWEEN THE ENDS OF THE SEAL IS 0.5′ OR LESS
8. A_C, A_S, ARE THE THERMAL EXPANSION COEFFICIENTS FOR CONCRETE AND STEEL RESPECTIVELY.

JOINT INFORMATION			"A" DIMENSIONS		
LOCATION	MOVEMENT RATING (MR)	SKEW	WINTER	SPRING & FALL	SUMMER

* TO SET MINIMUM JOINT OPENING "W"

$$"W" = \begin{cases} \tfrac{1}{2}" + [(\text{MAX STR TEMPERATURE IN F°}) - (\text{ACTUAL STR TEMPERATURE IN F°})] * (A_C \text{ OR } A_S)(12)(\text{CONTRIBUTORY L IN FEET}) \\ \tfrac{1}{2}" \text{ MINIMUM} \\ A_C = 0.0000060 \\ A_S = 0.0000065 \end{cases}$$

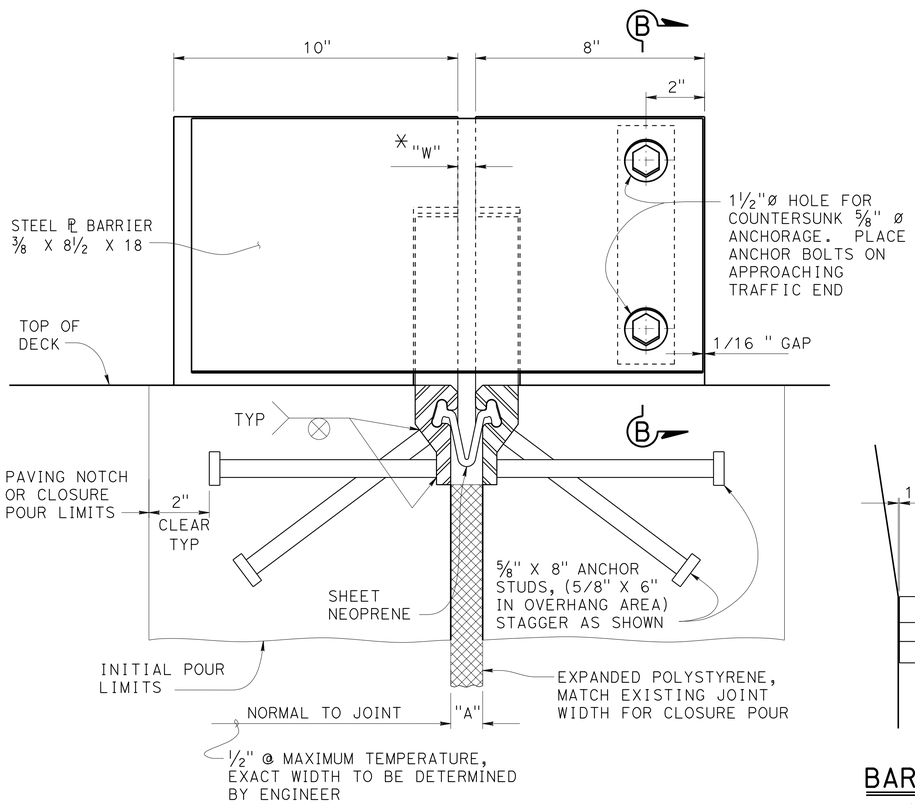

SECTION A-A

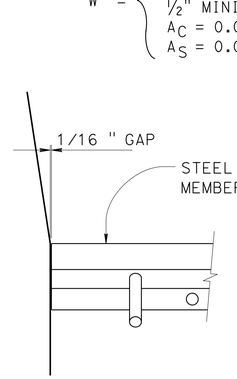

BARRIER DETAIL
HIGH SIDE

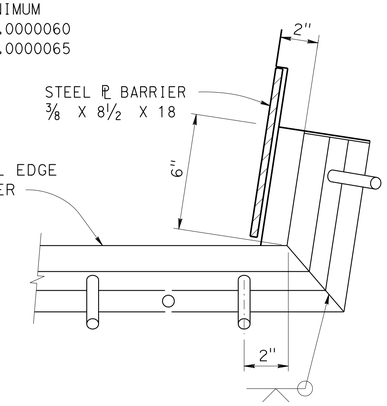

BARRIER DETAIL
LOW SIDE

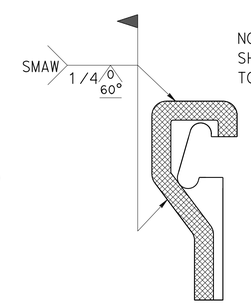

FIELD WELD
DETAIL

NOTE:
SHADED AREAS
TO BE WELDED

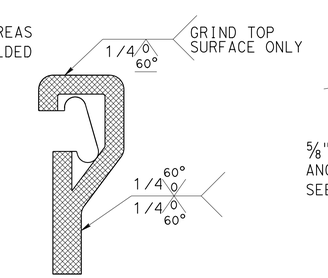

SHOP WELD
DETAIL

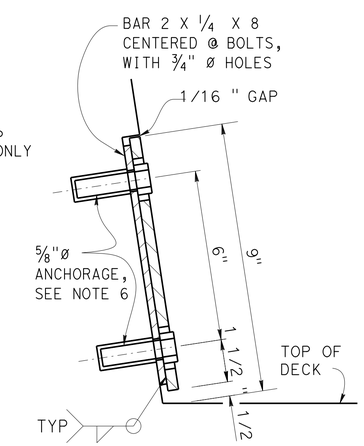

SECTION B-B

NO SCALE

RETAINING WALL NO. 1 (TYPE 1A)

JOINT SEAL ASSEMBLY

MAXIMUM MOVEMENT RATING = 4"

STANDARD DRAWING
FILE NO. XS8-010
APPROVAL DATE JUNE 2012

STATE OF CALIFORNIA
DEPARTMENT OF TRANSPORTATION

DIVISION OF ENGINEERING SERVICES

BRIDGE NO. 23-RW01
POST MILE 2.9

DS OSD 2147A (ENGLISH STANDARD DRAWING "XS" BORDER REV. (02-02-11)

ORIGINAL SCALE IN INCHES FOR REDUCED PLANS 0 1 2 3

UNIT: 0741
PROJECT NUMBER & PHASE: 04000211311
CONTRACT NO. 04-0A5341

DISREGARD PRINTS BEARING EARLIER REVISION DATES
REVISION DATES 2/24/12 3/26/12 5/24/12 6/21/12
SHEET 23 OF 30

FILE => 23-0248-s-d(JS).dgn

USERNAME => s124496 DATE PLOTTED => 08-MAY-2013 TIME PLOTTED => 09:03

DIST	COUNTY	ROUTE	POST MILES TOTAL PROJECT	SHEET NO.	TOTAL SHEETS
04	Sol	12,80	2.1/2.8, 12.0/13.1	591	597

Chandu Shenoy 9/12/12
REGISTERED CIVIL ENGINEER DATE

5-6-13
PLANS APPROVAL DATE

REGISTERED PROFESSIONAL ENGINEER CHANDU V. SHENOY NO. C-53636 EXP. 6/30/13 CIVIL STATE OF CALIFORNIA

THE STATE OF CALIFORNIA OR ITS OFFICERS OR AGENTS SHALL NOT BE RESPONSIBLE FOR THE ACCURACY OR COMPLETENESS OF ELECTRONIC COPIES OF THIS PLAN SHEET.

SOLANO TRANSPORTATION AUTHORITY
ONE HARBOR CENTER, SUITE 130
SUISUN CITY, CA 94585

MARK THOMAS & COMPANY, INC. + NOLTE ASSOCIATES, INC.
3000 OAK ROAD, SUITE 650
WALNUT CREEK, CA 94597

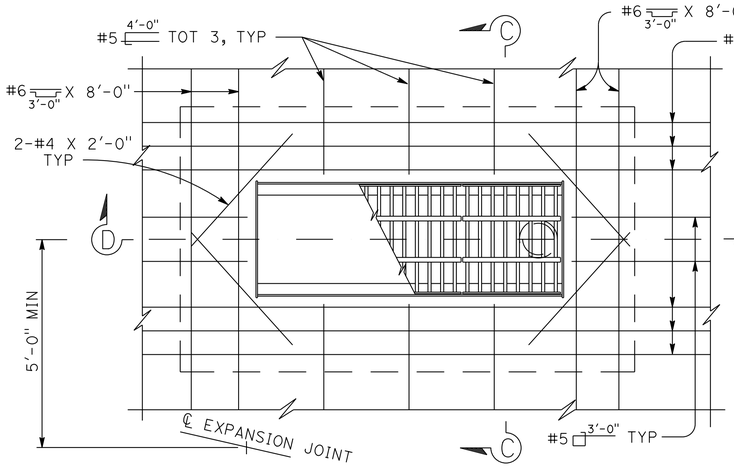

PLAN - MEDIAN INSTALLATION

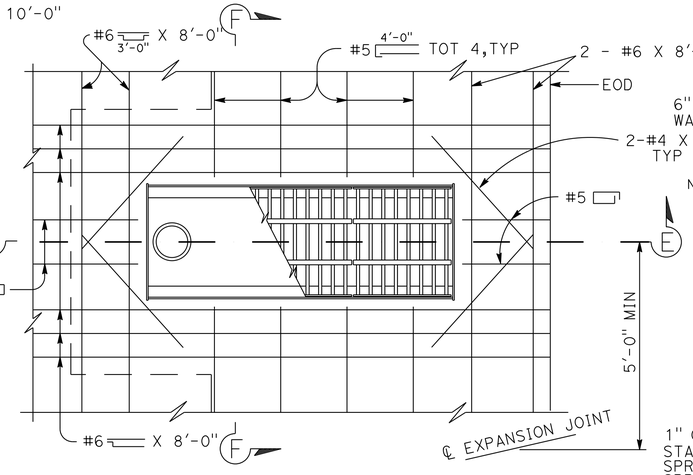

PLAN - CURB INSTALLATION

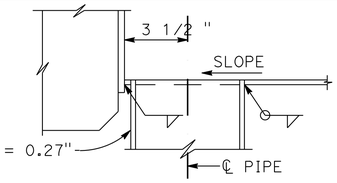

PIPE SECTION

NOTE:
GALVANIZE DECK DRAIN ASSEMBLY AFTER FABRICATION. REINFORCEMENT SHOWN AT DRAINS IS TO BE PLACED IN ADDITION TO TYPICAL SLAB REINFORCEMENT. TYPICAL SLAB REINFORCEMENT NOT SHOWN

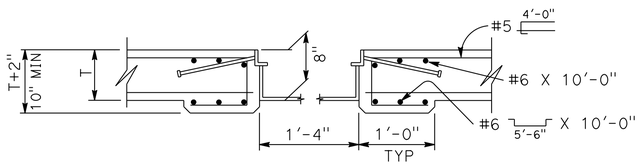

SECTION C-C

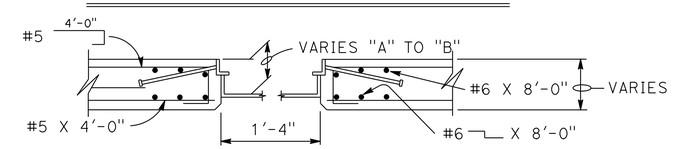

SECTION F-F

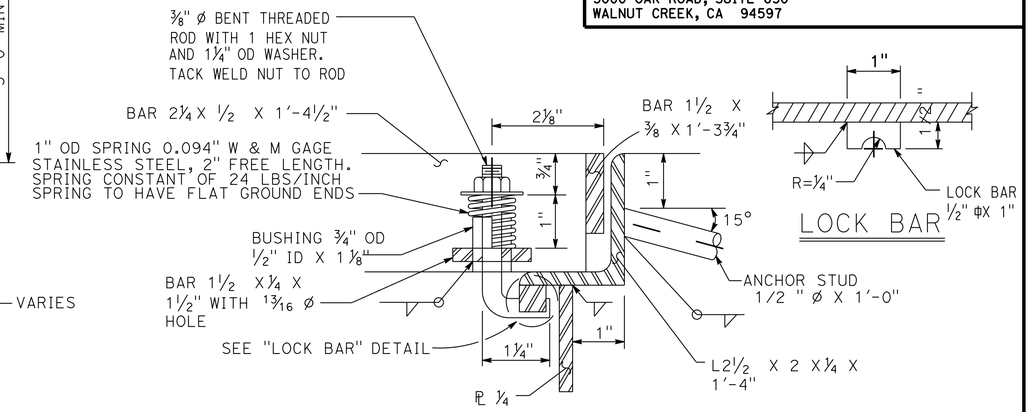

DETAIL A

LOCK BAR

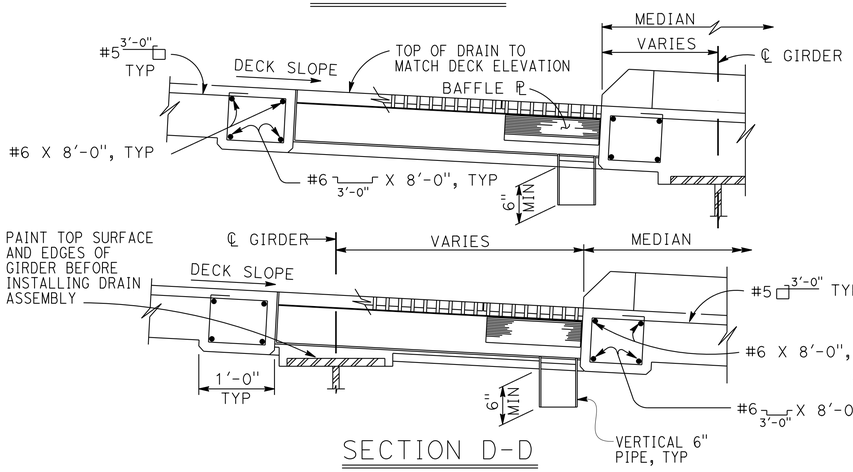

SECTION D-D

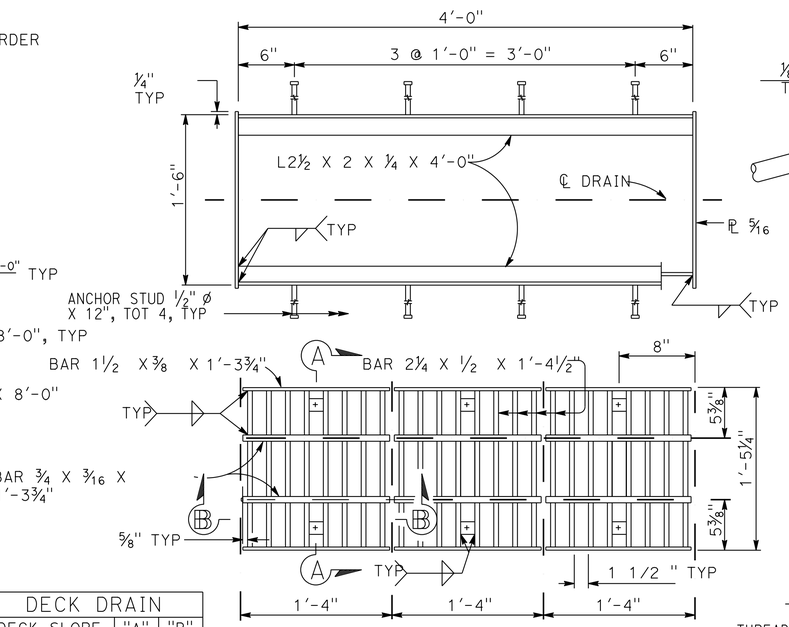

PLAN - FRAME & GRATE

NOTE:
GRATING CONSISTS OF 3 IDENTICAL UNITS EXCEPT FOR BAFFLE PLATE. BAFFLE PLATE IS REQUIRED ONLY FOR THE GRATE OVER THE 6" Ø PIPE

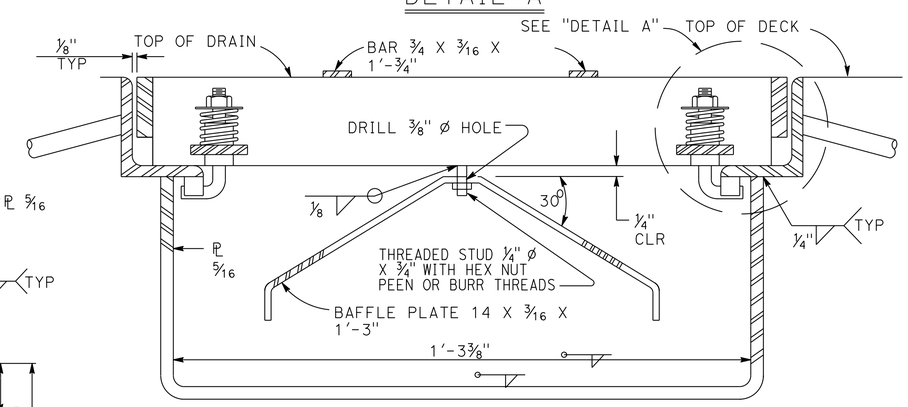

SECTION A-A (FRAME & GRATE)

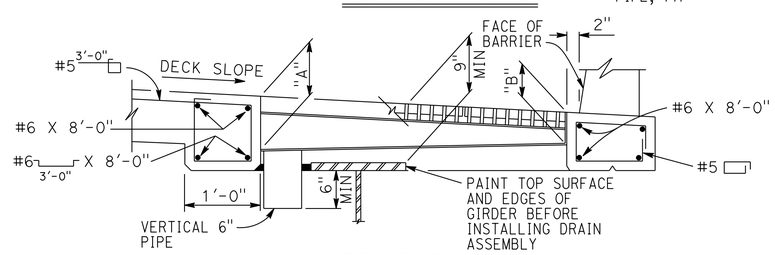

SECTION E-E

DECK DRAIN		
DECK SLOPE	"A"	"B"
0% TO 6%	9"	5"
7% TO 9%	10"	5"
10% TO 12%	10 1/24"'	

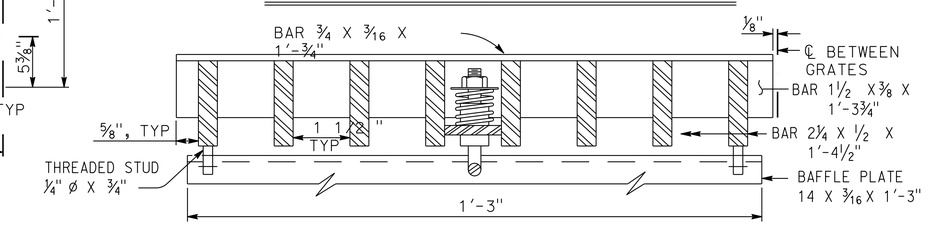

SECTION B-B

NO SCALE

STANDARD DRAWING

FILE NO. XS10-010 APPROVAL DATE JULY 2011

DS OSD 2147A (ENGLISH STANDARD DRAWING "XS" BORDER REV. (02-02-11)

ORIGINAL SCALE IN INCHES FOR REDUCED PLANS 0 1 2 3

STATE OF CALIFORNIA DEPARTMENT OF TRANSPORTATION

DIVISION OF ENGINEERING SERVICES

BRIDGE NO. 23-0248 POST MILE 3.0./12.2

WB 80 TO WB 12 SEPARATION (OVER WB 80 ON-RAMP)

DECK DRAIN - TYPE C

UNIT: PROJECT NUMBER & PHASE: CONTRACT NO.:

DISREGARD PRINTS BEARING EARLIER REVISION DATES

REVISION DATES

SHEET 24 OF 30

FILE => 23-0248-s-dd(TC).dgn

USERNAME => s124496 DATE PLOTTED => 08-MAY-2013 TIME PLOTTED => 09:03

DIST	COUNTY	ROUTE	POST MILES TOTAL PROJECT	SHEET NO	TOTAL SHEETS
04	Sol	12,80	2.1/2.8, 12.0/13.1	592	597

Chandu Shenoy 9/12/12
REGISTERED CIVIL ENGINEER DATE

5-6-13
PLANS APPROVAL DATE

REGISTERED PROFESSIONAL ENGINEER CHANDU V. SHENOY NO. C-53636 EXP. 6/30/13 CIVIL STATE OF CALIFORNIA

THE STATE OF CALIFORNIA OR ITS OFFICERS OR AGENTS SHALL NOT BE RESPONSIBLE FOR THE ACCURACY OR COMPLETENESS OF ELECTRONIC COPIES OF THIS PLAN SHEET.

SOLANO TRANSPORTATION AUTHORITY
ONE HARBOR CENTER, SUITE 130
SUISUN CITY, CA 94585

MARK THOMAS & COMPANY, INC. + NOLTE ASSOCIATES, INC.
3000 OAK ROAD, SUITE 650
WALNUT CREEK, CA 94597

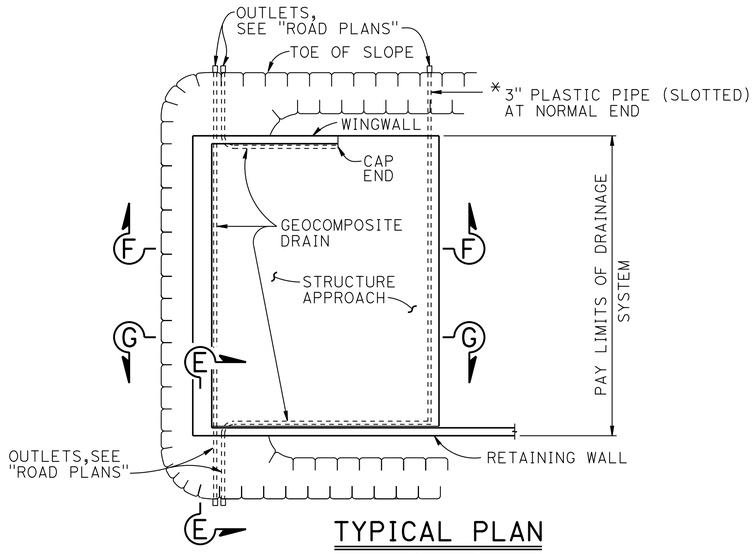

TYPICAL PLAN

1" = 10'

* FOR PIPE LAYOUT AT STAGGERED END, SEE "DETAIL B"

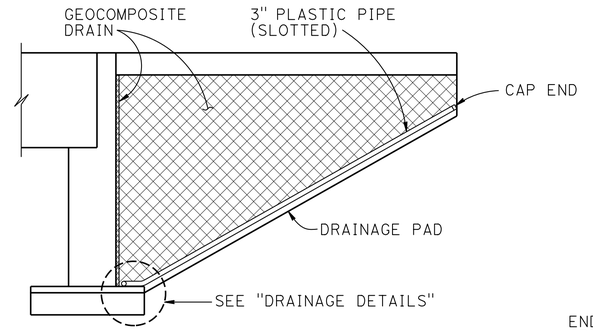

CANTILEVER WINGWALL

SECTION F-F

1/4 " = 1'-0"

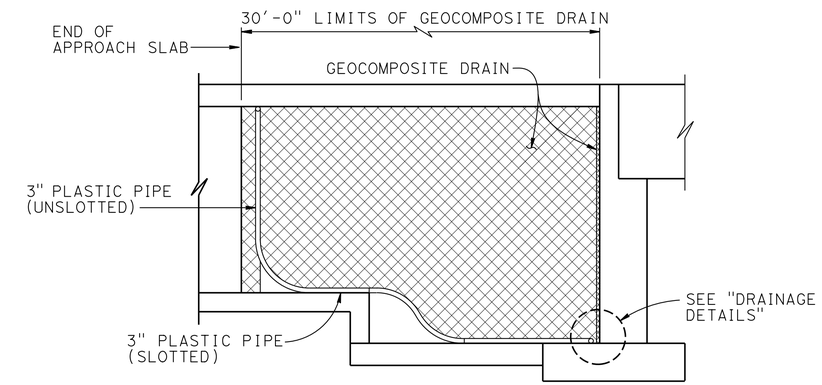

RETAINING WALL WINGWALL DRAINAGE DETAILS

SECTION G-G

1/4 " = 1'-0"

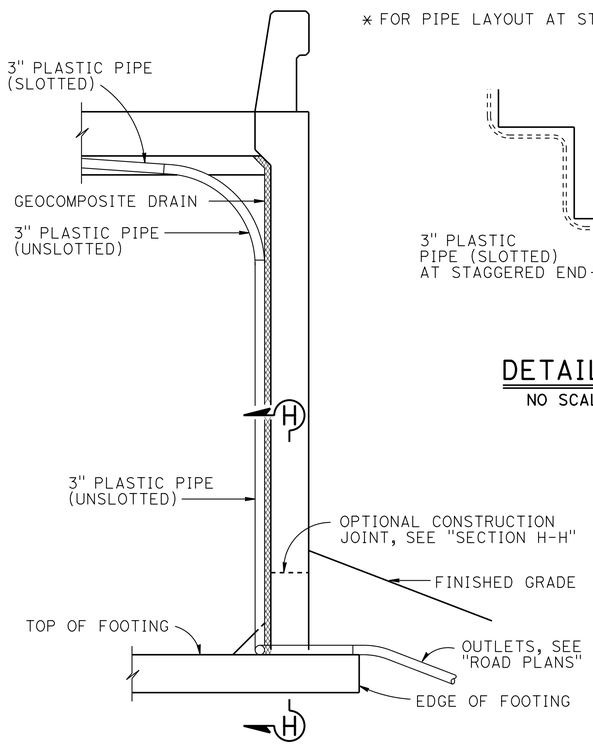

SECTION E-E

1/2 " = 1'-0"

NOTE: BENDS AND JUNCTIONS IN 3" PLASTIC PIPE ARE 30" RADIUS MIN

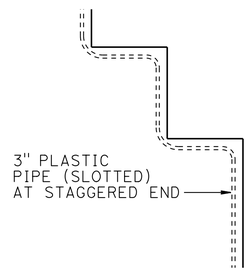

DETAIL B

NO SCALE

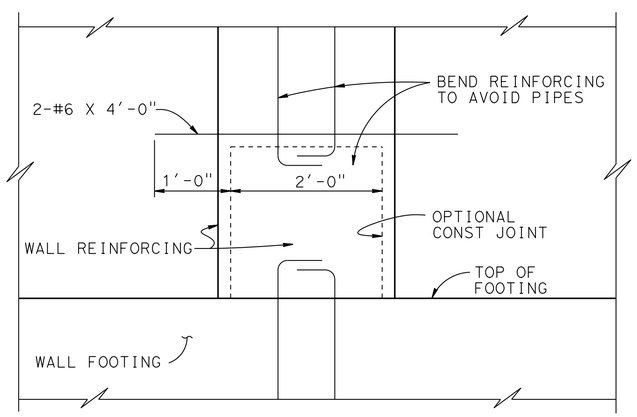

SECTION H-H

1" = 1'-0"

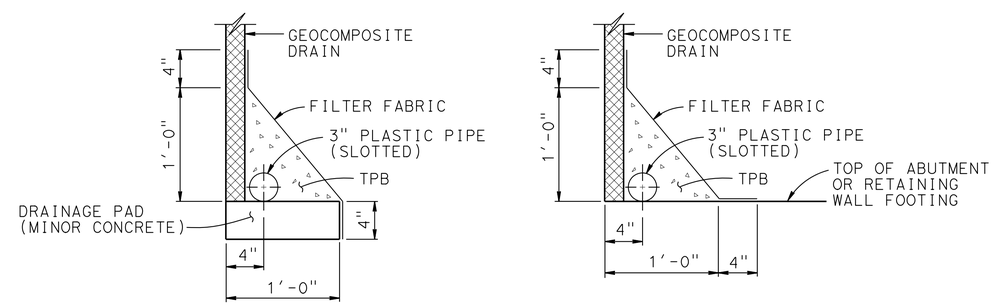

WITHOUT FOOTING

WITH FOOTING

DRAINAGE DETAILS

1 1/2 " = 1'-0"

STANDARD DRAWING

FILE NO. **XS3-110**

APPROVAL DATE JULY 2011

DS OSD 2147A (ENGLISH STANDARD DRAWING "XS" BORDER REV. (02-02-11)

ORIGINAL SCALE IN INCHES FOR REDUCED PLANS 0 1 2 3

STATE OF CALIFORNIA DEPARTMENT OF TRANSPORTATION

DIVISION OF ENGINEERING SERVICES

BRIDGE NO.

POST MILE

WB 80 TO WB 12 SEPARATION (OVER WB 80 ON-RAMP)

STRUCTURE APPROACH DRAINAGE DETAILS

UNIT: 0741
PROJECT NUMBER & PHASE: 04000211311 CONTRACT NO.: 04-0A5341

DISREGARD PRINTS BEARING EARLIER REVISION DATES

REVISION DATES 09/12/12

SHEET 25 OF 30

FILE => 23-0248-xs3-110.dgn

USERNAME => s124496 DATE PLOTTED => 09-MAY-2013 TIME PLOTTED => 07:42

DIST	COUNTY	ROUTE	POST MILES TOTAL PROJECT	SHEET NO	TOTAL SHEETS
04	Sol	12,80	2.1/2.8, 12.0/13.1	593	597

Chandu Shenoy 9/12/12
REGISTERED CIVIL ENGINEER DATE

5-6-13
PLANS APPROVAL DATE

REGISTERED PROFESSIONAL ENGINEER CHANDU V. SHENOY NO. C-53636 EXP. 6/30/13 CIVIL STATE OF CALIFORNIA

THE STATE OF CALIFORNIA OR ITS OFFICERS OR AGENTS SHALL NOT BE RESPONSIBLE FOR THE ACCURACY OR COMPLETENESS OF ELECTRONIC COPIES OF THIS PLAN SHEET.

SOLANO TRANSPORTATION AUTHORITY
ONE HARBOR CENTER, SUITE 130
SUISUN CITY, CA 94585

MARK THOMAS & COMPANY, INC. + NOLTE ASSOCIATES, INC.
3000 OAK ROAD, SUITE 650
WALNUT CREEK, CA 94597

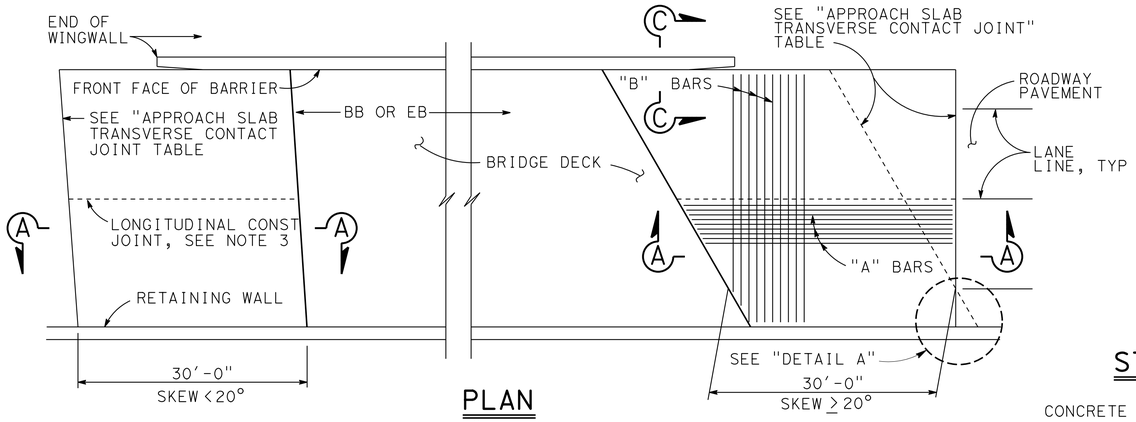

PLAN
1" = 10'

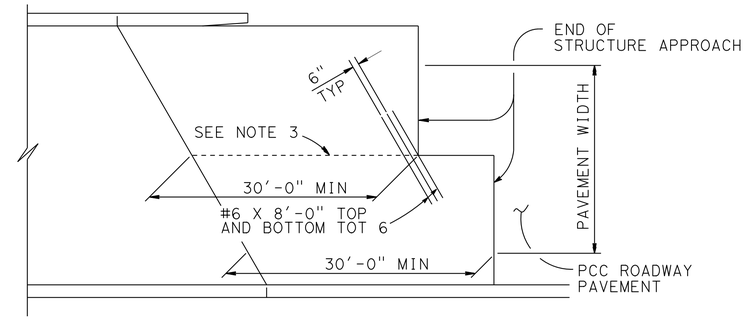

STRUCTURE APPROACH - END STAGGER DETAIL
NO SCALE

APPROACH SLAB TRANSVERSE CONTACT JOINT		
APPROACH SKEW	WITH AC ROADWAY PAVEMENT	WITH PCC ROADWAY PAVEMENT
< 20°	PARALLEL TO FACE OF PN	PARALLEL TO FACE OF PN
20° - 45°	PARALLEL TO FACE OF PN USE "DETAIL A"	STAGGER LINES 24' TO 36' APART
> 45°	PARALLEL TO FACE OF PN USE "DETAIL A"	STAGGER AT EACH LANE LINE

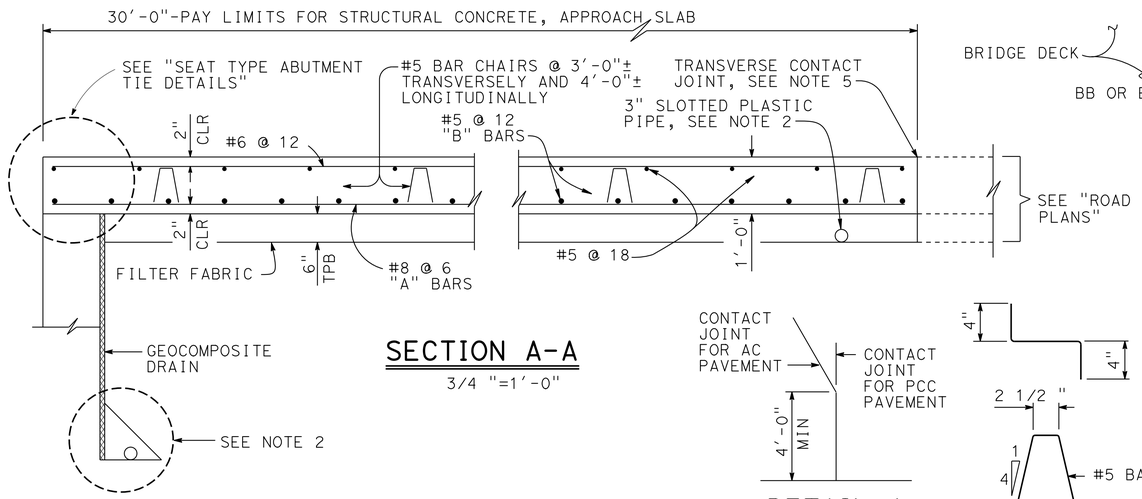

SECTION A-A
3/4 "=1'-0"

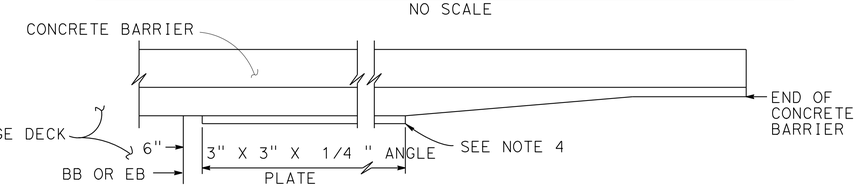

EDGE ANGLE DETAIL
1/2 "=1'-0"

DETAIL A
NO SCALE

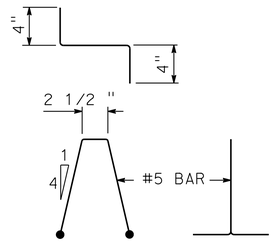

BAR CHAIR DETAIL
1 1/2 "=1'-0"

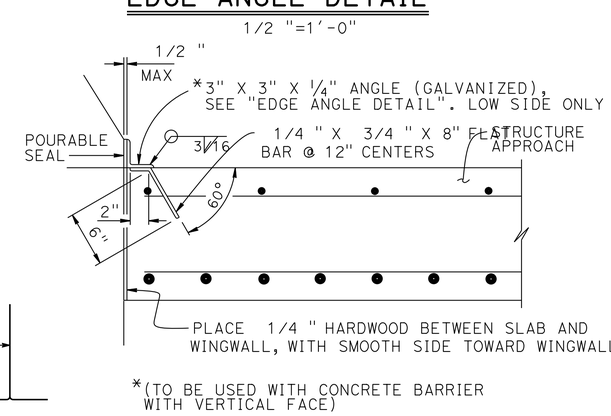

*(TO BE USED WITH CONCRETE BARRIER WITH VERTICAL FACE)

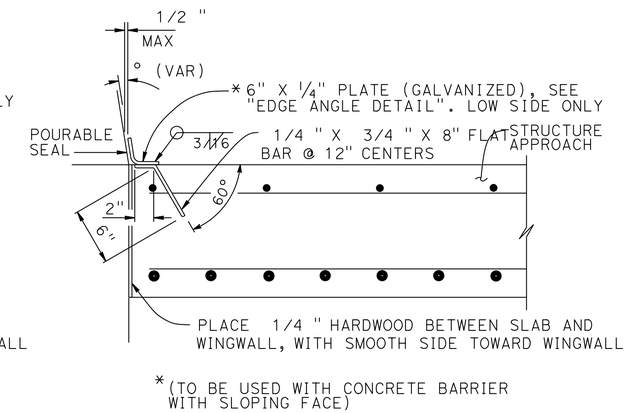

*(TO BE USED WITH CONCRETE BARRIER WITH SLOPING FACE)

DETAIL B
1 1/2 " = 1'-0"

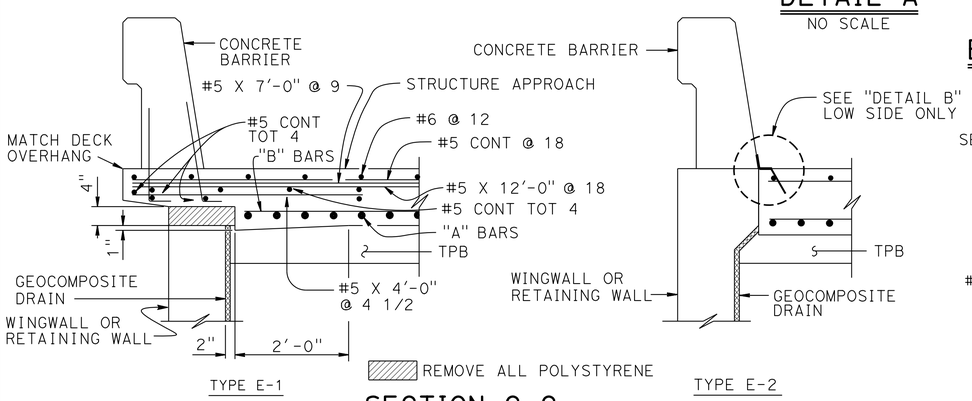

SECTION C-C
3/4 "=1'-0"
(TYPE E-1 TO BE USED, UNLESS OTHERWISE SHOWN ON PLANS)

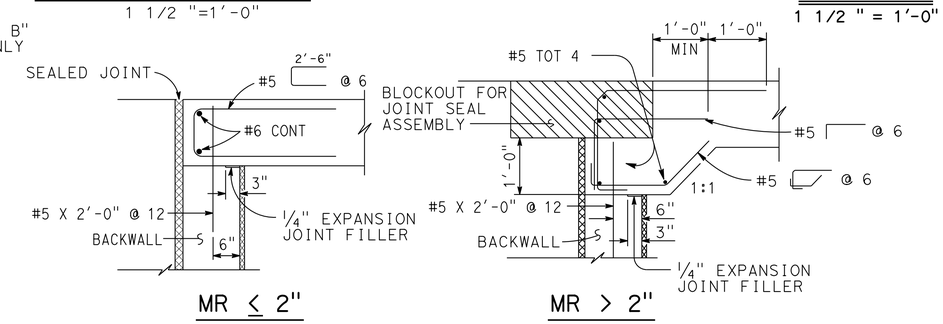

SEAT TYPE ABUTMENT TIE DETAILS (SEE NOTE 1)
3/4 "=1'-0"

NOTES:
1. FOR DETAILS NOT SHOWN, SEE STRUCTURE PLANS. FOR MR ≤ 2", ADJUST BAR REINFORCEMENT TO CLEAR A SAWCUT FOR SEALED JOINT, WHEN REQUIRED
2. FOR DRAINAGE DETAILS, SEE "STRUCTURE APPROACH DRAINAGE DETAILS" SHEET
3. LONGITUDINAL CONSTRUCTION JOINTS, WHEN PERMITTED BY THE ENGINEER, SHALL BE LOCATED ON LANE LINES
4. END ANGLE OR PLATE AT BEGINNING OF BARRIER TRANSITION, END OF WINGWALL OR END OF STRUCTURE APPROACH AS APPLICABLE
5. FOR TRANSVERSE CONTACT JOINT WITH NEW PCC PAVING, REFER TO STANDARD PLAN P10
6. AT THE CONTRACTOR'S OPTION, APPROACH SLAB TRANSVERSE REINFORCEMENT MAY BE PLACED PARALLEL TO PAVING NOTCH. SPACING OF TRANSVERSE REINFORCEMENT IS MEASURED ALONG ℄ ROADWAY

STANDARD DRAWING
FILE NO. XS3-120
APPROVAL DATE JULY 2011

STATE OF CALIFORNIA
DEPARTMENT OF TRANSPORTATION

DIVISION OF ENGINEERING SERVICES

BRIDGE NO.
POST MILE

WB 80 TO WB 12 SEPARATION (OVER WB 80 ON-RAMP)
STRUCTURE APPROACH TYPE N(30S)

DS OSD 2147A (ENGLISH STANDARD DRAWING "XS" BORDER REV. (02-02-11))
ORIGINAL SCALE IN INCHES FOR REDUCED PLANS 0 1 2 3
UNIT: 0741
PROJECT NUMBER & PHASE: 04000211311 CONTRACT NO.: 04-0A5341
DISREGARD PRINTS BEARING EARLIER REVISION DATES
REVISION DATES 09/12/12
SHEET 26 OF 30
FILE = BRNO-####-xs3-120.dgn

USERNAME => s124496 DATE PLOTTED => 08-MAY-2013 TIME PLOTTED => 09:03

REFERENCE: CALTRANS SOIL & ROCK LOGGING, CLASSIFICATION, AND PRESENTATION MANUAL (2010)

DIST	COUNTY	ROUTE	POST MILES TOTAL PROJECT	SHEET No	TOTAL SHEETS
04	Sol	12,80	2.1/2.8, 12.0/13.1	594	597

GEOTECHNICAL PROFESSIONAL — DATE 9/10/12

5-6-13
PLANS APPROVAL DATE

REGISTERED PROFESSIONAL ENGINEER — G. PARIKH — No. 666 — Exp. 12/31/13 — GEOTECHNICAL — STATE OF CALIFORNIA

The State of California or its officers or agents shall not be responsible for the accuracy or completeness of electronic copies of this plan sheet.

SOLANO TRANSPORTATION AUTHORITY
ONE HARBOR CENTER, SUITE 130
SUISUN CITY, CA 94585

PARIKH CONSULTANTS, INC.
2360 QUME DRIVE, SUITE A
SAN JOSE, CA 95131

CEMENTATION

Description	Criteria
Weak	Crumbles or breaks with handling or little finger pressure.
Moderate	Crumbles or breaks with considerable finger pressure.
Strong	Will not crumble or break with finger pressure.

BOREHOLE IDENTIFICATION

Symbol	Hole Type	Description
Size	A	Auger Boring (hollow or solid stem bucket)
Size	R RW RC P	Rotary drilled boring (conventional) Rotary drilled with self-casing wire-line Rotary core with continuously-sampled, self-casing wire-line Rotary percussion boring (air)
Size	R	Rotary drilled diamond core
Size	HD HA	Hand driven (1-inch soil tube) Hand Auger
●	D	Dynamic Cone Penetration Boring
▲	CPT	Cone Penetration Test (ASTM D 5778)
⬚	O	Other (note on LOTB)

Note: Size in inches.

CONSISTENCY OF COHESIVE SOILS

Description	Shear Strength (tsf)	Pocket Penetrometer Measurement, PP, (tsf)	Torvane Measurement, TV, (tsf)	Vane Shear Measurement, VS, (tsf)
Very Soft	Less than 0.12	Less than 0.25	Less than 0.12	Less than 0.12
Soft	0.12 - 0.25	0.25 - 0.5	0.12 - 0.25	0.12 - 0.25
Medium Stiff	0.25 - 0.5	0.5 - 1	0.25 - 0.5	0.25 - 0.5
Stiff	0.5 - 1	1 - 2	0.5 - 1	0.5 - 1
Very Stiff	1 - 2	2 - 4	1 - 2	1 - 2
Hard	Greater than 2	Greater than 4	Greater than 2	Greater than 2

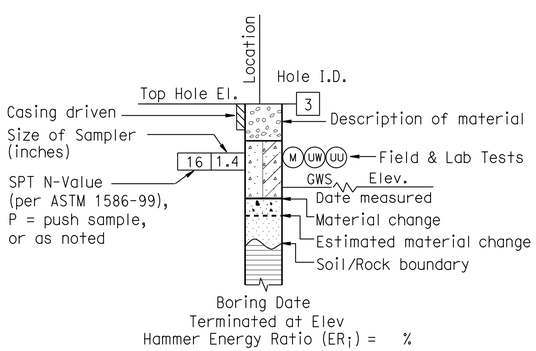

ROTARY BORING

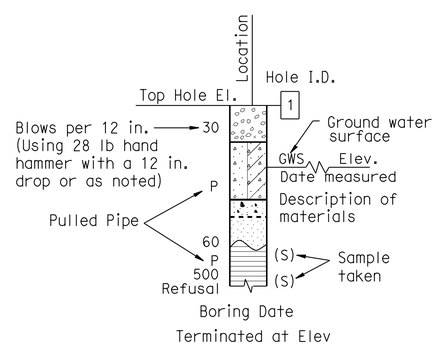

HAND BORING

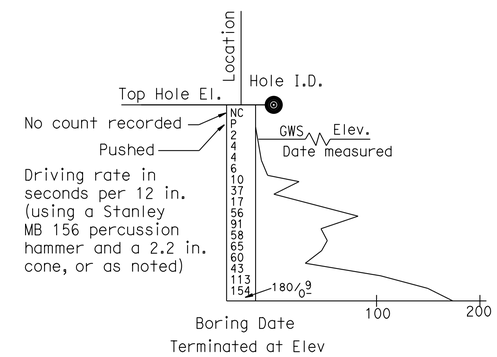

DYNAMIC CONE PENETRATION BORING

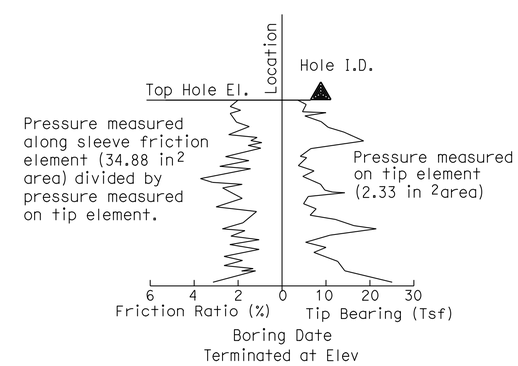

CONE PENETRATION TEST (CPT) BORING

DESIGN OVERSIGHT Tracy L Bertram
1-7-13
SIGN OFF DATE

DRAWN BY L. DUDDU
CHECKED BY F. WANG

L.S. BHANGOO
FIELD INVESTIGATION BY:
DATE: DECEMBER 2009

PREPARED FOR THE STATE OF CALIFORNIA DEPARTMENT OF TRANSPORTATION

F. WANG
PROJECT ENGINEER

BRIDGE NO. 23-0248
POST MILES 3.0/12.2

WB 80 TO WB 12 SEPARATION (OVER WB 80 ON-RAMP)

LOG OF TEST BORINGS 1 OF 4

GS GEOTECHNICAL LOG OF TEST BORINGS SHEET (ENGLISH) (REV. 7/16/10)

ORIGINAL SCALE IN INCHES FOR REDUCED PLANS 0 1 2 3

UNIT: 0741
PROJECT NUMBER & PHASE: 04000211311
CONTRACT NO.: 04-0A5341

DISREGARD PRINTS BEARING EARLIER REVISION DATES

REVISION DATES

SHEET 27 OF 30

FILE => 23-0248-z-lotb01.dgn

USERNAME => s124496 DATE PLOTTED => 09-MAY-2013 TIME PLOTTED => 07:49

REFERENCE: CALTRANS SOIL & ROCK LOGGING, CLASSIFICATION, AND PRESENTATION MANUAL (2010)

DIST	COUNTY	ROUTE	POST MILES TOTAL PROJECT	SHEET No	TOTAL SHEETS
04	Sol	12,80	2.1/2.8, 12.0/13.1	595	597

GEOTECHNICAL PROFESSIONAL — DATE 9/10/12

5-6-13
PLANS APPROVAL DATE

REGISTERED PROFESSIONAL ENGINEER — G. PARIKH — No. 666 — Exp. 12/31/13 — GEOTECHNICAL — STATE OF CALIFORNIA

The State of California or its officers or agents shall not be responsible for the accuracy or completeness of electronic copies of this plan sheet.

SOLANO TRANSPORTATION AUTHORITY
ONE HARBOR CENTER, SUITE 130
SUISUN CITY, CA 94585

PARIKH CONSULTANTS, INC.
2360 QUME DRIVE, SUITE A
SAN JOSE, CA 95131

GROUP SYMBOLS AND NAMES

Graphic/Symbol	Group Names
GW	Well-graded GRAVEL Well-graded GRAVEL with SAND
GP	Poorly-graded GRAVEL Poorly-graded GRAVEL with SAND
GW-GM	Well-graded GRAVEL with SILT Well-graded GRAVEL with SILT and SAND
GW-GC	Well-graded GRAVEL with CLAY (or SILTY CLAY) Well-graded GRAVEL with CLAY and SAND (or SILTY CLAY and SAND)
GP-GM	Poorly-graded GRAVEL with SILT Poorly-graded GRAVEL with SILT and SAND
GP-GC	Poorly-graded GRAVEL with CLAY (or SILTY CLAY) Poorly-graded GRAVEL with CLAY and SAND (or SILTY CLAY and SAND)
GM	SILTY GRAVEL SILTY GRAVEL with SAND
GC	CLAYEY GRAVEL CLAYEY GRAVEL with SAND
GC-GM	SILTY, CLAYEY GRAVEL SILTY, CLAYEY GRAVEL with SAND
SW	Well-graded SAND Well-graded SAND with GRAVEL
SP	Poorly-graded SAND Poorly-graded SAND with GRAVEL
SW-SM	Well-graded SAND with SILT Well-graded SAND with SILT and GRAVEL
SW-SC	Well-graded SAND with CLAY (or SILTY CLAY) Well-graded SAND with CLAY and GRAVEL (or SILTY CLAY and GRAVEL)
SP-SM	Poorly-graded SAND with SILT Poorly-graded SAND with SILT and GRAVEL
SP-SC	Poorly-graded SAND with CLAY (or SILTY CLAY) Poorly-graded SAND with CLAY and GRAVEL (or SILTY CLAY and GRAVEL)
SM	SILTY SAND SILTY SAND with GRAVEL
SC	CLAYEY SAND CLAYEY SAND with GRAVEL
SC-SM	SILTY, CLAYEY SAND SILTY, CLAYEY SAND with GRAVEL
PT	PEAT
	COBBLES COBBLES and BOULDERS BOULDERS

Graphic/Symbol	Group Names
CL	Lean CLAY Lean CLAY with SAND Lean CLAY with GRAVEL SANDY lean CLAY SANDY lean CLAY with GRAVEL GRAVELLY lean CLAY GRAVELLY lean CLAY with SAND
CL-ML	SILTY CLAY SILTY CLAY with SAND SILTY CLAY with GRAVEL SANDY SILTY CLAY SANDY SILTY CLAY with GRAVEL GRAVELLY SILTY CLAY GRAVELLY SILTY CLAY with SAND
ML	SILT SILT with SAND SILT with GRAVEL SANDY SILT SANDY SILT with GRAVEL GRAVELLY SILT GRAVELLY SILT with SAND
OL	ORGANIC lean CLAY ORGANIC lean CLAY with SAND ORGANIC lean CLAY with GRAVEL SANDY ORGANIC lean CLAY SANDY ORGANIC lean CLAY with GRAVEL GRAVELLY ORGANIC lean CLAY GRAVELLY ORGANIC lean CLAY with SAND
OL	ORGANIC SILT ORGANIC SILT with SAND ORGANIC SILT with GRAVEL SANDY ORGANIC SILT SANDY ORGANIC SILT with GRAVEL GRAVELLY ORGANIC SILT GRAVELLY ORGANIC SILT with SAND
CH	Fat CLAY Fat CLAY with SAND Fat CLAY with GRAVEL SANDY fat CLAY SANDY fat CLAY with GRAVEL GRAVELLY fat CLAY GRAVELLY fat CLAY with SAND
MH	Elastic SILT Elastic SILT with SAND Elastic SILT with GRAVEL SANDY elastic SILT SANDY elastic SILT with GRAVEL GRAVELLY elastic SILT GRAVELLY elastic SILT with SAND
OH	ORGANIC fat CLAY ORGANIC fat CLAY with SAND ORGANIC fat CLAY with GRAVEL SANDY ORGANIC fat CLAY SANDY ORGANIC fat CLAY with GRAVEL GRAVELLY ORGANIC fat CLAY GRAVELLY ORGANIC fat CLAY with SAND
OH	ORGANIC elastic SILT ORGANIC elastic SILT with SAND ORGANIC elastic SILT with GRAVEL SANDY ORGANIC elastic SILT SANDY ORGANIC elastic SILT with GRAVEL GRAVELLY ORGANIC elastic SILT GRAVELLY ORGANIC elastic SILT with SAND
OL/OH	ORGANIC SOIL ORGANIC SOIL with SAND ORGANIC SOIL with GRAVEL SANDY ORGANIC SOIL SANDY ORGANIC SOIL with GRAVEL GRAVELLY ORGANIC SOIL GRAVELLY ORGANIC SOIL with SAND

FIELD AND LABORATORY TESTING

- (C) Consolidation (ASTM D 2435)
- (CL) Collapse Potential (ASTM D 5333)
- (CP) Compaction Curve (CTM 216)
- (CR) Corrosivity Testing (CTM 643, CTM 422, CTM 417)
- (CU) Consolidated Undrained Triaxial (ASTM D 4767)
- (DS) Direct Shear (ASTM D 3080)
- (EI) Expansion Index (ASTM D 4829)
- (M) Moisture Content (ASTM D 2216)
- (OC) Organic Content-% (ASTM D 2974)
- (P) Permeability (CTM 220)
- (PA) Particle Size Analysis (ASTM D 422)
- (PI) Plasticity Index (AASHTO T 90) Liquid Limit (AASHTO T 89)
- (PL) Point Load Index (ASTM D 5731)
- (PM) Pressure Meter
- (R) R-Value (CTM 301)
- (SE) Sand Equivalent (CTM 217)
- (SG) Specific Gravity (AASHTO T 100)
- (SL) Shrinkage Limit (ASTM D 427)
- (SW) Swell Potential (ASTM D 4546)
- (UC) Unconfined Compression-Soil (ASTM D 2166) Unconfined Compression-Rock (ASTM D 2938)
- (UU) Unconsolidated Undrained Triaxial (ASTM D 2850)
- (UW) Unit Weight (ASTM D 4767)

APPARENT DENSITY OF COHESIONLESS SOILS

Description	SPT N_{60} (Blows / 12 in.)
Very Loose	0 - 5
Loose	5 - 10
Medium Dense	10 - 30
Dense	30 - 50
Very Dense	Greater than 50

MOISTURE

Description	Criteria
Dry	No discernable moisture
Moist	Moisture present, but no free water
Wet	Visible free water

PERCENT OR PROPORTION OF SOILS

Description	Criteria
Trace	Particles are present but estimated to be less than 5%
Few	5% - 10%
Little	15% - 25%
Some	30% - 45%
Mostly	50% - 100%

PARTICLE SIZE

Description		Size (in.)
Boulder		Greater than 12
Cobble		3 - 12
Gravel	Coarse	3/4 - 3
	Fine	1/5 - 3/4
Sand	Coarse	1/16 - 1/5
	Medium	1/64 - 1/16
	Fine	1/300 - 1/64
Silt and Clay		Less than 1/300

DESIGN OVERSIGHT Tracy L Bertram
1-7-13
SIGN OFF DATE

DRAWN BY L. DUDDU
CHECKED BY F. WANG

L.S. BHANGOO
FIELD INVESTIGATION BY:
DATE: OCTOBER 2009

PREPARED FOR THE STATE OF CALIFORNIA DEPARTMENT OF TRANSPORTATION

F. WANG
PROJECT ENGINEER

BRIDGE NO. 23-0248
POST MILES 3.0/12.2

WB 80 TO WB 12 SEPARATION (OVER WB 80 ON-RAMP)
LOG OF TEST BORINGS 2 OF 4

GS GEOTECHNICAL LOG OF TEST BORINGS SHEET (ENGLISH) (REV. 7/16/10)

ORIGINAL SCALE IN INCHES FOR REDUCED PLANS 0 1 2 3

UNIT: 0741
PROJECT NUMBER & PHASE: 04000211311
CONTRACT NO.: 04-0A5341

DISREGARD PRINTS BEARING EARLIER REVISION DATES
REVISION DATES

SHEET 28 OF 30

FILE => 23-0248-z-lotb02.dgn

USERNAME => s124496 DATE PLOTTED => 09-MAY-2013 TIME PLOTTED => 07:49

DIST	COUNTY	ROUTE	POST MILES TOTAL PROJECT	SHEET No	TOTAL SHEETS
04	Sol	12,80	2.1/2.8, 12.0/13.1	596	597

GEOTECHNICAL PROFESSIONAL — DATE 9/10/12

5-6-13
PLANS APPROVAL DATE

The State of California or its officers or agents shall not be responsible for the accuracy or completeness of electronic copies of this plan sheet.

REGISTERED PROFESSIONAL ENGINEER — G. PARIKH — No. 666 — Exp. 12/31/13 — GEOTECHNICAL — STATE OF CALIFORNIA

SOLANO TRANSPORTATION AUTHORITY
ONE HARBOR CENTER, SUITE 130
SUISUN CITY, CA 94585
PARIKH CONSULTANTS, INC.
2360 QUME DRIVE, SUITE A
SAN JOSE, CA 95131

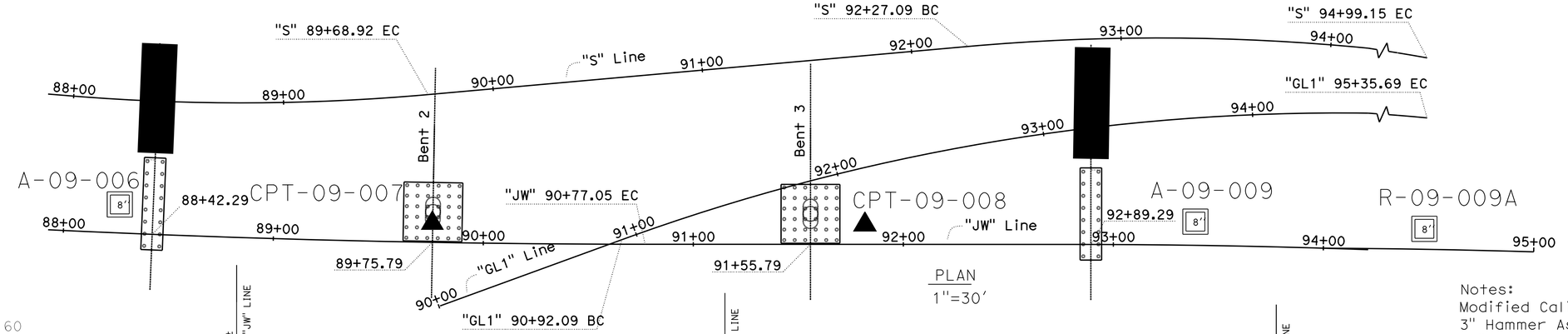

Notes:
Modified California Sampler: I.D. = 2.5"; O.D. = 3" Hammer Assembly: A 140 lb hammer with a 30" drop (Semi-Automatic (wireline) Hammer)

This LOTB sheet was prepared in accordance with the Caltrans Soil & Rock, Logging, Classification, and Presentation Manual (July 2010)

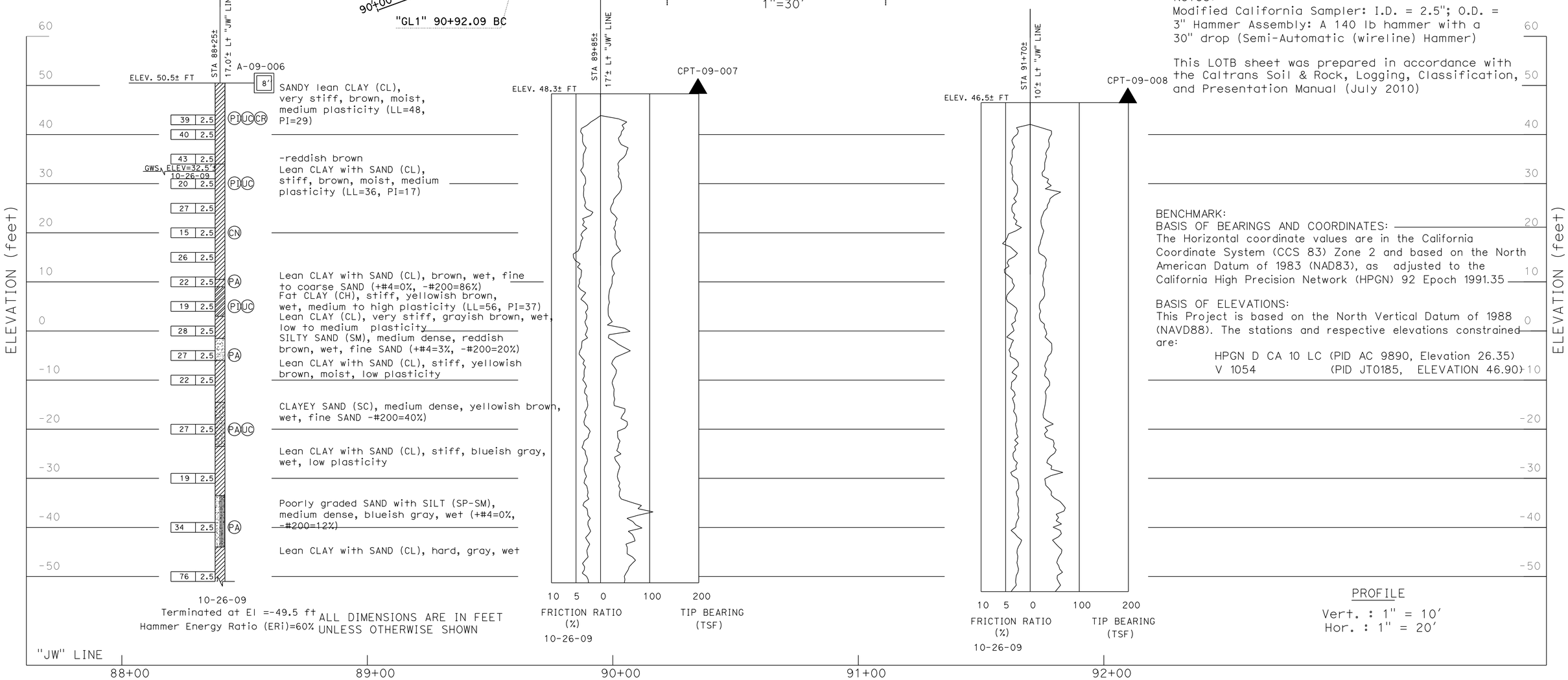

BENCHMARK:
BASIS OF BEARINGS AND COORDINATES:
The Horizontal coordinate values are in the California Coordinate System (CCS 83) Zone 2 and based on the North American Datum of 1983 (NAD83), as adjusted to the California High Precision Network (HPGN) 92 Epoch 1991.35

BASIS OF ELEVATIONS:
This Project is based on the North Vertical Datum of 1988 (NAVD88). The stations and respective elevations constrained are:

HPGN D CA 10 LC (PID AC 9890, Elevation 26.35)
V 1054 (PID JT0185, ELEVATION 46.90)

PROFILE
Vert. : 1" = 10'
Hor. : 1" = 20'

DESIGN OVERSIGHT Tracy L Bertram	DRAWN BY L. DUDDU	L.S. BHANGOO FIELD INVESTIGATION BY:	PREPARED FOR THE STATE OF CALIFORNIA DEPARTMENT OF TRANSPORTATION	F. WANG PROJECT ENGINEER	BRIDGE NO. 23-0248 / POST MILES 3.0/12.2 — WB 80 TO WB 12 SEPARATION (OVER WB 80 ON-RAMP)
1-7-13 SIGN OFF DATE	CHECKED BY F. WANG	DATE: OCTOBER 2009			LOG OF TEST BORINGS 3 OF 4

GS GEOTECHNICAL LOG OF TEST BORINGS SHEET (ENGLISH) (REV. 7/16/10)

ORIGINAL SCALE IN INCHES FOR REDUCED PLANS 0 1 2 3

UNIT: 0741
PROJECT NUMBER & PHASE: 04000211311 CONTRACT NO.: 04-0A5341

DISREGARD PRINTS BEARING EARLIER REVISION DATES — REVISION DATES 01/12/12 09/10/12 — SHEET 29 OF 30

FILE => 23-0248-z-lotb03.dgn

USERNAME => s124496 DATE PLOTTED => 09-MAY-2013 TIME PLOTTED => 07:49

DIST	COUNTY	ROUTE	POST MILES TOTAL PROJECT	SHEET No	TOTAL SHEETS
04	Sol	12,80	2.1/2.8, 12.0/13.1	597	597

GEOTECHNICAL PROFESSIONAL — DATE 9/10/12

5-6-13
PLANS APPROVAL DATE

The State of California or its officers or agents shall not be responsible for the accuracy or completeness of electronic copies of this plan sheet.

REGISTERED PROFESSIONAL ENGINEER — G. PARIKH — No. 666 — Exp. 12/31/13 — GEOTECHNICAL — STATE OF CALIFORNIA

SOLANO TRANSPORTATION AUTHORITY
ONE HARBOR CENTER, SUITE 130
SUISUN CITY, CA 94585

PARIKH CONSULTANTS, INC.
2360 QUME DRIVE, SUITE A
SAN JOSE, CA 95131

BENCHMARK:
BASIS OF BEARINGS AND COORDINATES:
The Horizontal coordinate values are in the California Coordinate System (CCS 83) Zone 2 and based on the North American Datum of 1983 (NAD83), as adjusted to the California High Precision Network (HPGN) 92 Epoch 1991.35

BASIS OF ELEVATIONS:
This Project is based on the North Vertical Datum of 1988 (NAVD88). The stations and respective elevations constrained are:

HPGN D CA 10 LC (PID AC 9890, Elevation 26.35)
V 1054 (PID JT0185, ELEVATION 46.90)

(SEE BORING LOCATIONS AND BENCH MARKS ON SHEET 1 OF 2)

Notes:
Standard Penetration Test Sampler: I.D. = 1.4"; O.D. = 2" Modified California Sampler: I.D. = 2.5"; O.D. = 3" Hammer Assembly: A 140 lb hammer with a 30" drop (Semi-Automatic (wireline) Hammer for A-09-009 and Automatic Hammer for R-10-009A)

This LOTB sheet was prepared in accordance with the Caltrans Soil & Rock, Logging, Classification, and Presentation Manual (July 2010)

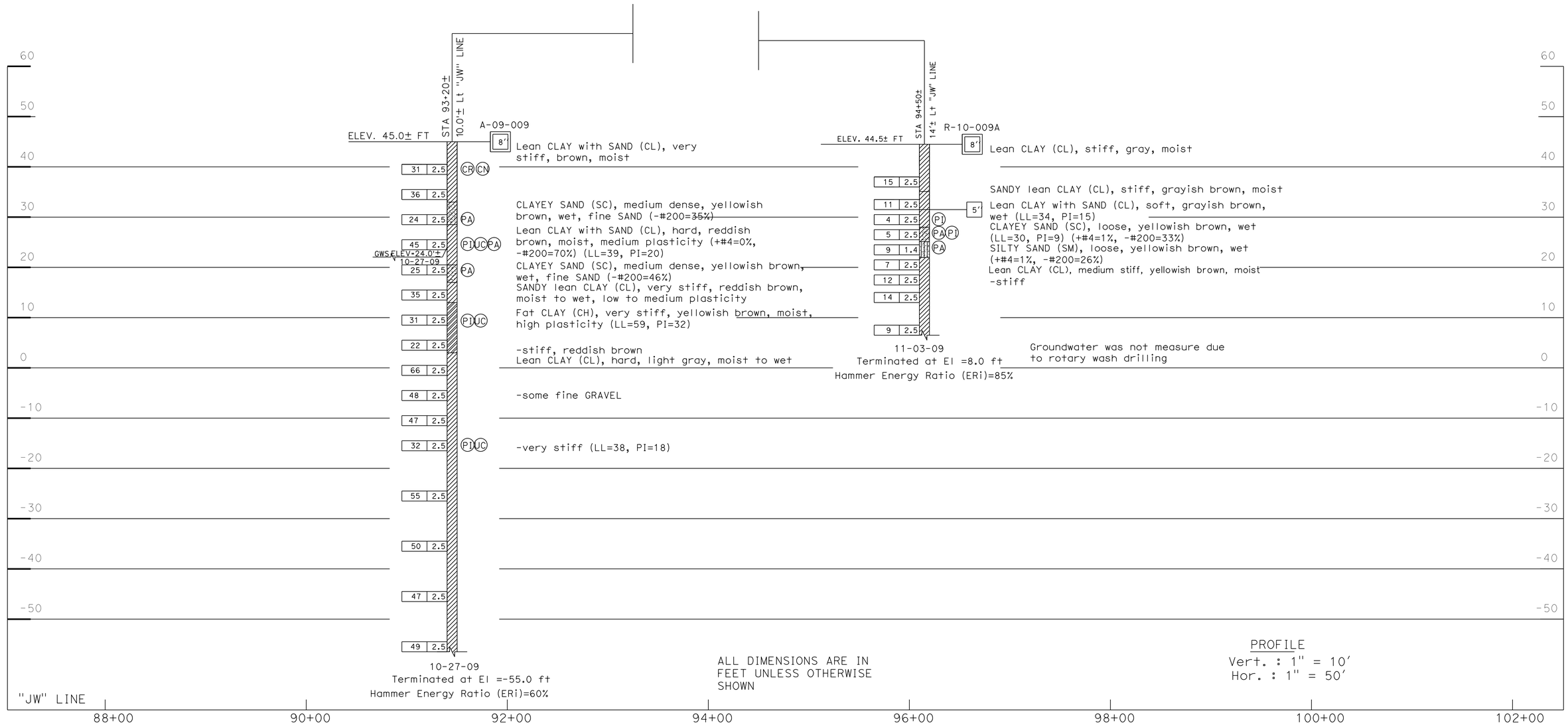

ALL DIMENSIONS ARE IN FEET UNLESS OTHERWISE SHOWN

PROFILE
Vert. : 1" = 10'
Hor. : 1" = 50'

DESIGN OVERSIGHT Tracy L Bertram
1-7-13
SIGN OFF DATE

DRAWN BY L. DUDDU
CHECKED BY F. WANG

L.S. BHANGOO
FIELD INVESTIGATION BY:
DATE: OCTOBER 2009

PREPARED FOR THE STATE OF CALIFORNIA DEPARTMENT OF TRANSPORTATION

F. WANG
PROJECT ENGINEER

BRIDGE NO. 23-0248
POST MILES 3.0/12.2

WB 80 TO WB 12 SEPARATION (OVER WB 80 ON-RAMP)
LOG OF TEST BORINGS 4 OF 4

GS GEOTECHNICAL LOG OF TEST BORINGS SHEET (ENGLISH) (REV. 7/16/10)

ORIGINAL SCALE IN INCHES FOR REDUCED PLANS 0 1 2 3

UNIT: 0741
PROJECT NUMBER & PHASE: 04000211311
CONTRACT NO.: 04-0A5341

DISREGARD PRINTS BEARING EARLIER REVISION DATES
REVISION DATES 01/25/12 09/10/12

SHEET 30 OF 30

FILE => 23-0248-z-lotb04.dgn

USERNAME => s124496 DATE PLOTTED => 09-MAY-2013 TIME PLOTTED => 07:49