DIST.	COUNTY	ROUTE	POST MILES TOTAL PROJECT	SHEET NO.	TOTAL SHEETS
04	Ala	80	2.2	601	800

CALIFORNIA STATE FIRE MARSHAL APPROVED
Approval of this plan does not authorize or approve any omission or deviation from applicable regulations. Final approval is subject to field inspection. One set of approved plans shall be available on the project site at all times.
Reviewed by: JOHN E WOODS, SDSFM
Approval date: 8-22-12

REGISTERED MECHANICAL ENGINEER — 05-25-12 DATE

REGISTERED PROFESSIONAL ENGINEER — MARK HEDGLIN — No. M32912 — Exp. 9-30-12 — MECH — STATE OF CALIFORNIA

10-22-12
PLANS APPROVAL DATE

The State of California or its officers or agents shall not be responsible for the accuracy or completeness of scanned copies of this plan sheet.

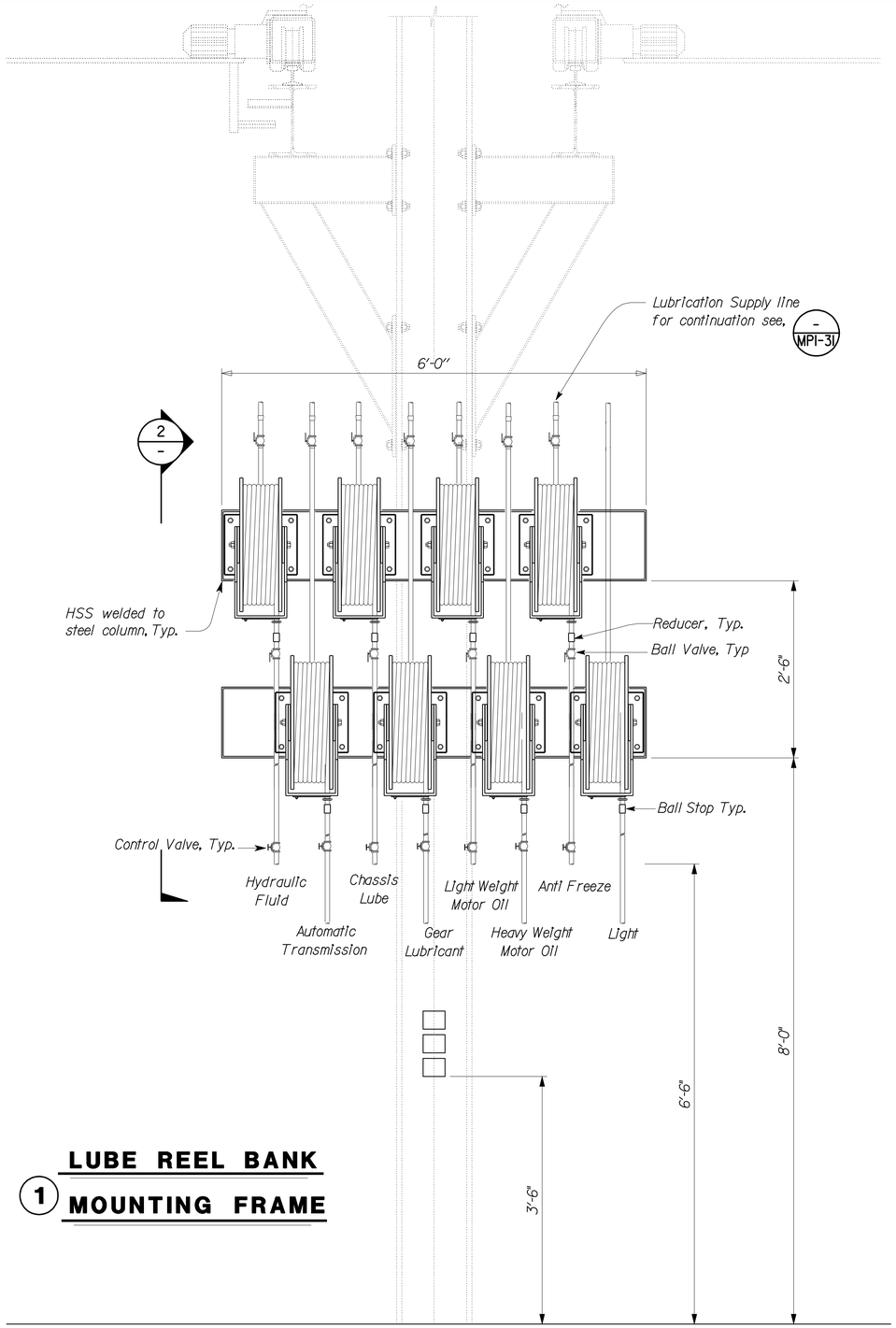

1 LUBE REEL BANK MOUNTING FRAME

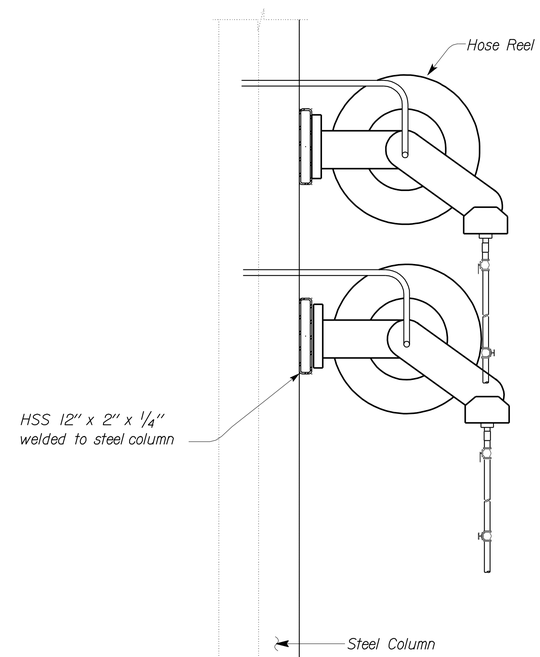

Note:
Ball Stops on product hoses shall be adjusted so that the dispensing nozzles shall be 6'-6" above finished floor.

2 SECTION

THIS DRAWING ACCURATE FOR MECHANICAL WORK ONLY

	BY	CHECKED
DESIGN	Mark Hedglin	Tom Hatam
DETAILS	Rudy Sarte	Tom Hatam
QUANTITIES	Mark Hedglin	Tom Hatam

STATE OF CALIFORNIA
DEPARTMENT OF TRANSPORTATION

DIVISION OF ENGINEERING SERVICES
ELECTRICAL-MECHANICAL-WATER AND WASTEWATER DESIGN

BRIDGE NO. 33M5785
POST MILE 2.2

SFOBB MAINTENANCE COMPLEX

PLUMBING DETAILS NO. 1

SHEET **MP4-1**

TAEMWW Imperial Rev. 7/10
FILE => mp4_1.dgn
DATE PLOTTED => 25-OCT-2012 TIME PLOTTED => 10:53

ORIGINAL SCALE IN INCHES FOR REDUCED PLANS 0 1 2 3

UNIT 3615
PROJECT NUMBER & PHASE 04120006661
EA 014081

DISREGARD PRINTS BEARING EARLIER REVISION DATES → 05-08-12 05-25-12

REVISION DATES (PRELIMINARY STAGE ONLY) SHEET OF

USERNAME => s124496 DATE PLOTTED => 25-OCT-2012 TIME PLOTTED => 10:53

VI=1

DIST.	COUNTY	ROUTE	POST MILES TOTAL PROJECT	SHEET NO.	TOTAL SHEETS
04	Ala	80	2.2	602	800

CALIFORNIA STATE FIRE MARSHAL APPROVED
Approval of this plan does not authorize or approve any omission or deviation from applicable regulations. Final approvals subject to field inspection. One set of approved plans shall be available on the project site at all times.
Reviewed by: JOHN E WOODS, SDSFM
Approval date: 8-22-12

REGISTERED MECHANICAL ENGINEER — 05-25-12 DATE

REGISTERED PROFESSIONAL ENGINEER — MARK HEDGLIN — No. M32912 — Exp. 9-30-12 — MECH — STATE OF CALIFORNIA

10-22-12
PLANS APPROVAL DATE

The State of California or its officers or agents shall not be responsible for the accuracy or completeness of scanned copies of this plan sheet.

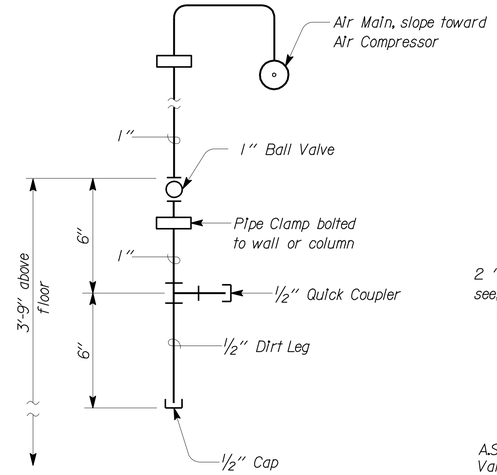

1 AIR DROP

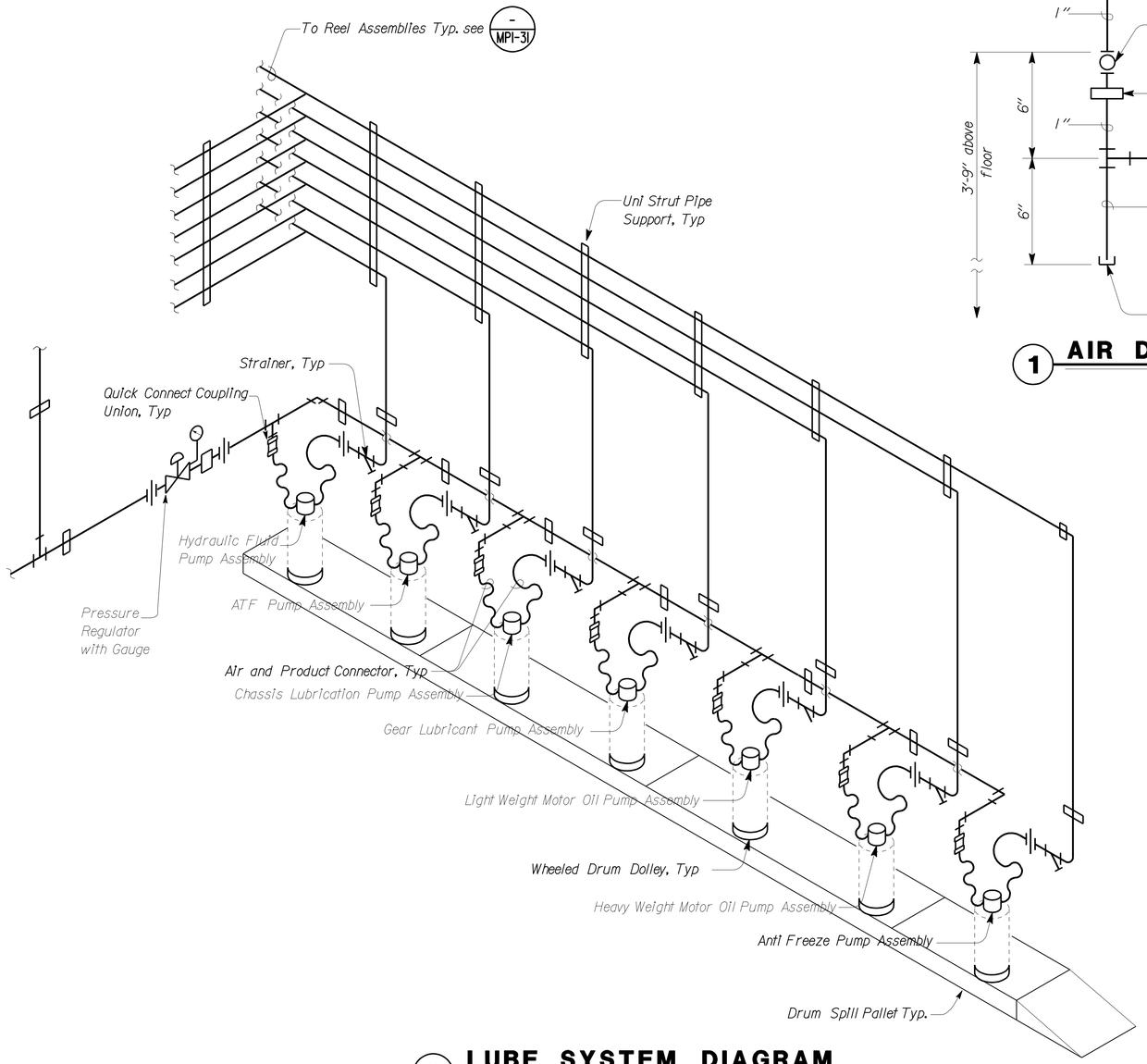

3 LUBE SYSTEM DIAGRAM

Note:
Drum and Product will be State Furnished.
Install Wheeled Drum Dolley under each Drum.

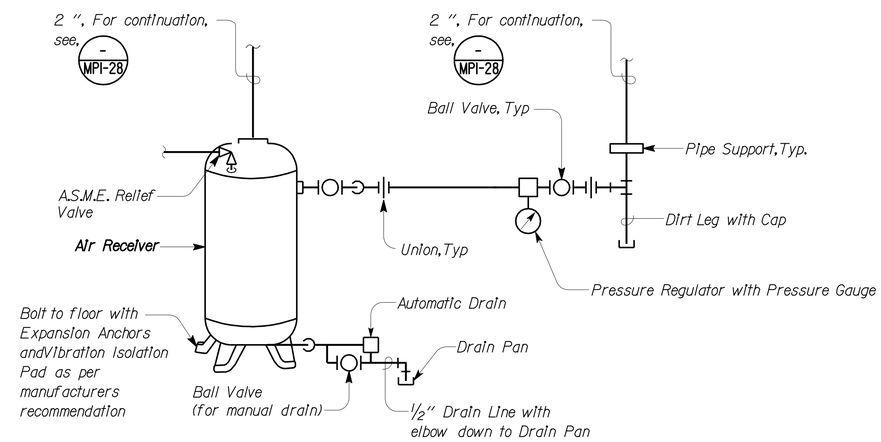

2 120 GALLON AIR RECEIVER

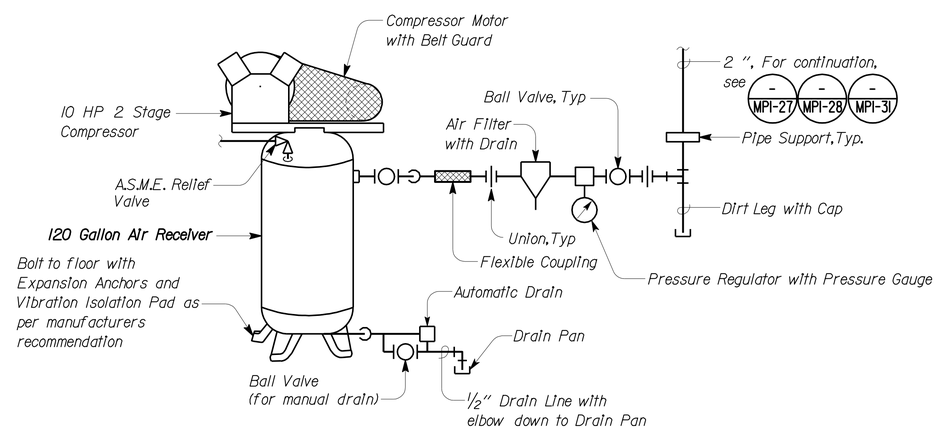

4 AIR COMPRESSOR

THIS DRAWING ACCURATE FOR MECHANICAL WORK ONLY

DESIGN	BY Mark Hedglin	CHECKED Tom Hatam	
DETAILS	BY Rudy Sarte	CHECKED Tom Hatam	
QUANTITIES	BY Mark Hedglin	CHECKED Tom Hatam	

STATE OF CALIFORNIA DEPARTMENT OF TRANSPORTATION

DIVISION OF ENGINEERING SERVICES
ELECTRICAL-MECHANICAL-WATER AND WASTEWATER DESIGN

BRIDGE NO. 33M5785
POST MILE 2.2

SFOBB MAINTENANCE COMPLEX
PLUMBING DETAILS NO. 2

SHEET **MP4-2**

TAEMWW Imperial Rev. 7/10
FILE => mp4_2.dgn
DATE PLOTTED => 25-OCT-2012 TIME PLOTTED => 10:53
ORIGINAL SCALE IN INCHES FOR REDUCED PLANS 0 1 2 3
UNIT 3615
PROJECT NUMBER & PHASE 04120006661
EA 014081
DISREGARD PRINTS BEARING EARLIER REVISION DATES → 05-08-12 05-25-12
REVISION DATES (PRELIMINARY STAGE ONLY) SHEET OF

USERNAME => s124496 DATE PLOTTED => 25-OCT-2012 TIME PLOTTED => 10:53

V|=|

DIST.	COUNTY	ROUTE	POST MILES TOTAL PROJECT	SHEET NO.	TOTAL SHEETS
04	Ala	80	2.2	603	800

REGISTERED MECHANICAL ENGINEER 05-25-12 DATE

REGISTERED PROFESSIONAL ENGINEER MARK HEDGLIN No. M32912 Exp. 9-30-12 MECH STATE OF CALIFORNIA

10-22-12
PLANS APPROVAL DATE

The State of California or its officers or agents shall not be responsible for the accuracy or completeness of scanned copies of this plan sheet.

CALIFORNIA STATE FIRE MARSHAL APPROVED
Approval of this plan does not authorize or approve any omission or deviation from applicable regulations. Final approval is subject to field inspection. One set of approved plans shall be available on the project site at all times.
Reviewed by: JOHN E WOODS, SDSFM
Approval date: 8-22-12

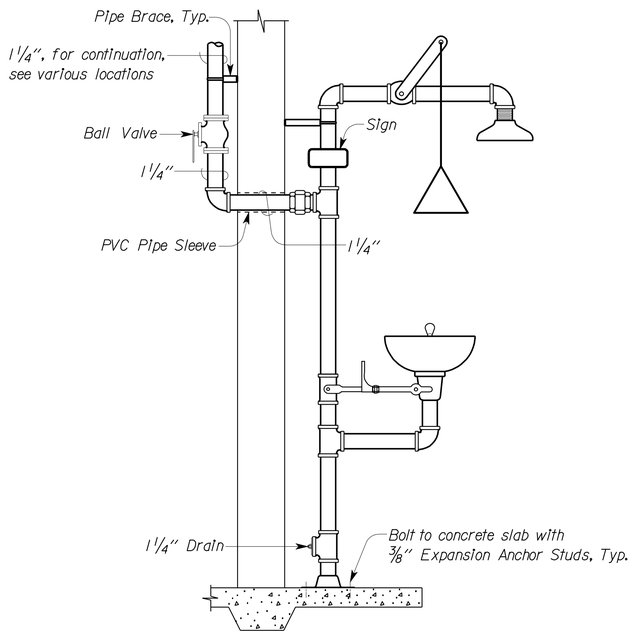

1 EXTERIOR EMERGENCY EYEWASH AND SHOWER

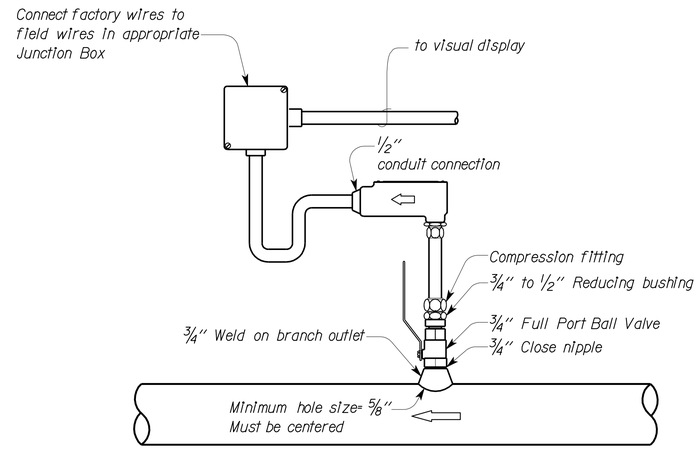

2 DIGITAL GAS METER

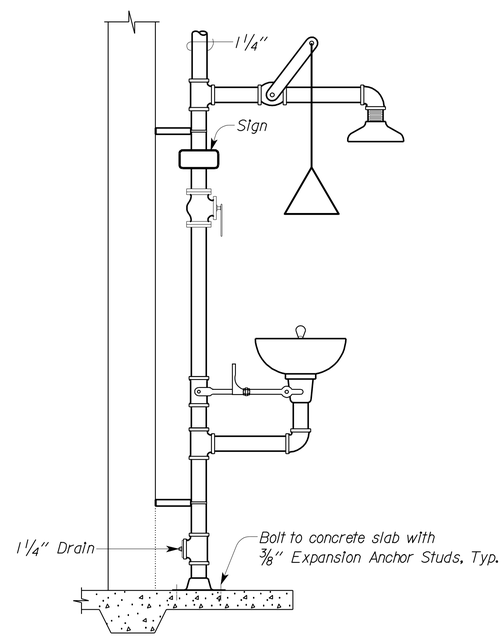

3 INTERIOR EMERGENCY EYEWASH AND SHOWER

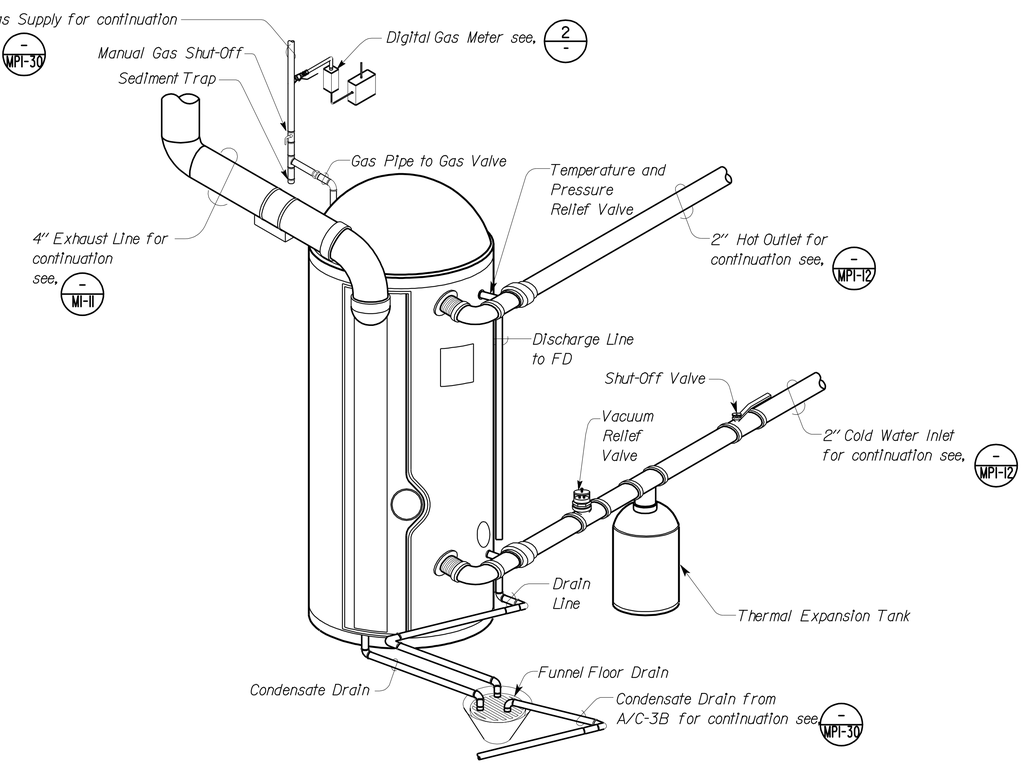

4 WATER HEATER

THIS DRAWING ACCURATE FOR MECHANICAL WORK ONLY

DESIGN	BY Mark Hedglin	CHECKED Tom Hatam	
DETAILS	BY Mark Hedglin	CHECKED Tom Hatam	
QUANTITIES	BY Mark Hedglin	CHECKED Tom Hatam	

STATE OF CALIFORNIA DEPARTMENT OF TRANSPORTATION

DIVISION OF ENGINEERING SERVICES
ELECTRICAL-MECHANICAL-WATER AND WASTEWATER DESIGN

BRIDGE NO. 33M5785
POST MILE 2.2

SFOBB MAINTENANCE COMPLEX
PLUMBING DETAILS NO. 3

SHEET **MP4-3**

TAEMWW Imperial Rev. 7/10
FILE => mp4_3.dgn
DATE PLOTTED => 25-OCT-2012 TIME PLOTTED => 10:53
ORIGINAL SCALE IN INCHES FOR REDUCED PLANS 0 1 2 3
UNIT 3615
PROJECT NUMBER & PHASE 04120006661
EA 014081
DISREGARD PRINTS BEARING EARLIER REVISION DATES → 05-08-12 05-25-12
REVISION DATES (PRELIMINARY STAGE ONLY) SHEET OF

USERNAME => s124496 DATE PLOTTED => 25-OCT-2012 TIME PLOTTED => 10:53

V1=1

DIST.	COUNTY	ROUTE	POST MILES TOTAL PROJECT	SHEET NO.	TOTAL SHEETS
04	Ala	80	2.2	604	800

REGISTERED MECHANICAL ENGINEER 05-25-12 DATE

REGISTERED PROFESSIONAL ENGINEER MARK HEDGLIN No. M32912 Exp. 9-30-12 MECH STATE OF CALIFORNIA

10-22-12
PLANS APPROVAL DATE

The State of California or its officers or agents shall not be responsible for the accuracy or completeness of scanned copies of this plan sheet.

CALIFORNIA STATE FIRE MARSHAL APPROVED
Approval of this plan does not authorize or approve any omission or deviation from applicable regulations. Final approval is subject to field inspection. One set of approved plans shall be available on the project site at all times.
Reviewed by: JOHN E WOODS, SDSFM
Approval date: 8-22-12

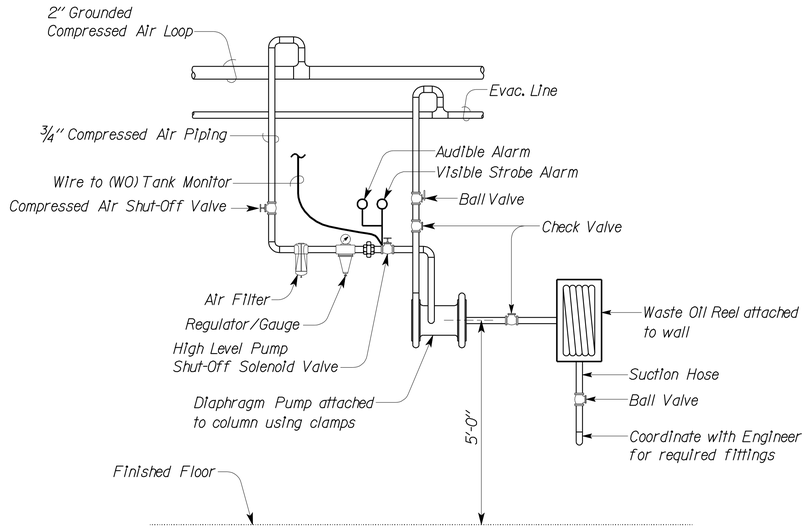

1 WASTE OIL HOSE REEL AND PUMP

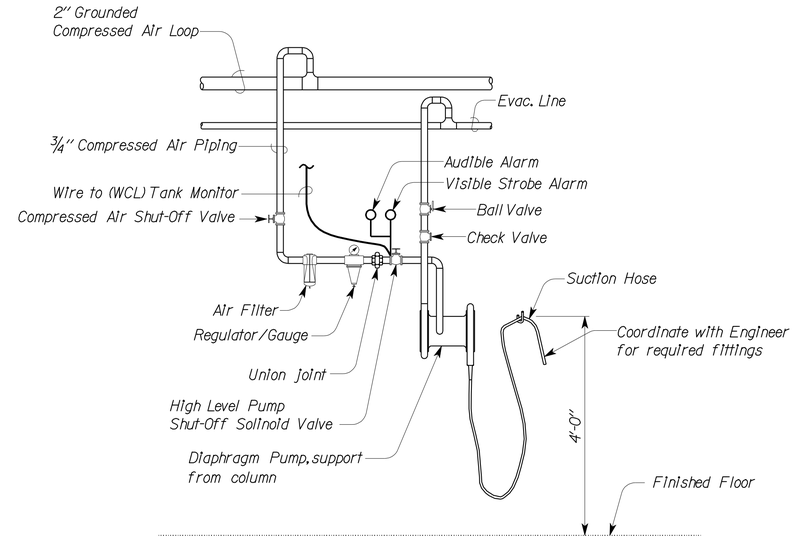

2 WASTE COOLANT PUMP

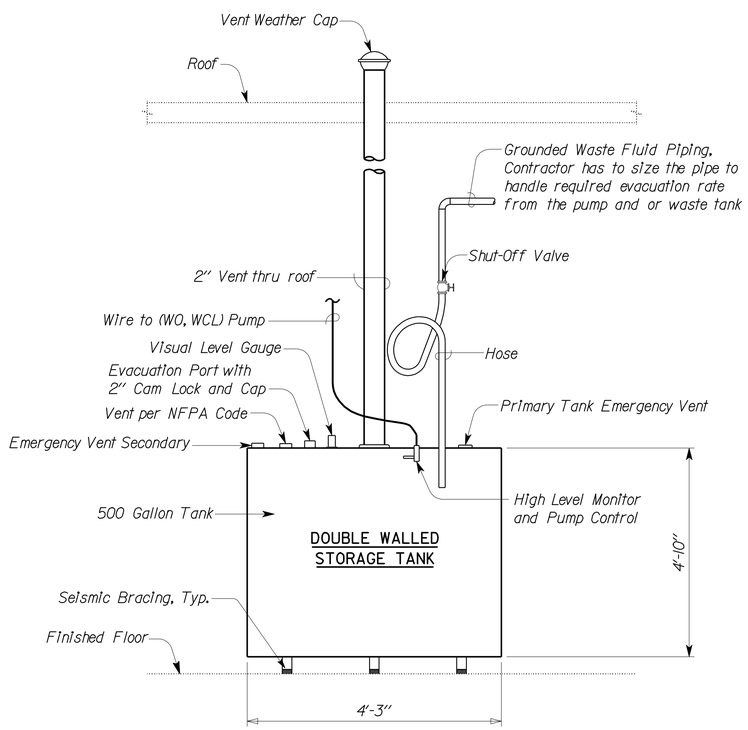

3 TANK, DOUBLE WALL CUBE (WCL & WO) STORAGE TANK

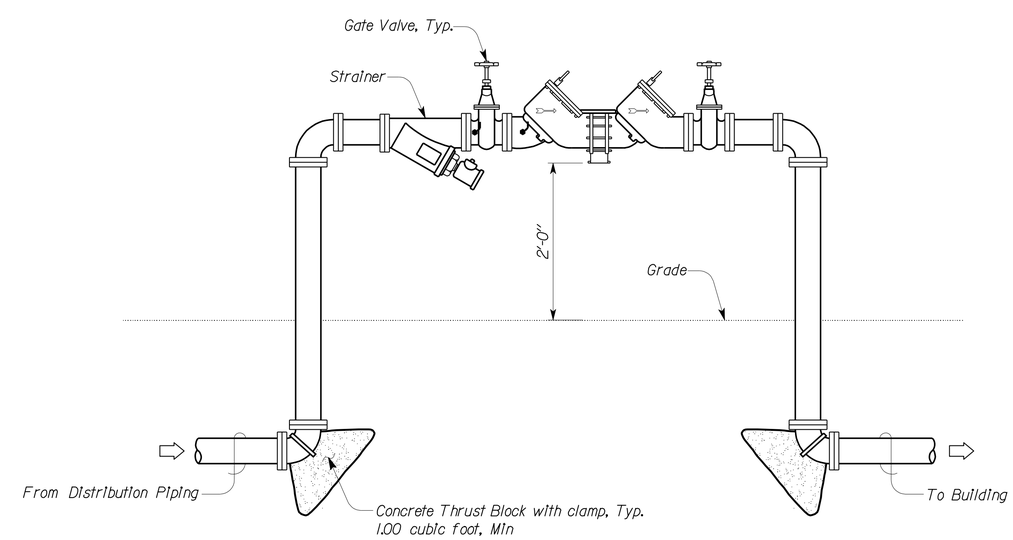

4 BACKFLOW PREVENTER ASSEMBLY

THIS DRAWING ACCURATE FOR MECHANICAL WORK ONLY

	BY	CHECKED
DESIGN	Mark Hedglin	Tom Hatam
DETAILS	Rudy Sarte	Tom Hatam
QUANTITIES	Mark Hedglin	Tom Hatam

STATE OF CALIFORNIA DEPARTMENT OF TRANSPORTATION

DIVISION OF ENGINEERING SERVICES ELECTRICAL-MECHANICAL-WATER AND WASTEWATER DESIGN

BRIDGE NO. 33M5785
POST MILE 2.2

SFOBB MAINTENANCE COMPLEX
PLUMBING DETAILS NO. 4

SHEET **MP4-4**

TAEMWW Imperial Rev. 7/10
FILE => mp4_4.dgn
DATE PLOTTED => 25-OCT-2012 TIME PLOTTED => 10:53
ORIGINAL SCALE IN INCHES FOR REDUCED PLANS 0 1 2 3
UNIT 3615
PROJECT NUMBER & PHASE 04120006661
EA 014081
DISREGARD PRINTS BEARING EARLIER REVISION DATES → 05-08-12 05-25-12
REVISION DATES (PRELIMINARY STAGE ONLY) SHEET OF

USERNAME => s124496 DATE PLOTTED => 25-OCT-2012 TIME PLOTTED => 10:53

V|=|

DIST.	COUNTY	ROUTE	POST MILES TOTAL PROJECT	SHEET NO.	TOTAL SHEETS
04	Ala	80	2.2	605	800

REGISTERED MECHANICAL ENGINEER 05-25-12 DATE

REGISTERED PROFESSIONAL ENGINEER MARK HEDGLIN No. M32912 Exp. 9-30-12 MECH STATE OF CALIFORNIA

10-22-12
PLANS APPROVAL DATE

The State of California or its officers or agents shall not be responsible for the accuracy or completeness of scanned copies of this plan sheet.

CALIFORNIA STATE FIRE MARSHAL APPROVED
Approval of this plan does not authorize or approve any omission or deviation from applicable regulations. Final approval is subject to field inspection. One set of approved plans shall be available on the project site at all times.
Reviewed by: JOHN E WOODS, SDSFM
Approval date: 8-22-12

Note.

Major equipment shown only. Additional components will be required to demonstrate proper operation and safety requirements of the system.

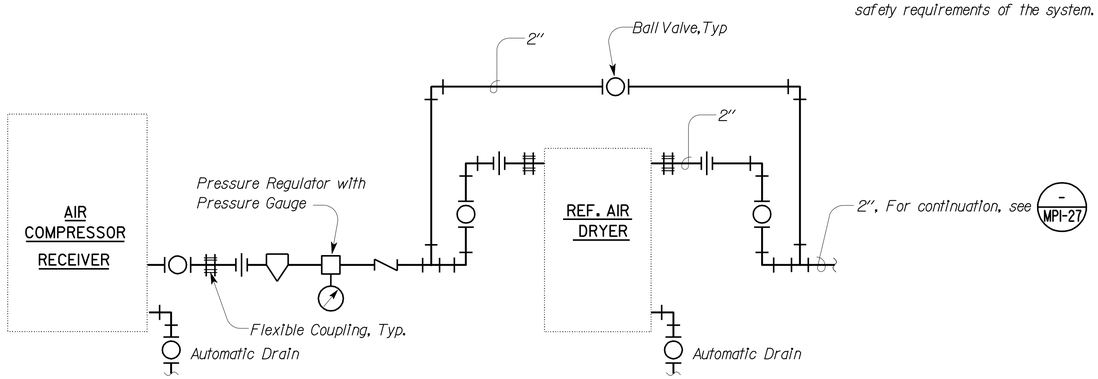

1 AIR COMPRESSOR & REFRIGERATED AIR DRYER SCHEMATIC

NO SCALE

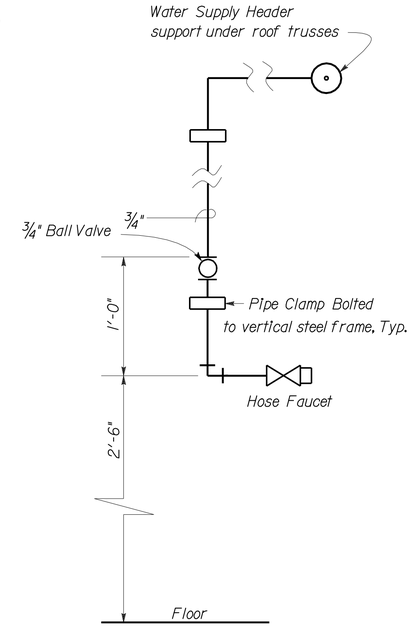

2 WATER DROP

NO SCALE

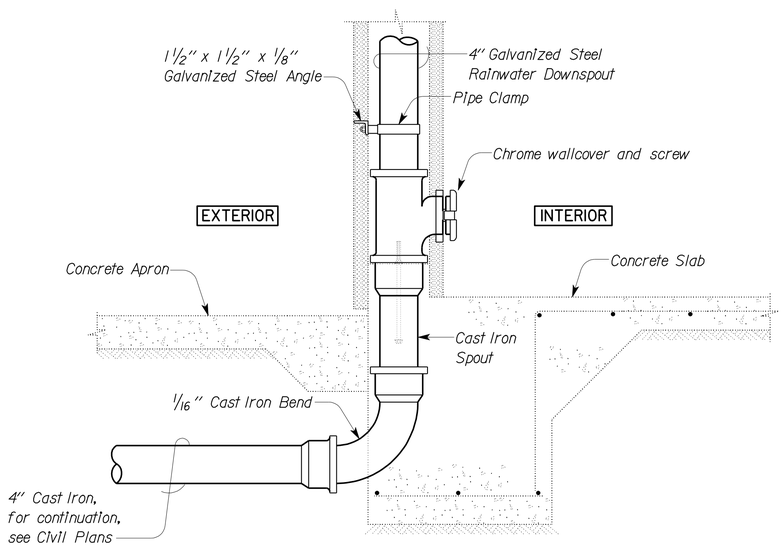

ELEVATION

3 RWL CLEANOUT DETAIL

NO SCALE

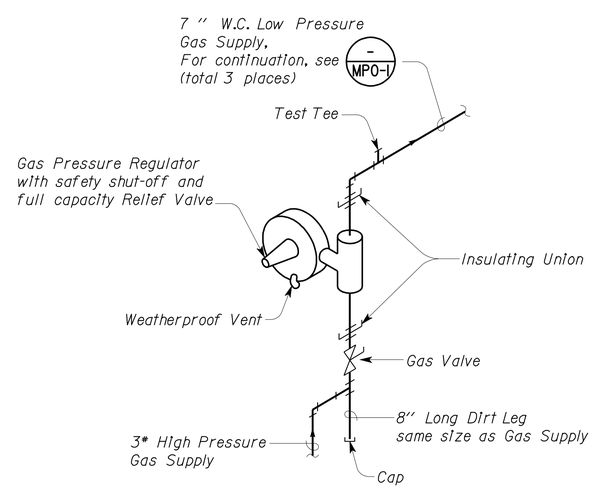

4 GAS PRESSURE REGULATOR

THIS DRAWING ACCURATE FOR MECHANICAL WORK ONLY

DESIGN	BY Mark Hedglin	CHECKED Tom Hatam	
DETAILS	BY Rudy Sarte	CHECKED Tom Hatam	
QUANTITIES	BY Mark Hedglin	CHECKED Tom Hatam	

STATE OF CALIFORNIA DEPARTMENT OF TRANSPORTATION

DIVISION OF ENGINEERING SERVICES
ELECTRICAL-MECHANICAL-WATER AND WASTEWATER DESIGN

BRIDGE NO. 33M5785
POST MILE 2.2

SFOBB MAINTENANCE COMPLEX

PLUMBING DETAILS NO. 5

SHEET **MP4-5**

TAEMWW Imperial Rev. 7/10
FILE => mp4_5.dgn
DATE PLOTTED => 25-OCT-2012 TIME PLOTTED => 10:54

ORIGINAL SCALE IN INCHES FOR REDUCED PLANS 0 1 2 3

UNIT 3615
PROJECT NUMBER & PHASE 04120006661
EA 014081

DISREGARD PRINTS BEARING EARLIER REVISION DATES → 05-08-12 05-25-12

REVISION DATES (PRELIMINARY STAGE ONLY) SHEET OF

USERNAME => s124496 DATE PLOTTED => 25-OCT-2012 TIME PLOTTED => 10:54

V|=|

DIST.	COUNTY	ROUTE	POST MILES TOTAL PROJECT	SHEET NO.	TOTAL SHEETS
04	Ala	80	2.2	606	800

Solomon C. Wong — 05-25-12
REGISTERED MECHANICAL ENGINEER — DATE

REGISTERED PROFESSIONAL ENGINEER SOLOMON WONG No. M27626 Exp. 6-30-13 MECH STATE OF CALIFORNIA

10-22-12
PLANS APPROVAL DATE

The State of California or its officers or agents shall not be responsible for the accuracy or completeness of scanned copies of this plan sheet.

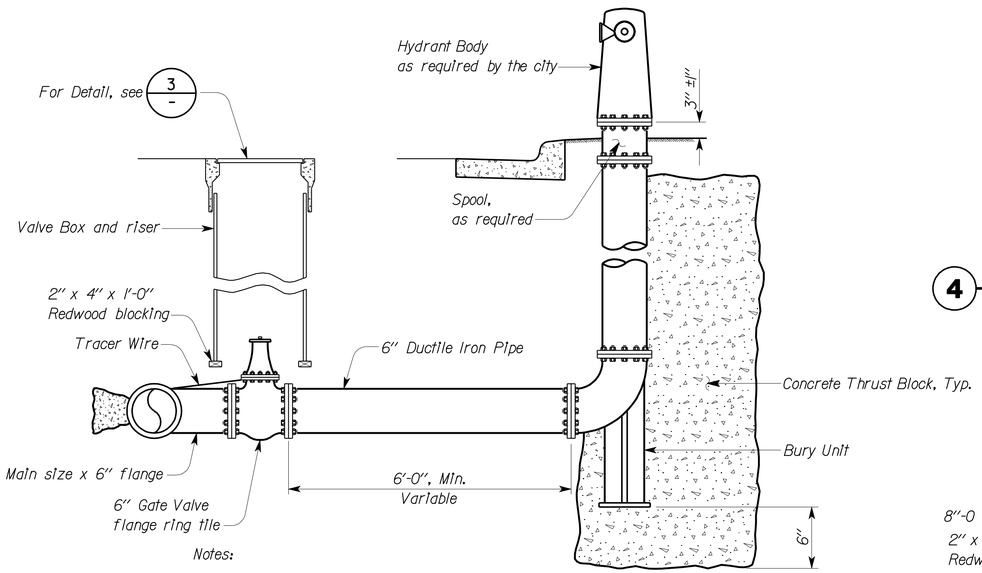

Notes:

1. Fire Hydrant installations shall comply with Fire District and City requirements.
2. Encase all metallic surfaces below ground with polyethylene.

See Standard Thrust Block dimensions on this sheet.

2 HYDRANT DETAIL

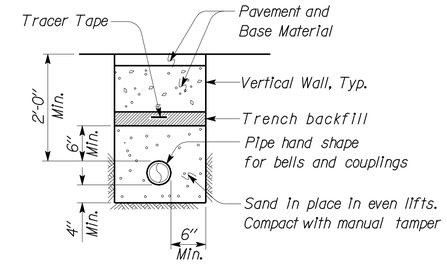

4 PIPE UNDER PAVEMENT

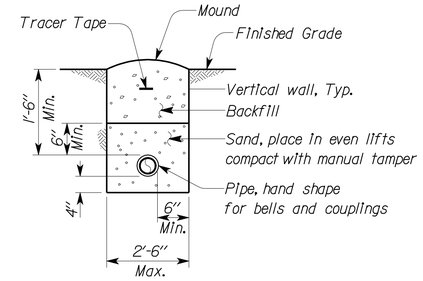

5 BURIED PIPE

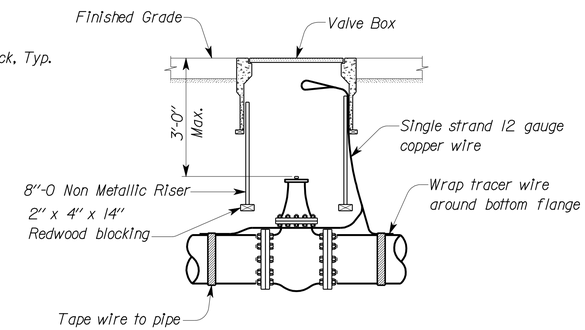

3 STANDARD VALVE BOX INSTALLED IN TRAFFIC AREA

REQUIRED THRUST BLOCK BEARING AREA- TOTAL SQUARE FEET

TYPE OF FITTING		90° BEND	45° BEND	11¼ BEND 22 ½ BEND	TEE OR DEAD END
TYPICAL INSTALLATION			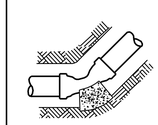	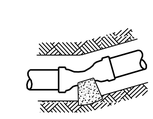	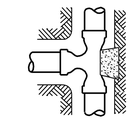
PIPE SIZE	4"	2.25	1	1	2.25
	6"	4.25	2.25	1	3.25
	8"	7.5	4.25	2.25	5.5
	10"	12	6.5	3.25	8.75

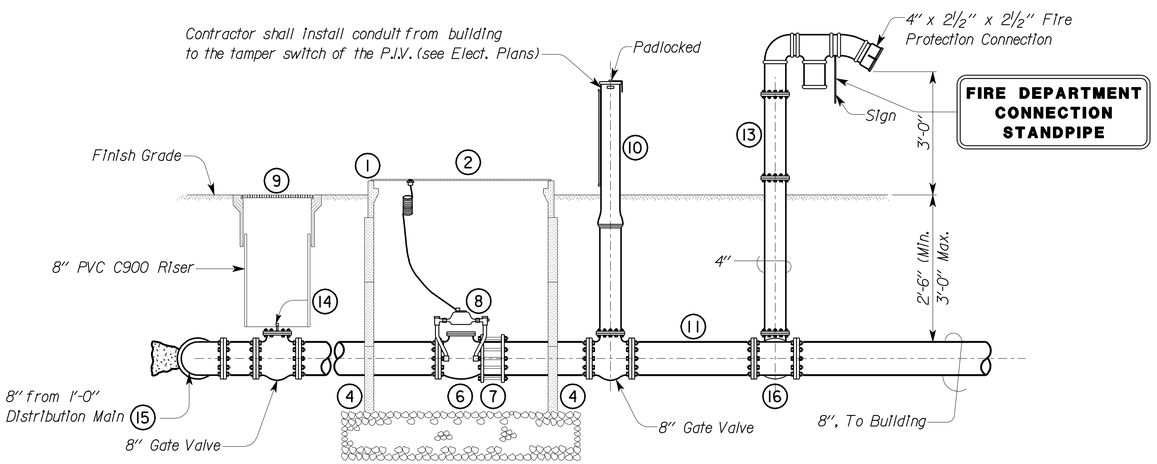

Note:

All material shall be U.L.-F.M. approved.

1 FIRE WATER CONNECTION

1. Reinforced Concrete Utility Box with extensions.
2. 2 piece Steel Checker Plate with two 10" round self closing reading lids and 1¾" hole for touch read module in one reading lid.
3. N/A
4. 2" x 2" Redwood Support Frame around box perimeter.
5. ¾" Crushed Rock sub-base, 1'-0" to 1'-6" deep.
6. 8" Detector Check Valve.
7. Flanged Coupling Adapter.
8. ⅝" x ¾" Bypass Meter (Cubic feet registered)
9. Valve Box and Lid
10. Flanged Post Indicator Valve with breakaway lock.
11. Ductile Iron Spool.
12. N/A
13. 4" Check Valve.
14. Install Valve Operating Nut Extension where valve is in excess of 2'-6" below grade, for detail, see this sheet.
15. Construct Thrust Blocks of class "B" concrete bearing area as shown.
16. 8" x 8" x 4" Flanged Tee.

CALIFORNIA STATE FIRE MARSHAL APPROVED
Approval of this plan does not authorize or approve any omission or deviation from applicable regulations. Final approval is subject to field inspection. One set of approved plans shall be available on the project site at all times.
Reviewed by: JOHN E WOODS, SDSFM
Approval date: 8-22-12

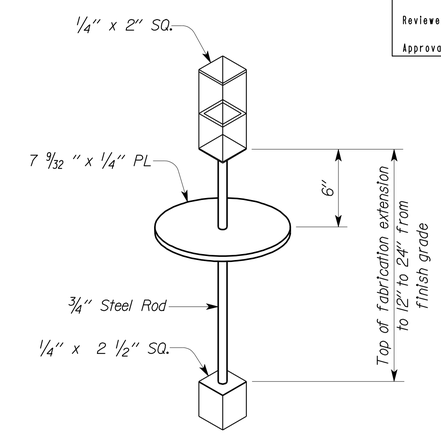

VALVE OPERATING NUT EXTENSION

THIS DRAWING ACCURATE FOR MECHANICAL WORK ONLY

NO SCALE

	BY	CHECKED
DESIGN	Solomon Wong	Tom Hatam
DETAILS	Rudy Sarte	Tom Hatam
QUANTITIES	Solomon Wong	Tom Hatam

STATE OF CALIFORNIA DEPARTMENT OF TRANSPORTATION

DIVISION OF ENGINEERING SERVICES
ELECTRICAL-MECHANICAL-WATER AND WASTEWATER DESIGN

BRIDGE NO. 33M5785
POST MILE 2.2

SFOBB MAINTENANCE COMPLEX
PLUMBING DETAILS NO. 6

SHEET MP4-6

TAEMWW Imperial Rev. 7/10
FILE => mp4_6.dgn
DATE PLOTTED => 25-OCT-2012 TIME PLOTTED => 10:54
ORIGINAL SCALE IN INCHES FOR REDUCED PLANS 0 1 2 3
UNIT 3615
PROJECT NUMBER & PHASE 04120006661
EA 014081
DISREGARD PRINTS BEARING EARLIER REVISION DATES
REVISION DATES (PRELIMINARY STAGE ONLY) 05-08-12 05-25-12
SHEET OF

USERNAME => s124436 DATE PLOTTED => 25-OCT-2012 TIME PLOTTED => 10:54

V1=1

DIST.	COUNTY	ROUTE	POST MILES TOTAL PROJECT	SHEET NO.	TOTAL SHEETS
04	Ala	80	2.2	607	800

CALIFORNIA STATE FIRE MARSHAL APPROVED

Approval of this plan does not authorize or approve any omission or deviation from applicable regulations. Final approval is subject to field inspection. One set of approved plans shall be available on the project site at all times.

Reviewed by: JOHN E WOODS, SDSFM

Approval date: 8-22-12

Solomon C. Wong — 05-25-12
REGISTERED MECHANICAL ENGINEER — DATE

REGISTERED PROFESSIONAL ENGINEER
SOLOMON WONG
No. M27626
Exp. 6-30-13
MECH
STATE OF CALIFORNIA

10-22-12
PLANS APPROVAL DATE

The State of California or its officers or agents shall not be responsible for the accuracy or completeness of scanned copies of this plan sheet.

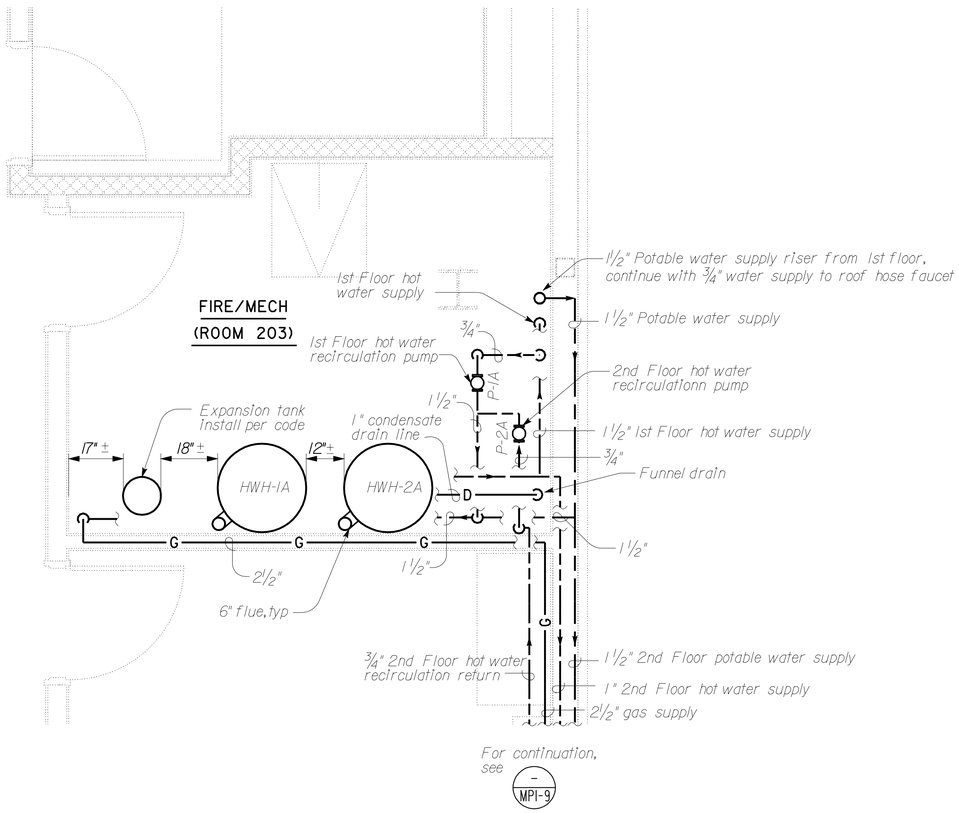

1 BUILDING 1A PARTIAL PLAN

SCALE : ½" = 1'-0"

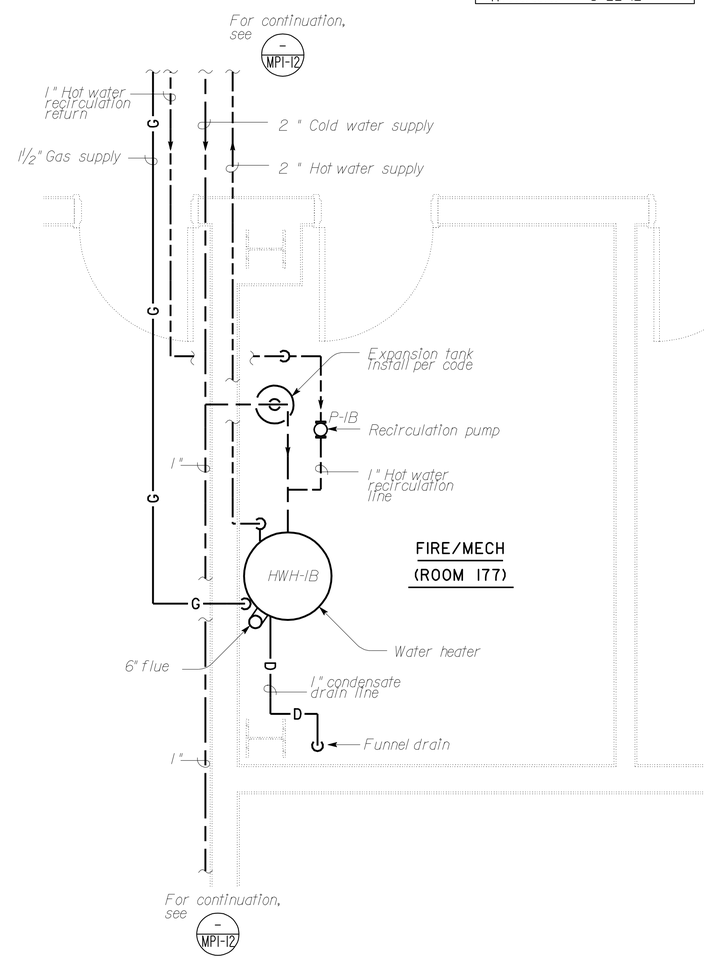

2 BUILDING 1B PARTIAL PLAN

SCALE : ½" = 1'-0"

THIS DRAWING ACCURATE FOR MECHANICAL WORK ONLY

	BY		CHECKED
DESIGN	Solomom Wong		Tom Hatam
DETAILS	Angela Chen		Tom Hatam
QUANTITIES	Solomom Wong		Tom Hatam

STATE OF CALIFORNIA
DEPARTMENT OF TRANSPORTATION

DIVISION OF ENGINEERING SERVICES
ELECTRICAL-MECHANICAL-WATER AND WASTEWATER DESIGN

BRIDGE NO. 33M5785
POST MILE 2.2

SFOBB MAINTENANCE COMPLEX
BUILDING 1A & 1B — MECHANICAL ROOM LAYOUT

SHEET **MP4-7**

TAEMWW Imperial Rev. 7/10
FILE => mp4_7.dgn
DATE PLOTTED => 25-OCT-2012 TIME PLOTTED => 10:54
ORIGINAL SCALE IN INCHES FOR REDUCED PLANS 0 1 2 3
UNIT 3615
PROJECT NUMBER & PHASE 04120006661
EA 014081
DISREGARD PRINTS BEARING EARLIER REVISION DATES → 05-08-12 05-25-12
REVISION DATES (PRELIMINARY STAGE ONLY) SHEET OF

USERNAME => s124496 DATE PLOTTED => 25-OCT-2012 TIME PLOTTED => 10:54

VI=I

DIST.	COUNTY	ROUTE	POST MILES TOTAL PROJECT	SHEET NO.	TOTAL SHEETS
04	Ala	80	2.2	608	800

CALIFORNIA STATE FIRE MARSHAL APPROVED
Approval of this plan does not authorize or approve any omission or deviation from applicable regulations. Final approval is subject to field inspection. One set of approved plans shall be available on the project site at all times.
Reviewed by: JOHN E WOODS, SDSFM
Approval date: 8-22-12

Solomon C. Wong — 05-25-12
REGISTERED MECHANICAL ENGINEER — DATE

REGISTERED PROFESSIONAL ENGINEER
SOLOMON WONG
No. M27626
Exp. 6-30-13
MECH
STATE OF CALIFORNIA

10-22-12
PLANS APPROVAL DATE

The State of California or its officers or agents shall not be responsible for the accuracy or completeness of scanned copies of this plan sheet.

Notes :

1. The water heaters shall be installed in accordance with the manufacturer's installation requirements. The installation and service must be performed by a qualified installer, service agency or the gas supplier.
2. Install the piping in an uniform manner to allow easy acces for operation and inspection. All piping shall be secured with unistruct anchors and u-clamps.

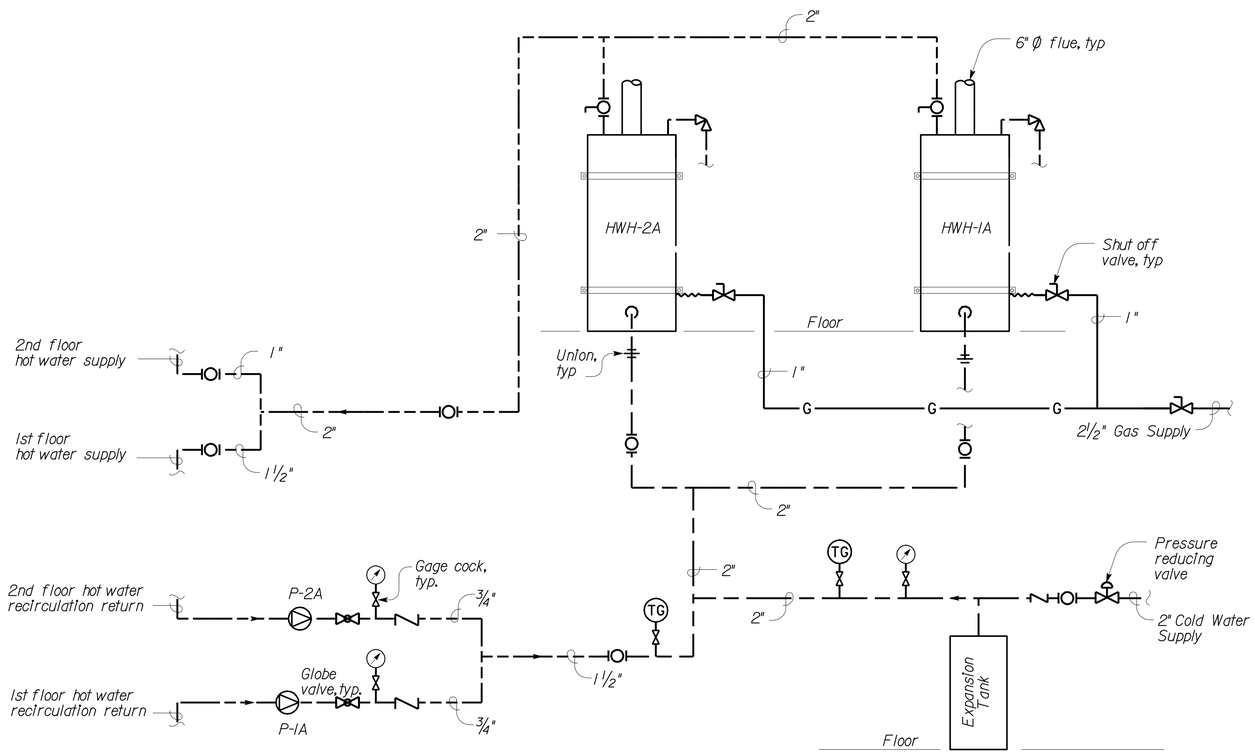

BUILDING 1A (ROOM 203)
DOMESTIC HOT WATER SCHEMATIC

NO SCALE

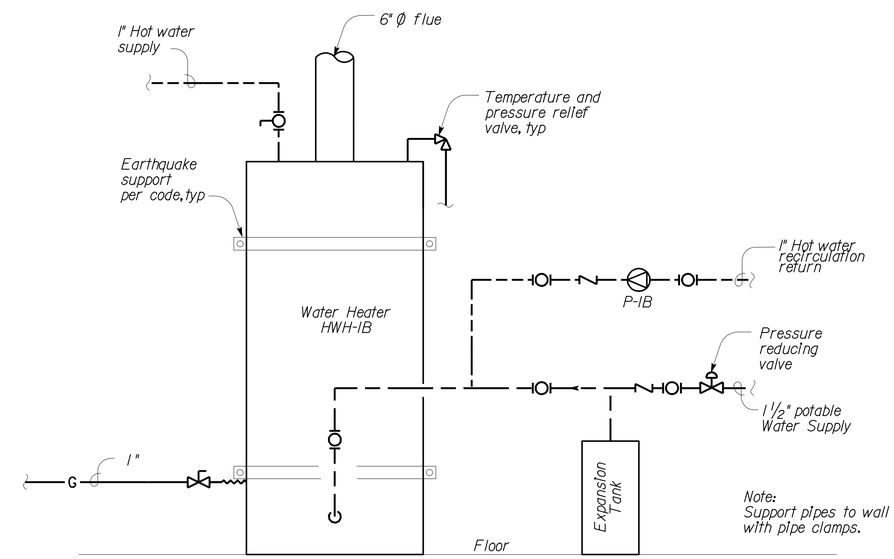

BUILDING 1B (ROOM 177)
DOMESTIC HOT WATER SCHEMATIC

NO SCALE

THIS DRAWING ACCURATE FOR MECHANICAL WORK ONLY

	BY		CHECKED
DESIGN	Solomon Wong		Tom Hatam
DETAILS	Angela Chen		Tom Hatam
QUANTITIES	Solomon Wong		Tom Hatam

STATE OF CALIFORNIA
DEPARTMENT OF TRANSPORTATION

DIVISION OF ENGINEERING SERVICES
ELECTRICAL-MECHANICAL-WATER AND WASTEWATER DESIGN

BRIDGE NO. 33M5785
POST MILE 2.2

SFOBB MAINTENANCE COMPLEX
BUILDING 1A&1B — DOMESTIC HOT WATER SCHEMATIC

SHEET **MP4-8**

TAEMWW Imperial Rev. 7/10
FILE => mp4_8.dgn
DATE PLOTTED => 25-OCT-2012 TIME PLOTTED => 10:54
ORIGINAL SCALE IN INCHES FOR REDUCED PLANS 0 1 2 3
UNIT 3615
PROJECT NUMBER & PHASE 04120006661
EA 014081
DISREGARD PRINTS BEARING EARLIER REVISION DATES → 05-08-12 05-25-12
REVISION DATES (PRELIMINARY STAGE ONLY) SHEET OF
USERNAME => s124496 DATE PLOTTED => 25-OCT-2012 TIME PLOTTED => 10:54
VI=I

DIST.	COUNTY	ROUTE	POST MILES TOTAL PROJECT	SHEET NO.	TOTAL SHEETS
04	Ala	80	2.2	609	800

REGISTERED MECHANICAL ENGINEER 09-06-12 DATE

REGISTERED PROFESSIONAL ENGINEER Jack Wheeler No. 21648 Exp. 6-30-13 MECH STATE OF CALIFORNIA

10-22-12
PLANS APPROVAL DATE

The State of California or its officers or agents shall not be responsible for the accuracy or completeness of scanned copies of this plan sheet.

CALIFORNIA STATE FIRE MARSHAL APPROVED
Approval of this plan does not authorize or approve any omission or deviation from applicable regulations. Final approval is subject to field inspection. One set of approved plans shall be available on the project site at all times.
Reviewed by: JOHN E WOODS, SDSFM
Approval date: 8-22-12

NOTE:

1. For communication vault and traffic rated vault locations and details, see electrical sheet, Communication Site Plan 1.

EQUIPMENT

Sump Pump (submersible) - 45 gpm @ 15 ft TDH, 1/2 hp, 120 V, 9.4 A

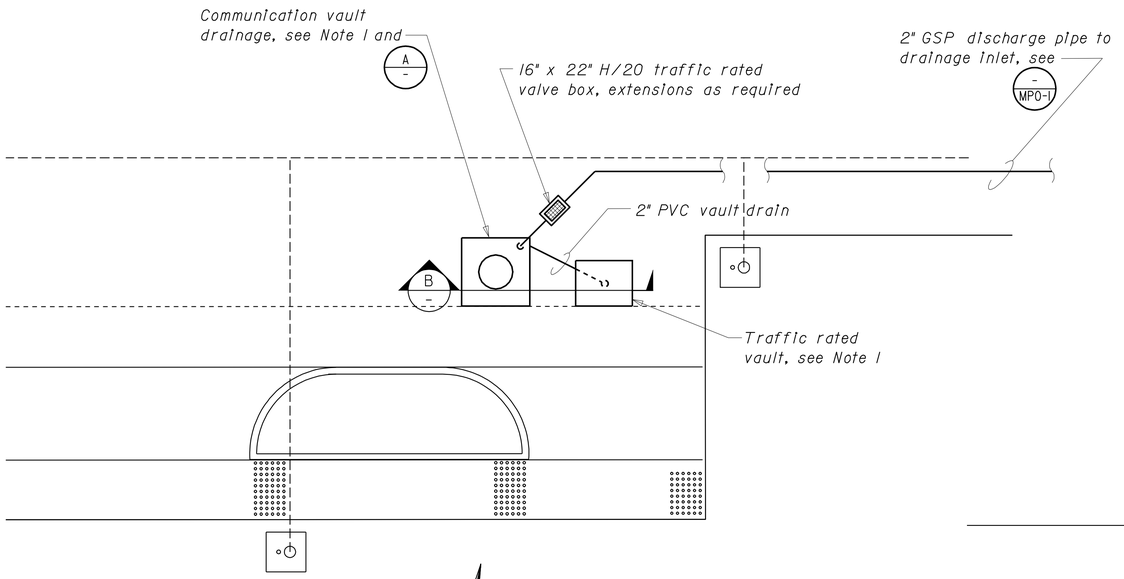

PARTIAL PLAN
No Scale

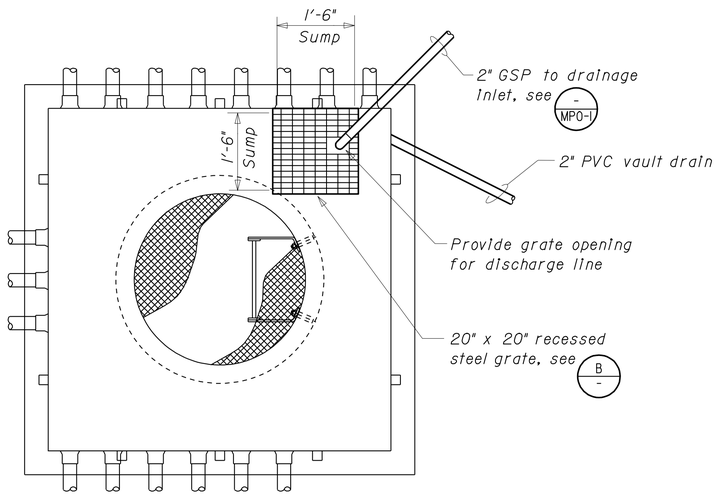

A COMMUNICATION VAULT
No Scale

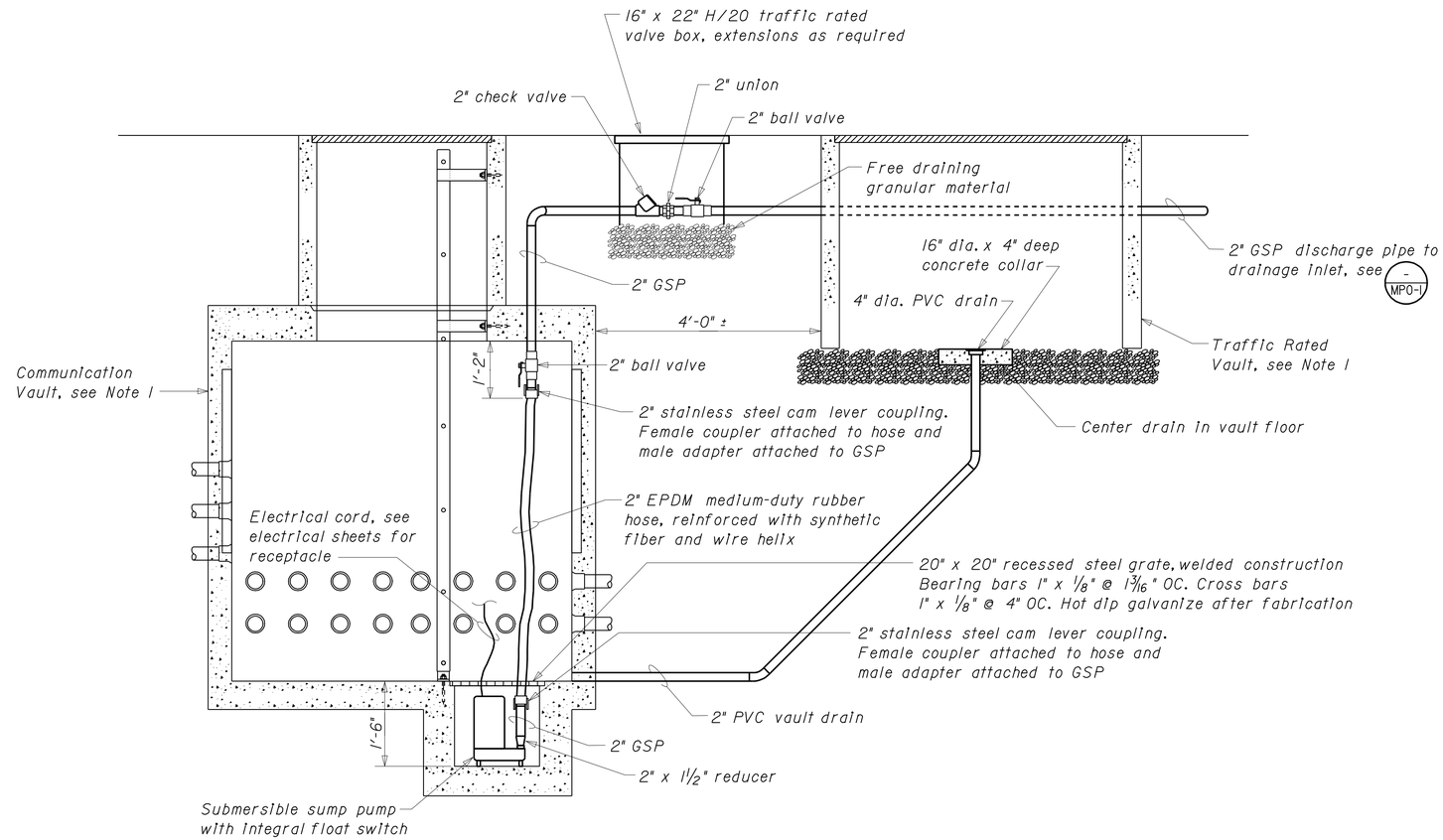

B SECTION
No Scale

THIS DRAWING ACCURATE FOR MECHANICAL WORK ONLY

	BY	CHECKED
DESIGN	Thomas Dietsch	Tom H. Hatam
DETAILS	Thomas Dietsch	Tom H. Hatam
QUANTITIES	Thomas Dietsch	Tom H. Hatam

STATE OF CALIFORNIA DEPARTMENT OF TRANSPORTATION

DIVISION OF ENGINEERING SERVICES
ELECTRICAL-MECHANICAL-WATER AND WASTEWATER DESIGN

BRIDGE NO. 33M5785
POST MILE 2.2

SFOBB MAINTENANCE COMPLEX
SITE DETAILS — COMMUNICATION VAULT DRAINAGE

SHEET **MP4-9**

TAEMWW Imperial Rev. 7/10
FILE => mp4_9.dgn
DATE PLOTTED => 30-OCT-2012 TIME PLOTTED => 08:31
ORIGINAL SCALE IN INCHES FOR REDUCED PLANS 0 1 2 3
UNIT 3615
PROJECT NUMBER & PHASE 04120006661
EA 014081
DISREGARD PRINTS BEARING EARLIER REVISION DATES
REVISION DATES (PRELIMINARY STAGE ONLY) 04-26-12 05-08-12 05-31-12
SHEET OF

USERNAME => s128843 DATE PLOTTED => 30-OCT-2012 TIME PLOTTED => 08:31

DIST.	COUNTY	ROUTE	POST MILES TOTAL PROJECT	SHEET NO.	TOTAL SHEETS
04	Ala	80	2.2	610	800

CALIFORNIA STATE FIRE MARSHAL
APPROVED
Approval of this plan does not authorize or approve any omission or deviation from applicable regulations. Final approval is subject to field inspection. One set of approved plans shall be available on the project site at all times.
Reviewed by: JOHN E WOODS, SDSFM
Approval date: 8-22-12

Solomon C. Wong 05-25-12
REGISTERED MECHANICAL ENGINEER DATE

REGISTERED PROFESSIONAL ENGINEER
SOLOMON WONG
No. M27626
Exp. 6-30-13
MECH
STATE OF CALIFORNIA

10-22-12
PLANS APPROVAL DATE

The State of California or its officers or agents shall not be responsible for the accuracy or completeness of scanned copies of this plan sheet.

BUILDING A EQUIPMENT SCHEDULE

UNIT No.	EQUIPMENT TYPE / ZONE	CAPACITY	ESP INCH H20	TYPE	Rating hp/ watts/ amps/ Btuh	V-Ph-Hz.	Weight (lbs)	Equipment Location / Room No.	QUANTITY
HWH-IA, & 2A	Hot Water Heater	80 gal / 97% efficient	--	G	130,000 Btuh	120-1-60	725 (empty)	Mechanical/ 203	2
P-IA & 2A	Hot Water System Recir. Pump / domestic hot water	4 GPM @ 11' Head	--	E	1/25 hp	115-1-60	10	Mechanical/ 203 (in-line)	2
EWC-IA	Electric water cooler / Lobby	8 GPH	--	E	0.370 kw	120-1-60	65	Lobby/ 200	1
EWC-2A	Electric water cooler / Lobby	8 GPH	--	E	0.370 kw	120-1-60	65	Lobby/ 109	1

BUILDING B EQUIPMENT SCHEDULE

UNIT No.	EQUIPMENT TYPE / ZONE	CAPACITY	ESP INCH H20	TYPE	Rating hp/ watts/ amps/ Btuh	V-Ph-Hz.	Weight (lbs)	Equipment Location / Room No.	QUANTITY
HWH-IB	Hot Water Heater	80 gal / 97% efficient	--	G	130,000 Btuh	120-1-60	725 (empty)	Fire/Mechanical / 177	1
P-IB	Hot Water System Recir. Pump / domestic hot water	4 GPM @ 11' Head	--	E	1/25 hp	115-1-60	10	Fire/Mechanical / 177	1
EWC-IB,2B	Electric water cooler / Lobby, Equip. Repair Bay	8 GPH	--	E	0.370 kw	120-1-60	65	Hallway/ 144 Equip. Repair Bay/ 191	2
IWH IB-4B	Instant Water Heater	75 F rise at 0.5 gpm	--	E	6.5 KW 240 V 23 Amp On-demand	240-1-60	15	133, 134, 136, 142	4

THIS DRAWING ACCURATE FOR MECHANICAL WORK ONLY

	BY		CHECKED
DESIGN	Solomon Wong		Tom Hatam
DETAILS	Angela Chen		Tom Hatam
QUANTITIES	Solomon Wong		Tom Hatam

STATE OF CALIFORNIA
DEPARTMENT OF TRANSPORTATION

DIVISION OF ENGINEERING SERVICES
ELECTRICAL-MECHANICAL-WATER AND WASTEWATER DESIGN

BRIDGE NO. 33M5785
POST MILE 2.2

SFOBB MAINTENANCE COMPLEX
BUILDING 1A
EQUIPMENT SCHEDULE

SHEET MP4-10

TAEMWW Imperial Rev. 7/10
FILE => mp4_10.dgn
DATE PLOTTED => 25-OCT-2012 TIME PLOTTED => 10:54

ORIGINAL SCALE IN INCHES FOR REDUCED PLANS 0 1 2 3

UNIT 3615
PROJECT NUMBER & PHASE 04120006661
EA 014081

DISREGARD PRINTS BEARING EARLIER REVISION DATES → 05-08-12 05-25-12

REVISION DATES (PRELIMINARY STAGE ONLY) SHEET OF

USERNAME => s124496 DATE PLOTTED => 25-OCT-2012 TIME PLOTTED => 10:54

VI=1

GRAPHIC SYMBOLS FOR ELECTRICAL WIRING AND LAYOUT DIAGRAMS

SYMBOL	DESCRIPTION
	POLE-TOP ELECTROLIER
	POLE-ARM ELECTROLIER
	POLE-ARM DUAL ELECTROLIER
CEILING / WALL	
S / S	SURFACE LIGHTING FIXTURE
R / R	RECESSED LIGHTING FIXTURE
P	BRIDGE SOFFIT PENDANT INDIVIDUAL LIGHTING FIXTURE
	SURFACE INDIVIDUAL LIGHTING FIXTURE
P	PENDANT INDIVIDUAL LIGHTING FIXTURE
R	RECESSED INDIVIDUAL LIGHTING FIXTURE
	SURFACE OR PENDANT CONTINUOUS ROW LIGHTING FIXTURES
NOTE:	A LOWER CASE LETTER NEAR GRAPHIC LIGHTING FIXTURE SYMBOL DENOTES THAT FIXTURE IS CONTROLLED BY A SIMILARLY MARKED SWITCH, AN ALPHA-NUMERIC SYMBOL NEAR GRAPHIC LIGHTING FIXTURE SYMBOL DENOTES FIXTURE TYPE, (I=INCANDESCENT, F=FLUORESCENT, LED=LIGHT EMITTING DIODE, DESIGN TYPE, NUMBER OF LAMPS AND WATTAGE.
	EXAMPLE : (4) LED 2 - 2 x 32 — 32 WATT LAMPS; 2 LAMPS; DESIGN TYPE; LIGHT; NUMBER OF FIXTURES
OR	RECESSED INDIVIDUAL LIGHTING FIXTURE WITH EMERGENCY LED DRIVER
B / B	BLANK OUTLET
J / J	JUNCTION BOX
	SINGLE RECEPTACLE OUTLET
	DUPLEX RECEPTACLE OUTLET
(GFCI)	DUPLEX RECEPTACLE OUTLET (WITH GFCI)
(GFCI) WP	DUPLEX RECEPTACLE OUTLET, WEATHERPROOF (WITH GFCI)
	SINGLE, SPECIAL PURPOSE RECEPTACLE OUTLET
	FLOOR SINGLE RECEPTACLE OUTLET
	FLOOR DUPLEX RECEPTACLE OUTLET
	FLOOR SPECIAL PURPOSE OUTLET
	FLOOR RADIO OUTLET
	FLOOR TELEPHONE OUTLET
	MULTI-OUTLET ASSEMBLY
SOC1	WALL SWITCH OCCUPANCY SENSOR TYPE1
SOC2	WALL SWITCH OCCUPANCY SENSOR TYPE2
OC1	CEILING OCCUPANCY SENSOR TYPE 1
OC2	CEILING OCCUPANCY SENSOR TYPE 2
OC3	HIGH BAY OCCUPANCY SENSOR TYPE 3
S	SINGLE POLE SWITCH
S_2	DOUBLE POLE SWITCH
S_3	THREE WAY SWITCH
S_{DTS}	DIGITAL TIMER SWITCH
S_{MC}	MOMENTARY CONTACT SWITCH
S_D	DIMMING SWITCH TYPE 1
S_{2D}	DIMMING SWITCH TYPE 2
S_{WP}	WEATHERPROOF SWITCH
S_F	FAN SWITCH
S_L	LIGHT SWITCH
S_{VS}	VARIABLE SPEED MOTOR CONTROL SWITCH
S_M	MOTION SENSOR SWITCH
S_T	MANUAL MOTOR STARTING SWITCH, WITHOUT THERMAL OVERLOAD TYPE
S_{TS}	MECHANICAL SPRING WOUND TIMER SWITCH

SYMBOL	DESCRIPTION
LD#	WALL MOUNTED, EXPOSED, LIGHTING DISCONNECT # : 1-SINGLE POLE, 2-TWO POLE
LD#	WALL OR COLUMN MOUNTED, ABOVE CEILING, LIGHTING DISCONNECT # : 1-SINGLE POLE, 2-TWO POLE
LCP	WALL MOUNTED, EXPOSED, LIGHTING CONTROL PANEL
LCP	WALL OR COLUMN MOUNTED, ABOVE CEILING, LIGHTING CONTROL PANEL
LCPR	LIGHTING CONTROL PANEL RECESSED INSIDE WALL
S	SWITCH AND SINGLE RECEPTACLE
S	SWITCH AND DUPLEX RECEPTACLE
	HAND DRYER NOZZLE
H	HAND DRYER
	RADIO OUTLET
	TELEPHONE OUTLET
	WALL VOICE, DATA OUTLET
	FLOOR VOICE, DATA OUTLET
	SPEAKER OUTLET
	PUSHBUTTON
	PUSHBUTTON STATION MOTOR CONTROL
T	THERMOSTAT
FS	FLOW SWITCH
PES	PHOTOELECTRIC SENSOR
PEU	PHOTOELECTRIC UNIT
	FLUSH-MOUNTED PANELBOARD AND CABINET
	SURFACE-MOUNTED PANELBOARD AND CABINET
	LIGHTING PANEL
	POWER PANEL
	COMBINATION LIGHTING AND POWER
MC	MOTOR CONTROLLER
	NON-FUSIBLE DISCONNECT SWITCH
	FUSIBLE DISCONNECT SWITCH
	CONDUIT CONCEALED IN CEILING OR WALL
	CONDUIT CONCEALED IN FLOOR
	CONDUIT EXPOSED
	CROSS-LINES INDICATE NUMBER OF #12 AWG CONDUCTORS. LONGER CROSS-LINE INDICATES 1#12 AWG (G) FOR EQUIPMENT GROUNDING CONDUCTOR. NO CROSS-LINE INDICATES 2#12 WITH 1#12 (G) UNLESS OTHERWISE NOTED. ALL CONDUIT 1/2" UNLESS OTHERWISE NOTED.
A1, A2	HOMERUN TO PANELBOARD, ARROWS INDICATE NUMBER OF CIRCUITS, LETTER DENOTES PANELBOARD, NUMERAL DENOTES CIRCUIT.
SM	SURFACE METAL RACEWAY
(2) 1/2"C, 2#12	CONDUCTOR INFO (PER CONDUIT); CONDUIT SIZE; NUMBER OF CONDUITS (NO NUMBER INDICATES ONE CONDUIT)
ALC	ARMORED LIGHTING CONTROL CABLE, CONCEALED IN CEILING OR WALL
ALC	EXPOSED ARMORED LIGHTING CONTROL CABLE
LC	LIGHTING CONTROL CABLE, CONCEALED IN CEILING OR WALL
MC	CONDUIT, RIGID STEEL, UNDERGROUND
PVC	CONDUIT, POLYVINYL CHLORIDE, UNDERGROUND
PVC	CONCRETE ENCASED PVC CONDUIT
	CONDUIT, FLEXIBLE
	CONDUIT, TURN UP
	CONDUIT, TURN DOWN
	CONDUIT SEAL, EXPLOSION-PROOF
X	CONDUIT, EXPANSION JOINT
	ADAPTER, ONE TYPE CONDUIT TO ANOTHER

SYMBOL	DESCRIPTION
AV	AUDIO/VISUAL ALARM DEVICE
ARM	ADDRESSABLE RELAY MODULE
C	MAGNETIC CONTACT SWITCH-PEDESTRIAN DOOR
C	MAGNETIC CONTACT SWITCH-VEHICLE DOOR
PD	PANIC DEVICE
CM	COMBINATION MOTION DETECTOR/PASSIVE INFRARED
DS	DUCT MOUNTED SMOKE DETECTOR
EL	ELECTROMECHANICAL LOCK
EH	ELECTRIFIED DOOR HINGE
G	GLASS BREAK DISCRIMINATOR
K	DIGITAL KEYPAD
KBX	KNOX BOX
LB	MAGNETIC DOOR LOCK
LG	LOCK GUARD
H	HEAT DETECTOR
EPT	ELECTRICAL POWER TRANSFER HINGE
EM	ELECTROMAGNETIC LOCK SET
MR	MULTIVOLTAGE RELAY MODULE
P	MANUAL PULL STATION
R	DIGITAL CARD READER
S	SMOKE DETECTOR
DS	DUCT SMOKE DETECTOR
SD	SMOKE DAMPER WITH ACTUATION
TS	REMOTE TEST SWITCH
W	COMBINATION DETECTOR (MICROWAVE/PASSIVE INFRARED)
T	TRANSFORMER
	PULL BOX, SEE NSP ES-8A
(T)	PULL BOX (TRAFFIC RATED), SEE NSP ES-8B
121	CONDUIT OR DOOR NUMBER, SEE PLANS
	FIRE RATED WALL
A	SECTION/ELEVATION LETTER
EE-2	SHEET NUMBER
1	DETAIL NUMBER
EE-2	SHEET NUMBER

GRAPHIC SYMBOLS FOR ELECTRICAL DIAGRAMS

SYMBOL	DESCRIPTION
	CIRCUIT BREAKER, SINGLE POLE
	CIRCUIT BREAKER, DOUBLE POLE
	CIRCUIT BREAKER, THREE POLE
GFCI	CIRCUIT BREAKER, WITH GROUND FAULT CIRCUIT INTERRUPTER
	CONTACT, NORMALLY OPEN
	CONTACT, NORMALLY CLOSED
	CONTACT, SINGLE POLE DOUBLE-THROW
	OPERATING COIL
	PRESSURE ACTUATED SWITCH, NORMALLY CLOSED
	PRESSURE ACTUATED SWITCH, NORMALLY OPEN
	FLOW ACTUATED SWITCH, NORMALLY CLOSED
	FLOW ACTUATED SWITCH, NORMALLY OPEN
	TEMPERATURE ACTUATED SWITCH, NORMALLY CLOSED
	TEMPERATURE ACTUATED SWITCH, NORMALLY OPEN
	LIMIT SWITCH, NORMALLY CLOSED
	LIMIT SWITCH, NORMALLY OPEN
	PUSHBUTTON SWITCH, NORMALLY CLOSED
	PUSHBUTTON SWITCH, NORMALLY OPEN
	SWITCH, SINGLE-POLE
	SWITCH, SINGLE-POLE, DOUBLE-THROW
	SWITCH, DOUBLE-POLE
	SWITCH, DOUBLE-POLE, DOUBLE-THROW
	SWITCH, SINGLE-POLE, 3-POSITION
	THERMAL OVERLOAD
	FUSE
	RESISTOR
	VARIABLE RESISTOR
	TRANSFORMER WINDING
	GROUNDING ELECTRODE
	ENCLOSURE BOND
A	PILOT LIGHT (A=AMBER, G=GREEN, R=RED)
G	GENERATOR
M	MOTOR
F	FAN MOTOR

PROJECT NOTES

A. SEPARATE GROUNDED (NEUTRAL) CONDUCTOR MUST BE USED FOR EACH 120 and 277-VOLT CIRCUIT.

B. HOMERUNS TO PANELBOARDS SHALL BE INSTALLED AS SHOWN ON THE PLANS. HOMERUNS MUST NOT BE COMBINED.

C. A SINGLE INSULATED EQUIPMENT GROUNDING CONDUCTOR (SIZED AS REQUIRED) MUST BE INSTALLED IN EACH CONDUIT RUN.

D. PENETRATIONS OF WALLS, WALL MEMBRANES AND CEILING SYSTEMS WHICH ARE REQUIRED TO HAVE A FIRE-RESISTANCE RATING MUST BE PROTECTED WITH THROUGH-PENETRATION FIRE STOPS, SUITABLE FOR THE METHOD OF PENETRATION. THROUGH-PENETRATION FIRE STOPS MUST BE TESTED USING ASTM E814, UL 1479 & C.B.C. SECTIONS. FOR FIRE RATING DETAILS, SEE ARCHITECTURAL SHEETS A6-7.1 THROUGH A6-7.9.

E. PENETRATIONS OF FULL HEIGHT INTERIOR WALL PARTITIONS MUST BE SEALED AIR- TIGHT. FOR FULL HEIGHT WALL PARTITIONS, SEE ARCHITECTURAL PLANS.

F. UNDERGROUND CONDUITS ENTERING THE BUILDING FROM OUTSIDE AND WITHIN THE BUILDING MUST BE INSTALLED BELOW THE STRUCTURAL PRIMARY/INTERMEDIATE GRADE BEAMS. FOR LOCATION OF STRUCTURAL PRIMARY/INTERMEDIATE GRADE BEAMS, UNDERGROUND CONDUITS STUB UP, AND PENETRATION DETAILS THROUGH FLOOR/BEAMS, REFER TO STRUCTURAL PLAN SHEETS.

G. OUTLET BOXES ON OPPOSITE SIDES OF FIRE-RESISTIVE WALLS SHALL BE SEPARATED BY A HORIZONTAL DISTANCE OF 24 INCHES (CBC SECTION 709.7).

CALIFORNIA STATE FIRE MARSHAL APPROVED

Approval of this plan does not authorize or approve any omission or deviation from applicable regulations. Final approval is subject to field inspection. One set of approved plans shall be available on the project site at all times.

Reviewed by: JOHN E WOODS, SDSFM

Approval date: 8-22-12

DIST.	COUNTY	ROUTE	POST MILES TOTAL PROJECT	SHEET NO.	TOTAL SHEETS
04	Ala	80	2.2	611	800

Catalino A. Enriquez 5-30-12
REGISTERED ELECTRICAL ENGINEER — DATE

REGISTERED PROFESSIONAL ENGINEER C. ENRIQUEZ No. 16944 Exp. 6-30-13 ELEC STATE OF CALIFORNIA

10-22-12
PLANS APPROVAL DATE

The State of California or its officers or agents shall not be responsible for the accuracy or completeness of scanned copies of this plan sheet.

ABBREVIATIONS

A	AMPERES
AC	ALTERNATING CURRENT
A/C	AIR CONDITIONING UNIT
ACS	AIR COMPRESSOR STARTER
AF	AMPERE FRAME
AL	ALARM LIGHT
ALC	ARMORED LIGHTING CONTROL CABLE
AT	ASTRONOMICAL
AT	AMPERE TRIP
ATS	AUTOMATIC TRANSFER SWITCH
AUX	AUXILIARY
BD	BUILDING DISCONNECT
BELCP	BUILDING EXTERIOR LIGHTING CONTROL PANEL
BRK	BREAKER
C	CONDUIT
CAT	CATEGORY
CB	CIRCUIT BREAKER
CCTV	CLOSE CIRCUIT TELEVISION
CKT	CIRCUIT
CFL	COMBINATION FAN LIGHT UNIT
CIDH	CAST-IN-DRILLED HOLE
CLCP	CANOPY LIGHTING CONTROL PANEL
COMM	COMMUNICATION
CRI	COLOR RENDERING INDEX
D	DEPTH
DC	DIRECT CURRENT
DMM	DIGITAL MULTI METER
DP	DUPLEX PLUG RECEPTACLE
(E)	EXISTING
ELCP	EXTERIOR LIGHTING CONTROL PANEL
FACP	FIRE ALARM CONTROL PANEL
FO	FIBER OPTIC
FPP	FIBER PATCH PANEL
FR	FAILURE RESET
G	GROUND
GD	GENERATOR DISCONNECT
GEC	GROUNDING ELECTRODE CONDUCTOR
GFCI	GROUND FAULT CIRCUIT INTERRUPTER
GFP	GROUND FAULT PROTECTION
GND	GROUND
GRS	GALVANIZED RIGID STEEL
GTAW	GAS TUNGSTEN ARC WELDING
HVAC	HEATING, VENTILATING AND AIR CONDITIONING
ID	IDENTIFICATION
IDF	INTERMEDIATE DISTRIBUTION FRAME
I/O	INPUT/OUTPUT
IFS	INTEGRATED FACILITIES SWITCHBOARD
JB	JUNCTION BOX
L	LENGTH
L	LIGHT
LAN	LOCAL AREA NETWORK
LC	LIGHTING CONTROL CABLE
LC	LIGHTING CONTACTOR
LCD	LIQUID CRYSTAL DISPLAY
LCP	LIGHTING CONTROL PANEL
LCPR	LIGHTING CONTROL PANEL RECESSED
LD	LIGHTING DISCONNECT
LDS	LEAK DETECTION SENSOR
LED	LIGHT EMITTING DIODE
LNP	LIGHTING NETWORK PANEL
LTG	LIGHTING
MAX	MAXIMUM
MB	MAIN BREAKER
MC	METALLIC CONDUIT
MCP	MOTOR CIRCUIT PROTECTOR
MDF	MAIN DISTRIBUTION FRAME
MH	MOUNTING HEIGHT
MIN	MINIMUM
MIS	MANAGEMENT INFORMATION SYSTEM
MMFO	MULTIMODE FIBER OPTIC
MPOE	MAIN POINT OF ENTRY
MSB	MAIN SWITCHBOARD
MT	EMPTY CONDUIT
(N)	NEW
NC	NORMALLY CLOSED
NIC	NOT IN CONTRACT
NO	NORMALLY OPEN
NO	NUMBER

ABBREVIATIONS

OL	OVERLOAD
OLTG	OUTSIDE LIGHTING
OS	OCCUPANCY SENSOR
OWSJ	OPEN WEB STEEL JOIST
P	POLE
PAF	POWER ADJUSTMENT FACTOR
PB	PULL BOX
PB	PUSH BUTTON
PCB	PRINTED CIRCUIT BOARD
PES	PHOTOELECTRIC SENSOR
PG&E	PACIFIC GAS AND ELECTRIC COMPANY
PL	PILOT LIGHT
PP	PATCH PANEL
PS	POWER SUPPLY
PS	PRESSURE SWITCH
PTS	POWER TRANSFER SWITCH
PTZ	PAN TILT AND ZOOM
PV	PHOTOVOLTAIC
PVC	POLYVINYL CHLORIDE
RES	RESISTOR
RMC	RIGID METAL CONDUIT
RSC	RIGID STEEL CONDUIT
RTB	RADIO TERMINAL BOARD
S	STARTER COIL
SCCR	SHORT CIRCUIT CURRENT RATING
SD	SERVICE DISCONNECT
SF	SQUARE FEET
SFR	SEAL FAILURE RELAY
SL	SUMP LIGHT
SMFO	SINGLE MODE FIBER OPTIC
SPD	SURGE PROTECTION DEVICE
SPR	STANDBY POWER RECEPTACLE
SS	SELECTOR SWITCH
ST	STARTER
STP	SHIELDED TWISTED PAIR
SV	SOLENOID VALVE
T	TRANSFORMER
TB	TERMINAL BLOCK
TC	TIME CLOCK
TLS	TANK LEVEL SENSOR
TM	TIME METER
TOT	TOTAL
TS	TIMER SWITCH
TSW	TEST SWITCH
TTB	TELEPHONE TERMINAL BOARD
TYP	TYPICAL
VPP	VOICE PATCH PANEL
UL	UNDERWRITERS LABORATORIES
UTP	UNSHIELDED TWISTED PAIR
UPS	UNINTERRUPTIBLE POWER SUPPLY
W	WIDTH
W	WATTS
WB	WORKBENCH
WLS	WATER LEVEL SWITCH
WP	WEATHERPROOF
Z	ZONE

	BY	CHECKED
DESIGN	Catalino Enriquez	J.S.S./H.Abdelsayed
DETAILS	Ed D. Tapalla / Dali Zhou	Catalino Enriquez
QUANTITIES	Catalino Enriquez	J.S.S./H.Abdelsayed

STATE OF CALIFORNIA
DEPARTMENT OF TRANSPORTATION

DIVISION OF ENGINEERING SERVICES
ELECTRICAL-MECHANICAL-WATER AND WASTEWATER DESIGN

BRIDGE NO. 33M5785
POST MILE 2.2

SFOBB MAINTENANCE COMPLEX

LEGEND

SHEET **EE0-0.0**

TAEMWW Imperial Rev. 7/10

ORIGINAL SCALE IN INCHES FOR REDUCED PLANS 0 1 2 3

UNIT 3596
PROJECT NUMBER & PHASE 04120006661
EA 014081

DISREGARD PRINTS BEARING EARLIER REVISION DATES → 10/5/11 02/22/12 5/28/12 5/30/12

REVISION DATES (PRELIMINARY STAGE ONLY) SHEET OF

25-OCT-2012 10:54

ee0_0.00.dgn

DIST.	COUNTY	ROUTE	POST MILES TOTAL PROJECT	SHEET NO.	TOTAL SHEETS
04	Ala	80	2.2	612	800

REGISTERED ELECTRICAL ENGINEER — 5-30-12 DATE

REGISTERED PROFESSIONAL ENGINEER J. AMIRAZODI No. 17509 Exp. 6-30-13 ELEC STATE OF CALIFORNIA

10-22-12
PLANS APPROVAL DATE

The State of California or its officers or agents shall not be responsible for the accuracy or completeness of scanned copies of this plan sheet.

CALIFORNIA STATE FIRE MARSHAL APPROVED

Approval of this plan does not authorize or approve any omission or deviation from applicable regulations. Final approval is subject to field inspection. One set of approved plans shall be available on the project site at all times.

Reviewed by: JOHN E WOODS, SDSFM

Approval date: 8-22-12

General Notes:

A. *Provide and install intermediate electrical pull boxes/vaults between existing PG&E power pole and transformer. Number, size and type as required by PG&E. Submit details to PG&E for approval.*

B. *For Electrical System Single Line Diagram, see EE0-1.1.*

C. *All base elbows and vertical risers through concrete slab shall be PVC coated rigid steel conduit. Wrap joints in contact with soil with two layers of 20 mil thick pipe wrapping tape.*

D. *Unless otherwise noted or required by local utility company, slurry type back filling for underground conduit system shall not be allowed.*

E. *For conduit and conductor/cable schedules, see EE0-1.11 and EE0-1.12.*

F. *For exact location of light pole, see EE0-0.3.*

G. *Underground conduits entering the building from outside and within the building shall be installed below the structural primary/intermediate grade beams. For location of structural primary/intermediate grade beams, underground conduits stub up, and penetration details through floor/beams, refer to Structural Plan sheets.*

Notes:

1. *Primary power conduit system for PG&E. Submit details to PG&E for approval.*
2. *Electrical Equipment Concrete Pad. For Detail see EE0-1.8.*
3. *This No. 6 communication pull box is the same as shown on EE0-05 and shown for clarity.*
4. *For camera mounting details on light pole, See Detail A on EE0-0.11.*
5. *To junction box. For continuation, see EE1-11.1.*
6. *For continuation, see EE0-0.7.*
7. *Pole mounted, outdoor, PTZ, dome camera.*
8. *Existing E85 fuel tank consists of fuel tank, fuel control terminal and underground and above ground conduit and conductors system. Existing tank and fuel terminal is supplied from existing East Bay substation. For location of East Bay substation, refer to plan sheet E-1. Perform the following:*
   - *Identify circuit supplying the fuel tank system;*
   - *Disconnect conductors and mark the circuit breaker as spare;*
   - *Remove all aboveground and underground conductors;*
   - *Remove all exposed conduits inclusive of all conduits mounted on the tank, and abandon underground conduits;*
   - *Remove fuel control terminal and associated concrete pad. Patch cavity to match surrounding surfaces.*

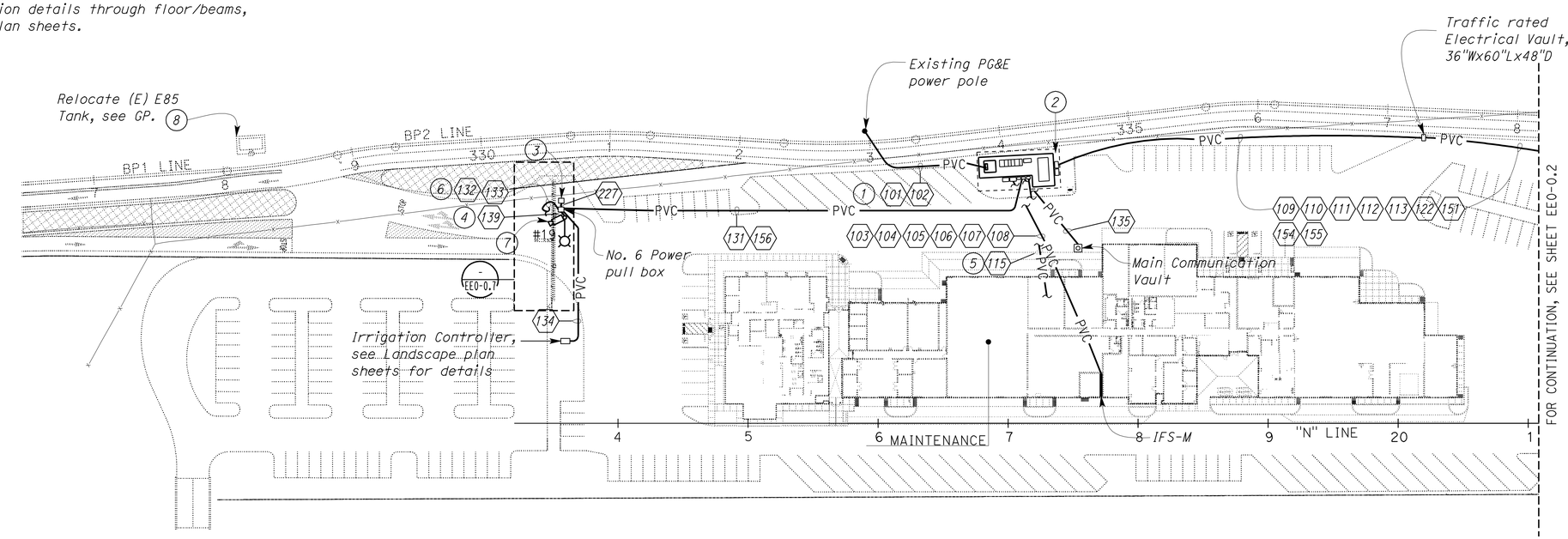

SITE PLAN

SCALE 1" = 50'-0"

THIS DRAWING ACCURATE FOR ELECTRICAL WORK ONLY

DESIGN SUPERVISOR Jatwinder S Sandhu
DESIGN ENGINEER

	BY	CHECKED
DESIGN	Javid Amirazodi	J.S. Sandhu/J.R. Lacy
DETAILS	Ed D. Tapalla 10/11	Javid Amirazodi
QUANTITIES	Javid Amirazodi	J.S. Sandhu/J.R. Lacy

STATE OF CALIFORNIA DEPARTMENT OF TRANSPORTATION

DIVISION OF ENGINEERING SERVICES ELECTRICAL-MECHANICAL-WATER AND WASTEWATER DESIGN

BRIDGE NO. 33M5785
POST MILE 2.2

SFOBB MAINTENANCE COMPLEX

POWER SITE PLAN 1

SHEET **EE0-0.1**

TAEMWW Imperial Rev. 7/10

ORIGINAL SCALE IN INCHES FOR REDUCED PLANS 0 1 2 3

UNIT 3596
PROJECT NUMBER & PHASE 04120006661
EA 014081

DISREGARD PRINTS BEARING EARLIER REVISION DATES → 5/30/12

REVISION DATES (PRELIMINARY STAGE ONLY) SHEET OF

25-OCT-2012 10:54

ee0_0.01.dgn

DIST.	COUNTY	ROUTE	POST MILES TOTAL PROJECT	SHEET NO.	TOTAL SHEETS
04	Ala	80	2.2	613	800

Javid Amirazodi 5-30-12
REGISTERED ELECTRICAL ENGINEER DATE

REGISTERED PROFESSIONAL ENGINEER J. AMIRAZODI No. 17509 Exp. 6-30-13 ELEC STATE OF CALIFORNIA

10-22-12
PLANS APPROVAL DATE

The State of California or its officers or agents shall not be responsible for the accuracy or completeness of scanned copies of this plan sheet.

CALIFORNIA STATE FIRE MARSHAL APPROVED
Approval of this plan does not authorize or approve any omission or deviation from applicable regulations. Final approval is subject to field inspection. One set of approved plans shall be available on the project site at all times.
Reviewed by: JOHN E WOODS, SDSFM
Approval date: 8-22-12

General Notes:

A. *All base elbows and vertical risers through concrete slab shall be PVC coated rigid steel conduit. Wrap joints in contact with soil with two layers of 20 mil thick pipe wrapping tape.*

B. *All pull boxes on this sheet shall be number 5 traffic rated pull box, unless otherwise noted.*

C. *Unless otherwise noted or required by local Utility Company, slurry type back filling for underground conduit system shall not be allowed.*

D. *For conduit and conductor/cable schedule, see EE0-1.11 and EE0-1.12.*

E. *Panel 2WA is located inside IFS-W, for exact location see EE4-1.*

F. *For exact location of light poles, see EE0-0.4.*

Notes:

1. *For continuation, see EE0-0.6.*
2. *For camera mounting details on light pole, See Detail A on EE0-0.11.*
3. *To Pump Control Box inside the Fuel Log Room. Change conduit to PVC coated galvanized steel conduit inside the room and install conduit seal. For continuation and exact location of Pump Control Box, see EE2-1.*
4. *For continuation, see EE0-0.8.*
5. *Pole mounted, outdoor, fixed, dome camera.*
6. *Pole mounted, outdoor, PTZ, dome camera.*

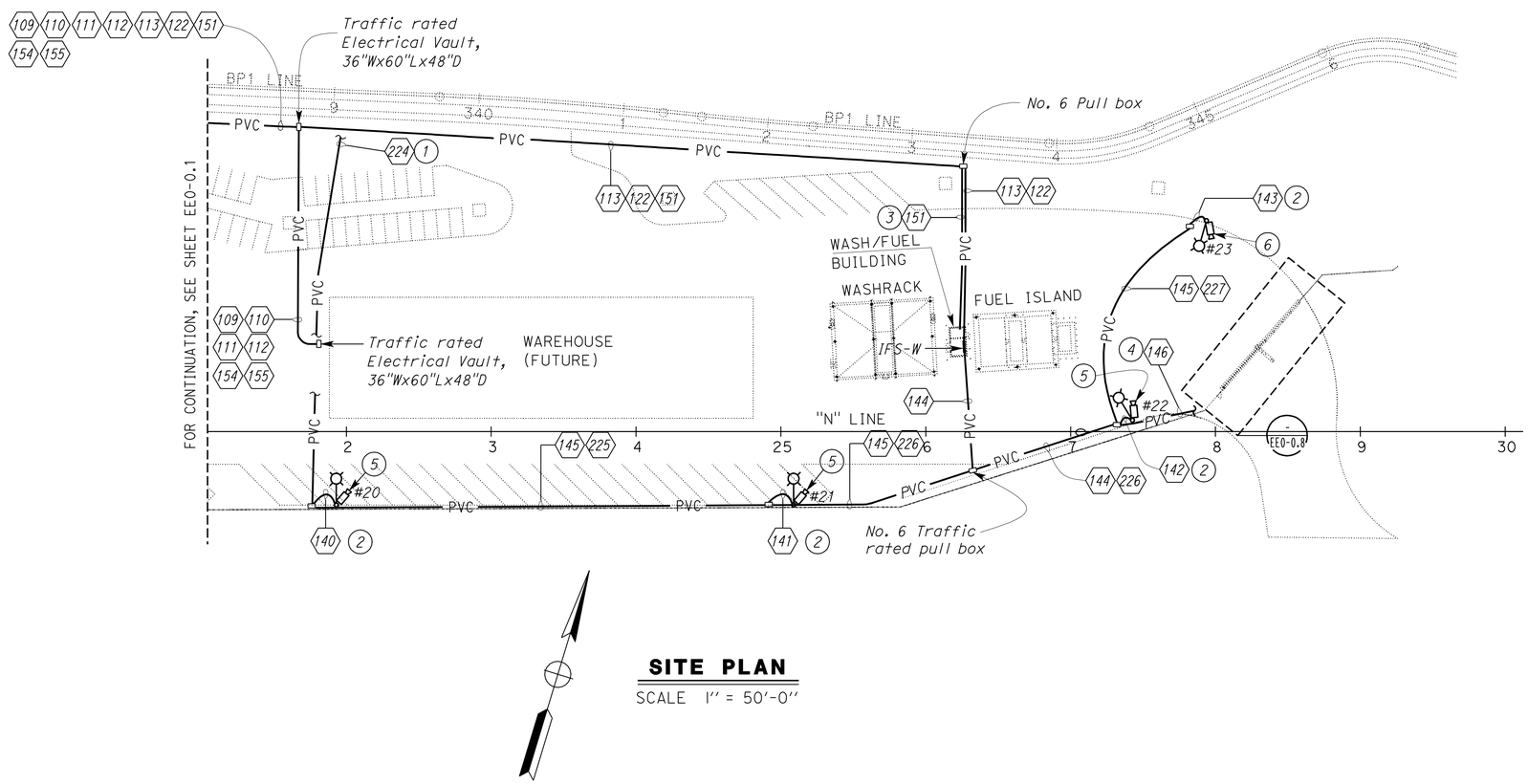

SITE PLAN
SCALE 1" = 50'-0"

THIS DRAWING ACCURATE FOR ELECTRICAL WORK ONLY

	BY	CHECKED
DESIGN	Javid Amirazodi	J.S. Sandhu/J.R. Lacy
DETAILS	Ed D. Tapalla 10/11	Javid Amirazodi
QUANTITIES	Javid Amirazodi	J.S. Sandhu/J.R. Lacy

STATE OF CALIFORNIA DEPARTMENT OF TRANSPORTATION

DIVISION OF ENGINEERING SERVICES
ELECTRICAL-MECHANICAL-WATER AND WASTEWATER DESIGN

BRIDGE NO. 33M5785
POST MILE 2.2

SFOBB MAINTENANCE COMPLEX
POWER SITE PLAN 2

SHEET **EE0-0.2**

TAEMWW Imperial Rev. 7/10

ORIGINAL SCALE IN INCHES FOR REDUCED PLANS 0 1 2 3

UNIT 3596
PROJECT NUMBER & PHASE 04120006661
EA 014081

DISREGARD PRINTS BEARING EARLIER REVISION DATES → 5/30/12
REVISION DATES (PRELIMINARY STAGE ONLY) SHEET OF

25-OCT-2012 10:55
ee0_0.02.dgn

DIST.	COUNTY	ROUTE	POST MILES TOTAL PROJECT	SHEET NO.	TOTAL SHEETS
04	Ala	80	2.2	614	800

Jaswinder S Gill 5-30-12
REGISTERED ELECTRICAL ENGINEER — DATE

REGISTERED PROFESSIONAL ENGINEER J. S. GILL No. 18551 Exp. 12-31-12 ELEC STATE OF CALIFORNIA

10-22-12
PLANS APPROVAL DATE

The State of California or its officers or agents shall not be responsible for the accuracy or completeness of scanned copies of this plan sheet.

CALIFORNIA STATE FIRE MARSHAL APPROVED
Approval of this plan does not authorize or approve any omission or deviation from applicable regulations. Final approval is subject to field inspection. One set of approved plans shall be available on the project site at all times.
Reviewed by: JOHN E WOODS, SDSFM
Approval date: 8-22-12

Notes:

1. Electrical equipment concrete pad. For details, see sheet EE0-1.8.
2. 1"C, 4#6, 1#8G (IFS-MSB Ckt. No. 18). Conductor numbers are 18A, 18B, 18C and 18N.
3. ¾"C, PVC, 2#8, 1#10G to lighting standard.
4. Lighting Standard C. See details on sheet EE0-0.11.
5. 1"C, 3#6, 1#8G. Conductor numbers are 18B, 18C and 18N.
6. Lighting Standard E. See details on sheet EE0-0.10.
7. To pull box near electrical equipment concrete pad. For continuation, see sheet EE0-1.8.
8. 1"C, 4#6, 1#8G (IFS-MSB Ckt. No. 17). Conductor numbers are 17A, 17B, 17C and 17N.
9. * ¾"C, PVC coated RSC, 2#8, 1#10G. Conductor numbers are 17A and 17N.
   * 1"C, PVC coated RSC, 5#12, 5#14, 1#12G. Conductor numbers are 17N, 17S1A, 17S1B, 17S2C, 17S2D, 17D1A, 17D1B, 17D2C, 17D2D & 17DC.
10. Lighting Standard B (Bridge Lights). See Details P on Standard Plans Dated May 2006, ES-9E. Install No. 8 Pull Box for each Lighting Standard.
11. ¾"C, PVC, 2#12, 2#14, 1#12G to the flag pole lights. Conductor number are 114S2D, N8AB11, 114D2D & 114DC. See Architectural plans for flag pole location. Location of the flag pole lights will be determined in the field based on the flag pole manufacturer recommendations.
12. (2) 2"C, MT.
13. ¾"C, 2#12, 2#14, 1#12G. Conductor numbers are 114S2C, N8AB11, 114D2C & 114DC.
14. ¾"C, 3#12, 3#14, 1#12G. Conductor numbers are 114S2C, 114S2D, N8AB11, 114D2C, 114D2D & 114DC.
15. See sheet EE1-3.19 for BELCP114 location & continuation. See sheet EE1-3.27 for BELCP114 schematic.
16. ¾"C, 2#12, 2#14, 1#12G. Conductor numbers are 148S2C, N8MB15, 148D2C & 148DC.
17. See sheet EE1-3.20 for BELCP148 location & continuation. See sheet EE1-3.27 for BELCP148 schematic.
18. (2) LED7E-1x20. In-ground flag pole floodlight. See Detail 3 on sheet EE0-0.10 to install flag pole floodlight at a distance and angle as recommended by the flagpole manufacturer.
19. Exterior Lighting Control Panel. Mount at height of 5'-6". See Detail 5 on sheet EE1-3.30 for mounting. Mount PEC on the panel as shown with a nipple. See sheet EE1-3.27 for the schematic.
20. 1"C, 3#12, 3#14, 1#12G. Conductor numbers are 17N, 17S1A, 17S1B, 17D1A, 17D1B & 17DC to bridge lights.
21. 1"C, 3#6, 1#8G (IFS-MSB Ckt. 17). Conductor numbers are 17B, 17C and 17N.
22. Not used.
23. 1"C, 1 lighting control cable to LNP-V inside IFS-V.
24. See sheet EE1-3.20 for JB location inside Room No. 192. See sheet EE1-3.18 for LNP-V location and schematic.
25. 1"C, 2#6, 1#8G. Conductor numbers are 18B & 18N.
26. Conduit seal at 18" above finished floor. Conduit seal also shown on EE1-3.20
27. 2"C, 4#6, 1#8G (IFS-MSB Ckt. No. 18). Conductor numbers are 18A, 18B, 18C and 18N.
28. 2"C, 4#6, 1#8G (IFS-MSB Ckt. No. 17). Conductor numbers are 17A, 17B, 17C and 17N.

General Notes:

A. Alphanumeric characters 17A, 17B, 17C, 18A, 18B and 18C adjacent to the Lighting Standards, identifies the ungrounded phase conductor to use for wiring the Lighting Standard.

B. Unless otherwise noted, all pull boxes shown on this sheet are No. 5 traffic rated pull boxes.

C. Unless otherwise noted, all the Lighting Standards shown on this sheet are Lighting Standard A. See sheet EE0-0.10 for details.

D. A lower case letter adjacent to the lighting Standard E lighting fixture graphic symbol denotes that fixture is controlled by a similarly marked switching relays located inside the Building Exterior Lighting Control Panel (BELCP). For details, see BELCP schematics.

E. See sheet EE1-3.29 for exterior Lighting Fixture Schedule.

F. See sheet EE1-3.19 & EE1-3.20 for building mounted exterior lights.

G. A lower case letter adjacent to the lighting Standard B lighting fixture graphic symbol denotes that fixture is controlled by a similarly marked switching relays located inside the Exterior Lighting Control Panel (ELCP). For details, see ELCP schematics.

H. Unless otherwise noted or required by local utility company, slurry type backfill for conduit system shall not be allowed.

I. For conduit system to CCTV camera, see sheet EE0-0.1.

J. All conduits mounted exposed on bridge and bridge column shall be rigid steel conduits. Install expansion fittings across bridge joint.

K. All elbows and risers inside the building and outside risers shall be PVC coated galvanized steel conduits. Wrap joints in touch with soil with two layers of pipe wrapping tape.

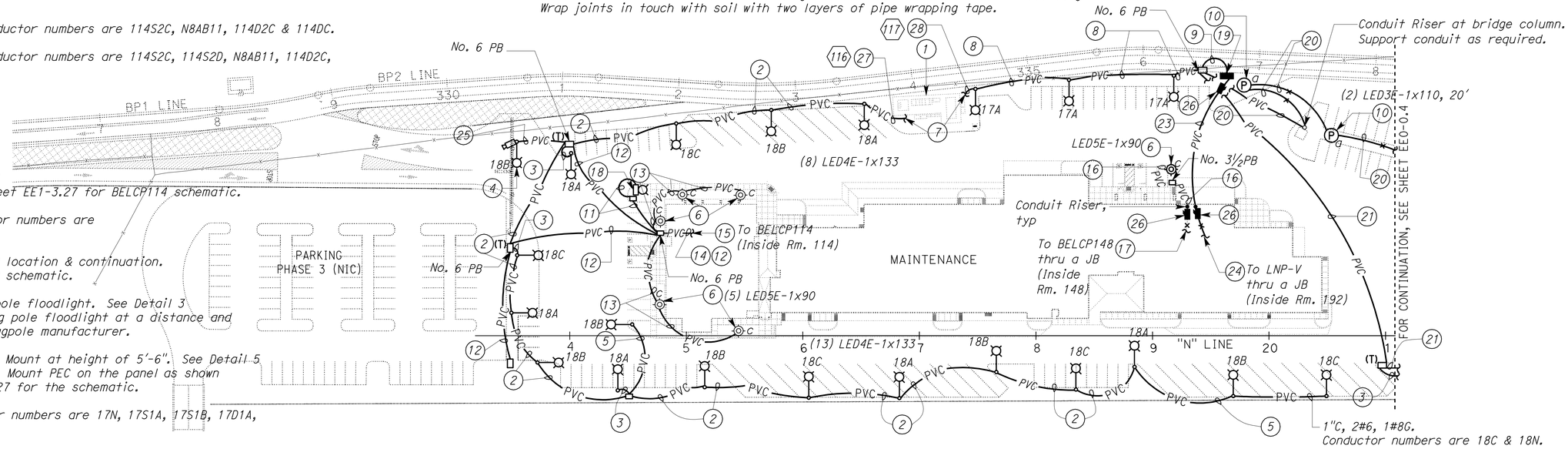

SITE PLAN
SCALE 1" = 50'-0"

L. Unless otherwise noted, all Lighting Standard A & Lighting Standard C lights shown here shall be controlled by fixture integrated motion sensor and photoelectric cell. Lights output shall be dimmed to 50% of maximum output when there is no motion detected.

M. ⬡ Symbol next to a plan note represents a conduit, repeated here for clarity only. For conduit and conductor/cable schedules, see sheets EE0-1.11 and EE0-1.12.

N. Underground conduits entering the building from outside and within the building shall be installed below the structural primary/intermediate grade beams. For location of structural primary/intermediate grade beams, underground conduits stub up, and penetration details through floor/beams, refer to Structural Plan sheets.

THIS DRAWING ACCURATE FOR ELECTRICAL WORK ONLY

	BY	CHECKED
DESIGN	Jaswinder Gill	Christine Mamaril
DETAILS	Ed D. Tapalla/Dali Zhou	Jaswinder Gill
QUANTITIES	Jaswinder Gill	Christine Mamaril

STATE OF CALIFORNIA
DEPARTMENT OF TRANSPORTATION

DIVISION OF ENGINEERING SERVICES
ELECTRICAL-MECHANICAL-WATER AND WASTEWATER DESIGN

BRIDGE NO. 33M5785
POST MILE 2.2

SFOBB MAINTENANCE COMPLEX
AREA LIGHTING SITE PLAN 1

SHEET **EE0-0.3**

TAEMWW Imperial Rev. 7/10

ORIGINAL SCALE IN INCHES FOR REDUCED PLANS 0 1 2 3

UNIT 3596
PROJECT NUMBER & PHASE 04120006661
EA 014081

DISREGARD PRINTS BEARING EARLIER REVISION DATES → 10/27/11 3/23/12 5/4/12 5/30/12

REVISION DATES (PRELIMINARY STAGE ONLY) SHEET OF

25-OCT-2012 10:55
ee0_0.03.dgn

DIST.	COUNTY	ROUTE	POST MILES TOTAL PROJECT	SHEET NO.	TOTAL SHEETS
04	Ala	80	2.2	615	800

REGISTERED ELECTRICAL ENGINEER — 5-30-12 DATE

REGISTERED PROFESSIONAL ENGINEER J. S. GILL No. 18551 Exp. 12-31-12 ELEC STATE OF CALIFORNIA

10-22-12
PLANS APPROVAL DATE

The State of California or its officers or agents shall not be responsible for the accuracy or completeness of scanned copies of this plan sheet.

CALIFORNIA STATE FIRE MARSHAL APPROVED
Approval of this plan does not authorize or approve any omission or deviation from applicable regulations. Final approval is subject to field inspection. One set of approved plans shall be available on the project site at all times.
Reviewed by: JOHN E WOODS, SDSFM
Approval date: 8-22-12

Notes:

1. 1"C, 3#6, 1#8G (IFS-MSB Ckt. No. 17). Conductor numbers are 17B, 17C and 17N.
2. 1"C, 2#6, 1#8G. Conductor numbers are 17B & 17N.
3. ¾"C, PVC, 2#8, 1#10G to Lighting Standard.
4. Lighting Standard B (Bridge Lights). See Detail P on Standard Plans Dated May 2006, ES-9E. Install No. 8 Pull Box for each Lighting Standard.
5. Lighting Standard C. See details on sheet EE0-0.11.
6. 2"C, MT. See sheet EE4-2 for continuation.
7. 1"C, 3#12, 3#14, 1#12G. Conductor numbers are 17N, 17S1A, 17S1B, 17D1A, 17D1B & 17DC.
8. ¾"C, 2#12, 2#14, 1#12G. Conductor numbers are 17N, 17S1A, 17D1A & 17DC.

General Notes:

A. Alphanumeric characters 17B and 17C adjacent to the Lighting Standards, identifies the ungrounded phase conductor to use for wiring the Lighting Standard.

B. Unless otherwise noted, all pull boxes shown on this sheet are No. 5 traffic rated pull boxes.

C. Unless otherwise noted, all the Lighting Standards shown on this sheet are Lighting Standard A. See sheet EE0-0.10 for details.

D. A lower case letter adjacent to the lighting Standard B lighting fixture graphic symbol denotes that fixture is controlled by a similarly marked switching relays located inside the Exterior Lighting Control Panel (ELCP). For details, see ELCP schematics.

E. See sheet EE1-3.29 for exterior Lighting Fixture Schedule.

F. See sheet EE1-3.19 & EE1-3.20 for building mounted exterior lights.

G. Unless otherwise noted or required by local utility company, slurry type backfill for conduit system shall not be allowed.

H. For conduit system to CCTV camera, see sheet EE0-0.2.

I. All conduits mounted exposed on bridge and bridge column shall be rigid steel conduits. Install expansion fittings across any bridge joints.

J. All elbows and risers inside the building shall be PVC coated galvanized steel conduits. Wrap joints in touch with soil with two layers of pipe wrapping tape.

K. Unless otherwise noted, all Lighting Standard A & Lighting Standard C lights shown here shall be controlled by fixture integrated motion sensor and photoelectric cell. Lights output shall be dimmed to 50% of maximum output when there is no motion detected.

L. Underground conduits entering the building from outside and within the building shall be installed below the structural primary/intermediate grade beams. For location of structural primary/intermediate grade beams, underground conduits stub up, and penetration details through floor/beams, refer to Structural Plan sheets.

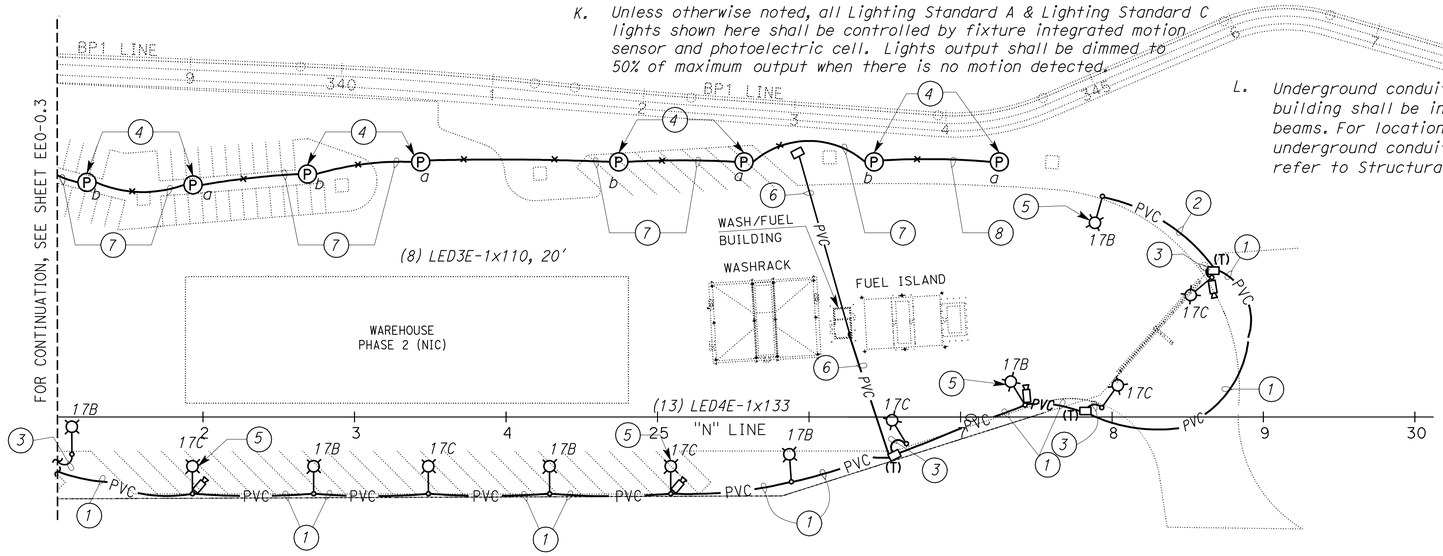

SITE PLAN
SCALE 1" = 50'-0"

THIS DRAWING ACCURATE FOR ELECTRICAL WORK ONLY

	BY	CHECKED
DESIGN	Jaswinder Gill	Christine Mamaril
DETAILS	Ed D. Tapalla 10/11	Jaswinder Gill
QUANTITIES	Jaswinder Gill	Christine Mamaril

STATE OF CALIFORNIA DEPARTMENT OF TRANSPORTATION

DIVISION OF ENGINEERING SERVICES
ELECTRICAL-MECHANICAL-WATER AND WASTEWATER DESIGN

BRIDGE NO. 33M5785
POST MILE 2.2

SFOBB MAINTENANCE COMPLEX
AREA LIGHTING SITE PLAN 2

SHEET **EE0-0.4**

TAEMWW Imperial Rev. 7/10

ORIGINAL SCALE IN INCHES FOR REDUCED PLANS 0 1 2 3

UNIT 3596
PROJECT NUMBER & PHASE 04120006661
EA 014081

DISREGARD PRINTS BEARING EARLIER REVISION DATES → REVISION DATES (PRELIMINARY STAGE ONLY) 10/7/11 3/23/12 5/14/12 5/30/12 8/20/12

SHEET OF

25-OCT-2012 10:55

ee0_0.04.dgn

DIST.	COUNTY	ROUTE	POST MILES TOTAL PROJECT	SHEET NO.	TOTAL SHEETS
04	Ala	80	2.2	616	800

REGISTERED ELECTRICAL ENGINEER — 5-30-12 DATE

REGISTERED PROFESSIONAL ENGINEER J. AMIRAZODI No. 17509 Exp. 6-30-13 ELEC STATE OF CALIFORNIA

10-22-12
PLANS APPROVAL DATE

The State of California or its officers or agents shall not be responsible for the accuracy or completeness of scanned copies of this plan sheet.

CALIFORNIA STATE FIRE MARSHAL APPROVED

Approval of this plan does not authorize or approve any omission or deviation from applicable regulations. Final approval is subject to field inspection. One set of approved plans shall be available on the project site at all times.

Reviewed by: JOHN E WOODS, SDSFM

Approval date: 8-22-12

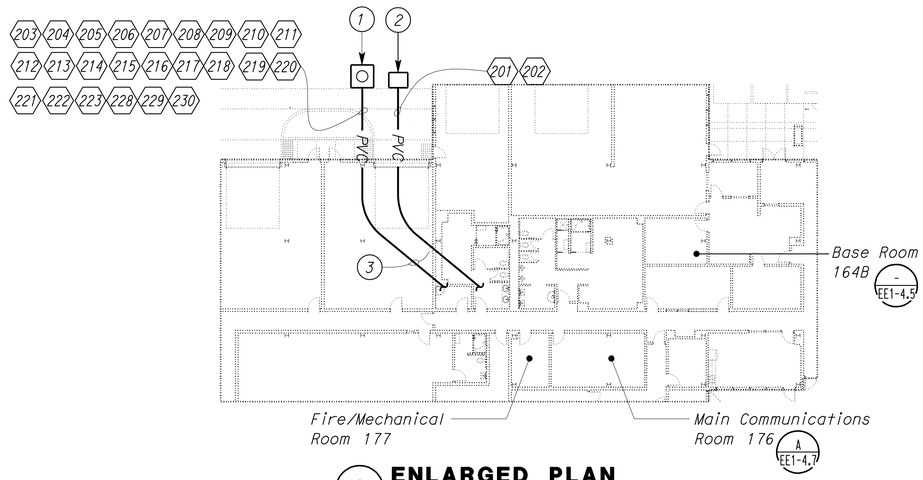

A ENLARGED PLAN
SCALE 1" = 20'-0"

General Notes:

A. All base elbows and vertical risers through concrete slab shall be PVC coated rigid steel conduit. Wrap joints in contact with soil with two layers of 20 mil thick pipe wrapping tape.

B. Unless otherwise noted or required by local Utility Company, slurry type backfilling for underground conduit system shall not be allowed.

C. For conduit and conductor/cable schedule, see EE0-1.11 and EE0-1.12.

D. Underground conduits entering the building from outside and within the building shall be installed below the structural primary/intermediate grade beams. For location of structural primary/intermediate grade beams, underground conduits stub up, and penetration details through floor/beams, refer to Structural Plan sheets.

Notes:

1. 6'Wx6'Lx6'D Main Communication Vault. For Detail, see EE0-0.9.
2. AT&T traffic rated vault. Contractor shall provide and install traffic rated vault; size and type as required by the Telephone Utility Company.
3. To Main Communications Room 176, Fire/Mechanical Room 177 and Base Room 164B. For continuation, See EE1-4.5, EE1-4.7 and EE1-6.0.
4. 2"C, PVC, between AT&T Vault and sump pump area inside the Communication Vault. For Detail, see MP4-9.
5. 8" Fire water line w/backflow preventer, post Indicator Valve, Fire Department Connection and Detector Check Valve. See Mechanical Plan sheets for exact locations.
6. Connect control cables to Fire Department Detector Check Valve tamper switch as required.
7. For continuation, see EE0-0.7.
8. This No. 6 power pull box is the same as shown on EE0-01 and shown for clarity.
9. 1"C, control cables as required. For continuation, see EE1-6.0.

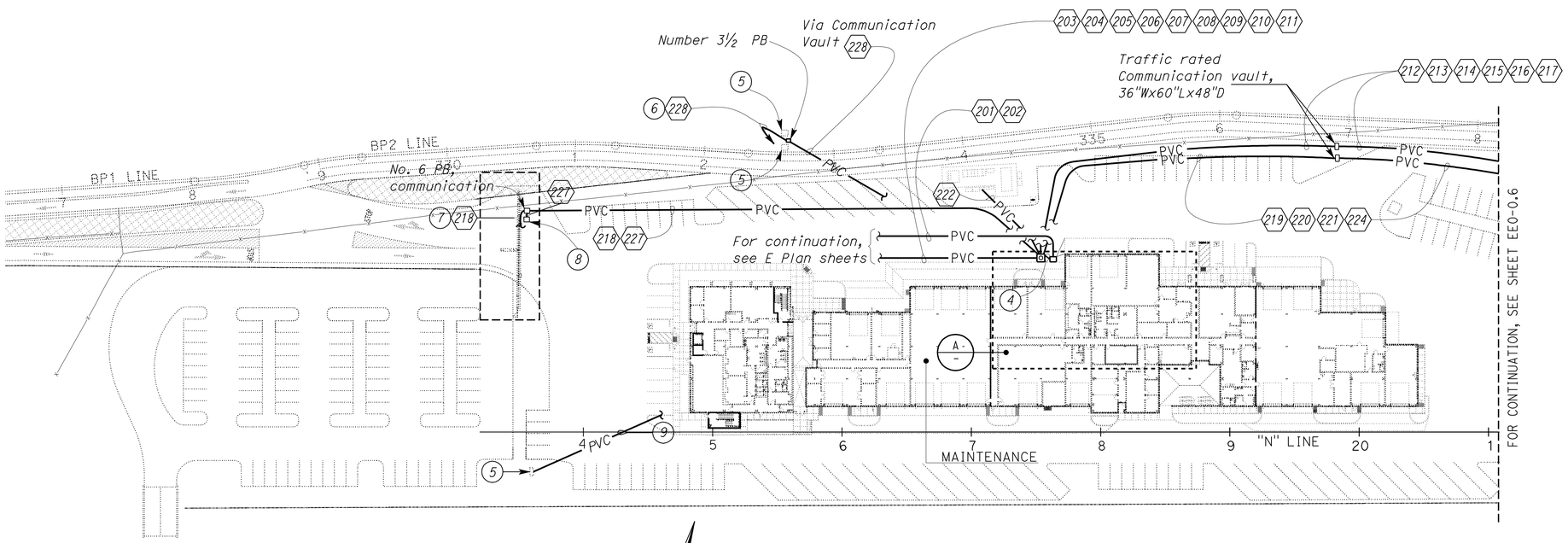

SITE PLAN
SCALE 1" = 50'-0"

THIS DRAWING ACCURATE FOR ELECTRICAL WORK ONLY

	BY	CHECKED
DESIGN	Javid Amirazodi	J.S. Sandhu/J.R. Lacy
DETAILS	Ed D. Tapalla 10/11	Javid Amirazodi
QUANTITIES	Javid Amirazodi	J.S. Sandhu/J.R. Lacy

STATE OF CALIFORNIA
DEPARTMENT OF TRANSPORTATION

DIVISION OF ENGINEERING SERVICES
ELECTRICAL-MECHANICAL-WATER AND WASTEWATER DESIGN

BRIDGE NO. 33M5785
POST MILE 2.2

SFOBB MAINTENANCE COMPLEX
COMMUNICATION SITE PLAN 1

SHEET **EE0-0.5**

TAEMWW Imperial Rev. 7/10

ORIGINAL SCALE IN INCHES FOR REDUCED PLANS 0 1 2 3

UNIT 3596
PROJECT NUMBER & PHASE 04120006661
EA 014081

DISREGARD PRINTS BEARING EARLIER REVISION DATES → 5/30/12
REVISION DATES (PRELIMINARY STAGE ONLY) SHEET OF

25-OCT-2012 10:55
ee0_0.05.dgn

DIST.	COUNTY	ROUTE	POST MILES TOTAL PROJECT	SHEET NO.	TOTAL SHEETS
04	Ala	80	2.2	617	800

REGISTERED ELECTRICAL ENGINEER — 5-30-12 DATE

REGISTERED PROFESSIONAL ENGINEER J. AMIRAZODI No. 17509 Exp. 6-30-13 ELEC STATE OF CALIFORNIA

10-22-12
PLANS APPROVAL DATE

The State of California or its officers or agents shall not be responsible for the accuracy or completeness of scanned copies of this plan sheet.

CALIFORNIA STATE FIRE MARSHAL APPROVED
Approval of this plan does not authorize or approve any omission or deviation from applicable regulations. Final approval is subject to field inspection. One set of approved plans shall be available on the project site at all times.
Reviewed by: JOHN E WOODS, SDSFM
Approval date: 8-22-12

General Notes:

A. *All base elbows and vertical risers through concrete slab shall be PVC coated rigid steel conduit. Wrap joints in contact with soil with two layers of 20 mil thick pipe wrapping tape.*

B. *All pull boxes on this sheet shall be number 5 traffic rated pull box, unless otherwise noted.*

C. *Unless otherwise noted or required by local utility company, slurry type backfilling for underground conduit system shall not be allowed.*

D. *For conduit and conductor/cable schedule, see EE0-1.11 and EE0-1.12.*

Notes:

1. *For continuation, see EE0-0.2.*
2. *To plywood board inside the Fuel Log Room. Terminate voice and data cables on Communication outlet and terminate FO cable on Fule Log Room fiber patch panel, using type SC connectors. For details, see EE2-1.*
3. *For continuation, see EE0-0.8.*

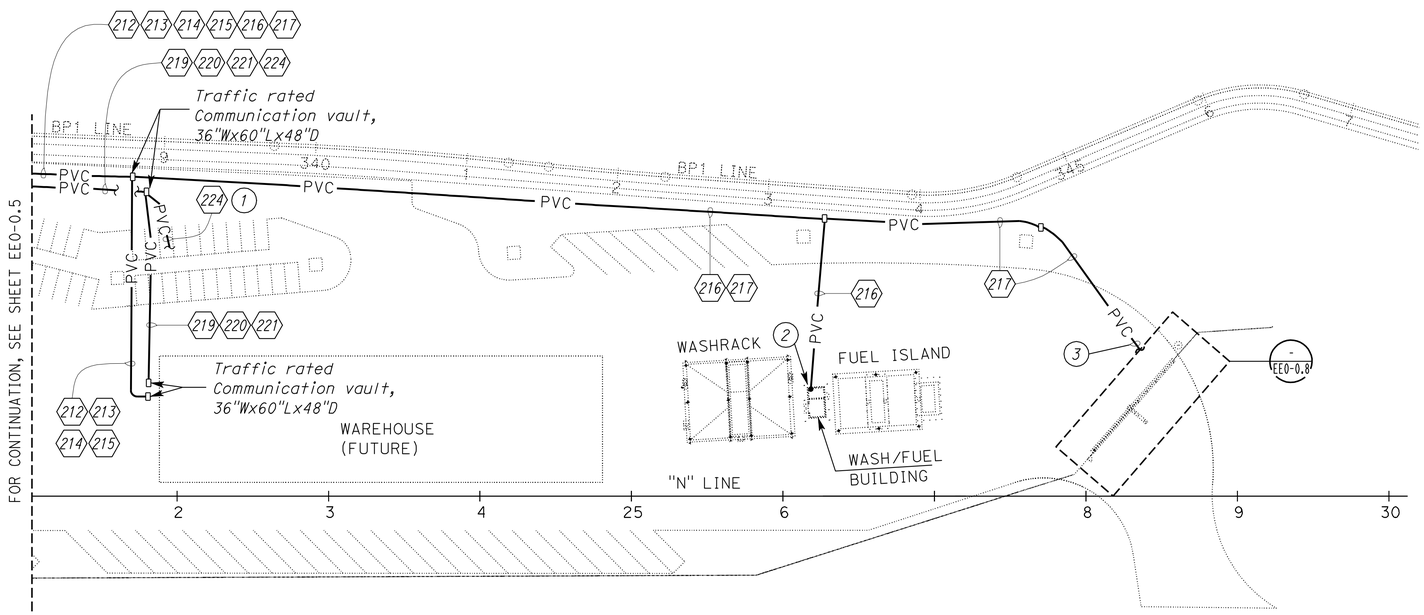

SITE PLAN
SCALE 1" = 50'-0"

THIS DRAWING ACCURATE FOR ELECTRICAL WORK ONLY

	BY	CHECKED
DESIGN	Javid Amirazodi	J.S. Sandhu/J.R. Lacy
DETAILS	Ed D. Tapalla 10/11	Javid Amirazodi
QUANTITIES	Javid Amirazodi	J.S. Sandhu/J.R. Lacy

STATE OF CALIFORNIA DEPARTMENT OF TRANSPORTATION

DIVISION OF ENGINEERING SERVICES
ELECTRICAL-MECHANICAL-WATER AND WASTEWATER DESIGN

BRIDGE NO. 33M5785
POST MILE 2.2

SFOBB MAINTENANCE COMPLEX
COMMUNICATION SITE PLAN 2

SHEET EE0-0.6

TAEMWW Imperial Rev. 7/10

ORIGINAL SCALE IN INCHES FOR REDUCED PLANS 0 1 2 3

UNIT 3596
PROJECT NUMBER & PHASE 04120006661
EA 014081

DISREGARD PRINTS BEARING EARLIER REVISION DATES → 5/30/12
REVISION DATES (PRELIMINARY STAGE ONLY) SHEET OF

25-OCT-2012 10:55
ee0_0.06.dgn

General Notes:

A. Location of gate operators, loop detectors, and gate digital card readers are arbitrary only. Exact locations shall be as per equipment and device manufacturer recommendations and shall be verified in the field.

B. Gate operators shall be installed complete with primary and secondary entrapment protection requirements in conformance with Class 3, UL 325 Entrapment Protection. Entrapment protection devices and its connection are not shown on the plans. Provide conduit, conductors or cables and other appurtenances for those that are not shown but are required to operate the gate system safely.

C. Gate operator shall be, 208 Volts, 1-phase, continuous duty type motor, that can operate the gate furnished

D. Provide and install safety opening device for Fire Department. The type of device shall be as required by the State Fire Marshal. Install device at a location as directed by the State Fire Marshal and the Engineer. Provide tamper switch integral to safety opening device and connect to building intrusion alarm for monitoring.

E. Provide concrete pad and unit stand for gate operators. Concrete pad and pedestal mounting stand installation shall be per gate operator manufacturer recommendation.

F. Gate digital card readers and swing gate card readers shall be as specified under intrusion alarm system and access control system of Special Provisions.

G. Submit all pertinent details to the Engineer for approval prior to installation.

H. For conduit and conductor/cable schedule, see EE0-1.11 and EE0-1.12.

Notes:

1. 1"C, MT, cap conduit at finished grade for future use.
2. Conduit and cables for control and integration with intrusion alarm, size as required.
3. Conduit and loop detector lead-in cables, size as required.
4. Weatherproof gate digital card reader unit stand, see Detail 1 this sheet.
5. Arrangement of conduits stub up shall be per the gate operator manufacturer recommendation.
6. Transition loop detector lead-in cables to conduit. Plug conduit opening with duct seal.
7. To be included as part of the gate operator system. Installation per gate operator manufacturer and Standard Plans Dated May 2006, RSP ES-5A.
8. All provisions inclusive of loop detector card and digital card reader shall be provided for making connection to gate operator. Entry/exit programing shall be as specified in Special provisions.
9. Conduit and cables to entrapment protection devices, size as required.
10. For continuation, see EE0.0.1.
11. For continuation, see EE0.0.5.
12. Not used.
13. Knox box. Knox box shall be UL listed, 1/4" thick stainless steel case, holds up to 2 keys in interior compartment, with alarm tamper switch, 100% welded with maximum width of 4". Secure to the steel tube as required.
14. For additional conduit/conductors, see EE0-01 and EE0-05.
15. To electromagnetic lock set, see special provisions.

CALIFORNIA STATE FIRE MARSHAL APPROVED
Approval of this plan does not authorize or approve any omission or deviation from applicable regulations. Final approval is subject to field inspection. One set of approved plans shall be available on the project site at all times.
Reviewed by: JOHN E WOODS, SDSFM
Approval date: 8-22-12

DIST.	COUNTY	ROUTE	POST MILES TOTAL PROJECT	SHEET NO.	TOTAL SHEETS
04	Ala	80	2.2	618	800

Javid Amirazodi 5-30-12
REGISTERED ELECTRICAL ENGINEER DATE

REGISTERED PROFESSIONAL ENGINEER J. AMIRAZODI No. 17509 Exp. 6-30-13 ELEC STATE OF CALIFORNIA

10-22-12
PLANS APPROVAL DATE

The State of California or its officers or agents shall not be responsible for the accuracy or completeness of scanned copies of this plan sheet.

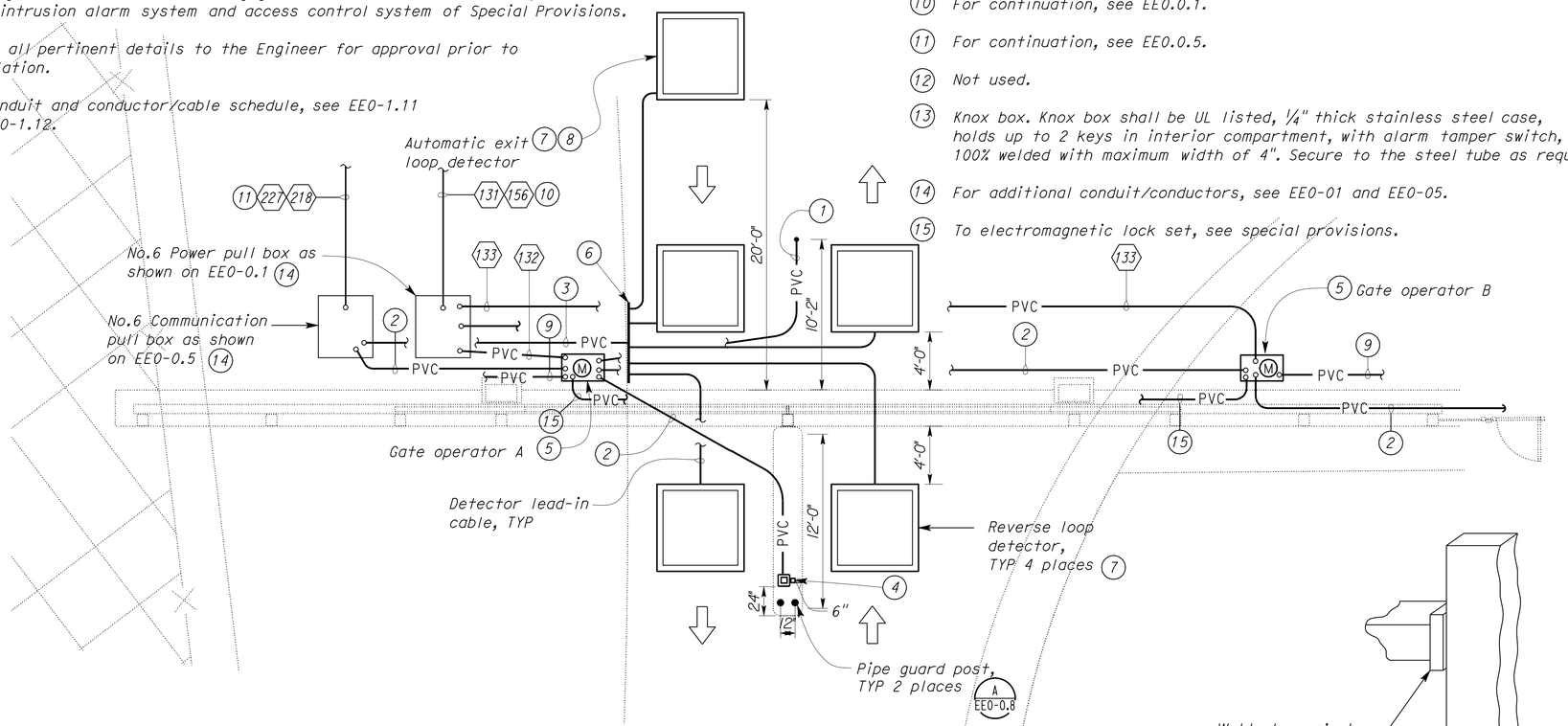

ENLARGED PLAN
SCALE 1" = 5'-0"

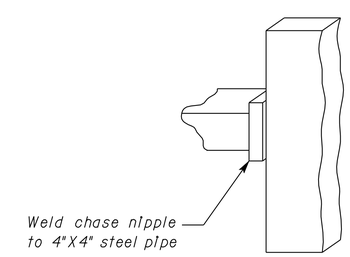

2 DETAIL
NO SCALE

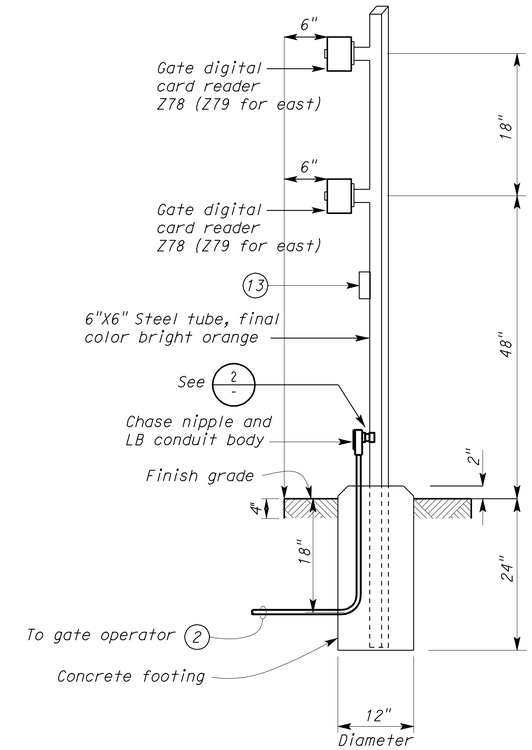

1 GATE DIGITAL CARD READER UNIT STAND
NO SCALE

THIS DRAWING ACCURATE FOR ELECTRICAL WORK ONLY

	BY	CHECKED
DESIGN	Javid Amirazodi	J.S. Sandhu/J.R. Lacy
DETAILS	Ed D. Tapalla 3/12	Javid Amirazodi
QUANTITIES	Javid Amirazodi	J.S. Sandhu/J.R. Lacy

STATE OF CALIFORNIA DEPARTMENT OF TRANSPORTATION

DIVISION OF ENGINEERING SERVICES ELECTRICAL-MECHANICAL-WATER AND WASTEWATER DESIGN

BRIDGE NO. 33M5785
POST MILE 2.2

SFOBB MAINTENANCE COMPLEX
NORTH SECURITY SLIDING AND SWING GATE DETAILS

SHEET EE0-0.7

TAEMWW Imperial Rev. 7/10

ORIGINAL SCALE IN INCHES FOR REDUCED PLANS 0 1 2 3

UNIT 3596
PROJECT NUMBER & PHASE 04120006661
EA 014081

DISREGARD PRINTS BEARING EARLIER REVISION DATES 5/30/12

REVISION DATES (PRELIMINARY STAGE ONLY) SHEET OF

25-OCT-2012 10:55
ee0_0.07.dgn

DIST.	COUNTY	ROUTE	POST MILES TOTAL PROJECT	SHEET NO.	TOTAL SHEETS
04	Ala	80	2.2	619	800

Javid Amirazodi 5-30-12
REGISTERED ELECTRICAL ENGINEER DATE

REGISTERED PROFESSIONAL ENGINEER J. AMIRAZODI No. 17509 Exp. 6-30-13 ELEC STATE OF CALIFORNIA

10-22-12
PLANS APPROVAL DATE

The State of California or its officers or agents shall not be responsible for the accuracy or completeness of scanned copies of this plan sheet.

CALIFORNIA STATE FIRE MARSHAL APPROVED
Approval of this plan does not authorize or approve any omission or deviation from applicable regulations. Final approval is subject to field inspection. One set of approved plans shall be available on the project site at all times.
Reviewed by: JOHN E WOODS, SDSFM
Approval date: 8-22-12

General Notes:

A. Location of gate operators, loop detectors, and gate digital card readers are arbitrary only. Exact locations shall be as per equipment and device manufacturer recommendations and shall be verified in the field.

B. Gate operators shall be installed complete with primary and secondary entrapment protection requirements in conformance with Class 3, UL 325 Entrapment Protection. Entrapment protection devices and its connection are not shown on the plans. Provide conduit, conductors or cables and other appurtenances for those that are not shown but are required to operate the gate system safely.

C. Gate operator shall be, 208 Volts, 1-phase, continuous duty type motor, that can operate the gate furnished

D. Provide and install safety opening device for Fire Department. The type of device shall be as required by the State Fire Marshal. Install device at a location as directed by the State Fire Marshal and the Engineer. Provide tamper switch integral to safety opening device and connect to building intrusion alarm for monitoring.

E. Provide concrete pad and unit stand for gate operators. Concrete pad and pedestal mounting stand installation shall be per gate operator manufacturer recommendation.

F. Gate digital card readers and swing gate card readers shall be as specified under intrusion alarm system and access control system of Special Provisions.

G. Submit all pertinent details to the Engineer for approval prior to installation.

I. For conduit and conductor/cable schedule, see EE0-1.11 and EE0-1.12.

Notes:

(1) 1"C, MT, cap conduit at finish grade for future use.

(2) Conduit and cables for control and integration with intrusion alarm, size as required.

(3) Conduit and loop detector lead-in cables, size as required.

(4) Weatherproof gate digital card reader unit stand, see Detail 1 on sheet EE0-0.7

(5) Arrangement of conduits stub up shall be per the gate operator manufacturer recommendation.

(6) Transition loop detector lead-in cables to conduit. Plug conduit opening with duct seal.

(7) To be included as part of the gate operator system. Installation per gate operator manufacturer and Standard Plans Dated May 2006, RSP ES-5A

(8) All provisions inclusive of loop detector card and digital card reader shall be provided for making connection to gate operator. Entry/exit programing shall be as specified in Special provisions.

(9) Conduit and cables to entrapment protection devices, size as required.

(10) For continuation, see EE0.0.2.

(11) For continuation, see EE0.0.6.

(12) Exact location of these devices shall be per manufacturer recommendation.

(13) To electromagnetic lock set, see special provisions.

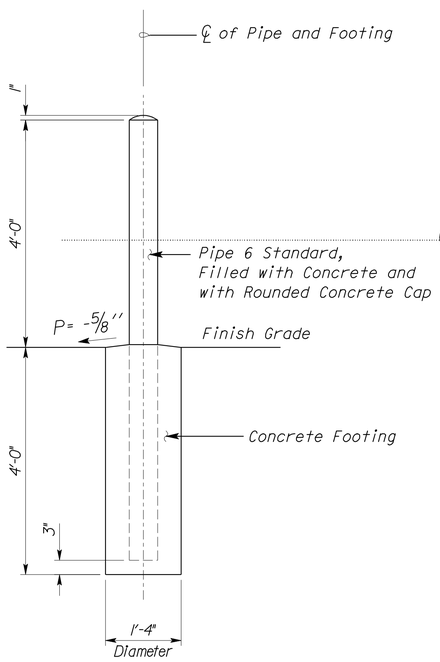

(A) PIPE GUARD POST DETAIL

NO SCALE

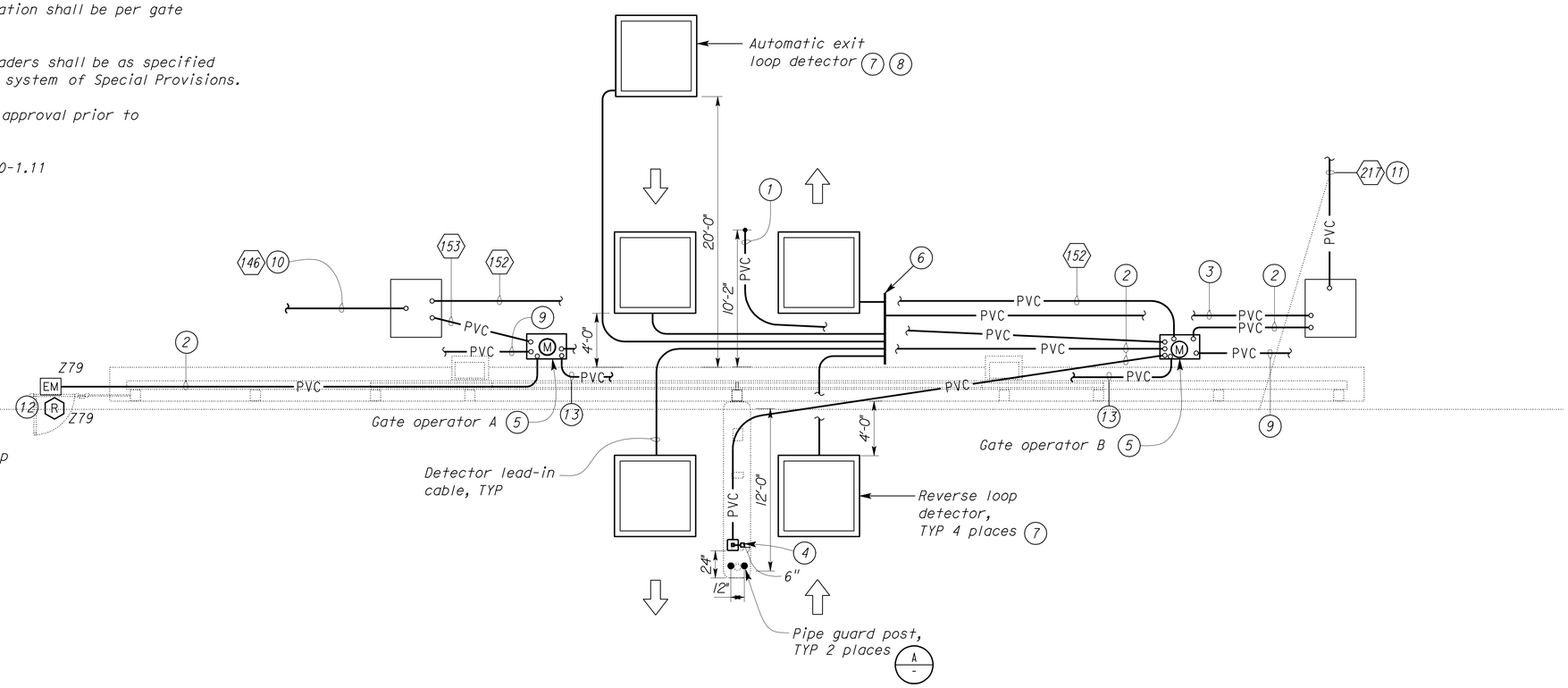

ENLARGED PLAN

SCALE 1'' = 5'-0''

THIS DRAWING ACCURATE FOR ELECTRICAL WORK ONLY

DESIGN	BY Javid Amirazodi	CHECKED J.S. Sandhu/J.R. Lacy	
DETAILS	BY Ed D. Tapalla 3/12	CHECKED Javid Amirazodi	
QUANTITIES	BY Javid Amirazodi	CHECKED J.S. Sandhu/J.R. Lacy	

STATE OF CALIFORNIA DEPARTMENT OF TRANSPORTATION

DIVISION OF ENGINEERING SERVICES
ELECTRICAL-MECHANICAL-WATER AND WASTEWATER DESIGN

BRIDGE NO. 33M5785
POST MILE 2.2

SFOBB MAINTENANCE COMPLEX
EAST SECURITY SLIDING AND SWING GATE DETAILS

SHEET **EE0-0.8**

TAEMWW Imperial Rev. 7/10

ORIGINAL SCALE IN INCHES FOR REDUCED PLANS 0 1 2 3

UNIT 3596
PROJECT NUMBER & PHASE 04120006661
EA 014081

DISREGARD PRINTS BEARING EARLIER REVISION DATES
REVISION DATES (PRELIMINARY STAGE ONLY) 5/30/12
SHEET OF

25-OCT-2012 10:55
ee0_0.08.dgn

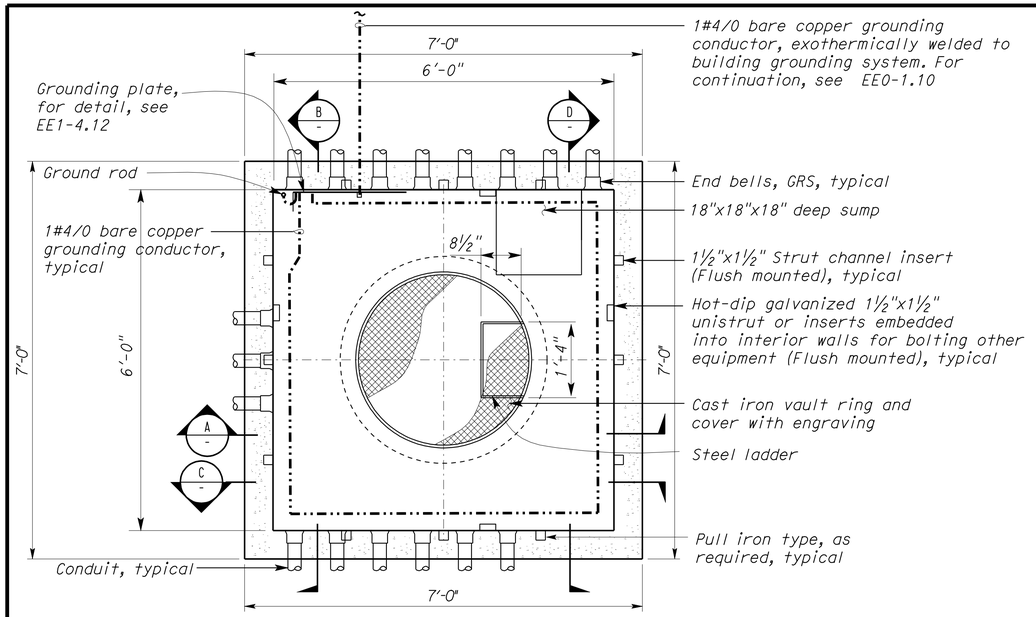

PLAN

SCALE ¾" = 1'-0"

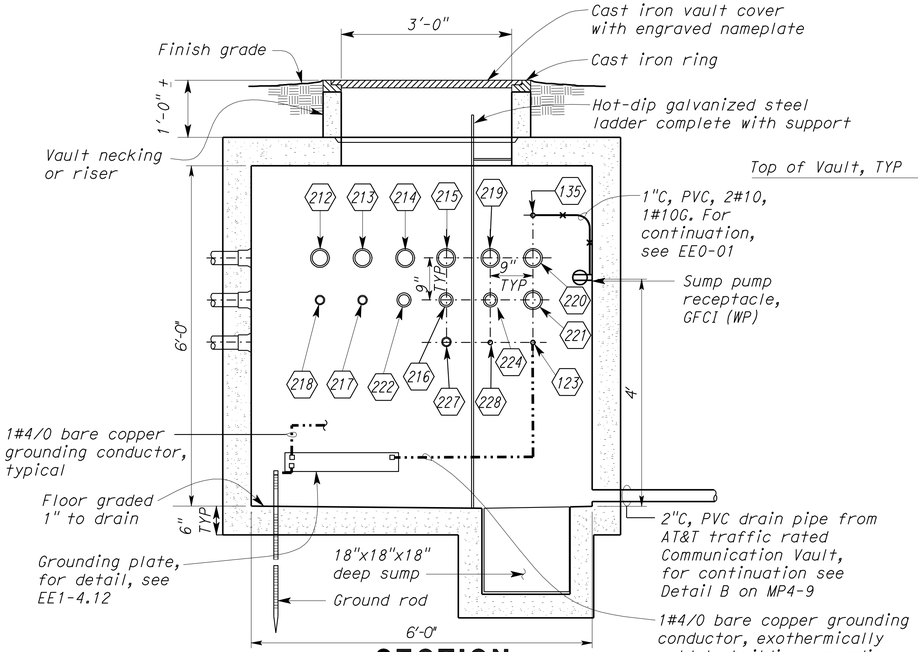

A SECTION

SCALE ¾" = 1'-0"

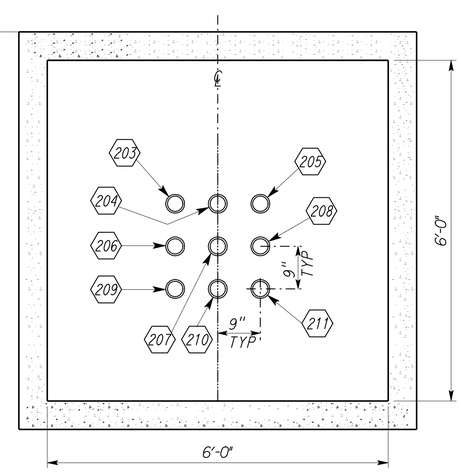

B SECTION

SCALE ¾" = 1'-0"

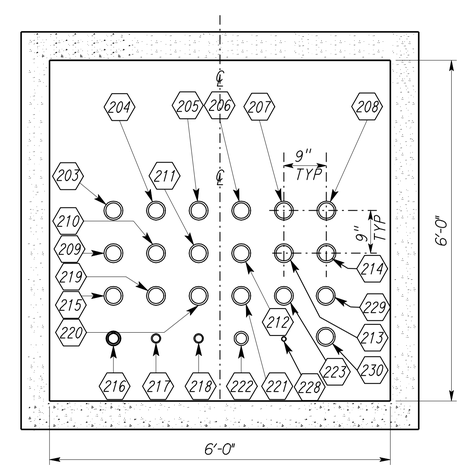

C SECTION

SCALE ¾" = 1'-0"

Hot-dip galvanized 1½"x1½" construction channel or inserts embedded into interior walls for bolting other equipment (Flush mounted), typical all sides

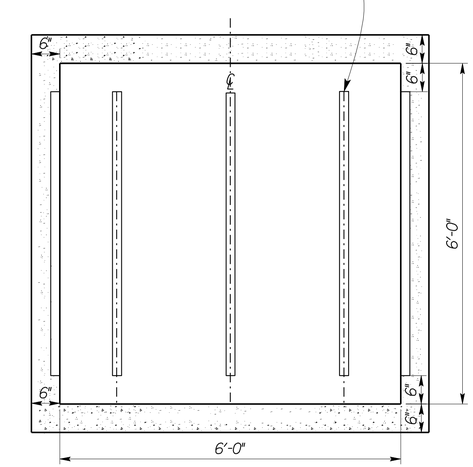

D SECTION

SCALE ¾" = 1'-0"

General Notes:

A. Vault cast iron ring and cover shall be designed for H-20 traffic loading.

B. Concrete ultimate compressive strength to be f'c=5,000 Psi.

C. Steel reinforcement yield strength to be fy=60,000 Psi.

D. All Vault joints shall be primed with joint primer by Vault supplier. In addition, all joints shall be made watertight by using joint sealant.

E. Prior to setting the vault the Contractor shall prepare the site by providing/installing adequate filter fabric, bedding rock, sand or other suitable base material as required for placing the vault. provide dewatering of the pit as required during construction

F. Vault shall comply with all applicable requirements of ASTM C476 and ASTM C858.

G. The ladder shall be designed to comply with the latest specifications of American National Standard Institute's publication A1413, safety requirements for fixed ladder.

H. Vault cover engraved nameplates shall read: Caltrans COMMUNICATION

I. For other related work not shown on this sheet, see Electrical and Mechanical plans.

J. All exposed metal part that can accidentally becomes energized shall be bonded to grounding plate.

K. Cap conduit for future use.

L. For conduit and conductor/cable schedule, see EE0-1.11 and EE0-1.12.

M. Provide "J" type hooks as required for bundling/training communication cables. All cables shall be bundled/trained in a manner to maintain a consistent pattern over their entire length inside the Vault.

N. Vaults shall be equipped with pull irons as required. All pull irons shall be constructed of hot-dip galvanized steel.

O. Heavyweight cable racks with adjustable arms shall be provided for all cables. The racks shall be attached with adjustable inserts set in the concrete walls The racks shall have a sufficient number of arms to accommodate cables for each conduit entering or leaving the vault.

P. The Contractor shall obtain all required permits and notifications before commencing any work operations.

Q. Submit all pertinent details to the Engineer for approval prior to installation.

R. For sump pump details, see MP4-9.

CALIFORNIA STATE FIRE MARSHAL APPROVED

Approval of this plan does not authorize or approve any omission or deviation from applicable regulations. Final approval is subject to field inspection. One set of approved plans shall be available on the project site at all times.

Reviewed by: JOHN E WOODS, SDSFM

Approval date: 8-22-12

DIST.	COUNTY	ROUTE	POST MILES TOTAL PROJECT	SHEET NO.	TOTAL SHEETS
04	Ala	80	2.2	620	800

REGISTERED ELECTRICAL ENGINEER — 5-30-12 DATE

REGISTERED PROFESSIONAL ENGINEER J. AMIRAZODI No. 17509 Exp. 6-30-13 ELEC STATE OF CALIFORNIA

10-22-12
PLANS APPROVAL DATE

The State of California or its officers or agents shall not be responsible for the accuracy or completeness of scanned copies of this plan sheet.

THIS DRAWING ACCURATE FOR ELECTRICAL WORK ONLY

	BY	CHECKED
DESIGN	Javid Amirazodi	J.S. Sandhu/J.R. Lacy
DETAILS	Ed D. Tapalla 3/12	Javid Amirazodi
QUANTITIES	Javid Amirazodi	J.S. Sandhu/J.R. Lacy

STATE OF CALIFORNIA
DEPARTMENT OF TRANSPORTATION

DIVISION OF ENGINEERING SERVICES
ELECTRICAL-MECHANICAL-WATER AND WASTEWATER DESIGN

BRIDGE NO. 33M5785
POST MILE 2.2

SFOBB MAINTENANCE COMPLEX

MAIN COMMUNICATION VAULT DETAILS

SHEET **EE0-0.9**

TAEMWW Imperial Rev. 7/10

ORIGINAL SCALE IN INCHES FOR REDUCED PLANS 0 1 2 3

UNIT 3596
PROJECT NUMBER & PHASE 04120006661
EA 014081

DISREGARD PRINTS BEARING EARLIER REVISION DATES → 5/30/12

REVISION DATES (PRELIMINARY STAGE ONLY) SHEET OF

25-OCT-2012 10:56

ee0_0.09.dgn

DIST.	COUNTY	ROUTE	POST MILES TOTAL PROJECT	SHEET NO.	TOTAL SHEETS
04	Ala	80	2.2	621	800

REGISTERED ELECTRICAL ENGINEER — Jaswinder S Gill — 5-30-12 DATE

REGISTERED PROFESSIONAL ENGINEER — J. S. GILL — No. 18551 — Exp. 12-31-12 — ELEC — STATE OF CALIFORNIA

10-22-12
PLANS APPROVAL DATE

The State of California or its officers or agents shall not be responsible for the accuracy or completeness of scanned copies of this plan sheet.

CALIFORNIA STATE FIRE MARSHAL APPROVED

Approval of this plan does not authorize or approve any omission or deviation from applicable regulations. Final approval is subject to field inspection. One set of approved plans shall be available on the project site at all times.

Reviewed by: JOHN E WOODS, SDSFM

Approval date: 8-22-12

Notes:

1. Handhole cover shall be 2" wide and 6" long, 10 gauge sheet steel cover.
2. Install a fused splice with standard midget, ferrule, 3-Ampere, 300 Volts, slow blowing fuse for the ungrounded phase conductors.
3. 8"x8"x6" deep, cast iron embedded junction box complete with weatherproof cover plate and a ¾"C, PVC drain pipe. Install a fused splice with standard midget, ferrule, 3 ampere, 300 volt, slow blowing fuse for the ungrounded phase conductor.
4. Provide conduit fittings as required to connect the PVC conduits to the cast iron embedded junction box.
5. ¾"C, PVC, 2#10, 1#10G.
6. Fixture arm mounting base shall be suitable to be directly mounted on a 5 inch square pole, or provide and install adapter base as required.
7. Post top mount shall be suitable to be directly mounted on a 4 inch square pole, or provide and install adapter base as required.

General Notes:

A. Four ASTM A-307 anchor bolts are required for each pole. Provide a hex nut, leveling nut and 2 washers for each bolt.

B. Hand holes for lighting standards shall be located on the downstream side of the pole unless otherwise noted on the plans.

C. During pole erection, the post shall be raked as necessary with the use of leveling nuts to provide a plumb pole axis.

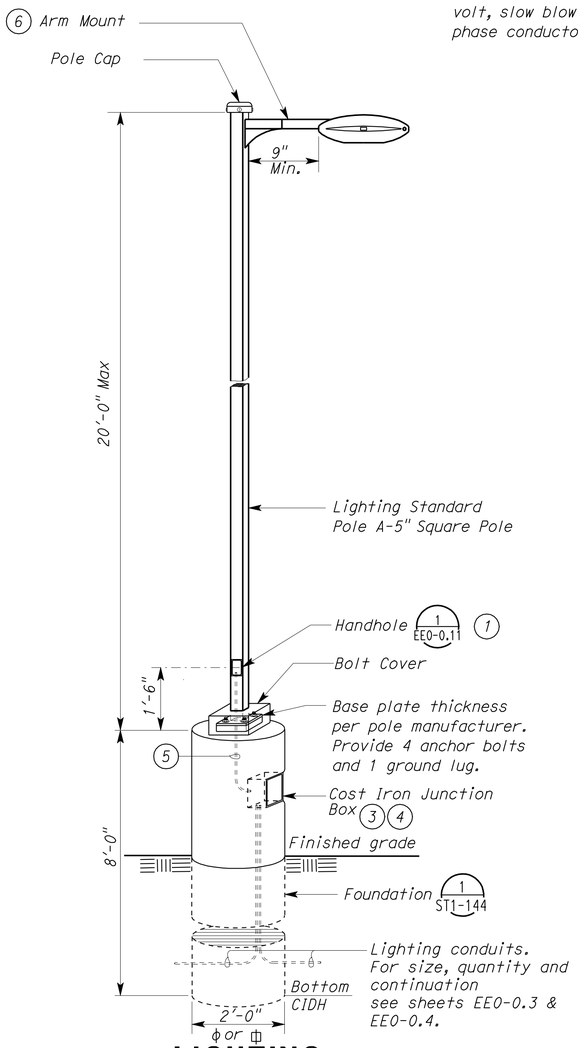

A LIGHTING STANDARD A ✱

NO SCALE

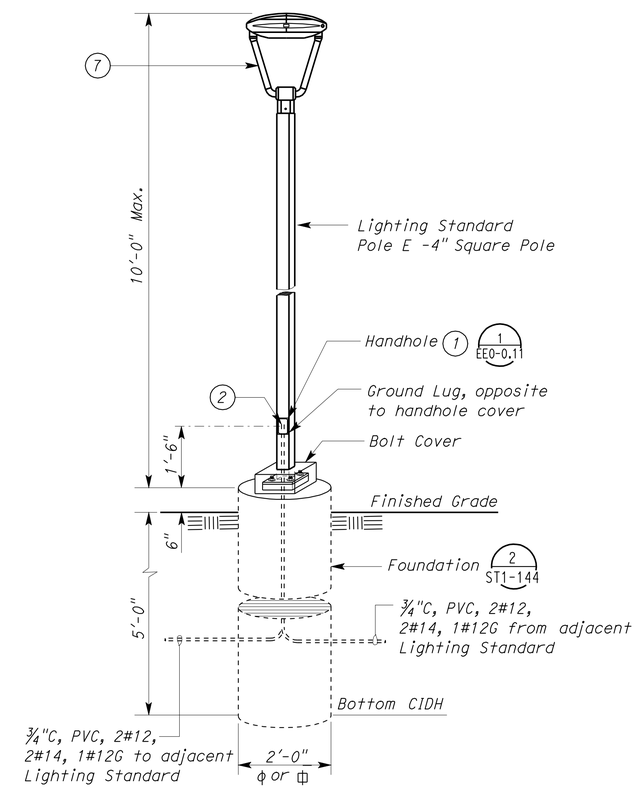

C LIGHTING STANDARD E

NO SCALE

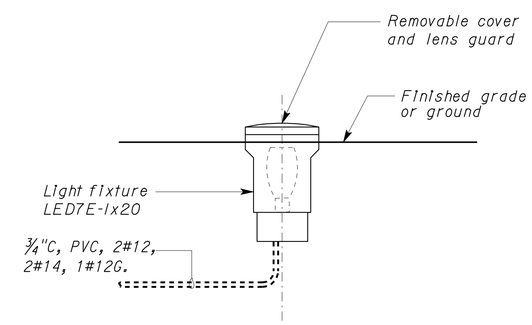

3 TYPE LED7E FLAGPOLE LUMINAIRE

NO SCALE

✱ Eliminate cast iron embedded junction box from foundation details for lighting standards with PB adjacent to lighting standards as shown on the plans.

THIS DRAWING ACCURATE FOR ELECTRICAL WORK ONLY

	BY	CHECKED
DESIGN	Jaswinder Gill	Christine Mamaril
DETAILS	Ed D. Tapalla/Dali Zhou	Jaswinder Gill
QUANTITIES	Jaswinder Gill	Christine Mamaril

STATE OF CALIFORNIA DEPARTMENT OF TRANSPORTATION

DIVISION OF ENGINEERING SERVICES ELECTRICAL-MECHANICAL-WATER AND WASTEWATER DESIGN

BRIDGE NO. 33M5785 — POST MILE 2.2

SFOBB MAINTENANCE COMPLEX

AREA LIGHTING STANDARD DETAILS 1

SHEET EE0-0.10

TAEMWW Imperial Rev. 7/10

ORIGINAL SCALE IN INCHES FOR REDUCED PLANS 0 1 2 3

UNIT 3596
PROJECT NUMBER & PHASE 04120006661
EA 014081

DISREGARD PRINTS BEARING EARLIER REVISION DATES → 11/8/2011 3/23/12 5/4/12 5/30/12

REVISION DATES (PRELIMINARY STAGE ONLY) SHEET OF

25-OCT-2012 10:56

ee0_0.10.dgn

DIST.	COUNTY	ROUTE	POST MILES TOTAL PROJECT	SHEET NO.	TOTAL SHEETS
04	Ala	80	2.2	622	800

Jaswinder S Gill 5-30-12
REGISTERED ELECTRICAL ENGINEER DATE

REGISTERED PROFESSIONAL ENGINEER J. S. GILL No. 18551 Exp. 12-31-12 ELEC STATE OF CALIFORNIA

10-22-12
PLANS APPROVAL DATE

The State of California or its officers or agents shall not be responsible for the accuracy or completeness of scanned copies of this plan sheet.

CALIFORNIA STATE FIRE MARSHAL APPROVED
Approval of this plan does not authorize or approve any omission or deviation from applicable regulations. Final approval is subject to field inspection. One set of approved plans shall be available on the project site at all times.
Reviewed by: JOHN E WOODS, SDSFM
Approval date: 8-22-12

General Notes:

A. *Four ASTM A-307 anchor bolts are required for each pole. Provide a hex nut, leveling nut and 2 washers for each bolt.*

B. *Handholes for lighting standards shall be located on the downstream side of the pole unless otherwise noted on the plans.*

C. *During pole erection, the post shall be raked as necessary with the use of leveling nuts to provide a plumb pole axis.*

Notes:

1. *Fixture arm mounting base shall be suitable to be directly mounted on a 5 inch square pole, or provide and install adapter base as required.*
2. *¾"C, PVC, 2#12, 1#12G, one 2 strands, multi-mode, FO cable for CCTV system. For continuation, see sheet EE0-0.1.*
3. *8"x8"x6" deep, cast iron embedded junction box complete with weatherproof cover plate and a ¾"C, PVC drain pipe. Install a fused splice with standard midget, ferrule, 3 ampere, 300 volt, slow blowing fuse for the ungrounded phase conductor.*
4. *Provide conduit fittings as required to connect the PVC conduits to the cast iron embedded junction box.*
5. *¾"C, PVC, 2#8, 1#10G.*

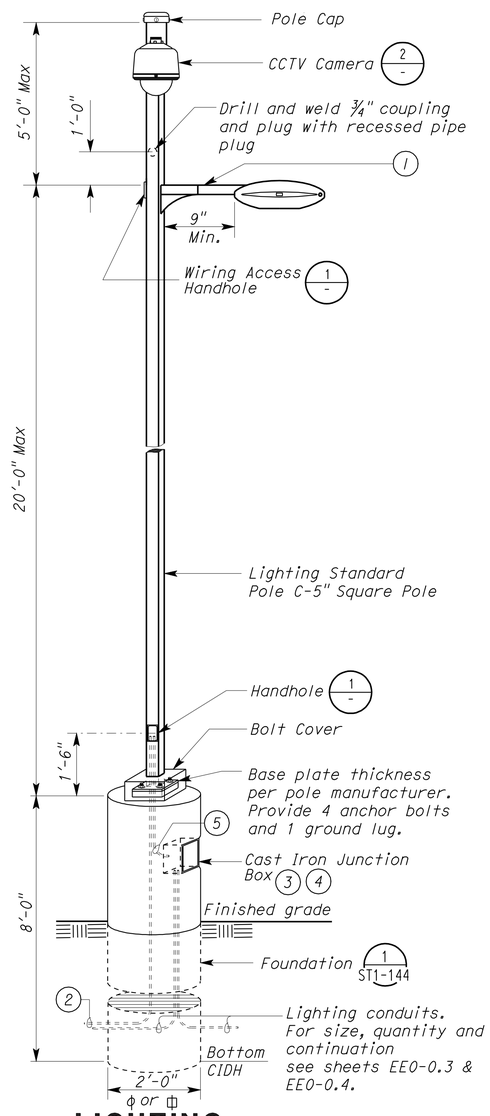

A LIGHTING STANDARD C
NO SCALE

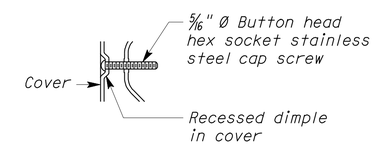

ALTERNATIVE DETAIL

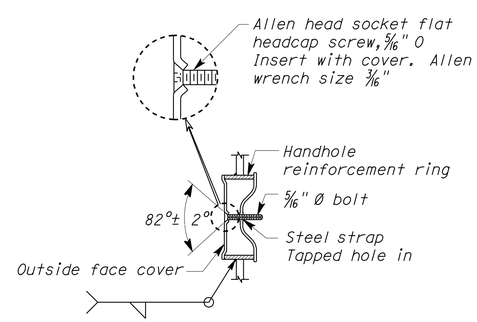

1 HANDHOLE DETAILS
NO SCALE

FRONT **PLAN**

POWER SUPPLY BOX

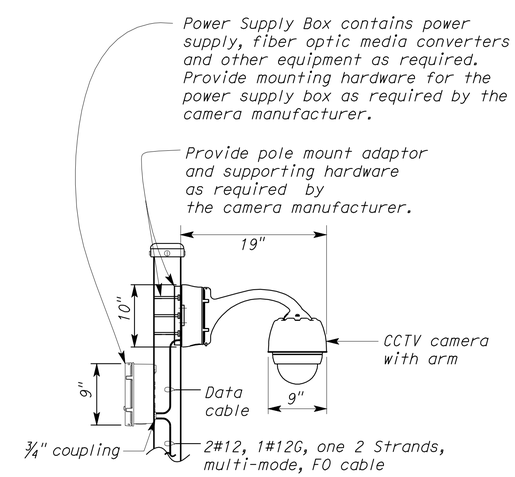

2 POLE MOUNTED CCTV CAMERA DETAILS
NO SCALE
All dimensions as shown are maximum allowed dimensions.

THIS DRAWING ACCURATE FOR ELECTRICAL WORK ONLY

	BY	CHECKED
DESIGN	Jaswinder Gill	Christine Mamaril
DETAILS	Ed D. Tapalla/Dali Zhou	Jaswinder Gill
QUANTITIES	Jaswinder Gill	Christine Mamaril

STATE OF CALIFORNIA DEPARTMENT OF TRANSPORTATION

DIVISION OF ENGINEERING SERVICES
ELECTRICAL-MECHANICAL-WATER AND WASTEWATER DESIGN

BRIDGE NO. 33M5785
POST MILE 2.2

SFOBB MAINTENANCE COMPLEX
AREA LIGHTING STANDARD DETAILS 2

SHEET **EE0-0.11**

TAEMWW Imperial Rev. 7/10

ORIGINAL SCALE IN INCHES FOR REDUCED PLANS 0 1 2 3

UNIT 3596
PROJECT NUMBER & PHASE 04120006661
EA 014081

DISREGARD PRINTS BEARING EARLIER REVISION DATES → 11/08/11 3/23/12 5/4/12 5/30/12

REVISION DATES (PRELIMINARY STAGE ONLY) SHEET OF

25-OCT-2012 10:56
ee0_0.11.dgn

DIST.	COUNTY	ROUTE	POST MILES TOTAL PROJECT	SHEET NO.	TOTAL SHEETS
04	Ala	80	2.2	623	800

Jaswinder S. Gill 5-30-12
REGISTERED ELECTRICAL ENGINEER DATE

REGISTERED PROFESSIONAL ENGINEER J. S. GILL No. 18551 Exp. 12-31-12 ELEC STATE OF CALIFORNIA

10-22-12
PLANS APPROVAL DATE

The State of California or its officers or agents shall not be responsible for the accuracy or completeness of scanned copies of this plan sheet.

CERTIFICATE OF COMPLIANCE (Page 1 of 4) OLTG-1C

Project Name: SFOBB MAINTENANCE COMPLEX
Date: 05/25/2012

Project Address: 200 BURMA ROAD, OAKLAND, CA 94607
Total Hardscape Illuminated Area: 324,656 Square Feet

General Information

Phase of Construction: ☑ New Construction ☐ Addition ☐ Alteration

Documentation Author's Declaration Statement

- I Certify that this Certificate of Compliance documentation is accurate and complete.

Name: JASWINDER GILL
Signature: Jaswinder S. Gill
Company: CA DEPARTMENT OF TRANSPORTATION
Date: 05/25/2012
Address: 1801 30TH STREET, MS9-3/11H
If applicable: CEA # CEPE #
City/State/Zip: SACRAMENTO, CA 95816
Phone: (916) 227-9492

Principal Lighting Designer's Declaration Statement

- I am eligible under Division 3 of the California Business and Professions Code to accept responsibility for the lighting design.
- This Certificate of Compliance identifies the lighting features and performance specification required for compliance with Title 24, Pages 1 and 6 of the California Code of Regulations.
- The design features represented on this Certificate of Compliance are consistent with the information provided to document this design on the other applicable compliance forms, worksheets, calculations, plans and specifications submitted to the enforcement agency for approval with this building permit application.

Name: JASWINDER GILL
Signature: Jaswinder S. Gill
Company: CA DEPARTMENT OF TRANSPORTATION
Phone: (916) 227-9492
Address: 1801 30TH STREET, MS9-3/11H
License # E 18551
City/State/Zip: SACRAMENTO, CA 95816
Date: EXP 12-31-12

Principal Lighting Designer's Declaration

☑ I Certify that this Certificate of Compliance documentation is accurate and complete, and accounts for all outdoor lighting power, including building mounted, pole mounted, as well as all other outdoor lighting designed for the site, and that Additional Lighting Power Allowances for Specific Applications or Additional Lighting Power Allowances for Ordinance Requirements have not been counted more than one time for the same area, in Accordance with Section 147 of the Standards.

Outdoor Lighting Mandatory Measures

Indicate location on building plans of Mandatory Measures Note Block: EE0-0.14

LIGHTING COMPLIANCE FORMS & WORKSHEETS (check box if worksheet is included)

For detailed instructions on the use of this and all Energy Effeciency Standards compliance forms, please refer to the Nonresidential Manual published by the California Energy Commission.

☑	OLTG-1C	Certificate of Compliance. All 4 pages required on plans for all submittal.
☑	OLTG-2C	(Page 1 of 3) Lighting Wattage Allowances for General Hardscape, Sales Frontage, or Ornamental Lighting. Optional on plans.
☑	OLTG-2C	(Page 2 of 3) Lighting Wattage Allowances for Per Application or Per Area. Optional on plans.
☐	OLTG-2C	(Page 3 of 3) Additional Lighting Power Allowance for Ordinance Requirements. Optional on plans.

2008 Nonresidential Compliance Forms *July 2010*

CERTIFICATE OF COMPLIANCE (Page 2 of 4) OLTG-1C

COMPLIANCE FIXTURE/LIGHTING CONTROL SCHEDULE and FIELD INSPECTION CHECKLIST

Project Name: SFOBB MAINTENANCE COMPLEX
Date: 05/25/2012

INSTALLATION CERTIFICATE, OLTG-1-INST (Retain a copy and verify form is completed and signed.) Field Inspection ☐

CERTIFICATE OF ACCEPTANCE, OLTG-2A (Retain a copy and verify form is completed and signed.) Field Inspection ☐

Luminaire Schedule			Installed Watts							
A	B	C	D	E	F		G	H	I	
					How wattage was determined				Field Inspector 2	
Name Or Item Tag	Luminaire Description See footnote below (i.e, lamp pole top shoe-box 400 watt metal halide)	Cutoff Designation	Watts per Luminaire 1	Special Features	Default from NA-8	According to S 130 (d or e)	Number of Luminaires	Installed Watts (D x G)	Pass	Fail
LED1E	WALL, INTEGRATED MOTION SENSOR, LED, REMOTE PHOTOCELL	FC	90	☐	☐	☑	25	2,250	☐	☐
LED2E	6 INCH RECESSED, REMOTE PHOTOCELL, LED ENGINE	FC	32	☐	☐	☑	15	480	☐	☐
LED3E	PENDANT/SURFACE,INTEGRATED MOTION SENSOR, LED, REMOTE PEC	FC	110	☐	☐	☑	30	3,300	☐	☐
LED4E	POLE, INTEGRATED MOTION SENSOR & PHOTOCELL, LED ENGINE	FC	133	☐	☐	☑	32	4,522	☐	☐
LED5E	POST TOP, REMOTE PHOTCELL, LED ENGINE	FC	90	☐	☐	☑	6	540	☐	☐
LED6E	6 INCH RECESSED, REMOTE PHOTOCELL, LED ENGINE	FC	20	☐	☐	☑	18	360	☐	☐
				☐	☐	☐			☐	☐
	Enter total into OLTG; Page 4 of 4; Row H; Total Installed Watts:							11,452		

1. Type of luminaire (i.e.: post top, wall pack, surface, shoe box); for non-incandescent luminaires, indicate nominal lamp wattage and lamp type (i.e.: flourescent incandescent, HID); ballast type (i.e.: electronic or magnetic); number of lamps and number of ballast per luminaire. For incandescent luminaires the luminaire wattage listed in column D shall be the maximum relamping rated wattage on a permanent factory-installed label on the luminaire. NOT the wattage of the lamp (bulb) used, in accordance with Section 130 (d or e).
2. If Fail then describe on Page 2 of the Inspection Checklist Form and take appropriate action to correct. Verify building plans if necessary.

EXEMPT LUMINAIRES Field Inspection ☐

Name or Symbol	Description of exempt luminaires in accordance with S 147

MANDATORY CONTROLS Field Inspection ☐

#	Description	Location	#	Description	Location
1	Photocell, Motion Sensor	Parking	4	Astro TC, Photocell	Pedestrian Walkway
2	Photocell, Motion Sensor,TC	Building Exterior	5	TC, Photcell, Motion Sensor	Washrack/Fuel Canopy
3	Astro TC, Photocell	Entrance Canopies	6	Photocell, Motion Sensor,TC	Bridge Lighting

SPECIAL FEATURES INSPECTION CHECKLIST (See Page 2 of 4 of OLTG-1C)

The local enforcement agency should pay special attention to the items specified in this checklist. These Items require special written justification and documentation, and special verification. The local enforcement agency determines the adequacy of the justification, and may reject a building or design that otherwise coplies base on the adequacy of the special justification and documentations submitted.

50% OF LAOD SHEDDING IS ACHEIVED FOR ALL THE FUEL PUMP CANOPY BY DIMMING THE LIGHTS TO

motion is detected using the integrated motion sensor on each parking lot and building mounted fixture.

Field Inspector Notes or Discrepancies:

2008 Nonresidential Compliance Forms *July 2010*

CALIFORNIA STATE FIRE MARSHAL APPROVED
Approval of this plan does not authorize or approve any omission or deviation from applicable regulations. Final approval is subject to field inspection. One set of approved plans shall be available on the project site at all times.
Reviewed by: JOHN E WOODS, SDSFM
Approval date: 8-22-12

GENERAL NOTE:

Form OLTG-1C, Parts 1 of 4 and 2 of 4 are shown on this sheet.
Form OLTG-1C, Parts 3 of 4 and 4 of 4 are shown on sheet EE0-0.13.
Other checked forms are available upon request.

	BY	CHECKED
DESIGN	Jaswinder Gill	Christine Mamaril
DETAILS	Jaswinder Gill	J. S. Sandhu
QUANTITIES	Jaswinder Gill	Christine Mamaril

STATE OF CALIFORNIA DEPARTMENT OF TRANSPORTATION

DIVISION OF ENGINEERING SERVICES ELECTRICAL-MECHANICAL-WATER AND WASTEWATER DESIGN

BRIDGE NO. 33M5785
POST MILE 2.2

SFOBB MAINTENANCE COMPLEX
OUTDOOR LIGHTING COMPLIANCE FORM 1

SHEET EE0-0.12

TAEMWW Imperial Rev. 7/10

ORIGINAL SCALE IN INCHES FOR REDUCED PLANS 0 1 2 3

UNIT 3596
PROJECT NUMBER & PHASE 04120006661
EA 014081

DISREGARD PRINTS BEARING EARLIER REVISION DATES → 11/08/11 3/23/2012 5/14/12 5/30/12

REVISION DATES (PRELIMINARY STAGE ONLY) SHEET OF

25-OCT-2012 10:56
ee0_0.12.dgn

CERTIFICATE OF COMPLIANCE (Page 3 of 4) OLTG-1C

Project Name: SFOBB MAINTENANCE COMPLEX

Date: 05/25/2012

A. OUTDOOR LIGHTING ZONE

OUTDOOR LIGHTING ZONE: ☐ OLZ 1 ☑ OLZ 2 ☑ OLZ 3 ☐ OLZ 4

Is the Outdoor Lighting Zone: ☑ Default in accordance with S 10-114, or ☐ Amended by JHA

Complete the information below if the default Outdoor Lighting Zone has been amended by the local jurisdiction having authority (JHA):

☐ The site is a government designated park, recreation area, wildlife preserve, or portion thereof, and has been designated as LZ2 or LZ3, in accordance with Table 10-114-A, because the site is contained within such a zone.

☐ The local jurisdiction having authority has officially adopted a change to the State Default Lighting Zone and has notified the Energy Commission by providing the materials required in S 10-114(d) to the Executive Director.

☐ The adopted change is posted on the Energy Commission website.

B. ADDITIONAL LIGHTING POWER ALLOWANCE FOR ORDINANCE REQUIREMENTS

Are additional lighting power allowances for ordinance in Table 147-C used? Yes ☐ No ☑

Complete the information below if the additional lighting power allowances for ordinance requirements are used:

☐ The local jurisdiction having authority has officially adopted specific outdoor light levels, which are express as average or minimum footcandle levels, by following a public notification review, and comment about the proposed changed.

☐ The local jurisdiction having authority which adopted specific outdoor light levels and has notified the Commission by providing the following materials required S 10-114(f) to the Executive Director.

C. ACCEPTANCE FORMS

Required Acceptance Tests

Designer:

This form is to be used by the designer and attached to the plans. Listed below is the acceptance tests for for the Lighting system,

OLTG-2A. The designer is required to check the acceptance tests and list all control devices serving the building or space shall be certified as meeting the Acceptance Requirements for Code Compliance. If all the lighting system or control of a certain type requires a tests, list the different lighting and the number of systems. The NA7 Section in the Appendix of the Nonresidential Reference Appendices Manual describes the test. Since this form will be a part of the plans, completion of this section will allow the responsible party to budget for the scope of work appropriately. Forms can be grouped by type of Luminaire controlled.

Enforcement Agency:

System Acceptance. Before Occupancy Permit is granted for a newly contructed building or space or when ever new lighting system with controls is installed in the building or space shall be cerified as meeting the Acceptance Requirements.

The OLTG-2A form is not considered a complete form and is not to be accepted by the enforcement agency unless the boxes are checked and/or filled and signed. In addition, a Certificate of Acceptance forms shall be submitted to the enforcement that certifies plans, specifications, installation certificates and, operating and maintenance information meet the requirements of S 10-103(b) of Title 24 Part 6. The field inspector must receive the properly filled out and signed forms before the building can receive final occupancy. A copy of the OLTG-2A for each different lighting luminaire control(s) must be provided to the owner of the building for their records.

	Luminaires Controlled			Certificate of Acceptance OLTG-2A [1]
Equipment Requiring Testing	Description	Number of like Controls	Location	Outdoor Lighting Acceptance Tests
BELCP	Astro TC, Photocell	3	Electrical Rooms-Building 1A & 1B	✓
ELCP	Astro TC, Photocell	1	Bridge Column	✓
LED1E	INTEGRATED MOTION SENSOR	25	Building Exterior Mouted Lights	✓
LED3E	INTEGRATED MOTION SENSOR	30	Washrack & Fuel Canopy, Bridge Underpass	✓
LED4E	INTEGRATED MOTION SENSOR & PHOTCELL	32	ALL POLE MOUNTED LIGHTS	✓
CLCP(Includes Main Hub)	Astro TC, Photocell	1	Fuel/Washrack Bldg.	✓

1. Insert: OMS for Outdoor Motion Sensor; OLSC for Outdoor Lighting Shutoff Controls; OP for Outdoor Photocontrol; ATS for Astronomical Time Switch; and, STS for Standard (non-astronomical) Time Switch acceptance.

CERTIFICATE OF COMPLIANCE (Page 4 of 4) OLTG-1C

COMPLIANCE FIXTURE/LIGHTING CONTROL SCHEDULE and FIELD INSPECTION CHECKLIST

Project Name: SFOBB MAINTENANCE COMPLEX

Date: 05/25/2012

ALLOWED AND INSTALLED OUTDOOR LIGHTING POWER

		Lighting Wattage Power Allowance
A	Lighting power allowance for general hardscape (from OLTG-2C Page 1 of 3)	17,663
B	Specific application lighting wattage per unit length (from OLTG-2C Page 1 of 3)	0
C	Specific application wattage allowance for ornamental lighting (from OLTG-2C Page 1 of 3)	540
D	Specific application wattage allowance per application (from OLTG-2C Page 2 of 3)	1,620
E	Specific application lighting wattage allowance per area (from OLTG-2C Page 2 of 3)	2,927
F	Additional lighting power allowance for ordinance requirements (from OLTG-2C Page 3 of 3)	0
G	Total Allowed Wattage=Sum of rows A through F	22,750
H	Total installed Watts from Luminaire Schedule, (from OLTG-1C Page 2 of 4)	11,452
Provided that the lighting wattage power allowance listed in rows A through F are identical to the lighting wattage power allowance taken from OLTG-2C pages 1 through 3, complies if installed Wattage in row H is less than or equal to the Total Installed Wattage in row G		☑ Yes ☐ No

NOTES:

DIST.	COUNTY	ROUTE	POST MILES TOTAL PROJECT	SHEET NO.	TOTAL SHEETS
04	Ala	80	2.2	624	800

Jaswinder S Gill 5-30-12
REGISTERED ELECTRICAL ENGINEER DATE

REGISTERED PROFESSIONAL ENGINEER J. S. GILL No. 18551 Exp. 12-31-12 ELEC STATE OF CALIFORNIA

10-22-12
PLANS APPROVAL DATE

The State of California or its officers or agents shall not be responsible for the accuracy or completeness of scanned copies of this plan sheet.

CALIFORNIA STATE FIRE MARSHAL APPROVED

Approval of this plan does not authorize or approve any omission or deviation from applicable regulations. Final approval is subject to field inspection. One set of approved plans shall be available on the project site at all times.

Reviewed by: JOHN E WOODS, SDSFM

Approval date: 8-22-12

	BY	CHECKED
DESIGN	Jaswinder Gill	Christine Mamaril
DETAILS	Jaswinder Gill	J. S. Sandhu
QUANTITIES	Jaswinder Gill	Christine Mamaril

STATE OF CALIFORNIA DEPARTMENT OF TRANSPORTATION

DIVISION OF ENGINEERING SERVICES ELECTRICAL-MECHANICAL-WATER AND WASTEWATER DESIGN

BRIDGE NO. 33M5785 POST MILE 2.2

SFOBB MAINTENANCE COMPLEX

OUTDOOR LIGHTING COMPLIANCE FORM 2

SHEET EE0-0.13

TAEMWW Imperial Rev. 7/10

ORIGINAL SCALE IN INCHES FOR REDUCED PLANS 0 1 2 3

UNIT 3596 PROJECT NUMBER & PHASE 04120006661

EA 014081

DISREGARD PRINTS BEARING EARLIER REVISION DATES → REVISION DATES (PRELIMINARY STAGE ONLY) 11/08/11 3/23/12 5/4/12 5/30/12 SHEET OF

25-OCT-2012 10:56

ee0_0.13.dgn

DIST.	COUNTY	ROUTE	POST MILES TOTAL PROJECT	SHEET NO.	TOTAL SHEETS
04	Ala	80	2.2	625	800

Jaswinder S. Gill 5-30-12
REGISTERED ELECTRICAL ENGINEER DATE

REGISTERED PROFESSIONAL ENGINEER J. S. GILL No. 18551 Exp. 12-31-12 ELEC STATE OF CALIFORNIA

10-22-12
PLANS APPROVAL DATE

The State of California or its officers or agents shall not be responsible for the accuracy or completeness of scanned copies of this plan sheet.

CALIFORNIA STATE FIRE MARSHAL
APPROVED
Approval of this plan does not authorize or approve any omission or deviation from applicable regulations. Final approval is subject to field inspection. One set of approved plans shall be available on the project site at all times.
Reviewed by: JOHN E WOODS, SDSFM
Approval date: 8-22-12

CALIFORNIA ENERGY COMMISSION MANDATORY MEASURES:

BUILDING LIGHTING SHUT-OFF

1. Occupancy sensor for Offices, Hallways, Conference, Storage, Utility, Lockers, Restrooms, Crew Room, Supply, Shop Area and High Bays.

2. Timer switches for shower lights and task lighting.

INDOOR MULTI-LEVEL LIGHTING CONTROL

1. Bilevel occupant sensor wall and/or ceiling for Offices, Hallways, Conference, Storage, Utility, Lockers, Restrooms, Crew Room, Supply, Shop Area and High Bays.

2. LED lights with 0-10V dimmable ballast to achieve manual dimming through a wall dimmer switches for all areas.

DAYLIT AREA CONTROL

1. Photoelectric cell unit and wall dimmer switches for all spaces with daylighting area greater then 2500 square foot.

BUILDING EXTERIOR, WASHRACK CANOPY & FUEL ISLAND CANOPY LIGHTING

1. Photoelectric cell unit and astronomical time clock. Time clock function integral to Main Hub provides astronomical time clock functions.

2. All exterior luminaries shall have full cut-off type light distribution.

3. Fixture integrated motion sensor shall dimm the light output by 50% of maximum output when there is no motion detected.

OUTDOOR PARKING AREA LIGHTING

1. All exterior luminaries shall have full cut-off type light distribution.

2. Fixture integrated motion sensor shall dimm the light output by 50% of maximum output when there is no motion detected.

3. Fixture integrated photocell control the light switching ON/OFF based on daylighting.

OUTDOOR PARKING AREA LIGHTING UNDER BRIDGE

1. Photoelectric cell unit and astronomical time clock. Time clock function integral to Main Hub provides astronomical time clock functions.

2. All exterior luminaries shall have full cut-off type light distribution.

3. Fixture integrated motion sensor shall dimm the light output by 50% of maximum output when there is no motion detected.

GENERAL NOTE:

Form LTG-1C, page 2 of 4 (Conditional Spaces) and page 2 of 4 (Un-conditional Spaces) are shown on sheet EE0-0.15.
Form LTG-1C, page 3 of 4 and page 4 of 4 are shown on sheet. EE0-0.16.
Other checked forms are available upon request.

CERTIFICATE OF COMPLIANCE (Page 1 of 4) LTG-1C

Project Name: SFOBB MAINTENANCE COMPLEX			Date: 05/25/2012
Project Address: 200 BURMA ROAD, OAKLAND, CA 94607	Climate Zone: 3		Conditioned Floor Area: 43,117 SF Unconditioned Floor Area: 8,252 SF

General Information

Building Type:	☑ Nonresidential	☐ High-Rise Residential	☐ Hotel/Motel
☐ Schools	☐ Relocatable Public Schools	☑ Conditioned Spaces	☑ Unconditioned Spaces
Phase of Construction:	☑ New Construction	☐ Addition	☐ Alteration
Method of Compliance:	☐ Complete Building	☑ Area Category	☐ Tailored

Documentation Author's Declaration Statement
- I Certify that this Certificate of Compliance documentation is accurate and complete.

Name: JASWINDER GILL		Signature: Jaswinder S. Gill	
Company: CA DEPARTMENT OF TRANSPORTATION			Date: 05/25/2012
Address: 1801 30TH STREET, MS-9-3/11H			If applicable: CEA # CEPE #
City/State/Zip: SACRAMENTO, CA-95816			Phone: (916) 227-9492

Principal Lighting Designer's Declaration Statement
- I am eligible under Division 3 of the California Business and Professions Code to accept responsilbilty for the lighting design.
- This Certificate of Compliance identifies the lighting features and performance specification required for compliance with Title 24, Pages 1 and 6 of the California Code of Regulations.
- The design features represented on this Certificate of Compliance are consistent with the information provided to document this design on the other applicable compliance forms, worksheets, calculations, plans and specifications submitted to the enforcement agency for approval with this building permit application.

Name: JASWINDER GILL		Signature: Jaswinder S. Gill	
Company: CA DEPARTMENT OF TRANSPORTATION			Phone: (916) 227-9492
Address: 1801 30TH STREET, MS-9-3/11H			License # E 18551
City/State/Zip: SACRAMENTO, CA-95816			Date: EXP 12-31-12

Lighting Mandatory Measures
Indicate location on building plans of Mandatory Measures Note Block: THIS SHEET

LIGHTING COMPLIANCE FORMS & WORKSHEETS (Check box if worksheet is included)

For detailed instructions on the use of this and all Energy Effeciency Standards compliance forms, please refer to the Nonresidential Manual published by the California Energy Commission.

☑	LTG-1C Pages 1 through 4	Certificate of Compliance. All pages required on plans for all submittals.
☑	LTG-2C	Lighting Controls Credit Worksheet
☑	LTG-3C	Indoor Lighting Power Allowance
☐	LTG-4C Pages 1 through 4	Tailored Method Worksheet
☐	LTG-5C Pages 1 and 2	Line Voltage Track Lighting Worksheet

2008 Nonresidential Compliance Forms **July 2010**

DESIGN	BY Jaswinder Gill	CHECKED Christine Mamaril	
DETAILS	BY Jaswinder Gill	CHECKED J. S. Sandhu	
QUANTITIES	BY Jaswinder Gill	CHECKED Christine Mamaril	

STATE OF CALIFORNIA
DEPARTMENT OF TRANSPORTATION

DIVISION OF ENGINEERING SERVICES
ELECTRICAL-MECHANICAL-WATER AND WASTEWATER DESIGN

BRIDGE NO. 33M5785
POST MILE 2.2

SFOBB MAINTENANCE COMPLEX
INDOOR LIGHTING COMPLIANCE FORM 1

SHEET EE0-0.14

TAEMWW Imperial Rev. 7/10

ORIGINAL SCALE IN INCHES FOR REDUCED PLANS 0 1 2 3

UNIT 3596
PROJECT NUMBER & PHASE 04120006661
EA 014081

DISREGARD PRINTS BEARING EARLIER REVISION DATES
REVISION DATES (PRELIMINARY STAGE ONLY) 11/08/11 3/23/12 5/4/12 5/30/12
SHEET OF

25-OCT-2012 10:56
ee0_0.14.dgn

DIST.	COUNTY	ROUTE	POST MILES TOTAL PROJECT	SHEET NO.	TOTAL SHEETS
04	Ala	80	2.2	626	800

Jaswinder S Gill 5-30-12
REGISTERED ELECTRICAL ENGINEER DATE

REGISTERED PROFESSIONAL ENGINEER J. S. GILL No. 18551 Exp. 12-31-12 ELEC STATE OF CALIFORNIA

10-22-12
PLANS APPROVAL DATE

The State of California or its officers or agents shall not be responsible for the accuracy or completeness of scanned copies of this plan sheet.

CERTIFICATE OF COMPLIANCE (Page 2 of 4) LTG-1C

INDOOR LIGHTING SCHEDULE and FIELD INSPECTION ENERGY CHECKLIST

Project Name: SFOBB MAINTENANCE COMPLEX — Date: 05/25/2012

Installation Certificate, LTG-1-INST (Retain a copy and verify form is compited and signed.) — Field Inspector ☐

Certificate of Acceptance, LTG-2A and LTG-3A (Retain a copy and verify form is completed and signed.) — Field Inspector ☐

A separate Lighting Schedule Must Be Filled Out for Conditioned and Unconditioned Spaces Installed Lighting Power listed on this Lighting Schedule is only for: ☐ CONDITIONED SPACE ☑ UNCONDITIONED SPACE

☑ The actual indoor lighting power listed below includes all installed permanent and portable lighting system in accordance with S 146 (a)

☑ Only for offices: Up to the first 0.2 watts per square foot of portable lighting shall not be rquired to be included in the calculation of actual indoor lighting power density in accordance with Exception to S 146 (a). All portable lighting in excess of 0.2 watts per square foot is totaled below.

	Luminaire Schedule (Type, Lamps, Ballasts)		Installed Watts						
A	B	C	D	E		F	G	H	
				How wattage was determined				Field Inspector 2	
	Complete Luminaire Description (i.e, lamp flourescent troffer, F32T8, one dimmable electronic ballast)		Watts per Luminaire 1	CEC Default from NA8	According to S 130 (d or e)	Number of Luminaires	Installed Watts (D x F)	Pass	Fail
LED1	2X2, LED ENGINE, RECESSED TROFFER		37	☐	☑	32	1184	☐	☐
LED2	2X4, LED ENGINE, RECESSED TROFFER		47	☐	☑	12	564	☐	☐
LED5	LED HIGH BAY, SLIM PROFILE LED ENGINE		116	☐	☑	12	1392	☐	☐
LED6	LED HIGH BAY, SLIM PROFILE LED ENGINE		233	☐	☑	9	2097	☐	☐
LED7	1X4, BI-PIN SOCKET LED LAMP, BRACKET MOUNTED INDUSTRIAL FIXTURE		37	☐	☑	15	555	☐	☐
				☐	☐			☐	☐
				☐	☐			☐	☐
				☐	☐			☐	☐
				☐	☐			☐	☐
				☐	☐			☐	☐
				☐	☐			☐	☐
				☐	☐			☐	☐
				☐	☐			☐	☐
				☐	☐			☐	☐
				☐	☐			☐	☐
				☐	☐			☐	☐
				☐	☐			☐	☐
				☐	☐			☐	☐
			INSTALLED WATTS PAGE TOTAL:				5792		

Building total number of pages: 1 — Installed Watts Building Total (Sum of all pages): 5792

Enter into LTG-1C Page 4 of 4

1. Wattage shall be determined according to Section 130 (d and e). Wattage shall be rating of light fixture, not rating of bulb.
2. If Fail then describe on Page 2 of the Inspection Checklist Form and take appropriate action to correct. Verify building plans if necessary.

2008 Nonresidential Compliance Forms — **July 2010**

CERTIFICATE OF COMPLIANCE (Page 2 of 4) LTG-1C

INDOOR LIGHTING SCHEDULE and FIELD INSPECTION ENERGY CHECKLIST

Project Name: SFOBB MAINTENANCE COMPLEX — Date: 05/25/2012

Installation Certificate, LTG-1-INST (Retain a copy and verify form is compited and signed.) — Field Inspector ☐

Certificate of Acceptance, LTG-2A and LTG-3A (Retain a copy and verify form is completed and signed.) — Field Inspector ☐

A separate Lighting Schedule Must Be Filled Out for Conditioned and Unconditioned Spaces Installed Lighting Power listed on this Lighting Schedule is only for: ☑ CONDITIONED SPACE ☐ UNCONDITIONED SPACE

☑ The actual indoor lighting power listed below includes all installed permanent and portable lighting system in accordance with Section 146 (a)

☑ Only for offices: Up to the first 0.2 watts per square foot of portable lighting shall not be rquired to be included in the calculation of actual indoor lighting power density in accordance with Exception to S 146 (a). All portable lighting in excess of 0.2 watts per square foot is totaled below.

	Luminaire Schedule (Type, Lamps, Ballasts)		Installed Watts						
A	B	C	D	E		F	G	H	
				How wattage was determined				Field Inspector 2	
	Complete Luminaire Description (i.e, lamp flourescent troffer, F32T8, one dimmable electronic ballast)		Watts per Luminaire 1	CEC Default from NA8	According to S 130 (d or e)	Number of Luminaires	Installed Watts (D x F)	Pass	Fail
LED1	2X2, LED ENGINE, RECESSED TROFFER		37	☐	☑	128	4736	☐	☐
LED2	2X4, LED ENGINE, RECESSED TROFFER		47	☐	☑	176	8272	☐	☐
LED3	6" RECESSED LED DOWN LIGHT, WET LOCATION		27	☐	☑	10	270	☐	☐
LED4	1X4, LED ENGINE, WALL MOUNTED, LOW PROFILE WRAP STRIP LIGHT		27	☐	☑	6	162	☐	☐
LED5	LED HIGH BAY, SLIM PROFILE LED ENGINE		116	☐	☑	15	1740	☐	☐
LED6	LED HIGH BAY, SLIM PROFILE LED ENGINE		233	☐	☑	64	14912	☐	☐
LED7	1X4, BI-PIN SOCKET LED LAMP, BRACKET MOUNTED INDUSTRIAL FIXTURE		37	☐	☑	54	1998	☐	☐
LED9	1X4 LED ENGINE, HEAVYDUTY ENCLOSED FIXTURE		40	☐	☑	3	120	☐	☐
				☐	☐			☐	☐
				☐	☐			☐	☐
				☐	☐			☐	☐
				☐	☐			☐	☐
				☐	☐			☐	☐
				☐	☐			☐	☐
				☐	☐			☐	☐
				☐	☐			☐	☐
				☐	☐			☐	☐
				☐	☐			☐	☐
			INSTALLED WATTS PAGE TOTAL:				32210		

Building total number of pages: 1 — Installed Watts Building Total (Sum of all pages): 32210

Enter into LTG-1C Page 4 of 4

1. Wattage shall be determined according to Section 130 (d and e). Wattage shall be rating of light fixture, not rating of bulb.
2. If Fail then describe on Page 2 of the Inspection Checklist Form and take appropriate action to correct. Verify building plans if necessary.

2008 Nonresidential Compliance Forms — **July 2010**

CALIFORNIA STATE FIRE MARSHAL APPROVED
Approval of this plan does not authorize or approve any omission or deviation from applicable regulations. Final approval is subject to field inspection. One set of approved plans shall be available on the project site at all times.
Reviewed by: JOHN E WOODS, SDSFM
Approval date: 8-22-12

DESIGN	BY Jaswinder Gill	CHECKED Christine Mamaril	
DETAILS	BY Jaswinder Gill	CHECKED J. S. Sandhu	
QUANTITIES	BY Jaswinder Gill	CHECKED Christine Mamaril	

STATE OF CALIFORNIA DEPARTMENT OF TRANSPORTATION

DIVISION OF ENGINEERING SERVICES ELECTRICAL-MECHANICAL-WATER AND WASTEWATER DESIGN

BRIDGE NO. 33M5785 — POST MILE 2.2

SFOBB MAINTENANCE COMPLEX

INDOOR LIGHTING COMPLIANCE FORM 2

SHEET EE0-0.15

TAEMWW Imperial Rev. 7/10

ORIGINAL SCALE IN INCHES FOR REDUCED PLANS 0 1 2 3

UNIT 3596
PROJECT NUMBER & PHASE 04120006661
EA 014081

DISREGARD PRINTS BEARING EARLIER REVISION DATES → REVISION DATES (PRELIMINARY STAGE ONLY) 11/08/2011 3/23/12 5/14/12 5/30/12 — SHEET — OF

25-OCT-2012 10:56
ee0_0.15.dgn

DIST.	COUNTY	ROUTE	POST MILES TOTAL PROJECT	SHEET NO.	TOTAL SHEETS
04	Ala	80	2.2	627	800

Jaswinder S Gill 5-30-12
REGISTERED ELECTRICAL ENGINEER DATE

REGISTERED PROFESSIONAL ENGINEER J. S. GILL No. 18551 Exp. 12-31-12 ELEC STATE OF CALIFORNIA

10-22-12
PLANS APPROVAL DATE

The State of California or its officers or agents shall not be responsible for the accuracy or completeness of scanned copies of this plan sheet.

CALIFORNIA STATE FIRE MARSHAL APPROVED
Approval of this plan does not authorize or approve any omission or deviation from applicable regulations. Final approval is subject to field inspection. One set of approved plans shall be available on the project site at all times.
Reviewed by: JOHN E WOODS, SDSFM
Approval date: 8-22-12

CERTIFICATE OF COMPLIANCE (Page 3 of 4) LTG-1C

Project Name: SFOBB MAINTENANCE COMPLEX
Date: 05/25/2012

INDOOR LIGHTING SCHEDULE and FIELD ENERGY CHECKLIST

Fill in controls for all spaces: a) area controls, b) multi-level controls, c) manual daylighting controls for daylit areas> 250 sq ft, automatic daylighting controls for daylit areas> 2,500 sq ft, d) shut-off controls, e) display lighting controls, f) tailored lighting controls-general lighting controlled separately from display, ornamental and display case lighting and g) demand responsive automatic controls for retail stores> 50,000 sq ft, in accordance with Section 131.

MANDATORY LIGHTING CONTROLS - FIELD INSPECTION ENERGY CHECKLIST				Field Inspector	
Type/Description	Number of Units	Location in Building		Pass	Fail
LIGHTING CONTROL PANEL (LCP) & LIGHTING CONTROL PANEL RECESSED (LCPR)	35	SEE SHEET EE1-3.01 FOR LOCATIONS		☐	☐
Ceiling Occupancy Sensor, Type1(OC1)	40	OFFICE SPACES WITH CLOSED CEILING SYSTEMS		☐	☐
Ceiling Occupancy Sensor, Type2 (OC2)	34	OFFICE SPACES WITH CLOSED CEILING SYSTEMS		☐	☐
Ceiling Occupancy Sensor, Type3 (OC3)	41	SHOP AREA WITH OPEN DECK CEILINGS		☐	☐
PHOTOELECTRIC CELL UNIT (PEU)	23	AREA WITH SKYLIGHTS & TUBE LIGHTS		☐	☐
WALL SINGLE SWITCH-DIMMER(Sd)	28	SPACES WITH ONE ZONE OF LIGHTING		☐	☐
WALL DOUBLE SWITCH-DIMMER (S2d)	70	SPACES WITH TWO ZONE OF LIGHTING		☐	☐
WALL SINGLE SWITCH OCCUPANCY (SOC1)	21	OFFICES WITH ONE LIGHT		☐	☐
WALL DUAL SWITCH OCCUPANCY (SOC2)	32	SPACES WITH BI-LEVEL SWITCHING		☐	☐
LIGHTING NETWORK PANELS (LNP)-CONTAINS HUBS & MAIN HUBS	6	INSIDE INTEGRATED FACILITIES SWITCHBOARDS		☐	☐
HUBS	20	INSIDE LNP'S		☐	☐
MAIN HUBS	2	INSIDE LNP'S		☐	☐

Field Inspectors's Notes or Descripancies:

2008 Nonresidential Compliance Forms *July 2010*

CERTIFICATE OF COMPLIANCE (Page 4 of 4) LTG-1C

Project Name: SFOBB MAINTENANCE COMPLEX
Date: 05/25/2012

Conditioned and Unconditioned space Lighting must not be combined for compliance

Indoor Lighting Power for Conditioned Spaces		Watts	Indoor Lighting Power for Unconditioned Spaces		Watts
Installed Lighting (from Conditioned LTG-1C Page 2		32,210	Installed Lighting (from Unconditioned LTG-1C Page 2		5,792
Lighting Control Credit Conditioned Spaces (from LTG-2C)	-	3,211	Lighting Control Credit Unconditioned Spaces (from LTG-2C)	-	945
Adjusted Installed Lighting Power	=	28,999	Adjusted Installed Lighting Power	=	4,847
Complies if Installed ≤ Allowed			Complies if Installed ≤ Allowed		
Allowed Lighting Power Conditioned Spaces (from LTG-3C)		38,657	Allowed Lighting Power Unconditioned Spaces (from LTG-3C)		5,099

Required Acceptance Tests

Designer:
This form is to be used by the designer and attached to the plans. Listed below is the acceptance test for the lighting system, LTG-2A and LTG-3A. The designer is required to check the acceptance tests and list all control devices serving the building or space shall be certified as meeting the Acceptance Requirements for Code Compliance. If all the lighting system or control of a certain type requires a test, list the different lighting and the number of systems. The NA7 Section in the Appendix of the Nonresidential Reference Appendices Manual describes the test. Since this form will be part of the plans, completion of this section will allow the responsible party to budget for the scope of work appropriately. Forms can be grouped by type of Luminaire controlled.

Enforcement Agency:
System Acceptance. Before Occupancy Permit is granted for a newly constructed building or space or when ever new lighting system with controls is installed in the building or space shall be certified as meeting the Acceptance Requirements.
The LTG-2A and LTG-3A forms are not considered a complete form and are not to be accepted by the enforcement agency unless the boxes are checked and/or filled and signed. In addition, a Certificate of Acceptance forms shall be submitted to the enforcement agency that certifies plans, specifications, installation certificates, and operating and maintenance information meet the requirements of Section 10-103 (b) of Title 24 Part 6. The field inspector must receive the properly filled out and signed forms before the building can receive final occupancy. A copy of the LTG-2A and LTG-3A for each different lighting luminaire control(s) must be provided to the owner of the building for their records.

Luminaires Controlled				LTG-2A and 3A
Equipment Requiring Testing	Description	Number of like Controls	Location	Controls and Sensors and Automatic Daylighting Controls Acceptance
LCP & LCPR	LCP & LCPR	35		☑
OC1	Ceiling Occupancy Sensor, Type1(OC1)	40		☑
OC2	Ceiling Occupancy Sensor, Type2 (OC2)	34		☑
OC3	Ceiling Occupancy Sensor, Type3 (OC3)	41		☑
PEU	PHOTOELECTRIC CELL UNIT (PEU)	23		☑
Sd	WALL SINGLE SWITCH-DIMMER(Sd)	28		☑
S2d	WALL DOUBLE SWITCH-DIMMER (S2d)	70		☑
SOC1	WALL SINGLE SWITCH OCCUPANCY (SOC1)	21		☑
SOC2	WALL DUAL SWITCH OCCUPANCY (SOC2)	32		☑
LNP	LIGHTING NETWORK PANELS	6		☑
HUBS	HUBS	20		☑
MAIN HUBS	MAIN HUBS	2		☐
				☐
				☐

2008 Nonresidential Compliance Forms *July 2010*

DESIGN	BY Jaswinder Gill	CHECKED Christine Mamaril	
DETAILS	BY Jaswinder Gill	CHECKED J. S. Sandhu	
QUANTITIES	BY Jaswinder Gill	CHECKED Christine Mamaril	

STATE OF CALIFORNIA DEPARTMENT OF TRANSPORTATION

DIVISION OF ENGINEERING SERVICES ELECTRICAL-MECHANICAL-WATER AND WASTEWATER DESIGN

BRIDGE NO. 33M5785
POST MILE 2.2

SFOBB MAINTENANCE COMPLEX
INDOOR LIGHTING COMPLIANCE FORM 3

SHEET EE0-0.16

TAEMWW Imperial Rev. 7/10

ORIGINAL SCALE IN INCHES FOR REDUCED PLANS 0 1 2 3

UNIT 3596
PROJECT NUMBER & PHASE 04120006661
EA 014081

DISREGARD PRINTS BEARING EARLIER REVISION DATES → 11/08/2011 3/23/12 5/4/12 5/30/12

REVISION DATES (PRELIMINARY STAGE ONLY) SHEET OF

25-OCT-2012 10:57
ee0_0.16.dgn

DIST.	COUNTY	ROUTE	POST MILES TOTAL PROJECT	SHEET NO.	TOTAL SHEETS
04	Ala	80	2.2	628	800

Jarid Amirazodi 5-30-12
REGISTERED ELECTRICAL ENGINEER DATE

REGISTERED PROFESSIONAL ENGINEER J. AMIRAZODI No. 17509 Exp. 6-30-13 ELEC STATE OF CALIFORNIA

10-22-12
PLANS APPROVAL DATE

The State of California or its officers or agents shall not be responsible for the accuracy or completeness of scanned copies of this plan sheet.

CALIFORNIA STATE FIRE MARSHAL APPROVED
Approval of this plan does not authorize or approve any omission or deviation from applicable regulations. Final approval is subject to field inspection. One set of approved plans shall be available on the project site at all times.
Reviewed by: JOHN E WOODS, SDSFM
Approval date: 8-22-12

General Note:

A. *For conduit/conductor continuation, see EE Plan sheets.*

B. *Provide and install all equipment and devices such as low voltage power supply, data and control cables, connectors, mounting devices, communication software and any other required equipment for proper operation of Web-Based Power Monitoring System of PV system, lighting system and power system, without any additional costs to the State.*

C. *Provide and install 120-volt power for power monitoring type 1 from Panel M (M9) as required.*

D. *For conduit and conductor/cable schedule, see EE0-1.11 and EE0-1.12.*

E. *For power monitoring block diagram, see EE1-3.02.*

Notes:

1. *Power monitoring Type 1.*
2. *Power monitoring Type 2.*
3. *Transformer M shall be dry type, 30 KVA, 480 V Primary-Delta, 208/120 V Secondary-Y, 3-phase, 4 Wire.*
4. *For Panel M schedule, see EE0-1.13.*
5. *To electrical vault or pull box.*
6. *Data and control cables as required.*

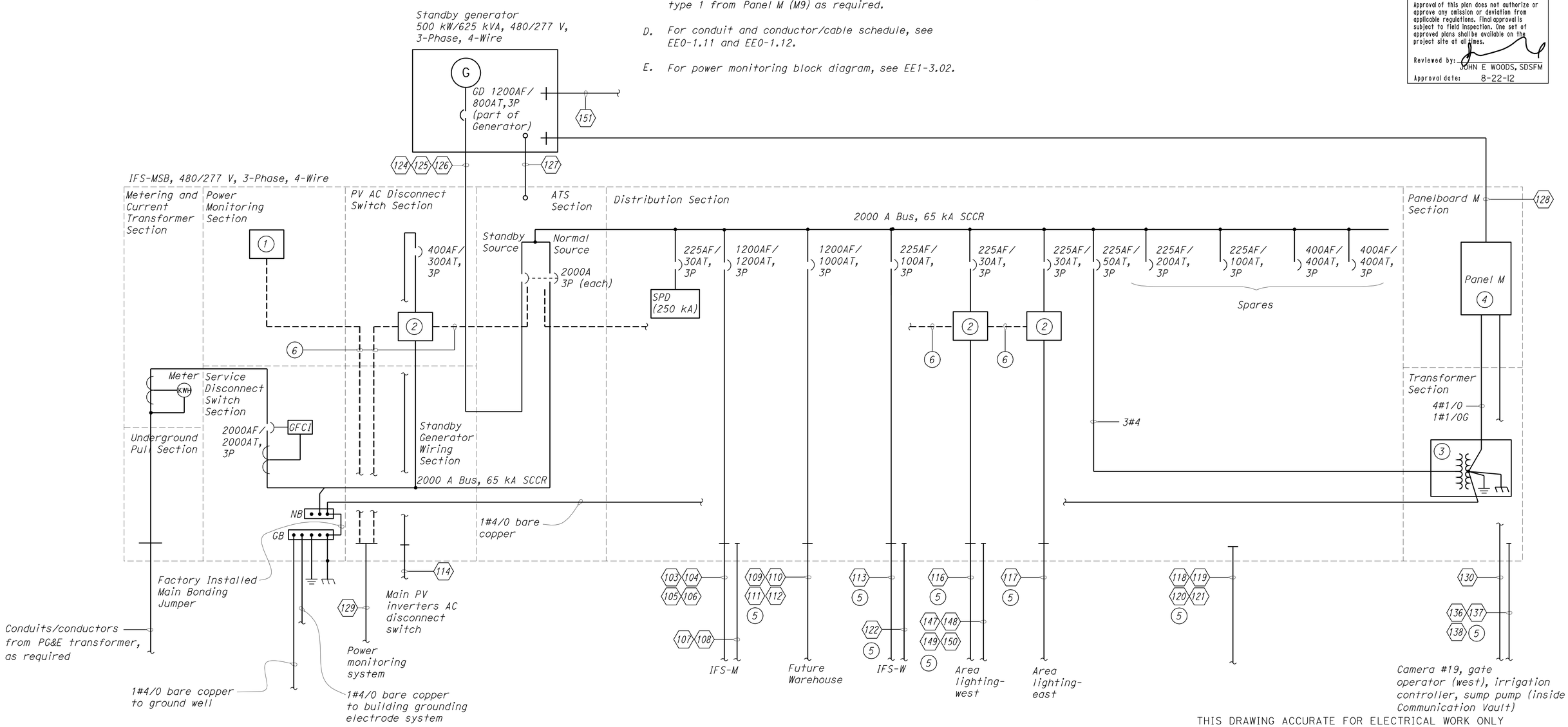

THIS DRAWING ACCURATE FOR ELECTRICAL WORK ONLY

	BY	CHECKED
DESIGN	Javid Amirazodi	J.S. Sandhu/J.R. Lacy
DETAILS	Javid Amirazodi	James R. Lacy
QUANTITIES	Javid Amirazodi	J.S. Sandhu/J.R. Lacy

STATE OF CALIFORNIA
DEPARTMENT OF TRANSPORTATION

DIVISION OF ENGINEERING SERVICES
ELECTRICAL-MECHANICAL-WATER AND WASTEWATER DESIGN

BRIDGE NO. 33M5785
POST MILE 2.2

SFOBB MAINTENANCE COMPLEX

ELECTRICAL SYSTEM SINGLE LINE DIAGRAM

SHEET **EE0-1.1**

TAEMWW Imperial Rev. 7/10

ORIGINAL SCALE IN INCHES FOR REDUCED PLANS 0 1 2 3

UNIT 3596
PROJECT NUMBER & PHASE 04120006661
EA 014081

DISREGARD PRINTS BEARING EARLIER REVISION DATES → 5/30/12

REVISION DATES (PRELIMINARY STAGE ONLY) SHEET OF

25-OCT-2012 10:57

ee0_1.01.dgn

DIST.	COUNTY	ROUTE	POST MILES TOTAL PROJECT	SHEET NO.	TOTAL SHEETS
04	Ala	80	2.2	629	800

Catalino A. Enriquez 5-30-12
REGISTERED ELECTRICAL ENGINEER DATE

REGISTERED PROFESSIONAL ENGINEER C. ENRIQUEZ No. 16944 Exp. 6-30-13 ELEC STATE OF CALIFORNIA

10-22-12
PLANS APPROVAL DATE

The State of California or its officers or agents shall not be responsible for the accuracy or completeness of scanned copies of this plan sheet.

CALIFORNIA STATE FIRE MARSHAL APPROVED
Approval of this plan does not authorize or approve any omission or deviation from applicable regulations. Final approval is subject to field inspection. One set of approved plans shall be available on the project site at all times.
Reviewed by: JOHN E WOODS, SDSFM
Approval date: 8-22-12

General Notes:

A. For feeders size and physical location of all panelboards and switchboards in Building 1A and 1B, see sheets EE1-1.1 through EE1-3.

B. High-leg (stinger) shall be on B-phase of all 120/240 volts, 3-phase, 4-wire panelboards.

C. For Power Monitoring interconnection block diagram, see sheet EE1-3.02.

Notes:

1. Power Monitoring Type 2.
2. Serial control cables to the next IFS. See EE1-3.01 for continuation.
3. Serial control cable.

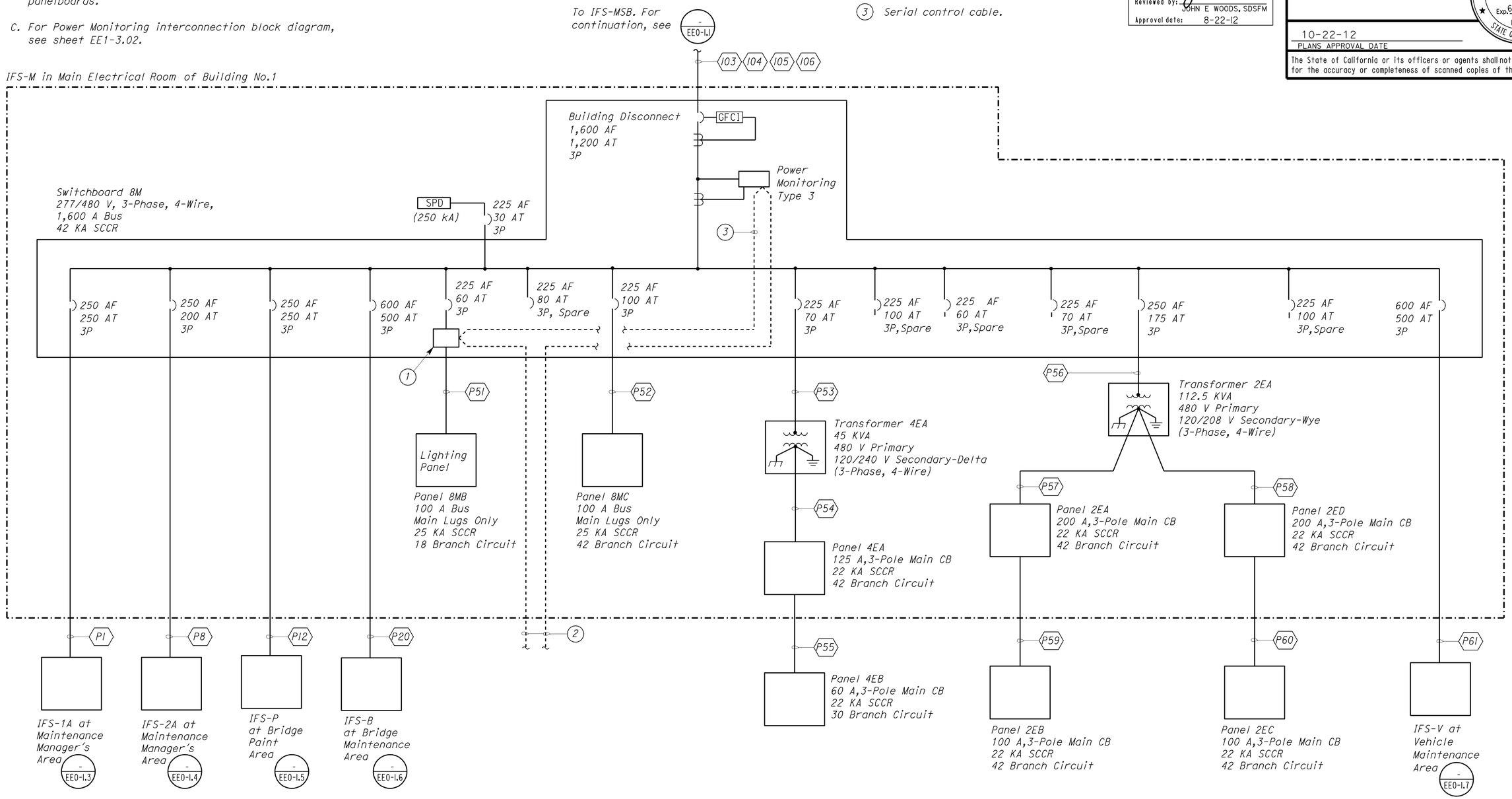

BUILDING 1A AND 1B POWER DIAGRAM

THIS DRAWING ACCURATE FOR ELECTRICAL WORK ONLY

	BY	CHECKED
DESIGN	Catalino Enriquez	J.S.S./H.Abdelsayed
DETAILS	Dali Zhou	Catalino Enriquez
QUANTITIES	Catalino Enriquez	J.S.S./H.Abdelsayed

STATE OF CALIFORNIA
DEPARTMENT OF TRANSPORTATION

DIVISION OF ENGINEERING SERVICES
ELECTRICAL-MECHANICAL-WATER AND WASTEWATER DESIGN

BRIDGE NO. 33M5785
POST MILE 2.2

SFOBB MAINTENANCE COMPLEX
IFS-M SINGLE LINE DIAGRAM

SHEET **EE0-1.2**

TAEMWW Imperial Rev. 7/10

ORIGINAL SCALE IN INCHES FOR REDUCED PLANS 0 1 2 3

UNIT 3596
PROJECT NUMBER & PHASE 04120006661
EA 014081

DISREGARD PRINTS BEARING EARLIER REVISION DATES
REVISION DATES (PRELIMINARY STAGE ONLY) 7/26/12 4/27/12 5/30/12
SHEET OF

25-OCT-2012 10:57
ee0_1.02.dgn

DIST.	COUNTY	ROUTE	POST MILES TOTAL PROJECT	SHEET NO.	TOTAL SHEETS
04	Ala	80	2.2	630	800

REGISTERED ELECTRICAL ENGINEER — 5-30-12 DATE

REGISTERED PROFESSIONAL ENGINEER J. ABDELSAYED No. 18915 Exp. 12-31-13 ELEC STATE OF CALIFORNIA

10-22-12
PLANS APPROVAL DATE

The State of California or its officers or agents shall not be responsible for the accuracy or completeness of scanned copies of this plan sheet.

CALIFORNIA STATE FIRE MARSHAL APPROVED
Approval of this plan does not authorize or approve any omission or deviation from applicable regulations. Final approval is subject to field inspection. One set of approved plans shall be available on the project site at all times.
Reviewed by: JOHN E WOODS, SDSFM
Approval date: 8-22-12

General Notes:

A. *For conduit and conductor schedule, see sheet EE1-1.2.*

B. *For Power Monitoring interconnection block diagram, see sheet EE1-3.02.*

Notes:

(1) *Power Monitoring Type 2.*

(2) *Serial control cables to the next IFS. See EE1-3.01 for continuation.*

(3) *Serial control cable.*

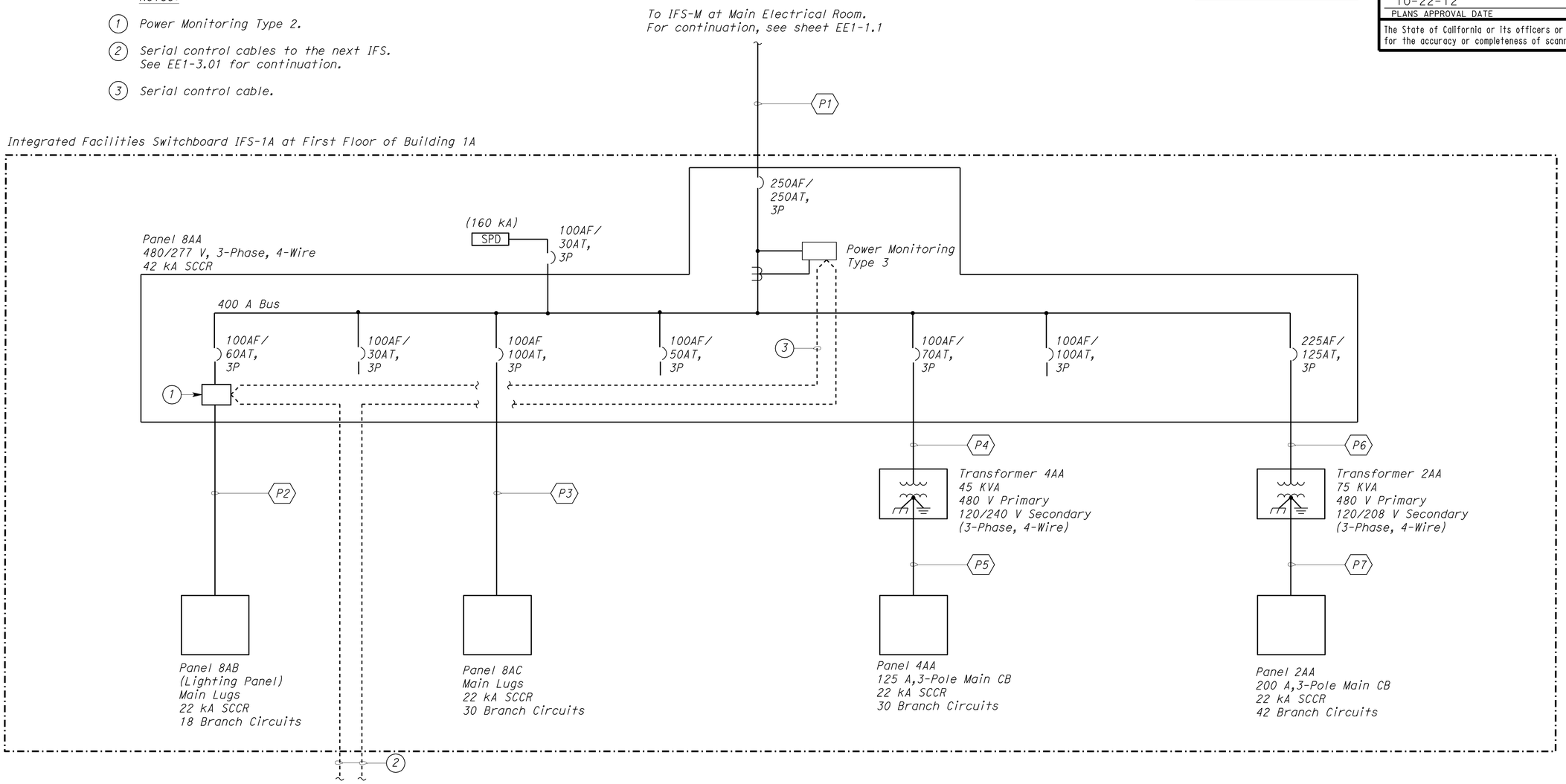

INTEGRATED FACILITIES SWITCHBOARD IFS-1A

THIS DRAWING ACCURATE FOR ELECTRICAL WORK ONLY

	BY	CHECKED
DESIGN	Joseph Abdelsayed	J. S. Sandhu
DETAILS	Ed Tapalla/Dali Zhou	Joseph Abdelsayed
QUANTITIES	Joseph Abdelsayed	J. S. Sandhu

STATE OF CALIFORNIA
DEPARTMENT OF TRANSPORTATION

DIVISION OF ENGINEERING SERVICES
ELECTRICAL-MECHANICAL-WATER AND WASTEWATER DESIGN

BRIDGE NO. 33M5785
POST MILE 2.2

SFOBB MAINTENANCE COMPLEX
IFS-1A SINGLE LINE DIAGRAM

SHEET **EE0-1.3**

TAEMWW Imperial Rev. 7/10

ORIGINAL SCALE IN INCHES FOR REDUCED PLANS 0 1 2 3

UNIT 3596
PROJECT NUMBER & PHASE 04120006661
EA 014081

DISREGARD PRINTS BEARING EARLIER REVISION DATES → 7/18/12 5/30/12

REVISION DATES (PRELIMINARY STAGE ONLY) SHEET OF

25-OCT-2012 10:57

ee0_1.03.dgn

DIST.	COUNTY	ROUTE	POST MILES TOTAL PROJECT	SHEET NO.	TOTAL SHEETS
04	Ala	80	2.2	631	800

REGISTERED ELECTRICAL ENGINEER — 5-30-12 DATE

REGISTERED PROFESSIONAL ENGINEER J. ABDELSAYED No. 18915 Exp. 12-31-13 ELEC STATE OF CALIFORNIA

10-22-12
PLANS APPROVAL DATE

The State of California or its officers or agents shall not be responsible for the accuracy or completeness of scanned copies of this plan sheet.

CALIFORNIA STATE FIRE MARSHAL APPROVED
Approval of this plan does not authorize or approve any omission or deviation from applicable regulations. Final approval is subject to field inspection. One set of approved plans shall be available on the project site at all times.
Reviewed by: JOHN E WOODS, SDSFM
Approval date: 8-22-12

General Notes:

A. *For conduit and conductor schedule, see sheet EE1-1.2.*

B. *For Power Monitoring interconnection block diagram, see sheet EE1-3.02.*

Notes:

1. *Power Monitoring Type 2.*
2. *Serial control cables to the next IFS. See EE1-3.01 for continuation.*
3. *Serial control cable.*

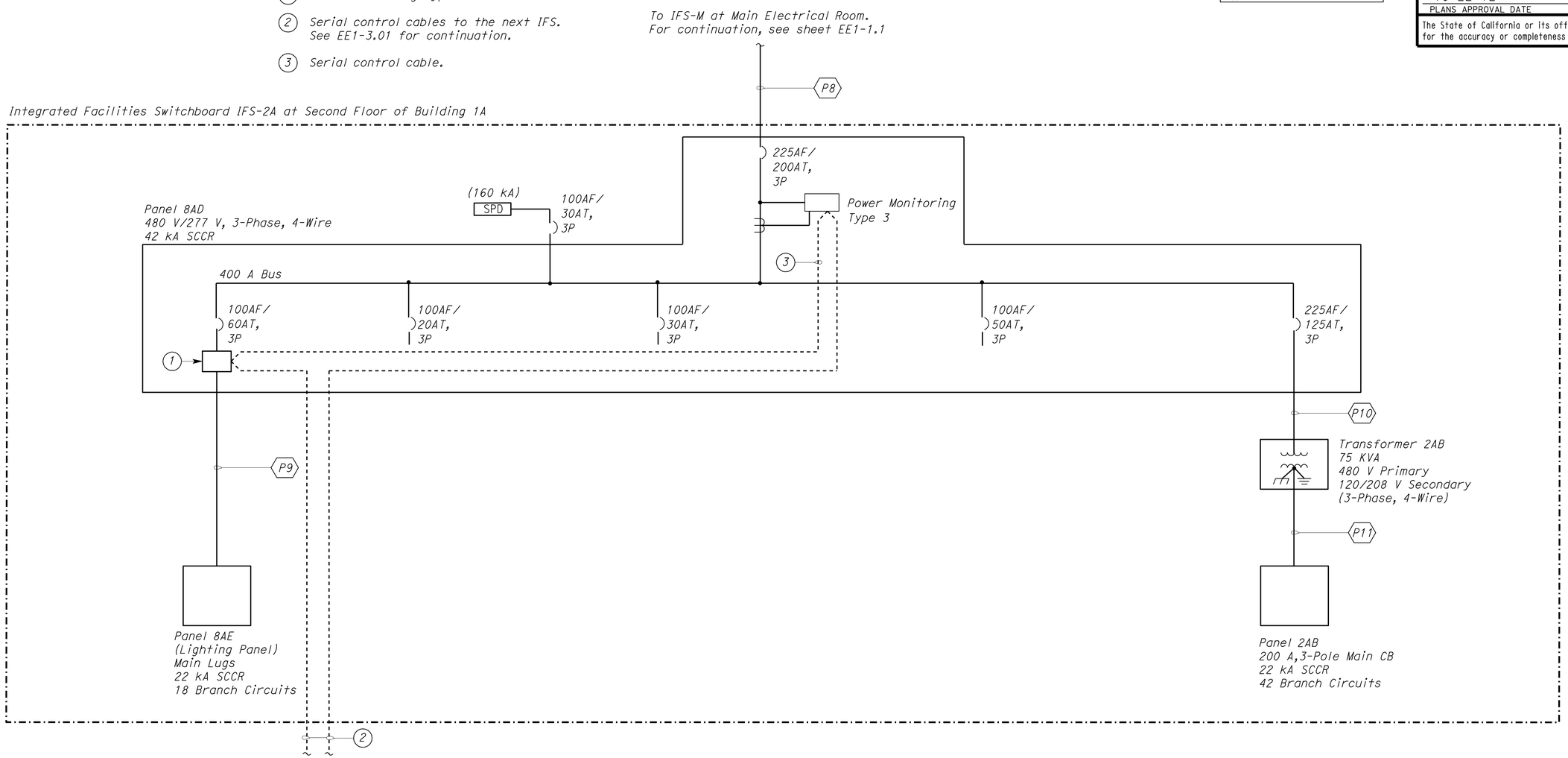

INTEGRATED FACILITIES SWITCHBOARD IFS-2A

	BY	CHECKED
DESIGN	Joseph Abdelsayed	J. S. Sandhu
DETAILS	Ed Tapalla/Dali Zhou	Joseph Abdelsayed
QUANTITIES	Joseph Abdelsayed	J. S. Sandhu

STATE OF CALIFORNIA
DEPARTMENT OF TRANSPORTATION

DIVISION OF ENGINEERING SERVICES
ELECTRICAL-MECHANICAL-WATER AND WASTEWATER DESIGN

BRIDGE NO. 33M5785
POST MILE 2.2

SFOBB MAINTENANCE COMPLEX
IFS-2A SINGLE LINE DIAGRAM

SHEET **EE0-1.4**

TAEMWW Imperial Rev. 7/10

ORIGINAL SCALE IN INCHES FOR REDUCED PLANS 0 1 2 3

UNIT 3596
PROJECT NUMBER & PHASE 04120006661
EA 014081

DISREGARD PRINTS BEARING EARLIER REVISION DATES → 7/9/12 5/30/12
REVISION DATES (PRELIMINARY STAGE ONLY) SHEET OF

25-OCT-2012 11:19
ee0_1.04.dgn

DIST.	COUNTY	ROUTE	POST MILES TOTAL PROJECT	SHEET NO.	TOTAL SHEETS
04	Ala	80	2.2	632	800

REGISTERED ELECTRICAL ENGINEER — 5-30-12 DATE

REGISTERED PROFESSIONAL ENGINEER J. ABDELSAYED No. 18915 Exp. 12-31-13 ELEC STATE OF CALIFORNIA

10-22-12
PLANS APPROVAL DATE

The State of California or its officers or agents shall not be responsible for the accuracy or completeness of scanned copies of this plan sheet.

CALIFORNIA STATE FIRE MARSHAL APPROVED
Approval of this plan does not authorize or approve any omission or deviation from applicable regulations. Final approval is subject to field inspection. One set of approved plans shall be available on the project site at all times.
Reviewed by: JOHN E WOODS, SDSFM
Approval date: 8-22-12

General Notes:

A. *For conduit and conductor schedule, see sheet EE1-1.2.*

B. *For Power Monitoring interconnection block diagram, see sheet EE1-3.02.*

Notes:

1. *Power Monitoring Type 2.*
2. *Serial control cables to the next IFS. See EE1-3.01 for continuation.*
3. *Serial control cable.*

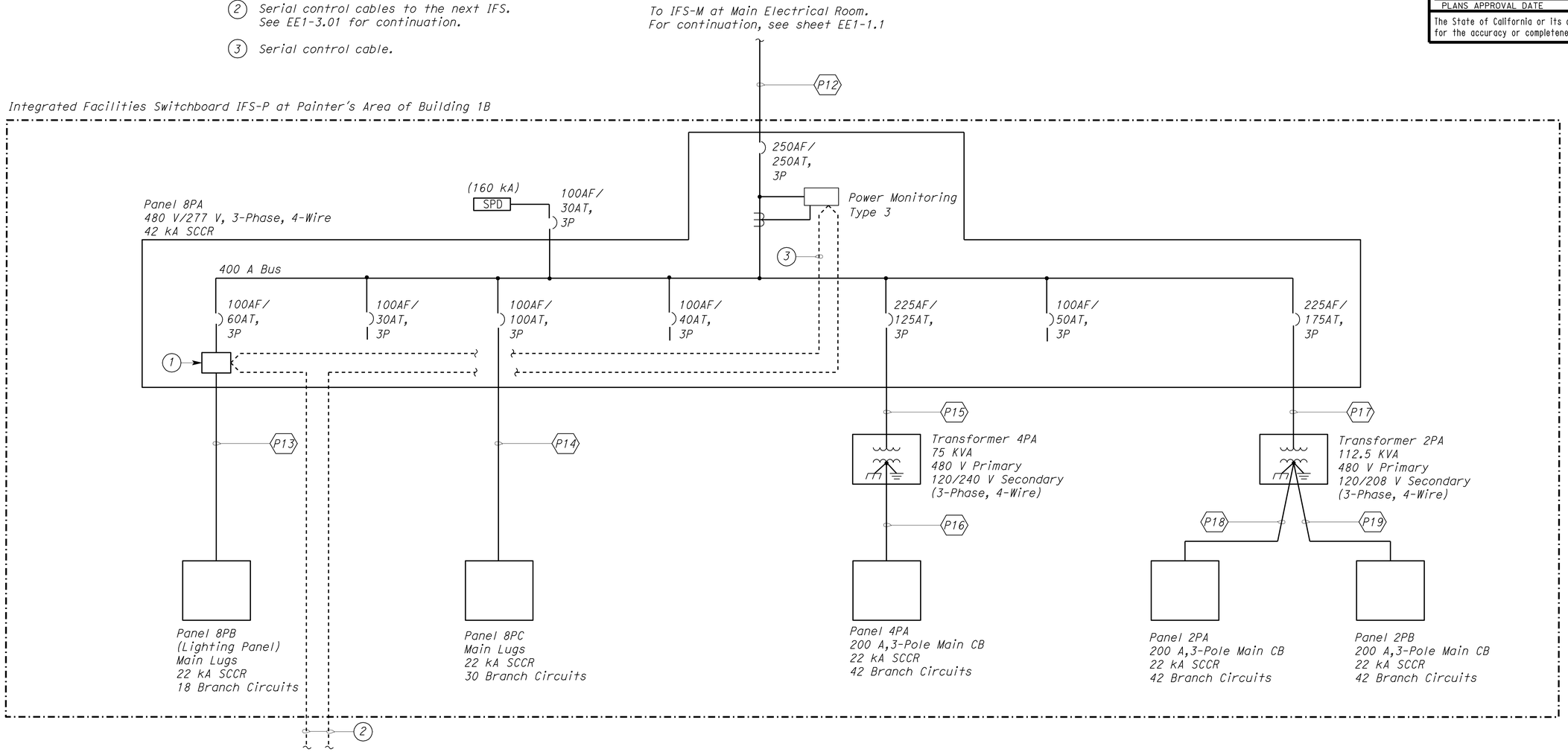

INTEGRATED FACILITIES SWITCHBOARD IFS-P

	BY	CHECKED
DESIGN	Joseph Abdelsayed	J. S. Sandhu
DETAILS	Ed Tapalla/Dali Zhou	Joseph Abdelsayed
QUANTITIES	Joseph Abdelsayed	J. S. Sandhu

STATE OF CALIFORNIA
DEPARTMENT OF TRANSPORTATION

DIVISION OF ENGINEERING SERVICES
ELECTRICAL-MECHANICAL-WATER AND WASTEWATER DESIGN

BRIDGE NO. 33M5785
POST MILE 2.2

SFOBB MAINTENANCE COMPLEX
IFS-P SINGLE LINE DIAGRAM

SHEET **EE0-1.5**

TAEMWW Imperial Rev. 7/10

ORIGINAL SCALE IN INCHES FOR REDUCED PLANS 0 1 2 3

UNIT 3596
PROJECT NUMBER & PHASE 04120006661
EA 014081

DISREGARD PRINTS BEARING EARLIER REVISION DATES → 7/6/12 5/30/12

REVISION DATES (PRELIMINARY STAGE ONLY) SHEET OF

25-OCT-2012 11:19
ee0_1.05.dgn

DIST.	COUNTY	ROUTE	POST MILES TOTAL PROJECT	SHEET NO.	TOTAL SHEETS
04	Ala	80	2.2	633	800

REGISTERED ELECTRICAL ENGINEER — DATE 5-30-12

REGISTERED PROFESSIONAL ENGINEER J. ABDELSAYED No. 18915 Exp. 12-31-13 ELEC STATE OF CALIFORNIA

10-22-12
PLANS APPROVAL DATE

The State of California or its officers or agents shall not be responsible for the accuracy or completeness of scanned copies of this plan sheet.

CALIFORNIA STATE FIRE MARSHAL APPROVED
Approval of this plan does not authorize or approve any omission or deviation from applicable regulations. Final approval is subject to field inspection. One set of approved plans shall be available on the project site at all times.
Reviewed by: JOHN E WOODS, SDSFM
Approval date: 8-22-12

General Notes:

A. For conduit and conductor schedule, see sheet EE1-1.2.

B. For Power Monitoring interconnection block diagram, see sheet EE1-3.02.

Notes:

(1) Power Monitoring Type 2.

(2) Serial control cables to the next IFS. See EE1-3.01 for continuation.

(3) Serial control cable.

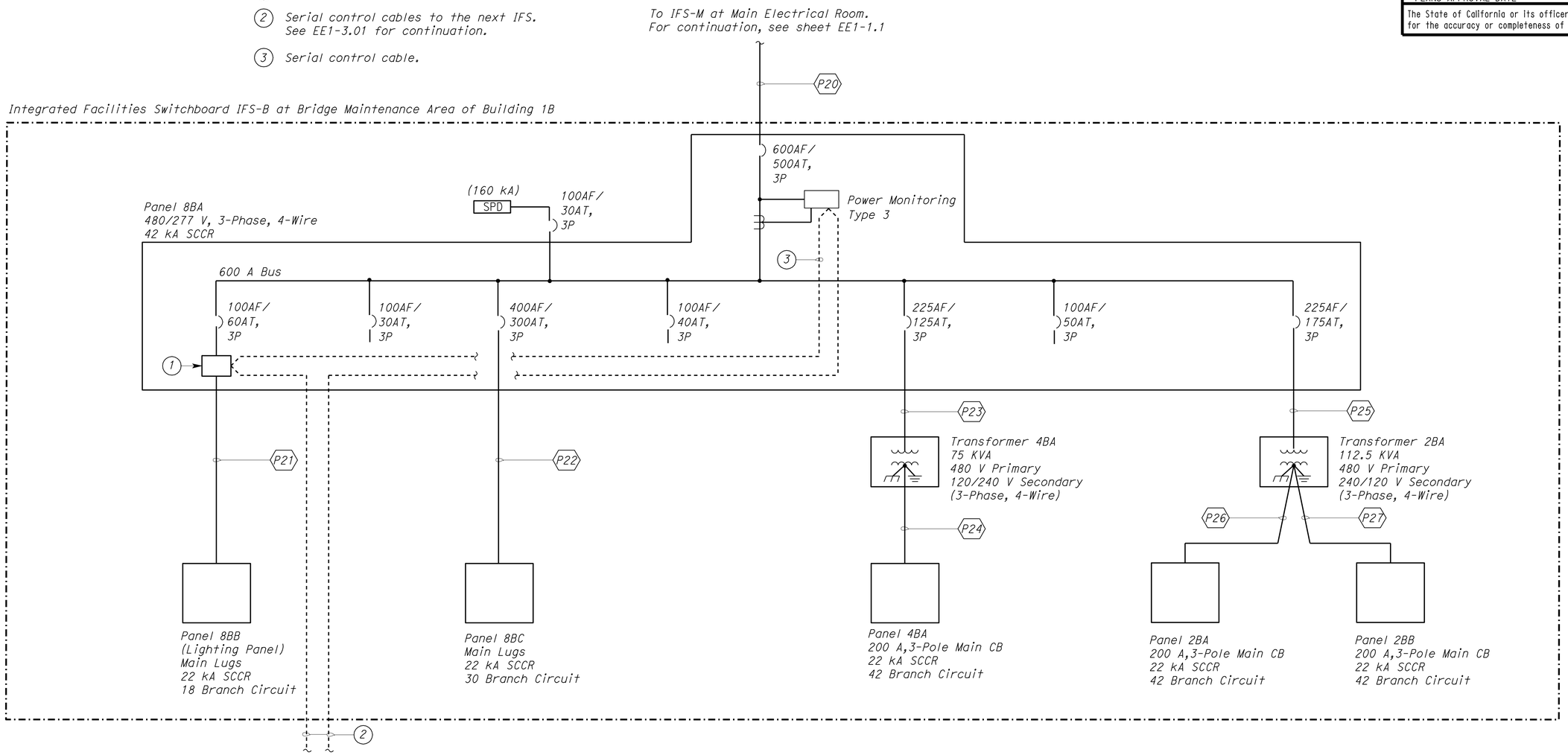

INTEGRATED FACILITIES SWITCHBOARD IFS-B

	BY	CHECKED
DESIGN	Joseph Abdelsayed	J. S. Sandhu
DETAILS	Ed Tapalla/Dali Zhou	Joseph Abdelsayed
QUANTITIES	Joseph Abdelsayed	J. S. Sandhu

STATE OF CALIFORNIA
DEPARTMENT OF TRANSPORTATION

DIVISION OF ENGINEERING SERVICES
ELECTRICAL-MECHANICAL-WATER AND WASTEWATER DESIGN

BRIDGE NO. 33M5785
POST MILE 2.2

SFOBB MAINTENANCE COMPLEX
IFS-B SINGLE LINE DIAGRAM

SHEET **EE0-1.6**

TAEMWW Imperial Rev. 7/10

ORIGINAL SCALE IN INCHES FOR REDUCED PLANS 0 1 2 3

UNIT 3596
PROJECT NUMBER & PHASE 04120006661
EA 014081

DISREGARD PRINTS BEARING EARLIER REVISION DATES
REVISION DATES (PRELIMINARY STAGE ONLY) 7/16/12 5/30/12
SHEET OF

25-OCT-2012 11:19
ee0_1.06.dgn

DIST.	COUNTY	ROUTE	POST MILES TOTAL PROJECT	SHEET NO.	TOTAL SHEETS
04	Ala	80	2.2	634	800

Catalino A. Enriquez 5-30-12
REGISTERED ELECTRICAL ENGINEER DATE

REGISTERED PROFESSIONAL ENGINEER C. ENRIQUEZ No. 16944 Exp. 6-30-13 ELEC STATE OF CALIFORNIA

10-22-12
PLANS APPROVAL DATE

The State of California or its officers or agents shall not be responsible for the accuracy or completeness of scanned copies of this plan sheet.

General Notes:

A. *For feeders size and physical location of all panelboards and switchboards in Building 1A and IB, see sheets EE1-1.1 through EE1-3.*

B. *For Power Monitoring interconnection block diagram, see sheet EE1-3.02.*

Notes:

1. *Power Monitoring Type 2.*
2. *Serial control cables to the next IFS. See EE1-3.01 for continuation.*
3. *Serial control cable.*

CALIFORNIA STATE FIRE MARSHAL APPROVED
Approval of this plan does not authorize or approve any omission or deviation from applicable regulations. Final approval is subject to field inspection. One set of approved plans shall be available on the project site at all times.
Reviewed by: JOHN E WOODS, SDSFM
Approval date: 8-22-12

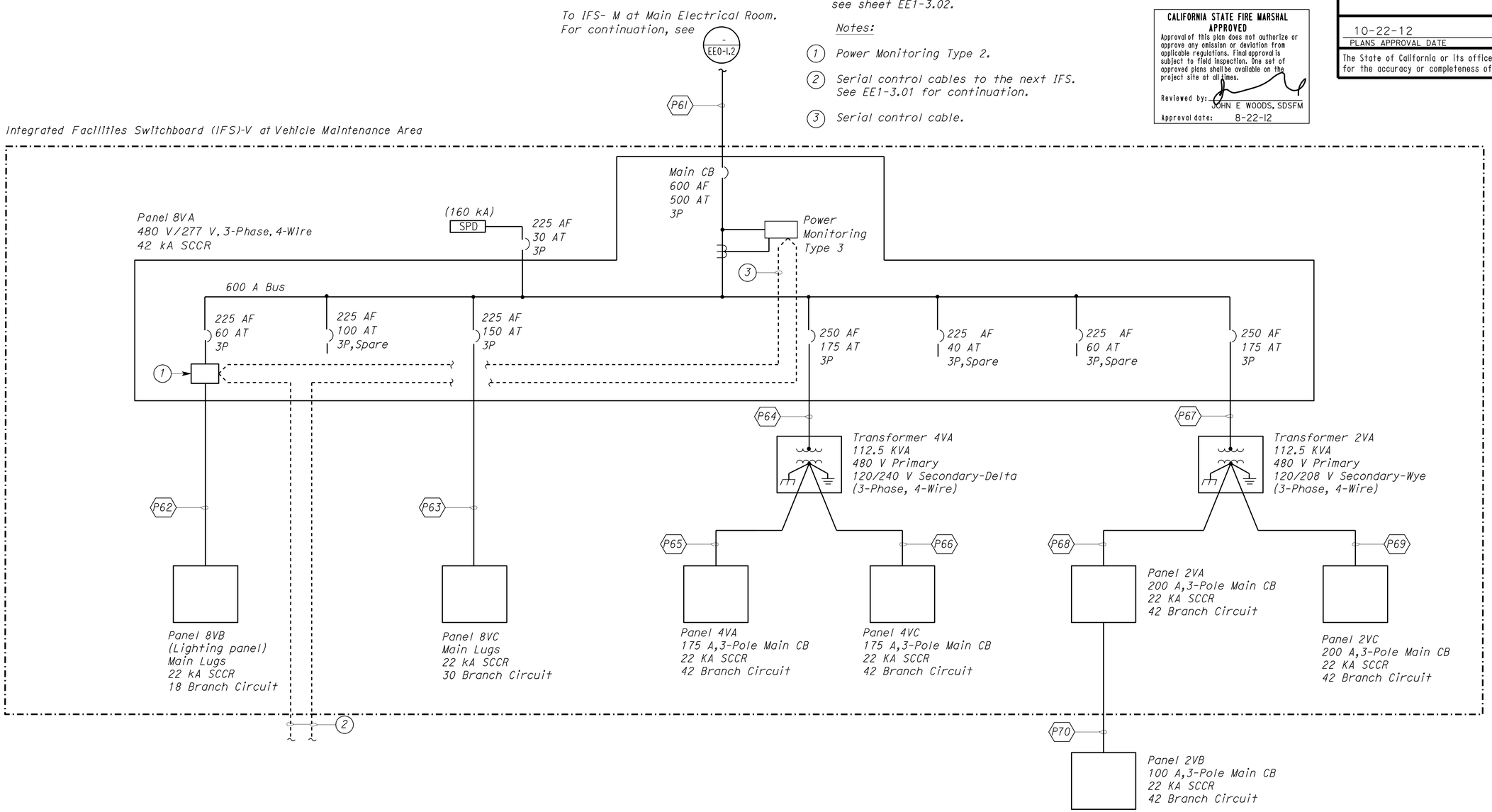

INTEGRATED FACILITIES SWITCHBOARD (IFS)-V POWER DIAGRAM

	BY	CHECKED
DESIGN	Catalino Enriquez	J.S.S./H.Abdelsayed
DETAILS	Dali Zhou	Catalino Enriquez
QUANTITIES	Catalino Enriquez	J.S.S./H.Abdelsayed

STATE OF CALIFORNIA
DEPARTMENT OF TRANSPORTATION

DIVISION OF ENGINEERING SERVICES
ELECTRICAL-MECHANICAL-WATER AND WASTEWATER DESIGN

BRIDGE NO. 33M5785
POST MILE 2.2

SFOBB MAINTENANCE COMPLEX
IFS-V SINGLE LINE DIAGRAM

SHEET **EE0-1.7**

TAEMWW Imperial Rev. 7/10

ORIGINAL SCALE IN INCHES FOR REDUCED PLANS 0 1 2 3

UNIT 3596
PROJECT NUMBER & PHASE 04120006661
EA 014081

DISREGARD PRINTS BEARING EARLIER REVISION DATES → 7/18/12 6/29/12 5/30/12
REVISION DATES (PRELIMINARY STAGE ONLY) SHEET OF

25-OCT-2012 11:19
ee0_1.07.dgn

DIST.	COUNTY	ROUTE	POST MILES TOTAL PROJECT	SHEET NO.	TOTAL SHEETS
04	Ala	80	2.2	635	800

REGISTERED ELECTRICAL ENGINEER — 5-30-12 DATE

REGISTERED PROFESSIONAL ENGINEER J. AMIRAZODI No. 17509 Exp. 6-30-13 ELEC STATE OF CALIFORNIA

10-22-12
PLANS APPROVAL DATE

The State of California or its officers or agents shall not be responsible for the accuracy or completeness of scanned copies of this plan sheet.

ACCESSIBILITY DESIGN APPROVAL STAMP DOT / DES / OTA
PROJECT ID 0412000666
Reviewed by: Y. A. WANG
Date: 07-24-12

CALIFORNIA STATE FIRE MARSHAL APPROVED
Approval of this plan does not authorize or approve any omission or deviation from applicable regulations. Final approval is subject to field inspection. One set of approved plans shall be available on the project site at all times.
Reviewed by: JOHN E WOODS, SDSFM
Approval date: 8-22-12

*APPROVAL DEFERRED TO SUBMITTAL

General Notes:

A. Provide and install protective bollards around the PG&E transformer, number and type as required by PG&E. Submit details to PG&E for approval prior to installation.

B. Provide and install intermediate electrical pull boxes/vaults between existing PG&E power pole and transformer. Number, size and type as required by PG&E. Submit details to PG&E for approval prior to installation.

C. All base elbows and vertical risers through concrete slab shall be PVC coated rigid steel conduit. Wrap joints in contact with soil with two layers of 20 mil thick pipe wrapping tape.

D. For conduit/conductor continuation, see electrical site plan sheets.

E. For electrical equipment concrete pad foundation details, see Detail 3 on ST1-145.

F. For conduit and conductor/cable schedule, see EE0-1.11 and EE0-1.12.

G. Submit all pertinent details to the Engineer for approval prior to installation. Conduit stub ups may required adjustment.

Notes:

1. Primary power conduit system for PG&E. Submit details to PG&E for approval prior to installation.
2. Provide and install transformer pad, reinforcing bars, slab-box, grounding system and other requirements as required by PG&E for 2000 A, 480/277-Volt, 3-phase, 4-wire service. Submit details to PG&E for approval prior to installation.
3. (8) 5"C with pull rope. Pull rope size/type shall be per PG&E Submit details to PG&E for approval prior to installation.
4. Electrical vault, 36"Wx60"Lx48"D.
5. Number 6 pull box.
6. 1#4/0 bare copper to ground well.
7. 1#4/0 bare copper to building grounding electrode system.
8. 1½" x 1½" construction channels support system for PV Service AC Disconnect Switch, Maintenance Building AC Disconnect Switch and Warehouse Building AC Disconnect Switch. Perform the following:
   - Support construction channels to the concrete with angle bracket, back braces and wedge type expansion anchor as required;
   - Provide cross channels for mounting equipment as required;
   - Construction channels shall be galvanized.
9. Install 12" x 12" (length as required), weatherproof type gutter under the disconnect switches for splicing and routing conduits/conductors to/from disconnect switches, inverters and IFS-MSB. See detail A this sheet for wiring diagram.
10. Warehouse Building AC Disconnect Switch. Disconnect switch shall be 225 AF/150 AT, 3P installed inside a NEMA Type 3R enclosure.
11. Maintenance Building AC Disconnect Switch. Disconnect switch shall be 225 AF/150 AT, 3P installed inside a NEMA Type 3R enclosure.
12. PV Service AC Disconnect Switch. Disconnect switch shall be 400 AF/300 AT, 3P installed inside a NEMA Type 3R enclosure.
13. 1"C, 1 TIA-485 cable. Terminate TIA-485 cable on communication module of the PV inverter as required.
14. 2"C, 3#2/0, 1#2/0G.

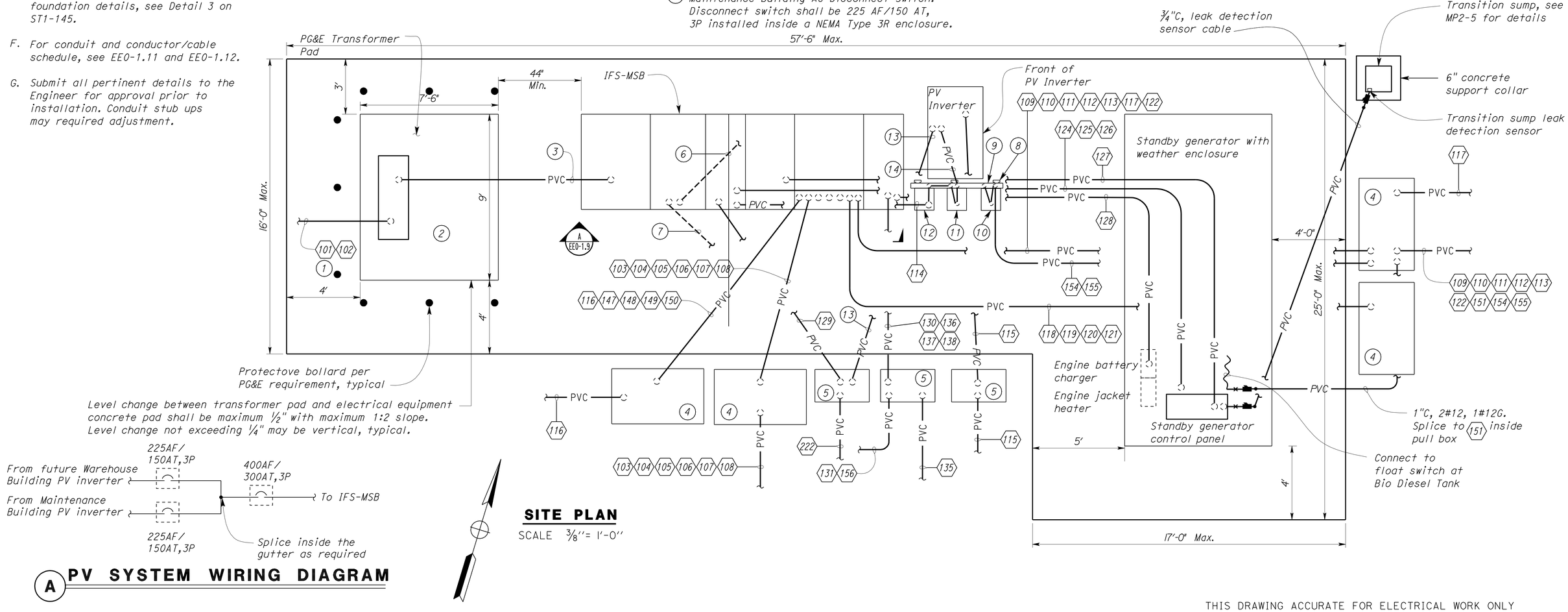

SITE PLAN
SCALE 3/8"= 1'-0"

A PV SYSTEM WIRING DIAGRAM

THIS DRAWING ACCURATE FOR ELECTRICAL WORK ONLY

	BY	CHECKED
DESIGN	Javid Amirazodi	J.S. Sandhu/J.R. Lacy
DETAILS	Javid Amirazodi	James R. Lacy
QUANTITIES	Javid Amirazodi	J.S. Sandhu/J.R. Lacy

STATE OF CALIFORNIA DEPARTMENT OF TRANSPORTATION

DIVISION OF ENGINEERING SERVICES
ELECTRICAL-MECHANICAL-WATER AND WASTEWATER DESIGN

BRIDGE NO. 33M5785
POST MILE 2.2

SFOBB MAINTENANCE COMPLEX
ELECTRICAL EQUIPMENT CONCRETE PAD DETAILS

SHEET **EE0-1.8**

TAEMWW Imperial Rev. 7/10

ORIGINAL SCALE IN INCHES FOR REDUCED PLANS 0 1 2 3

UNIT 3596
PROJECT NUMBER & PHASE 04120006661
EA 014081

DISREGARD PRINTS BEARING EARLIER REVISION DATES → 5/30/12 7/23/12

REVISION DATES (PRELIMINARY STAGE ONLY) SHEET OF

25-OCT-2012 11:19

ee0_1.08.dgn

DIST.	COUNTY	ROUTE	POST MILES TOTAL PROJECT	SHEET NO.	TOTAL SHEETS
04	Ala	80	2.2	636	800

Javid Amirazodi 5-30-12
REGISTERED ELECTRICAL ENGINEER DATE

REGISTERED PROFESSIONAL ENGINEER J. AMIRAZODI No. 17509 Exp. 6-30-13 ELEC STATE OF CALIFORNIA

10-22-12
PLANS APPROVAL DATE

The State of California or its officers or agents shall not be responsible for the accuracy or completeness of scanned copies of this plan sheet.

CALIFORNIA STATE FIRE MARSHAL APPROVED
Approval of this plan does not authorize or approve any omission or deviation from applicable regulations. Final approval is subject to field inspection. One set of approved plans shall be available on the project site at all times.
Reviewed by: JOHN E WOODS, SDSFM
Approval date: 8-22-12

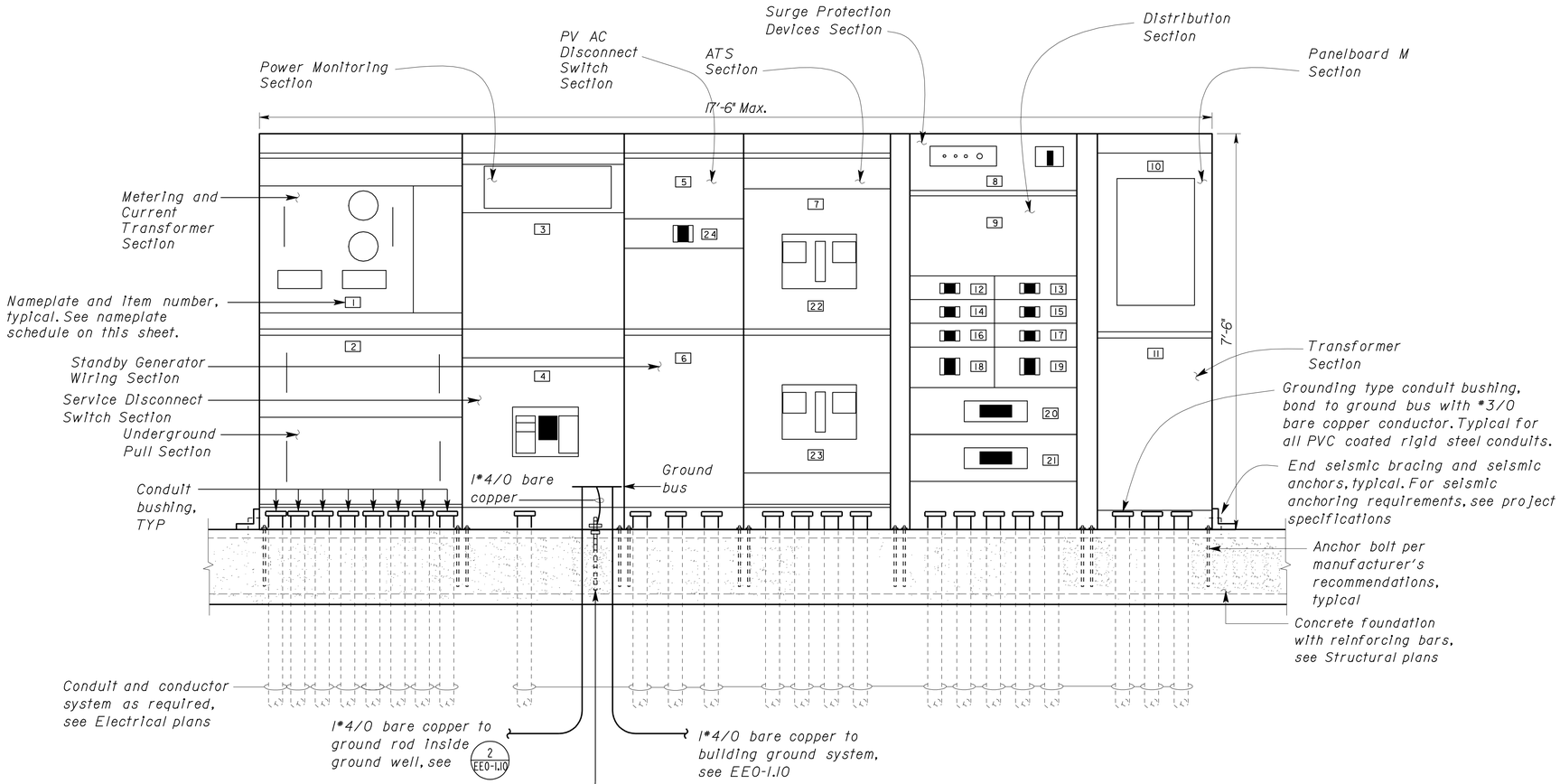

A IFS-MSB, ELEVATION

NO SCALE

Weatherproof enclosure not shown

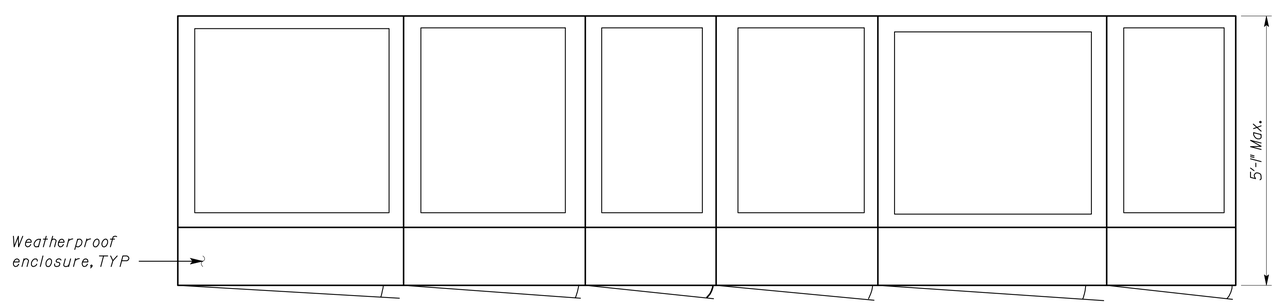

B IFS-MSB, TOP VIEW

NO SCALE

NAMEPLATE SCHEDULE

ITEM No.	LETTER HEIGHT (inch)	INSCRIPTION
1	1	METERING AND CURRENT TRANSFORMER SECTION
2	1	UNDERGROUND PULL SECTION
3	1	POWER MONITORING SECTION
4	1	SERVICE DISCONNECT SWITCH SECTION
5	1	PV AC DISCONNECT SWITCH SECTION
6	1	STANDBY GENERATOR WIRING SECTION
7	1	ATS SECTION
8	1	SURGE PROTECTION DEVICES SECTION
9	1	DISTRIBUTION SECTION
10	1	PANELBOARD M SECTION
11	1/2	TRANSFORMER SECTION
12	1/2	SPARE
13	1/2	SPARE
14	1/2	SPARE
15	1/2	SPARE
16	1/2	TRANSFORMER M
17	1/2	AREA LIGHTING-EAST
18	1/2	AREA LIGHTING-WEST
19	1/2	WASHRACK BUILDING
20	1/2	WAREHOUSE BUILDING
21	1/2	IFS-M
22	1/2	NORMAL SOURCE
23	1/2	STANDBY SOURCE
24	1/2	PV Service AC Disconnect Switch

THIS DRAWING ACCURATE FOR ELECTRICAL WORK ONLY

	BY	CHECKED
DESIGN	Javid Amirazodi	J.S. Sandhu/J.R. Lacy
DETAILS	Javid Amirazodi	James R. Lacy
QUANTITIES	Javid Amirazodi	J.S. Sandhu/J.R. Lacy

STATE OF CALIFORNIA
DEPARTMENT OF TRANSPORTATION

DIVISION OF ENGINEERING SERVICES
ELECTRICAL-MECHANICAL-WATER AND WASTEWATER DESIGN

BRIDGE NO. 33M5785
POST MILE 2.2

SFOBB MAINTENANCE COMPLEX
MAIN SWITCHBOARD DETAILS

SHEET **EE0-1.9**

TAEMWW Imperial Rev. 7/10

ORIGINAL SCALE IN INCHES FOR REDUCED PLANS 0 1 2 3

UNIT 3596
PROJECT NUMBER & PHASE 04120006661
EA 014081

DISREGARD PRINTS BEARING EARLIER REVISION DATES → 5/30/12
REVISION DATES (PRELIMINARY STAGE ONLY) SHEET OF

25-OCT-2012 11:19
ee0_1.09.dgn

DIST.	COUNTY	ROUTE	POST MILES TOTAL PROJECT	SHEET NO.	TOTAL SHEETS
04	Ala	80	2.2	637	800

Javid Amirazodi 5-30-12
REGISTERED ELECTRICAL ENGINEER DATE

REGISTERED PROFESSIONAL ENGINEER J. AMIRAZODI No. 17509 Exp. 6-30-13 ELEC STATE OF CALIFORNIA

10-22-12
PLANS APPROVAL DATE

The State of California or its officers or agents shall not be responsible for the accuracy or completeness of scanned copies of this plan sheet.

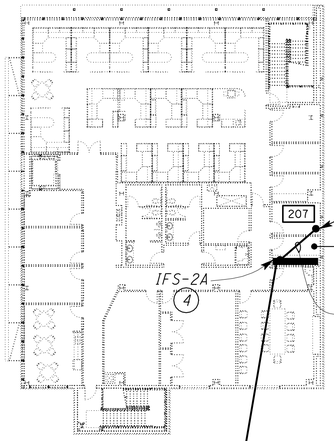

2ND FLOOR

SCALE 1" = 20'-0"

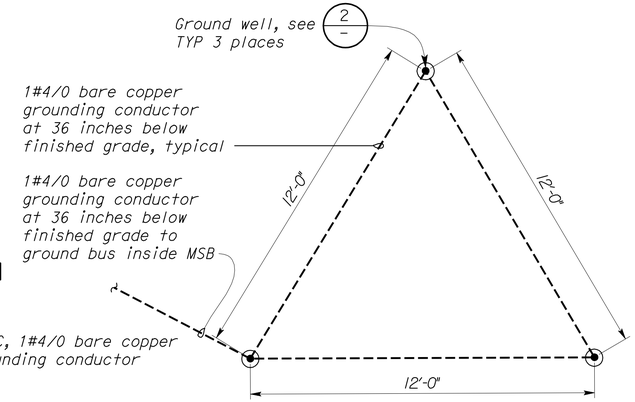

1 GROUNDING DETAIL

NO SCALE

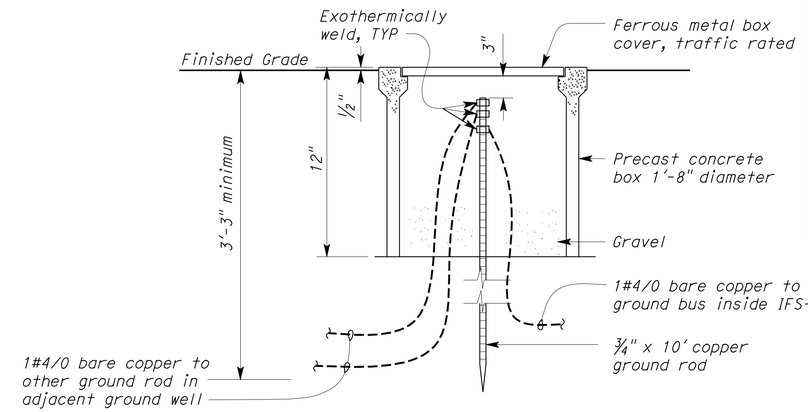

2 GROUND WELL DETAIL

NO SCALE

CALIFORNIA STATE FIRE MARSHAL APPROVED

Approval of this plan does not authorize or approve any omission or deviation from applicable regulations. Final approval is subject to field inspection. One set of approved plans shall be available on the project site at all times.

Reviewed by: JOHN E WOODS, SDSFM

Approval date: 8-22-12

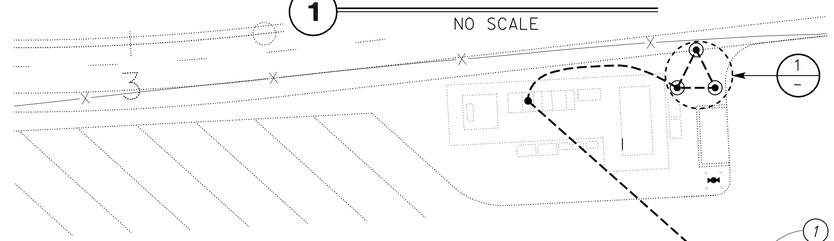

General Note:

Underground conduits entering the building from outside and within the building shall be installed below the structural primary/intermediate grade beams. For location of structural primary/intermediate grade beams, underground conduits stub up, and penetration details through floor/beams, refer to Structural Plan sheets.

Notes:

1. Exothermically weld #4/0 bare copper grounding conductors together.
2. Terminate #4/0 bare copper grounding conductor at the ground bus inside IFS via grounding bar. For details, see EE1-9.4.
3. Terminate #4/0 bare copper grounding conductor at the grounding hub of grounding plate. For details, see EE1-4.11.
4. Terminate #4/0 bare copper grounding conductor at the ground bus inside IFS.

¾" C, 1#4/0 bare copper grounding conductor

1#4/0 bare copper grounding conductor. Install conductor at 36 inches below finished grade and minimum of 8' from the edge of the building concrete foundation, typical.

Main Communication Vault

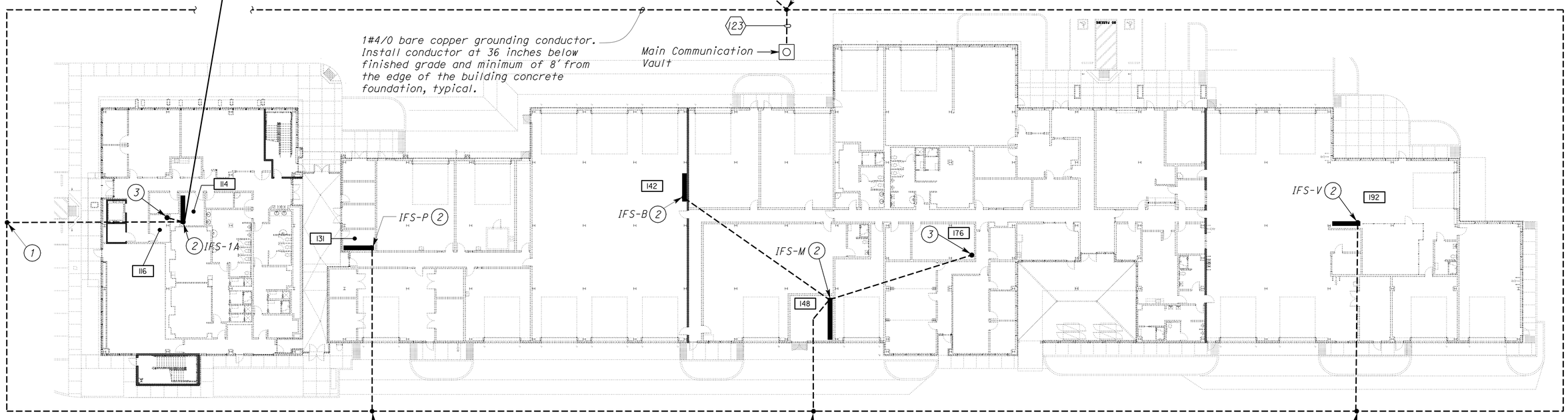

1ST FLOOR

SCALE 1" = 20'-0"

THIS DRAWING ACCURATE FOR ELECTRICAL WORK ONLY

	BY	CHECKED
DESIGN	Javid Amirazodi	J.S. Sandhu/J.R. Lacy
DETAILS	Ed D. Tapalla 10/11	Javid Amirazodi
QUANTITIES	Javid Amirazodi	J.S. Sandhu/J.R. Lacy

STATE OF CALIFORNIA DEPARTMENT OF TRANSPORTATION

DIVISION OF ENGINEERING SERVICES
ELECTRICAL-MECHANICAL-WATER AND WASTEWATER DESIGN

BRIDGE NO. 33M5785
POST MILE 2.2

SFOBB MAINTENANCE COMPLEX

GROUNDING PLAN

SHEET **EE0-1.10**

TAEMWW Imperial Rev. 7/10

ORIGINAL SCALE IN INCHES FOR REDUCED PLANS 0 1 2 3

UNIT 3596
PROJECT NUMBER & PHASE 04120006661
EA 014081

DISREGARD PRINTS BEARING EARLIER REVISION DATES → 5/30/12

REVISION DATES (PRELIMINARY STAGE ONLY) SHEET OF

25-OCT-2012 11:19

ee0_1.10.dgn

DIST.	COUNTY	ROUTE	POST MILES TOTAL PROJECT	SHEET NO.	TOTAL SHEETS
04	Ala	80	2.2	638	800

CALIFORNIA STATE FIRE MARSHAL APPROVED
Approval of this plan does not authorize or approve any omission or deviation from applicable regulations. Final approval is subject to field inspection. One set of approved plans shall be available on the project site at all times.
Reviewed by: JOHN E WOODS, SDSFM
Approval date: 8-22-12

Javid Amirazodi 5-30-12
REGISTERED ELECTRICAL ENGINEER DATE

REGISTERED PROFESSIONAL ENGINEER J. AMIRAZODI No. 17509 Exp. 6-30-13 ELEC STATE OF CALIFORNIA

10-22-12
PLANS APPROVAL DATE

The State of California or its officers or agents shall not be responsible for the accuracy or completeness of scanned copies of this plan sheet.

CONDUITS AND CONDUCTORS/CABLES SCHEDULE *

CONDUIT NUMBER	REFERENCE SHEET	CONDUIT SIZE/TYPE	FROM	TO	CONDUCTOR/CABLE SIZE
101	EE0-0.1, EE0-1.8	4"C, PVC	PG&E power pole	PG&E transformer	As required by PG&E
102	EE0-0.1, EE0-1.8	4"C, PVC	PG&E power pole	PG&E transformer	As required by PG&E
103	EE0-0.1, EE0-1.1, EE0-1.8	3"C, PVC	IFS-MSB	IFS-M	4#350 kcmil, 1#350 kcmil G
104	EE0-0.1, EE0-1.1, EE0-1.8	3"C, PVC	IFS-MSB	IFS-M	4#350 kcmil, 1#350 kcmil G
105	EE0-0.1, EE0-1.1, EE0-1.8	3"C, PVC	IFS-MSB	IFS-M	4#350 kcmil, 1#350 kcmil G
106	EE0-0.1, EE0-1.1, EE0-1.8	3"C, PVC	IFS-MSB	IFS-M	4#350 kcmil, 1#350 kcmil G
107	EE0-0.1, EE0-1.1, EE0-1.8	4"C, PVC	IFS-MSB	IFS-M	MT, pull rope
108	EE0-0.1, EE0-1.1, EE0-1.8	4"C, PVC	IFS-MSB	IFS-M	MT, pull rope
109	EE0-0.1, EE0-0.2, EE0-1.1, EE0-1.8	4"C, PVC	IFS-MSB	Electrical vault, future warehouse	MT, pull rope
110	EE0-0.1, EE0-0.2, EE0-1.1, EE0-1.8	4"C, PVC	IFS-MSB	Electrical vault, future warehouse	MT, pull rope
111	EE0-0.1, EE0-0.2, EE0-1.1, EE0-1.8	4"C, PVC	IFS-MSB	Electrical vault, future warehouse	MT, pull rope
112	EE0-0.1, EE0-0.2, EE0-1.1, EE0-1.8	4"C, PVC	IFS-MSB	Electrical vault, future warehouse	MT, pull rope
113	EE0-0.1, EE0-0.2, EE0-1.1, EE0-1.8	4"C, PVC	IFS-MSB	IFS-W	4#350 kcmil, 1#350 kcmil G
114	EE0-1.1, EE0-1.8,	3"C, PVC	IFS-MSB	PV service AC disconnect Switch	3#500 kcmil, 1#500 kcmil G
115	EE0-0.1, EE1-11.1	3"C, PVC	PV power DC disconnect switch	PV inverter (DC)	4#4/0, 1#4/0G
116	EE0-1.1, EE0-1.8	2"C, PVC	IFS-MSB	Area light-west	4#6, 1#8 G
117	EE0-1.1, EE0-1.8	2"C, PVC	IFS-MSB	Area light-east	4#6, 1#8 G
118	EE0-1.1, EE0-1.8	4"C, PVC	IFS-MSB	Electrical vault	MT, pull rope
119	EE0-1.1, EE0-1.8	4"C, PVC	IFS-MSB	Electrical vault	MT, pull rope
20	EE0-1.1, EE0-1.8	4"C, PVC	IFS-MSB	Electrical vault	MT, pull rope
121	EE0-1.1, EE0-1.8	4"C, PVC	IFS-MSB	Electrical vault	MT, pull rope
22	EE0-0.1, EE0-0.2, EE0-1.1, EE0-1.8	4"C, PVC	IFS-MSB	IFS-W	MT, pull rope
23	EE0-09, EE0-1.10	-	Building grounding system	Ground plate inside Main communication vault	#4/0 Bare
24	EE0-1.1, EE0-1.8	3"C, PVC	IFS-MSB	Standby generator	4#350 kcmil, 1#350 kcmil G
25	EE0-1.1, EE0-1.8	3"C, PVC	IFS-MSB	Standby generator	4#350 kcmil, 1#350 kcmil G
26	EE0-1.1, EE0-1.8	3"C, PVC	IFS-MSB	Standby generator	4#350 kcmil, 1#350 kcmil G
27	EE0-1.1, EE0-1.8	1"C, PVC	ATS section of IFS-MSB	Standby generator	Control cables as required
28	EE0-1.1, EE0-1.8	1"C, PVC	Panel M inside IFS-MSB	Engine jacket heater (M1-3), engine battery charger (M5)	4#10, 1#10G
129	EE0-1.1, EE0-1.8	1"C, PVC	IFS-MSB	Pull box	Data and control cables as required
30	EE0-1.1, EE0-1.8	3"C, PVC	Panel M inside IFS-MSB	Camera #19 (M7), gate operators-north (M6-8, 10-12), irrigation controller (M2), sump pump receptacle (M4)	4#6(gate operators), 2#10 (sump pump receptacle), 4#8, 1#6G

* For pull box/vault locations/numbers in conduit routes, see site Plan sheets.

CONDUITS AND CONDUCTORS/CABLES SCHEDULE *

CONDUIT NUMBER	REFERENCE SHEET	CONDUIT SIZE/TYPE	FROM	TO	CONDUCTOR/CABLE SIZE
131	EE0-0.1, EE0-1.8	4"C, PVC	Pull box	Camera #19, gate operators (north), irrigation controller	4#6(gate operators), 4#8, 1#6G
132	EE0-0.1, EE0-0.7	1"C, PVC	Pull box	Gate operator A-west (M6-8)	2#8, 1#8G
133	EE0-0.1, EE0-0.7	1"C, PVC	Pull box	Gate operator B-west (M10-12)	2#8, 1#8G
134	EE0-0.1	4"C, PVC	Pull box	Irrigation controller	2#8, 1#8G
135	EE0-0.1, EE0-0.9 EE0-1.8	1"C, PVC	Panel M inside IFS-MSB	Sump pump receptacle inside Main Communication Vault	2#10, 1#10G
136	EE0-1.1, EE0-1.8	2"C, PVC	IFS-MSB	Pull box	MT, pull rope
137	EE0-1.1, EE0-1.8	2"C, PVC	IFS-MSB	Pull box	MT, pull rope
138	EE0-1.1, EE0-1.8	2"C, PVC	IFS-MSB	Pull box	MT, pull rope
139	EE0-0.1	¾"C, PVC	Pull box	Camera #19 on light pole	One 2 strands, MMFO cable, 2#12, 1#12G
140	EE0-0.2	¾"C, PVC	Pull box	Camera #20 on light pole	One 2 strands, MMFO cable, 2#12, 1#12G
141	EE0-0.2	¾"C, PVC	Pull box	Camera #21 on light pole	One 2 strands, MMFO cable, 2#12, 1#12G
142	EE0-0.2	¾"C, PVC	Pull box	Camera #22 on light pole	One 2 strands, MMFO cable, 2#12, 1#12G
143	EE0-0.2	¾"C, PVC	Pull box	Camera #23 on light pole	One 2 strands, MMFO cable, 2#12, 1#12G
144	EE0-0.2	2"C, PVC	Panel 2WA	Cameras (2WA8), gate operators-east (2WA16-18,20-22)	4#6, 2#8, 1#6G
145	EE0-0.2	1"C, PVC	Pull box	Pull box next to cameras #20, 21, 23	2#8, 1#8G
146	EE0-0.2, EE0.08	2"C, PVC	Pull box	Pull box	4#6, 1#6G
147	EE0-1.1, EE0-1.8	4"C, PVC	IFS-MSB	Electrical vault	MT, pull rope
148	EE0-1.1, EE0-1.8	4"C, PVC	IFS-MSB	Electrical vault	MT, pull rope
149	EE0-1.1, EE0-1.8	4"C, PVC	IFS-MSB	Electrical vault	MT, pull rope
150	EE0-1.1, EE0-1.8	4"C, PVC	IFS-MSB	Electrical vault	MT, pull rope
151	EE0-0.1, EE0-0.2, EE0-1.8, EE2-1	1"C, PVC	Float switch inside standby generator bio diesel tank	Pump contol box	2#8, 1#8G
152	EE0-0.1, EE0-0.8	1"C, PVC	Pull box	Gate operator B-east (2WA20-22)	2#8, 1#8G
153	EE0-0.1, EE0-0.8	1"C, PVC	Pull box	Gate operator A-east (2WA16-18)	2#8, 1#8G
154	EE0-0.1, EE0-02 EE0-0.9, EE0-1.1	4"C, PVC	IFS-MSB	Electrical vault, future warehouse pv system	MT, pull rope
155	EE0-0.1, EE0-02 EE0-0.9, EE0-1.1	4"C, PVC	IFS-MSB	Electrical vault, future warehouse pv system	MT, pull rope
156	EE0-0.1, EE0-1.8	4"C, PVC	Pull box	Pull box	MT, pull rope

THIS DRAWING ACCURATE FOR ELECTRICAL WORK ONLY

	BY	CHECKED
DESIGN	Javid Amirazodi	J.S. Sandhu/J.R. Lacy
DETAILS	Javid Amirazodi	James R. Lacy
QUANTITIES	Javid Amirazodi	J.S. Sandhu/J.R. Lacy

STATE OF CALIFORNIA
DEPARTMENT OF TRANSPORTATION

DIVISION OF ENGINEERING SERVICES
ELECTRICAL-MECHANICAL-WATER AND WASTEWATER DESIGN

BRIDGE NO. 33M5785
POST MILE 2.2

SFOBB MAINTENANCE COMPLEX
CONDUIT AND CONDUCTOR/CABLE SCHEDULE I

SHEET **EE0-1.11**

TAEMWW Imperial Rev. 7/10

ORIGINAL SCALE IN INCHES FOR REDUCED PLANS 0 1 2 3

UNIT 3596
PROJECT NUMBER & PHASE 04120006661
EA 014081

DISREGARD PRINTS BEARING EARLIER REVISION DATES → 5/30/12
REVISION DATES (PRELIMINARY STAGE ONLY) SHEET OF

25-OCT-2012 11:19
ee0_1.11.dgn

DIST.	COUNTY	ROUTE	POST MILES TOTAL PROJECT	SHEET NO.	TOTAL SHEETS
04	Ala	80	2.2	639	800

CALIFORNIA STATE FIRE MARSHAL APPROVED
Approval of this plan does not authorize or approve any omission or deviation from applicable regulations. Final approval is subject to field inspection. One set of approved plans shall be available on the project site at all times.
Reviewed by: JOHN E WOODS, SDSFM
Approval date: 8-22-12

Javid Amirazodi 5-30-12
REGISTERED ELECTRICAL ENGINEER DATE

REGISTERED PROFESSIONAL ENGINEER J. AMIRAZODI No. 17509 Exp. 6-30-13 ELEC STATE OF CALIFORNIA

10-22-12
PLANS APPROVAL DATE

The State of California or its officers or agents shall not be responsible for the accuracy or completeness of scanned copies of this plan sheet.

CONDUITS AND CONDUCTORS/CABLES SCHEDULE ✳

CONDUIT NUMBER	REFERENCE SHEET	CONDUIT SIZE/TYPE	FROM	TO	CONDUCTOR/CABLE SIZE AND TERMINATION
201	EE0-0.5, EE1-4.7	4"C, PVC	AT&T vault	AT&T designated space in room 176	Conductors/cables as required by AT&T. Terminate on AT&T equipment in room 176 as required by AT&T
202	EE0-0.5, EE1-4.7	4"C, PVC	AT&T vault	AT&T designated space in room 176	Conductors/cables as required by AT&T. Terminate on AT&T equipment in room 176 as required by AT&T
203	EE0-0.5, EE0-0.9 EE1-4.7	4"C, PVC	IT communication racks designated space in room 176	Toll operation building IT room	One 24 strands, MMFO cable. Terminate on PP 1BR2F1 in room 176, using type SC connectors
204	EE0-0.5, EE0-0.9 EE1-4.7	4"C, PVC	IT communication racks designated space in room 176	Toll operation building IT room	MT, pull rope
205	EE0-0.5, EE0-0.9 EE1-4.7	4"C, PVC	IT communication racks designated space in room 176	Toll Operation Building IT Room	MT, pull rope
206	EE0-0.5, EE0-0.9 EE1-4.7	4"C, PVC	IT communication racks designated space in room 176	East Bay and Oakland substations	Two 12 strands, MMFO cable. Terminate on PP 1BR2F4 in room 176, using type SC connectors
207	EE0-0.5, EE0-0.9 EE1-4.7	4"C, PVC	IT communication racks designated space in room 176	Utility tunnel	MT, pull rope
208	EE0-0.5, EE0-0.9 EE1-4.7	4"C, PVC	IT communication racks designated space in room 176	Utility tunnel	MT, pull rope
209	EE0-0.5, EE0-0.9 EE1-4.7	4"C, PVC	Bridge electrical designated space in room 176	East Bay and Oakland Substations	Two 50 pair, STP cable. Terminate on 66 Blocks 37 and 38 in room 176
210	EE0-0.5, EE0-0.9 EE1-4.7	4"C, PVC	Toll operation building SCADA room	SCADA rack designated space in room 176	✳ ✳
211	EE0-0.5, EE0-0.9 EE1-4.5	4"C, PVC	Toll operation building BASE room	BASE designated space in room 164A	✳ ✳ ✳
212	EE0-0.5,EE0-0.6, EE0-0.9,EE1-4.7	4"C, PVC	IT communication racks designated space in room 176	Pull box for future Warehouse	MT, pull rope
213	EE0-0.5,EE0-0.6, EE0-0.9,EE1-4.7	4"C, PVC	IT communication racks designated space in room 176	Pull box for future Warehouse	MT, pull rope
214	EE0-0.5,EE0-0.6, EE1-4.7	4"C, PVC	IT communication racks designated space in room 176	Pull box for future Warehouse	MT, pull rope
215	EE0-0.5,EE0-0.6, EE0-0.9,EE1-4.7	4"C, PVC	IT communication racks designated space in room 176	Pull box for future Warehouse	MT, pull rope
216	EE0-0.5,EE0-0.6, EE0-0.9,EE1-4.7	3"C, PVC	IT communication racks designated space in room 176	Fuel Log Room	2 data cables, 2 voice cables.One 4 strands MMFO cable,terminate on 1BR2F3 and Fuel Log Room fiber PP
217	EE0-0.5,EE0-0.6, EE0-0.8,EE1-4.7	2"C, PVC	Intrusion alarm designated space in room 176	Knox box and access gate-east	Control cables as required
218	EE0-0.5,EE0-0.6, EE0-0.7,EE1-4.7	2"C, PVC	Intrusion alarm designated space in room 176	Knox box and access gate-west	Control cables as required
219	EE0-0.5,EE0-0.6, EE0-0.9,EE1-4.7	4"C, PVC	Intrusion alarm designated space in room 176	Pull box for future Warehouse	MT, pull rope
220	EE0-0.5, EE0-0.6, EE0-0.9, EE1-4.7	4"C, PVC	CCTV rack designated space in room 176	Pull box for future Warehouse	MT, pull rope
221	EE0-0.5, EE0-0.9, EE5-6.0	4"C, PVC	Fire alarm control panel in room 177	Pull box for future Warehouse	MT, pull rope
222	EE0-0.5, EE0-0.9, EE0-1.8, EE1-1.8, EE1-4.7	3"C, PVC	Power monitoring section of IFS-MSB and PV inverter	Power monitoring system designated space in room 176	Data and control cables for power monitoring system to lighting network workstation via power monitoring gateway and network switch and 1 TIA-485 cable to PV system data acquisition server.Terminate as required.
223	EE0-0.5, EE0-0.9 EE1-4.7	4"C, PVC	CCTV rack designated space in room 176	Main communications vault	Five 2 strands, MMFO cables. Terminate on devices as required
224	EE0-0.5,EE0-0.6, EE0-0.9, EE0-0.2	3"C, PVC	Main communications vault	Pull box	Four 2 strands, MMFO cables
225	EE0-0.2	2"C, PVC	Pull box	Pull box	Three 2 strands, MMFO cables. Terminate on devices as required
226	EE0-0.2	2"C, PVC	Pull box	Pull box	Two 2 strands, MMFO cables. Terminate on devices as required
227	EE0-0.1, EE0-0.2 EE0-0.9, EE0-0.5	2"C, PVC	Main communications vault	Pull box	One 2 strands, MMFO cable
228	EE0-0.2, EE0-0.9, EE5-6.0	1"C, PVC	Fire alarm control panel in room 177	Fire department detector check valve tamper switch	Control cables as required. Terminate on devices as required
229	EE0-0.5, EE0-0.9 EE1-4.7	4"C, PVC	IT Communication racks designated space in room 176	Main Communication Vault	MT, pull rope
230	EE0-0.5, EE0-0.9 EE1-4.7	4"C, PVC	IT Communication racks designated space in room 176	Main Communication Vault	MT, pull rope

✳ For pull box/vault locations/numbers in conduit routes, see site Plan sheets.

✳ ✳ One 12 strands, MMFO cable and one 50 pairs, STP cable. Perform the following:
- -Provide and install fiber patch panel in SCADA rack located in room 176. Fiber patch panel shall be Leviton, RDP-175; AFL, LightLink LANSystem 1RU or equal;
- -Terminate the 12 multi mode fibers on 12 ST/UPC connectors. 12 connectors shall fit onto two 6 pack module and the modules shall be attached to fiber patch panel;
- -Terminate one 50 pairs, STP cable on 66 Block 39 in room 176.
- -For SCADA rack and 66 Block location, see EE1-4.5.

✳ ✳ ✳ One 12 strands, SMFO cable. Perform the following:
- -Provide and install fiber patch panel in BASE rack located in room 164B. Fiber patch panel shall be Leviton, RDP-175; AFL, LightLink LANSystem 1RU or equal;
- -Terminate the 12 single mode fibers on 3 duplex SC/UPC connectors. SMFO cable shall be DryBlock Cable, ofs or FirstLink, Prysmian.The connectors shall be fixed within a 6 pack module and the module shall be attached to fiber patch panel;
- -For BASE rack location, see EE1-4.5.

THIS DRAWING ACCURATE FOR ELECTRICAL WORK ONLY

	BY	CHECKED
DESIGN	Javid Amirazodi	J.S. Sandhu/J.R. Lacy
DETAILS	Javid Amirazodi	James R. Lacy
QUANTITIES	Javid Amirazodi	J.S. Sandhu/J.R. Lacy

STATE OF CALIFORNIA
DEPARTMENT OF TRANSPORTATION

DIVISION OF ENGINEERING SERVICES
ELECTRICAL-MECHANICAL-WATER AND WASTEWATER DESIGN

BRIDGE NO. 33M5785
POST MILE 2.2

SFOBB MAINTENANCE COMPLEX
CONDUIT AND CONDUCTOR/CABLE SCHEDULE 2

SHEET EE0-1.12

TAEMWW Imperial Rev. 7/10

ORIGINAL SCALE IN INCHES FOR REDUCED PLANS 0 1 2 3

UNIT 3596
PROJECT NUMBER & PHASE 04120006661
EA 014081

DISREGARD PRINTS BEARING EARLIER REVISION DATES → 5/30/12
REVISION DATES (PRELIMINARY STAGE ONLY) SHEET OF

ee0_1.12.dgn
25-OCT-2012 11:20

DIST.	COUNTY	ROUTE	POST MILES TOTAL PROJECT	SHEET NO.	TOTAL SHEETS
04	Ala	80	2.2	640	800

REGISTERED ELECTRICAL ENGINEER — 5-30-12 DATE

REGISTERED PROFESSIONAL ENGINEER J. AMIRAZODI No. 17509 Exp. 6-30-13 ELEC STATE OF CALIFORNIA

10-22-12
PLANS APPROVAL DATE

The State of California or its officers or agents shall not be responsible for the accuracy or completeness of scanned copies of this plan sheet.

CALIFORNIA STATE FIRE MARSHAL APPROVED

Approval of this plan does not authorize or approve any omission or deviation from applicable regulations. Final approval is subject to field inspection. One set of approved plans shall be available on the project site at all times.

Reviewed by: JOHN E WOODS, SDSFM

Approval date: 8-22-12

MAIN: 100A/3P CIRCUIT BREAKER

VOLTS: 208/120 V, THREE-PHASE, FOUR-WIRE

PANEL M (BOTTOM FEED)
22K SCCR

FEEDER SIZE: 4#1/0, 1#1/0G

LOCATION: INSIDE IFS-MSB

DESCRIPTION	AMPERES A	AMPERES B	AMPERES C	BRK	CKT	A B C	CKT	BRK	AMPERES A	AMPERES B	AMPERES C	DESCRIPTION
ENGINE JACKET HEATER	15			20/2	1		2	20/1	4			IRRIGATION CONTROLLER
		15			3		4	20/1		12		SUMP PUMP RECEPTACLE
ENGINE BATTERY CHARGER			6	20/1	5		6	20/2			8	GATE OPERATOR A-NORTH SIDE ENTRANCE
CAMERA #19	2			20/1	7		8		8			
POWER MONITORING SYSTEM		4		20/1	9		10	20/2		8		GATE OPERATOR B-NORTH SIDE ENTRANCE
SPARE			-	20/1	11		12				8	
SPARE	-			20/1	13		14	20/1	-			SPARE
SPARE		-		20/2	15		16	20/1		-		SPARE
			-		17		18	20/1			-	SPARE
SPARE	-			20/2	19		20	20/1	-			SPARE
		-			21		22	-		-		SPACE
SPACE			-	-	23		24	-			-	
	-			-	25		26	-	-			
		-		-	27		28	-		-		
			-	-	29		30	-			-	

A	B	C	
29	39	22	TOTAL CONNECTED LOAD (AMPERES PER PHASE)

	BY	CHECKED
DESIGN	Javid Amirazodi	J.S. Sandhu/J.R. Lacy
DETAILS	Javid Amirazodi	James R. Lacy
QUANTITIES	Javid Amirazodi	J.S. Sandhu/J.R. Lacy

STATE OF CALIFORNIA
DEPARTMENT OF TRANSPORTATION

DIVISION OF ENGINEERING SERVICES
ELECTRICAL-MECHANICAL-WATER AND WASTEWATER DESIGN

BRIDGE NO. 33M5785
POST MILE 2.2

SFOBB MAINTENANCE COMPLEX

PANEL M SCHEDULE

SHEET **EE0-1.13**

TAEMWW Imperial Rev. 7/10

ORIGINAL SCALE IN INCHES FOR REDUCED PLANS 0 1 2 3

UNIT 3596
PROJECT NUMBER & PHASE 04120006661
EA 014081

DISREGARD PRINTS BEARING EARLIER REVISION DATES → 5/30/12

REVISION DATES (PRELIMINARY STAGE ONLY) SHEET OF

25-OCT-2012 11:20

ee0_1.13.dgn

DIST.	COUNTY	ROUTE	POST MILES TOTAL PROJECT	SHEET NO.	TOTAL SHEETS
04	Ala	80	2.2	641	800

Catalino A. Enriquez 5-30-12
REGISTERED ELECTRICAL ENGINEER DATE

REGISTERED PROFESSIONAL ENGINEER C. ENRIQUEZ No. 16944 Exp. 6-30-13 ELEC STATE OF CALIFORNIA

10-22-12
PLANS APPROVAL DATE

The State of California or its officers or agents shall not be responsible for the accuracy or completeness of scanned copies of this plan sheet.

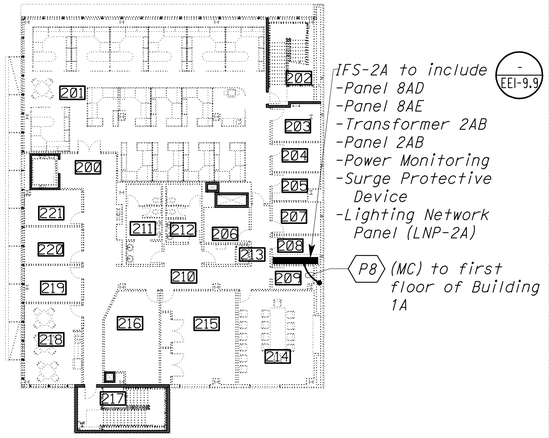

SECOND FLOOR

ROOM #	ROOM NAME	ROOM #	ROOM NAME	ROOM #	ROOM NAME	ROOM #	ROOM NAME
100	LOBBY AREA	131	ELECTRICAL	162	ELECTRICAL SHOP	192	EQUIPMENT REPAIR AREA
101	HALLWAY	132	HALLWAY	163	EQUIPMENT STORAGE BAY	193	MACHINE SHOP
102	LEAD WORKER AREA	133	RIGGING SECURE TOOL	164A	BASE ROOM	194	UNISEX TOILET
103	SUPERVISOR OFFICE	134	PAINT MIX	164B	ENGINEER MAP ROOM	195	ROVER BAY STORAGE
104	SUPERVISOR OFFICE	135	HALLWAY	165	LOBBY	196	SECURE STORAGE AREA
105	KITCHEN	136	SEW ROOM	166	BREAK ROOM	197	WORKSTATION
106	CREW ROOM 1	137	SHOP CREW	167	HALLWAY	198	LEAD WORKER OFFICE
107	CREW ROOM 2	138	TOOL STORAGE 1	168	SUPERVISOR	199	UTILITY
108	STAIR 1	139	PAINT STORAGE 1	169	LEAD WORKER AREA		
109	LOBBY 2	140	TOOL STORAGE 2	170	SUPERVISOR	200	LOBBY
110	WOMENS RESTROOM	141	PAINT STORAGE 2	171	SUPERVISOR	201	OPEN OFFICE AREA
111	MEN'S RESTROOM	142	EQUIPMENT STORAGE BAYS	172	SUPERVISOR	202	STAIRS
112	JANITOR	143	HALLWAY	173	CREW ROOM	203	FIRE/MECHANICAL
113	OFF. SUP. STORAGE	144	HALLWAY	174	CREW ROOM	204	OFFICE SUP STORAGE
114	ELECTRICAL	145	CABINET SHOP	175	CREW ROOM	205	COMMUNICATION ROOM
115	MECHANICAL	146	SECURE STORAGE	176	MAIN COMMUNICATION	206	QUIET ROOM
116	COMMUNICATION	147	WELDING SHOP	177	FIRE/MECHANICAL	207	COMMUNICATION
117	ELEVATOR EQUIPMENT	148	MAIN ELECTRICAL	178	ETTIE STORAGE	208	ELECTRICAL
118	ELEVATOR	149	TOILET ROOM	179	HALLWAY	209	JANITOR
119	HALLWAY	150	BAIR STORAGE	180	PARTS STORAGE	210	AISLE
120	WOMEN DECON	151	JANITOR	181	TIRE STORAGE	211	MENS RESTROOM
121	WOMEN LOCKERS/SHOWERS	152	WOMEN'S RESTROOM	182	PARTS OFFICE	212	WOMEN'S RESTROOM
122	MEN'S DECONTAMINATION	153	WOMEN'S LOCKER	183	SUPERVISOR	213	UNISEX SHOWER
123	MEN'S LOCKER	154	MEN'S RESTROOM	184	CREW ROOM	214	CONFERENCE ROOM
124	MEN'S SHOWER	155	MEN'S LOCKER	185	HALLWAY	215	TRAINING
125	GEAR ROOM	156	MEN'S SHOWER	186	WOMEN'S RESTROOM	216	FILE STORAGE
126	STAIRS 2	157	HALLWAY	187	MEN'S RESTROOM	217	STAIRS
127	BREEZEWAY	158	LOBBY	188	MEN'S LOCKER	218	BREAK ROOM
128	COMPRESSOR ROOM	159	MONITOR SPACE	189	SUPERVISOR	219	RIG ENG. SUP
129	STORAGE	160	CREW ROOM	190	JANITOR	220	MAINTENANCE AREA SUP
130	RECYCLE MATERIAL STORAGE	161	SUPERVISOR	191	EQUIPMENT REPAIR BAYS	221	MAINTENANCE AREA SUP

General Notes:

A. For power one line diagrams, see sheets EE0-1.1 through EE0-1.7.

B. For feeder conduit and conductor sizes, see sheets EE1-1.2 and EE1-1.3.

C. For panelboards and switchboards index sheet, see EE1-1.4.

D. For IFS grounding details, see sheet EE1-9.4.

E. All elbows and risers inside the building shall be PVC coated galvanized steel conduit. Wrap joints in touch with soil with two layers of pipe wrapping tape.

F. For Lighting Network Panels (LNP), see lighting plan sheets.

G. Underground conduits entering the building from outside and within the building shall be installed below the structural primary/intermediate grade beams. For location of structural primary/intermediate grade beams, underground conduits stub up, and penetration details through floor/beams, refer to Structural Plan sheets.

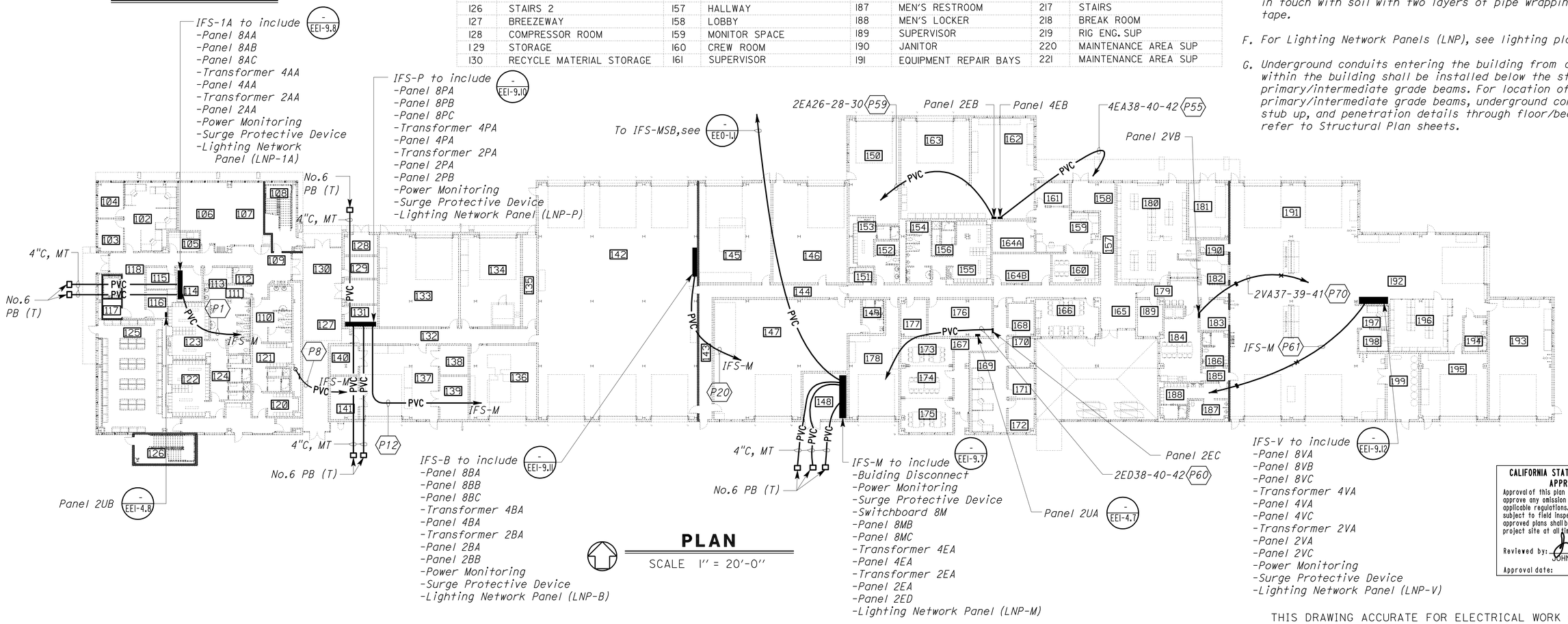

PLAN

SCALE 1" = 20'-0"

CALIFORNIA STATE FIRE MARSHAL APPROVED
Approval of this plan does not authorize or approve any omission or deviation from applicable regulations. Final approval is subject to field inspection. One set of approved plans shall be available on the project site at all times.
Reviewed by: JOHN E WOODS, SDSFM
Approval date: 8-22-12

THIS DRAWING ACCURATE FOR ELECTRICAL WORK ONLY

	BY	CHECKED
DESIGN	Catalino Enriquez	J.S.S./H.Abdelsayed
DETAILS	Dali Zhou	Catalino Enriquez
QUANTITIES	Catalino Enriquez	J.S.S./H.Abdelsayed

STATE OF CALIFORNIA
DEPARTMENT OF TRANSPORTATION

DIVISION OF ENGINEERING SERVICES
ELECTRICAL-MECHANICAL-WATER AND WASTEWATER DESIGN

BRIDGE NO. 33M5785
POST MILE 2.2

SFOBB MAINTENANCE COMPLEX
POWER PANEL KEY PLAN

SHEET EE1-1.1

TAEMWW Imperial Rev. 7/10

ORIGINAL SCALE IN INCHES FOR REDUCED PLANS 0 1 2 3

UNIT 3596
PROJECT NUMBER & PHASE 04120006661
EA 014081

DISREGARD PRINTS BEARING EARLIER REVISION DATES → 1/9/12 5/18/12 5/30/12
REVISION DATES (PRELIMINARY STAGE ONLY) SHEET OF

25-OCT-2012 11:20
ee1_1.01.dgn

DIST.	COUNTY	ROUTE	POST MILES TOTAL PROJECT	SHEET NO.	TOTAL SHEETS
04	Ala	80	2.2	642	800

REGISTERED ELECTRICAL ENGINEER — 5-30-12 DATE

REGISTERED PROFESSIONAL ENGINEER J. ABDELSAYED No. 18915 Exp. 12-31-13 ELEC STATE OF CALIFORNIA

10-22-12
PLANS APPROVAL DATE

The State of California or its officers or agents shall not be responsible for the accuracy or completeness of scanned copies of this plan sheet.

CALIFORNIA STATE FIRE MARSHAL APPROVED
Approval of this plan does not authorize or approve any omission or deviation from applicable regulations. Final approval is subject to field inspection. One set of approved plans shall be available on the project site at all times.
Reviewed by: JOHN E WOODS, SDSFM
Approval date: 8-22-12

CONDUITS AND CONDUCTORS/CABLES SCHEDULE

CONDUIT NUMBER	REFERENCE SHEET	SET OF RUN	CONDUIT SIZE/TYPE	CONDUCTOR/CABLE SIZE	FROM	TO
P1	EE0-1.3, EE1-1.1	1	3"	4#300 MCM, 1#300 MCM G	Switchboard 8M	Panel 8AA
P2	EE0-1.3	1	-	4#4, 1#4G	Panel 8AA	Panel 8AB
P3	EE0-1.3	1	-	4#1, 1#1G	Panel 8AA	Panel 8AC
P4	EE0-1.3	1	-	3#4	Panel 8AA	Transformer 4AA
P5	EE0-1.3	1	-	4#1, 1#1G	Transformer 4AA	Panel 4AA
P6	EE0-1.3	1	-	3#1	Panel 8AA	Transformer 2AA
P7	EE0-1.3	1	-	4#4/0, 1#4/0G	Transformer 2AA	Panel 2AA
P8	EE0-1.4, EE1-1.1	1	2½"	4#4/0, 1#4/0G	Switchboard 8M	Panel 8AD
P9	EE0-1.4	1	-	4#4, 1#4G	Panel 8AA	Panel 8AE
P10	EE0-1.4	1	-	3#1	Panel 8AD	Transformer 2AB
P11	EE0-1.4	1	-	4#4/0, 1#4/0G	Transformer 2AB	Panel 2AB
P12	EE0-1.5, EE1-1.1	1	3"	4#300 MCM, 1#300 MCM G	Switchboard 8M	Panel 8PA
P13	EE0-1.5	1	-	4#4, 1#4G	Panel 8PA	Panel 8PB
P14	EE0-1.5	1	-	4#1, 1#1G	Panel 8PA	Panel 8PC
P15	EE0-1.5	1	-	3#1	Panel 8PA	Transformer 4PA
P16	EE0-1.5	1	-	4#4/0, 1#4/0G	Transformer 4PA	Panel 4PA
P17	EE0-1.5	1	-	3#3/0	Panel 8PA	Transformer 2PA
P18	EE0-1.5	1	-	4#4/0, 1#4/0G	Transformer 2PA	Panel 2PA
P19	EE0-1.5	1	-	4#4/0, 1#4/0G	Transformer 2PA	Panel 2PB
P20	EE0-1.6, EE1-1.1	2	3"	4#300 MCM, 1#300 MCM G	Switchboard 8M	Panel 8BA
P21	EE0-1.6	1	-	4#4, 1#4G	Panel 8BA	Panel 8BB
P22	EE0-1.6	1	-	4#350 MCM, 1#350 MCM G	Panel 8BA	Panel 8BC
P23	EE0-1.6	1	-	3#1	Panel 8BA	Transformer 4BA
P24	EE0-1.6	1	-	4#4/0, 1#4/0G	Transformer 4BA	Panel 4BA
P25	EE0-1.6	1	-	3#3/0	Panel 8BA	Transformer 2BA
P26	EE0-1.6	1	-	4#4/0, 1#4/0G	Transformer 2BA	Panel 2BA
P27	EE0-1.6	1	-	4#4/0, 1#4/0G	Transformer 2BA	Panel 2BB

THIS DRAWING ACCURATE FOR ELECTRICAL WORK ONLY

	BY	CHECKED
DESIGN	Joseph Abdelsayed	J. S. Sandhu
DETAILS	Ed Tapalla/Dali Zhou	Joseph Abdelsayed
QUANTITIES	Joseph Abdelsayed	J. S. Sandhu

STATE OF CALIFORNIA
DEPARTMENT OF TRANSPORTATION

DIVISION OF ENGINEERING SERVICES
ELECTRICAL-MECHANICAL-WATER AND WASTEWATER DESIGN

BRIDGE NO. 33M5785
POST MILE 2.2

SFOBB MAINTENANCE COMPLEX
FEEDER SCHEDULE 1

SHEET **EE1-1.2**

TAEMWW Imperial Rev. 7/10

ORIGINAL SCALE IN INCHES FOR REDUCED PLANS 0 1 2 3

UNIT 3596
PROJECT NUMBER & PHASE 04120006661
EA 014081

DISREGARD PRINTS BEARING EARLIER REVISION DATES → 5/30/12

REVISION DATES (PRELIMINARY STAGE ONLY) SHEET OF

25-OCT-2012 11:20
ee1_1.02.dgn

DIST.	COUNTY	ROUTE	POST MILES TOTAL PROJECT	SHEET NO.	TOTAL SHEETS
04	Ala	80	2.2	643	800

Catalino A. Enriquez 5-30-12
REGISTERED ELECTRICAL ENGINEER DATE

REGISTERED PROFESSIONAL ENGINEER C. ENRIQUEZ No. 16944 Exp. 6-30-13 ELEC STATE OF CALIFORNIA

10-22-12
PLANS APPROVAL DATE

The State of California or its officers or agents shall not be responsible for the accuracy or completeness of scanned copies of this plan sheet.

CALIFORNIA STATE FIRE MARSHAL APPROVED
Approval of this plan does not authorize or approve any omission or deviation from applicable regulations. Final approval is subject to field inspection. One set of approved plans shall be available on the project site at all times.
Reviewed by: JOHN E WOODS, SDSFM
Approval date: 8-22-12

GENERAL NOTE:

For panelboards and switchboards location, see sheet EE1-1.1.

CONDUITS AND CONDUCTORS/CABLES SCHEDULE

CONDUIT NUMBER	REFERENCE SHEET	SET OF RUN	CONDUIT SIZE/TYPE	CONDUCTOR/CABLE SIZE	FROM	TO
P51	EE0-1.2, EE1-1.1	1	-	4#1, 1#6G	Switchboard 8M	Panel 8MB
P52	EE0-1.2, EE1-1.1	1	-	4#1, 1#6G	Switchboard 8M	Panel 8MC
P53	EE0-1.2, EE1-1.1	1	-	3#4	Switchboard 8M	Transformer 4EA
P54	EE0-1.2, EE1-1.1	1		4#1/0, (1#4G for GEC and per panelboard)	Transformer 4EA	Panel 4EA
P55	EE0-1.2, EE1-1.1	1	2"C, PVC	4#1, 1#6G	Panel 4EA	Panel 4EB
P56	EE0-1.2, EE1-1.1	1	-	3#3/0	Switchboard 8M	Transformer 2EA
P57	EE0-1.2, EE1-1.1	2	-	4#3/0 (1#2/0G for GEC and per panelboard)	Transformer 2EA	Panel 2EA
P58	EE0-1.2, EE1-1.1	2	-	4#3/0 (1#2/0G for GEC and per panelboard)	Transformer 2EA	Panel 2ED
P59	EE0-1.2, EE1-1.1	1	2"C, PVC	4#2/0, 1#6G	Panel 2EA	Panel 2EB
P60	EE0-1.2, EE1-1.1	1	2"C, PVC	4#2/0, 1#6G	Panel 2ED	Panel 2EC
P61	EE0-1.7, EE1-1.1	2	3"C, EMT	4#350 kcmil,1#350 kcmil G	Switchboard 8M	Panel 8VA
P62	EE0-1.7, EE1-1.1	1	-	4#1, 1#6G	Panel 8VA	Panel 8VB
P63	EE0-1.7, EE1-1.1	1	-	4#4/0, 1#4G	Panel 8VA	Panel 8VC
P64	EE0-1.7, EE1-1.1	1	-	3#3/0	Panel 8VA	Transformer 4VA
P65	EE0-1.7, EE1-1.1	2	-	4#3/0 (1#2/0G for GEC and per panelboard)	Transformer 4VA	Panel 4VA
P66	EE0-1.7, EE1-1.1	2	-	4#3/0 (1#2/0G for GEC and per panelboard)	Transformer 4VA	Panel 4VC
P67	EE0-1.7, EE1-1.1	1	-	3#3/0	Panel 8VA	Transformer 2VA
P68	EE0-1.7, EE1-1.1	2	-	4#3/0 (1#2/0G for GEC and per panelboard)	Transformer 2VA	Panel 2VA
P69	EE0-1.7, EE1-1.1	2	-	4#3/0 (1#2/0G for GEC and per panelboard)	Transformer 2VA	Panel 2VC
P70	EE0-1.7, EE1-1.1	1	2"C, EMT	4#1/0, 1#6G	Panel 2VA	Panel 2VB

	BY	CHECKED
DESIGN	Catalino Enriquez	J.S.S./H.Abdelsayed
DETAILS	Catalino Enriquez	J.S.S./H.Abdelsayed
QUANTITIES	Catalino Enriquez	J.S.S./H.Abdelsayed

STATE OF CALIFORNIA
DEPARTMENT OF TRANSPORTATION

DIVISION OF ENGINEERING SERVICES
ELECTRICAL-MECHANICAL-WATER AND WASTEWATER DESIGN

BRIDGE NO. 33M5785
POST MILE 2.2

SFOBB MAINTENANCE COMPLEX

FEEDER SCHEDULE 2

SHEET **EE1-1.3**

TAEMWW Imperial Rev. 7/10

ORIGINAL SCALE IN INCHES FOR REDUCED PLANS 0 1 2 3

UNIT 3596
PROJECT NUMBER & PHASE 04120006661
EA 014081

DISREGARD PRINTS BEARING EARLIER REVISION DATES → 4/16/12 5/18/12 5/30/12

REVISION DATES (PRELIMINARY STAGE ONLY) SHEET OF

25-OCT-2012 11:20

ee1_1.03.dgn

DIST.	COUNTY	ROUTE	POST MILES TOTAL PROJECT	SHEET NO.	TOTAL SHEETS
04	Ala	80	2.2	644	800

Catalino A. Enriquez 5-30-12
REGISTERED ELECTRICAL ENGINEER DATE

REGISTERED PROFESSIONAL ENGINEER C. ENRIQUEZ No. 16944 Exp. 6-30-13 ELEC STATE OF CALIFORNIA

10-22-12
PLANS APPROVAL DATE

The State of California or its officers or agents shall not be responsible for the accuracy or completeness of scanned copies of this plan sheet.

CALIFORNIA STATE FIRE MARSHAL APPROVED
Approval of this plan does not authorize or approve any omission or deviation from applicable regulations. Final approval is subject to field inspection. One set of approved plans shall be available on the project site at all times.
Reviewed by: JOHN E WOODS, SDSFM
Approval date: 8-22-12

GENERAL NOTE:

For panelboards and switchboards location, see sheet EE1-1.1.

EQUIPMENT	PANEL SCHEDULE SHEET NUMBER
Panel 8AA	EE1-10.2
Panel 8AB	EE1-10.2
Panel 8AC	EE1-10.2
Panel 4AA	EE1-10.3
Panel 2AA	EE1-10.3
Panel 8AD	EE1-10.4
Panel 8AE	EE1-10.4
Panel 2AB	EE1-10.4
Panel 8PA	EE1-10.5
Panel 8PB	EE1-10.5
Panel 8PC	EE1-10.5
Panel 4PA	EE1-10.6
Panel 2PA	EE1-10.6
Panel 2PB	EE1-10.6
Panel 8BA	EE1-10.7
Panel 8BB	EE1-10.7
Panel 8BC	EE1-10.7
Panel 4BA	EE1-10.8
Panel 2BA	EE1-10.8
Panel 2BB	EE1-10.8

EQUIPMENT	PANEL SCHEDULE SHEET NUMBER
Switchboard 8M	EE1-10.1
Panel 8MB	EE1-10.9
Panel 8MC	EE1-10.9
Panel 4EA	EE1-10.10
Panel 4EB	EE1-10.11
Panel 2EA	EE1-10.10
Panel 2EB	EE1-10.11
Panel 2EC	EE1-10.11
Panel 2ED	EE1-10.10
Panel 8VA	EE1-10.12
Panel 8VB	EE1-10.12
Panel 8VC	EE1-10.12
Panel 4VA	EE1-10.13
Panel 4VC	EE1-10.13
Panel 2VA	EE1-10.14
Panel 2VB	EE1-10.14
Panel 2VC	EE1-10.14
Panel 2UA	EE1-10.15
Panel 2UB	EE1-10.15

	BY	CHECKED
DESIGN	Catalino Enriquez	J.S.S./H.Abdelsayed
DETAILS	Catalino Enriquez	J.S.S./H.Abdelsayed
QUANTITIES	Catalino Enriquez	J.S.S./H.Abdelsayed

STATE OF CALIFORNIA
DEPARTMENT OF TRANSPORTATION

DIVISION OF ENGINEERING SERVICES
ELECTRICAL-MECHANICAL-WATER AND WASTEWATER DESIGN

BRIDGE NO. 33M5785
POST MILE 2.2

SFOBB MAINTENANCE COMPLEX

PANELS INDEX

SHEET **EE1-1.4**

TAEMWW Imperial Rev. 7/10

ORIGINAL SCALE IN INCHES FOR REDUCED PLANS 0 1 2 3

UNIT 3596
PROJECT NUMBER & PHASE 04120006661
EA 014081

DISREGARD PRINTS BEARING EARLIER REVISION DATES → 4/18/12 4/23/12 5/30/12

REVISION DATES (PRELIMINARY STAGE ONLY) SHEET OF

25-OCT-2012 11:20

ee1_1.04.dgn

DIST.	COUNTY	ROUTE	POST MILES TOTAL PROJECT	SHEET NO.	TOTAL SHEETS
04	Ala	80	2.2	645	800

REGISTERED ELECTRICAL ENGINEER — 5-30-12 DATE

REGISTERED PROFESSIONAL ENGINEER J. ABDELSAYED No. 18915 Exp. 12-31-13 ELEC STATE OF CALIFORNIA

10-22-12
PLANS APPROVAL DATE

CALIFORNIA STATE FIRE MARSHAL APPROVED
Approval of this plan does not authorize or approve any omission or deviation from applicable regulations. Final approval is subject to field inspection. One set of approved plans shall be available on the project site at all times.
Reviewed by: JOHN E WOODS, SDSFM
Approval date: 8-22-12

The State of California or its officers or agents shall not be responsible for the accuracy or completeness of scanned copies of this plan sheet.

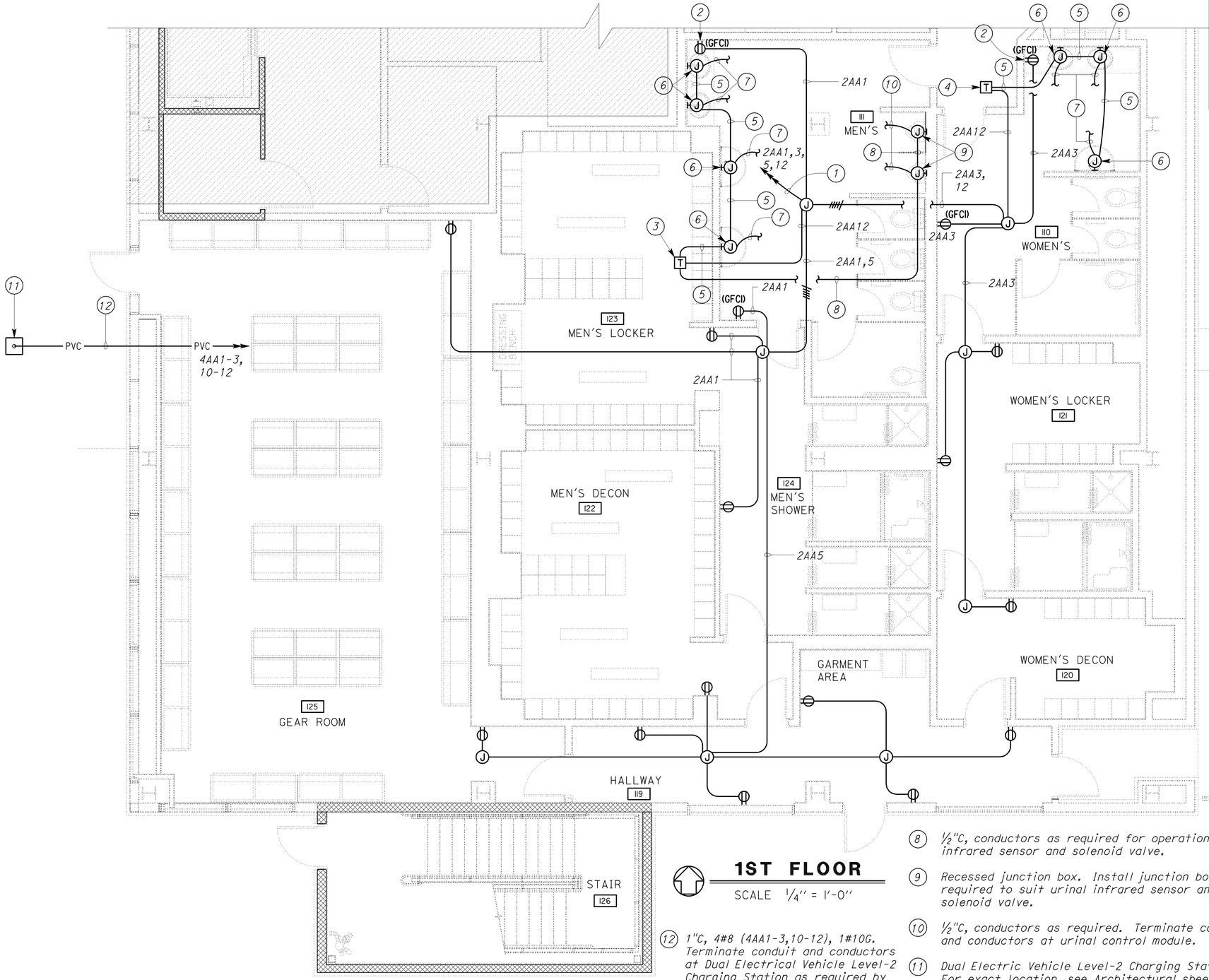

1ST FLOOR

SCALE 1/4" = 1'-0"

General Notes:

A. *System layout for the automatic flush system as shown is diagrammatic only. The exact layout depends on the system furnished and installed. In addition, provide and install any components that are not shown but are required for the automatic functioning of the automatic flush system. The price for additional components shall be considered part of the lump sum price.*

B. *All device and accessories for automatic flush system are supplied by the water closet, faucet, and urinal manufacturer.*

C. *Provide and install support systems for supporting armored cable as required.*

D. *Transformer supplied by the manufacturer shall be sized adequately to supply all units shown.*

E. *Armored cable to connect various devices shall be of adequate length with approved connectors for terminations at junction boxes and field devices.*

F. *Underground conduits entering the building from outside and within the building shall be installed below the structural primary/intermediate grade beams. For location of structural primary/intermediate grade beams, underground conduits stub up, and penetration details through floor/beams, refer to Structural Plan sheets.*

Notes:

1. *3/4"C, 8#12 (2AA1,3,5,12), 1#12G.*
2. *Mount bottom of the receptacle six inches above the countertop.*
3. *Provide and install all hardware as required for the installation of the low voltage transformer as recommended by the manufacturer. Mount transformer in a surface mounted junction box in the attic space above the Men's Locker Room.*
4. *Provide and install all hardware as required for the installation of the low voltage transformer as recommended by the manufacturer. Mount transformer in a surface mounted junction box in the attic space above the Lobby.*
5. *1/2"C, conductors as required by electronic faucet manufacturer.*
6. *Recessed junction box. Install junction box as required to suit electronic faucet unit furnished.*
7. *1/2"C, conductors as required. Terminate conduit and conductors at electronic faucet control module.*
8. *1/2"C, conductors as required for operation of infrared sensor and solenoid valve.*
9. *Recessed junction box. Install junction box as required to suit urinal infrared sensor and solenoid valve.*
10. *1/2"C, conductors as required. Terminate conduit and conductors at urinal control module.*
11. *Dual Electric Vehicle Level-2 Charging Station. For exact location, see Architectural sheets.*
12. *1"C, 4#8 (4AA1-3,10-12), 1#10G. Terminate conduit and conductors at Dual Electrical Vehicle Level-2 Charging Station as required by unit furnished.*

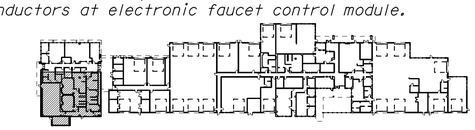

KEY PLAN

THIS DRAWING ACCURATE FOR ELECTRICAL WORK ONLY

	BY	CHECKED
DESIGN	Joseph Abdelsayed	J. S. Sandhu
DETAILS	Ed Tapalla/Dali Zhou	Joseph Abdelsayed
QUANTITIES	Joseph Abdelsayed	J. S. Sandhu

STATE OF CALIFORNIA DEPARTMENT OF TRANSPORTATION

DIVISION OF ENGINEERING SERVICES
ELECTRICAL-MECHANICAL-WATER AND WASTEWATER DESIGN

BRIDGE NO. 33M5785
POST MILE 2.2

SFOBB MAINTENANCE COMPLEX
BUILDING 1A — PARTIAL POWER PLAN 1

SHEET **EE1-1.5**

TAEMWW Imperial Rev. 7/10

ORIGINAL SCALE IN INCHES FOR REDUCED PLANS 0 1 2 3

UNIT 3596
PROJECT NUMBER & PHASE 04120006661
EA 014081

DISREGARD PRINTS BEARING EARLIER REVISION DATES → 10/19/11 12/19/11 5/30/12

REVISION DATES (PRELIMINARY STAGE ONLY) SHEET OF

25-OCT-2012 11:20

ee1_1.05.dgn

DIST.	COUNTY	ROUTE	POST MILES TOTAL PROJECT	SHEET NO.	TOTAL SHEETS
04	Ala	80	2.2	646	800

REGISTERED ELECTRICAL ENGINEER — 5-30-12 DATE

REGISTERED PROFESSIONAL ENGINEER J. ABDELSAYED No. 18915 Exp. 12-31-13 ELEC STATE OF CALIFORNIA

10-22-12
PLANS APPROVAL DATE

The State of California or its officers or agents shall not be responsible for the accuracy or completeness of scanned copies of this plan sheet.

CALIFORNIA STATE FIRE MARSHAL APPROVED

Approval of this plan does not authorize or approve any omission or deviation from applicable regulations. Final approval is subject to field inspection. One set of approved plans shall be available on the project site at all times.

Reviewed by: JOHN E WOODS, SDSFM

Approval date: 8-22-12

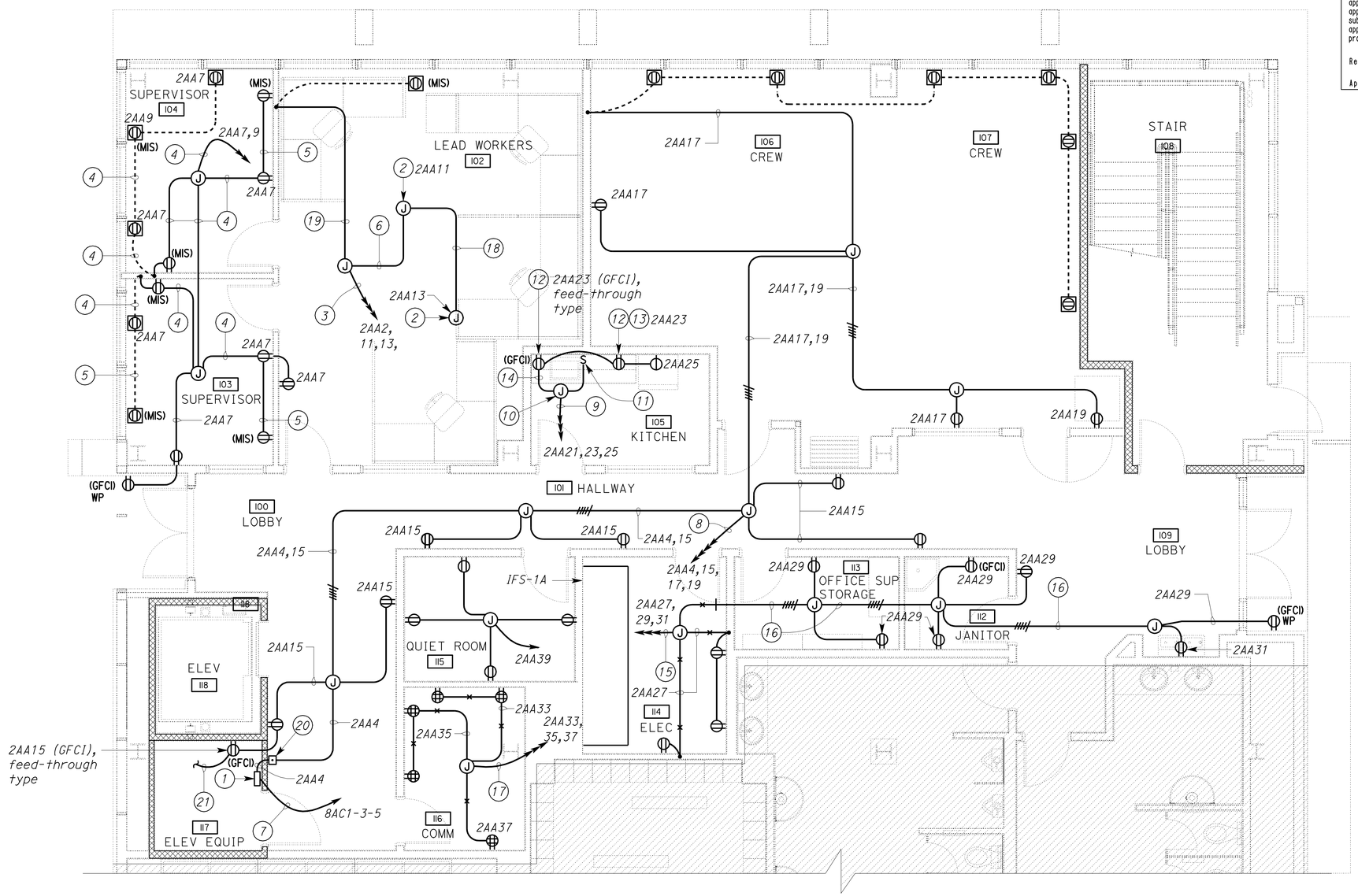

1ST FLOOR

SCALE 1/4" = 1'-0"

Notes:

1. Elevator Equipment Disconnect Switch.
2. Install junction box in the attic space for access to future cubicle partitions. Coil one foot of each conductor inside junction box. Label grid ceiling frame adjacent to junction box with corresponding circuit numbers.
3. 3/4"C, 6#12 (2AA2,11,13), 1#12 insulated ground, 1#12G.
4. 3/4"C, 4#12 (2AA7,9), 1#12 insulated ground, 1#12G.
5. 1/2"C, 2#12 (2AA9), 1#12 insulated ground.
6. 3/4"C, 4#12 (2AA11,13), 1#12 insulated ground, 1#12G.
7. 1 1/2"C, 3#2 (8AC1-3-5), 1#8G.
8. 3/4"C, 8#12, (2AA4,15,17,19), 1#12G.
9. 1"C, 6#12, (2AA21,23,25), 1#12G
10. Mount junction box below sink. Connect circuit 2AA21 to undersink garbage disposal. Install weatherproof GFCI receptacle to suit unit furnished.
11. Switch for garbage disposal. Mount bottom of switch 6 inches above counter top.
12. Mount bottom of the receptacle 6 inches above countertop.
13. Connect this outlet from GFCI feed-through type outlet.
14. 3/4"C, 4#12 (2AA23,25), 1#12G.
15. 1"C, 6#12 (2AA27,29,31), 1#12G.
16. 3/4"C, 4#12 (2AA29,31), 1#12G.
17. 3/4"C, 6#12 (2AA33,35,37), 1#12G.
18. 1/2"C, 2#12 (2AA13), 1#12 insulated ground, 1#12G.
19. 1/2"C, 2#12 (2AA2), 1#12 insulated ground, 1#12G.
20. Shunt Trip Pushbutton
21. 1/2"C, 2#12 (2AA15), 1#12G to receptacle located in the Elevator Pit. For details, see Architectural Sheets.

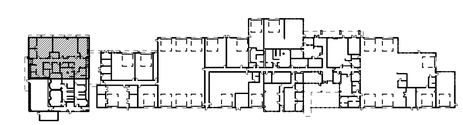

KEY PLAN

THIS DRAWING ACCURATE FOR ELECTRICAL WORK ONLY

	BY	CHECKED
DESIGN	Joseph Abdelsayed	J. S. Sandhu
DETAILS	Ed Tapalla/Dali Zhou	Joseph Abdelsayed
QUANTITIES	Joseph Abdelsayed	J. S. Sandhu

STATE OF CALIFORNIA DEPARTMENT OF TRANSPORTATION

DIVISION OF ENGINEERING SERVICES ELECTRICAL-MECHANICAL-WATER AND WASTEWATER DESIGN

BRIDGE NO. 33M5785 POST MILE 2.2

SFOBB MAINTENANCE COMPLEX

BUILDING 1A — PARTIAL POWER PLAN 2

SHEET **EE1-1.6**

TAEMWW Imperial Rev. 7/10

ORIGINAL SCALE IN INCHES FOR REDUCED PLANS 0 1 2 3

UNIT 3596
PROJECT NUMBER & PHASE 04120006661
EA 014081

DISREGARD PRINTS BEARING EARLIER REVISION DATES → REVISION DATES (PRELIMINARY STAGE ONLY) 10/24/11 12/24/11 5/30/12 SHEET OF

25-OCT-2012 11:20

ee1_1.06.dgn

DIST.	COUNTY	ROUTE	POST MILES TOTAL PROJECT	SHEET NO.	TOTAL SHEETS
04	Ala	80	2.2	647	800

REGISTERED ELECTRICAL ENGINEER — 5-30-12 DATE

REGISTERED PROFESSIONAL ENGINEER J. ABDELSAYED No. 18915 Exp. 12-31-13 ELEC STATE OF CALIFORNIA

10-22-12
PLANS APPROVAL DATE

The State of California or its officers or agents shall not be responsible for the accuracy or completeness of scanned copies of this plan sheet.

CALIFORNIA STATE FIRE MARSHAL APPROVED
Approval of this plan does not authorize or approve any omission or deviation from applicable regulations. Final approval is subject to field inspection. One set of approved plans shall be available on the project site at all times.
Reviewed by: JOHN E WOODS, SDSFM
Approval date: 8-22-12

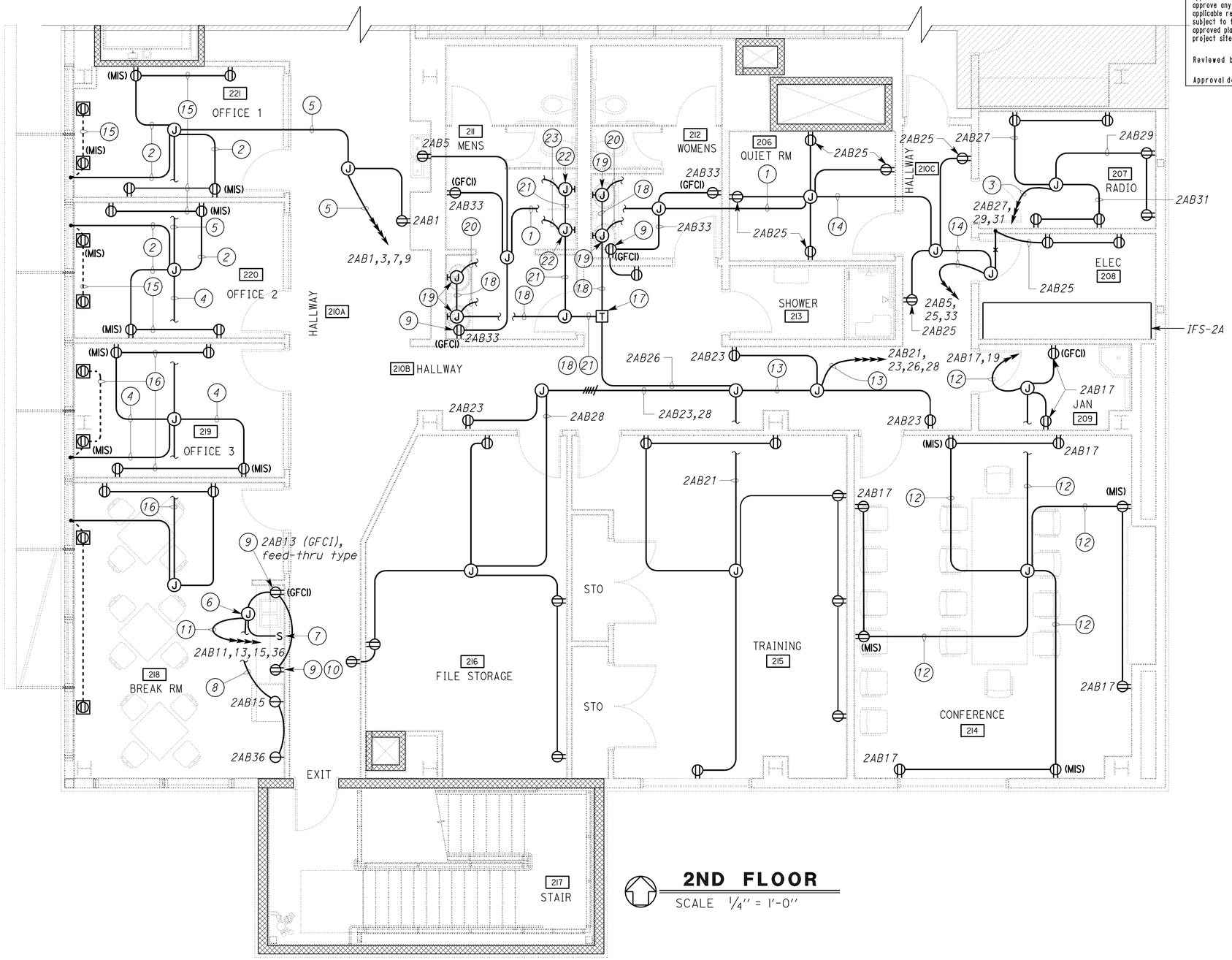

2ND FLOOR
SCALE 1/4" = 1'-0"

General Note:

A. For general and project notes on this sheet, see sheet EE1-1.8.

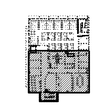

SECOND FLOOR

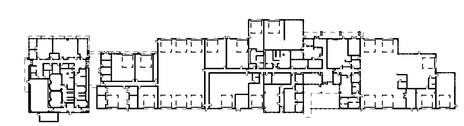

KEY PLAN

THIS DRAWING ACCURATE FOR ELECTRICAL WORK ONLY

	BY	CHECKED
DESIGN	Joseph Abdelsayed	J. S. Sandhu
DETAILS	Ed Tapalla/Dali Zhou	Joseph Abdelsayed
QUANTITIES	Joseph Abdelsayed	J. S. Sandhu

STATE OF CALIFORNIA
DEPARTMENT OF TRANSPORTATION

DIVISION OF ENGINEERING SERVICES
ELECTRICAL-MECHANICAL-WATER AND WASTEWATER DESIGN

BRIDGE NO. 33M5785
POST MILE 2.2

SFOBB MAINTENANCE COMPLEX
BUILDING 1A
PARTIAL POWER PLAN 3

SHEET **EE1-1.7**

TAEMWW Imperial Rev. 7/10

ORIGINAL SCALE IN INCHES FOR REDUCED PLANS 0 1 2 3

UNIT 3596
PROJECT NUMBER & PHASE 04120006661
EA 014081

DISREGARD PRINTS BEARING EARLIER REVISION DATES
REVISION DATES (PRELIMINARY STAGE ONLY) 10/19/11 5/30/12
SHEET OF

25-OCT-2012 11:20
ee1_1.07.dgn

DIST.	COUNTY	ROUTE	POST MILES TOTAL PROJECT	SHEET NO.	TOTAL SHEETS
04	Ala	80	2.2	648	800

REGISTERED ELECTRICAL ENGINEER — 5-30-12 DATE

REGISTERED PROFESSIONAL ENGINEER J. ABDELSAYED No. 18915 Exp. 12-31-13 ELEC STATE OF CALIFORNIA

10-22-12
PLANS APPROVAL DATE

The State of California or its officers or agents shall not be responsible for the accuracy or completeness of scanned copies of this plan sheet.

CALIFORNIA STATE FIRE MARSHAL APPROVED

Approval of this plan does not authorize or approve any omission or deviation from applicable regulations. Final approval is subject to field inspection. One set of approved plans shall be available on the project site at all times.

Reviewed by: JOHN E WOODS, SDSFM

Approval date: 8-22-12

General Notes:

A. *System layout for the automatic flush system as shown is diagrammatic only. The exact layout depends on the system furnished and installed. In addition, provide and install any components that are not shown but are required for the automatic functioning of the automatic flush system. The price for additional components shall be considered part of the lump sum price.*

B. *All device and accessories for automatic flush system are supplied by the water closet, faucet, and urinal manufacturer.*

C. *Provide and install support systems for supporting armored cable as required.*

D. *Transformer supplied by the manufacturer shall be sized adequately to supply all units shown.*

E. *Armored cable to connect various devices shall be of adequate length with approved connectors for terminations at junction boxes and field devices.*

Notes:

1. ¾"C, 4#12 (2AB5,33), 1#12G.
2. ¾"C, 4#10 (2AB1,3), 1#10 insulated ground, 1#10G.
3. ¾"C, 6#12 (2AB27,29,31), 1#12G.
4. ¾"C, 4#10 (2AB7,9), 1#10 insulated ground, 1#10G.
5. 1"C, 8#10 (2AB1,3,7,9), 1#10 insulated ground, 1#10G.
6. Mount junction box below sink. Connect circuit 2AB11 to undersink garbage disposal. Install weatherproof GFCI receptacle to suit unit furnished.
7. Switch for garbage disposal. Mount bottom of switch 6 inches above counter top.
8. ¾"C, 4#12 (2AB15,36) 1#12G.
9. Mount bottom of receptacle 6 inches above counter top.
10. Connect this outlet from GFCI feed-through type outlet.
11. 1"C, 8#10 (2AB11,13,15,36), 1#10G.
12. ¾"C, 4#12 (2AB17,19), 1#12 insulated ground, 1#12G.
13. ¾"C, 8#12 (2AB21,23,26,28), 1#12G.
14. ¾"C, 6#12 (2AB5,25,33), 1#12G.
15. ½"C, 2#10 (2AB1), 1#10G.
16. ½"C, 2#10 (2AB7), 1#10G.
17. Provide and install all hardware as required for the installation of the low voltage transformer as recommended by the manufacturer. Mount transformer in a surface mounted junction box in the attic space above the Hallway.
18. ½"C, conductors as required by electronic faucet manufacturer.
19. Recessed junction box. Install junction box as required to suit electronic faucet unit furnished.
20. ½"C, conductors as required. Terminate conduit and conductors at electronic faucet control module.
21. ½"C, conductors as required for operation of infrared sensor and solenoid valve.
22. Recessed junction box. Install junction box as required to suit urinal infrared sensor and solenoid valve.
23. ½"C, conductors as required. Terminate conduit and conductors at urinal control module.

SECOND FLOOR

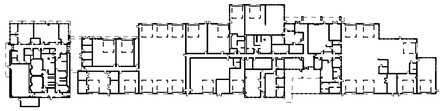

KEY PLAN

THIS DRAWING ACCURATE FOR ELECTRICAL WORK ONLY

	BY	CHECKED
DESIGN	Joseph Abdelsayed	J. S. Sandhu
DETAILS	Ed Tapalla/Dali Zhou	Joseph Abdelsayed
QUANTITIES	Joseph Abdelsayed	J. S. Sandhu

STATE OF CALIFORNIA DEPARTMENT OF TRANSPORTATION

DIVISION OF ENGINEERING SERVICES
ELECTRICAL-MECHANICAL-WATER AND WASTEWATER DESIGN

BRIDGE NO. 33M5785
POST MILE 2.2

SFOBB MAINTENANCE COMPLEX

BUILDING 1A — PARTIAL POWER PLAN 3 NOTES

SHEET **EE1-1.8**

TAEMWW Imperial Rev. 7/10

ORIGINAL SCALE IN INCHES FOR REDUCED PLANS 0 1 2 3

UNIT 3596
PROJECT NUMBER & PHASE 04120006661
EA 014081

DISREGARD PRINTS BEARING EARLIER REVISION DATES → 10/19/11 5/30/12

REVISION DATES (PRELIMINARY STAGE ONLY) SHEET OF

ee1_1.08.dgn

25-OCT-2012 11:21

DIST.	COUNTY	ROUTE	POST MILES TOTAL PROJECT	SHEET NO.	TOTAL SHEETS
04	Ala	80	2.2	649	800

REGISTERED ELECTRICAL ENGINEER — 5-30-12 DATE

REGISTERED PROFESSIONAL ENGINEER J.ABDELSAYED No. 18915 Exp. 12-31-13 ELEC STATE OF CALIFORNIA

10-22-12
PLANS APPROVAL DATE

The State of California or its officers or agents shall not be responsible for the accuracy or completeness of scanned copies of this plan sheet.

CALIFORNIA STATE FIRE MARSHAL APPROVED
Approval of this plan does not authorize or approve any omission or deviation from applicable regulations. Final approval is subject to field inspection. One set of approved plans shall be available on the project site at all times.
Reviewed by: JOHN E WOODS, SDSFM
Approval date: 8-22-12

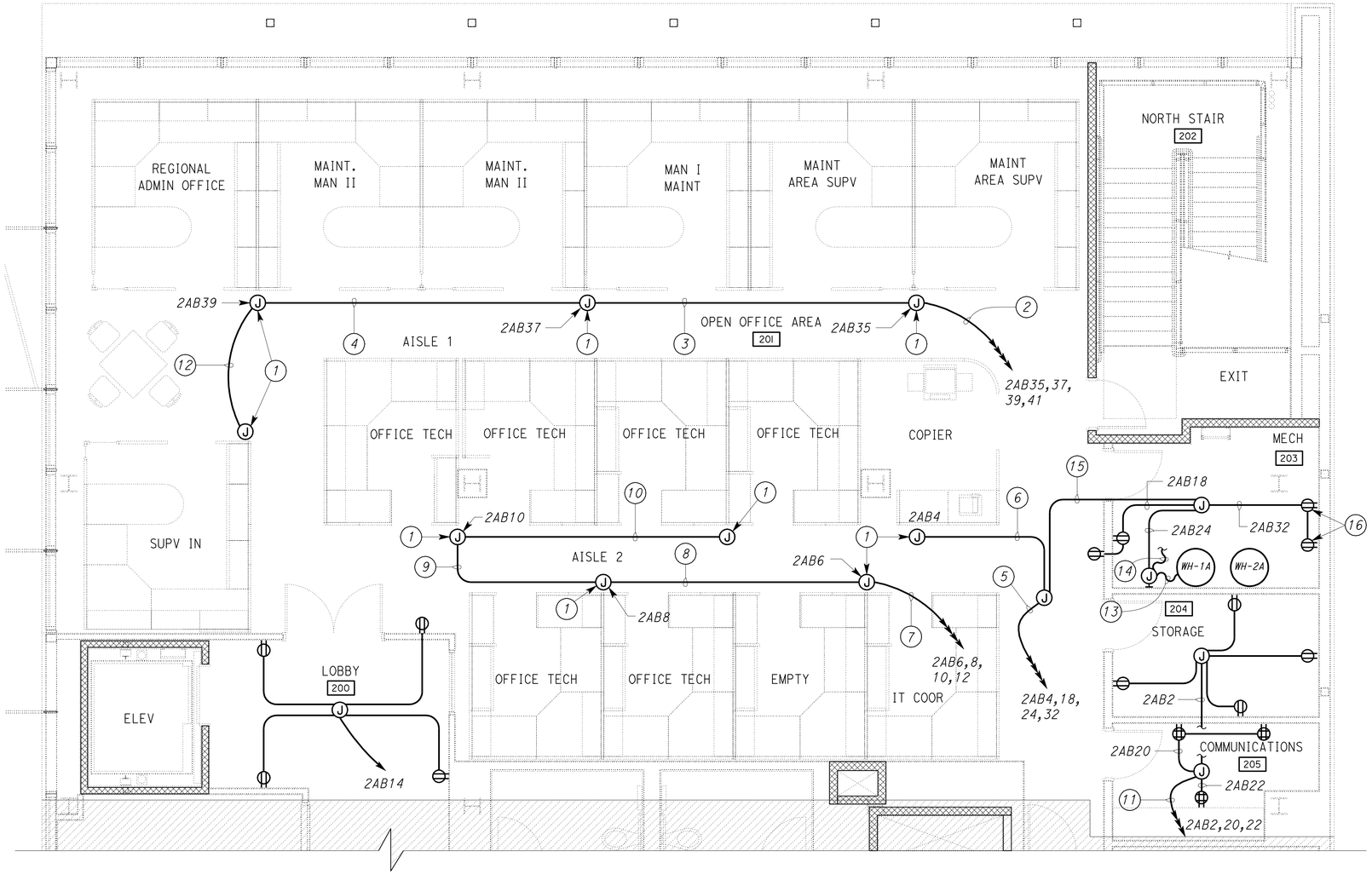

2ND FLOOR

SCALE 1/4" = 1'-0"

Notes:

1. *Install junction box in the attic space for access to future cubicle partitions. Coil one foot of each conductor inside junction box. Label grid ceiling frame adjacent to junction box with corresponding circuit numbers.*
2. *1"C, 4#12 (2AB35,37), 4#10 (2AB39,41), 1#10 insulated ground, 1#10G.*
3. *3/4"C, 2#12 (2AB37), 4#10 (2AB39,41), 1#10 insulated ground, 1#10G.*
4. *3/4"C, 4#10 (2AB39,41), 1#10 insulated ground, 1#10G.*
5. *3/4"C, 8#12 (2AB4,18,24,32), 1#12 insulated ground, 1#12G.*
6. *1/2"C, 2#12 (2AB4), 1#12 insulated ground, 1#12G.*
7. *1"C, 4#12 (2AB6,8), 2#10 (2AB10,12), 1#10 insulated ground, 1#10G.*
8. *3/4"C, 2#12 (2AB8), 4#10 (2AB10,12), 1#10 insulated ground, 1#10G.*
9. *3/4"C, 4#10 (2AB10,12), 1#10 insulated ground, 1#10G.*
10. *1/2"C, 2#10 (2AB12), 1#10 insulated ground, 1#10G.*
11. *3/4"C, 6#12 (2AB2,20,22), 1#12G.*
12. *3/4"C, 2#10 (2AB41), 1#10 insulated ground.*
13. *1/2"C, 2#12 (2BA24), 1#12G to Water Heater WH-1A. Terminate conduit and conductors as required to suit unit furnished.*
14. *1/2"C, 2#12 (2BA24), 1#12G to Water Heater WH-2A. Terminate conduit and conductors as required to suit unit furnished.*
15. *3/4"C, 6#12 (2AB18,24,32), 1#12G.*
16. *Receptacles (2AB32) for Recirculation Pumps P-1A and P-2A. See Mechanical sheets for details.*

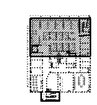

2ND FLOOR

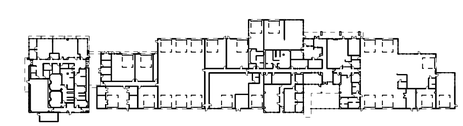

KEY PLAN

THIS DRAWING ACCURATE FOR ELECTRICAL WORK ONLY

	BY	CHECKED
DESIGN	Joseph Abdelsayed	J. S. Sandhu
DETAILS	Ed Tapalla/Dali Zhou	Joseph Abdelsayed
QUANTITIES	Joseph Abdelsayed	J. S. Sandhu

STATE OF CALIFORNIA DEPARTMENT OF TRANSPORTATION

DIVISION OF ENGINEERING SERVICES
ELECTRICAL-MECHANICAL-WATER AND WASTEWATER DESIGN

BRIDGE NO. 33M5785
POST MILE 2.2

SFOBB MAINTENANCE COMPLEX
BUILDING 1A
PARTIAL POWER PLAN 4

SHEET **EE1-1.9**

TAEMWW Imperial Rev. 7/10

ORIGINAL SCALE IN INCHES FOR REDUCED PLANS 0 1 2 3

UNIT 3596
PROJECT NUMBER & PHASE 04120006661
EA 014081

DISREGARD PRINTS BEARING EARLIER REVISION DATES → 10/19/11 5/30/12

REVISION DATES (PRELIMINARY STAGE ONLY) SHEET OF

25-OCT-2012 11:21

ee1_1.09.dgn

General Notes:

A. The bottom of all Multi-Outlet assemblies shall be mounted at 6 inches above counter tops, tables or work benches unless otherwise noted. For details and additional information, see sheet EE1-9.1.

B. Location of all other equipment as shown is arbitrary only. Exact location depends upon the unit furnished and physical limitations. All cables and conductors shall be installed in conduit.

C. For all Disconnect Switch, Welding Receptacle, and Special Purpose Receptacle equipment schedules, see sheets EE1-10.16 and EE1-10.17.

DIST.	COUNTY	ROUTE	POST MILES TOTAL PROJECT	SHEET NO.	TOTAL SHEETS
04	Ala	80	2.2	650	800

REGISTERED ELECTRICAL ENGINEER — 5-30-12 DATE

REGISTERED PROFESSIONAL ENGINEER J. ABDELSAYED No. 18915 Exp. 12-31-13 ELEC STATE OF CALIFORNIA

10-22-12
PLANS APPROVAL DATE

The State of California or its officers or agents shall not be responsible for the accuracy or completeness of scanned copies of this plan sheet.

CALIFORNIA STATE FIRE MARSHAL APPROVED
Approval of this plan does not authorize or approve any omission or deviation from applicable regulations. Final approval is subject to field inspection. One set of approved plans shall be available on the project site at all times.
Reviewed by: JOHN E WOODS, SDSFM
Approval date: 8-22-12

(25) ¾"C, 6#12 (2PA2,4,6), 1#12 insulated ground, 1#12G.

(26) Receptacle (2PA4) for Bench Drill Press.

(27) Receptacle (2PA6) for Bench Grinder.

(28) Type B4 Multi-Outlet Assembly.

(29) ¾"C, 4#12 (2PA8,10), 1#12 insulated ground, 1#12G.

(30) Type B2 Multi-Outlet Assembly. Mount Multi-Outlet Assembly to steel back of workbench. For details, see Architectural Sheets.

(31) ¾"C, 4#10 (2PA14,16), 2#12 (2PA12), 1#10G.

(32) ¾"C, 4#10 (2PA14,16), 1#10G.

(33) Receptacle (2PA16) for Drill Press.

(34) 1"C, 6#10 (2PA18,20,22), 1#10 insulated ground, 1#10G.

(35) ½"C, 2#10 (2PA29), 1#10G

(36) ½"C, 2#10 (2PA18), 1#10G.

(37) ½"C, 2#10 (2PA20), 1#10 insulated ground, 1#10G.

(38) ½"C, 2#10 (2PA27), 1#10G.

(39) ½"C, 2#10 (2PA14), 1#10G.

(40) ½"C, 2#10 (2PA16), 1#10G.

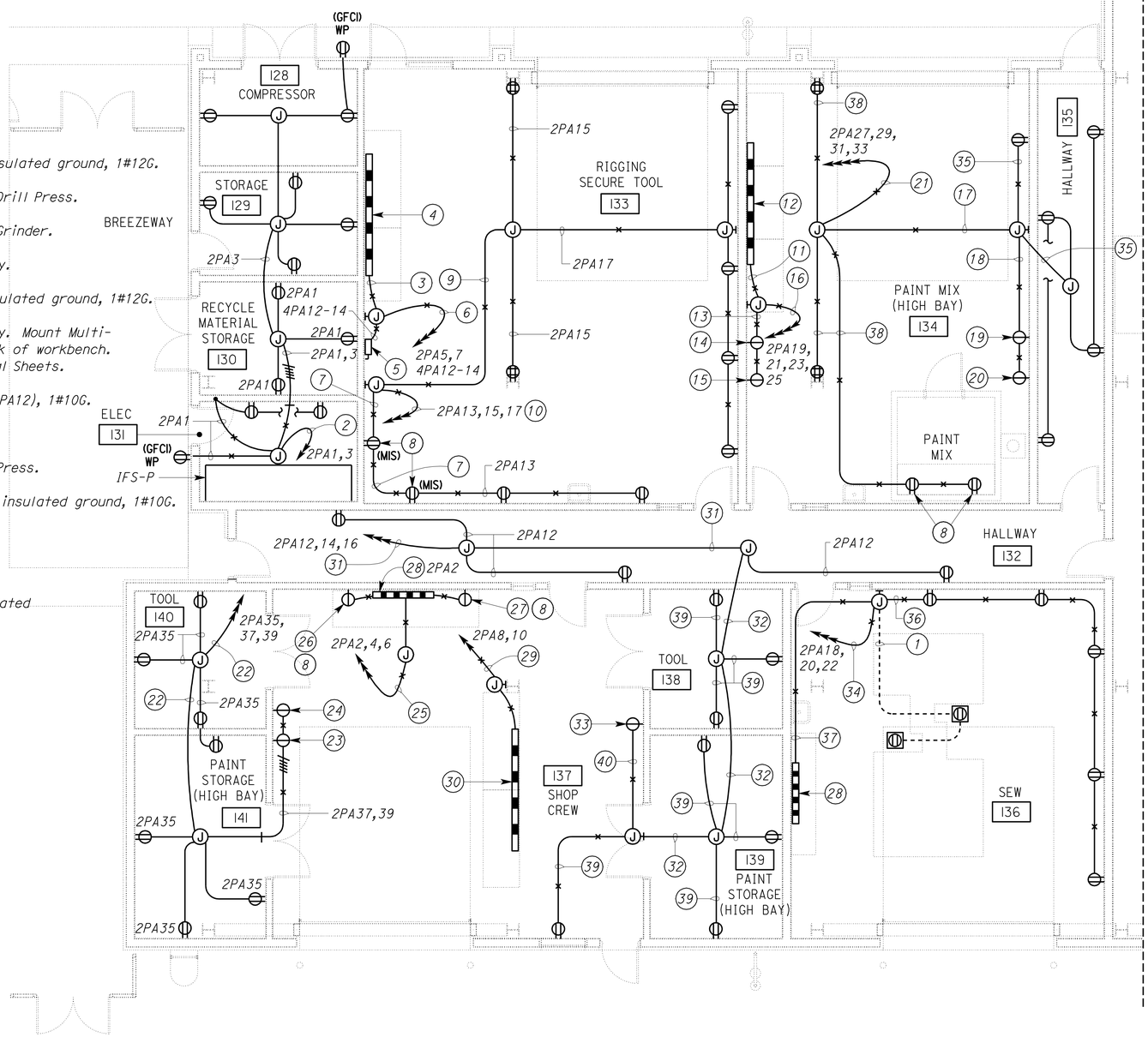

PLAN
SCALE 3/16" = 1'-0"

Notes:

(1) ½"C, 2#10 (2PA22), 1#10G.

(2) ¾"C, 4#12 (2PA1,3), 1#12G.

(3) ¾"C, 4#12 (2PA5,7), 1#12G.

(4) Type B1 Multi-Outlet Assembly.

(5) Drill Press Disconnect Switch (4PA12-14).

(6) ¾"C, 4#12 (2PA5,7) 2#12 (4PA12-14), 1#12G.

(7) ½"C, 2#12 (2PA13), 1#12 insulated ground, 1#12G.

(8) Mount bottom of receptacle 6 inches above table/workbench.

(9) ½"C, 4#12 (2PA15,17), 1#12G.

(10) ¾"C, 6#12 (2PA13,15,17), 1#12 insulated ground, 1#12G.

(11) ¾"C, 4#12 (2PA19,21), 1#12 insulated ground, 1#12G.

(12) Type B2 Multi-Outlet Assembly.

(13) ½"C, 4#12 (2PA23,25), 1#12G.

(14) Receptacle (2PA23) for Paint Shaker.

(15) Receptacle (2PA25) for Paint Shaker.

(16) 1"C, 8#12 (2PA19,21,23,25), 1#12 insulated ground, 1#12G.

(17) 1"C, 6#10 (2PA29,31,33), 1#10G.

(18) ½"C, 4#10 (2PA31,33), 1#10G.

(19) Receptacle (2PA31) for Paint Shaker.

(20) Receptacle (2PA33) for Paint Shaker.

(21) ¾"C, 8#10 (2PA27,29,31,33), 1#10G.

(22) ¾"C, 6#12 (2PA35,37,39), 1#12G.

(23) Receptacle (2PA37) for Standing Grinder.

(24) Receptacle (2PA39) for Drill Press.

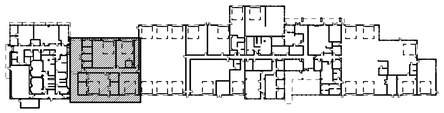

KEY PLAN

THIS DRAWING ACCURATE FOR ELECTRICAL WORK ONLY

	BY	CHECKED
DESIGN	Joseph Abdelsayed	J. S. Sandhu
DETAILS	Ed Tapalla/Dali Zhou	Joseph Abdelsayed
QUANTITIES	Joseph Abdelsayed	J. S. Sandhu

STATE OF CALIFORNIA
DEPARTMENT OF TRANSPORTATION

DIVISION OF ENGINEERING SERVICES
ELECTRICAL-MECHANICAL-WATER AND WASTEWATER DESIGN

BRIDGE NO. 33M5785
POST MILE 2.2

SFOBB MAINTENANCE COMPLEX
BUILDING 1B — PARTIAL POWER PLAN 5

SHEET EE1-1.10

TAEMWW Imperial Rev. 7/10

ORIGINAL SCALE IN INCHES FOR REDUCED PLANS 0 1 2 3

UNIT 3596
PROJECT NUMBER & PHASE 04120006661
EA 014081

DISREGARD PRINTS BEARING EARLIER REVISION DATES → 11/29/11 5/30/12

REVISION DATES (PRELIMINARY STAGE ONLY) SHEET OF

25-OCT-2012 11:21
ee1_1.10.dgn

General Notes:

A. Location of overhead door operators and related components as shown is arbitrary only. Exact location depends upon the unit furnished. Contractor shall furnish and install any additional conduit, conductors, cables and equipment necessary for the automatic operation without extra cost to the State. All cables and conductors shall be installed in conduit.

B. Location of all other equipment as shown is arbitrary only. Exact location depends upon the unit furnished and physical limitations. All cables and conductors shall be installed in conduit.

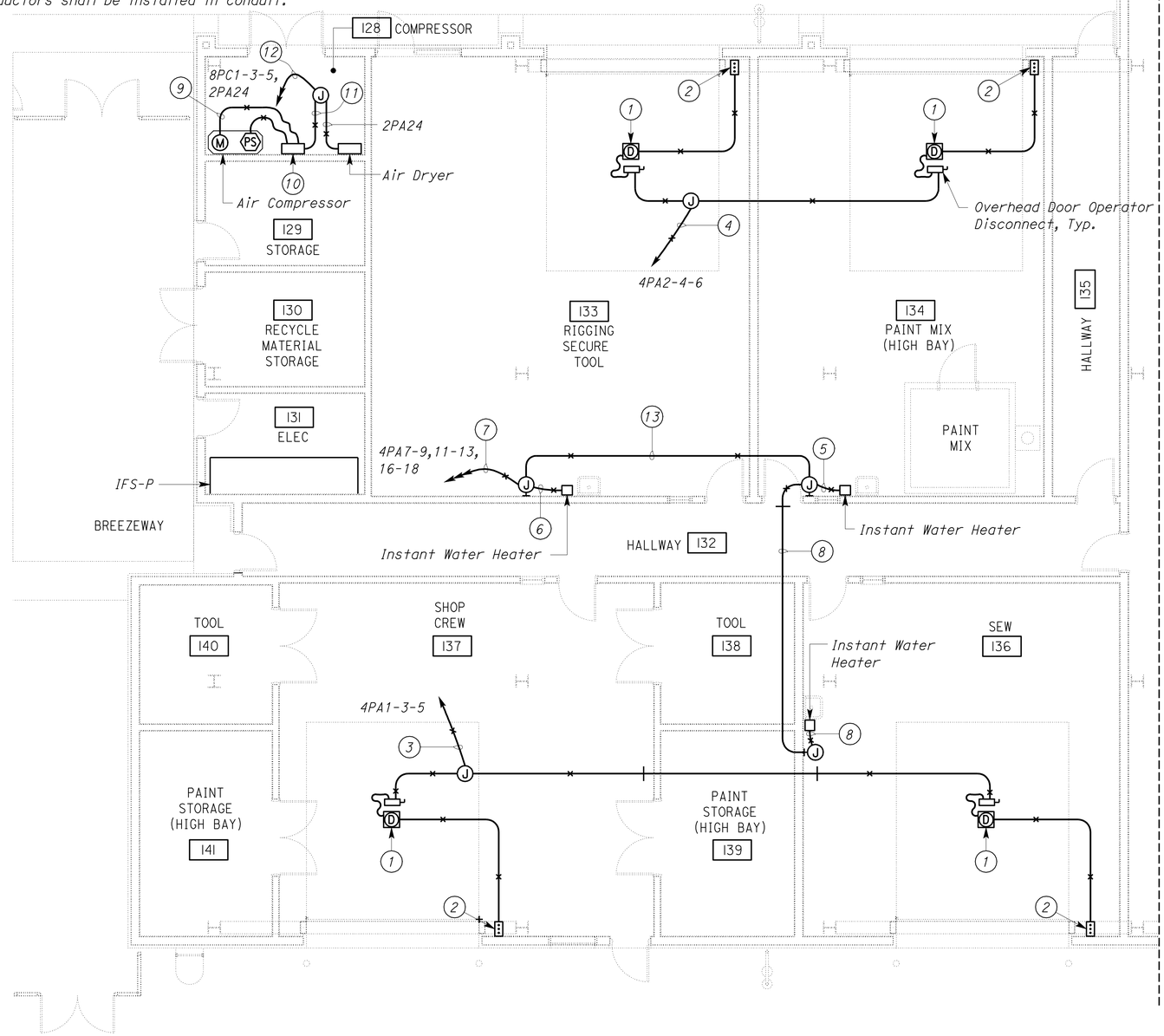

FOR CONTINUATION, SEE SHEET EE1-1.12

PLAN

SCALE 3/16" = 1'-0"

DIST.	COUNTY	ROUTE	POST MILES TOTAL PROJECT	SHEET NO.	TOTAL SHEETS
04	Ala	80	2.2	651	800

REGISTERED ELECTRICAL ENGINEER — 5-30-12 DATE

REGISTERED PROFESSIONAL ENGINEER J. ABDELSAYED No. 18915 Exp. 12-31-13 ELEC STATE OF CALIFORNIA

10-22-12
PLANS APPROVAL DATE

The State of California or its officers or agents shall not be responsible for the accuracy or completeness of scanned copies of this plan sheet.

CALIFORNIA STATE FIRE MARSHAL APPROVED

Approval of this plan does not authorize or approve any omission or deviation from applicable regulations. Final approval is subject to field inspection. One set of approved plans shall be available on the project site at all times.

Reviewed by: JOHN E WOODS, SDSFM

Approval date: 8-22-12

Notes:

1. Overhead door operator unit. Install the following for the overhead door operator system:
   - ½"C, 3#12, 1#12G in between the overhead door operator disconnect switch and the overhead door operator unit.
   - ½"C, control conductors as required in between the overhead door operator unit and pushbutton station.
   - Junction box and flexible cable between the overhead door operator unit and safety edge limit switch.
   - ½"C, control cables as required between the overhead door operator unit and door chain operated safety limit switch.

   Safety edge limit switch and door chain operated safety limit switch are not shown. Mount overhead door operator disconnect switch adjacent to the overhead door operator unit.
2. Pushbutton station for overhead door operator.
3. ½"C, 3#12 (4PA1-3-5), 1#12G.
4. ½"C, 3#12 (4PA2-4-6), 1#12G
5. ¾"C, 2#8 (4PA7-9), 1#10G.
6. ¾"C, 2#8 (4PA16-18), 1#10G.
7. 1½"C, 6#8 (4PA7-9,11-13,16-18), 1#10G.
8. ¾"C, 2#8 (4PA11-13), 1#10G.
9. ¾"C, 3#10, 1#10G
10. Air Compressor Starter. For schematic, see 2/EE1-9.2
11. ¾"C, 3#10 (8PC1-3-5), 1#10G.
12. 1"C, 3#10 (8PC1-3-5), 2#12 (2PA24), 1#12G.
13. 1"C, 4#8 (4PA7-9,11-3), 1#10G

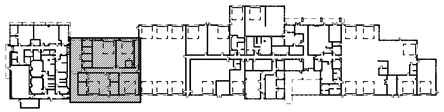

KEY PLAN

THIS DRAWING ACCURATE FOR ELECTRICAL WORK ONLY

	BY	CHECKED
DESIGN	Joseph Abdelsayed	J. S. Sandhu
DETAILS	Ed Tapalla/Dali Zhou	Joseph Abdelsayed
QUANTITIES	Joseph Abdelsayed	J. S. Sandhu

STATE OF CALIFORNIA DEPARTMENT OF TRANSPORTATION

DIVISION OF ENGINEERING SERVICES ELECTRICAL-MECHANICAL-WATER AND WASTEWATER DESIGN

BRIDGE NO. 33M5785 POST MILE 2.2

SFOBB MAINTENANCE COMPLEX

BUILDING 1B — PARTIAL POWER PLAN 6

SHEET EE1-1.11

TAEMWW Imperial Rev. 7/10

ORIGINAL SCALE IN INCHES FOR REDUCED PLANS 0 1 2 3

UNIT 3596
PROJECT NUMBER & PHASE 04120006661
EA 014081

DISREGARD PRINTS BEARING EARLIER REVISION DATES → 11/28/11 5/30/12

REVISION DATES (PRELIMINARY STAGE ONLY) SHEET OF

ee1_1.11.dgn

25-OCT-2012 11:21

DIST.	COUNTY	ROUTE	POST MILES TOTAL PROJECT	SHEET NO.	TOTAL SHEETS
04	Ala	80	2.2	652	800

REGISTERED ELECTRICAL ENGINEER — 5-30-12 DATE

REGISTERED PROFESSIONAL ENGINEER J. ABDELSAYED No. 18915 Exp. 12-31-13 ELEC STATE OF CALIFORNIA

10-22-12
PLANS APPROVAL DATE

The State of California or its officers or agents shall not be responsible for the accuracy or completeness of scanned copies of this plan sheet.

CALIFORNIA STATE FIRE MARSHAL APPROVED
Approval of this plan does not authorize or approve any omission or deviation from applicable regulations. Final approval is subject to field inspection. One set of approved plans shall be available on the project site at all times.
Reviewed by: JOHN E WOODS, SDSFM
Approval date: 8-22-12

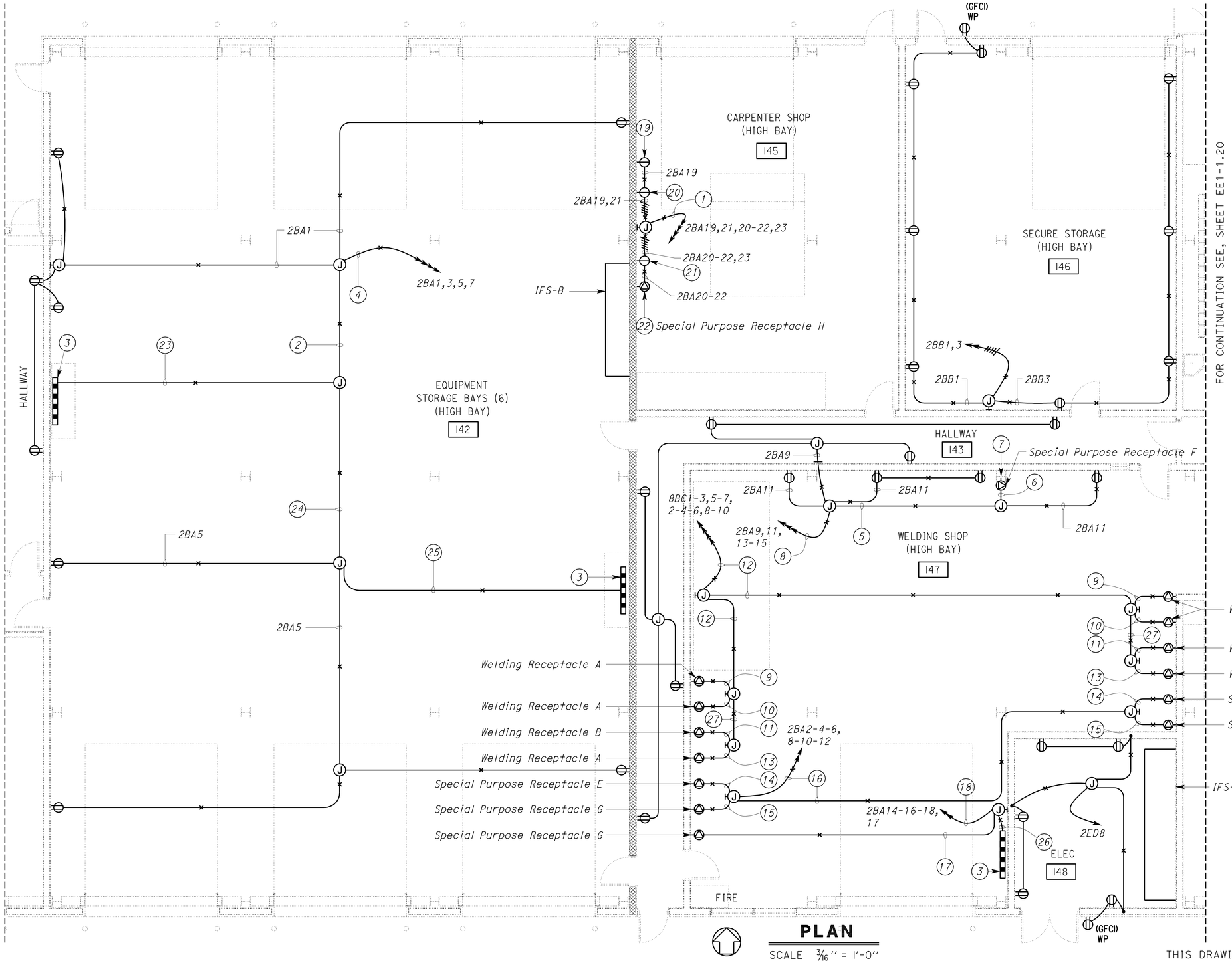

FOR CONTINUATION SEE, SHEET EE1-1.20

PLAN

SCALE 3/16" = 1'-0"

General Note:

A. *For all notes on this sheet, see sheet EE1-1.13.*

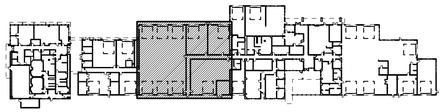

KEY PLAN

THIS DRAWING ACCURATE FOR ELECTRICAL WORK ONLY

DESIGN	BY Joseph Abdelsayed	CHECKED J. S. Sandhu	
DETAILS	BY Ed Tapalla/Dali Zhou	CHECKED Joseph Abdelsayed	
QUANTITIES	BY Joseph Abdelsayed	CHECKED J. S. Sandhu	

STATE OF CALIFORNIA DEPARTMENT OF TRANSPORTATION

DIVISION OF ENGINEERING SERVICES ELECTRICAL-MECHANICAL-WATER AND WASTEWATER DESIGN

BRIDGE NO. 33M5785 — POST MILE 2.2

SFOBB MAINTENANCE COMPLEX

BUILDING 1B — PARTIAL POWER PLAN 7

SHEET **EE1-1.12**

TAEMWW Imperial Rev. 7/10

ORIGINAL SCALE IN INCHES FOR REDUCED PLANS 0 1 2 3

UNIT 3596
PROJECT NUMBER & PHASE 04120006661
EA 014081

DISREGARD PRINTS BEARING EARLIER REVISION DATES → 11/28/11 5/30/12

REVISION DATES (PRELIMINARY STAGE ONLY) SHEET OF

25-OCT-2012 11:21

ee1_1.12.dgn

DIST.	COUNTY	ROUTE	POST MILES TOTAL PROJECT	SHEET NO.	TOTAL SHEETS
04	Ala	80	2.2	653	800

REGISTERED ELECTRICAL ENGINEER — 5-30-12 DATE

REGISTERED PROFESSIONAL ENGINEER J. ABDELSAYED No. 18915 Exp. 12-31-13 ELEC STATE OF CALIFORNIA

10-22-12
PLANS APPROVAL DATE

The State of California or its officers or agents shall not be responsible for the accuracy or completeness of scanned copies of this plan sheet.

CALIFORNIA STATE FIRE MARSHAL APPROVED
Approval of this plan does not authorize or approve any omission or deviation from applicable regulations. Final approval is subject to field inspection. One set of approved plans shall be available on the project site at all times.
Reviewed by: JOHN E WOODS, SDSFM
Approval date: 8-22-12

General Notes:

A. *Location of all equipment as shown is arbitrary only. Exact location depends upon the unit furnished and physical limitations. All cables and conductors shall be installed in conduit.*

B. *All conduit running across travelling crane shall be mounted above and clear of the crane's motion envelope.*

C. *All bottoms of multi-outlet assemblies shall be mounted at 6 inches above counter tops, tables or work benches unless otherwise noted. For details and additional information, see sheet EE1-9.1.*

D. *For all Disconnect Switch, Welding Receptacle, and Special Purpose Receptacle equipment schedules, see sheets EE1-10.16 and EE1-10.17.*

Notes:

1. *¾"C, 8#12 (2BA19,21,20-22,23), 1#12G.*
2. *¾"C, 6#12 (2BA3,5,7), 1#12 insulated ground, 1#12G.*
3. *Type B4 Multi-Outlet Assembly.*
4. *1"C, 8#12 (2BA1,3,5,7), 1#12 insulated ground, 1#12G.*
5. *¾"C, 2#12 (2BA11), 2#10 (2BA13-15), 1#10G.*
6. *½"C, 2#10 (2BA13-15), 1#10G*
7. *Single-Phase Special Purpose Receptacle (2BA13-15) for Metal Lathe.*
8. *¾"C, 4#12 (2BA9,11), 2#10 (2BA13-15), 1#10G.*
9. *1"C, 2#4 (8BC1-3), 1#10G (Welding Machine).*
10. *1"C, 2#4 (8BC5-7), 1#10G (GTAW Welder).*
11. *1"C, 3#6 (8BC2-4-6), 1#10G (Welding Machine).*
12. *2"C, 2#4 (8BC1-3), 2#4 (8BC5-7), 3#6 (8BC2-4-6), 2#6 (8BC8-10), 1#10G.*
13. *1"C, 2#6 (8BC8-10), 1#10G (Welding Machine).*
14. *1"C, 3#6 (2BA2-4-6), 1#10G (Plasma Cutter).*
15. *½"C, 3#12 (2BA8-10-12), 1#12G (Chop Saw).*
16. *1½"C, 3#6 (2BA2-4-6), 3#12 (2BA8-10-12), 1#10G.*
17. *½"C, 3#12 (2BA14-16-18), 1#12G (Vertical Band Saw).*
18. *¾"C, 3#12 (2BA14-16-18), 2#10 (2BA17), 1#10 insulated ground, 1#10G.*
19. *Receptacle (2BA19) for Drill Press.*
20. *Receptacle (2BA21) for Bench Grinder.*
21. *Receptacle (2BA23) for Belt Sander.*
22. *Single-Phase Special Purpose Receptacle (2BA20-22) for Belt/Disc Sander.*
23. *½"C, 2#12 (2BA3), 1#12 insulated ground, 1#12G.*
24. *¾"C, 4#12 (2BA5,7) 1#12 insulated ground, 1#12G.*
25. *½"C, 2#12 (2BA7), 1#12 insulated ground, 1#12G.*
26. *½"C, 2#12 (2BA17), 1#12 insulated ground, 1#12G.*
27. *1½"C, 5#6 (8BC2-4-6,8-10), 1#10G.*

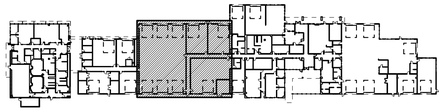

KEY PLAN

	BY	CHECKED
DESIGN	Joseph Abdelsayed	J. S. Sandhu
DETAILS	Ed Tapalla/Dali Zhou	Joseph Abdelsayed
QUANTITIES	Joseph Abdelsayed	J. S. Sandhu

STATE OF CALIFORNIA
DEPARTMENT OF TRANSPORTATION

DIVISION OF ENGINEERING SERVICES
ELECTRICAL-MECHANICAL-WATER AND WASTEWATER DESIGN

BRIDGE NO. 33M5785
POST MILE 2.2

SFOBB MAINTENANCE COMPLEX
BUILDING 1B — PARTIAL POWER PLAN 7 NOTES

SHEET **EE1-1.13**

TAEMWW Imperial Rev. 7/10

ORIGINAL SCALE IN INCHES FOR REDUCED PLANS 0 1 2 3

UNIT 3596
PROJECT NUMBER & PHASE 04120006661
EA 014081

DISREGARD PRINTS BEARING EARLIER REVISION DATES → 11/28/11 5/30/12

REVISION DATES (PRELIMINARY STAGE ONLY) SHEET OF

ee1_1.13.dgn

25-OCT-2012 11:21

DIST.	COUNTY	ROUTE	POST MILES TOTAL PROJECT	SHEET NO.	TOTAL SHEETS
04	Ala	80	2.2	654	800

REGISTERED ELECTRICAL ENGINEER — 5-30-12 DATE

REGISTERED PROFESSIONAL ENGINEER J. ABDELSAYED No. 18915 Exp. 12-31-13 ELEC STATE OF CALIFORNIA

10-22-12
PLANS APPROVAL DATE

The State of California or its officers or agents shall not be responsible for the accuracy or completeness of scanned copies of this plan sheet.

CALIFORNIA STATE FIRE MARSHAL APPROVED
Approval of this plan does not authorize or approve any omission or deviation from applicable regulations. Final approval is subject to field inspection. One set of approved plans shall be available on the project site at all times.
Reviewed by: JOHN E WOODS, SDSFM
Approval date: 8-22-12

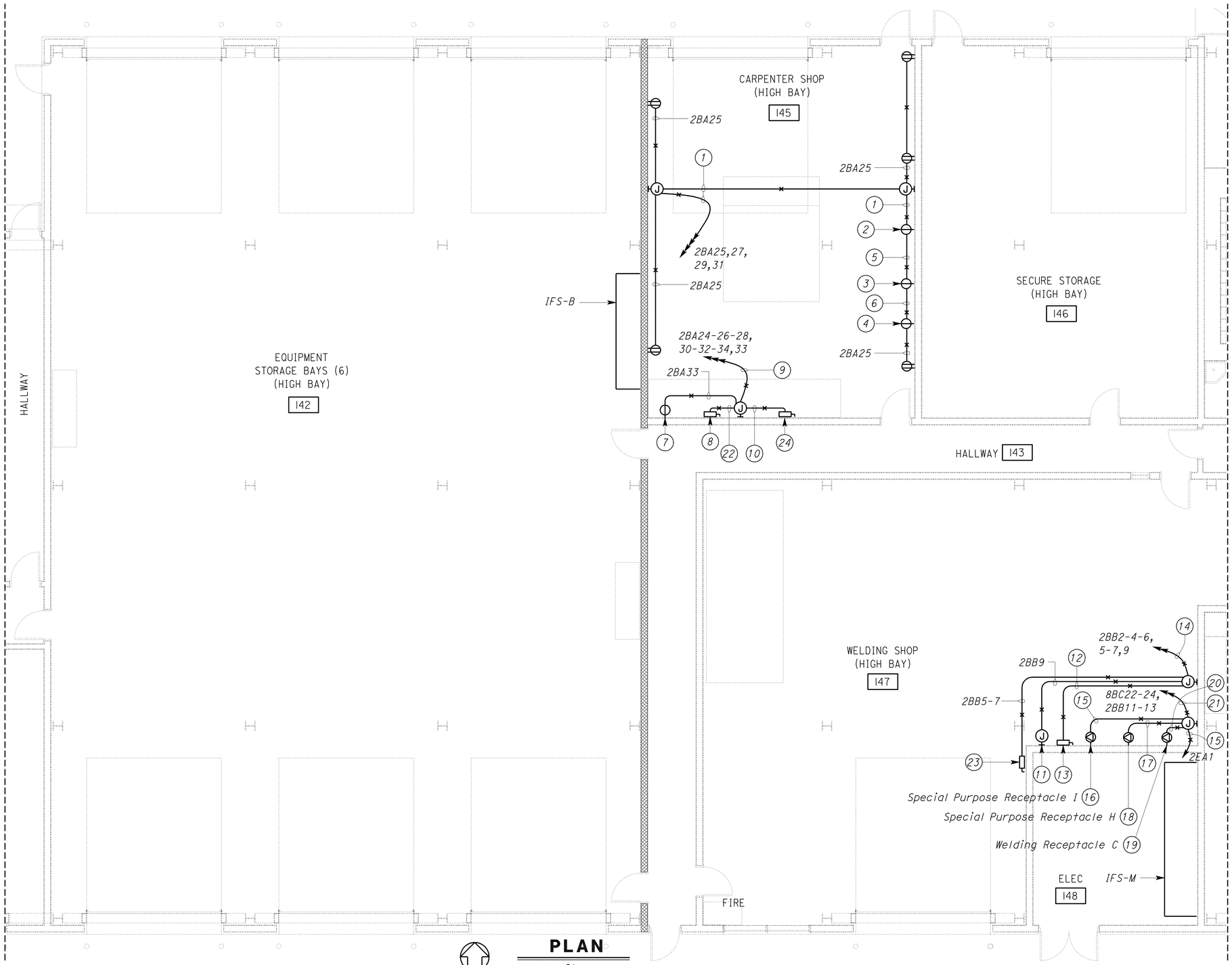

PLAN
SCALE 3/16" = 1'-0"

General Note:

A. For all notes on this sheet, see sheet EE1-1.15.

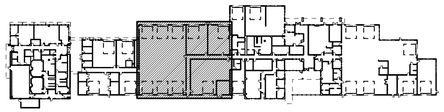

KEY PLAN

THIS DRAWING ACCURATE FOR ELECTRICAL WORK ONLY

	BY	CHECKED
DESIGN	Joseph Abdelsayed	J. S. Sandhu
DETAILS	Ed Tapalla/Dali Zhou	Joseph Abdelsayed
QUANTITIES	Joseph Abdelsayed	J. S. Sandhu

STATE OF CALIFORNIA
DEPARTMENT OF TRANSPORTATION

DIVISION OF ENGINEERING SERVICES
ELECTRICAL-MECHANICAL-WATER AND WASTEWATER DESIGN

BRIDGE NO. 33M5785
POST MILE 2.2

SFOBB MAINTENANCE COMPLEX
BUILDING 1B — PARTIAL POWER PLAN 8

SHEET **EE1-1.14**

TAEMWW Imperial Rev. 7/10

ORIGINAL SCALE IN INCHES FOR REDUCED PLANS 0 1 2 3

UNIT 3596
PROJECT NUMBER & PHASE 04120006661
EA 014081

DISREGARD PRINTS BEARING EARLIER REVISION DATES → 11/28/11 5/30/12

REVISION DATES (PRELIMINARY STAGE ONLY) SHEET OF

25-OCT-2012 11:22
ee1_1.14.dgn

DIST.	COUNTY	ROUTE	POST MILES TOTAL PROJECT	SHEET NO.	TOTAL SHEETS
04	Ala	80	2.2	655	800

REGISTERED ELECTRICAL ENGINEER 5-30-12 DATE

REGISTERED PROFESSIONAL ENGINEER J. ABDELSAYED No. 18915 Exp. 12-31-13 ELEC STATE OF CALIFORNIA

10-22-12
PLANS APPROVAL DATE

The State of California or its officers or agents shall not be responsible for the accuracy or completeness of scanned copies of this plan sheet.

CALIFORNIA STATE FIRE MARSHAL APPROVED

Approval of this plan does not authorize or approve any omission or deviation from applicable regulations. Final approval is subject to field inspection. One set of approved plans shall be available on the project site at all times.

Reviewed by: JOHN E WOODS, SDSFM

Approval date: 8-22-12

General Notes:

A. *Location of all equipment as shown is arbitrary only. Exact location depends upon the unit furnished and physical limitations. All cables and conductors shall be installed in conduit.*

B. *All conduit running across travelling crane shall be mounted above and clear of the crane's motion envelope.*

C. *For all Disconnect Switch, Welding Receptacle, and Special Purpose Receptacle equipment schedules, see sheets EE1-10.16 and EE1-10.17.*

Notes:

1. *¾"C, 8#12 (2AB25,27,29,31), 1#12G.*
2. *Receptacle for Joiner Planer (2BA27).*
3. *Receptacle for Joiner Planer (2BA29) .*
4. *Receptacle for Band Saw (2BA31).*
5. *¾"C, 6#12 (2AB25,29,31), 1#12G.*
6. *½"C, 4#12 (2AB25,31), 1#12G.*
7. *Receptacle for Radial Arm Saw (2BA33).*
8. *Radial Arm Saw (2BA2-4-6) Disconnect Switch.*
9. *1"C, 3#10 (2BA24-26-28), 5#12 (2BA30-32-34,33), 1#10G*
10. *½"C, 3#12 (2BA30-32-34), 1#12G.*
11. *Wall-mounted junction box for lights mounted on the Grinder. Coil one foot of conductors inside junction box.*
12. *½"C, 3#12 (2BB2-4-6), 1#12G.*
13. *Grinder (2BB2-4-6) Disconnect Switch.*
14. *¾"C, 7#12 (2BB2-4-6,5-7,9), 1#12G.*
15. *¾"C, 2#10 (2EA1), 1#10G.*
16. *Single-Phase Special Purpose Receptacle for Grinder (2EA1).*
17. *¾"C, 2#10 (2BB11-13), 1#10G.*
18. *Single-Phase Special Purpose Receptacle (2BB11-13) for Belt Sander.*
19. *Single-Phase Special Purpose Receptacle (8BC22-24) for Stud Welder.*
20. *1½"C, 2#1 (8BC22-24), 1#8G.*
21. *2"C, 2#1 (8BC22-24), 2#10 (2BB11-13), 1#8G.*
22. *¾"C, 3#10 (2BA24-26-28), 1#10G.*
23. *Drill Press (2BB5-7) Disconnect Switch.*
24. *Radial Arm Saw (2BA30-32-34) Disconnect Switch*

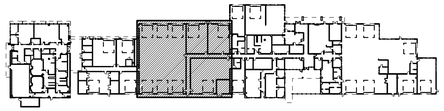

KEY PLAN

	BY	CHECKED
DESIGN	Joseph Abdelsayed	J. S. Sandhu
DETAILS	Ed Tapalla/Dali Zhou	Joseph Abdelsayed
QUANTITIES	Joseph Abdelsayed	J. S. Sandhu

STATE OF CALIFORNIA DEPARTMENT OF TRANSPORTATION

DIVISION OF ENGINEERING SERVICES
ELECTRICAL-MECHANICAL-WATER AND WASTEWATER DESIGN

BRIDGE NO. 33M5785
POST MILE 2.2

SFOBB MAINTENANCE COMPLEX

BUILDING 1B

PARTIAL POWER PLAN 8 NOTES

SHEET **EE1-1.15**

TAEMWW Imperial Rev. 7/10

ORIGINAL SCALE IN INCHES FOR REDUCED PLANS 0 1 2 3

UNIT 3596
PROJECT NUMBER & PHASE 04120006661
EA 014081

DISREGARD PRINTS BEARING EARLIER REVISION DATES → 11/28/11 5/30/12

REVISION DATES (PRELIMINARY STAGE ONLY) SHEET OF

25-OCT-2012 11:22

ee1_1.15.dgn

DIST.	COUNTY	ROUTE	POST MILES TOTAL PROJECT	SHEET NO.	TOTAL SHEETS
04	Ala	80	2.2	656	800

REGISTERED ELECTRICAL ENGINEER — 5-30-12 DATE

REGISTERED PROFESSIONAL ENGINEER J. ABDELSAYED No. 18915 Exp. 12-31-13 ELEC STATE OF CALIFORNIA

10-22-12
PLANS APPROVAL DATE

The State of California or its officers or agents shall not be responsible for the accuracy or completeness of scanned copies of this plan sheet.

CALIFORNIA STATE FIRE MARSHAL APPROVED
Approval of this plan does not authorize or approve any omission or deviation from applicable regulations. Final approval is subject to field inspection. One set of approved plans shall be available on the project site at all times.
Reviewed by: JOHN E WOODS, SDSFM
Approval date: 8-22-12

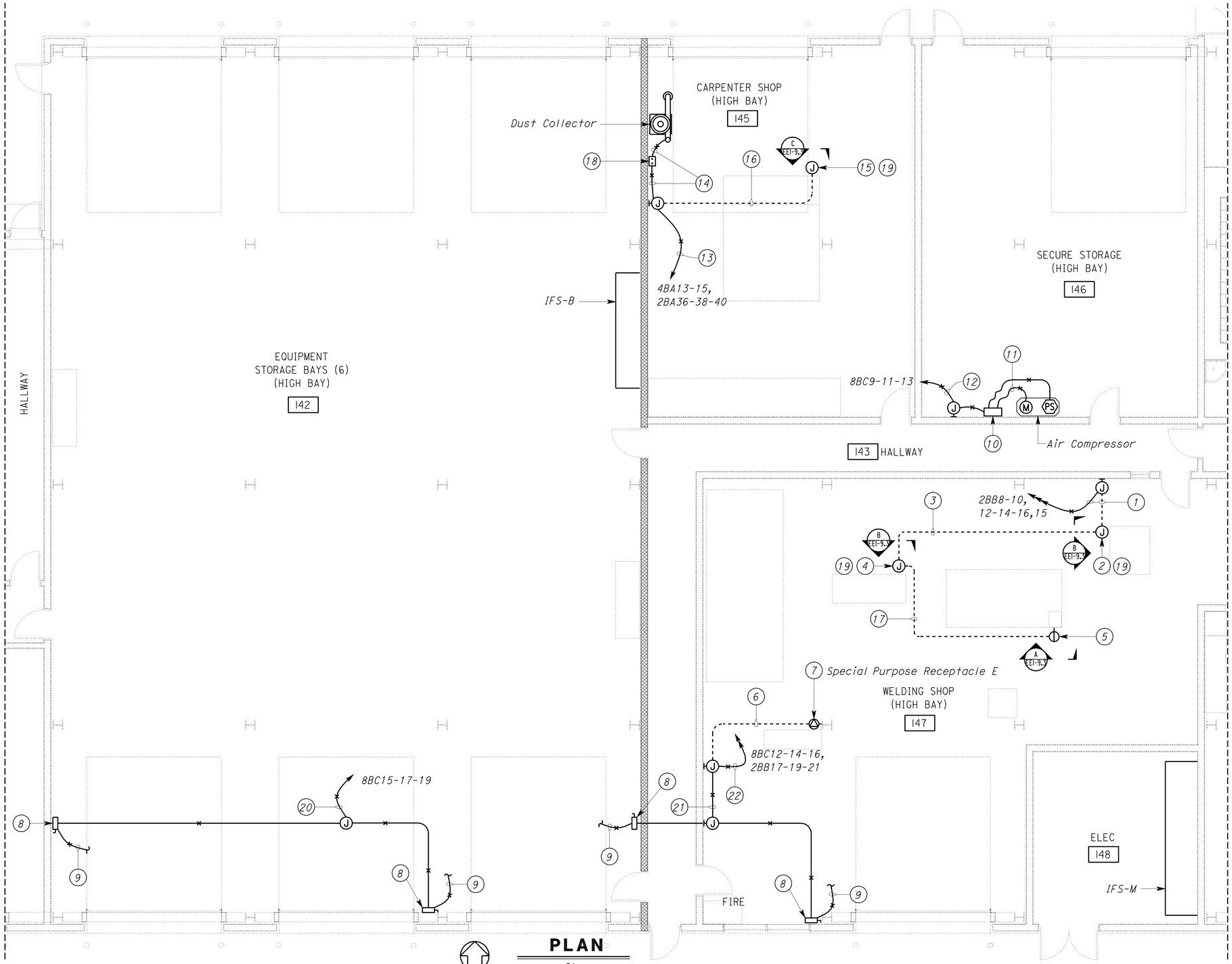

PLAN
SCALE 3/16" = 1'-0"

General Note:

A. For all notes on this sheet, see sheet EE1-1.17.

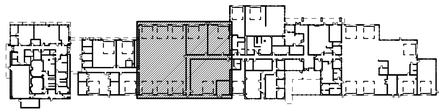

KEY PLAN

THIS DRAWING ACCURATE FOR ELECTRICAL WORK ONLY

DESIGN	BY Joseph Abdelsayed	CHECKED J. S. Sandhu	
DETAILS	BY Ed Tapalla/Dali Zhou	CHECKED Joseph Abdelsayed	
QUANTITIES	BY Joseph Abdelsayed	CHECKED J. S. Sandhu	

STATE OF CALIFORNIA
DEPARTMENT OF TRANSPORTATION

DIVISION OF ENGINEERING SERVICES
ELECTRICAL-MECHANICAL-WATER AND WASTEWATER DESIGN

BRIDGE NO. 33M5785
POST MILE 2.2

SFOBB MAINTENANCE COMPLEX
BUILDING 1B
PARTIAL POWER PLAN 9

SHEET **EE1-1.16**

TAEMWW Imperial Rev. 7/10

ORIGINAL SCALE IN INCHES FOR REDUCED PLANS 0 1 2 3

UNIT 3596
PROJECT NUMBER & PHASE 04120006661
EA 014081

DISREGARD PRINTS BEARING EARLIER REVISION DATES → 11/28/11 5/30/12

REVISION DATES (PRELIMINARY STAGE ONLY) SHEET OF

25-OCT-2012 11:22
ee1_1.16.dgn

DIST.	COUNTY	ROUTE	POST MILES TOTAL PROJECT	SHEET NO.	TOTAL SHEETS
04	Ala	80	2.2	657	800

REGISTERED ELECTRICAL ENGINEER — 5-30-12 DATE

REGISTERED PROFESSIONAL ENGINEER J. ABDELSAYED No. 18915 Exp. 12-31-13 ELEC STATE OF CALIFORNIA

10-22-12
PLANS APPROVAL DATE

The State of California or its officers or agents shall not be responsible for the accuracy or completeness of scanned copies of this plan sheet.

CALIFORNIA STATE FIRE MARSHAL APPROVED

Approval of this plan does not authorize or approve any omission or deviation from applicable regulations. Final approval is subject to field inspection. One set of approved plans shall be available on the project site at all times.

Reviewed by: JOHN E WOODS, SDSFM

Approval date: 8-22-12

General Notes:

A. *Location of all equipment as shown is arbitrary only. Exact location depends upon the unit furnished and physical limitations. All cables and conductors shall be installed in conduit.*

B. *All conduit running across travelling crane shall be mounted above and clear of the crane's motion envelope.*

C. *For all Disconnect Switch, Welding Receptacle, and Special Purpose Receptacle equipment schedules, see sheets EE1-10.16 and EE1-10.17.*

Notes:

1. *¾"C, 7#12 (2BB8-10,12-14-16,15), 1#12G.*
2. *Junction Box for Bender (2BB8-10).*
3. *¾"C, 5#12 (2BB12-14-16,15), 1#12G*
4. *Junction Box for Horizontal Band Saw (2BB12-14-16).*
5. *Receptacle for Drill Bit Sharpener (2BB15).*
6. *1½"C, 3#4 (2BB17-19-21), 1#10G.*
7. *Three-Phase Special Purpose Receptacle for Iron Worker (2BB17-19-21).*
8. *Overhead Crane Disconnect Switch.*
9. *Conduit and conductors to be terminated at the crane conductor bar system as recommended by the crane manufacturer.*
10. *Air Compressor Starter. For schematic, see* 2 / EE1-9.2
11. *¾"C, 3#10, 1#10G*
12. *¾"C, 3#10 (8BC9-11-13), 1#10G.*
13. *¾"C, 2#10 (4BA13-15), 3#12 (2BA36-38-40), 1#10G.*
14. *¾"C, 2#10 (4BA13-15), 1#10G.*
15. *Junction Box for Table Saw (2BA36-38-40)*
16. *¾"C, 3#12 (2BA36-38-40), 1#12G.*
17. *¾"C, 2#12 (2BB15), 1#12G.*
18. *Dust Collector Manual Motor Starter (4BA13-15).*
19. *Coil one foot of conductors inside junction box.*
20. *¾"C, 3#12 (8BC15-17-19), 1#12G.*
21. *¾"C, 3#12 (8BC12-14-16), 1#12G.*
22. *¾"C, 3#12 (8BC12-14-16), 3#12 (2BB17-19-21), 1#12G.*

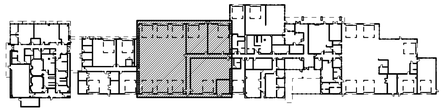

KEY PLAN

	BY	CHECKED
DESIGN	Joseph Abdelsayed	J. S. Sandhu
DETAILS	Ed Tapalla/Dali Zhou	Joseph Abdelsayed
QUANTITIES	Joseph Abdelsayed	J. S. Sandhu

STATE OF CALIFORNIA DEPARTMENT OF TRANSPORTATION

DIVISION OF ENGINEERING SERVICES
ELECTRICAL-MECHANICAL-WATER AND WASTEWATER DESIGN

BRIDGE NO. 33M5785
POST MILE 2.2

SFOBB MAINTENANCE COMPLEX

BUILDING 1B — PARTIAL POWER PLAN 9 NOTES

SHEET **EE1-1.17**

TAEMWW Imperial Rev. 7/10

ORIGINAL SCALE IN INCHES FOR REDUCED PLANS 0 1 2 3

UNIT 3596
PROJECT NUMBER & PHASE 04120006661
EA 014081

DISREGARD PRINTS BEARING EARLIER REVISION DATES → 11/28/11 5/30/12

REVISION DATES (PRELIMINARY STAGE ONLY) SHEET OF

25-OCT-2012 11:22

ee1_1.17.dgn

DIST.	COUNTY	ROUTE	POST MILES TOTAL PROJECT	SHEET NO.	TOTAL SHEETS
04	Ala	80	2.2	658	800

REGISTERED ELECTRICAL ENGINEER — 5-30-12 DATE

REGISTERED PROFESSIONAL ENGINEER J. ABDELSAYED No. 18915 Exp. 12-31-13 ELEC STATE OF CALIFORNIA

10-22-12
PLANS APPROVAL DATE

The State of California or its officers or agents shall not be responsible for the accuracy or completeness of scanned copies of this plan sheet.

CALIFORNIA STATE FIRE MARSHAL APPROVED
Approval of this plan does not authorize or approve any omission or deviation from applicable regulations. Final approval is subject to field inspection. One set of approved plans shall be available on the project site at all times.
Reviewed by: JOHN E WOODS, SDSFM
Approval date: 8-22-12

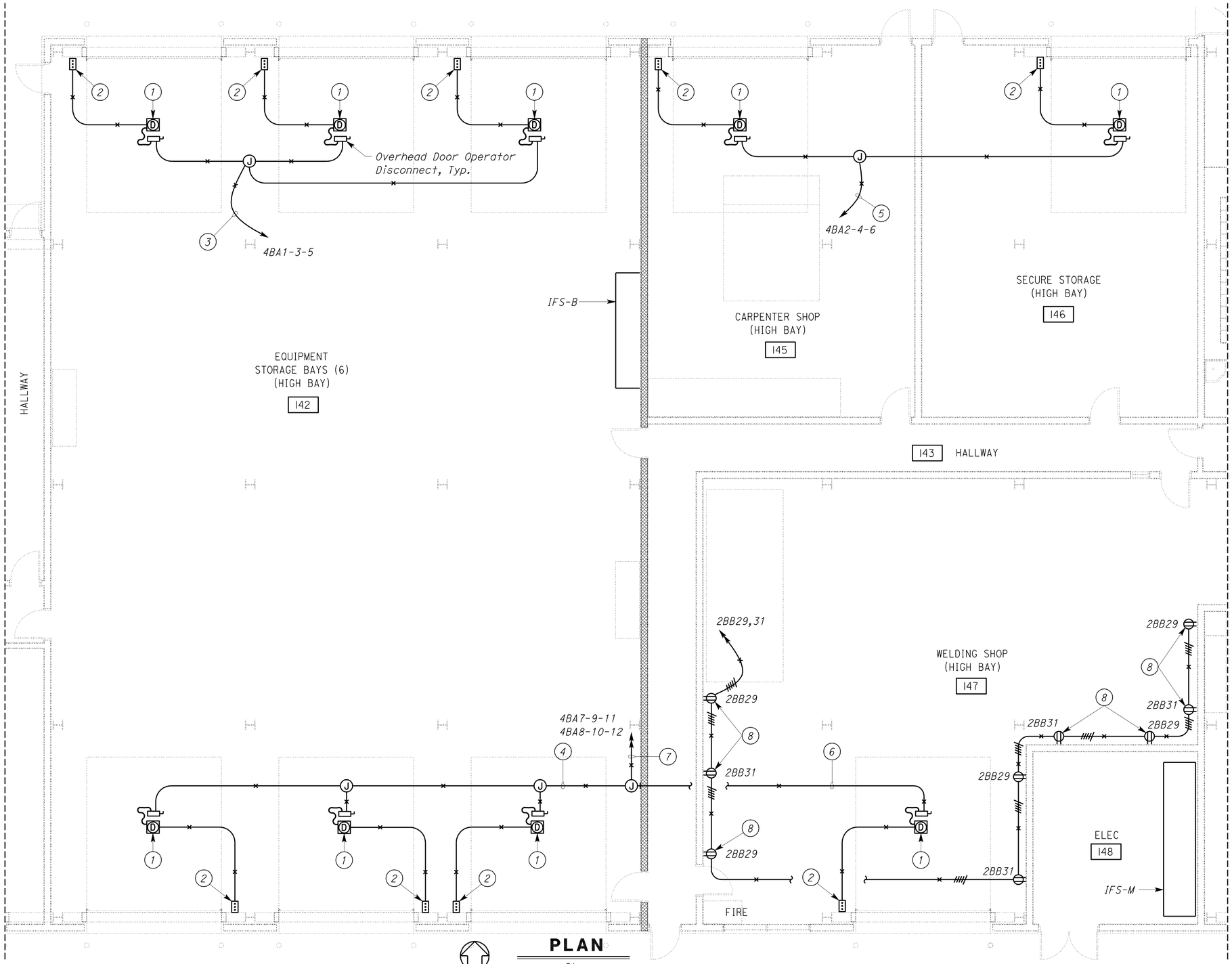

PLAN
SCALE 3/16" = 1'-0"

General Note:

A. *For all notes on this sheet, see sheet EE1-1.19.*

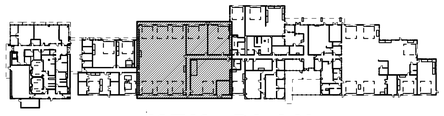

KEY PLAN

THIS DRAWING ACCURATE FOR ELECTRICAL WORK ONLY

	BY	CHECKED
DESIGN	Joseph Abdelsayed	J. S. Sandhu
DETAILS	Ed Tapalla/Dali Zhou	Joseph Abdelsayed
QUANTITIES	Joseph Abdelsayed	J. S. Sandhu

STATE OF CALIFORNIA
DEPARTMENT OF TRANSPORTATION

DIVISION OF ENGINEERING SERVICES
ELECTRICAL-MECHANICAL-WATER AND WASTEWATER DESIGN

BRIDGE NO. 33M5785
POST MILE 2.2

SFOBB MAINTENANCE COMPLEX
BUILDING 1B
PARTIAL POWER PLAN 10

SHEET **EE1-1.18**

TAEMWW Imperial Rev. 7/10

ORIGINAL SCALE IN INCHES FOR REDUCED PLANS 0 1 2 3

UNIT 3596
PROJECT NUMBER & PHASE 04120006661
EA 014081

DISREGARD PRINTS BEARING EARLIER REVISION DATES → 11/28/11 5/30/12

REVISION DATES (PRELIMINARY STAGE ONLY) SHEET OF

25-OCT-2012 11:22
ee1_1.18.dgn

DIST.	COUNTY	ROUTE	POST MILES TOTAL PROJECT	SHEET NO.	TOTAL SHEETS
04	Ala	80	2.2	659	800

CALIFORNIA STATE FIRE MARSHAL APPROVED

Approval of this plan does not authorize or approve any omission or deviation from applicable regulations. Final approval is subject to field inspection. One set of approved plans shall be available on the project site at all times.

Reviewed by: JOHN E WOODS, SDSFM

Approval date: 8-22-12

REGISTERED ELECTRICAL ENGINEER — 5-30-12 DATE

REGISTERED PROFESSIONAL ENGINEER J. ABDELSAYED No. 18915 Exp. 12-31-13 ELEC STATE OF CALIFORNIA

10-22-12
PLANS APPROVAL DATE

The State of California or its officers or agents shall not be responsible for the accuracy or completeness of scanned copies of this plan sheet.

General Notes:

A. *Location of overhead door operators and related components as shown is arbitrary only. Exact location depends upon the unit furnished. Contractor shall furnish and install any additional conduit, conductors, cables and equipment necessary for the automatic operation without extra cost to the State. All cables and conductors shall be installed in conduit.*

B. *Location of all equipment as shown is arbitrary only. Exact location depends upon the unit furnished and physical limitations. All cables and conductors shall be installed in conduit.*

C. *All conduit running across travelling crane shall be mounted above and clear of the crane's motion envelope.*

Notes:

(1) *Overhead door operator unit. Install the following for the overhead door operator system:*

- *½"C, 3#12, 1#12G in between the overhead door operator disconnect switch and the overhead door operator unit.*
- *½"C, control conductors as required in between the overhead door operator unit and pushbutton station.*
- *Junction box and flexible cable between the overhead door operator unit and safety edge limit switch.*
- *½"C, control cables as required between the overhead door operator unit and door chain operated safety limit switch.*

Safety edge limit switch and door chain operated safety limit switch are not shown. Mount overhead door operator disconnect switch adjacent to the overhead door operator unit.

(2) *Pushbutton station for overhead door operator.*

(3) *½"C, 3#12 (4BA1-3-5), 1#12G.*

(4) *½"C, 3#12 (4BA7-9-11), 1#12G.*

(5) *½"C, 3#12 (4BA2-4-6), 1#12G.*

(6) *½"C, 3#12 (4BA8-10-12), 1#12G.*

(7) *¾"C, 6#12 (4BA7-9-11,8-10-12), 1#12G.*

(8) *Mount bottom of receptacle 24" above the floor.*

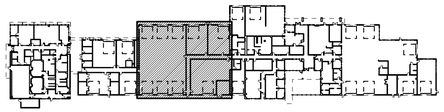

KEY PLAN

	BY	CHECKED
DESIGN	Joseph Abdelsayed	J. S. Sandhu
DETAILS	Ed Tapalla/Dali Zhou	Joseph Abdelsayed
QUANTITIES	Joseph Abdelsayed	J. S. Sandhu

STATE OF CALIFORNIA
DEPARTMENT OF TRANSPORTATION

DIVISION OF ENGINEERING SERVICES
ELECTRICAL-MECHANICAL-WATER AND WASTEWATER DESIGN

BRIDGE NO. 33M5785
POST MILE 2.2

SFOBB MAINTENANCE COMPLEX

BUILDING 1B — PARTIAL POWER PLAN 10 NOTES

SHEET **EE1-1.19**

TAEMWW Imperial Rev. 7/10

ORIGINAL SCALE IN INCHES FOR REDUCED PLANS 0 1 2 3

UNIT 3596
PROJECT NUMBER & PHASE 04120006661
EA 014081

DISREGARD PRINTS BEARING EARLIER REVISION DATES → 11-28-11 5-30-12

REVISION DATES (PRELIMINARY STAGE ONLY) SHEET OF

25-OCT-2012 11:22

ee1_1.19.dgn

DIST.	COUNTY	ROUTE	POST MILES TOTAL PROJECT	SHEET NO.	TOTAL SHEETS
04	Ala	80	2.2	660	800

CALIFORNIA STATE FIRE MARSHAL APPROVED

Approval of this plan does not authorize or approve any omission or deviation from applicable regulations. Final approval is subject to field inspection. One set of approved plans shall be available on the project site at all times.

Reviewed by: JOHN E WOODS, SDSFM

Approval date: 8-22-12

Catalino A. Enriquez 5-30-12
REGISTERED ELECTRICAL ENGINEER DATE

REGISTERED PROFESSIONAL ENGINEER C. ENRIQUEZ No. 16944 Exp. 6-30-13 ELEC STATE OF CALIFORNIA

10-22-12
PLANS APPROVAL DATE

The State of California or its officers or agents shall not be responsible for the accuracy or completeness of scanned copies of this plan sheet.

FOR GENERAL NOTES AND PROJECT NOTES PERTAINING TO THIS PLAN, SEE SHEET EE1-1.21

FOR CONTINUATION SEE, SHEET EE1-1.22

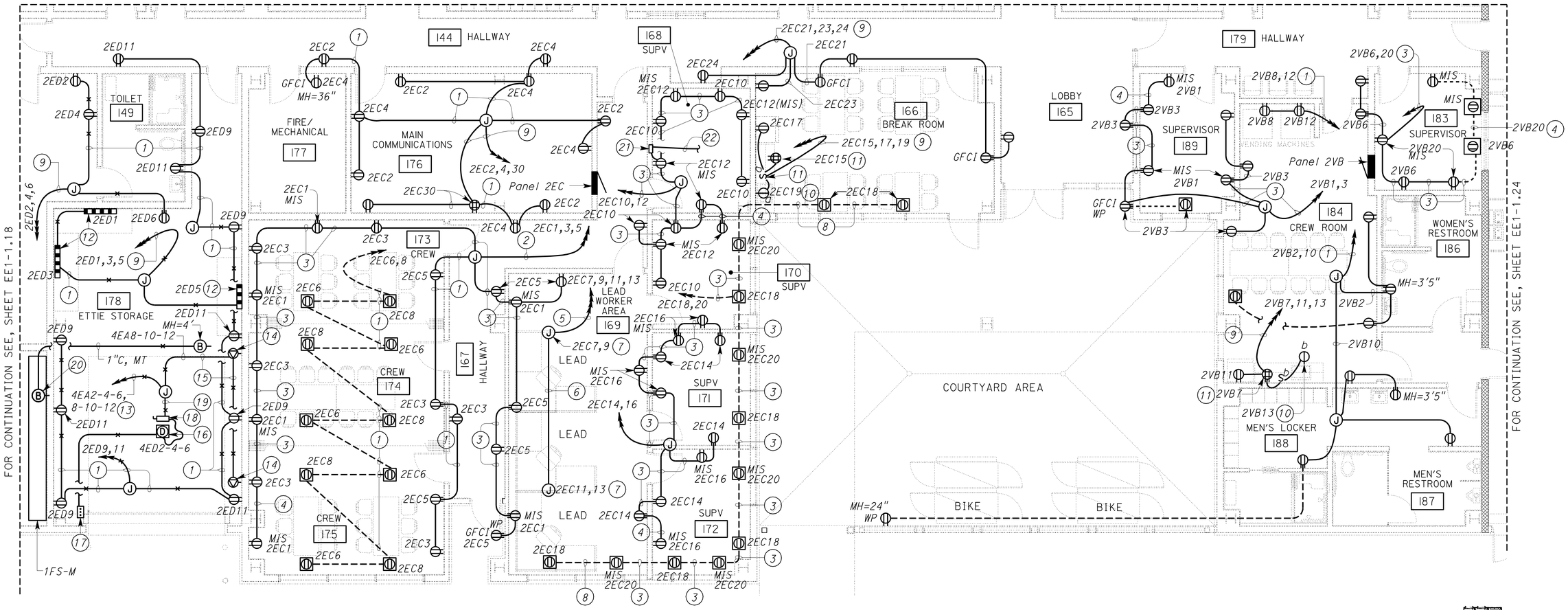

PLAN

SCALE 3/16" = 1'-0"

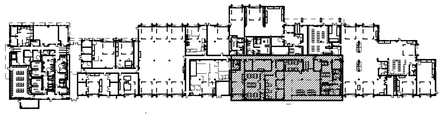

KEY PLAN

THIS DRAWING ACCURATE FOR ELECTRICAL WORK ONLY

	BY	CHECKED
DESIGN	Catalino Enriquez	J.S.S./H.Abdelsayed
DETAILS	Ed D. Tapalla/Dali Zhou	Catalino Enriquez
QUANTITIES	Catalino Enriquez	J.S.S./H.Abdelsayed

STATE OF CALIFORNIA DEPARTMENT OF TRANSPORTATION

DIVISION OF ENGINEERING SERVICES
ELECTRICAL-MECHANICAL-WATER AND WASTEWATER DESIGN

BRIDGE NO. 33M5785
POST MILE 2.2

SFOBB MAINTENANCE COMPLEX

BUILDING 1B — PARTIAL POWER PLAN 11

SHEET **EE1-1.20**

TAEMWW Imperial Rev. 7/10

ORIGINAL SCALE IN INCHES FOR REDUCED PLANS 0 1 2 3

UNIT 3596
PROJECT NUMBER & PHASE 04120006661
EA 014081

DISREGARD PRINTS BEARING EARLIER REVISION DATES → 11/28/11 1/29/12 5/14/12 5/30/12

REVISION DATES (PRELIMINARY STAGE ONLY) SHEET OF

25-OCT-2012 11:22

ee1_1.20.dgn

DIST.	COUNTY	ROUTE	POST MILES TOTAL PROJECT	SHEET NO.	TOTAL SHEETS
04	Ala	80	2.2	661	800

CALIFORNIA STATE FIRE MARSHAL
APPROVED
Approval of this plan does not authorize or approve any omission or deviation from applicable regulations. Final approval is subject to field inspection. One set of approved plans shall be available on the project site at all times.
Reviewed by: JOHN E WOODS, SDSFM
Approval date: 8-22-12

Catalino A. Enriquez 5-30-12
REGISTERED ELECTRICAL ENGINEER DATE

REGISTERED PROFESSIONAL ENGINEER
C. ENRIQUEZ
No. 16944
Exp. 6-30-13
ELEC
STATE OF CALIFORNIA

10-22-12
PLANS APPROVAL DATE

The State of California or its officers or agents shall not be responsible for the accuracy or completeness of scanned copies of this plan sheet.

General Notes:

A. For plan sheet related to the following notes, see preceding sheet EE1-20.

B. For location of panelboards, see sheet EE1-1.1.

C. Location of overhead door operators and related components as shown is arbitrary only. Exact location depends upon the unit furnished. Contractor shall furnish and install any additional conduit, conductors, cables and equipment necessary for the automatic operation without extra cost to the State. All cables and conductors shall be installed in conduit.

Notes:

(1) ¾"C, 4#12, 1#12G.

(2) 1"C, 6#10, 1#10G insulated, 1#10G.

(3) ¾"C, 4#12, 1#12G insulated, 1#12G.

(4) ½"C, 2#12, 1#12G insulated, 1#12G.

(5) 1"C, 8#10, 1#10G insulated, 1#10G.

(6) ¾"C, 4#10, 1#10G insulated, 1#10G.

(7) Install junction box in the attic space for feeding future cubicle partitions. Provide one foot of additional length for each conductor terminated inside the junction box. Label junction box and adjacent grid ceiling frame with corresponding circuit numbers.

(8) ¾"C, 2#12, 1#12G.

(9) ¾"C, 6#12, 1#12G.

(10) Mount GFCI receptacle under the counter to suit waste disposer unit. See Architectural plan sheets for exact location of waste disposer unit.

(11) Mount device 8 inches above counter top.

(12) Multioutlet assembly, Type B3. See sheet EE1-9.1.

(13) 1"C, 3#12 (overhead door operator), 3#10 (240 volt special purpose receptacle), 1#10G.

(14) Special purpose receptacle, type L (240 volts, 20 ampere, 3-phase). See sheet EE1-10.17

(15) ¾"C, 3#10, 1#10G.

(16) Overhead door operator unit. Install the following for the overhead door operator system:

½"C, 3#12, 1#12G in between the overhead door operator disconnect switch and the overhead door operator unit.

½"C, control conductors as required in between the overhead door operator unit and pushbutton station.

Junction box and flexible cable between the overhead door operator unit and safety edge limit switch.

½"C, control cables as required between the overhead door operator unit and door chain operated safety limit switch.

Safety edge limit switch and door chain operated safety limit switch are not shown. Mount overhead door operator disconnect switch adjacent to the overhead door operator unit.

(17) Pushbutton station for overhead door operator.

(18) Overhead door operator disconnect switch.

(19) ½"C, 3#12, 1#12G.

(20) Install junction box above Panel 8MC section of IFS-M.

(21) Skylight control switch mounted at switch height. For device details, see Architectural specification.

(22) ¾"C, control conductors as required to skylight dimmer unit. For device details, see Architectural plan sheets and specification.

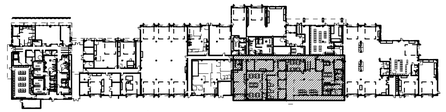

KEY PLAN

DESIGN	BY Catalino Enriquez	CHECKED J.S.S./H.Abdelsayed	
DETAILS	BY Ed D. Tapalla/Dali Zhou	CHECKED Catalino Enriquez	
QUANTITIES	BY Catalino Enriquez	CHECKED J.S.S./H.Abdelsayed	

STATE OF CALIFORNIA
DEPARTMENT OF TRANSPORTATION

DIVISION OF ENGINEERING SERVICES
ELECTRICAL-MECHANICAL-WATER AND WASTEWATER DESIGN

BRIDGE NO. 33M5785
POST MILE 2.2

SFOBB MAINTENANCE COMPLEX
BUILDING 1B
PARTIAL POWER PLAN 11 NOTES

SHEET EE1-1.21

TAEMWW Imperial Rev. 7/10

ORIGINAL SCALE IN INCHES FOR REDUCED PLANS 0 1 2 3

UNIT 3596
PROJECT NUMBER & PHASE 04120006661
EA 014081

DISREGARD PRINTS BEARING EARLIER REVISION DATES → 11/28/11 5/18/12 5/30/12

REVISION DATES (PRELIMINARY STAGE ONLY) SHEET OF

25-OCT-2012 11:27

ee1_1.21.dgn

DIST.	COUNTY	ROUTE	POST MILES TOTAL PROJECT	SHEET NO.	TOTAL SHEETS
04	Ala	80	2.2	662	800

CALIFORNIA STATE FIRE MARSHAL APPROVED
Approval of this plan does not authorize or approve any omission or deviation from applicable regulations. Final approval is subject to field inspection. One set of approved plans shall be available on the project site at all times.
Reviewed by: JOHN E WOODS, SDSFM
Approval date: 8-22-12

Catalino A. Enriquez 5-30-12
REGISTERED ELECTRICAL ENGINEER DATE

REGISTERED PROFESSIONAL ENGINEER C. ENRIQUEZ No. 16944 Exp. 6-30-13 ELEC STATE OF CALIFORNIA

10-22-12
PLANS APPROVAL DATE

The State of California or its officers or agents shall not be responsible for the accuracy or completeness of scanned copies of this plan sheet.

FOR GENERAL NOTES AND PROJECT NOTES PERTAINING TO THIS PLAN, SEE SHEET EE1-1.23

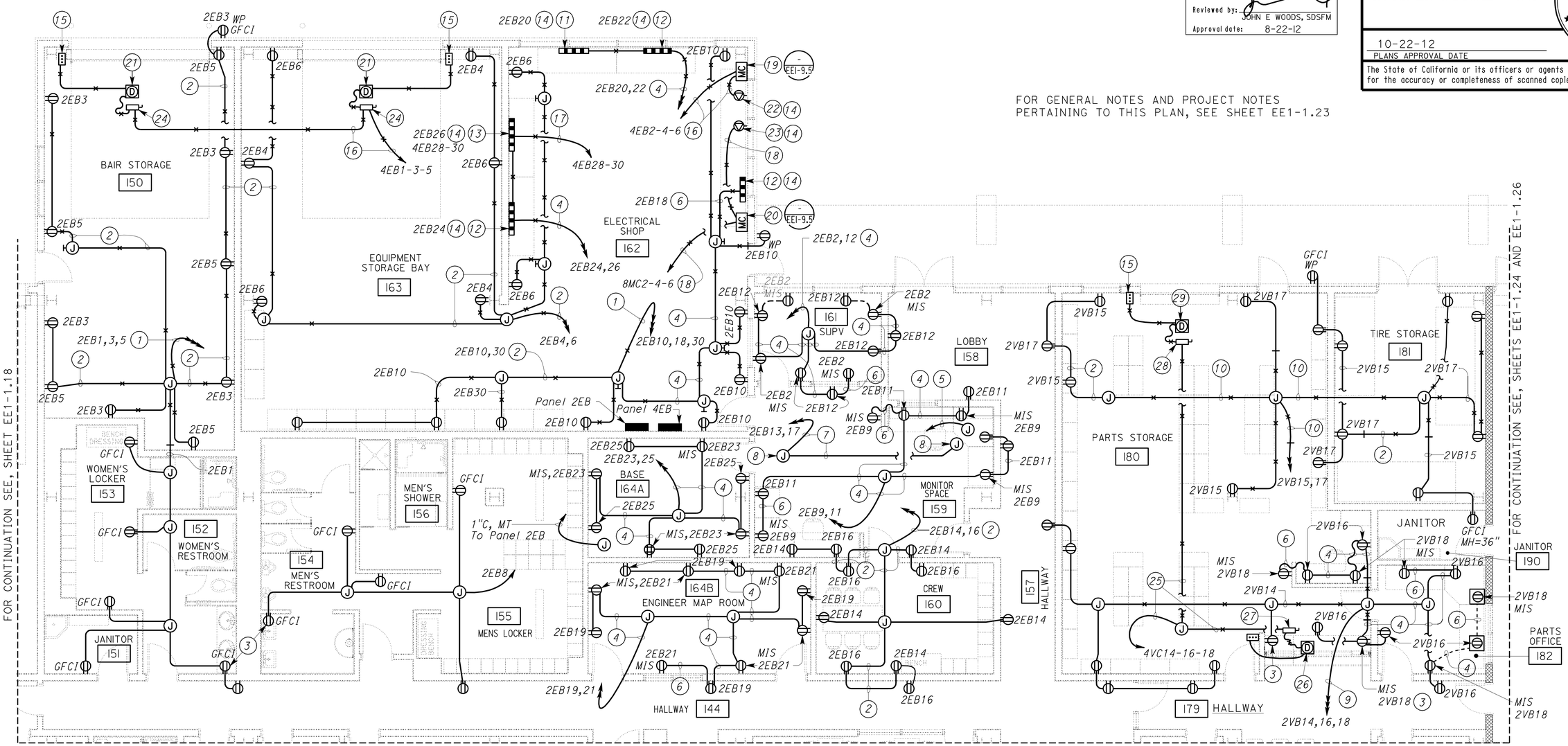

FOR CONTINUATION SEE, SHEET EE1-1.20

PLAN

SCALE 3/16" = 1'-0"

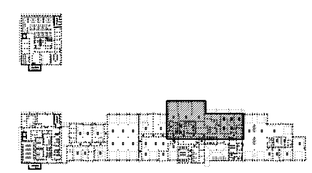

KEY PLAN

THIS DRAWING ACCURATE FOR ELECTRICAL WORK ONLY

DESIGN	BY Catalino Enriquez	CHECKED J.S.S./H.Abdelsayed	
DETAILS	BY Ed D. Tapalla/Dali Zhou	CHECKED Catalino Enriquez	
QUANTITIES	BY Catalino Enriquez	CHECKED J.S.S./H.Abdelsayed	

STATE OF CALIFORNIA
DEPARTMENT OF TRANSPORTATION

DIVISION OF ENGINEERING SERVICES
ELECTRICAL-MECHANICAL-WATER AND WASTEWATER DESIGN

BRIDGE NO. 33M5785
POST MILE 2.2

SFOBB MAINTENANCE COMPLEX
BUILDING 1B
PARTIAL POWER PLAN 12

SHEET EE1-1.22

TAEMWW Imperial Rev. 7/10

ORIGINAL SCALE IN INCHES FOR REDUCED PLANS 0 1 2 3

UNIT 3596
PROJECT NUMBER & PHASE 04120006661
EA 014081

DISREGARD PRINTS BEARING EARLIER REVISION DATES → 11/28/11 5/18/12 5/30/12

REVISION DATES (PRELIMINARY STAGE ONLY) SHEET OF

25-OCT-2012 11:27
ee1_1.22.dgn

DIST.	COUNTY	ROUTE	POST MILES TOTAL PROJECT	SHEET NO.	TOTAL SHEETS
04	Ala	80	2.2	663	800

Catalino A. Enriquez 5-30-12
REGISTERED ELECTRICAL ENGINEER DATE

REGISTERED PROFESSIONAL ENGINEER C. ENRIQUEZ No. 16944 Exp. 6-30-13 ELEC STATE OF CALIFORNIA

10-22-12
PLANS APPROVAL DATE

The State of California or its officers or agents shall not be responsible for the accuracy or completeness of scanned copies of this plan sheet.

CALIFORNIA STATE FIRE MARSHAL APPROVED
Approval of this plan does not authorize or approve any omission or deviation from applicable regulations. Final approval is subject to field inspection. One set of approved plans shall be available on the project site at all times.
Reviewed by: JOHN E WOODS, SDSFM
Approval date: 8-22-12

General Note:

A. For plan sheet related to the following notes, see preceding sheet EE1-1.22.

B. For location of switchboards and panelboards, see sheet EE1-1.1.

C. Location of overhead door operators, countertop roll-up door operator and related components as shown is arbitrary only. Exact location depends upon the unit furnished. Contractor shall furnish and install any additional conduit, conductors, cables and equipment necessary for the automatic operation without extra cost to the State. All cables and conductors shall be installed in conduits.

Notes:

(1) ¾"C, 6#12, 1#12G.

(2) ¾"C, 4#12, 1#12G.

(3) Mount device 7 inches above counter top.

(4) ¾"C, 4#12, 1#12G insulated, 1#12G.

(5) 1"C, MT to Panel 2EB for future connection of security's modular cubicle. Install junction box in the attic space.

(6) ½"C, 2#12, 1#12G insulated, 1#12G.

(7) ¾"C, 4#10, 1#10G insulated, 1#10G.

(8) Install junction box in the attic space for feeding future cubicle partitions. Provide one foot of additional length for each conductor terminated or spliced inside the junction box. Label junction box and adjacent grid ceiling frame with corresponding circuit numbers.

(9) ¾"C, 6#12, 1#12G insulated, 1#12G.

(10) ¾"C, 4#10, 1#10G.

(11) Multi-outlet assembly, Type B3. See sheet EE1-9.1.

(12) Multi-outlet assembly, Type B4. See sheet EE1-9.1.

(13) Multi-outlet assembly, Type B5. See sheet EE1-9.1.

(14) Mount device 6 inches clear from work bench counter top to bottom of device.

(15) Pushbutton station for overhead door operator.

(16) ¾"C, 3#12, 1#12G.

(17) ¾"C, 2#12, 1#12 spare, 1#12G.

(18) ¾"C, 3#10, 1#10G.

(19) 240 volt test motor controller.

(20) 480 volt test motor controller.

(21) Overhead door operator unit. Install the following for the overhead door operator system:

- ½"C, 3#12, 1#12G in between the overhead door operator disconnect switch and the overhead door operator unit.
- ½"C, control conductors as required in between the overhead door operator unit and pushbutton station.
- Junction box and flexible cable between the overhead door operator unit and safety edge limit switch.
- ½"C, control cables as required between the overhead door operator unit and door chain operated safety limit switch.

Safety edge limit switch and door chain operated safety limit switch are not shown. Mount overhead door operator disconnect switch adjacent to the overhead door operator unit.

(22) Special purpose receptacle, type L. See sheet EE1-10.17.

(23) Special purpose receptacle, type N. See sheet EE1-10.17.

(24) Overhead door operator disconnect.

(25) ¾"C, 3#10, 1#10 spare, 1#10G.

(26) Overhead coiling grille operator. Install the following for the overhead coiling grille operator system:

- ½"C, 3#10, 1#10 spare, 1#10G in between the coiling grille operator disconnect switch and the coiling grille operator.
- ½"C, control conductors as required in between the overhead coiling grille operator and pushbutton station.
- Junction box and flexible cable between the overhead coiling grille operator unit and safety edge limit switch.
- ½"C, control cables as required between the coiling grille operator and grille chain operated safety limit switch.

Safety edge limit switch and grille chain operated safety limit switch are not shown. Mount coiling grille operator disconnect switch adjacent to the coiling grille operator unit.

(27) Overhead coiling grille operator disconnect switch.

(28) Overhead coiling door operator disconnect switch.

(29) Overhead coiling door operator. Install the following for the overhead coiling door operator system:

- ½"C, 3#10, 1#10 spare, 1#10G in between the coiling door operator disconnect switch and the coiling door operator.
- ½"C, control conductors as required in between the overhead coiling door operator and pushbutton station.
- Junction box and flexible cable between the overhead coiling door operator unit and safety edge limit switch.
- ½"C, control cables as required between the coiling door operator and door chain operated safety limit switch.

Safety edge limit switch and door chain operated safety limit switch are not shown. Mount coiling door operator disconnect switch adjacent to the coiling door operator unit.

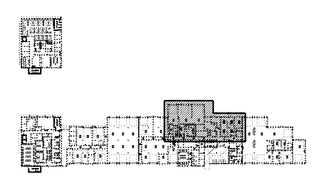

KEY PLAN

	BY	CHECKED
DESIGN	Catalino Enriquez	J.S.S./H.Abdelsayed
DETAILS	Ed D. Tapalla/Dali Zhou	Catalino Enriquez
QUANTITIES	Catalino Enriquez	J.S.S./H.Abdelsayed

STATE OF CALIFORNIA
DEPARTMENT OF TRANSPORTATION

DIVISION OF ENGINEERING SERVICES
ELECTRICAL-MECHANICAL-WATER AND WASTEWATER DESIGN

BRIDGE NO. 33M5785
POST MILE 2.2

SFOBB MAINTENANCE COMPLEX

BUILDING 1B

PARTIAL POWER PLAN 12 NOTES

SHEET **EE1-1.23**

TAEMWW Imperial Rev. 7/10

ORIGINAL SCALE IN INCHES FOR REDUCED PLANS 0 1 2 3

UNIT 3596
PROJECT NUMBER & PHASE 04120006661
EA 014081

DISREGARD PRINTS BEARING EARLIER REVISION DATES → 11/28/11 5/18/12 5/30/12

REVISION DATES (PRELIMINARY STAGE ONLY) SHEET OF

25-OCT-2012 11:27

ee1_1.23.dgn

DIST.	COUNTY	ROUTE	POST MILES TOTAL PROJECT	SHEET NO.	TOTAL SHEETS
04	Ala	80	2.2	664	800

CALIFORNIA STATE FIRE MARSHAL APPROVED

Approval of this plan does not authorize or approve any omission or deviation from applicable regulations. Final approval is subject to field inspection. One set of approved plans shall be available on the project site at all times.

Reviewed by: JOHN E WOODS, SDSFM

Approval date: 8-22-12

Catalino A. Enriquez 5-30-12
REGISTERED ELECTRICAL ENGINEER DATE

REGISTERED PROFESSIONAL ENGINEER C. ENRIQUEZ No. 16944 Exp. 6-30-13 ELEC STATE OF CALIFORNIA

10-22-12
PLANS APPROVAL DATE

The State of California or its officers or agents shall not be responsible for the accuracy or completeness of scanned copies of this plan sheet.

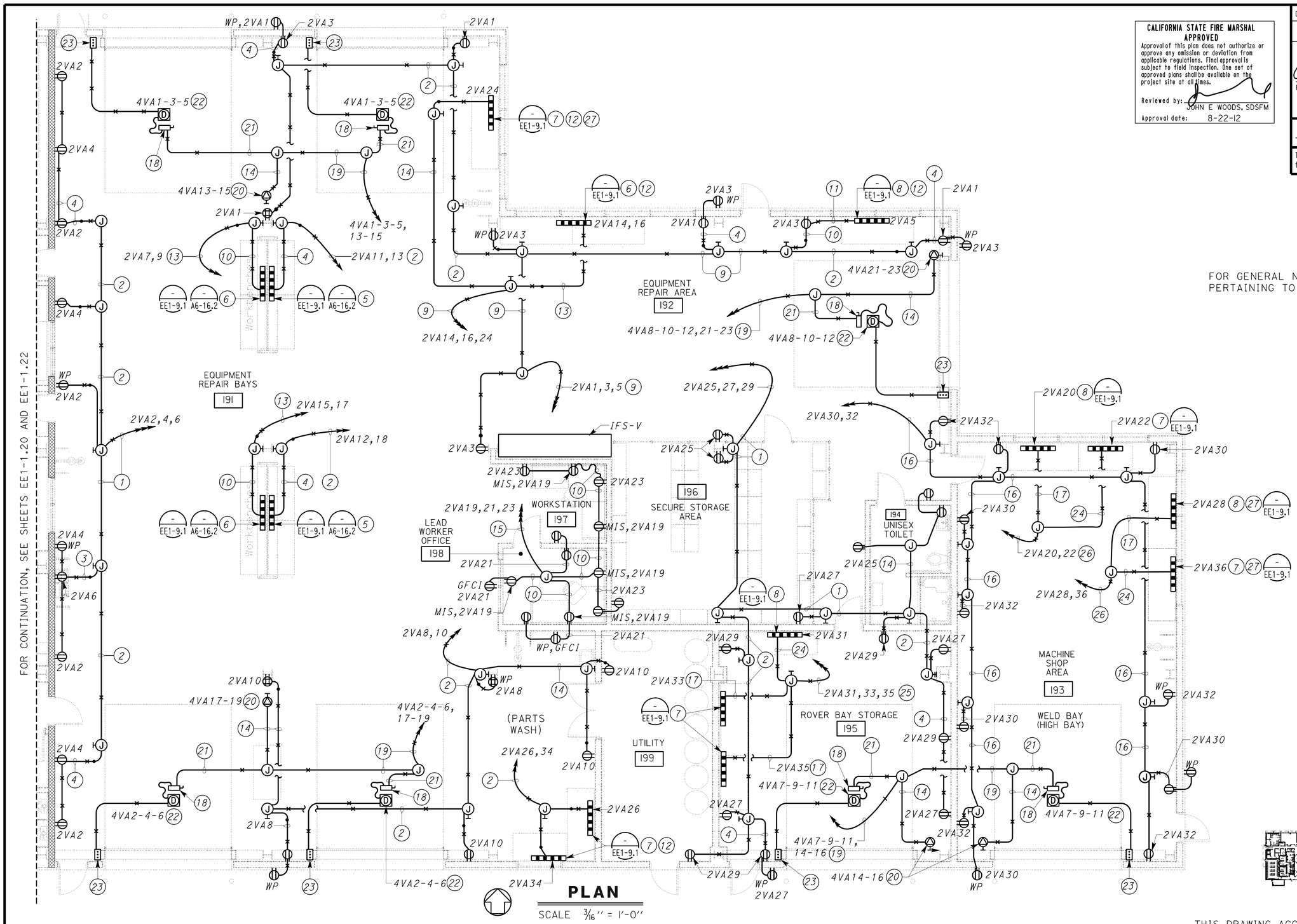

FOR GENERAL NOTES AND PROJECT NOTES PERTAINING TO THIS PLAN, SEE SHEET EE1-1.25

PLAN

SCALE 3/16" = 1'-0"

KEY PLAN

THIS DRAWING ACCURATE FOR ELECTRICAL WORK ONLY

	BY	CHECKED
DESIGN	Catalino Enriquez	J.S.S./H.Abdelsayed
DETAILS	Ed D. Tapalla/Dali Zhou	Catalino Enriquez
QUANTITIES	Catalino Enriquez	J.S.S./H.Abdelsayed

STATE OF CALIFORNIA
DEPARTMENT OF TRANSPORTATION

DIVISION OF ENGINEERING SERVICES
ELECTRICAL-MECHANICAL-WATER AND WASTEWATER DESIGN

BRIDGE NO. 33M5785
POST MILE 2.2

SFOBB MAINTENANCE COMPLEX

BUILDING 1B

PARTIAL POWER PLAN 13

SHEET **EE1-1.24**

TAEMWW Imperial Rev. 7/10

ORIGINAL SCALE IN INCHES FOR REDUCED PLANS 0 1 2 3

UNIT 3596
PROJECT NUMBER & PHASE 04120006661
EA 014081

DISREGARD PRINTS BEARING EARLIER REVISION DATES → 11/29/11 5/18/12 5/30/12

REVISION DATES (PRELIMINARY STAGE ONLY) SHEET OF

25-OCT-2012 11:28

ee1_1.24.dgn

DIST.	COUNTY	ROUTE	POST MILES TOTAL PROJECT	SHEET NO.	TOTAL SHEETS
04	Ala	80	2.2	665	800

CALIFORNIA STATE FIRE MARSHAL APPROVED
Approval of this plan does not authorize or approve any omission or deviation from applicable regulations. Final approval is subject to field inspection. One set of approved plans shall be available on the project site at all times.
Reviewed by: JOHN E WOODS, SDSFM
Approval date: 8-22-12

Catalino A. Enriquez 5-30-12
REGISTERED ELECTRICAL ENGINEER DATE

REGISTERED PROFESSIONAL ENGINEER C. ENRIQUEZ No. 16944 Exp. 6-30-13 ELEC STATE OF CALIFORNIA

10-22-12
PLANS APPROVAL DATE

The State of California or its officers or agents shall not be responsible for the accuracy or completeness of scanned copies of this plan sheet.

General Notes:

A. *For plan sheet related to the following notes, see preceding sheet EE1-1.24.*

B. *For location of panelboards, see sheet EE1-1.1.*

C. *All conduit running across travelling crane shall be mounted above and clear of the crane's motion envelope.*

D. *Location of overhead door operators and related components as shown is arbitrary only. Exact location depends upon the unit furnished. Contractor shall furnish and install any additional conduit, conductors, cables and equipment necessary for the automatic operation without extra cost to the State. All cables and conductors shall be installed in conduits.*

Notes:

1. *1"C, 6#10, 1#10G.*
2. *¾"C, 4#10, 1#10G.*
3. *¾"C, 6#12, 1#12G.*
4. *¾"C, 4#12, 1#12G.*
5. *Multi-outlet assembly, Type B1.*
6. *Multi-outlet assembly, Type B2.*
7. *Multi-outlet assembly, Type B3.*
8. *Multi-outlet assembly, Type B4.*
9. *1"C, 6#10, 1#10G insulated, 1#10G.*
10. *¾"C, 4#12, 1#12G insulated, 1#12G*
11. *½"C, 2#12, 1#12G insulated, 1#12G.*
12. *Mount device 6 inches clear from work bench counter top to bottom of device.*
13. *¾"C, 4#10, 1#10G insulated, 1#10G.*
14. *½"C, 2#10, 1#10G.*
15. *¾"C, 6#12, 1#12G insulated, 1#12G.*
16. *1"C, 4#8, 1#10G.*
17. *¾"C, 2#8, 1#10G.*
18. *Overhead door operator disconnect switch.*
19. *1"C, 3#12 (overhead door operators), 2#10 (240 volt special purpose receptacle), 1#10G.*
20. *Special purpose receptacle, type J (240 volts, 20 ampere, 1-phase). See sheet EE1-10.17.*
21. *½"C, 3#12, 1#12G.*
22. *Overhead door operator unit. Install the following for the overhead door operator system:*
    - *½"C, 3#12, 1#12G in between the overhead door operator disconnect switch and the overhead door operator unit.*
    - *½"C, control conductors as required in between the overhead door operator unit and pushbutton station.*
    - *Junction box and flexible cable between the overhead door operator unit and safety edge limit switch.*
    - *½"C, control cables as required between the overhead door operator unit and door chain operated safety limit switch.*

    Safety edge limit switch and door chain operated safety limit switch are not shown. Mount overhead door operator disconnect switch adjacent to the overhead door operator unit.
23. *Pushbutton station for overhead door operator.*
24. *¾"C, 2#8, 1#10G insulated, 1#10G.*
25. *1"C, 6#8, 1#10G insulated, 1#10G.*
26. *1"C, 4#8, 1#10G insulated, 1#10G.*
27. *Mount multi-outlet assembly on the back-end plate built-in with the workbench.*

KEY PLAN

	BY	CHECKED
DESIGN	Catalino Enriquez	J.S.S./H.Abdelsayed
DETAILS	Ed D. Tapalla/Dali Zhou	Catalino Enriquez
QUANTITIES	Catalino Enriquez	J.S.S./H.Abdelsayed

STATE OF CALIFORNIA
DEPARTMENT OF TRANSPORTATION

DIVISION OF ENGINEERING SERVICES
ELECTRICAL-MECHANICAL-WATER AND WASTEWATER DESIGN

BRIDGE NO. 33M5785
POST MILE 2.2

SFOBB MAINTENANCE COMPLEX
BUILDING 1B
PARTIAL POWER PLAN 13 NOTES

SHEET **EE1-1.25**

TAEMWW Imperial Rev. 7/10

ORIGINAL SCALE IN INCHES FOR REDUCED PLANS 0 1 2 3

UNIT 3596
PROJECT NUMBER & PHASE 04120006661
EA 014081

DISREGARD PRINTS BEARING EARLIER REVISION DATES → 11/28/11 5/18/12 5/30/12

REVISION DATES (PRELIMINARY STAGE ONLY) SHEET OF

25-OCT-2012 11:28
ee1_1.25.dgn

DIST.	COUNTY	ROUTE	POST MILES TOTAL PROJECT	SHEET NO.	TOTAL SHEETS
04	Ala	80	2.2	666	800

Catalino A. Enriquez 5-30-12
REGISTERED ELECTRICAL ENGINEER DATE

REGISTERED PROFESSIONAL ENGINEER C. ENRIQUEZ No. 16944 Exp. 6-30-13 ELEC STATE OF CALIFORNIA

10-22-12
PLANS APPROVAL DATE

The State of California or its officers or agents shall not be responsible for the accuracy or completeness of scanned copies of this plan sheet.

CALIFORNIA STATE FIRE MARSHAL APPROVED

Approval of this plan does not authorize or approve any omission or deviation from applicable regulations. Final approval is subject to field inspection. One set of approved plans shall be available on the project site at all times.

Reviewed by: JOHN E WOODS, SDSFM

Approval date: 8-22-12

FOR GENERAL NOTES AND PROJECT NOTES PERTAINING TO THIS PLAN, SEE SHEET EE1-1.27.

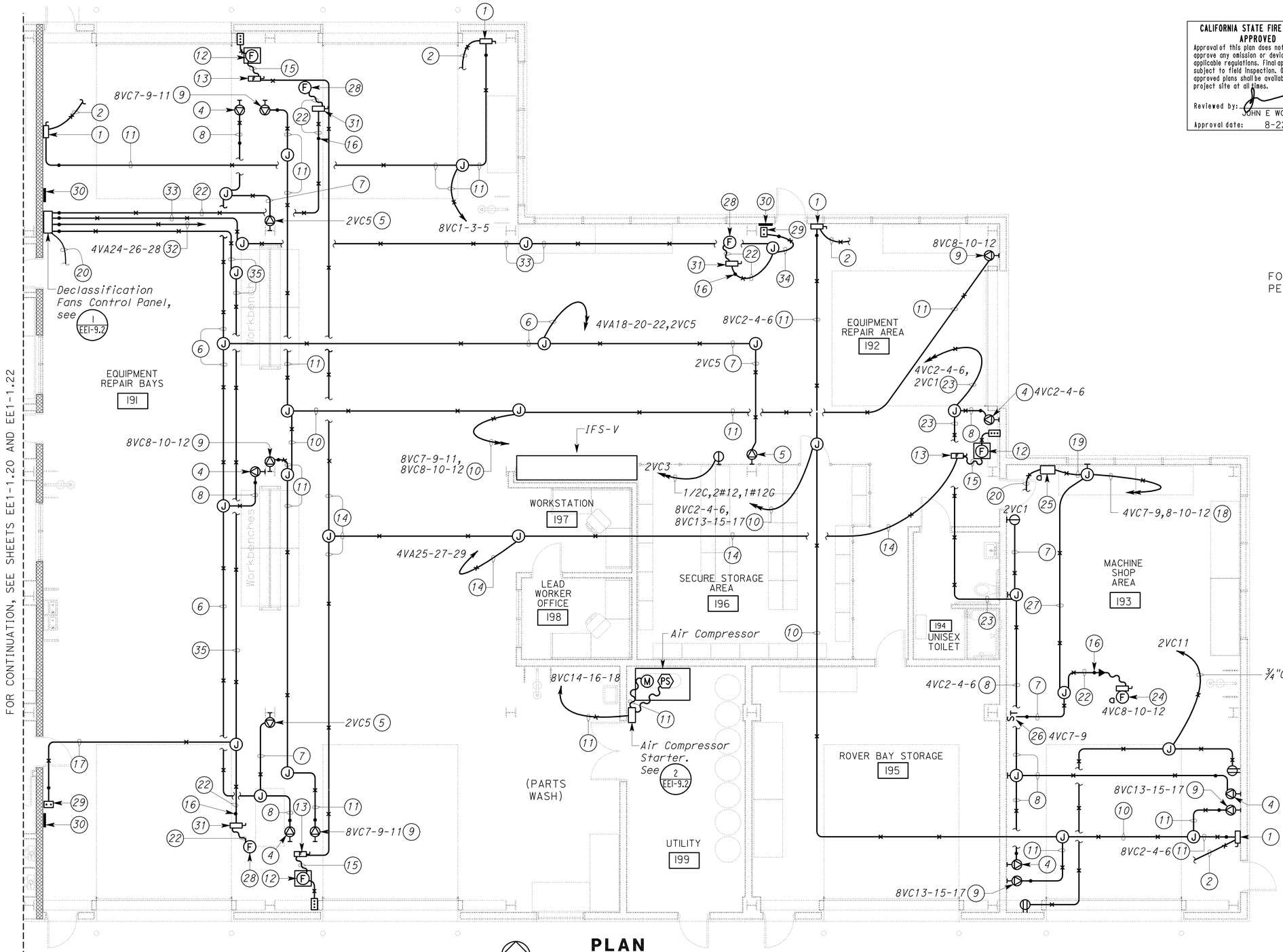

PLAN

SCALE 3/16" = 1'-0"

KEY PLAN

THIS DRAWING ACCURATE FOR ELECTRICAL WORK ONLY

	BY	CHECKED
DESIGN	Catalino Enriquez	J.S.S./H.Abdelsayed
DETAILS	Dali Zhou	Catalino Enriquez
QUANTITIES	Catalino Enriquez	J.S.S./H.Abdelsayed

STATE OF CALIFORNIA
DEPARTMENT OF TRANSPORTATION

DIVISION OF ENGINEERING SERVICES
ELECTRICAL-MECHANICAL-WATER AND WASTEWATER DESIGN

BRIDGE NO. 33M5785
POST MILE 2.2

SFOBB MAINTENANCE COMPLEX

BUILDING 1B

PARTIAL POWER PLAN 14

SHEET **EE1-1.26**

TAEMWW Imperial Rev. 7/10

ORIGINAL SCALE IN INCHES FOR REDUCED PLANS 0 1 2 3

UNIT 3596
PROJECT NUMBER & PHASE 04120006661
EA 014081

DISREGARD PRINTS BEARING EARLIER REVISION DATES → 3/7/12 3/19/12 5/30/12

REVISION DATES (PRELIMINARY STAGE ONLY) SHEET OF

25-OCT-2012 11:28

ee1_1.26.dgn

DIST.	COUNTY	ROUTE	POST MILES TOTAL PROJECT	SHEET NO.	TOTAL SHEETS
04	Ala	80	2.2	667	800

CALIFORNIA STATE FIRE MARSHAL APPROVED
Approval of this plan does not authorize or approve any omission or deviation from applicable regulations. Final approval is subject to field inspection. One set of approved plans shall be available on the project site at all times.
Reviewed by: JOHN E WOODS, SDSFM
Approval date: 8-22-12

Catalino A. Enriquez 5-30-12
REGISTERED ELECTRICAL ENGINEER DATE

REGISTERED PROFESSIONAL ENGINEER C. ENRIQUEZ No. 16944 Exp. 6-30-13 ELEC STATE OF CALIFORNIA

10-22-12
PLANS APPROVAL DATE

The State of California or its officers or agents shall not be responsible for the accuracy or completeness of scanned copies of this plan sheet.

General Notes:

A. For plan sheet related to the following notes, see preceding sheet EE1-1.26.

B. For location of switchboards and panelboards, see sheet EE1-1.1.

C. All conduit running across travelling crane shall be mounted above and clear of the crane's motion envelope.

D. Location of overhead cranes, lube and light reels, vehicle engine exhaust fans, fume exhaust fans, declassification fans, receptacles and related components as shown is arbitrary only. Exact location depends upon the unit furnished and physical limitations. All cables and conductors shall be installed in conduits.

E. For equipment schedule, see sheets EE1-10.16 and EE1-10.17.

Notes:

1. Overhead crane disconnect.
2. Conduit and conductor to be terminated at crane conductor bar system as recommended by the crane manufacturer.
3. Not used.
4. Vehicle lift receptacle (Special purpose receptacle, type P).
5. Reel light receptacle (Special purpose receptacle type M). Install receptacle in the attic space to suit location of reel light unit furnished.
6. 1¼"C, 2#10 (reel light receptacle), 3#3 (vehicle lift receptacle), 1#8G.
7. ½"C, 2#10, 1#10G.
8. 1¼"C, 3#3, 1#8G
9. Welding receptacle (Special purpose receptacle type D).
10. 1"C, 6#8, 1#10G.
11. ¾"C, 3#8, 1#10G.
12. Vehicle engine exhaust fan and hose reel assembly complete with pushbutton station. Install ½inch conduit with control conductors between the assembly and pushbutton station as recommended by the manufacturer.
13. Vehicle engine exhaust fan disconnect.
14. 1"C, 3#8, 1#8 spare (vehicle engine exhaust fans), 1#8G.
15. ¾"C, 3#10, 1#10 spare, 1#10G.
16. Provide conduit flashing.
17. ½"C, 4#12, 1#12G.
18. ¾"C, 4#10 (fume exhaust fan), 2#10 (cut-off saw), 1#10G.
19. ¾"C, 4#10 (3 line plus neutral), 3#10 (switched power),1#10G.
20. ½"C, control conductors to fire alarm system for emergency shutdown. See Fire Alarm System sheets.
21. Not used.
22. ¾"C, 3#10, 1#10G.
23. 1¼"C, 2#10 (drill press), 3#3 (vehicle lift receptacle), 1#8G.
24. Fume exhaust fan (EF-20B) with built-in disconnect.
25. Fume exhaust fan combination motor starter, see (3) EE1-9.6.
26. Cut-off saw manual motor starter.
27. ¾"C, 3#10 (fume exhaust fan), 2#10 (cut-off saw), 1#10G.
28. Declassification fan.
29. Declassification fan pushbutton station.
30. Warning sign. Install warning sign adjacent to control panel and pushbutton stations. Warning sign shall read:

    OPEN DOOR LOUVERS AND TURN ON
    DECLASSIFICATION FANS BEFORE
    REPAIRING GASOLINE POWERED VEHICLES
31. Declassification fan disconnect switch.
32. 1"C, 4#8, 1#8G.
33. ¾"C, 3#10 (power), 3#12 (control), 1#10G.
34. ½"C, 3#12, 1#12G.
35. ¾"C, 3#10 (power), 4#12 (control), 1#10G.

KEY PLAN

	BY	CHECKED
DESIGN	Catalino Enriquez	J.S.S./H.Abdelsayed
DETAILS	Dali Zhou	Catalino Enriquez
QUANTITIES	Catalino Enriquez	J.S.S./H.Abdelsayed

STATE OF CALIFORNIA
DEPARTMENT OF TRANSPORTATION

DIVISION OF ENGINEERING SERVICES
ELECTRICAL-MECHANICAL-WATER AND WASTEWATER DESIGN

BRIDGE NO. 33M5785
POST MILE 2.2

SFOBB MAINTENANCE COMPLEX
BUILDING 1B
PARTIAL POWER PLAN 14 NOTES

SHEET EE1-1.27

TAEMWW Imperial Rev. 7/10

ORIGINAL SCALE IN INCHES FOR REDUCED PLANS 0 1 2 3

UNIT 3596
PROJECT NUMBER & PHASE 04120006661
EA 014081

DISREGARD PRINTS BEARING EARLIER REVISION DATES → 3/7/12 3/19/12 5/30/12

REVISION DATES (PRELIMINARY STAGE ONLY) SHEET OF

25-OCT-2012 11:28
ee1_1.27.dgn

DIST.	COUNTY	ROUTE	POST MILES TOTAL PROJECT	SHEET NO.	TOTAL SHEETS
04	Ala	80	2.2	668	800

REGISTERED ELECTRICAL ENGINEER — 5-30-12 DATE

REGISTERED PROFESSIONAL ENGINEER J. ABDELSAYED No. 18915 Exp. 12-31-13 ELEC STATE OF CALIFORNIA

10-22-12
PLANS APPROVAL DATE

The State of California or its officers or agents shall not be responsible for the accuracy or completeness of scanned copies of this plan sheet.

CALIFORNIA STATE FIRE MARSHAL APPROVED

Approval of this plan does not authorize or approve any omission or deviation from applicable regulations. Final approval is subject to field inspection. One set of approved plans shall be available on the project site at all times.

Reviewed by: JOHN E WOODS, SDSFM

Approval date: 8-22-12

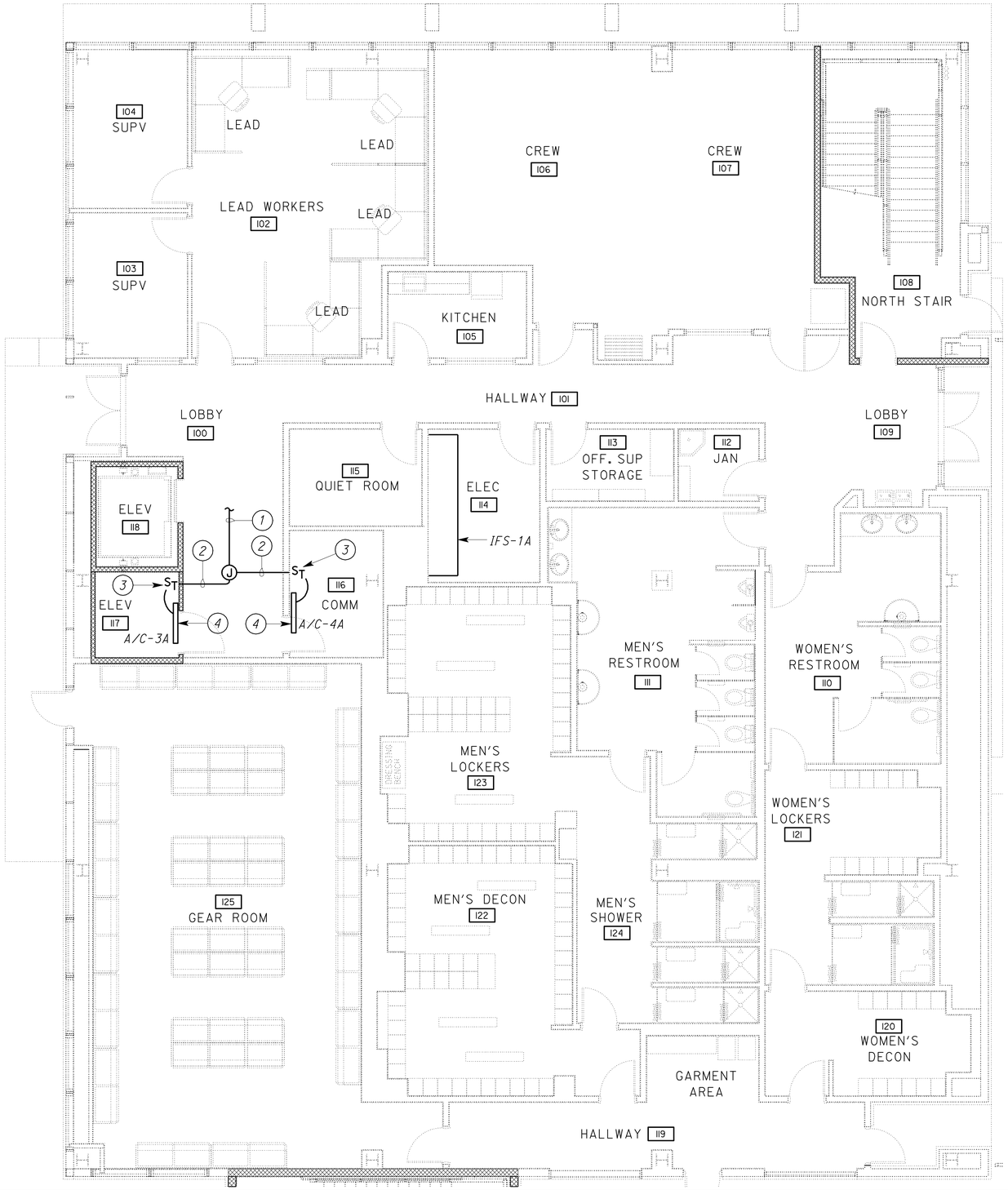

1ST FLOOR

SCALE 3/16" = 1'-0"

General Notes:

A. *Location of all HVAC related equipment is arbitrary only. See Mechanical Plan sheets for exact location of HVAC related equipment.*

B. *HVAC control and communication connections to building control system are not shown. See Mechanical Sheets for details.*

C. *For HVAC equipment schedule, see sheet EE1-10.16.*

Notes:

1. *¾"C, 6#12, 1#12G to Outdoor Condenser Units A/C-3A and A/C-4A on the roof. For continuation, see sheet EE1-2.3.*
2. *½"C, 3#12, 1#12G.*
3. *Indoor A/C Unit Disconnect Switch. For details, see sheet EE1-10.16.*
4. *Indoor A/C Unit mounted on the wall. For details, see Mechanical sheets.*

KEY PLAN

THIS DRAWING ACCURATE FOR ELECTRICAL WORK ONLY

	BY	CHECKED
DESIGN	Joseph Abdelsayed	J. S. Sandhu
DETAILS	Ed Tapalla/Dali Zhou	Joseph Abdelsayed
QUANTITIES	Joseph Abdelsayed	J. S. Sandhu

STATE OF CALIFORNIA DEPARTMENT OF TRANSPORTATION

DIVISION OF ENGINEERING SERVICES ELECTRICAL-MECHANICAL-WATER AND WASTEWATER DESIGN

BRIDGE NO. 33M5785 2.2 X

SFOBB MAINTENANCE COMPLEX

BUILDING 1A — HVAC POWER PLAN 1

SHEET **EE1-2.1**

TAEMWW Imperial Rev. 7/10

ORIGINAL SCALE IN INCHES FOR REDUCED PLANS 0 1 2 3

UNIT 3596
PROJECT NUMBER & PHASE 04120006661
EA 014081

DISREGARD PRINTS BEARING EARLIER REVISION DATES → 10/24/11 12/19/11 5/30/12

REVISION DATES (PRELIMINARY STAGE ONLY) SHEET OF

25-OCT-2012 11:28

ee1_2.01.dgn

DIST.	COUNTY	ROUTE	POST MILES TOTAL PROJECT	SHEET NO.	TOTAL SHEETS
04	Ala	80	2.2	669	800

REGISTERED ELECTRICAL ENGINEER — 5-30-12 DATE

REGISTERED PROFESSIONAL ENGINEER J. ABDELSAYED No. 18915 Exp. 12-31-13 ELEC STATE OF CALIFORNIA

10-22-12
PLANS APPROVAL DATE

The State of California or its officers or agents shall not be responsible for the accuracy or completeness of scanned copies of this plan sheet.

CALIFORNIA STATE FIRE MARSHAL APPROVED
Approval of this plan does not authorize or approve any omission or deviation from applicable regulations. Final approval is subject to field inspection. One set of approved plans shall be available on the project site at all times.
Reviewed by: JOHN E WOODS, SDSFM
Approval date: 8-22-12

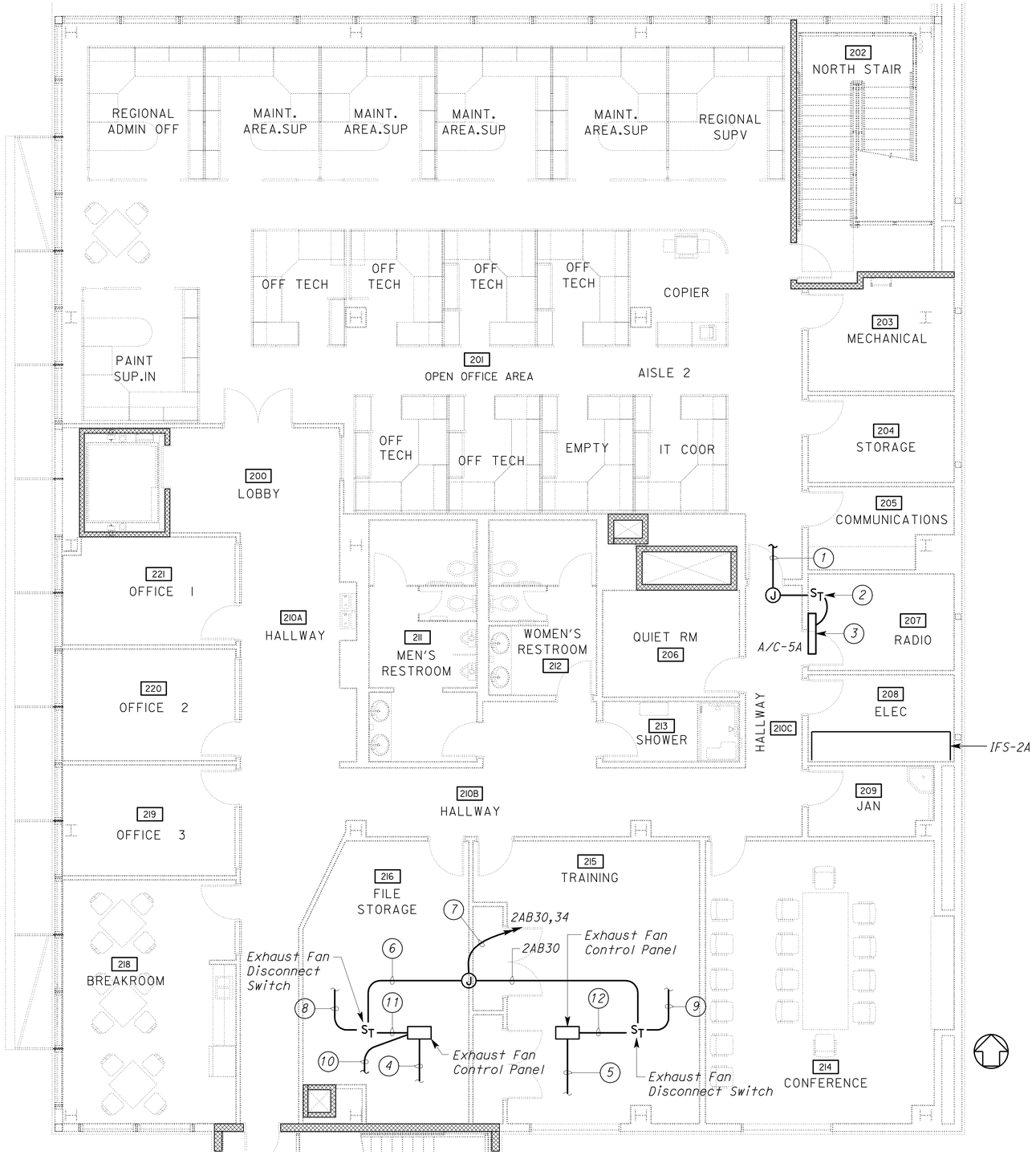

2ND FLOOR

SCALE 3/16 '' = 1'-0''

General Notes:

A. *Location of all HVAC related equipment is arbitrary only. See Mechanical Plan sheets for exact location of HVAC related equipment.*

B. *HVAC control and communication connections to building control system are not shown. See Mechanical Sheets for details.*

C. *For HVAC equipment schedule, see sheet EE1-10.16.*

D. *For exhaust fan EF-1A and EF-2A wiring diagrams, see* (1 / EEI-9.6)

E. *Mount disconnect switches and control panels for EF-1A and EF-2A in attic space.*

Notes:

1. *¾"C, 3#12, 1#12G to Outdoor Condenser Unit A/C-5A on the roof. For continuation, see sheet EE1-2.3.*
2. *Indoor A/C Unit Disconnect Switch. For details, see sheet EE1-10.16.*
3. *A/C Indoor Unit mounted on the wall. For details, see Mechanical sheets.*
4. *½"C, 2#10 (2AB34), 1#10G to Exhaust Fan EF-1A on the roof. For continuation, see sheet EE1-2.3.*
5. *½"C, 2#12 (2AB30), 1#12G to Exhaust Fan EF-2A on the roof. For continuation, see sheet EE1-2.3.*
6. *½"C, 2#10 (2AB34), 1#10G.*
7. *¾"C, 4#12 (2AB30,36), 2#10 (2AB34), 1#10G.*
8. *½"C, 2#12 low voltage conductors to A/C-1A on the roof. For continuation, see sheet EE1-2.3.*
9. *½"C, 2#12 low voltage conductors to A/C-2A on the roof. For continuation, see sheet EE1-2.3.*
10. *½"C,Control conductors to fire alarm system for emergency shutdown. See Fire Alarm sheets.*
11. *¾"C, 2#12, 2#10, 1#10G.*
12. *¾"C, 4#12, 1#12G.*

2ND FLOOR

KEY PLAN

THIS DRAWING ACCURATE FOR ELECTRICAL WORK ONLY

	BY	CHECKED
DESIGN	Joseph Abdelsayed	J. S. Sandhu
DETAILS	Ed Tapalla/Dali Zhou	Joseph Abdelsayed
QUANTITIES	Joseph Abdelsayed	J. S. Sandhu

STATE OF CALIFORNIA DEPARTMENT OF TRANSPORTATION

DIVISION OF ENGINEERING SERVICES
ELECTRICAL-MECHANICAL-WATER AND WASTEWATER DESIGN

BRIDGE NO. 33M5785 2.2 X

SFOBB MAINTENANCE COMPLEX

BUILDING 1A — HVAC POWER PLAN 2

SHEET **EE1-2.2**

TAEMWW Imperial Rev. 7/10

ORIGINAL SCALE IN INCHES FOR REDUCED PLANS 0 1 2 3

UNIT 3596
PROJECT NUMBER & PHASE 04120006661
EA 014081

DISREGARD PRINTS BEARING EARLIER REVISION DATES → 10/9/12 5/30/12

REVISION DATES (PRELIMINARY STAGE ONLY) SHEET OF

25-OCT-2012 11:28
ee1_2.02.dgn

DIST.	COUNTY	ROUTE	POST MILES TOTAL PROJECT	SHEET NO.	TOTAL SHEETS
04	Ala	80	2.2	670	800

REGISTERED ELECTRICAL ENGINEER — 5-30-12 DATE

REGISTERED PROFESSIONAL ENGINEER J. ABDELSAYED No. 18915 Exp. 12-31-13 ELEC STATE OF CALIFORNIA

10-22-12
PLANS APPROVAL DATE

CALIFORNIA STATE FIRE MARSHAL APPROVED
Approval of this plan does not authorize or approve any omission or deviation from applicable regulations. Final approval is subject to field inspection. One set of approved plans shall be available on the project site at all times.
Reviewed by: JOHN E WOODS, SDSFM
Approval date: 8-22-12

The State of California or its officers or agents shall not be responsible for the accuracy or completeness of scanned copies of this plan sheet.

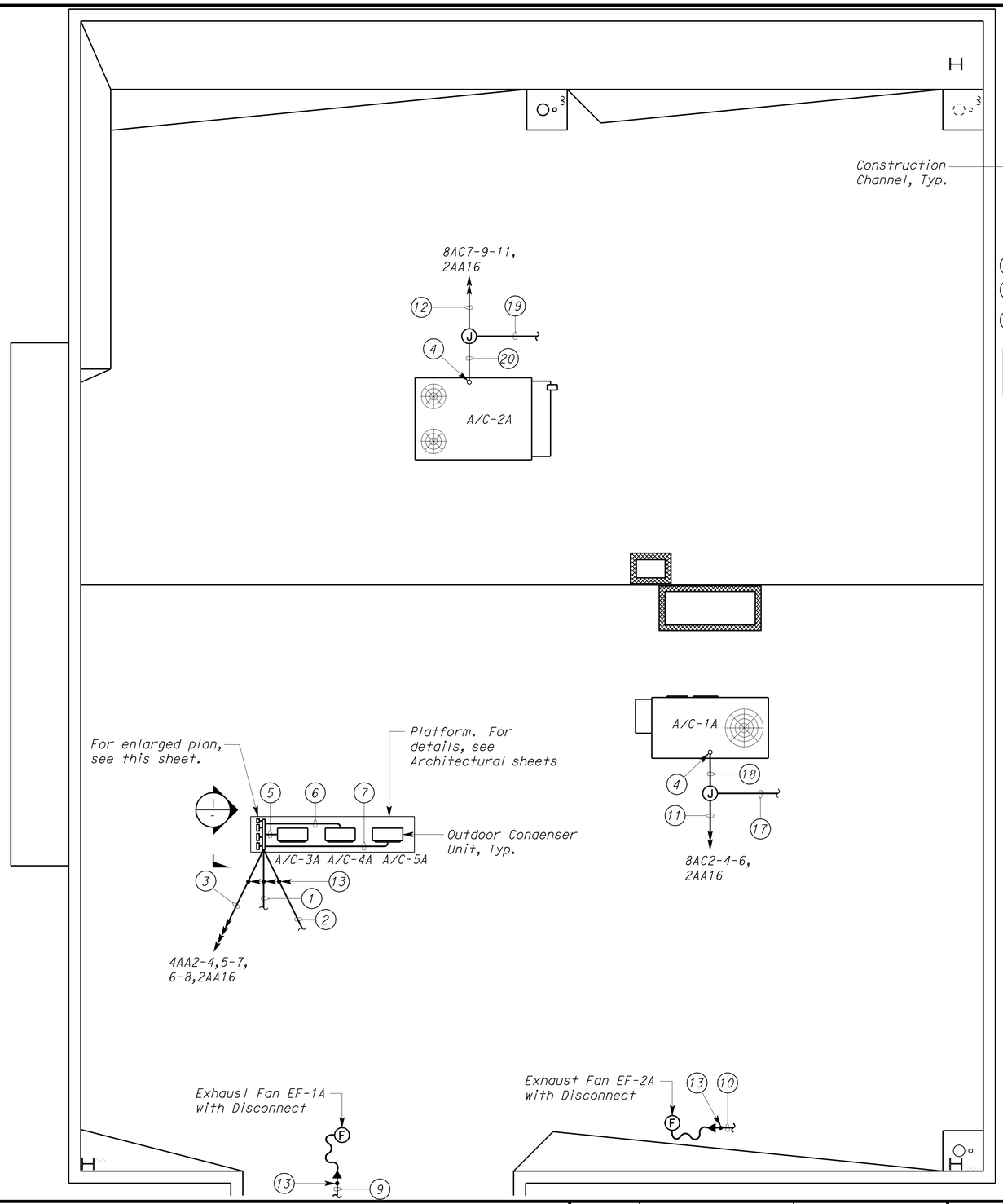

ROOF PLAN

SCALE : 3/16" = 1'-0"

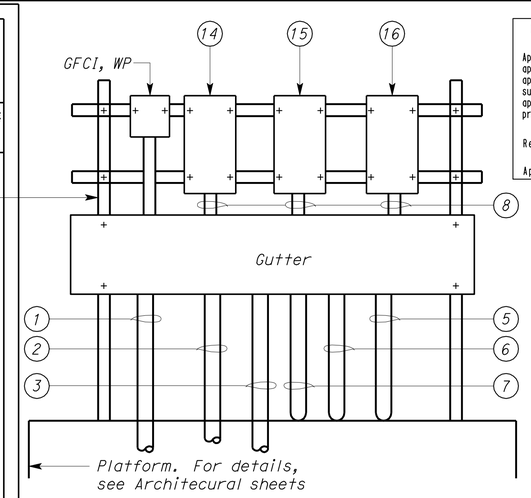

1 DETAIL

NO SCALE

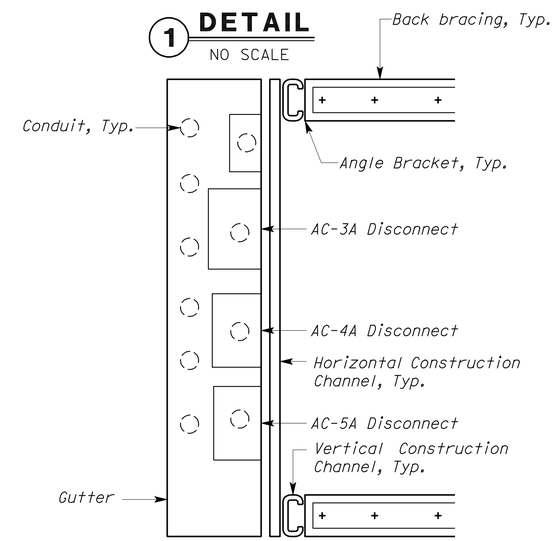

ENLARGED PLAN 21

NO SCALE

(18) 1"C, 3#10 (8AC2-4-6), 2#12 (2AA16), 2#10, 1#10G.

(19) ½"C, 2#12 low voltage conductors to Exhaust Fan EF-2A Disconnect Switch in the second floor attic space. For continuation, see sheet EE1-2.2.

(20) 1"C, 3#10 (8AC7-9-11), 2#12 (2AA16), 2#12, 1#10G.

(21) Provide and install construction channels for supporting gutter, disconnect switches, and weatherproof receptacle. In addition, install angle brackets and back braces as required. Secure construction channels to the platform in a manner to achieve weatherproofing of the roof. Submit details to the Engineer for approval prior to installation.

General Notes:

A. Location of all HVAC related equipment is arbitrary only. See Mechanical Plan sheets for exact location of HVAC related equipment.

B. HVAC control and communication connections to building control system are not shown. See Mechanical Sheets for details.

C. For HVAC equipment schedule, see sheet EE1-10.16.

Notes:

(1) ¾"C, 6#12, 1#12G to Indoor Units AC-3A and AC-4A on the first floor. For continuation, see sheet EE1-2.1.

(2) ¾"C, 3#12, 1#12G to Indoor Unit AC-5A on the second floor. For continuation, see sheet EE1-2.2.

(3) ¾"C, 6#12 (4AA2-4,6-8,5-7), 2#12 (2AA16), 1#12G to IFS-1A on the first floor.

(4) Stub up conduit directly through the base of the rooftop-mounted A/C unit as required by the unit furnished.

(5) ¾"C, 2#12 (4AA5-7), 3#12 (Indoor Unit), 1#12G.

(6) ¾"C, 2#12 (4AA2-4), 3#12 (Indoor Unit), 1#12G.

(7) ¾"C, 2#12 (4AA6-8), 3#12 (Indoor Unit), 1#12G.

(8) ½"C, 4#12, 1#12G

(9) ½"C, 2#12 (2AB34), 1#12G to Exhaust Fan EF-1A Exhaust Fan Control Panel in the second floor attic space. For continuation, see sheet EE1-2.2.

(10) ½"C, 2#12 (2AB30), 1#12G to Exhaust Fan EF-2A Exhaust Fan Control Panel in the second floor attic space. For continuation, see sheet EE1-2.2.

(11) ¾"C, 3#10 (8AC2-4-6), 2#12 (2AA16), 1#10G to IFS-1A on the first floor.

(12) ¾"C, 3#10 (8AC7-9-11), 2#12 (2AA16), 1#10G to IFS-1A on the first floor.

(13) Provide conduit flashing.

(14) Outdoor A/C Unit (A/C-3A) Disconnect Switch (4AB5-7). For details, see sheet EE1-10.16.

(15) Outdoor A/C Unit (A/C-4A) Disconnect Switch (4AB2-4). For details, see sheet EE1-10.16.

(16) Outdoor A/C Unit (A/C-5A) Disconnect Switch (4AB6-8). For details, see sheet EE1-10.16.

(17) ½"C, 2#12 low voltage conductors to Exhaust Fan EF-1A Disconnect Switch in the second floor attic space. For continuation, see sheet EE1-2.2.

THIS DRAWING ACCURATE FOR ELECTRICAL WORK ONLY

	BY	CHECKED
DESIGN	Joseph Abdelsayed	J. S. Sandhu
DETAILS	Ed Tapalla/Dali Zhou	Joseph Abdelsayed
QUANTITIES	Joseph Abdelsayed	J. S. Sandhu

STATE OF CALIFORNIA DEPARTMENT OF TRANSPORTATION

DIVISION OF ENGINEERING SERVICES
ELECTRICAL-MECHANICAL-WATER AND WASTEWATER DESIGN

BRIDGE NO. 33M5785
POST MILE 2.2

SFOBB MAINTENANCE COMPLEX
BUILDING 1A
HVAC POWER PLAN 3

SHEET EE1-2.3

TAEMWW Imperial Rev. 7/10

ORIGINAL SCALE IN INCHES FOR REDUCED PLANS 0 1 2 3

UNIT 3596
PROJECT NUMBER & PHASE 04120006661
EA 014081

DISREGARD PRINTS BEARING EARLIER REVISION DATES → 3/28/12 5/30/12

REVISION DATES (PRELIMINARY STAGE ONLY) SHEET OF

25-OCT-2012 11:29

ee1_2.03.dgn

DIST.	COUNTY	ROUTE	POST MILES TOTAL PROJECT	SHEET NO.	TOTAL SHEETS
04	Ala	80	2.2	671	800

REGISTERED ELECTRICAL ENGINEER — DATE 5-30-12

REGISTERED PROFESSIONAL ENGINEER J. ABDELSAYED No. 18915 Exp. 12-31-13 ELEC STATE OF CALIFORNIA

10-22-12
PLANS APPROVAL DATE

The State of California or its officers or agents shall not be responsible for the accuracy or completeness of scanned copies of this plan sheet.

CALIFORNIA STATE FIRE MARSHAL APPROVED

Approval of this plan does not authorize or approve any omission or deviation from applicable regulations. Final approval is subject to field inspection. One set of approved plans shall be available on the project site at all times.

Reviewed by: JOHN E WOODS, SDSFM

Approval date: 8-22-12

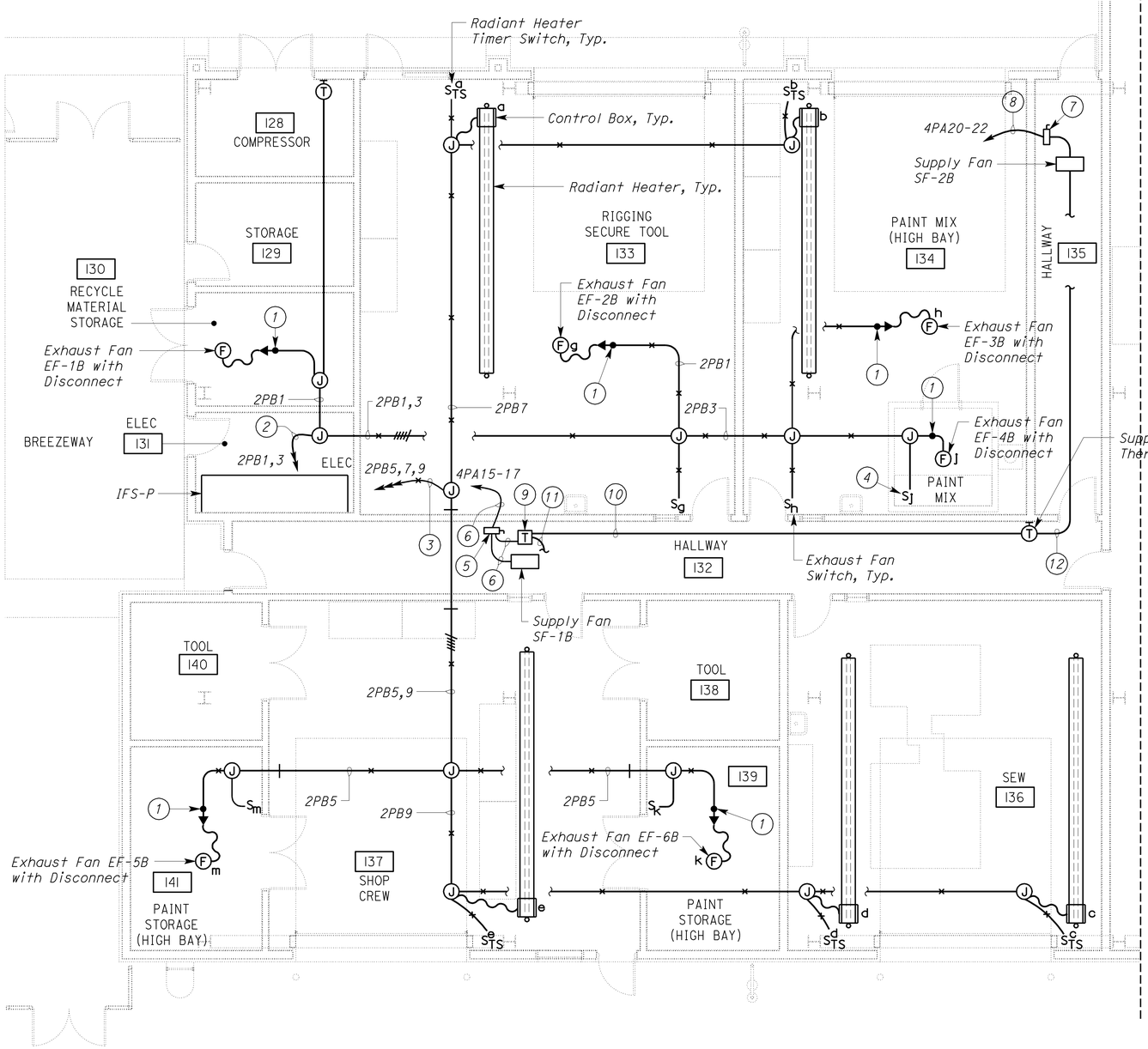

PLAN

SCALE 3/16" = 1'-0"

General Notes:

A. *Location of all HVAC related equipment is arbitrary only. See Mechanical Plan sheets for exact location of HVAC related equipment.*

B. *HVAC control and communication connections to building control system are not shown. See Mechanical Sheets for details.*

C. *For HVAC equipment schedule, see sheet EE1-10.16.*

Notes:

1. *Provide conduit flashing.*
2. *¾"C, 4#12 (2PB1,3), 1#12G.*
3. *¾"C, 6#12 (2PB5,7,9), 1#12G.*
4. *Mount bottom of exhaust fan Switch 6 inches above table/workbench.*
5. *Supply Fan SF-1B Disconnect Switch. Mount Disconnect Switch in attic space adjacent to the Supply Fan. For Disconnect Switch equipment schedule, see sheet EE1-10.16.*
6. *¾"C, 2#10 (4PA15-17), 1#10G.*
7. *Supply Fan SF-2B Disconnect Switch. Mount Disconnect Switch in attic space adjacent to the Supply Fan. For Disconnect Switch equipment schedule, see sheet EE1-10.16.*
8. *¾"C, 2#8 (4PA20-22), 1#8G.*
9. *240 V Primary, 24 VAC Secondary, fused, Control Transformer. Provide and install all hardware as required for the installation of the low voltage transformer. Mount Transformer in a surface mounted junction box with a hinged door in the attic space adjacent to Supply Fan SF-1B disconnect switch. Size transformer as required for Supply Fan units furnished.*
10. *½"C, low voltage conductors as required to Supply Fan Thermostat, and low voltage conductors as required from Supply Fan Thermostat to Supply Fan SF-1B.*
11. *½"C, low voltage conductors as required to Supply Fan SF-1B.*
12. *½"C, low voltage conductors as required to Supply Fan SF-2B.*

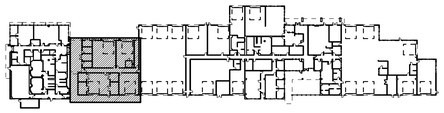

KEY PLAN

THIS DRAWING ACCURATE FOR ELECTRICAL WORK ONLY

	BY	CHECKED
DESIGN	Joseph Abdelsayed	J. S. Sandhu
DETAILS	Ed Tapalla/Dali Zhou	Joseph Abdelsayed
QUANTITIES	Joseph Abdelsayed	J. S. Sandhu

STATE OF CALIFORNIA DEPARTMENT OF TRANSPORTATION

DIVISION OF ENGINEERING SERVICES ELECTRICAL-MECHANICAL-WATER AND WASTEWATER DESIGN

BRIDGE NO. 33M5785 POST MILE 2.2

SFOBB MAINTENANCE COMPLEX

BUILDING 1B — HVAC POWER PLAN 4

SHEET **EE1-2.4**

TAEMWW Imperial Rev. 7/10

ORIGINAL SCALE IN INCHES FOR REDUCED PLANS 0 1 2 3

UNIT 3596
PROJECT NUMBER & PHASE 04120006661
EA 014081

DISREGARD PRINTS BEARING EARLIER REVISION DATES → 11/29/11 5/30/12

REVISION DATES (PRELIMINARY STAGE ONLY) SHEET OF

25-OCT-2012 12:22

ee1_2.04.dgn

DIST.	COUNTY	ROUTE	POST MILES TOTAL PROJECT	SHEET NO.	TOTAL SHEETS
04	Ala	80	2.2	672	800

REGISTERED ELECTRICAL ENGINEER — 5-30-12 DATE

REGISTERED PROFESSIONAL ENGINEER J. ABDELSAYED No. 18915 Exp. 12-31-13 ELEC STATE OF CALIFORNIA

10-22-12
PLANS APPROVAL DATE

The State of California or its officers or agents shall not be responsible for the accuracy or completeness of scanned copies of this plan sheet.

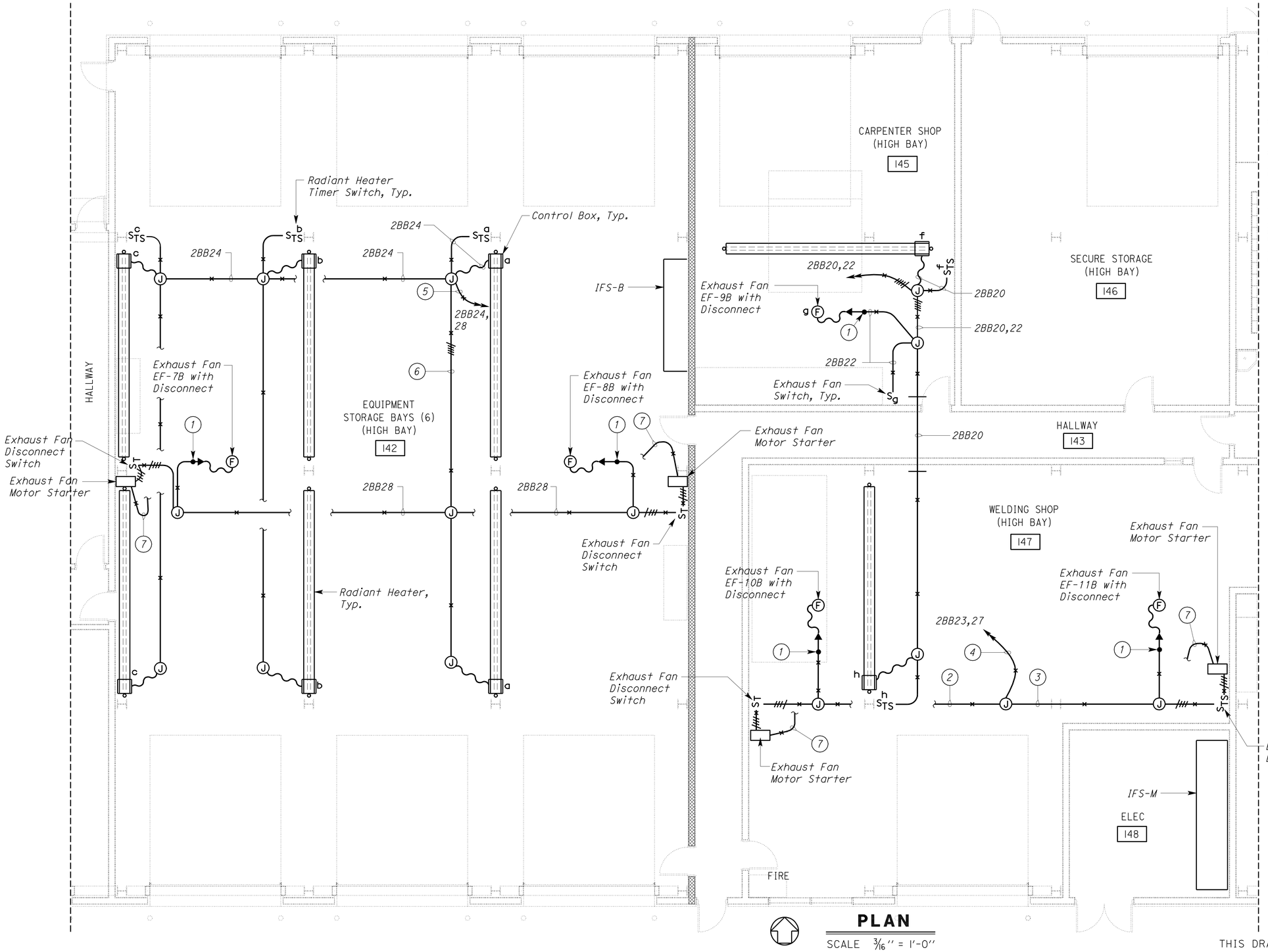

PLAN

SCALE 3/16" = 1'-0"

THIS DRAWING ACCURATE FOR ELECTRICAL WORK ONLY

CALIFORNIA STATE FIRE MARSHAL APPROVED

Approval of this plan does not authorize or approve any omission or deviation from applicable regulations. Final approval is subject to field inspection. One set of approved plans shall be available on the project site at all times.

Reviewed by: JOHN E WOODS, SDSFM

Approval date: 8-22-12

General Notes:

A. *Location of all HVAC related equipment is arbitrary only. See Mechanical Plan sheets for exact location of HVAC related equipment.*

B. *HVAC control and communication connections to building control system are not shown. See Mechanical Sheets for details.*

C. *For HVAC equipment schedule, see sheet EE1-10.16.*

Notes:

1. *Provide conduit flashing.*
2. *3/4"C, 2#10 (2BB23), 1#10G.*
3. *3/4"C, 2#10 (2BB27), 1#10G.*
4. *3/4"C, 4#10 (2BB23,27), 1#10G.*
5. *1/2"C, 4#12 (2BB24,28), 1#12G.*
6. *1/2"C, 2#12 (2BB28), 2#12 switched conductors (2BB24), 1#12G.*
7. *1/2"C, Control conductors to fire alarm system for emergency shutdown. See Fire Alarm sheets.*

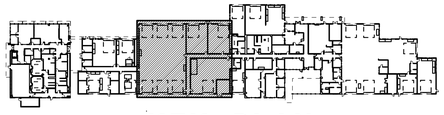

KEY PLAN

DESIGN	BY Joseph Abdelsayed	CHECKED J. S. Sandhu	
DETAILS	BY Ed Tapalla/Dali Zhou	CHECKED Joseph Abdelsayed	
QUANTITIES	BY Joseph Abdelsayed	CHECKED J. S. Sandhu	

STATE OF CALIFORNIA DEPARTMENT OF TRANSPORTATION

DIVISION OF ENGINEERING SERVICES
ELECTRICAL-MECHANICAL-WATER AND WASTEWATER DESIGN

BRIDGE NO. 33M5785
POST MILE 2.2

SFOBB MAINTENANCE COMPLEX

BUILDING 1B — HVAC POWER PLAN 5

SHEET **EE1-2.5**

TAEMWW Imperial Rev. 7/10

ORIGINAL SCALE IN INCHES FOR REDUCED PLANS 0 1 2 3

UNIT 3596
PROJECT NUMBER & PHASE 04120006661
EA 014081

DISREGARD PRINTS BEARING EARLIER REVISION DATES → 11/28/11 5/30/12

REVISION DATES (PRELIMINARY STAGE ONLY) SHEET OF

25-OCT-2012 12:22

ee1_2.05.dgn

DIST.	COUNTY	ROUTE	POST MILES TOTAL PROJECT	SHEET NO.	TOTAL SHEETS
04	Ala	80	2.2	673	800

Catalino A. Enriquez 5-30-12
REGISTERED ELECTRICAL ENGINEER DATE

REGISTERED PROFESSIONAL ENGINEER C. ENRIQUEZ No. 16944 Exp. 6-30-13 ELEC STATE OF CALIFORNIA

10-22-12
PLANS APPROVAL DATE

The State of California or its officers or agents shall not be responsible for the accuracy or completeness of scanned copies of this plan sheet.

CALIFORNIA STATE FIRE MARSHAL APPROVED
Approval of this plan does not authorize or approve any omission or deviation from applicable regulations. Final approval is subject to field inspection. One set of approved plans shall be available on the project site at all times.
Reviewed by: JOHN E WOODS, SDSFM
Approval date: 8-22-12

Notes:

(1) *Provide conduit flashing.*

(2) *1"C, 3#8 (A/C unit), 2#12 (receptacle), 1#8G.*

(3) *1"C, 3#8 (A/C unit), 2#12 (receptacle), 2#12 (24-volt A/C output), 1#8G*

(4) *2#12 (24-volt A/C output), 1#12G*

(5) *¾"C, 4#12, 1#12G*

(6) *Receptacle built-in to the unit provided by the A/C manufacturer shall be GFCI and weatherproof type receptacle.*

(7) *Transformer with factory installed circuit protection as recommended by electronic faucet manufacturer. Install transformer inside a 6"x6"x6" NEMA-1 steel junction box. Label junction box as "FAUCET TRANSFORMER".*

(8) *½"C, cable as recommended by the electronic faucet/urinal manufacturer.*

(9) *Recessed junction box. Locate junction box as required to suit electronic faucet/urinal unit furnished.*

(10) *Terminate cable to electronic faucet/urinal control module.*

(11) *Exhaust fan disconnect switch. Mount device at 9 feet. For schematic diagram, see detail number 2 in sheet EE1-9.6.*

(12) *Exhaust fan control panel. Mount device at 9 feet. For schematic diagram, see detail number 2 in sheet EE1-9.6.*

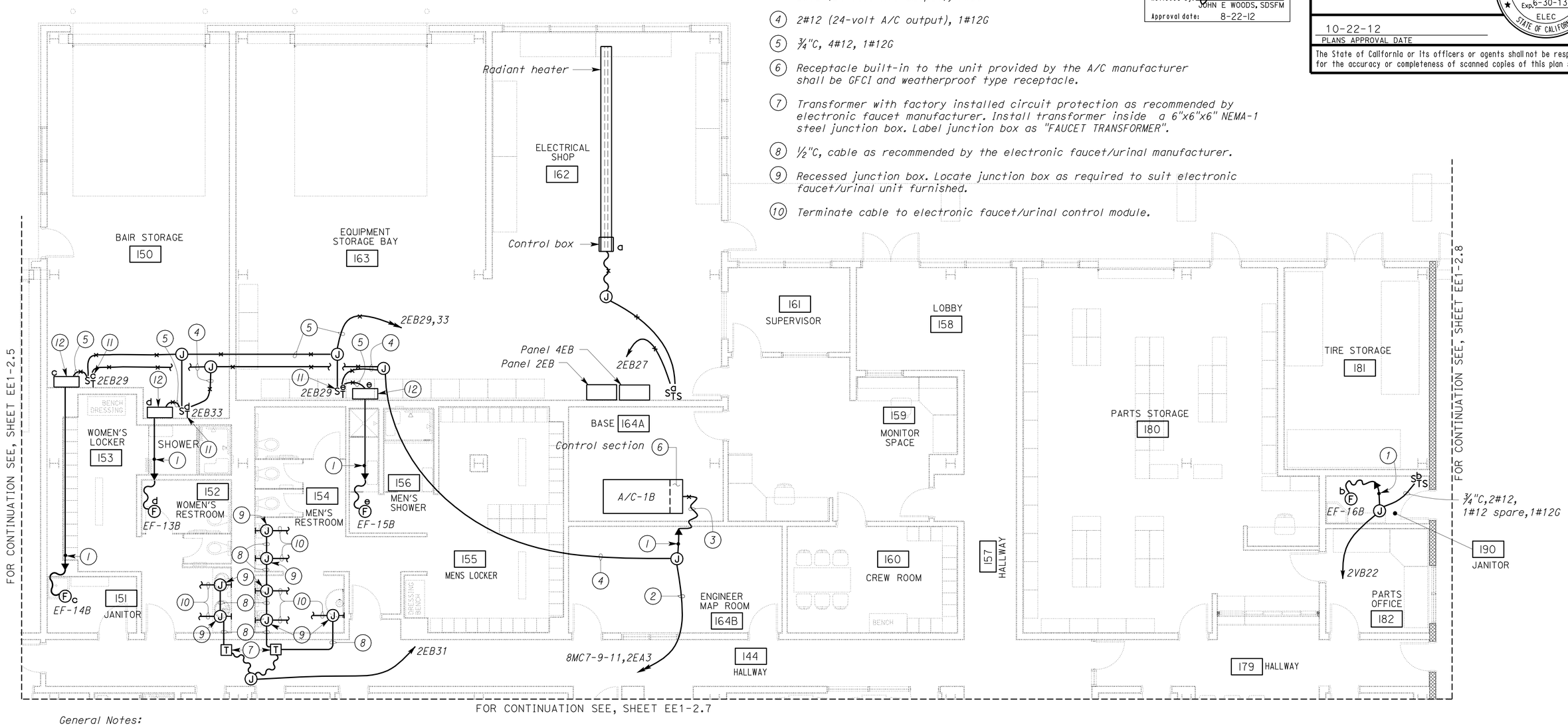

General Notes:

A. *For location of all switchboards and panelboards, see sheet EE1-1.1.*

B. *See Mechanical Plan sheets for HVAC control and system operation.*

C. *All low voltage wiring between 120/24 volt transformer and electronic faucet/urinal control module shall be installed in conduit system. All conductors/cables splicing and termination shall be contained inside a properly sized junction box.*

D. *Locations of exhaust fans, electronic faucets/urinals, and A/C unit as shown are arbitrary only. See Mechanical Plan sheets for exact locations of HVAC related devices. All cables and conductors shall be installed in conduit system.*

PLAN
SCALE 3/16" = 1'-0"

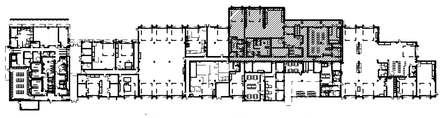

KEY PLAN

THIS DRAWING ACCURATE FOR ELECTRICAL WORK ONLY

	BY	CHECKED
DESIGN	Catalino Enriquez	J.S.S./H.Abdelsayed
DETAILS	Dali Zhou	Catalino Enriquez
QUANTITIES	Catalino Enriquez	J.S.S./H.Abdelsayed

STATE OF CALIFORNIA
DEPARTMENT OF TRANSPORTATION

DIVISION OF ENGINEERING SERVICES
ELECTRICAL-MECHANICAL-WATER AND WASTEWATER DESIGN

BRIDGE NO. 33M5785
POST MILE 2.2

SFOBB MAINTENANCE COMPLEX
BUILDING 1B
HVAC POWER PLAN 6

SHEET **EE1-2.6**

TAEMWW Imperial Rev. 7/10

ORIGINAL SCALE IN INCHES FOR REDUCED PLANS 0 1 2 3

UNIT 3596
PROJECT NUMBER & PHASE 04120006661
EA 014081

DISREGARD PRINTS BEARING EARLIER REVISION DATES → 1/13/12 5/30/12

REVISION DATES (PRELIMINARY STAGE ONLY) SHEET OF

25-OCT-2012 12:22
ee1_2.06.dgn

DIST.	COUNTY	ROUTE	POST MILES TOTAL PROJECT	SHEET NO.	TOTAL SHEETS
04	Ala	80	2.2	674	800

Catalino A. Enriquez 5-30-12
REGISTERED ELECTRICAL ENGINEER DATE

REGISTERED PROFESSIONAL ENGINEER C. ENRIQUEZ No. 16944 Exp. 6-30-13 ELEC STATE OF CALIFORNIA

10-22-12
PLANS APPROVAL DATE

The State of California or its officers or agents shall not be responsible for the accuracy or completeness of scanned copies of this plan sheet.

CALIFORNIA STATE FIRE MARSHAL APPROVED
Approval of this plan does not authorize or approve any omission or deviation from applicable regulations. Final approval is subject to field inspection. One set of approved plans shall be available on the project site at all times.
Reviewed by: JOHN E WOODS, SDSFM
Approval date: 8-22-12

General Notes:

A. For location of all switchboards and panelboards, see sheet EE1-1.1.

B. See Mechanical Plan sheets for HVAC control and system operation.

C. All low voltage wiring between 120/24 volt transformer and electronic faucet/urinal control module shall be installed in conduit system. All conductors/cables splicing and termination shall be contained inside a properly sized junction box.

D. Locations of exhaust fans, electronic faucets/urinals, and A/C unit as shown are arbitrary only. See Mechanical Plan sheets for exact locations of HVAC related devices. All cables and conductors shall be installed in conduit system.

Notes:

1. Locate junction box as required to suit water heater unit furnished.
2. ½"C, 2#12, 1#12G to water heater unit electronic ignition system.
3. ½"C, 2#12, 1#12G to hot water recirculation pump.
4. Transformer with factory installed circuit protection as recommended by electronic faucet manufacturer. Install transformer inside a 6"x6"x6" NEMA-1 steel junction box. Label junction box as "FAUCET TRANSFORMER".
5. ½"C, cable as recommended by the electronic faucet manufacturer
6. Recessed junction box. Locate junction box as required to suit electronic faucet unit furnished.
7. Terminate cable to electronic faucet/urinal control module.
8. A/C Indoor unit mounted on the wall. Power to this unit is supplied from the A/C Outdoor unit.
9. A/C Outdoor unit mounted on the roof.
10. Provide conduit flashing.
11. 1"C, 2#10 (A/C outdoor unit), 3#10 and control conductors as required (A/C indoor unit), 2#12 (receptacle),1#10G.
12. ¾"C, 3#10 and control conductors as required, 1#10G.
13. 1"C, 2#10 (A/C outdoor unit), 3#10 and control conductors as required (A/C indoor unit), 1#10G.

FOR CONTINUATION SEE, SHEET EE1-2.6

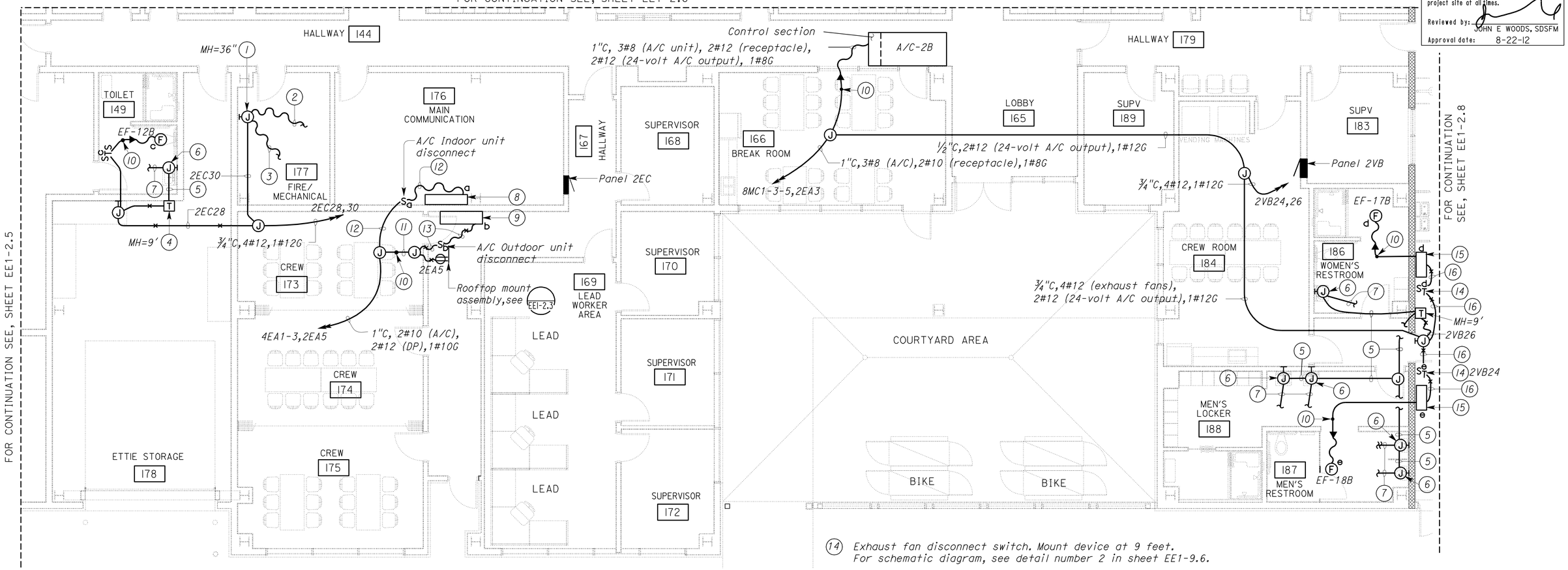

(14) Exhaust fan disconnect switch. Mount device at 9 feet. For schematic diagram, see detail number 2 in sheet EE1-9.6.

(15) Exhaust fan control panel. Mount device at 9 feet. For schematic diagram, see detail number 2 in sheet EE1-9.6.

(16) ¾"C,2#12 (exhaust fans),2#12 (24-volt A/C output),1#12G

PLAN
SCALE 3/16" = 1'-0"

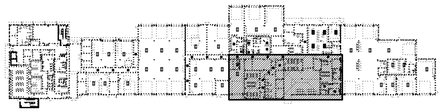

KEY PLAN
THIS DRAWING ACCURATE FOR ELECTRICAL WORK ONLY

	BY	CHECKED
DESIGN	Catalino Enriquez	J.S.S./H.Abdelsayed
DETAILS	Dali Zhou	Catalino Enriquez
QUANTITIES	Catalino Enriquez	J.S.S./H.Abdelsayed

STATE OF CALIFORNIA DEPARTMENT OF TRANSPORTATION

DIVISION OF ENGINEERING SERVICES
ELECTRICAL-MECHANICAL-WATER AND WASTEWATER DESIGN

BRIDGE NO. 33M5785
POST MILE 2.2

SFOBB MAINTENANCE COMPLEX
BUILDING 1B
HVAC POWER PLAN 7

SHEET **EE1-2.7**

TAEMWW Imperial Rev. 7/10

ORIGINAL SCALE IN INCHES FOR REDUCED PLANS 0 1 2 3

UNIT 3596
PROJECT NUMBER & PHASE 04120006661
EA 014081

DISREGARD PRINTS BEARING EARLIER REVISION DATES → 3/15/12 5/30/12

REVISION DATES (PRELIMINARY STAGE ONLY) SHEET OF

25-OCT-2012 12:22
ee1_2.07.dgn

DIST.	COUNTY	ROUTE	POST MILES TOTAL PROJECT	SHEET NO.	TOTAL SHEETS
04	Ala	80	2.2	675	800

Catalino A. Enriquez 5-30-12
REGISTERED ELECTRICAL ENGINEER DATE

REGISTERED PROFESSIONAL ENGINEER C. ENRIQUEZ No. 16944 Exp. 6-30-13 ELEC STATE OF CALIFORNIA

10-22-12
PLANS APPROVAL DATE

The State of California or its officers or agents shall not be responsible for the accuracy or completeness of scanned copies of this plan sheet.

CALIFORNIA STATE FIRE MARSHAL APPROVED
Approval of this plan does not authorize or approve any omission or deviation from applicable regulations. Final approval is subject to field inspection. One set of approved plans shall be available on the project site at all times.
Reviewed by: JOHN E WOODS, SDSFM
Approval date: 8-22-12

General Notes:

A. *For location of all panelboards and switchboards, see sheet EE1-1.1.*

B. *All low voltage wiring between 120/24 volt transformer and electronic faucet's control module shall be installed inside conduit system. All conductors/cables splicing and termination shall be contained inside a properly sized junction box.*

C. *Locations of exhaust fans, electronic faucets, HVAC systems, and radiant heaters as shown are arbitrary only. See Mechanical Plan sheets for exact locations of HVAC related devices. All cables and conductors shall be installed in conduit system.*

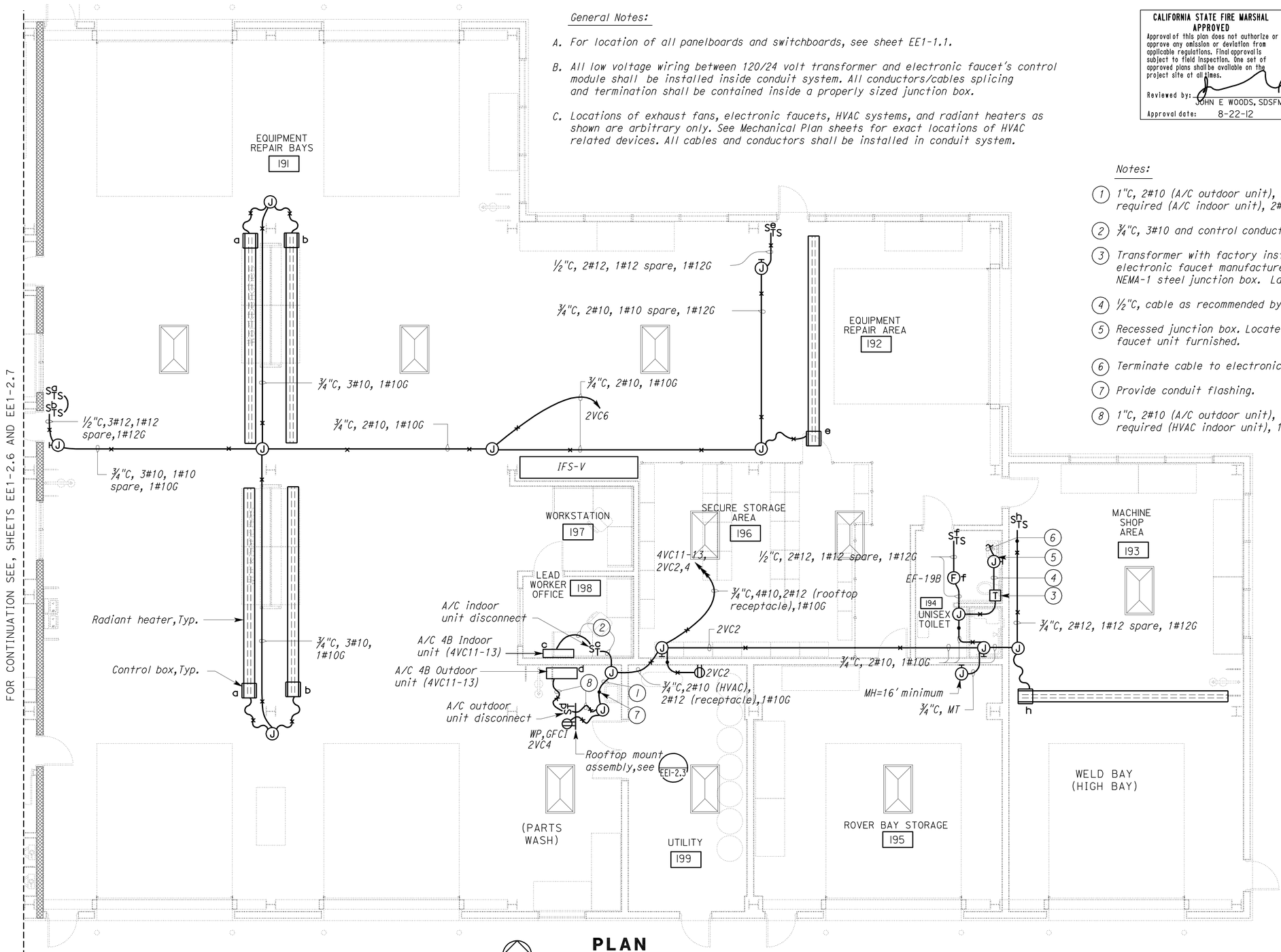

Notes:

1. *1"C, 2#10 (A/C outdoor unit), 3#10 and control conductors as required (A/C indoor unit), 2#12 (receptacle),1#10G.*
2. *¾"C, 3#10 and control conductors as required, 1#10G.*
3. *Transformer with factory installed circuit protection as recommended by electronic faucet manufacturer. Install transformer inside a 6"x6"x6" NEMA-1 steel junction box. Label junction box as "FAUCET TRANSFORMER".*
4. *½"C, cable as recommended by the electronic faucet manufacturer.*
5. *Recessed junction box. Locate junction box as required to suit electronic faucet unit furnished.*
6. *Terminate cable to electronic faucet's control module.*
7. *Provide conduit flashing.*
8. *1"C, 2#10 (A/C outdoor unit), 3#10 and control conductors as required (HVAC indoor unit), 1#10G.*

PLAN

SCALE 3/16" = 1'-0"

KEY PLAN

THIS DRAWING ACCURATE FOR ELECTRICAL WORK ONLY

	BY	CHECKED
DESIGN	Catalino Enriquez	J.S.S./H.Abdelsayed
DETAILS	Ed D. Tapalla/Dali Zhou	Catalino Enriquez
QUANTITIES	Catalino Enriquez	J.S.S./H.Abdelsayed

STATE OF CALIFORNIA
DEPARTMENT OF TRANSPORTATION

DIVISION OF ENGINEERING SERVICES
ELECTRICAL-MECHANICAL-WATER AND WASTEWATER DESIGN

BRIDGE NO. 33M5785
POST MILE 2.2

SFOBB MAINTENANCE COMPLEX
BUILDING B
HVAC POWER PLAN 8

SHEET **EE1-2.8**

TAEMWW Imperial Rev. 7/10

ORIGINAL SCALE IN INCHES FOR REDUCED PLANS 0 1 2 3

UNIT 3596
PROJECT NUMBER & PHASE 04120006661
EA 014081

DISREGARD PRINTS BEARING EARLIER REVISION DATES → 11/28/11 5/11/12 5/30/12

REVISION DATES (PRELIMINARY STAGE ONLY) SHEET OF

25-OCT-2012 12:22
ee1_2.08.dgn

DIST.	COUNTY	ROUTE	POST MILES TOTAL PROJECT	SHEET NO.	TOTAL SHEETS
04	Ala	80	2.2	676	800

Jaswinder S Gill 5-30-12
REGISTERED ELECTRICAL ENGINEER DATE

REGISTERED PROFESSIONAL ENGINEER J. S. GILL No. 18551 Exp. 12-31-12 ELEC STATE OF CALIFORNIA

10-22-12
PLANS APPROVAL DATE

The State of California or its officers or agents shall not be responsible for the accuracy or completeness of scanned copies of this plan sheet.

CALIFORNIA STATE FIRE MARSHAL APPROVED
Approval of this plan does not authorize or approve any omission or deviation from applicable regulations. Final approval is subject to field inspection. One set of approved plans shall be available on the project site at all times.
Reviewed by: JOHN E WOODS, SDSFM
Approval date: 8-22-12

General Notes (All Lighting Plans):

A. General lighting for each location is shown on 2 accompanying sheets designated as "Lighting Power Plan #" and "Lighting Control Plan #" where # represents the lighting plan number. For example, sheet EE1-3.1 is designated as "Lighting Power Plan 1 and the accompanying plan sheet EE1-3.2 is designated as "Lighting Control Plan 1". "Lighting Power Plan 1" shows the power (line voltage switching and low voltage dimming) from LCP to the lighting fixtures and "Lighting Control Plan 1" shows the low voltage lighting network controls and connections to lighting control devices.

B. "Lighting Control Plan #" includes a room identifier for identifying the LCP, LNP and the Hub port number associated with each room. For example, on sheet EE1-3.2 the identifier for room no. 125 shall be read as follow's:

Room Identifier:

ROOM NAME	
ROOM NUMBER	LIGHTING NETWORK PANEL, HUB PORT NUMBER
LCP NO. &	ZONE CONTROLLING THE LIGHTS FOR THE ROOM

C. Room identifier for rooms where the lighting control devices are directly connected to the LNP, will be as shown below. For example, on sheet EE1-3.4 the identifier for room no. 104 shall be read as follow's:

Room Identifier:

ROOM NAME	
ROOM NUMBER	LIGHTING NETWORK PANEL, HUB PORT NUMBER

D. For exact location of lighting fixtures, see Architectural Reflected Ceiling Plans.

E. For lighting control schematics, see sheets EE1-3.25, EE1-3.26 & EE1-3.27.

F. Control conductors occupying the same conduit/raceway as power conductors shall have the same insulation rating as the power conductors.

G. Exposed vertical ALC runs on the walls shall not be permitted below 10 feet. Use a conduit to protect the ALC for upto height of 10 feet from the finished floor.

H. Exact location of occupancy sensors shall be as recommended by the manufacturer.

I. For interior lighting fixtures schedule, see sheet EE1-3.28.

J. For exterior and outdoor lighting fixtures schedule, see sheet EE1-3.29.

K. Conduits, ALC and LC shown routed thru areas with finished ceiling system or furred walls shall be concealed. See the Architectural Plans.

L. Conductor numbers shown in the Notes includes symbols *** & **** before or after the alphanumeric characters. *** corresponds to the room number where the Lighting Control Panel (LCP), Lighting Control Panel Recessed (LCPR) & Building Exterior Lighting Control Panel (BELCP) is physically located. **** corresponds to the ungrounded phase conductors feeding the light fixtures. For example, Note 9 in Room 125 on sheet EE1-3.1 shall read as ¾"C, 2#12, 2#14 & 1#12G. Conductor numbers are 125S1A, N8AB4,125D1A & 125DC.

M. Lighting Control Panels (LCP) and Lighting Control Panels Recessed (LCPR) are distributed throughout the building to control the switching and dimming of lights within each room. LCP's with single zone controls, controls the switching and dimming of all the lights within that room only. LCP's and LCPR's with dual zone controls, controls the switching and dimming of two adjacent rooms.

N. LCP's and Lighting Disconnects (LD) in rooms with grid-tied ceiling systems are mounted above ceiling tiles inside the attic space at locations shown on the plans. Support LCP's and LD's as required on the structural I-Beams with beam clamps or on the walls as required. For locations, see sheet EE1-3.01 and lighting plans.

O. LCP's and Lighting Disconnects (LD) in rooms with exposed metal deck ceilings are mounted above doors or at locations shown on the plans. Surface mount LCP's and LD's on the wall above doors at mounting height of 10'-0" or as directed by the Engineer. For locations, see sheet EE1-3.01 and lighting plans.

P. Distributed LCP's and LCPR's are networked to the Lighting Network Panels (LNP) using the Lighting Control Cable (LC) or Armored Lighting Control Cable (ALC). LNP's are located inside the top section of the Integrated Facilities Switchboards (IFS). LNP's includes Hubs or Main Hubs for terminating the LC's and ALC's from the LCP's or from the LCPR's. See Lighting Control Plans for details. For locations of LNP's, see sheet EE1-3.01 and lighting plans.

Q. Lighting Power & Control Schedules lists each rooms individual power and control (switching & dimming) information.

R. Lighting Disconnects, for surface mounted LCP's and for LCP's above ceiling spaces shall be mounted at the same height and adjacent to the associated LCP. Use power distribution type terminal blocks inside lighting disconnects.

S. For exact location of building mounted exterior lighting fixtures, see Architectural Elevation Plans.

T. Underground conduits entering the building from outside and within the building shall be installed below the structural primary/intermediate grade beams. For location of structural primary/intermediate grade beams, underground conduits stub up, and penetration details through floor/beams, refer to Structural Plan sheets.

U. Install warning plates on all the LNP's integrated inside the IFS's with the following incription:

To de-energize the LNP, disconnect the ungrounded CB 1 from the lighting panel.

V. For IFS's details, see sheets EE1-9.07 to EE1-9.12.

Plan Notes (Applicable to Lighting Plan sheets EE1-3.1 to EE1-3.20 only):

1. Add 1#12 unswitched ungrounded circuit conductor. Conductor number is H****.
2. 1"C, 6#12, 5#14, 1#12G. Conductor numbers are H****, N****, ***S1A, ***S1B, ***S2C, ***S2D, ***D1A, ***D1B, ***D2C, ***D2D & ***DC.
3. 1"C, 7#12, 5#14, 1#12G. Conductor numbers are SH1, SH2, N****, ***S1A, ***S1B, ***S2C, ***S2D, ***D1A, ***D1B, ***D2C, ***D2D & ***DC.
4. ¾"C, 3#12, 3#14, 1#12G. Conductor numbers are N****, ***S2C, ***S2D, ***D2C, ***D2D & ***DC.
5. ¾"C, 2#12, 2#14, 1#12G. Conductor numbers are N****, ***S2C, ***D2C & ***DC.
6. ¾"C, 2#12, 2#14, 1#12G. Conductor numbers are N****, ***S2D, ***D2D & ***DC.
7. ¾"C, 3#12, 3#14, 1#12G. Conductor numbers are N****, ***S1A, ***S1B, ***D1A, ***D1B & ***DC.
8. ¾"C, 2#12, 2#14, 1#12G. Conductor numbers are ***S1B, N****, ***D1B & ***DC.
9. ¾"C, 2#12, 2#14, 1#12G. Conductor numbers are ***S1A, N****, ***D1A & ***DC.

	BY	CHECKED
DESIGN	Jaswinder Gill	Christine Mamaril
DETAILS	Dali Zhou	Jaswinder Gill
QUANTITIES	Jaswinder Gill	Christine Mamaril

STATE OF CALIFORNIA DEPARTMENT OF TRANSPORTATION

DIVISION OF ENGINEERING SERVICES
ELECTRICAL-MECHANICAL-WATER AND WASTEWATER DESIGN

BRIDGE NO. 33M5785
POST MILE 2.2

SFOBB MAINTENANCE COMPLEX
LIGHTING PLANS GENERAL NOTES

SHEET **EE1-3.00**

TAEMWW Imperial Rev. 7/10

ORIGINAL SCALE IN INCHES FOR REDUCED PLANS 0 1 2 3

UNIT 3596
PROJECT NUMBER & PHASE 04120006661
EA 014081

DISREGARD PRINTS BEARING EARLIER REVISION DATES →
REVISION DATES (PRELIMINARY STAGE ONLY) 1/18/12 3/23/12 5/14/12 5/30/12
SHEET OF

25-OCT-2012 12:22
ee1_3.000.dgn

DIST.	COUNTY	ROUTE	POST MILES TOTAL PROJECT	SHEET NO.	TOTAL SHEETS
04	Ala	80	2.2	677	800

Jaswinder S Gill 5-30-12
REGISTERED ELECTRICAL ENGINEER DATE

REGISTERED PROFESSIONAL ENGINEER J. S. GILL No. 18551 Exp. 12-31-12 ELEC STATE OF CALIFORNIA

10-22-12
PLANS APPROVAL DATE

The State of California or its officers or agents shall not be responsible for the accuracy or completeness of scanned copies of this plan sheet.

LIGHTING NETWORK DEVICE SCHEDULE

DEVICE ID	DEVICE NAME	ROOM NO.	ROOM NO. CONTROLLED	MOUNTING	PLAN REFERENCE
1	LCPI25	125	125	15	EE1-3.1
2	LCPI26	126	126, 217	15	EE1-3.1
3	LCPRI22	122	119, 122	16	EE1-3.1
4	LCPRI23	123	111, 123, 124	16	EE1-3.1
5	LCPRI21	121	110, 120, 121	16	EE1-3.1
6	LCPI02	102	100, 101, 102, 109	17	EE1-3.3
7	LCPI06	106	106, 107	17	EE1-3.3
8	LCPI08	108	108, 202	17	EE1-3.3
9	LCP2I0	210B	200, 210A, 210B,210C	17	EE1-3.5
10	LCP2I5	215	215	17	EE1-3.5
11	LCP2I4	214	214	17	EE1-3.5
12	LCPR2II	210B	211, 212	16	EE1-3.5
13	LCP20I	201	201	17	EE1-3.7
14	LCPI33	133	132, 133	18	EE1-3.9
15	LCPI34	134	134, 135	18	EE1-3.9
16	LCPI37	137	136, 137	18	EE1-3.9
17	LCPI42	142	142	18	EE1-3.11
18	LCPI43	142	143, 144	18	EE1-3.11
19	LCPI45	145	145, 146	18	EE1-3.11
20	LCPI47	147	147	18	EE1-3.11
21	LCPI78	178	165, 178, 179A	18	EE1-3.13
22	LCPI76	176	176	18	EE1-3.13
23	LCPI75	175	167, 173, 174, 175	15	EE1-3.13
24	LCPI69	169	169	15	EE1-3.13
25	LCPI50	150	150	18	EE1-3.15
26	LCPI62	162	162, 163	18	EE1-3.15
27	LCPI59	159	157, 158, 159	15	EE1-3.15
28	LCPI80	180	180, 181	18	EE1-3.15
29	LCPI9IA	191	179B, 184	18	EE1-3.13
30	LCPI9IB	191	186, 187, 188	18	EE1-3.13
31	LCPI9I	191	191	18	EE1-3.17
32	LCPI92	192	192, 193	18	EE1-3.17
33	LCPI95	195	195, 196	18	EE1-3.17
34	LCPRI53	153	152, 153	16	EE1-3.15
35	LCPRI55	155	154, 155	16	EE1-3.15

Notes:

1. 2"C, PVC, serial control cables from Power Monitoring Type 2 modules, as required.
2. See sheet EE1-3.2 for LNP-1A schematic.
3. See sheet EE1-3.8 for LNP-2A schematic.
4. See sheet EE1-3.10 for LNP-P schematic.
5. See sheet EE1-3.12 for LNP-B schematic.
6. See sheet EE1-3.14 for LNP-M schematic.
7. See sheet EE1-3.18 for LNP-V schematic.
8. See sheet EE1-3.16 for Lighting Network Control schematic.
9. 1"C, serial control cables from Power Monitoring Type 2 modules, as required.
10. Power Monitoring Gateway & Power Monitoring Network Switch.
11. Lighting Network Workstation.
12. Number adjacent to the symbol indicates Device ID. See Lighting Network Device Schedule on this sheet.
13. 1"C, serial control cables to Lighting Network Workstation for Interior Lighting Zone Power Monitoring, as required.
14. Not used.
15. Surface mount on a wall inside attic space above suspended ceiling tiles.
16. Recessed inside a metal stud wall.
17. Surface mount on a structural column inside attic space above ceiling tiles. Use beam clamps to support the panel.
18. Surface mount on a wall above the door.

General Notes:

A. For Lighting Power & Control Schedules, see sheets EE1-3.21 to EE1-3.24.

B. Armored Lighting Control Cables & Lighting Control Cables in between LNP's are also shown on Lighting Control Plans. They are shown here for clarity. See plan sheets for details.

C. Provide and install wall mounting bracket for Power Monitoring Gateway & Power Monitoring Network Switch. Install and secure devices on mounting bracket.

D. Conduit system for Exterior Lighting, PV Inverter & Site Power Monitoring is shown on sheets EE0-0.5 and EE1-4.7.

CALIFORNIA STATE FIRE MARSHAL APPROVED
Approval of this plan does not authorize or approve any omission or deviation from applicable regulations. Final approval is subject to field inspection. One set of approved plans shall be available on the project site at all times.
Reviewed by: JOHN E WOODS, SDSFM
Approval date: 8-22-12

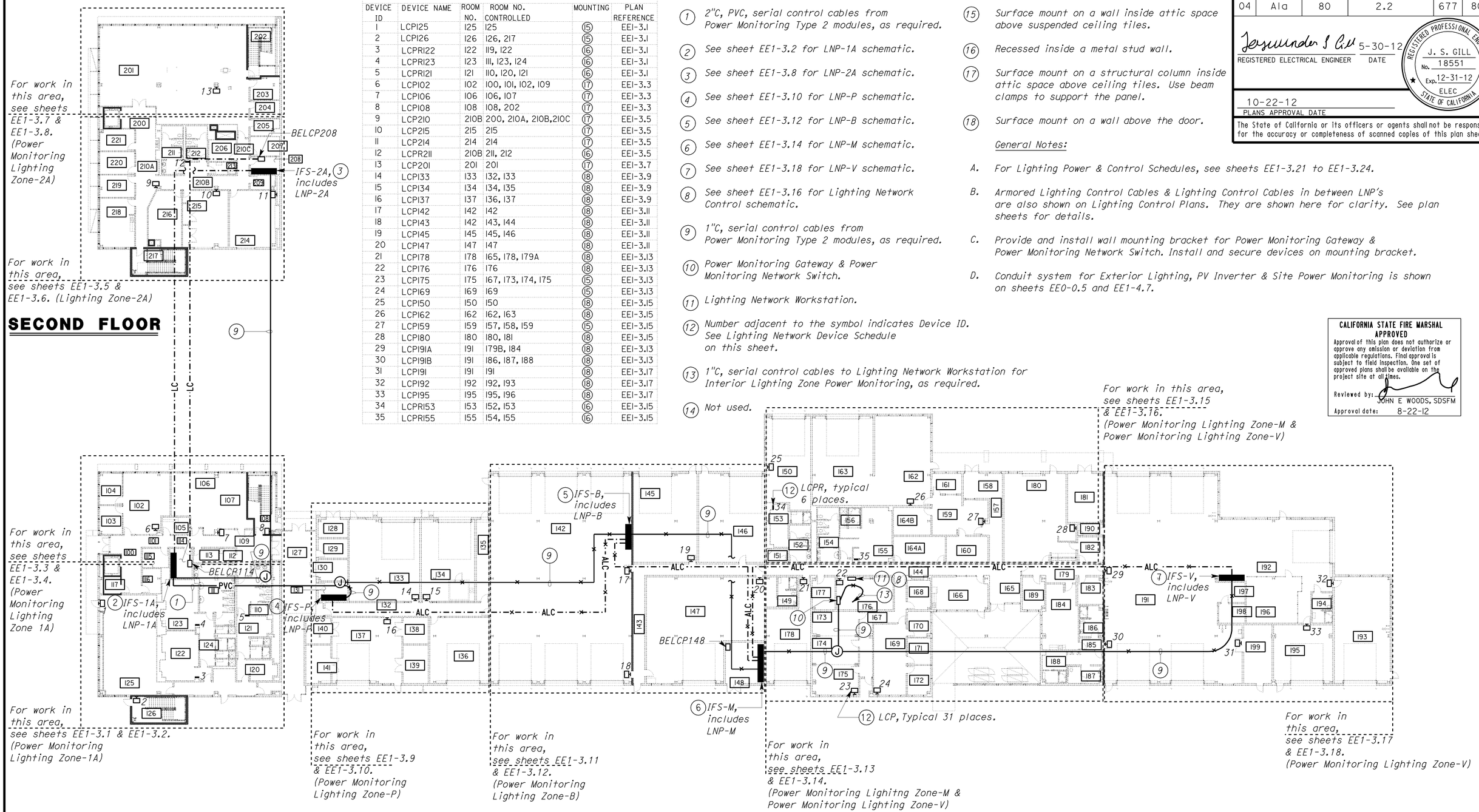

PLAN

SCALE 1" = 20'-0"

THIS DRAWING ACCURATE FOR ELECTRICAL WORK ONLY

	BY	CHECKED
DESIGN	Jaswinder Gill	Christine Mamaril
DETAILS	Dali Zhou	Jaswinder Gill
QUANTITIES	Jaswinder Gill	Christine Mamaril

STATE OF CALIFORNIA DEPARTMENT OF TRANSPORTATION

DIVISION OF ENGINEERING SERVICES
ELECTRICAL-MECHANICAL-WATER AND WASTEWATER DESIGN

BRIDGE NO. 33M5785
POST MILE 2.2

SFOBB MAINTENANCE COMPLEX
LIGHTING NETWORK KEY PLAN

SHEET EE1-3.01

TAEMWW Imperial Rev. 7/10

ORIGINAL SCALE IN INCHES FOR REDUCED PLANS 0 1 2 3

UNIT 3596
PROJECT NUMBER & PHASE 04120006661
EA 014081

DISREGARD PRINTS BEARING EARLIER REVISION DATES
REVISION DATES (PRELIMINARY STAGE ONLY) 1/9/12 3/23/12 5/4/12 5/30/12
SHEET OF

25-OCT-2012 12:23
ee1_3.001.dgn

DIST.	COUNTY	ROUTE	POST MILES TOTAL PROJECT	SHEET NO.	TOTAL SHEETS
04	Ala	80	2.2	678	800

Jaswinder S Gill 5-30-12
REGISTERED ELECTRICAL ENGINEER DATE

REGISTERED PROFESSIONAL ENGINEER J. S. GILL No. 18551 Exp. 12-31-12 ELEC STATE OF CALIFORNIA

10-22-12
PLANS APPROVAL DATE

The State of California or its officers or agents shall not be responsible for the accuracy or completeness of scanned copies of this plan sheet.

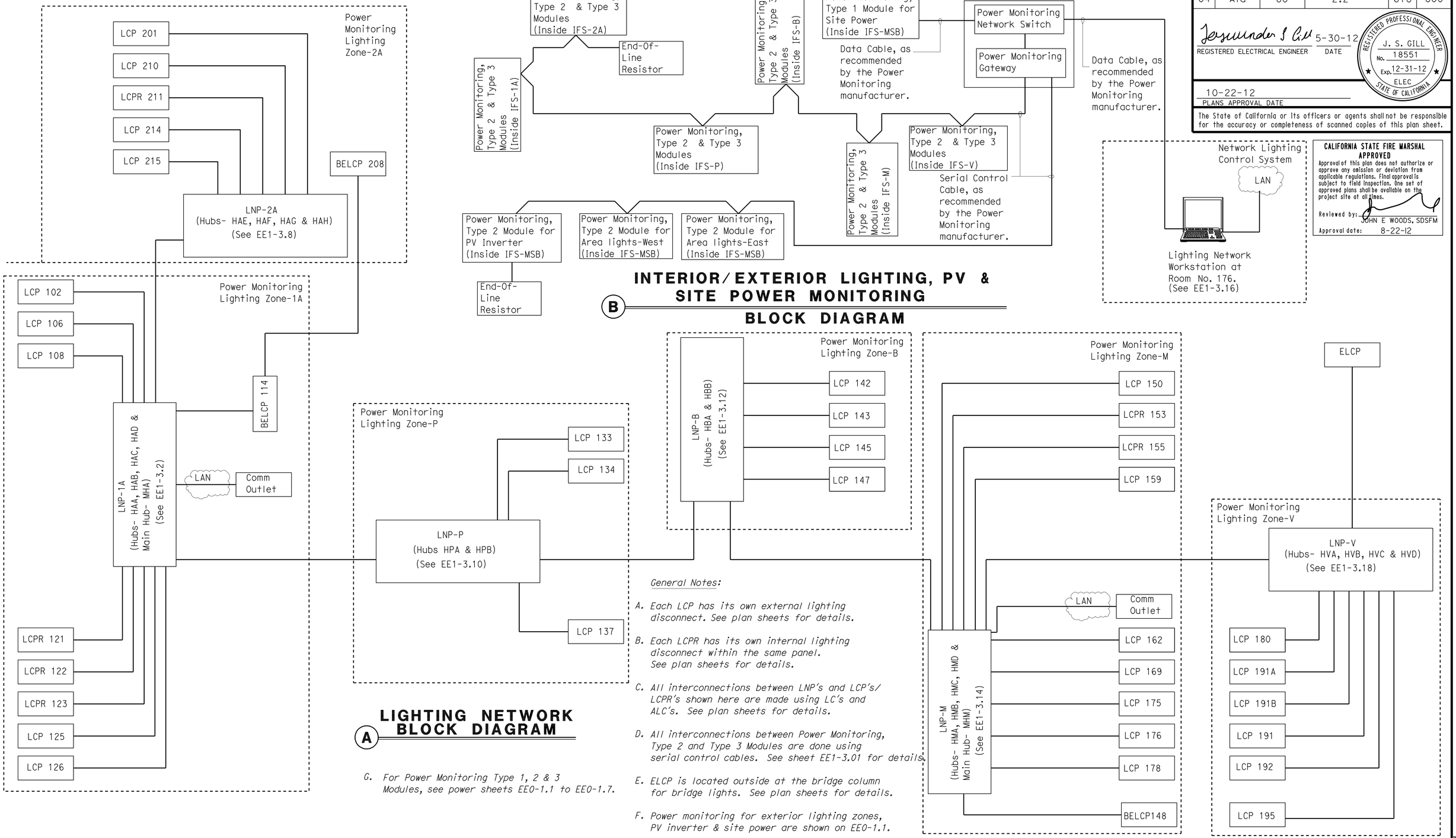

CALIFORNIA STATE FIRE MARSHAL APPROVED
Approval of this plan does not authorize or approve any omission or deviation from applicable regulations. Final approval is subject to field inspection. One set of approved plans shall be available on the project site at all times.
Reviewed by: JOHN E WOODS, SDSFM
Approval date: 8-22-12

(B) INTERIOR/EXTERIOR LIGHTING, PV & SITE POWER MONITORING BLOCK DIAGRAM

(A) LIGHTING NETWORK BLOCK DIAGRAM

General Notes:

A. *Each LCP has its own external lighting disconnect. See plan sheets for details.*

B. *Each LCPR has its own internal lighting disconnect within the same panel. See plan sheets for details.*

C. *All interconnections between LNP's and LCP's/ LCPR's shown here are made using LC's and ALC's. See plan sheets for details.*

D. *All interconnections between Power Monitoring, Type 2 and Type 3 Modules are done using serial control cables. See sheet EE1-3.01 for details.*

E. *ELCP is located outside at the bridge column for bridge lights. See plan sheets for details.*

F. *Power monitoring for exterior lighting zones, PV inverter & site power are shown on EE0-1.1.*

G. *For Power Monitoring Type 1, 2 & 3 Modules, see power sheets EE0-1.1 to EE0-1.7.*

	BY	CHECKED
DESIGN	Jaswinder Gill	Christine Mamaril
DETAILS	Ed D. Tapalla 4/12	Jaswinder Gill
QUANTITIES	Jaswinder Gill	Christine Mamaril

STATE OF CALIFORNIA DEPARTMENT OF TRANSPORTATION

DIVISION OF ENGINEERING SERVICES
ELECTRICAL-MECHANICAL-WATER AND WASTEWATER DESIGN

BRIDGE NO. 33M5785
POST MILE 2.2

SFOBB MAINTENANCE COMPLEX
LIGHTING NETWORK BLOCK DIAGRAM

SHEET **EE1-3.02**

TAEMWW Imperial Rev. 7/10

ORIGINAL SCALE IN INCHES FOR REDUCED PLANS 0 1 2 3

UNIT 3596
PROJECT NUMBER & PHASE 04120006661
EA 014081

DISREGARD PRINTS BEARING EARLIER REVISION DATES → 4/30/12 5/4/12 5/30/12

REVISION DATES (PRELIMINARY STAGE ONLY) SHEET OF

25-OCT-2012 12:23

ee1_3.002.dgn

DIST.	COUNTY	ROUTE	POST MILES TOTAL PROJECT	SHEET NO.	TOTAL SHEETS
04	Ala	80	2.2	679	800

CALIFORNIA STATE FIRE MARSHAL APPROVED

Approval of this plan does not authorize or approve any omission or deviation from applicable regulations. Final approval is subject to field inspection. One set of approved plans shall be available on the project site at all times.

Reviewed by: JOHN E WOODS, SDSFM

Approval date: 8-22-12

Jaswinder S Gill 5-30-12

REGISTERED ELECTRICAL ENGINEER — DATE

REGISTERED PROFESSIONAL ENGINEER — J. S. GILL — No. 18551 — Exp. 12-31-12 — ELEC — STATE OF CALIFORNIA

10-22-12

PLANS APPROVAL DATE

The State of California or its officers or agents shall not be responsible for the accuracy or completeness of scanned copies of this plan sheet.

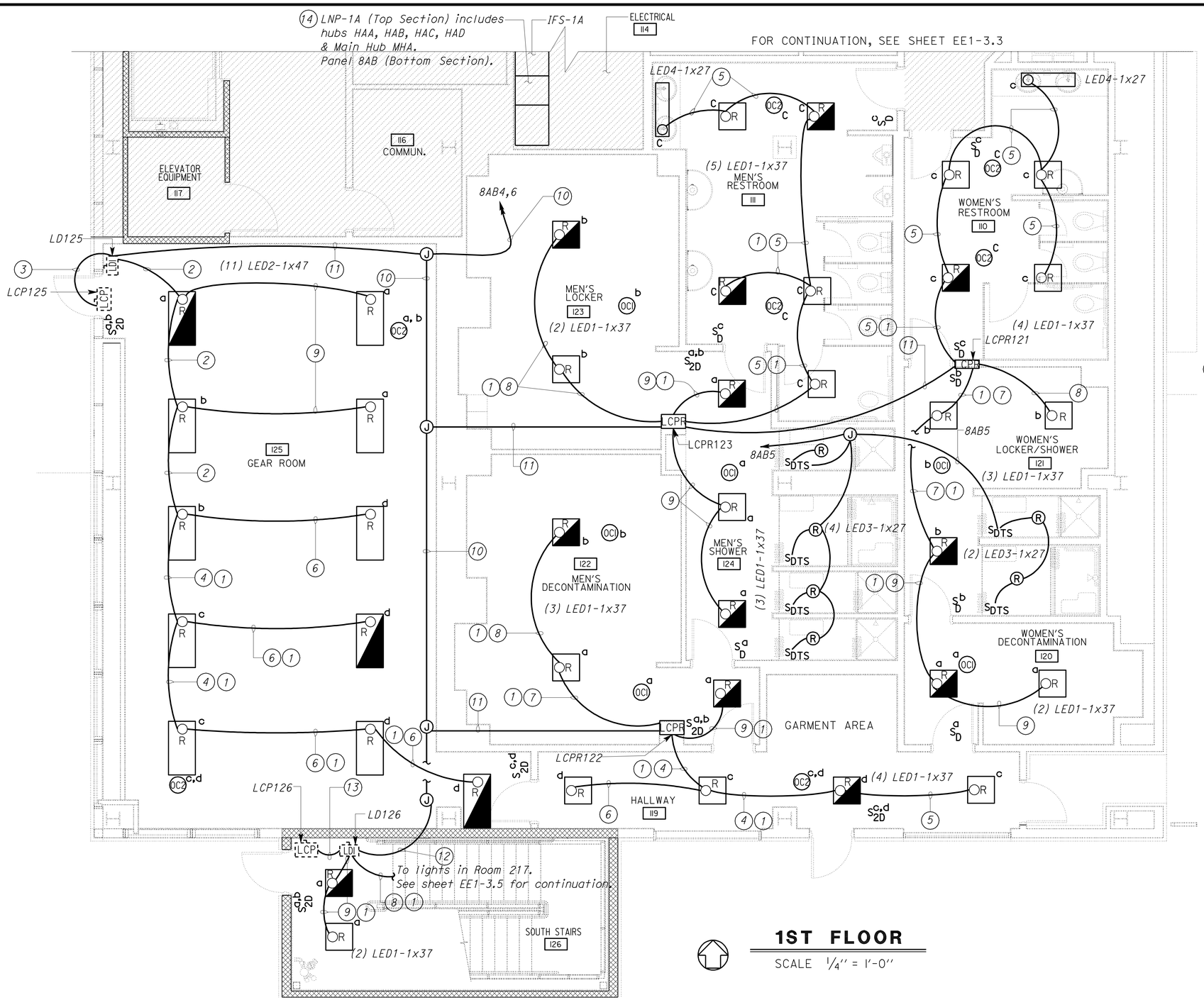

1ST FLOOR

SCALE 1/4" = 1'-0"

Notes:

(10) 3/4"C, 4#12, 1#12G. Conductor numbers are H8AB4, N8AB4, H8AB6 & N8AB6.

(11) 3/4"C, 2#12, 1#12G. Conductor numbers are H8AB4 & N8AB4.

(12) 3/4"C, 2#12, 1#12G. Conductor numbers are H8AB6 & N8AB6.

(13) 1"C, 4#12, 3#14, 1#12G. Conductor numbers are SH1, N****, ***S1A, ***S1B, ***D1A, ***D1B & ***DC.

(14) See sheet EE1-3.2 for LNP-1A schematic.

General Notes:

A. See sheet EE1-3.00 for plan notes 1 thru 9.

B. Low voltage Lighting Control Devices are shown here for reference only. See Lighting Control Plan 1 on sheet EE1-3.2 for details.

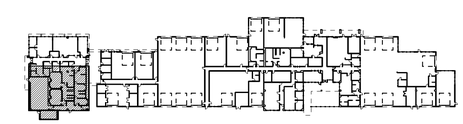

KEY PLAN

THIS DRAWING ACCURATE FOR ELECTRICAL WORK ONLY

	BY	CHECKED
DESIGN	Jaswinder Gill	Christine Mamaril
DETAILS	Ed D. Tapalla/Dali Zhou	Jaswinder Gill
QUANTITIES	Jaswinder Gill	Christine Mamaril

STATE OF CALIFORNIA DEPARTMENT OF TRANSPORTATION

DIVISION OF ENGINEERING SERVICES ELECTRICAL-MECHANICAL-WATER AND WASTEWATER DESIGN

BRIDGE NO. 33M5785 — POST MILE 2.2

SFOBB MAINTENANCE COMPLEX

BUILDING 1A — LIGHTING POWER PLAN 1

SHEET **EE1-3.1**

TAEMWW Imperial Rev. 7/10

ORIGINAL SCALE IN INCHES FOR REDUCED PLANS 0 1 2 3

UNIT 3596

PROJECT NUMBER & PHASE 04120006661

EA 014081

DISREGARD PRINTS BEARING EARLIER REVISION DATES → REVISION DATES (PRELIMINARY STAGE ONLY) 10/24/11 2/24/12 3/23/2012 5/4/12 5/30/12 — SHEET — OF

25-OCT-2012 12:23

ee1_3.01.dgn

DIST.	COUNTY	ROUTE	POST MILES TOTAL PROJECT	SHEET NO.	TOTAL SHEETS
04	Ala	80	2.2	680	800

REGISTERED ELECTRICAL ENGINEER — 5-30-12 DATE

REGISTERED PROFESSIONAL ENGINEER J. S. GILL No. 18551 Exp. 12-31-12 ELEC STATE OF CALIFORNIA

10-22-12
PLANS APPROVAL DATE

The State of California or its officers or agents shall not be responsible for the accuracy or completeness of scanned copies of this plan sheet.

CALIFORNIA STATE FIRE MARSHAL APPROVED
Approval of this plan does not authorize or approve any omission or deviation from applicable regulations. Final approval is subject to field inspection. One set of approved plans shall be available on the project site at all times.
Reviewed by: JOHN E WOODS, SDSFM
Approval date: 8-22-12

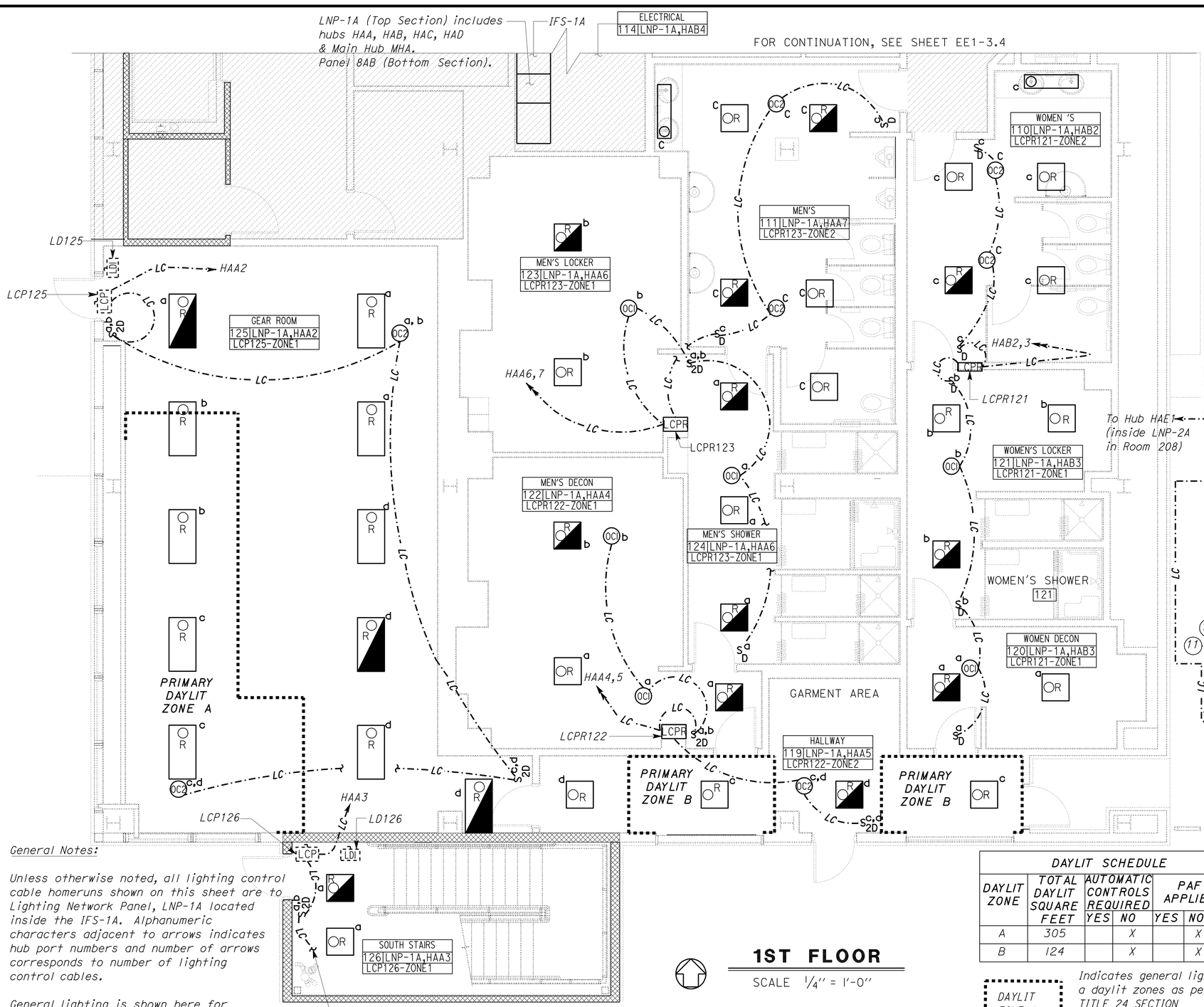

1ST FLOOR

SCALE 1/4" = 1'-0"

Notes:

(10) For continuation, see plan view.

(11) For continuation, see sheet EE1-3.4.

(12) Spare Hub ports for future.

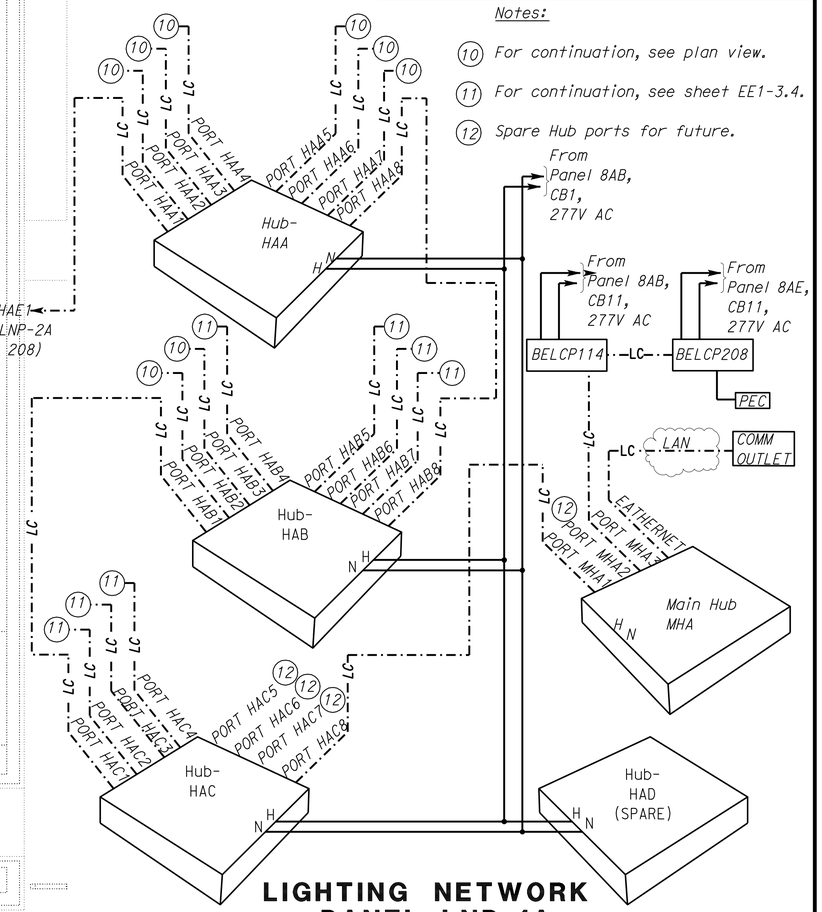

LIGHTING NETWORK PANEL LNP-1A SCHEMATIC

General Notes:

A. Unless otherwise noted, all lighting control cable homeruns shown on this sheet are to Lighting Network Panel, LNP-1A located inside the IFS-1A. Alphanumeric characters adjacent to arrows indicates hub port numbers and number of arrows corresponds to number of lighting control cables.

B. General lighting is shown here for reference only. See sheet EE1-3.1 for details.

DAYLIT SCHEDULE						
DAYLIT ZONE	TOTAL DAYLIT SQUARE FEET	AUTOMATIC CONTROLS REQUIRED		PAF APPLIED		DAYLIT CONTROL DEVICE
		YES	NO	YES	NO	
A	305		X		X	
B	124		X		X	

DAYLIT ZONE #

Indicates general lighting within a daylit zones as per TITLE 24 SECTION 131 (C) 2B. See Daylit Schedule for details.

KEY PLAN

THIS DRAWING ACCURATE FOR ELECTRICAL WORK ONLY

	BY	CHECKED
DESIGN	Jaswinder Gill	Christine Mamaril
DETAILS	Ed D. Tapalla/Dali Zhou	Jaswinder Gill
QUANTITIES	Jaswinder Gill	Christine Mamaril

STATE OF CALIFORNIA DEPARTMENT OF TRANSPORTATION

DIVISION OF ENGINEERING SERVICES ELECTRICAL-MECHANICAL-WATER AND WASTEWATER DESIGN

BRIDGE NO. 33M5785
POST MILE 2.2

SFOBB MAINTENANCE COMPLEX
BUILDING 1A — LIGHTING CONTROL PLAN 1

SHEET EE1-3.2

TAEMWW Imperial Rev. 7/10

ORIGINAL SCALE IN INCHES FOR REDUCED PLANS 0 1 2 3

UNIT 3596
PROJECT NUMBER & PHASE 04120006661
EA 014081

DISREGARD PRINTS BEARING EARLIER REVISION DATES → 10/19/11 2/29/12 3/23/2012 5/4/12 5/30/12

REVISION DATES (PRELIMINARY STAGE ONLY) SHEET OF

25-OCT-2012 12:23
ee1_3.02.dgn

DIST.	COUNTY	ROUTE	POST MILES TOTAL PROJECT	SHEET NO.	TOTAL SHEETS
04	Ala	80	2.2	681	800

CALIFORNIA STATE FIRE MARSHAL APPROVED

Approval of this plan does not authorize or approve any omission or deviation from applicable regulations. Final approval is subject to field inspection. One set of approved plans shall be available on the project site at all times.

Reviewed by: JOHN E WOODS, SDSFM

Approval date: 8-22-12

Jaswinder S Gill 5-30-12

REGISTERED ELECTRICAL ENGINEER — DATE

REGISTERED PROFESSIONAL ENGINEER — J. S. GILL — No. 18551 — Exp. 12-31-12 — ELEC — STATE OF CALIFORNIA

10-22-12

PLANS APPROVAL DATE

The State of California or its officers or agents shall not be responsible for the accuracy or completeness of scanned copies of this plan sheet.

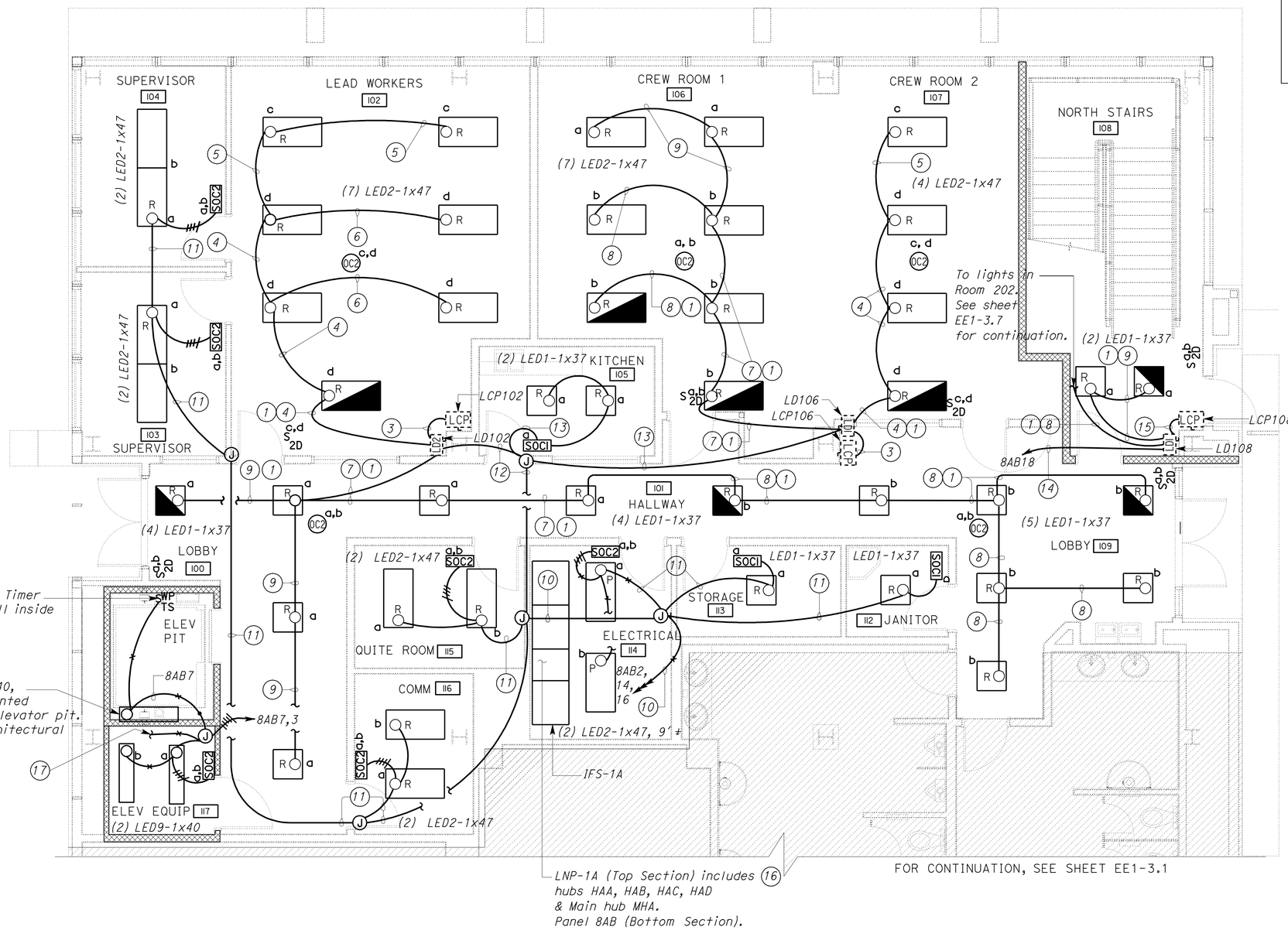

1ST FLOOR

SCALE 1/4" = 1'-0"

Notes:

(10) 1"C, 6#12, 1#12G. Conductor numbers are H8AB2, H8AB14, H8AB16, N8AB2, N8AB14 & N8AB16.

(11) 3/4"C, 2#12, 1#12G. Conductor numbers are H8AB2 & N8AB2.

(12) 3/4"C, 4#12, 1#12G. Conductor numbers are H8AB14, H8AB16, N8AB14 & N8AB16.

(13) 3/4"C, 2#12, 1#12G. Conductor numbers are H8AB16 & N8AB16.

(14) 3/4"C, 2#12, 1#12G. Conductor numbers are H8AB18 & N8AB18.

(15) 1"C, 4#12, 3#14, 1#12G. Conductor numbers are SH1, N***, ***S1A, ***S1B, ***D1A, ***D1B & ***DC.

(16) See sheet EE1-3.2 for LNP-1A schematics.

(17) 3/4'C, 2#12, 1#12G. Conductor numbers are H8AB3 & N8AB3 to the Elevator Cab Control Panel provided by the Elevator Cab manufacturer.

General Notes:

A. See sheet EE1-3.00 for plan notes 1 thru 9.

B. Low voltage Lighting Control Devices are shown here for reference only. See Lighting Control Plan 2 on sheet EE1-3.4 for details.

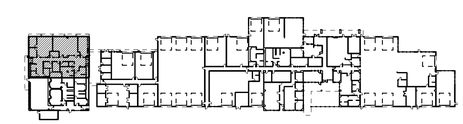

KEY PLAN

THIS DRAWING ACCURATE FOR ELECTRICAL WORK ONLY

	BY	CHECKED
DESIGN	Jaswinder Gill	Christine Mamaril
DETAILS	Ed D. Tapalla/Dali Zhou	Jaswinder Gill
QUANTITIES	Jaswinder Gill	Christine Mamaril

STATE OF CALIFORNIA DEPARTMENT OF TRANSPORTATION

DIVISION OF ENGINEERING SERVICES ELECTRICAL-MECHANICAL-WATER AND WASTEWATER DESIGN

BRIDGE NO. 33M5785 — POST MILE 2.2

SFOBB MAINTENANCE COMPLEX — BUILDING 1A — LIGHTING POWER PLAN 2

SHEET **EE1-3.3**

TAEMWW Imperial Rev. 7/10

ORIGINAL SCALE IN INCHES FOR REDUCED PLANS 0 1 2 3

UNIT 3596 — PROJECT NUMBER & PHASE 04120006661 — EA 014081

DISREGARD PRINTS BEARING EARLIER REVISION DATES → 10/24/11 2/28/12 3/23/12 5/4/12 5/30/12

REVISION DATES (PRELIMINARY STAGE ONLY) — SHEET — OF

25-OCT-2012 12:23

ee1_3.03.dgn

DIST.	COUNTY	ROUTE	POST MILES TOTAL PROJECT	SHEET NO.	TOTAL SHEETS
04	Ala	80	2.2	682	800

CALIFORNIA STATE FIRE MARSHAL APPROVED

Approval of this plan does not authorize or approve any omission or deviation from applicable regulations. Final approval is subject to field inspection. One set of approved plans shall be available on the project site at all times.

Reviewed by: JOHN E WOODS, SDSFM

Approval date: 8-22-12

Jaswinder S Gill 5-30-12

REGISTERED ELECTRICAL ENGINEER — DATE

REGISTERED PROFESSIONAL ENGINEER J. S. GILL No. 18551 Exp. 12-31-12 ELEC STATE OF CALIFORNIA

10-22-12

PLANS APPROVAL DATE

The State of California or its officers or agents shall not be responsible for the accuracy or completeness of scanned copies of this plan sheet.

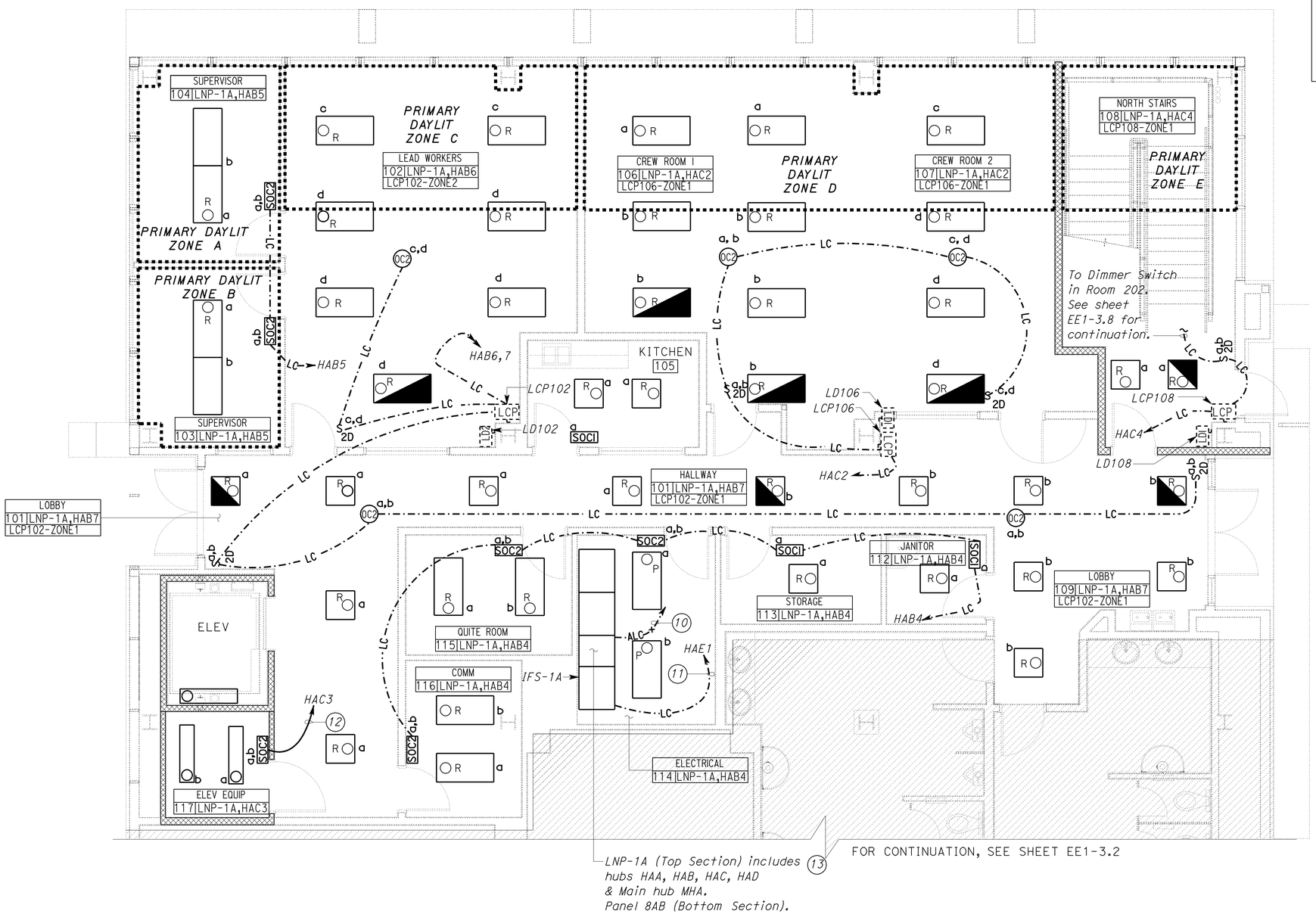

1ST FLOOR

SCALE 1/4" = 1'-0"

DAYLIT SCHEDULE						
DAYLIT ZONE	TOTAL DAYLIT SQUARE FEET	AUTOMATIC CONTROLS REQUIRED		PAF APPLIED		DAYLIT CONTROL DEVICE
		YES	NO	YES	NO	
A	120		X		X	
B	128		X		X	
C	200		X		X	
D	325		X		X	
E	120		X		X	

DAYLIT ZONE #

Indicates general lighting within a daylit zones as per TITLE 24 SECTION 131 (C) 2B. See Daylit Schedule for details.

General Notes:

A. Unless otherwise noted, all lighting control cable homeruns shown on this sheet are to Lighting Network Panel, LNP-1A located inside the IFS-1A. Alphanumeric characters adjacent to arrows indicates hub port numbers and number of arrows corresponds to number of lighting control cables.

B. General lighting is shown here for reference only. See sheet EE1-3.3 for details.

Notes:

(10) To communication Outlet on the North Wall of the Electrical Room. See sheet EE1-4.2 for location of communication outlet.

(11) Lighting Control Cable to hub HAE1 inside LNP-2A in Room 208. See sheet EE1-3.6.

(12) 3/4"C, one Lighting Control Cable.

(13) See sheet EE1-3.2 for LNP-1A schematic.

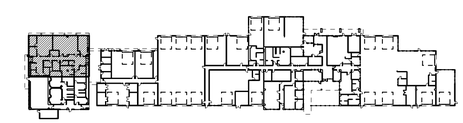

KEY PLAN

THIS DRAWING ACCURATE FOR ELECTRICAL WORK ONLY

	BY	CHECKED
DESIGN	Jaswinder Gill	Christine Mamaril
DETAILS	Ed D. Tapalla/Dali Zhou	Jaswinder Gill
QUANTITIES	Jaswinder Gill	Christine Mamaril

STATE OF CALIFORNIA DEPARTMENT OF TRANSPORTATION

DIVISION OF ENGINEERING SERVICES ELECTRICAL-MECHANICAL-WATER AND WASTEWATER DESIGN

BRIDGE NO. 33M5785

POST MILE 2.2

SFOBB MAINTENANCE COMPLEX

BUILDING 1A — LIGHTING CONTROL PLAN 2

SHEET EE1-3.4

TAEMWW Imperial Rev. 7/10

ORIGINAL SCALE IN INCHES FOR REDUCED PLANS 0 1 2 3

UNIT 3596

PROJECT NUMBER & PHASE 04120006661

EA 014081

DISREGARD PRINTS BEARING EARLIER REVISION DATES

REVISION DATES (PRELIMINARY STAGE ONLY) 10/14/11 2/24/12 3/23/12 5/4/12 5/30/12

SHEET OF

25-OCT-2012 12:23

ee1_3.04.dgn

DIST.	COUNTY	ROUTE	POST MILES TOTAL PROJECT	SHEET NO.	TOTAL SHEETS
04	Ala	80	2.2	683	800

Jaswinder S Gill 5-30-12
REGISTERED ELECTRICAL ENGINEER DATE

REGISTERED PROFESSIONAL ENGINEER J. S. GILL No. 18551 Exp. 12-31-12 ELEC STATE OF CALIFORNIA

10-22-12
PLANS APPROVAL DATE

The State of California or its officers or agents shall not be responsible for the accuracy or completeness of scanned copies of this plan sheet.

CALIFORNIA STATE FIRE MARSHAL APPROVED
Approval of this plan does not authorize or approve any omission or deviation from applicable regulations. Final approval is subject to field inspection. One set of approved plans shall be available on the project site at all times.
Reviewed by: JOHN E WOODS, SDSFM
Approval date: 8-22-12

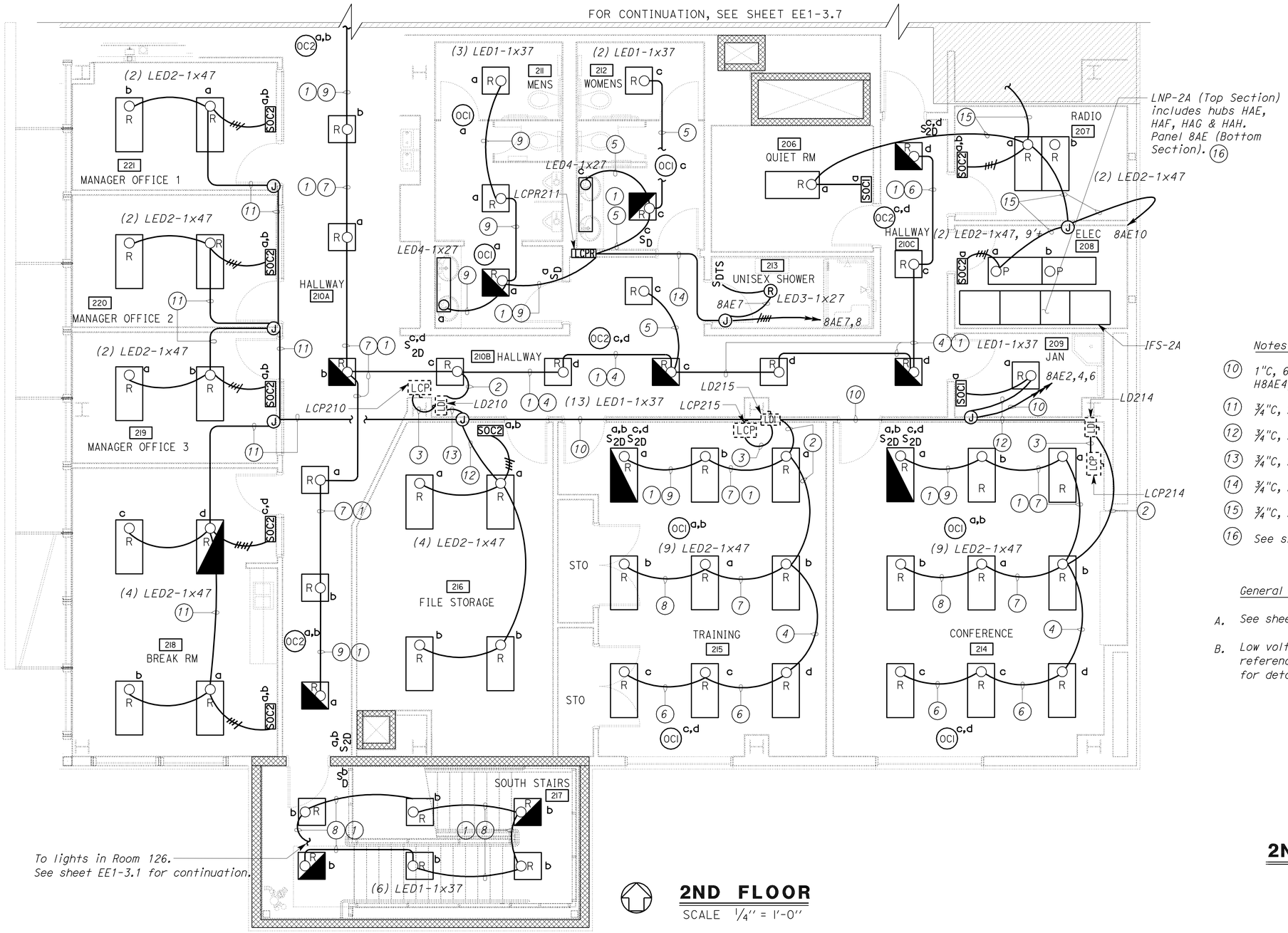

Notes:

(10) 1"C, 6#12, 1#12G. Conductor numbers are H8AE2, H8AE4, H8AE6, N8AE2, N8AD4 & N8AE6.

(11) 3/4"C, 2#12, 1#12G. Conductor numbers are H8AE2 & N8AE2.

(12) 3/4"C, 2#12, 1#12G. Conductor numbers are H8AE4 & N8AE4.

(13) 3/4"C, 2#12, 1#12G. Conductor numbers are H8AE6 & N8AE6.

(14) 3/4"C, 2#12, 1#12G. Conductor numbers are H8AE8 & N8AE8.

(15) 3/4"C, 2#12, 1#12G. Conductor numbers are H8AE10 & N8AE10.

(16) See sheet EE1-3.8 for LNP-2A schematic.

General Notes:

A. See sheet EE1-3.00 for plan notes 1 thru 9.

B. Low voltage Lighting Control Devices are shown here for reference only. See Lighting Control Plan 3 on sheet EE1-3.6 for details.

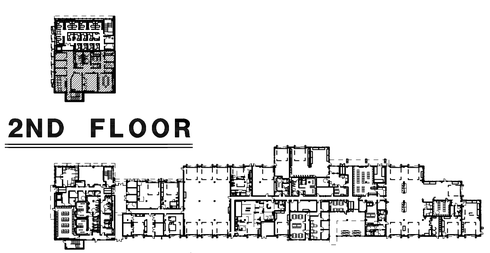

2ND FLOOR

KEY PLAN

THIS DRAWING ACCURATE FOR ELECTRICAL WORK ONLY

	BY	CHECKED
DESIGN	Jaswinder Gill	Christine Mamaril
DETAILS	Ed D. Tapalla/Dali Zhou	Jaswinder Gill
QUANTITIES	Jaswinder Gill	Christine Mamaril

STATE OF CALIFORNIA DEPARTMENT OF TRANSPORTATION

DIVISION OF ENGINEERING SERVICES
ELECTRICAL-MECHANICAL-WATER AND WASTEWATER DESIGN

BRIDGE NO. 33M5785
POST MILE 2.2

SFOBB MAINTENANCE COMPLEX
BUILDING 1A
LIGHTING POWER PLAN 3

SHEET **EE1-3.5**

ORIGINAL SCALE IN INCHES FOR REDUCED PLANS 0 1 2 3

UNIT 3596
PROJECT NUMBER & PHASE 04120006661
EA 014081

DISREGARD PRINTS BEARING EARLIER REVISION DATES
REVISION DATES (PRELIMINARY STAGE ONLY) 10/14/11 2/24/12 3/23/12 5/4/12 5/30/12
SHEET OF

TAEMWW Imperial Rev. 7/10

25-OCT-2012 12:24
ee1_3.05.dgn

DIST.	COUNTY	ROUTE	POST MILES TOTAL PROJECT	SHEET NO.	TOTAL SHEETS
04	Ala	80	2.2	684	800

Jaswinder S Gill 5-30-12
REGISTERED ELECTRICAL ENGINEER DATE

REGISTERED PROFESSIONAL ENGINEER J. S. GILL No. 18551 Exp. 12-31-12 ELEC STATE OF CALIFORNIA

10-22-12
PLANS APPROVAL DATE

The State of California or its officers or agents shall not be responsible for the accuracy or completeness of scanned copies of this plan sheet.

CALIFORNIA STATE FIRE MARSHAL APPROVED
Approval of this plan does not authorize or approve any omission or deviation from applicable regulations. Final approval is subject to field inspection. One set of approved plans shall be available on the project site at all times.
Reviewed by: JOHN E WOODS, SDSFM
Approval date: 8-22-12

FOR CONTINUATION, SEE SHEET EE1-3.8

2ND FLOOR
SCALE 1/4" = 1'-0"

DAYLIT ZONE # — Indicates general lighting within a daylit zones as per TITLE 24 SECTION 131 (C) 2B. See Daylit Schedule for details.

DAYLIT SCHEDULE

DAYLIT ZONE	TOTAL DAYLIT SQUARE FEET	AUTOMATIC CONTROLS REQUIRED YES	AUTOMATIC CONTROLS REQUIRED NO	PAF APPLIED YES	PAF APPLIED NO	DAYLIT CONTROL DEVICE
A	232		X		X	
B	80		X		X	
C	80		X		X	
D	70		X		X	
E	107		X		X	
F	100		X		X	

General Notes:

A. Unless otherwise noted, all lighting control cable homeruns shown on this sheet are to Lighting Network Panel, LNP-2A located inside the IFS-2A. Alphanumeric characters adjacent to arrows indicates hub port numbers and number of arrows corresponds to number of lighting control cables.

B. General lighting is shown here for reference only. See sheet EE1-3.5 for details.

Notes:

(10) Lighting Control Cable to hub HAA1 inside LNP-1A in Room 114. See note 11 on sheet EE1-3.4.

(11) See sheet EE1-3.8 for LNP-2A schematic.

2ND FLOOR

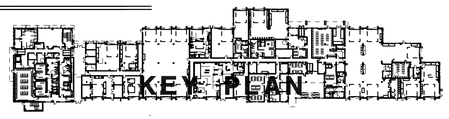

KEY PLAN

THIS DRAWING ACCURATE FOR ELECTRICAL WORK ONLY

	BY	CHECKED
DESIGN	Jaswinder Gill	Christine Mamaril
DETAILS	Ed D. Tapalla/Dali Zhou	Jaswinder Gill
QUANTITIES	Jaswinder Gill	Christine Mamaril

STATE OF CALIFORNIA
DEPARTMENT OF TRANSPORTATION

DIVISION OF ENGINEERING SERVICES
ELECTRICAL-MECHANICAL-WATER AND WASTEWATER DESIGN

BRIDGE NO. 33M5785
POST MILE 2.2

SFOBB MAINTENANCE COMPLEX
BUILDING 1A — LIGHTING CONTROL PLAN 3

SHEET **EE1-3.6**

TAEMWW Imperial Rev. 7/10

ORIGINAL SCALE IN INCHES FOR REDUCED PLANS 0 1 2 3

UNIT 3596
PROJECT NUMBER & PHASE 04120006661
EA 014081

DISREGARD PRINTS BEARING EARLIER REVISION DATES
REVISION DATES (PRELIMINARY STAGE ONLY) 10/19/11 2/24/12 3/23/12 5/4/12 5/30/12
SHEET OF

25-OCT-2012 12:24
ee1_3.06.dgn

DIST.	COUNTY	ROUTE	POST MILES TOTAL PROJECT	SHEET NO.	TOTAL SHEETS
04	Ala	80	2.2	685	800

Jaswinder S Gill 5-30-12
REGISTERED ELECTRICAL ENGINEER DATE

REGISTERED PROFESSIONAL ENGINEER J. S. GILL No. 18551 Exp. 12-31-12 ELEC STATE OF CALIFORNIA

10-22-12
PLANS APPROVAL DATE

The State of California or its officers or agents shall not be responsible for the accuracy or completeness of scanned copies of this plan sheet.

CALIFORNIA STATE FIRE MARSHAL APPROVED
Approval of this plan does not authorize or approve any omission or deviation from applicable regulations. Final approval is subject to field inspection. One set of approved plans shall be available on the project site at all times.
Reviewed by: JOHN E WOODS, SDSFM
Approval date: 8-22-12

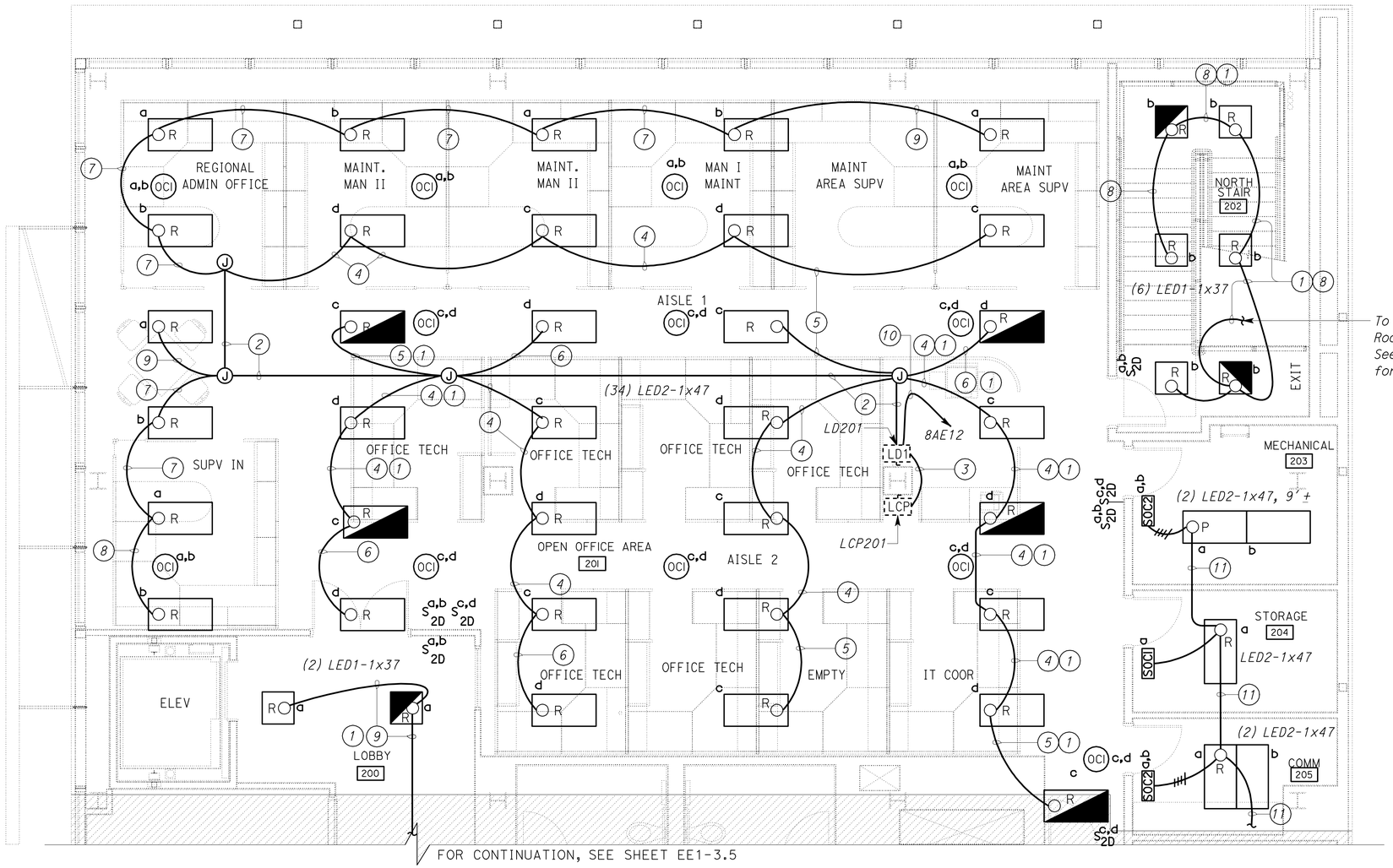

2ND FLOOR

SCALE 1/4" = 1'-0"

General Notes:

A. *Unless otherwise noted, all power homeruns shown on this sheet are to Panelboard 8AE located inside the IFS-2A at Room No. 208. See sheet EE1-3.5 for IFS-2A location.*

B. *See sheet EE1-3.00 for plan Notes 1 thru 9.*

C. *Low Voltage Lighting Control Devices are show here for reference only. See Lighting Control Plan 4 on sheet EE1-3.8 for details.*

Notes:

(10) *¾"C, 2#12, 1#12G. Conductor numbers are H8AE12, & N8AE12.*

(11) *¾"C, 2#12, 1#12G. Conductor numbers are H8AE10 & N8AE10*

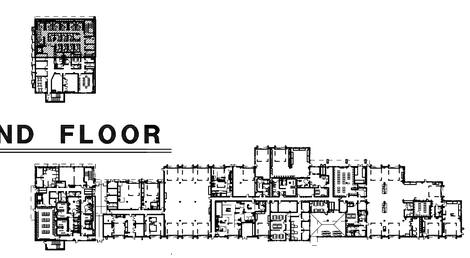

2ND FLOOR

KEY PLAN

THIS DRAWING ACCURATE FOR ELECTRICAL WORK ONLY

	BY	CHECKED
DESIGN	Jaswinder Gill	Christine Mamaril
DETAILS	Ed D. Tapalla/Dali Zhou	Jaswinder Gill
QUANTITIES	Jaswinder Gill	Christine Mamaril

STATE OF CALIFORNIA DEPARTMENT OF TRANSPORTATION

DIVISION OF ENGINEERING SERVICES
ELECTRICAL-MECHANICAL-WATER AND WASTEWATER DESIGN

BRIDGE NO. 33M5785
POST MILE 2.2

SFOBB MAINTENANCE COMPLEX
BUILDING 1A
LIGHTING POWER PLAN 4

SHEET **EE1-3.7**

TAEMWW Imperial Rev. 7/10

ORIGINAL SCALE IN INCHES FOR REDUCED PLANS 0 1 2 3

UNIT 3596
PROJECT NUMBER & PHASE 04120006661
EA 014081

DISREGARD PRINTS BEARING EARLIER REVISION DATES →
REVISION DATES (PRELIMINARY STAGE ONLY) 10/14/11 2/28/12 3/23/12 5/4/12 5/30/12
SHEET OF

25-OCT-2012 12:24
ee1_3.07.dgn

DIST.	COUNTY	ROUTE	POST MILES TOTAL PROJECT	SHEET NO.	TOTAL SHEETS
04	Ala	80	2.2	686	800

Jaswinder S Gill 5-30-12
REGISTERED ELECTRICAL ENGINEER DATE

REGISTERED PROFESSIONAL ENGINEER J. S. GILL No. 18551 Exp. 12-31-12 ELEC STATE OF CALIFORNIA

10-22-12
PLANS APPROVAL DATE

The State of California or its officers or agents shall not be responsible for the accuracy or completeness of scanned copies of this plan sheet.

CALIFORNIA STATE FIRE MARSHAL APPROVED
Approval of this plan does not authorize or approve any omission or deviation from applicable regulations. Final approval is subject to field inspection. One set of approved plans shall be available on the project site at all times.
Reviewed by: JOHN E WOODS, SDSFM
Approval date: 8-22-12

APPROVAL DEFERRED TO SUBMITTAL

LIGHTING NETWORK PANEL LNP-2A SCHEMATIC (10)

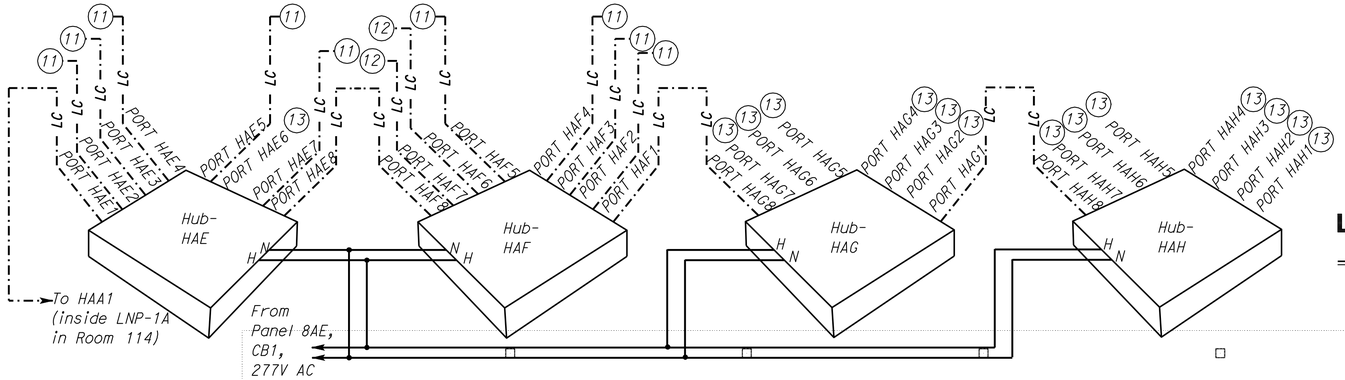

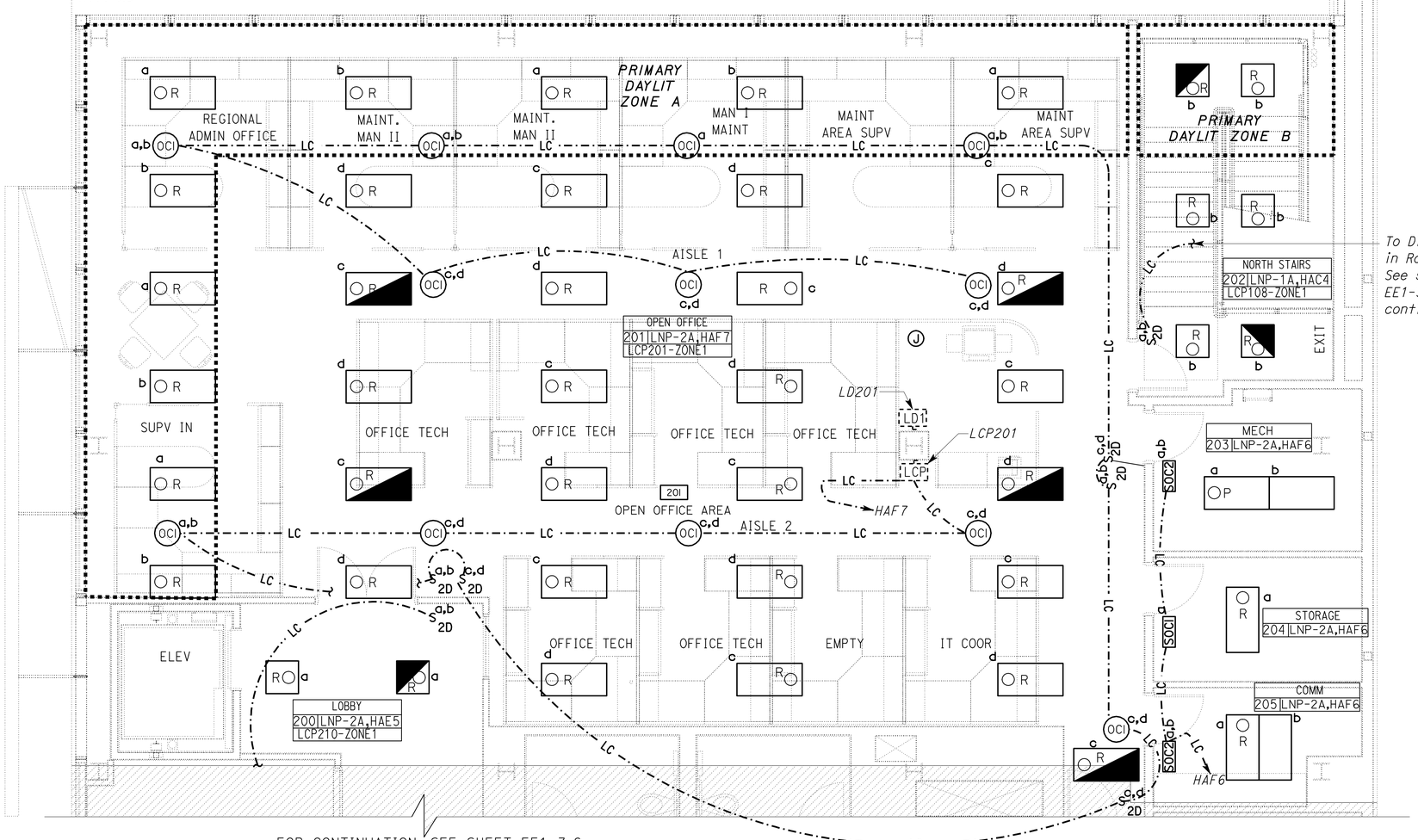

FOR CONTINUATION, SEE SHEET EE1-3.6

2ND FLOOR

SCALE 1/4" = 1'-0"

General Note:

A. *Unless otherwise noted, all lighting control cable homeruns shown on this sheet are to Lighting Control Network Panel, LNP-2A located inside the IFS-2A. Alphanumeric characters adjacent to arrows indicates hub port numbers and number of arrows corresponds to number of lighting control cables.*

B. *General lighting is show here for reference only. See sheet EE1-3.7 for details.*

Notes:

(10) *See sheet EE1-3.5 for LNP-2A location.*

(11) *For continuation, see sheet EE1-3.6.*

(12) *For continuation, see plan view.*

(13) *Spare hub ports for future.*

DAYLIT ZONE # — *Indicates general lighting within a daylit zones as per TITLE 24 SECTION 131 (C) 2B. See Daylit Schedule for details.*

DAYLIT SCHEDULE						
DAYLIT ZONE	TOTAL DAYLIT SQUARE FEET	AUTOMATIC CONTROLS REQUIRED		PAF APPLIED		DAYLIT CONTROL DEVICE
		YES	NO	YES	NO	
A	724		X		X	
B	100		X		X	

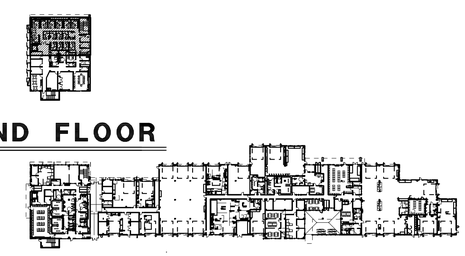

2ND FLOOR

KEY PLAN

THIS DRAWING ACCURATE FOR ELECTRICAL WORK ONLY

	BY	CHECKED
DESIGN	Jaswinder Gill	Christine Mamaril
DETAILS	Ed D. Tapalla/Dali Zhou	Jaswinder Gill
QUANTITIES	Jaswinder Gill	Christine Mamaril

STATE OF CALIFORNIA DEPARTMENT OF TRANSPORTATION

DIVISION OF ENGINEERING SERVICES
ELECTRICAL-MECHANICAL-WATER AND WASTEWATER DESIGN

BRIDGE NO. 33M5785
POST MILE 2.2

SFOBB MAINTENANCE COMPLEX
BUILDING 1A — LIGHTING CONTROL PLAN 4

SHEET **EE1-3.8**

TAEMWW Imperial Rev. 7/10

ORIGINAL SCALE IN INCHES FOR REDUCED PLANS 0 1 2 3

UNIT 3596
PROJECT NUMBER & PHASE 04120006661
EA 014081

DISREGARD PRINTS BEARING EARLIER REVISION DATES → 10/19/11 2/28/12 3/23/12 5/4/12 5/30/12

REVISION DATES (PRELIMINARY STAGE ONLY) SHEET OF

25-OCT-2012 12:24
ee1_3.08.dgn

DIST.	COUNTY	ROUTE	POST MILES TOTAL PROJECT	SHEET NO.	TOTAL SHEETS
04	Ala	80	2.2	687	800

CALIFORNIA STATE FIRE MARSHAL APPROVED

Approval of this plan does not authorize or approve any omission or deviation from applicable regulations. Final approval is subject to field inspection. One set of approved plans shall be available on the project site at all times.

Reviewed by: JOHN E WOODS, SDSFM

Approval date: 8-22-12

Jaswinder S Gill 5-30-12

REGISTERED ELECTRICAL ENGINEER — DATE

REGISTERED PROFESSIONAL ENGINEER — J. S. GILL — No. 18551 — Exp. 12-31-12 — ELEC — STATE OF CALIFORNIA

10-22-12

PLANS APPROVAL DATE

The State of California or its officers or agents shall not be responsible for the accuracy or completeness of scanned copies of this plan sheet.

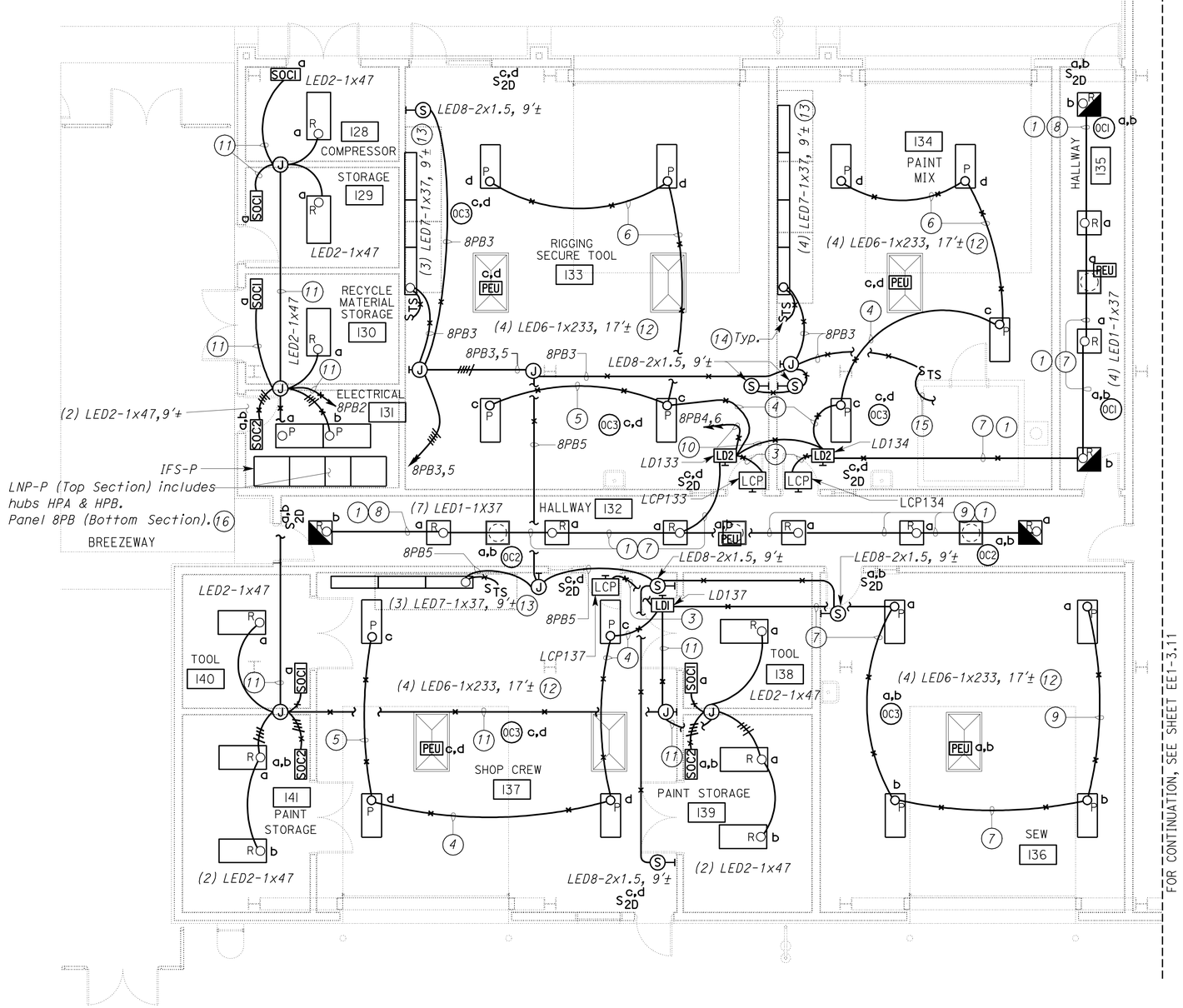

PLAN

SCALE 3/16" = 1'-0"

General Notes:

A. *See sheet EE1-3.00 for plan notes 1 thru 9.*

B. *Low voltage Lighting Control Devices are shown here for reference only. See Lighting Control Plan 5 on sheet EE1-3.10 for details.*

Notes:

(10) *¾"C, 4#12, 1#12G. Conductor numbers are H8PB4, H8PB6, N8PB4 & N8PB6.*

(11) *¾"C, 2#12, 1#12G. Conductor numbers are H8PB2 & N8PB2.*

(12) *For fixture mounting details in spaces shared along with low density radiant heaters, see sheet EE1-3.30 & Mechanical plans.*

(13) *Wall mounted task lighting for work benches. See Detail 1 on sheet EE1-3.30.*

(14) *Workbench lights timer switch. Mount 6 inches above workbench.*

(15) *To Paint mix Booth Lights.*

(16) *See sheet EE1-3.10 for LNP-P schematic.*

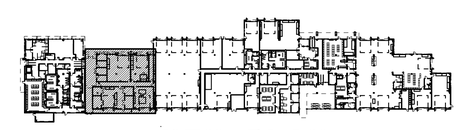

KEY PLAN

THIS DRAWING ACCURATE FOR ELECTRICAL WORK ONLY

	BY	CHECKED
DESIGN	Jaswinder Gill	Christine Mamaril
DETAILS	Ed D. Tapalla/Dali Zhou	Jaswinder Gill
QUANTITIES	Jaswinder Gill	Christine Mamaril

STATE OF CALIFORNIA DEPARTMENT OF TRANSPORTATION

DIVISION OF ENGINEERING SERVICES ELECTRICAL-MECHANICAL-WATER AND WASTEWATER DESIGN

BRIDGE NO. 33M5785 — POST MILE 2.2

SFOBB MAINTENANCE COMPLEX — BUILDING 1B — LIGHTING POWER PLAN 5

SHEET **EE1-3.9**

TAEMWW Imperial Rev. 7/10

ORIGINAL SCALE IN INCHES FOR REDUCED PLANS 0 1 2 3

UNIT 3596 — PROJECT NUMBER & PHASE 04120006661 — EA 014081

DISREGARD PRINTS BEARING EARLIER REVISION DATES → REVISION DATES (PRELIMINARY STAGE ONLY) 11/29/11 01/29/12 3/23/12 5/4/12 5/30/12 — SHEET OF

25-OCT-2012 12:25

ee1_3.09.dgn

DIST.	COUNTY	ROUTE	POST MILES TOTAL PROJECT	SHEET NO.	TOTAL SHEETS
04	Ala	80	2.2	688	800

Jaswinder S Gill 5-30-12
REGISTERED ELECTRICAL ENGINEER DATE

REGISTERED PROFESSIONAL ENGINEER J. S. GILL No. 18551 Exp. 12-31-12 ELEC STATE OF CALIFORNIA

10-22-12
PLANS APPROVAL DATE

The State of California or its officers or agents shall not be responsible for the accuracy or completeness of scanned copies of this plan sheet.

CALIFORNIA STATE FIRE MARSHAL APPROVED
Approval of this plan does not authorize or approve any omission or deviation from applicable regulations. Final approval is subject to field inspection. One set of approved plans shall be available on the project site at all times.
Reviewed by: JOHN E WOODS, SDSFM
Approval date: 8-22-12

Note:

(10) See plan view for continuation.

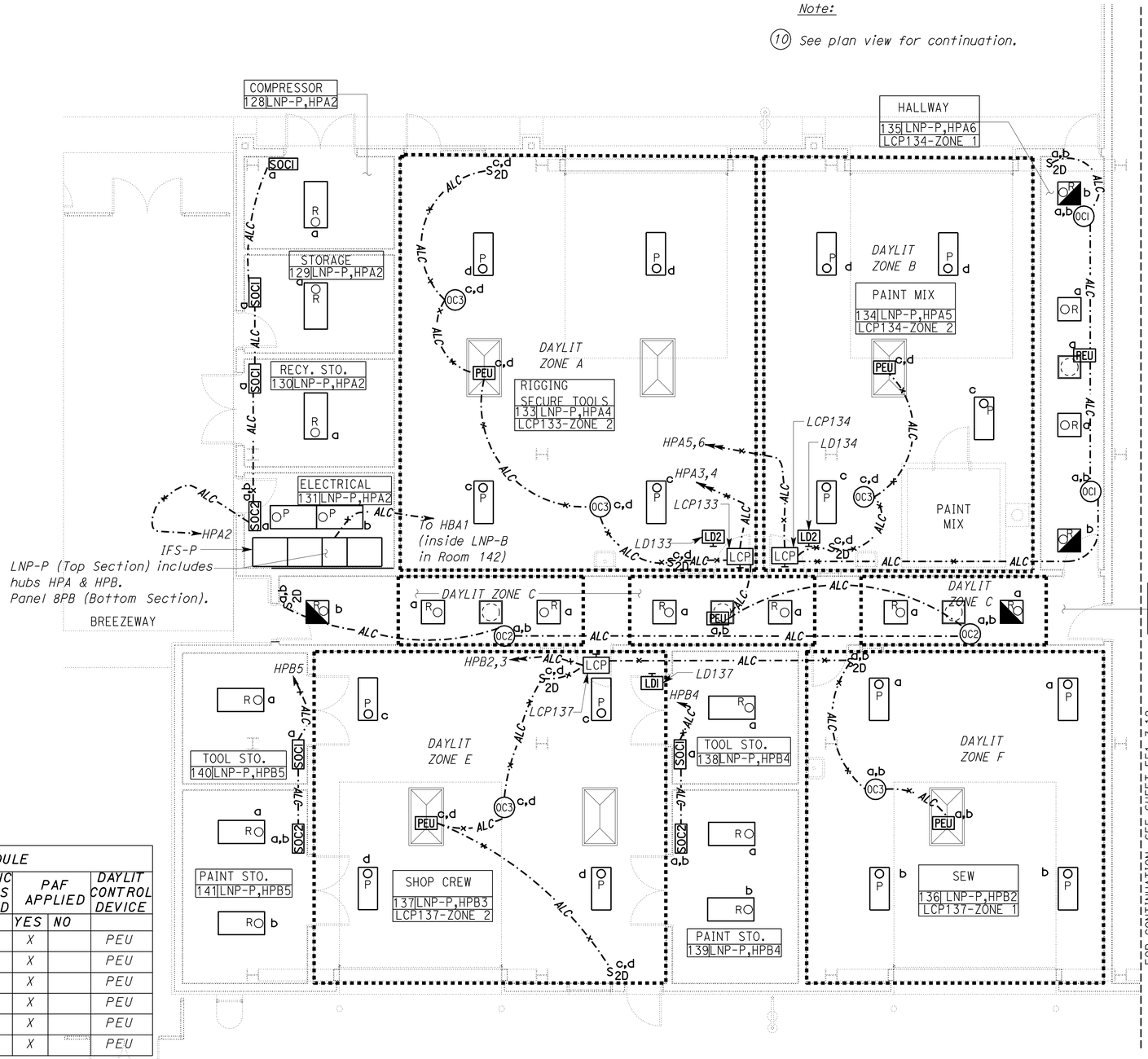

PLAN

SCALE 3/16" = 1'-0"

General Notes:

A. Unless otherwise noted, all armored lighting control cable homeruns shown on this sheet are to Lighting Network Panel, LNP-P located inside the IFS-P. Alphanumeric characters adjacent to arrows indicates hub port numbers and number of arrows corresponds to number of armored lighting control cables.

B. General lighting is shown here for reference only. See sheet EE1-3.9 for details.

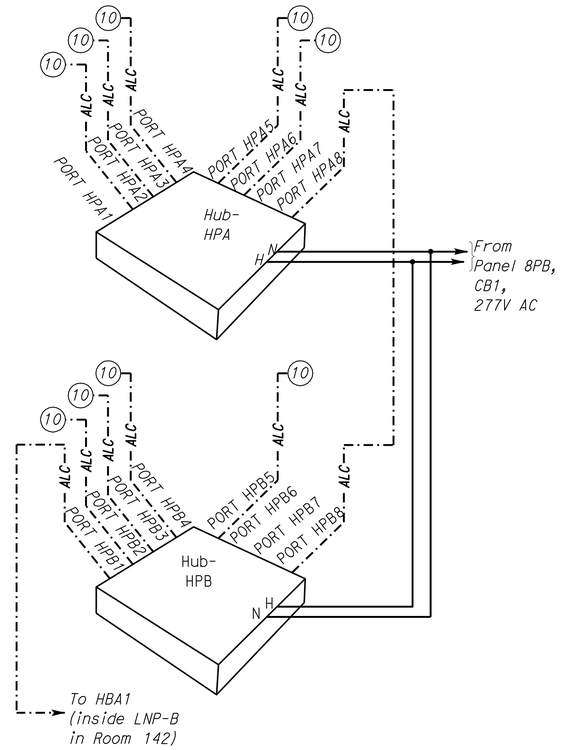

LIGHTING NETWORK PANEL LNP-P SCHEMATIC

DAYLIT SCHEDULE						
DAYLIT ZONE	TOTAL DAYLIT SQUARE FEET	AUTOMATIC CONTROLS REQUIRED		PAF APPLIED		DAYLIT CONTROL DEVICE
		YES	NO	YES	NO	
A	1100		X	X		PEU
B	835		X	X		PEU
C	282		X	X		PEU
D	86		X	X		PEU
E	875		X	X		PEU
F	745		X	X		PEU

DAYLIT ZONE # — Indicates general lighting within a daylit zones as per TITLE 24 SECTION 131 (C) 2B. See Daylit Schedule for details.

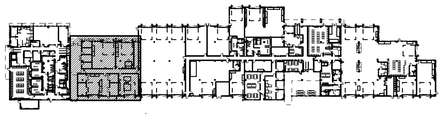

KEY PLAN

THIS DRAWING ACCURATE FOR ELECTRICAL WORK ONLY

	BY	CHECKED
DESIGN	Jaswinder Gill	Christine Mamaril
DETAILS	Ed D. Tapalla/Dali Zhou	Jaswinder Gill
QUANTITIES	Jaswinder Gill	Christine Mamaril

STATE OF CALIFORNIA DEPARTMENT OF TRANSPORTATION

DIVISION OF ENGINEERING SERVICES
ELECTRICAL-MECHANICAL-WATER AND WASTEWATER DESIGN

BRIDGE NO. 33M5785
POST MILE 2.2

SFOBB MAINTENANCE COMPLEX
BUILDING 1B
LIGHTING CONTROL PLAN 5

SHEET EE1-3.10

TAEMWW Imperial Rev. 7/10

ORIGINAL SCALE IN INCHES FOR REDUCED PLANS 0 1 2 3

UNIT 3596
PROJECT NUMBER & PHASE 04120006661
EA 014081

DISREGARD PRINTS BEARING EARLIER REVISION DATES
REVISION DATES (PRELIMINARY STAGE ONLY) 11/29/11 01/28/12 3/23/12 5/4/12 5/30/12
SHEET OF

25-OCT-2012 12:25
ee1_3.10.dgn

DIST.	COUNTY	ROUTE	POST MILES TOTAL PROJECT	SHEET NO.	TOTAL SHEETS
04	Ala	80	2.2	689	800

REGISTERED ELECTRICAL ENGINEER — 5-30-12 DATE

REGISTERED PROFESSIONAL ENGINEER J. S. GILL No. 18551 Exp. 12-31-12 ELEC STATE OF CALIFORNIA

10-22-12

The State of California or its officers or agents shall not be responsible for the accuracy or completeness of scanned copies of this plan sheet.

CALIFORNIA STATE FIRE MARSHAL APPROVED
Approval of this plan does not authorize or approve any omission or deviation from applicable regulations. Final approval is subject to field inspection. One set of approved plans shall be available on the project site at all times.
Reviewed by: JOHN E WOODS, SDSFM
Approval date: 8-22-12

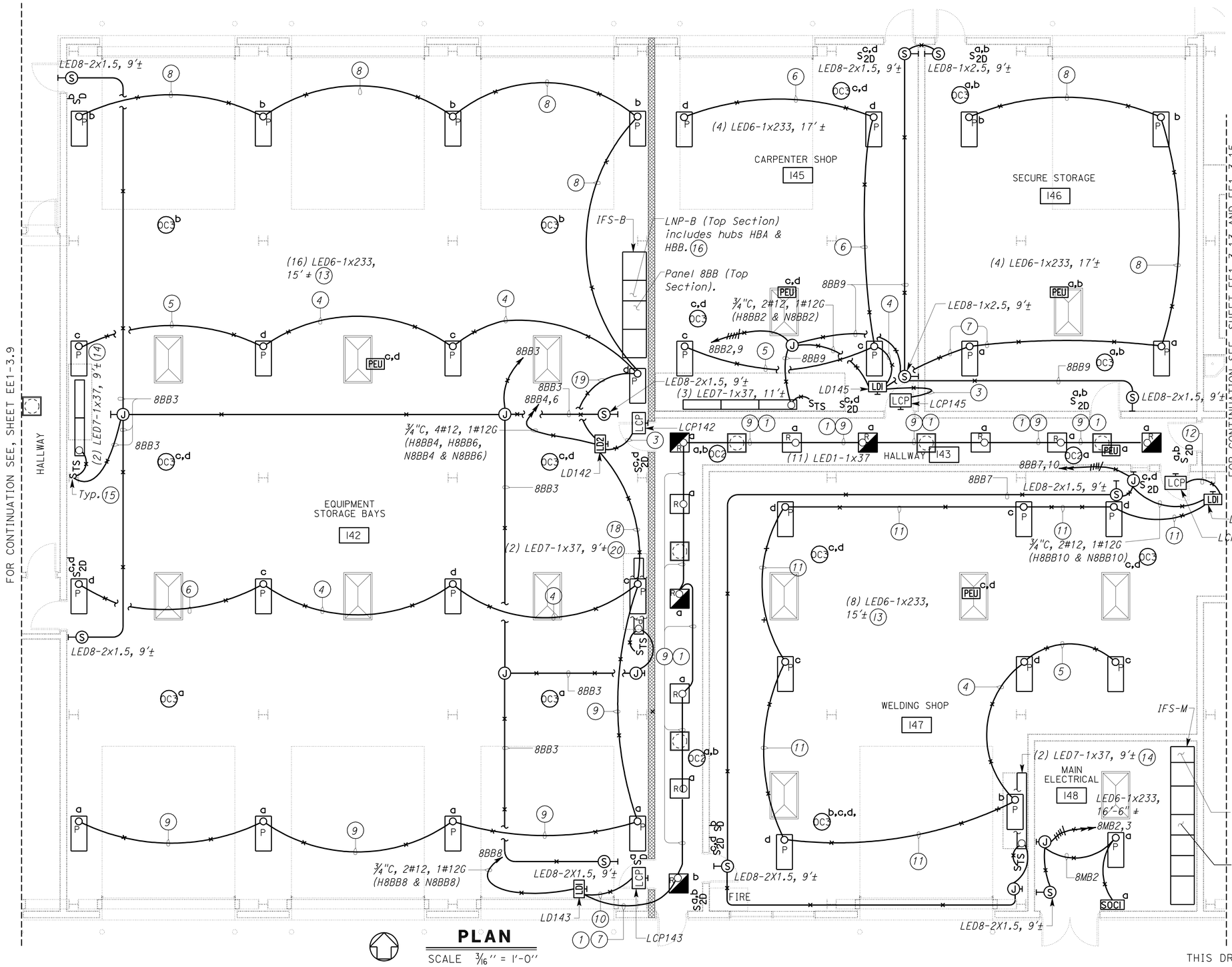

PLAN

SCALE 3/16" = 1'-0"

General Notes:

A. See sheet EE1-3.00 for plan Notes 1 thru 9.

B. Low voltage Lighting Control Devices are shown here for reference only. See Lighting Control Plan 6 on sheet EE1-3.12 for details.

Notes:

(10) 1"C, 5#12, 3#14, 1#12G. Conductor numbers are SH1, SH2, N****, ***S1A, ***S1B, ***D1A, ***D1B & ***DC.

(11) 1"C, 5#12, 4#14, 1#12G. Conductor numbers are N***, N****, ***S2C, ***S2D, ***S1B, ***D2C, ***D2D, ***D1B & ***DC.

(12) 1"C, 6#12, 4#14, 1#12G. Conductor numbers are SH1, SH2, N****, ***S2C, ***S2D, ***S1B, ***D2C, ***D2D, ***D1B & ***DC.

(13) For lighting mounting details, see sheet EE1-3.30.

(14) Wall mounted task lighting for work benches. See sheet EE1-3.30 for details.

(15) Workbench lights timer switch. Mount 6 inches above workbench.

(16) See sheet EE1-3.12 for LNP-B schematics.

(17) See sheet EE1-3.14 for LNP-M schematics.

(18) 1"C, 5#12, 4#14, 1#12G. Conductor numbers are N****, N****, ***S1A, ***S2C, ***S2D, ***D1A, ***D2C, ***D2D & ***DC.

(19) 1"C, 5#12, 4#14, 1#12G. Conductor numbers are N***, N****, ***S2C, ***S2D, ***S1B, ***D2C, ***D2D, ***D1B & ***DC.

(20) Pendant mount fixture from the structural beam.

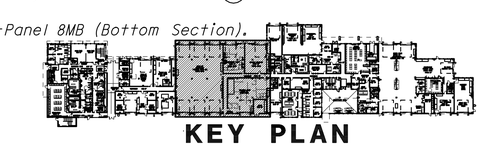

KEY PLAN

THIS DRAWING ACCURATE FOR ELECTRICAL WORK ONLY

	BY	CHECKED
DESIGN	Jaswinder Gill	Christine Mamaril
DETAILS	Ed D. Tapalla/Dali Zhou	Jaswinder Gill
QUANTITIES	Jaswinder Gill	Christine Mamaril

STATE OF CALIFORNIA DEPARTMENT OF TRANSPORTATION

DIVISION OF ENGINEERING SERVICES
ELECTRICAL-MECHANICAL-WATER AND WASTEWATER DESIGN

BRIDGE NO. 33M5785
POST MILE 2.2

SFOBB MAINTENANCE COMPLEX

BUILDING 1B — LIGHTING POWER PLAN 6

SHEET **EE1-3.11**

TAEMWW Imperial Rev. 7/10

ORIGINAL SCALE IN INCHES FOR REDUCED PLANS 0 1 2 3

UNIT 3596
PROJECT NUMBER & PHASE 04120006661
EA 014081

DISREGARD PRINTS BEARING EARLIER REVISION DATES → 11/28/11 02/22/12 3/23/12 5/4/12 5/30/12

REVISION DATES (PRELIMINARY STAGE ONLY) SHEET OF

25-OCT-2012 12:25

ee1_3.11.dgn

General Notes:

A. General lighting is shown here for reference only. See sheet EE1-3.11 for details.

B. Unless otherwise noted, all armored lighting control cable homeruns shown on this sheet are to Lighting Network Panel, LNP-B located inside the IFS-B. Alphanumeric characters adjacent to arrows indicates hub port numbers and number of arrows corresponds to number of armored lighting control cables.

Notes:

(11) See plan view for continuation.

(12) ALC to communication outlet on the west wall of the main electrical room.

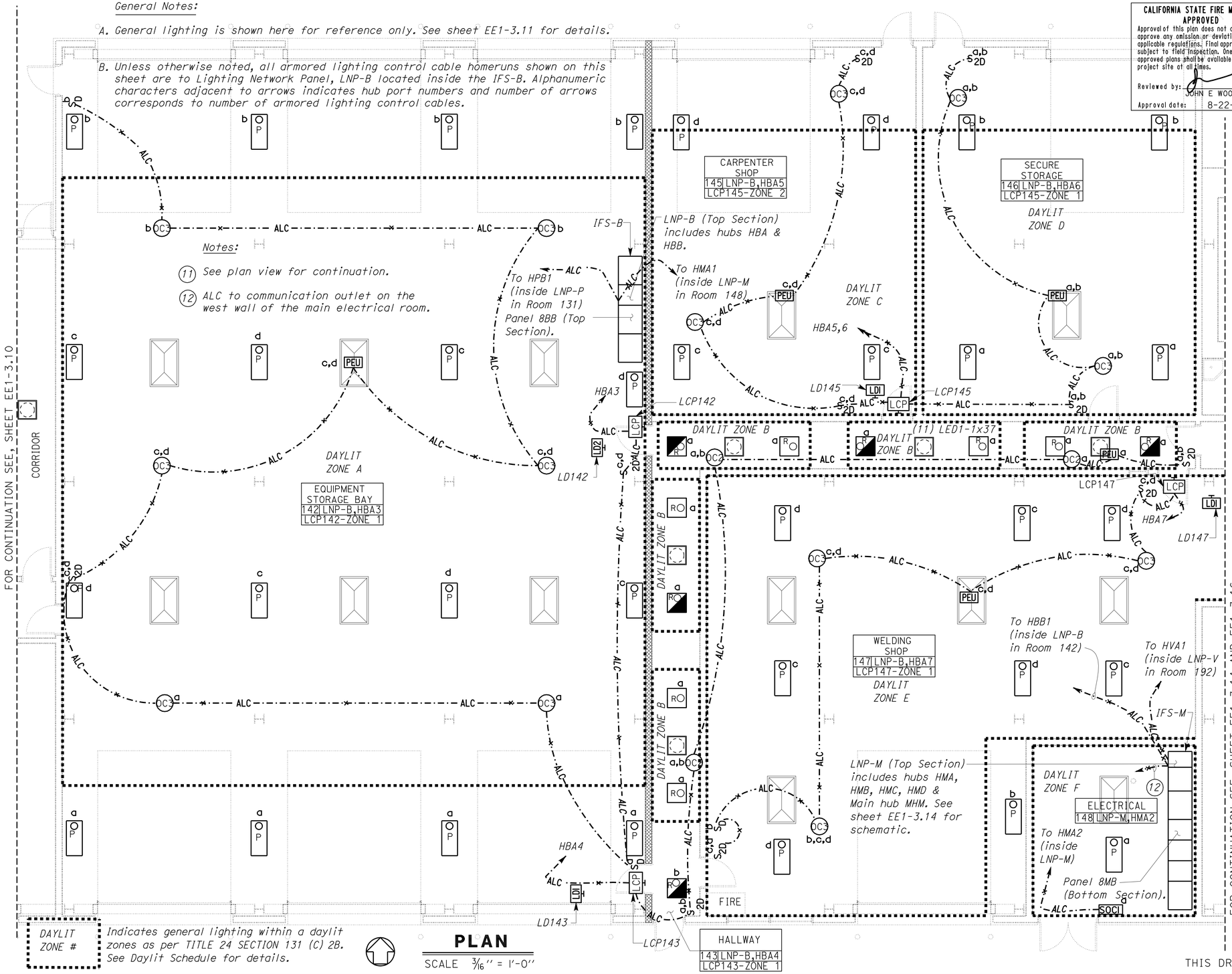

DAYLIT ZONE # — Indicates general lighting within a daylit zones as per TITLE 24 SECTION 131 (C) 2B. See Daylit Schedule for details.

PLAN

SCALE 3/16" = 1'-0"

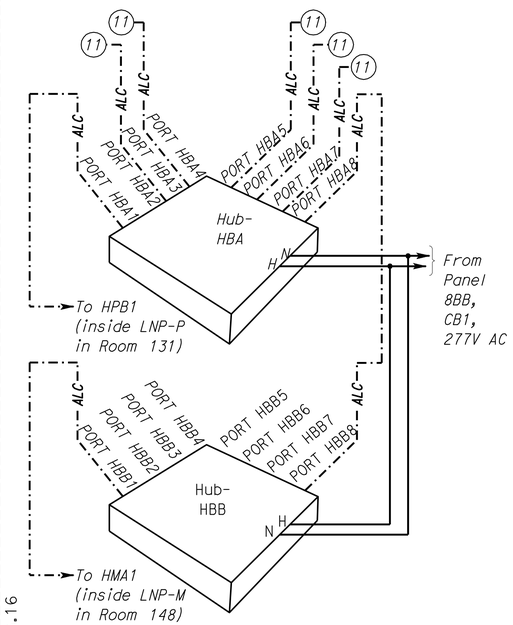

LIGHTING NETWORK PANEL LNP-B SCHEMATIC

DAYLIT SCHEDULE

DAYLIT ZONE	TOTAL DAYLIT SQUARE FEET	AUTOMATIC CONTROLS REQUIRED		PAF APPLIED		DAYLIT CONTROL DEVICE
		YES	NO	YES	NO	
A	3924	X			X	PEU
B	400		X	X		PEU
C	830		X	X		PEU
D	860		X	X		PEU
E	2200		X	X		PEU
F	305		X		X	SOC1

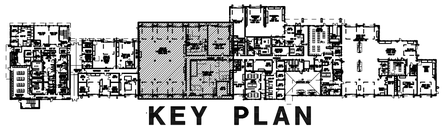

KEY PLAN

THIS DRAWING ACCURATE FOR ELECTRICAL WORK ONLY

CALIFORNIA STATE FIRE MARSHAL APPROVED

Approval of this plan does not authorize or approve any omission or deviation from applicable regulations. Final approval is subject to field inspection. One set of approved plans shall be available on the project site at all times.

Reviewed by: JOHN E WOODS, SDSFM

Approval date: 8-22-12

DIST.	COUNTY	ROUTE	POST MILES TOTAL PROJECT	SHEET NO.	TOTAL SHEETS
04	Ala	80	2.2	690	800

Jaswinder S Gill 5-30-12

REGISTERED ELECTRICAL ENGINEER — DATE

REGISTERED PROFESSIONAL ENGINEER J. S. GILL No. 18551 Exp. 12-31-12 ELEC STATE OF CALIFORNIA

10-22-12

PLANS APPROVAL DATE

The State of California or its officers or agents shall not be responsible for the accuracy or completeness of scanned copies of this plan sheet.

DESIGN	BY Jaswinder Gill	CHECKED Christine Mamaril	
DETAILS	BY Ed D. Tapalla/Dali Zhou	CHECKED Jaswinder Gill	
QUANTITIES	BY Jaswinder Gill	CHECKED Christine Mamaril	

STATE OF CALIFORNIA DEPARTMENT OF TRANSPORTATION

DIVISION OF ENGINEERING SERVICES
ELECTRICAL-MECHANICAL-WATER AND WASTEWATER DESIGN

BRIDGE NO. 33M5785
POST MILE 2.2

SFOBB MAINTENANCE COMPLEX

BUILDING 1B — LIGHTING CONTROL PLAN 6

SHEET EE1-3.12

TAEMWW Imperial Rev. 7/10

ORIGINAL SCALE IN INCHES FOR REDUCED PLANS 0 1 2 3

UNIT 3596
PROJECT NUMBER & PHASE 04120006661
EA 014081

DISREGARD PRINTS BEARING EARLIER REVISION DATES

REVISION DATES (PRELIMINARY STAGE ONLY) 11/28/11 02/22/12 3/23/12 5/4/12 5/30/12 SHEET OF

25-OCT-2012 12:25

ee1_3.12.dgn

DIST.	COUNTY	ROUTE	POST MILES TOTAL PROJECT	SHEET NO.	TOTAL SHEETS
04	Ala	80	2.2	691	800

REGISTERED ELECTRICAL ENGINEER — 5-30-12 DATE

REGISTERED PROFESSIONAL ENGINEER J. S. GILL No. 18551 Exp. 12-31-12 ELEC STATE OF CALIFORNIA

10-22-12
PLANS APPROVAL DATE

The State of California or its officers or agents shall not be responsible for the accuracy or completeness of scanned copies of this plan sheet.

CALIFORNIA STATE FIRE MARSHAL APPROVED

Approval of this plan does not authorize or approve any omission or deviation from applicable regulations. Final approval is subject to field inspection. One set of approved plans shall be available on the project site at all times.

Reviewed by: JOHN E WOODS, SDSFM

Approval date: 8-22-12

Notes:

(10) 1"C, 4#12, 4#14, 1#12G. Conductor numbers are N****, ***S2C, ***S1A, ***S1B, ***D2C, ***D1A, ***D1B & ***DC.

(11) 1"C, 3#12, 3#14, 1#12G. Conductor numbers are N****, ***S2C, ***S1B, ***D2C, ***D1B & ***DC.

(12) 1"C, 6#12, 4#14, 1#12G. Conductor numbers are SH1, SH2, N****, ***S2C, ***S1A, ***S1B, ***D2C, ***D1A, ***D1B & ***DC.

(13) 1"C, 5#12, 3#14, 1#12G. Conductor numbers are SH1, SH2, N****, ***S1A, ***S1B, ***D1A, ***D1B & ***DC.

(14) ¾"C, 4#12, 1#12G. Conductor numbers are H8VB4, H8VB6, N8VB4 & N8VB6.

(15) ¾"C, 2#12, 1#12G. Conductor numbers are H8VB6 & N8VB6.

(16) ¾"C, 4#12, 1#12G. Conductor numbers are H8MB4, H8MB6, N8MB4 & N8MB6.

(17) Lighting Network Workstaion & Printer. Provide a 30" wide x 26" deep and 32" tall computer workstation desk.

(18) Task lighting for work benches, see sheet EE1-3.30 for details.

(19) Workbench lights timer switch. Mount 6 inches above workbench.

(20) ¾"C, 2#12, 1#12G. Conductor numbers are H8VB4 & N8VB4.

(21) See sheet EE1-3.14 for LNP-M schematics.

(22) ¾"C, 2#12, 1#12G. Conductor numbers are H8MB6 & N8MB6.

General Notes:

A. Unless otherwise noted, all power homeruns shown on this sheet are to Panelbord 8MB located inside the IFS-M at Room No. 148.

B. See sheet EE1-3.00 for plan Notes 1 thru 9.

C. Low voltage Lighting Control Devices are shown here for reference only. See Lighting Control Plan 7 on sheet EE1-3.14 for details.

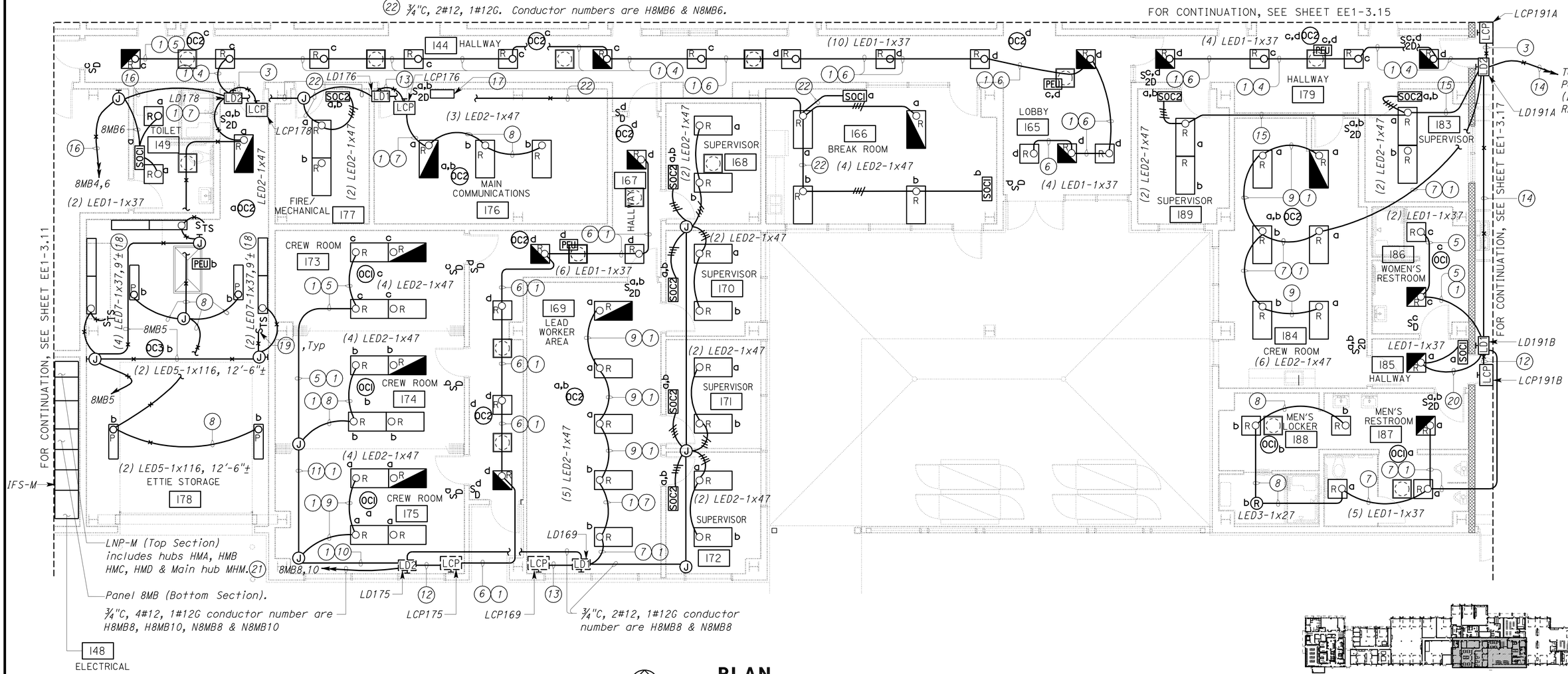

PLAN

SCALE 3/16" = 1'-0"

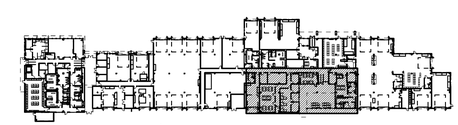

KEY PLAN

THIS DRAWING ACCURATE FOR ELECTRICAL WORK ONLY

	BY	CHECKED
DESIGN	Jaswinder Gill	Christine Mamaril
DETAILS	Ed D. Tapalla/Dali Zhou	Jaswinder Gill
QUANTITIES	Jaswinder Gill	Christine Mamaril

STATE OF CALIFORNIA DEPARTMENT OF TRANSPORTATION

DIVISION OF ENGINEERING SERVICES ELECTRICAL-MECHANICAL-WATER AND WASTEWATER DESIGN

BRIDGE NO. 33M5785 — POST MILE 2.2

SFOBB MAINTENANCE COMPLEX

BUILDING 1B — LIGHTING POWER PLAN 7

SHEET **EE1-3.13**

TAEMWW Imperial Rev. 7/10

ORIGINAL SCALE IN INCHES FOR REDUCED PLANS 0 1 2 3

UNIT 3596
PROJECT NUMBER & PHASE 04120006661
EA 014081

DISREGARD PRINTS BEARING EARLIER REVISION DATES → 11/28/11 02/28/12 3/23/12 5/4/12 5/30/12

REVISION DATES (PRELIMINARY STAGE ONLY) SHEET OF

25-OCT-2012 12:25

ee1_3.13.dgn

DIST.	COUNTY	ROUTE	POST MILES TOTAL PROJECT	SHEET NO.	TOTAL SHEETS
04	Ala	80	2.2	692	800

REGISTERED ELECTRICAL ENGINEER — 5-30-12 DATE

REGISTERED PROFESSIONAL ENGINEER J. S. GILL No. 18551 Exp. 12-31-12 ELEC STATE OF CALIFORNIA

10-22-12
PLANS APPROVAL DATE

The State of California or its officers or agents shall not be responsible for the accuracy or completeness of scanned copies of this plan sheet.

CALIFORNIA STATE FIRE MARSHAL APPROVED
Approval of this plan does not authorize or approve any omission or deviation from applicable regulations. Final approval is subject to field inspection. One set of approved plans shall be available on the project site at all times.
Reviewed by: JOHN E WOODS, SDSFM
Approval date: 8-22-12

LIGHTING NETWORK PANEL LNP-M SCHEMATIC

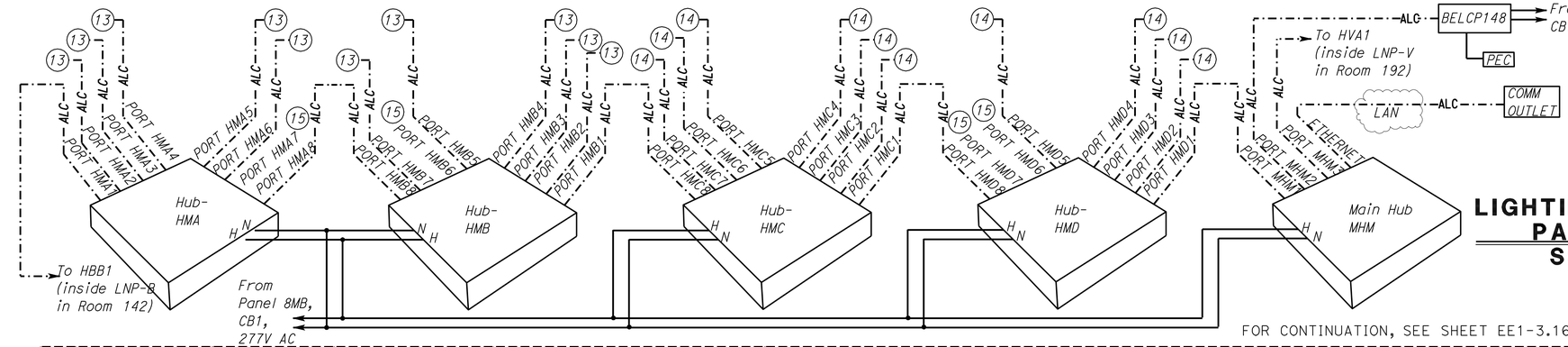

DAYLIT ZONE # — Indicates general lighting within a daylit zones as per TITLE 24 SECTION 131 (C) 2B. See Daylit Schedule for details.

FOR CONTINUATION, SEE SHEET EE1-3.16

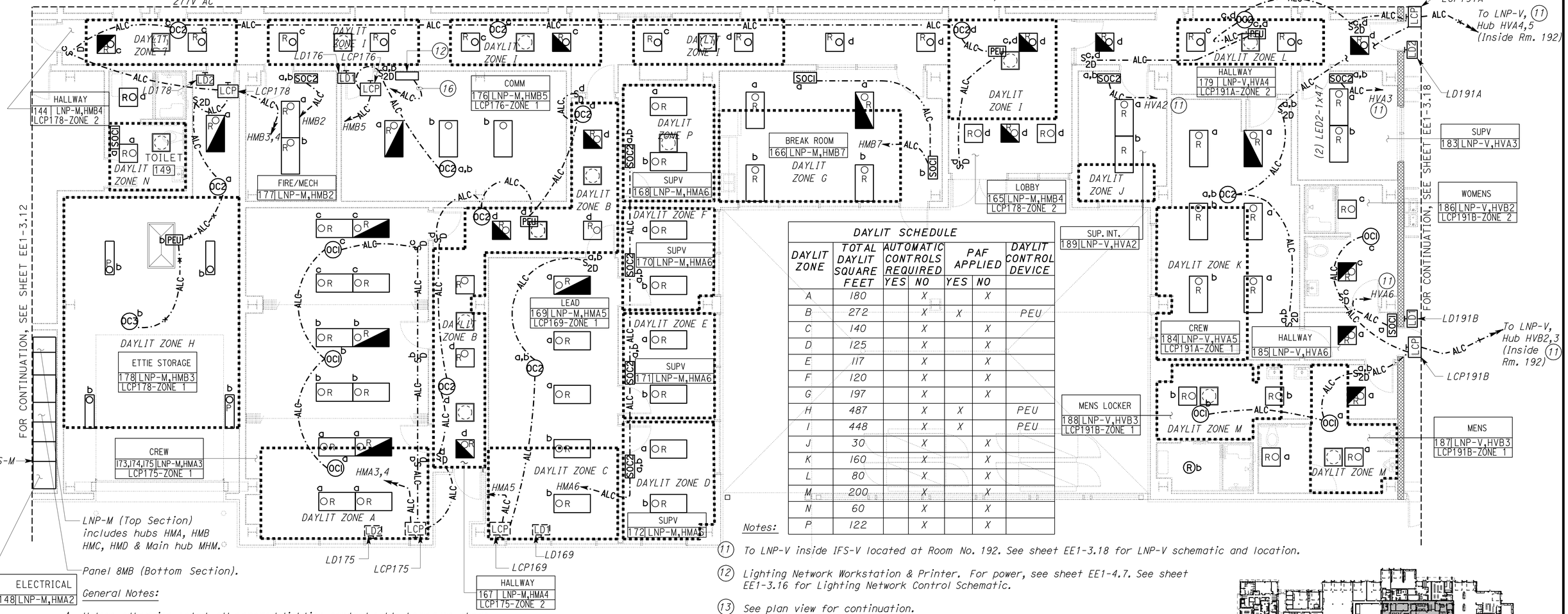

DAYLIT ZONE	TOTAL DAYLIT SQUARE FEET	AUTOMATIC CONTROLS REQUIRED YES	AUTOMATIC CONTROLS REQUIRED NO	PAF APPLIED YES	PAF APPLIED NO	DAYLIT CONTROL DEVICE
A	180		X		X	
B	272		X	X		PEU
C	140		X		X	
D	125		X		X	
E	117		X		X	
F	120		X		X	
G	197		X		X	
H	487		X	X		PEU
I	448		X	X		PEU
J	30		X		X	
K	160		X		X	
L	80		X		X	
M	200		X		X	
N	60		X		X	
P	122		X		X	

PLAN

SCALE 3/16" = 1'-0"

General Notes:

A. Unless otherwise noted, all armored lighting control cable homeruns shown on this sheet are to Lighting Network Panel, LNP-M located inside the IFS-M inside Room No. 148. Alphanumeric characters adjacent to arrows indicates hub port numbers and number of arrows corresponds to number of armored lighting control cables.

B. General lighting is shown here for reference only. See sheet EE1-3.13 for details.

Notes:

(11) To LNP-V inside IFS-V located at Room No. 192. See sheet EE1-3.18 for LNP-V schematic and location.

(12) Lighting Network Workstation & Printer. For power, see sheet EE1-4.7. See sheet EE1-3.16 for Lighting Network Control Schematic.

(13) See plan view for continuation.

(14) See sheet EE1-3.16 for continuation.

(15) Spare hub ports.

(16) To communication outlet.

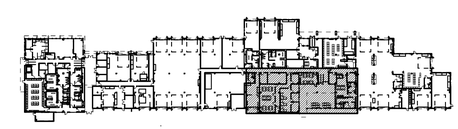

KEY PLAN

THIS DRAWING ACCURATE FOR ELECTRICAL WORK ONLY

DESIGN	BY Jaswinder Gill	CHECKED Christine Mamaril	
DETAILS	BY Ed D. Tapalla/Dali Zhou	CHECKED Jaswinder Gill	
QUANTITIES	BY Jaswinder Gill	CHECKED Christine Mamaril	

STATE OF CALIFORNIA DEPARTMENT OF TRANSPORTATION

DIVISION OF ENGINEERING SERVICES ELECTRICAL-MECHANICAL-WATER AND WASTEWATER DESIGN

BRIDGE NO. 33M5785 — POST MILE 2.2

SFOBB MAINTENANCE COMPLEX — BUILDING 1B — LIGHTING CONTROL PLAN 7

SHEET EE1-3.14

ORIGINAL SCALE IN INCHES FOR REDUCED PLANS 0 1 2 3

UNIT 3596
PROJECT NUMBER & PHASE 04120006661
EA 014081

DISREGARD PRINTS BEARING EARLIER REVISION DATES → 11/29/11 02/22/12 3/23/12 5/4/12 5/30/12

REVISION DATES (PRELIMINARY STAGE ONLY) SHEET OF

TAEMWW Imperial Rev. 7/10

25-OCT-2012 12:26

ee1_3.14.dgn

DIST.	COUNTY	ROUTE	POST MILES TOTAL PROJECT	SHEET NO.	TOTAL SHEETS
04	Ala	80	2.2	693	800

CALIFORNIA STATE FIRE MARSHAL APPROVED

Approval of this plan does not authorize or approve any omission or deviation from applicable regulations. Final approval is subject to field inspection. One set of approved plans shall be available on the project site at all times.

Reviewed by: JOHN E WOODS, SDSFM

Approval date: 8-22-12

Jaswinder S Gill 5-30-12

REGISTERED ELECTRICAL ENGINEER — DATE

REGISTERED PROFESSIONAL ENGINEER — J. S. GILL — No. 18551 — Exp. 12-31-12 — ELEC — STATE OF CALIFORNIA

10-22-12

PLANS APPROVAL DATE

The State of California or its officers or agents shall not be responsible for the accuracy or completeness of scanned copies of this plan sheet.

General Notes:

A. *Unless otherwise noted, all power homeruns shown on this sheet are to Panelboard 8MB located inside the IFS-M at Room No. 148. See sheet EE1-3.11.*

B. *See sheet EE1-3.00 for plan Notes 1 thru 9.*

C. *Low voltage Lighting Control Devices are shown here for reference only. See Lighting Control Plan 8 on sheet EE1-3.16 for details.*

D. *For location of IFS-V, see sheet EE1-3.17.*

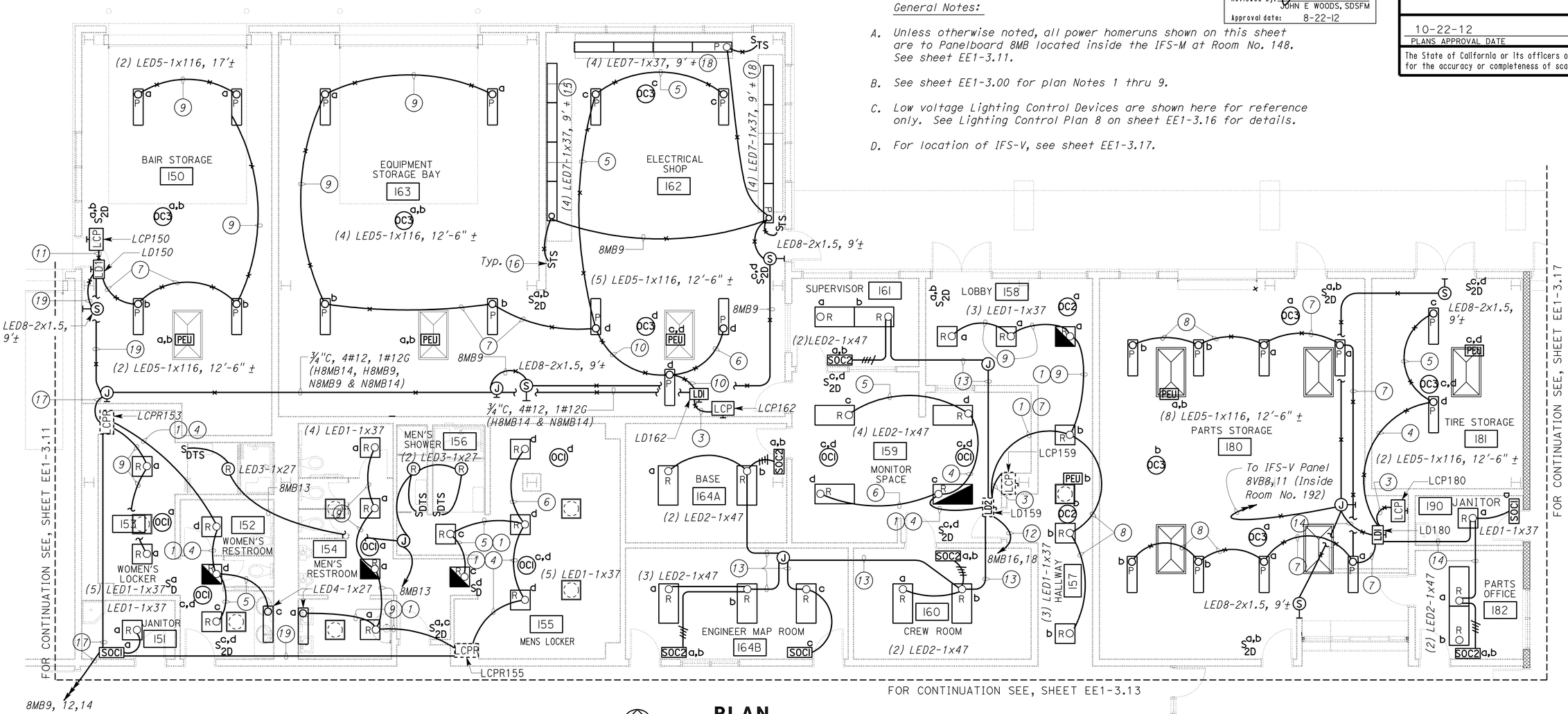

PLAN

SCALE 3/16" = 1'-0"

Notes:

(10) *1"C, 5#10, 5#14, 1#12G. Conductor numbers are N****, ***S1A, ***S1B, ***S2C, ***S2D, ***D1A, ***D1B, ***D2C, ***D2D & ***DC.*

(11) *1"C, 5#10, 3#14, 1#12G. Conductor numbers are SH1, SH2, N****, ***S1A, ***S1B, ***D1A, ***D1B & ***DC.*

(12) *¾"C, 4#12, 1#12G. Conductor numbers are H8MB16, H8MB18, N8MB16 & N8MB18.*

(13) *¾"C, 2#12, 1#12G. Conductor numbers are H8MB18 & N8MB18.*

(14) *¾"C, 2#12, 1#12G. Conductor numbers are H8VB8 & N8VB8.*

(15) *Task Lighting for work benches, see sheet EE1-3.30.*

(16) *Work bench lights timer switch. Mount 6 inches above workbench.*

(17) *1"C, 6#12, 1#12G. Conductor numbers are H8MB12, H8MB14, H8MB9, N8MB9, N8MB12 & N8MB14.*

(18) *Pendant mount workbench lights from the structural beam support. See structural sheets for structural beam details.*

(19) *¾"C, 2#12, 1#12G. Conductor numbers are H8MB12 & N8MVB12.*

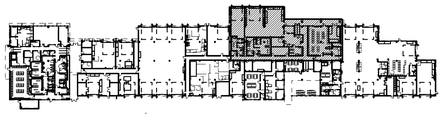

KEY PLAN

THIS DRAWING ACCURATE FOR ELECTRICAL WORK ONLY

	BY	CHECKED
DESIGN	Jaswinder Gill	Christine Mamaril
DETAILS	Ed D. Tapalla/Dali Zhou	Jaswinder Gill
QUANTITIES	Jaswinder Gill	Christine Mamaril

STATE OF CALIFORNIA DEPARTMENT OF TRANSPORTATION

DIVISION OF ENGINEERING SERVICES ELECTRICAL-MECHANICAL-WATER AND WASTEWATER DESIGN

BRIDGE NO. 33M5785 — POST MILE 2.2

SFOBB MAINTENANCE COMPLEX

BUILDING 1B — LIGHTING POWER PLAN 8

SHEET **EE1-3.15**

ORIGINAL SCALE IN INCHES FOR REDUCED PLANS 0 1 2 3

UNIT 3596

PROJECT NUMBER & PHASE 04120006661

EA 014081

DISREGARD PRINTS BEARING EARLIER REVISION DATES → REVISION DATES (PRELIMINARY STAGE ONLY) 11/29/11 02/02/12 3/23/12 5/4/12 5/30/12 — SHEET — OF

TAEMWW Imperial Rev. 7/10

25-OCT-2012 12:26

ee1_3.15.dgn

DIST.	COUNTY	ROUTE	POST MILES TOTAL PROJECT	SHEET NO.	TOTAL SHEETS
04	Ala	80	2.2	694	800

REGISTERED ELECTRICAL ENGINEER — Jaswinder S Gill — 5-30-12 DATE

REGISTERED PROFESSIONAL ENGINEER — J. S. GILL — No. 18551 — Exp. 12-31-12 — ELEC — STATE OF CALIFORNIA

10-22-12
PLANS APPROVAL DATE

The State of California or its officers or agents shall not be responsible for the accuracy or completeness of scanned copies of this plan sheet.

CALIFORNIA STATE FIRE MARSHAL APPROVED
Approval of this plan does not authorize or approve any omission or deviation from applicable regulations. Final approvals subject to field inspection. One set of approved plans shall be available on the project site at all times.
Reviewed by: JOHN E WOODS, SDSFM
Approval date: 8-22-12

General Notes:

A. *Unless otherwise noted, all armored lighting control cable homeruns shown on this sheet are to Lighting Network Panel, LNP-M located inside the IFS-M at Room No. 148. See sheet EE1-3.12. Alphanumeric characters adjacent to arrows indicates hub port numbers and number of arrows corresponds to number of armored lighting control cables.*

B. *For location of LNP-V, see sheet EE1-3.18.*

DAYLIT SCHEDULE

DAYLIT ZONE	TOTAL DAYLIT SQUARE FEET	AUTOMATIC CONTROLS REQUIRED		PAF APPLIED		DAYLIT CONTROL DEVICE
		YES	NO	YES	NO	
A	185		X		X	
B	513		X		X	
C	589		X	X		PEU
D	750		X	X		PEU
E	970		X	X		PEU
F	115		X		X	
G	1106		X	X		PEU
H	318		X	X		PEU
I	103		X		X	

NETWORK LIGHTING CONTROL SCHEMATIC

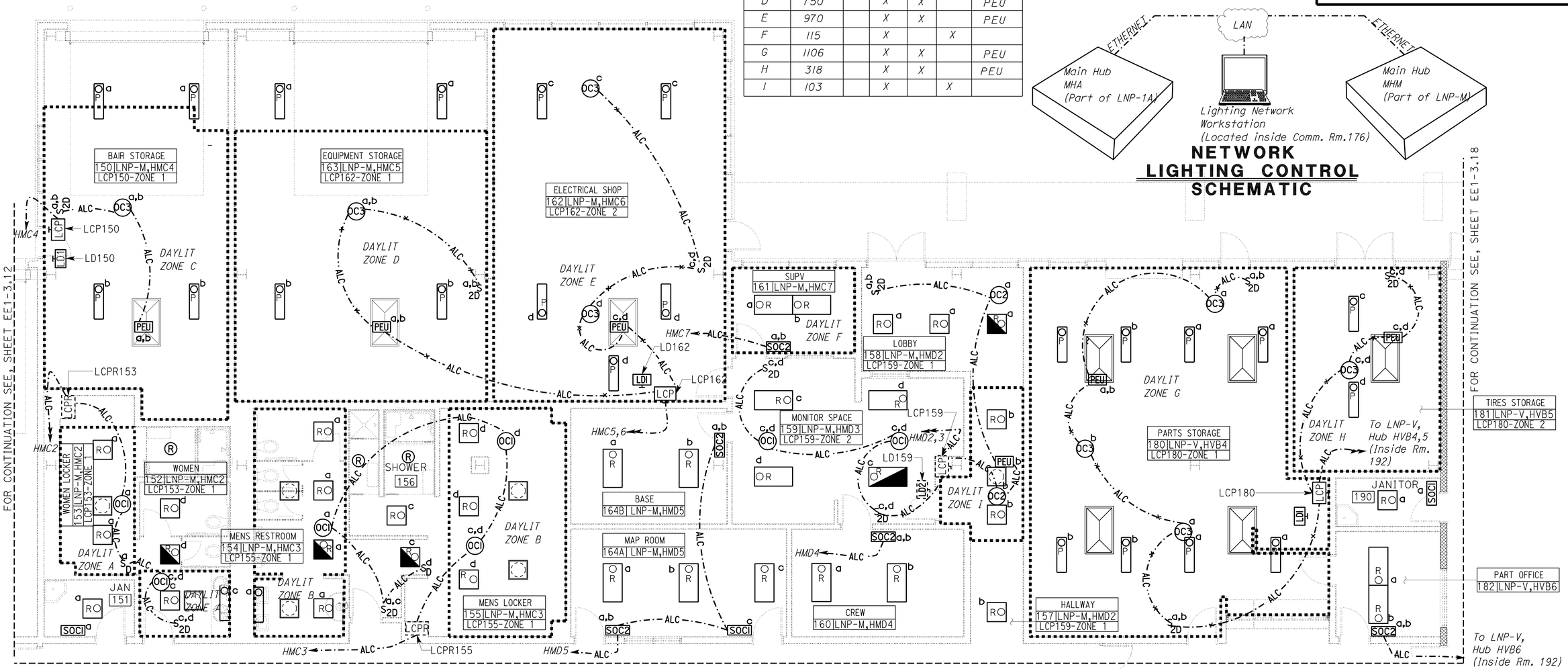

PLAN

SCALE 3/16" = 1'-0"

KEY PLAN

THIS DRAWING ACCURATE FOR ELECTRICAL WORK ONLY

	BY	CHECKED
DESIGN	Jaswinder Gill	Christine Mamaril
DETAILS	Ed D. Tapalla/Dali Zhou	Jaswinder Gill
QUANTITIES	Jaswinder Gill	Christine Mamaril

STATE OF CALIFORNIA
DEPARTMENT OF TRANSPORTATION

DIVISION OF ENGINEERING SERVICES
ELECTRICAL-MECHANICAL-WATER AND WASTEWATER DESIGN

BRIDGE NO. 33M5785
POST MILE 2.2

SFOBB MAINTENANCE COMPLEX
BUILDING 1B — LIGHTING CONTROL PLAN 8

SHEET **EE1-3.16**

TAEMWW Imperial Rev. 7/10

ORIGINAL SCALE IN INCHES FOR REDUCED PLANS 0 1 2 3

UNIT 3596
PROJECT NUMBER & PHASE 04120006661
EA 014081

DISREGARD PRINTS BEARING EARLIER REVISION DATES
REVISION DATES (PRELIMINARY STAGE ONLY) 11/29/11 02/02/12 3/23/12 5/4/12 5/30/12
SHEET OF

25-OCT-2012 12:26
ee1_3.16.dgn

DIST.	COUNTY	ROUTE	POST MILES TOTAL PROJECT	SHEET NO.	TOTAL SHEETS
04	Ala	80	2.2	695	800

REGISTERED ELECTRICAL ENGINEER — 5-30-12 DATE

REGISTERED PROFESSIONAL ENGINEER — J. S. GILL — No. 18551 — Exp. 12-31-12 — ELEC — STATE OF CALIFORNIA

10-22-12
PLANS APPROVAL DATE

The State of California or its officers or agents shall not be responsible for the accuracy or completeness of scanned copies of this plan sheet.

CALIFORNIA STATE FIRE MARSHAL APPROVED

Approval of this plan does not authorize or approve any omission or deviation from applicable regulations. Final approval is subject to field inspection. One set of approved plans shall be available on the project site at all times.

Reviewed by: JOHN E WOODS, SDSFM

Approval date: 8-22-12

General Notes:

A. *See sheet EE1-3.00 for plan Notes 1 thru 9.*

B. *Low voltage Lighting Control Devices are shown here for reference only. See Lighting Control Plan 9 on sheet EE1-3.18 for details.*

C. *For additional LCP's located inside Room No. 191, see sheet EE1-3.13.*

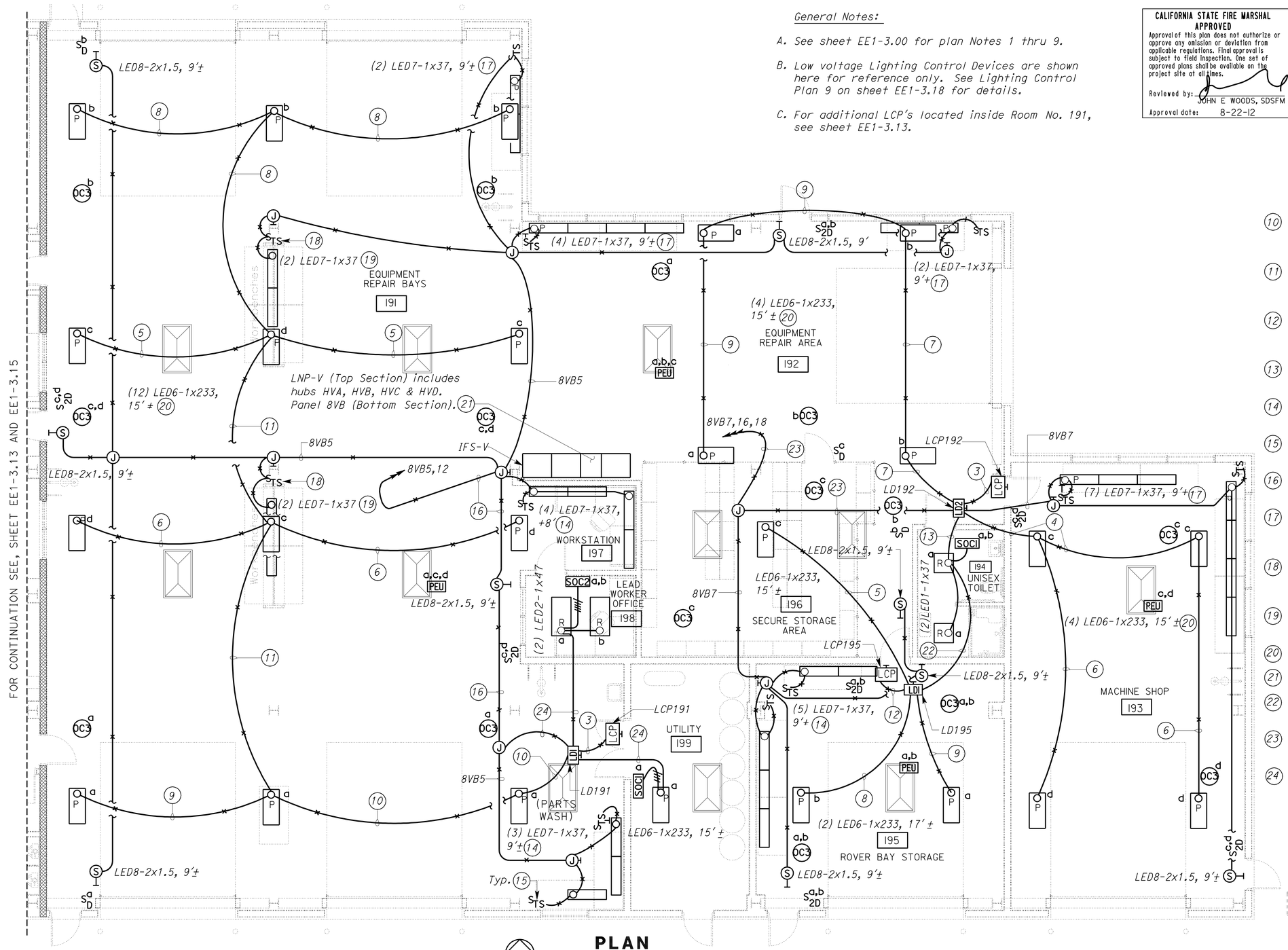

PLAN

SCALE 3/16" = 1'-0"

Notes:

(10) *1"C, 5#12, 5#14, 1#12G. Conductor numbers are N****, ***S2C, ***S2D, ***S1A, ***S1B, ***D2C, ***D2D, ***D1A, ***D1B & ***DC.*

(11) *1"C, 4#12, 4#14, 1#12G. Conductor numbers are N****, ***S2C, ***S2D, ***S1B, ***D2C, ***D2D, ***D1B & ***DC.*

(12) *1"C, 6#12, 4#14, 1#12G. Conductor numbers are SH1, SH2, N****, ***S2C, ***S1A, ***S1B, ***D2C, ***D1A, ***D1B & ***DC.*

(13) *¾"C, 4#12, 1#12G. Conductor numbers are H8VB16, H8VB18, N8VB16 & N8VB18.*

(14) *Task lighting for work benches, see sheet EE1-3.30 for details.*

(15) *Workbench lights timer switch. Mount 6 inches above workbench.*

(16) *¾"C, 4#12, 1#12G. Conductor numbers are H8VB12, H8VB5, N8VB5 & N8VB12.*

(17) *Pendant mount workbench lights from the structural beam support. See structural sheets for the structural beam details.*

(18) *Work bench lights timer switch. Mount 6 inches above work bench at the column of the workbench assembly.*

(19) *See Architectural details for mounting the lights on the workbench assembly.*

(20) *For Lighting mounting details, see sheet EE1-3.30.*

(21) *See sheet EE1-3.18 for LNP-V schematics.*

(22) *¾"C, 2#12, 1#12G. Conductor numbers are H8VB16 & N8VB16.*

(23) *1"C, 6#12, 1#12G. Conductor numbers are H8VB7, H8VB16, H8VB18, N8VB7, N8VB16 & N8VB18.*

(24) *¾"C, 2#12, 1#12G. Conductor numbers are H8VB12, & N8VB12.*

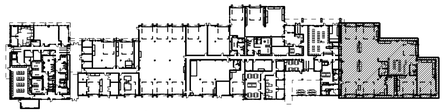

KEY PLAN

THIS DRAWING ACCURATE FOR ELECTRICAL WORK ONLY

	BY	CHECKED
DESIGN	Jaswinder Gill	Christine Mamaril
DETAILS	Ed D. Tapalla/Dali Zhou	Jaswinder Gill
QUANTITIES	Jaswinder Gill	Christine Mamaril

STATE OF CALIFORNIA
DEPARTMENT OF TRANSPORTATION

DIVISION OF ENGINEERING SERVICES
ELECTRICAL-MECHANICAL-WATER AND WASTEWATER DESIGN

BRIDGE NO. 33M5785
POST MILE 2.2

SFOBB MAINTENANCE COMPLEX

BUILDING 1B — LIGHTING POWER PLAN 9

SHEET **EE1-3.17**

TAEMWW Imperial Rev. 7/10

ORIGINAL SCALE IN INCHES FOR REDUCED PLANS 0 1 2 3

UNIT 3596
PROJECT NUMBER & PHASE 04120006661
EA 014081

DISREGARD PRINTS BEARING EARLIER REVISION DATES → 11/29/11 3/23/12 5/4/12 5/30/12

REVISION DATES (PRELIMINARY STAGE ONLY) SHEET OF

25-OCT-2012 12:26

ee1_3.17.dgn

DIST.	COUNTY	ROUTE	POST MILES TOTAL PROJECT	SHEET NO.	TOTAL SHEETS
04	Ala	80	2.2	696	800

REGISTERED ELECTRICAL ENGINEER — 5-30-12 DATE

REGISTERED PROFESSIONAL ENGINEER J. S. GILL No. 18551 Exp. 12-31-12 ELEC STATE OF CALIFORNIA

10-22-12
PLANS APPROVAL DATE

The State of California or its officers or agents shall not be responsible for the accuracy or completeness of scanned copies of this plan sheet.

CALIFORNIA STATE FIRE MARSHAL APPROVED

Approval of this plan does not authorize or approve any omission or deviation from applicable regulations. Final approval is subject to field inspection. One set of approved plans shall be available on the project site at all times.

Reviewed by: JOHN E WOODS, SDSFM

Approval date: 8-22-12

DAYLIT ZONE #

Indicates general lighting within a daylit zones as per TITLE 24 SECTION 131 (C) 2B. See Daylit Schedule for details.

General Note:

A. *Unless otherwise noted, all armored lighting control cable homeruns shown on this sheet are to Lighting Network Panel, LNP-V located inside the IFS-V at Room No. 192. Alphanumeric characters adjacent to arrows indicates hub port numbers and number of arrows corresponds to number of armored lighting control cables.*

DAYLIT SCHEDULE

DAYLIT ZONE	TOTAL DAYLIT SQUARE FEET	AUTOMATIC CONTROLS REQUIRED		PAF APPLIED		DAYLIT CONTROL DEVICE
		YES	NO	YES	NO	
A	5600	X			X	PEU
B	800		X	X		PEU
C	650		X	X		PEU
D	315		X		X	

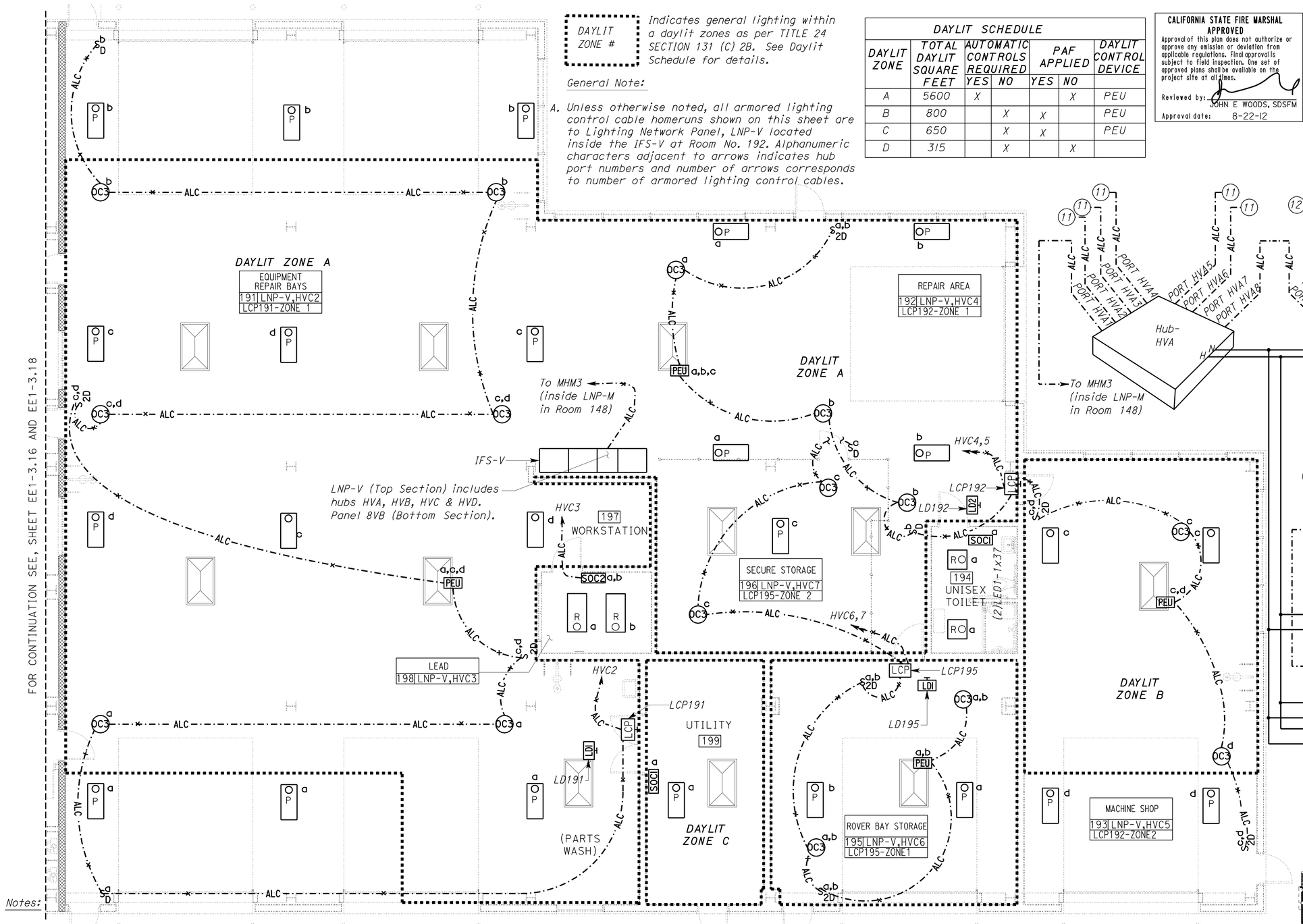

LIGHTING NETWORK PANEL LNP-V SCHEMATIC

PLAN

SCALE 3/16" = 1'-0"

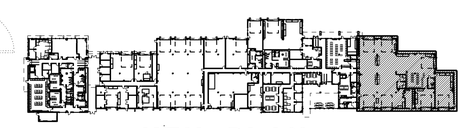

KEY PLAN

THIS DRAWING ACCURATE FOR ELECTRICAL WORK ONLY

Notes:

(10) *For conduit to ELCP, see sheet EE1-3.20.*

(11) *For continuation, see sheet EE1-3.14.*

(12) *For continuation, see sheet EE1-3.16.*

(13) *See plan view for continuation.*

	BY	CHECKED
DESIGN	Jaswinder Gill	Christine Mamaril
DETAILS	Ed D. Tapalla/Dali Zhou	Jaswinder Gill
QUANTITIES	Jaswinder Gill	Christine Mamaril

STATE OF CALIFORNIA DEPARTMENT OF TRANSPORTATION

DIVISION OF ENGINEERING SERVICES
ELECTRICAL-MECHANICAL-WATER AND WASTEWATER DESIGN

BRIDGE NO. 33M5785
POST MILE 2.2

SFOBB MAINTENANCE COMPLEX

BUILDING 1B — LIGHTING CONTROL PLAN 9

SHEET **EE1-3.18**

TAEMWW Imperial Rev. 7/10

ORIGINAL SCALE IN INCHES FOR REDUCED PLANS 0 1 2 3

UNIT 3596
PROJECT NUMBER & PHASE 04120006661
EA 014081

DISREGARD PRINTS BEARING EARLIER REVISION DATES → 11/28/11 3/23/12 5/4/12 5/30/12

REVISION DATES (PRELIMINARY STAGE ONLY) SHEET OF

25-OCT-2012 12:27 ee1_3.18.dgn

DIST.	COUNTY	ROUTE	POST MILES TOTAL PROJECT	SHEET NO.	TOTAL SHEETS
04	Ala	80	2.2	697	800

CALIFORNIA STATE FIRE MARSHAL APPROVED

Approval of this plan does not authorize or approve any omission or deviation from applicable regulations. Final approval is subject to field inspection. One set of approved plans shall be available on the project site at all times.

Reviewed by: JOHN E WOODS, SDSFM

Approval date: 8-22-12

Jaswinder S Gill 5-30-12

REGISTERED ELECTRICAL ENGINEER — DATE

REGISTERED PROFESSIONAL ENGINEER J. S. GILL No. 18551 Exp. 12-31-12 ELEC STATE OF CALIFORNIA

10-22-12

PLANS APPROVAL DATE

The State of California or its officers or agents shall not be responsible for the accuracy or completeness of scanned copies of this plan sheet.

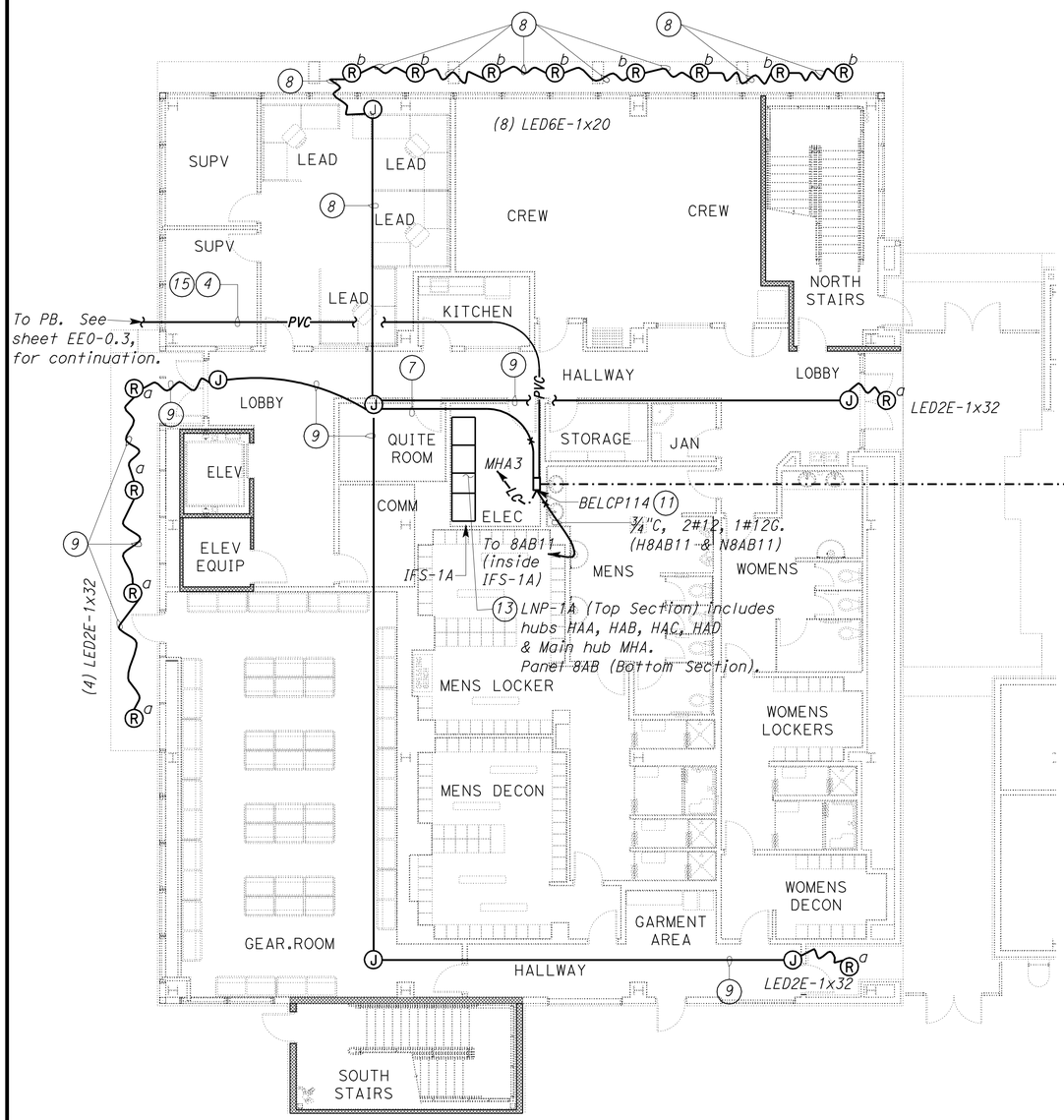

1ST FLOOR

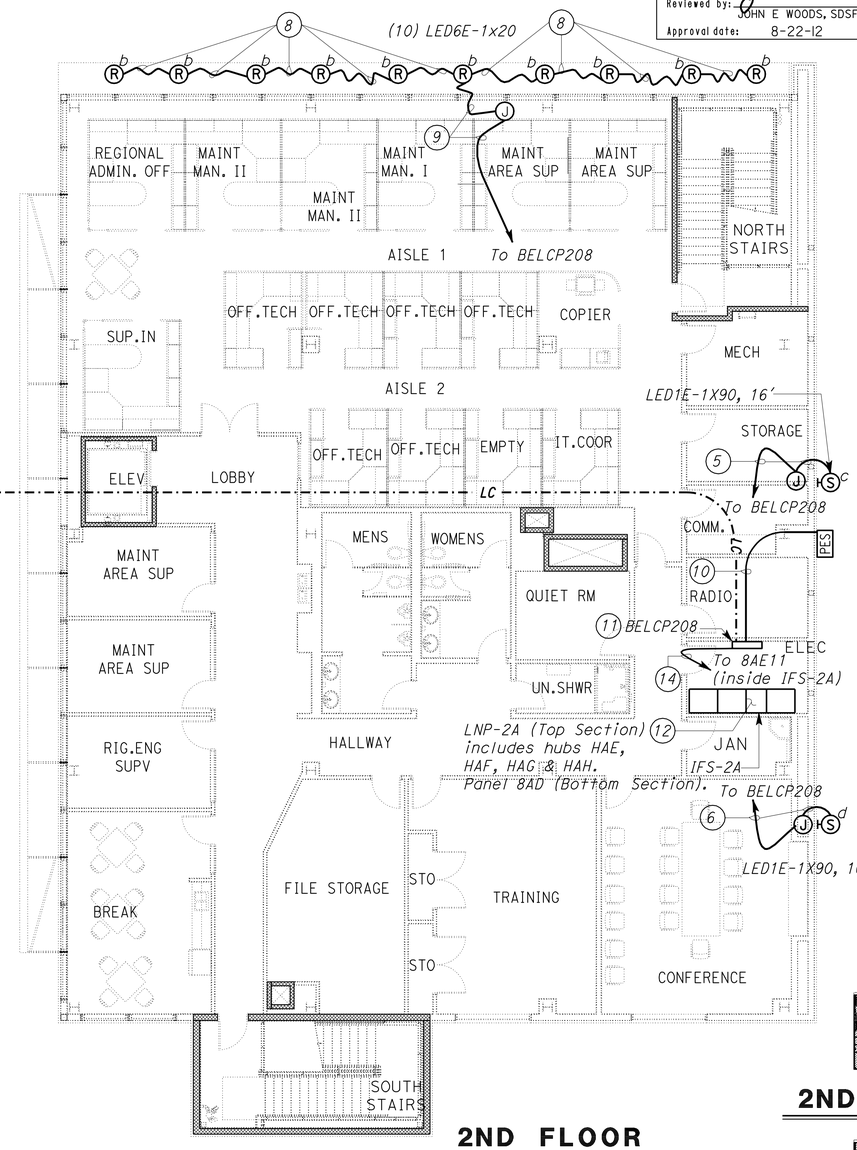

2ND FLOOR

General Notes:

A. Install PES at mounting height of 30 feet in a manner, so that the PES window faces North.

B. Unless otherwise noted, all homeruns shown on this on this sheet are to BELCP208 inside the Electrical Room No. 208.

C. Unless otherwise noted, all lighting control cable homeruns shown on this sheet are to Lighting Network Panel, LNP-1A located inside the IFS-1A. Alphanumeric characters adjacent to arrows indicates hub port numbers and number of arrows corresponds to number of lighting control cables.

D. A lower case letter adjacent to the building mounted exterior and recessed soffit lighting fixture graphic symbol denotes that fixture is controlled by a similarly marked switching relays located inside the Building Exterior Lighting Control Panel (BELCP). For details, see BELCP schematics.

E. See sheet EE1-3.00 for plan notes 1 thru 9.

Notes:

(10) ¾"C, 3#12, 1#12G.

(11) See sheet EE1-3.27 for BELCP schematic.

(12) See sheet EE1-3.8 for LNP-2A schematic.

(13) See sheet EE1-3.2 for LNP-1A schematic.

(14) ¾"C, 2#12, 1#12G. Conductor numbers are H8AE11 & N8AE11.

(15) (2) 2"C, MT.

2ND FLOOR

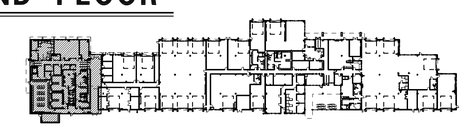

1ST FLOOR — KEY PLAN

PLAN

SCALE 1/8" = 1'-0"

THIS DRAWING ACCURATE FOR ELECTRICAL WORK ONLY

	BY	CHECKED
DESIGN	Jaswinder Gill	Christine Mamaril
DETAILS	Ed D. Tapalla 10/11	Jaswinder Gill
QUANTITIES	Jaswinder Gill	Christine Mamaril

STATE OF CALIFORNIA DEPARTMENT OF TRANSPORTATION

DIVISION OF ENGINEERING SERVICES ELECTRICAL-MECHANICAL-WATER AND WASTEWATER DESIGN

BRIDGE NO. 33M5785 — POST MILE 2.2

SFOBB MAINTENANCE COMPLEX

BUILDING 1A — BUILDING EXTERIOR LIGHTING PLAN 1

SHEET EE1-3.19

TAEMWW Imperial Rev. 7/10

ORIGINAL SCALE IN INCHES FOR REDUCED PLANS 0 1 2 3

UNIT 3596 PROJECT NUMBER & PHASE 04120006661

EA 014081

DISREGARD PRINTS BEARING EARLIER REVISION DATES → 10/25/11 02/22/12 3/23/12 5/30/12

REVISION DATES (PRELIMINARY STAGE ONLY) SHEET OF

25-OCT-2012 12:27

ee1_3.19.dgn

DIST.	COUNTY	ROUTE	POST MILES TOTAL PROJECT	SHEET NO.	TOTAL SHEETS
04	Ala	80	2.2	698	800

Jaswinder S Gill 5-30-12
REGISTERED ELECTRICAL ENGINEER DATE

REGISTERED PROFESSIONAL ENGINEER J. S. GILL No. 18551 Exp. 12-31-12 ELEC STATE OF CALIFORNIA

10-22-12
PLANS APPROVAL DATE

The State of California or its officers or agents shall not be responsible for the accuracy or completeness of scanned copies of this plan sheet.

CALIFORNIA STATE FIRE MARSHAL APPROVED
Approval of this plan does not authorize or approve any omission or deviation from applicable regulations. Final approval is subject to field inspection. One set of approved plans shall be available on the project site at all times.
Reviewed by: JOHN E WOODS, SDSFM
Approval date: 8-22-12

Notes:

(10) ¾"C, 3#12, 1#12G.

(11) See sheet EE1-3.27 for schematic.

(12) ¾"C, 2#12, 1#12G, to Panel 8MB inside IFS-M. Conductor numbers are H8MB15 & N8MB15.

(13) See sheet EE1-3.14 for LNP-M schematic.

(14) To LNP-M inside IFS-M.

(15) Conduit seal, typical. Install at 18" above finished floor. Conduit seal is also shown on EE0-0.3 for clarity.

(16) 1"C, 1 Lighting Control Cable to ELCP at the Material Storage Bin.

General Notes:

A. Install PES at parapet wall above roof in a manner, so that the PES window faces North.

B. Unless otherwise noted, all homeruns shown on this on this sheet are to BELCP148 inside the Electrical Room No. 148.

C. A lower case letter adjacent to the building mounted exterior and recessed soffit lighting fixture graphic symbol denotes that fixture is controlled by a similarly marked switching relays located inside the Building Exterior Lighting Control Panel (BELCP). See schematics for BELCP for details.

D. See sheet EE1-3.00 for plan notes 1 thru 9.

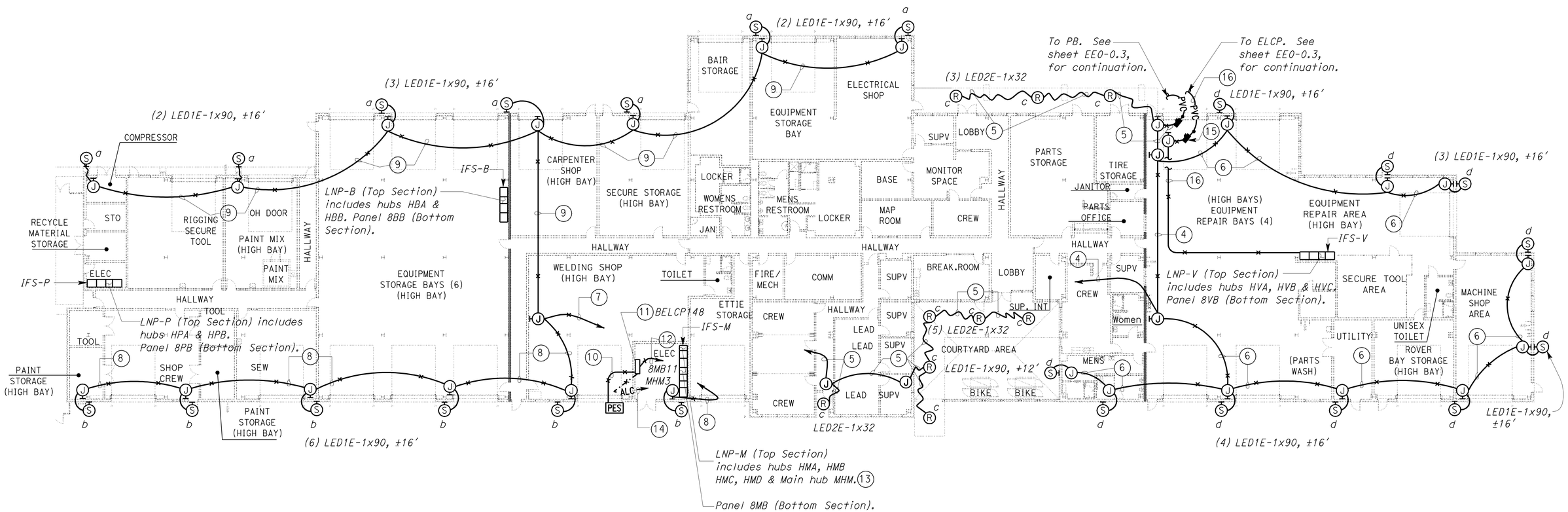

PLAN

SCALE 1/16" = 1'-0"

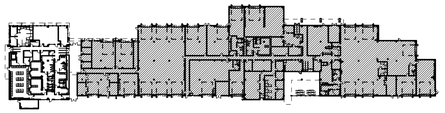

KEY PLAN

THIS DRAWING ACCURATE FOR ELECTRICAL WORK ONLY

	BY	CHECKED
DESIGN	Jaswinder Gill	Christine Mamaril
DETAILS	Ed D. Tapalla 10/11	Jaswinder Gill
QUANTITIES	Jaswinder Gill	Christine Mamaril

STATE OF CALIFORNIA DEPARTMENT OF TRANSPORTATION

DIVISION OF ENGINEERING SERVICES
ELECTRICAL-MECHANICAL-WATER AND WASTEWATER DESIGN

BRIDGE NO. 33M5785
POST MILE 2.2

SFOBB MAINTENANCE COMPLEX

BUILDING 1B — BUILDING EXTERIOR LIGHTING PLAN 2

SHEET **EE1-3.20**

TAEMWW Imperial Rev. 7/10

ORIGINAL SCALE IN INCHES FOR REDUCED PLANS 0 1 2 3

UNIT 3596
PROJECT NUMBER & PHASE 04120006661
EA 014081

DISREGARD PRINTS BEARING EARLIER REVISION DATES → 10/24/11 02/28/12 3/23/12 5/30/12

REVISION DATES (PRELIMINARY STAGE ONLY) SHEET OF

25-OCT-2012 12:27

ee1_3.20.dgn

DIST.	COUNTY	ROUTE	POST MILES TOTAL PROJECT	SHEET NO.	TOTAL SHEETS
04	Ala	80	2.2	699	800

REGISTERED ELECTRICAL ENGINEER — Jaswinder S Gill — 5-30-12 DATE

REGISTERED PROFESSIONAL ENGINEER — J. S. GILL — No. 18551 — Exp. 12-31-12 — ELEC — STATE OF CALIFORNIA

10-22-12
PLANS APPROVAL DATE

The State of California or its officers or agents shall not be responsible for the accuracy or completeness of scanned copies of this plan sheet.

CALIFORNIA STATE FIRE MARSHAL APPROVED

Approval of this plan does not authorize or approve any omission or deviation from applicable regulations. Final approval is subject to field inspection. One set of approved plans shall be available on the project site at all times.

Reviewed by: JOHN E WOODS, SDSFM

Approval date: 8-22-12

LIGHTING CONTROL PANEL SCHEMATIC LEGEND:

① *See schematic details* 1 / EEI-3.25

② *See schematic details* 1 / EEI-3.26

③ *See schematic details* 2 / EEI-3.26

FIXTURE MOUNTING TYPE:

R1 *Recessed on a suspended acoustic ceiling tiles.*

R2 *Recessed on a gypsum board ceiling.*

P *Pendant or Stem mounted, swivel type junction box on an exposed deck ceiling.*

S *Surface mount on gypsum board ceiling.*

BUILDING 1A (FIRST FLOOR) LIGHTING POWER & CONTROL SCHEDULE

		POWER SCHEDULE						CONTROL SCHEDULE																	LIGHTING SCHEDULE										
		PANELBOARD				INTEGRATED FACILITY SWITCHBOARD		LIGHTING CONTROL DEVICES QUANTITY										LIGHTING CONTROL PANEL (LCP)						LIGHTING NETWORK PANEL (LNP)											
ROOM NUMBER	ROOM NAME	PANELBOARD NAME	CIRCUIT NO.	CIRCUIT BREAKER (AMPERE/POLE)	PANEL LOC. (ROOM NO.)	IFS NAME	IFS LOC. (ROOM NO.)	SOC1	SOC2	OC1	OC2	OC3	S_D	S_{2D}	PEU	S_{DTS}	S_{TS}	LCP NUMBER	LCP LOCATION (RM. NO.)	SWITCHING RELAYS	DIMMING RELAYS	CONTROL ZONE NO.	LCP SCHEMATIC	LNP NAME	NETWORK HUB NAME	NETWROK HUB PORT NO.		LED1 (37 W)	LED2 (47 W)	LED3 (27 W)	LED4 (27 W)	LED5 (116 W)	LED6 (233 W)	LED9 (40 W)	INSTALLED WATTS (W)	MOUNTING	POWER PLAN REFERENCE	CONTROL PLAN REFERENCE	NOTES
99	ELEVATOR CAB	8AB	3	15/1	114	IFS-1A	114																														EEI-3.3		FIXTURES PROVIDED BY THE ELEVATOR CAB MANUFACTURER
100	LOBBY	8AB	14	15/1	114	IFS-1A	114				1			1				LCP102	102	SIA	DIA	ZONE1	①	LNP-1A	HAB	7		4						148	RI	EEI-3.3	EEI-3.4	
101	HALLWAY	8AB	14	15/1	114	IFS-1A	114				1							LCP102	102	SIA,SIB	DIA,DIB	ZONE1	①	LNP-1A	HAB	7		4						148	RI	EEI-3.3	EEI-3.4	
102	LEAD WORKER	8AB	16	15/1	114	IFS-1A	114				1			1				LCP102	102	S2C,S2D	D2C,D2D	ZONE2	①	LNP-1A	HAB	6			7					329	RI	EEI-3.3	EEI-3.4	
103	SUPERVISOR	8AB	2	15/1	114	IFS-1A	114		1															LNP-1A	HAB	5			2					94	RI	EEI-3.3	EEI-3.4	
104	SUPERVISOR	8AB	2	15/1	114	IFS-1A	114		1															LNP-1A	HAB	5			2					94	RI	EEI-3.3	EEI-3.4	
105	KITCHEN	8AB	16	15/1	114	IFS-1A	114	1																				2						74	R2	EEI-3.3		
106	CREW ROOM 1	8AB	16	15/1	114	IFS-1A	114				1			1				LCP106	106	SIA,SIB	DIA,DIB	ZONE1	②	LNP-1A	HAC	2			7					329	RI	EEI-3.3	EEI-3.4	
107	CREW ROOM 2	8AB	16	15/1	114	IFS-1A	114				1			1				LCP106	106	S2C,S2D	D2C,D2D	ZONE1	②	LNP-1A	HAC	2			4					188	RI	EEI-3.3	EEI-3.4	
108	NORTH STAIRS	8AB	18	15/1	114	IFS-1A	114							1				LCP108	108	SIA,SIB	DIA,DIB	ZONE1	②	LNP-1A	HAC	4		2						74	RI	EEI-3.3	EEI-3.4	MODIFY LCP SCHEMATIC TO KEEP S2C & S2D RELAYS AS SPARE
109	LOBBY	8AB	14	15/1	114	IFS-1A	114							1				LCP102	102	SIB	DIB	ZONE1	①	LNP-1A	HAB	7		5						185	RI	EEI-3.3	EEI-3.4	
110	WOMENS RESTROOM	8AB	4	15/1	114	IFS-1A	114				2		2					LCPR121	121	S2C	D2C	ZONE2	③	LNP-1A	HAB	2		4			1			175	R2	EEI-3.1	EEI-3.2	LED4 FIXTURES ARE WALL MOUNTED ABOVE MIRROR
111	MENS RESTROOM	8AB	4	15/1	114	IFS-1A	114				2		2					LCPR123	123	S2C	D2C	ZONE2	③	LNP-1A	HAA	7		5			1			212	R2	EEI-3.1	EEI-3.2	LED4 FIXTURES ARE WALL MOUNTED ABOVE MIRROR
112	JANITOR	8AB	2	15/1	114	IFS-1A	114	1																LNP-1A	HAB	4		1						37	R2	EEI-3.3	EEI-3.4	
113	STORAGE	8AB	2	15/1	114	IFS-1A	114	1																LNP-1A	HAB	4		1						37	R2	EEI-3.3	EEI-3.4	
114	ELECTRICAL	8AB	2	15/1	114	IFS-1A	114		1															LNP-1A	HAB	4			2					94	P	EEI-3.3	EEI-3.4	
115	QUITE ROOM	8AB	2	15/1	114	IFS-1A	114		1															LNP-1A	HAB	4			2					94	R2	EEI-3.3	EEI-3.4	
116	COMMUNICATIONS	8AB	2	15/1	114	IFS-1A	114		1															LNP-1A	HAB	4			2					94	RI	EEI-3.3	EEI-3.4	
117	ELEVATOR EQUIPMENT	8AB	7	15/1	114	IFS-1A	114		1															LNP-1A	HAC	3							2	80	S	EEI-3.3	EEI-3.4	
	ELEVATOR PIT	8AB	7	15/1	114	IFS-1A	114									1																	1	40		EEI-3.3		FIXTURE MOUNTED ON WALL INSIDE THE ELEVATOR PIT
119	HALLWAY	8AB	4	15/1	114	IFS-1A	114				1			1				LCPR122	122	S2C, S2D	D2C, D2D	ZONE2	③	LNP-1A	HAA	5		4						148	R2	EEI-3.1	EEI-3.2	
120	WOMENS DECONTAMINATION	8AB	4	15/1	114	IFS-1A	114			1			1					LCPR121	121	SIA	DIA	ZONE1	③	LNP-1A	HAB	3		2						74	R2	EEI-3.1	EEI-3.2	
121	WOMENS LOCKER	8AB	4	15/1	114	IFS-1A	114			1			2					LCPR121	121	SIB	DIB	ZONE1	③	LNP-1A	HAB	3		3						111	R2	EEI-3.1	EEI-3.2	
	WOMENS SHOWER STALLS	8AB	5	15/1	114	IFS-1A	114								2														2					54	R2	EEI-3.1		
122	MENS DECONTAMINATION	8AB	4	15/1	114	IFS-1A	114			2				1				LCPR122	122	SIA,SIB	DIA,DIB	ZONE1	③	LNP-1A	HAA	4		3						111	RI	EEI-3.1	EEI-3.2	
123	MENS LOCKER	8AB	4	15/1	114	IFS-1A	114			1				1				LCPR123	123	SIB	DIB	ZONE1	③	LNP-1A	HAA	6		2						74	RI	EEI-3.1	EEI-3.2	
124	MENS SHOWER	8AB	4	15/1	114	IFS-1A	114			1			1					LCPR123	123	SIA	DIA	ZONE1	③	LNP-1A	HAA	6		3						111	R2	EEI-3.1	EEI-3.2	
	MENS SHOWER STALLS	8AB	5	15/1	114	IFS-1A	114								4														4					108	R2	EEI-3.1		
125	GEAR ROOM	8AB	4	15/1	114	IFS-1A	114				2			2				LCP125	125	SIA,SIB,S2C,S2D	DIA,DIB,D2C,D2D	ZONE1	②	LNP-1A	HAA	2			11					517	RI	EEI-3.1	EEI-3.2	
126	SOUTH STAIRS	8AB	6	15/1	114	IFS-1A	114							1				LCP126	126	SIA	DIA	ZONE1	②	LNP-1A	HAA	3		2						74	RI	EEI-3.1	EEI-3.2	MODIFY LCP SCHEMATIC TO KEEP S2C & S2D RELAYS AS SPARE

	BY	CHECKED
DESIGN	Jaswinder Gill	Christine Mamaril
DETAILS	Dali Zhou	Jaswinder Gill
QUANTITIES	Jaswinder Gill	Christine Mamaril

STATE OF CALIFORNIA
DEPARTMENT OF TRANSPORTATION

DIVISION OF ENGINEERING SERVICES
ELECTRICAL-MECHANICAL-WATER AND WASTEWATER DESIGN

BRIDGE NO. 33M5785
POST MILE 2.2

SFOBB MAINTENANCE COMPLEX

LIGHTING POWER AND CONTROL SCHEDULE 1

SHEET EE1-3.21

TAEMWW Imperial Rev. 7/10

ORIGINAL SCALE IN INCHES FOR REDUCED PLANS 0 1 2 3

UNIT 3596
PROJECT NUMBER & PHASE 04120006661
EA 014081

DISREGARD PRINTS BEARING EARLIER REVISION DATES → REVISION DATES (PRELIMINARY STAGE ONLY) 12/20/11 2/28/12 3/23/12 5/30/12 SHEET OF

25-OCT-2012 12:27

ee1_3.21.dgn

DIST.	COUNTY	ROUTE	POST MILES TOTAL PROJECT	SHEET NO.	TOTAL SHEETS
04	Ala	80	2.2	700	800

REGISTERED ELECTRICAL ENGINEER — Jaswinder S Gill — 5-30-12 DATE

REGISTERED PROFESSIONAL ENGINEER — J. S. GILL — No. 18551 — Exp. 12-31-12 — ELEC — STATE OF CALIFORNIA

10-22-12
PLANS APPROVAL DATE

The State of California or its officers or agents shall not be responsible for the accuracy or completeness of scanned copies of this plan sheet.

CALIFORNIA STATE FIRE MARSHAL APPROVED
Approval of this plan does not authorize or approve any omission or deviation from applicable regulations. Final approval is subject to field inspection. One set of approved plans shall be available on the project site at all times.
Reviewed by: JOHN E WOODS, SDSFM
Approval date: 8-22-12

LIGHTING CONTROL PANEL SCHEMATIC LEGEND:

① *See schematic details* (1 / EEI-3.25).

② *See schematic details* (1 / EEI-3.26).

③ *See schematic details* (2 / EEI-3.26).

FIXTURE MOUNTING TYPE:

R1 *Recessed on a suspended acoustic ceiling tiles.*

R2 *Recessed on a gypsum board ceiling.*

P *Pendant or Stem mounted, swivel type junction box on an exposed deck ceiling.*

S *Surface mount on gypsum board ceiling.*

W *Wall mounted. See mounting detail* (1 / EEI-3.30).

BUILDING 1A (SECOND FLOOR) LIGHTING POWER & CONTROL SCHEDULE

ROOM NUMBER	ROOM NAME	POWER SCHEDULE: PANELBOARD: PANELBOARD NAME	PANELBOARD: CIRCUIT NO.	PANELBOARD: CIRCUIT BREAKER (AMPERE/PHASE)	PANELBOARD: PANEL LOC. (ROOM NO.)	INTEGRATED FACILITY SWITCHBOARD: IFS NAME	IFS LOC. (ROOM NO.)	CONTROL SCHEDULE: LIGHTING CONTROL DEVICES QUANTITY: SOC1	SOC2	OC1	OC2	OC3	S_D	S_{2D}	PEU	S_{DTS}	LIGHTING CONTROL PANEL (LCP): LCP NUMBER	LCP LOCATION (RM. NO.)	SWITCHING RELAYS	DIMMING RELAYS	CONTROL ZONE NO.	SCHEMATIC REFERENCE	LIGHTING NETWORK PANEL (LNP): LNP NAME	NETWORK HUB NAME	NETWROK HUB PORT NO.	LIGHTING SCHEDULE: LED1 (37 W)	LED2 (47 W)	LED3 (27 W)	LED4 (27 W)	LED5 (116 W)	LED6 (233 W)	LED9 (40 W)	INSTALLED WATTS (W)	MOUNTING	POWER PLAN REFERENCE	CONTROL PLAN REFERENCE	NOTES
200	LOBBY	8AE	6	15/1	208	IFS-2A	208							1			LCP210	210B	SIA	DIA	ZONE1	②	LNP-2A	HAE	5	2							74	RI	EEI-3.7	EEI-3.8	
201	OPEN OFFICE AREA	8AE	12	15/1	208	IFS-2A	208			12				5			LCP201	201	SIA,SIB,S2C,S2D	DIA,DIB,D2C,D2D	ZONE1	②	LNP-2A	HAF	7		34						1598	RI	EEI-3.7	EEI-3.8	
202	NORTH STAIRS	8AB	18	15/1	114	IFS-1A	114							1			LCP108	108	SIB	DIB	ZONE1	②	LNP-1A	HAC	4	6							222	RI	EEI-3.7	EEI-3.8	MODIFY LCP SCHEMATIC TO KEEP S2C & S2D RELAYS AS SPARE
203	MECHANICAL	8AE	10	15/1	208	IFS-2A	208		1														LNP-2A	HAF	6		2						94	P	EEI-3.7	EEI-3.8	
204	STORAGE	8AE	10	15/1	208	IFS-2A	208	1															LNP-2A	HAF	6		1						47	RI	EEI-3.7	EEI-3.8	
205	COMMUNICATION	8AE	10	15/1	208	IFS-2A	208		1														LNP-2A	HAF	6		2						94	RI	EEI-3.7	EEI-3.8	
206	QUIET ROOM	8AE	10	15/1	208	IFS-2A	208	1															LNP-2A	HAE	7		1						47	RI	EEI-3.5	EEI-3.6	
207	RADIO	8AE	10	15/1	208	IFS-2A	208		1														LNP-2A	HAE	7		2						94	RI	EEI-3.5	EEI-3.6	
208	ELECTRICAL	8AE	10	15/1	208	IFS-2A	208		1														LNP-2A	HAE	7		2						94	P	EEI-3.5	EEI-3.6	
209	JANITOR	8AE	4	15/1	208	IFS-2A	208	1																		1							37	R2	EEI-3.5		
210A,B,C	HALLWAY	8AE	6	15/1	208	IFS-2A	208				4			3			LCP210	210B	SIA,SIB,S2C,S2D	DIA,DIB,D2C,D2D	ZONE1	②	LNP-2A	HAE	5	13							481	RI	EEI-3.5	EEI-3.6	
211	MENS RESTROOM	8AE	8	15/1	208	IFS-2A	208			2			1				LCPR211	211	SIA	DIA	ZONE1	③	LNP-2A	HAF	2	3			1				138	R2	EEI-3.5	EEI-3.6	LED4 FIXTURES ARE WALL MOUNTED ABOVE MIRROR
212	WOMENS RESTROOM	8AE	8	15/1	208	IFS-2A	208			1			1				LCPR211	211	SIC	DIC	ZONE2	③	LNP-2A	HAF	3	2			1				101	R2	EEI-3.5	EEI-3.6	LED4 FIXTURES ARE WALL MOUNTED ABOVE MIRROR
213	SHOWER	8AE	7	15/1	208	IFS-2A	208								1													1					27	R2	EEI-3.5		
214	CONFERENCE	8AE	4	15/1	208	IFS-2A	208			2				2			LCP214	214	SIA,SIB,S2C,S2D	DIA,DIB,D2C,D2D	ZONE1	②	LNP-2A	HAE	2		9						423	RI	EEI-3.5	EEI-3.6	
215	TRAINING	8AE	4	15/1	208	IFS-2A	208			2				2			LCP215	215	SIA,SIB,S2C,S2D	DIA,DIB,D2C,D2D	ZONE1	②	LNP-2A	HAE	3		9						423	RI	EEI-3.5	EEI-3.6	
216	FILE STORAGE	8AE	4	15/1	208	IFS-2A	208		1														LNP-2A	HAE	4		4						188	R2	EEI-3.5	EEI-3.6	
217	SOUTH STAIRS	8AB	6	15/1	114	IFS-1A	114						1				LCP126	126	SIB	DIB	ZONE1	②	LNP-1A	HAA	3	6							222	RI	EEI-3.5	EEI-3.6	MODIFY LCP SCHEMATIC TO KEEP S2C & S2D RELAYS AS SPARE
218	BREAK ROOM	8AE	2	15/1	208	IFS-2A	208		2														LNP-2A	HAF	4		4						188	RI	EEI-3.5	EEI-3.6	
219	MANAGER OFFICE 3	8AE	2	15/1	208	IFS-2A	208		1														LNP-2A	HAF	5		2						94	RI	EEI-3.5	EEI-3.6	
220	MANAGER OFFICE 2	8AE	2	15/1	208	IFS-2A	208		1														LNP-2A	HAF	5		2						94	RI	EEI-3.5	EEI-3.6	
221	MANAGER OFFICE 1	8AE	2	15/1	208	IFS-2A	208		1														LNP-2A	HAF	5		2						94	RI	EEI-3.5	EEI-3.6	

	BY	CHECKED
DESIGN	Jaswinder Gill	Christine Mamaril
DETAILS	Dali Zhou	Jaswinder Gill
QUANTITIES	Jaswinder Gill	Christine Mamaril

STATE OF CALIFORNIA
DEPARTMENT OF TRANSPORTATION

DIVISION OF ENGINEERING SERVICES
ELECTRICAL-MECHANICAL-WATER AND WASTEWATER DESIGN

BRIDGE NO. 33M5785
POST MILE 2.2

SFOBB MAINTENANCE COMPLEX

LIGHTING POWER AND CONTROL SCHEDULE 2

SHEET EE1-3.22

TAEMWW Imperial Rev. 7/10

ORIGINAL SCALE IN INCHES FOR REDUCED PLANS 0 1 2 3

UNIT 3596
PROJECT NUMBER & PHASE 04120006661
EA 014081

DISREGARD PRINTS BEARING EARLIER REVISION DATES → 12/20/11 02/22/12 03/23/12 05/30/12

REVISION DATES (PRELIMINARY STAGE ONLY) SHEET OF

25-OCT-2012 08:59

ee1_3.22.dgn