PROJECT DESIGN CRITERIA

The building work on this project has been designed to conform to the 2007 California Building Code (2006 IBC).

LOADS

SEISMIC: Occupancy Category = II

Importance Factor I = 1.0

Site Soil Class = E

S_S = 1.500 S_{DS} = 0.900

S_1 = 0.600 S_{D1} = 0.960

Seismic Design Category = D

Seismic Force-Resisting System:

North - South

R = 6.5 C_S = 0.1380

East - West

R = 6.5 C_S = 0.1380

WIND: Importance Factor = 1.0

Basic Wind Speed = 85 mph

Exposure C

Internal Pressure Coefficient GC_{pi} = ± 0.00

LIVE LOAD: Roof = 20 psf

MATERIALS

REINFORCED CONCRETE: (Ultimate Strength Design):

f'c = 3,000 psi

f_y = 60,000 psi

COLD FORMED STEEL: shall be F_y = 33 ksi

FOUNDATION:

Soils report dated : Mar 15, 2011

For Soil Classification, see Log of Test Boring Sheets.

DETAIL NOTES

1. For Concrete see: "Concrete Standard"
2. All bolts shall be hex head machine bolts, with hex head nuts; unless otherwise noted.
3. All lock washers shall be helical spring lock washers.
4. Miscellaneous metal shall be hot dip galvanized.

FRAMING NOTES

1. Cold Formed Steel section designations shall conform to the AISI Standard for Cold-Formed Steel Framing-General Provisions.
2. Framing screws shall be #12 Self-Drilling, Self-Tapping Screws.
3. Penetration of Screws through joined Materials shall not be Less than 3 Exposed Threads. Screws shall be Installed and tightened in accordance with Screw Manufacturer's Instructions.
4. All screws to be ICC approved, subject to approval by the Engineer.
5. All Cold Formed Steel sections shall be unpunched.
6. Joists shall be located directly above stud.
7. Powder Driven Fastener Shall have an Allowable Shear Capacity of 200 lb. & be submitted for approval.

WOOD STRUCTURAL PANEL NOTES

1. Wood Structural Panels shall be conform to the Requirements for their Type in Voluntary Product Standard PS 1-07 or PS 2-04. Panels shall be Factory-Marked Indicating Compliance with Grade Requirements. The Durability Classification shall be Exposure 1.
2. Bearing, shear and exterior walls shall be sheathed with 15/32 " CDX Exposure 1 plywood sheathing with 32/16 Span Rating.
3. All Exterior Wall Panels shall be Installed with Strength Axis Placed Horizontally. All Panel Edges shall be Blocked.
4. All roofs shall be sheathed with 19/32" CDX Exposure 1 Plywood Panels with 40/20 Span Rating.
5. Plywood for roofs shall be placed face grain perpendicular to supports. Where possible, plywood shall be placed in full sheets and staggered one-half sheet length. Any partial plywood sheet shall not be less than 2'-0" in length or width unless fully blocked.
6. Panel Screws shall be #8 Modified Truss Screw with reamer point and a 5/16" min Head Dia. Maximum Spacing shall be 6" at Panel Edges and 12" at Intermediate Supports. See Shear Wall Schedules for other Spacing Requirements.
7. Prior to Installation, Panels shall be protected from Exposure to Weather and Moisture. Provide Air Circulation around Tarp-Covered Stacks..

(A) COLD FORMED STEEL SECTIONS

LOCATION	ITEM	SECTION
Wall	Stud	600S200-43
	Track	600T200-43
	Blocking	600T200-43
Lintel	Stud	600S200-43
	Track	600T200-43
Roof	Joist	600S200-43
	Track	600T200-43
	Blocking	600T200-43

DIST.	COUNTY	ROUTE	POST MILES TOTAL PROJECT	SHEET NO.	TOTAL SHEETS
04	Ala	80	2.2	501	800

REGISTERED CIVIL ENGINEER — 05-31-12 DATE

REGISTERED PROFESSIONAL ENGINEER Sean R. Samuel No. 54569 Exp. 12-31-13 CIVIL STATE OF CALIFORNIA

10-22-12
PLANS APPROVAL DATE

The State of California or its officers or agents shall not be responsible for the accuracy or completeness of electronic copies of this plan sheet.

	BY	CHECKED
DESIGN	Sean Samuel	Brian Sutliff
DETAILS	Sean Samuel	Brian Sutliff
QUANTITIES		

STATE OF CALIFORNIA DEPARTMENT OF TRANSPORTATION

DIVISION OF ENGINEERING SERVICES ARCHITECTURAL AND STRUCTURAL DESIGN

BRIDGE NO. 58M5709

POST MILE 2.2

SFOBB MAINTENANCE COMPLEX

WASH/FUEL BUILDING

DESIGN CRITERIA AND DETAIL NOTES

SHEET **ST4-0**

TAEMWW Imperial Rev. 7/10

ORIGINAL SCALE IN INCHES FOR REDUCED PLANS 0 1 2 3

UNIT 3599

PROJECT NUMBER & PHASE 04120006661

EA 014081

DISREGARD PRINTS BEARING EARLIER REVISION DATES → 02-08-11 02-10-11 03-17-11

REVISION DATES (PRELIMINARY STAGE ONLY) SHEET OF

D:\User\Projects\Dist_04\0400000038_sfobb_ms_complex\Expedite_20120620\st_04\st4_00.dgn

25-OCT-2012 15:05

DIST.	COUNTY	ROUTE	POST MILES TOTAL PROJECT	SHEET NO.	TOTAL SHEETS
04	Ala	80	2.2	502	800

REGISTERED CIVIL ENGINEER — DATE 05-31-12

REGISTERED PROFESSIONAL ENGINEER — Sean R. Samuel No. 54569 Exp. 12-31-13 CIVIL — STATE OF CALIFORNIA

10-22-12
PLANS APPROVAL DATE

The State of California or its officers or agents shall not be responsible for the accuracy or completeness of electronic copies of this plan sheet.

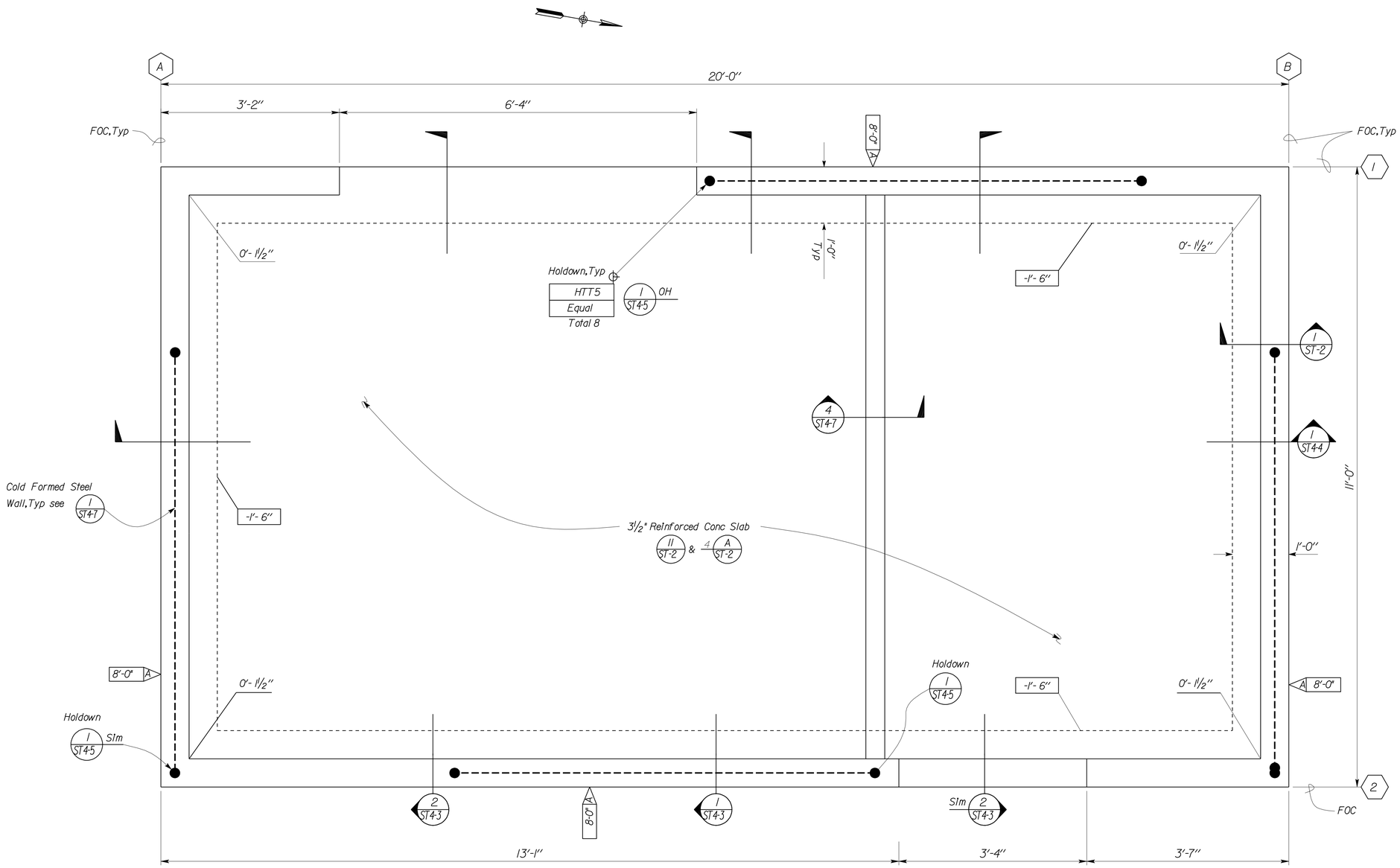

Elevation . = Datum 0'-0"

1 FOUNDATION PLAN

Scale 1" = 1' - 0"

A SHEARWALL TABLE

Shear Wall	Screw Schedule		Holdown	Holdown Anchor Bolt
	Edge Screw	Field Screw		
A	6"	12"	HTT5 / Equal	See Note 1

SHEARWALL TABLE NOTES

1. Holdown Anchor Bolts shall be 5/8" Ø with 16" embedment in Concrete measured from top of raised curb.

NOTES

1. For Cold Formed Wall sections see A ST4-0

	BY	CHECKED
DESIGN	Sean Samuel	Brian Sutliff
DETAILS	Sean Samuel	Brian Sutliff
QUANTITIES		

STATE OF CALIFORNIA DEPARTMENT OF TRANSPORTATION

DIVISION OF ENGINEERING SERVICES ARCHITECTURAL AND STRUCTURAL DESIGN

BRIDGE NO. 58M5709
POST MILE 2.2

SFOBB MAINTENANCE COMPLEX

WASH/FUEL BUILDING — FOUNDATION PLAN

SHEET ST4-1

TAEMWW Imperial Rev. 7/10

ORIGINAL SCALE IN INCHES FOR REDUCED PLANS 0 1 2 3

UNIT 3599
PROJECT NUMBER & PHASE 04120006661
EA 014081

DISREGARD PRINTS BEARING EARLIER REVISION DATES → REVISION DATES (PRELIMINARY STAGE ONLY) SHEET OF

D:\User\Projects\Dist_04\0400000038_sfobb_ms_complex\Expedite_20120620\st_04\st4_01.dgn

25-OCT-2012 15:05

DIST.	COUNTY	ROUTE	POST MILES TOTAL PROJECT	SHEET NO.	TOTAL SHEETS
04	Ala	80	2.2	503	800

REGISTERED CIVIL ENGINEER — DATE 05-31-12

REGISTERED PROFESSIONAL ENGINEER Sean R. Samuel No. 54569 Exp. 12-31-13 CIVIL STATE OF CALIFORNIA

10-22-12
PLANS APPROVAL DATE

The State of California or its officers or agents shall not be responsible for the accuracy or completeness of electronic copies of this plan sheet.

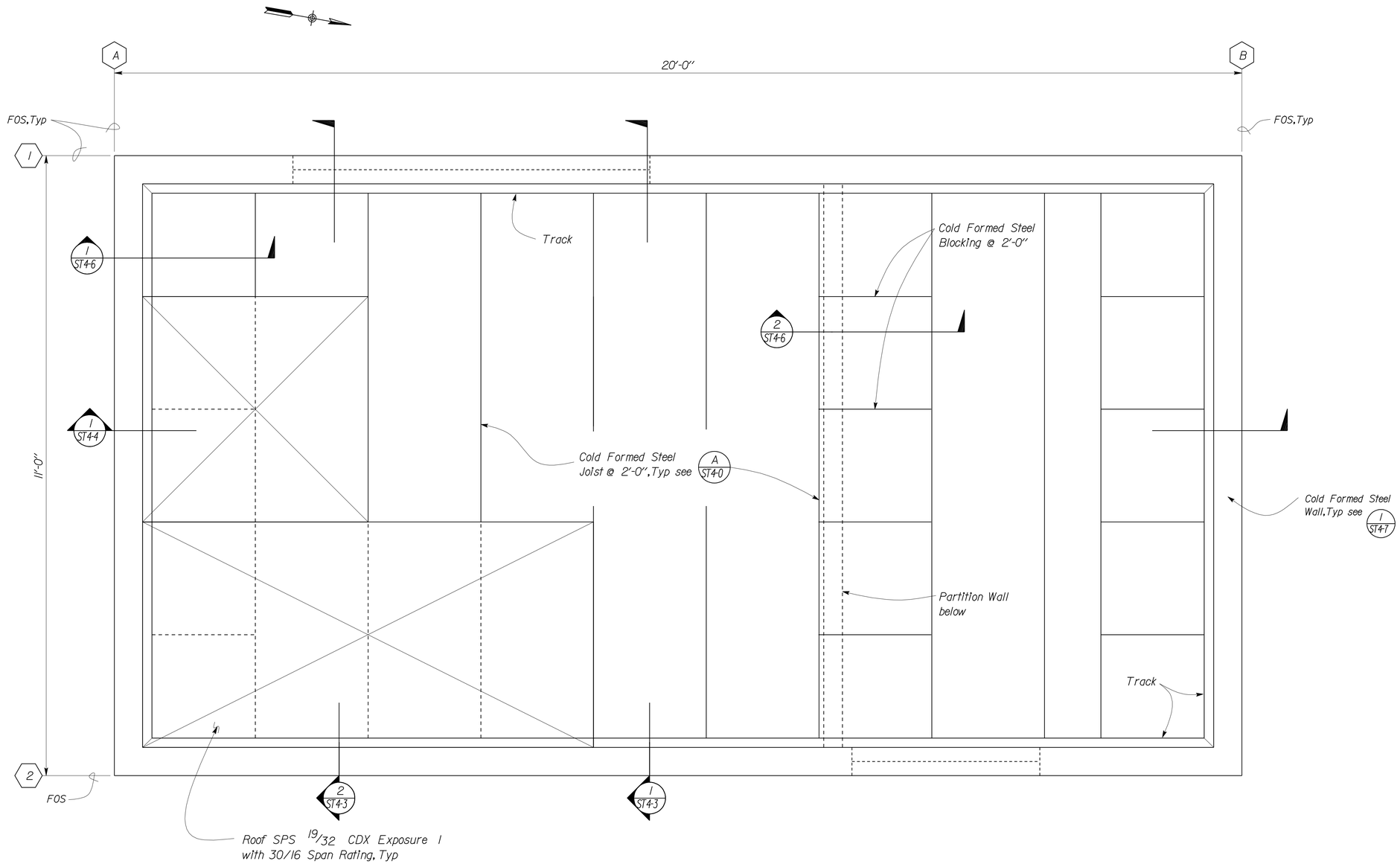

1 ROOF FRAMING PLAN
Scale 1" = 1'-0"

A ROOF FASTENER SCHEDULE

Screw Schedule		
Edge	Boundary	Field
6"	6"	12"

NOTES

1. For Cold Formed Wall and Roof sections see A ST4-0

DESIGN	BY Sean Samuel	CHECKED Brian Sutliff	
DETAILS	BY Sean Samuel	CHECKED Brian Sutliff	
QUANTITIES	BY	CHECKED	

STATE OF CALIFORNIA
DEPARTMENT OF TRANSPORTATION

DIVISION OF ENGINEERING SERVICES
ARCHITECTURAL AND STRUCTURAL DESIGN

BRIDGE NO. 58M5709
POST MILE 2.2

SFOBB MAINTENANCE COMPLEX

WASH/FUEL BUILDING

ROOF FRAMING PLAN

SHEET ST4-2

TAEMWW Imperial Rev. 7/10

ORIGINAL SCALE IN INCHES FOR REDUCED PLANS 0 1 2 3

UNIT 3599
PROJECT NUMBER & PHASE 04120006661
EA 014081

DISREGARD PRINTS BEARING EARLIER REVISION DATES

REVISION DATES (PRELIMINARY STAGE ONLY) SHEET OF

D:\User\Projects\Dist_04\0400000038_sfobb_ms_complex\Expedite_20120620\st_04\st4_02.dgn

25-OCT-2012 15:05

DIST.	COUNTY	ROUTE	POST MILES TOTAL PROJECT	SHEET NO.	TOTAL SHEETS
04	Ala	80	2.2	504	800

REGISTERED CIVIL ENGINEER — DATE 05-31-12

REGISTERED PROFESSIONAL ENGINEER — Sean R. Samuel No. 54569 Exp. 12-31-13 CIVIL — STATE OF CALIFORNIA

10-22-12
PLANS APPROVAL DATE

The State of California or its officers or agents shall not be responsible for the accuracy or completeness of electronic copies of this plan sheet.

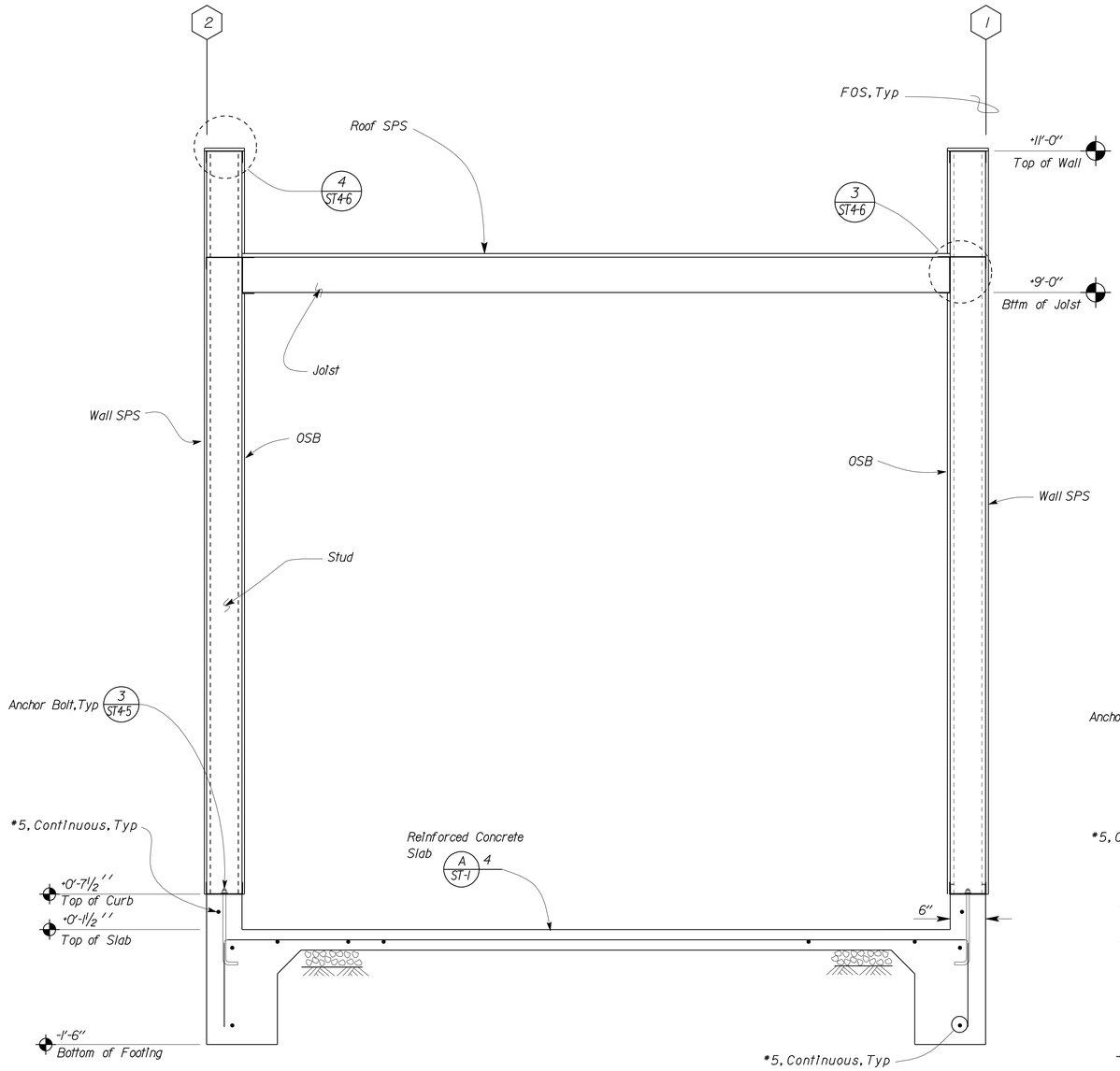

1 BUILDING SECTION
Scale 1" = 1' - 0"

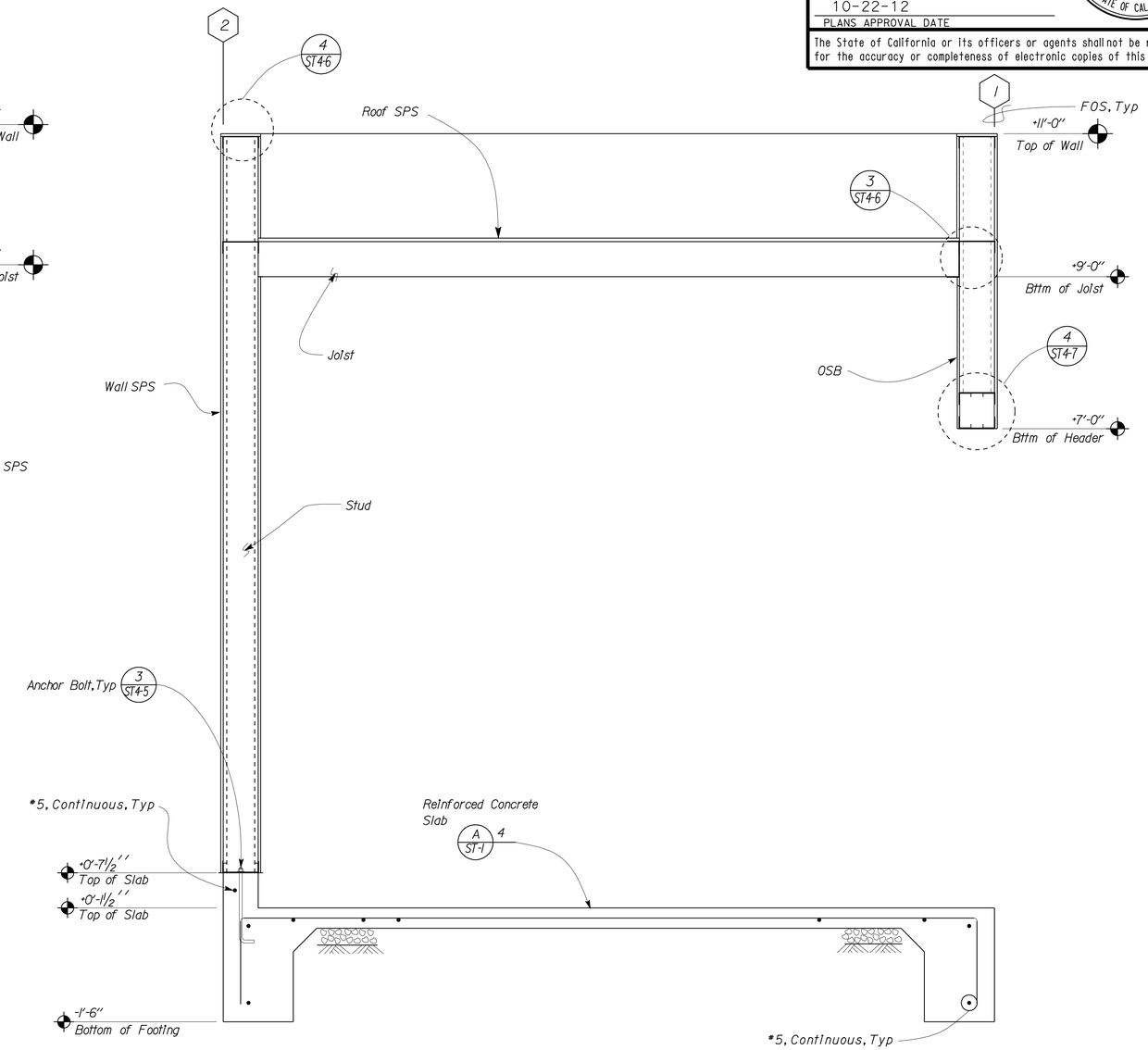

2 BUILDING SECTION
Scale 1" = 1' - 0"

	BY	CHECKED
DESIGN	Sean Samuel	Brian Sutliff
DETAILS	Sean Samuel	Brian Sutliff
QUANTITIES		

STATE OF CALIFORNIA
DEPARTMENT OF TRANSPORTATION

DIVISION OF ENGINEERING SERVICES
ARCHITECTURAL AND STRUCTURAL DESIGN

BRIDGE NO. 58M5709
POST MILE 2.2

SFOBB MAINTENANCE COMPLEX

WASH/FUEL BUILDING

BUILDING SECTIONS

SHEET ST4-3

TAEMWW Imperial Rev. 7/10

ORIGINAL SCALE IN INCHES FOR REDUCED PLANS 0 1 2 3

UNIT 3599
PROJECT NUMBER & PHASE 04120006661
EA 014081

DISREGARD PRINTS BEARING EARLIER REVISION DATES → - -09

REVISION DATES (PRELIMINARY STAGE ONLY) SHEET OF

D:\User\Projects\Dist_04\0400000038_sfobb_ms_complex\Expedite_20120620\st_04\st4_03.dgn

25-OCT-2012 15:06

DIST.	COUNTY	ROUTE	POST MILES TOTAL PROJECT	SHEET NO.	TOTAL SHEETS
04	Ala	80	2.2	505	800

REGISTERED CIVIL ENGINEER — DATE 05-31-12

REGISTERED PROFESSIONAL ENGINEER Sean R. Samuel No. 54569 Exp. 12-31-13 CIVIL STATE OF CALIFORNIA

10-22-12
PLANS APPROVAL DATE

The State of California or its officers or agents shall not be responsible for the accuracy or completeness of electronic copies of this plan sheet.

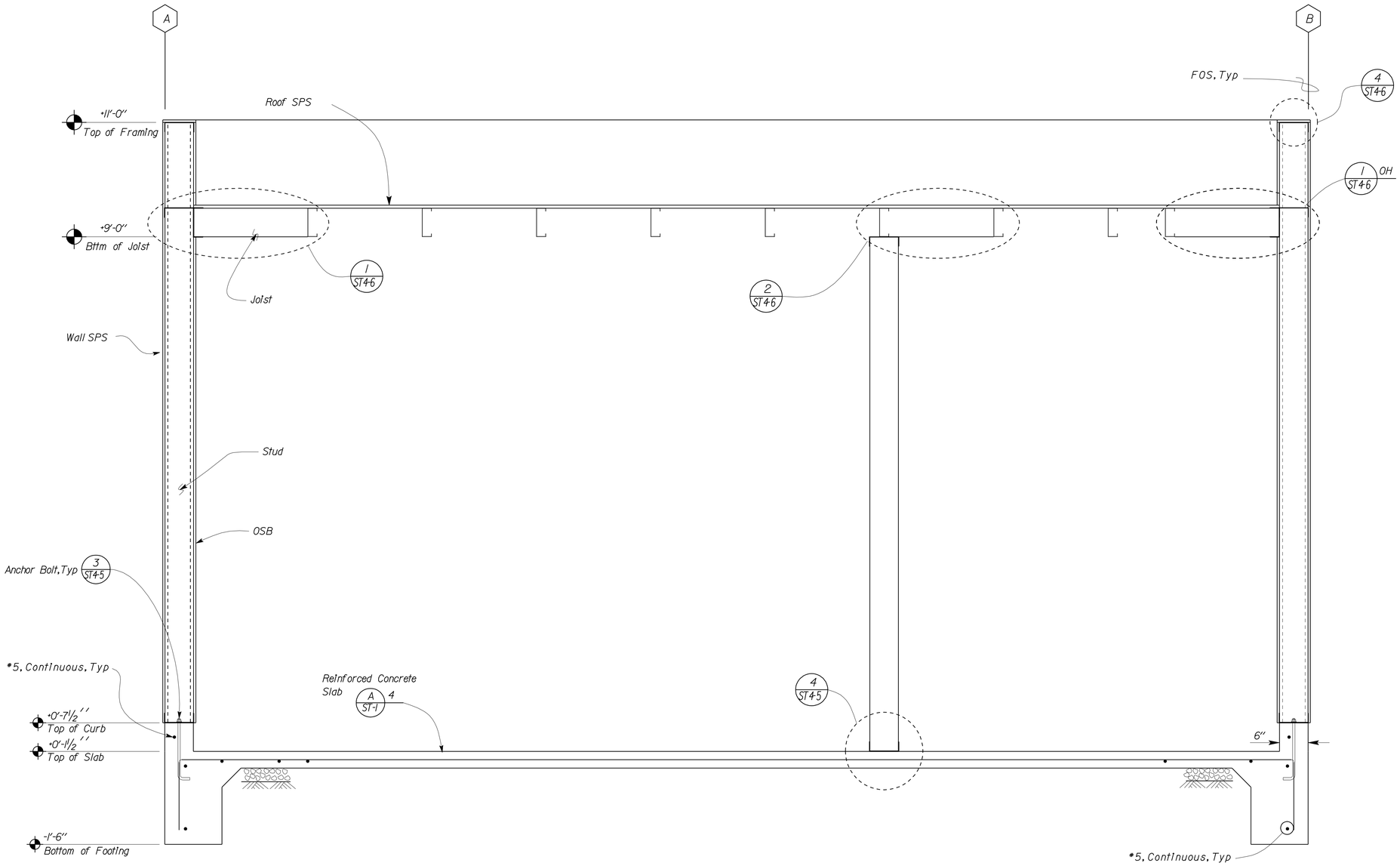

1 BUILDING SECTION
Scale 1" = 1'-0"

	BY	CHECKED
DESIGN	Sean Samuel	Brian Sutliff
DETAILS	Sean Samuel	Brian Sutliff
QUANTITIES		

STATE OF CALIFORNIA
DEPARTMENT OF TRANSPORTATION

DIVISION OF ENGINEERING SERVICES
ARCHITECTURAL AND STRUCTURAL DESIGN

BRIDGE NO. 58M5709
POST MILE 2.2

SFOBB MAINTENANCE COMPLEX

WASH/FUEL BUILDING

LONGITUDINAL BUILDING SECTION

SHEET ST4-4

TAEMWW Imperial Rev. 7/10

ORIGINAL SCALE IN INCHES FOR REDUCED PLANS 0 1 2 3

UNIT 3599
PROJECT NUMBER & PHASE 04120006661

DISREGARD PRINTS BEARING EARLIER REVISION DATES → - -09

REVISION DATES (PRELIMINARY STAGE ONLY) SHEET OF

EA 014081

D:\User\Projects\Dist_04\0400000038_sfobb_ms_complex\Expedite_20120620\st_04\st4_04.dgn

25-OCT-2012 15:06

DIST.	COUNTY	ROUTE	POST MILES TOTAL PROJECT	SHEET NO.	TOTAL SHEETS
04	Ala	80	2.2	506	800

REGISTERED CIVIL ENGINEER — DATE 05-31-12

REGISTERED PROFESSIONAL ENGINEER Sean R. Samuel No. 54569 Exp. 12-31-13 CIVIL STATE OF CALIFORNIA

10-22-12
PLANS APPROVAL DATE

The State of California or its officers or agents shall not be responsible for the accuracy or completeness of electronic copies of this plan sheet.

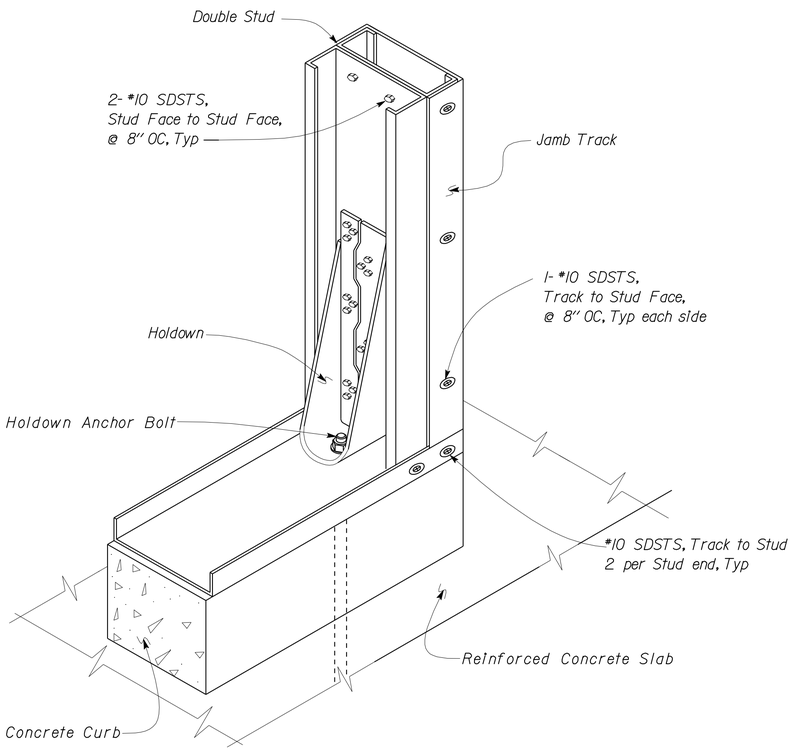

NOTES
Wall SPS not shown for clarity
Curb Reinforcement not shown for clarity

1 HOLDOWN DETAIL
No Scale

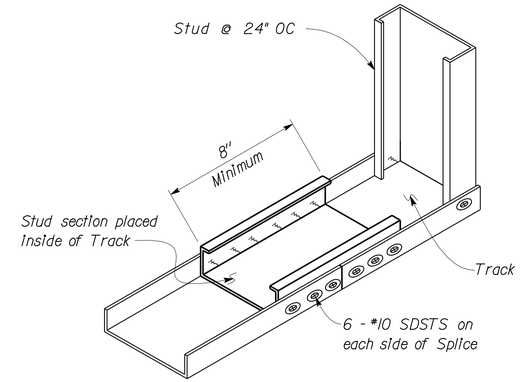

2 WALL BOTTOM TRACK SPLICE
No Scale

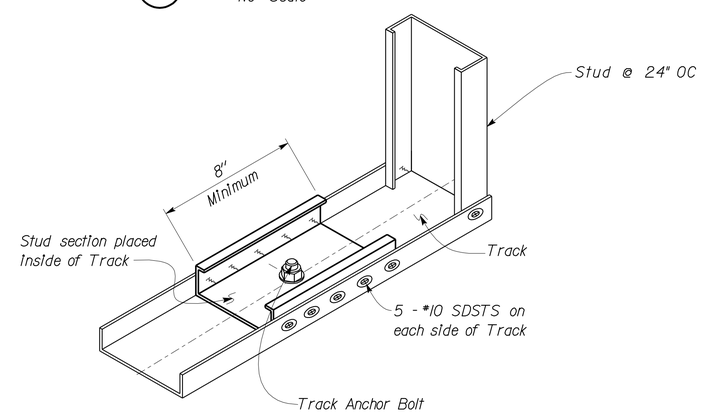

3 ANCHOR BOLT DETAIL
No Scale

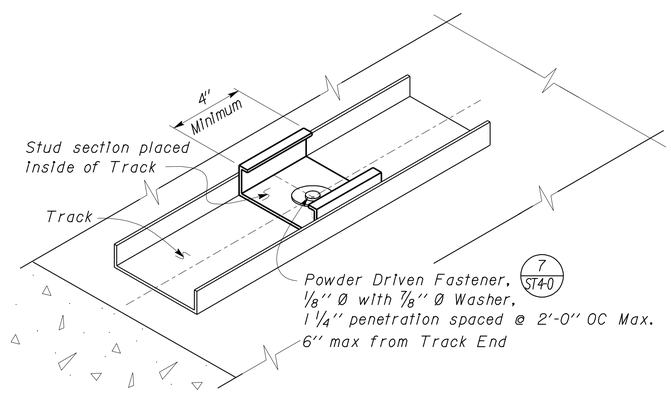

4 WALL TRACK ANCHORAGE AT PARTITION WALL
No Scale

	BY	CHECKED
DESIGN	Sean Samuel	Brian Sutliff
DETAILS	Sean Samuel	Brian Sutliff
QUANTITIES		

STATE OF CALIFORNIA
DEPARTMENT OF TRANSPORTATION

DIVISION OF ENGINEERING SERVICES
ARCHITECTURAL AND STRUCTURAL DESIGN

BRIDGE NO. 58M5709
POST MILE 2.2

SFOBB MAINTENANCE COMPLEX
WASH/FUEL BUILDING
WALL FRAMING DETAILS

SHEET ST4-5

TAEMWW Imperial Rev. 7/10

ORIGINAL SCALE IN INCHES FOR REDUCED PLANS 0 1 2 3

UNIT 3599
PROJECT NUMBER & PHASE 04120006661
EA 014081

DISREGARD PRINTS BEARING EARLIER REVISION DATES → - 09

REVISION DATES (PRELIMINARY STAGE ONLY) SHEET OF

D:\User\Projects\Dist_04\0400000038_sfobb_ms_complex\Expedite_20120620\st_04\st4_05.dgn

25-OCT-2012 15:06

DIST.	COUNTY	ROUTE	POST MILES TOTAL PROJECT	SHEET NO.	TOTAL SHEETS
04	Ala	80	2.2	507	800

REGISTERED CIVIL ENGINEER — 05-31-12 DATE

REGISTERED PROFESSIONAL ENGINEER Sean R. Samuel No. 54569 Exp. 12-31-13 CIVIL STATE OF CALIFORNIA

10-22-12
PLANS APPROVAL DATE

The State of California or its officers or agents shall not be responsible for the accuracy or completeness of electronic copies of this plan sheet.

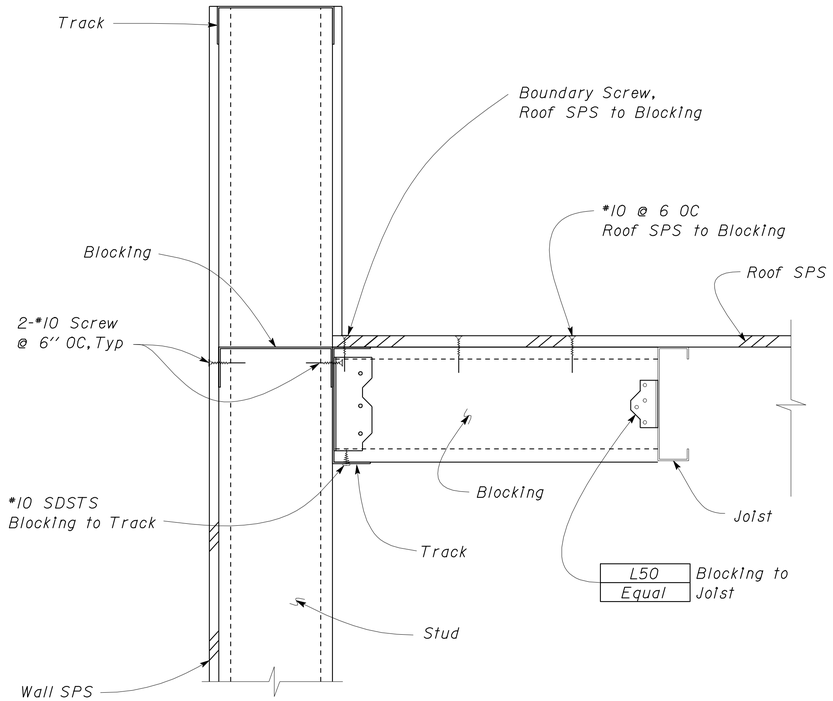

1 ROOF SECTION
Scale 3'' = 1' - 0''

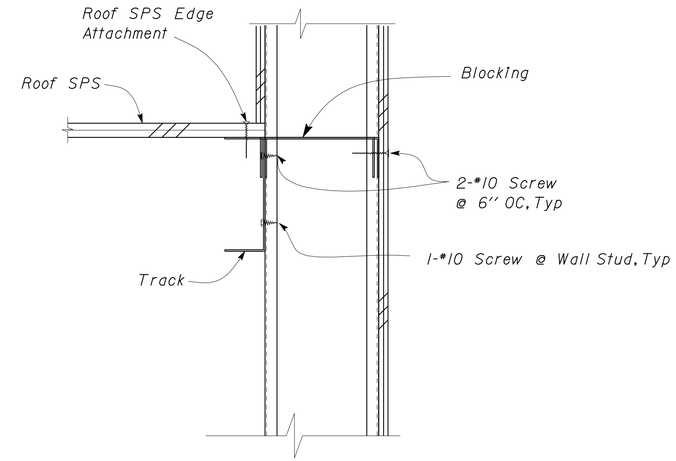

3 ROOF SUPPORT DETAIL ALONG WALL
Scale 3'' = 1' - 0''

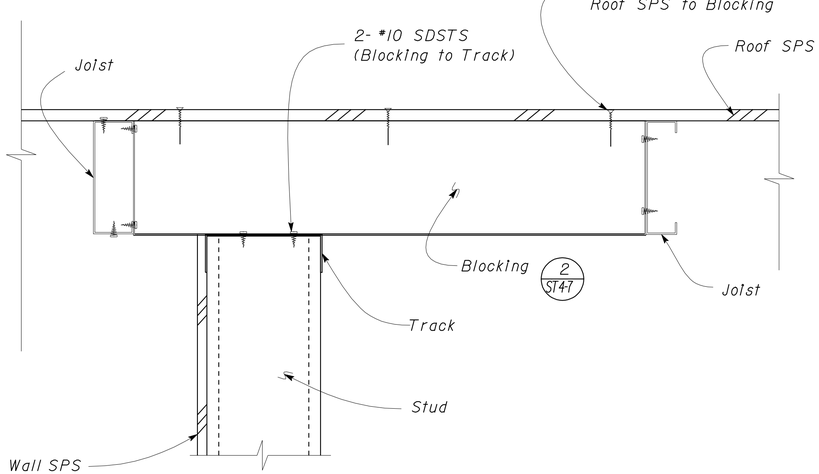

2 PARTITION WALL ROOF ATTACHMENT
Scale 3'' = 1' - 0''

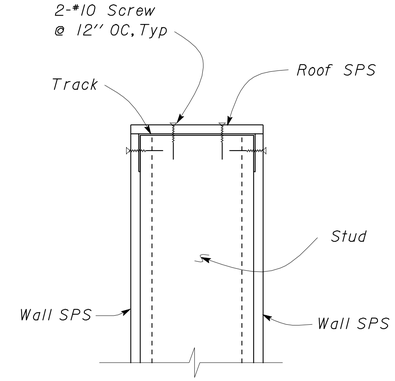

4 TOP OF WALL DETAIL
Scale 3'' = 1' - 0''

DESIGN	BY Sean Samuel	CHECKED Brian Sutliff	
DETAILS	BY Sean Samuel	CHECKED Brian Sutliff	
QUANTITIES	BY	CHECKED	

STATE OF CALIFORNIA
DEPARTMENT OF TRANSPORTATION

DIVISION OF ENGINEERING SERVICES
ARCHITECTURAL AND STRUCTURAL DESIGN

BRIDGE NO. 58M5709
POST MILE 2.2

SFOBB MAINTENANCE COMPLEX

WASH/FUEL BUILDING — ROOF FRAMING AND HEADER DETAILS

SHEET **ST4-6**

TAEMWW Imperial Rev. 7/10

ORIGINAL SCALE IN INCHES FOR REDUCED PLANS 0 1 2 3

UNIT 3599
PROJECT NUMBER & PHASE 04120006661
EA 014081

DISREGARD PRINTS BEARING EARLIER REVISION DATES → REVISION DATES (PRELIMINARY STAGE ONLY) - 09 SHEET OF

D:\User\Projects\Dist_04\0400000038_sfobb_ms_complex\Expedite_20120620\st_04\st4_06.dgn

25-OCT-2012 15:06

DIST.	COUNTY	ROUTE	POST MILES TOTAL PROJECT	SHEET NO.	TOTAL SHEETS
04	Ala	80	2.2	508	800

REGISTERED CIVIL ENGINEER — DATE 05-31-12

REGISTERED PROFESSIONAL ENGINEER Sean R. Samuel No. 54569 Exp. 12-31-13 CIVIL STATE OF CALIFORNIA

10-22-12
PLANS APPROVAL DATE

The State of California or its officers or agents shall not be responsible for the accuracy or completeness of electronic copies of this plan sheet.

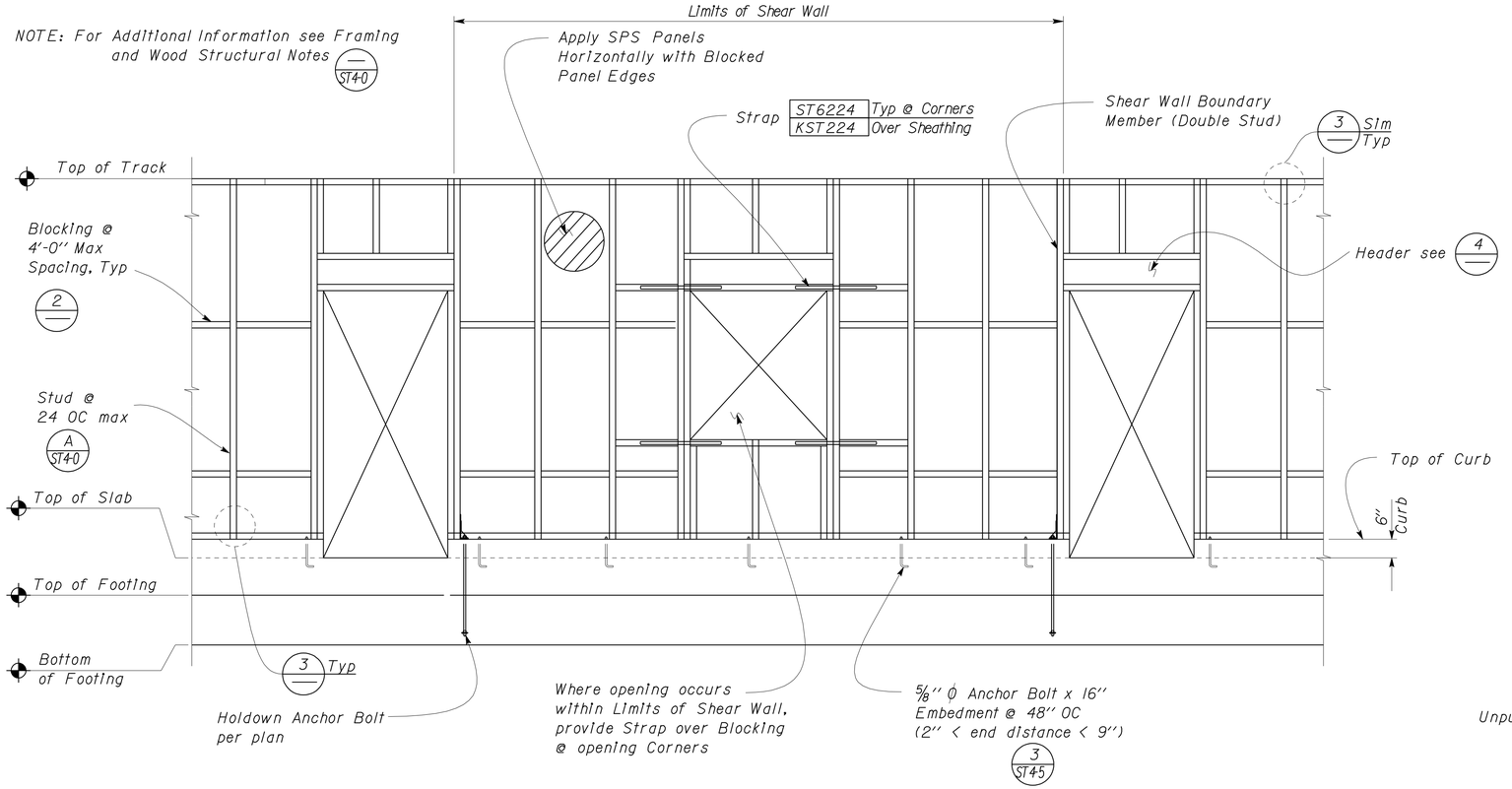

1 TYPICAL BEARING/SHEAR WALL
No Scale

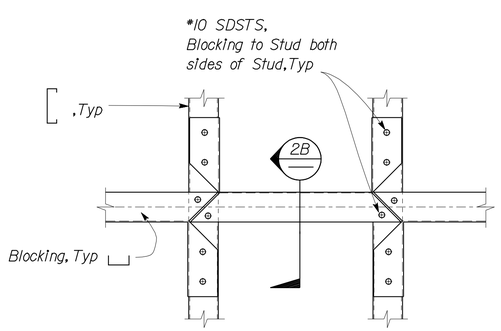

2A ELEVATION

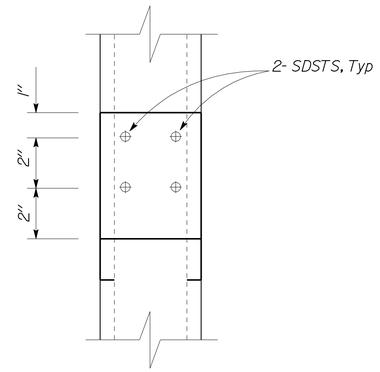

2B SECTION

NOTE:
Use a piece of Track or Stud as Blocking. Cut Flanges of Track and bend Web.

2 BLOCKING DETAIL
No Scale

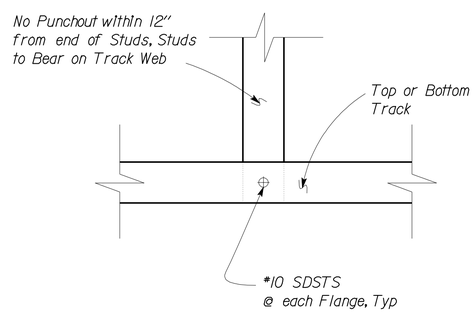

3 BOTTOM/TOP TRACK DETAIL
No Scale

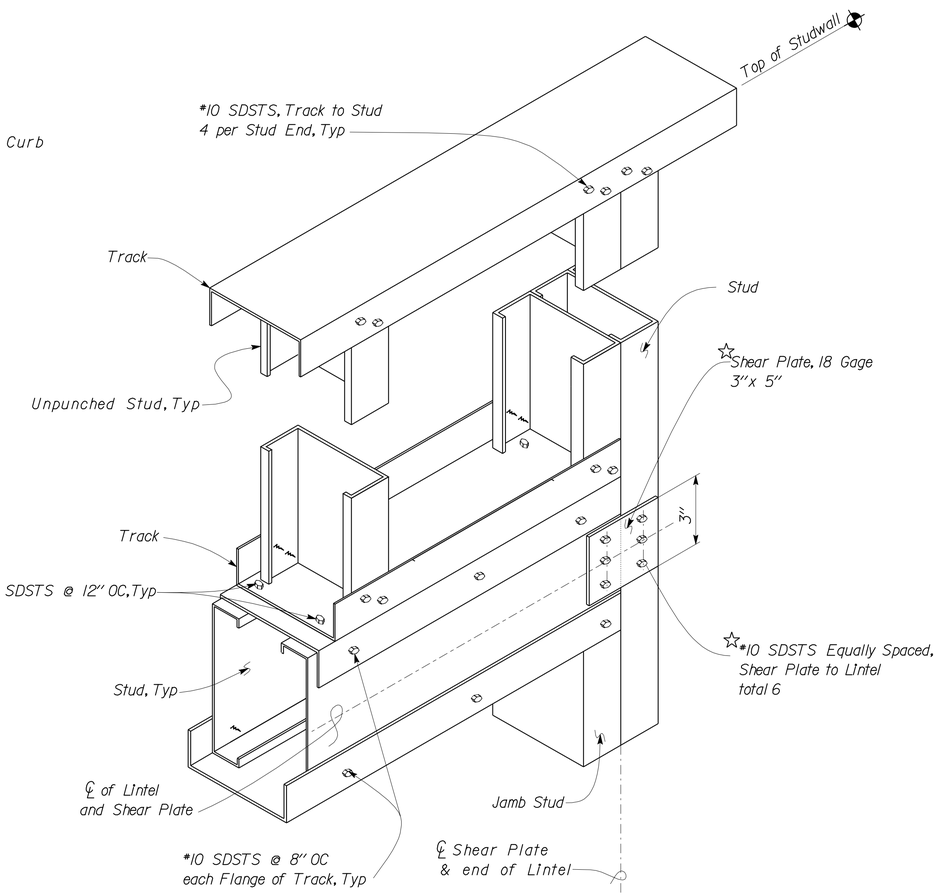

☆NOTE
Shear Plate Connections to occur on each side of Lintel

4 HEADER DETAIL
No Scale

DESIGN	BY Sean Samuel	CHECKED Brian Sutliff	
DETAILS	BY Sean Samuel	CHECKED Brian Sutliff	
QUANTITIES	BY	CHECKED	

STATE OF CALIFORNIA DEPARTMENT OF TRANSPORTATION

DIVISION OF ENGINEERING SERVICES ARCHITECTURAL AND STRUCTURAL DESIGN

BRIDGE NO. 58M5709
POST MILE 2.2

SFOBB MAINTENANCE COMPLEX

WASH/FUEL BUILDING — WALL FRAMING DETAILS AND NOTES

SHEET ST4-7

TAEMWW Imperial Rev. 7/10

ORIGINAL SCALE IN INCHES FOR REDUCED PLANS 0 1 2 3

UNIT 3599
PROJECT NUMBER & PHASE 04120006661
EA 014081

DISREGARD PRINTS BEARING EARLIER REVISION DATES → - 09

REVISION DATES (PRELIMINARY STAGE ONLY) SHEET OF

D:\User\Projects\Dist_04\0400000038_sfobb_ms_complex\Expedite_20120620\st_04\st4_07.dgn

25-OCT-2012 15:06

DIST	COUNTY	ROUTE	POST MILES TOTAL PROJECT	SHEET No.	TOTAL SHEETS
04	Ala	80	2.2	509	800

REGISTERED CIVIL ENGINEER — DATE 3-23-12

10-22-12
PLANS APPROVAL DATE

REGISTERED PROFESSIONAL ENGINEER — Caroline Chen — No. C62438 — Exp. 9-30-13 — CIVIL — STATE OF CALIFORNIA

The State of California or its officers or agents shall not be responsible for the accuracy or completeness of electronic copies of this plan sheet.

This LOTB sheet was prepared in accordance with the Caltrans Soil & Rock Logging, Classification, & Presentation Manual (2010 Edition).

BENCH MARK

CT nail and shiner on E/B shoulder of Burma Rd. 161′ Rt, Sta 26+72.0, "N" Line.
Survey Monument #5308,
N 2,127,360.342000
E 6,039,937.799000
Elev +7.706
NAVD 88

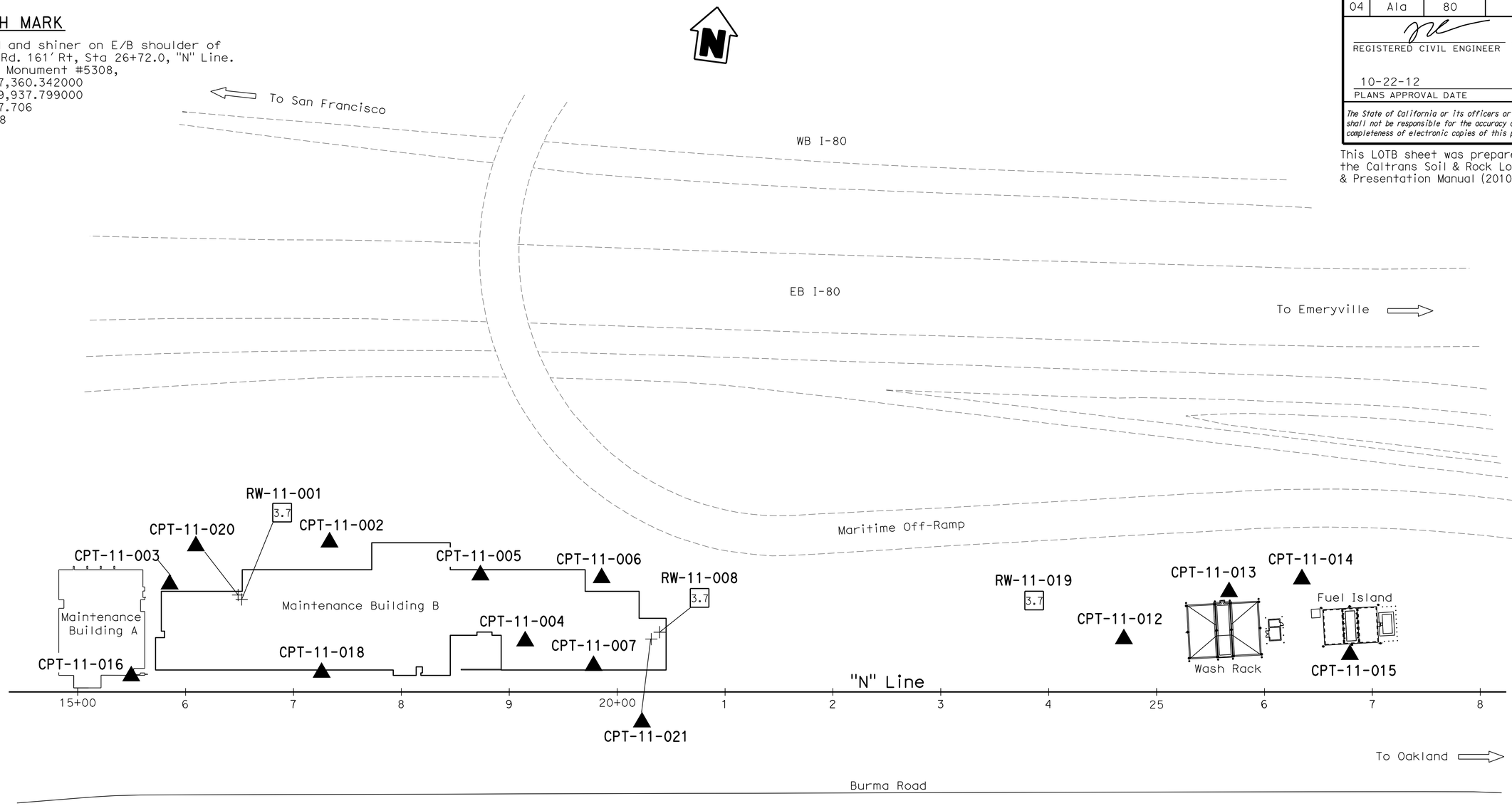

PLAN
1" = 50′

ENGINEERING SERVICES	MATERIALS AND GEOTECHNICAL SERVICES	STATE OF CALIFORNIA DEPARTMENT OF TRANSPORTATION	DIVISION OF ENGINEERING SERVICES STRUCTURE DESIGN DESIGN BRANCH X	BRIDGE NO. / POST MILE 2.0/2.4	SFOBB MAINTENANCE COMPLEX (PHASE I) LOG OF TEST BORINGS 1 OF 14
FUNCTIONAL SUPERVISOR NAME: M. Momenzadeh	DRAWN BY: W. Tang 02/12 CHECKED BY: J. Moore	FIELD INVESTIGATION BY: D. Nesbitt			
OGS CIVIL LOG OF TEST BORINGS SHEET	ORIGINAL SCALE IN INCHES FOR REDUCED PLANS 0 1 2 3	UNIT: 3643 PROJECT NUMBER & PHASE: 04120006661	CONTRACT NO.: 04-014041	DISREGARD PRINTS BEARING EARLIER REVISION DATES	REVISION DATES ~~03-06-12~~ 03-16-12 SHEET X OF X

FILE => st0_Log_01of14.dgn

USERNAME => s114640 DATE PLOTTED => 25-OCT-2012 TIME PLOTTED => 15:06

DIST	COUNTY	ROUTE	POST MILES TOTAL PROJECT	SHEET No.	TOTAL SHEETS
04	Ala	80	2.2	510	800

REGISTERED CIVIL ENGINEER — DATE 3-23-12

10-22-12
PLANS APPROVAL DATE

REGISTERED PROFESSIONAL ENGINEER — Caroline Chen — No. C62438 — Exp. 9-30-13 — CIVIL — STATE OF CALIFORNIA

The State of California or its officers or agents shall not be responsible for the accuracy or completeness of electronic copies of this plan sheet.

This LOTB sheet was prepared in accordance with the Caltrans Soil & Rock Logging, Classification, & Presentation Manual (2010 Edition).

FOR PLAN VIEW, SEE
"LOG OF TEST BORINGS 1 OF 14"

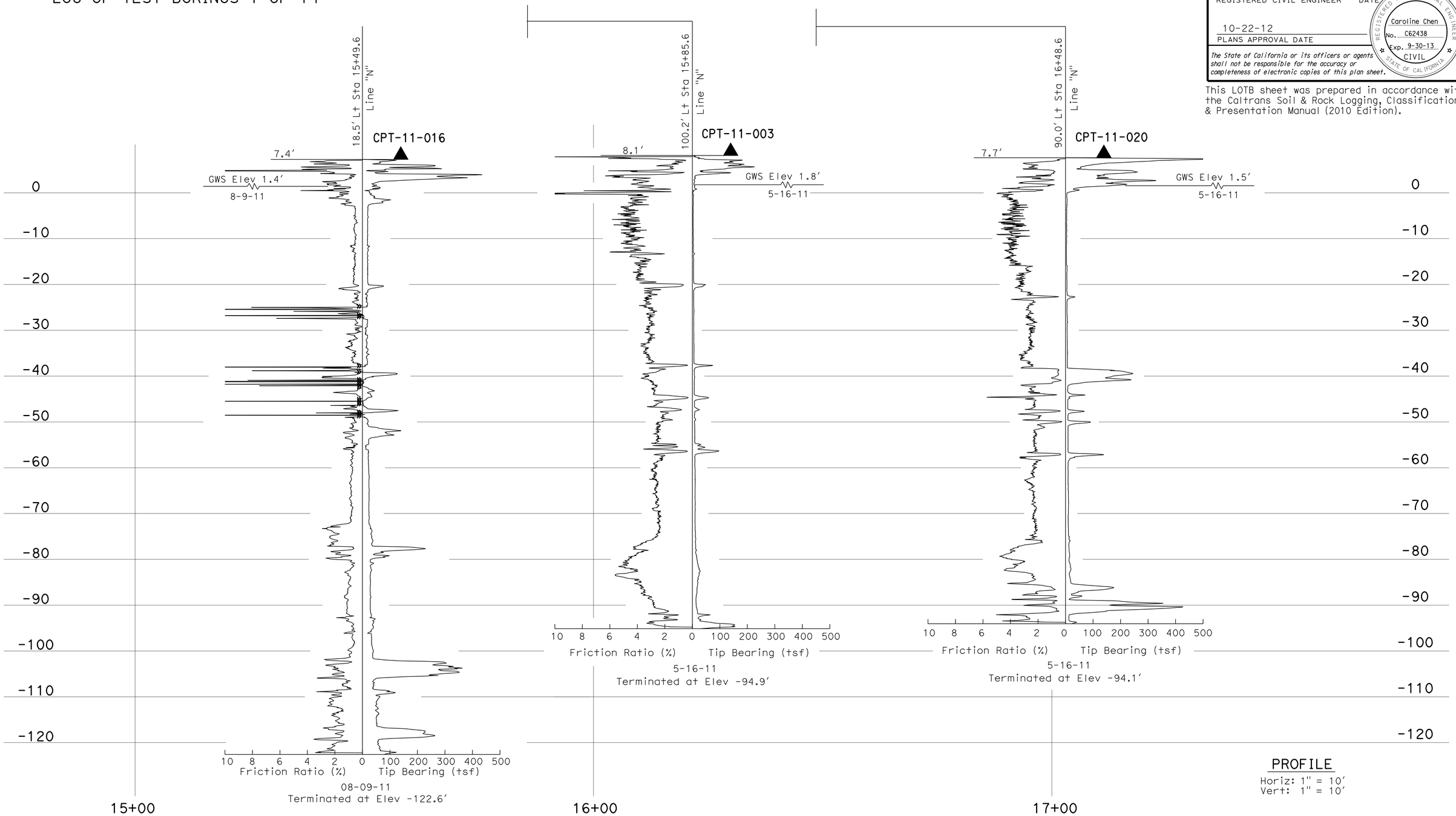

ENGINEERING SERVICES	MATERIALS AND GEOTECHNICAL SERVICES	STATE OF CALIFORNIA DEPARTMENT OF TRANSPORTATION	DIVISION OF ENGINEERING SERVICES STRUCTURE DESIGN	BRIDGE NO.	SFOBB MAINTENANCE COMPLEX (PHASE I)
FUNCTIONAL SUPERVISOR	DRAWN BY: W. Tang 02/12	FIELD INVESTIGATION BY:	DESIGN BRANCH X	POST MILE	LOG OF TEST BORINGS 2 OF 14
NAME: M. Momenzadeh	CHECKED BY: J. Moore	D. Nesbitt		2.0/2.4	

OGS CIVIL LOG OF TEST BORINGS SHEET

ORIGINAL SCALE IN INCHES FOR REDUCED PLANS 0 1 2 3

UNIT: 3643
PROJECT NUMBER & PHASE: 04120006661 CONTRACT NO.: 04-014041

DISREGARD PRINTS BEARING EARLIER REVISION DATES → REVISION DATES 02-28-12 03-06-12 03-19-12 SHEET X OF X

FILE => st0_Log_02of14.dgn

USERNAME => s123631 DATE PLOTTED => 25-OCT-2012 TIME PLOTTED => 15:07

DIST	COUNTY	ROUTE	POST MILES TOTAL PROJECT	SHEET No.	TOTAL SHEETS
04	Ala	80	2.2	511	800

REGISTERED CIVIL ENGINEER 3-23-12 DATE

10-22-12
PLANS APPROVAL DATE

REGISTERED PROFESSIONAL ENGINEER Caroline Chen No. C62438 Exp. 9-30-13 CIVIL STATE OF CALIFORNIA

The State of California or its officers or agents shall not be responsible for the accuracy or completeness of electronic copies of this plan sheet.

This LOTB sheet was prepared in accordance with the Caltrans Soil & Rock Logging, Classification, & Presentation Manual (2010 Edition).

FOR PLAN VIEW, SEE
"LOG OF TEST BORINGS 1 OF 14"

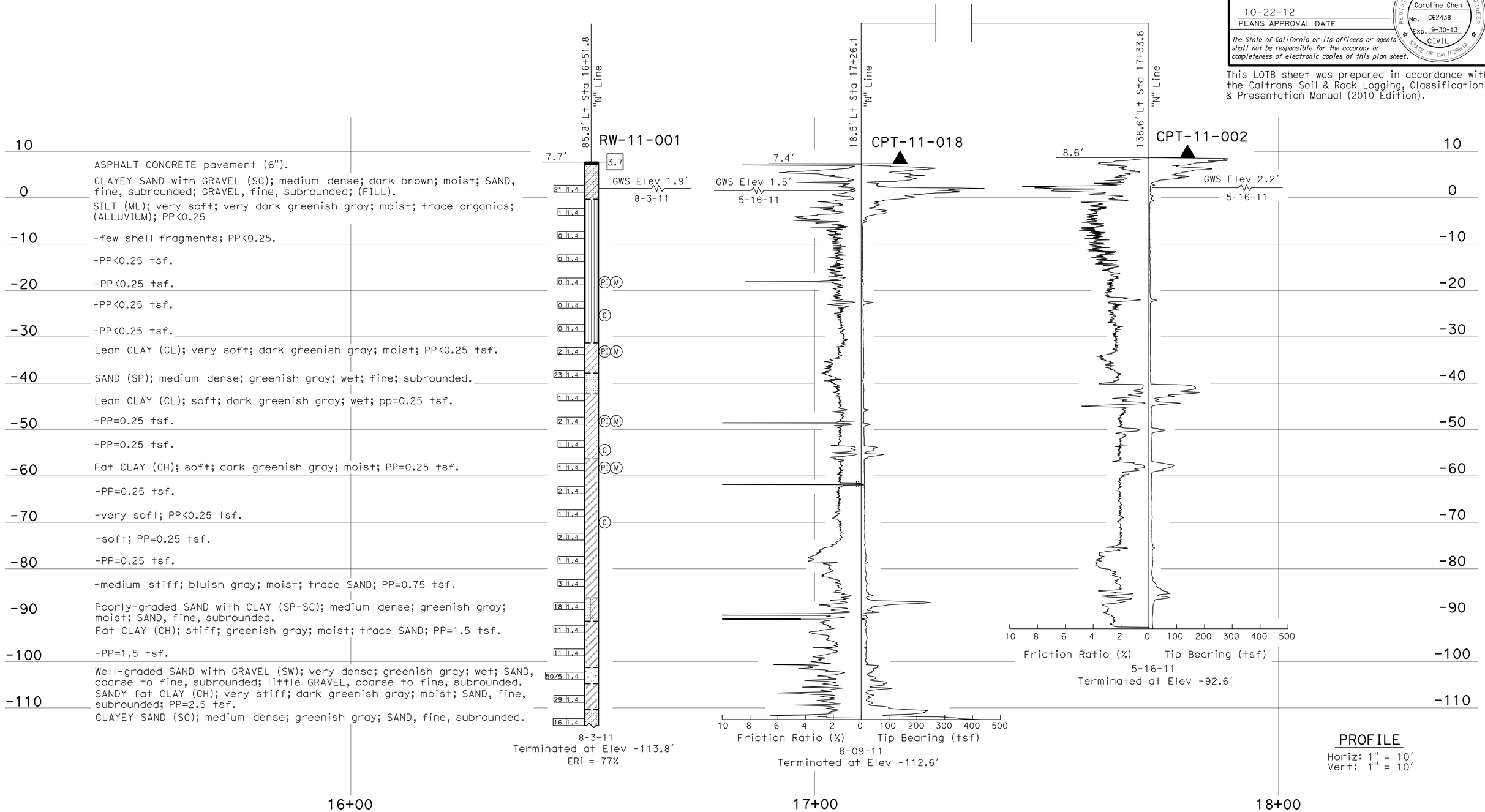

ENGINEERING SERVICES	MATERIALS AND GEOTECHNICAL SERVICES	STATE OF CALIFORNIA DEPARTMENT OF TRANSPORTATION	DIVISION OF ENGINEERING SERVICES STRUCTURE DESIGN DESIGN BRANCH X	BRIDGE NO. / POST MILE 2.0/2.4	SFOBB MAINTENANCE COMPLEX (PHASE I) LOG OF TEST BORINGS 3 OF 14
FUNCTIONAL SUPERVISOR NAME: M. Momenzadeh	DRAWN BY: W. Tang 02/12 CHECKED BY: J. Moore	FIELD INVESTIGATION BY: D. Nesbitt			

OGS CIVIL LOG OF TEST BORINGS SHEET

ORIGINAL SCALE IN INCHES FOR REDUCED PLANS 0 1 2 3

UNIT: 3643
PROJECT NUMBER & PHASE: 04120006661 CONTRACT NO.: 04-014041

DISREGARD PRINTS BEARING EARLIER REVISION DATES → REVISION DATES 02-24-12 02-28-12 03-05-12 SHEET X OF X

FILE => st0_Log_03of14.dgn

USERNAME => s123631 DATE PLOTTED => 25-OCT-2012 TIME PLOTTED => 15:07

DIST	COUNTY	ROUTE	POST MILES TOTAL PROJECT	SHEET No.	TOTAL SHEETS
04	Ala	80	2.2	512	800

REGISTERED CIVIL ENGINEER — DATE 3-23-12

10-22-12
PLANS APPROVAL DATE

REGISTERED PROFESSIONAL ENGINEER — Caroline Chen — No. C62438 — Exp. 9-30-13 — CIVIL — STATE OF CALIFORNIA

The State of California or its officers or agents shall not be responsible for the accuracy or completeness of electronic copies of this plan sheet.

This LOTB sheet was prepared in accordance with the Caltrans Soil & Rock Logging, Classification, & Presentation Manual (2010 Edition).

FOR PLAN VIEW, SEE
"LOG OF TEST BORINGS 1 OF 14"

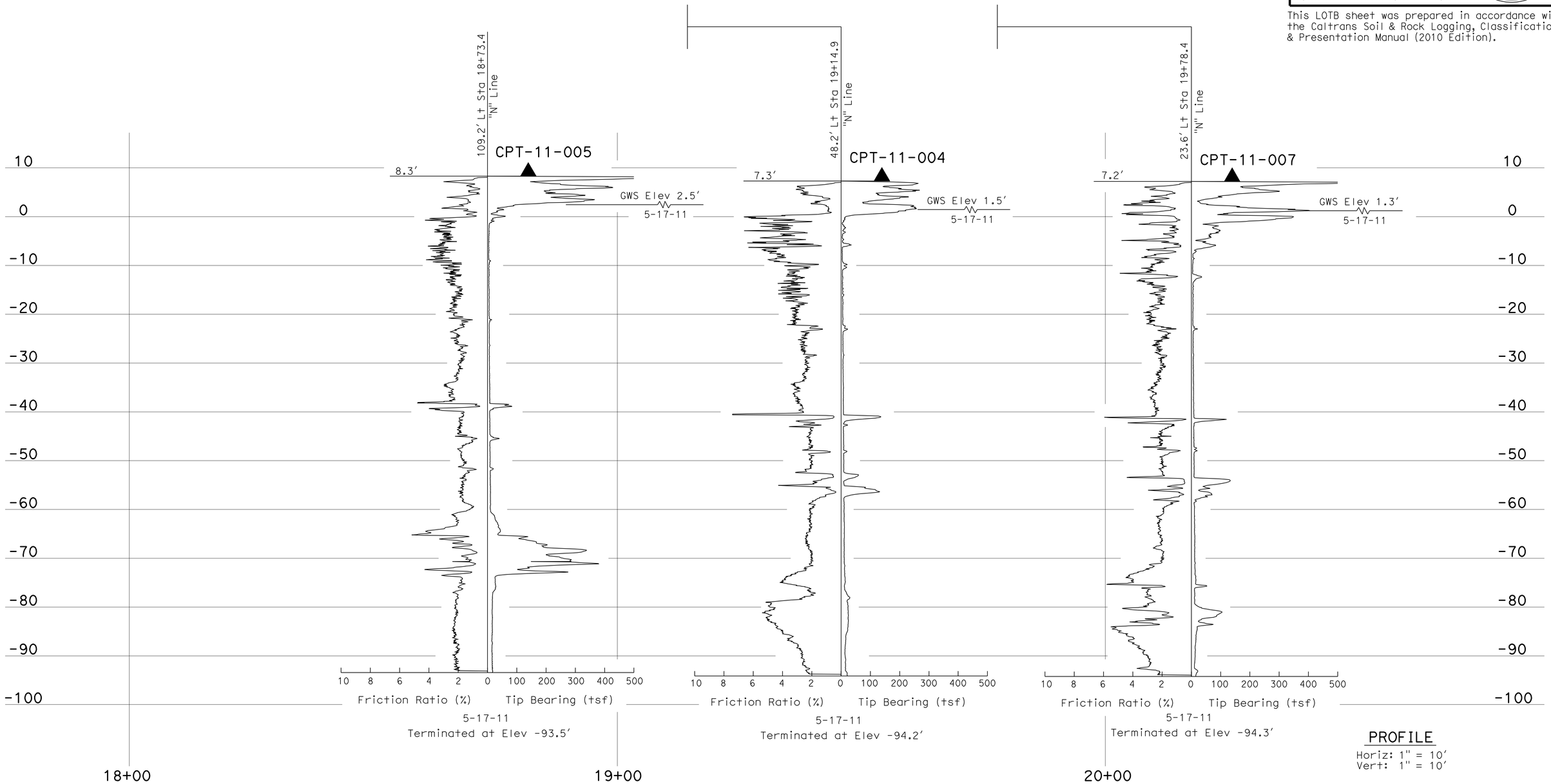

PROFILE
Horiz: 1" = 10'
Vert: 1" = 10'

ENGINEERING SERVICES	MATERIALS AND GEOTECHNICAL SERVICES	STATE OF CALIFORNIA DEPARTMENT OF TRANSPORTATION	DIVISION OF ENGINEERING SERVICES STRUCTURE DESIGN	BRIDGE NO.	SFOBB MAINTENANCE COMPLEX (PHASE I)
FUNCTIONAL SUPERVISOR	DRAWN BY: W. Tang 02/12	FIELD INVESTIGATION BY:	DESIGN BRANCH X	POST MILE	LOG OF TEST BORINGS 4 OF 14
NAME: M. Momenzadeh	CHECKED BY: J. Moore	D. Nesbitt		2.0/2.4	

OGS CIVIL LOG OF TEST BORINGS SHEET

ORIGINAL SCALE IN INCHES FOR REDUCED PLANS 0 1 2 3

UNIT: 3643
PROJECT NUMBER & PHASE: 04120006661 CONTRACT NO.: 04-014041

DISREGARD PRINTS BEARING EARLIER REVISION DATES → 03-05-12

REVISION DATES				SHEET	OF
03-05-12				X	X

FILE => st0_Log_04of14.dgn

USERNAME => s123631 DATE PLOTTED => 25-OCT-2012 TIME PLOTTED => 15:07

DIST	COUNTY	ROUTE	POST MILES TOTAL PROJECT	SHEET No.	TOTAL SHEETS
04	Ala	80	2.2	513	800

REGISTERED CIVIL ENGINEER 3-23-12 DATE

10-22-12
PLANS APPROVAL DATE

REGISTERED PROFESSIONAL ENGINEER Caroline Chen No. C62438 Exp. 9-30-13 CIVIL STATE OF CALIFORNIA

The State of California or its officers or agents shall not be responsible for the accuracy or completeness of electronic copies of this plan sheet.

This LOTB sheet was prepared in accordance with the Caltrans Soil & Rock Logging, Classification, & Presentation Manual (2010 Edition).

FOR PLAN VIEW, SEE
"LOG OF TEST BORINGS 1 OF 14"

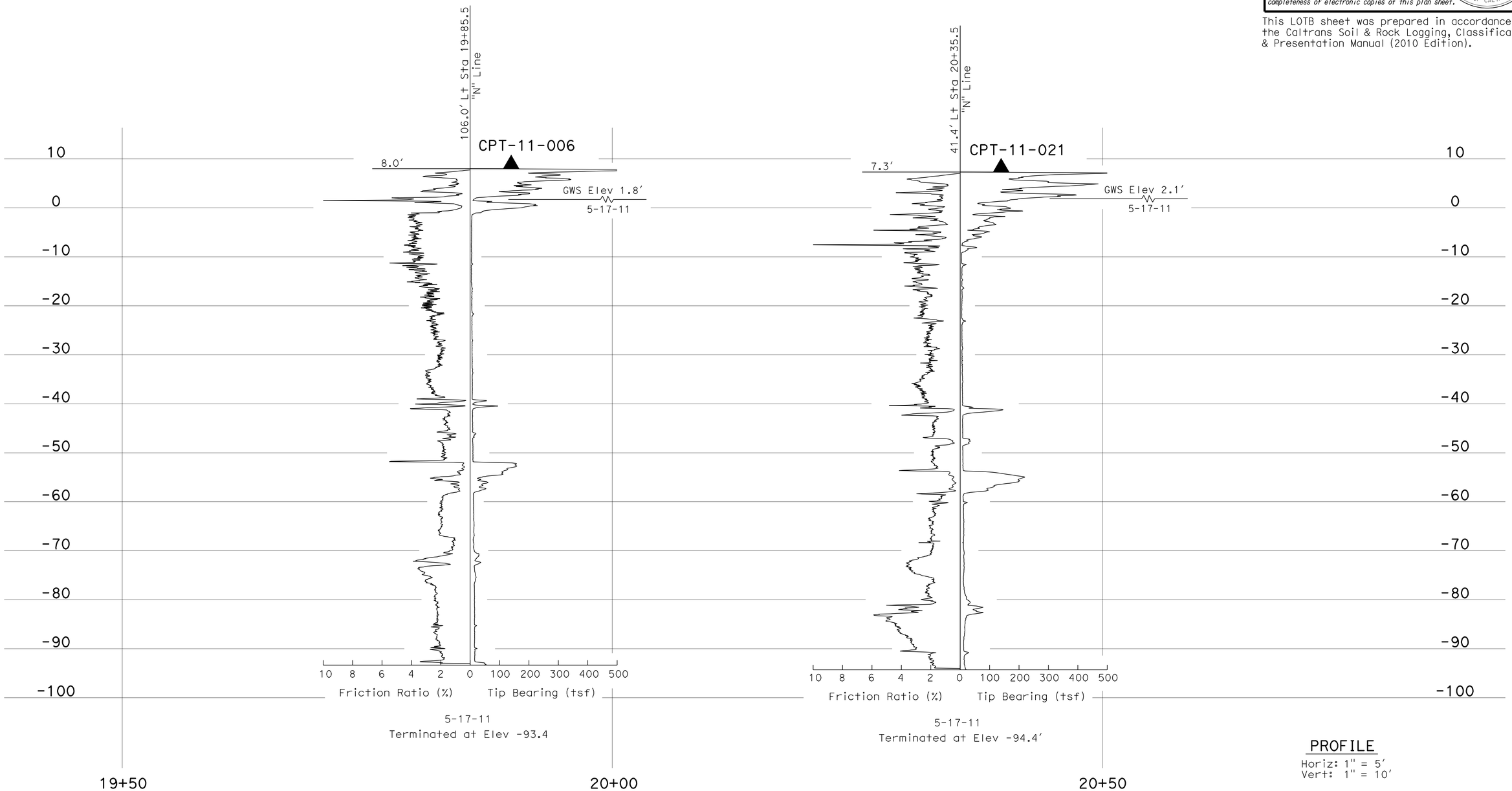

PROFILE
Horiz: 1" = 5'
Vert: 1" = 10'

ENGINEERING SERVICES	MATERIALS AND GEOTECHNICAL SERVICES	STATE OF CALIFORNIA DEPARTMENT OF TRANSPORTATION	DIVISION OF ENGINEERING SERVICES STRUCTURE DESIGN	BRIDGE NO.	SFOBB MAINTENANCE COMPLEX (PHASE I)
FUNCTIONAL SUPERVISOR	DRAWN BY: W. Tang 02/12	FIELD INVESTIGATION BY:	DESIGN BRANCH X	POST MILE	LOG OF TEST BORINGS 5 OF 14
NAME: M. Momenzadeh	CHECKED BY: J. Moore	D. Nesbitt		2.0/2.4	

OGS CIVIL LOG OF TEST BORINGS SHEET

ORIGINAL SCALE IN INCHES FOR REDUCED PLANS 0 1 2 3

UNIT: 3643
PROJECT NUMBER & PHASE: 04120006661 CONTRACT NO.: 04-014041

DISREGARD PRINTS BEARING EARLIER REVISION DATES

REVISION DATES				SHEET	OF
03-05-12				X	X

FILE => st0_Log_05of14.dgn

USERNAME => s123631 DATE PLOTTED => 25-OCT-2012 TIME PLOTTED => 15:07

DIST	COUNTY	ROUTE	POST MILES TOTAL PROJECT	SHEET No.	TOTAL SHEETS
04	Ala	80	2.2	514	800

REGISTERED CIVIL ENGINEER 3-23-12 DATE

10-22-12
PLANS APPROVAL DATE

REGISTERED PROFESSIONAL ENGINEER Caroline Chen No. C62438 Exp. 9-30-13 CIVIL STATE OF CALIFORNIA

The State of California or its officers or agents shall not be responsible for the accuracy or completeness of electronic copies of this plan sheet.

This LOTB sheet was prepared in accordance with the Caltrans Soil & Rock Logging, Classification, & Presentation Manual (2010 Edition).

FOR PLAN VIEW, SEE
"LOG OF TEST BORINGS 1 OF 14"

RW-11-008

45.4' Lt Sta 20+39.3 "N" Line

7.3'

GWS Elev 1.3'
8-2-11

- 3.7 ASPHALT CONCRETE pavement (6").
- (CR) CLAYEY SAND with GRAVEL (SC); medium dense; olive brown; moist; SAND, from coarse to fine, subrounded; GRAVEL, fine, subrounded; (FILL). (18 ft.4)
- No recovery. (4 ft.4)
- SANDY lean CLAY (CL); soft; greenish gray; wet; some SAND, coarse, subrounded; few GRAVEL, fine, subrounded; (ALLUVIUM); PP=0.25 tsf. (1 ft.4)
- (C) Lean CLAY (CL); very soft; very dark greenish gray; moist; few shell fragments; PP<0.25 tsf. (1 ft.4)
- -PP<0.25 tsf. (1 ft.4)
- (PI)(M) -trace shell fragments; PP<0.25 tsf. (1 ft.4)
- (PI)(M) -soft; trace fine SAND; PP=0.25 tsf. (0 ft.4)
- -trace organic material; PP=0.25 tsf. (1 ft.4)
- Poorly-graded SAND (SP); loose; multi-colored, green, gray and black; wet; SAND, fine, subrounded. (6 ft.4)
- (PI)(M)(C) Fat CLAY (CH); soft; very dark greenish gray; moist; PP=0.25 tsf. (1 ft.4)
- -PP=0.25 tsf. (1 ft.4)
- Poorly-graded SAND (SP); medium dense; greenish gray; wet; SAND, fine, subrounded. (16 ft.4)
- (PI)(M) Lean CLAY (CL); soft; dark greenish gray; moist; trace GRAVEL; pp=0.25 tsf. (3 ft.4)
- -PP=0.25 tsf. (1 ft.4)
- -PP=0.25 tsf. (1 ft.4)
- -PP=0.25 tsf. (1 ft.4)
- -mottled greenish gray and bluish gray; trace organics; PP=0.25 tsf. (1 ft.4)
- -stiff; greenish gray; trace organics; PP=1.25 tsf. (6 ft.4)
- -medium stiff; PP=0.75 tsf. (3 ft.4)
- -PP=0.75 tsf. (2 ft.4)
- GRAVELLY lean CLAY with SAND (CL); very stiff; mottled dark brown and yellowish brown; moist; little GRAVEL, fine, subrounded; little SAND, from coarse to fine, subrounded; PP=2.5 tsf. (25 ft.4)
- -PP=2.5 tsf. (16 ft.4)
- CLAYEY SAND (SC); medium dense; dark yellowish brown; wet; SAND, fine, subrounded; trace GRAVEL. (15 ft.4)
- (12 ft.4)

8-2-11
Terminated at Elev -114.2'
ERi = 77%

RW-11-019

71.5' Lt Sta 23+34.3 "N" Line

7.1'

GWS Elev 0.1'
8-31-11

- 3.7 ASPHALT CONCRETE pavement (6").
- (C)(PA)(M) Poorly-graded GRAVEL with SILT and SAND (GP-GM); dense; dark brown; moist; mostly GRAVEL, fine, subrounded; some SAND, fine, subrounded; (FILL). (37 ft.4)
- Lean CLAY with SAND (CL); very soft; gray; moist; (ALLUVIUM); PP<0.25 tsf. (5 ft.4)
- -PP<0.25 tsf. (0 ft.4)
- -PP<0.25 tsf. (1 ft.4)
- (PI)(M)(C) -PP<0.25 tsf. (0 ft.4)
- -PP<0.25 tsf. (0 ft.4)
- (PI)(M)(C) -PP<0.25 tsf. (0 ft.4)
- (PI)(M) Fat CLAY (CH); very soft; gray; moist; PP<0.25 tsf. (0 ft.4)
- -PP<0.25 tsf. (0 ft.4)
- -PP<0.25 tsf. (0 ft.4)
- (M)(C) Poorly-graded SAND with CLAY (SP-SC); medium dense; dark gray; moist; mostly SAND, fine. (12 ft.4)
- Fat CLAY with SAND (CH); very soft; gray; moist; little fine SAND; PP<0.25 tsf. (0 ft.4)
- (PI)(M) -PP<0.25 tsf. (0 ft.4)
- -soft; PP=0.25 tsf. (1 ft.4)
- -stiff; PP=1.5 tsf. (11 ft.4)
- -PP=1.0 tsf. (5 ft.4)
- -very stiff; PP=2.0 tsf. (12 ft.4)
- -stiff; olive; PP=1.25 tsf. (11 ft.4)
- Poorly-graded SAND with CLAY and GRAVEL (SP-SC); medium dense; olive; wet; mostly fine SAND; little fine GRAVEL. (20 ft.4)
- SILTY SAND (SM); medium dense; olive; moist; mostly fine SAND. (21 ft.4)
- CLAYEY SAND with GRAVEL (SC); dense; olive; moist; mostly fine SAND. (12 ft.4)
- SANDY SILT (ML); very stiff; olive; moist; some fine SAND; PP=2.0 tsf. (29 ft.4)
- (13 ft.4)

8-30-11
Terminated at Elev -114.4'
ERi = 77%

PROFILE
Horiz: 1" = 20'
Vert: 1" = 10'

20+00 22+00 24+00

ENGINEERING SERVICES	MATERIALS AND GEOTECHNICAL SERVICES	STATE OF CALIFORNIA DEPARTMENT OF TRANSPORTATION	DIVISION OF ENGINEERING SERVICES STRUCTURE DESIGN DESIGN BRANCH X	BRIDGE NO. / POST MILE 2.0/2.4	SFOBB MAINTENANCE COMPLEX (PHASE I) LOG OF TEST BORINGS 6 OF 14
FUNCTIONAL SUPERVISOR NAME: M. Momenzadeh	DRAWN BY: W. Tang 02/12 CHECKED BY: J. Moore	FIELD INVESTIGATION BY: D. Nesbitt			

OGS CIVIL LOG OF TEST BORINGS SHEET

ORIGINAL SCALE IN INCHES FOR REDUCED PLANS 0 1 2 3

UNIT: 3643
PROJECT NUMBER & PHASE: 04120006661 CONTRACT NO.: 04-014041

DISREGARD PRINTS BEARING EARLIER REVISION DATES → REVISION DATES 02-24-12 02-28-12 03-05-12 SHEET X OF X

FILE => st0_Log_06of14.dgn

USERNAME => s123631 DATE PLOTTED => 25-OCT-2012 TIME PLOTTED => 15:08

DIST	COUNTY	ROUTE	POST MILES TOTAL PROJECT	SHEET No.	TOTAL SHEETS
04	Ala	80	2.2	515	800

REGISTERED CIVIL ENGINEER 3-23-12 DATE

10-22-12
PLANS APPROVAL DATE

REGISTERED PROFESSIONAL ENGINEER Caroline Chen No. C62438 Exp. 9-30-13 CIVIL STATE OF CALIFORNIA

The State of California or its officers or agents shall not be responsible for the accuracy or completeness of electronic copies of this plan sheet.

This LOTB sheet was prepared in accordance with the Caltrans Soil & Rock Logging, Classification, & Presentation Manual (2010 Edition).

FOR PLAN VIEW, SEE
"LOG OF TEST BORINGS 1 OF 14"

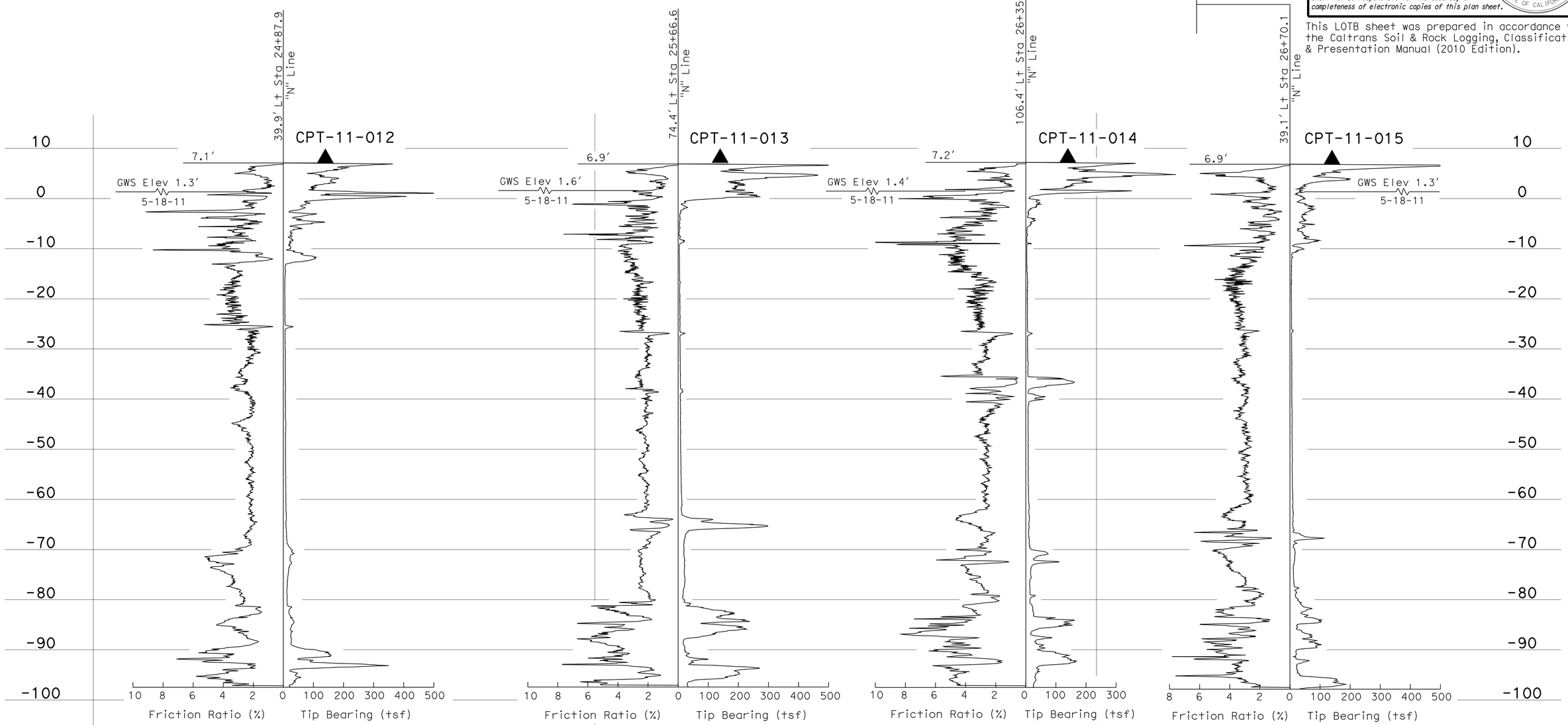

PROFILE
Horiz: 1" = 10'
Vert: 1" = 10'

ENGINEERING SERVICES	MATERIALS AND GEOTECHNICAL SERVICES	STATE OF CALIFORNIA DEPARTMENT OF TRANSPORTATION	DIVISION OF ENGINEERING SERVICES STRUCTURE DESIGN DESIGN BRANCH X	BRIDGE NO. / POST MILE 2.0/2.4	SFOBB MAINTENANCE COMPLEX (PHASE I) LOG OF TEST BORINGS 7 OF 14
FUNCTIONAL SUPERVISOR NAME: M. Momenzadeh	DRAWN BY: W. Tang 02/12 CHECKED BY: J. Moore	FIELD INVESTIGATION BY: D. Nesbitt			

OGS CIVIL LOG OF TEST BORINGS SHEET

ORIGINAL SCALE IN INCHES FOR REDUCED PLANS 0 1 2 3

UNIT: 3643
PROJECT NUMBER & PHASE: 04120006661 CONTRACT NO.: 04-014041

DISREGARD PRINTS BEARING EARLIER REVISION DATES → 03-05-12

REVISION DATES | SHEET X | OF X

FILE => st0_Log_07of14.dgn

USERNAME => s123631 DATE PLOTTED => 25-OCT-2012 TIME PLOTTED => 15:08

REFERENCE: CALTRANS SOIL & ROCK LOGGING, CLASSIFICATION, AND PRESENTATION MANUAL (2010)

DIST	COUNTY	ROUTE	POST MILES TOTAL PROJECT	SHEET No.	TOTAL SHEETS
04	Ala	80	2.2	516	800

REGISTERED CIVIL ENGINEER 3-23-12 DATE

10-22-12
PLANS APPROVAL DATE

REGISTERED PROFESSIONAL ENGINEER
Caroline Chen
No. C62438
Exp. 9-30-13
CIVIL
STATE OF CALIFORNIA

The State of California or its officers or agents shall not be responsible for the accuracy or completeness of electronic copies of this plan sheet.

CEMENTATION

Description	Criteria
Weak	Crumbles or breaks with handling or little finger pressure.
Moderate	Crumbles or breaks with considerable finger pressure.
Strong	Will not crumble or break with finger pressure.

BOREHOLE IDENTIFICATION

Symbol	Hole Type	Description
Size	A	Auger Boring (hollow or solid stem bucket)
Size	R RW RC P	Rotary drilled boring (conventional) Rotary drilled with self-casing wire-line Rotary core with continuously-sampled, self-casing wire-line Rotary percussion boring (air)
Size	R RC	Rotary drilled diamond core Rotary drilled rock core
Size	HD HA	Hand driven (1-inch soil tube) Hand Auger
●	D	Dynamic Cone Penetration Boring
▲	CPT	Cone Penetration Test (ASTM D 5778)
⬚	O	Other (note on LOTB)

Note: Size in inches.

CONSISTENCY OF COHESIVE SOILS

Description	Shear Strength (tsf)	Pocket Penetrometer Measurement, PP, (tsf)	Torvane Measurement, TV, (tsf)	Vane Shear Measurement, VS, (tsf)
Very Soft	Less than 0.12	Less than 0.25	Less than 0.12	Less than 0.12
Soft	0.12 - 0.25	0.25 - 0.5	0.12 - 0.25	0.12 - 0.25
Medium Stiff	0.25 - 0.5	0.5 - 1	0.25 - 0.5	0.25 - 0.5
Stiff	0.5 - 1	1 - 2	0.5 - 1	0.5 - 1
Very Stiff	1 - 2	2 - 4	1 - 2	1 - 2
Hard	Greater than 2	Greater than 4	Greater than 2	Greater than 2

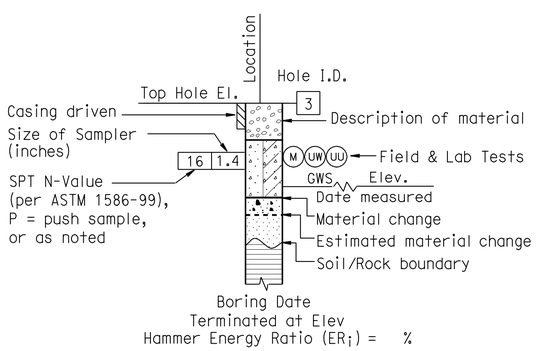

ROTARY BORING

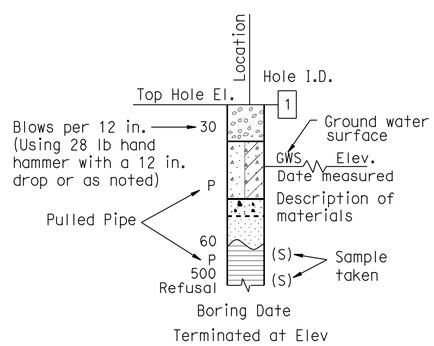

HAND BORING

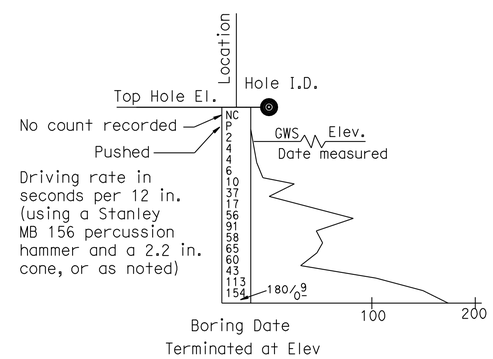

DYNAMIC CONE PENETRATION BORING

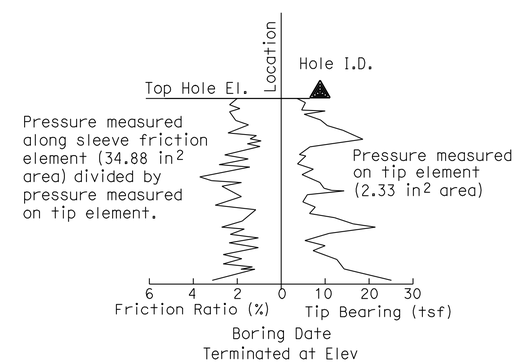

CONE PENETRATION TEST (CPT) BORING

ENGINEERING SERVICES	MATERIALS AND GEOTECHNICAL SERVICES	STATE OF CALIFORNIA DEPARTMENT OF TRANSPORTATION	DIVISION OF ENGINEERING SERVICES STRUCTURE DESIGN DESIGN BRANCH X	BRIDGE NO. / POST MILE 2.0/2.4	SFOBB MAINTENANCE COMPLEX (PHASE I) LOG OF TEST BORINGS 8 OF 14
	PREPARED BY: W. Tang 02/12				

GS LOTB SOIL LEGEND

ORIGINAL SCALE IN INCHES FOR REDUCED PLANS 0 1 2 3

UNIT: 3643
PROJECT NUMBER & PHASE: 04120006661 CONTRACT NO.: 04-014041

DISREGARD PRINTS BEARING EARLIER REVISION DATES

REVISION DATES | SHEET X | OF X

FILE => st0_Log_08of14.dgn

USERNAME => s123631 DATE PLOTTED => 25-OCT-2012 TIME PLOTTED => 15:08

REFERENCE: CALTRANS SOIL & ROCK LOGGING, CLASSIFICATION, AND PRESENTATION MANUAL (2010)

DIST	COUNTY	ROUTE	POST MILES TOTAL PROJECT	SHEET No.	TOTAL SHEETS
04	Ala	80	2.2	517	800

REGISTERED CIVIL ENGINEER 3-23-12 DATE

10-22-12
PLANS APPROVAL DATE

REGISTERED PROFESSIONAL ENGINEER Caroline Chen No. C62438 Exp. 9-30-13 CIVIL STATE OF CALIFORNIA

The State of California or its officers or agents shall not be responsible for the accuracy or completeness of electronic copies of this plan sheet.

GROUP SYMBOLS AND NAMES

Graphic/Symbol	Group Names	Graphic/Symbol	Group Names
GW	Well-graded GRAVEL Well-graded GRAVEL with SAND	CL	Lean CLAY Lean CLAY with SAND Lean CLAY with GRAVEL SANDY lean CLAY SANDY lean CLAY with GRAVEL GRAVELLY lean CLAY GRAVELLY lean CLAY with SAND
GP	Poorly-graded GRAVEL Poorly-graded GRAVEL with SAND		
GW-GM	Well-graded GRAVEL with SILT Well-graded GRAVEL with SILT and SAND	CL-ML	SILTY CLAY SILTY CLAY with SAND SILTY CLAY with GRAVEL SANDY SILTY CLAY SANDY SILTY CLAY with GRAVEL GRAVELLY SILTY CLAY GRAVELLY SILTY CLAY with SAND
GW-GC	Well-graded GRAVEL with CLAY (or SILTY CLAY) Well-graded GRAVEL with CLAY and SAND (or SILTY CLAY and SAND)		
GP-GM	Poorly-graded GRAVEL with SILT Poorly-graded GRAVEL with SILT and SAND	ML	SILT SILT with SAND SILT with GRAVEL SANDY SILT SANDY SILT with GRAVEL GRAVELLY SILT GRAVELLY SILT with SAND
GP-GC	Poorly-graded GRAVEL with CLAY (or SILTY CLAY) Poorly-graded GRAVEL with CLAY and SAND (or SILTY CLAY and SAND)		
GM	SILTY GRAVEL SILTY GRAVEL with SAND	OL	ORGANIC lean CLAY ORGANIC lean CLAY with SAND ORGANIC lean CLAY with GRAVEL SANDY ORGANIC lean CLAY SANDY ORGANIC lean CLAY with GRAVEL GRAVELLY ORGANIC lean CLAY GRAVELLY ORGANIC lean CLAY with SAND
GC	CLAYEY GRAVEL CLAYEY GRAVEL with SAND		
GC-GM	SILTY, CLAYEY GRAVEL SILTY, CLAYEY GRAVEL with SAND	OL	ORGANIC SILT ORGANIC SILT with SAND ORGANIC SILT with GRAVEL SANDY ORGANIC SILT SANDY ORGANIC SILT with GRAVEL GRAVELLY ORGANIC SILT GRAVELLY ORGANIC SILT with SAND
SW	Well-graded SAND Well-graded SAND with GRAVEL		
SP	Poorly-graded SAND Poorly-graded SAND with GRAVEL	CH	Fat CLAY Fat CLAY with SAND Fat CLAY with GRAVEL SANDY fat CLAY SANDY fat CLAY with GRAVEL GRAVELLY fat CLAY GRAVELLY fat CLAY with SAND
SW-SM	Well-graded SAND with SILT Well-graded SAND with SILT and GRAVEL		
SW-SC	Well-graded SAND with CLAY (or SILTY CLAY) Well-graded SAND with CLAY and GRAVEL (or SILTY CLAY and GRAVEL)	MH	Elastic SILT Elastic SILT with SAND Elastic SILT with GRAVEL SANDY elastic SILT SANDY elastic SILT with GRAVEL GRAVELLY elastic SILT GRAVELLY elastic SILT with SAND
SP-SM	Poorly-graded SAND with SILT Poorly-graded SAND with SILT and GRAVEL		
SP-SC	Poorly-graded SAND with CLAY (or SILTY CLAY) Poorly-graded SAND with CLAY and GRAVEL (or SILTY CLAY and GRAVEL)	OH	ORGANIC fat CLAY ORGANIC fat CLAY with SAND ORGANIC fat CLAY with GRAVEL SANDY ORGANIC fat CLAY SANDY ORGANIC fat CLAY with GRAVEL GRAVELLY ORGANIC fat CLAY GRAVELLY ORGANIC fat CLAY with SAND
SM	SILTY SAND SILTY SAND with GRAVEL		
SC	CLAYEY SAND CLAYEY SAND with GRAVEL	OH	ORGANIC elastic SILT ORGANIC elastic SILT with SAND ORGANIC elastic SILT with GRAVEL SANDY ORGANIC elastic SILT SANDY ORGANIC elastic SILT with GRAVEL GRAVELLY ORGANIC elastic SILT GRAVELLY ORGANIC elastic SILT with SAND
SC-SM	SILTY, CLAYEY SAND SILTY, CLAYEY SAND with GRAVEL		
PT	PEAT	OL/OH	ORGANIC SOIL ORGANIC SOIL with SAND ORGANIC SOIL with GRAVEL SANDY ORGANIC SOIL SANDY ORGANIC SOIL with GRAVEL GRAVELLY ORGANIC SOIL GRAVELLY ORGANIC SOIL with SAND
	COBBLES COBBLES and BOULDERS BOULDERS		

FIELD AND LABORATORY TESTING

- (C) Consolidation (ASTM D 2435)
- (CL) Collapse Potential (ASTM D 5333)
- (CP) Compaction Curve (CTM 216)
- (CR) Corrosivity Testing (CTM 643, CTM 422, CTM 417)
- (CU) Consolidated Undrained Triaxial (ASTM D 4767)
- (DS) Direct Shear (ASTM D 3080)
- (EI) Expansion Index (ASTM D 4829)
- (M) Moisture Content (ASTM D 2216)
- (OC) Organic Content-% (ASTM D 2974)
- (P) Permeability (CTM 220)
- (PA) Particle Size Analysis (ASTM D 422)
- (PI) Plasticity Index (AASHTO T 90) Liquid Limit (AASHTO T 89)
- (PL) Point Load Index (ASTM D 5731)
- (PM) Pressure Meter
- (R) R-Value (CTM 301)
- (SE) Sand Equivalent (CTM 217)
- (SG) Specific Gravity (AASHTO T 100)
- (SL) Shrinkage Limit (ASTM D 427)
- (SW) Swell Potential (ASTM D 4546)
- (UC) Unconfined Compression-Soil (ASTM D 2166) Unconfined Compression-Rock (ASTM D 2938)
- (UU) Unconsolidated Undrained Triaxial (ASTM D 2850)
- (UW) Unit Weight (ASTM D 4767)

APPARENT DENSITY OF COHESIONLESS SOILS

Description	SPT N_{60} (Blows / 12 in.)
Very Loose	0 - 5
Loose	5 - 10
Medium Dense	10 - 30
Dense	30 - 50
Very Dense	Greater than 50

MOISTURE

Description	Criteria
Dry	No discernable moisture
Moist	Moisture present, but no free water
Wet	Visible free water

PERCENT OR PROPORTION OF SOILS

Description	Criteria
Trace	Particles are present but estimated to be less than 5%
Few	5% - 10%
Little	15% - 25%
Some	30% - 45%
Mostly	50% - 100%

PARTICLE SIZE

Description		Size (in.)
Boulder		Greater than 12
Cobble		3 - 12
Gravel	Coarse	3/4 - 3
	Fine	1/5 - 3/4
Sand	Coarse	1/16 - 1/5
	Medium	1/64 - 1/16
	Fine	1/300 - 1/64
Silt and Clay		Less than 1/300

ENGINEERING SERVICES

MATERIALS AND GEOTECHNICAL SERVICES

PREPARED BY: W. Tang 02/12

STATE OF CALIFORNIA DEPARTMENT OF TRANSPORTATION

DIVISION OF ENGINEERING SERVICES STRUCTURE DESIGN DESIGN BRANCH X

BRIDGE NO.

POST MILE 2.0/2.4

SFOBB MAINTENANCE COMPLEX (PHASE I)

LOG OF TEST BORINGS 9 OF 14

GS LOTB SOIL LEGEND

ORIGINAL SCALE IN INCHES FOR REDUCED PLANS 0 1 2 3

UNIT: 3643
PROJECT NUMBER & PHASE: 04120006661
CONTRACT NO.: 04-014041

DISREGARD PRINTS BEARING EARLIER REVISION DATES

REVISION DATES | SHEET X | OF X

FILE => st0_Log_09of14.dgn

USERNAME => s123631 DATE PLOTTED => 25-OCT-2012 TIME PLOTTED => 15:08

DIST	COUNTY	ROUTE	KILOMETER POST TOTAL PROJECT	SHEET NO.	TOTAL SHEETS
04	Ala	80			

REGISTERED ENGINEER-GEOTECHNICAL

PLANS APPROVAL DATE

REGISTERED PROFESSIONAL ENGINEER GARY PARIKH No. G.E. 666 Exp. 12/31/07 GEOTECHNICAL STATE OF CALIFORNIA

PARIKH CONSULTANTS, INC.
356 SOUTH MILPITAS BLVD
MILPITAS CA 95035

The State of California or its officers or agents shall not be responsible for the accuracy or completeness of electronic copies of this plan sheet.

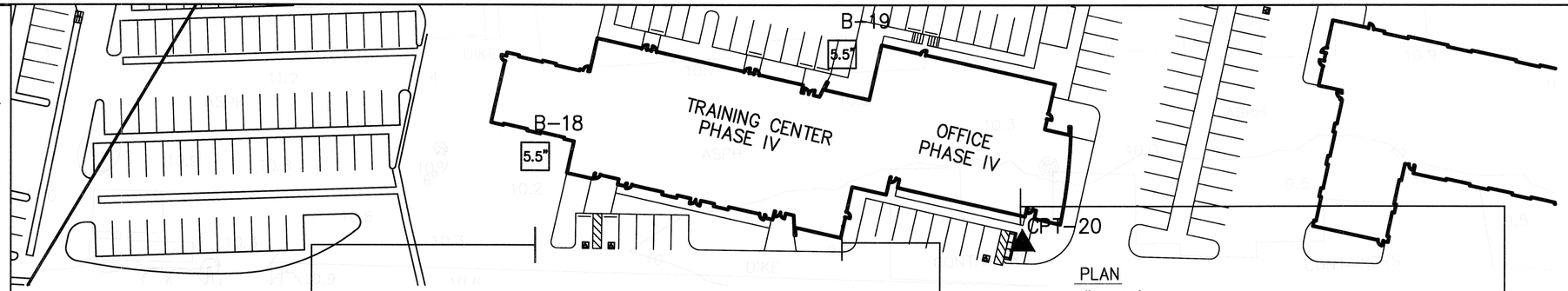

PLAN
1" : 40'

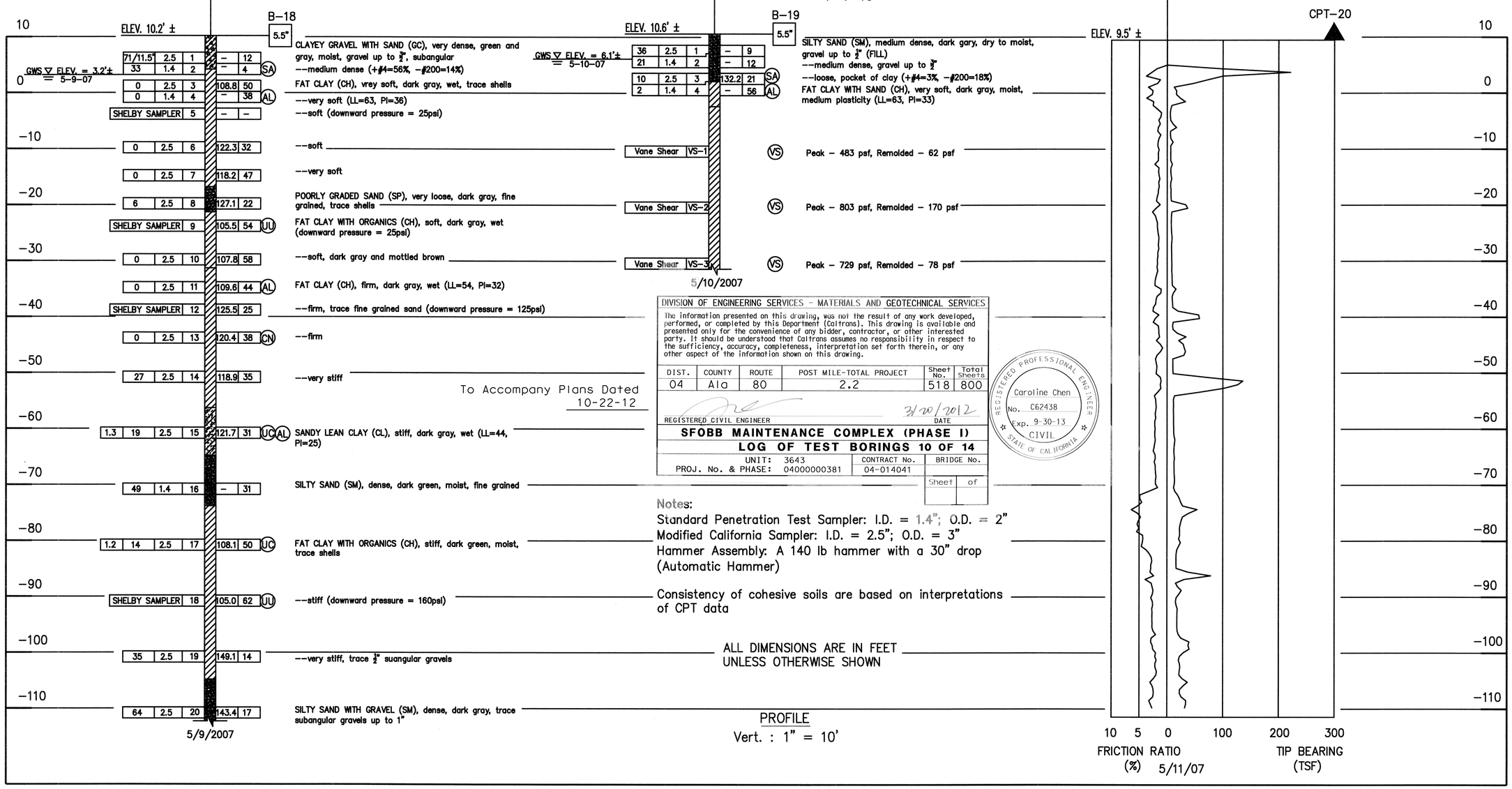

To Accompany Plans Dated 10-22-12

DIVISION OF ENGINEERING SERVICES - MATERIALS AND GEOTECHNICAL SERVICES

The information presented on this drawing, was not the result of any work developed, performed, or completed by this Department (Caltrans). This drawing is available and presented only for the convenience of any bidder, contractor, or other interested party. It should be understood that Caltrans assumes no responsibility in respect to the sufficiency, accuracy, completeness, interpretation set forth therein, or any other aspect of the information shown on this drawing.

DIST.	COUNTY	ROUTE	POST MILE-TOTAL PROJECT	Sheet No.	Total Sheets
04	Ala	80	2.2	518	800

REGISTERED CIVIL ENGINEER — DATE 3/20/2012

REGISTERED PROFESSIONAL ENGINEER Caroline Chen No. C62438 Exp. 9-30-13 CIVIL STATE OF CALIFORNIA

SFOBB MAINTENANCE COMPLEX (PHASE I)

LOG OF TEST BORINGS 10 OF 14

UNIT: 3643 — CONTRACT No. — BRIDGE No.
PROJ. No. & PHASE: 04000000381 — 04-014041 — Sheet — of

Notes:
Standard Penetration Test Sampler: I.D. = 1.4"; O.D. = 2"
Modified California Sampler: I.D. = 2.5"; O.D. = 3"
Hammer Assembly: A 140 lb hammer with a 30" drop (Automatic Hammer)

Consistency of cohesive soils are based on interpretations of CPT data

ALL DIMENSIONS ARE IN FEET UNLESS OTHERWISE SHOWN

PROFILE
Vert. : 1" = 10'

LEGEND OF BORING OPERATIONS

IN-SITU, LAB & FIELD TEST DESIGNATIONS

TYPES OF BORINGS

LEGEND OF EARTH MATERIALS (USCS) BASED ON ASTM D2487, D2488

CONSISTENCY CLASSIFICATION FOR SOILS According to the Standard Penetration Test (ASTM D-1586)

SPT N-Value (Blows/12")	Granular	SPT N-Value (Blows/12")	Cohesive
0-4	Very loose	<2	Very soft
5-10	Loose	2-4	Soft
11-30	Medium Dense	5-8	Firm
31-50	Dense	9-15	Stiff
>50	Very Dense	16-30	Very Stiff
		>30	Hard

NOTE: Visual classification of earth materials are based on field inspection and or a confirmed or revised with laboratory test results as necessary.

DESIGN OVERSIGHT

SIGN OFF DATE

DESIGN By: L. TRAN
CHECKED By: P. SIRCAR

Field Investigation by: W. LI / F. WANG

PREPARED FOR THE STATE OF CALIFORNIA DEPARTMENT OF TRANSPORTATION

P. SIRCAR
PROJECT ENGINEER

ORIGINAL SCALE IN INCHES FOR REDUCED PLANS 0 1 2 3 4 5

CU
EA

STRUCTURE NO.
KILO POST (PM)

DISREGARD PRINTS BEARING EARLIER REVISION DATES

REVISION DATES (PRELIMINARY STAGE ONLY) SHEET OF

SFOBB MAINTENANCE COMPLEX
LOG OF TEST BORINGS

st0_Log_10of14.tif

PLATE A-7

DIST	COUNTY	ROUTE	KILOMETER POST TOTAL PROJECT	SHEET NO.	TOTAL SHEETS
04	Ala	80			

REGISTERED ENGINEER-GEOTECHNICAL

PLANS APPROVAL DATE

REGISTERED PROFESSIONAL ENGINEER GARY PARIKH No. G.E. 666 Exp. 12/31/07 GEOTECHNICAL STATE OF CALIFORNIA

PARIKH CONSULTANTS, INC.
356 SOUTH MILPITAS BLVD
MILPITAS CA 95035

The State of California or its officers or agents shall not be responsible for the accuracy or completeness of electronic copies of this plan sheet.

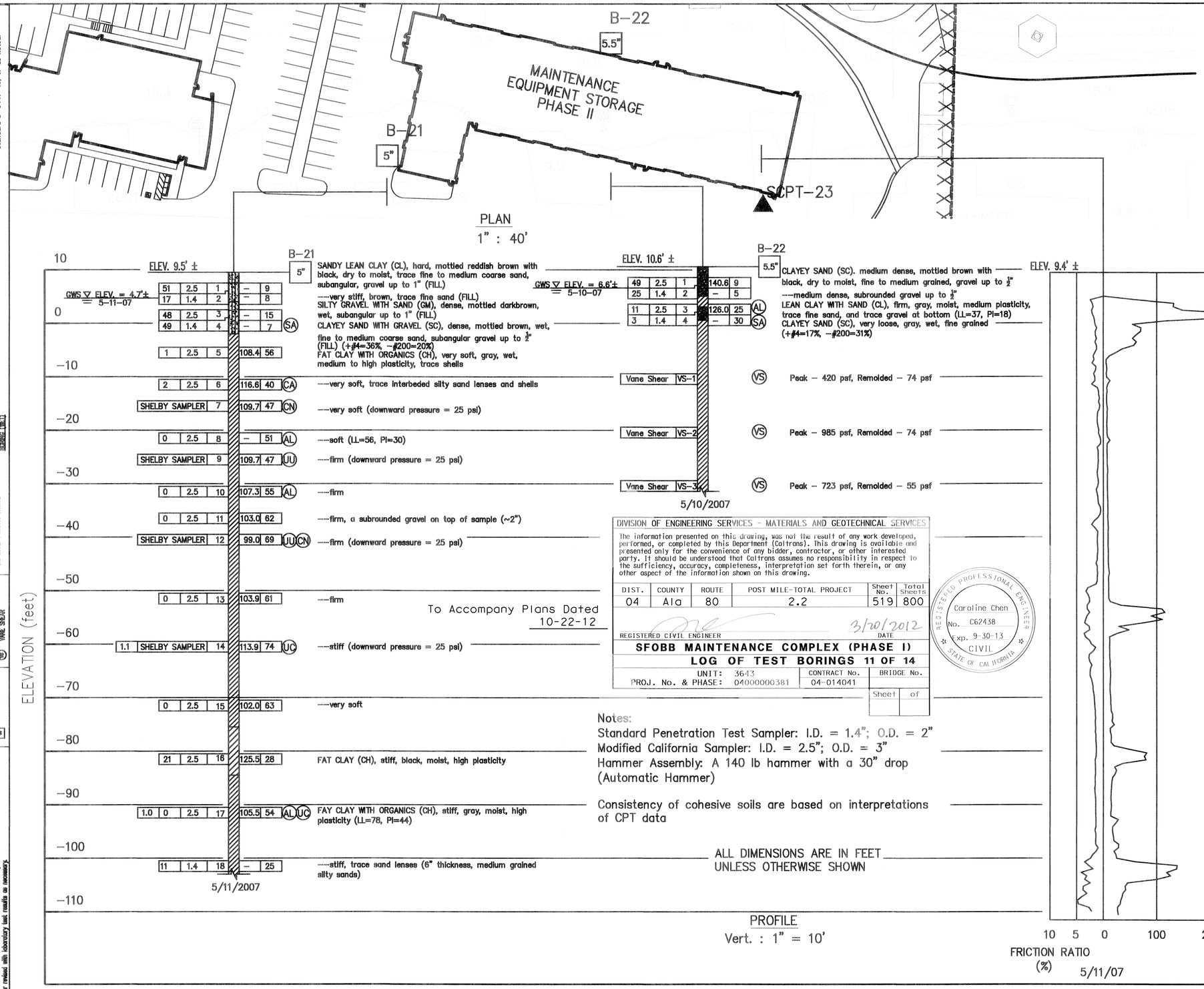

DIST.	COUNTY	ROUTE	POST MILE-TOTAL PROJECT	Sheet No.	Total Sheets
04	Ala	80	2.2	519	800

DIVISION OF ENGINEERING SERVICES - MATERIALS AND GEOTECHNICAL SERVICES

The information presented on this drawing, was not the result of any work developed, performed, or completed by this Department (Caltrans). This drawing is available and presented only for the convenience of any bidder, contractor, or other interested party. It should be understood that Caltrans assumes no responsibility in respect to the sufficiency, accuracy, completeness, interpretation set forth therein, or any other aspect of the information shown on this drawing.

REGISTERED CIVIL ENGINEER — DATE 3/20/2012

REGISTERED PROFESSIONAL ENGINEER Caroline Chen No. C62438 Exp. 9-30-13 CIVIL STATE OF CALIFORNIA

SFOBB MAINTENANCE COMPLEX (PHASE I)

LOG OF TEST BORINGS 11 OF 14

UNIT: 3643 | CONTRACT No. | BRIDGE No.
PROJ. No. & PHASE: 04000000381 | 04-014041 | Sheet of

Notes:
Standard Penetration Test Sampler: I.D. = 1.4"; O.D. = 2"
Modified California Sampler: I.D. = 2.5"; O.D. = 3"
Hammer Assembly: A 140 lb hammer with a 30" drop (Automatic Hammer)

Consistency of cohesive soils are based on interpretations of CPT data

LEGEND OF BORING OPERATIONS

IN-SITU, LAB & FIELD TEST DESIGNATIONS

TYPES OF BORINGS

LEGEND OF EARTH MATERIALS (USCS) BASED ON ASTM D2487, D2488

CONSISTENCY CLASSIFICATION FOR SOILS According to the Standard Penetration test (ASTM D-1586)

SPT N-Value (Blows/ft)	Granular	SPT N-Value (Blows/ft)	Cohesive
0-4	Very loose	<2	Very soft
5-10	Loose	2-4	Soft
11-30	Medium Dense	5-8	Firm
31-50	Dense	9-15	Stiff
>50	Very Dense	16-30	Very Stiff
		>30	Hard

NOTE: Visual classifications of earth materials are based on field inspection and or a confirmed or revised with laboratory test results as necessary.

DESIGN OVERSIGHT	DESIGN By: L. TRAN	Field Investigation by: W. LI / F. WANG	PREPARED FOR THE STATE OF CALIFORNIA DEPARTMENT OF TRANSPORTATION	P. SIRCAR PROJECT ENGINEER	STRUCTURE NO.	SFOBB MAINTENANCE COMPLEX
SIGN OFF DATE	CHECKED By: P. SIRCAR				KILO POST (PM)	LOG OF TEST BORINGS

ORIGINAL SCALE IN INCHES FOR REDUCED PLANS 0 1 2 3 4 5 — CU EA

DISREGARD PRINTS BEARING EARLIER REVISION DATES → REVISION DATES (PRELIMINARY STAGE ONLY) SHEET OF

st0_Log_11of14.tif

PLATE A-8

DIST.	COUNTY	ROUTE	POST MILES TOTAL PROJECT	SHEET NO.	TOTAL SHEETS
04	Ala	880, 80	34.4, 1.3/3.0	741	1412

R.C. Wilhelms
CERTIFIED ENGINEERING GEOLOGIST

REGISTERED GEOLOGIST R.C. WILHELMS No. 560 Exp. 6-30-94 CERTIFIED ENGINEERING GEOLOGIST STATE OF CALIFORNIA

6-13-94
PLANS APPROVAL DATE

BENCH MARK

BM AB-1036 EL.=5.92'
P.K. NAIL W/C.T. SHINER AT NORTHERLY END OF A.C. PATH LEADING AWAY (NORTHERLY) S.P.R.R. DEPOT (16TH & WOOD ST.) APPROX. OPPOSITE FROM 20TH STREET.

BM AB-441 EL.=5.33'
P.K. NAIL AND SHINER 0.04 BELOW A.C. PAVEMENT NEAR ℄ INTERSECTION OF WOOD AND 20TH STREET.

BM AB-420 EL.=39.64'
P.K. NAIL W/ SHINER AT NORTHEASTERLY SIDE OF ABANDONED WOOD BRIDGE OVER S.P.R.R. TRACKS. 1200' NORTHERLY OF WEST GRAND AVE. AT END OF WAKE AVE.

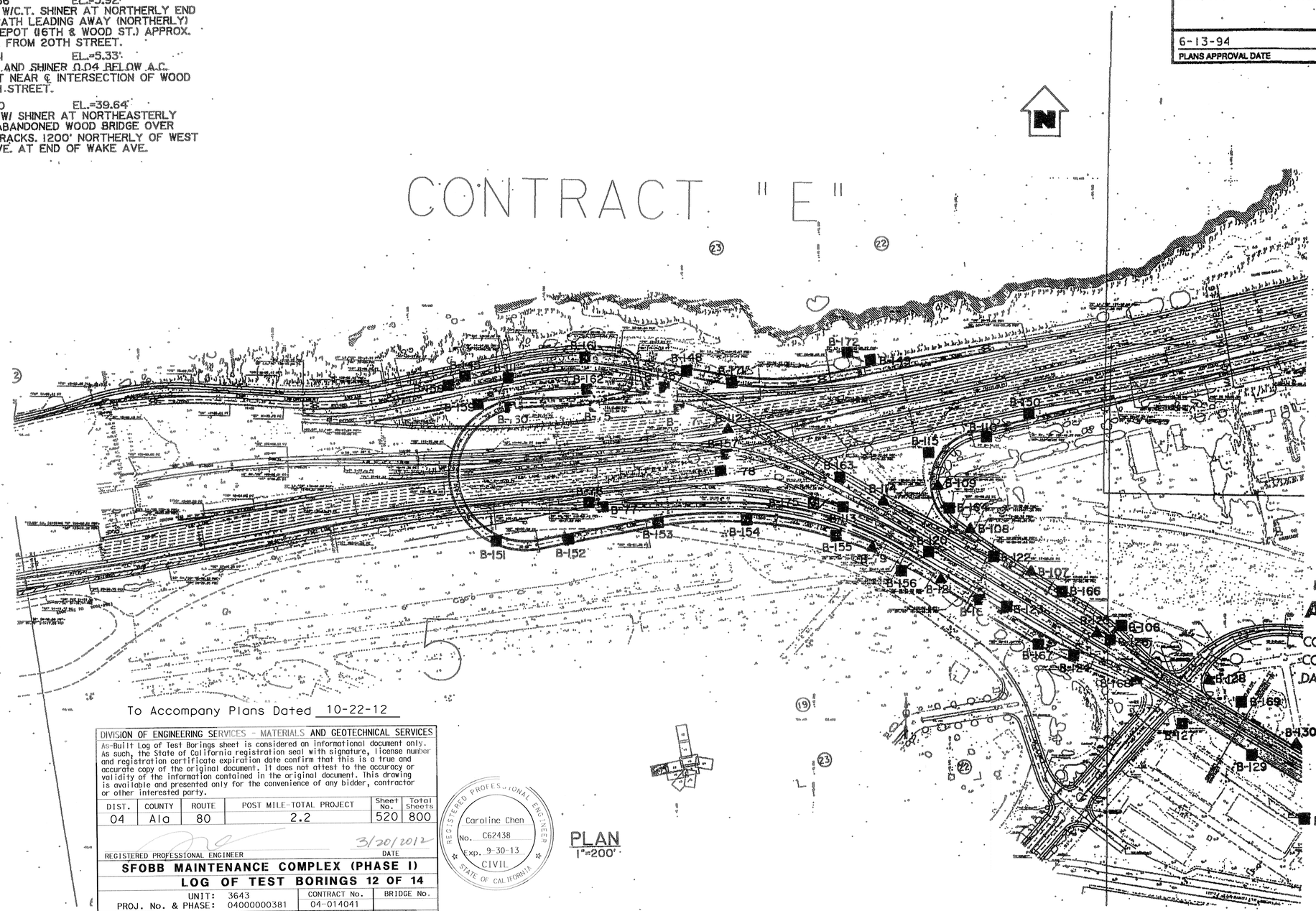

NO AS BUILT CHANGES
AS BUILT
CORRECTIONS BY R. AKKAWI
CONTRACT NO. 04-192234
DATE 9-19-97 10-28-98

To Accompany Plans Dated 10-22-12

DIVISION OF ENGINEERING SERVICES - MATERIALS AND GEOTECHNICAL SERVICES

As-Built Log of Test Borings sheet is considered an informational document only. As such, the State of California registration seal with signature, license number and registration certificate expiration date confirm that this is a true and accurate copy of the original document. It does not attest to the accuracy or validity of the information contained in the original document. This drawing is available and presented only for the convenience of any bidder, contractor or other interested party.

DIST.	COUNTY	ROUTE	POST MILE-TOTAL PROJECT	Sheet No.	Total Sheets
04	Ala	80	2.2	520	800

REGISTERED PROFESSIONAL ENGINEER — DATE 3/20/2012

REGISTERED PROFESSIONAL ENGINEER Caroline Chen No. C62438 Exp. 9-30-13 CIVIL STATE OF CALIFORNIA

SFOBB MAINTENANCE COMPLEX (PHASE I)
LOG OF TEST BORINGS 12 OF 14

UNIT: 3643 — CONTRACT No. 04-014041 — BRIDGE No.
PROJ. No. & PHASE: 04000000381

AS-BUILT VERT DATUM: :... CONVERSION: — Sheet — of

NOTE: A COPY OF THIS LOG OF TEST BORINGS IS AVAILABLE AT OFFICE OF STRUCTURE MAINTENANCE AND INVESTIGATIONS, SACRAMENTO, CALIFORNIA

PLAN
1"=200'

CONTRACT "E"

LEGEND OF BORING OPERATIONS

LEGEND OF EARTH MATERIALS: GRAVEL, SAND, SILT, CLAY, CLAYEY SILT, PEAT and/or ORGANIC MATTER, FILL MATERIAL, IGNEOUS ROCK, SEDIMENTARY ROCK, METAMORPHIC ROCK, SANDY CLAY or CLAYEY SAND, SANDY SILT or SILTY SAND, SILTY CLAY

CONSISTENCY CLASSIFICATION FOR SOILS — According to the Standard Penetration Test

Penetration Index (Blows / Ft)	Granular	Cohesive
0-4	Very loose	Very soft
5-9	Loose	Soft
10-18	Slightly compact	Stiff
19-35	Compact	Very stiff
35-69	Dense	Hard
>70	Very dense	Very hard

NOTE: Classification of earth material as shown on this sheet is based upon field inspection and is not to be construed to imply mechanical analysis.

OFFICE OF TRANSPORTATION MATERIALS & RESEARCH	ENGINEERING GEOLOGY BRANCH	FIELD INVESTIGATION BY:	State of CALIFORNIA DEPARTMENT OF TRANSPORTATION	DIVISION OF STRUCTURES STRUCTURE DESIGN	BRIDGE NO. 33-623S	MARITIME OFF-RAMP
DRAWN BY K. WAHL 5-92		M. WILLIAM			POST MILE	LOG OF TEST BORINGS 1 OF 20
CHECKED BY						

ORIGINAL SCALE IN INCHES FOR REDUCED PLANS 0 1 2 3

CU 04
EA 192231

DISREGARD PRINTS BEARING EARLIER REVISION DATES

REVISION DATES (PRELIMINARY STAGE ONLY)

SHEET 105 OF 138

TL 6031 REV 3/90

www.fastio.com

st0_Log_12of14.tif

DIST.	COUNTY	ROUTE	POST MILES TOTAL PROJECT	SHEET NO.	TOTAL SHEETS
04	Ala	880, 80	34.4, 1.3/3.0	869	1412

GEOTECHNICAL PROFESSIONAL

6-13-94
PLANS APPROVAL DATE

REGISTERED PROFESSIONAL ENGINEER H. R. TABER No. 817 EXP. 12-31-92 GEOTECHNICAL STATE OF CALIFORNIA

TABER CONSULTANTS
538 Galveston Street
West Sacramento, CA 95691

JOB No. 1P1/388/72.019
Field Study By: T. A. Krause & W. E. Nichols

FOR PLAN VIEW, SEE SHEET 1 OF 20

NO AS BUILT CHANGES

AS BUILT
CORRECTIONS BY RAY AKKAWI
CONTRACT NO. 04-192234
DATE SEPT. 19/97 FEB 9/30/98

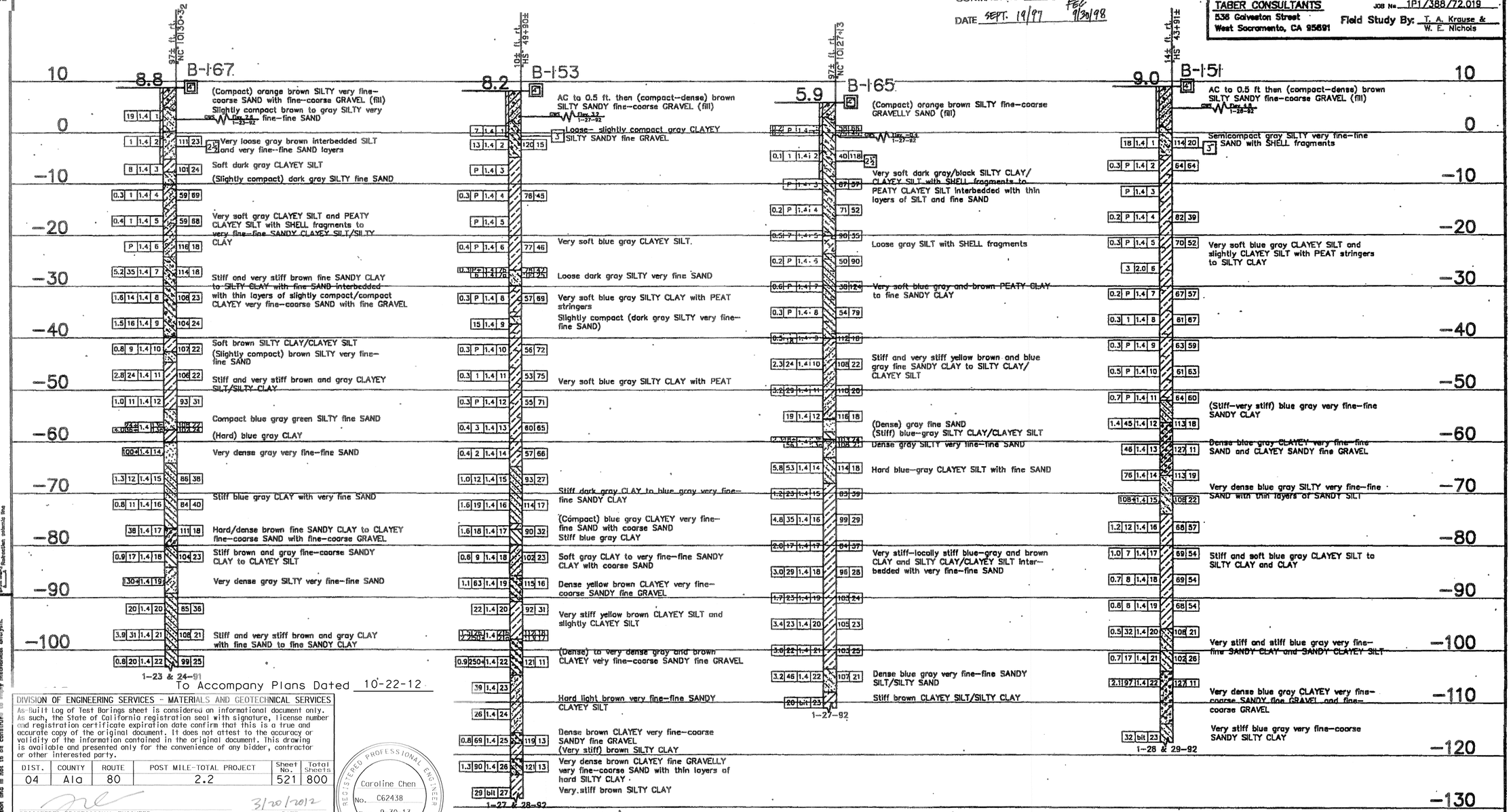

To Accompany Plans Dated 10-22-12

DIVISION OF ENGINEERING SERVICES - MATERIALS AND GEOTECHNICAL SERVICES

As-Built Log of Test Borings sheet is considered an informational document only. As such, the State of California registration seal with signature, license number and registration certificate expiration date confirm that this is a true and accurate copy of the original document. It does not attest to the accuracy or validity of the information contained in the original document. this drawing is available and presented only for the convenience of any bidder, contractor or other interested party.

DIST.	COUNTY	ROUTE	POST MILE-TOTAL PROJECT	Sheet No.	Total Sheets
04	Ala	80	2.2	521	800

REGISTERED PROFESSIONAL ENGINEER — DATE 3/20/2012

REGISTERED PROFESSIONAL ENGINEER Caroline Chen No. C62438 Exp. 9-30-13 CIVIL STATE OF CALIFORNIA

SFOBB MAINTENANCE COMPLEX (PHASE I)
LOG OF TEST BORINGS 13 OF 14

UNIT: 3643 | CONTRACT No. 04-014041 | BRIDGE No.
PROJ. No. & PHASE: 04000000381
AS-BUILT VERT DATUM: > CONVERSION: : | Sheet | of
NOTE: A COPY OF THIS LOG OF TEST BORINGS IS AVAILABLE AT OFFICE OF STRUCTURE MAINTENANCE AND INVESTIGATIONS, SACRAMENTO, CALIFORNIA

NOTE: Classification of earth material as shown on this sheet is based upon field inspection and is not to be construed to imply mechanical analysis.

LEGEND OF BORING OPERATIONS

LEGEND OF EARTH MATERIALS: GRAVEL, SAND, SILT, CLAY, SANDY CLAY or CLAYEY SAND, SANDY SILT or SILTY SAND, SILTY CLAY, CLAYEY SILT, PEAT and/or ORGANIC MATTER, FILL MATERIAL, IGNEOUS ROCK, SEDIMENTARY ROCK, METAMORPHIC ROCK

CONSISTENCY CLASSIFICATION FOR SOILS According to the Standard Penetration Test

Penetration Index (Blows / ft)	Granular	Cohesive
0-4	Very loose	Very soft
5-9	Loose	Soft
10-18	Slightly compact	Stiff
19-34	Compact	Very stiff
35-58	Dense	Hard
>70	Very dense	Very hard

CONTRACT "E"

, PROJECT ENGINEER

Prepared for the State of CALIFORNIA DEPARTMENT OF TRANSPORTATION

DIVISION OF STRUCTURES
STRUCTURE DESIGN

BRIDGE NO. 33-623S
POST MILE

MARITIME OFF-RAMP
LOG OF TEST BORINGS 17 OF 20

ORIGINAL SCALE IN INCHES FOR REDUCED PLANS 0 1 2 3

CU 04
EA 192231

DISREGARD PRINTS BEARING EARLIER REVISION DATES

REVISION DATES (PRELIMINARY STAGE ONLY) 5/5/92 | SHEET 95 | OF 112

TL 6052 REV. 4/89 3/92 13:17:20.09C 70

st0_Log_13of14.tif

DIST.	COUNTY	ROUTE	POST MILES TOTAL PROJECT	SHEET NO.	TOTAL SHEETS
04	Ala	880.80	34.4, 1.3/3.0	870	1412

GEOTECHNICAL PROFESSIONAL

6-13-94
PLANS APPROVAL DATE

REGISTERED PROFESSIONAL ENGINEER R. R. TABER No. 817 EXP. 12-31-92 GEOTECHNICAL STATE OF CALIFORNIA

TABER CONSULTANTS
536 Galveston Street
West Sacramento, CA 95691

JOB No. 1P1/388/72.019
Field Study By: T. A. Krause & W. E. Nichols

NO AS BUILT CHANGES

AS BUILT
CORRECTIONS BY RAY AKKAWI
CONTRACT NO. 04 - 192231
DATE 9/30/98

FOR PLAN VIEW, SEE SHEET 1 OF 20

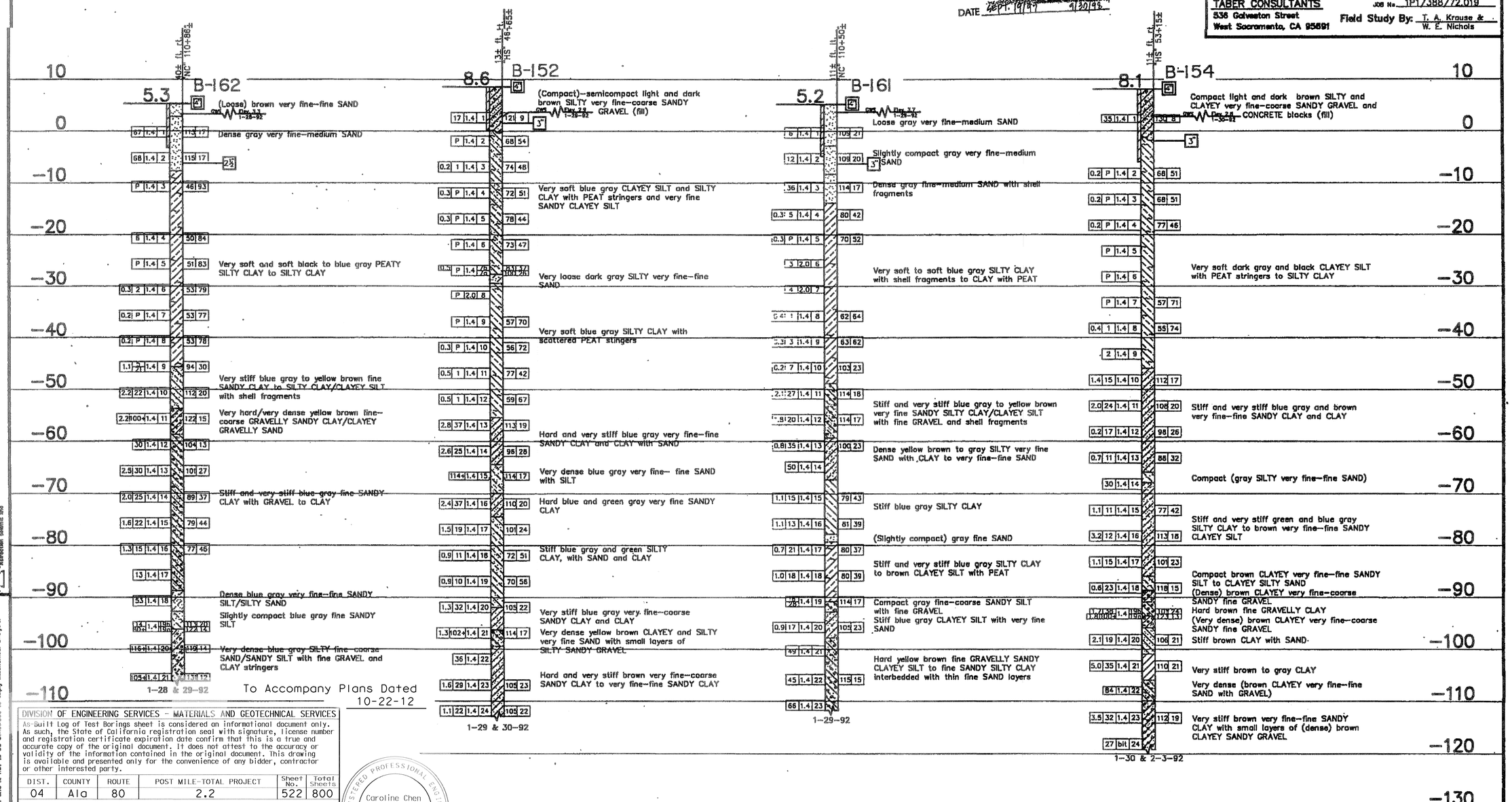

To Accompany Plans Dated 10-22-12

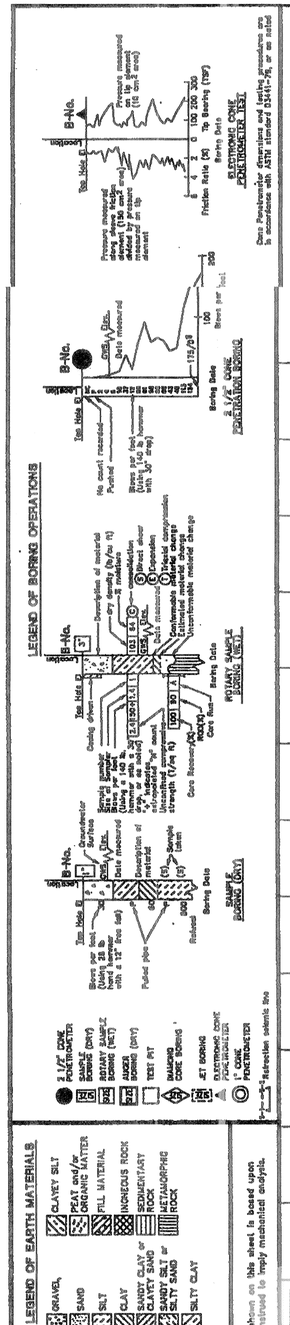

DIVISION OF ENGINEERING SERVICES - MATERIALS AND GEOTECHNICAL SERVICES

As-Built Log of Test Borings sheet is considered an informational document only. As such, the State of California registration seal with signature, license number and registration certificate expiration date confirm that this is a true and accurate copy of the original document. It does not attest to the accuracy or validity of the information contained in the original document. This drawing is available and presented only for the convenience of any bidder, contractor or other interested party.

DIST.	COUNTY	ROUTE	POST MILE-TOTAL PROJECT	Sheet No.	Total Sheets
04	Ala	80	2.2	522	800

REGISTERED PROFESSIONAL ENGINEER — DATE 3/20/2012

REGISTERED PROFESSIONAL ENGINEER Caroline Chen No. C62438 Exp. 9-30-13 CIVIL STATE OF CALIFORNIA

SFOBB MAINTENANCE COMPLEX (PHASE I)

LOG OF TEST BORINGS 14 OF 14

UNIT: 3643 — CONTRACT No. 04-014041 — BRIDGE No.
PROJ. No. & PHASE: 04000000381

AS-BUILT VERT DATUM: ; CONVERSION: — Sheet — of

NOTE: A COPY OF THIS LOG OF TEST BORINGS IS AVAILABLE AT OFFICE OF STRUCTURE MAINTENANCE AND INVESTIGATIONS, SACRAMENTO, CALIFORNIA

PROJECT ENGINEER

Prepared for the State of **CALIFORNIA** DEPARTMENT OF TRANSPORTATION

DIVISION OF STRUCTURES
STRUCTURE DESIGN

BRIDGE NO. 33-623S
POST MILE

MARITIME OFF-RAMP

LOG OF TEST BORINGS 18 OF 20

CONTRACT "E"

ORIGINAL SCALE IN INCHES FOR REDUCED PLANS 0 1 2 3

CU 04
EA 192231

DISREGARD PRINTS BEARING EARLIER REVISION DATES — REVISION DATES (PRELIMINARY STAGE ONLY) 5/5/92

SHEET 96 OF 112

TL 6052 REV. 4/89 3/92 1S0172.DWG 7pt

st0_Log_14of14.tif

HEATING, VENTILATING AND AIR CONDITIONING

- Balance Damper
- Flexible Duct
- EA — Exhaust Air
- RA — Return Air
- SA — Supply Air
- SIZE — Exhaust Grille
- or SIZE — Return Grille, See Note
- or SIZE CFM — Supply Diffuser, See Note
- T — Thermostat
- TS — Time Switch
- EF — Exhaust Fan
- FE — Fire Extinguisher
- Z or ZTS — Zone Temperature Sensor
- CO_2 — Carbon Dioxide Sensor
- Zone Damper
- Smoke Damper

NOTE Ceiling Grille and Diffusers are Identified by Duct Connection Neck Size

MISCELLANEOUS

- L — Angle
- ℄ — Centerline
- Ø — Diameter
- Section / Elevation Letter
- Sheet Number
- Detail Number
- Sheet Number

Fire Marshal Stamp

CALIFORNIA STATE FIRE MARSHAL APPROVED

Approval of this plan does not authorize or approve any omission or deviation from applicable regulations. Final approval is subject to field inspection. One set of approved plans shall be available on the project site at all times.

Reviewed by: JOHN E WOODS, SDSFM

Approval date: 8-22-12

DIST.	COUNTY	ROUTE	POST MILES TOTAL PROJECT	SHEET NO.	TOTAL SHEETS
04	Ala	80	2.2	523	800

REGISTERED MECHANICAL ENGINEER — 05-25-12 DATE

REGISTERED PROFESSIONAL ENGINEER — MARK HEDGLIN — No. M32912 — Exp. 9-30-12 — MECH — STATE OF CALIFORNIA

10-22-12
PLANS APPROVAL DATE

The State of California or its officers or agents shall not be responsible for the accuracy or completeness of scanned copies of this plan sheet.

MECHANICAL ABBREVIATIONS:

A/C	Air Conditioning
ABS	Acrylontirle Butadiene Styrene
AC	Asphalt Concrete
ACP	Air Compressor
AP	Alternative Pipe
ATF	Automatic Transmission Fluid
BD	Balance Damper
BLDG	Building
BTU	British Thermal Unit
BTUH	British Thermal Unit Per Hour
BV	Balancing Valve
C	Conduit
Cap.	Capacity
CHLF	Combination Heat Lamp, Light and Fan Unit
CI	Cast-Iron
CO	Cleanout
COTF	Cleanout Through Floor
COTG	Cleanout Through Grade
COTW	Cleanout To Wall
CV	Check Valve
CW	Cold Water
CFM	Cubic Feet Per Minute
D	Depth
Dia	Diameter
DWV	Drain / Waste / Vent
DB	Dry Bulb
DF	Declassification Fan
DH	Duct Heater
(E)	Existing
EA	Exhaust Air
EEW	Emergency Eyewash and Shower
EF	Exhaust Fan
EL	Elevation
Elect.	Electrical
ESP	External Static Pressure
EWC	Electric Water Cooler
EWH	Electric Water Heater
°F	Fahrenheit
FC	Flexible Connection
FD	Floor Drain
FDC	Fire Department Connection
FE	Fire Extinguisher
FG	Finish Grade
FL	Flow Line
FH	Fire Hydrant
FS	Flow Switch
FTR	Flue Through Roof
GA	Gauge
GALV	Galvanized
GH	Ground Hydrant
GLV	Globe Valve
GPM	Gallons Per Minute
GS	Gang Sink
GSP	Galvanized Steel Pipe
GV	Gate Valve
GWH	Gas Water Heater
GYP	Gypsum
H	Height
HB	Hydrant Box
HCP	Hot Water Circulation Pump
HF	Hose Faucet
HVAC	Heating, Ventilating And Air Conditioning
HW	Hot Water
HZ	Hertz
ID	Inside Diameter
IE	Invert Elevation
IN	Inch
IPS	International Pipe Standard
KS	Kitchen Sink
kW	Kilowatt
LIRH	Low Intensity Radient Heatrer
LPG	Liquified Petroleum Gas
L/s	Liters per Second
MAX	Maximum
MAN	Manhole
MIN	Minimum
MS	Mop Sink
(N)	New
NIC	Not In Contract
NO	Number
NPT	National Pipe Thread
NST	National Standard Thread
NPS	Nominal Pipe Size
OA	Outside Air
OC	On Center
OD	Outside Diameter
OG	Original Ground
PH	Phase
PIV	Post Indicator Valve
POC	Point of Connection
PVC	Polyvinyl Chloride
PCC	Portland Cement Concrete
PSI	Pounds Per Square Inch
PV	Photo Voltaic
RH	Radiant Heater
R	Radius
RA	Return Air
RAD	Refrigerated Air Dryer
RCP	Reinforced Concrete Pipe
RD	Roof Drain
REG	Register
REQ	Required
RW	Recycled Water
SA	Supply Air
SCH	Schedule
SDS	Sanitary Dump Station
SF	Supply Fan
SHR	Shower
S.P.	Static Pressure
STA	Station
STD	Standard
TA	Transfer Air
TP	Trap Primer
TOT	Total
TS	Time Switch
TYP	Typical
UH	Unit Heater
UR	Urinal
V	Vent
VAC	Voltage, Alternating Current
VEEF	Vehicle Engine Exhaust Fan
VEEHR	Vehicle Engine Exhaust Hose Reel
VR	Vent Riser
VTR	Vent Thru Roof
W	Width
W/	With
W/O	Without
WB	Wet Bulb
WC	Water Closet
WD	Water Drop
W.C.	Water Column
W.H.	Wall Hydrant
WH	Water Hammer Arrestor
WP	Weatherproof
ZD	Zone Damper

THIS DRAWING ACCURATE FOR MECHANICAL WORK ONLY

	BY	CHECKED
DESIGN	Mark Hedglin	Tom Hatam
DETAILS	Rudy Sarte	Tom Hatam
QUANTITIES	Mark Hedglin	Tom Hatam

STATE OF CALIFORNIA DEPARTMENT OF TRANSPORTATION

DIVISION OF ENGINEERING SERVICES
ELECTRICAL-MECHANICAL-WATER AND WASTEWATER DESIGN

BRIDGE NO. 33M5785
POST MILE 2.2

SFOBB MAINTENANCE COMPLEX

LEGENDS AND ABBREVIATIONS

SHEET **MO-0**

TAEMWW Imperial Rev. 7/10

FILE => m0_0.dgn
DATE PLOTTED => 25-OCT-2012 TIME PLOTTED => 15:09

ORIGINAL SCALE IN INCHES FOR REDUCED PLANS 0 1 2 3

UNIT 3615
PROJECT NUMBER & PHASE 04120006661
EA 014081

DISREGARD PRINTS BEARING EARLIER REVISION DATES → 05-08-12 05-25-12

REVISION DATES (PRELIMINARY STAGE ONLY) SHEET OF

USERNAME => s123631 DATE PLOTTED => 25-OCT-2012 TIME PLOTTED => 15:09

V|=|

DIST.	COUNTY	ROUTE	POST MILES TOTAL PROJECT	SHEET NO.	TOTAL SHEETS
04	Ala	80	2.2	524	800

REGISTERED MECHANICAL ENGINEER 05-25-12 DATE

REGISTERED PROFESSIONAL ENGINEER MARK HEDGLIN No. M32912 Exp. 9-30-12 MECH STATE OF CALIFORNIA

10-22-12
PLANS APPROVAL DATE

The State of California or its officers or agents shall not be responsible for the accuracy or completeness of scanned copies of this plan sheet.

Fire Marshal Stamp

CALIFORNIA STATE FIRE MARSHAL APPROVED
Approval of this plan does not authorize or approve any omission or deviation from applicable regulations. Final approval is subject to field inspection. One set of approved plans shall be available on the project site at all times.
Reviewed by: JOHN E WOODS, SDSFM
Approval date: 8-22-12

CERTIFICATE OF COMPLIANCE and FIELD INSPECTION ENERGY CHECKLIST (Part 1 of 4) MECH-1C

Project Name			Date
SFOBB Admin.			5/22/2012
Project Address	Climate Zone	Total Cond. Floor Area	Addition Floor Area
Burma Rd. Post Mile 1.8/2.5 Oakland	3	53,045	n/a

GENERAL INFORMATION

Building Type: ☑ Nonresidential ☐ High-Rise Residential ☐ Hotel/Motel Guest Room
☐ Schools (Public School) ☐ Relocatable Public School Bldg. ☑ Conditioned Spaces ☐ Unconditioned Spaces (affidavit)
Phase of Construction: ☑ New Construction ☐ Addition ☐ Alteration
Approach of Compliance: ☐ Component ☐ Overall Envelope TDV Energy ☐ Unconditioned (file affidavit)
Front Orientation: N, E, S, W or in Degrees: 0 deg

HVAC SYSTEM DETAILS

Equipment[2]	Inspection Criteria	FIELD INSPECTION ENERGY CHECKLIST Meets Criteria or Requirements: Pass	Fail – Describe Reason[2]
Item or System Tags (i.e. AC-1, RTU-1, HP-1)	DHW Heater	☐	☐
Equipment Type[3]:	Gas Fired DHW Boiler	☐	☐
Number of Systems	2	☐	☐
Max Allowed Heating Capacity[1]	130,000 Btu/hr	☐	☐
Minimum Heating Efficiency[1]	97 %	☐	☐
Max Allowed Cooling Capacity[1]	n/a	☐	☐
Cooling Efficiency[1]	n/a	☐	☐
Duct Location/ R-Value	n/a	☐	☐
When duct testing is required, submit **MECH-4A** & **MECH-4-HERS**	n/a	☐	☐
Economizer	n/a	☐	☐
Thermostat	n/a	☐	☐
Fan Control	n/a	☐	☐

Equipment[2]	Inspection Criteria	FIELD INSPECTION ENERGY CHECKLIST: Pass	Fail – Describe Reason[2]
Item or System Tags (i.e. AC-1, RTU-1, HP-1)	Ground Level Comm Rm. AC	☐	☐
Equipment Type[3]:	Split DX	☐	☐
Number of Systems	1	☐	☐
Max Allowed Heating Capacity[1]	0 Btu/hr	☐	☐
Minimum Heating Efficiency[1]	n/a	☐	☐
Max Allowed Cooling Capacity[1]	12,000 Btu/hr	☐	☐
Cooling Efficiency[1]	15.2 SEER / 12.3 EER	☐	☐
Duct Location/ R-Value	n/a	☐	☐
When duct testing is required, submit **MECH-4A** & **MECH-4-HERS**	No	☐	☐
Economizer	No Economizer	☐	☐
Thermostat	Setback Required	☐	☐
Fan Control	Constant Volume	☐	☐

1. If the Actual installed equipment performance efficiency and capacity is less than the Proposed (from the energy compliance submittal or from the building plans) the responsible party shall resubmit energy compliance to include the new changes.
2. For additional detailed discrepancy use Page 2 of the Inspection Checklist Form. Compliance fails if a Fail box is checked.
3. Indicate Equipment Type: Gas (Pkg or, Split), VAV, HP (Pkg or split), Hydronic, PTAC, or other.

CERTIFICATE OF COMPLIANCE and FIELD INSPECTION ENERGY CHECKLIST (Part 1 of 4) MECH-1C

Project Name			Date
SFOBB Admin.			5/22/2012
Project Address	Climate Zone	Total Cond. Floor Area	Addition Floor Area
Burma Rd. Post Mile 1.8/2.5 Oakland	3	53,045	n/a

GENERAL INFORMATION

Building Type: ☑ Nonresidential ☐ High-Rise Residential ☐ Hotel/Motel Guest Room
☐ Schools (Public School) ☐ Relocatable Public School Bldg. ☑ Conditioned Spaces ☐ Unconditioned Spaces (affidavit)
Phase of Construction: ☑ New Construction ☐ Addition ☐ Alteration
Approach of Compliance: ☐ Component ☐ Overall Envelope TDV Energy ☐ Unconditioned (file affidavit)
Front Orientation: N, E, S, W or in Degrees: 0 deg

HVAC SYSTEM DETAILS

Equipment[2]	Inspection Criteria	FIELD INSPECTION ENERGY CHECKLIST Meets Criteria or Requirements: Pass	Fail – Describe Reason[2]
Item or System Tags (i.e. AC-1, RTU-1, HP-1)	Ground Level Elv. Equip Rm. AC	☐	☐
Equipment Type[3]:	Split DX	☐	☐
Number of Systems	1	☐	☐
Max Allowed Heating Capacity[1]	0 Btu/hr	☐	☐
Minimum Heating Efficiency[1]	n/a	☐	☐
Max Allowed Cooling Capacity[1]	12,000 Btu/hr	☐	☐
Cooling Efficiency[1]	15.2 SEER / 12.3 EER	☐	☐
Duct Location/ R-Value	n/a	☐	☐
When duct testing is required, submit **MECH-4A** & **MECH-4-HERS**	No	☐	☐
Economizer	No Economizer	☐	☐
Thermostat	Setback Required	☐	☐
Fan Control	Constant Volume	☐	☐

Equipment[2]	Inspection Criteria	FIELD INSPECTION ENERGY CHECKLIST: Pass	Fail – Describe Reason[2]
Item or System Tags (i.e. AC-1, RTU-1, HP-1)	Ground Level	☐	☐
Equipment Type[3]:	Packaged DX	☐	☐
Number of Systems	1	☐	☐
Max Allowed Heating Capacity[1]	120,000 Btu/hr	☐	☐
Minimum Heating Efficiency[1]	80% AFUE	☐	☐
Max Allowed Cooling Capacity[1]	120,000 Btu/hr	☐	☐
Cooling Efficiency[1]	12.5 EER	☐	☐
Duct Location/ R-Value	Conditioned / 8.0	☐	☐
When duct testing is required, submit **MECH-4A** & **MECH-4-HERS**	Yes	☐	☐
Economizer	Diff. Temp (Integrated)	☐	☐
Thermostat	Setback Required	☐	☐
Fan Control	Constant Volume	☐	☐

1. If the Actual installed equipment performance efficiency and capacity is less than the Proposed (from the energy compliance submittal or from the building plans) the responsible party shall resubmit energy compliance to include the new changes.
2. For additional detailed discrepancy use Page 2 of the Inspection Checklist Form. Compliance fails if a Fail box is checked.
3. Indicate Equipment Type: Gas (Pkg or, Split), VAV, HP (Pkg or split), Hydronic, PTAC, or other.

THIS DRAWING ACCURATE FOR MECHANICAL WORK ONLY

	BY	CHECKED
DESIGN	Mark Hedglin	Tom Hatam
DETAILS	Mark Hedglin	Tom Hatam
QUANTITIES	Mark Hedglin	Tom Hatam

STATE OF CALIFORNIA DEPARTMENT OF TRANSPORTATION

DIVISION OF ENGINEERING SERVICES ELECTRICAL-MECHANICAL-WATER AND WASTEWATER DESIGN

BRIDGE NO. 33M5785
POST MILE 2.2

SFOBB MAINTENANCE COMPLEX

TITLE 24

SHEET **M0-1**

TAEMWW Imperial Rev. 7/10
FILE => m0_1.dgn
DATE PLOTTED => 25-OCT-2012 TIME PLOTTED => 15:09
ORIGINAL SCALE IN INCHES FOR REDUCED PLANS 0 1 2 3
UNIT 3615
PROJECT NUMBER & PHASE 04120006661
EA 014081
DISREGARD PRINTS BEARING EARLIER REVISION DATES
REVISION DATES (PRELIMINARY STAGE ONLY) 05-08-12 05-25-12
SHEET OF

USERNAME => s123631 DATE PLOTTED => 25-OCT-2012 TIME PLOTTED => 15:09

V|=|

DIST.	COUNTY	ROUTE	POST MILES TOTAL PROJECT	SHEET NO.	TOTAL SHEETS
04	Ala	80	2.2	525	800

REGISTERED MECHANICAL ENGINEER — 05-25-12 DATE

REGISTERED PROFESSIONAL ENGINEER MARK HEDGLIN No. M32912 Exp. 9-30-12 MECH STATE OF CALIFORNIA

10-22-12
PLANS APPROVAL DATE

The State of California or its officers or agents shall not be responsible for the accuracy or completeness of scanned copies of this plan sheet.

Fire Marshal Stamp

CALIFORNIA STATE FIRE MARSHAL APPROVED
Approval of this plan does not authorize or approve any omission or deviation from applicable regulations. Final approval is subject to field inspection. One set of approved plans shall be available on the project site at all times.
Reviewed by: JOHN E WOODS, SDSFM
Approval date: 8-22-12

CERTIFICATE OF COMPLIANCE and FIELD INSPECTION ENERGY CHECKLIST (Part 1 of 4) MECH-1C

Project Name			Date
SFOBB Admin.			5/22/2012
Project Address	**Climate Zone**	**Total Cond. Floor Area**	**Addition Floor Area**
Burma Rd. Post Mile 1.8/2.5 Oakland	3	53,045	n/a

GENERAL INFORMATION

- Building Type: ☑ Nonresidential ☐ High-Rise Residential ☐ Hotel/Motel Guest Room
- ☐ Schools (Public School) ☐ Relocatable Public School Bldg. ☑ Conditioned Spaces ☐ Unconditioned Spaces (affidavit)
- Phase of Construction: ☑ New Construction ☐ Addition ☐ Alteration
- Approach of Compliance: ☐ Component ☐ Overall Envelope TDV Energy ☐ Unconditioned (file affidavit)
- Front Orientation: N, E, S, W or in Degrees: 0 deg

HVAC SYSTEM DETAILS

Equipment[2]	Inspection Criteria	FIELD INSPECTION ENERGY CHECKLIST Meets Criteria or Requirements: Pass	Fail – Describe Reason[2]
Item or System Tags (i.e. AC-1, RTU-1, HP-1)	Upper Level	☐	☐
Equipment Type[3]:	Packaged VAV	☐	☐
Number of Systems	1	☐	☐
Max Allowed Heating Capacity[1]	122,000 Btu/hr	☐	☐
Minimum Heating Efficiency[1]	81% AFUE	☐	☐
Max Allowed Cooling Capacity[1]	158,000 Btu/hr	☐	☐
Cooling Efficiency[1]	12.0 EER	☐	☐
Duct Location/ R-Value	Attic, Ceiling+Roof Ins / 8.0	☐	☐
When duct testing is required, submit **MECH-4A** & **MECH-4-HERS**	Yes	☐	☐
Economizer	Diff. Temp (Integrated)	☐	☐
Thermostat	Setback Required	☐	☐
Fan Control	Constant Volume	☐	☐

Equipment[2]	Inspection Criteria	FIELD INSPECTION ENERGY CHECKLIST: Pass	Fail – Describe Reason[2]
Item or System Tags (i.e. AC-1, RTU-1, HP-1)	Upper Level Radio Rm. AC	☐	☐
Equipment Type[3]:	Split DX	☐	☐
Number of Systems	1	☐	☐
Max Allowed Heating Capacity[1]	0 Btu/hr	☐	☐
Minimum Heating Efficiency[1]	n/a	☐	☐
Max Allowed Cooling Capacity[1]	12,000 Btu/hr	☐	☐
Cooling Efficiency[1]	15.2 SEER / 12.3 EER	☐	☐
Duct Location/ R-Value	n/a	☐	☐
When duct testing is required, submit **MECH-4A** & **MECH-4-HERS**	No	☐	☐
Economizer	No Economizer	☐	☐
Thermostat	Setback Required	☐	☐
Fan Control	Constant Volume	☐	☐

1. If the Actual installed equipment performance efficiency and capacity is less than the Proposed (from the energy compliance submittal or from the building plans) the responsible party shall resubmit energy compliance to include the new changes.
2. For additional detailed discrepancy use Page 2 of the Inspection Checklist Form. Compliance fails if a Fail box is checked.
3. Indicate Equipment Type: Gas (Pkg or, Split), VAV, HP (Pkg or split), Hydronic, PTAC, or other.

EnergyPro 5.1 by EnergySoft User Number: 3478 **RunCode: 2012-05-22T12:09:32** *ID: 0400000038* *Page 19 of 41*

CERTIFICATE OF COMPLIANCE and FIELD INSPECTION ENERGY CHECKLIST (Part 1 of 4) MECH-1C

Project Name			Date
SFOBB Admin.			5/22/2012
Project Address	**Climate Zone**	**Total Cond. Floor Area**	**Addition Floor Area**
Burma Rd. Post Mile 1.8/2.5 Oakland	3	53,045	n/a

GENERAL INFORMATION

- Building Type: ☑ Nonresidential ☐ High-Rise Residential ☐ Hotel/Motel Guest Room
- ☐ Schools (Public School) ☐ Relocatable Public School Bldg. ☑ Conditioned Spaces ☐ Unconditioned Spaces (affidavit)
- Phase of Construction: ☑ New Construction ☐ Addition ☐ Alteration
- Approach of Compliance: ☐ Component ☐ Overall Envelope TDV Energy ☐ Unconditioned (file affidavit)
- Front Orientation: N, E, S, W or in Degrees: 0 deg

HVAC SYSTEM DETAILS

Equipment[2]	Inspection Criteria	FIELD INSPECTION ENERGY CHECKLIST Meets Criteria or Requirements: Pass	Fail – Describe Reason[2]
Item or System Tags (i.e. AC-1, RTU-1, HP-1)	DHW Heater	☐	☐
Equipment Type[3]:	Gas Fired DHW Boiler	☐	☐
Number of Systems	1	☐	☐
Max Allowed Heating Capacity[1]	130,000 Btu/hr	☐	☐
Minimum Heating Efficiency[1]	97 %	☐	☐
Max Allowed Cooling Capacity[1]	n/a	☐	☐
Cooling Efficiency[1]	n/a	☐	☐
Duct Location/ R-Value	n/a	☐	☐
When duct testing is required, submit **MECH-4A** & **MECH-4-HERS**	n/a	☐	☐
Economizer	n/a	☐	☐
Thermostat	n/a	☐	☐
Fan Control	n/a	☐	☐

Equipment[2]	Inspection Criteria	FIELD INSPECTION ENERGY CHECKLIST: Pass	Fail – Describe Reason[2]
Item or System Tags (i.e. AC-1, RTU-1, HP-1)	Core Office North	☐	☐
Equipment Type[3]:	Packaged VAV	☐	☐
Number of Systems	1	☐	☐
Max Allowed Heating Capacity[1]	84,000 Btu/hr	☐	☐
Minimum Heating Efficiency[1]	80% AFUE	☐	☐
Max Allowed Cooling Capacity[1]	95,000 Btu/hr	☐	☐
Cooling Efficiency[1]	13.0 EER	☐	☐
Duct Location/ R-Value	Attic, Ceiling Ins, vented / 8.0	☐	☐
When duct testing is required, submit **MECH-4A** & **MECH-4-HERS**	Yes	☐	☐
Economizer	Diff. Temp (Integrated)	☐	☐
Thermostat	Setback Required	☐	☐
Fan Control	Constant Volume	☐	☐

1. If the Actual installed equipment performance efficiency and capacity is less than the Proposed (from the energy compliance submittal or from the building plans) the responsible party shall resubmit energy compliance to include the new changes.
2. For additional detailed discrepancy use Page 2 of the Inspection Checklist Form. Compliance fails if a Fail box is checked.
3. Indicate Equipment Type: Gas (Pkg or, Split), VAV, HP (Pkg or split), Hydronic, PTAC, or other.

EnergyPro 5.1 by EnergySoft User Number: 3478 **RunCode: 2012-05-22T12:09:32** *ID: 0400000038* *Page 20 of 41*

THIS DRAWING ACCURATE FOR MECHANICAL WORK ONLY

	BY	CHECKED
DESIGN	Mark Hedglin	Tom Hatam
DETAILS	Mark Hedglin	Tom Hatam
QUANTITIES	Mark Hedglin	Tom Hatam

STATE OF CALIFORNIA DEPARTMENT OF TRANSPORTATION

DIVISION OF ENGINEERING SERVICES ELECTRICAL-MECHANICAL-WATER AND WASTEWATER DESIGN

BRIDGE NO. 33M5785 POST MILE 2.2

SFOBB MAINTENANCE COMPLEX

TITLE 24

SHEET **M0-2**

TAEMWW Imperial Rev. 7/10

FILE => m0_2.dgn
DATE PLOTTED => 25-OCT-2012 TIME PLOTTED => 15:09

ORIGINAL SCALE IN INCHES FOR REDUCED PLANS 0 1 2 3

UNIT 3615
PROJECT NUMBER & PHASE 04120006661
EA 014081

DISREGARD PRINTS BEARING EARLIER REVISION DATES → REVISION DATES (PRELIMINARY STAGE ONLY) 05-08-12 05-25-12 SHEET OF

USERNAME => s123631 DATE PLOTTED => 25-OCT-2012 TIME PLOTTED => 15:09

V|=|

DIST.	COUNTY	ROUTE	POST MILES TOTAL PROJECT	SHEET NO.	TOTAL SHEETS
04	Ala	80	2.2	526	800

REGISTERED MECHANICAL ENGINEER — 05-25-12 DATE

REGISTERED PROFESSIONAL ENGINEER MARK HEDGLIN No. M32912 Exp. 9-30-12 MECH STATE OF CALIFORNIA

10-22-12
PLANS APPROVAL DATE

The State of California or its officers or agents shall not be responsible for the accuracy or completeness of scanned copies of this plan sheet.

Fire Marshal Stamp

CALIFORNIA STATE FIRE MARSHAL APPROVED
Approval of this plan does not authorize or approve any omission or deviation from applicable regulations. Final approval is subject to field inspection. One set of approved plans shall be available on the project site at all times.
Reviewed by: JOHN E WOODS, SDSFM
Approval date: 8-22-12

CERTIFICATE OF COMPLIANCE and FIELD INSPECTION ENERGY CHECKLIST (Part 1 of 4) MECH-1C

Project Name	Climate Zone	Total Cond. Floor Area	Date / Addition Floor Area
SFOBB Admin.			5/22/2012
Project Address: Burma Rd. Post Mile 1.8/2.5 Oakland	3	53,045	n/a

GENERAL INFORMATION

Building Type: ☑ Nonresidential ☐ High-Rise Residential ☐ Hotel/Motel Guest Room
☐ Schools (Public School) ☐ Relocatable Public School Bldg. ☑ Conditioned Spaces ☐ Unconditioned Spaces (affidavit)
Phase of Construction: ☑ New Construction ☐ Addition ☐ Alteration
Approach of Compliance: ☐ Component ☐ Overall Envelope TDV Energy ☐ Unconditioned (file affidavit)
Front Orientation: N, E, S, W or in Degrees: 0 deg

HVAC SYSTEM DETAILS

Equipment[2]	Inspection Criteria	FIELD INSPECTION ENERGY CHECKLIST Meets Criteria or Requirements: Pass	Fail – Describe Reason[2]
Item or System Tags (i.e. AC-1, RTU-1, HP-1)	Core OfficeSouth	☐	☐
Equipment Type[3]:	Packaged VAV	☐	☐
Number of Systems	1	☐	☐
Max Allowed Heating Capacity[1]	84,000 Btu/hr	☐	☐
Minimum Heating Efficiency[1]	80% AFUE	☐	☐
Max Allowed Cooling Capacity[1]	95,000 Btu/hr	☐	☐
Cooling Efficiency[1]	13.0 EER	☐	☐
Duct Location/ R-Value	Attic, Ceiling Ins, vented / 8.0	☐	☐
When duct testing is required, submit **MECH-4A** & **MECH-4-HERS**	Yes	☐	☐
Economizer	Diff. Temp (Integrated)	☐	☐
Thermostat	Setback Required	☐	☐
Fan Control	Constant Volume	☐	☐

Equipment[2]	Inspection Criteria	FIELD INSPECTION ENERGY CHECKLIST: Pass	Fail – Describe Reason[2]
Item or System Tags (i.e. AC-1, RTU-1, HP-1)	Comm. Rm. AC	☐	☐
Equipment Type[3]:	Split DX	☐	☐
Number of Systems	1	☐	☐
Max Allowed Heating Capacity[1]	0 Btu/hr	☐	☐
Minimum Heating Efficiency[1]	n/a	☐	☐
Max Allowed Cooling Capacity[1]	24,000 Btu/hr	☐	☐
Cooling Efficiency[1]	17.0 SEER / 13.0 EER	☐	☐
Duct Location/ R-Value	n/a	☐	☐
When duct testing is required, submit **MECH-4A** & **MECH-4-HERS**	No	☐	☐
Economizer	No Economizer	☐	☐
Thermostat	Setback Required	☐	☐
Fan Control	Constant Volume	☐	☐

1. If the Actual installed equipment performance efficiency and capacity is less than the Proposed (from the energy compliance submittal or from the building plans) the responsible party shall resubmit energy compliance to include the new changes.
2. For additional detailed discrepancy use Page 2 of the Inspection Checklist Form. Compliance fails if a Fail box is checked.
3. Indicate Equipment Type: Gas (Pkg or, Split), VAV, HP (Pkg or split), Hydronic, PTAC, or other.

CERTIFICATE OF COMPLIANCE and FIELD INSPECTION ENERGY CHECKLIST (Part 1 of 4) MECH-1C

Project Name	Climate Zone	Total Cond. Floor Area	Date / Addition Floor Area
SFOBB Admin.			5/22/2012
Project Address: Burma Rd. Post Mile 1.8/2.5 Oakland	3	53,045	n/a

GENERAL INFORMATION

Building Type: ☑ Nonresidential ☐ High-Rise Residential ☐ Hotel/Motel Guest Room
☐ Schools (Public School) ☐ Relocatable Public School Bldg. ☑ Conditioned Spaces ☐ Unconditioned Spaces (affidavit)
Phase of Construction: ☑ New Construction ☐ Addition ☐ Alteration
Approach of Compliance: ☐ Component ☐ Overall Envelope TDV Energy ☐ Unconditioned (file affidavit)
Front Orientation: N, E, S, W or in Degrees: 0 deg

HVAC SYSTEM DETAILS

Equipment[2]	Inspection Criteria	FIELD INSPECTION ENERGY CHECKLIST Meets Criteria or Requirements: Pass	Fail – Describe Reason[2]
Item or System Tags (i.e. AC-1, RTU-1, HP-1)	West Shop	☐	☐
Equipment Type[3]:	Packaged DX	☐	☐
Number of Systems	14	☐	☐
Max Allowed Heating Capacity[1]	75,000 Btu/hr	☐	☐
Minimum Heating Efficiency[1]	90% AFUE	☐	☐
Max Allowed Cooling Capacity[1]	0 Btu/hr	☐	☐
Cooling Efficiency[1]	n/a	☐	☐
Duct Location/ R-Value	Attic, Ceiling Ins, vented / 8.0	☐	☐
When duct testing is required, submit **MECH-4A** & **MECH-4-HERS**	No	☐	☐
Economizer	No Economizer	☐	☐
Thermostat	No Setback Required	☐	☐
Fan Control	Constant Volume	☐	☐

Equipment[2]	Inspection Criteria	FIELD INSPECTION ENERGY CHECKLIST: Pass	Fail – Describe Reason[2]
Item or System Tags (i.e. AC-1, RTU-1, HP-1)	Hallway 132 SF & Duct Heater	☐	☐
Equipment Type[3]:	Room PTAC	☐	☐
Number of Systems	1	☐	☐
Max Allowed Heating Capacity[1]	8,500 Btu/hr	☐	☐
Minimum Heating Efficiency[1]	3.50 HSPF	☐	☐
Max Allowed Cooling Capacity[1]	0 Btu/hr	☐	☐
Cooling Efficiency[1]	n/a	☐	☐
Duct Location/ R-Value	Attic, Ceiling Ins, vented / 8.0	☐	☐
When duct testing is required, submit **MECH-4A** & **MECH-4-HERS**	No	☐	☐
Economizer	No Economizer	☐	☐
Thermostat	No Setback Required	☐	☐
Fan Control	Constant Volume	☐	☐

1. If the Actual installed equipment performance efficiency and capacity is less than the Proposed (from the energy compliance submittal or from the building plans) the responsible party shall resubmit energy compliance to include the new changes.
2. For additional detailed discrepancy use Page 2 of the Inspection Checklist Form. Compliance fails if a Fail box is checked.
3. Indicate Equipment Type: Gas (Pkg or, Split), VAV, HP (Pkg or split), Hydronic, PTAC, or other.

THIS DRAWING ACCURATE FOR MECHANICAL WORK ONLY

	BY	CHECKED
DESIGN	Mark Hedglin	Tom Hatam
DETAILS	Mark Hedglin	Tom Hatam
QUANTITIES	Mark Hedglin	Tom Hatam

STATE OF CALIFORNIA DEPARTMENT OF TRANSPORTATION

DIVISION OF ENGINEERING SERVICES ELECTRICAL-MECHANICAL-WATER AND WASTEWATER DESIGN

BRIDGE NO. 33M5785 POST MILE 2.2

SFOBB MAINTENANCE COMPLEX

TITLE 24

SHEET MO-3

TAEMWW Imperial Rev. 7/10 FILE => m0_3.dgn DATE PLOTTED => 25-OCT-2012 TIME PLOTTED => 15:09

ORIGINAL SCALE IN INCHES FOR REDUCED PLANS 0 1 2 3

UNIT 3615 PROJECT NUMBER & PHASE 04120006661 EA 014081

DISREGARD PRINTS BEARING EARLIER REVISION DATES → 05-08-12 05-24-12

REVISION DATES (PRELIMINARY STAGE ONLY) SHEET OF

USERNAME => s123631 DATE PLOTTED => 25-OCT-2012 TIME PLOTTED => 15:09

V|=|

DIST.	COUNTY	ROUTE	POST MILES TOTAL PROJECT	SHEET NO.	TOTAL SHEETS
04	Ala	80	2.2	527	800

REGISTERED MECHANICAL ENGINEER — 05-25-12 DATE

REGISTERED PROFESSIONAL ENGINEER — MARK HEDGLIN — No. M32912 — Exp. 9-30-12 — MECH — STATE OF CALIFORNIA

10-22-12
PLANS APPROVAL DATE

The State of California or its officers or agents shall not be responsible for the accuracy or completeness of scanned copies of this plan sheet.

Fire Marshal Stamp

CALIFORNIA STATE FIRE MARSHAL APPROVED
Approval of this plan does not authorize or approve any omission or deviation from applicable regulations. Final approval is subject to field inspection. One set of approved plans shall be available on the project site at all times.
Reviewed by: JOHN E WOODS, SDSFM
Approval date: 8-22-12

CERTIFICATE OF COMPLIANCE and FIELD INSPECTION ENERGY CHECKLIST (Part 1 of 4) MECH-1C

Project Name			Date
SFOBB Admin.			5/22/2012
Project Address	Climate Zone	Total Cond. Floor Area	Addition Floor Area
Burma Rd. Post Mile 1.8/2.5 Oakland	3	53,045	n/a

GENERAL INFORMATION

Building Type:	☑ Nonresidential	☐ High-Rise Residential	☐ Hotel/Motel Guest Room
☐ Schools (Public School)	☐ Relocatable Public School Bldg.	☑ Conditioned Spaces	☐ Unconditioned Spaces (affidavit)
Phase of Construction:	☑ New Construction	☐ Addition	☐ Alteration
Approach of Compliance:	☐ Component	☐ Overall Envelope TDV Energy	☐ Unconditioned (file affidavit)
Front Orientation: N, E, S, W or in Degrees:	0 deg		

HVAC SYSTEM DETAILS

Equipment[2]	Inspection Criteria	FIELD INSPECTION ENERGY CHECKLIST Meets Criteria or Requirements: Pass	Fail – Describe Reason[2]
Item or System Tags (i.e. AC-1, RTU-1, HP-1)	Hallway 135 SF & Duct Heater	☐	☐
Equipment Type[3]:	Room PTAC	☐	☐
Number of Systems	1	☐	☐
Max Allowed Heating Capacity[1]	8,500 Btu/hr	☐	☐
Minimum Heating Efficiency[1]	3.50 HSPF	☐	☐
Max Allowed Cooling Capacity[1]	0 Btu/hr	☐	☐
Cooling Efficiency[1]	n/a	☐	☐
Duct Location/ R-Value	Attic, Ceiling Ins, vented / 8.0	☐	☐
When duct testing is required, submit **MECH-4A** & **MECH-4-HERS**	No	☐	☐
Economizer	No Economizer	☐	☐
Thermostat	No Setback Required	☐	☐
Fan Control	Constant Volume	☐	☐

Equipment[2]	Inspection Criteria	FIELD INSPECTION ENERGY CHECKLIST Pass	Fail – Describe Reason[2]
Item or System Tags (i.e. AC-1, RTU-1, HP-1)	East Shop	☐	☐
Equipment Type[3]:	Packaged DX	☐	☐
Number of Systems	7	☐	☐
Max Allowed Heating Capacity[1]	75,000 Btu/hr	☐	☐
Minimum Heating Efficiency[1]	90% AFUE	☐	☐
Max Allowed Cooling Capacity[1]	0 Btu/hr	☐	☐
Cooling Efficiency[1]	n/a	☐	☐
Duct Location/ R-Value	Attic, Ceiling Ins, vented / 8.0	☐	☐
When duct testing is required, submit **MECH-4A** & **MECH-4-HERS**	No	☐	☐
Economizer	No Economizer	☐	☐
Thermostat	No Setback Required	☐	☐
Fan Control	Constant Volume	☐	☐

1. If the Actual installed equipment performance efficiency and capacity is less than the Proposed (from the energy compliance submittal or from the building plans) the responsible party shall resubmit energy compliance to include the new changes.
2. For additional detailed discrepancy use Page 2 of the Inspection Checklist Form. Compliance fails if a Fail box is checked.
3. Indicate Equipment Type: Gas (Pkg or, Split), VAV, HP (Pkg or split), Hydronic, PTAC, or other.

EnergyPro 5.1 by EnergySoft User Number: 3478 **RunCode: 2012-05-22T12:09:32** *ID: 0400000038* *Page 23 of 41*

CERTIFICATE OF COMPLIANCE and FIELD INSPECTION ENERGY CHECKLIST (Part 1 of 4) MECH-1C

Project Name			Date
SFOBB Admin.			5/22/2012
Project Address	Climate Zone	Total Cond. Floor Area	Addition Floor Area
Burma Rd. Post Mile 1.8/2.5 Oakland	3	53,045	n/a

GENERAL INFORMATION

Building Type:	☑ Nonresidential	☐ High-Rise Residential	☐ Hotel/Motel Guest Room
☐ Schools (Public School)	☐ Relocatable Public School Bldg.	☑ Conditioned Spaces	☐ Unconditioned Spaces (affidavit)
Phase of Construction:	☑ New Construction	☐ Addition	☐ Alteration
Approach of Compliance:	☐ Component	☐ Overall Envelope TDV Energy	☐ Unconditioned (file affidavit)
Front Orientation: N, E, S, W or in Degrees:	0 deg		

HVAC SYSTEM DETAILS

Equipment[2]	Inspection Criteria	FIELD INSPECTION ENERGY CHECKLIST Meets Criteria or Requirements: Pass	Fail – Describe Reason[2]
Item or System Tags (i.e. AC-1, RTU-1, HP-1)	Lead Worker Office AC	☐	☐
Equipment Type[3]:	Split DX	☐	☐
Number of Systems	1	☐	☐
Max Allowed Heating Capacity[1]	7,200 Btu/hr	☐	☐
Minimum Heating Efficiency[1]	8.90 HSPF	☐	☐
Max Allowed Cooling Capacity[1]	6,000 Btu/hr	☐	☐
Cooling Efficiency[1]	18.0 SEER / 12.5 EER	☐	☐
Duct Location/ R-Value	Attic, Ceiling Ins, vented / 8.0	☐	☐
When duct testing is required, submit **MECH-4A** & **MECH-4-HERS**	No	☐	☐
Economizer	No Economizer	☐	☐
Thermostat	Setback Required	☐	☐
Fan Control	Constant Volume	☐	☐

Equipment[2]	Inspection Criteria	FIELD INSPECTION ENERGY CHECKLIST Pass	Fail – Describe Reason[2]
Item or System Tags (i.e. AC-1, RTU-1, HP-1)		☐	☐
Equipment Type[3]:		☐	☐
Number of Systems		☐	☐
Max Allowed Heating Capacity[1]		☐	☐
Minimum Heating Efficiency[1]		☐	☐
Max Allowed Cooling Capacity[1]		☐	☐
Cooling Efficiency[1]		☐	☐
Duct Location/ R-Value		☐	☐
When duct testing is required, submit **MECH-4A** & **MECH-4-HERS**		☐	☐
Economizer		☐	☐
Thermostat		☐	☐
Fan Control		☐	☐

1. If the Actual installed equipment performance efficiency and capacity is less than the Proposed (from the energy compliance submittal or from the building plans) the responsible party shall resubmit energy compliance to include the new changes.
2. For additional detailed discrepancy use Page 2 of the Inspection Checklist Form. Compliance fails if a Fail box is checked.
3. Indicate Equipment Type: Gas (Pkg or, Split), VAV, HP (Pkg or split), Hydronic, PTAC, or other.

EnergyPro 5.1 by EnergySoft User Number: 3478 **RunCode: 2012-05-22T12:09:32** *ID: 0400000038* *Page 24 of 41*

THIS DRAWING ACCURATE FOR MECHANICAL WORK ONLY

DESIGN	BY Mark Hedglin	CHECKED Tom Hatam	
DETAILS	BY Mark Hedglin	CHECKED Tom Hatam	
QUANTITIES	BY Mark Hedglin	CHECKED Tom Hatam	

STATE OF CALIFORNIA DEPARTMENT OF TRANSPORTATION

DIVISION OF ENGINEERING SERVICES
ELECTRICAL-MECHANICAL-WATER AND WASTEWATER DESIGN

BRIDGE NO. 33M5785
POST MILE 2.2

SFOBB MAINTENANCE COMPLEX

TITLE 24

SHEET **MO-4**

TAEMWW Imperial Rev. 7/10

FILE => m0_4.dgn
DATE PLOTTED => 25-OCT-2012 TIME PLOTTED => 15:09

ORIGINAL SCALE IN INCHES FOR REDUCED PLANS 0 1 2 3

UNIT 3615
PROJECT NUMBER & PHASE 04120006661
EA 014081

DISREGARD PRINTS BEARING EARLIER REVISION DATES → 05-08-12 05-25-12

REVISION DATES (PRELIMINARY STAGE ONLY) SHEET OF

USERNAME => s123631 DATE PLOTTED => 25-OCT-2012 TIME PLOTTED => 15:09

V|=|

DIST.	COUNTY	ROUTE	POST MILES TOTAL PROJECT	SHEET NO.	TOTAL SHEETS
04	Ala	80	2.2	528	800

REGISTERED MECHANICAL ENGINEER — 05-25-12 DATE

REGISTERED PROFESSIONAL ENGINEER — MARK HEDGLIN — No. M32912 — Exp. 9-30-12 — MECH — STATE OF CALIFORNIA

10-22-12
PLANS APPROVAL DATE

The State of California or its officers or agents shall not be responsible for the accuracy or completeness of scanned copies of this plan sheet.

Fire Marshal Stamp

CALIFORNIA STATE FIRE MARSHAL APPROVED
Approval of this plan does not authorize or approve any omission or deviation from applicable regulations. Final approval is subject to field inspection. One set of approved plans shall be available on the project site at all times.
Reviewed by: JOHN E WOODS, SDSFM
Approval date: 8-22-12

CERTIFICATE OF COMPLIANCE and FIELD INSPECTION ENERGY CHECKLIST (Part 2 of 4) MECH-1C

Project Name: *SFOBB Admin.*
Date: *5/22/2012*

Discrepancies:

CERTIFICATE OF COMPLIANCE and FIELD INSPECTION ENERGY CHECKLIST (Part 3 of 4) MECH-1C

Project Name: *SFOBB Admin.*
Date: *5/22/2012*

Required Acceptance Tests

Designer:

This form is to be used by the designer and attached to the plans. Listed below are all the acceptance tests for mechanical systems. The designer is required to check the applicable boxes by all acceptance tests that apply and listed all equipment that requires an acceptance test. If all equipment of a certain type requires a test, list the equipment description and the number of systems. The NA number designates the Section in the Appendix of the Nonresidential Reference Appendices Manual that describes the test. Since this form will be part of the plans, completion of this section will allow the responsible party to budget for the scope of work appropriately.

Building Departments:

Systems Acceptance: Before occupancy permit is granted for a newly constructed building or space, or a new space-conditioning system serving a building or space is operated for normal use, all control devices serving the building or space shall be certified as meeting the Acceptance Requirements for Code Compliance.
Systems Acceptance: Before occupancy permit is granted. All newly installed HVAC equipment must be tested using the Acceptance Requirements.

The MECH-1C form is not considered a completed form and is not to be accepted by the building department unless the correct boxes are checked. The equipment requiring testing, person performing the test (Example: HVAC installer, TAB contractor, controls contractor, PE in charge of project) and what Acceptance test must be conducted. The following checked-off forms are required for **ALL** newly installed equipment. In addition a Certificate of Acceptance forms shall be submitted to the building department that certifies plans, specifications, installation, certificates, and operating and maintenance information meet the requirements of §10-103(b) and Title-24 Part 6. The building inspector must receive the properly filled out and signed forms before the building can receive final occupancy.

TEST DESCRIPTION		MECH-2A	MECH-3A	MECH-4A	MECH-5A	MECH-6A	MECH-7A	MECH-8A	MECH-9A	MECH-10A	MECH-11A
Equipment Requiring Testing or Verification	Qty.	Outdoor Ventilation For VAV & CAV	Constant Volume & Single-Zone Unitary	Air Distribution Ducts	Economizer Controls	Demand Control Ventilation DCV	Supply Fan VAV	Valve Leakage Test	Supply Water Temp. Reset	Hydronic System Variable Flow Control	Automatic Demand Shed Control
Mr. Slim 1 ton PKA-A12	*3*	☑	☑	☐	☐	☐	☐	☐	☐	☐	☐
*Trane YHC120A3*LA**000000000*	*1*	☑	☑	☑	☑	☐	☐	☐	☐	☐	☑
*Trane YCD151C4L*A**	*1*	☑	☐	☑	☑	☐	☐	☐	☐	☐	☑
*Trane YHC092A3*MA**000000000*	*2*	☑	☐	☑	☑	☐	☐	☐	☐	☐	☑
Mr. Slim 2 ton PKA-A24	*1*	☑	☑	☐	☐	☐	☐	☐	☐	☐	☐
Re-Verber-Ray HL3	*21*	☑	☑	☐	☐	☐	☐	☐	☐	☐	☑
Electro Industries 2.5 kW	*2*	☑	☐	☐	☐	☐	☐	☐	☐	☐	☐
Mr. Slim 1/2 ton	*1*	☑	☑	☐	☐	☐	☐	☐	☐	☐	☐
		☐	☐	☐	☐	☐	☐	☐	☐	☐	☐
		☐	☐	☐	☐	☐	☐	☐	☐	☐	☐
		☐	☐	☐	☐	☐	☐	☐	☐	☐	☐
		☐	☐	☐	☐	☐	☐	☐	☐	☐	☐
		☐	☐	☐	☐	☐	☐	☐	☐	☐	☐
		☐	☐	☐	☐	☐	☐	☐	☐	☐	☐

THIS DRAWING ACCURATE FOR MECHANICAL WORK ONLY

	BY	CHECKED
DESIGN	Mark Hedglin	Tom Hatam
DETAILS	Mark Hedglin	Tom Hatam
QUANTITIES	Mark Hedglin	Tom Hatam

STATE OF CALIFORNIA
DEPARTMENT OF TRANSPORTATION

DIVISION OF ENGINEERING SERVICES
ELECTRICAL-MECHANICAL-WATER AND WASTEWATER DESIGN

BRIDGE NO. 33M5785
POST MILE 2.2

SFOBB MAINTENANCE COMPLEX

TITLE 24

SHEET **M0-5**

TAEMWW Imperial Rev. 7/10
FILE => m0_5.dgn
DATE PLOTTED => 25-OCT-2012 TIME PLOTTED => 15:09

ORIGINAL SCALE IN INCHES FOR REDUCED PLANS 0 1 2 3

UNIT 3615
PROJECT NUMBER & PHASE 04120006661
EA 014081

DISREGARD PRINTS BEARING EARLIER REVISION DATES → 05-08-12 05-25-12

REVISION DATES (PRELIMINARY STAGE ONLY) SHEET OF

USERNAME => s123631 DATE PLOTTED => 25-OCT-2012 TIME PLOTTED => 15:09

V|=|

DIST.	COUNTY	ROUTE	POST MILES TOTAL PROJECT	SHEET NO.	TOTAL SHEETS
04	Ala	80	2.2	529	800

REGISTERED MECHANICAL ENGINEER 05-25-12 DATE

REGISTERED PROFESSIONAL ENGINEER MARK HEDGLIN No. M32912 Exp. 9-30-12 MECH STATE OF CALIFORNIA

10-22-12
PLANS APPROVAL DATE

The State of California or its officers or agents shall not be responsible for the accuracy or completeness of scanned copies of this plan sheet.

Fire Marshal Stamp

CALIFORNIA STATE FIRE MARSHAL
APPROVED
Approval of this plan does not authorize or approve any omission or deviation from applicable regulations. Final approval is subject to field inspection. One set of approved plans shall be available on the project site at all times.
Reviewed by: JOHN E WOODS, SDSFM
Approval date: 8-22-12

CERTIFICATE OF COMPLIANCE and FIELD INSPECTION ENERGY CHECKLIST (Part 4 of 4) MECH-1C

Project Name: *SFOBB Admin.*
Date: *5/22/2012*

TEST DESCRIPTION		MECH-12A	MECH-13A	MECH-14A	MECH-15A	
Equipment Requiring Testing	Qty.	Fault Detection & Diagnostics for DX Units	Automatic Fault Detection & Diagnostics for Air & Zone	Distributed Energy Storage DX AC Systems	Thermal Energy Storage (TES) Systems	Test Performed By:
Mr. Slim 1 ton PKA-A12	*3*	☐	☐	☐	☐	
*Trane YHC120A3*LA**000000000*	*1*	☑	☐	☐	☐	
*Trane YCD151C4L*A**	*1*	☑	☐	☐	☐	
*Trane YHC092A3*MA**000000000*	*2*	☑	☐	☐	☐	
Mr. Slim 2 ton PKA-A24	*1*	☐	☐	☐	☐	
Re-Verber-Ray HL3	*21*	☐	☐	☐	☐	
Electro Industries 2.5 kW	*2*	☐	☐	☐	☐	
Mr. Slim 1/2 ton	*1*	☐	☐	☐	☐	
		☐	☐	☐	☐	
		☐	☐	☐	☐	
		☐	☐	☐	☐	
		☐	☐	☐	☐	
		☐	☐	☐	☐	
		☐	☐	☐	☐	
		☐	☐	☐	☐	
		☐	☐	☐	☐	
		☐	☐	☐	☐	
		☐	☐	☐	☐	
		☐	☐	☐	☐	
		☐	☐	☐	☐	
		☐	☐	☐	☐	
		☐	☐	☐	☐	
		☐	☐	☐	☐	
		☐	☐	☐	☐	
		☐	☐	☐	☐	
		☐	☐	☐	☐	
		☐	☐	☐	☐	
		☐	☐	☐	☐	
		☐	☐	☐	☐	
		☐	☐	☐	☐	

*EnergyPro 5.1 by EnergySoft User Number: 3478 **RunCode: 2012-05-22T12:09:32** ID: 0400000038 Page 27 of 41*

THIS DRAWING ACCURATE FOR MECHANICAL WORK ONLY

DESIGN	BY Mark Hedglin	CHECKED Tom Hatam	
DETAILS	BY Mark Hedglin	CHECKED Tom Hatam	
QUANTITIES	BY Mark Hedglin	CHECKED Tom Hatam	

STATE OF CALIFORNIA
DEPARTMENT OF TRANSPORTATION

DIVISION OF ENGINEERING SERVICES
ELECTRICAL-MECHANICAL-WATER AND WASTEWATER DESIGN

BRIDGE NO. 33M5785
POST MILE 2.2

SFOBB MAINTENANCE COMPLEX
TITLE 24

SHEET **MO-6**

TAEMWW Imperial Rev. 7/10
FILE => m0_6.dgn
DATE PLOTTED => 25-OCT-2012 TIME PLOTTED => 15:09

ORIGINAL SCALE IN INCHES FOR REDUCED PLANS 0 1 2 3

UNIT 3615
PROJECT NUMBER & PHASE 04120006661
EA 014081

DISREGARD PRINTS BEARING EARLIER REVISION DATES → 05-08-12 05-25-12
REVISION DATES (PRELIMINARY STAGE ONLY) SHEET OF

USERNAME => s123631 DATE PLOTTED => 25-OCT-2012 TIME PLOTTED => 15:09

V|=|

DIST.	COUNTY	ROUTE	POST MILES TOTAL PROJECT	SHEET NO.	TOTAL SHEETS
04	Ala	80	2.2	530	800

Christopher M. Faria 05-25-12
REGISTERED MECHANICAL ENGINEER DATE

REGISTERED PROFESSIONAL ENGINEER
CHRISTOPHER M. FARIA
No. M30419
Exp. 12-31-13
MECH
STATE OF CALIFORNIA

10-22-12
PLANS APPROVAL DATE

The State of California or its officers or agents shall not be responsible for the accuracy or completeness of scanned copies of this plan sheet.

Fire Marshal Stamp

CALIFORNIA STATE FIRE MARSHAL APPROVED
Approval of this plan does not authorize or approve any omission or deviation from applicable regulations. Final approval is subject to field inspection. One set of approved plans shall be available on the project site at all times.
Reviewed by: JOHN E WOODS, SDSFM
Approval date: 8-22-12

PACKAGED UNIT AIR CONDITIONER SCHEDULE

UNIT No.	NOMINAL CFM	ESP Inches	NOMINAL Tons	COOLING OUTPUT		HEATING OUTPUT MBH (HI/Low)	MINIMUM OSA CFM	TOTAL Kw	ELECTRICAL	EER	WEIGHT (lbs)	USE
				TOTAL MBH	SENSIBLE MBH							
A/C-1A	4000	.75	10	120	114	120/84	2350	9.04	460v, 3Φ	13	2000	1st Floor
A/C-2A	5000	1.0	12.5	158	158	122/81	1170	12.33	460v, 3Φ	12	2600	2nd Floor

SPLIT SYSTEM AIR CONDITIONER SCHEDULE

UNIT No.	CFM	NOMINAL COOLING CAPACITY Btu/h	TOTAL WATT	ELECTRICAL	SEER	WEIGHT (lbs)		USE
						INDOOR	OUTDOOR	
A/C-3A	350	12,000	1190	230/240v, 1Φ	15.2	29	82	ELEVATOR EQUIPMENT ROOM (1st FLOOR)
A/C-4A	350	12,000	1190	230/240v, 1Φ	15.2	29	82	COMMUNICATION ROOM (1st FLOOR)
A/C-5A	350	12,000	1190	230/240v, 1Φ	15.2	29	82	RADIO ROOM (2nd FLOOR)

EXHAUST FAN SCHEDULE

UNIT No.	CFM	ESP Inches	HP	ELECTRICAL	WEIGHT (lbs)	USE
EF-1A	2140	0.5	3/4	120V	90	1st FLOOR EXHAUST
EF-2A	460	0.4	1/4	120v	65	2nd FLOOR EXHAUST

ZONE DAMPER SCHEDULE

UNIT No.	DIAMETER Inches	CFM	
		MINIMUM	MAXIMUM
ZD-1A	14	600	1000
ZD-2A	16	750	1200
ZD-3A	8	250	360
ZD-4A	8	200	320
ZD-5A	14	600	1020
ZD-6A	8	300	420
ZD-7A	8	300	420
ZD-8A	8	160	255

THIS DRAWING ACCURATE FOR MECHANICAL WORK ONLY

	BY	CHECKED
DESIGN	Chris Faria	Tom Hatam
DETAILS	Angela Chen	Tom Hatam
QUANTITIES	Chris Faria	Tom Hatam

STATE OF CALIFORNIA
DEPARTMENT OF TRANSPORTATION

DIVISION OF ENGINEERING SERVICES
ELECTRICAL-MECHANICAL-WATER AND WASTEWATER DESIGN

BRIDGE NO. 33M5785
POST MILE 2.2

SFOBB MAINTENANCE COMPLEX
BUILDING 1A
EQUIPMENT SCHEDULES

SHEET **M0-7**

TAEMWW Imperial Rev. 7/10
FILE => m0_7.dgn
DATE PLOTTED => 25-OCT-2012 TIME PLOTTED => 15:10

ORIGINAL SCALE IN INCHES FOR REDUCED PLANS 0 1 2 3

UNIT 3615
PROJECT NUMBER & PHASE 04120006661
EA 014081

DISREGARD PRINTS BEARING EARLIER REVISION DATES → 05-08-12 05-25-12
REVISION DATES (PRELIMINARY STAGE ONLY) SHEET OF

USERNAME => s123631 DATE PLOTTED => 25-OCT-2012 TIME PLOTTED => 15:10

V|=|

DIST.	COUNTY	ROUTE	POST MILES TOTAL PROJECT	SHEET NO.	TOTAL SHEETS
04	Ala	80	2.2	531	800

REGISTERED MECHANICAL ENGINEER 05-25-12 DATE

REGISTERED PROFESSIONAL ENGINEER MARK HEDGLIN No. M32912 Exp. 9-30-12 MECH STATE OF CALIFORNIA

10-22-12
PLANS APPROVAL DATE

The State of California or its officers or agents shall not be responsible for the accuracy or completeness of scanned copies of this plan sheet.

Fire Marshal Stamp

CALIFORNIA STATE FIRE MARSHAL APPROVED
Approval of this plan does not authorize or approve any omission or deviation from applicable regulations. Final approval is subject to field inspection. One set of approved plans shall be available on the project site at all times.
Reviewed by: JOHN E WOODS, SDSFM
Approval date: 8-22-12

MISC. EQUIPMENT SCHEDULE

UNIT No.	EQUIPMENT TYPE / LOCATION	CAPACITY	ESP INCH H20	SOUND dB	Rating hp/ watts/ amps/ Btuh	V-Ph-Hz.	Weight (lbs)
LIRH IB-18B	Radiant heater/ Shop Crew	75 Mbtuh	--	--	4.8 amp ignition/ 1.1 amp running	115-1-60	120
LIRH 19B-20B	Radiant heater/ Shop Crew	125 Mbtuh	--	--	4.8 amp ignition/ 1.1 amp running	115-1-60	160
SDC-1B	Saw Dust Collector	1780 CFM	--	75	3 hp / 14.5 amp	230-1-60	264
VEEF&HR IB-3B	Vehicle Engine Exhaust Fan/ Equip. Repair Bays Vehicle Engine Exhaust Hose Reel/ Motor	600 cfm 30 ft- 6" Ø hose	3.1" --	83 --	1hp 1/6 hp	230-3-60	260
MFE IB-2B	Mobile Fume Extractor	900 CFM	--	80	1hp	120-1-60	325
BC-IB-8B	Bridge Crane-Hoist/ Equip. Storage Bays	3 ton	--	N/A	0.5 kw bridge 0.25 kw trolley 0.15 kw hoist	460-3-60	see M4-3
SF IB-2B	Supply Fan w/ duct heater	150 CFM @ 50° F rise	0.125	--	2.5 kW heater 30 Amp	230-1-60	64

AIR COMPRESSOR SCHEDULE

UNIT No.	EQUIPMENT TYPE / LOCATION	MAX DELIVERY CFM	PSI	SOUND dB	HP/Kw	STORAGE GALLONS	V-Ph-Hz.	Weight (lbs)
ACP IB-3B	2 Stage Air compressor	35	175	-	10 hp	120	460-3-60	1104
RAD-1B	Refrigerated Air Dryer	42	200	-	0.37	-	115-1-60	77

EXHAUST FAN SCHEDULE

NAME	CFM	ESP	HP	ELECTRICAL	WEIGHT
EF-1B	500	0.125"	1/25	120-1-60	40
EF-2B	630	0.125"	1/15	120-1-60	40
EF-3B	630	0.125"	1/15	120-1-60	40
EF-4B	500	0.125"	1/25	120-1-60	40
EF-5B	500	0.125"	1/25	120-1-60	40
EF-6B	500	0.125"	1/25	120-1-60	40
EF-7B	1000	0.125"	1/6	120-1-60	64
EF-8B	1000	0.125"	1/6	120-1-60	64
EF-9B	600	0.125"	1/15	120-1-60	40
EF-10B	2000	0.125"	1/2	120-1-60	90
EF-11B	2000	0.125"	1/2	120-1-60	90
EF-12B	60	0.25"	1/200	120-1-60	30
EF-13B	250	0.25"	1/4	120-1-60	40
EF-14B	60	0.25"	1/200	120-1-60	30
EF-15B	600	0.25"	1/25	120-1-60	40
EF-16B	60	0.25"	1/200	120-1-60	30
EF-17B	100	0.25"	1/200	120-1-60	30
EF-18B	330	0.25"	1/4	120-1-60	40
EF-19B	60	0.25"	1/200	120-1-60	30
EF-20B	2000	0.125"	1/2	230-3-60	90
DF-1B-3B	2000	0.375"	1/2	230-3-60	90

PACKAGED UNIT AIR CONDITIONER SCHEDULE

UNIT No.	NOMINAL CFM	ESP Inches	NOMINAL Tons	COOLING OUTPUT		HEATING OUTPUT MBH (HI/Low)	MINIMUM OSA CFM	TOTAL Kw	ELECTRICAL	EER	WEIGHT (lbs)	USE
				TOTAL MBH	SENSIBLE MBH							
A/C-1B	3000	0.5	7.5	92	82	120/84	910	6.85	460v, 3Φ	13	1600	North
A/C-2B	3000	0.5	7.5	92	82	120/84	420	6.85	460v, 3Φ	13	1600	South

SPLIT SYSTEM AIR CONDITIONER SCHEDULE

UNIT No.	CFM	NOMINAL COOLING CAPACITY Btu/h	TOTAL WATT	ELECTRICAL	SEER	WEIGHT (lbs)		TYPE / USE
						INDOOR	OUTDOOR	
A/C-3B	775	24,000	2270	230-1-60	17	46	163	Split Ductless Cooling Only Main Comm. Rm 176
A/C-4B	250	7200 Heating 6000 Cooling	1650/ 1440	230-1-60	13.2	22	130	Split Ductless Heat Pump Rm 198

ZONE DAMPER SCHEDULE

UNIT No.	DIAMETER Inches	CFM	
		MINIMUM	MAXIMUM
ZD 1B-1	12"	525	900
ZD 1B-2	8"	225	350
ZD 1B-3	6"	150	250
ZD 1B-4	8"	150	300
ZD 1B-5	8"	150	300
ZD 1B-6	8"	300	400
ZD 1B-7	8"	300	400
ZD 2B-8	10"	450	520
ZD 2B-9	8"	450	510
ZD 2B-10	6"	150	200
ZD 2B-11	6"	150	200
ZD 2B-12	6"	150	300
ZD 2B-13	6"	150	300
ZD 2B-14	8"	300	400
ZD 2B-15	8"	225	320
ZD 2B-16	6"	150	200

THIS DRAWING ACCURATE FOR MECHANICAL WORK ONLY

	BY		CHECKED	
DESIGN	BY	Mark Hedglin	CHECKED	Tom Hatam
DETAILS	BY	Mark Hedglin	CHECKED	Tom Hatam
QUANTITIES	BY	Mark Hedglin	CHECKED	Tom Hatam

STATE OF CALIFORNIA
DEPARTMENT OF TRANSPORTATION

DIVISION OF ENGINEERING SERVICES
ELECTRICAL-MECHANICAL-WATER AND WASTEWATER DESIGN

BRIDGE NO. 33M5785
POST MILE 2.2

SFOBB MAINTENANCE COMPLEX
BUILDING 1B
EQUIPMENT SCHEDULES

SHEET MO-8

TAEMWW Imperial Rev. 7/10
FILE => m0_8.dgn
DATE PLOTTED => 25-OCT-2012 TIME PLOTTED => 15:49
ORIGINAL SCALE IN INCHES FOR REDUCED PLANS 0 1 2 3
UNIT 3615
PROJECT NUMBER & PHASE 04120006661
EA 014081
DISREGARD PRINTS BEARING EARLIER REVISION DATES → 05-08-12 05-25-12
REVISION DATES (PRELIMINARY STAGE ONLY) SHEET OF

USERNAME => s114640 DATE PLOTTED => 25-OCT-2012 TIME PLOTTED => 15:49
V|=|

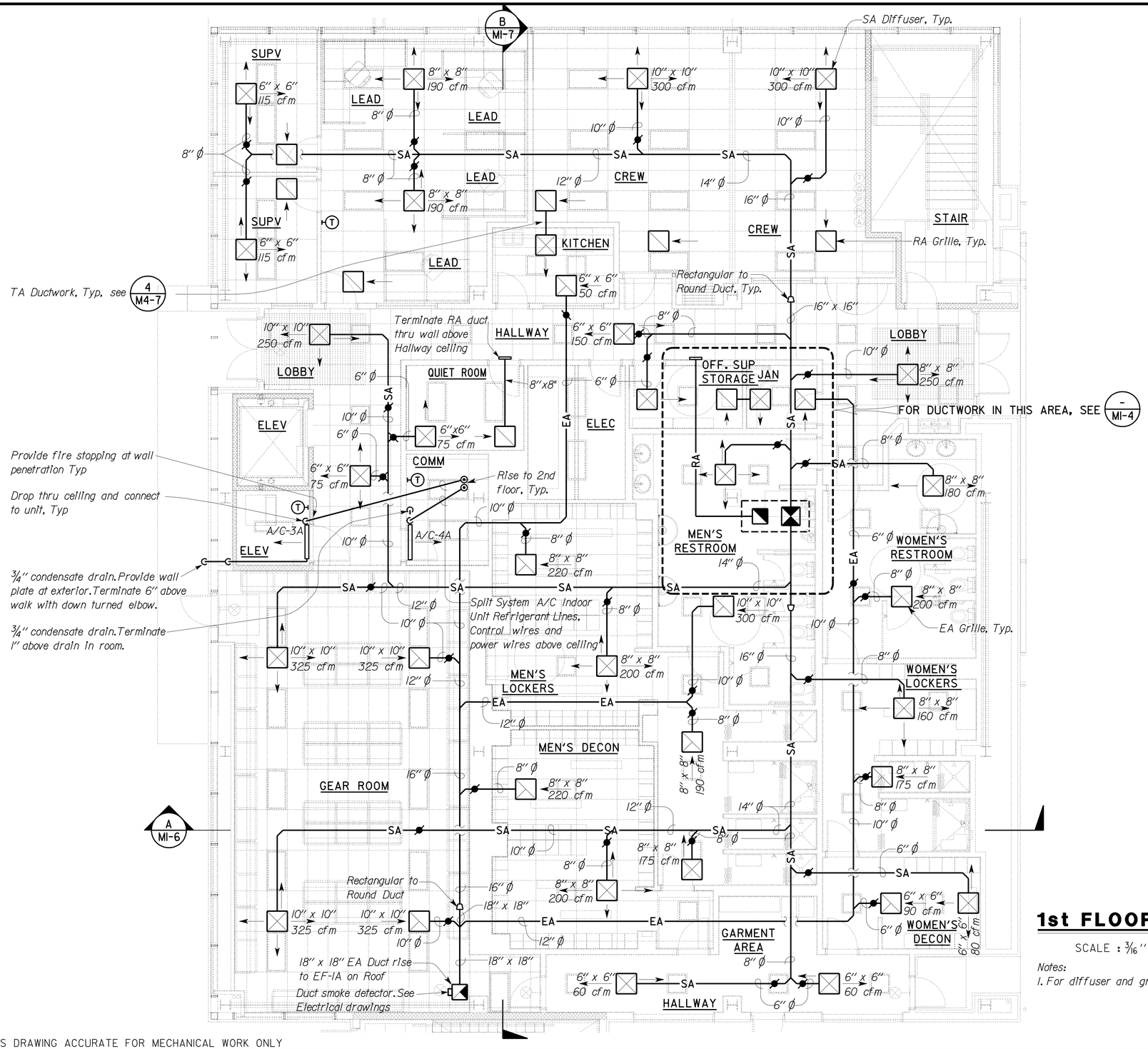

THIS DRAWING ACCURATE FOR MECHANICAL WORK ONLY

Fire Marshal Stamp

CALIFORNIA STATE FIRE MARSHAL APPROVED

Approval of this plan does not authorize or approve any omission or deviation from applicable regulations. Final approval is subject to field inspection. One set of approved plans shall be available on the project site at all times.

Reviewed by: JOHN E WOODS, SDSFM

Approval date: 8-22-12

DIST.	COUNTY	ROUTE	POST MILES TOTAL PROJECT	SHEET NO.	TOTAL SHEETS
04	Ala	80	2.2	532	800

Christopher M. Faria 05-25-12
REGISTERED MECHANICAL ENGINEER DATE

REGISTERED PROFESSIONAL ENGINEER CHRISTOPHER M. FARIA No. M30419 Exp. 12-31-13 MECH STATE OF CALIFORNIA

10-22-12
PLANS APPROVAL DATE

The State of California or its officers or agents shall not be responsible for the accuracy or completeness of scanned copies of this plan sheet.

1st FLOOR PLAN

SCALE : 3/16" = 1'-0"

Notes:
1. For diffuser and grille installation see sheet M4-7

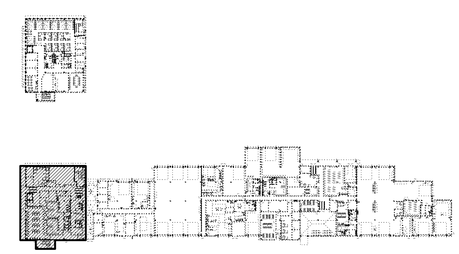

KEY PLAN

DESIGN	BY Chris Faria	CHECKED Tom Hatam	
DETAILS	BY Angela Chen	CHECKED Tom Hatam	
QUANTITIES	BY Chris Faria	CHECKED Tom Hatam	

STATE OF CALIFORNIA DEPARTMENT OF TRANSPORTATION

DIVISION OF ENGINEERING SERVICES
ELECTRICAL-MECHANICAL-WATER AND WASTEWATER DESIGN

UNIT 3615
PROJECT NUMBER & PHASE 04120006661
EA 014081

BRIDGE NO. 33M5785
POST MILE 2.2

SFOBB MAINTENANCE COMPLEX

BUILDING IA — HVAC 1st FLOOR PLAN

SHEET **M1-1**

TAEMWW Imperial Rev. 7/10
FILE => m1_1.dgn
DATE PLOTTED => 25-OCT-2012 TIME PLOTTED => 15:49

ORIGINAL SCALE IN INCHES FOR REDUCED PLANS 0 1 2 3

DISREGARD PRINTS BEARING EARLIER REVISION DATES → 05-08-12 05-25-12

REVISION DATES (PRELIMINARY STAGE ONLY) SHEET OF

USERNAME => s114640 DATE PLOTTED => 25-OCT-2012 TIME PLOTTED => 15:49

VI=1

DIST.	COUNTY	ROUTE	POST MILES TOTAL PROJECT	SHEET NO.	TOTAL SHEETS
04	Ala	80	2.2	533	800

Christopher M. Faria 05-25-12
REGISTERED MECHANICAL ENGINEER DATE

REGISTERED PROFESSIONAL ENGINEER CHRISTOPHER M. FARIA No. M30419 Exp. 12-31-13 MECH STATE OF CALIFORNIA

10-22-12
PLANS APPROVAL DATE

The State of California or its officers or agents shall not be responsible for the accuracy or completeness of scanned copies of this plan sheet.

Fire Marshal Stamp

CALIFORNIA STATE FIRE MARSHAL APPROVED
Approval of this plan does not authorize or approve any omission or deviation from applicable regulations. Final approval is subject to field inspection. One set of approved plans shall be available on the project site at all times.
Reviewed by: JOHN E WOODS, SDSFM
Approval date: 8-22-12

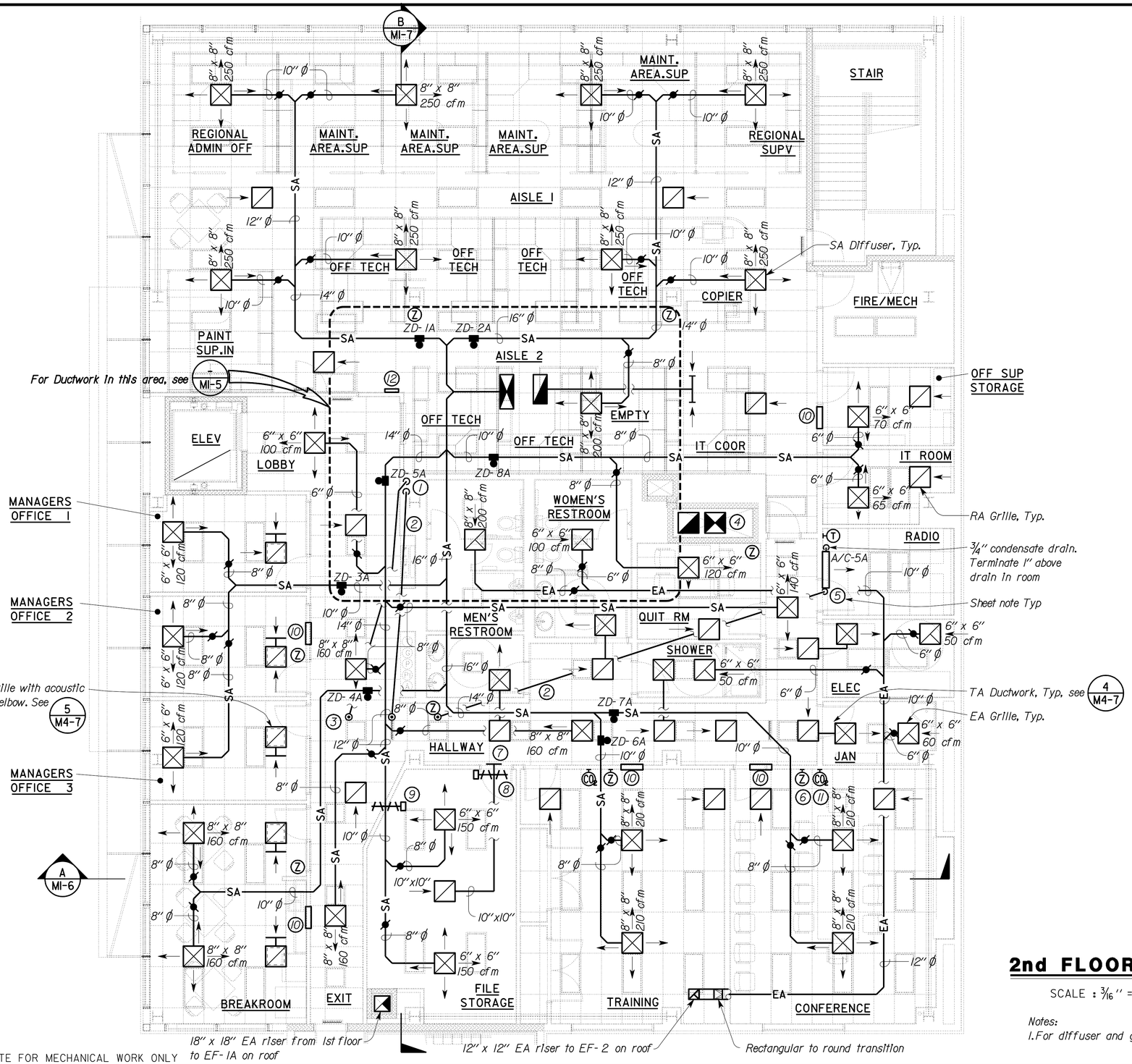

THIS DRAWING ACCURATE FOR MECHANICAL WORK ONLY

Sheet Notes:

1. Drop to 1st floor, Typ.
2. Split system A/C indoor unit refrigerant lines, control wires, and power wires above ceiling, Typ.
3. Rise to split system A/C outdoor unit on roof, Typ.
4. 18" x 18" RA riser and 22" x 22" SA drop to/from A/C-1A on roof. Provide supports for ductwork in chase.
5. Drop thru ceiling and connect to unit.
6. Zone Temperature Sensor, Typ.
7. Terminate RA duct thru wall above Hallway ceiling. Coordinate with smoke damper.
8. 10"x10" smoke damper. Fire alarm smoke detector in room must activate damper. Refer to Fire Alarm drawings.
9. 10"x10" smoke damper with sleeve for round duct connections. Fire alarm smoke detector in room must activate damper. Refer to Fire Alarm drawings.
10. 12"x12" opening in full height wall above ceiling for RA path.
11. Carbon Dioxide Sensor, Typ
12. A/C-2A central control panel (CCP)

2nd FLOOR PLAN

SCALE : 3/16" = 1'-0"

Notes:
1. For diffuser and grille installation see sheet M4-7

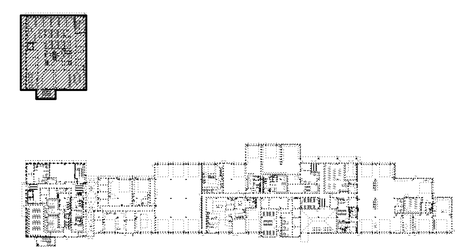

KEY PLAN

DESIGN	BY Chris Faria	CHECKED Tom Hatam	
DETAILS	BY Angela Chen	CHECKED Tom Hatam	
QUANTITIES	BY Chris Faria	CHECKED Tom Hatam	

STATE OF CALIFORNIA
DEPARTMENT OF TRANSPORTATION

DIVISION OF ENGINEERING SERVICES
ELECTRICAL-MECHANICAL-WATER AND WASTEWATER DESIGN

BRIDGE NO. 33M5785
POST MILE 2.2

SFOBB MAINTENANCE COMPLEX
BUILDING IA
HVAC 2nd FLOOR PLAN

SHEET **M1-2**

TAEMWW Imperial Rev. 7/10
FILE => m1_2.dgn
DATE PLOTTED => 25-OCT-2012 TIME PLOTTED => 15:49
ORIGINAL SCALE IN INCHES FOR REDUCED PLANS 0 1 2 3
UNIT 3615
PROJECT NUMBER & PHASE 04120006661
EA 014081
DISREGARD PRINTS BEARING EARLIER REVISION DATES 05-08-12 05-25-12
REVISION DATES (PRELIMINARY STAGE ONLY) SHEET OF
USERNAME => s114640 DATE PLOTTED => 25-OCT-2012 TIME PLOTTED => 15:49
V1=1

DIST.	COUNTY	ROUTE	POST MILES TOTAL PROJECT	SHEET NO.	TOTAL SHEETS
04	Ala	80	2.2	534	800

Christopher M. Faria 05-25-12
REGISTERED MECHANICAL ENGINEER DATE

REGISTERED PROFESSIONAL ENGINEER
CHRISTOPHER M. FARIA
No. M30419
Exp. 12-31-13
MECH
STATE OF CALIFORNIA

10-22-12
PLANS APPROVAL DATE

The State of California or its officers or agents shall not be responsible for the accuracy or completeness of scanned copies of this plan sheet.

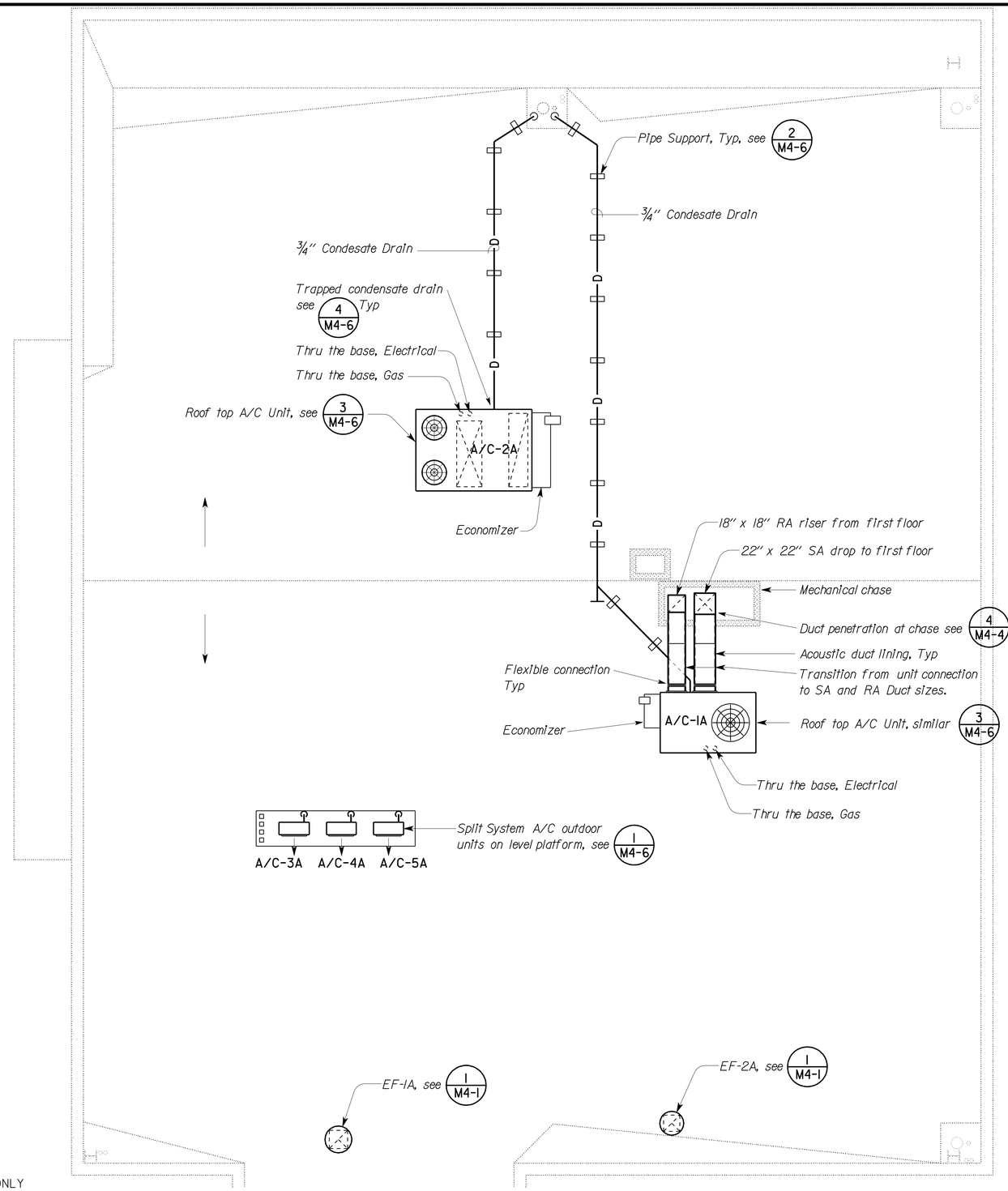

Fire Marshal Stamp

CALIFORNIA STATE FIRE MARSHAL APPROVED

Approval of this plan does not authorize or approve any omission or deviation from applicable regulations. Final approval is subject to field inspection. One set of approved plans shall be available on the project site at all times.

Reviewed by: JOHN E WOODS, SDSFM

Approval date: 8-22-12

Notes:

Air flow configuration, horizontal or down flow, of A/C unit provided may be different than that shown. Submit shop drawings for approval showing the submitted A/C units and their ductwork layout.

ROOF PLAN

SCALE : 3/16" = 1'-0"

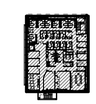

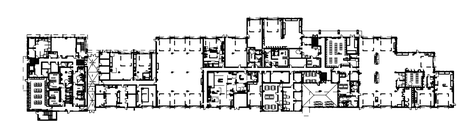

KEY PLAN

THIS DRAWING ACCURATE FOR MECHANICAL WORK ONLY

DESIGN	BY Chris Faria	CHECKED Tom Hatam	
DETAILS	BY Angela Chen	CHECKED Tom Hatam	
QUANTITIES	BY Chris Faria	CHECKED Tom Hatam	

STATE OF CALIFORNIA
DEPARTMENT OF TRANSPORTATION

DIVISION OF ENGINEERING SERVICES
ELECTRICAL-MECHANICAL-WATER AND WASTEWATER DESIGN

BRIDGE NO. 33M5785
POST MILE 2.2

SFOBB MAINTENANCE COMPLEX

BUILDING IA — HVAC ROOF PLAN

SHEET **M1-3**

TAEMWW Imperial Rev. 7/10
FILE => m1_3.dgn
DATE PLOTTED => 25-OCT-2012 TIME PLOTTED => 15:49

ORIGINAL SCALE IN INCHES FOR REDUCED PLANS 0 1 2 3

UNIT 3615
PROJECT NUMBER & PHASE 04120006661
EA 014081

DISREGARD PRINTS BEARING EARLIER REVISION DATES → 05-08-12 05-25-12

REVISION DATES (PRELIMINARY STAGE ONLY) SHEET OF

USERNAME => s114640 DATE PLOTTED => 25-OCT-2012 TIME PLOTTED => 15:49

V|=|

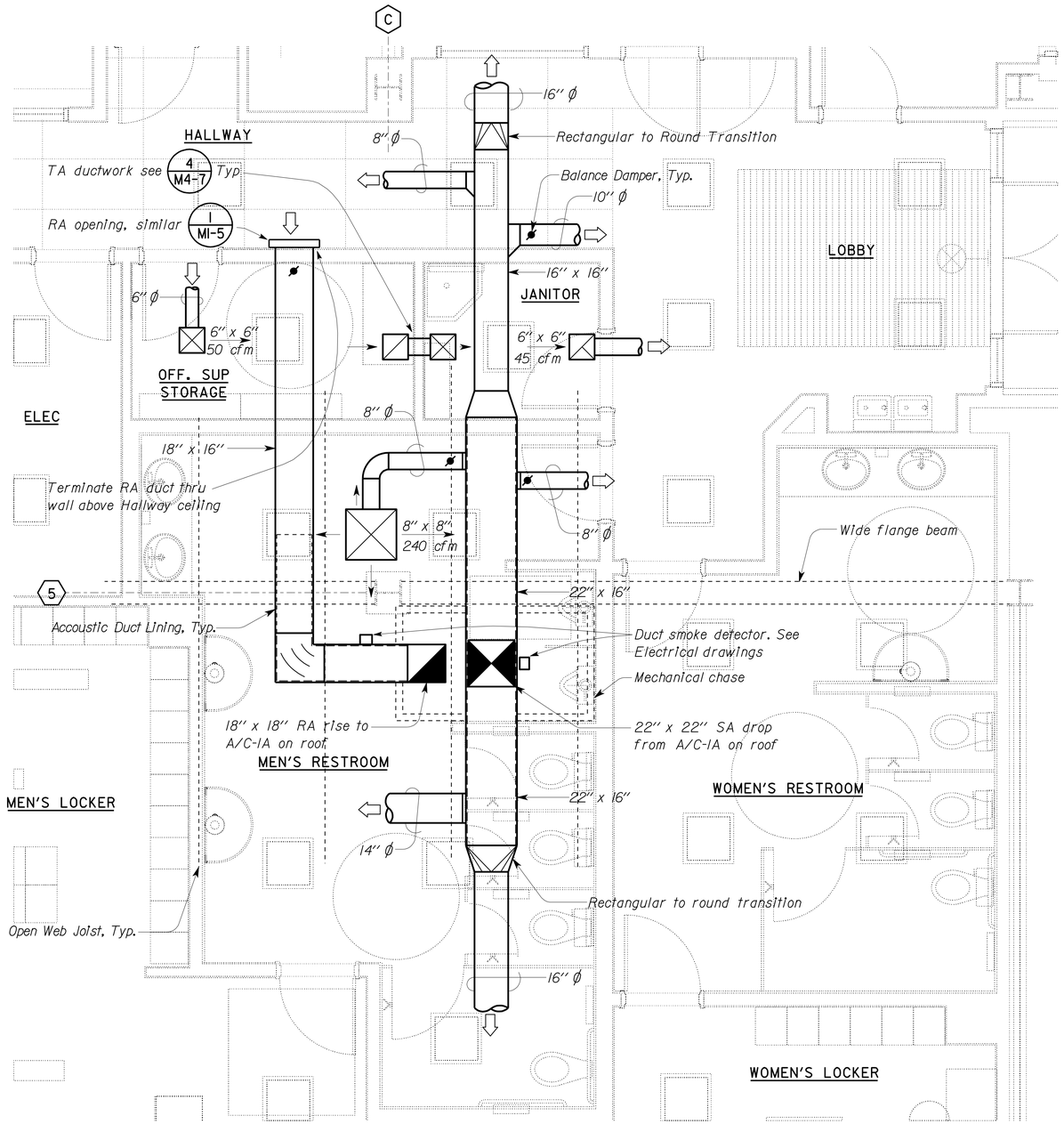

PARTIAL 1st FLOOR PLAN

SCALE: 3/8" = 1'-0"

Notes:

1. Duct sizes are clear inside dimensions. Overall duct size to account for acoustic lining where present.
2. SA/RA duct drop/rise shall have accoustic lining from unit to point indicated.

Fire Marshal Stamp

CALIFORNIA STATE FIRE MARSHAL APPROVED

Approval of this plan does not authorize or approve any omission or deviation from applicable regulations. Final approval is subject to field inspection. One set of approved plans shall be available on the project site at all times.

Reviewed by: JOHN E WOODS, SDSFM

Approval date: 8-22-12

DIST.	COUNTY	ROUTE	POST MILES TOTAL PROJECT	SHEET NO.	TOTAL SHEETS
04	Ala	80	2.2	535	800

Christopher M. Faria 05-25-12
REGISTERED MECHANICAL ENGINEER DATE

REGISTERED PROFESSIONAL ENGINEER CHRISTOPHER M. FARIA No. M30419 Exp. 12-31-13 MECH STATE OF CALIFORNIA

10-22-12
PLANS APPROVAL DATE

The State of California or its officers or agents shall not be responsible for the accuracy or completeness of scanned copies of this plan sheet.

THIS DRAWING ACCURATE FOR MECHANICAL WORK ONLY

	BY	CHECKED
DESIGN	Chris Faria	Tom Hatam
DETAILS	Angela Chen	Tom Hatam
QUANTITIES	Chris Faria	Tom Hatam

STATE OF CALIFORNIA DEPARTMENT OF TRANSPORTATION

DIVISION OF ENGINEERING SERVICES ELECTRICAL-MECHANICAL-WATER AND WASTEWATER DESIGN

BRIDGE NO. 33M5785
POST MILE 2.2

SFOBB MAINTENANCE COMPLEX

BUILDING IA — HVAC PARTIAL PLAN - 1

SHEET **M1-4**

TAEMWW Imperial Rev. 7/10

FILE => m1_4.dgn
DATE PLOTTED => 25-OCT-2012 TIME PLOTTED => 15:49

ORIGINAL SCALE IN INCHES FOR REDUCED PLANS 0 1 2 3

UNIT 3615
PROJECT NUMBER & PHASE 04120006661
EA 014081

DISREGARD PRINTS BEARING EARLIER REVISION DATES → 05-08-12 05-25-12

REVISION DATES (PRELIMINARY STAGE ONLY) SHEET OF

USERNAME => s114640 DATE PLOTTED => 25-OCT-2012 TIME PLOTTED => 15:49

V|=|

DIST.	COUNTY	ROUTE	POST MILES TOTAL PROJECT	SHEET NO.	TOTAL SHEETS
04	Ala	80	2.2	536	800

CALIFORNIA STATE FIRE MARSHAL APPROVED
Approval of this plan does not authorize or approve any omission or deviation from applicable regulations. Final approval is subject to field inspection. One set of approved plans shall be available on the project site at all times.
Reviewed by: JOHN E WOODS, SDSFM
Approval date: 8-22-12

Christopher M. Faria 05-25-12
REGISTERED MECHANICAL ENGINEER DATE

REGISTERED PROFESSIONAL ENGINEER CHRISTOPHER M. FARIA No. M30419 Exp. 12-31-13 MECH STATE OF CALIFORNIA

10-22-12
PLANS APPROVAL DATE

The State of California or its officers or agents shall not be responsible for the accuracy or completeness of scanned copies of this plan sheet.

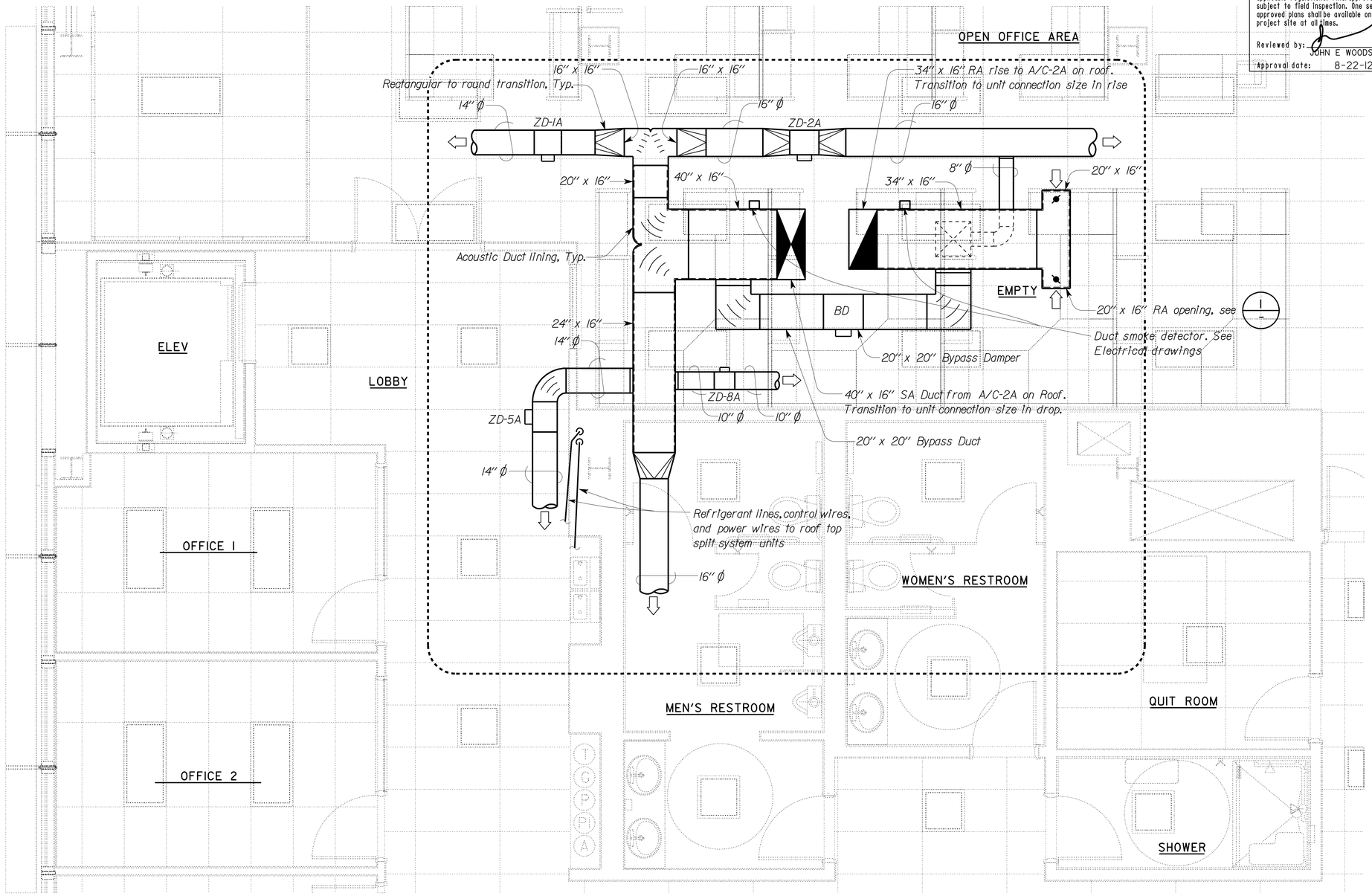

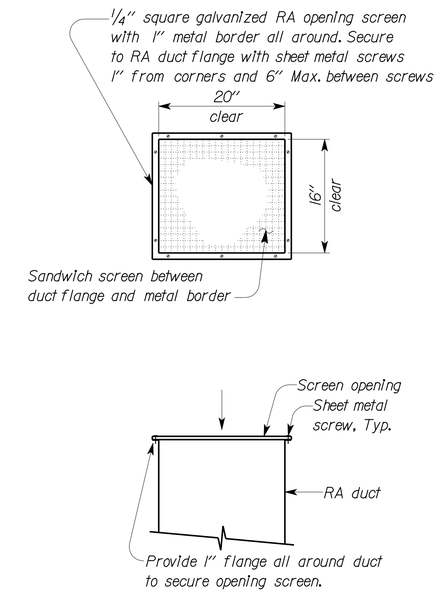

1 RA OPENING DETAIL

NO SCALE

PARTIAL 2nd FLOOR PLAN

SCALE: 3/8" = 1'-0"

Note:

1. Duct sizes are clear inside dimensions. Overall duct size to account for acoustic lining where present.
2. SA and RA duct drop/rise shall have acoustic lining from unit to point indicated.

THIS DRAWING ACCURATE FOR MECHANICAL WORK ONLY

	BY		CHECKED	
DESIGN	BY	Chris Faria	CHECKED	Tom Hatam
DETAILS	BY	Angela Chen	CHECKED	Tom Hatam
QUANTITIES	BY	Chris Faria	CHECKED	Tom Hatam

STATE OF CALIFORNIA DEPARTMENT OF TRANSPORTATION

DIVISION OF ENGINEERING SERVICES
ELECTRICAL-MECHANICAL-WATER AND WASTEWATER DESIGN

BRIDGE NO. 33M5785
POST MILE 2.2

SFOBB MAINTENANCE COMPLEX
BUILDING IA
HVAC PARTIAL PLAN - 2

SHEET **M1-5**

TAEMWW Imperial Rev. 7/10
FILE => m1_5.dgn
DATE PLOTTED => 25-OCT-2012 TIME PLOTTED => 15:49

ORIGINAL SCALE IN INCHES FOR REDUCED PLANS 0 1 2 3

UNIT 3615
PROJECT NUMBER & PHASE 04120006661
EA 014081

DISREGARD PRINTS BEARING EARLIER REVISION DATES → 05-08-12 05-25-12

REVISION DATES (PRELIMINARY STAGE ONLY) SHEET OF

USERNAME => s114640 DATE PLOTTED => 25-OCT-2012 TIME PLOTTED => 15:49

V|=|

DIST.	COUNTY	ROUTE	POST MILES TOTAL PROJECT	SHEET NO.	TOTAL SHEETS
04	Ala	80	2.2	537	800

CALIFORNIA STATE FIRE MARSHAL APPROVED

Approval of this plan does not authorize or approve any omission or deviation from applicable regulations. Final approval is subject to field inspection. One set of approved plans shall be available on the project site at all times.

Reviewed by: JOHN E WOODS, SDSFM

Approval date: 8-22-12

Christopher M. Faria 05-25-12
REGISTERED MECHANICAL ENGINEER DATE

REGISTERED PROFESSIONAL ENGINEER
CHRISTOPHER M. FARIA
No. M30419
Exp. 12-31-13
MECH
STATE OF CALIFORNIA

10-22-12
PLANS APPROVAL DATE

The State of California or its officers or agents shall not be responsible for the accuracy or completeness of scanned copies of this plan sheet.

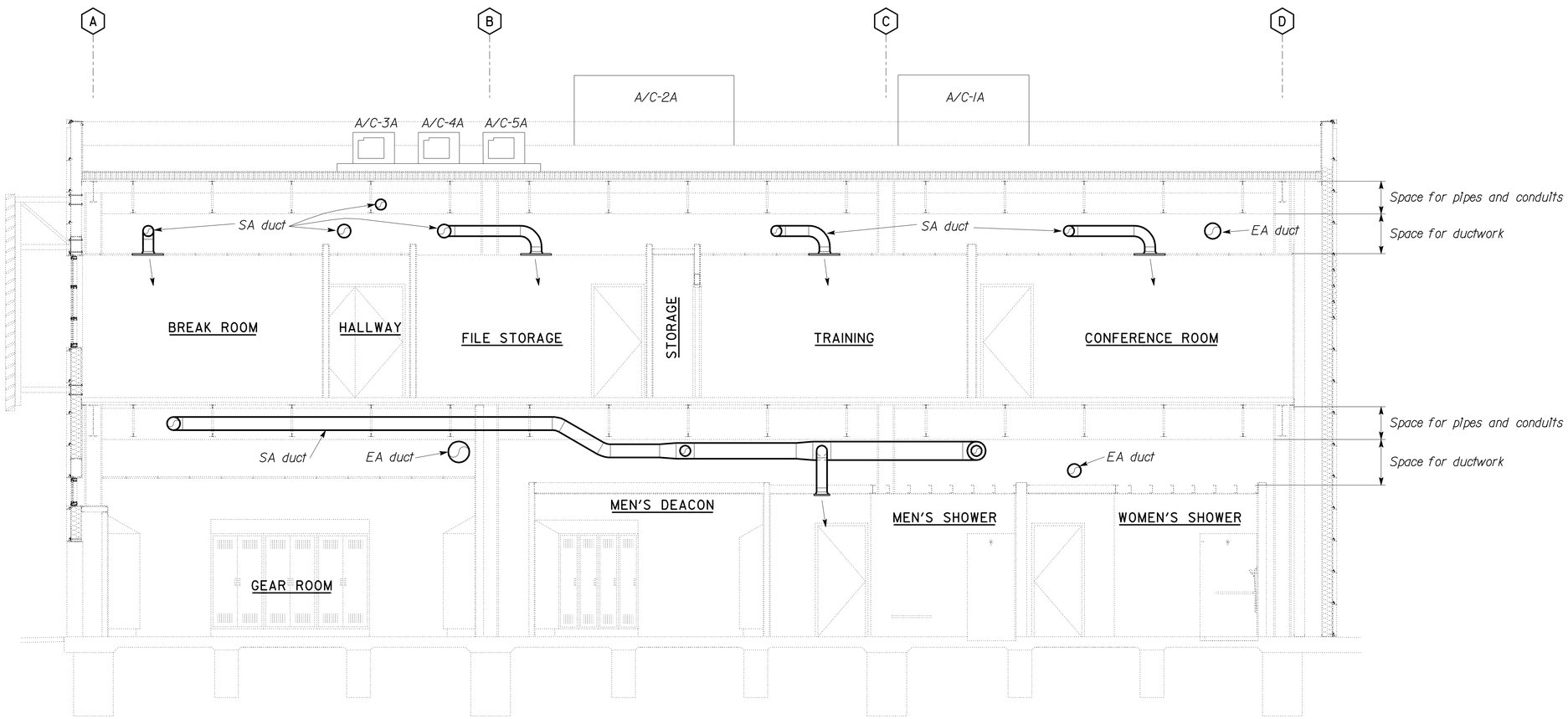

(A) SECTION

SCALE: 1/4" = 1'-0"

THIS DRAWING ACCURATE FOR MECHANICAL WORK ONLY

DESIGN	BY Chris Faria	CHECKED Tom Hatam	
DETAILS	BY Angela Chen	CHECKED Tom Hatam	
QUANTITIES	BY Chris Faria	CHECKED Tom Hatam	

STATE OF CALIFORNIA
DEPARTMENT OF TRANSPORTATION

DIVISION OF ENGINEERING SERVICES
ELECTRICAL-MECHANICAL-WATER AND WASTEWATER DESIGN

BRIDGE NO. 33M5785
POST MILE 2.2

SFOBB MAINTENANCE COMPLEX

BUILDING IA

BUILDING SECTION

SHEET **M1-6**

TAEMWW Imperial Rev. 7/10

FILE => m1_6.dgn
DATE PLOTTED => 25-OCT-2012 TIME PLOTTED => 15:49

ORIGINAL SCALE IN INCHES FOR REDUCED PLANS 0 1 2 3

UNIT 3615
PROJECT NUMBER & PHASE 04120006661
EA 014081

DISREGARD PRINTS BEARING EARLIER REVISION DATES →

REVISION DATES (PRELIMINARY STAGE ONLY) 05-08-12 05-25-12

SHEET OF

USERNAME => s114640 DATE PLOTTED => 25-OCT-2012 TIME PLOTTED => 15:49

V|=|

CALIFORNIA STATE FIRE MARSHAL APPROVED
Approval of this plan does not authorize or approve any omission or deviation from applicable regulations. Final approval is subject to field inspection. One set of approved plans shall be available on the project site at all times.
Reviewed by: JOHN E WOODS, SDSFM
Approval date: 8-22-12

DIST.	COUNTY	ROUTE	POST MILES TOTAL PROJECT	SHEET NO.	TOTAL SHEETS
04	Ala	80	2.2	538	800

Christopher M. Faria 05-25-12
REGISTERED MECHANICAL ENGINEER DATE

REGISTERED PROFESSIONAL ENGINEER
CHRISTOPHER M. FARIA
No. M30419
Exp. 12-31-13
MECH
STATE OF CALIFORNIA

10-22-12
PLANS APPROVAL DATE

The State of California or its officers or agents shall not be responsible for the accuracy or completeness of scanned copies of this plan sheet.

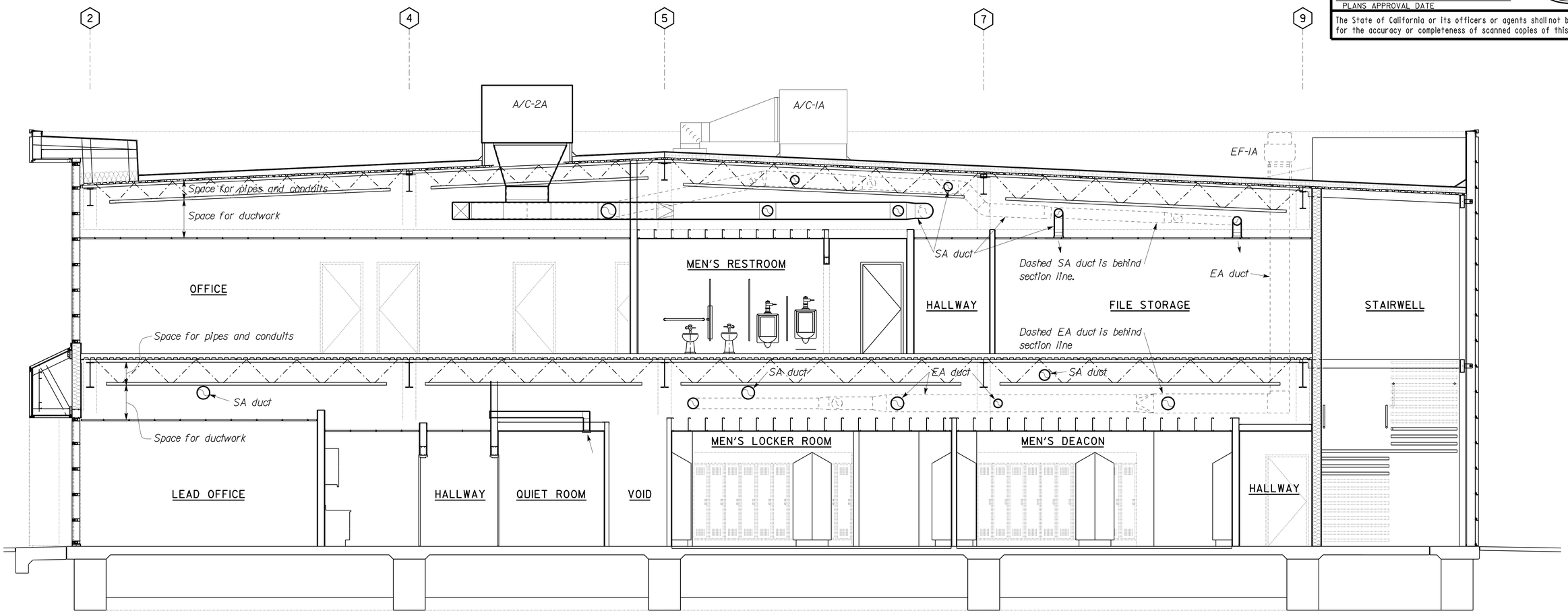

B SECTION

SCALE: 1/4" = 1'-0"

THIS DRAWING ACCURATE FOR MECHANICAL WORK ONLY

DESIGN	BY Chris Faria	CHECKED Tom Hatam	
DETAILS	BY Angela Chen	CHECKED Tom Hatam	
QUANTITIES	BY Chris Faria	CHECKED Tom Hatam	

STATE OF CALIFORNIA
DEPARTMENT OF TRANSPORTATION

DIVISION OF ENGINEERING SERVICES
ELECTRICAL-MECHANICAL-WATER AND WASTEWATER DESIGN

BRIDGE NO. 33M5785
POST MILE 2.2

SFOBB MAINTENANCE COMPLEX
BUILDING IA
BUILDING SECTION

SHEET **M1-7**

TAEMWW Imperial Rev. 7/10
FILE => m1_7.dgn
DATE PLOTTED => 25-OCT-2012 TIME PLOTTED => 15:49
ORIGINAL SCALE IN INCHES FOR REDUCED PLANS 0 1 2 3
UNIT 3615
PROJECT NUMBER & PHASE 04120006661
EA 014081
DISREGARD PRINTS BEARING EARLIER REVISION DATES
REVISION DATES (PRELIMINARY STAGE ONLY) 05-08-12 05-25-12
SHEET OF

USERNAME => s114640 DATE PLOTTED => 25-OCT-2012 TIME PLOTTED => 15:49
V1=1

DIST.	COUNTY	ROUTE	POST MILES TOTAL PROJECT	SHEET NO.	TOTAL SHEETS
04	Ala	80	2.2	539	800

REGISTERED MECHANICAL ENGINEER — 05-25-12 DATE

REGISTERED PROFESSIONAL ENGINEER — MARK HEDGLIN — No. M32912 — Exp. 9-30-12 — MECH — STATE OF CALIFORNIA

10-22-12
PLANS APPROVAL DATE

The State of California or its officers or agents shall not be responsible for the accuracy or completeness of scanned copies of this plan sheet.

CALIFORNIA STATE FIRE MARSHAL APPROVED
Approval of this plan does not authorize or approve any omission or deviation from applicable regulations. Final approval is subject to field inspection. One set of approved plans shall be available on the project site at all times.
Reviewed by: JOHN E WOODS, SDSFM
Approval date: 8-22-12

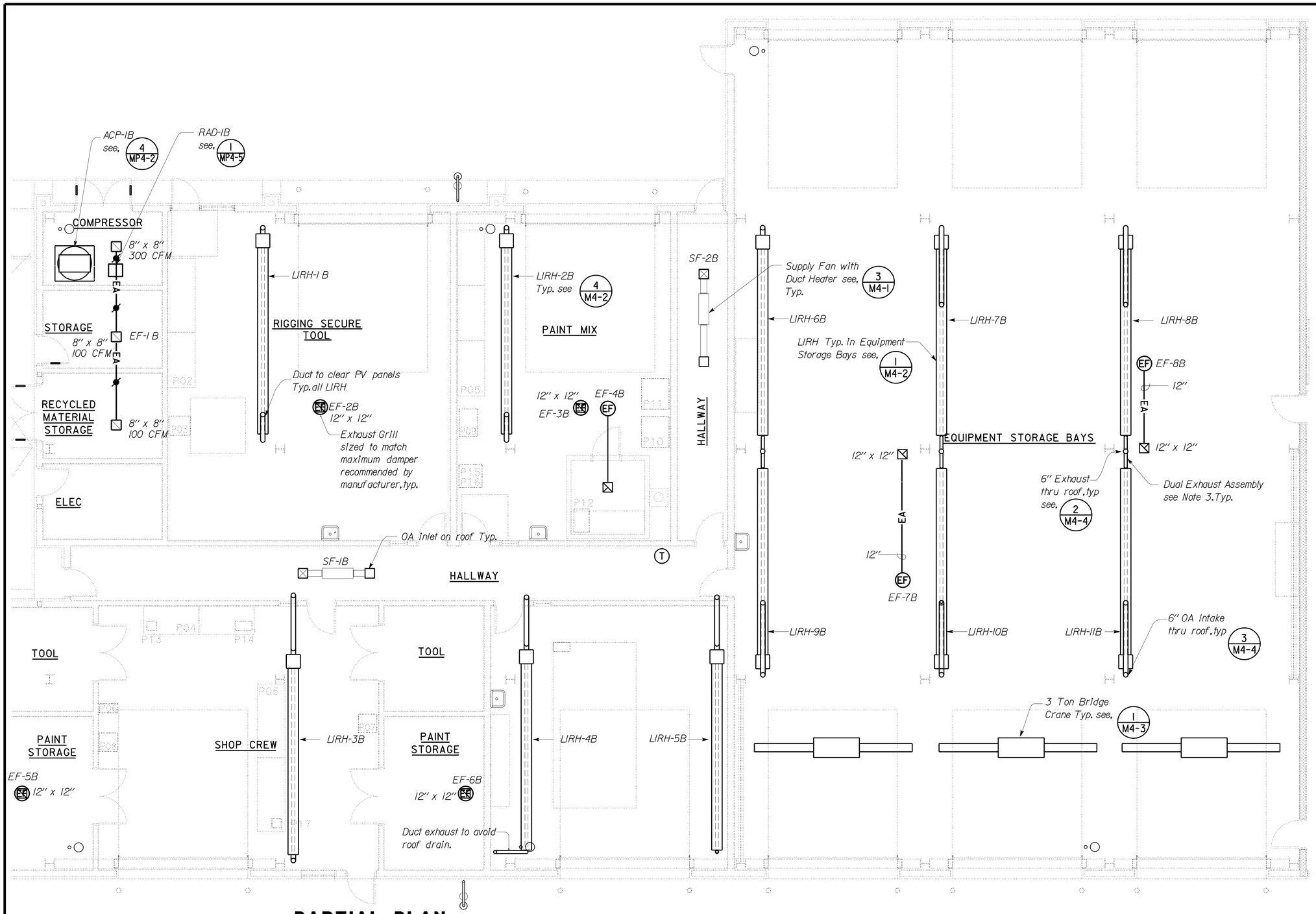

PARTIAL PLAN

SCALE : 3/16" = 1'-0"

THIS DRAWING ACCURATE FOR MECHANICAL WORK ONLY

NOTE:
1. For LIRH Gas Line layout see, - MPI-27
2. For LIRH Time Switch locations see Electrical sheets.
3. LIRHs connected with dual exhaust assembly must be controlled with same thermostat.
4. Roof penetrations see, - MI-13

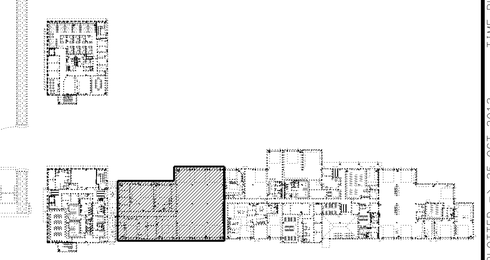

KEY PLAN

DESIGN	BY Mark Hedglin	CHECKED Tom Hatam	
DETAILS	BY Mark Hedglin	CHECKED Tom Hatam	
QUANTITIES	BY Mark Hedglin	CHECKED Tom Hatam	

STATE OF CALIFORNIA
DEPARTMENT OF TRANSPORTATION

DIVISION OF ENGINEERING SERVICES
ELECTRICAL-MECHANICAL-WATER AND WASTEWATER DESIGN

BRIDGE NO. 33M5785
POST MILE 2.2

SFOBB MAINTENANCE COMPLEX
BUILDING IB
PARTIAL HVAC PLAN

SHEET **M1-8**

TAEMWW Imperial Rev. 7/10
FILE => m1_8.dgn
DATE PLOTTED => 25-OCT-2012 TIME PLOTTED => 15:49

ORIGINAL SCALE IN INCHES FOR REDUCED PLANS 0 1 2 3

UNIT 3615
PROJECT NUMBER & PHASE 04120006661
EA 014081

DISREGARD PRINTS BEARING EARLIER REVISION DATES → 05-08-12 05-25-12
REVISION DATES (PRELIMINARY STAGE ONLY) SHEET OF

USERNAME => s114640 DATE PLOTTED => 25-OCT-2012 TIME PLOTTED => 15:49

VI=1

DIST.	COUNTY	ROUTE	POST MILES TOTAL PROJECT	SHEET NO.	TOTAL SHEETS
04	Ala	80	2.2	540	800

CALIFORNIA STATE FIRE MARSHAL APPROVED
Approval of this plan does not authorize or approve any omission or deviation from applicable regulations. Final approval is subject to field inspection. One set of approved plans shall be available on the project site at all times.
Reviewed by: JOHN E WOODS, SDSFM
Approval date: 8-22-12

REGISTERED MECHANICAL ENGINEER — 05-25-12 DATE

REGISTERED PROFESSIONAL ENGINEER — MARK HEDGLIN — No. M32912 — Exp. 9-30-12 — MECH — STATE OF CALIFORNIA

10-22-12
PLANS APPROVAL DATE

The State of California or its officers or agents shall not be responsible for the accuracy or completeness of scanned copies of this plan sheet.

NOTE: 1. For LIRH Gas Line layout see, (-/MPI-28)

2. For LIRH Time Switch locations see Electrical sheets.

3. Roof penetrations see, (-/MI-14)

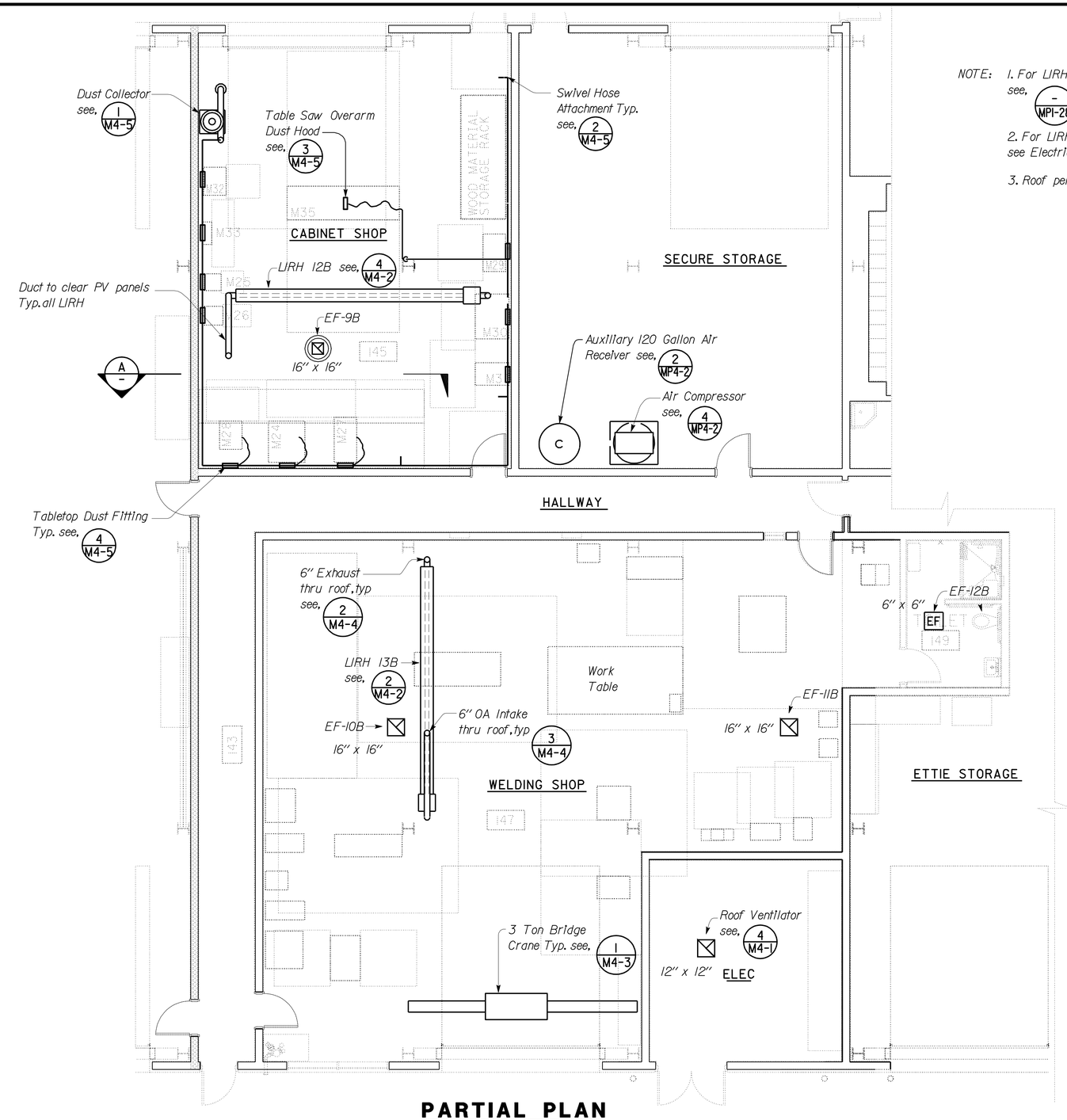

PARTIAL PLAN

SCALE : 3/16" = 1'-0"

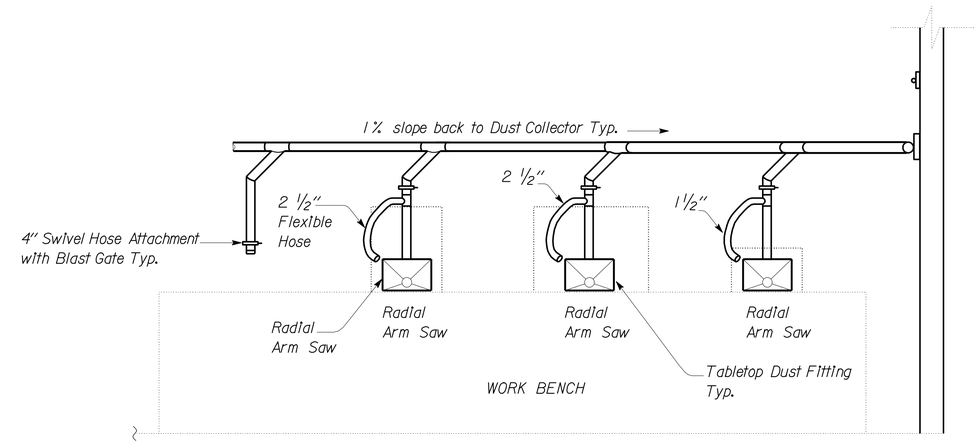

A ELEVATION

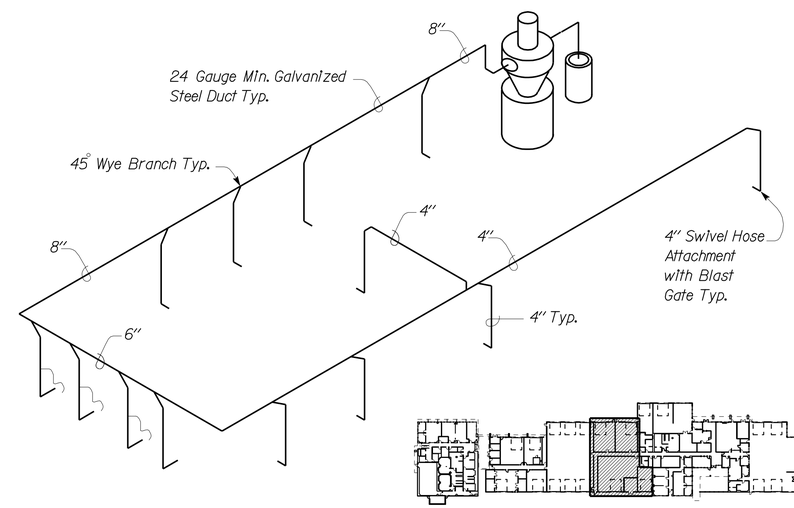

DUST COLLECTION SYSTEM

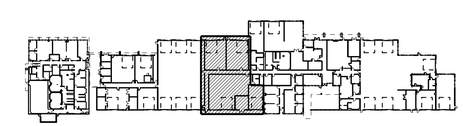

KEY PLAN

THIS DRAWING ACCURATE FOR MECHANICAL WORK ONLY

	BY	CHECKED
DESIGN	Mark Hedglin	Tom Hatam
DETAILS	Mark Hedglin	Tom Hatam
QUANTITIES	Mark Hedglin	Tom Hatam

STATE OF CALIFORNIA
DEPARTMENT OF TRANSPORTATION

DIVISION OF ENGINEERING SERVICES
ELECTRICAL-MECHANICAL-WATER AND WASTEWATER DESIGN

BRIDGE NO. 33M5785
POST MILE 2.2

SFOBB MAINTENANCE COMPLEX
BUILDING IB — PARTIAL MECHANICAL PLAN

SHEET **M1-9**

TAEMWW Imperial Rev. 7/10
FILE => m1_9.dgn
DATE PLOTTED => 25-OCT-2012 TIME PLOTTED => 15:49

ORIGINAL SCALE IN INCHES FOR REDUCED PLANS 0 1 2 3

UNIT 3615
PROJECT NUMBER & PHASE 04120006661
EA 014081

DISREGARD PRINTS BEARING EARLIER REVISION DATES → 05-08-12 05-25-12

REVISION DATES (PRELIMINARY STAGE ONLY) SHEET OF

USERNAME => s114640 DATE PLOTTED => 25-OCT-2012 TIME PLOTTED => 15:49

V1=1

DIST.	COUNTY	ROUTE	POST MILES TOTAL PROJECT	SHEET NO.	TOTAL SHEETS
04	Ala	80	2.2	541	800

CALIFORNIA STATE FIRE MARSHAL APPROVED
Approval of this plan does not authorize or approve any omission or deviation from applicable regulations. Final approval is subject to field inspection. One set of approved plans shall be available on the project site at all times.
Reviewed by: JOHN E WOODS, SDSFM
Approval date: 8-22-12

REGISTERED MECHANICAL ENGINEER — 05-25-12 DATE

REGISTERED PROFESSIONAL ENGINEER — MARK HEDGLIN — No. M32912 — Exp. 9-30-12 — MECH — STATE OF CALIFORNIA

10-22-12
PLANS APPROVAL DATE

The State of California or its officers or agents shall not be responsible for the accuracy or completeness of scanned copies of this plan sheet.

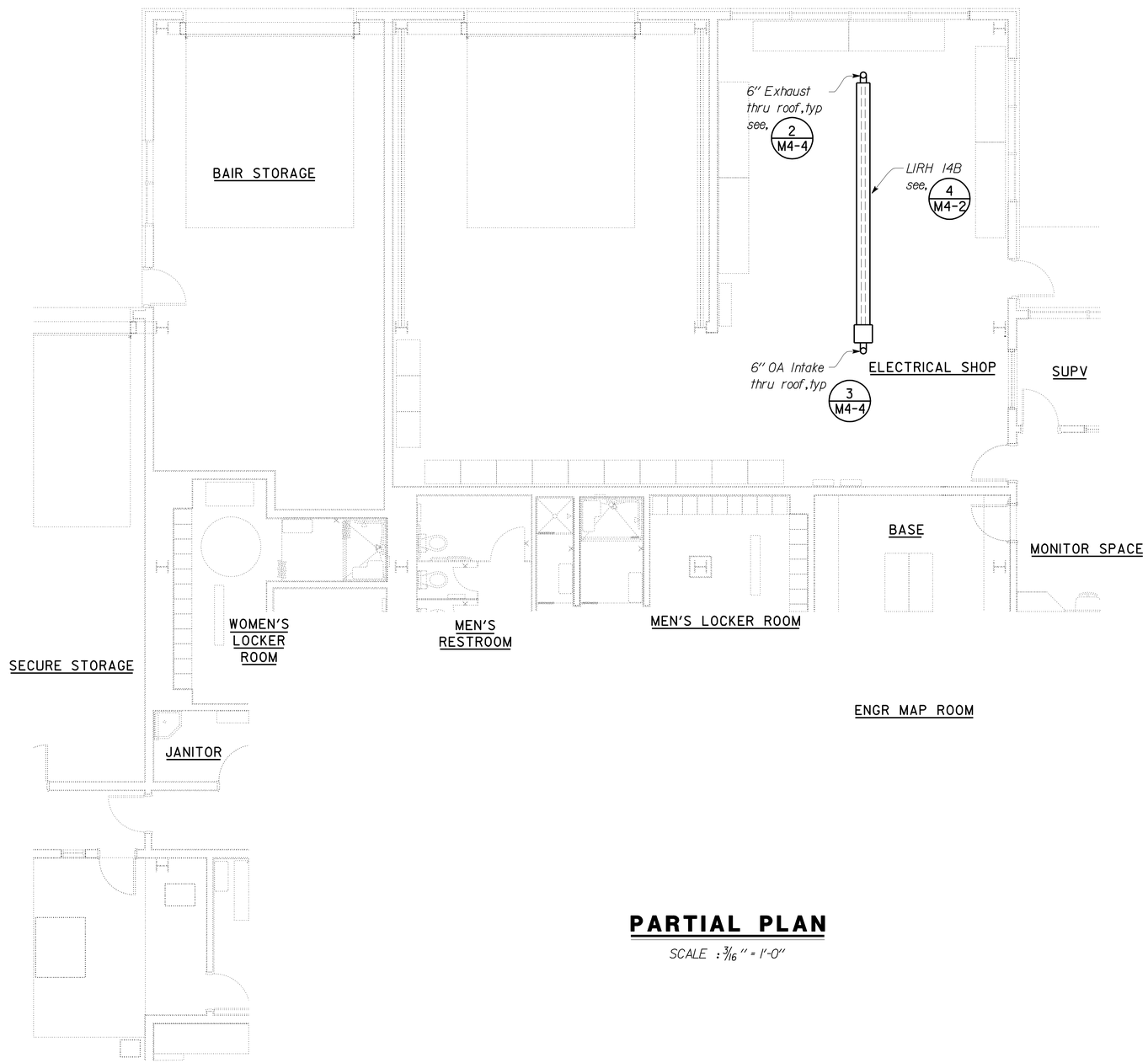

PARTIAL PLAN

SCALE : 3/16" = 1'-0"

NOTE: 1. For LIRH Gas Line layout see, - MP1-29

2. For LIRH Time Switch locations see Electrical sheets.

3. Roof penetrations see, - M1-14

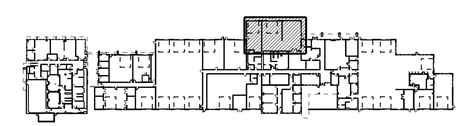

KEY PLAN

THIS DRAWING ACCURATE FOR MECHANICAL WORK ONLY

	BY	CHECKED
DESIGN	Mark Hedglin	Tom Hatam
DETAILS	Rudy Sarte	Tom Hatam
QUANTITIES	Mark Hedglin	Tom Hatam

STATE OF CALIFORNIA
DEPARTMENT OF TRANSPORTATION

DIVISION OF ENGINEERING SERVICES
ELECTRICAL-MECHANICAL-WATER AND WASTEWATER DESIGN

BRIDGE NO. 33M5785
POST MILE 2.2

SFOBB MAINTENANCE COMPLEX
BUILDING IB
PARTIAL MECHANICAL PLAN

SHEET M1-10

TAEMWW Imperial Rev. 7/10
FILE => m1_10.dgn
DATE PLOTTED => 25-OCT-2012 TIME PLOTTED => 15:32

ORIGINAL SCALE IN INCHES FOR REDUCED PLANS 0 1 2 3

UNIT 3615
PROJECT NUMBER & PHASE 04120006661
EA 014081

DISREGARD PRINTS BEARING EARLIER REVISION DATES → 05-08-12 05-25-12

REVISION DATES (PRELIMINARY STAGE ONLY) SHEET OF

USERNAME => s123631 DATE PLOTTED => 25-OCT-2012 TIME PLOTTED => 15:32

VI=I

DIST.	COUNTY	ROUTE	POST MILES TOTAL PROJECT	SHEET NO.	TOTAL SHEETS
04	Ala	80	2.2	542	800

REGISTERED MECHANICAL ENGINEER — 05-25-12 DATE

REGISTERED PROFESSIONAL ENGINEER — MARK HEDGLIN — No. M32912 — Exp. 9-30-12 MECH — STATE OF CALIFORNIA

10-22-12
PLANS APPROVAL DATE

The State of California or its officers or agents shall not be responsible for the accuracy or completeness of scanned copies of this plan sheet.

CALIFORNIA STATE FIRE MARSHAL APPROVED
Approval of this plan does not authorize or approve any omission or deviation from applicable regulations. Final approval is subject to field inspection. One set of approved plans shall be available on the project site at all times.
Reviewed by: JOHN E WOODS, SDSFM
Approval date: 8-22-12

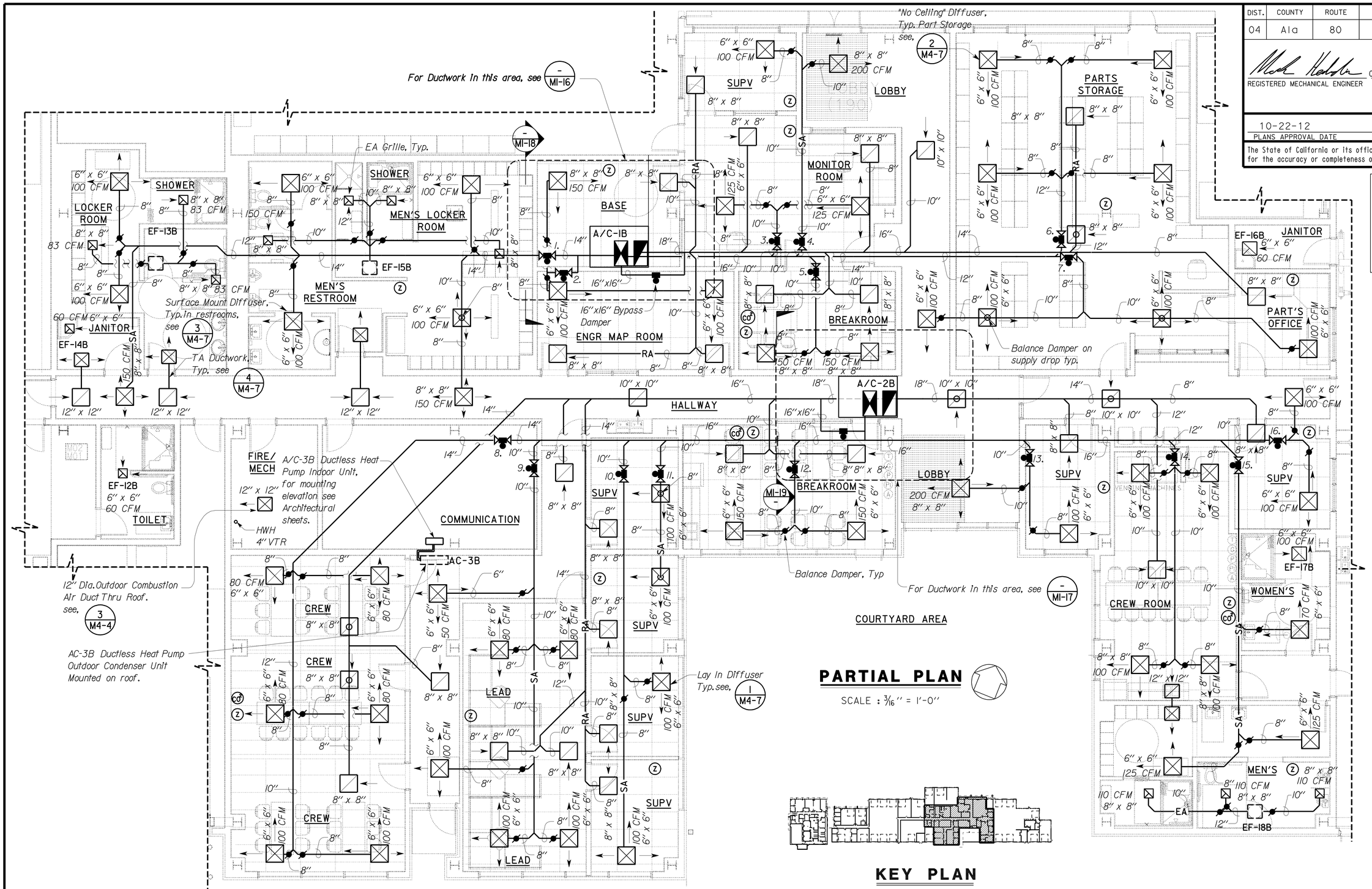

PARTIAL PLAN

SCALE : 3/16" = 1'-0"

KEY PLAN

THIS DRAWING ACCURATE FOR MECHANICAL WORK ONLY

	BY	CHECKED
DESIGN	Mark Hedglin	Tom Hatam
DETAILS	Rudy Sarte	Tom Hatam
QUANTITIES	Mark Hedglin	Tom Hatam

STATE OF CALIFORNIA DEPARTMENT OF TRANSPORTATION

DIVISION OF ENGINEERING SERVICES
ELECTRICAL-MECHANICAL-WATER AND WASTEWATER DESIGN

BRIDGE NO. 33M5785
POST MILE 2.2

SFOBB MAINTENANCE COMPLEX
BUILDING IB — PARTIAL HVAC PLAN

SHEET **M1-11**

TAEMWW Imperial Rev. 7/10
FILE => m1_11.dgn
DATE PLOTTED => 25-OCT-2012 TIME PLOTTED => 15:32
ORIGINAL SCALE IN INCHES FOR REDUCED PLANS 0 1 2 3
UNIT 3615
PROJECT NUMBER & PHASE 04120006661
EA 014081
DISREGARD PRINTS BEARING EARLIER REVISION DATES → 05-08-12 05-25-12
REVISION DATES (PRELIMINARY STAGE ONLY) SHEET OF
USERNAME => s123631 DATE PLOTTED => 25-OCT-2012 TIME PLOTTED => 15:32

DIST.	COUNTY	ROUTE	POST MILES TOTAL PROJECT	SHEET NO.	TOTAL SHEETS
04	Ala	80	2.2	543	800

CALIFORNIA STATE FIRE MARSHAL APPROVED
Approval of this plan does not authorize or approve any omission or deviation from applicable regulations. Final approval is subject to field inspection. One set of approved plans shall be available on the project site at all times.
Reviewed by: JOHN E WOODS, SDSFM
Approval date: 8-22-12

REGISTERED MECHANICAL ENGINEER — 05-25-12 DATE

REGISTERED PROFESSIONAL ENGINEER — MARK HEDGLIN — No. M32912 — Exp. 9-30-12 — MECH — STATE OF CALIFORNIA

10-22-12
PLANS APPROVAL DATE

The State of California or its officers or agents shall not be responsible for the accuracy or completeness of scanned copies of this plan sheet.

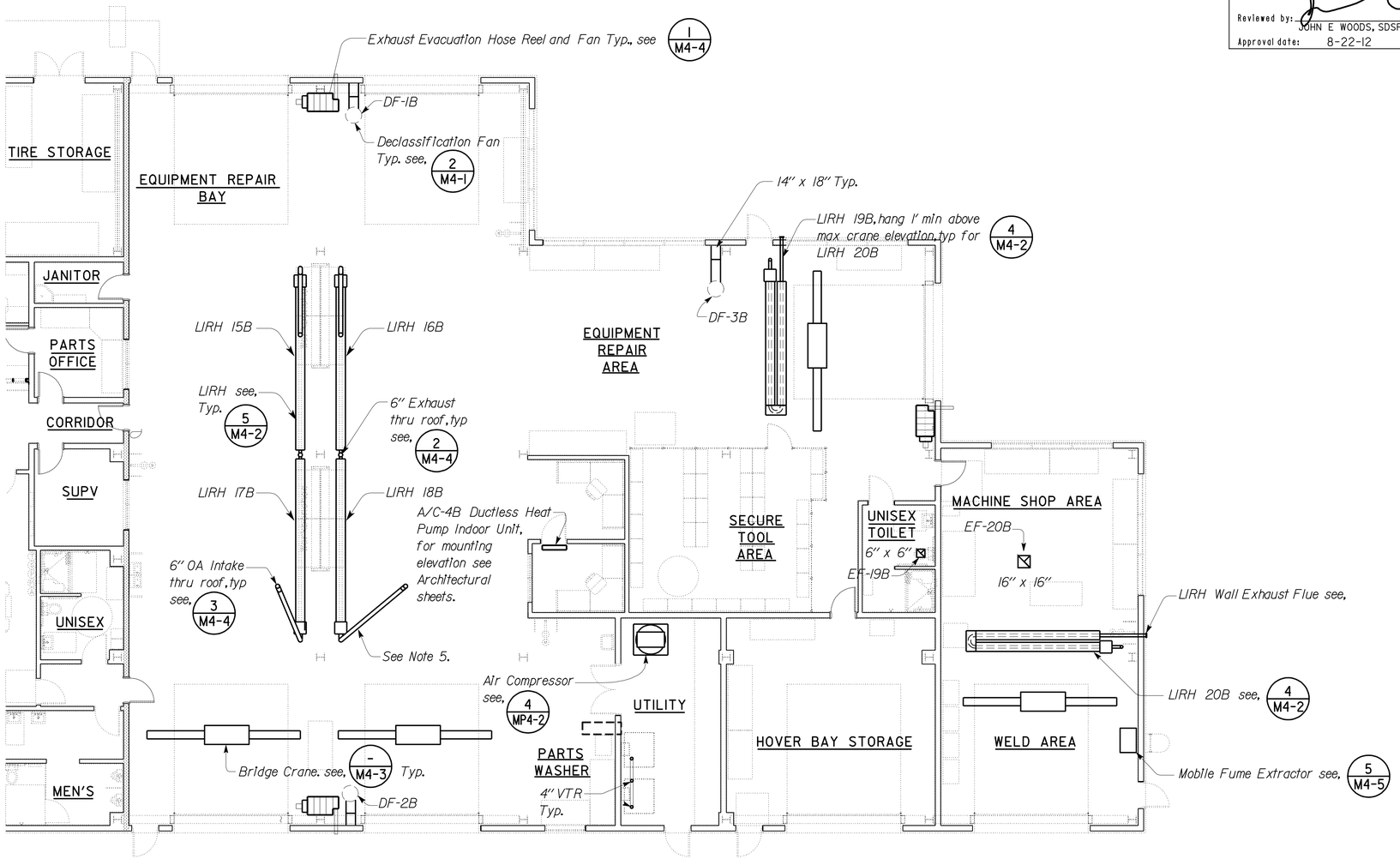

NOTE:
1. For LIRH Gas Line layout see, -/MPI-31
2. For LIRH Time Switch locations see Electrical sheets.
3. LIRHs connected with dual exhaust assembly must be controlled with same thermostat.
4. Roof penetrations see, -/MI-15
5. Duct LIRH OA and exhaust to avoid PV panels on roof. One 90° and two 45° elbows max.

PARTIAL PLAN

SCALE: 1/8" = 1'-0"

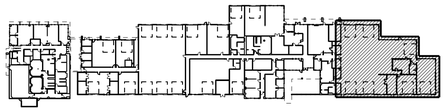

KEY PLAN

THIS DRAWING ACCURATE FOR MECHANICAL WORK ONLY

DESIGN	BY Mark Hedglin	CHECKED Tom Hatam	
DETAILS	BY Rudy Sarte	CHECKED Tom Hatam	
QUANTITIES	BY Mark Hedglin	CHECKED Tom Hatam	

STATE OF CALIFORNIA
DEPARTMENT OF TRANSPORTATION

DIVISION OF ENGINEERING SERVICES
ELECTRICAL-MECHANICAL-WATER AND WASTEWATER DESIGN

BRIDGE NO. 33M5785
POST MILE 2.2

SFOBB MAINTENANCE COMPLEX
BUILDING IB — PARTIAL MECHANICAL PLAN

SHEET **M1-12**

TAEMWW Imperial Rev. 7/10
FILE => m1_12.dgn
DATE PLOTTED => 25-OCT-2012 TIME PLOTTED => 15:32
ORIGINAL SCALE IN INCHES FOR REDUCED PLANS 0 1 2 3
UNIT 3615
PROJECT NUMBER & PHASE 04120006661
EA 014081
DISREGARD PRINTS BEARING EARLIER REVISION DATES → 05-08-12 05-25-12
REVISION DATES (PRELIMINARY STAGE ONLY) SHEET OF
USERNAME => s123631 DATE PLOTTED => 25-OCT-2012 TIME PLOTTED => 15:32
V1=1

CALIFORNIA STATE FIRE MARSHAL APPROVED

Approval of this plan does not authorize or approve any omission or deviation from applicable regulations. Final approval is subject to field inspection. One set of approved plans shall be available on the project site at all times.

Reviewed by: JOHN E WOODS, SDSFM

Approval date: 8-22-12

DIST.	COUNTY	ROUTE	POST MILES TOTAL PROJECT	SHEET NO.	TOTAL SHEETS
04	Ala	80	2.2	544	800

REGISTERED MECHANICAL ENGINEER — 05-25-12 DATE

REGISTERED PROFESSIONAL ENGINEER — MARK HEDGLIN — No. M32912 — Exp. 9-30-12 — MECH — STATE OF CALIFORNIA

10-22-12
PLANS APPROVAL DATE

The State of California or its officers or agents shall not be responsible for the accuracy or completeness of scanned copies of this plan sheet.

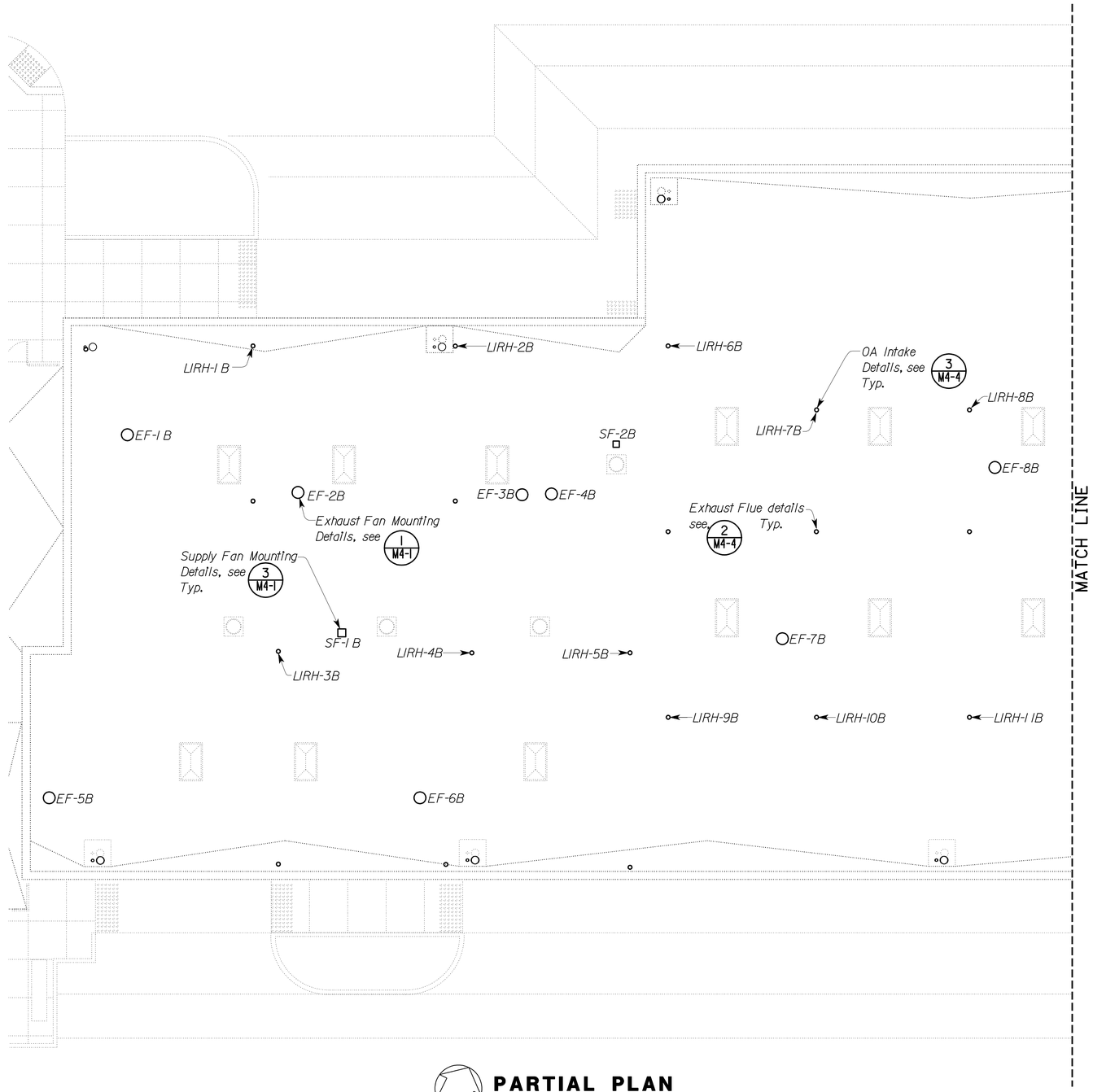

PARTIAL PLAN

SCALE: 1/8" = 1'-0"

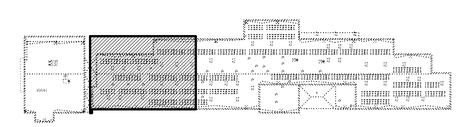

KEY PLAN

THIS DRAWING ACCURATE FOR MECHANICAL WORK ONLY

DESIGN	BY Mark Hedglin	CHECKED Tom Hatam	
DETAILS	BY Mark Hedglin	CHECKED Tom Hatam	
QUANTITIES	BY Mark Hedglin	CHECKED Tom Hatam	

STATE OF CALIFORNIA
DEPARTMENT OF TRANSPORTATION

DIVISION OF ENGINEERING SERVICES
ELECTRICAL-MECHANICAL-WATER AND WASTEWATER DESIGN

BRIDGE NO. 33M5785
POST MILE 2.2

SFOBB MAINTENANCE COMPLEX

BUILDING IB — PARTIAL ROOF PLAN

SHEET **M1-13**

TAEMWW Imperial Rev. 7/10

FILE => m1_13.dgn
DATE PLOTTED => 25-OCT-2012 TIME PLOTTED => 15:33

ORIGINAL SCALE IN INCHES FOR REDUCED PLANS 0 1 2 3

UNIT 3615
PROJECT NUMBER & PHASE 04120006661
EA 014081

DISREGARD PRINTS BEARING EARLIER REVISION DATES → 05-08-12 05-25-12

REVISION DATES (PRELIMINARY STAGE ONLY) SHEET OF

USERNAME => s123631 DATE PLOTTED => 25-OCT-2012 TIME PLOTTED => 15:33

V|=|

DIST.	COUNTY	ROUTE	POST MILES TOTAL PROJECT	SHEET NO.	TOTAL SHEETS
04	Ala	80	2.2	545	800

REGISTERED MECHANICAL ENGINEER 05-25-12 DATE

REGISTERED PROFESSIONAL ENGINEER MARK HEDGLIN No. M32912 Exp. 9-30-12 MECH STATE OF CALIFORNIA

10-22-12
PLANS APPROVAL DATE

The State of California or its officers or agents shall not be responsible for the accuracy or completeness of scanned copies of this plan sheet.

CALIFORNIA STATE FIRE MARSHAL APPROVED

Approval of this plan does not authorize or approve any omission or deviation from applicable regulations. Final approval is subject to field inspection. One set of approved plans shall be available on the project site at all times.

Reviewed by: JOHN E WOODS, SDSFM

Approval date: 8-22-12

PARTIAL PLAN

SCALE: 1/8" = 1'-0"

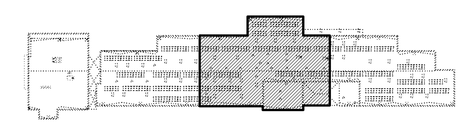

KEY PLAN

THIS DRAWING ACCURATE FOR MECHANICAL WORK ONLY

DESIGN	BY Mark Hedglin	CHECKED Tom Hatam	
DETAILS	BY Mark Hedglin	CHECKED Tom Hatam	
QUANTITIES	BY Mark Hedglin	CHECKED Tom Hatam	

STATE OF CALIFORNIA DEPARTMENT OF TRANSPORTATION

DIVISION OF ENGINEERING SERVICES
ELECTRICAL-MECHANICAL-WATER AND WASTEWATER DESIGN

UNIT 3615
PROJECT NUMBER & PHASE 04120006661
EA 014081

BRIDGE NO. 33M5785
POST MILE 2.2

SFOBB MAINTENANCE COMPLEX

BUILDING 1B — PARTIAL ROOF PLAN

SHEET **M1-14**

TAEMWW Imperial Rev. 7/10

FILE => m1_14.dgn
DATE PLOTTED => 25-OCT-2012 TIME PLOTTED => 15:33

ORIGINAL SCALE IN INCHES FOR REDUCED PLANS 0 1 2 3

DISREGARD PRINTS BEARING EARLIER REVISION DATES → 05-08-12 05-25-12

REVISION DATES (PRELIMINARY STAGE ONLY) SHEET OF

USERNAME => s123631 DATE PLOTTED => 25-OCT-2012 TIME PLOTTED => 15:33

V|=|

DIST.	COUNTY	ROUTE	POST MILES TOTAL PROJECT	SHEET NO.	TOTAL SHEETS
04	Ala	80	2.2	546	800

CALIFORNIA STATE FIRE MARSHAL APPROVED

Approval of this plan does not authorize or approve any omission or deviation from applicable regulations. Final approval is subject to field inspection. One set of approved plans shall be available on the project site at all times.

Reviewed by: JOHN E WOODS, SDSFM

Approval date: 8-22-12

REGISTERED MECHANICAL ENGINEER — 05-25-12 DATE

REGISTERED PROFESSIONAL ENGINEER — MARK HEDGLIN — No. M32912 — Exp. 9-30-12 — MECH — STATE OF CALIFORNIA

10-22-12
PLANS APPROVAL DATE

The State of California or its officers or agents shall not be responsible for the accuracy or completeness of scanned copies of this plan sheet.

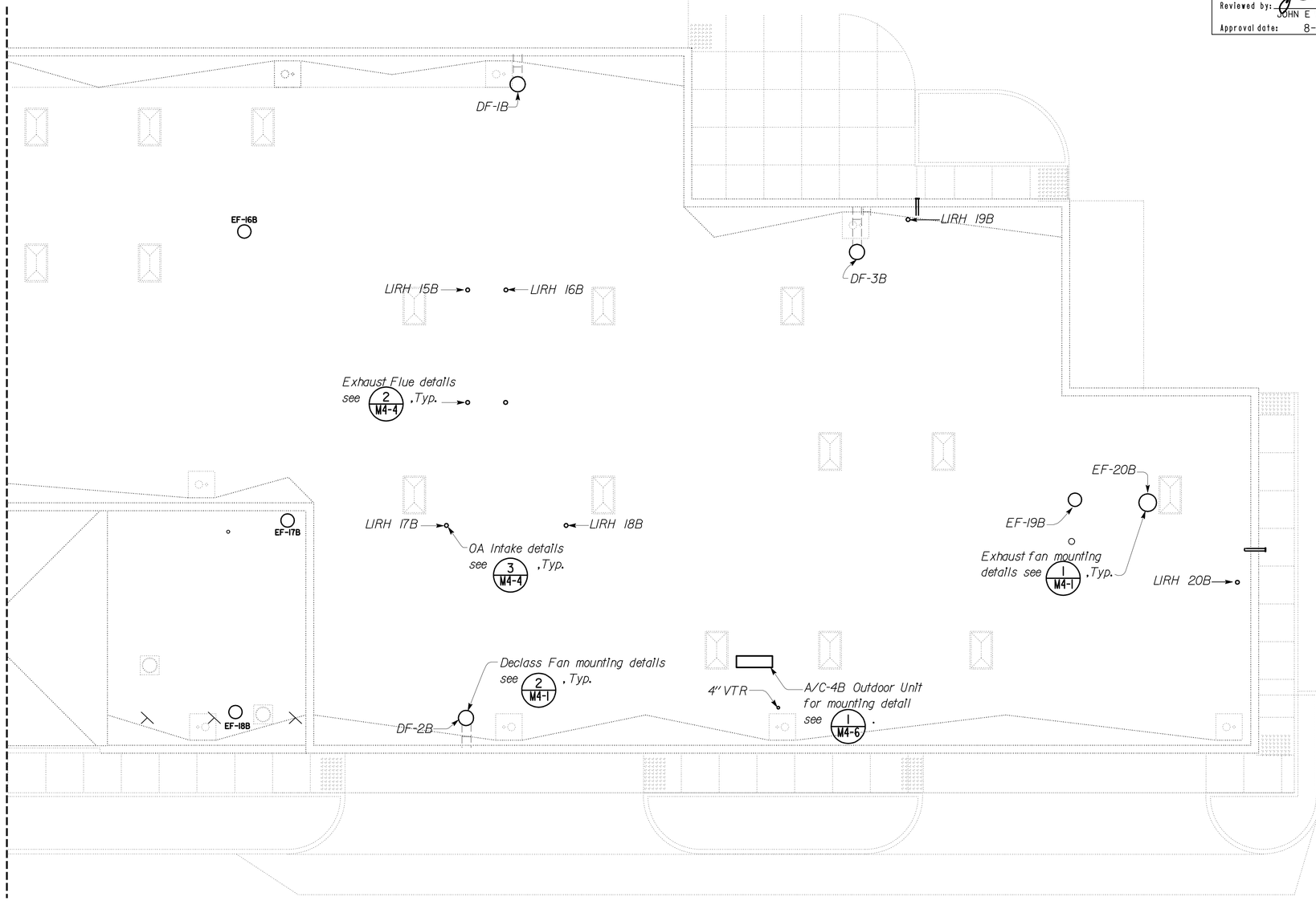

PARTIAL PLAN

SCALE: 1/8" = 1'-0"

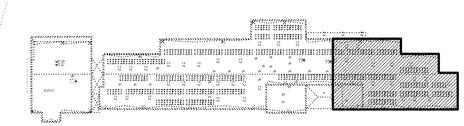

KEY PLAN

THIS DRAWING ACCURATE FOR MECHANICAL WORK ONLY

	BY	CHECKED
DESIGN	Mark Hedglin	Tom Hatam
DETAILS	Mark Hedglin	Tom Hatam
QUANTITIES	Mark Hedglin	Tom Hatam

STATE OF CALIFORNIA DEPARTMENT OF TRANSPORTATION

DIVISION OF ENGINEERING SERVICES
ELECTRICAL-MECHANICAL-WATER AND WASTEWATER DESIGN

BRIDGE NO. 33M5785
POST MILE 2.2

SFOBB MAINTENANCE COMPLEX

BUILDING IB — PARTIAL ROOF PLAN

SHEET **M1-15**

TAEMWW Imperial Rev. 7/10

FILE => m1_15.dgn
DATE PLOTTED => 25-OCT-2012 TIME PLOTTED => 15:33

ORIGINAL SCALE IN INCHES FOR REDUCED PLANS 0 1 2 3

UNIT 3615
PROJECT NUMBER & PHASE 04120006661
EA 014081

DISREGARD PRINTS BEARING EARLIER REVISION DATES → 05-08-12 05-25-12

REVISION DATES (PRELIMINARY STAGE ONLY) SHEET OF

USERNAME => s123631 DATE PLOTTED => 25-OCT-2012 TIME PLOTTED => 15:33

V|=|

DIST.	COUNTY	ROUTE	POST MILES TOTAL PROJECT	SHEET NO.	TOTAL SHEETS
04	Ala	80	2.2	547	800

CALIFORNIA STATE FIRE MARSHAL APPROVED

Approval of this plan does not authorize or approve any omission or deviation from applicable regulations. Final approval is subject to field inspection. One set of approved plans shall be available on the project site at all times.

Reviewed by: JOHN E WOODS, SDSFM

Approval date: 8-22-12

REGISTERED MECHANICAL ENGINEER — 05-25-12 DATE

REGISTERED PROFESSIONAL ENGINEER — MARK HEDGLIN — No. M32912 — Exp. 9-30-12 — MECH — STATE OF CALIFORNIA

10-22-12
PLANS APPROVAL DATE

The State of California or its officers or agents shall not be responsible for the accuracy or completeness of scanned copies of this plan sheet.

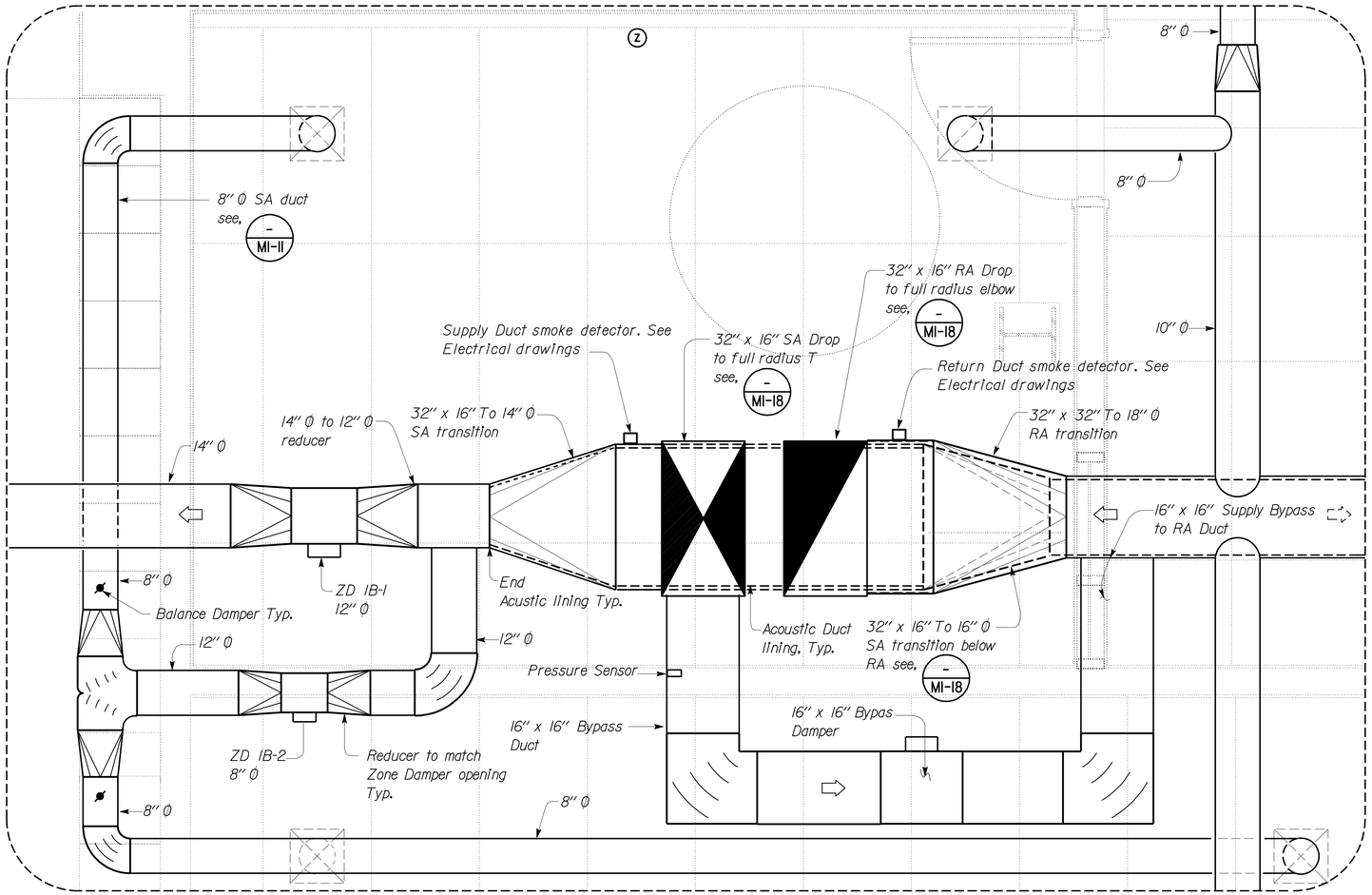

PARTIAL A/C-1B

SCALE: 3/4" = 1'-0"

Note:

1. *Duct sizes are clear inside dimensions. Overall duct size to account for acoustic lining where present.*
2. *SA and RA duct drop/rise shall have acoustic lining from unit to point indicated.*
3. *32" x 16" SA, and RA rise to A/C-IB on roof. Transition to unit connection size in rise*
4. *Duct Supports per SMACNA*
5. *Bypass Damper Pressure Sensor shall be located and installed per manufacturer's specifications.*
6. *ZD IB-2 and associated duct work shown offset for clarity.*

THIS DRAWING ACCURATE FOR MECHANICAL WORK ONLY

	BY	CHECKED
DESIGN	Mark Hedglin	Tom Hatam
DETAILS	Mark Hedglin	Tom Hatam
QUANTITIES	Mark Hedglin	Tom Hatam

STATE OF CALIFORNIA DEPARTMENT OF TRANSPORTATION

DIVISION OF ENGINEERING SERVICES
ELECTRICAL-MECHANICAL-WATER AND WASTEWATER DESIGN

UNIT 3615
PROJECT NUMBER & PHASE 04120006661
EA 014081

BRIDGE NO. 33M5785
POST MILE 2.2

SFOBB MAINTENANCE COMPLEX

BUILDING IB — HVAC PARTIAL PLAN 3

SHEET **M1-16**

TAEMWW Imperial Rev. 7/10
FILE => m1_16.dgn
DATE PLOTTED => 25-OCT-2012 TIME PLOTTED => 15:33

ORIGINAL SCALE IN INCHES FOR REDUCED PLANS 0 1 2 3

DISREGARD PRINTS BEARING EARLIER REVISION DATES → 05-08-12 05-25-12

REVISION DATES (PRELIMINARY STAGE ONLY) SHEET OF

USERNAME => s123631 DATE PLOTTED => 25-OCT-2012 TIME PLOTTED => 15:33

V|=|

DIST.	COUNTY	ROUTE	POST MILES TOTAL PROJECT	SHEET NO.	TOTAL SHEETS
04	Ala	80	2.2	548	800

REGISTERED MECHANICAL ENGINEER 05-25-12 DATE

REGISTERED PROFESSIONAL ENGINEER MARK HEDGLIN No. M32912 Exp. 9-30-12 MECH STATE OF CALIFORNIA

10-22-12
PLANS APPROVAL DATE

The State of California or its officers or agents shall not be responsible for the accuracy or completeness of scanned copies of this plan sheet.

CALIFORNIA STATE FIRE MARSHAL APPROVED
Approval of this plan does not authorize or approve any omission or deviation from applicable regulations. Final approval is subject to field inspection. One set of approved plans shall be available on the project site at all times.
Reviewed by: JOHN E WOODS, SDSFM
Approval date: 8-22-12

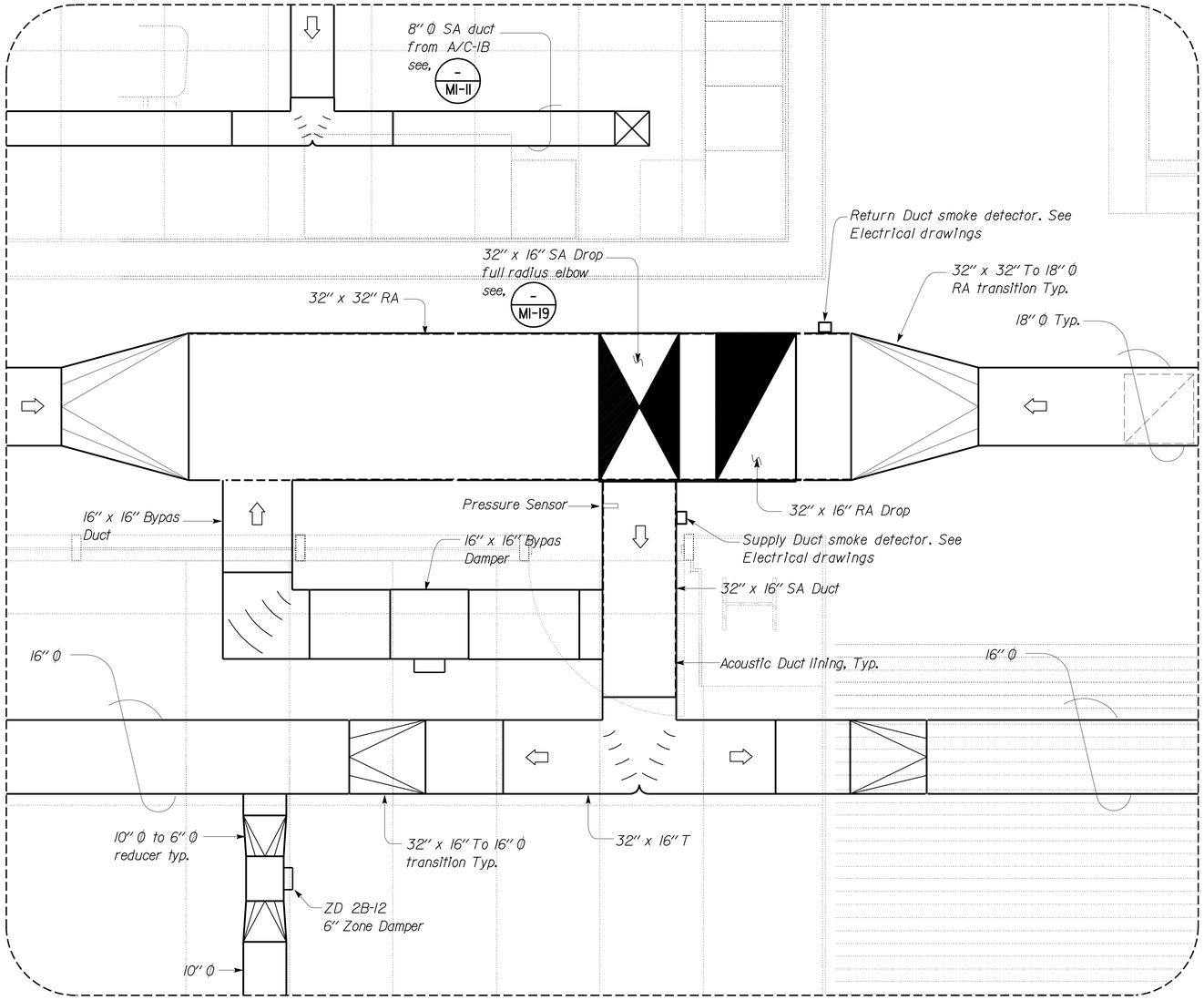

Note:

1. Duct sizes are clear inside dimensions. Overall duct size to account for acoustic lining where present.
2. SA and RA duct drop/rise shall have acoustic lining from unit to point indicated.
3. 32" x 16" SA, and RA rise to A/C-IB on roof. Transition to unit connection size in rise
4. Duct Supports per SMACNA
5. Bypass Damper Pressure Sensor shall be located and installed per manufacturer's specifications.

PARTIAL A/C-2B

SCALE: 3/4" = 1'-0"

THIS DRAWING ACCURATE FOR MECHANICAL WORK ONLY

	BY	CHECKED
DESIGN	Mark Hedglin	Tom Hatam
DETAILS	Mark Hedglin	Tom Hatam
QUANTITIES	Mark Hedglin	Tom Hatam

STATE OF CALIFORNIA DEPARTMENT OF TRANSPORTATION

DIVISION OF ENGINEERING SERVICES ELECTRICAL-MECHANICAL-WATER AND WASTEWATER DESIGN

BRIDGE NO. 33M5785
POST MILE 2.2

SFOBB MAINTENANCE COMPLEX
BUILDING IB
HVAC PARTIAL PLAN 4

SHEET **M1-17**

TAEMWW Imperial Rev. 7/10
FILE => m1_17.dgn
DATE PLOTTED => 25-OCT-2012 TIME PLOTTED => 15:34
ORIGINAL SCALE IN INCHES FOR REDUCED PLANS 0 1 2 3
UNIT 3615
PROJECT NUMBER & PHASE 04120006661
EA 014081
DISREGARD PRINTS BEARING EARLIER REVISION DATES → 05-08-12 05-25-12
REVISION DATES (PRELIMINARY STAGE ONLY) SHEET OF

USERNAME => s123631 DATE PLOTTED => 25-OCT-2012 TIME PLOTTED => 15:34
V|=|

DIST.	COUNTY	ROUTE	POST MILES TOTAL PROJECT	SHEET NO.	TOTAL SHEETS
04	Ala	80	2.2	549	800

REGISTERED MECHANICAL ENGINEER 05-25-12 DATE

REGISTERED PROFESSIONAL ENGINEER MARK HEDGLIN No. M32912 Exp. 9-30-12 MECH STATE OF CALIFORNIA

10-22-12
PLANS APPROVAL DATE

The State of California or its officers or agents shall not be responsible for the accuracy or completeness of scanned copies of this plan sheet.

CALIFORNIA STATE FIRE MARSHAL APPROVED
Approval of this plan does not authorize or approve any omission or deviation from applicable regulations. Final approval is subject to field inspection. One set of approved plans shall be available on the project site at all times.
Reviewed by: JOHN E WOODS, SDSFM
Approval date: 8-22-12

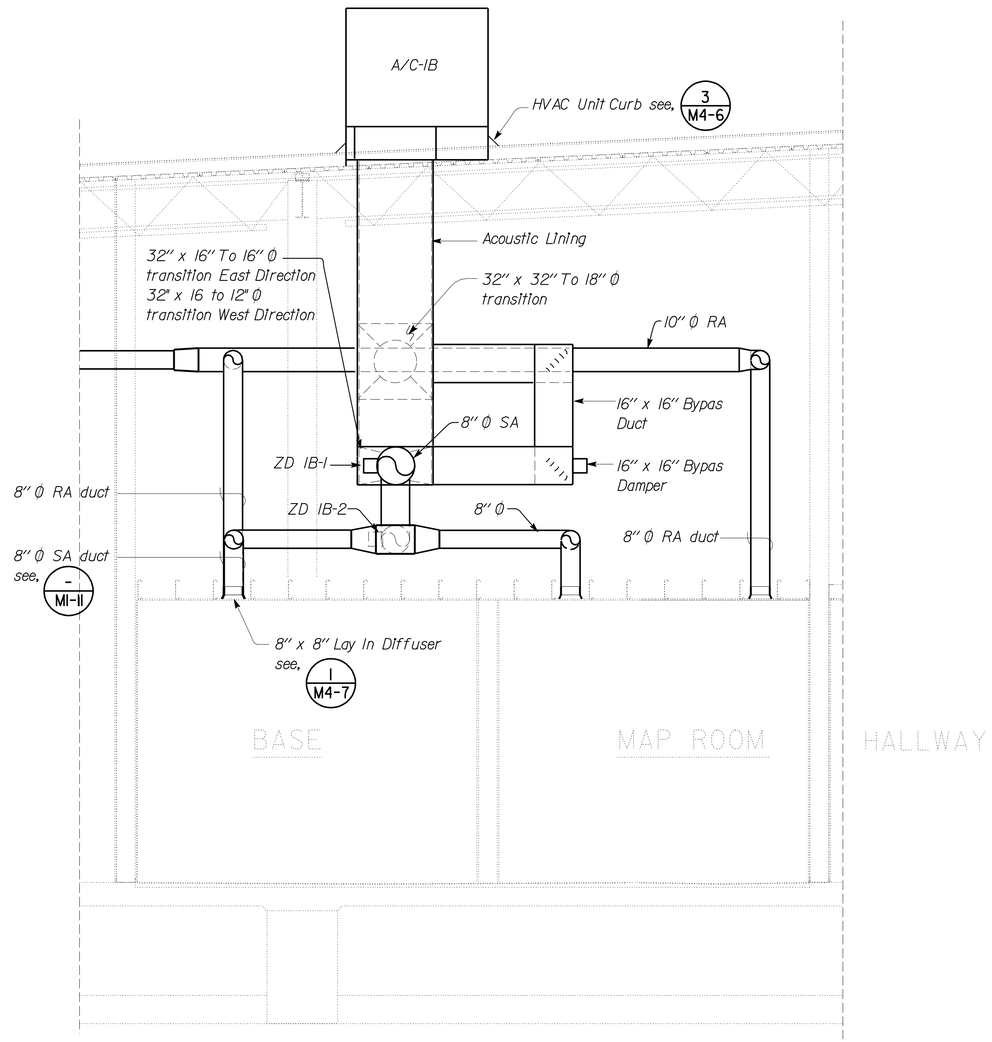

1 ELEVATION A/C-1B

SCALE: 3/8" = 1'-0"

Note:

1. *Duct sizes are clear inside dimensions. Overall duct size to account for acoustic lining where present.*
2. *SA and RA duct drop/rise shall have acoustic lining from unit to point indicated.*
3. *32" x 16" RA rise to AC-1B on roof. Transition to unit connection size in rise*
4. *Duct Supports per SMACNA*
5. *Bypass Damper Pressure Sensor shall be located and installed per manufacturer's specifications.*

THIS DRAWING ACCURATE FOR MECHANICAL WORK ONLY

	BY	CHECKED
DESIGN	Mark Hedglin	Tom Hatam
DETAILS	Mark Hedglin	Tom Hatam
QUANTITIES	Mark Hedglin	Tom Hatam

STATE OF CALIFORNIA DEPARTMENT OF TRANSPORTATION

DIVISION OF ENGINEERING SERVICES ELECTRICAL-MECHANICAL-WATER AND WASTEWATER DESIGN

BRIDGE NO. 33M5785 POST MILE 2.2

SFOBB MAINTENANCE COMPLEX

BUILDING IB — BUILDING SECTION

SHEET **M1-18**

TAEMWW Imperial Rev. 7/10
FILE => m1_18.dgn
DATE PLOTTED => 25-OCT-2012 TIME PLOTTED => 15:34

ORIGINAL SCALE IN INCHES FOR REDUCED PLANS 0 1 2 3

UNIT 3615
PROJECT NUMBER & PHASE 04120006661
EA 014081

DISREGARD PRINTS BEARING EARLIER REVISION DATES → 05-08-12 05-25-12

REVISION DATES (PRELIMINARY STAGE ONLY) SHEET OF

USERNAME => s123631 DATE PLOTTED => 25-OCT-2012 TIME PLOTTED => 15:34

V1=1

DIST.	COUNTY	ROUTE	POST MILES TOTAL PROJECT	SHEET NO.	TOTAL SHEETS
04	Ala	80	2.2	550	800

REGISTERED MECHANICAL ENGINEER 05-25-12 DATE

REGISTERED PROFESSIONAL ENGINEER MARK HEDGLIN No. M32912 Exp. 9-30-12 MECH STATE OF CALIFORNIA

10-22-12
PLANS APPROVAL DATE

The State of California or its officers or agents shall not be responsible for the accuracy or completeness of scanned copies of this plan sheet.

CALIFORNIA STATE FIRE MARSHAL APPROVED
Approval of this plan does not authorize or approve any omission or deviation from applicable regulations. Final approval is subject to field inspection. One set of approved plans shall be available on the project site at all times.
Reviewed by: JOHN E WOODS, SDSFM
Approval date: 8-22-12

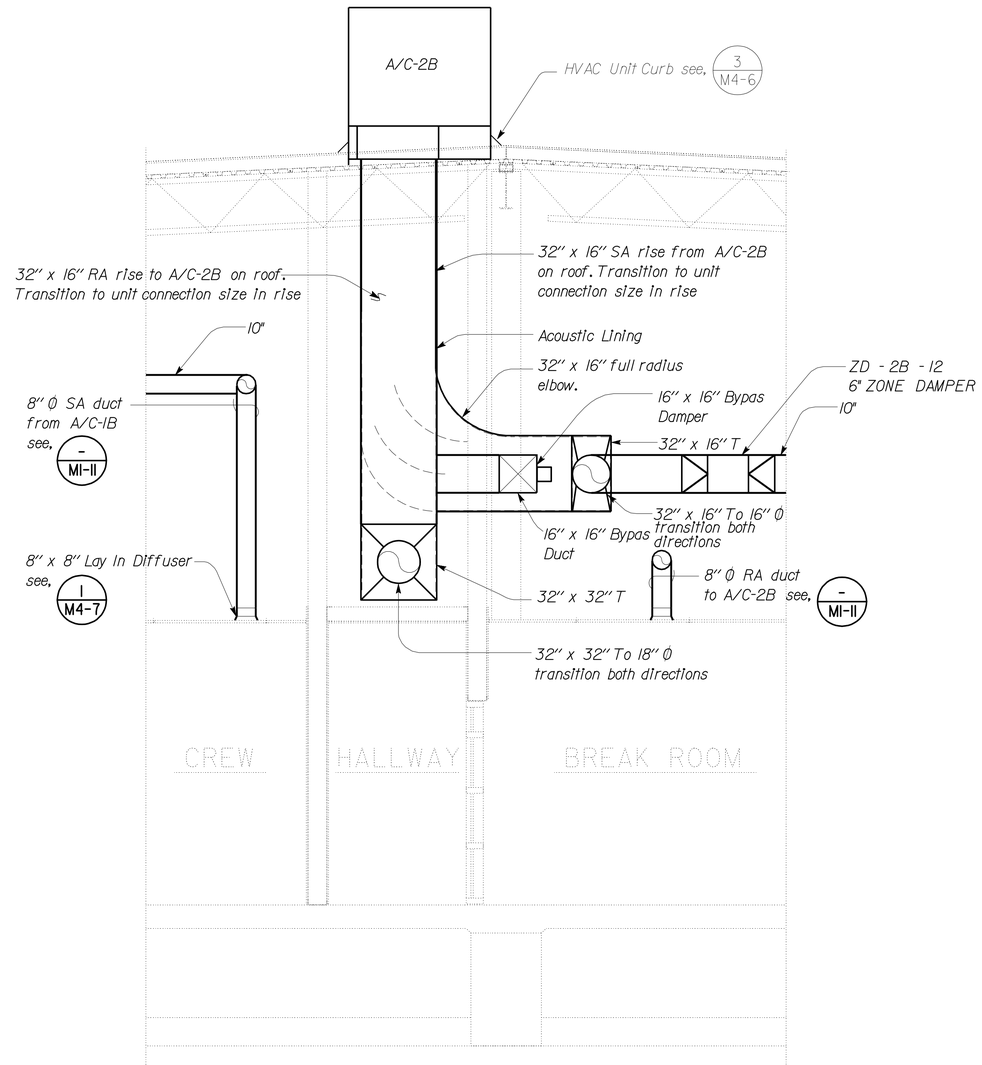

1 ELEVATION A/C-2B

SCALE: 3/4" = 1'-0"

Note:

1. *Duct sizes are clear inside dimensions. Overall duct size to account for acoustic lining where present.*
2. *SA and RA duct drop/rise shall have acoustic lining from unit to point indicated.*
3. *Duct Supports per SMACNA*
4. *Bypass Damper Pressure Sensor shall be located and installed per manufacturer's specifications.*

THIS DRAWING ACCURATE FOR MECHANICAL WORK ONLY

	BY	CHECKED
DESIGN	Mark Hedglin	Tom Hatam
DETAILS	Mark Hedglin	Tom Hatam
QUANTITIES	Mark Hedglin	Tom Hatam

STATE OF CALIFORNIA DEPARTMENT OF TRANSPORTATION

DIVISION OF ENGINEERING SERVICES
ELECTRICAL-MECHANICAL-WATER AND WASTEWATER DESIGN

BRIDGE NO. 33M5785
POST MILE 2.2

SFOBB MAINTENANCE COMPLEX
BUILDING IB — BUILDING SECTION

SHEET **M1-19**

TAEMWW Imperial Rev. 7/10
FILE => m1_19.dgn
DATE PLOTTED => 02-NOV-2012 TIME PLOTTED => 09:55
ORIGINAL SCALE IN INCHES FOR REDUCED PLANS 0 1 2 3
UNIT 3615
PROJECT NUMBER & PHASE 04120006661
EA 014081
DISREGARD PRINTS BEARING EARLIER REVISION DATES → 05-08-12 05-25-12
REVISION DATES (PRELIMINARY STAGE ONLY) SHEET OF
USERNAME => s109858 DATE PLOTTED => 02-NOV-2012 TIME PLOTTED => 09:55
V|=|

DIST.	COUNTY	ROUTE	POST MILES TOTAL PROJECT	SHEET NO.	TOTAL SHEETS
04	Ala	80	2.2	551	800

Christopher M. Faria 05-25-12
REGISTERED MECHANICAL ENGINEER DATE

REGISTERED PROFESSIONAL ENGINEER
CHRISTOPHER M. FARIA
No. M30419
Exp. 12-31-13
MECH
STATE OF CALIFORNIA

10-22-12
PLANS APPROVAL DATE

The State of California or its officers or agents shall not be responsible for the accuracy or completeness of scanned copies of this plan sheet.

CALIFORNIA STATE FIRE MARSHAL APPROVED
Approval of this plan does not authorize or approve any omission or deviation from applicable regulations. Final approval is subject to field inspection. One set of approved plans shall be available on the project site at all times.
Reviewed by: JOHN E WOODS, SDSFM
Approval date: 8-22-12

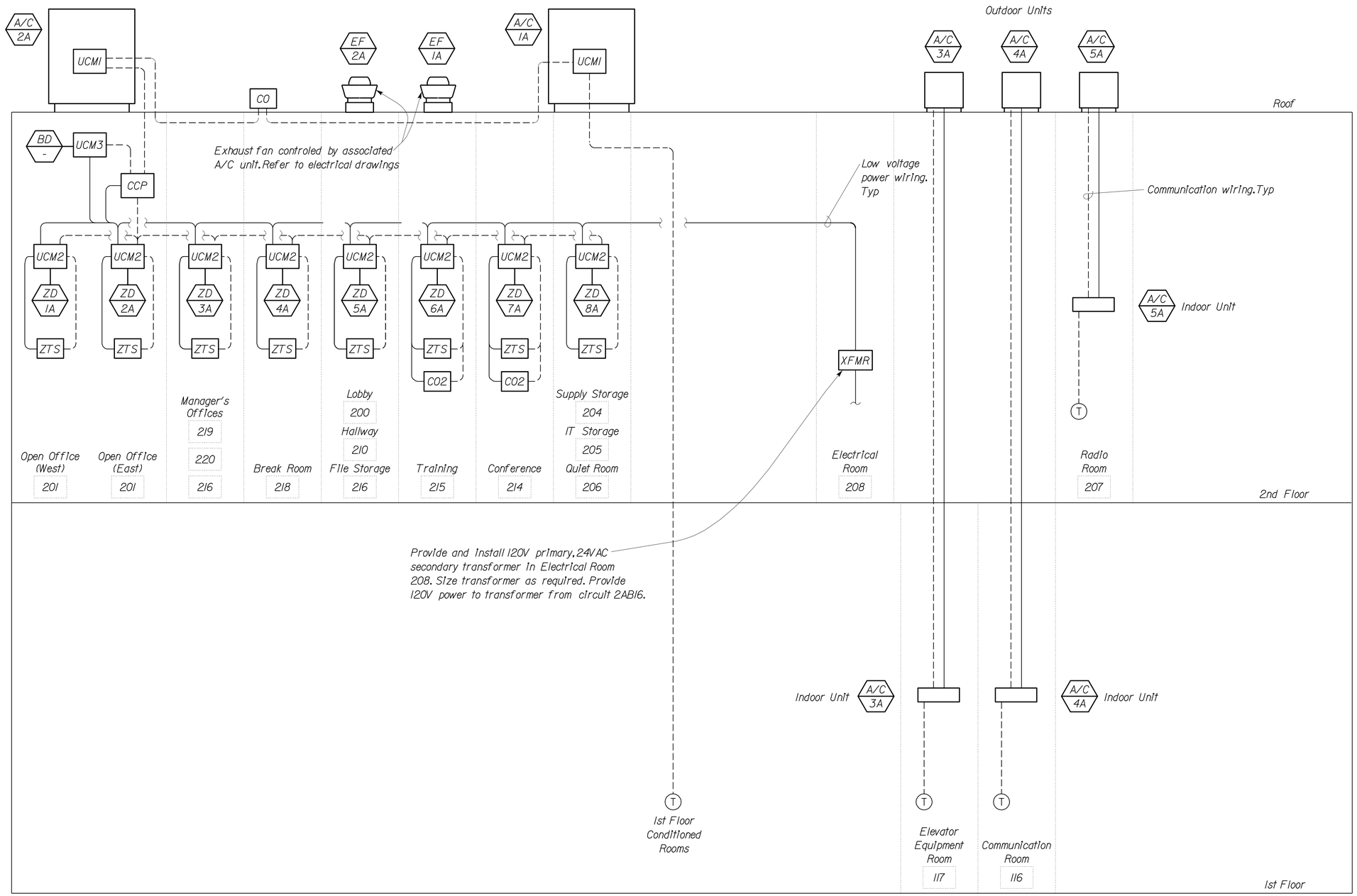

BD -	Bypass Damper
CCP	Central Control Panel
CO2	Carbon Dioxide Sensor
CO	Carbon Monoxide Sensor
OCS	Occupancy Sensor
XFMR	120 V to 24 V Transformer
UCM1	HVAC Unit Control Module
UCM2	Zone Damper Unit Control Module
UCM3	Bypass Damper Unit Control Module
ZD -	Zone Damper
ZTS	Zone Temperature Sensor

THIS DRAWING ACCURATE FOR MECHANICAL WORK ONLY

	BY	CHECKED
DESIGN	Chris Faria	Tom Hatam
DETAILS	Angela Chen	Tom Hatam
QUANTITIES	Chris Faria	Tom Hatam

STATE OF CALIFORNIA
DEPARTMENT OF TRANSPORTATION

DIVISION OF ENGINEERING SERVICES
ELECTRICAL-MECHANICAL-WATER AND WASTEWATER DESIGN

BRIDGE NO. 33M5785
POST MILE 2.2

SFOBB MAINTENANCE COMPLEX
BUILDING IA
CONTROL DIAGRAM - I

SHEET **M1-20**

TAEMWW Imperial Rev. 7/10
FILE => m1_20.dgn
DATE PLOTTED => 02-NOV-2012 TIME PLOTTED => 09:55
ORIGINAL SCALE IN INCHES FOR REDUCED PLANS 0 1 2 3
UNIT 3615
PROJECT NUMBER & PHASE 04120006661
EA 014081
DISREGARD PRINTS BEARING EARLIER REVISION DATES → 05-08-12 05-25-12
REVISION DATES (PRELIMINARY STAGE ONLY) SHEET OF

USERNAME => s109858 DATE PLOTTED => 02-NOV-2012 TIME PLOTTED => 09:55
V1=1

DIST.	COUNTY	ROUTE	POST MILES TOTAL PROJECT	SHEET NO.	TOTAL SHEETS
04	Ala	80	2.2	552	800

REGISTERED MECHANICAL ENGINEER — 05-25-12 DATE

REGISTERED PROFESSIONAL ENGINEER — MARK HEDGLIN — No. M32912 — Exp. 9-30-12 MECH — STATE OF CALIFORNIA

10-22-12
PLANS APPROVAL DATE

The State of California or its officers or agents shall not be responsible for the accuracy or completeness of scanned copies of this plan sheet.

CALIFORNIA STATE FIRE MARSHAL APPROVED

Approval of this plan does not authorize or approve any omission or deviation from applicable regulations. Final approval is subject to field inspection. One set of approved plans shall be available on the project site at all times.

Reviewed by: JOHN E WOODS, SDSFM

Approval date: 8-22-12

BUILDING B NORTH AREA

NO SCALE

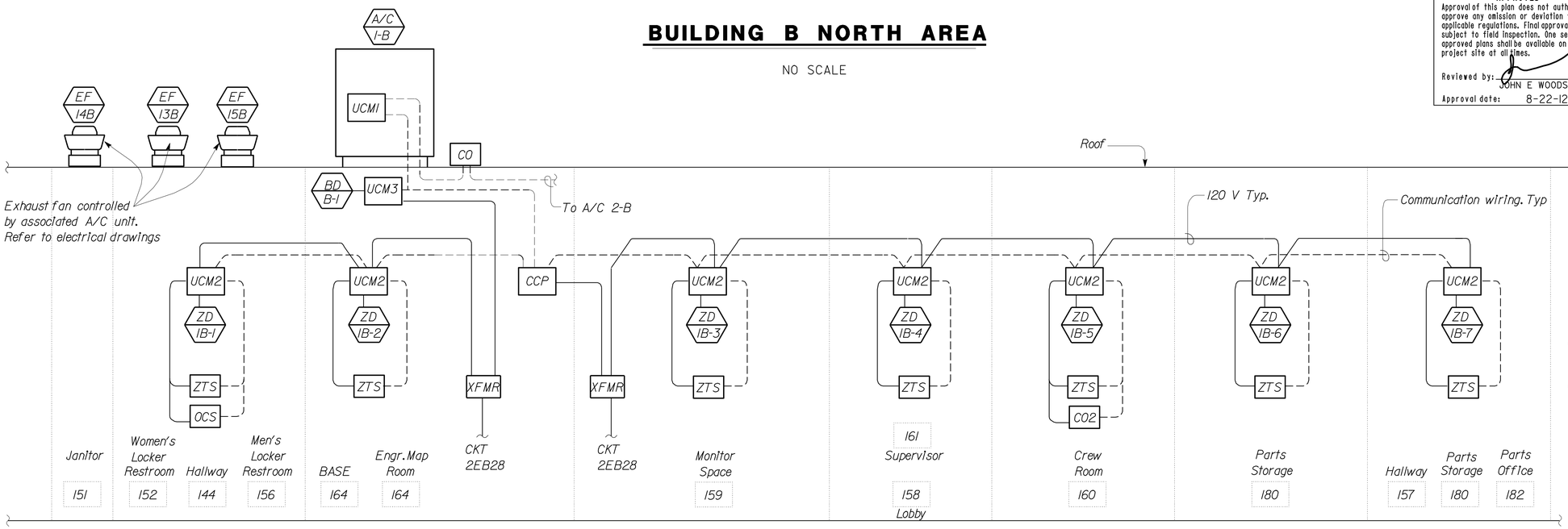

Note:
All Other HVAC Equipment In Building B Not Shown on Control Diagram Shall Be Locally Controlled.

BD -	Bypass Damper	XFMR	120 V to 24 V Transformer
ZD -	Zone Damper	UCM1	HVAC Unit Control Module
CCP	Central Control Panel	UCM2	Zone Damper Unit Control Module
CO2	Carbon Dioxide Sensor	UCM3	Bypass Damper Unit Control Module
CO	Carbon Monoxide Sensor	ZTS	Zone Temperature Sensor
T	Thermostat		

BUILDING B SOUTH AREA

NO SCALE

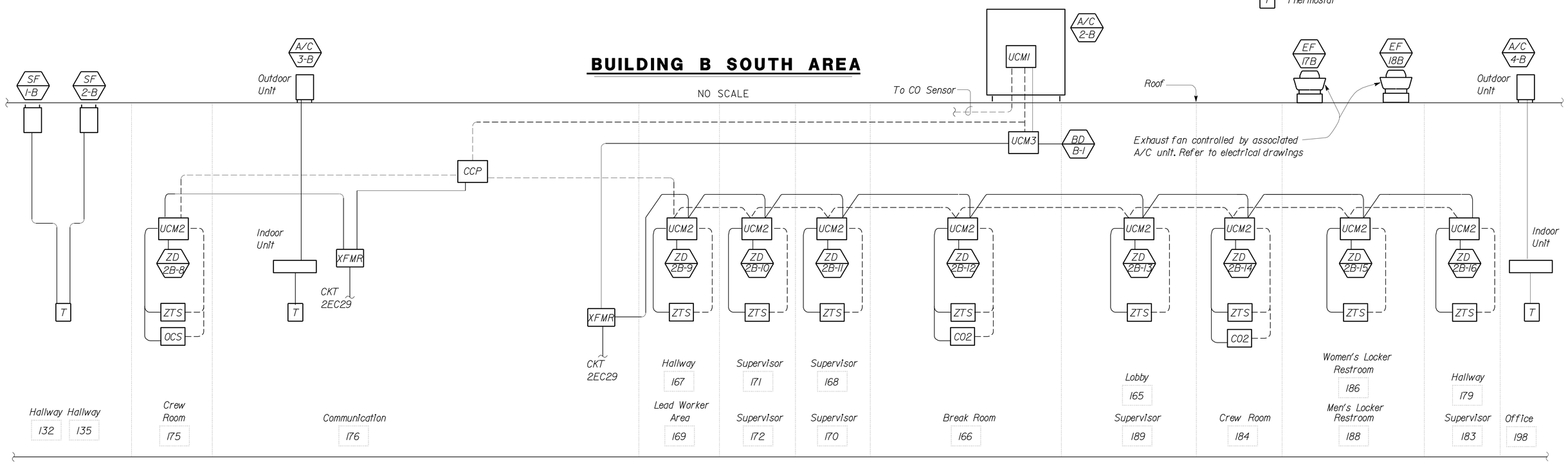

THIS DRAWING ACCURATE FOR MECHANICAL WORK ONLY

	BY	CHECKED
DESIGN	Mark Hedglin	Tom Hatam
DETAILS	Mark Hedglin	Tom Hatam
QUANTITIES	Mark Hedglin	Tom Hatam

STATE OF CALIFORNIA
DEPARTMENT OF TRANSPORTATION

DIVISION OF ENGINEERING SERVICES
ELECTRICAL-MECHANICAL-WATER AND WASTEWATER DESIGN

BRIDGE NO. 33M5785
POST MILE 2.2

SFOBB MAINTENANCE COMPLEX

BUILDING IB — CONTROL DIAGRAM 2

SHEET **M1-21**

TAEMWW Imperial Rev. 7/10

FILE => m1_21.dgn
DATE PLOTTED => 25-OCT-2012 TIME PLOTTED => 15:34

ORIGINAL SCALE IN INCHES FOR REDUCED PLANS 0 1 2 3

UNIT 3615
PROJECT NUMBER & PHASE 04120006661
EA 014081

DISREGARD PRINTS BEARING EARLIER REVISION DATES → 05-08-12 05-25-12

REVISION DATES (PRELIMINARY STAGE ONLY) SHEET OF

USERNAME => s123631 DATE PLOTTED => 25-OCT-2012 TIME PLOTTED => 15:34

V|=|

DIST.	COUNTY	ROUTE	POST MILES TOTAL PROJECT	SHEET NO.	TOTAL SHEETS
04	Ala	80	2.2	553	800

CALIFORNIA STATE FIRE MARSHAL APPROVED
Approval of this plan does not authorize or approve any omission or deviation from applicable regulations. Final approval is subject to field inspection. One set of approved plans shall be available on the project site at all times.
Reviewed by: JOHN E WOODS, SDSFM
Approval date: 8-22-12

REGISTERED MECHANICAL ENGINEER — 05-25-12 DATE

REGISTERED PROFESSIONAL ENGINEER — MARK HEDGLIN — No. M32912 — Exp. 9-30-12 — MECH — STATE OF CALIFORNIA

10-22-12
PLANS APPROVAL DATE

The State of California or its officers or agents shall not be responsible for the accuracy or completeness of scanned copies of this plan sheet.

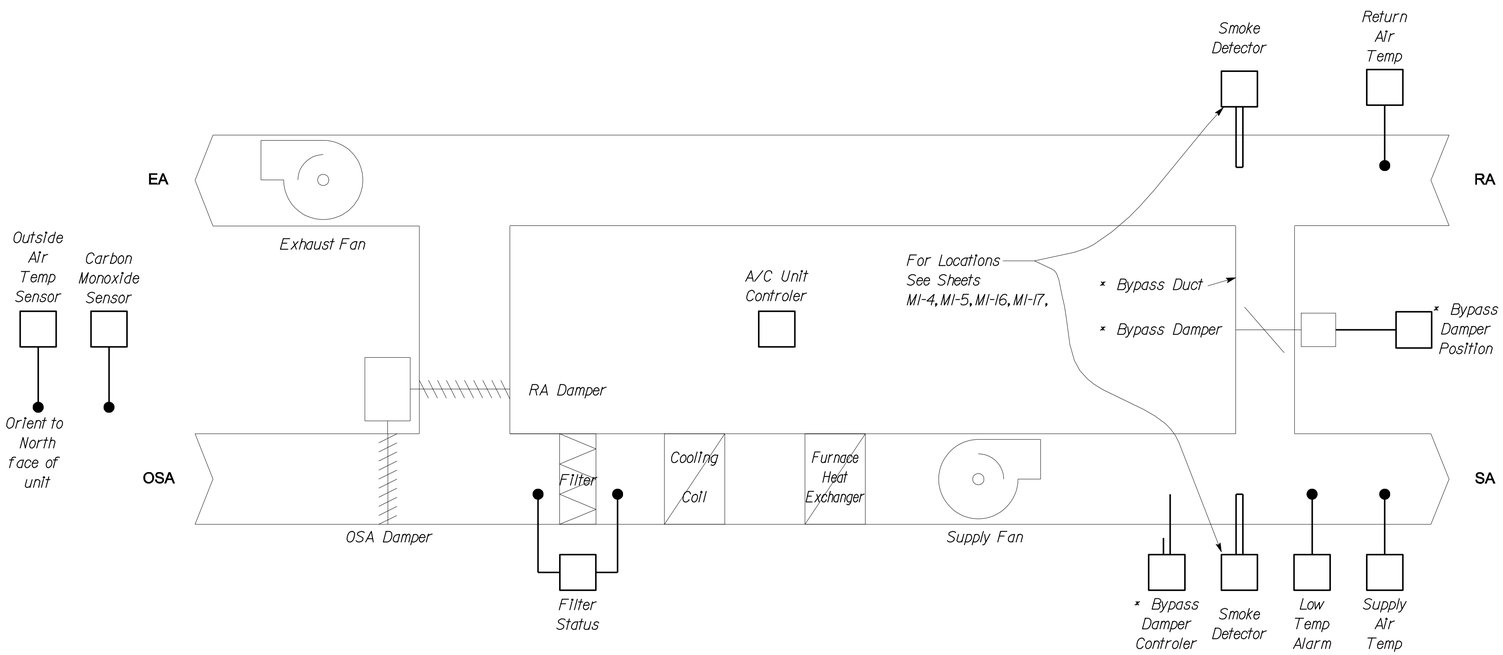

1 AC UNIT CONTROL DETAIL

No Scale

Notes
1. Items identified with an asterisk (*) are not present a A/C-1A.

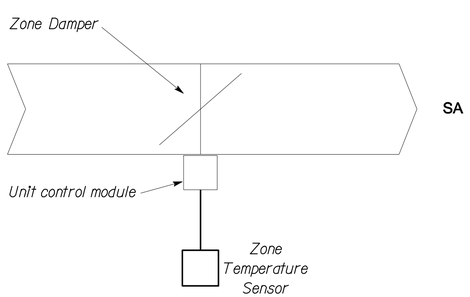

2 TEMPERATURE SENSOR ZONE DAMPER CONTROL DETAIL

No Scale

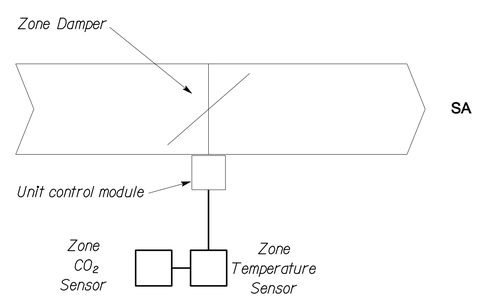

3 TEMPERATURE AND CO_2 SENSOR ZONE DAMPER CONTROL DETAIL

No Scale

THIS DRAWING ACCURATE FOR MECHANICAL WORK ONLY

DESIGN	BY Mark Hedglin	CHECKED Tom Hatam	
DETAILS	BY Mark Hedglin	CHECKED Tom Hatam	
QUANTITIES	BY Mark Hedglin	CHECKED Tom Hatam	

STATE OF CALIFORNIA DEPARTMENT OF TRANSPORTATION

DIVISION OF ENGINEERING SERVICES
ELECTRICAL-MECHANICAL-WATER AND WASTEWATER DESIGN

BRIDGE NO. 33M5785
POST MILE 2.2

SFOBB MAINTENANCE COMPLEX
BUILDING IA & IB
CONTROL DIAGRAM

SHEET **M1-22**

TAEMWW Imperial Rev. 7/10
FILE => m1_22.dgn
DATE PLOTTED => 25-OCT-2012 TIME PLOTTED => 15:34

ORIGINAL SCALE IN INCHES FOR REDUCED PLANS 0 1 2 3

UNIT 3615
PROJECT NUMBER & PHASE 04120006661
EA 014081

DISREGARD PRINTS BEARING EARLIER REVISION DATES
REVISION DATES (PRELIMINARY STAGE ONLY) 05-08-12 05-25-12
SHEET OF

USERNAME => s123631 DATE PLOTTED => 25-OCT-2012 TIME PLOTTED => 15:34

V|=|

DIST.	COUNTY	ROUTE	POST MILES TOTAL PROJECT	SHEET NO.	TOTAL SHEETS
04	Ala	80	2.2	554	800

CALIFORNIA STATE FIRE MARSHAL
APPROVED
Approval of this plan does not authorize or approve any omission or deviation from applicable regulations. Final approval is subject to field inspection. One set of approved plans shall be available on the project site at all times.
Reviewed by: JOHN E WOODS, SDSFM
Approval date: 8-22-12

Christopher M. Faria 05-25-12
REGISTERED MECHANICAL ENGINEER DATE

REGISTERED PROFESSIONAL ENGINEER
CHRISTOPHER M. FARIA
No. M30419
Exp. 12-31-13
MECH
STATE OF CALIFORNIA

10-22-12
PLANS APPROVAL DATE

The State of California or its officers or agents shall not be responsible for the accuracy or completeness of scanned copies of this plan sheet.

ROOFTOP AC: (A/C-1A)
The A/C unit will be enabled according to the building occupied schedule. A manual after hours override timer shall be provided to allow the unit to operate during the unoccupied schedule time if occupants are present in the building. The occupied schedule shall be adjustable and initially set to run Monday thru Friday from 6am to 6pm and shall exclude state holidays. The overide shall be initially set to 2hrs.

SUPPLY/RETURN AIR SMOKE DETECTION:
The A/C unit shall shut down upon the detection of smoke in the supply or return air. The smoke detector shall be a manual reset type.

SUPPLY FAN:
The supply fan will run whenever the A/C unit is enabled unless the A/C unit has been shut down by a safety device.

EXHAUST FAN (A/C unit powered exhaust):
The exhaust fan shall operate whenever the outside air damper is at any position other than the minimum position and shall vary in volume to be 90% of the OA intake. Exhaust fan shall shut down per the schedule or a safety device.

SUPPLY AIR TEMPERATURE:
The A/C unit controller will maintain the supply air temperature according to the thermostat's call for cooling or heating. The A/C unit controller will stage the unit cooling or heating systems to maintain the supply air temperature in order to satisfy the room thermostat.

The A/C unit set points shall be 78 °F ± 2 °F for cooling and 68 °F ± 2°F for heating. The set points shall be adjustable.

LOW LIMIT SET POINT:
During the unoccupied schedule time the A/C unit shall operate to maintain the low limit set point. The low limit set point shall be 55 °F. The set point shall be adjustable.

ECONOMIZER OPERATION:
The outside air damper shall have a full range of operation. The outside air damper and return air damper shall be linked and shall operate together. The outside air damper shall be closed until energized. Once energized the outside air damper shall modulate between its minimum to full open based on the following:

1. If a room CO2 sensor senses a CO2 level greater than the set point of 750 ppm ± 100 ppm for five minutes the damper shall modulate to maintain the CO2 level below the set point. The set point,rang and time period shall be adjustable.
2. If the unit is in the cooling mode and the outside air temperature is below the return air temperature ± 2°F the damper shall modulate open to provide additional outside air as free cooling. The outside air damper shall modulate between fully open and the minimum position to maintain a supply air temperature of 55 °F. If the supply air temperature cannot be maintained at 55 °F by use of the economizer,mechanical refrigeration will be used in addition to the economizer to maintain the supply air temperature at 55 °F.

The outside air damper shall return to its fully close position for any of the following conditions:

1. The A/C unit is off.
2. The A/C unit has been shut down for a safety reason.
3. The roof top CO sensor senses a CO level greater than 35 ± 5 ppm. The set point and range shall be adjustable.

FILTER STATUS:
The filter status sensor shall monitor the differential pressure across the filter. The dirty filter offset shall be adjustable.

SPLIT SYSTEM A/C: (A/C-3A,A/C-4A,A/C-5A,& A/C-3B)
The cooling only split system A/C units shall be enabled all the time. The unit will cycle on and off to maintain the thermostats set point.

The A/C unit set point shall be 78 °F. The set point shall be adjustable.

SPLIT SYSTEM HEAT PUMP A/C: (A/C-4B)
The split system heat pump shall be enabled by a local thermostat inside the indoor unit. The unit will cycle on and off to maintain the thermostat's set point.

SUPPLY FAN WITH DUCT HEATER: SF-1B & SF-2B)
The supply fans will be enabled according to the buildings occupied schedule. Both units will be controlled by a programable thermostat. The supply fans will maintain a constant air flow of at least 150 CFM. The heating element will cycle on to maintain the thermostat's set point. The set point shall be adjustable.

BUILDING EXHAUST FANS:
(EF-1A,EF-2A,EF-13B,EF-14B,EF-15B,EF-17B,& EF-18B)
The building exhaust fans shall run whenever the supply fan of the A/C unit associated with them runs. The building exhaust fans will not run when the supply fan of the A/C unit associated with them is off. This interlocking shall be accomplished by providing a 24 volt,AC,output from the rooftop unit for use by electrical discipline.

ROOFTOP A/C WITH ZONE AND BYPASS DAMPERS: (A/C-2A,A/C-1B,& A/C-2B)
The A/C unit will be enabled according to the building occupied schedule. A manual after hours override timer shall be provided to allow the unit to operate during the unoccupied schedule time if occupants are present in the building. The occupied schedule shall be adjustable and initially set to run Monday thru Friday from 6am to 6pm and shall exclude state holidays. The overide shall be initially set to 2 hrs.

SUPPLY/RETRURN AIR SMOKE DETECTION:
The A/C unit shall shut down upon the detection of smoke in the supply or return air. The smoke detector shall be a manual reset type.

SUPPLY FAN:
The supply fan will run whenever the A/C unit is enabled unless the A/C unit has been shut down by a safety device.

EXHAUST FAN (A/C unit powered exhaust):
The exhaust fan shall operate whenever the outside air damper is at any position other than the minimum position and shall vary in volume to be 90% of the OA intake. Exhaust fan shall shut down per the schedule or a safety device.

SUPPLY AIR TEMPERATURE:
The A/C unit controller will maintain the supply air temperature as commanded by the CCP. The A/C unit controller will stage the unit cooling or heating systems to maintain the supply air temperature in order to satisfy the room temperature sensor.

The A/C unit set points shall be 78 °F ± 2 °F for cooling and 68 °F ± 2°F for heating. The set points and range shall be adjustable.

LOW LIMIT SET POINT:
During the unoccupied schedule time the A/C unit shall operate to maintain the low limit set point. The low limit set point shall be 55 °F ±2 °F The set point shall be adjustable.

ECONOMIZER OPERATION:
The outside air damper shall have a full range of operation. The outside air damper and return air damper shall be linked and shall operate together. The outside air damper shall be closed until energized. Once energized the outside air damper shall modulate between its minimum to full open based on the following:

1. If a room CO2 sensor senses a CO2 level greater than the set point of 750 ppm ± 100 ppm for five minutes the damper shall modulate to maintain the CO2 level below the set point. The set point range and time period shall be adjustable.
2. If the unit is in the cooling mode and the outside air temperature is below the return air temperature ± 2°F the damper shall modulate open to provide additional outside air as free cooling. The outside air damper shall modulate between fully open and the minimum position to maintain a supply air temperature of 55 °F. If the supply air temperature cannot be maintained at 55 °F by use of the economizer,mechanical refrigeration will be used in addition to the economizer to maintain the supply air temperature at 55 °F.

The outside air damper shall return to its fully close position for any of the following conditions:

1. The A/C unit is off.
2. The A/C unit has been shut down for a safety reason.
3. The roof top CO sensor senses a CO level greater than 35 ± 5 ppm. The set point and range shall be adjustable.

FILTER STATUS:
The filter status sensor shall monitor the differential pressure across the filter. The dirty filter offset shall be adjustable.

ZONE DAMPERS:
The zone damper will be modulated by its unit control module from a minimum air flow position to a maximum position according to the zone temperature sensor's call for cooling or heating. Where applicable,CO2 sensor shall overide damper until CO2 set point is reached. Minimum and maximum damper positions shall be adjustable.

BYPASS DAMPER:
The bypass damper will modulate from a minimum air flow position to a maximum position according to the supply air duct pressure sensor.

CENTRAL CONTROL PANEL:
The CCP will monitor all unit control modules associated with its A/C unit. When a "majority" number is reached the CCP will command the A/C unit into either heating or cooling mode as required. Majority number shall be adjustable. CCP units shall be capable of performing system diagnostics, producing alarms, and logging energy usage trend data as called out in the specifications.

THIS DRAWING ACCURATE FOR MECHANICAL WORK ONLY

	BY	CHECKED
DESIGN	Chris Faria/Mark Hedglin	Tom Hatam
DETAILS	Angela Chen	Tom Hatam
QUANTITIES	Chris Faria	Tom Hatam

STATE OF CALIFORNIA
DEPARTMENT OF TRANSPORTATION

DIVISION OF ENGINEERING SERVICES
ELECTRICAL-MECHANICAL-WATER AND WASTEWATER DESIGN

BRIDGE NO. 33M5785
POST MILE 2.2

SFOBB MAINTENANCE COMPLEX
BUILDING 1A & 1B
SEQUENCE OF OPERATION

SHEET M1-23

TAEMWW Imperial Rev. 7/10
FILE => m1_23.dgn
DATE PLOTTED => 25-OCT-2012 TIME PLOTTED => 15:34

ORIGINAL SCALE IN INCHES FOR REDUCED PLANS 0 1 2 3

UNIT 3615
PROJECT NUMBER & PHASE 04120006661
EA 014081

DISREGARD PRINTS BEARING EARLIER REVISION DATES
REVISION DATES (PRELIMINARY STAGE ONLY) 05-08-12 05-25-12
SHEET OF

USERNAME => s123631 DATE PLOTTED => 25-OCT-2012 TIME PLOTTED => 15:34

V|=|

DIST.	COUNTY	ROUTE	POST MILES TOTAL PROJECT	SHEET NO.	TOTAL SHEETS
04	Ala	80	2.2	555	800

CALIFORNIA STATE FIRE MARSHAL APPROVED
Approval of this plan does not authorize or approve any omission or deviation from applicable regulations. Final approval is subject to field inspection. One set of approved plans shall be available on the project site at all times.
Reviewed by: JOHN E WOODS, SDSFM
Approval date: 8-22-12

REGISTERED MECHANICAL ENGINEER — 05-25-12 DATE

REGISTERED PROFESSIONAL ENGINEER — MARK HEDGLIN — No. M32912 — Exp. 9-30-12 — MECH — STATE OF CALIFORNIA

10-22-12
PLANS APPROVAL DATE

The State of California or its officers or agents shall not be responsible for the accuracy or completeness of scanned copies of this plan sheet.

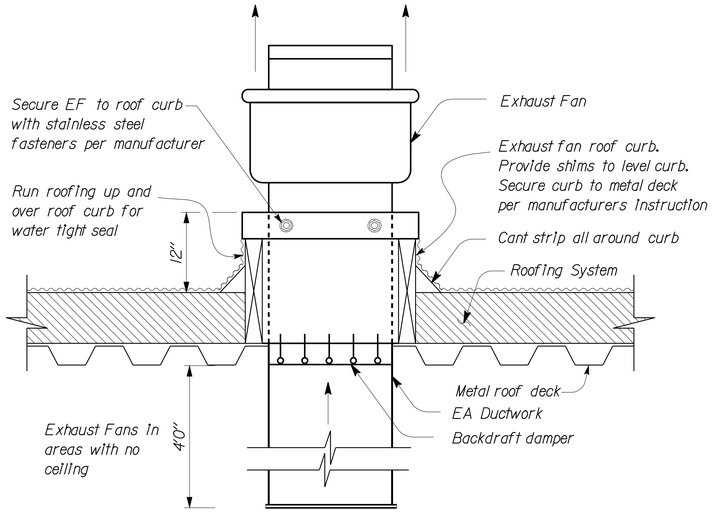

Note:
1. Seal EA duct to roof curb and roof curb to EF for air tight seal.
2. Route electrical service inside roof curb to EF.

1 EXHAUST FAN

NO SCALE

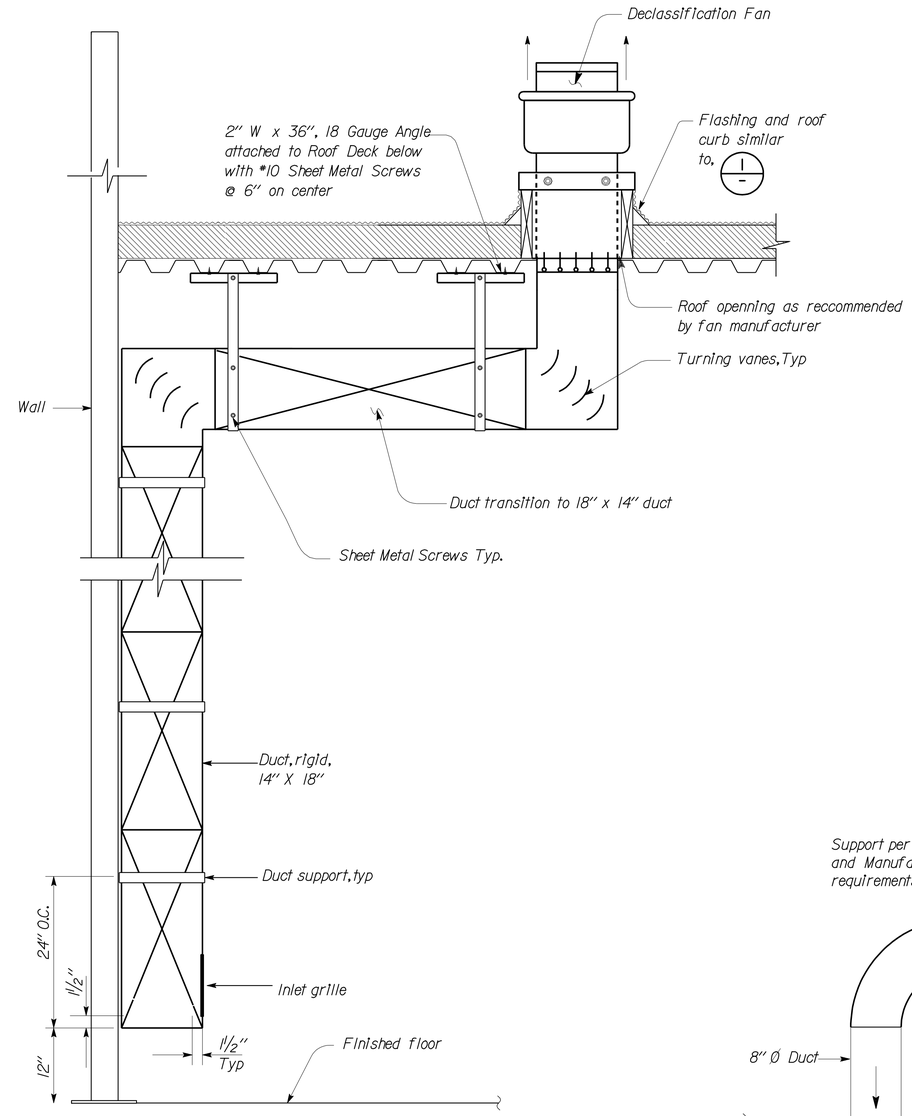

2 DECLASSIFICATION FAN-ELEVATION

NO SCALE

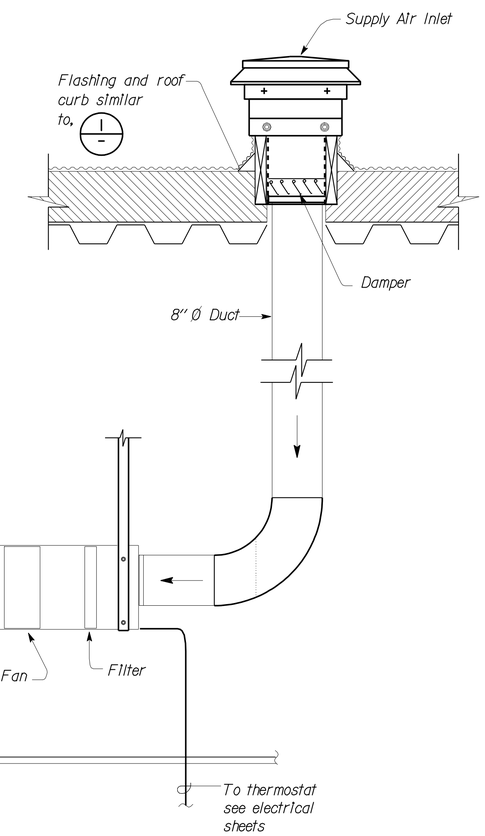

3 SUPPLY FAN & DUCT HEATER

NO SCALE

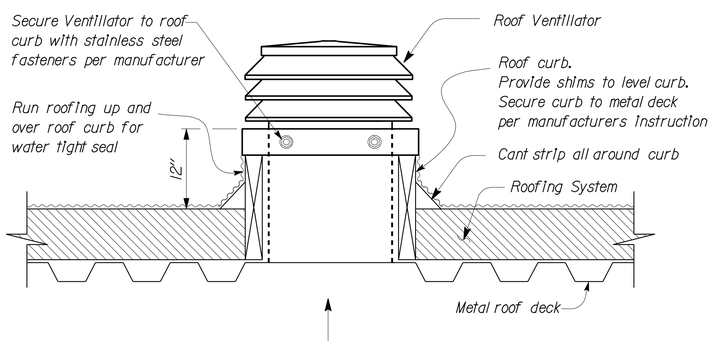

Note:
1. Seal duct to roof curb and roof curb to ventillator for air tight seal.

4 ROOF VENTILATOR

NO SCALE

THIS DRAWING ACCURATE FOR MECHANICAL WORK ONLY

NO SCALE

DESIGN	BY M.Hedglin/Chris Farla	CHECKED Tom Hatam	
DETAILS	BY Rudy Sarte	CHECKED Tom Hatam	
QUANTITIES	BY M.Hedglin/Chris Farla	CHECKED Tom Hatam	

STATE OF CALIFORNIA DEPARTMENT OF TRANSPORTATION

DIVISION OF ENGINEERING SERVICES
ELECTRICAL-MECHANICAL-WATER AND WASTEWATER DESIGN

BRIDGE NO. 33M5785
POST MILE 2.2

SFOBB MAINTENANCE COMPLEX

MECHANICAL DETAILS - I

SHEET **M4-1**

TAEMWW Imperial Rev. 7/10
FILE => m4_1.dgn
DATE PLOTTED => 25-OCT-2012 TIME PLOTTED => 15:34

ORIGINAL SCALE IN INCHES FOR REDUCED PLANS 0 1 2 3

UNIT 3615
PROJECT NUMBER & PHASE 04120006661
EA 014081

DISREGARD PRINTS BEARING EARLIER REVISION DATES → 05-08-12 05-25-12

REVISION DATES (PRELIMINARY STAGE ONLY) SHEET OF

USERNAME => s123631 DATE PLOTTED => 25-OCT-2012 TIME PLOTTED => 15:34

V|=|

DIST.	COUNTY	ROUTE	POST MILES TOTAL PROJECT	SHEET NO.	TOTAL SHEETS
04	Ala	80	2.2	556	800

REGISTERED MECHANICAL ENGINEER 05-25-12 DATE

REGISTERED PROFESSIONAL ENGINEER MARK HEDGLIN No. M32912 Exp. 9-30-12 MECH STATE OF CALIFORNIA

10-22-12
PLANS APPROVAL DATE

The State of California or its officers or agents shall not be responsible for the accuracy or completeness of scanned copies of this plan sheet.

CALIFORNIA STATE FIRE MARSHAL APPROVED
Approval of this plan does not authorize or approve any omission or deviation from applicable regulations. Final approval is subject to field inspection. One set of approved plans shall be available on the project site at all times.
Reviewed by: JOHN E WOODS, SDSFM
Approval date: 8-22-12

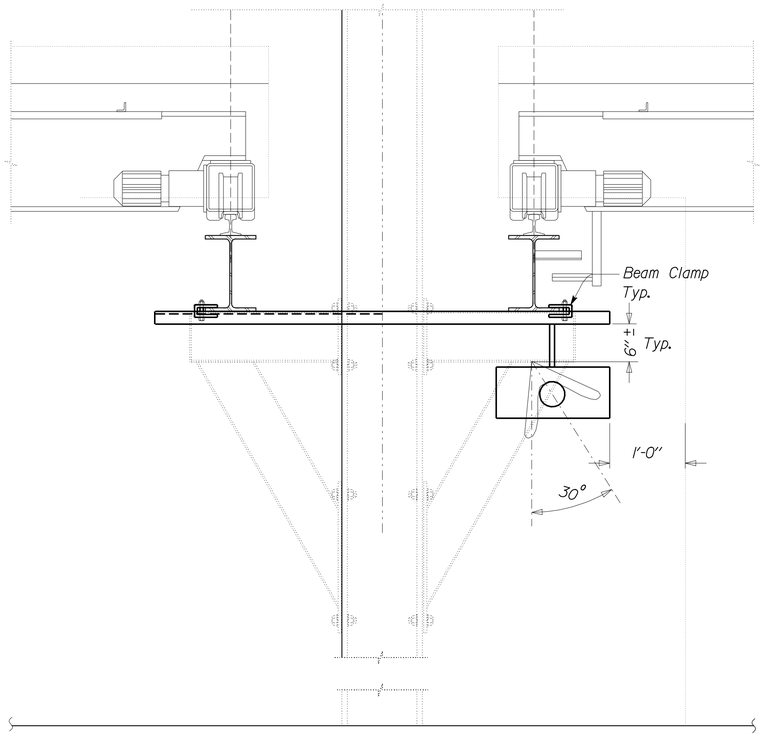

1 LOW INTENSITY RADIANT HEATER

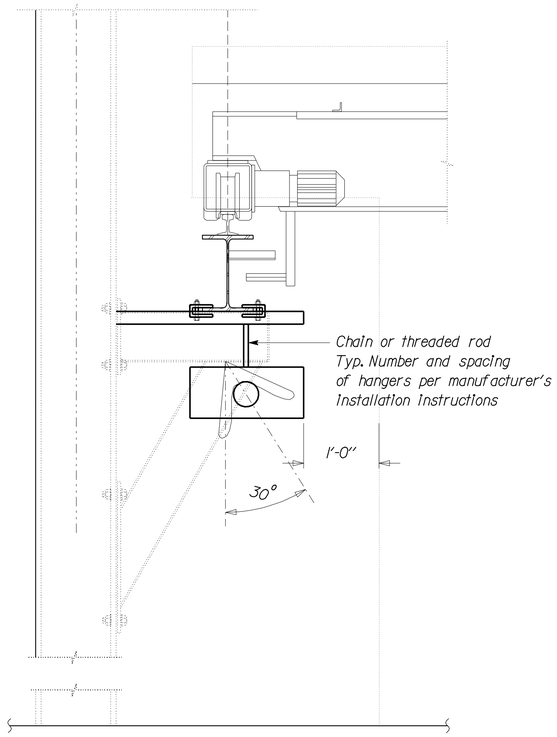

2 LOW INTENSITY RADIANT HEATER

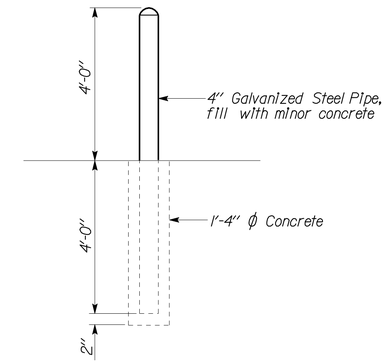

3 GUARD POST

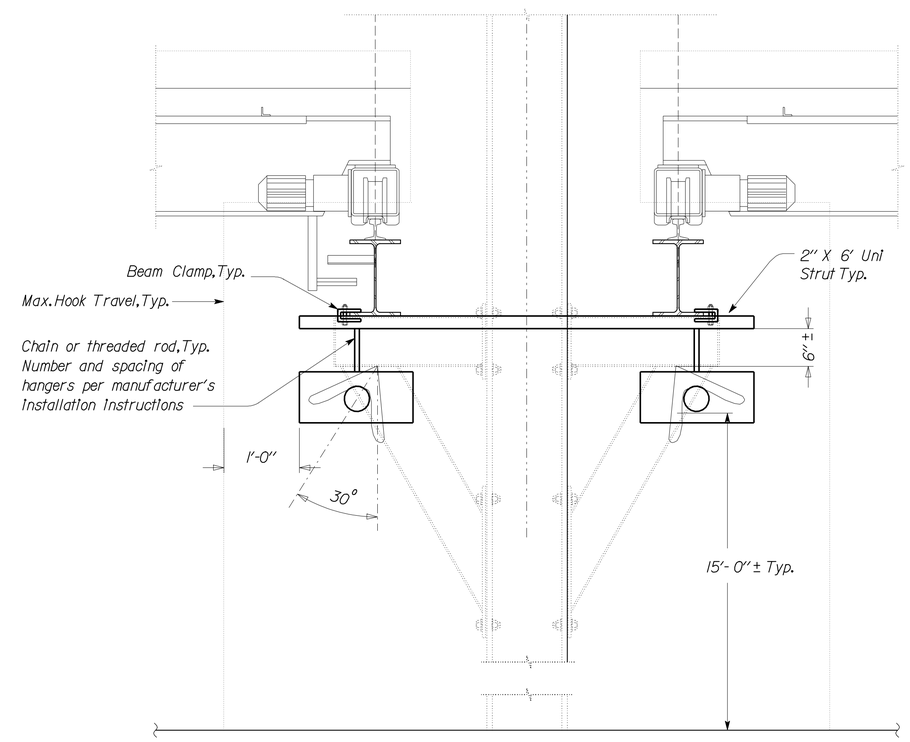

5 LOW INTENSITY RADIANT HEATER

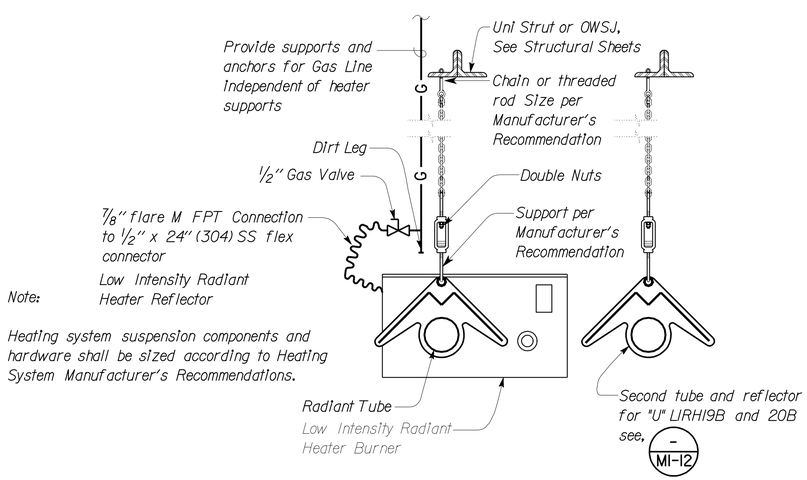

4 LOW INTENSITY RADIANT HEATER

THIS DRAWING ACCURATE FOR MECHANICAL WORK ONLY

DESIGN	BY Mark Hedglin	CHECKED Tom Hatam	
DETAILS	BY Mark Hedglin	CHECKED Tom Hatam	
QUANTITIES	BY Mark Hedglin	CHECKED Tom Hatam	

STATE OF CALIFORNIA DEPARTMENT OF TRANSPORTATION

DIVISION OF ENGINEERING SERVICES
ELECTRICAL-MECHANICAL-WATER AND WASTEWATER DESIGN

BRIDGE NO. 33M5785
POST MILE 2.2

SFOBB MAINTENANCE COMPLEX

MECHANICAL DETAILS - 2

SHEET **M4-2**

TAEMWW Imperial Rev. 7/10
FILE => m4_2.dgn
DATE PLOTTED => 25-OCT-2012 TIME PLOTTED => 15:35
ORIGINAL SCALE IN INCHES FOR REDUCED PLANS 0 1 2 3
UNIT 3615
PROJECT NUMBER & PHASE 04120006661
EA 014081
DISREGARD PRINTS BEARING EARLIER REVISION DATES 05-08-12 05-25-12
REVISION DATES (PRELIMINARY STAGE ONLY) SHEET OF

USERNAME => s123631 DATE PLOTTED => 25-OCT-2012 TIME PLOTTED => 15:35

V|=|

DIST.	COUNTY	ROUTE	POST MILES TOTAL PROJECT	SHEET NO.	TOTAL SHEETS
04	Ala	80	2.2	557	800

CALIFORNIA STATE FIRE MARSHAL APPROVED
Approval of this plan does not authorize or approve any omission or deviation from applicable regulations. Final approval is subject to field inspection. One set of approved plans shall be available on the project site at all times.
Reviewed by: JOHN E WOODS, SDSFM
Approval date: 8-22-12

REGISTERED MECHANICAL ENGINEER — 05-25-12 DATE

REGISTERED PROFESSIONAL ENGINEER — MARK HEDGLIN — No. M32912 — Exp. 9-30-12 — MECH — STATE OF CALIFORNIA

10-22-12
PLANS APPROVAL DATE

The State of California or its officers or agents shall not be responsible for the accuracy or completeness of scanned copies of this plan sheet.

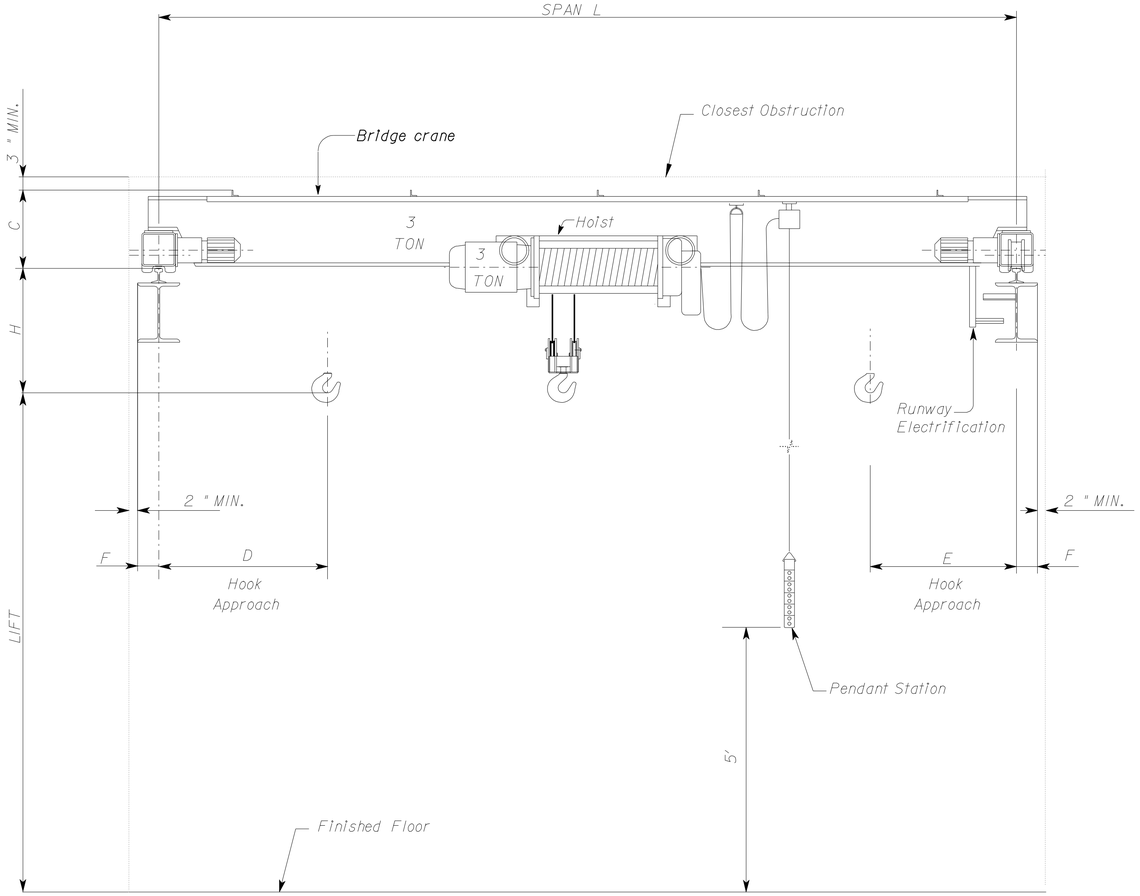

1 BRIDGE CRANE AND HOIST

No Scale

CAP. TONS	SPAN L	A	B	C	F	MIN. J	WHEEL DIA.	# OF WHEELS	W.B.	MAX. WHEEL LOAD LBS.	BRIDGE WEIGHT LBS.	GIRDER TYPE
3	20'-0"	6'-11"	8"	1'-2"	5"	12"	6.3"	4	5'-3"	3600	2100	BEAM

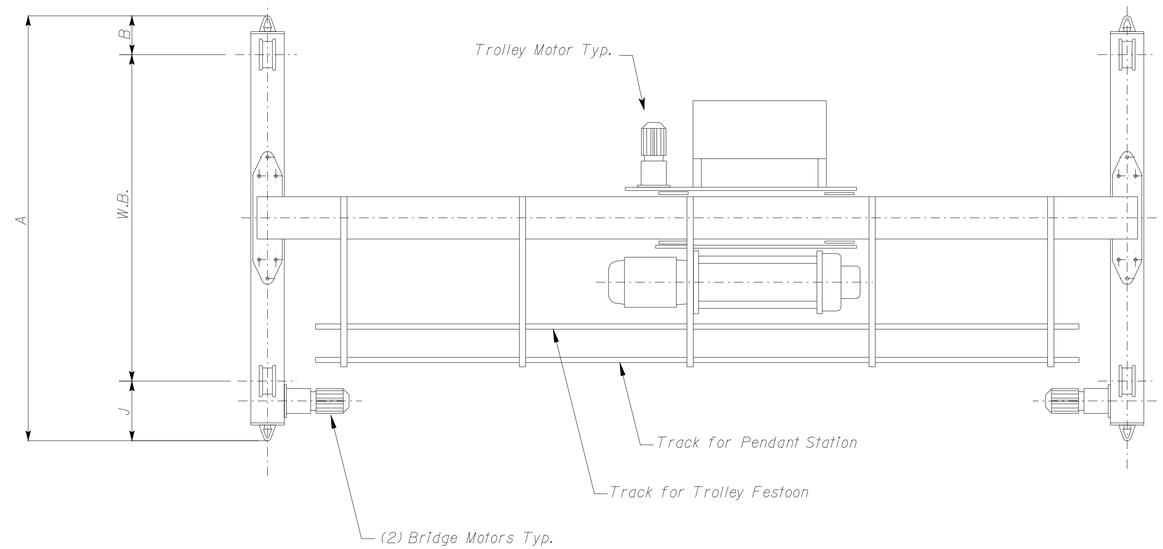

A PLAN VIEW

No Scale

LIFT	23'-3"
TROLLEY WEIGHT	825 LBS.
D	2'-6"
E	3'-0"
H	1'-7 1/2"

HOISTING SPEED	16/4 FPM
BRIDGE SPEED	100/25 FPM
TROLLEY SPEED	67/15 FPM
POWER SUPPLY	460/3/60

NOTES:
1. HOIST CLASSIFICATION: HMI H4 / FEM 3M

THIS DRAWING ACCURATE FOR MECHANICAL WORK ONLY

	BY	CHECKED
DESIGN	Mark Hedglin	Tom Hatam
DETAILS	Rudy Sarte	Tom Hatam
QUANTITIES	Mark Hedglin	Tom Hatam

STATE OF CALIFORNIA DEPARTMENT OF TRANSPORTATION

DIVISION OF ENGINEERING SERVICES
ELECTRICAL-MECHANICAL-WATER AND WASTEWATER DESIGN

BRIDGE NO. 33M5785
POST MILE

SFOBB MAINTENANCE COMPLEX

MECHANICAL DETAILS - 3

SHEET **M4-3**

TAEMWW Imperial Rev. 7/10
FILE => m4_3.dgn
DATE PLOTTED => 02-NOV-2012 TIME PLOTTED => 09:55
ORIGINAL SCALE IN INCHES FOR REDUCED PLANS 0 1 2 3
UNIT 3615
PROJECT NUMBER & PHASE 04120006661
EA 014081
DISREGARD PRINTS BEARING EARLIER REVISION DATES → 05-08-12 05-25-12
REVISION DATES (PRELIMINARY STAGE ONLY) SHEET OF
USERNAME => s109858 DATE PLOTTED => 02-NOV-2012 TIME PLOTTED => 09:55
VI=1

DIST.	COUNTY	ROUTE	POST MILES TOTAL PROJECT	SHEET NO.	TOTAL SHEETS
04	Ala	80	2.2	558	800

REGISTERED MECHANICAL ENGINEER — 05-25-12 DATE

REGISTERED PROFESSIONAL ENGINEER — MARK HEDGLIN — No. M32912 — Exp. 9-30-12 — MECH — STATE OF CALIFORNIA

10-22-12
PLANS APPROVAL DATE

The State of California or its officers or agents shall not be responsible for the accuracy or completeness of scanned copies of this plan sheet.

CALIFORNIA STATE FIRE MARSHAL APPROVED
Approval of this plan does not authorize or approve any omission or deviation from applicable regulations. Final approval is subject to field inspection. One set of approved plans shall be available on the project site at all times.
Reviewed by: JOHN E WOODS, SDSFM
Approval date: 8-22-12

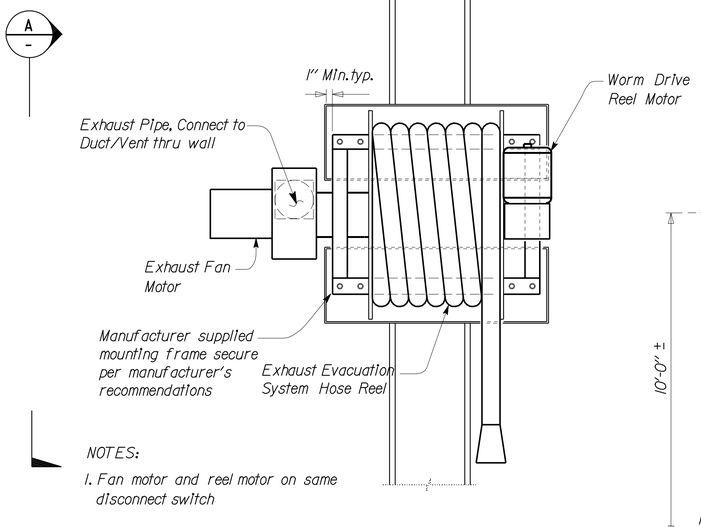

1 EXHAUST EVACUATION HOSE REEL AND FAN

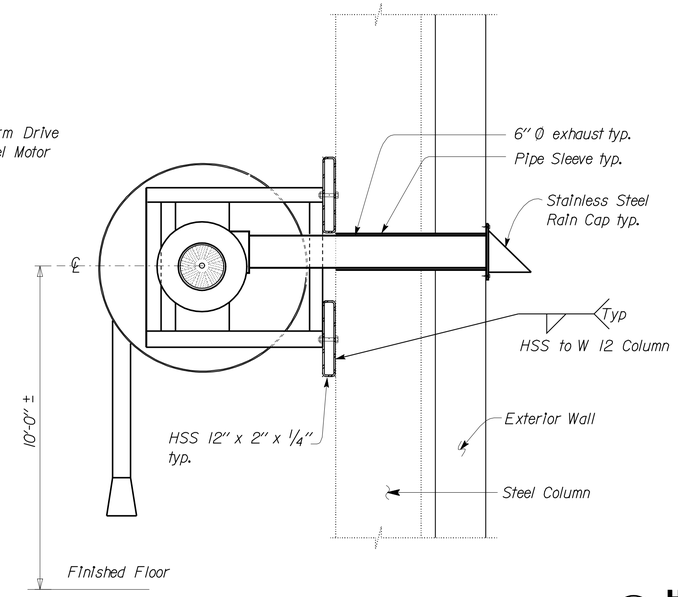

A SECTION VIEW

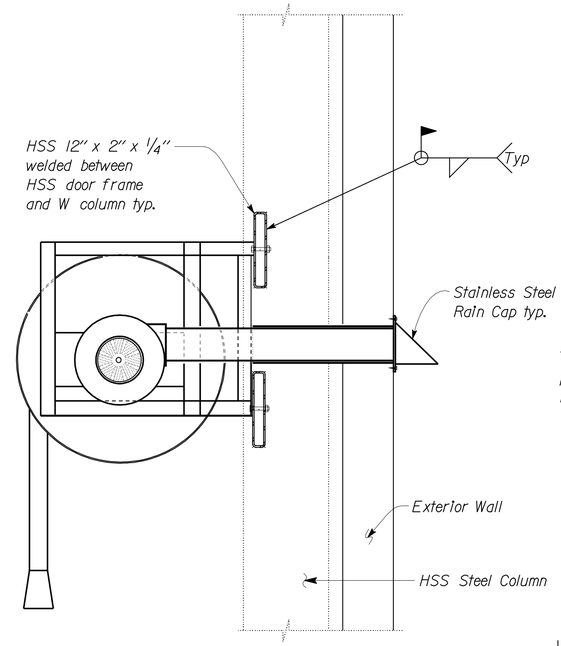

A HSS TO W COLUMN MOUNT

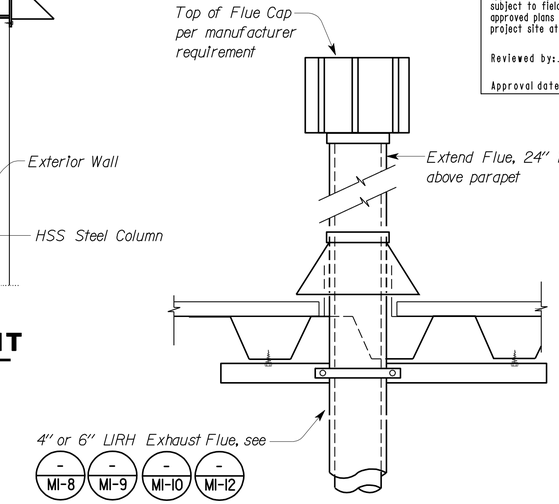

2 EXHAUST FLUE

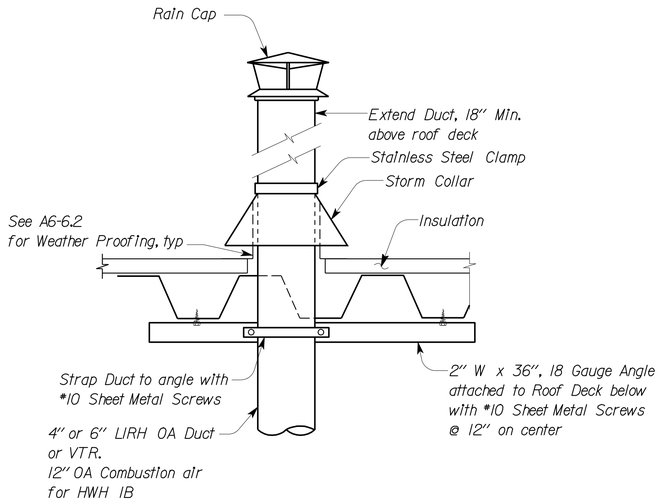

3 OUTSIDE AIR INTAKE / VTR

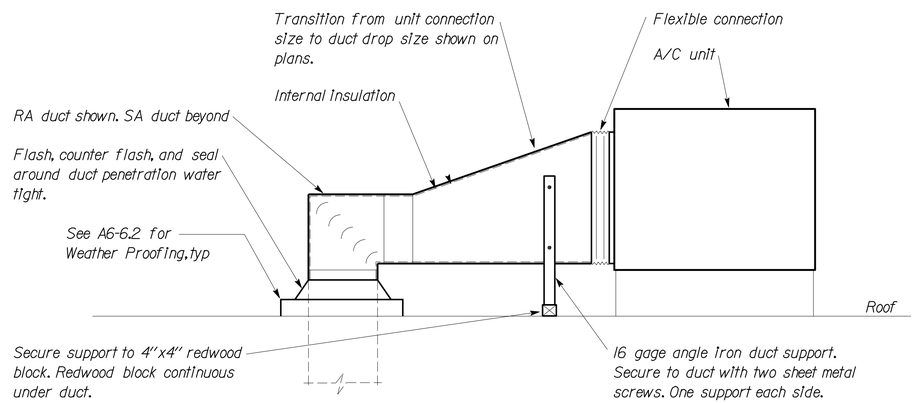

4 DUCT THRU ROOF DETAIL

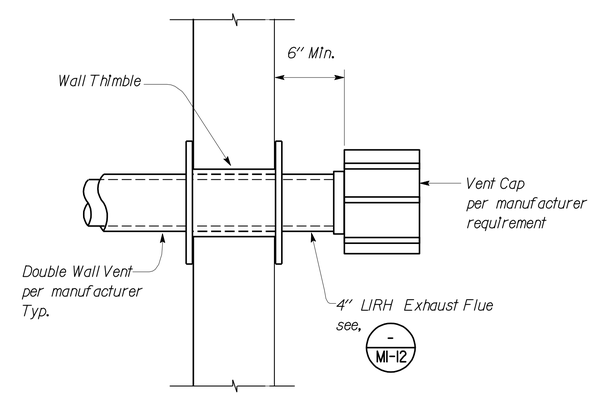

5 LIRH WALL EXHAUST FLUE

THIS DRAWING ACCURATE FOR MECHANICAL WORK ONLY

	BY	CHECKED
DESIGN	Mark Hedglin	Tom Hatam
DETAILS	Angela Chen	Tom Hatam
QUANTITIES	Mark Hedglin	Tom Hatam

STATE OF CALIFORNIA
DEPARTMENT OF TRANSPORTATION

DIVISION OF ENGINEERING SERVICES
ELECTRICAL-MECHANICAL-WATER AND WASTEWATER DESIGN

BRIDGE NO. 33M5785
POST MILE 2.2

SFOBB MAINTENANCE COMPLEX

MECHANICAL DETAILS - 4

SHEET **M4-4**

TAEMWW Imperial Rev. 7/10
FILE => m4_4.dgn
DATE PLOTTED => 02-NOV-2012 TIME PLOTTED => 10:21

ORIGINAL SCALE IN INCHES FOR REDUCED PLANS 0 1 2 3

UNIT 3615
PROJECT NUMBER & PHASE 04120006661
EA 014081

DISREGARD PRINTS BEARING EARLIER REVISION DATES
REVISION DATES (PRELIMINARY STAGE ONLY) 05-08-12 05-25-12
SHEET OF

USERNAME => s12161d4 DATE PLOTTED => 02-NOV-2012 TIME PLOTTED => 10:21

VI=I

DIST.	COUNTY	ROUTE	POST MILES TOTAL PROJECT	SHEET NO.	TOTAL SHEETS
04	Ala	80	2.2	559	800

CALIFORNIA STATE FIRE MARSHAL APPROVED
Approval of this plan does not authorize or approve any omission or deviation from applicable regulations. Final approval is subject to field inspection. One set of approved plans shall be available on the project site at all times.
Reviewed by: JOHN E WOODS, SDSFM
Approval date: 8-22-12

REGISTERED MECHANICAL ENGINEER — 05-25-12 DATE

REGISTERED PROFESSIONAL ENGINEER — MARK HEDGLIN — No. M32912 — Exp. 9-30-12 — MECH — STATE OF CALIFORNIA

10-22-12
PLANS APPROVAL DATE

The State of California or its officers or agents shall not be responsible for the accuracy or completeness of scanned copies of this plan sheet.

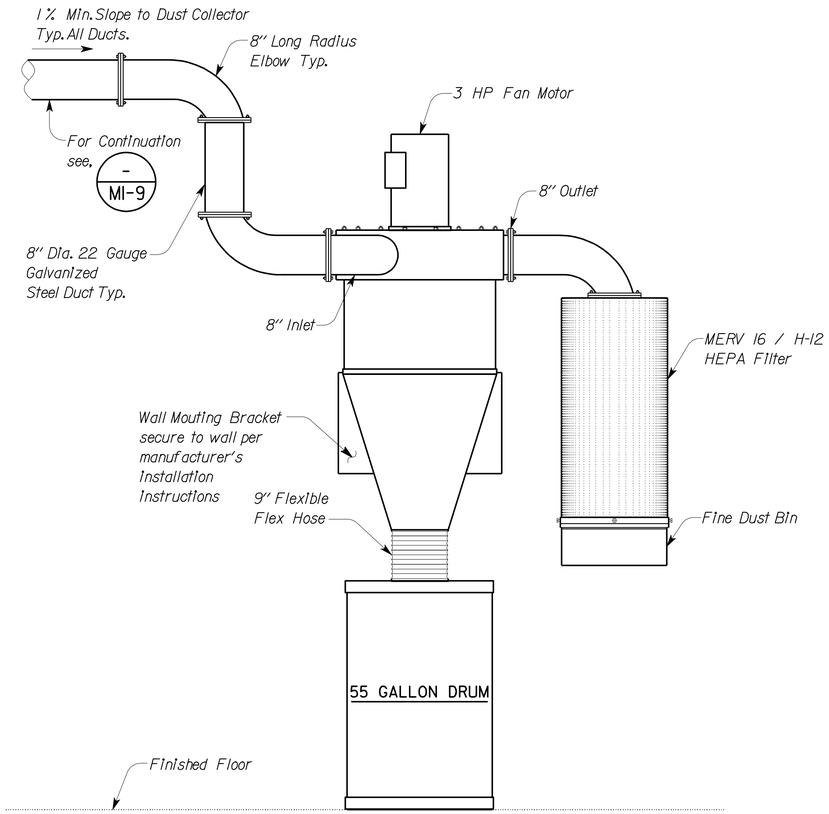

1 **DUST COLLECTOR**

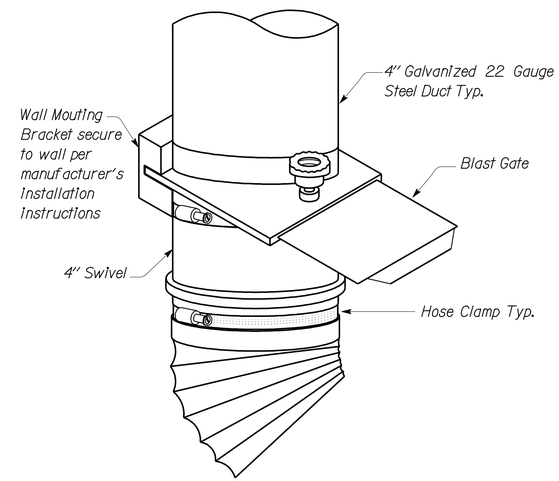

2 **SWIVEL HOSE ATTACHMENT**

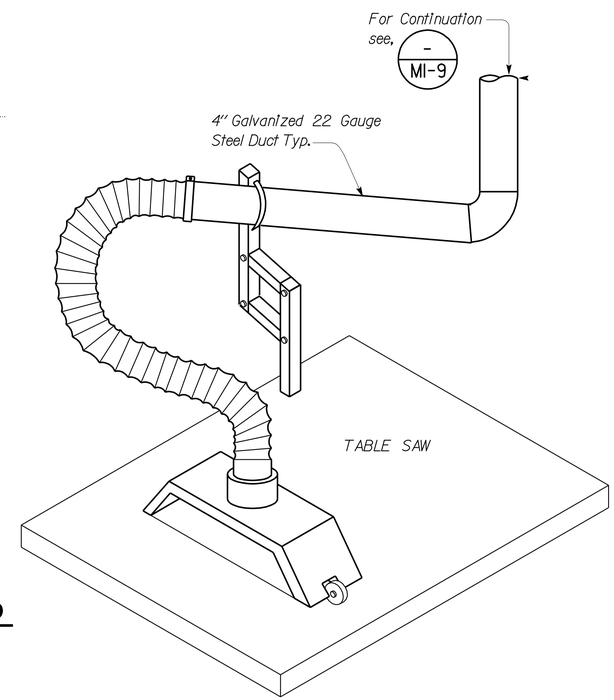

3 **OVERARM DUST HOOD**

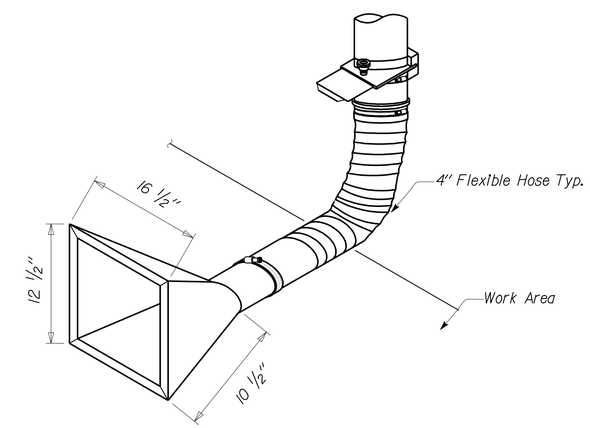

4 **TABLETOP DUST FITTING**

THIS DRAWING ACCURATE FOR MECHANICAL WORK ONLY

NO SCALE

DESIGN	BY Mark Hedglin	CHECKED Tom Hatam	
DETAILS	BY Rudy Sarte/Mark Hedglin	CHECKED Tom Hatam	
QUANTITIES	BY Mark Hedglin	CHECKED Tom Hatam	

STATE OF CALIFORNIA DEPARTMENT OF TRANSPORTATION

DIVISION OF ENGINEERING SERVICES
ELECTRICAL-MECHANICAL-WATER AND WASTEWATER DESIGN

BRIDGE NO. 33M5785
POST MILE 2.2

SFOBB MAINTENANCE COMPLEX
MECHANICAL DETAILS - 5

SHEET **M4-5**

TAEMWW Imperial Rev. 7/10
FILE => m4_5.dgn
DATE PLOTTED => 25-OCT-2012 TIME PLOTTED => 15:35
ORIGINAL SCALE IN INCHES FOR REDUCED PLANS 0 1 2 3
UNIT 3615
PROJECT NUMBER & PHASE 04120006661
EA 014081
DISREGARD PRINTS BEARING EARLIER REVISION DATES → 05-08-12 05-25-12
REVISION DATES (PRELIMINARY STAGE ONLY) SHEET OF

USERNAME => s123631 DATE PLOTTED => 25-OCT-2012 TIME PLOTTED => 15:35

V|=|

DIST.	COUNTY	ROUTE	POST MILES TOTAL PROJECT	SHEET NO.	TOTAL SHEETS
04	Ala	80	2.2	560	800

CALIFORNIA STATE FIRE MARSHAL APPROVED
Approval of this plan does not authorize or approve any omission or deviation from applicable regulations. Final approval is subject to field inspection. One set of approved plans shall be available on the project site at all times.
Reviewed by: JOHN E WOODS, SDSFM
Approval date: 8-22-12

Christopher M. Faria 05-25-12
REGISTERED MECHANICAL ENGINEER DATE

REGISTERED PROFESSIONAL ENGINEER CHRISTOPHER M. FARIA No. M30419 Exp. 12-31-13 MECH STATE OF CALIFORNIA

10-22-12
PLANS APPROVAL DATE

The State of California or its officers or agents shall not be responsible for the accuracy or completeness of scanned copies of this plan sheet.

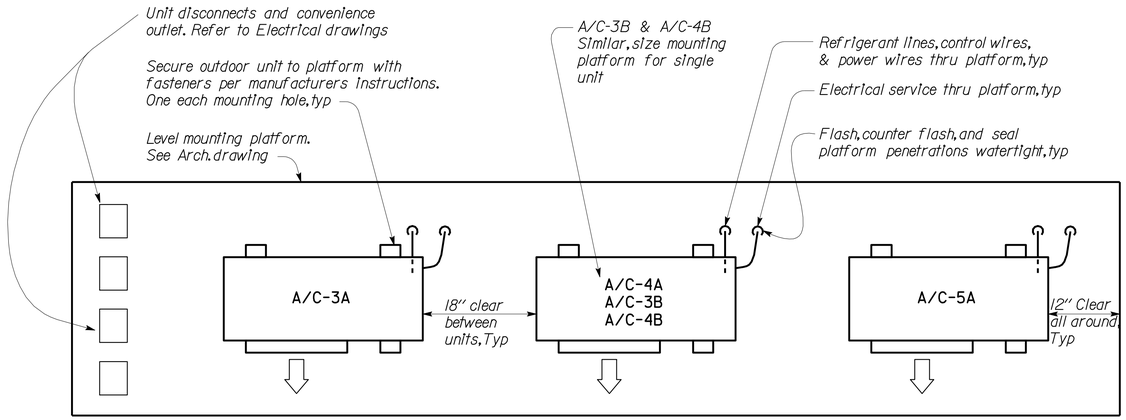

1 SPLIT SYSTEM OUTDOOR UNIT MOUNTING DETAIL

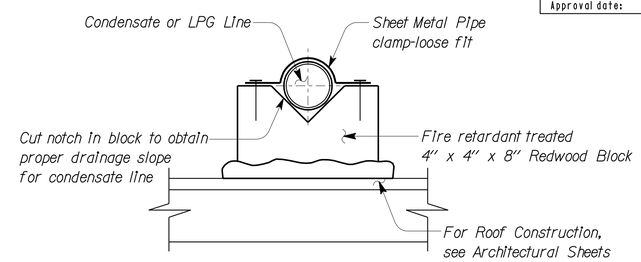

2 ROOF PIPE SUPPORT DETAIL

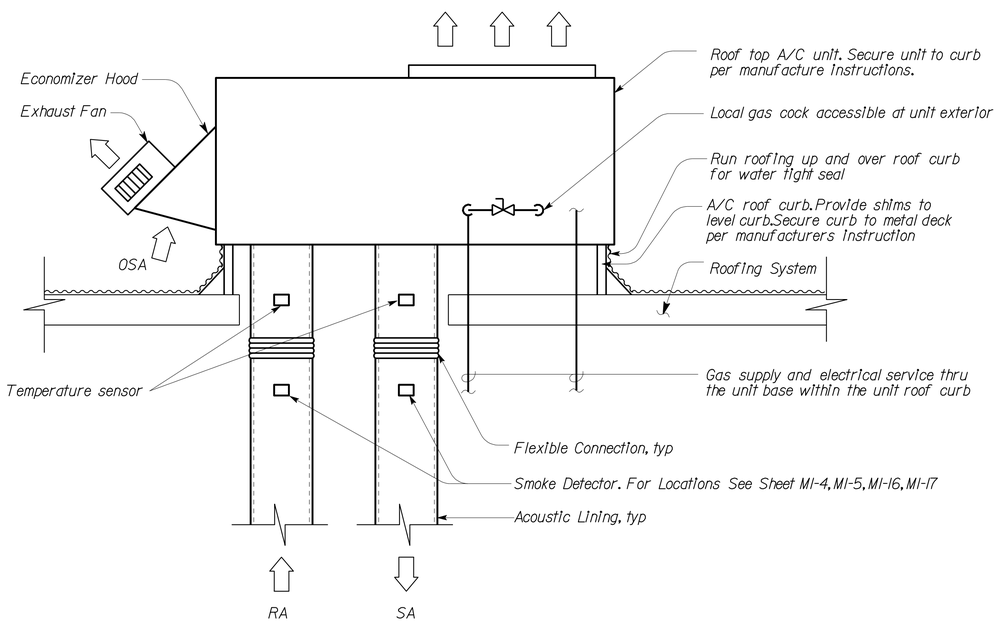

3 A/C DETAIL

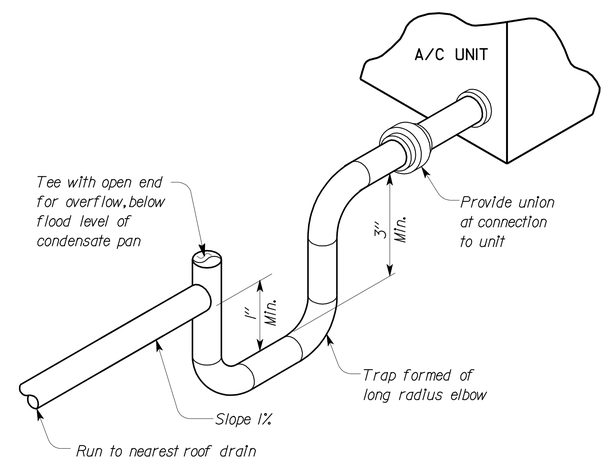

4 CONDENSATE DRAIN DETAIL

NO SCALE

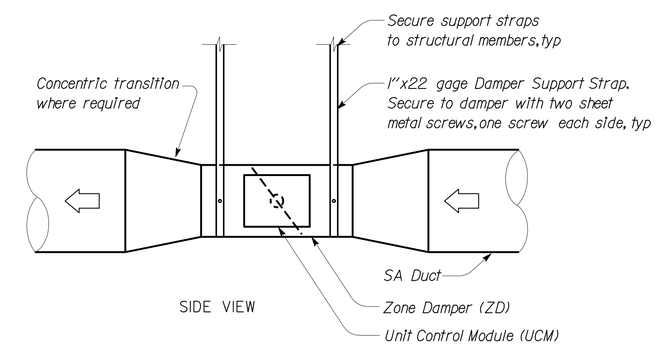

Notes:
1. Ensure all fasteners used at zone damper do not interfere with damper operation
2. Refer to plans & schedule for duct & damper size
3. Orientate damper so that damper drive shaft in horizontal

5 ZONE DAMPER DETAIL

THIS DRAWING ACCURATE FOR MECHANICAL WORK ONLY

	BY	CHECKED
DESIGN	Chris Faria	Tom Hatam
DETAILS	Angela Chen	Tom Hatam
QUANTITIES	Chris Faria	Tom Hatam

STATE OF CALIFORNIA DEPARTMENT OF TRANSPORTATION

DIVISION OF ENGINEERING SERVICES
ELECTRICAL-MECHANICAL-WATER AND WASTEWATER DESIGN

BRIDGE NO. 33M5785
POST MILE 2.2

SFOBB MAINTENANCE COMPLEX
MECHANICAL DETAILS - 6

SHEET **M4-6**

TAEMWW Imperial Rev. 7/10
FILE => m4_6.dgn
DATE PLOTTED => 25-OCT-2012 TIME PLOTTED => 15:35
ORIGINAL SCALE IN INCHES FOR REDUCED PLANS 0 1 2 3
UNIT 3615
PROJECT NUMBER & PHASE 04120006661
EA 014081
DISREGARD PRINTS BEARING EARLIER REVISION DATES → 05-08-12 05-25-12
REVISION DATES (PRELIMINARY STAGE ONLY) SHEET OF

USERNAME => s123631 DATE PLOTTED => 25-OCT-2012 TIME PLOTTED => 15:35

DIST.	COUNTY	ROUTE	POST MILES TOTAL PROJECT	SHEET NO.	TOTAL SHEETS
04	Ala	80	2.2	561	800

CALIFORNIA STATE FIRE MARSHAL APPROVED
Approval of this plan does not authorize or approve any omission or deviation from applicable regulations. Final approval is subject to field inspection. One set of approved plans shall be available on the project site at all times.
Reviewed by: JOHN E WOODS, SDSFM
Approval date: 8-22-12

Christopher M. Faria 05-25-12
REGISTERED MECHANICAL ENGINEER DATE

REGISTERED PROFESSIONAL ENGINEER CHRISTOPHER M. FARIA No. M30419 Exp. 12-31-13 MECH STATE OF CALIFORNIA

10-22-12
PLANS APPROVAL DATE

The State of California or its officers or agents shall not be responsible for the accuracy or completeness of scanned copies of this plan sheet.

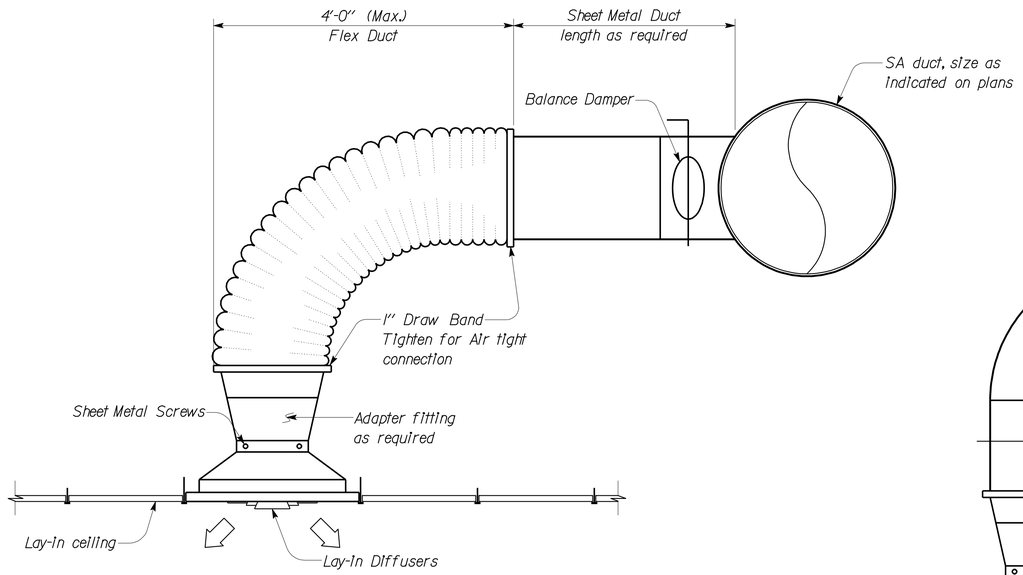

1 DIFFUSER INSTALLATION (LAY-IN)

No Scale

Notes:
1. EA grille installation is similar less flexible duct.

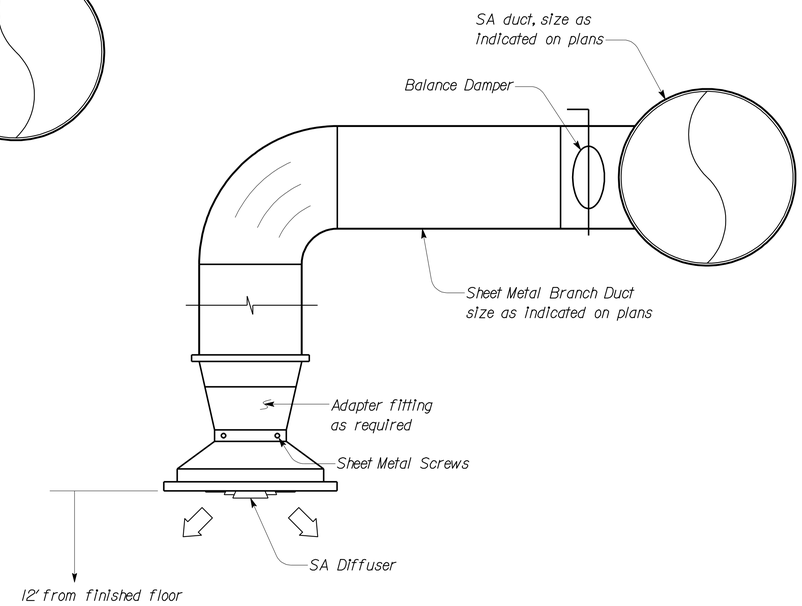

2 DIFFUSER INSTALLATION (NO CEILING)

No Scale

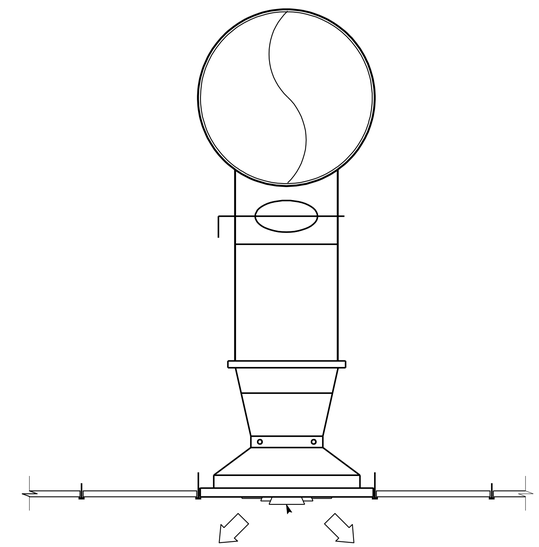

6 DIFFUSER ALTERNATE INSTALLATION

No Scale

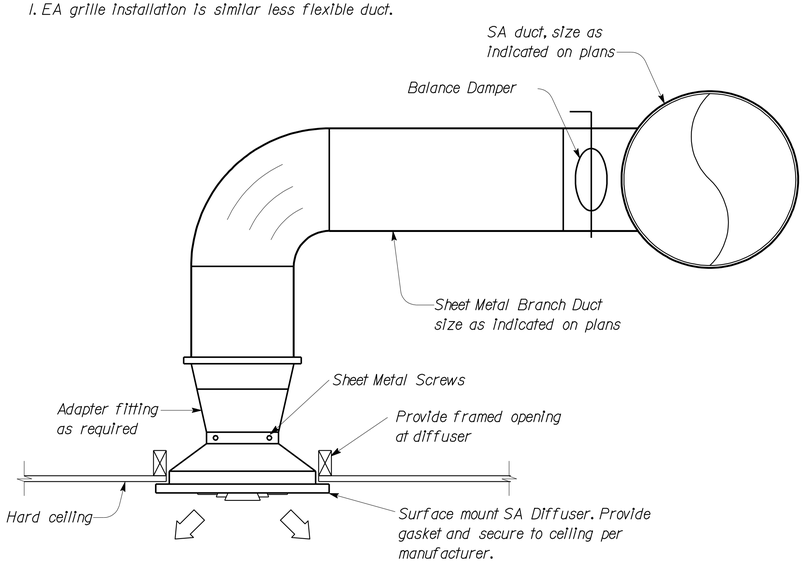

3 DIFFUSER INSTALLATION (SURFACE MOUNT)

No Scale

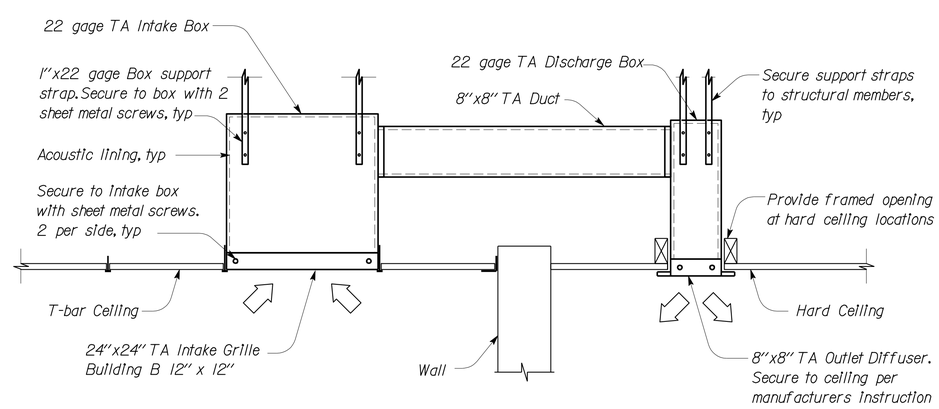

4 TRANSFER AIR (TA) DUCTWORK

No Scale

Note: Duct sizes are clear inside dimensions. Overall duct size to account for acoustic lining.

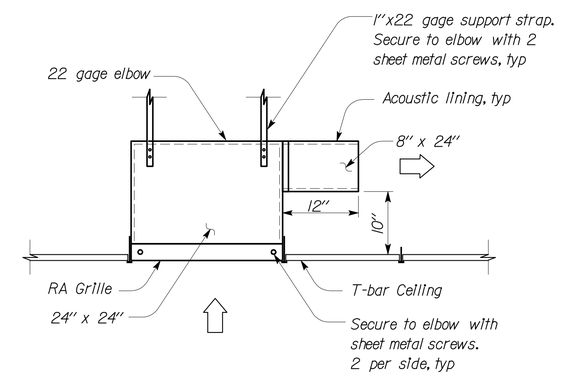

5 ACOUSTIC LINED RA ELBOW

No Scale

Note: Duct sizes are clear inside dimensions. Overall duct size to account for acoustic lining.

Notes:
1. At locations where the balance damper is above a hard ceiling provide a remote cable operated damper with a ceiling mounter operator.
2. EA grille installation is similar.

THIS DRAWING ACCURATE FOR MECHANICAL WORK ONLY

DESIGN	BY Chris Faria	CHECKED Tom Hatam	
DETAILS	BY Angela Chen	CHECKED Tom Hatam	
QUANTITIES	BY Chris Faria	CHECKED Tom Hatam	

STATE OF CALIFORNIA
DEPARTMENT OF TRANSPORTATION

DIVISION OF ENGINEERING SERVICES
ELECTRICAL-MECHANICAL-WATER AND WASTEWATER DESIGN

BRIDGE NO. 33M5785
POST MILE 2.2

SFOBB MAINTENANCE COMPLEX

MECHANICAL DETAILS - 7

SHEET **M4-7**

TAEMWW Imperial Rev. 7/10
FILE => m4_7.dgn
DATE PLOTTED => 26-OCT-2012 TIME PLOTTED => 06:57

ORIGINAL SCALE IN INCHES FOR REDUCED PLANS 0 1 2 3

UNIT 3615
PROJECT NUMBER & PHASE 04120006661
EA 014081

DISREGARD PRINTS BEARING EARLIER REVISION DATES 05-08-12 05-25-12
REVISION DATES (PRELIMINARY STAGE ONLY) SHEET OF

USERNAME => s124436 DATE PLOTTED => 26-OCT-2012 TIME PLOTTED => 06:57

V|=|

DIST.	COUNTY	ROUTE	POST MILES TOTAL PROJECT	SHEET NO.	TOTAL SHEETS
04	Ala	80	2.2	562	800

Solomon C. Wong — 05-25-12
REGISTERED MECHANICAL ENGINEER — DATE

REGISTERED PROFESSIONAL ENGINEER
SOLOMON WONG
No. M27626
Exp. 6-30-13
MECH
STATE OF CALIFORNIA

10-22-12
PLANS APPROVAL DATE

The State of California or its officers or agents shall not be responsible for the accuracy or completeness of scanned copies of this plan sheet.

CALIFORNIA STATE FIRE MARSHAL APPROVED
Approval of this plan does not authorize or approve any omission or deviation from applicable regulations. Final approval is subject to field inspection. One set of approved plans shall be available on the project site at all times.
Reviewed by: JOHN E WOODS, SDSFM
Approval date: 8-22-12

PLUMBING

- Cold Water
- A — Compressed Air
- F — Fire Service Water Line
- G — Gas
- D — Equipment Drain
- RD — Roof Drain
- OD — Overflow Drain
- RWL — Rain Water Leader
- Hot Water
- R — Relief Valve Discharge Pipe
- S — Sewer Line
- Sanitary Sewer (above grade)
- Sewer Line
- Sanitary Sewer Vent
- Lube Line
- RW — Recycled Water

PIPE FITTINGS AND VALVES

- Cap, Threaded
- Elbow, Turned Down
- Elbow, Turned Up
- Reducer, Concentric
- Pressure Gauge (with gage cock and Snubber)
- Strainer
- Union
- Union, Insulating
- Valve, Ball
- Valve, Check
- Valve, Gas
- Valve, Gate
- Valve, Globe
- Valve, Safety Relief
- Valve, Pressure Reducing
- Valve, Pressure/Temperature Relief
- Water Hammer Arrestor

MISCELLANEOUS

- L — Angle
- ℄ — Centerline
- Ø — Diameter
- Section / Elevation Letter
- Sheet Number
- Detail Number
- Sheet Number

PLUMBING ABBREVIATIONS:

ABS	Acrylontirle Butadiene Styrene
AC	Asphalt Concrete
A/C	Air Conditioner
AD	Air Drop
AP	Alternative Pipe
ATF	Automatic Transmission Fluid
BFP	Backflow Preventer
BLDG	Building
BV	Balancing Valve
C	Conduit
Cap.	Capacity
CI	Cast-Iron
CO	Cleanout
COTF	Cleanout Through Floor
COTG	Cleanout Through Grade
COTW	Cleanout To Wall
CV	Check Valve
CW	Cold Water
D	Depth
Dia	Diameter
DWV	Drain / Waste / Vent
DF	Drinking Fountain
(E)	Existing
EEW	Emergency Eyewash and Shower
EL	Elevation
Elect.	Electrical
EPDM	Ethylene Propylene Diene Monomer
EWC	Electric Water Cooler
EWH	Electric Water Heater
°F	Fahrenheit
FC	Flexible Connection
FD	Floor Drain
FDC	Fire Department Connection
FE	Fire Extinguisher
FG	Finish Grade
FL	Flow Line
FH	Fire Hydrant
FS	Flow Switch
FTR	Flue Through Roof
GA	Gauge
GAL	Gallon
GALV	Galvanized
GH	Ground Hydrant
GLV	Globe Valve
GPM	Gallons Per Minute
GS	Gang Sink
GSP	Galvanized Steel Pipe
GV	Gate Valve
GWH	Gas Water Heater
GYP	Gypsum
H	Height
HB	Hydrant Box
H/C	Hot Water, High Pressure Cleaner
HF	Hose Faucet
HW	Hot Water
HWH	Hot Water Heater
HZ	Hertz
ID	Inside Diameter
IE	Invert Elevation
IN	Inch
IPS	International Pipe Standard
IWH	Instant Water Heater
KS	Kitchen Sink
kW	Kilowatt
LAV	Lavatory
LPG	Liquified Petroleum Gas
MAX	Maximum
MAN	Manhole
MIN	Minimum
MS	Mop Sink
(N)	New
NIC	Not In Contract
NO	Number
NPT	National Pipe Thread
NST	National Standard Thread
NPS	Nominal Pipe Size
OC	On Center
OD	Outside Diameter
OG	Original Ground
PH	Phase
PIV	Post Indicator Valve
POC	Point of Connection
PVC	Polyvinyl Chloride
PCC	Portland Cement Concrete
PSI	Pounds Per Square Inch
PRV	Pressure Reducing Valve
R	Radius
RCP	Reinforced Concrete Pipe
RD	Roof Drain
RDO	Roof Drain Overflow
REQ	Required
RV	Relief Valve
RW	Recycled Water
RWL	Rain Water Leader
SDS	Sanitary Dump Station
SS	Sanitary Sewer
SCH	Schedule
S/S	Service Sink
SHR	Shower
STD	Standard
STA	Station
TCV	Temperature Control Valve
TP	Trap Primer
TOT	Total
TS	Time Switch
TYP	Typical
UR	Urinal
V	Vent
VAC	Voltage, Alternating Current
VR	Vent Riser
VTR	Vent Thru Roof
W	Width
W/	With
W/O	Without
WC	Water Closet
WCL	Waste Coolant
W.C.	Water Column
WD	Water Drop
W.H.	Wall Hydrant
WHA	Water Hammer Arrestor
WLS	Water Level Switch
WO	Waiste Oil
WP	Weatherproof
WS	Wash Sink
WSP	Welded Steel Pipe
XFMR	Transformer

THIS DRAWING ACCURATE FOR MECHANICAL WORK ONLY

	BY	CHECKED
DESIGN	Solomon Wong	Tom Hatam
DETAILS	Rudy Sarte	Tom Hatam
QUANTITIES	Solomon Wong	Tom Hatam

STATE OF CALIFORNIA
DEPARTMENT OF TRANSPORTATION

DIVISION OF ENGINEERING SERVICES
ELECTRICAL-MECHANICAL-WATER AND WASTEWATER DESIGN

BRIDGE NO. 33M5785
POST MILE 2.2

SFOBB MAINTENANCE COMPLEX
LEGEND AND ABBREVIATION

SHEET **MP0-0**

TAEMWW Imperial Rev. 7/10
FILE => mp0_0.dgn
DATE PLOTTED => 26-OCT-2012 TIME PLOTTED => 06:57
ORIGINAL SCALE IN INCHES FOR REDUCED PLANS 0 1 2 3
UNIT 3615
PROJECT NUMBER & PHASE 04120006661
EA 014081
DISREGARD PRINTS BEARING EARLIER REVISION DATES → 05-08-12 05-25-12
REVISION DATES (PRELIMINARY STAGE ONLY) SHEET OF

USERNAME => s124936 DATE PLOTTED => 26-OCT-2012 TIME PLOTTED => 06:57
V|=|

DIST.	COUNTY	ROUTE	POST MILES TOTAL PROJECT	SHEET NO.	TOTAL SHEETS
04	Ala	80	2.2	563	800

Solomon C. Wong — 05-25-12
REGISTERED MECHANICAL ENGINEER — DATE

REGISTERED PROFESSIONAL ENGINEER
SOLOMON WONG
No. M27626
Exp. 6-30-13
MECH
STATE OF CALIFORNIA

10-22-12
PLANS APPROVAL DATE

The State of California or its officers or agents shall not be responsible for the accuracy or completeness of scanned copies of this plan sheet.

CALIFORNIA STATE FIRE MARSHAL APPROVED
Approval of this plan does not authorize or approve any omission or deviation from applicable regulations. Final approval is subject to field inspection. One set of approved plans shall be available on the project site at all times.
Reviewed by: JOHN E WOODS, SDSFM
Approval date: 8-22-12

General Notes:

1. Contractor shall field verify all existing equipment, piping, utility connections and dimensions before ordering and fabricating any materials.
2. The Fire Sprinkler contractor shall hydraulically design a sprinkler system to protect the cross hatched areas of Building 1A and 1B, except otherwise noted. The location and routing of the Firewater main are only suggestive. Actual firewater connections from the utility main shall be obtained from East Bay Municipal Utility District (EBMUD).
3. The contractor shall identify a hydraulically designed sprinkler system with a permanently marked weatherproof metal or rigid plastic sign secured with corrosion-resistance wire, chain, or other approved means. Such shall be placed at the alarm valve, or dry pipe valve supplying the corresponding hydraulically designed area. The Sign shall included the following information:
   (a) Location of design area or areas.
   (b) Discharge densities over the design area or areas.
   (c) Required flow and residual pressure demand of the base of riser.
   (d) Hose stream demand included is addition to the sprinkler demand.
4. Installation of the fire sprinkler system shall not be started until complete plans and specifications (including water supply information and type of existing system, if any) have been approved by the California Fire Marshal.
5. If requested at various stages and upon completion, the system shall be tested in the presence of the California Fire Marshal.
6. The fire service mains and the appurtenances shall conform to the requirements of the 2010 edition of the National Fire Protection Association Standard #24.
7. All post indicator valves shall be pad lockable with tamper proof protection.
8. Flow and pressure characteristics in the existing Water Main are available from East Bay Municipal Utility District (EBMUD). Static pressure 71 psi; Residual pressure 20 psi with 1400 gpm flowing, to be verified by EBMUD.
9. For specific locations of the 3-inch roof drains, total of 23 drains, see AI-4.0
10. Contractor shall maintain all existing domestic water, irrigation water, firewater, gas supply, and sanitary sewer discharge services during the construction and transition of these services to new building, existing Burma Road building/facilities and the north median buildings/facilities located between the East Bound and West Bound I-80 Freeways.
11. No sprinkler require in Room 99 (Elevator shaft), Building 1A and Room 148 (Main Electrical Room), Building 1B. Piping discharge from the interior to the exterior of the building.
12. For Sanitary Sewer Building 1A and 1B, see MPI-1, MPI-3, MPI-5, MPI-6, MPI-7
13. For Water and Firewater Supplies to Building 1A and 1B, see MPI-8, MPI-10, MPI-12, MPI-15, MPI-17
14. For Gas Supply to Building 1A and 1B, see MPI-8
15. Building finished floor assumed at +0 ft. See utility grading and profile plans for details.
16. The automatic fire sprinkler shall conform to the requirements of the 2010 edition of the National Fire Protection Association Standard #13.
17. For Guard Post Details, see M4-2

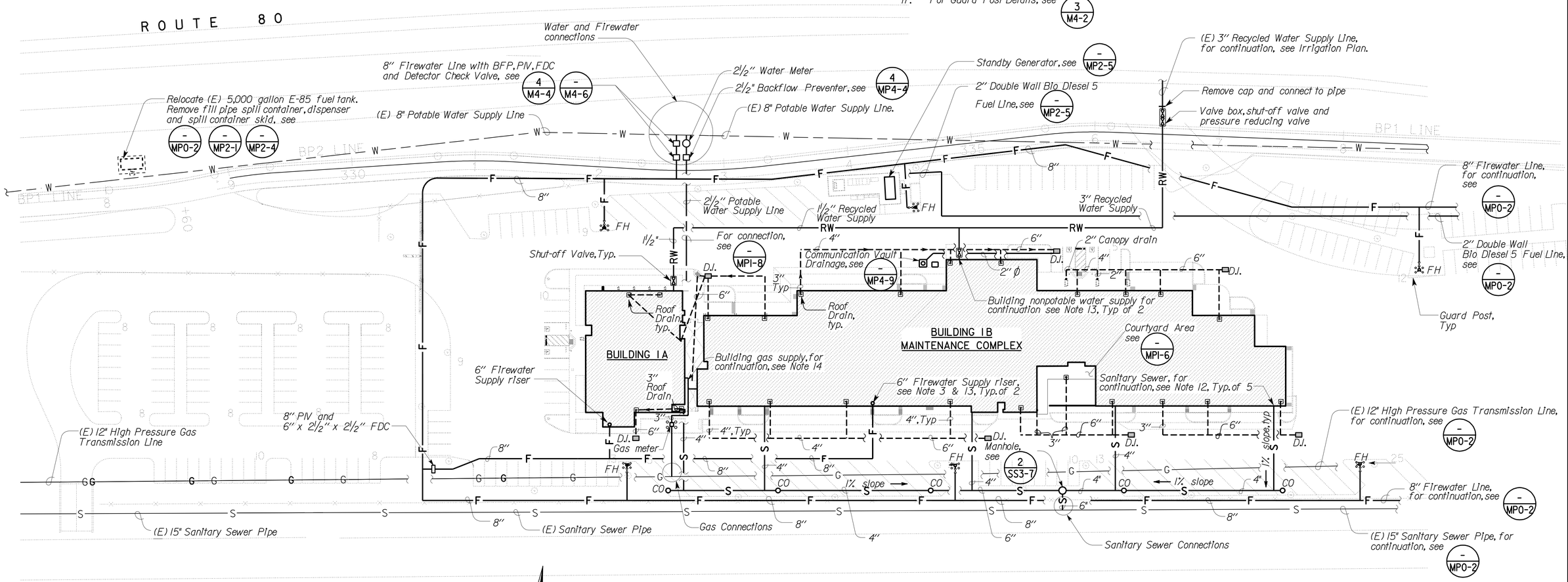

PARTIAL SITE PLAN

SCALE: 1" = 40'-0"

THIS DRAWING ACCURATE FOR MECHANICAL WORK ONLY

DESIGN SUPERVISOR	DESIGN	BY Solomon Wong	CHECKED Tom Hatam
DESIGN ENGINEER	DETAILS	BY R. Sarte / A. Chen	CHECKED Tom Hatam
	QUANTITIES	BY Solomon Wong	CHECKED Tom Hatam

STATE OF CALIFORNIA
DEPARTMENT OF TRANSPORTATION

DIVISION OF ENGINEERING SERVICES
ELECTRICAL-MECHANICAL-WATER AND WASTEWATER DESIGN

BRIDGE NO. 33M5785
POST MILE 2.2

SFOBB MAINTENANCE COMPLEX
PARTIAL SITE PIPING PLAN NO. 1

SHEET **MP0-1**

TAEMWW Imperial Rev. 7/10
FILE => mp0_1.dgn
DATE PLOTTED => 26-OCT-2012
TIME PLOTTED => 06:57

ORIGINAL SCALE IN INCHES FOR REDUCED PLANS 0 1 2 3

UNIT 3615
PROJECT NUMBER & PHASE 04120006661
EA 014081

DISREGARD PRINTS BEARING EARLIER REVISION DATES → 05-08-12 05-25-12
REVISION DATES (PRELIMINARY STAGE ONLY) SHEET OF

USERNAME => s124496 DATE PLOTTED => 26-OCT-2012 TIME PLOTTED => 06:57

V1=1

DIST.	COUNTY	ROUTE	POST MILES TOTAL PROJECT	SHEET NO.	TOTAL SHEETS
04	Ala	80	2.2	564	800

Solomon C. Wong — 05-25-12
REGISTERED MECHANICAL ENGINEER — DATE

REGISTERED PROFESSIONAL ENGINEER
SOLOMON WONG
No. M27626
Exp. 6-30-13
MECH
STATE OF CALIFORNIA

10-22-12
PLANS APPROVAL DATE

The State of California or its officers or agents shall not be responsible for the accuracy or completeness of scanned copies of this plan sheet.

CALIFORNIA STATE FIRE MARSHAL APPROVED

Approval of this plan does not authorize or approve any omission or deviation from applicable regulations. Final approval is subject to field inspection. One set of approved plans shall be available on the project site at all times.

Reviewed by: JOHN E WOODS, SDSFM

Approval date: 8-22-12

Notes:

1. Contractor shall field verify all existing equipment, piping, utility connections and dimensions before ordering and fabricating any materials.
2. For guard post details, see 3/M4-2

State Fire Marshal Notes:

1. Prior to installation, all plans and specifications shall be approved by the Office of the State Fire Marshal.
2. Inspection are required : 1) prior to pouring thrust blocks, 2) for hydrostatic testing and 3) for flush. Schedule all inspections 48 hours in advance. Inspections cancelled after 1 p.m. on the day before the scheduled date will be subjected to a re-inspection fee. Call local Deputy State Fire Marshal for inspection scheduling.
3. Installation, inspection and testing shall conform to 2010 NFPA 13 and 2010 NFPA 24.
4. Private fire hydrants shall be approved wet barrel style with a minimum of one 2½" and one 4" outlet. The 4" outlet shall face the fire department access road. All outlets shall be provided with National Standard Threads (NST).
5. Fire hydrant supply piping shall be a minimum of six inches in diameter. The lowest operating nut shall be a minimum of 18" above grade and the hydrant flange shall be a minimum of 2" above grade.
6. Fire hydrants shall be a minimum of 40 feet from all structures. A keyed gate valve shall be provided for each hydrant in an accessible location. Valves shall not be located in parking stalls.
7. All pipes shall be approved for use in fire service systems (Class 150 minimum). Class 200 pipe shall be used where the pressure may exceed 150 PSI.
8. All ferrous pipes and fittings shall be protected with a loose 8-mil polyethylene tube. The ends of the tube and any splices mate for "T"s or other piping components shall be sealed with 2" tape, approved for underground use. All bolted joints shall be cleaned and thoroughly coated with asphalt or other corrosion retarding material after assembly and prior to poly-tube installation.
9. A 12" bed of clean fill sand shall be provided below and above the pipe (total 24").
10. All bolts used for underground connections shall be stainless steel.
11. A minimum of 30" of cover, from finish grade to the pipe, shall be provided. When surface loads are expected, a minimum of 36" cover shall be provided.
12. Thrust blocks, or other approved method of thrust restraint, shall be provided wherever pipe changes direction.
13. The trench shall be excavated for thrust blocks and inspected prior to the pour. All corrosion protection shall be in place.
14. A hydrostatic test (200 psi for two hours or 50 psi over maximum static pressure, which ever is greater) shall be witnessed by a Deputy State Fire Marshal. The trench shall be back-filled between the joints to prevent movement of the pipe.
15. The system shall be thoroughly flushed before connection is made to the overhead piping. Flow shall be through a minimum of a 4" hose or pipe unless otherwise approved by the Deputy Fire Marshal. A Deputy Fire Marshal shall witness the flush.
16. Private hydrants, sprinkler control valves, detector check assemblies, post indicating valves and fire department connections shall be painted OSHA red.
17. All control valves shall be locked in the open position. Valves shall be electrically supervised if they serve 100 or more sprinkler heads.

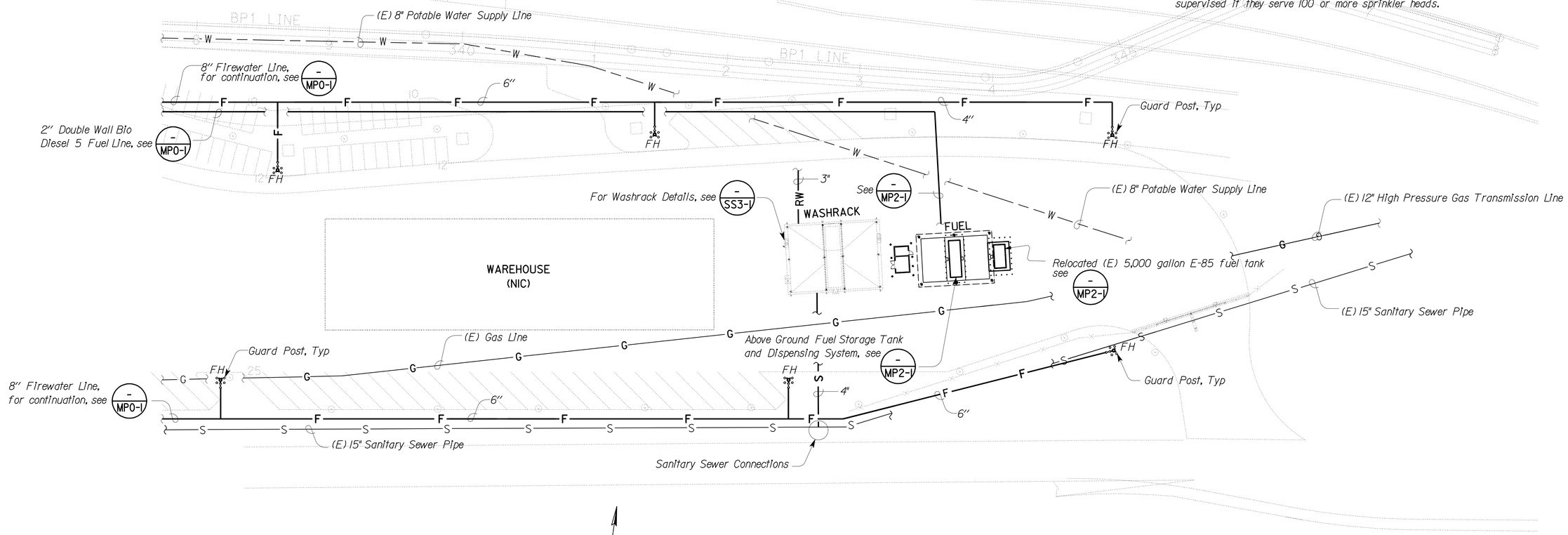

PARTIAL SITE PLAN

SCALE: 1" = 40'-0"

THIS DRAWING ACCURATE FOR MECHANICAL WORK ONLY

DESIGN	BY Solomon Wong	CHECKED Tom Hatam	
DETAILS	BY Angela Chen	CHECKED Tom Hatam	
QUANTITIES	BY Solomon Wong	CHECKED Tom Hatam	

STATE OF CALIFORNIA
DEPARTMENT OF TRANSPORTATION

DIVISION OF ENGINEERING SERVICES
ELECTRICAL-MECHANICAL-WATER AND WASTEWATER DESIGN

BRIDGE NO. 33M5785
POST MILE 2.2

SFOBB MAINTENANCE COMPLEX

PARTIAL SITE PIPING PLAN NO. 2

SHEET **MP0-2**

TAEMWW Imperial Rev. 7/10

FILE => mp0_2.dgn
DATE PLOTTED => 26-OCT-2012 TIME PLOTTED => 06:57

ORIGINAL SCALE IN INCHES FOR REDUCED PLANS 0 1 2 3

UNIT 3615
PROJECT NUMBER & PHASE 04120006661
EA 014081

DISREGARD PRINTS BEARING EARLIER REVISION DATES → 05-08-12 05-25-12

REVISION DATES (PRELIMINARY STAGE ONLY) SHEET OF

USERNAME => s124436 DATE PLOTTED => 26-OCT-2012 TIME PLOTTED => 06:57

V1=1

DIST.	COUNTY	ROUTE	POST MILES TOTAL PROJECT	SHEET NO.	TOTAL SHEETS
04	Ala	80	2.2	565	800

Solomon C. Wong — REGISTERED MECHANICAL ENGINEER — 05-25-12 DATE

REGISTERED PROFESSIONAL ENGINEER SOLOMON WONG No. M27626 Exp. 6-30-13 MECH STATE OF CALIFORNIA

10-22-12
PLANS APPROVAL DATE

The State of California or its officers or agents shall not be responsible for the accuracy or completeness of scanned copies of this plan sheet.

CALIFORNIA STATE FIRE MARSHAL APPROVED

Approval of this plan does not authorize or approve any omission or deviation from applicable regulations. Final approval is subject to field inspection. One set of approved plans shall be available on the project site at all times.

Reviewed by: JOHN E WOODS, SDSFM

Approval date: 8-22-12

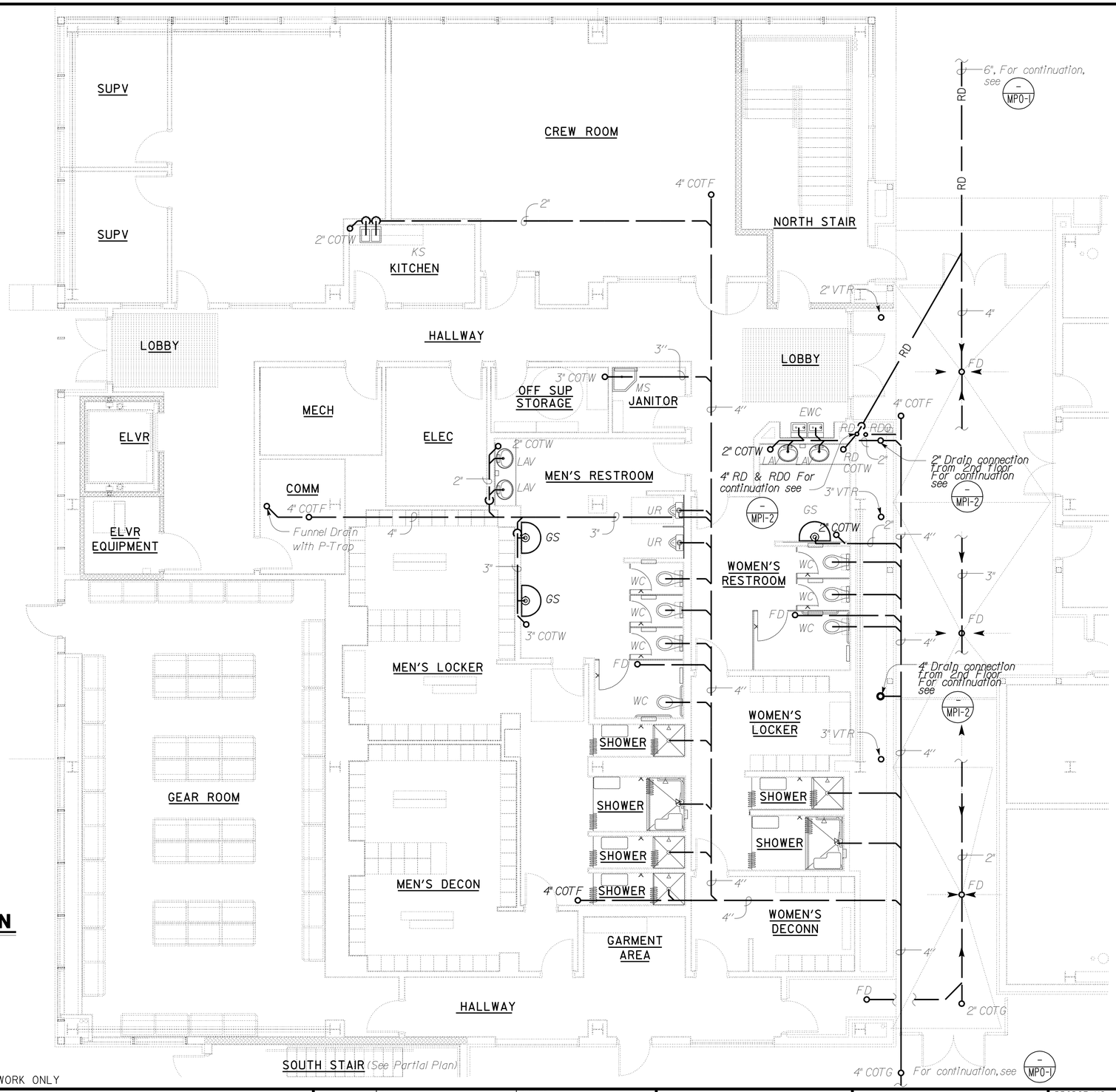

1st FLOOR PLAN

SCALE : 3/16" = 1'-0"

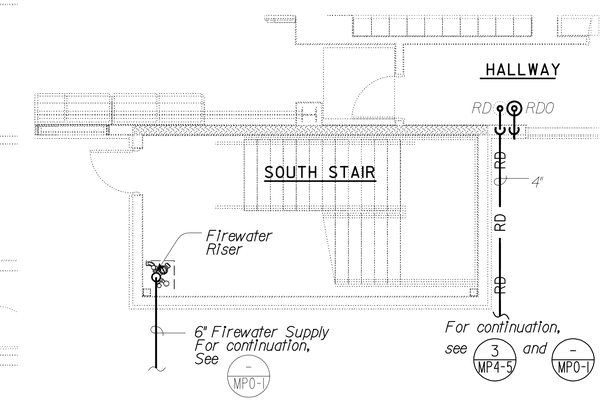

PARTIAL PLAN

SCALE : 3/16" = 1'-0"

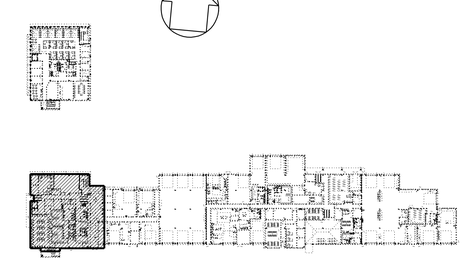

KEY PLAN

THIS DRAWING ACCURATE FOR MECHANICAL WORK ONLY

	BY		CHECKED	
DESIGN	BY	Solomon Wong	CHECKED	Tom Hatam
DETAILS	BY	Angela Chen	CHECKED	Tom Hatam
QUANTITIES	BY	Solomon Wong	CHECKED	Tom Hatam

STATE OF CALIFORNIA DEPARTMENT OF TRANSPORTATION

DIVISION OF ENGINEERING SERVICES
ELECTRICAL-MECHANICAL-WATER AND WASTEWATER DESIGN

BRIDGE NO. 33M5785
POST MILE 2.2

SFOBB MAINTENANCE COMPLEX

BUILDING 1A — SANITARY SEWER PLAN NO. 1

SHEET **MP1-1**

TAEMWW Imperial Rev. 7/10

FILE => mp1_1.dgn
DATE PLOTTED => 30-OCT-2012 TIME PLOTTED => 07:31

ORIGINAL SCALE IN INCHES FOR REDUCED PLANS 0 1 2 3

UNIT 3615
PROJECT NUMBER & PHASE 04120006661
EA 014081

DISREGARD PRINTS BEARING EARLIER REVISION DATES → 05-08-12 05-25-12

REVISION DATES (PRELIMINARY STAGE ONLY) SHEET OF

USERNAME => s114640 DATE PLOTTED => 30-OCT-2012 TIME PLOTTED => 07:31

V|=|

DIST.	COUNTY	ROUTE	POST MILES TOTAL PROJECT	SHEET NO.	TOTAL SHEETS
04	Ala	80	2.2	566	800

CALIFORNIA STATE FIRE MARSHAL APPROVED
Approval of this plan does not authorize or approve any omission or deviation from applicable regulations. Final approval is subject to field inspection. One set of approved plans shall be available on the project site at all times.
Reviewed by: JOHN E WOODS, SDSFM
Approval date: 8-22-12

Solomon C. Wong — 05-25-12
REGISTERED MECHANICAL ENGINEER — DATE

REGISTERED PROFESSIONAL ENGINEER
SOLOMON WONG
No. M27626
Exp. 6-30-13
MECH
STATE OF CALIFORNIA

10-22-12
PLANS APPROVAL DATE

The State of California or its officers or agents shall not be responsible for the accuracy or completeness of scanned copies of this plan sheet.

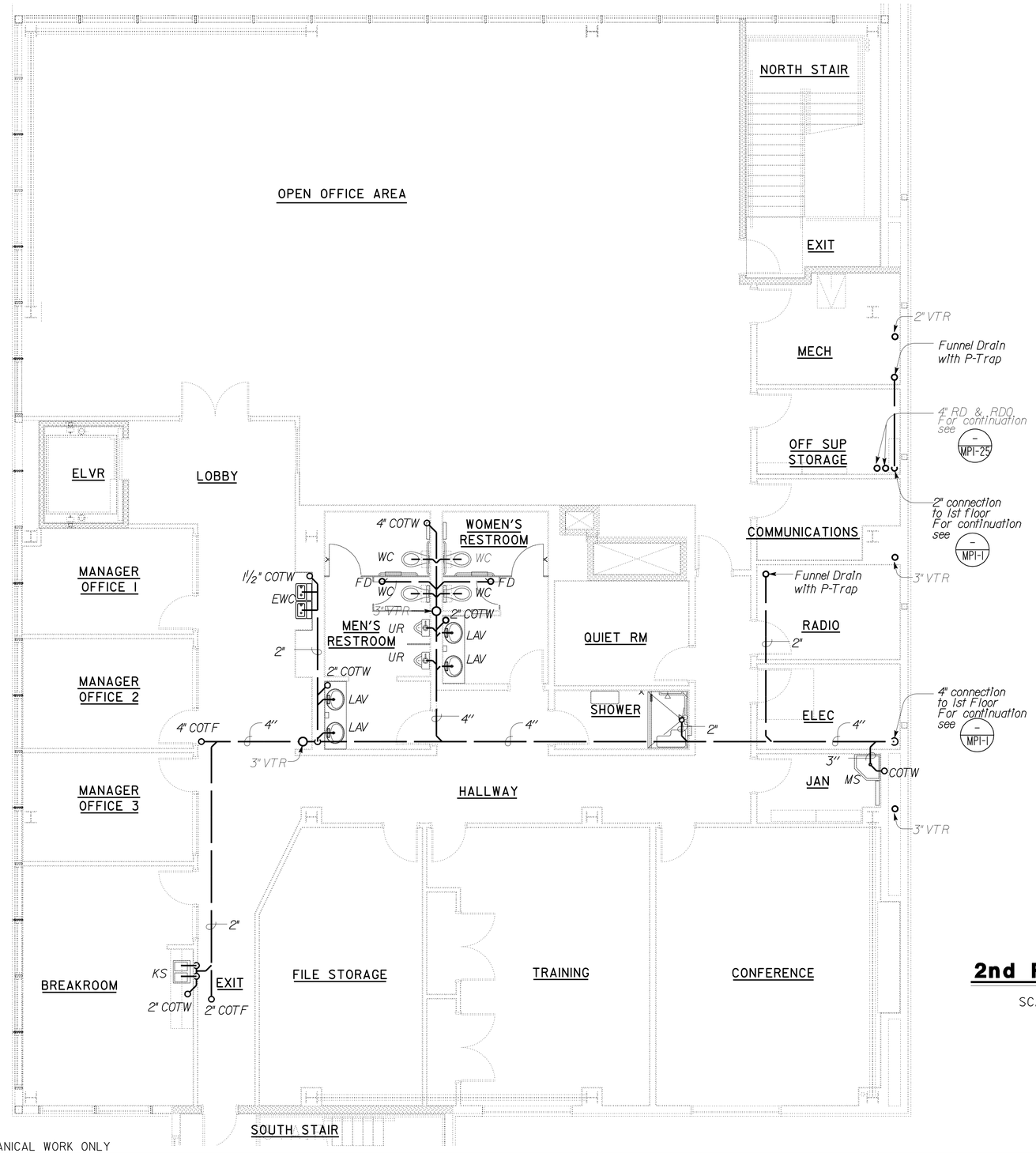

2nd FLOOR PLAN

SCALE : 3/16" = 1'-0"

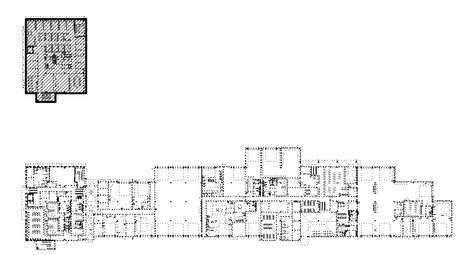

KEY PLAN

THIS DRAWING ACCURATE FOR MECHANICAL WORK ONLY

DESIGN	BY Solomon Wong	CHECKED Tom Hatam	
DETAILS	BY Angela Chen	CHECKED Tom Hatam	
QUANTITIES	BY Solomon Wong	CHECKED Tom Hatam	

STATE OF CALIFORNIA
DEPARTMENT OF TRANSPORTATION

DIVISION OF ENGINEERING SERVICES
ELECTRICAL-MECHANICAL-WATER AND WASTEWATER DESIGN

BRIDGE NO. 33M5785
POST MILE 2.2

SFOBB MAINTENANCE COMPLEX
BUILDING 1A — SANITARY SEWER PLAN NO. 2

SHEET **MP1-2**

TAEMWW Imperial Rev. 7/10
FILE => mp1_2.dgn
DATE PLOTTED => 26-OCT-2012 TIME PLOTTED => 06:58
ORIGINAL SCALE IN INCHES FOR REDUCED PLANS 0 1 2 3
UNIT 3615
PROJECT NUMBER & PHASE 04120006661
EA 014081
DISREGARD PRINTS BEARING EARLIER REVISION DATES → 05-08-12 05-25-12
REVISION DATES (PRELIMINARY STAGE ONLY) SHEET OF
USERNAME => s124496 DATE PLOTTED => 26-OCT-2012 TIME PLOTTED => 06:58
VI=1

DIST.	COUNTY	ROUTE	POST MILES TOTAL PROJECT	SHEET NO.	TOTAL SHEETS
04	Ala	80	2.2	567	800

Solomon C. Wong — 05-25-12
REGISTERED MECHANICAL ENGINEER — DATE

REGISTERED PROFESSIONAL ENGINEER
SOLOMON WONG
No. M27626
Exp. 6-30-13
MECH
STATE OF CALIFORNIA

10-22-12
PLANS APPROVAL DATE

The State of California or its officers or agents shall not be responsible for the accuracy or completeness of scanned copies of this plan sheet.

CALIFORNIA STATE FIRE MARSHAL APPROVED
Approval of this plan does not authorize or approve any omission or deviation from applicable regulations. Final approval is subject to field inspection. One set of approved plans shall be available on the project site at all times.
Reviewed by: JOHN E WOODS, SDSFM
Approval date: 8-22-12

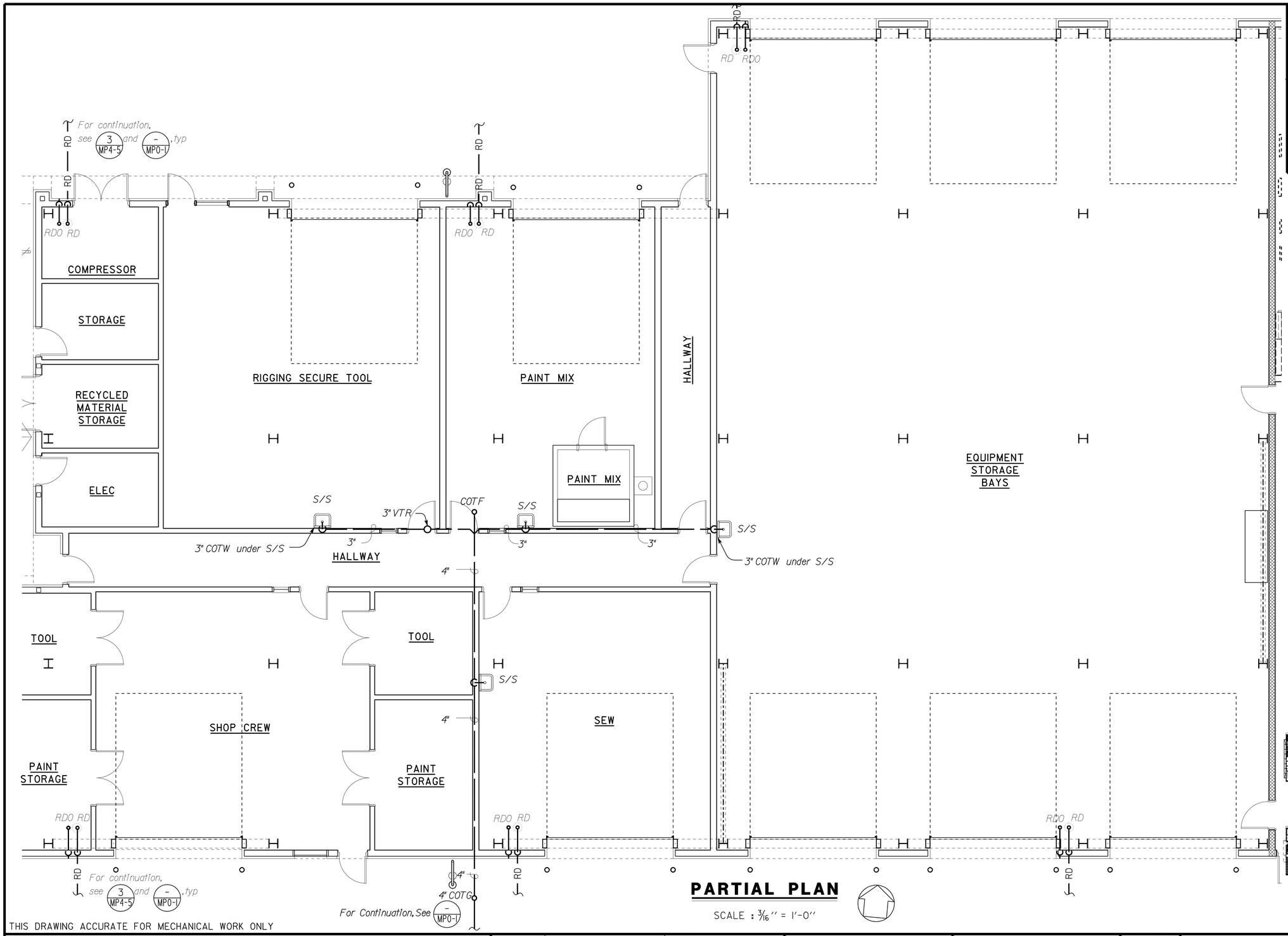

THIS DRAWING ACCURATE FOR MECHANICAL WORK ONLY

PARTIAL PLAN

SCALE : 3/16" = 1'-0"

KEY PLAN

DESIGN	BY Solomon Wong	CHECKED Tom Hatam	
DETAILS	BY Angela Chen	CHECKED Tom Hatam	
QUANTITIES	BY Solomon Wong	CHECKED Tom Hatam	

STATE OF CALIFORNIA
DEPARTMENT OF TRANSPORTATION

DIVISION OF ENGINEERING SERVICES
ELECTRICAL-MECHANICAL-WATER AND WASTEWATER DESIGN

BRIDGE NO. 33M5785
POST MILE

SFOBB MAINTENANCE COMPLEX
BUILDING 1B — SANITARY SEWER PLAN NO. 3

SHEET **MP1-3**

TAEMWW Imperial Rev. 7/10
FILE => mp1_3.dgn
DATE PLOTTED => 26-OCT-2012 TIME PLOTTED => 06:58

ORIGINAL SCALE IN INCHES FOR REDUCED PLANS 0 1 2 3

UNIT 3615
PROJECT NUMBER & PHASE 04120006661
EA 014081

DISREGARD PRINTS BEARING EARLIER REVISION DATES → 05-08-12 05-25-12

REVISION DATES (PRELIMINARY STAGE ONLY) SHEET OF

USERNAME => s124436 DATE PLOTTED => 26-OCT-2012 TIME PLOTTED => 06:58

V|=|

DIST.	COUNTY	ROUTE	POST MILES TOTAL PROJECT	SHEET NO.	TOTAL SHEETS
04	Ala	80	2.2	568	800

CALIFORNIA STATE FIRE MARSHAL APPROVED

Approval of this plan does not authorize or approve any omission or deviation from applicable regulations. Final approval is subject to field inspection. One set of approved plans shall be available on the project site at all times.

Reviewed by: JOHN E WOODS, SDSFM

Approval date: 8-22-12

Solomon C. Wong — 05-25-12
REGISTERED MECHANICAL ENGINEER — DATE

REGISTERED PROFESSIONAL ENGINEER
SOLOMON WONG
No. M27626
Exp. 6-30-13
MECH
STATE OF CALIFORNIA

10-22-12
PLANS APPROVAL DATE

The State of California or its officers or agents shall not be responsible for the accuracy or completeness of scanned copies of this plan sheet.

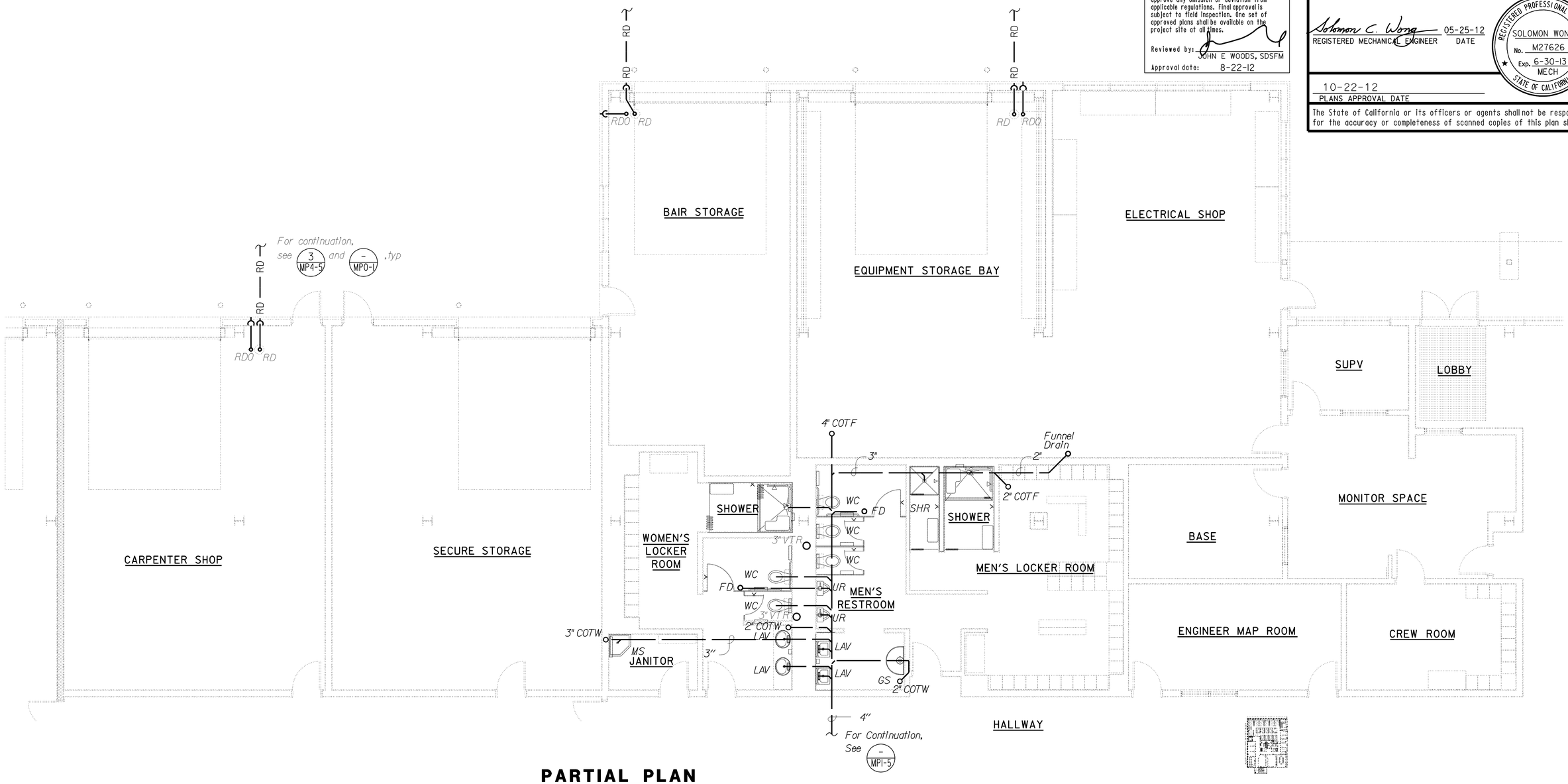

PARTIAL PLAN

SCALE : 3/16" = 1'-0"

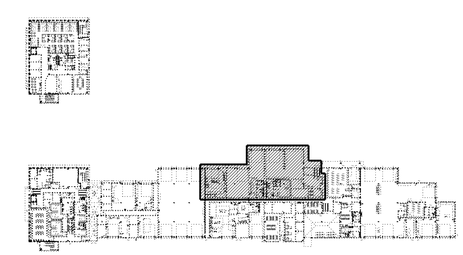

KEY PLAN

THIS DRAWING ACCURATE FOR MECHANICAL WORK ONLY

	BY		CHECKED	
DESIGN	BY	Solomon Wong	CHECKED	Tom Hatam
DETAILS	BY	Angela Chen	CHECKED	Tom Hatam
QUANTITIES	BY	Solomon Wong	CHECKED	Tom Hatam

STATE OF CALIFORNIA
DEPARTMENT OF TRANSPORTATION

DIVISION OF ENGINEERING SERVICES
ELECTRICAL-MECHANICAL-WATER AND WASTEWATER DESIGN

BRIDGE NO. 33M5785
POST MILE 2.2

SFOBB MAINTENANCE COMPLEX

BUILDING 1B — SANITARY SEWER PLAN NO. 4

SHEET **MP1-4**

TAEMWW Imperial Rev. 7/10

FILE => mp1_4.dgn
DATE PLOTTED => 30-OCT-2012 TIME PLOTTED => 07:31

ORIGINAL SCALE IN INCHES FOR REDUCED PLANS 0 1 2 3

UNIT 3615
PROJECT NUMBER & PHASE 04120006661
EA 014081

DISREGARD PRINTS BEARING EARLIER REVISION DATES →

REVISION DATES (PRELIMINARY STAGE ONLY) 05-08-12 05-25-12 — SHEET — OF

USERNAME => s114640 DATE PLOTTED => 30-OCT-2012 TIME PLOTTED => 07:31

VI=1

DIST.	COUNTY	ROUTE	POST MILES TOTAL PROJECT	SHEET NO.	TOTAL SHEETS
04	Ala	80	2.2	569	800

CALIFORNIA STATE FIRE MARSHAL APPROVED

Approval of this plan does not authorize or approve any omission or deviation from applicable regulations. Final approval is subject to field inspection. One set of approved plans shall be available on the project site at all times.

Reviewed by: JOHN E WOODS, SDSFM

Approval date: 8-22-12

Solomon C. Wong — 05-25-12
REGISTERED MECHANICAL ENGINEER — DATE

REGISTERED PROFESSIONAL ENGINEER
SOLOMON WONG
No. M27626
Exp. 6-30-13
MECH
STATE OF CALIFORNIA

10-22-12
PLANS APPROVAL DATE

The State of California or its officers or agents shall not be responsible for the accuracy or completeness of scanned copies of this plan sheet.

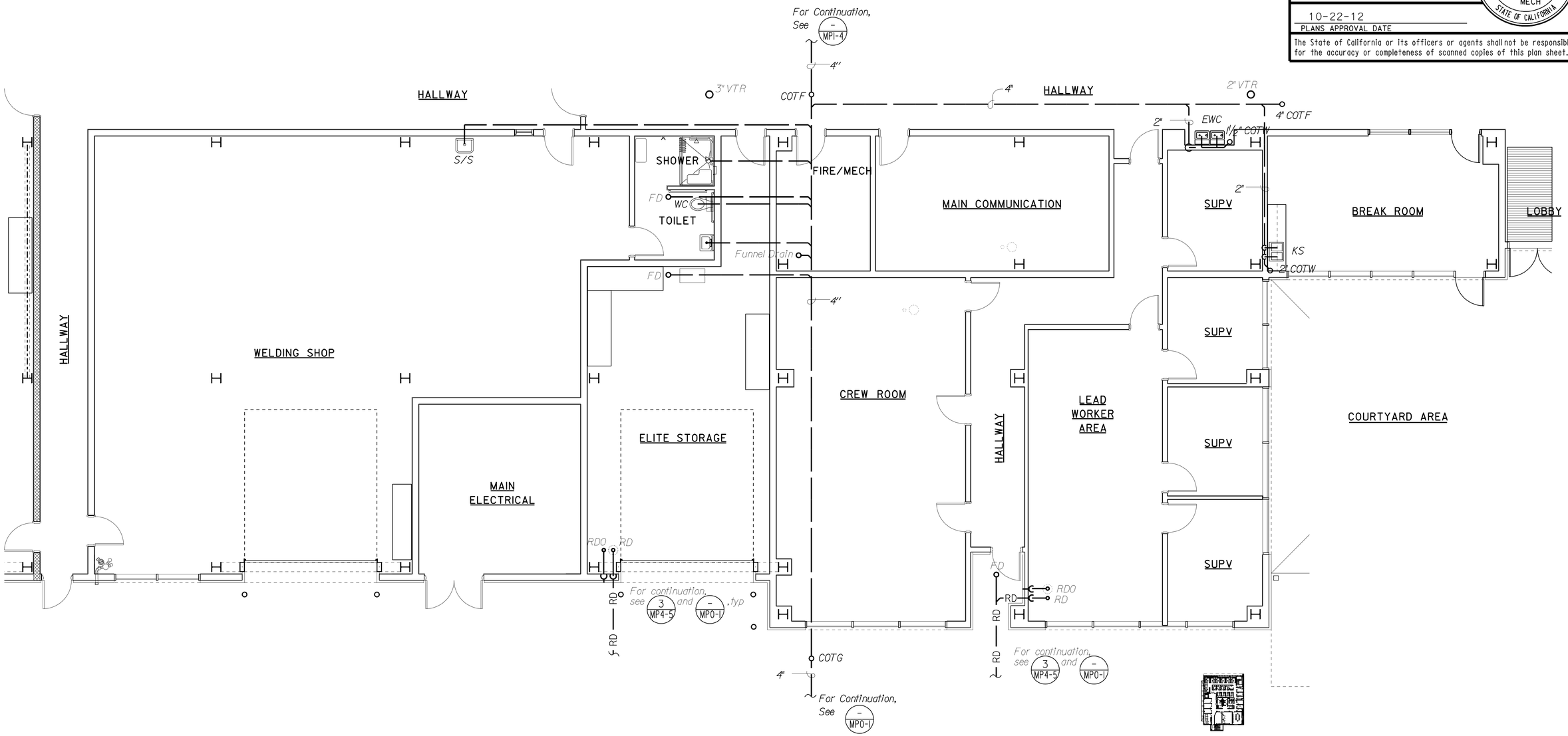

PARTIAL PLAN

SCALE : 3/16" = 1'-0"

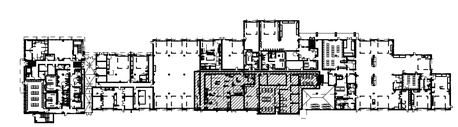

KEY PLAN

THIS DRAWING ACCURATE FOR MECHANICAL WORK ONLY

	BY		CHECKED	
DESIGN	BY	Solomon Wong	CHECKED	Tom Hatam
DETAILS	BY	Angela Chen	CHECKED	Tom Hatam
QUANTITIES	BY	Solomon Wong	CHECKED	Tom Hatam

STATE OF CALIFORNIA
DEPARTMENT OF TRANSPORTATION

DIVISION OF ENGINEERING SERVICES
ELECTRICAL-MECHANICAL-WATER AND WASTEWATER DESIGN

BRIDGE NO. 33M5785
POST MILE 2.2

SFOBB MAINTENANCE COMPLEX
BUILDING 1B — SANITARY SEWER PLAN NO. 5

SHEET **MP1-5**

TAEMWW Imperial Rev. 7/10
FILE => mp1_5.dgn
DATE PLOTTED => 26-OCT-2012 TIME PLOTTED => 06:58

ORIGINAL SCALE IN INCHES FOR REDUCED PLANS 0 1 2 3

UNIT 3615
PROJECT NUMBER & PHASE 04120006661
EA 014081

DISREGARD PRINTS BEARING EARLIER REVISION DATES → 05-08-12 05-25-12

REVISION DATES (PRELIMINARY STAGE ONLY) SHEET OF

USERNAME => s124496 DATE PLOTTED => 26-OCT-2012 TIME PLOTTED => 06:58

V|=|

DIST.	COUNTY	ROUTE	POST MILES TOTAL PROJECT	SHEET NO.	TOTAL SHEETS
04	Ala	80	2.2	570	800

REGISTERED MECHANICAL ENGINEER — 05-25-12 DATE

REGISTERED PROFESSIONAL ENGINEER — SOLOMON WONG — No. M27626 — Exp. 6-30-13 — MECH — STATE OF CALIFORNIA

10-22-12
PLANS APPROVAL DATE

The State of California or its officers or agents shall not be responsible for the accuracy or completeness of scanned copies of this plan sheet.

CALIFORNIA STATE FIRE MARSHAL APPROVED
Approval of this plan does not authorize or approve any omission or deviation from applicable regulations. Final approval is subject to field inspection. One set of approved plans shall be available on the project site at all times.
Reviewed by: JOHN E WOODS, SDSFM
Approval date: 8-22-12

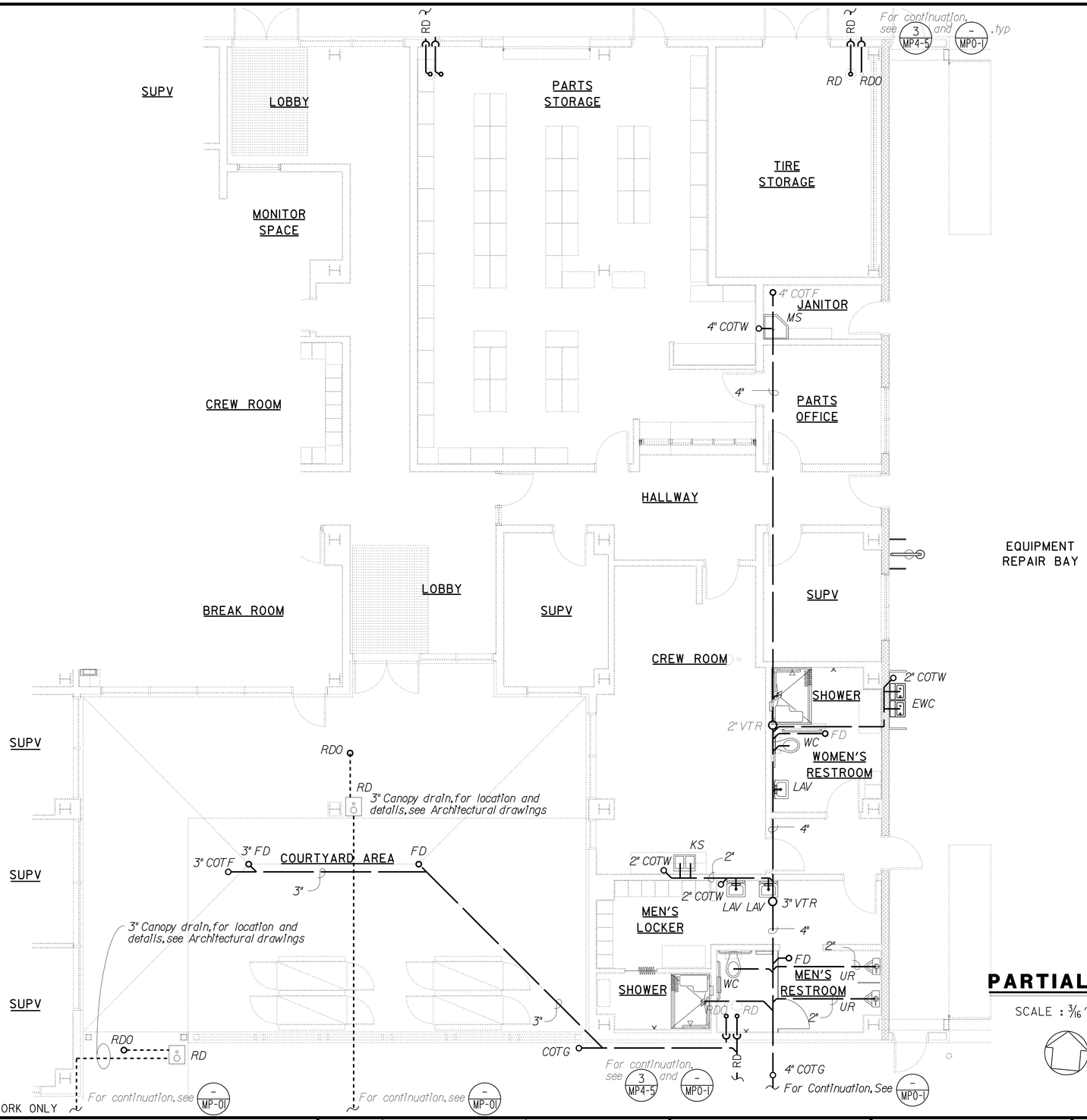

THIS DRAWING ACCURATE FOR MECHANICAL WORK ONLY

PARTIAL PLAN

SCALE : 3/16" = 1'-0"

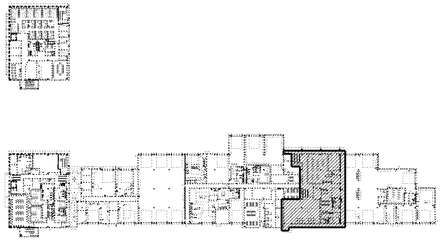

KEY PLAN

DESIGN	BY Solomon Wong	CHECKED Tom Hatam	
DETAILS	BY Angela Chen	CHECKED Tom Hatam	
QUANTITIES	BY Solomon Wong	CHECKED Tom Hatam	

STATE OF CALIFORNIA
DEPARTMENT OF TRANSPORTATION

DIVISION OF ENGINEERING SERVICES
ELECTRICAL-MECHANICAL-WATER AND WASTEWATER DESIGN

BRIDGE NO. 33M5785
POST MILE 2.2

SFOBB MAINTENANCE COMPLEX
BUILDING 1B — SANITARY SEWER PLAN NO. 6

SHEET **MP1-6**

TAEMWW Imperial Rev. 7/10
FILE => mp1_6.dgn
DATE PLOTTED => 26-OCT-2012 TIME PLOTTED => 06:59

ORIGINAL SCALE IN INCHES FOR REDUCED PLANS 0 1 2 3

UNIT 3615
PROJECT NUMBER & PHASE 04120006661
EA 014081

DISREGARD PRINTS BEARING EARLIER REVISION DATES → 05-08-12 05-25-12

REVISION DATES (PRELIMINARY STAGE ONLY) SHEET OF

USERNAME => s124436 DATE PLOTTED => 26-OCT-2012 TIME PLOTTED => 06:59

VI=I

DIST.	COUNTY	ROUTE	POST MILES TOTAL PROJECT	SHEET NO.	TOTAL SHEETS
04	Ala	80	2.2	571	800

CALIFORNIA STATE FIRE MARSHAL APPROVED

Approval of this plan does not authorize or approve any omission or deviation from applicable regulations. Final approval is subject to field inspection. One set of approved plans shall be available on the project site at all times.

Reviewed by: JOHN E WOODS, SDSFM

Approval date: 8-22-12

Solomon C. Wong — 05-25-12
REGISTERED MECHANICAL ENGINEER — DATE

REGISTERED PROFESSIONAL ENGINEER
SOLOMON WONG
No. M27626
Exp. 6-30-13
MECH
STATE OF CALIFORNIA

10-22-12
PLANS APPROVAL DATE

The State of California or its officers or agents shall not be responsible for the accuracy or completeness of scanned copies of this plan sheet.

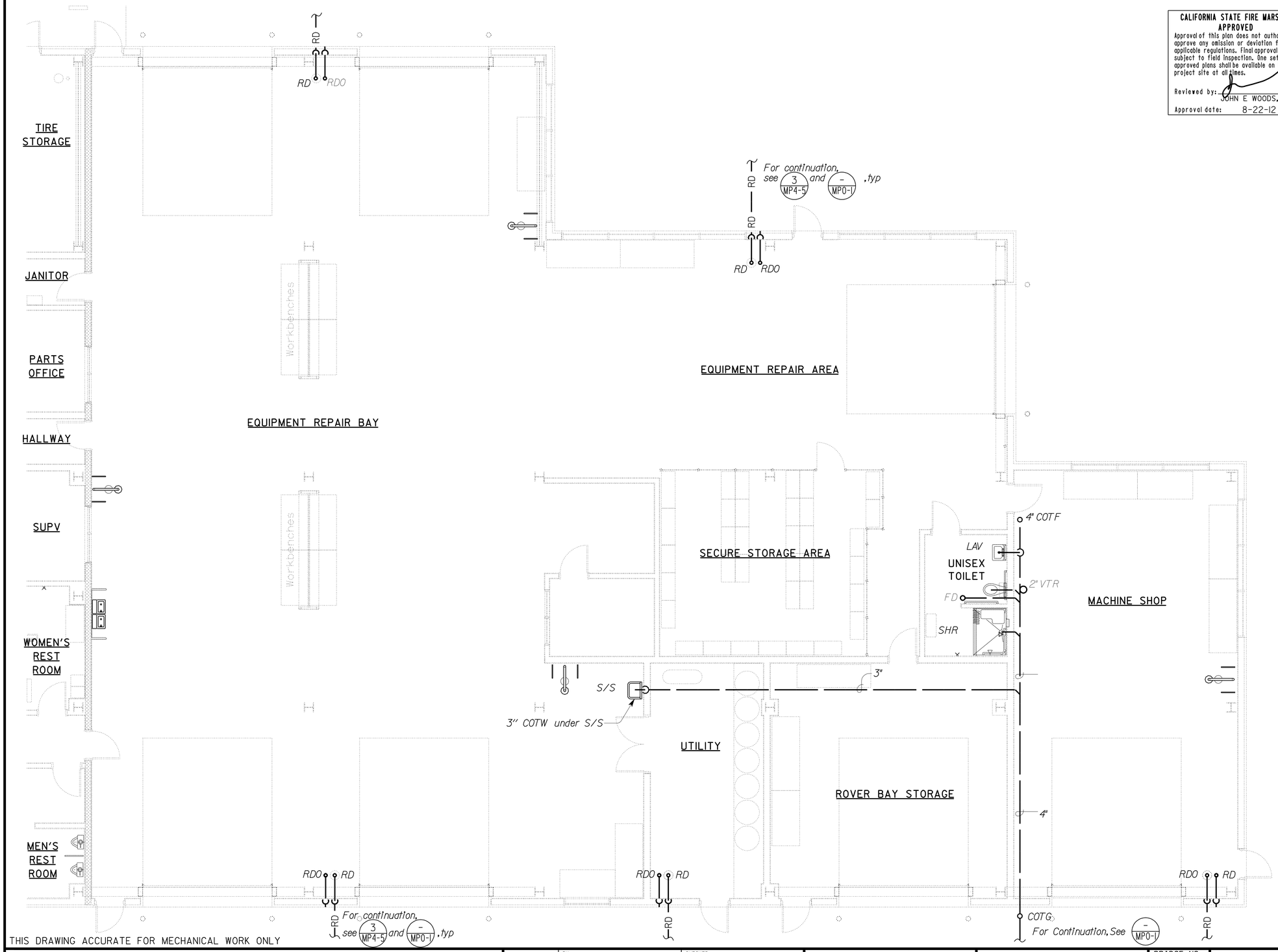

THIS DRAWING ACCURATE FOR MECHANICAL WORK ONLY

PARTIAL PLAN

SCALE : 3/16" = 1'-0"

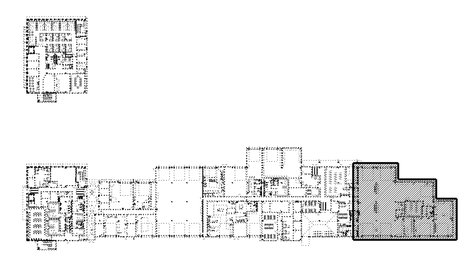

KEY PLAN

	BY		CHECKED	
DESIGN	BY	Solomon Wong	CHECKED	Tom Hatam
DETAILS	BY	Angela Chen	CHECKED	Tom Hatam
QUANTITIES	BY	Solomon Wong	CHECKED	Tom Hatam

STATE OF CALIFORNIA
DEPARTMENT OF TRANSPORTATION

DIVISION OF ENGINEERING SERVICES
ELECTRICAL-MECHANICAL-WATER AND WASTEWATER DESIGN

BRIDGE NO. 33M5785
POST MILE 2.2

SFOBB MAINTENANCE COMPLEX

BUILDING 1B — SANITARY SEWER PLAN NO. 7

SHEET **MP1-7**

TAEMWW Imperial Rev. 7/10

FILE => mp1_7.dgn
DATE PLOTTED => 30-OCT-2012 TIME PLOTTED => 07:31

ORIGINAL SCALE IN INCHES FOR REDUCED PLANS 0 1 2 3

UNIT 3615
PROJECT NUMBER & PHASE 04120006661
EA 014081

DISREGARD PRINTS BEARING EARLIER REVISION DATES → 05-08-12 05-25-12

REVISION DATES (PRELIMINARY STAGE ONLY) SHEET OF

USERNAME => s114640 DATE PLOTTED => 30-OCT-2012 TIME PLOTTED => 07:31

VI=1

DIST.	COUNTY	ROUTE	POST MILES TOTAL PROJECT	SHEET NO.	TOTAL SHEETS
04	Ala	80	2.2	572	800

REGISTERED MECHANICAL ENGINEER — 05-25-12 DATE

REGISTERED PROFESSIONAL ENGINEER — SOLOMON WONG — No. M27626 — Exp. 6-30-13 — MECH — STATE OF CALIFORNIA

10-22-12
PLANS APPROVAL DATE

The State of California or its officers or agents shall not be responsible for the accuracy or completeness of scanned copies of this plan sheet.

CALIFORNIA STATE FIRE MARSHAL APPROVED

Approval of this plan does not authorize or approve any omission or deviation from applicable regulations. Final approval is subject to field inspection. One set of approved plans shall be available on the project site at all times.

Reviewed by: JOHN E WOODS, SDSFM

Approval date: 8-22-12

Note:

1. For nonpotable water supply to water closet and urinal, see MPI-15
2. Insulate all hot water supply and recirculation lines.

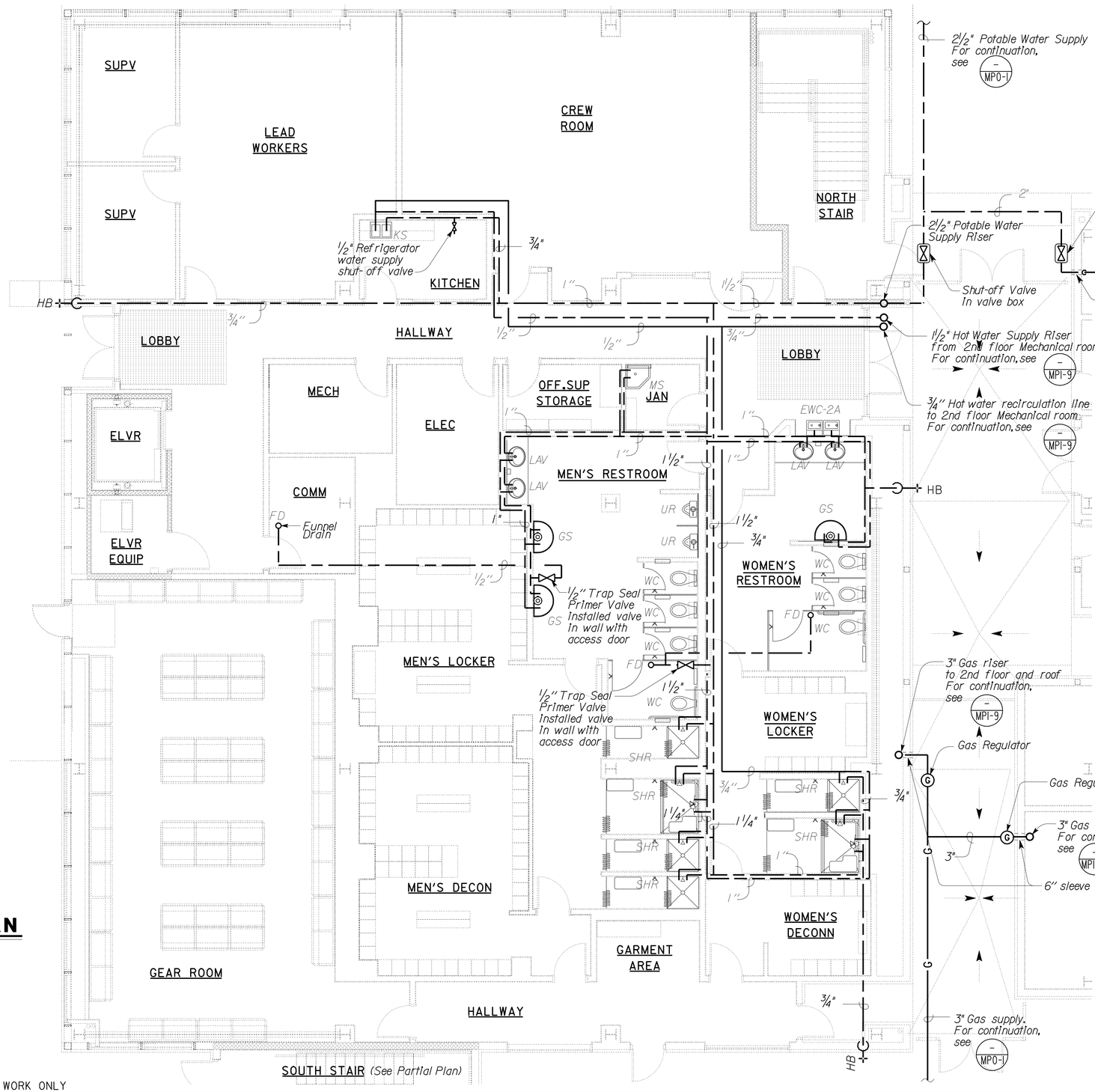

1st FLOOR PLAN

SCALE : 3/16" = 1'-0"

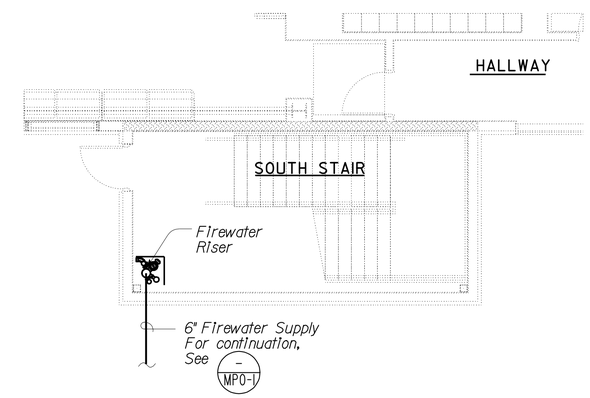

PARTIAL PLAN

SCALE : 3/16" = 1'-0"

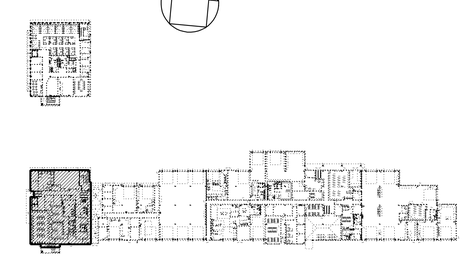

KEY PLAN

THIS DRAWING ACCURATE FOR MECHANICAL WORK ONLY

	BY		CHECKED	
DESIGN	BY	Solomon Wong	CHECKED	Tom Hatam
DETAILS	BY	Angela Chen	CHECKED	Tom Hatam
QUANTITIES	BY	Solomon Wong	CHECKED	Tom Hatam

STATE OF CALIFORNIA
DEPARTMENT OF TRANSPORTATION

DIVISION OF ENGINEERING SERVICES
ELECTRICAL-MECHANICAL-WATER AND WASTEWATER DESIGN

BRIDGE NO. 33M5785
POST MILE 2.2

SFOBB MAINTENANCE COMPLEX

BUILDING 1A — DOMESTIC WATER PLAN NO. 1

SHEET **MP1-8**

TAEMWW Imperial Rev. 7/10
FILE => mp1_8.dgn
DATE PLOTTED => 26-OCT-2012 TIME PLOTTED => 06:59

ORIGINAL SCALE IN INCHES FOR REDUCED PLANS 0 1 2 3

UNIT 3615
PROJECT NUMBER & PHASE 04120006661
EA 014081

DISREGARD PRINTS BEARING EARLIER REVISION DATES →
REVISION DATES (PRELIMINARY STAGE ONLY) 05-08-12 05-25-12
SHEET OF

USERNAME => s124496 DATE PLOTTED => 26-OCT-2012 TIME PLOTTED => 06:59

V|=|

DIST.	COUNTY	ROUTE	POST MILES TOTAL PROJECT	SHEET NO.	TOTAL SHEETS
04	Ala	80	2.2	573	800

CALIFORNIA STATE FIRE MARSHAL APPROVED
Approval of this plan does not authorize or approve any omission or deviation from applicable regulations. Final approval is subject to field inspection. One set of approved plans shall be available on the project site at all times.
Reviewed by: JOHN E WOODS, SDSFM
Approval date: 8-22-12

Solomon C. Wong — 05-25-12
REGISTERED MECHANICAL ENGINEER — DATE

REGISTERED PROFESSIONAL ENGINEER
SOLOMON WONG
No. M27626
Exp. 6-30-13
MECH
STATE OF CALIFORNIA

10-22-12
PLANS APPROVAL DATE

The State of California or its officers or agents shall not be responsible for the accuracy or completeness of scanned copies of this plan sheet.

Note:

1. For non potable water supply to water closet and urinal, see MP1-16
2. For hose faucet on roof, see MP1-25
3. Insulate all hot water supply and recirculation lines.
4. Install digital gas meter in an accessible location in accordance with the manufacturer's instructions, see MP4-3
5. Provide access door for Trap Seal Primer Valve.

2nd FLOOR PLAN

SCALE : 3/16" = 1'-0"

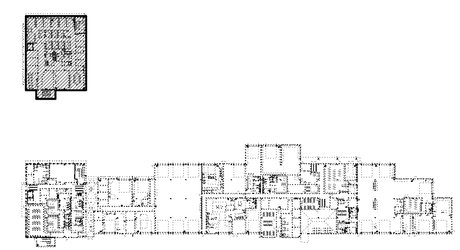

KEY PLAN

THIS DRAWING ACCURATE FOR MECHANICAL WORK ONLY

	BY		CHECKED
DESIGN	Solomon Wong		Tom Hatam
DETAILS	Angela Chen		Tom Hatam
QUANTITIES	Solomon Wong		Tom Hatam

STATE OF CALIFORNIA DEPARTMENT OF TRANSPORTATION

DIVISION OF ENGINEERING SERVICES
ELECTRICAL-MECHANICAL-WATER AND WASTEWATER DESIGN

BRIDGE NO. 33M5785
POST MILE 2.2

SFOBB MAINTENANCE COMPLEX
BUILDING 1A
DOMESTIC WATER PLAN NO. 2

SHEET **MP1-9**

TAEMWW Imperial Rev. 7/10
FILE => mp1_9.dgn
DATE PLOTTED => 26-OCT-2012 TIME PLOTTED => 07:00
ORIGINAL SCALE IN INCHES FOR REDUCED PLANS 0 1 2 3
UNIT 3615
PROJECT NUMBER & PHASE 04120006661
EA 014081
DISREGARD PRINTS BEARING EARLIER REVISION DATES
REVISION DATES (PRELIMINARY STAGE ONLY) 05-08-12 05-25-12
SHEET OF

USERNAME => s124496 DATE PLOTTED => 26-OCT-2012 TIME PLOTTED => 07:00

DIST.	COUNTY	ROUTE	POST MILES TOTAL PROJECT	SHEET NO.	TOTAL SHEETS
04	Ala	80	2.2	574	800

REGISTERED MECHANICAL ENGINEER — 05-25-12 DATE

REGISTERED PROFESSIONAL ENGINEER — SOLOMON WONG — No. M27626 — Exp. 6-30-13 — MECH — STATE OF CALIFORNIA

10-22-12
PLANS APPROVAL DATE

The State of California or its officers or agents shall not be responsible for the accuracy or completeness of scanned copies of this plan sheet.

CALIFORNIA STATE FIRE MARSHAL APPROVED
Approval of this plan does not authorize or approve any omission or deviation from applicable regulations. Final approval is subject to field inspection. One set of approved plans shall be available on the project site at all times.
Reviewed by: JOHN E WOODS, SDSFM
Approval date: 8-22-12

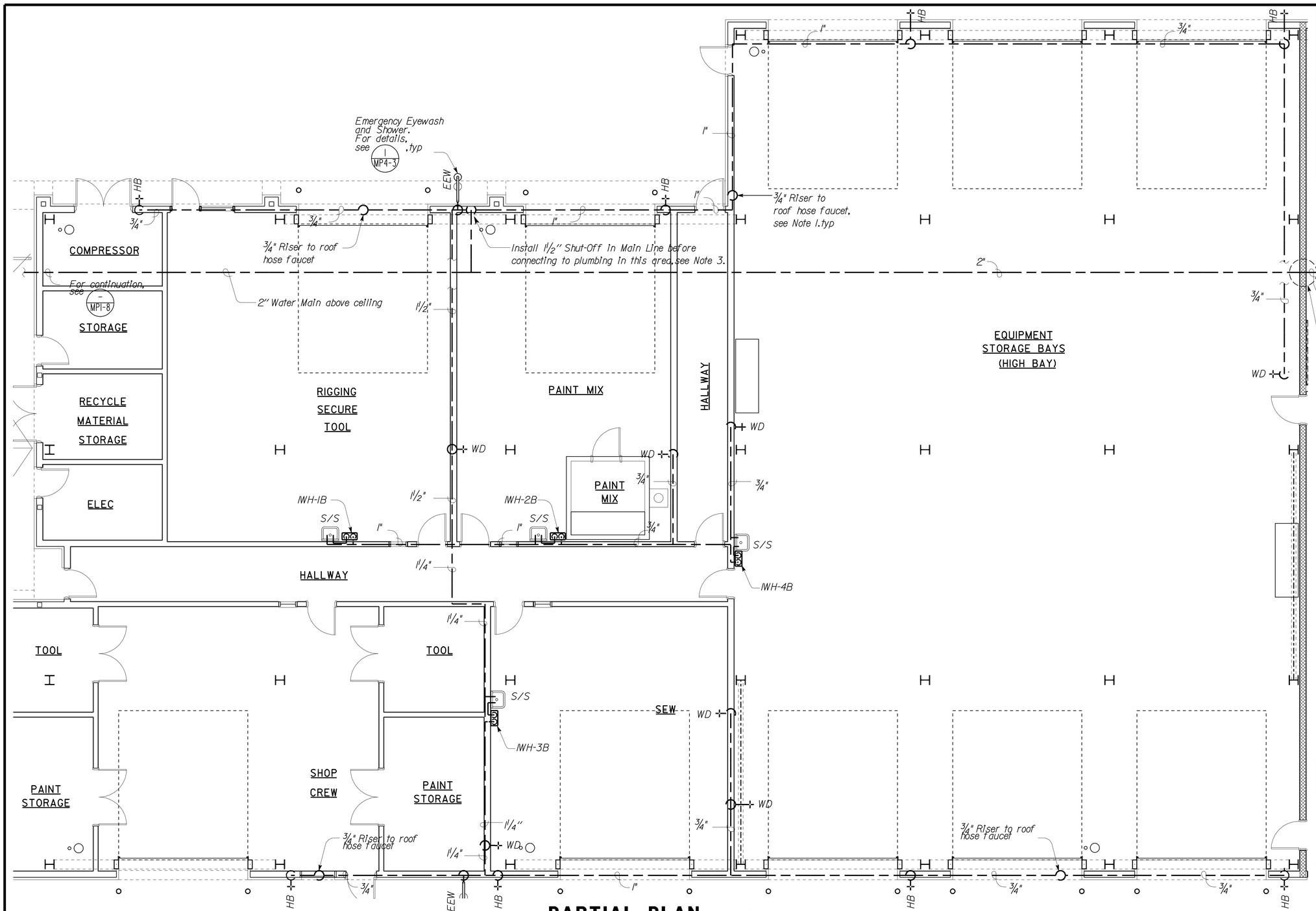

PARTIAL PLAN

SCALE : 3/16" = 1'-0"

Note:

1. For hose faucet on roof see MP1-26
2. Insulate all hot water supply lines.
3. Shut-Off must be Installed in an access box 5' from floor. Mark box "Water Shut-Off Valve".

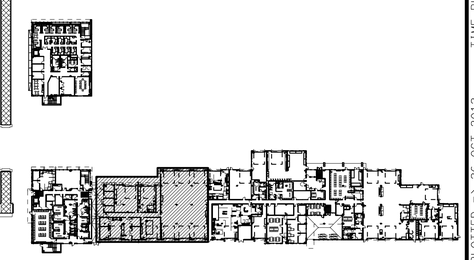

KEY PLAN

THIS DRAWING ACCURATE FOR MECHANICAL WORK ONLY

	BY	CHECKED
DESIGN	Solomon Wong	Tom Hatam
DETAILS	Angela Chen	Tom Hatam
QUANTITIES	Solomon Wong	Tom Hatam

STATE OF CALIFORNIA
DEPARTMENT OF TRANSPORTATION

DIVISION OF ENGINEERING SERVICES
ELECTRICAL-MECHANICAL-WATER AND WASTEWATER DESIGN

BRIDGE NO. 33M5785
POST MILE 2.2

SFOBB MAINTENANCE COMPLEX
BUILDING 1B — DOMESTIC WATER PLAN NO. 3

SHEET **MP1-10**

TAEMWW Imperial Rev. 7/10
FILE => mp1_10.dgn
DATE PLOTTED => 26-OCT-2012 TIME PLOTTED => 07:00

ORIGINAL SCALE IN INCHES FOR REDUCED PLANS 0 1 2 3

UNIT 3615
PROJECT NUMBER & PHASE 04120006661
EA 014081

DISREGARD PRINTS BEARING EARLIER REVISION DATES → 05-08-12 05-25-12

REVISION DATES (PRELIMINARY STAGE ONLY) — SHEET — OF

USERNAME => s124496 DATE PLOTTED => 26-OCT-2012 TIME PLOTTED => 07:00

V|=|

DIST.	COUNTY	ROUTE	POST MILES TOTAL PROJECT	SHEET NO.	TOTAL SHEETS
04	Ala	80	2.2	575	800

Solomon C. Wong — 05-25-12
REGISTERED MECHANICAL ENGINEER — DATE

REGISTERED PROFESSIONAL ENGINEER
SOLOMON WONG
No. M27626
Exp. 6-30-13
MECH
STATE OF CALIFORNIA

10-22-12
PLANS APPROVAL DATE

The State of California or its officers or agents shall not be responsible for the accuracy or completeness of scanned copies of this plan sheet.

CALIFORNIA STATE FIRE MARSHAL APPROVED
Approval of this plan does not authorize or approve any omission or deviation from applicable regulations. Final approval is subject to field inspection. One set of approved plans shall be available on the project site at all times.
Reviewed by: JOHN E WOODS, SDSFM
Approval date: 8-22-12

Notes:

1. For nonpotable water supply to water closet and urinal, see MPI-17
2. For hose faucet on roof, see MPI-26
3. Provide Access Door for Trap Primer Valve.
4. Shut-Off Valve must be installed in an access box 5'± from floor. Mark box "Water Shut-Off Valve".
5. Insulate all hot water supply and recirculation lines.

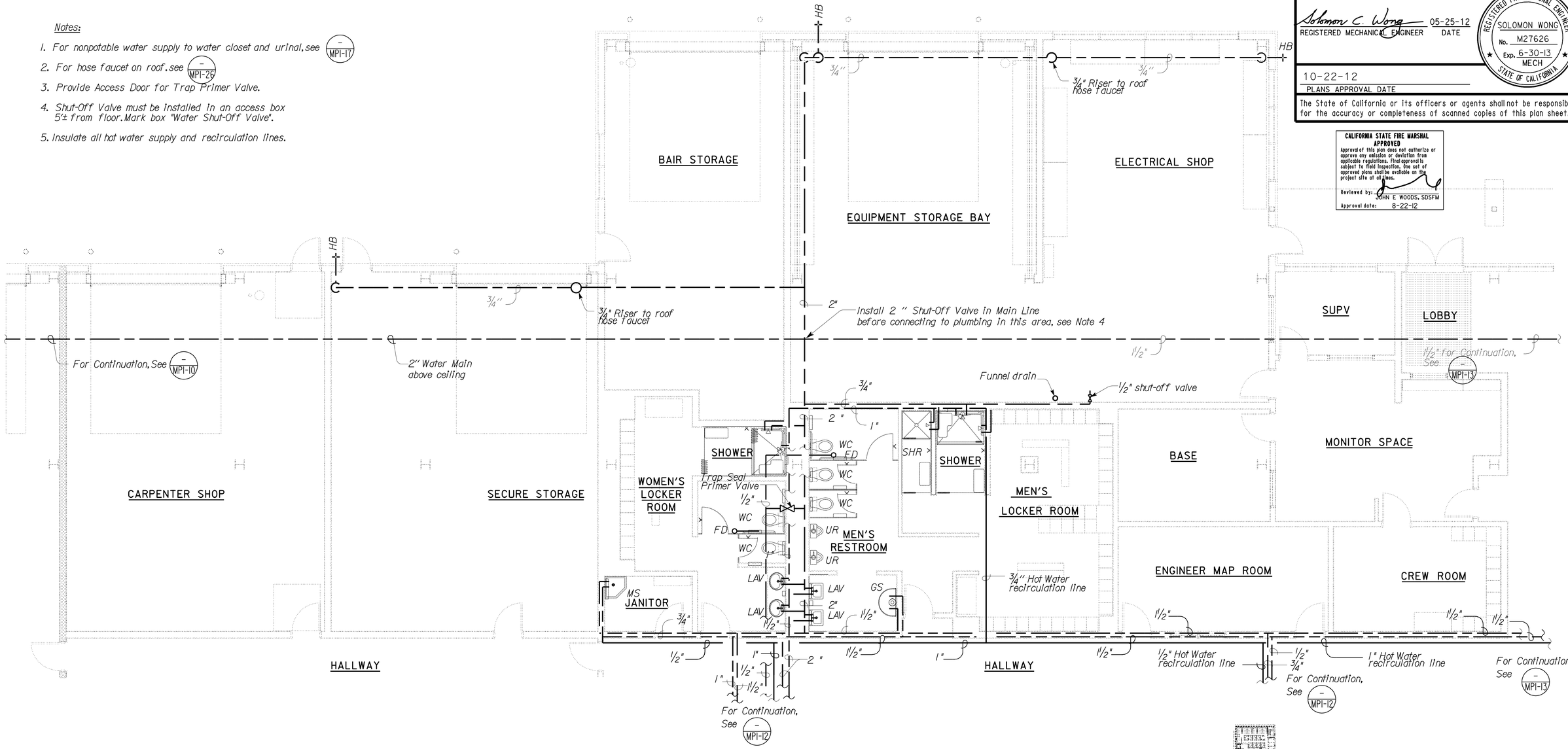

PARTIAL PLAN

SCALE : 3/16" = 1'-0"

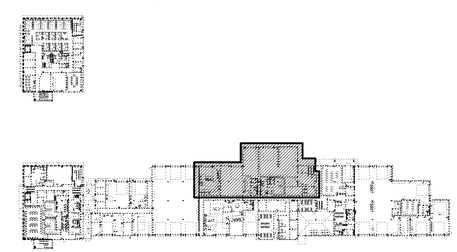

KEY PLAN

THIS DRAWING ACCURATE FOR MECHANICAL WORK ONLY

	BY	CHECKED
DESIGN	Solomon Wong	Tom Hatam
DETAILS	Angela Chen	Tom Hatam
QUANTITIES	Solomon Wong	Tom Hatam

STATE OF CALIFORNIA
DEPARTMENT OF TRANSPORTATION

DIVISION OF ENGINEERING SERVICES
ELECTRICAL-MECHANICAL-WATER AND WASTEWATER DESIGN

BRIDGE NO. 33M5785
POST MILE 2.2

SFOBB MAINTENANCE COMPLEX
BUILDING 1B — DOMESTIC WATER PLAN NO. 4

SHEET **MP1-11**

TAEMWW Imperial Rev. 7/10
FILE => mp1_11.dgn
DATE PLOTTED => 30-OCT-2012 TIME PLOTTED => 07:31

ORIGINAL SCALE IN INCHES FOR REDUCED PLANS 0 1 2 3

UNIT 3615
PROJECT NUMBER & PHASE 04120006661
EA 014081

DISREGARD PRINTS BEARING EARLIER REVISION DATES → 05-08-12 05-25-12

REVISION DATES (PRELIMINARY STAGE ONLY) SHEET OF

USERNAME => s114640 DATE PLOTTED => 30-OCT-2012 TIME PLOTTED => 07:31

VI=I

DIST.	COUNTY	ROUTE	POST MILES TOTAL PROJECT	SHEET NO.	TOTAL SHEETS
04	Ala	80	2.2	576	800

CALIFORNIA STATE FIRE MARSHAL APPROVED
Approval of this plan does not authorize or approve any omission or deviation from applicable regulations. Final approval is subject to field inspection. One set of approved plans shall be available on the project site at all times.
Reviewed by: JOHN E WOODS, SDSFM
Approval date: 8-22-12

Solomon C. Wong — 05-25-12
REGISTERED MECHANICAL ENGINEER — DATE

REGISTERED PROFESSIONAL ENGINEER
SOLOMON WONG
No. M27626
Exp. 6-30-13
MECH
STATE OF CALIFORNIA

10-22-12
PLANS APPROVAL DATE

The State of California or its officers or agents shall not be responsible for the accuracy or completeness of scanned copies of this plan sheet.

Notes:

1. *For nonpotable water supply to water closet, see* (– / MP1-17)
2. *For hose faucet on roof, see* (– / MP1-26)
3. *Insulate all hot water supply and recirculation lines.*

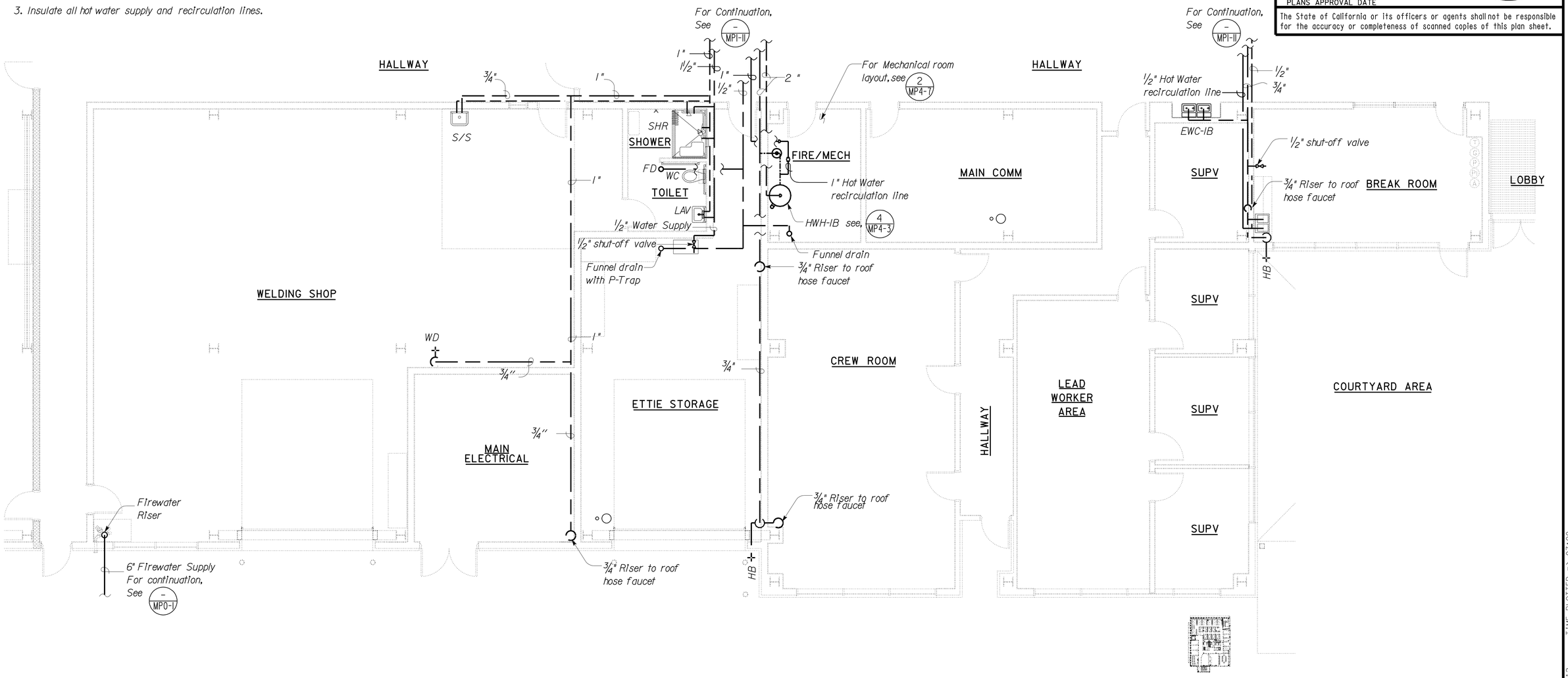

PARTIAL PLAN

SCALE : 3/16" = 1'-0"

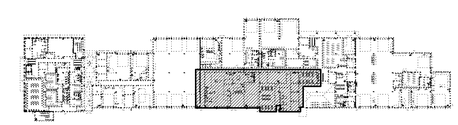

KEY PLAN

THIS DRAWING ACCURATE FOR MECHANICAL WORK ONLY

	BY	CHECKED
DESIGN	Solomon Wong	Tom Hatam
DETAILS	Angela Chen	Tom Hatam
QUANTITIES	Solomon Wong	Tom Hatam

STATE OF CALIFORNIA
DEPARTMENT OF TRANSPORTATION

DIVISION OF ENGINEERING SERVICES
ELECTRICAL-MECHANICAL-WATER AND WASTEWATER DESIGN

BRIDGE NO. 33M5785
POST MILE 2.2

SFOBB MAINTENANCE COMPLEX
BUILDING 1B — DOMESTIC WATER PLAN NO. 5

SHEET **MP1-12**

TAEMWW Imperial Rev. 7/10
FILE => mp1_12.dgn
DATE PLOTTED => 26-OCT-2012 TIME PLOTTED => 07:00
ORIGINAL SCALE IN INCHES FOR REDUCED PLANS 0 1 2 3
UNIT 3615
PROJECT NUMBER & PHASE 04120006661
EA 014081
DISREGARD PRINTS BEARING EARLIER REVISION DATES
REVISION DATES (PRELIMINARY STAGE ONLY) 05-08-12 05-25-12
SHEET OF
USERNAME => s124496 DATE PLOTTED => 26-OCT-2012 TIME PLOTTED => 07:00
V|=|

DIST.	COUNTY	ROUTE	POST MILES TOTAL PROJECT	SHEET NO.	TOTAL SHEETS
04	Ala	80	2.2	577	800

CALIFORNIA STATE FIRE MARSHAL APPROVED

Approval of this plan does not authorize or approve any omission or deviation from applicable regulations. Final approval is subject to field inspection. One set of approved plans shall be available on the project site at all times.

Reviewed by: JOHN E WOODS, SDSFM

Approval date: 8-22-12

Solomon C. Wong — 05-25-12

REGISTERED MECHANICAL ENGINEER — DATE

REGISTERED PROFESSIONAL ENGINEER — SOLOMON WONG — No. M27626 — Exp. 6-30-13 — MECH — STATE OF CALIFORNIA

10-22-12

PLANS APPROVAL DATE

The State of California or its officers or agents shall not be responsible for the accuracy or completeness of scanned copies of this plan sheet.

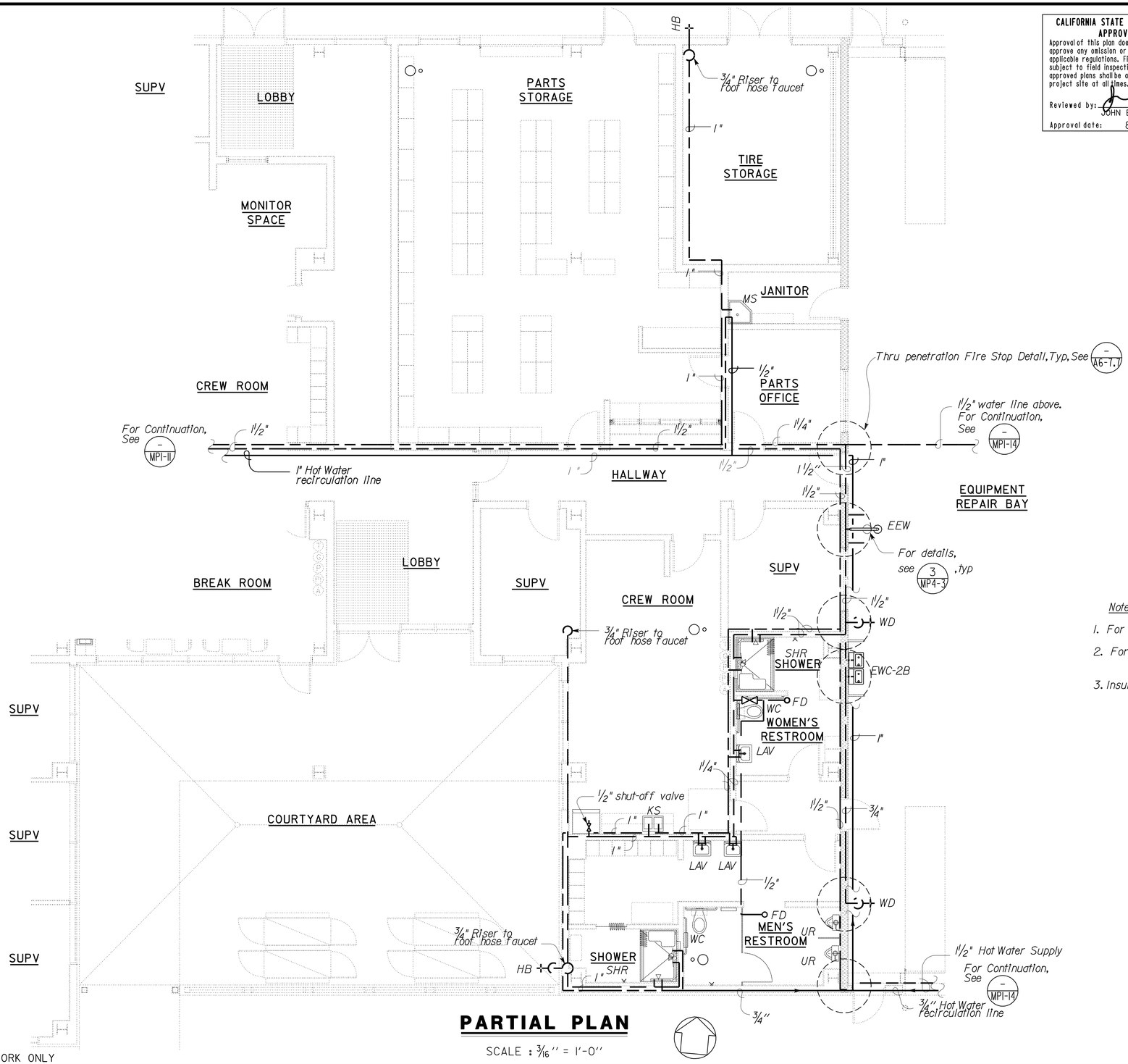

PARTIAL PLAN

SCALE : 3/16" = 1'-0"

Notes:

1. For nonpotable water supply to water closet and urinal, see MP1-17
2. For hose faucet on roof, see MP1-26
3. Insulate all hot water supply and recirculation lines.

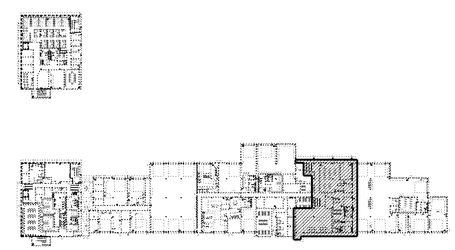

KEY PLAN

THIS DRAWING ACCURATE FOR MECHANICAL WORK ONLY

DESIGN	BY Solomon Wong	CHECKED Tom Hatam	
DETAILS	BY Angela Chen	CHECKED Tom Hatam	
QUANTITIES	BY Solomon Wong	CHECKED Tom Hatam	

STATE OF CALIFORNIA DEPARTMENT OF TRANSPORTATION

DIVISION OF ENGINEERING SERVICES
ELECTRICAL-MECHANICAL-WATER AND WASTEWATER DESIGN

UNIT 3615
PROJECT NUMBER & PHASE 04120006661
EA 014081

BRIDGE NO. 33M5785
POST MILE 2.2

SFOBB MAINTENANCE COMPLEX

BUILDING 1B — DOMESTIC WATER PLAN NO. 6

SHEET **MP1-13**

TAEMWW Imperial Rev. 7/10

FILE => mp1_13.dgn
DATE PLOTTED => 26-OCT-2012 TIME PLOTTED => 07:01

ORIGINAL SCALE IN INCHES FOR REDUCED PLANS 0 1 2 3

DISREGARD PRINTS BEARING EARLIER REVISION DATES → 05-08-12 05-25-12

REVISION DATES (PRELIMINARY STAGE ONLY) — SHEET — OF

USERNAME => s124496 DATE PLOTTED => 26-OCT-2012 TIME PLOTTED => 07:01

VI=1

DIST.	COUNTY	ROUTE	POST MILES TOTAL PROJECT	SHEET NO.	TOTAL SHEETS
04	Ala	80	2.2	578	800

CALIFORNIA STATE FIRE MARSHAL APPROVED
Approval of this plan does not authorize or approve any omission or deviation from applicable regulations. Final approval is subject to field inspection. One set of approved plans shall be available on the project site at all times.
Reviewed by: JOHN E WOODS, SDSFM
Approval date: 8-22-12

Solomon C. Wong — 05-25-12
REGISTERED MECHANICAL ENGINEER — DATE

REGISTERED PROFESSIONAL ENGINEER — SOLOMON WONG — No. M27626 — Exp. 6-30-13 — MECH — STATE OF CALIFORNIA

10-22-12
PLANS APPROVAL DATE

The State of California or its officers or agents shall not be responsible for the accuracy or completeness of scanned copies of this plan sheet.

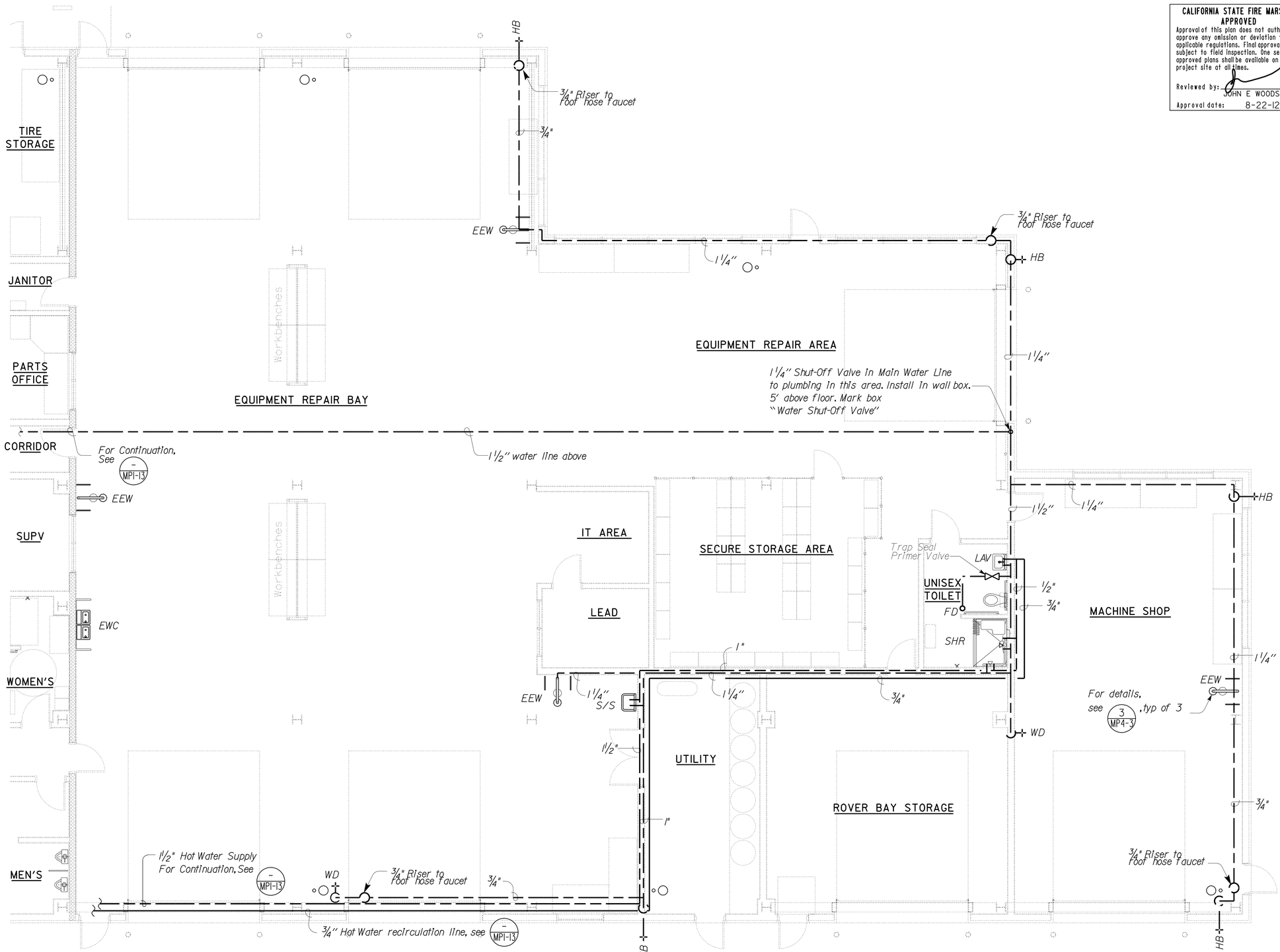

THIS DRAWING ACCURATE FOR MECHANICAL WORK ONLY

Notes:

1. For nonpotable water supply to water closet, see MP1-18
2. For hose faucet on roof, see MP1-26
3. Insulate all hot water supply and recirculation lines.

PARTIAL PLAN

SCALE : 3/16" = 1'-0"

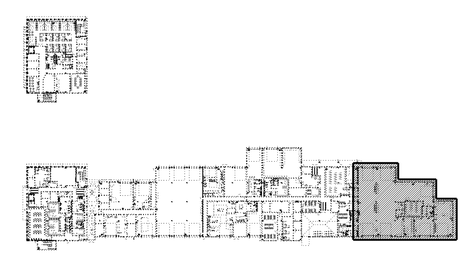

KEY PLAN

DESIGN	BY Solomon Wong	CHECKED Tom Hatam	
DETAILS	BY Angela Chen	CHECKED Tom Hatam	
QUANTITIES	BY Solomon Wong	CHECKED Tom Hatam	

STATE OF CALIFORNIA
DEPARTMENT OF TRANSPORTATION

DIVISION OF ENGINEERING SERVICES
ELECTRICAL-MECHANICAL-WATER AND WASTEWATER DESIGN

BRIDGE NO. 33M5785
POST MILE 2.2

SFOBB MAINTENANCE COMPLEX
BUILDING 1B — DOMESTIC WATER PLAN NO. 7

SHEET **MP1-14**

TAEMWW Imperial Rev. 7/10
FILE => mp1_14.dgn
DATE PLOTTED => 30-OCT-2012 TIME PLOTTED => 07:32
ORIGINAL SCALE IN INCHES FOR REDUCED PLANS 0 1 2 3
UNIT 3615
PROJECT NUMBER & PHASE 04120006661
EA 014081
DISREGARD PRINTS BEARING EARLIER REVISION DATES
REVISION DATES (PRELIMINARY STAGE ONLY) 05-08-12 05-25-12
SHEET OF

USERNAME => s114640 DATE PLOTTED => 30-OCT-2012 TIME PLOTTED => 07:32
V|=|

DIST.	COUNTY	ROUTE	POST MILES TOTAL PROJECT	SHEET NO.	TOTAL SHEETS
04	Ala	80	2.2	579	800

REGISTERED MECHANICAL ENGINEER — 05-25-12 DATE

REGISTERED PROFESSIONAL ENGINEER — MARK HEDGLIN — No. M32912 — Exp. 9-30-12 — MECH — STATE OF CALIFORNIA

10-22-12
PLANS APPROVAL DATE

The State of California or its officers or agents shall not be responsible for the accuracy or completeness of scanned copies of this plan sheet.

CALIFORNIA STATE FIRE MARSHAL APPROVED

Approval of this plan does not authorize or approve any omission or deviation from applicable regulations. Final approval is subject to field inspection. One set of approved plans shall be available on the project site at all times.

Reviewed by: JOHN E WOODS, SDSFM

Approval date: 8-22-12

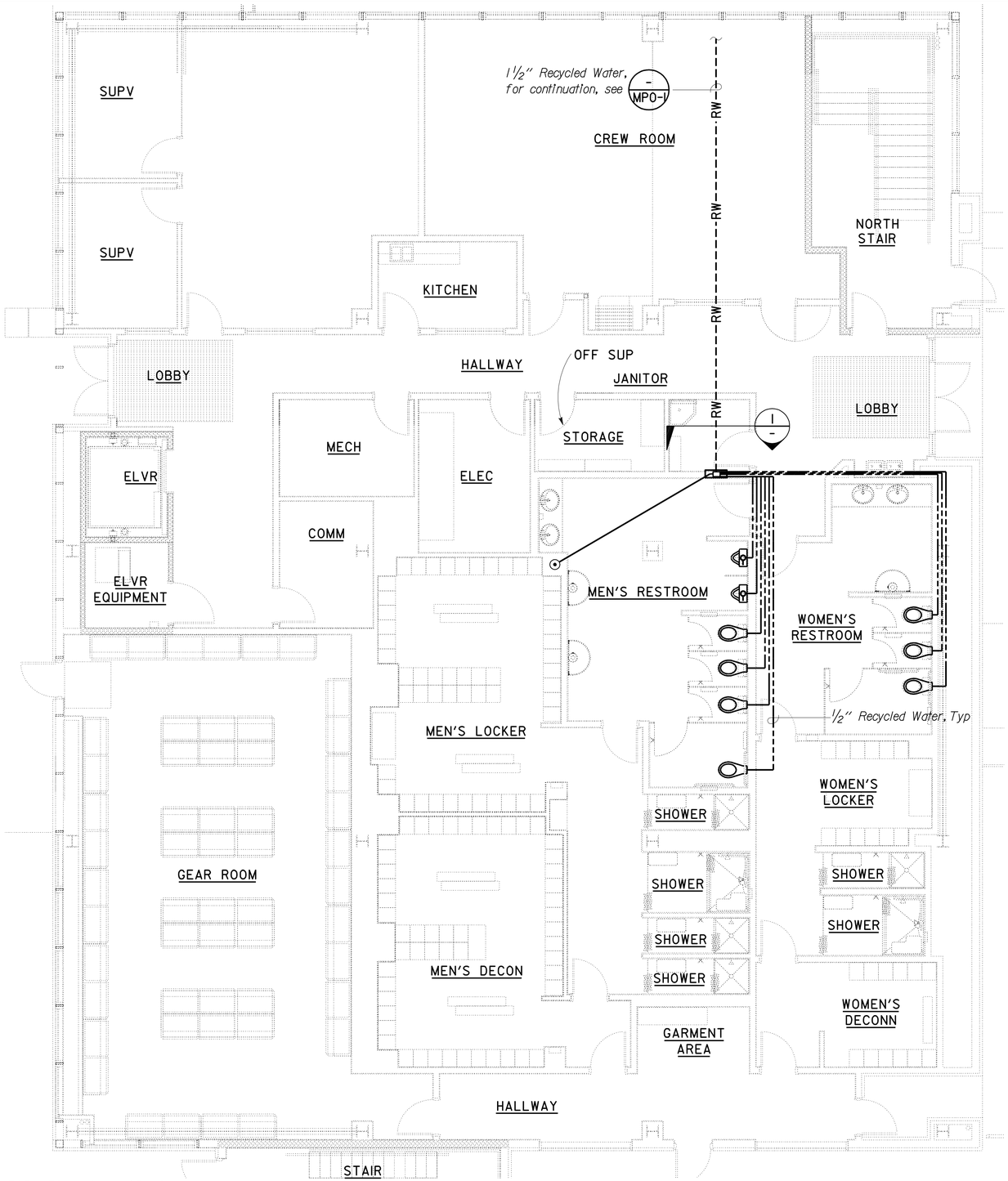

PARTIAL PLAN

SCALE : 3/16" = 1'-0"

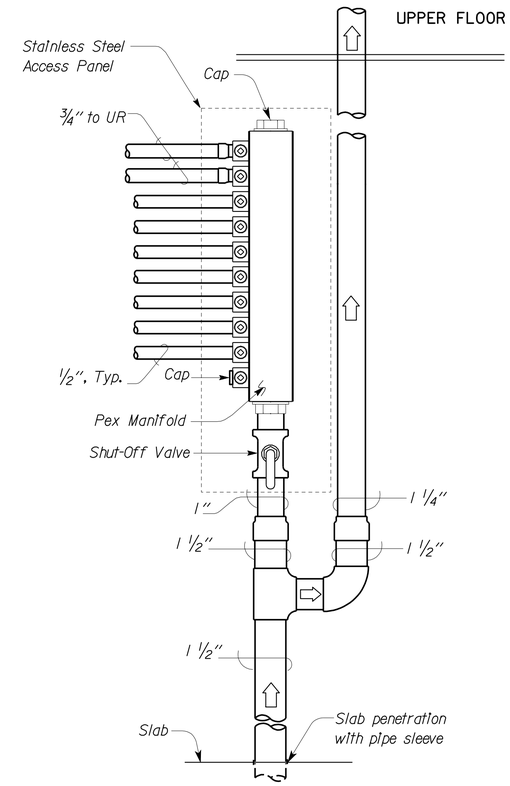

1 DETAIL

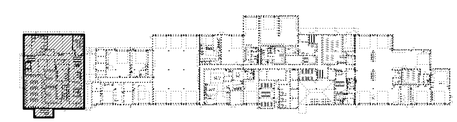

KEY PLAN

THIS DRAWING ACCURATE FOR MECHANICAL WORK ONLY

DESIGN	BY Mark Hedglin	CHECKED Tom Hatam	
DETAILS	BY Rudy Sarte	CHECKED Tom Hatam	
QUANTITIES	BY Mark Hedglin	CHECKED Tom Hatam	

STATE OF CALIFORNIA
DEPARTMENT OF TRANSPORTATION

DIVISION OF ENGINEERING SERVICES
ELECTRICAL-MECHANICAL-WATER AND WASTEWATER DESIGN

BRIDGE NO. 33M5785
POST MILE 2.2

SFOBB MAINTENANCE COMPLEX

BUILDING IA — RW PLUMBING PLAN NO. 1

SHEET **MP1-15**

TAEMWW Imperial Rev. 7/10
FILE => mp1_15.dgn
DATE PLOTTED => 26-OCT-2012 TIME PLOTTED => 07:01

ORIGINAL SCALE IN INCHES FOR REDUCED PLANS 0 1 2 3

UNIT 3615
PROJECT NUMBER & PHASE 04120006661
EA 014081

DISREGARD PRINTS BEARING EARLIER REVISION DATES → 05-08-12 05-25-12

REVISION DATES (PRELIMINARY STAGE ONLY) SHEET OF

USERNAME => s124496 DATE PLOTTED => 26-OCT-2012 TIME PLOTTED => 07:01

V|=|

DIST.	COUNTY	ROUTE	POST MILES TOTAL PROJECT	SHEET NO.	TOTAL SHEETS
04	Ala	80	2.2	580	800

REGISTERED MECHANICAL ENGINEER 05-25-12 DATE

REGISTERED PROFESSIONAL ENGINEER MARK HEDGLIN No. M32912 Exp. 9-30-12 MECH STATE OF CALIFORNIA

10-22-12
PLANS APPROVAL DATE

The State of California or its officers or agents shall not be responsible for the accuracy or completeness of scanned copies of this plan sheet.

CALIFORNIA STATE FIRE MARSHAL APPROVED

Approval of this plan does not authorize or approve any omission or deviation from applicable regulations. Final approval is subject to field inspection. One set of approved plans shall be available on the project site at all times.

Reviewed by: JOHN E WOODS, SDSFM

Approval date: 8-22-12

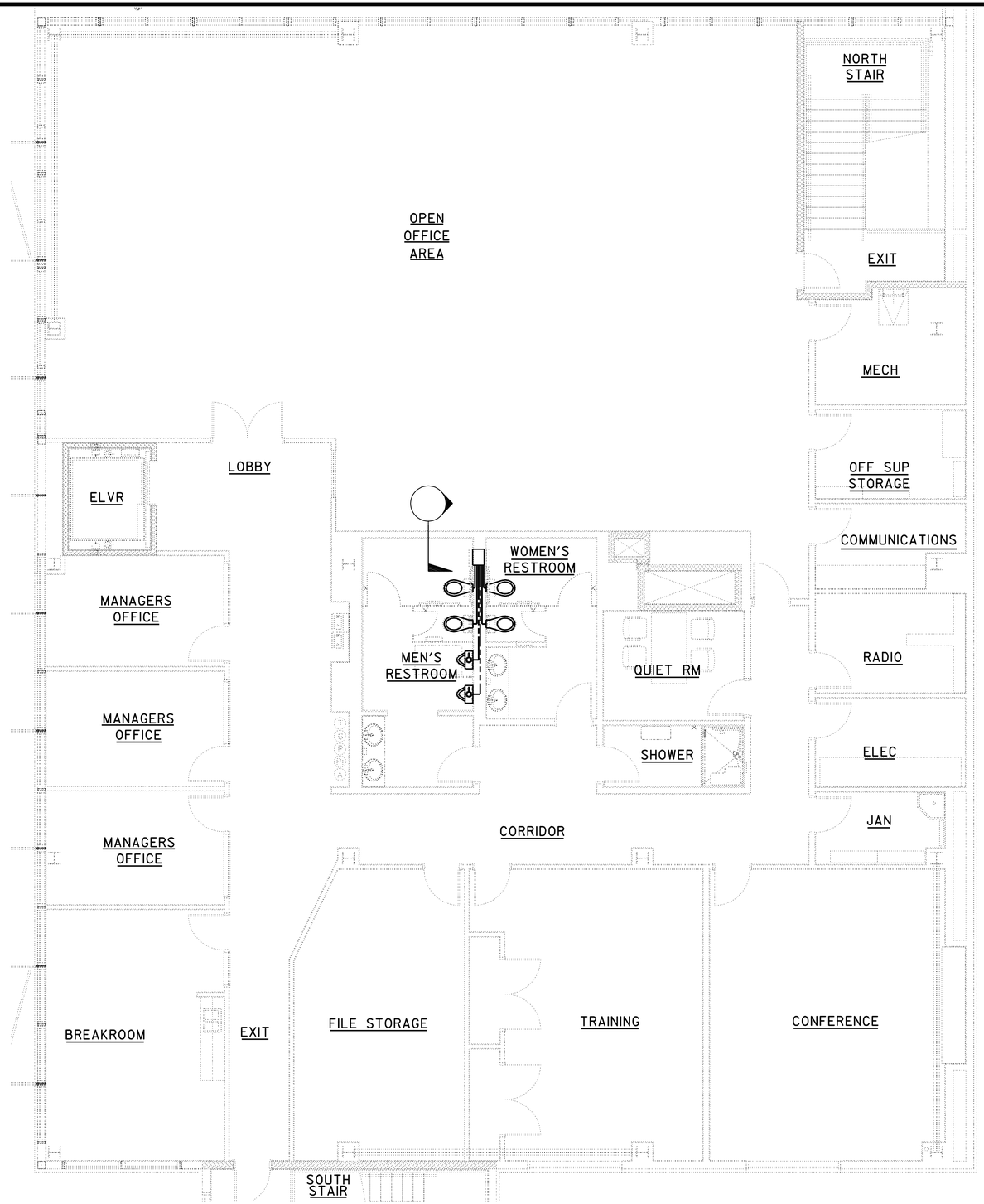

PARTIAL PLAN

SCALE : 3/16" = 1'-0"

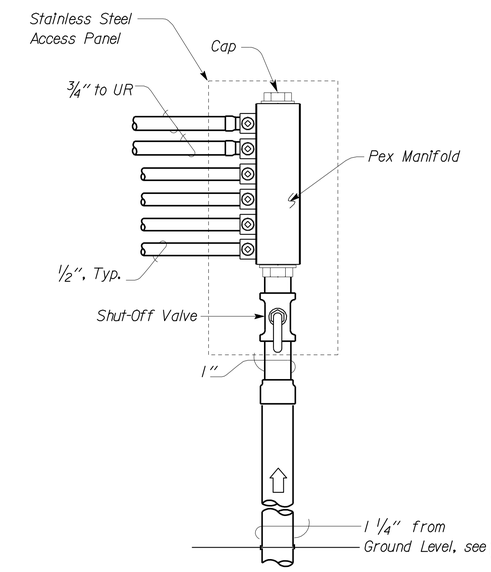

1 DETAIL

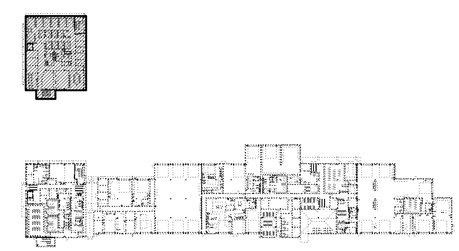

KEY PLAN

THIS DRAWING ACCURATE FOR MECHANICAL WORK ONLY

DESIGN	BY Mark Hedglin	CHECKED Tom Hatam	
DETAILS	BY Rudy Sarte	CHECKED Tom Hatam	
QUANTITIES	BY Mark Hedglin	CHECKED Tom Hatam	

STATE OF CALIFORNIA DEPARTMENT OF TRANSPORTATION

DIVISION OF ENGINEERING SERVICES
ELECTRICAL-MECHANICAL-WATER AND WASTEWATER DESIGN

BRIDGE NO. 33M5785
POST MILE 2.2

SFOBB MAINTENANCE COMPLEX

BUILDING IA — RW PLUMBING PLAN NO. 2

SHEET **MP1-16**

TAEMWW Imperial Rev. 7/10

FILE => mp1_16.dgn
DATE PLOTTED => 26-OCT-2012 TIME PLOTTED => 07:01

ORIGINAL SCALE IN INCHES FOR REDUCED PLANS 0 1 2 3

UNIT 3615
PROJECT NUMBER & PHASE 04120006661
EA 014081

DISREGARD PRINTS BEARING EARLIER REVISION DATES → 05-08-12 05-25-12

REVISION DATES (PRELIMINARY STAGE ONLY) SHEET OF

USERNAME => s124496 DATE PLOTTED => 26-OCT-2012 TIME PLOTTED => 07:01

VI=1

DIST.	COUNTY	ROUTE	POST MILES TOTAL PROJECT	SHEET NO.	TOTAL SHEETS
04	Ala	80	2.2	581	800

REGISTERED MECHANICAL ENGINEER — 05-25-12 DATE

REGISTERED PROFESSIONAL ENGINEER — MARK HEDGLIN No. M32912 Exp. 9-30-12 MECH — STATE OF CALIFORNIA

10-22-12
PLANS APPROVAL DATE

The State of California or its officers or agents shall not be responsible for the accuracy or completeness of scanned copies of this plan sheet.

CALIFORNIA STATE FIRE MARSHAL APPROVED
Approval of this plan does not authorize or approve any omission or deviation from applicable regulations. Final approval is subject to field inspection. One set of approved plans shall be available on the project site at all times.
Reviewed by: JOHN E WOODS, SDSFM
Approval date: 8-22-12

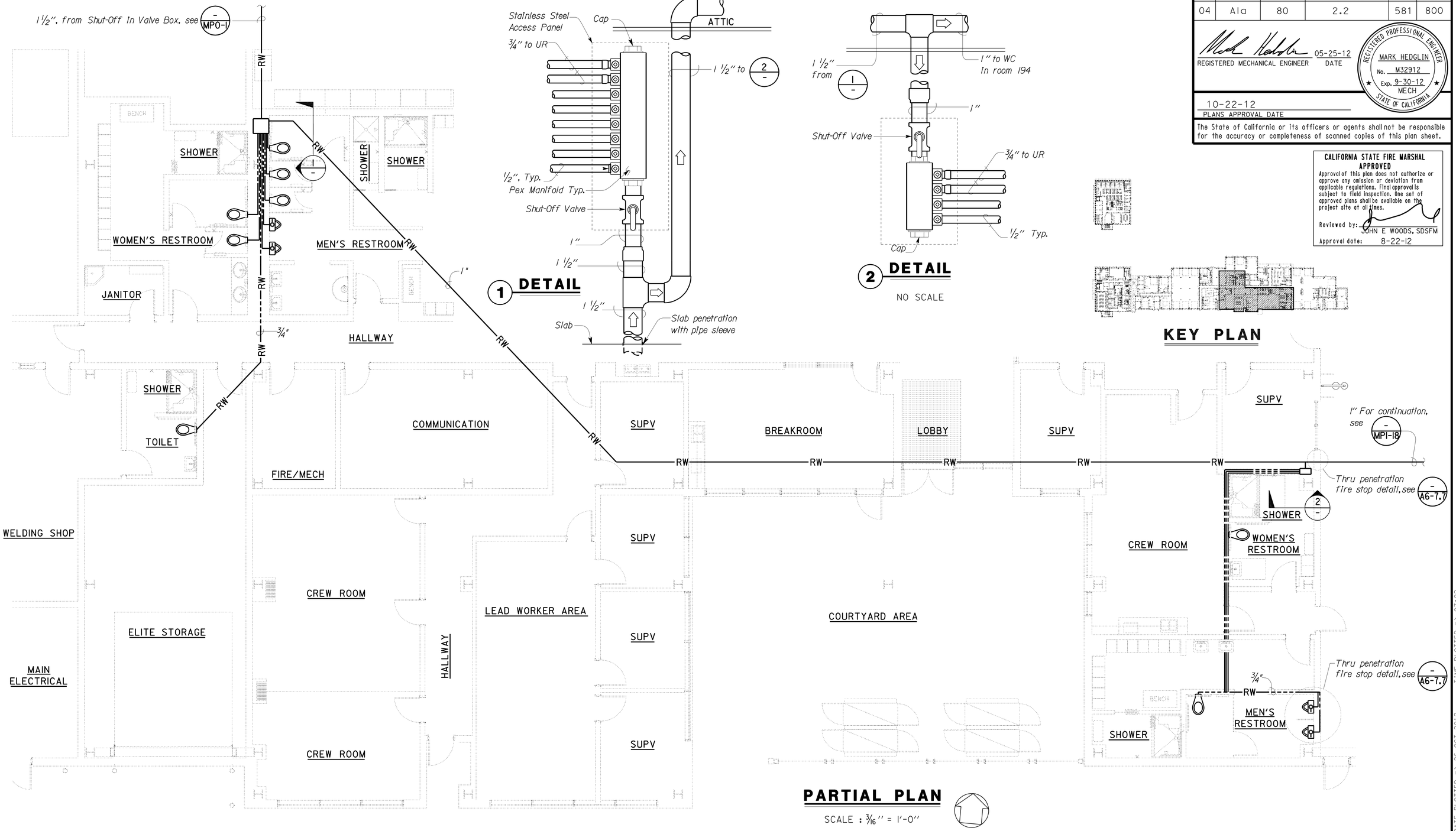

THIS DRAWING ACCURATE FOR MECHANICAL WORK ONLY

	BY	CHECKED
DESIGN	Mark Hedglin	Tom Hatam
DETAILS	Mark Hedglin	Tom Hatam
QUANTITIES	Solomon Wong	Tom Hatam

STATE OF CALIFORNIA DEPARTMENT OF TRANSPORTATION

DIVISION OF ENGINEERING SERVICES
ELECTRICAL-MECHANICAL-WATER AND WASTEWATER DESIGN

BRIDGE NO. 33M5785
POST MILE

SFOBB MAINTENANCE COMPLEX
BUILDING IB — RW PLUMBING PLAN NO. 3

SHEET **MP1-17**

TAEMWW Imperial Rev. 7/10
FILE => mp1_17.dgn
DATE PLOTTED => 26-OCT-2012 TIME PLOTTED => 07:02
ORIGINAL SCALE IN INCHES FOR REDUCED PLANS 0 1 2 3
UNIT 3615
PROJECT NUMBER & PHASE 04120006661
EA 014081
DISREGARD PRINTS BEARING EARLIER REVISION DATES → 05-08-12 05-25-12
REVISION DATES (PRELIMINARY STAGE ONLY) SHEET OF

USERNAME => s124496 DATE PLOTTED => 26-OCT-2012 TIME PLOTTED => 07:02

DIST.	COUNTY	ROUTE	POST MILES TOTAL PROJECT	SHEET NO.	TOTAL SHEETS
04	Ala	80	2.2	582	800

REGISTERED MECHANICAL ENGINEER — 05-25-12 DATE

REGISTERED PROFESSIONAL ENGINEER — MARK HEDGLIN — No. M32912 — Exp. 9-30-12 — MECH — STATE OF CALIFORNIA

10-22-12
PLANS APPROVAL DATE

The State of California or its officers or agents shall not be responsible for the accuracy or completeness of scanned copies of this plan sheet.

CALIFORNIA STATE FIRE MARSHAL APPROVED
Approval of this plan does not authorize or approve any omission or deviation from applicable regulations. Final approval is subject to field inspection. One set of approved plans shall be available on the project site at all times.
Reviewed by: JOHN E WOODS, SDSFM
Approval date: 8-22-12

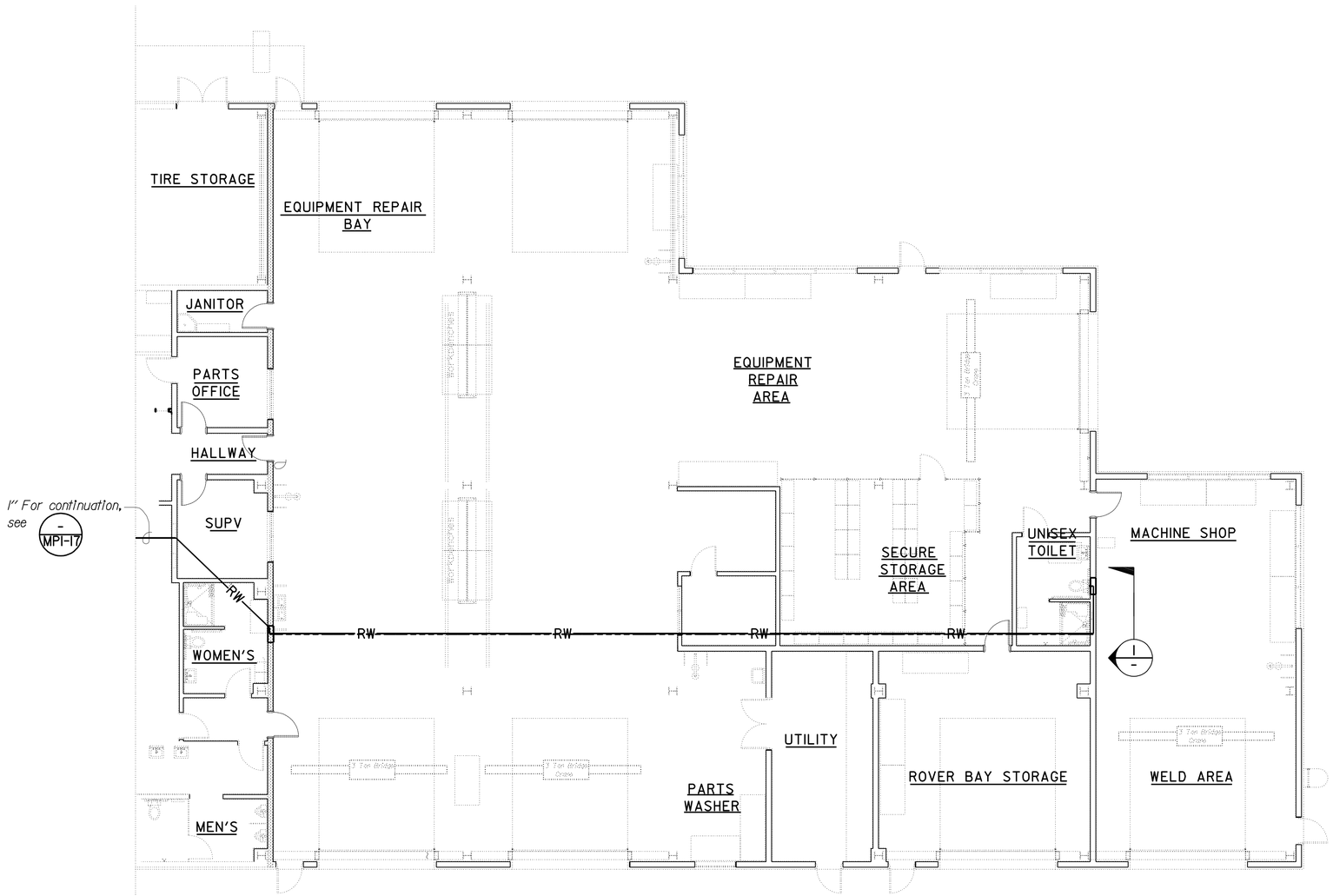

PARTIAL PLAN

SCALE : 3/16" = 1'-0"

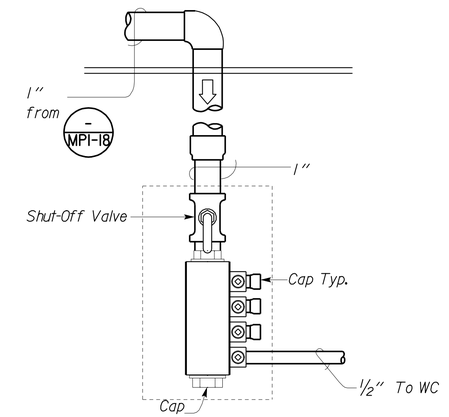

1 DETAIL

NO SCALE

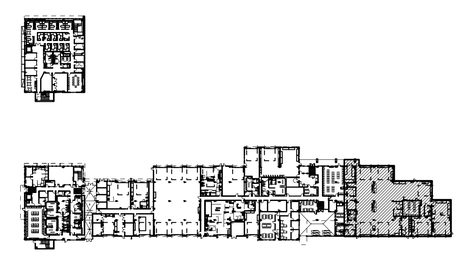

KEY PLAN

THIS DRAWING ACCURATE FOR MECHANICAL WORK ONLY

	BY	CHECKED
DESIGN	Mark Hedglin	Tom Hatam
DETAILS	Mark Hedglin	Tom Hatam
QUANTITIES	Solomon Wong	Tom Hatam

STATE OF CALIFORNIA
DEPARTMENT OF TRANSPORTATION

DIVISION OF ENGINEERING SERVICES
ELECTRICAL-MECHANICAL-WATER AND WASTEWATER DESIGN

BRIDGE NO. 33M5785
POST MILE 2.2

SFOBB MAINTENANCE COMPLEX
BUILDING IB — RW PLUMBING PLAN NO. 4

SHEET **MP1-18**

TAEMWW Imperial Rev. 7/10
FILE => mp1_18.dgn
DATE PLOTTED => 26-OCT-2012 TIME PLOTTED => 07:02

ORIGINAL SCALE IN INCHES FOR REDUCED PLANS 0 1 2 3

UNIT 3615
PROJECT NUMBER & PHASE 04120006661
EA 014081

DISREGARD PRINTS BEARING EARLIER REVISION DATES → 05-08-12 05-25-12

REVISION DATES (PRELIMINARY STAGE ONLY) SHEET OF

USERNAME => s124436 DATE PLOTTED => 26-OCT-2012 TIME PLOTTED => 07:02

V1=1

DIST.	COUNTY	ROUTE	POST MILES TOTAL PROJECT	SHEET NO.	TOTAL SHEETS
04	Ala	80	2.2	583	800

Solomon C. Wong — 05-25-12
REGISTERED MECHANICAL ENGINEER — DATE

REGISTERED PROFESSIONAL ENGINEER
SOLOMON WONG
No. M27626
Exp. 6-30-13
MECH
STATE OF CALIFORNIA

10-22-12
PLANS APPROVAL DATE

The State of California or its officers or agents shall not be responsible for the accuracy or completeness of scanned copies of this plan sheet.

CALIFORNIA STATE FIRE MARSHAL APPROVED
Approval of this plan does not authorize or approve any omission or deviation from applicable regulations. Final approval is subject to field inspection. One set of approved plans shall be available on the project site at all times.
Reviewed by: JOHN E WOODS, SDSFM
Approval date: 8-22-12

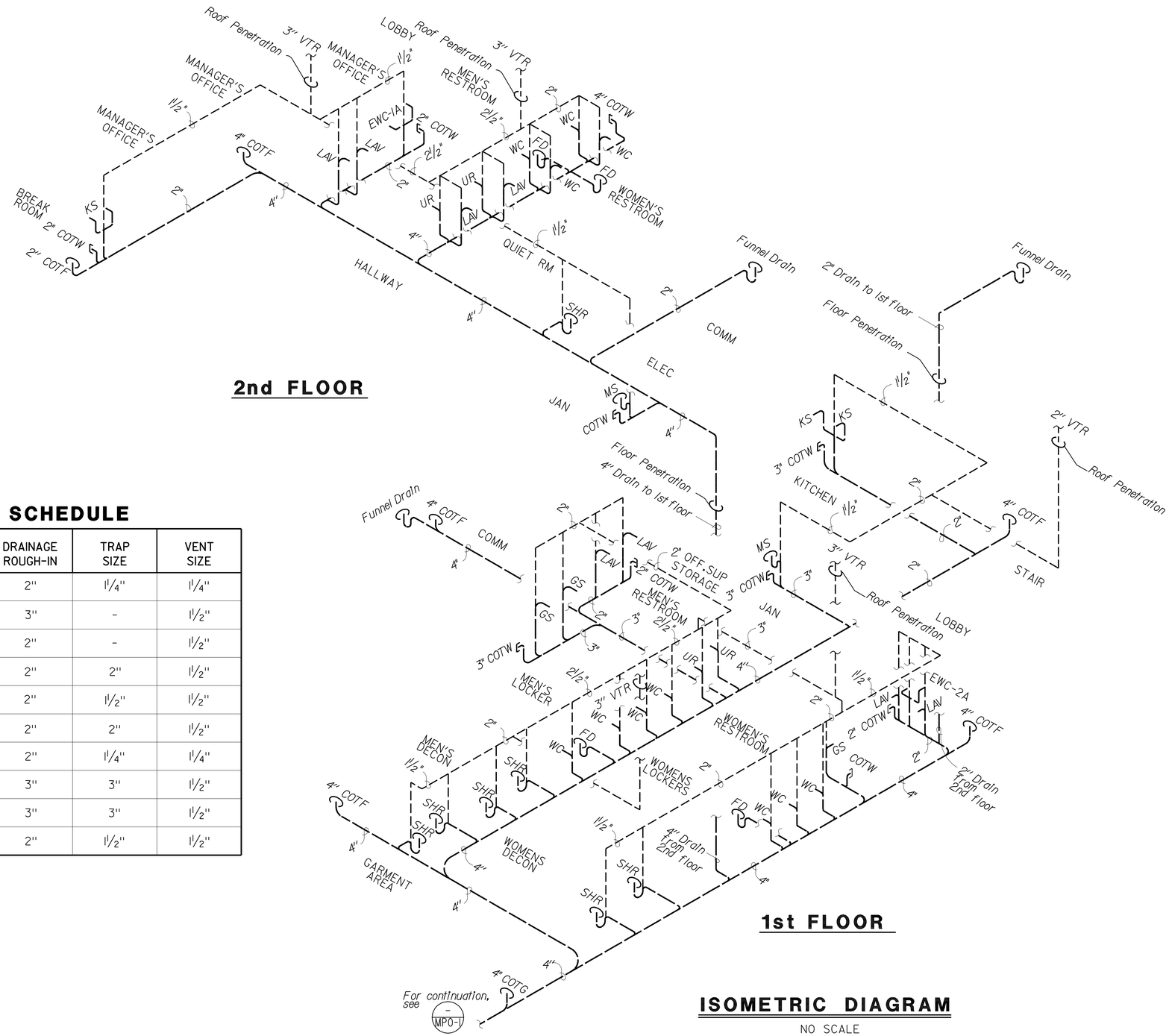

ISOMETRIC DIAGRAM

NO SCALE

PLUMBING SCHEDULE

FIXTURE	DRAINAGE ROUGH-IN	TRAP SIZE	VENT SIZE
LAVATORY	2"	1¼"	1¼"
WATER CLOSET	3"	-	1½"
URINAL	2"	-	1½"
SHOWER	2"	2"	1½"
KITCHEN SINK	2"	1½"	1½"
FLOOR DRAIN	2"	2"	1½"
ELECTRIC WATER COOLER	2"	1¼"	1¼"
SERVICE SINK	3"	3"	1½"
MOP SINK	3"	3"	1½"
GANG SINK	2"	1½"	1½"

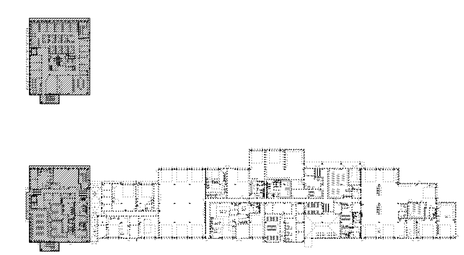

KEY PLAN

THIS DRAWING ACCURATE FOR MECHANICAL WORK ONLY

	BY		CHECKED
DESIGN	Solomon Wong		Tom Hatam
DETAILS	Angela Chen		Tom Hatam
QUANTITIES	Solomon Wong		Tom Hatam

STATE OF CALIFORNIA
DEPARTMENT OF TRANSPORTATION

DIVISION OF ENGINEERING SERVICES
ELECTRICAL-MECHANICAL-WATER AND WASTEWATER DESIGN

BRIDGE NO. 33M5785
POST MILE 2.2

SFOBB MAINTENANCE COMPLEX
BUILDING 1A — SANITARY SEWER ISOMETRIC NO. 1

SHEET **MP1-19**

TAEMWW Imperial Rev. 7/10
FILE => mp1_19.dgn
DATE PLOTTED => 26-OCT-2012 TIME PLOTTED => 07:02

ORIGINAL SCALE IN INCHES FOR REDUCED PLANS 0 1 2 3

UNIT 3615
PROJECT NUMBER & PHASE 04120006661
EA 014081

DISREGARD PRINTS BEARING EARLIER REVISION DATES → 05-08-12 05-25-12

REVISION DATES (PRELIMINARY STAGE ONLY) SHEET OF

USERNAME => s124496 DATE PLOTTED => 26-OCT-2012 TIME PLOTTED => 07:02

V|=|

DIST.	COUNTY	ROUTE	POST MILES TOTAL PROJECT	SHEET NO.	TOTAL SHEETS
04	Ala	80	2.2	584	800

Solomon C. Wong — 05-25-12
REGISTERED MECHANICAL ENGINEER — DATE

REGISTERED PROFESSIONAL ENGINEER
SOLOMON WONG
No. M27626
Exp. 6-30-13
MECH
STATE OF CALIFORNIA

10-22-12
PLANS APPROVAL DATE

The State of California or its officers or agents shall not be responsible for the accuracy or completeness of scanned copies of this plan sheet.

CALIFORNIA STATE FIRE MARSHAL APPROVED
Approval of this plan does not authorize or approve any omission or deviation from applicable regulations. Final approval is subject to field inspection. One set of approved plans shall be available on the project site at all times.
Reviewed by: JOHN E WOODS, SDSFM
Approval date: 8-22-12

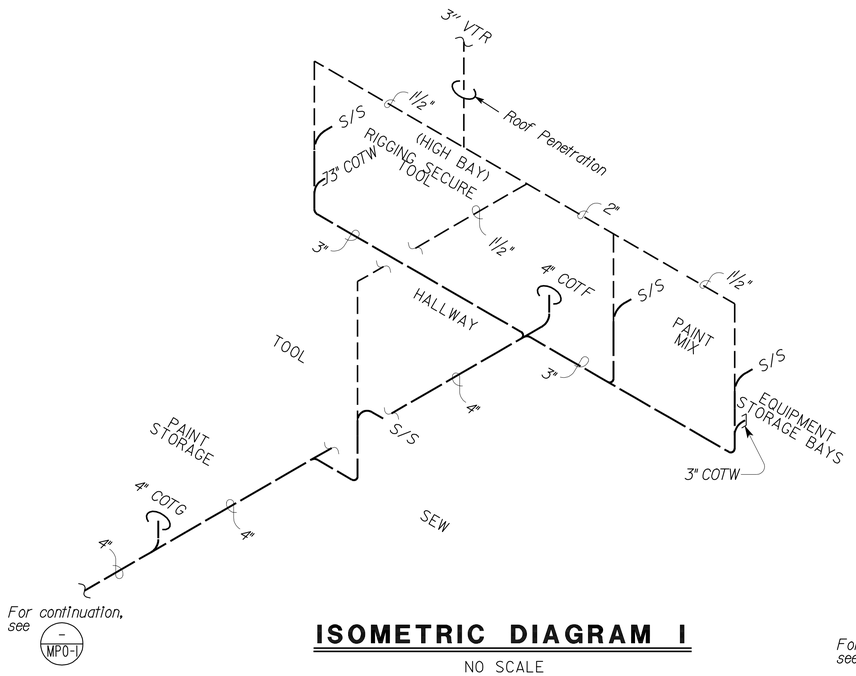

ISOMETRIC DIAGRAM I

NO SCALE

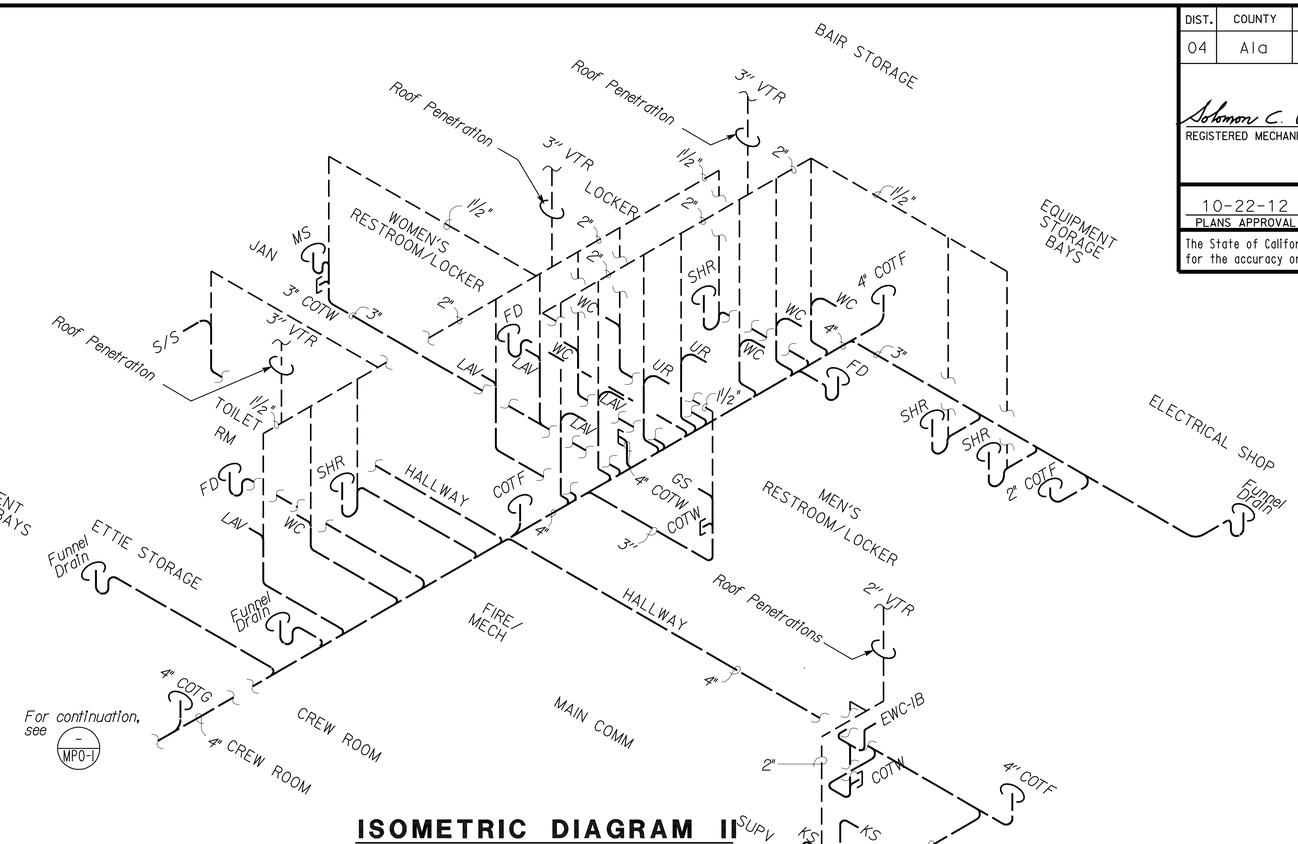

ISOMETRIC DIAGRAM II

NO SCALE

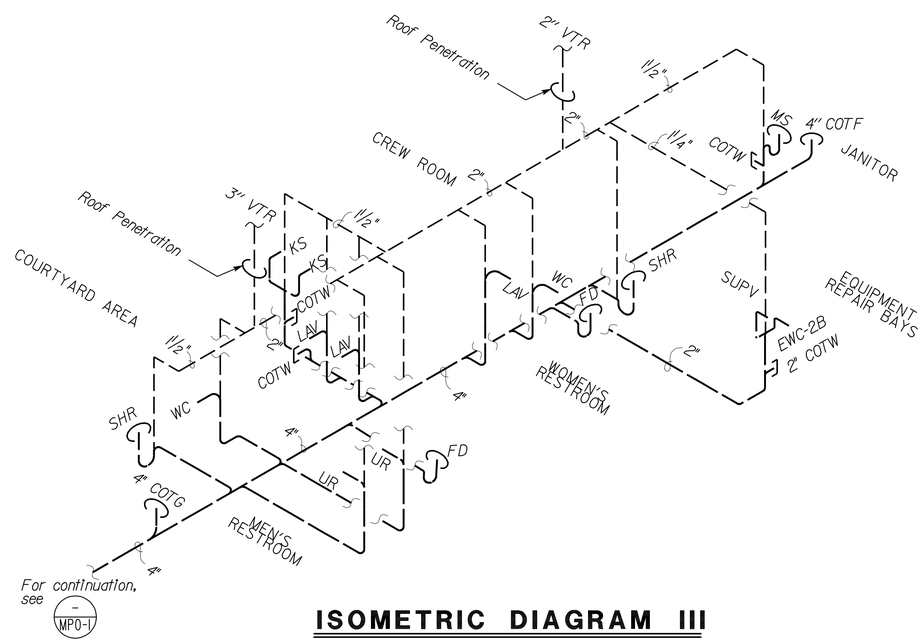

ISOMETRIC DIAGRAM III

NO SCALE

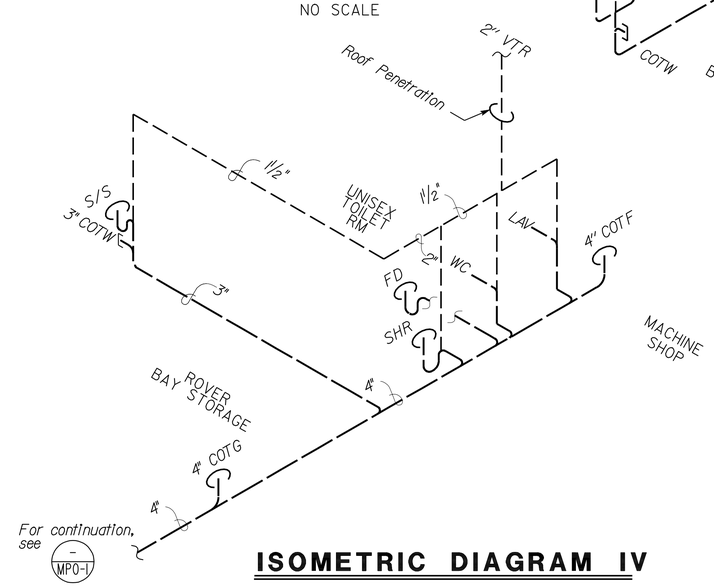

ISOMETRIC DIAGRAM IV

NO SCALE

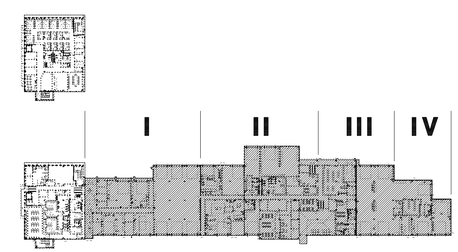

KEY PLAN

THIS DRAWING ACCURATE FOR MECHANICAL WORK ONLY

	BY		CHECKED
DESIGN	Solomon Wong		Tom Hatam
DETAILS	Angela Chen		Tom Hatam
QUANTITIES	Solomon Wong		Tom Hatam

STATE OF CALIFORNIA
DEPARTMENT OF TRANSPORTATION

DIVISION OF ENGINEERING SERVICES
ELECTRICAL-MECHANICAL-WATER AND WASTEWATER DESIGN

BRIDGE NO. 33M5785
POST MILE 2.2

SFOBB MAINTENANCE COMPLEX
BUILDING 1B — SANITARY SEWER ISOMETRIC NO. 2

SHEET **MP1-20**

TAEMWW Imperial Rev. 7/10
FILE => mp1_20.dgn
DATE PLOTTED => 26-OCT-2012 TIME PLOTTED => 07:02

ORIGINAL SCALE IN INCHES FOR REDUCED PLANS 0 1 2 3

UNIT 3615
PROJECT NUMBER & PHASE 04120006661
EA 014081

DISREGARD PRINTS BEARING EARLIER REVISION DATES → 05-08-12 05-25-12
REVISION DATES (PRELIMINARY STAGE ONLY) SHEET OF

USERNAME => s124496 DATE PLOTTED => 26-OCT-2012 TIME PLOTTED => 07:02

VI=I

DIST.	COUNTY	ROUTE	POST MILES TOTAL PROJECT	SHEET NO.	TOTAL SHEETS
04	Ala	80	2.2	585	800

Solomon C. Wong — 05-25-12
REGISTERED MECHANICAL ENGINEER — DATE

REGISTERED PROFESSIONAL ENGINEER
SOLOMON WONG
No. M27626
Exp. 6-30-13
MECH
STATE OF CALIFORNIA

10-22-12
PLANS APPROVAL DATE

The State of California or its officers or agents shall not be responsible for the accuracy or completeness of scanned copies of this plan sheet.

Fire Marshal Stamp

CALIFORNIA STATE FIRE MARSHAL APPROVED

Approval of this plan does not authorize or approve any omission or deviation from applicable regulations. Final approval is subject to field inspection. One set of approved plans shall be available on the project site at all times.

Reviewed by: JOHN E WOODS, SDSFM

Approval date: 8-22-12

NOTE:

1. For detail layout of the hot water system in the Fire/Mechanical Room 203, see MP4-7 MP4-8

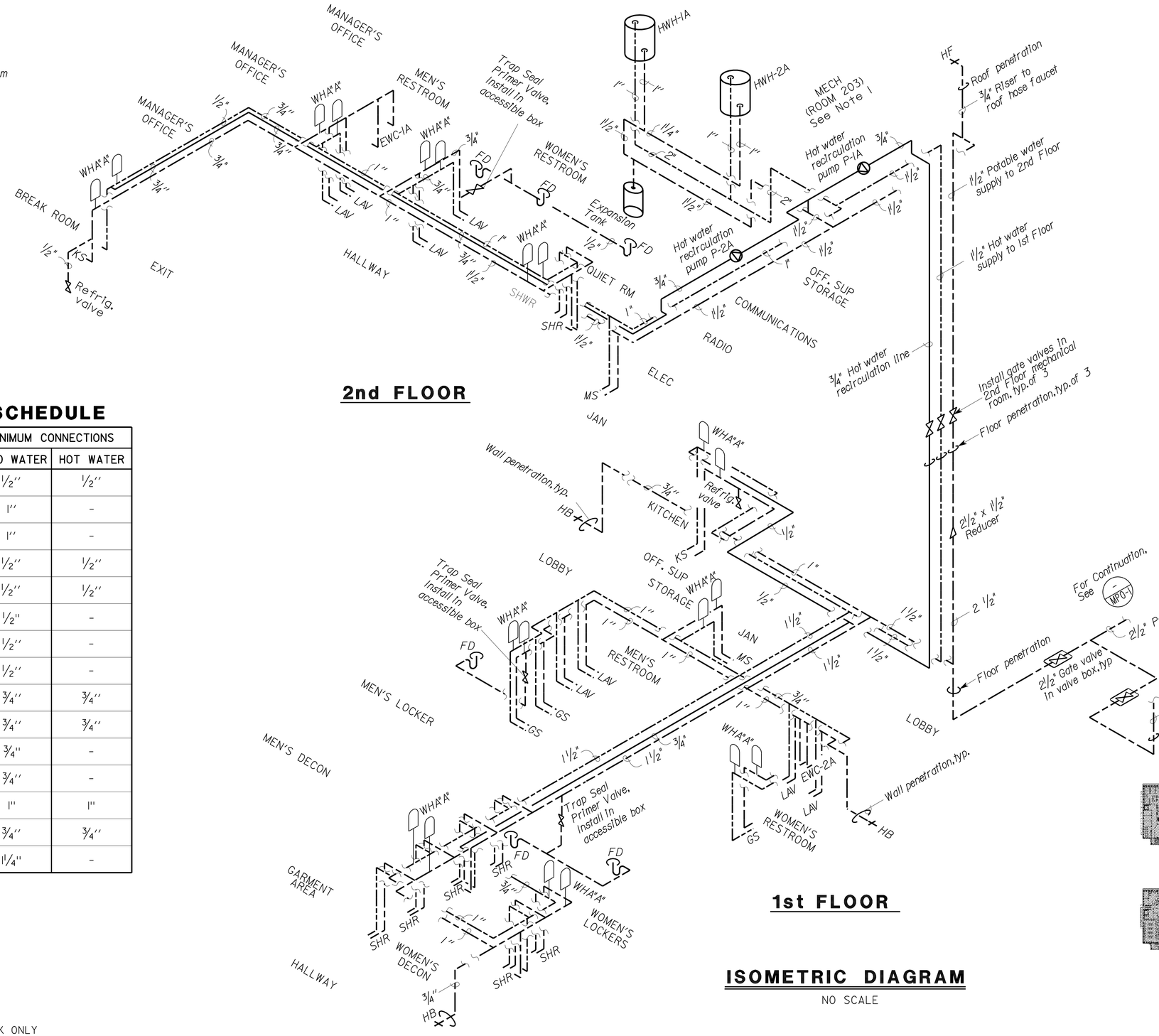

PLUMBING SCHEDULE

FIXTURE	MINIMUM CONNECTIONS	
	COLD WATER	HOT WATER
LAVATORY	1/2"	1/2"
WATER CLOSET	1"	-
URINAL	1"	-
SHOWER	1/2"	1/2"
KITCHEN SINK	1/2"	1/2"
FLOOR DRAIN	1/2"	-
REFRIGERATOR	1/2"	-
ELECTRIC WATER COOLER	1/2"	-
SERVICE SINK	3/4"	3/4"
MOP SINK	3/4"	3/4"
WATER DROP	3/4"	-
HOSE BIBB	3/4"	-
HOT WATER HEATER	1"	1"
GANG SINK	3/4"	3/4"
EMERGENCY EYEWASH & SHOWER	1 1/4"	-

ISOMETRIC DIAGRAM

NO SCALE

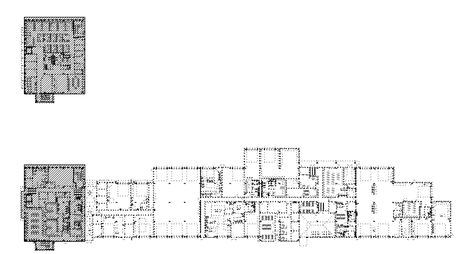

KEY PLAN

THIS DRAWING ACCURATE FOR MECHANICAL WORK ONLY

	BY		CHECKED	
DESIGN	BY	Solomon Wong	CHECKED	Tom Hatam
DETAILS	BY	Angela Chen	CHECKED	Tom Hatam
QUANTITIES	BY	Solomon Wong	CHECKED	Tom Hatam

STATE OF CALIFORNIA
DEPARTMENT OF TRANSPORTATION

DIVISION OF ENGINEERING SERVICES
ELECTRICAL-MECHANICAL-WATER AND WASTEWATER DESIGN

BRIDGE NO. 33M5785
POST MILE 2.2

SFOBB MAINTENANCE COMPLEX

BUILDING 1A — DOMESTIC WATER ISOMETRIC NO. 1

SHEET **MP1-21**

TAEMWW Imperial Rev. 7/10
FILE => mp1_21.dgn
DATE PLOTTED => 26-OCT-2012 TIME PLOTTED => 07:03

ORIGINAL SCALE IN INCHES FOR REDUCED PLANS 0 1 2 3

UNIT 3615
PROJECT NUMBER & PHASE 04120006661
EA 014081

DISREGARD PRINTS BEARING EARLIER REVISION DATES → 05-08-12 05-25-12

REVISION DATES (PRELIMINARY STAGE ONLY) SHEET OF

USERNAME => s124496 DATE PLOTTED => 26-OCT-2012 TIME PLOTTED => 07:03

V|=|

DIST.	COUNTY	ROUTE	POST MILES TOTAL PROJECT	SHEET NO.	TOTAL SHEETS
04	Ala	80	2.2	586	800

Solomon C. Wong 05-25-12
REGISTERED MECHANICAL ENGINEER DATE

REGISTERED PROFESSIONAL ENGINEER
SOLOMON WONG
No. M27626
Exp. 6-30-13
MECH
STATE OF CALIFORNIA

10-22-12
PLANS APPROVAL DATE

The State of California or its officers or agents shall not be responsible for the accuracy or completeness of scanned copies of this plan sheet.

Fire Marshal Stamp

CALIFORNIA STATE FIRE MARSHAL APPROVED

Approval of this plan does not authorize or approve any omission or deviation from applicable regulations. Final approval is subject to field inspection. One set of approved plans shall be available on the project site at all times.

Reviewed by: JOHN E WOODS, SDSFM

Approval date: 8-22-12

Note:

1. *Shut-Off must be installed in an access box 5' from floor. Mark box "Water Shut-Off Valve.*

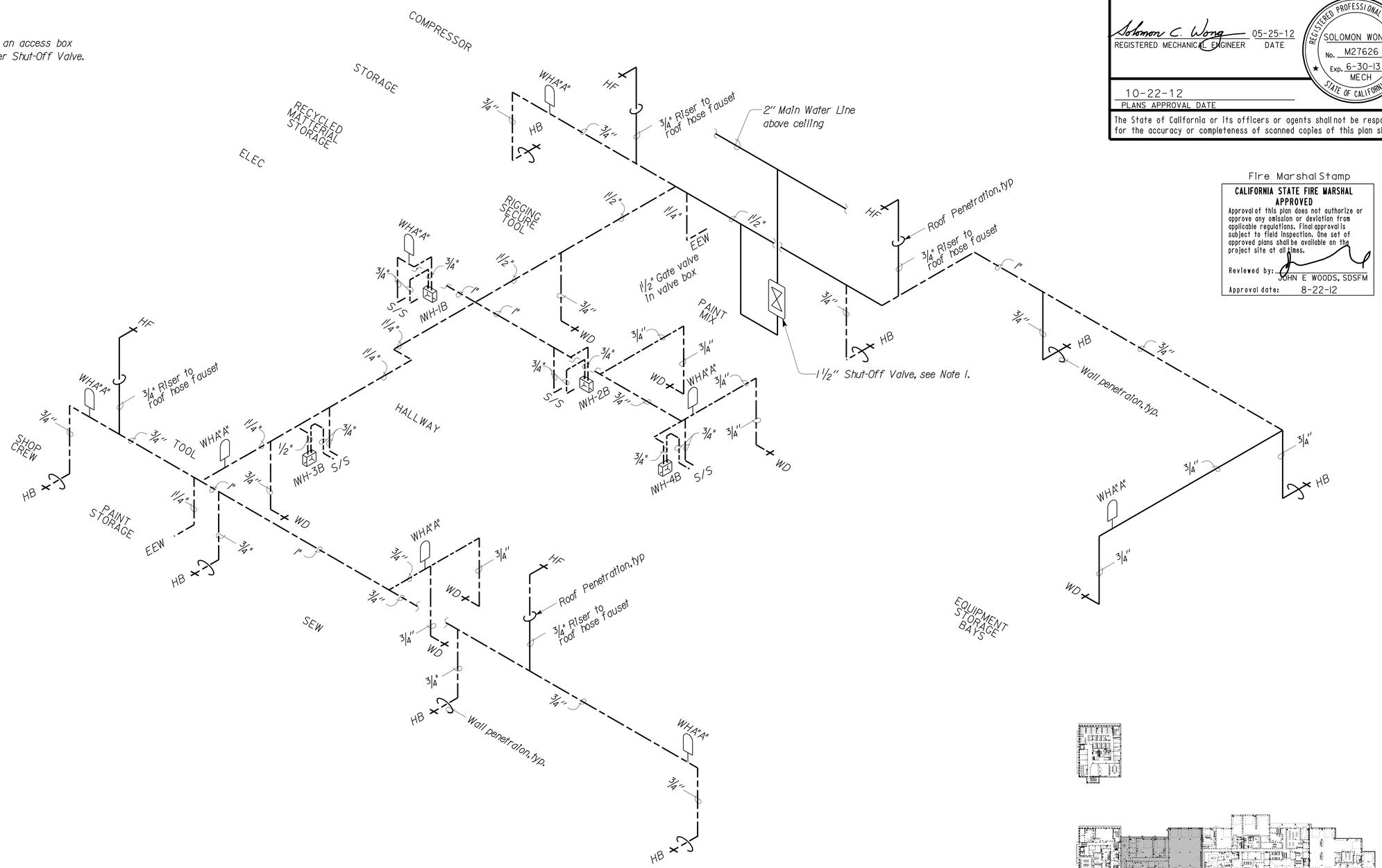

ISOMETRIC DIAGRAM

NO SCALE

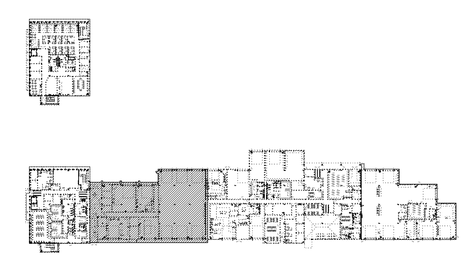

KEY PLAN

THIS DRAWING ACCURATE FOR MECHANICAL WORK ONLY

	BY		CHECKED	
DESIGN	BY	Solomon Wong	CHECKED	Tom Hatam
DETAILS	BY	Angela Chen	CHECKED	Tom Hatam
QUANTITIES	BY	Solomon Wong	CHECKED	Tom Hatam

STATE OF CALIFORNIA
DEPARTMENT OF TRANSPORTATION

DIVISION OF ENGINEERING SERVICES
ELECTRICAL-MECHANICAL-WATER AND WASTEWATER DESIGN

BRIDGE NO. 33M5785
POST MILE 2.2

SFOBB MAINTENANCE COMPLEX

BUILDING 1B — DOMESTIC WATER ISOMETRIC NO. 2

SHEET **MP1-22**

TAEMWW Imperial Rev. 7/10
FILE => mp1_22.dgn
DATE PLOTTED => 26-OCT-2012 TIME PLOTTED => 07:03

ORIGINAL SCALE IN INCHES FOR REDUCED PLANS 0 1 2 3

UNIT 3615
PROJECT NUMBER & PHASE 04120006661
EA 014081

DISREGARD PRINTS BEARING EARLIER REVISION DATES → 05-08-12 05-25-12

REVISION DATES (PRELIMINARY STAGE ONLY) SHEET OF

USERNAME => s124496 DATE PLOTTED => 26-OCT-2012 TIME PLOTTED => 07:03

VI=1

DIST.	COUNTY	ROUTE	POST MILES TOTAL PROJECT	SHEET NO.	TOTAL SHEETS
04	Ala	80	2.2	587	800

Solomon C. Wong — 05-25-12
REGISTERED MECHANICAL ENGINEER — DATE

REGISTERED PROFESSIONAL ENGINEER
SOLOMON WONG
No. M27626
Exp. 6-30-13
MECH
STATE OF CALIFORNIA

10-22-12
PLANS APPROVAL DATE

The State of California or its officers or agents shall not be responsible for the accuracy or completeness of scanned copies of this plan sheet.

Fire Marshal Stamp

CALIFORNIA STATE FIRE MARSHAL APPROVED

Approval of this plan does not authorize or approve any omission or deviation from applicable regulations. Final approval is subject to field inspection. One set of approved plans shall be available on the project site at all times.

Reviewed by: JOHN E WOODS, SDSFM

Approval date: 8-22-12

Notes:

1. *For detail layout of the hot water system in the Fire/Mechanical Room 177, see (- / MP4-7) and (- / MP4-8)*
2. *Shut-Off must be installed in an access box 5' from floor. Mark box "Water Shut-Off Valve".*

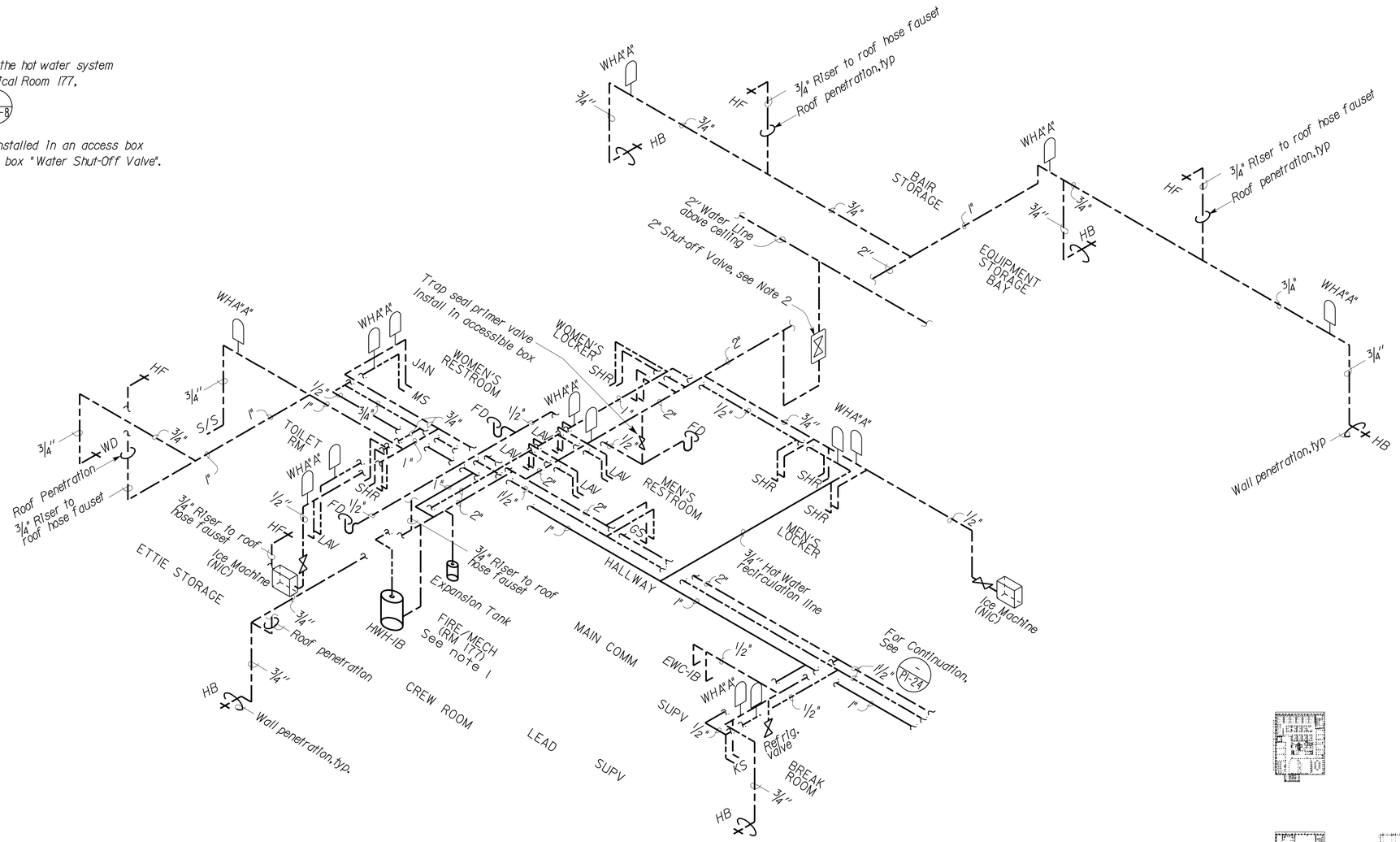

ISOMETRIC DIAGRAM

NO SCALE

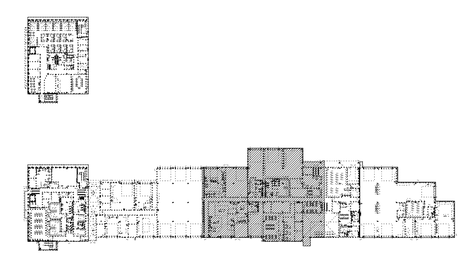

KEY PLAN

THIS DRAWING ACCURATE FOR MECHANICAL WORK ONLY

DESIGN	BY Solomon Wong	CHECKED Tom Hatam	
DETAILS	BY Angela Chen	CHECKED Tom Hatam	
QUANTITIES	BY Solomon Wong	CHECKED Tom Hatam	

STATE OF CALIFORNIA
DEPARTMENT OF TRANSPORTATION

DIVISION OF ENGINEERING SERVICES
ELECTRICAL-MECHANICAL-WATER AND WASTEWATER DESIGN

BRIDGE NO. 33M5785
POST MILE 2.2

SFOBB MAINTENANCE COMPLEX

BUILDING 1B — DOMESTIC WATER ISOMETRIC NO. 3

SHEET **MP1-23**

TAEMWW Imperial Rev. 7/10

FILE => mp1_23.dgn
DATE PLOTTED => 26-OCT-2012 TIME PLOTTED => 07:03

ORIGINAL SCALE IN INCHES FOR REDUCED PLANS 0 1 2 3

UNIT 3615
PROJECT NUMBER & PHASE 04120006661
EA 014081

DISREGARD PRINTS BEARING EARLIER REVISION DATES → 05-08-12 05-25-12

REVISION DATES (PRELIMINARY STAGE ONLY) SHEET OF

USERNAME => s124496 DATE PLOTTED => 26-OCT-2012 TIME PLOTTED => 07:03

VI=1

DIST.	COUNTY	ROUTE	POST MILES TOTAL PROJECT	SHEET NO.	TOTAL SHEETS
04	Ala	80	2.2	588	800

Solomon C. Wong 05-25-12
REGISTERED MECHANICAL ENGINEER DATE

REGISTERED PROFESSIONAL ENGINEER SOLOMON WONG No. M27626 Exp. 6-30-13 MECH STATE OF CALIFORNIA

10-22-12
PLANS APPROVAL DATE

The State of California or its officers or agents shall not be responsible for the accuracy or completeness of scanned copies of this plan sheet.

Fire Marshal Stamp

CALIFORNIA STATE FIRE MARSHAL APPROVED

Approval of this plan does not authorize or approve any omission or deviation from applicable regulations. Final approval is subject to field inspection. One set of approved plans shall be available on the project site at all times.

Reviewed by: JOHN E WOODS, SDSFM

Approval date: 8-22-12

Note:

1. Shut-Off must be installed in an access box 5' from floor. Mark box "Water Shut-Off Valve.

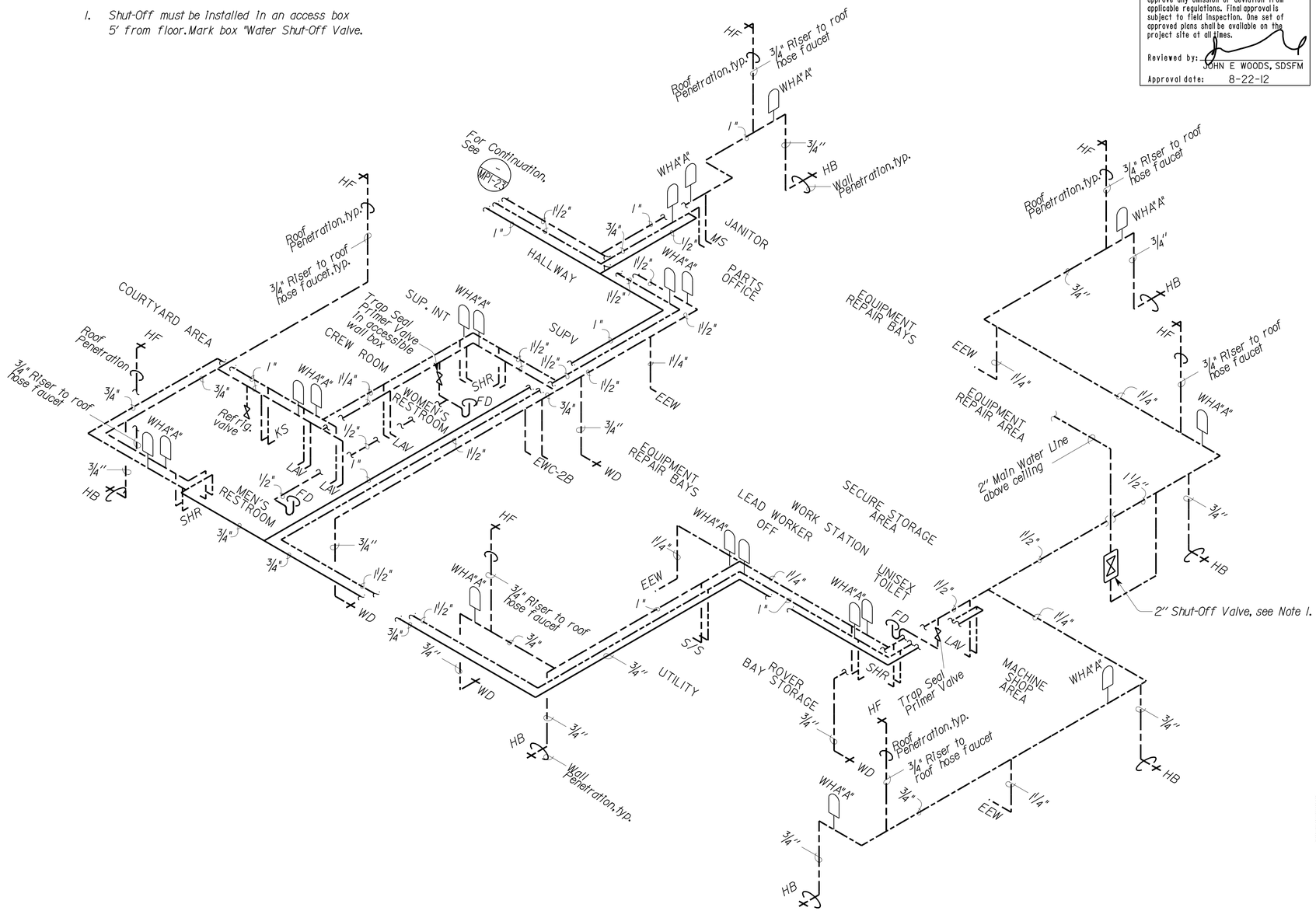

ISOMETRIC DIAGRAM

NO SCALE

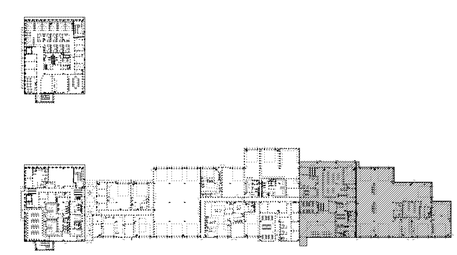

KEY PLAN

THIS DRAWING ACCURATE FOR MECHANICAL WORK ONLY

DESIGN	BY Solomon Wong	CHECKED Tom Hatam	
DETAILS	BY Angela Chen	CHECKED Tom Hatam	
QUANTITIES	BY Solomon Wong	CHECKED Tom Hatam	

STATE OF CALIFORNIA DEPARTMENT OF TRANSPORTATION

DIVISION OF ENGINEERING SERVICES
ELECTRICAL-MECHANICAL-WATER AND WASTEWATER DESIGN

BRIDGE NO. 33M5785
POST MILE 2.2

SFOBB MAINTENANCE COMPLEX

BUILDING 1B — DOMESTIC WATER ISOMETRIC NO. 4

SHEET **MP1-24**

TAEMWW Imperial Rev. 7/10

FILE => mp1_24.dgn
DATE PLOTTED => 26-OCT-2012 TIME PLOTTED => 07:03

ORIGINAL SCALE IN INCHES FOR REDUCED PLANS 0 1 2 3

UNIT 3615
PROJECT NUMBER & PHASE 04120006661
EA 014081

DISREGARD PRINTS BEARING EARLIER REVISION DATES → 05-08-12 05-25-12

REVISION DATES (PRELIMINARY STAGE ONLY) SHEET OF

USERNAME => s124496 DATE PLOTTED => 26-OCT-2012 TIME PLOTTED => 07:03

V|=|

DIST.	COUNTY	ROUTE	POST MILES TOTAL PROJECT	SHEET NO.	TOTAL SHEETS
04	Ala	80	2.2	589	800

Solomon C. Wong — 05-25-12
REGISTERED MECHANICAL ENGINEER — DATE

REGISTERED PROFESSIONAL ENGINEER
SOLOMON WONG
No. M27626
Exp. 6-30-13
MECH
STATE OF CALIFORNIA

10-22-12
PLANS APPROVAL DATE

The State of California or its officers or agents shall not be responsible for the accuracy or completeness of scanned copies of this plan sheet.

Fire Marshal Stamp

CALIFORNIA STATE FIRE MARSHAL APPROVED

Approval of this plan does not authorize or approve any omission or deviation from applicable regulations. Final approval is subject to field inspection. One set of approved plans shall be available on the project site at all times.

Reviewed by: JOHN E WOODS, SDSFM

Approval date: 8-22-12

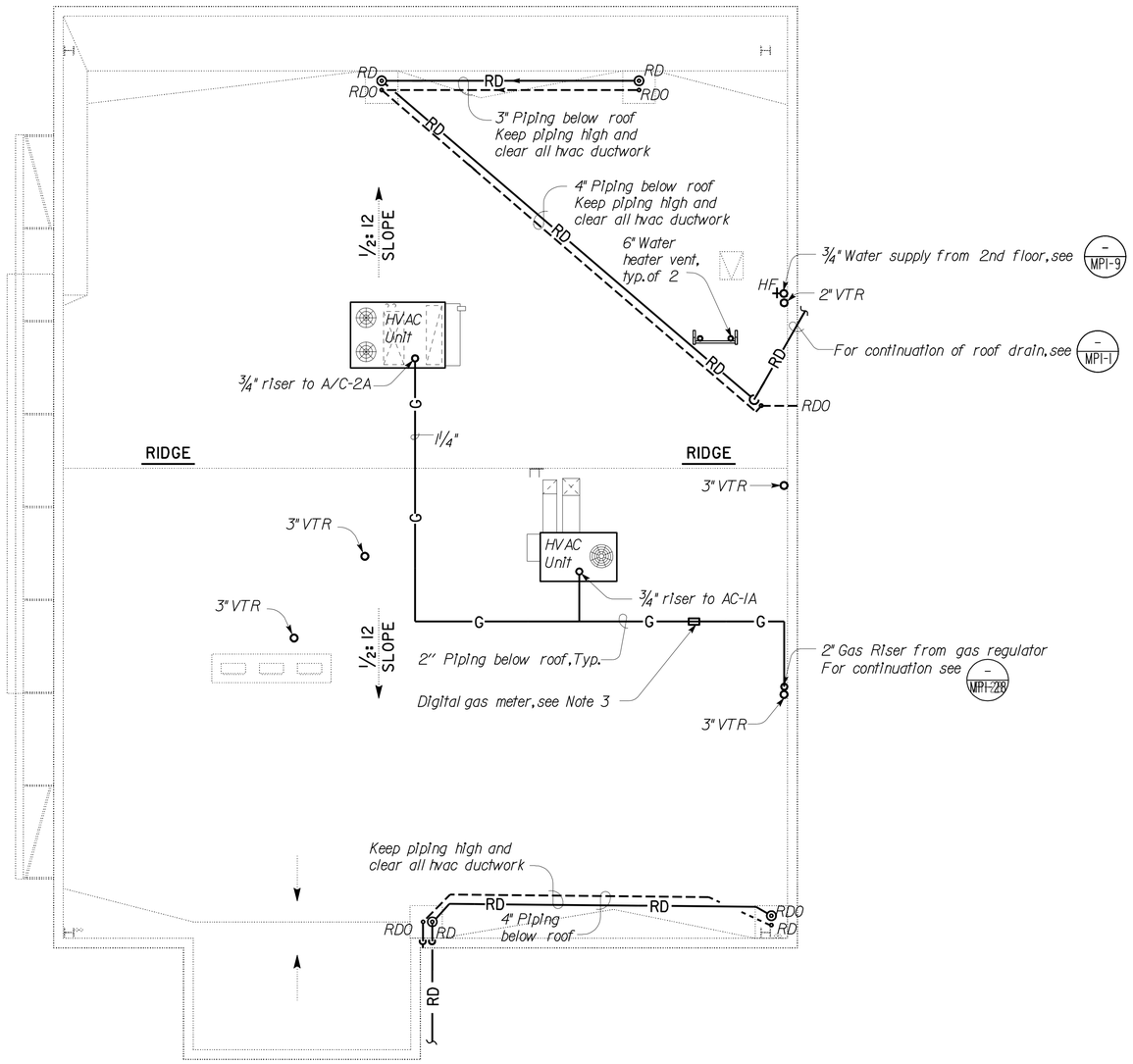

ROOF PLAN

SCALE : 1/8" = 1'-0"

Notes:

1. For continuation of roof drain to site D.I. boxes, see MPO-1.
2. Support water heater vents to unistruct support with U brackets and anchor support to roof structure.
3. Install digital gas meter in an accessible location in accordance with the manucaturer's instructions, see 2/MP4-3

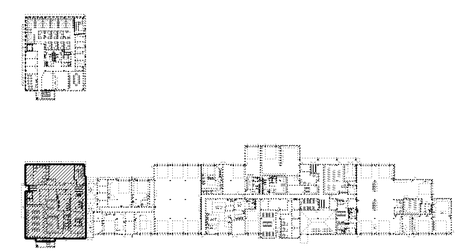

KEY PLAN

THIS DRAWING ACCURATE FOR MECHANICAL WORK ONLY

DESIGN	BY Solomon Wong	CHECKED Tom Hatam	
DETAILS	BY Angela Chen	CHECKED Tom Hatam	
QUANTITIES	BY Solomon Wong	CHECKED Tom Hatam	

STATE OF CALIFORNIA
DEPARTMENT OF TRANSPORTATION

DIVISION OF ENGINEERING SERVICES
ELECTRICAL-MECHANICAL-WATER AND WASTEWATER DESIGN

BRIDGE NO. 33M5785
POST MILE 2.2

SFOBB MAINTENANCE COMPLEX

BUILDING 1A — ROOF PIPING PLAN NO. 1

SHEET **MP1-25**

TAEMWW Imperial Rev. 7/10

FILE => mp1_25.dgn
DATE PLOTTED => 26-OCT-2012 TIME PLOTTED => 07:04

ORIGINAL SCALE IN INCHES FOR REDUCED PLANS 0 1 2 3

UNIT 3615
PROJECT NUMBER & PHASE 04120006661
EA 014081

DISREGARD PRINTS BEARING EARLIER REVISION DATES → 05-08-12 05-25-12

REVISION DATES (PRELIMINARY STAGE ONLY) SHEET OF

USERNAME => s124496 DATE PLOTTED => 26-OCT-2012 TIME PLOTTED => 07:04

VI=1

DIST.	COUNTY	ROUTE	POST MILES TOTAL PROJECT	SHEET NO.	TOTAL SHEETS
04	Ala	80	2.2	590	800

Solomon C. Wong — 05-25-12
REGISTERED MECHANICAL ENGINEER — DATE

REGISTERED PROFESSIONAL ENGINEER
SOLOMON WONG
No. M27626
Exp. 6-30-13
MECH
STATE OF CALIFORNIA

10-22-12
PLANS APPROVAL DATE

The State of California or its officers or agents shall not be responsible for the accuracy or completeness of scanned copies of this plan sheet.

Notes:

1. For continuation of roof drain and canopy drain to site D.I. boxes, see (– / MP0-1).
2. Support all hose faucets on roof wall with unistruct and pipe clamps at 30" above roof deck.

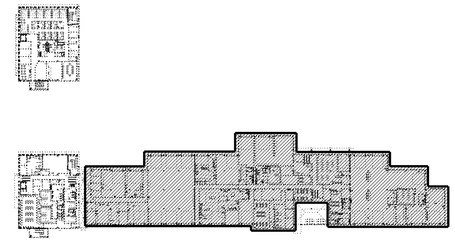

KEY PLAN

Fire Marshal Stamp

CALIFORNIA STATE FIRE MARSHAL
APPROVED
Approval of this plan does not authorize or approve any omission or deviation from applicable regulations. Final approval is subject to field inspection. One set of approved plans shall be available on the project site at all times.
Reviewed by: JOHN E WOODS, SDSFM
Approval date: 8-22-12

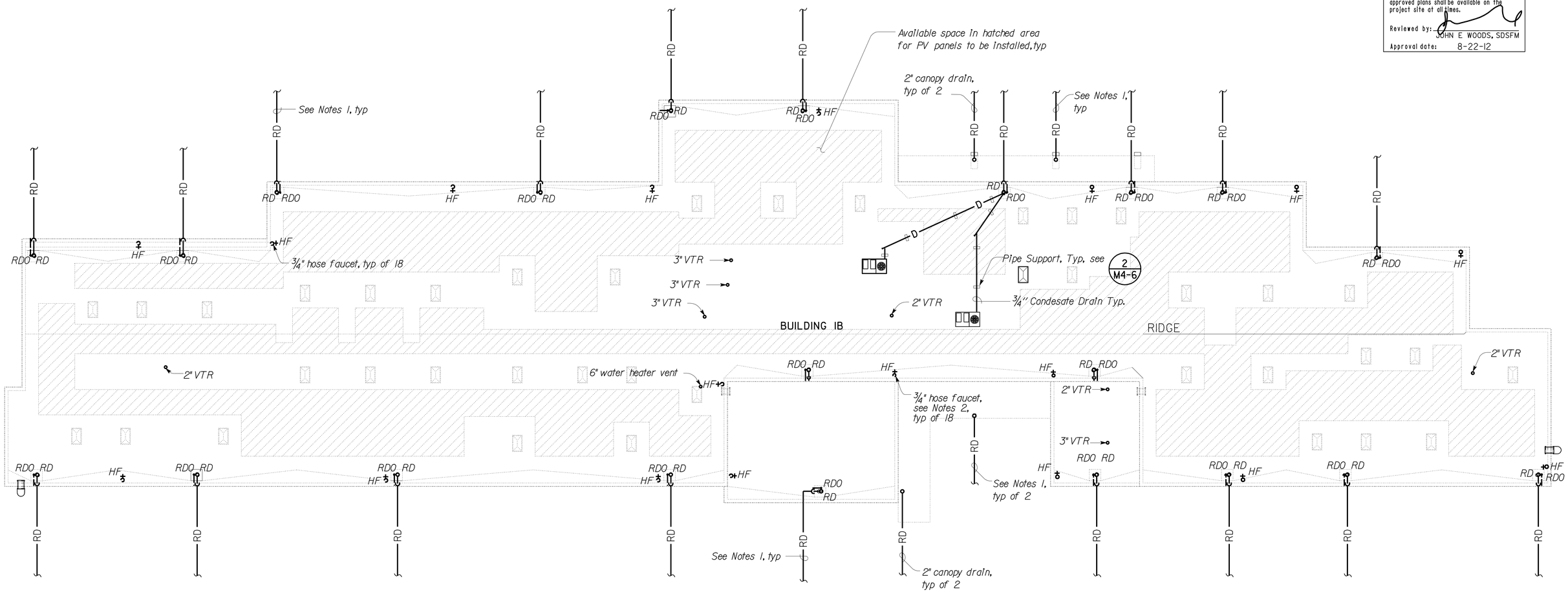

ROOF PLAN

SCALE 1" = 15'-0"

THIS DRAWING ACCURATE FOR MECHANICAL WORK ONLY

DESIGN	BY Solomon Wong	CHECKED Tom Hatam	
DETAILS	BY Angela Chen	CHECKED Tom Hatam	
QUANTITIES	BY Solomon Wong	CHECKED Tom Hatam	

STATE OF CALIFORNIA
DEPARTMENT OF TRANSPORTATION

DIVISION OF ENGINEERING SERVICES
ELECTRICAL-MECHANICAL-WATER AND WASTEWATER DESIGN

BRIDGE NO. 33M5785
POST MILE 2.2

SFOBB MAINTENANCE COMPLEX
BUILDING 1B
ROOF PIPING PLAN NO. 2

SHEET MP1-26

TAEMWW Imperial Rev. 7/10
FILE => mp1_26.dgn
DATE PLOTTED => 26-OCT-2012 TIME PLOTTED => 07:04

ORIGINAL SCALE IN INCHES FOR REDUCED PLANS 0 1 2 3

UNIT 3615
PROJECT NUMBER & PHASE 04120006661
EA 014081

DISREGARD PRINTS BEARING EARLIER REVISION DATES → 05-08-12 05-25-12

REVISION DATES (PRELIMINARY STAGE ONLY) SHEET OF

USERNAME => s124496 DATE PLOTTED => 26-OCT-2012 TIME PLOTTED => 07:04

VI=1

DIST.	COUNTY	ROUTE	POST MILES TOTAL PROJECT	SHEET NO.	TOTAL SHEETS
04	Ala	80	2.2	591	800

REGISTERED MECHANICAL ENGINEER — 05-25-12 DATE

REGISTERED PROFESSIONAL ENGINEER — MARK HEDGLIN — No. M32912 — Exp. 9-30-12 — MECH — STATE OF CALIFORNIA

10-22-12
PLANS APPROVAL DATE

The State of California or its officers or agents shall not be responsible for the accuracy or completeness of scanned copies of this plan sheet.

CALIFORNIA STATE FIRE MARSHAL APPROVED

Approval of this plan does not authorize or approve any omission or deviation from applicable regulations. Final approval is subject to field inspection. One set of approved plans shall be available on the project site at all times.

Reviewed by: JOHN E WOODS, SDSFM

Approval date: 8-22-12

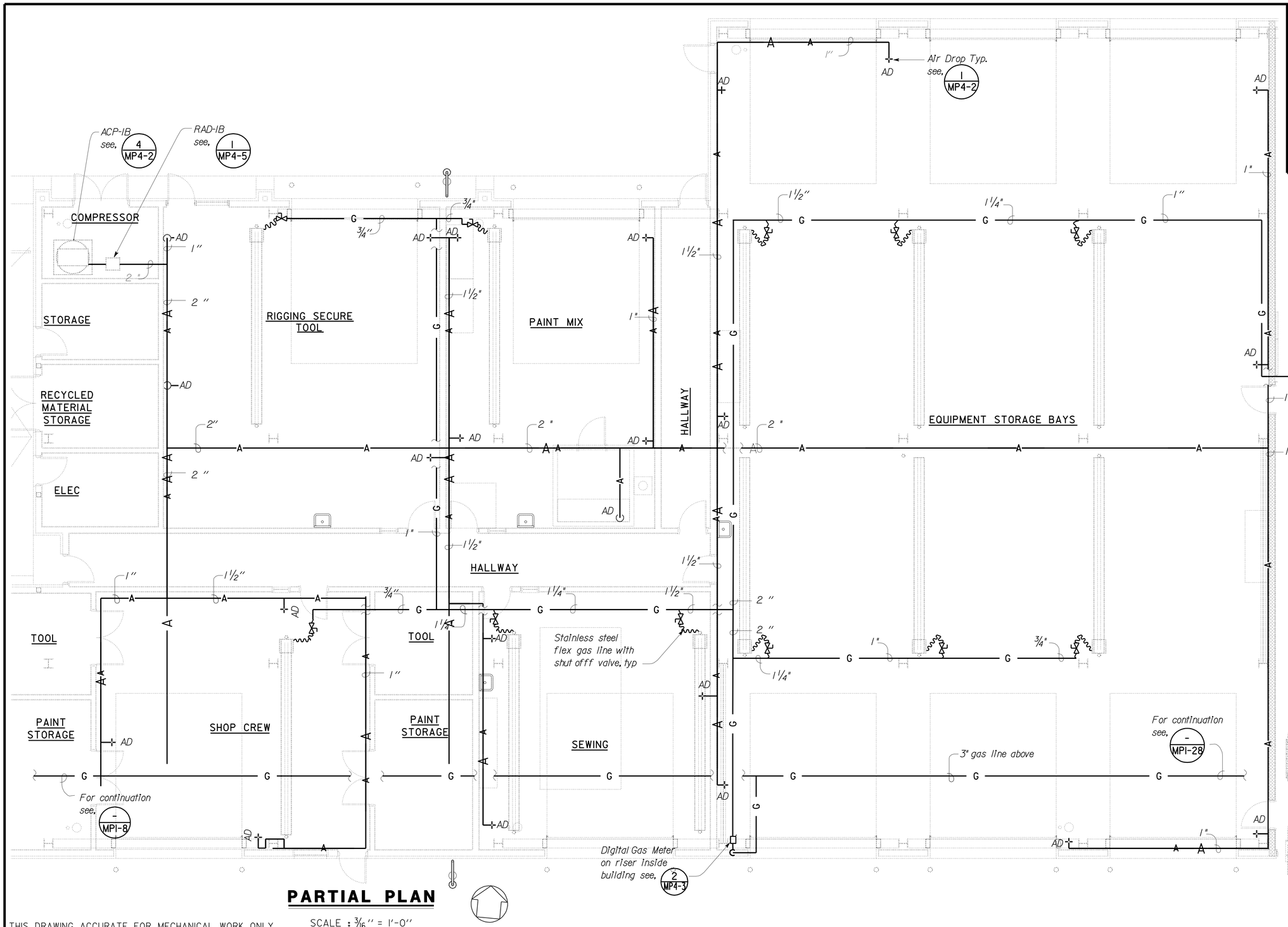

PARTIAL PLAN

SCALE : 3/16" = 1'-0"

THIS DRAWING ACCURATE FOR MECHANICAL WORK ONLY

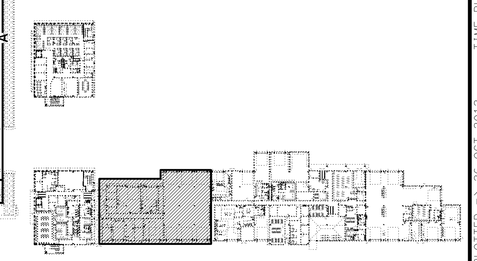

KEY PLAN

DESIGN	BY Mark Hedglin	CHECKED Tom Hatam	
DETAILS	BY Mark Hedglin	CHECKED Tom Hatam	
QUANTITIES	BY Mark Hedglin	CHECKED Tom Hatam	

STATE OF CALIFORNIA
DEPARTMENT OF TRANSPORTATION

DIVISION OF ENGINEERING SERVICES
ELECTRICAL-MECHANICAL-WATER AND WASTEWATER DESIGN

BRIDGE NO. 33M5785
POST MILE 2.2

SFOBB MAINTENANCE COMPLEX

BUILDING 1B — EQUIPMENT LAYOUT PLAN NO. 1

SHEET **MP1-27**

TAEMWW Imperial Rev. 7/10

FILE => mp1_27.dgn
DATE PLOTTED => 26-OCT-2012 TIME PLOTTED => 07:04

ORIGINAL SCALE IN INCHES FOR REDUCED PLANS 0 1 2 3

UNIT 3615
PROJECT NUMBER & PHASE 04120006661
EA 014081

DISREGARD PRINTS BEARING EARLIER REVISION DATES → 05-08-12 05-25-12

REVISION DATES (PRELIMINARY STAGE ONLY) — SHEET — OF

USERNAME => s124496 DATE PLOTTED => 26-OCT-2012 TIME PLOTTED => 07:04

VI=1

DIST.	COUNTY	ROUTE	POST MILES TOTAL PROJECT	SHEET NO.	TOTAL SHEETS
04	Ala	80	2.2	592	800

REGISTERED MECHANICAL ENGINEER 05-25-12 DATE

REGISTERED PROFESSIONAL ENGINEER MARK HEDGLIN No. M32912 Exp. 9-30-12 MECH STATE OF CALIFORNIA

10-22-12
PLANS APPROVAL DATE

The State of California or its officers or agents shall not be responsible for the accuracy or completeness of scanned copies of this plan sheet.

CALIFORNIA STATE FIRE MARSHAL APPROVED
Approval of this plan does not authorize or approve any omission or deviation from applicable regulations. Final approval is subject to field inspection. One set of approved plans shall be available on the project site at all times.
Reviewed by: JOHN E WOODS, SDSFM
Approval date: 8-22-12

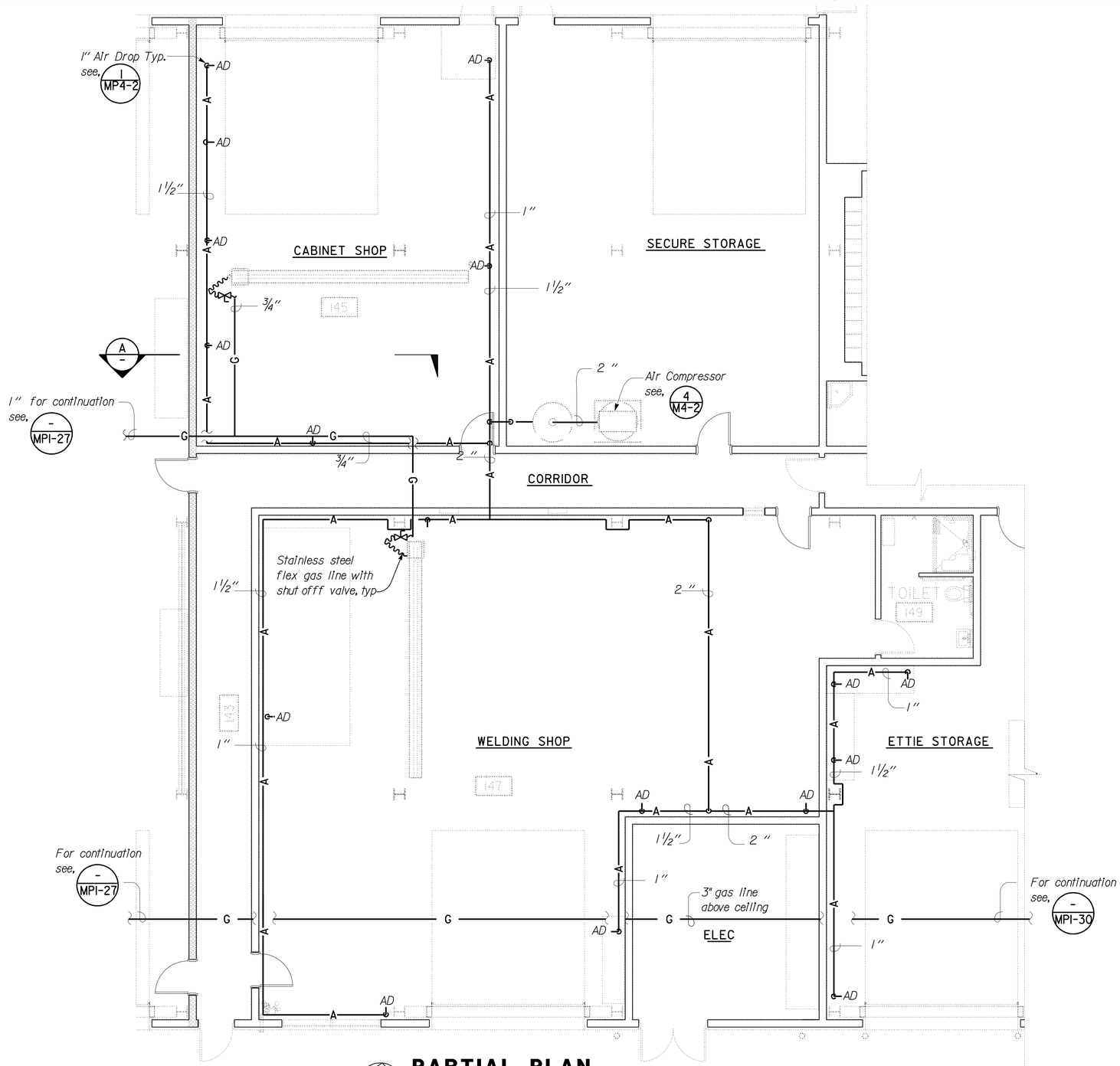

PARTIAL PLAN

SCALE : 3/16" = 1'-0"

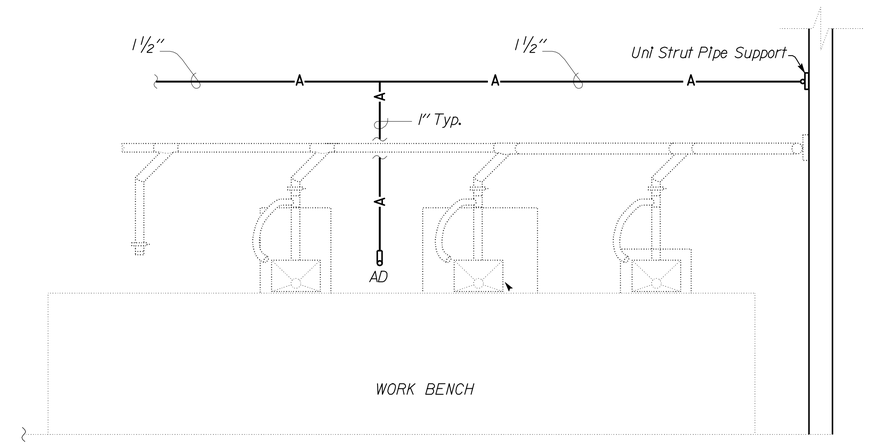

A ELEVATION

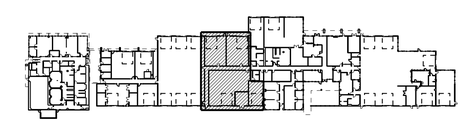

KEY PLAN

THIS DRAWING ACCURATE FOR MECHANICAL WORK ONLY

	BY		CHECKED	
DESIGN	BY	Mark Hedglin	CHECKED	Tom Hatam
DETAILS	BY	Mark Hedglin	CHECKED	Tom Hatam
QUANTITIES	BY	Mark Hedglin	CHECKED	Tom Hatam

STATE OF CALIFORNIA
DEPARTMENT OF TRANSPORTATION

DIVISION OF ENGINEERING SERVICES
ELECTRICAL-MECHANICAL-WATER AND WASTEWATER DESIGN

BRIDGE NO. 33M5785
POST MILE 2.2

SFOBB MAINTENANCE COMPLEX
BUILDING IB
EQUIPMENT LAYOUT PLAN NO. 2

SHEET **MP1-28**

TAEMWW Imperial Rev. 7/10
FILE => mp1_28.dgn
DATE PLOTTED => 26-OCT-2012 TIME PLOTTED => 07:04

ORIGINAL SCALE IN INCHES FOR REDUCED PLANS 0 1 2 3

UNIT 3615
PROJECT NUMBER & PHASE 04120006661
EA 014081

DISREGARD PRINTS BEARING EARLIER REVISION DATES → 05-08-12 05-25-12

REVISION DATES (PRELIMINARY STAGE ONLY) SHEET OF

USERNAME => s124496 DATE PLOTTED => 26-OCT-2012 TIME PLOTTED => 07:04

V|=|

DIST.	COUNTY	ROUTE	POST MILES TOTAL PROJECT	SHEET NO.	TOTAL SHEETS
04	Ala	80	2.2	593	800

CALIFORNIA STATE FIRE MARSHAL APPROVED

Approval of this plan does not authorize or approve any omission or deviation from applicable regulations. Final approval is subject to field inspection. One set of approved plans shall be available on the project site at all times.

Reviewed by: JOHN E WOODS, SDSFM

Approval date: 8-22-12

REGISTERED MECHANICAL ENGINEER — DATE: 05-25-12

REGISTERED PROFESSIONAL ENGINEER — MARK HEDGLIN — No. M32912 — Exp. 9-30-12 — MECH — STATE OF CALIFORNIA

10-22-12
PLANS APPROVAL DATE

The State of California or its officers or agents shall not be responsible for the accuracy or completeness of scanned copies of this plan sheet.

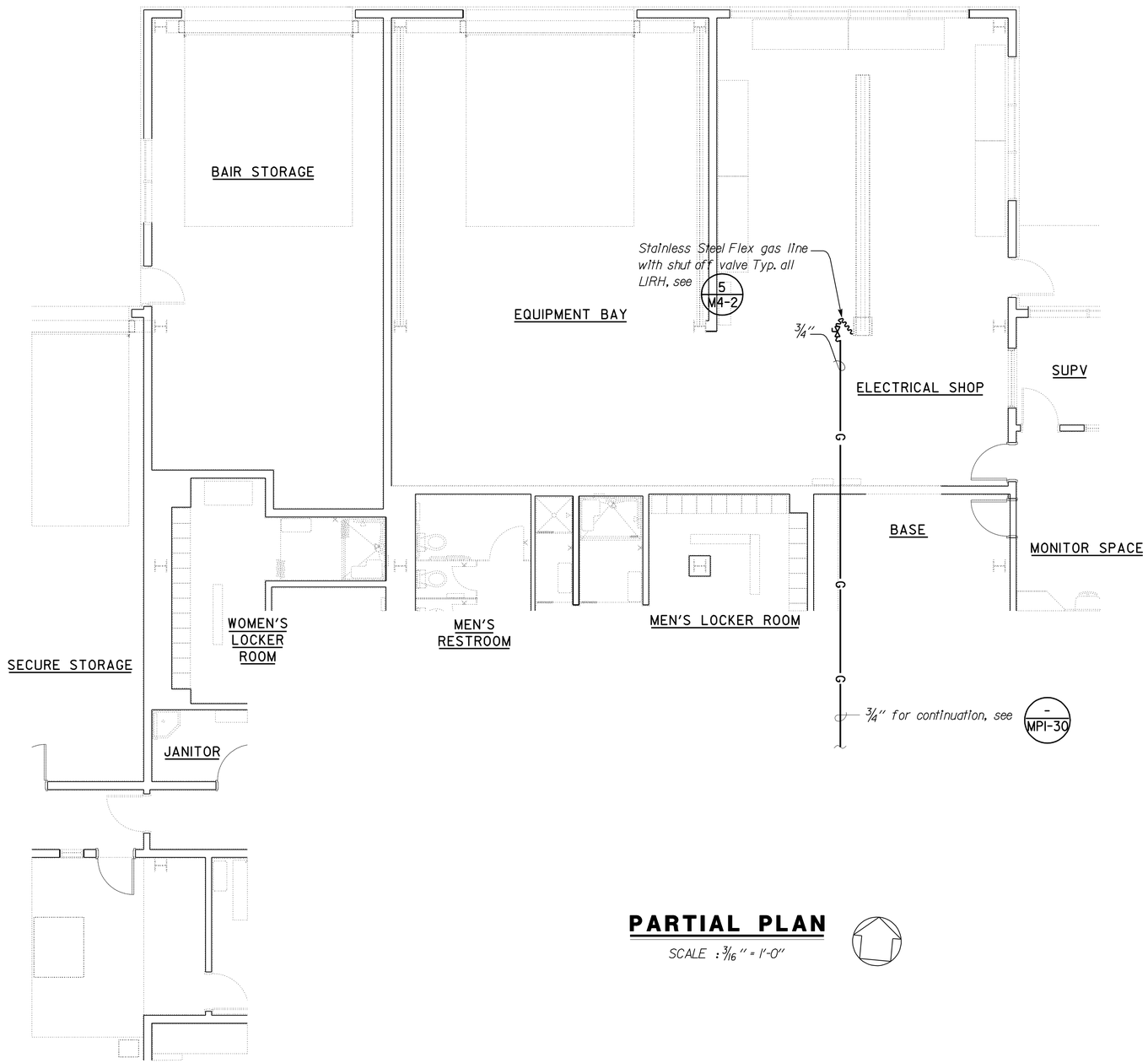

PARTIAL PLAN

SCALE : 3/16" = 1'-0"

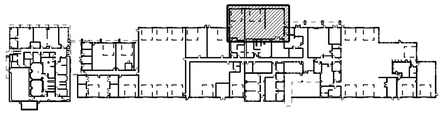

KEY PLAN

THIS DRAWING ACCURATE FOR MECHANICAL WORK ONLY

	BY	CHECKED
DESIGN	Mark Hedglin	Tom Hatam
DETAILS	Mark Hedglin	Tom Hatam
QUANTITIES	Mark Hedglin	Tom Hatam

STATE OF CALIFORNIA
DEPARTMENT OF TRANSPORTATION

DIVISION OF ENGINEERING SERVICES
ELECTRICAL-MECHANICAL-WATER AND WASTEWATER DESIGN

BRIDGE NO. 33M5785
POST MILE 2.2

SFOBB MAINTENANCE COMPLEX

BUILDING IB — EQUIPMENT LAYOUT PLAN NO. 3

SHEET **MP1-29**

TAEMWW Imperial Rev. 7/10

FILE => mp1_29.dgn
DATE PLOTTED => 26-OCT-2012 TIME PLOTTED => 07:04

ORIGINAL SCALE IN INCHES FOR REDUCED PLANS 0 1 2 3

UNIT 3615
PROJECT NUMBER & PHASE 04120006661
EA 014081

DISREGARD PRINTS BEARING EARLIER REVISION DATES → 05-08-12 05-25-12

REVISION DATES (PRELIMINARY STAGE ONLY) SHEET OF

USERNAME => s124496 DATE PLOTTED => 26-OCT-2012 TIME PLOTTED => 07:04

VI=1

DIST.	COUNTY	ROUTE	POST MILES TOTAL PROJECT	SHEET NO.	TOTAL SHEETS
04	Ala	80	2.2	594	800

REGISTERED MECHANICAL ENGINEER 05-25-12 DATE

REGISTERED PROFESSIONAL ENGINEER MARK HEDGLIN No. M32912 Exp. 9-30-12 MECH STATE OF CALIFORNIA

10-22-12
PLANS APPROVAL DATE

The State of California or its officers or agents shall not be responsible for the accuracy or completeness of scanned copies of this plan sheet.

CALIFORNIA STATE FIRE MARSHAL APPROVED
Approval of this plan does not authorize or approve any omission or deviation from applicable regulations. Final approval is subject to field inspection. One set of approved plans shall be available on the project site at all times.
Reviewed by: JOHN E WOODS, SDSFM
Approval date: 8-22-12

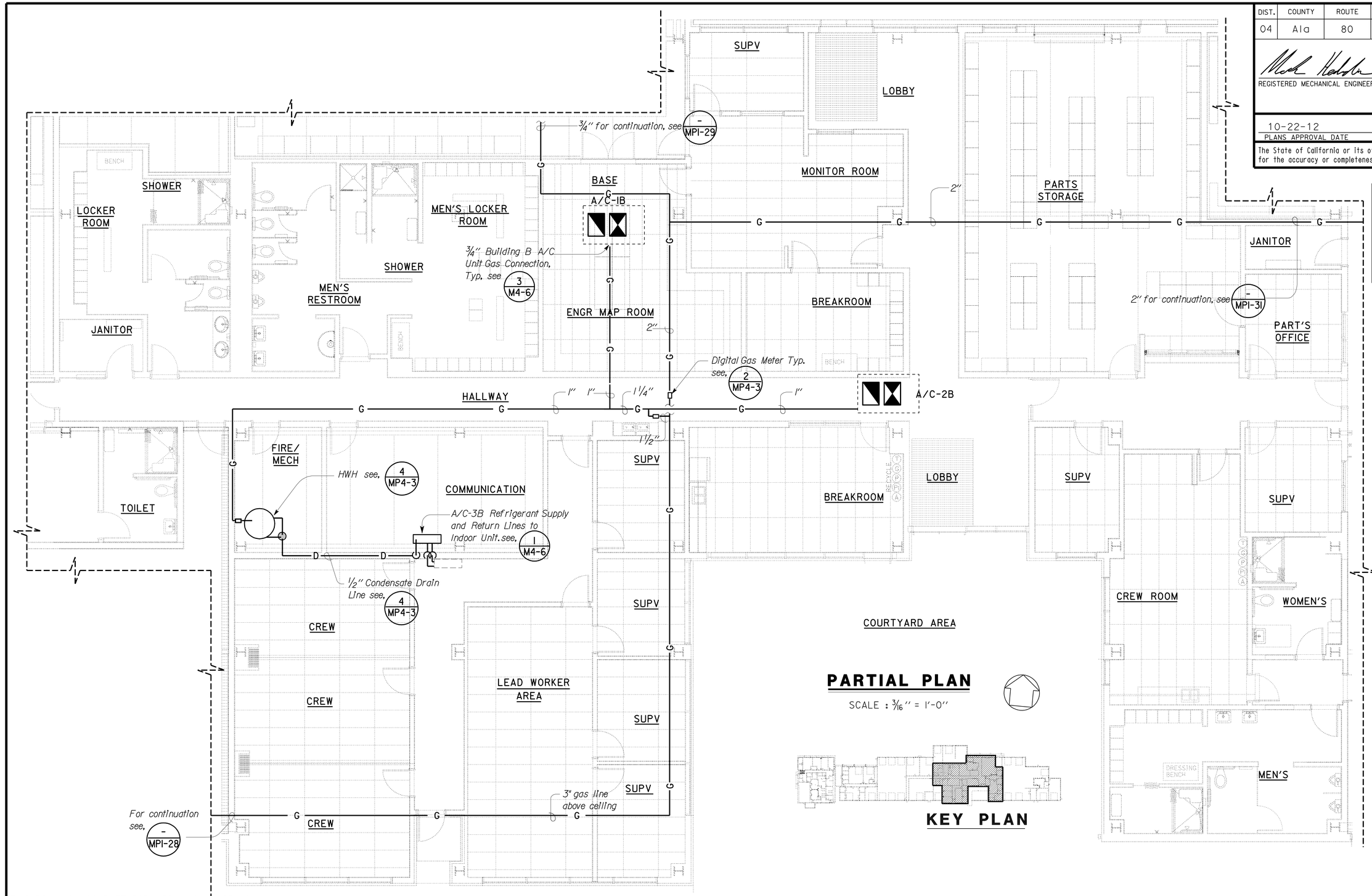

PARTIAL PLAN

SCALE : 3/16" = 1'-0"

KEY PLAN

THIS DRAWING ACCURATE FOR MECHANICAL WORK ONLY

	BY	CHECKED
DESIGN	Mark Hedglin	Tom Hatam
DETAILS	Rudy Sarte	Tom Hatam
QUANTITIES	Mark Hedglin	Tom Hatam

STATE OF CALIFORNIA DEPARTMENT OF TRANSPORTATION

DIVISION OF ENGINEERING SERVICES ELECTRICAL-MECHANICAL-WATER AND WASTEWATER DESIGN

BRIDGE NO. 33M5785
POST MILE 2.2

SFOBB MAINTENANCE COMPLEX
BUILDING IB — EQUIPMENT LAYOUT PLAN NO. 4

SHEET **MP1-30**

TAEMWW Imperial Rev. 7/10
FILE => mp1_30.dgn
DATE PLOTTED => 30-OCT-2012 TIME PLOTTED => 08:41
ORIGINAL SCALE IN INCHES FOR REDUCED PLANS 0 1 2 3
UNIT 3615
PROJECT NUMBER & PHASE 04120006661
EA 014081
DISREGARD PRINTS BEARING EARLIER REVISION DATES → 05-08-12 05-25-12
REVISION DATES (PRELIMINARY STAGE ONLY) SHEET OF
USERNAME => s128843 DATE PLOTTED => 30-OCT-2012 TIME PLOTTED => 08:41
V|=|

DIST.	COUNTY	ROUTE	POST MILES TOTAL PROJECT	SHEET NO.	TOTAL SHEETS
04	Ala	80	2.2	595	800

REGISTERED MECHANICAL ENGINEER 05-25-12 DATE

REGISTERED PROFESSIONAL ENGINEER MARK HEDGLIN No. M32912 Exp. 9-30-12 MECH STATE OF CALIFORNIA

10-22-12
PLANS APPROVAL DATE

The State of California or its officers or agents shall not be responsible for the accuracy or completeness of scanned copies of this plan sheet.

CALIFORNIA STATE FIRE MARSHAL APPROVED
Approval of this plan does not authorize or approve any omission or deviation from applicable regulations. Final approval is subject to field inspection. One set of approved plans shall be available on the project site at all times.
Reviewed by: JOHN E WOODS, SDSFM
Approval date: 8-22-12

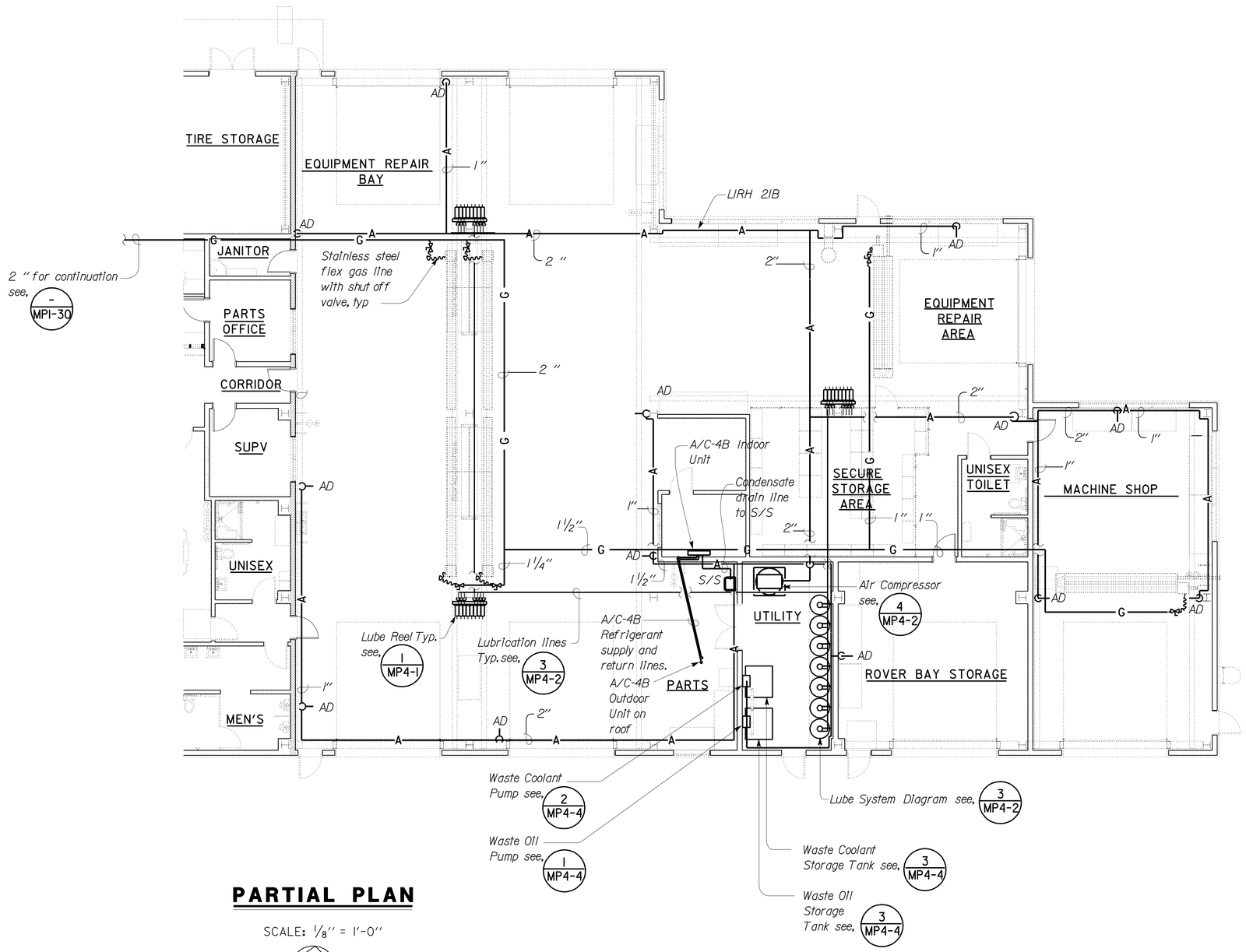

PARTIAL PLAN

SCALE: 1/8" = 1'-0"

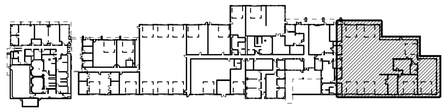

KEY PLAN

THIS DRAWING ACCURATE FOR MECHANICAL WORK ONLY

	BY	CHECKED
DESIGN	Mark Hedglin	Tom Hatam
DETAILS	Mark Hedglin	Tom Hatam
QUANTITIES	Mark Hedglin	Tom Hatam

STATE OF CALIFORNIA DEPARTMENT OF TRANSPORTATION

DIVISION OF ENGINEERING SERVICES
ELECTRICAL-MECHANICAL-WATER AND WASTEWATER DESIGN

BRIDGE NO. 33M5785
POST MILE 2.2

SFOBB MAINTENANCE COMPLEX
BUILDING IB — EQUIPMENT LAYOUT PLAN NO. 5

SHEET **MP1-31**

TAEMWW Imperial Rev. 7/10
FILE => mp1_31.dgn
DATE PLOTTED => 30-OCT-2012 TIME PLOTTED => 08:31
ORIGINAL SCALE IN INCHES FOR REDUCED PLANS 0 1 2 3
UNIT 3615
PROJECT NUMBER & PHASE 04120006661
EA 014081
DISREGARD PRINTS BEARING EARLIER REVISION DATES
REVISION DATES (PRELIMINARY STAGE ONLY) 05-08-12 05-25-12
SHEET OF

USERNAME => s128843 DATE PLOTTED => 30-OCT-2012 TIME PLOTTED => 08:31

DIST.	COUNTY	ROUTE	POST MILES TOTAL PROJECT	SHEET NO.	TOTAL SHEETS
04	Ala	80	2.2	596	800

CALIFORNIA STATE FIRE MARSHAL APPROVED

Approval of this plan does not authorize or approve any omission or deviation from applicable regulations. Final approval is subject to field inspection. One set of approved plans shall be available on the project site at all times.

Reviewed by: JOHN E WOODS, SDSFM

Approval date: 8-22-12

REGISTERED MECHANICAL ENGINEER — 09-06-12 — DATE

REGISTERED PROFESSIONAL ENGINEER — Jack Wheeler — No. 21648 — Exp. 6-30-13 — MECH — STATE OF CALIFORNIA

10-22-12
PLANS APPROVAL DATE

The State of California or its officers or agents shall not be responsible for the accuracy or completeness of scanned copies of this plan sheet.

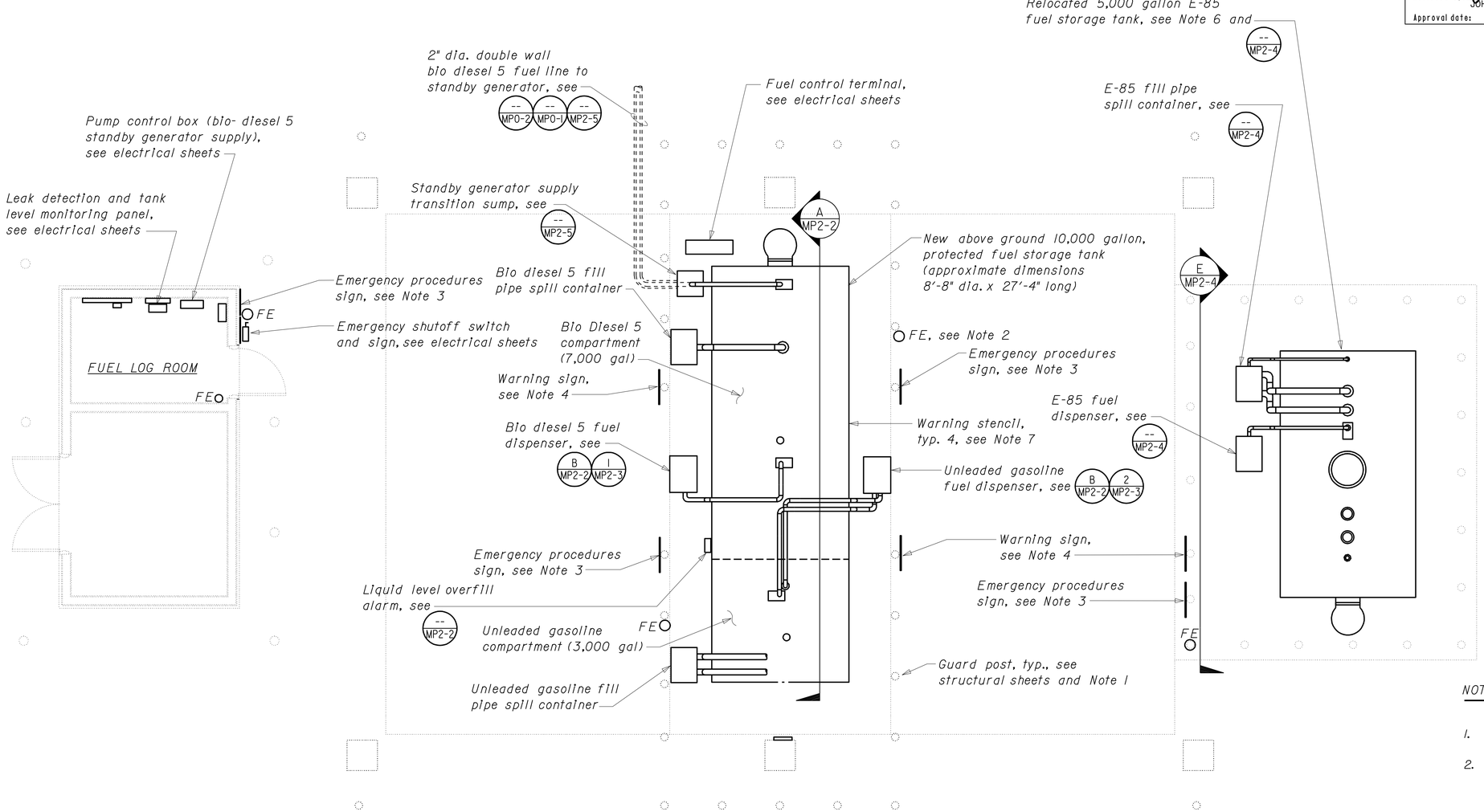

PLAN
1/4"=1'-0"

NOTES

1. Guard posts shall comply with Section 312 of the CFC.
2. Fire extinguishers under canopy shall be 40B:C, bracket mounted, 20 pound size. Fire extinguisher in fuel log building shall be 2A:10B:C, bracket mounted.
3. Provide "Emergency procedures signs" per 2010 CFC, see Detail 5 on MP2-6.
4. Provide "Warning signs" per 2010 CFC, see Detail 6 on MP2-5.
5. Fuel supply, vapor recovery and primary vent lines only shown for clarity. For all appurtenances, see sheet P2-2.
6. Connect new E-85 dispenser and fill pipe spill container to relocated E-85 fuel tank at (E) pipe flanges. Re- configure piping and provide new pipe and fittings as required.
7. On both sides and both ends, the fuel tank shall be stecilled with "NO SMOKING - FLAMMABLE LIQUID" in bold red 6" high letters.

THIS DRAWING ACCURATE FOR MECHANICAL WORK ONLY

	BY	CHECKED
DESIGN	Thomas Dietsch	Tom H. Hatam
DETAILS	Thomas Dietsch	Tom H. Hatam
QUANTITIES	Thomas Dietsch	Tom H. Hatam

STATE OF CALIFORNIA
DEPARTMENT OF TRANSPORTATION

DIVISION OF ENGINEERING SERVICES
ELECTRICAL-MECHANICAL-WATER AND WASTEWATER DESIGN

BRIDGE NO. 33M5785
POST MILE 2.2

SFOBB MAINTENANCE COMPLEX
FUEL ISLAND — FUEL ISLAND PLUMBING PLAN

SHEET **MP2-1**

TAEMWW Imperial Rev. 7/10
FILE => mp2_1.dgn
DATE PLOTTED => 30-OCT-2012 TIME PLOTTED => 08:31

ORIGINAL SCALE IN INCHES FOR REDUCED PLANS 0 1 2 3

UNIT 3615
PROJECT NUMBER & PHASE 04120006661
EA 014081

DISREGARD PRINTS BEARING EARLIER REVISION DATES
REVISION DATES (PRELIMINARY STAGE ONLY) 04-26-12 05-08-12 05-31-12
SHEET OF

USERNAME => s128843 DATE PLOTTED => 30-OCT-2012 TIME PLOTTED => 08:31

V|=|

DIST.	COUNTY	ROUTE	POST MILES TOTAL PROJECT	SHEET NO.	TOTAL SHEETS
04	Ala	80	2.2	597	800

CALIFORNIA STATE FIRE MARSHAL APPROVED
Approval of this plan does not authorize or approve any omission or deviation from applicable regulations. Final approval is subject to field inspection. One set of approved plans shall be available on the project site at all times.
Reviewed by: JOHN E WOODS, SDSFM
Approval date: 8-22-12

REGISTERED MECHANICAL ENGINEER — DATE: 09-06-12
REGISTERED PROFESSIONAL ENGINEER — Jack Wheeler — No. 21648 — Exp. 6-30-13 — MECH — STATE OF CALIFORNIA

10-22-12
PLANS APPROVAL DATE

The State of California or its officers or agents shall not be responsible for the accuracy or completeness of scanned copies of this plan sheet.

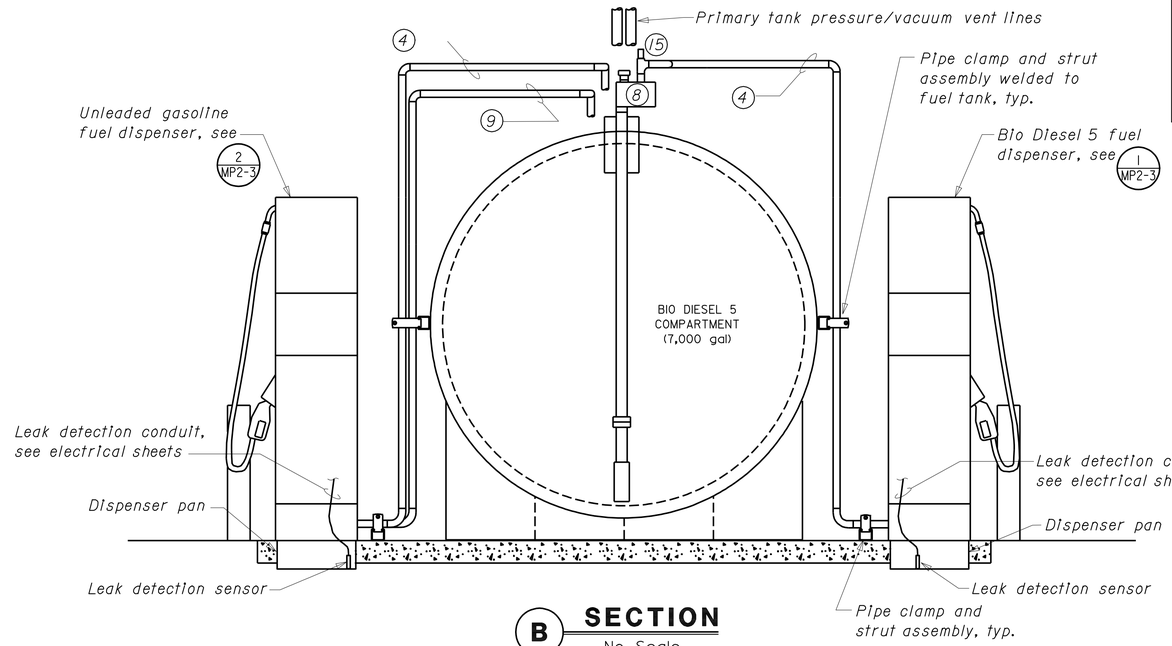

B SECTION
No Scale

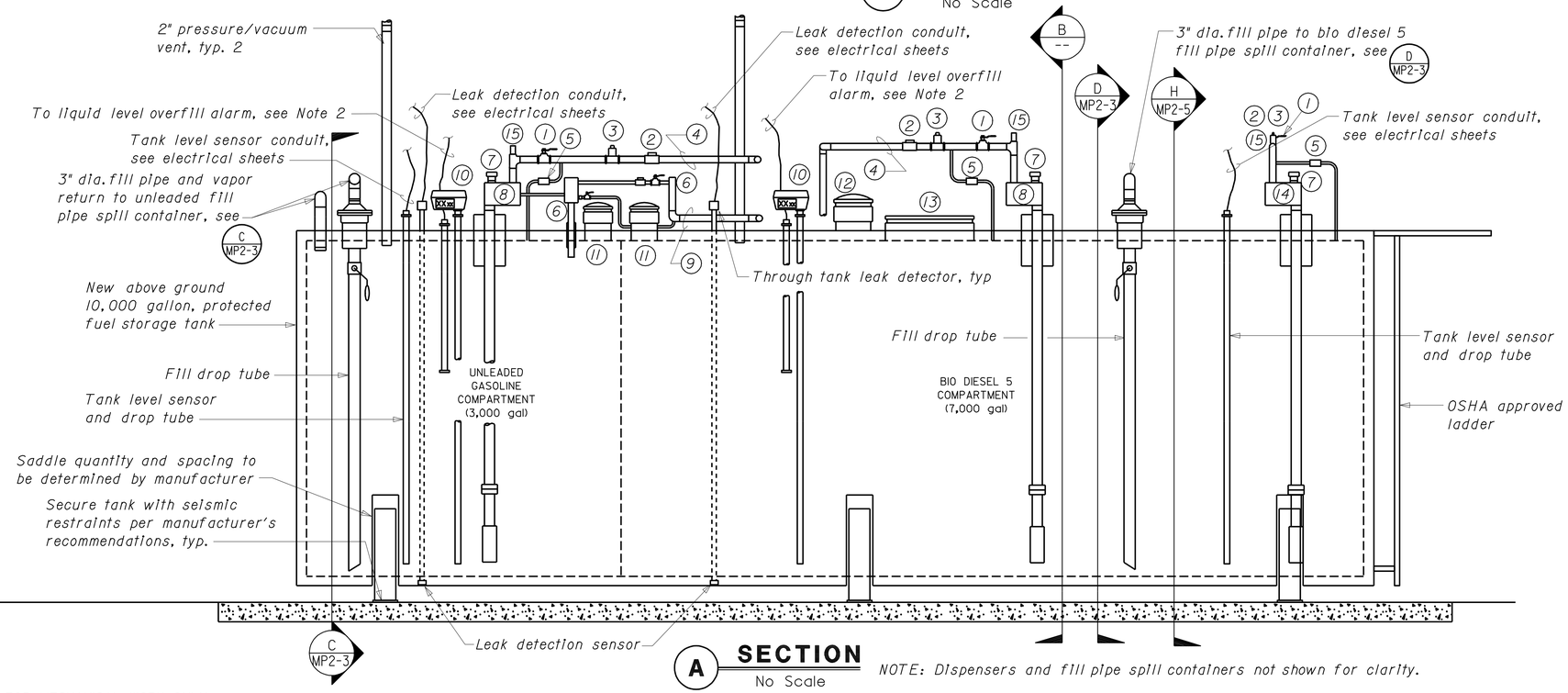

A SECTION
No Scale

NOTE: Dispensers and fill pipe spill containers not shown for clarity.

EQUIPMENT

Aboveground storage tank (protected) - 10,000 gallon, dual compartment (unleaded gasoline and bio diesel 5), secondary containment type tank

Unleaded gasoline fuel dispenser, 120 V
Unleaded gasoline fuel pump (submersible) - ¾ hp, 208 V - 1 Phase
Unleaded gasoline fill pipe spill container, 20 gallon

Bio diesel 5 fuel dispenser, 120 V
Bio diesel 5 fuel pump (submersible) - ¾ hp, 208 V - 1 Phase
Bio diesel 5 fill pipe spill container, 20 gallon

Standby generator bio diesel 5 fuel pump (submersible) and control box, ¾ hp, 208 V - 1 Phase

APPURTENANCES

1. Ball Valve
2. External Emergency Shutoff Valve
3. Solenoid Valve
4. Product Supply Line to Dispenser
5. Expansion Relief Valve
6. Central Vacuum Pump/Vapor Recovery System
7. Mechanical Leak Detector
8. Submersible Pump and Controls
9. Vapor Recovery Line to Dispenser
10. Tank Level Gauge and Drop Tube (display toward spill containers)
11. Primary Tank Emergency Vent
12. Secondary Containment Emergency Vent
13. 24" dia. manway
14. Submersible pump and control box
15. Anti-siphon valve

THIS DRAWING ACCURATE FOR MECHANICAL WORK ONLY

	BY	CHECKED
DESIGN	Thomas Dietsch	Tom H. Hatam
DETAILS	Thomas Dietsch	Tom H. Hatam
QUANTITIES	Thomas Dietsch	Tom H. Hatam

STATE OF CALIFORNIA
DEPARTMENT OF TRANSPORTATION

DIVISION OF ENGINEERING SERVICES
ELECTRICAL-MECHANICAL-WATER AND WASTEWATER DESIGN

BRIDGE NO. 33M5785
POST MILE 2.2

SFOBB MAINTENANCE COMPLEX
FUEL ISLAND — FUEL TANK SECTIONS AND DETAILS

SHEET **MP2-2**

TAEMWW Imperial Rev. 7/10
FILE => mp2_2.dgn
DATE PLOTTED => 25-OCT-2012 TIME PLOTTED => 14:07
ORIGINAL SCALE IN INCHES FOR REDUCED PLANS 0 1 2 3
UNIT 3615
PROJECT NUMBER & PHASE 04120006661
EA 014081
DISREGARD PRINTS BEARING EARLIER REVISION DATES → 04-26-12 05-08-12 05-31-12
REVISION DATES (PRELIMINARY STAGE ONLY) SHEET OF

USERNAME => s121614 DATE PLOTTED => 25-OCT-2012 TIME PLOTTED => 14:07
VI=1

DIST.	COUNTY	ROUTE	POST MILES TOTAL PROJECT	SHEET NO.	TOTAL SHEETS
04	Ala	80	2.2	598	800

CALIFORNIA STATE FIRE MARSHAL APPROVED
Approval of this plan does not authorize or approve any omission or deviation from applicable regulations. Final approval is subject to field inspection. One set of approved plans shall be available on the project site at all times.
Reviewed by: JOHN E WOODS, SDSFM
Approval date: 8-22-12

REGISTERED MECHANICAL ENGINEER 09-06-12 DATE
REGISTERED PROFESSIONAL ENGINEER Jack Wheeler No. 21648 Exp. 6-30-13 MECH STATE OF CALIFORNIA

10-22-12
PLANS APPROVAL DATE

The State of California or its officers or agents shall not be responsible for the accuracy or completeness of scanned copies of this plan sheet.

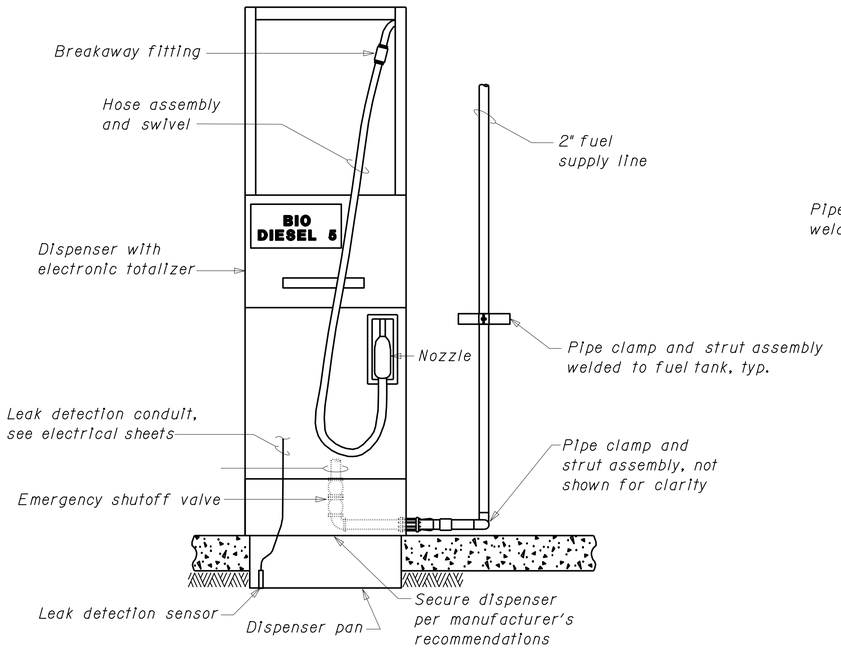

1 BIO DIESEL 5 FUEL DISPENSER
No Scale

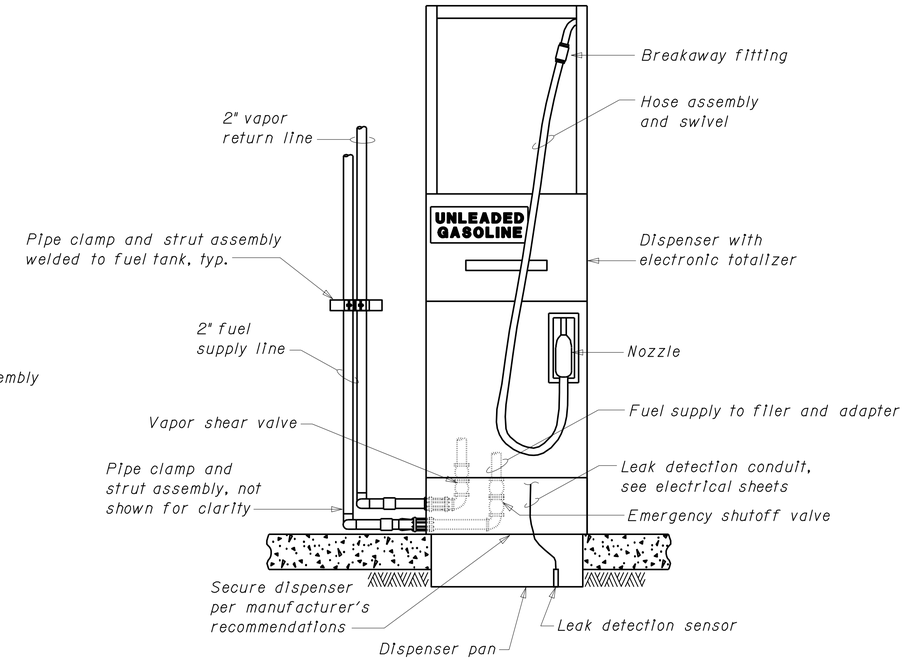

2 UNLEADED GASOLINE FUEL DISPENSER
No Scale

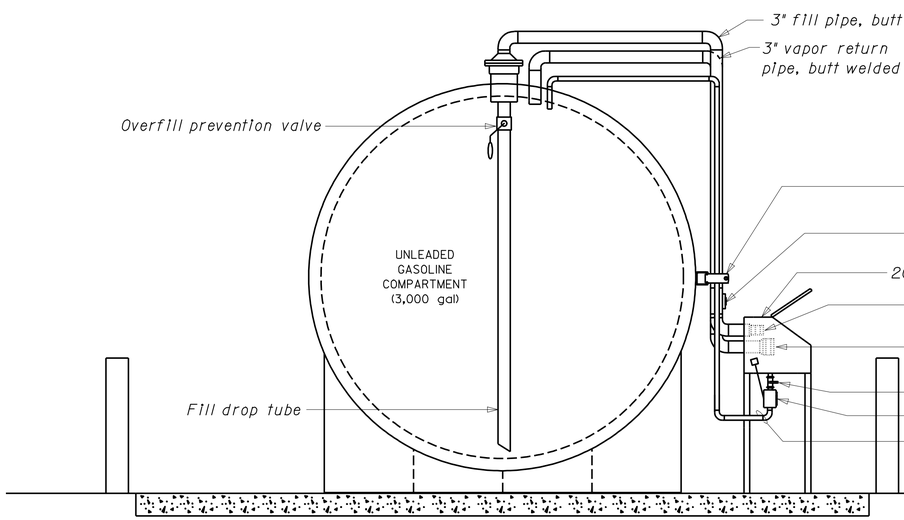

C SECTION
No Scale

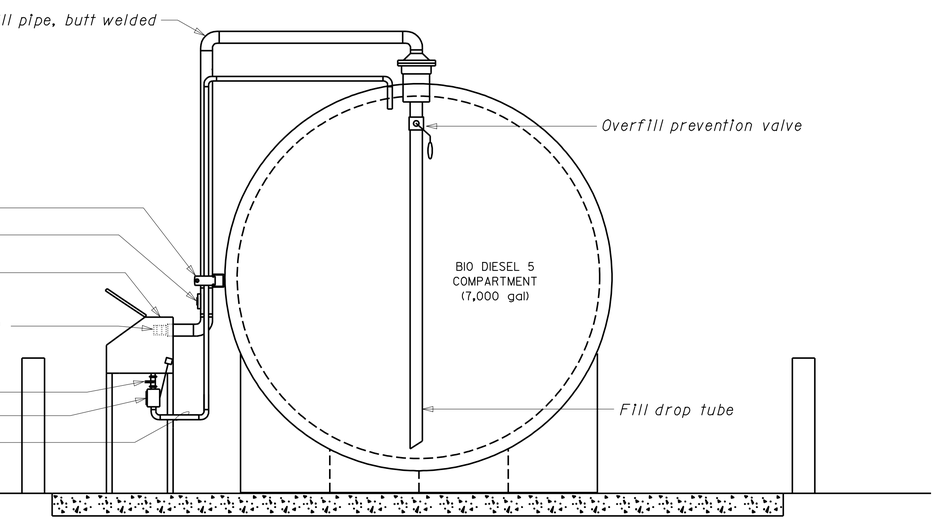

D SECTION
No Scale

THIS DRAWING ACCURATE FOR MECHANICAL WORK ONLY

	BY	CHECKED
DESIGN	Thomas Dietsch	Tom H. Hatam
DETAILS	Thomas Dietsch	Tom H. Hatam
QUANTITIES	Thomas Dietsch	Tom H. Hatam

STATE OF CALIFORNIA
DEPARTMENT OF TRANSPORTATION

DIVISION OF ENGINEERING SERVICES
ELECTRICAL-MECHANICAL-WATER AND WASTEWATER DESIGN

BRIDGE NO. 33M5785
POST MILE 2.2

SFOBB MAINTENANCE COMPLEX
FUEL ISLAND
FILL PIPE AND DISPENSER DETAILS

SHEET **MP2-3**

TAEMWW Imperial Rev. 7/10
FILE => mp2_3.dgn
DATE PLOTTED => 25-OCT-2012 TIME PLOTTED => 14:07
ORIGINAL SCALE IN INCHES FOR REDUCED PLANS 0 1 2 3
UNIT 3615
PROJECT NUMBER & PHASE 04120006661
EA 014081
DISREGARD PRINTS BEARING EARLIER REVISION DATES
REVISION DATES (PRELIMINARY STAGE ONLY) 04-26-12 05-08-12 05-31-12
SHEET OF

USERNAME => s121614 DATE PLOTTED => 25-OCT-2012 TIME PLOTTED => 14:07

DIST.	COUNTY	ROUTE	POST MILES TOTAL PROJECT	SHEET NO.	TOTAL SHEETS
04	Ala	80	2.2	599	800

CALIFORNIA STATE FIRE MARSHAL APPROVED
Approval of this plan does not authorize or approve any omission or deviation from applicable regulations. Final approval is subject to field inspection. One set of approved plans shall be available on the project site at all times.
Reviewed by: JOHN E WOODS, SDSFM
Approval date: 8-22-12

REGISTERED MECHANICAL ENGINEER 09-06-12 DATE

REGISTERED PROFESSIONAL ENGINEER Jack Wheeler No. 21648 Exp. 6-30-13 MECH STATE OF CALIFORNIA

10-22-12
PLANS APPROVAL DATE

The State of California or its officers or agents shall not be responsible for the accuracy or completeness of scanned copies of this plan sheet.

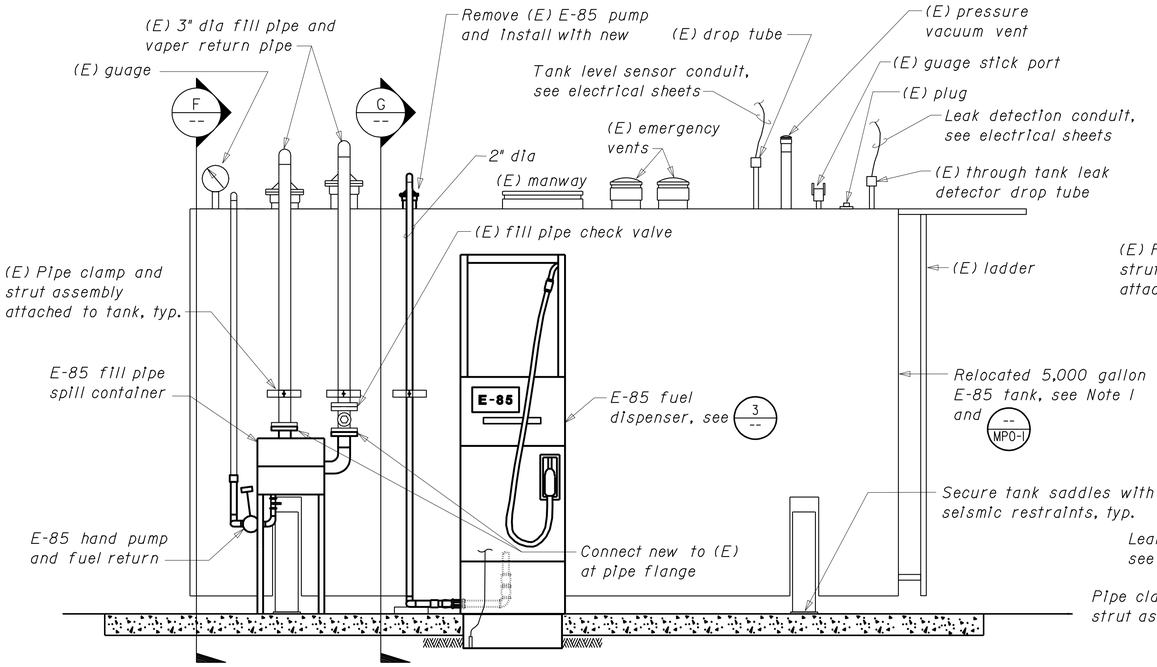

E ELEVATION
No Scale

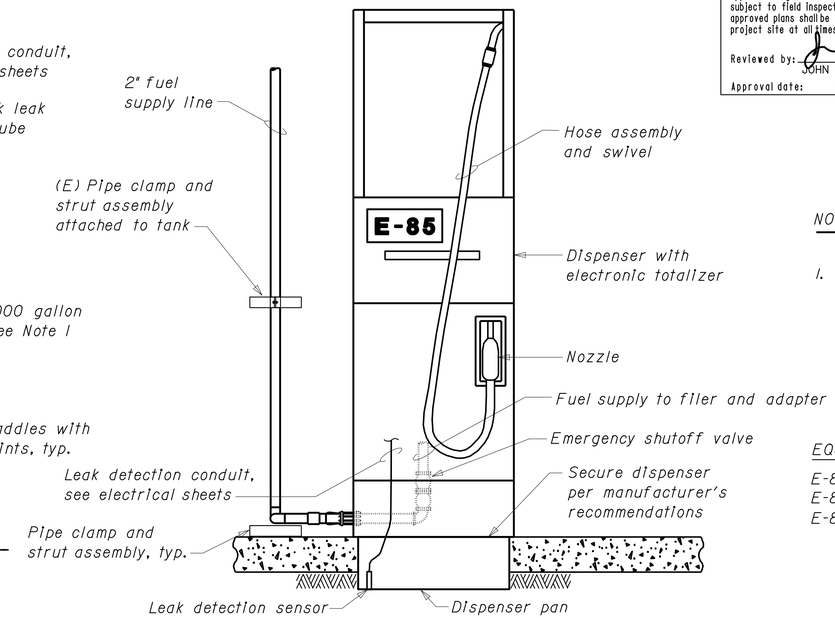

3 E-85 FUEL DISPENSER
No Scale

NOTES

1. Contractor shall verify all controlling field dimensions before relocating E-85 fuel tank, and before installing new E-85 dispenser, fill pipe spill container, and all other piping and appurtenances.

EQUIPMENT

E-85 fuel dispenser, 120 V
E-85 fuel pump (submersible) - 3/4 hp, 208 V - 1 Phase
E-85 fill pipe spill container, 20 gallon

APPURTENANCES

1. Ball Valve
2. External Emergency Shutoff Valve
3. Solenoid Valve
4. Product Supply Line
5. Expansion Relief Valve
7. Mechanical Leak Detector
14. Submersible Pump and Controls
15. Anti-siphon Valve

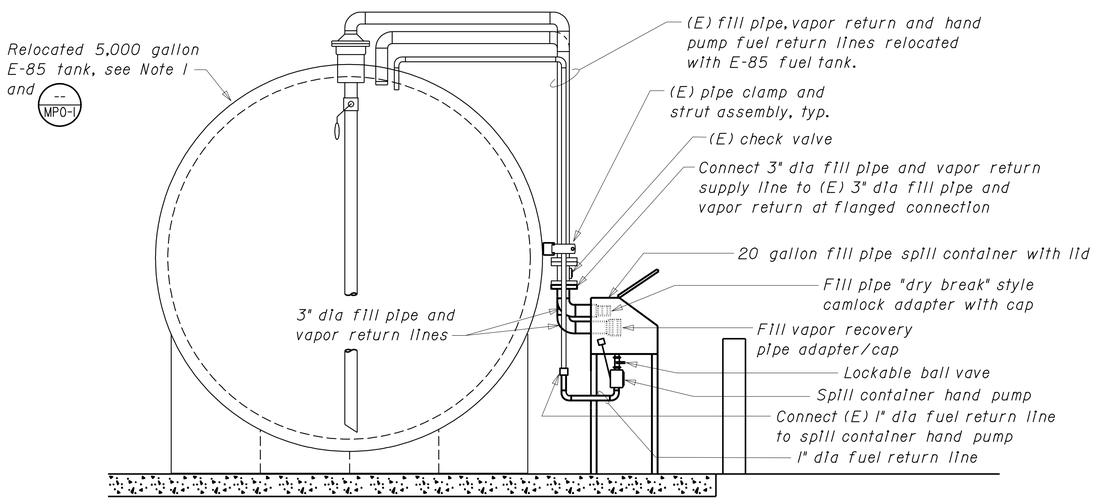

F SECTION
No Scale

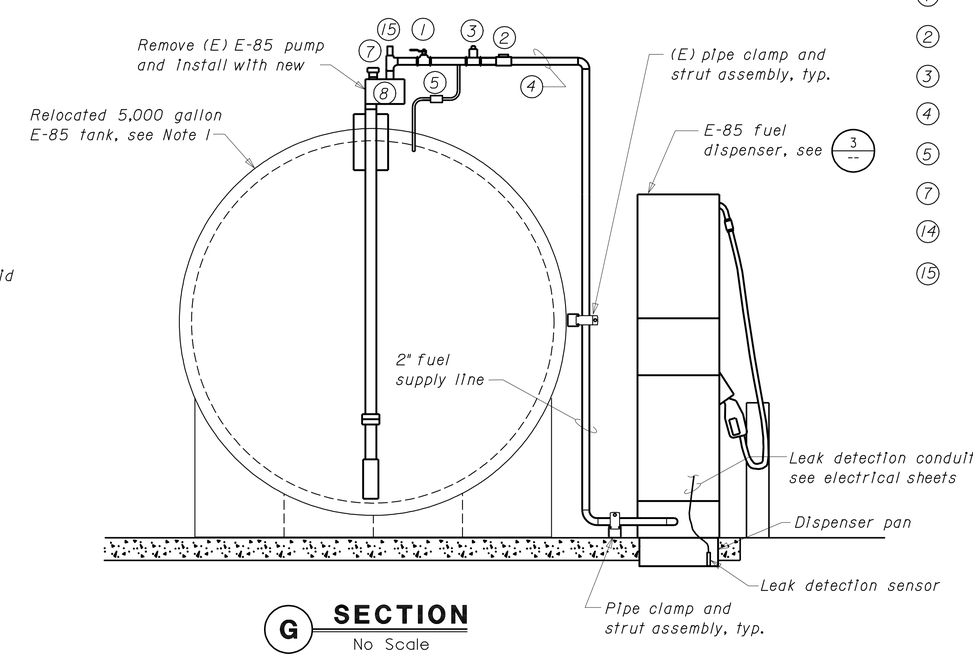

G SECTION
No Scale

THIS DRAWING ACCURATE FOR MECHANICAL WORK ONLY

	BY	CHECKED
DESIGN	Thomas Dietsch	Tom H. Hatam
DETAILS	Thomas Dietsch	Tom H. Hatam
QUANTITIES	Thomas Dietsch	Tom H. Hatam

STATE OF CALIFORNIA
DEPARTMENT OF TRANSPORTATION

DIVISION OF ENGINEERING SERVICES
ELECTRICAL-MECHANICAL-WATER AND WASTEWATER DESIGN

BRIDGE NO. 33M5785
POST MILE 2.2

SFOBB MAINTENANCE COMPLEX
FUEL ISLAND
RELOCATED E-85 TANK AND DETAILS

SHEET **MP2-4**

TAEMWW Imperial Rev. 7/10
FILE => mp2_4.dgn
DATE PLOTTED => 25-OCT-2012 TIME PLOTTED => 14:07
ORIGINAL SCALE IN INCHES FOR REDUCED PLANS 0 1 2 3
UNIT 3615
PROJECT NUMBER & PHASE 04120006661
EA 014081
DISREGARD PRINTS BEARING EARLIER REVISION DATES
REVISION DATES (PRELIMINARY STAGE ONLY) 04-25-12 05-08-12 05-31-12
SHEET OF

USERNAME => s12614 DATE PLOTTED => 25-OCT-2012 TIME PLOTTED => 14:07
V|=|

DIST.	COUNTY	ROUTE	POST MILES TOTAL PROJECT	SHEET NO.	TOTAL SHEETS
04	Ala	80	2.2	600	800

REGISTERED MECHANICAL ENGINEER 09-06-12 DATE

REGISTERED PROFESSIONAL ENGINEER Jack Wheeler No. 21648 Exp. 6-30-13 MECH STATE OF CALIFORNIA

10-22-12
PLANS APPROVAL DATE

The State of California or its officers or agents shall not be responsible for the accuracy or completeness of scanned copies of this plan sheet.

CALIFORNIA STATE FIRE MARSHAL APPROVED
Approval of this plan does not authorize or approve any omission or deviation from applicable regulations. Final approval is subject to field inspection. One set of approved plans shall be available on the project site at all times.
Reviewed by: JOHN E WOODS, SDSFM
Approval date: 8-22-12

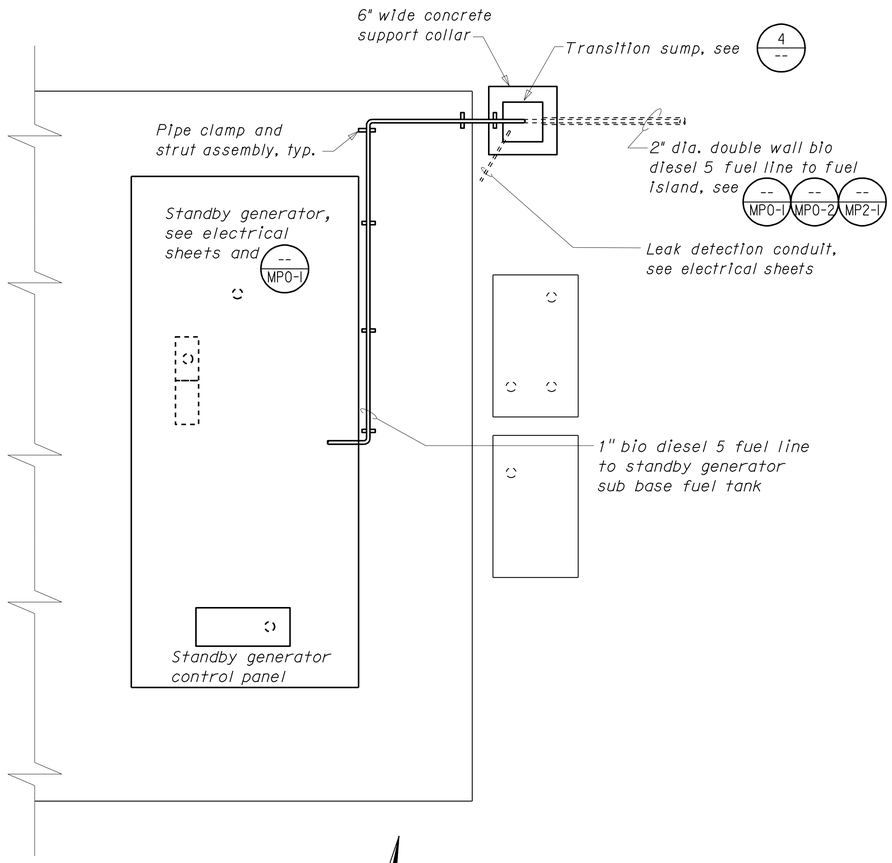

PARTIAL PLAN
3/8"=1'-0"

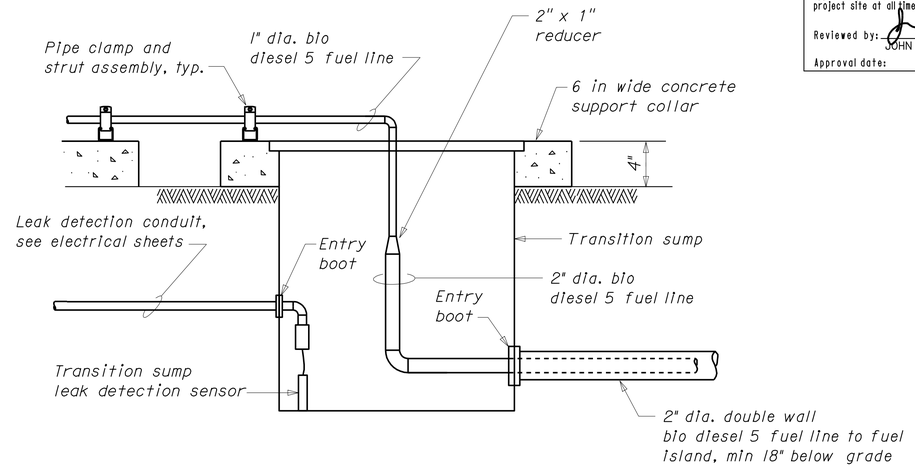

4 TRANSITION SUMP
No Scale

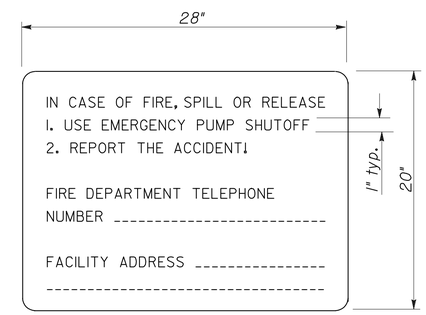

5 EMERGENCY PROCEDURES SIGN
No Scale

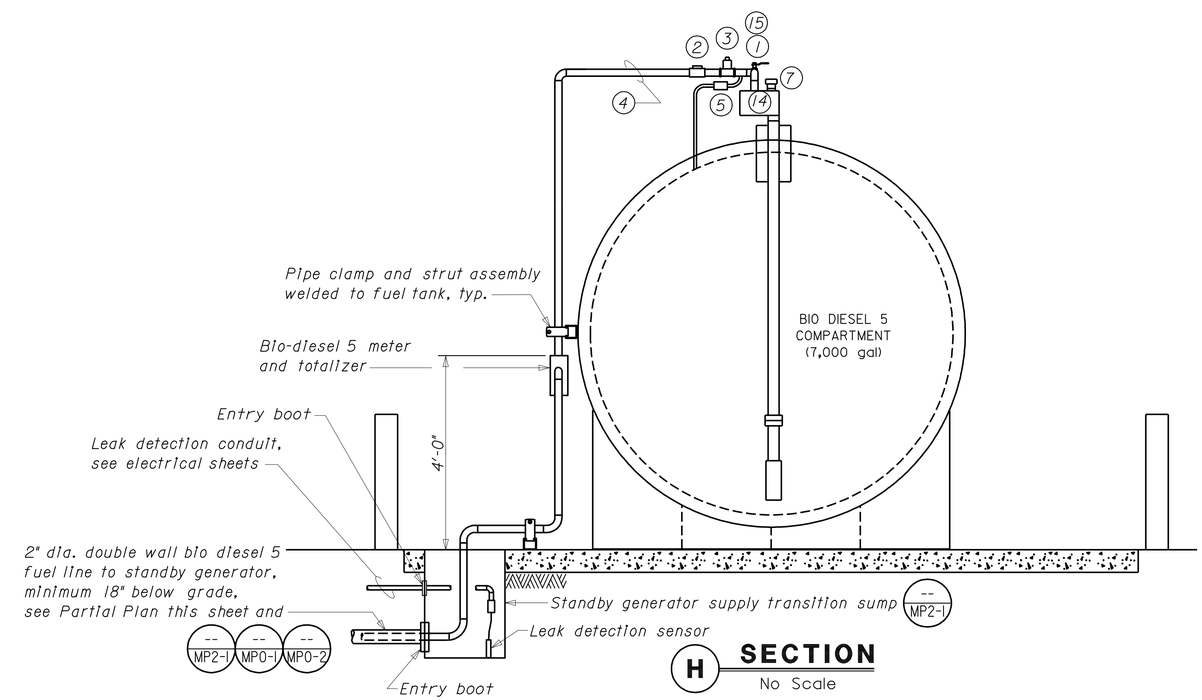

H SECTION
No Scale

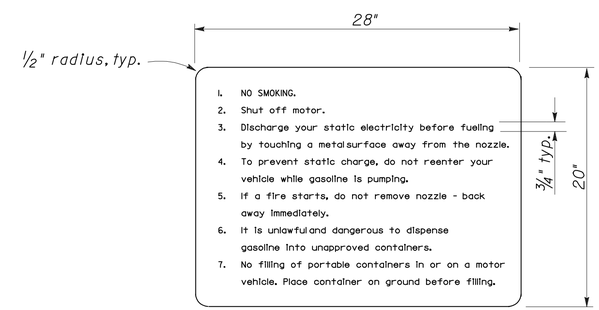

6 WARNING SIGN
No Scale

APPURTENANCES

1. Ball Valve
2. External Emergency Shutoff Valve
3. Solenoid Valve
4. Product Supply Line
5. Expansion Relief Valve
7. Mechanical Leak Detector
14. Submersible Pump with Control Box
15. Anti-siphon Valve

SEQUENCE OF OPERATION - STANDBY GENERATOR TANK RE-FUELING

1. Fuel level in the standby generator fuel tank lowers and closes the float switch. A signal is sent to the fuel pump control box located in the Fuel Log Building. The pump demand circuit is energized to open the solenoid valve and start the fuel pump.
2. Once the standby generator fuel tank is full, the float switch opens and de-energizes the control box circuit. The pump demand circuit is de-energized. The fuel pump stops and the solenoid valve is closed.

THIS DRAWING ACCURATE FOR MECHANICAL WORK ONLY

	BY	CHECKED
DESIGN	Thomas Dietsch	Tom H. Hatam
DETAILS	Thomas Dietsch	Tom H. Hatam
QUANTITIES	Thomas Dietsch	Tom H. Hatam

STATE OF CALIFORNIA DEPARTMENT OF TRANSPORTATION

DIVISION OF ENGINEERING SERVICES
ELECTRICAL-MECHANICAL-WATER AND WASTEWATER DESIGN

BRIDGE NO. 33M5785
POST MILE 2.2

SFOBB MAINTENANCE COMPLEX
FUEL ISLAND
STANDBY GENERATOR REFUELING DETAILS

SHEET **MP2-5**

TAEMWW Imperial Rev. 7/10
FILE => mp2_5.dgn
DATE PLOTTED => 25-OCT-2012 TIME PLOTTED => 14:08
ORIGINAL SCALE IN INCHES FOR REDUCED PLANS 0 1 2 3
UNIT 3615
PROJECT NUMBER & PHASE 04120006661
EA 014081
DISREGARD PRINTS BEARING EARLIER REVISION DATES
REVISION DATES (PRELIMINARY STAGE ONLY) 04-25-12 05-08-12 05-31-12
SHEET OF

USERNAME => s12614 DATE PLOTTED => 25-OCT-2012 TIME PLOTTED => 14:08