Dist	COUNTY	ROUTE	KILOMETER POST TOTAL PROJECT	SHEET No.	TOTAL SHEETS
04	SF	80	12.6/13.9	101	821

Caltrans Metric

Alex McDonald
LICENSED LANDSCAPE ARCHITECT

2-21-12
PLANS APPROVAL DATE

LICENSED LANDSCAPE ARCHITECT
ALEXANDER K. MCDONALD No. 4397
Alex McDonald
Signature
8-31-12
Renewal Date
2-14-12
Date
STATE OF CALIFORNIA

THE STATE OF CALIFORNIA OR ITS OFFICERS OR AGENTS SHALL NOT BE RESPONSIBLE FOR THE ACCURACY OR COMPLETENESS OF ELECTRONIC COPIES OF THIS PLAN SHEET.

EROSION CONTROL QUANTITIES

SHEET No.	STATION / LOCATION	LOCATION	EROSION CONTROL (NETTING)	EROSION CONTROL (TYPE D)	EROSION CONTROL (COMPOST BLANKET)	TOPSOIL [N]	EROSION CONTROL (WIRE MESH BLANKET)	FIBER ROLLS m	
			m^2	m^2	m^3	m^3	m^2	(TYPE 1)	(TYPE 2)
EC-1	WW LINE	R† & L†	325	3,700	92	86	-	508	-
EC-1	SG LINE	R†	8,079	3,951	29	2,217	188	248	38
EC-1	BP LINE	R† & L†	492	1,693	44	-	-	85	83
EC-2	UTILITY STAIRS	R† & L†	228	327	9	-	-	38	58
EC-2	HISTORIC STAIRS	R† & L†	120	226	6	-	-	75	32
EC-2	CG LINE	R† & L†	2,737	7,644	190	205	-	597	299
EC-2	CG1 LINE	L†	-	1,434	37	-	-	122	-
EC-3	TF3 LINE	R† & L†	2,265	10,441	240	-	1,194	906	233
TOTAL			14,246	29,416	647	2,508	1,382	2,579	743

[N] NOT A SEPARATE PAY ITEM, FOR INFORMATION ONLY

STATE OF CALIFORNIA - DEPARTMENT OF TRANSPORTATION
Caltrans WATER QUALITY

SENIOR LANDSCAPE ARCHITECT: DAVE W. YAM
CALCULATED-DESIGNED BY: Alex McDonald
CHECKED BY: Jennifer Egawa
REVISED BY: AKM
DATE REVISED: 2/10/12

EROSION CONTROL QUANTITIES

NO SCALE

ECQ-1

LAST REVISION 05-24-11
DATE PLOTTED => 25-FEB-2012
TIME PLOTTED => 07:28

Dist	COUNTY	ROUTE	KILOMETER POST TOTAL PROJECT	SHEET No.	TOTAL SHEETS
04	SF	80	12.6/13.9	102	821

Brian M Wood 11-1-11
REGISTERED CIVIL ENGINEER DATE

2-21-12
PLANS APPROVAL DATE

REGISTERED PROFESSIONAL ENGINEER Brian M. Wood No. 76969 Exp. 12-31-12 CIVIL STATE OF CALIFORNIA

THE STATE OF CALIFORNIA OR ITS OFFICERS OR AGENTS SHALL NOT BE RESPONSIBLE FOR THE ACCURACY OR COMPLETENESS OF ELECTRONIC COPIES OF THIS PLAN SHEET.

Caltrans Metric

FOR COMPLETE RIGHT OF WAY AND ACCURATE ACCESS DATA, SEE RIGHT OF WAY RECORD MAPS AT DISTRICT OFFICE.

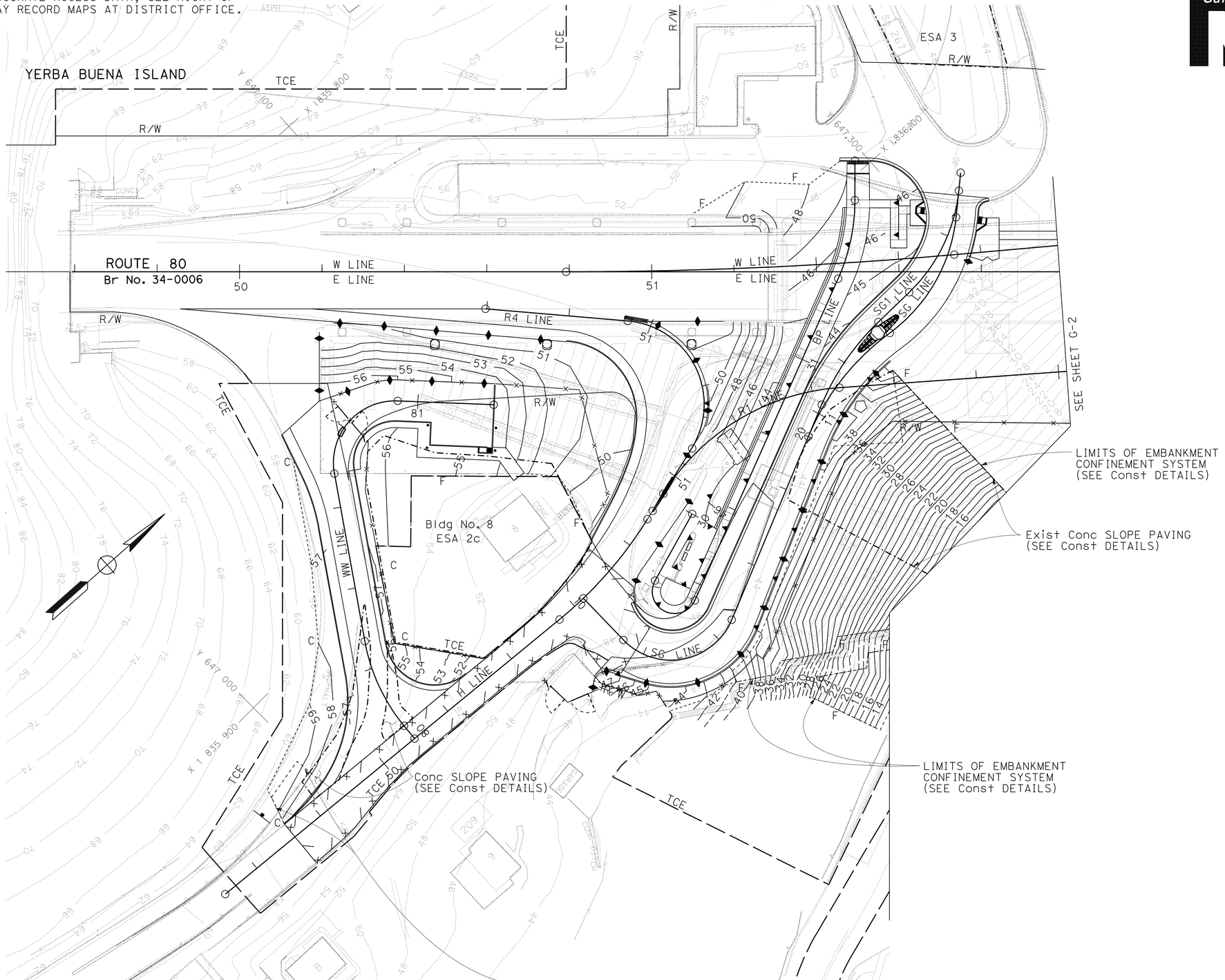

ALL DIMENSIONS ARE IN METERS UNLESS OTHERWISE SHOWN

CONTOUR GRADING

SCALE 1:500

THIS PLAN ACCURATE FOR CONTOUR GRADING WORK ONLY

G-1

BRIAN WOOD	BW	CALCULATED-DESIGNED BY	
AMANDO VITO	11-1-11	CHECKED BY	
REVISED BY		FUNCTIONAL SUPERVISOR	
DATE REVISED		BOB ZANDIPOUR	

STATE OF CALIFORNIA - DEPARTMENT OF TRANSPORTATION

Caltrans DESIGN

LAST REVISION 02-06-12 DATE PLOTTED => 25-FEB-2012 TIME PLOTTED => 07:28

Dist	COUNTY	ROUTE	KILOMETER POST TOTAL PROJECT	SHEET No.	TOTAL SHEETS
04	SF	80	12.6/13.9	103	821

Brian M Wood 11-1-11
REGISTERED CIVIL ENGINEER DATE

2-21-12
PLANS APPROVAL DATE

REGISTERED PROFESSIONAL ENGINEER Brian M. Wood No. 76969 Exp. 12-31-12 CIVIL STATE OF CALIFORNIA

THE STATE OF CALIFORNIA OR ITS OFFICERS OR AGENTS SHALL NOT BE RESPONSIBLE FOR THE ACCURACY OR COMPLETENESS OF ELECTRONIC COPIES OF THIS PLAN SHEET.

Caltrans Metric

FOR COMPLETE RIGHT OF WAY AND ACCURATE ACCESS DATA, SEE RIGHT OF WAY RECORD MAPS AT DISTRICT OFFICE.

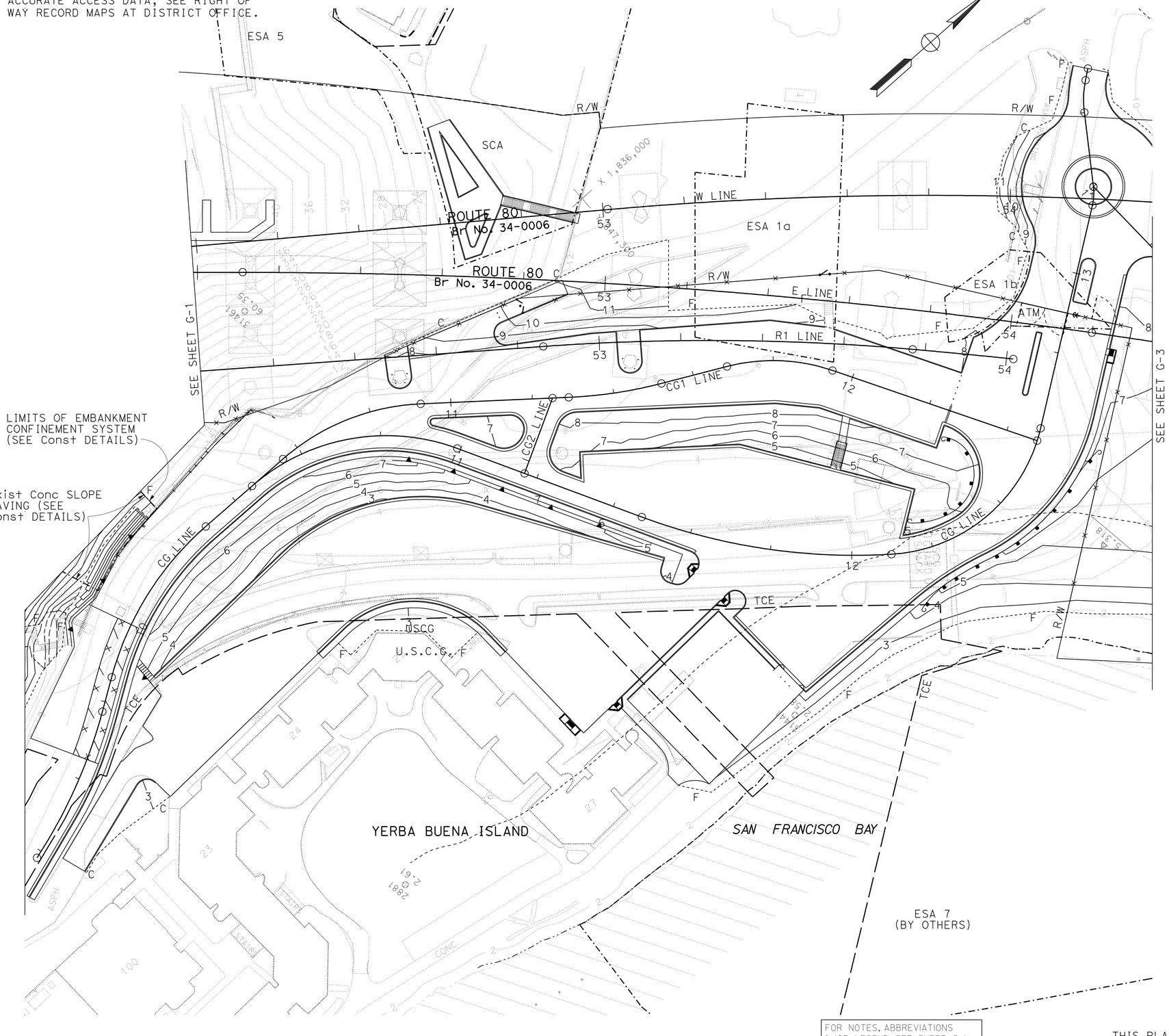

FOR NOTES, ABBREVIATIONS &/OR LEGEND, SEE SHEET G-1

THIS PLAN ACCURATE FOR CONTOUR GRADING WORK ONLY

ALL DIMENSIONS ARE IN METERS UNLESS OTHERWISE SHOWN

CONTOUR GRADING

SCALE 1:500

G-2

BRIAN WOOD	BW
AMANDO VITO	11-1-11
BOB ZANDIPOUR	

CALCULATED-DESIGNED BY / CHECKED BY / REVISED BY / DATE REVISED / FUNCTIONAL SUPERVISOR

STATE OF CALIFORNIA - DEPARTMENT OF TRANSPORTATION

Caltrans **DESIGN**

LAST REVISION 02-06-12 | DATE PLOTTED => 25-FEB-2012 | TIME PLOTTED => 07:28

Dist	COUNTY	ROUTE	KILOMETER POST TOTAL PROJECT	SHEET No.	TOTAL SHEETS
04	SF	80	12.6/13.9	104	821

Brian M Wood 11-1-11
REGISTERED CIVIL ENGINEER DATE

2-21-12
PLANS APPROVAL DATE

REGISTERED PROFESSIONAL ENGINEER Brian M. Wood No. 76969 Exp. 12-31-12 CIVIL STATE OF CALIFORNIA

THE STATE OF CALIFORNIA OR ITS OFFICERS OR AGENTS SHALL NOT BE RESPONSIBLE FOR THE ACCURACY OR COMPLETENESS OF ELECTRONIC COPIES OF THIS PLAN SHEET.

Caltrans Metric

FOR COMPLETE RIGHT OF WAY AND ACCURATE ACCESS DATA, SEE RIGHT OF WAY RECORD MAPS AT DISTRICT OFFICE.

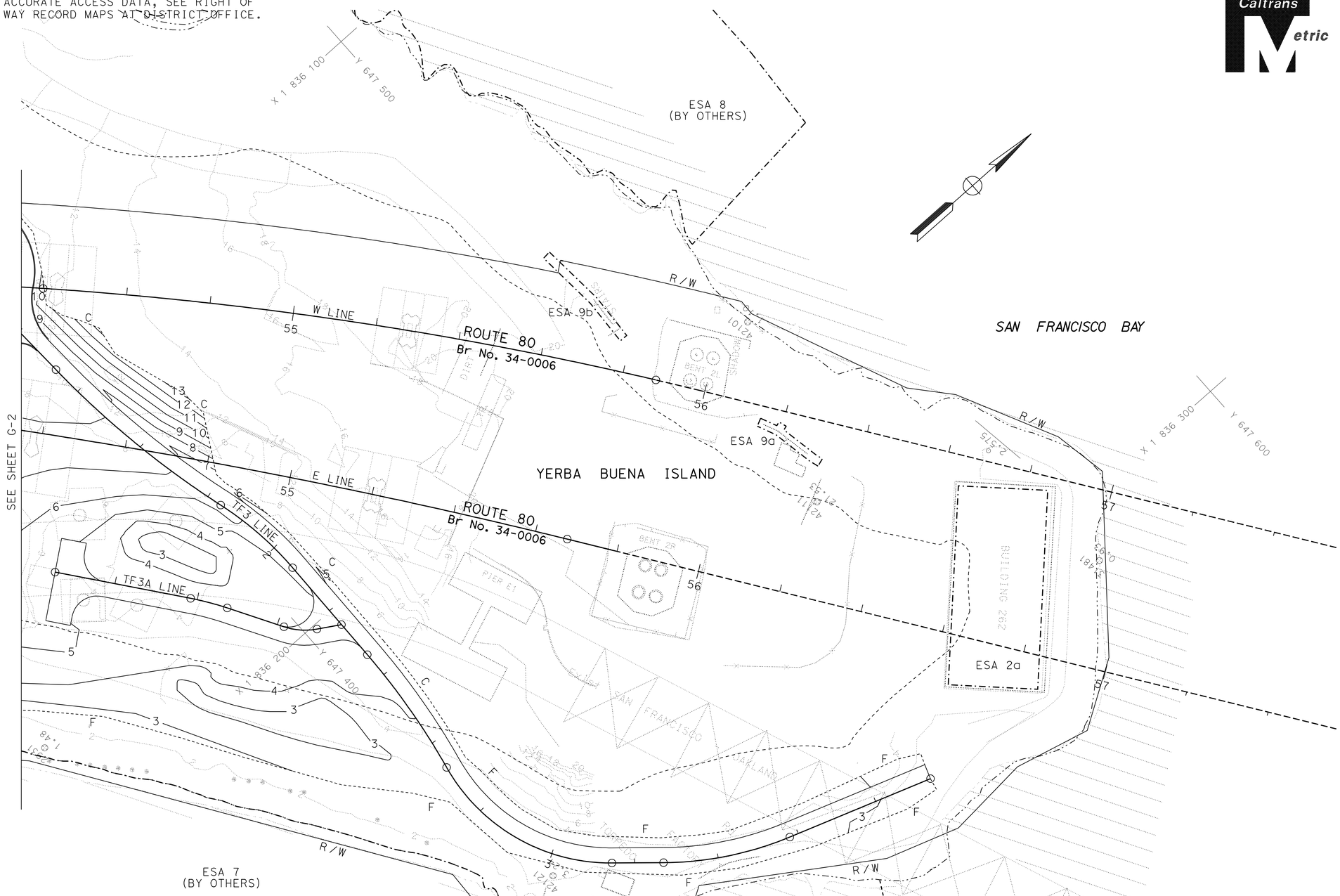

FOR NOTES, ABBREVIATIONS &/OR LEGEND, SEE SHEET G-1

THIS PLAN ACCURATE FOR CONTOUR GRADING WORK ONLY

ALL DIMENSIONS ARE IN METERS UNLESS OTHERWISE SHOWN

CONTOUR GRADING

SCALE 1:500

G-3

BW	11-1-11	REVISED BY	DATE REVISED
BRIAN WOOD		CALCULATED-DESIGNED BY	
AMANDO VITO		CHECKED BY	
BOB ZANDIPOUR		FUNCTIONAL SUPERVISOR	

STATE OF CALIFORNIA - DEPARTMENT OF TRANSPORTATION
Caltrans
DESIGN

LAST REVISION 02-07-12 | DATE PLOTTED => 25-FEB-2012 | TIME PLOTTED => 07:28

Dist	COUNTY	ROUTE	KILOMETER POST TOTAL PROJECT	SHEET No.	TOTAL SHEETS
04	SF	80	12.6/13.9	105	821

REGISTERED CIVIL ENGINEER 11-2-11 DATE

2-21-12
PLANS APPROVAL DATE

REGISTERED PROFESSIONAL ENGINEER Isaac Perez No. 53542 Exp. 6-30-13 CIVIL STATE OF CALIFORNIA

THE STATE OF CALIFORNIA OR ITS OFFICERS OR AGENTS SHALL NOT BE RESPONSIBLE FOR THE ACCURACY OR COMPLETENESS OF ELECTRONIC COPIES OF THIS PLAN SHEET.

FOR COMPLETE RIGHT OF WAY AND ACCURATE ACCESS DATA, SEE RIGHT OF WAY RECORD MAPS AT DISTRICT OFFICE.

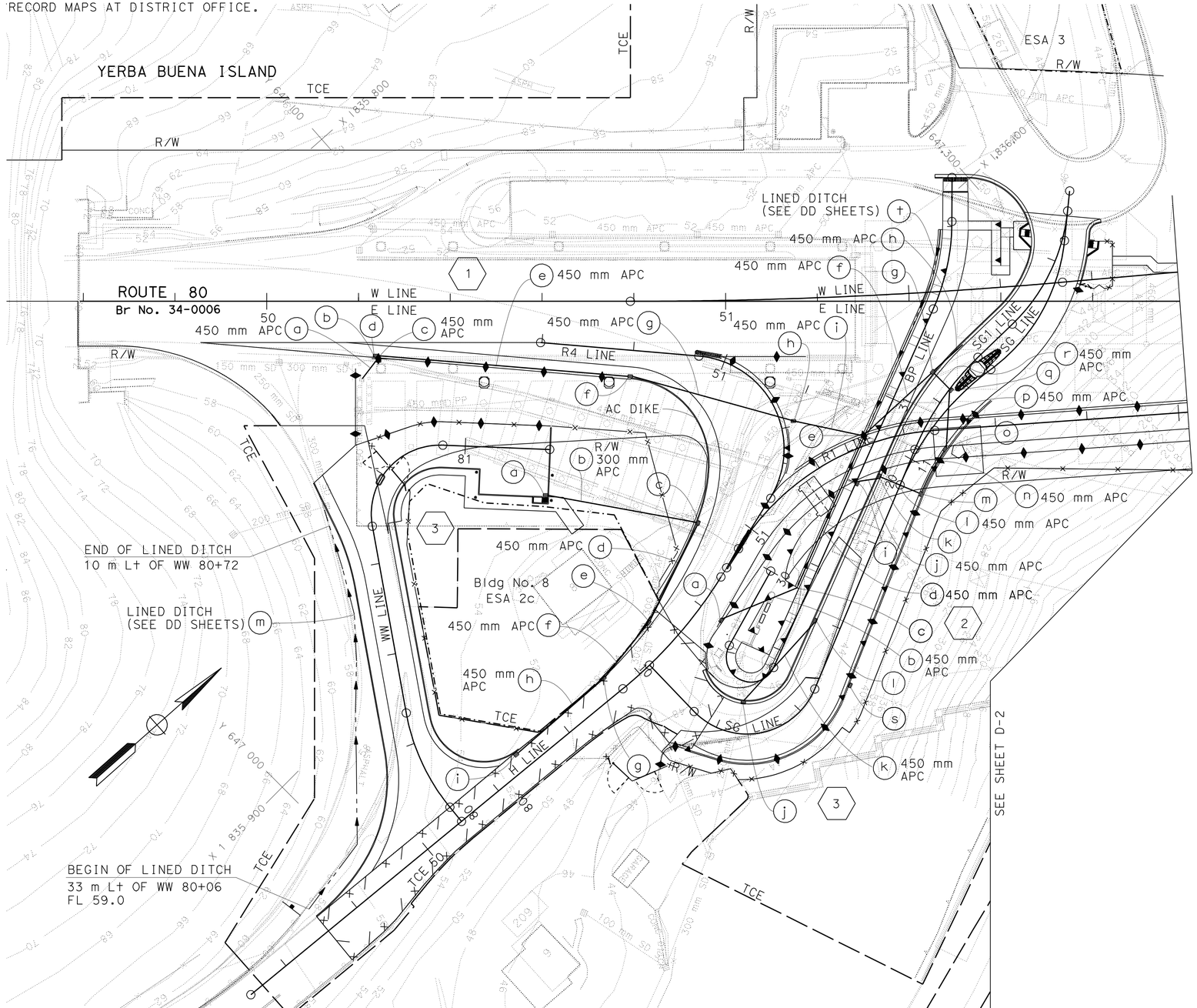

NOTES:

1. DATUM IS NATIONAL GEODETIC VERTICAL DATUM OF 1929 (NGVD).
2. INLETS WITHIN THE ROADBED ARE NOT TO BE CONSTRUCTED TO FINISH GRADE UNTIL ADJACENT PAVEMENT IS CONSTRUCTED.
3. UNLESS OTHERWISE NOTED, ENTRANCE FLOW LINES FOR DRAINAGE INLETS SHALL BE 33 mm HIGHER THAN THE OUTLET FLOW LINE.
4. ALL TIES TO INLETS ARE TO THE GUTTER FLOW LINE OF GRATE (ES OF ROADWAY) UNLESS OTHERWISE NOTED (SEE DD SHEETS).
5. ALL TIES TO MANHOLES AND JUNCTION BOXES ARE TO BE AT THE CENTER OF THE BASE UNLESS OTHERWISE NOTED.
6. SEE G SHEETS FOR CONTOUR GRADING DETAILS.
7. FOR UTILITIES INFORMATION, SEE UTILITY PLANS.
8. UNLESS OTHERWISE NOTED, ALL DRAINAGE INLETS (DI) MUST HAVE A DI MARKER. (SEE DD SHEETS)

LEGEND:

- (No.) DRAINAGE SYSTEM NUMBER
- (a) DRAINAGE UNIT
- △ FLARED END SECTION (FES)
- DRAINAGE EASEMENT
- TCE — TCE
- ▭ UTILITY TRENCH/DUCT BANK

ABBREVIATIONS:

CTSD	- CALTRANS STORM DRAIN
ECB	- EROSION CONTROL BLANKET
ES	- EDGE OF SHOULDER
RLSP	- ROCK LINED SPLASH PAD
SFSD	- SAN FRANCISCO STORM DRAIN
TCE	- TEMPORARY CONSTRUCTION EASEMENT
w/	- WITH
w/o	- WITHOUT
SGD	- STANDARD GUTTER DEPRESSION
G2M	- MODIFIED G2 INLET

THIS PLAN ACCURATE FOR DRAINAGE WORK ONLY

ALL DIMENSIONS ARE IN METERS UNLESS OTHERWISE SHOWN

DRAINAGE PLAN

SCALE 1:500

D-1

STATE OF CALIFORNIA - DEPARTMENT OF TRANSPORTATION
Caltrans
HYDRAULICS

FUNCTIONAL SUPERVISOR: JOSEPH PETERSON
CALCULATED-DESIGNED BY: ISAAC PEREZ
CHECKED BY: WEN-SHIOU HORNG
REVISED BY: IP
DATE REVISED: 11-1-11

LAST REVISION 11-02-11
DATE PLOTTED => 25-FEB-2012
TIME PLOTTED => 07:28

Dist	COUNTY	ROUTE	KILOMETER POST TOTAL PROJECT	SHEET No.	TOTAL SHEETS
04	SF	80	12.6/13.9	106	821

REGISTERED CIVIL ENGINEER 11-2-11 DATE

2-21-12
PLANS APPROVAL DATE

REGISTERED PROFESSIONAL ENGINEER Isaac Perez No. 53542 Exp. 6-30-13 CIVIL STATE OF CALIFORNIA

THE STATE OF CALIFORNIA OR ITS OFFICERS OR AGENTS SHALL NOT BE RESPONSIBLE FOR THE ACCURACY OR COMPLETENESS OF ELECTRONIC COPIES OF THIS PLAN SHEET.

Caltrans Metric

FOR COMPLETE RIGHT OF WAY AND ACCURATE ACCESS DATA, SEE RIGHT OF WAY RECORD MAPS AT DISTRICT OFFICE.

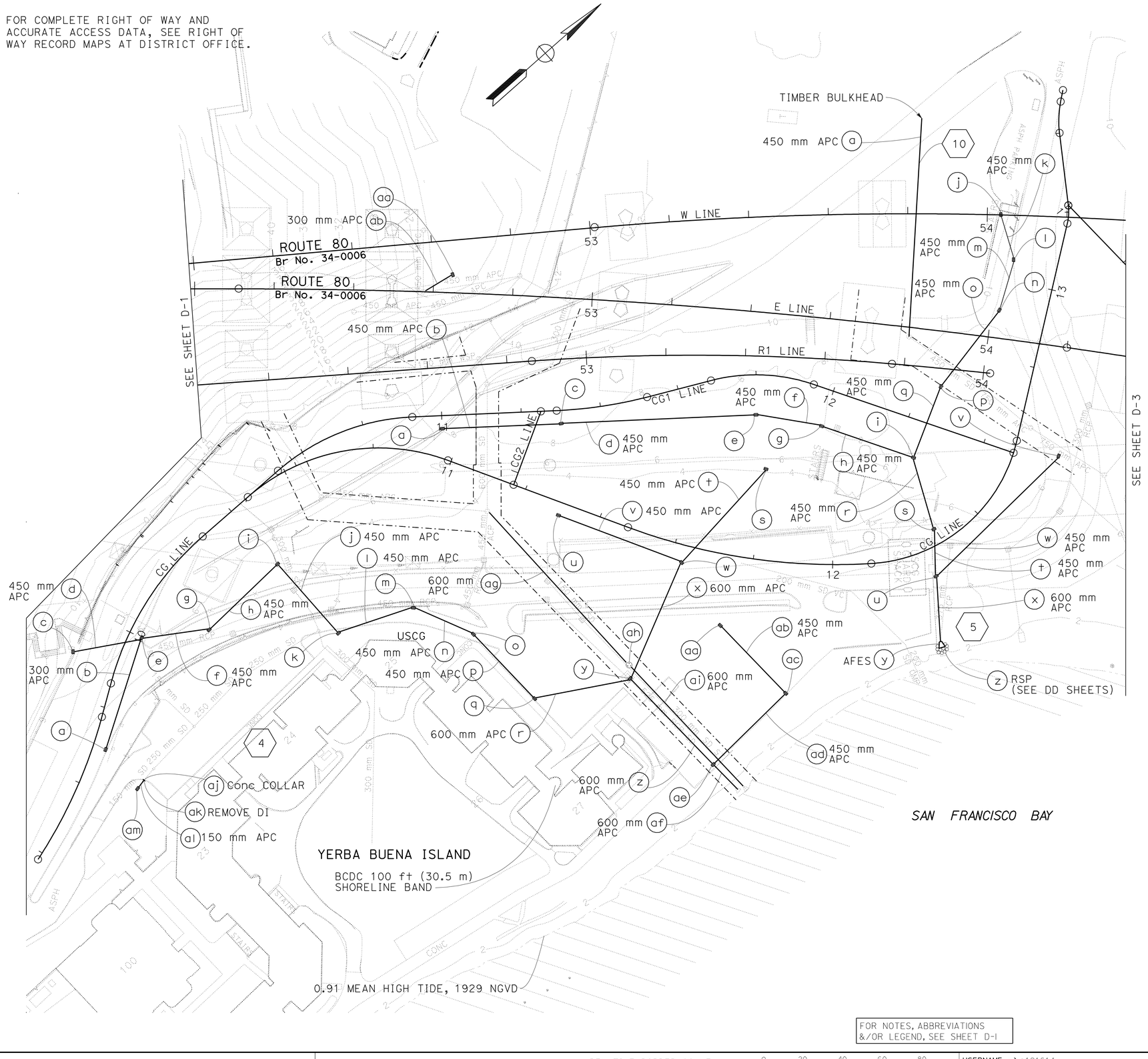

FOR NOTES, ABBREVIATIONS &/OR LEGEND, SEE SHEET D-1

ALL DIMENSIONS ARE IN METERS UNLESS OTHERWISE SHOWN

THIS PLAN ACCURATE FOR DRAINAGE WORK ONLY

DRAINAGE PLAN

SCALE 1:500

D-2

STATE OF CALIFORNIA - DEPARTMENT OF TRANSPORTATION
Caltrans
HYDRAULICS

FUNCTIONAL SUPERVISOR: JOSEPH PETERSON
CALCULATED-DESIGNED BY: ISAAC PEREZ
CHECKED BY: WEN-SHIOU HORNG
REVISED BY: IP
DATE REVISED: 11-1-11

LAST REVISION 02-16-12 | DATE PLOTTED => 25-FEB-2012 | TIME PLOTTED => 07:29

Dist	COUNTY	ROUTE	KILOMETER POST TOTAL PROJECT	SHEET No.	TOTAL SHEETS
04	SF	80	12.6/13.9	107	821

REGISTERED CIVIL ENGINEER 11-2-11 DATE

2-21-12
PLANS APPROVAL DATE

REGISTERED PROFESSIONAL ENGINEER Isaac Perez No. 53542 Exp. 6-30-13 CIVIL STATE OF CALIFORNIA

THE STATE OF CALIFORNIA OR ITS OFFICERS OR AGENTS SHALL NOT BE RESPONSIBLE FOR THE ACCURACY OR COMPLETENESS OF ELECTRONIC COPIES OF THIS PLAN SHEET.

Caltrans Metric

FOR COMPLETE RIGHT OF WAY AND ACCURATE ACCESS DATA, SEE RIGHT OF WAY RECORD MAPS AT DISTRICT OFFICE.

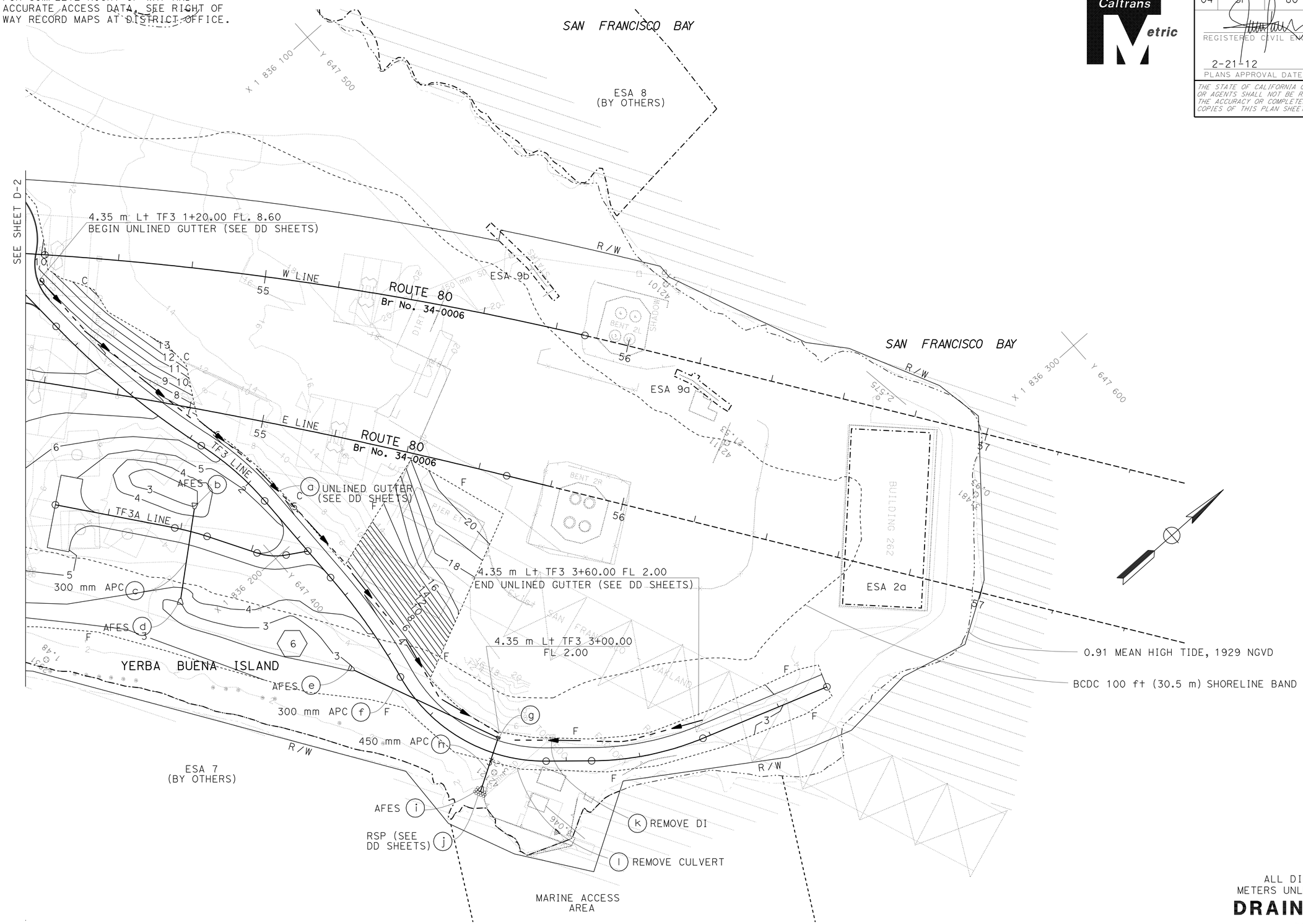

FOR NOTES, ABBREVIATIONS &/OR LEGEND, SEE SHEET D-1

THIS PLAN ACCURATE FOR DRAINAGE WORK ONLY

ALL DIMENSIONS ARE IN METERS UNLESS OTHERWISE SHOWN

DRAINAGE PLAN

SCALE 1:500

D-3

IP	11-1-11		
REVISED BY	DATE REVISED		
ISAAC PEREZ			
WEN-SHIOU HORNG			
CALCULATED-DESIGNED BY			
CHECKED BY			
FUNCTIONAL SUPERVISOR			
JOSEPH PETERSON			

STATE OF CALIFORNIA - DEPARTMENT OF TRANSPORTATION

Caltrans HYDRAULICS

LAST REVISION 11-03-11 DATE PLOTTED => 25-FEB-2012 TIME PLOTTED => 07:29

FOR COMPLETE RIGHT OF WAY AND ACCURATE ACCESS DATA, SEE RIGHT OF WAY RECORD MAPS AT DISTRICT OFFICE.

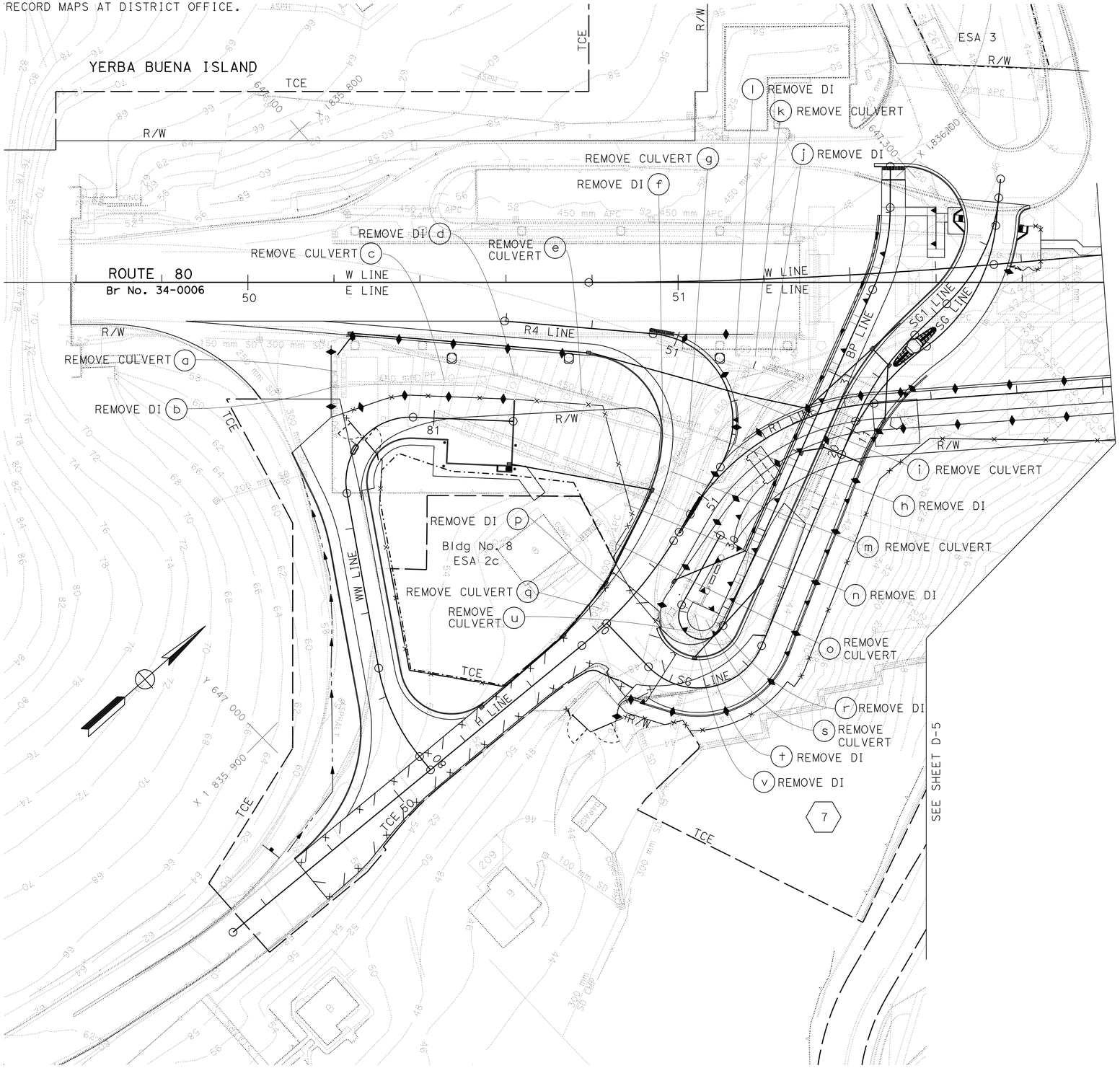

FOR NOTES, ABBREVIATIONS &/OR LEGEND, SEE SHEET D-1

THIS PLAN ACCURATE FOR DRAINAGE WORK ONLY

ALL DIMENSIONS ARE IN METERS UNLESS OTHERWISE SHOWN

DRAINAGE PLAN

SCALE 1:500

D-4

Dist	COUNTY	ROUTE	KILOMETER POST TOTAL PROJECT	SHEET No.	TOTAL SHEETS
04	SF	80	12.6/13.9	108	821

REGISTERED CIVIL ENGINEER 11-2-11 DATE

2-21-12
PLANS APPROVAL DATE

REGISTERED PROFESSIONAL ENGINEER Isaac Perez No. 53542 Exp. 6-30-13 CIVIL STATE OF CALIFORNIA

THE STATE OF CALIFORNIA OR ITS OFFICERS OR AGENTS SHALL NOT BE RESPONSIBLE FOR THE ACCURACY OR COMPLETENESS OF ELECTRONIC COPIES OF THIS PLAN SHEET.

Caltrans Metric

STATE OF CALIFORNIA - DEPARTMENT OF TRANSPORTATION
Caltrans HYDRAULICS

FUNCTIONAL SUPERVISOR: JOSEPH PETERSON
CALCULATED-DESIGNED BY: ISAAC PEREZ
CHECKED BY: WEN-SHIOU HORNG
REVISED BY: IP
DATE REVISED: 11-1-11

LAST REVISION 11-03-11
DATE PLOTTED => 25-FEB-2012
TIME PLOTTED => 07:29

Dist	COUNTY	ROUTE	KILOMETER POST TOTAL PROJECT	SHEET No.	TOTAL SHEETS
04	SF	80	12.6/13.9	109	821

REGISTERED CIVIL ENGINEER 11-2-11 DATE

2-21-12
PLANS APPROVAL DATE

REGISTERED PROFESSIONAL ENGINEER Isaac Perez No. 53542 Exp. 6-30-13 CIVIL STATE OF CALIFORNIA

THE STATE OF CALIFORNIA OR ITS OFFICERS OR AGENTS SHALL NOT BE RESPONSIBLE FOR THE ACCURACY OR COMPLETENESS OF ELECTRONIC COPIES OF THIS PLAN SHEET.

Caltrans Metric

FOR COMPLETE RIGHT OF WAY AND ACCURATE ACCESS DATA, SEE RIGHT OF WAY RECORD MAPS AT DISTRICT OFFICE.

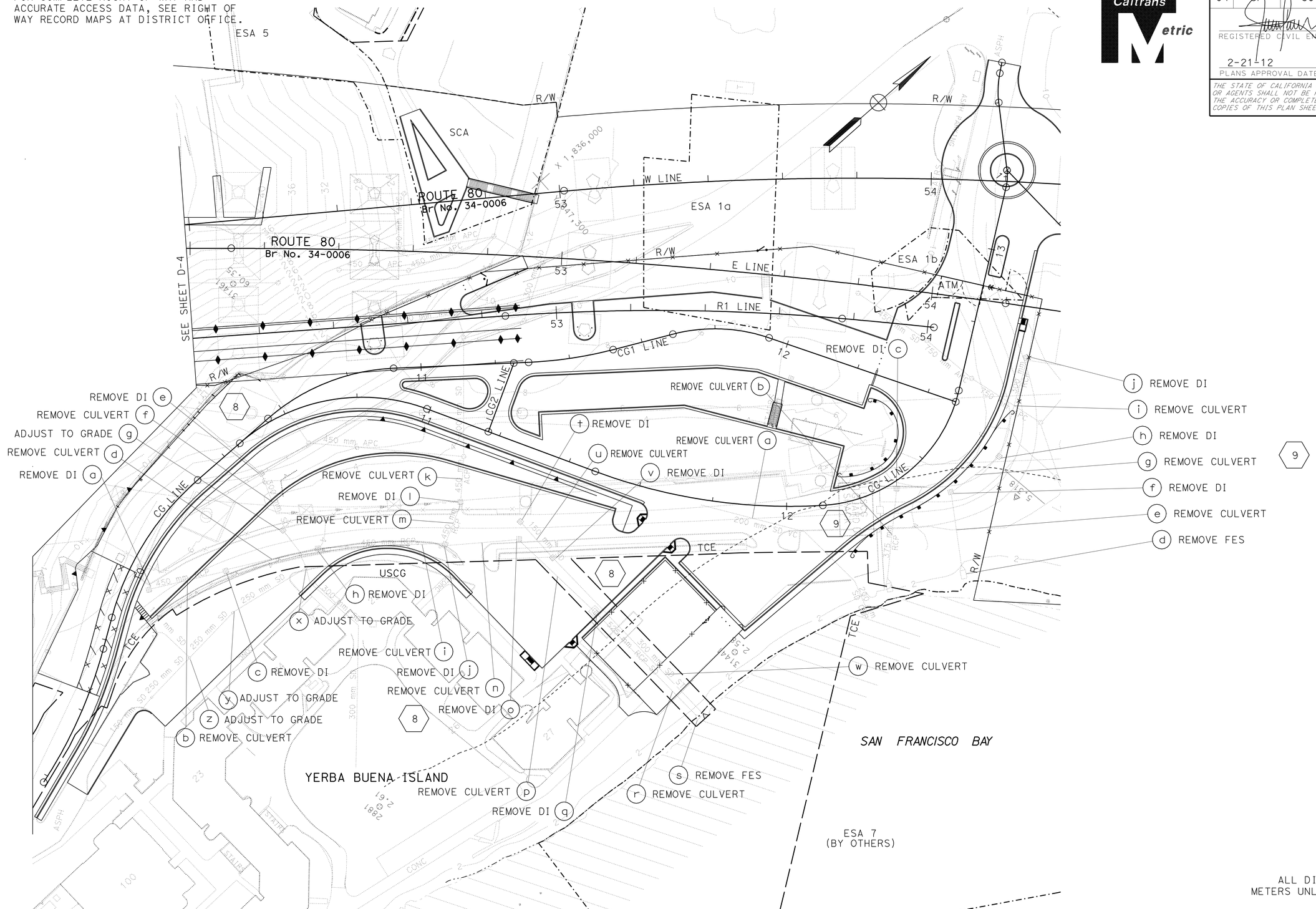

FOR NOTES, ABBREVIATIONS &/OR LEGEND, SEE SHEET D-1

ALL DIMENSIONS ARE IN METERS UNLESS OTHERWISE SHOWN

THIS PLAN ACCURATE FOR DRAINAGE WORK ONLY

DRAINAGE PLAN

SCALE 1:500

D-5

IP	11-1-11	ISAAC PEREZ	WEN-SHIOU HORNG
REVISED BY	DATE REVISED	CALCULATED-DESIGNED BY	CHECKED BY

FUNCTIONAL SUPERVISOR: JOSEPH PETERSON

STATE OF CALIFORNIA - DEPARTMENT OF TRANSPORTATION

Caltrans

HYDRAULICS

LAST REVISION 02-16-12 | DATE PLOTTED => 25-FEB-2012 | TIME PLOTTED => 07:29

Dist	COUNTY	ROUTE	KILOMETER POST TOTAL PROJECT	SHEET No.	TOTAL SHEETS
04	SF	80	12.6/13.9	110	821

Caltrans Metric

REGISTERED CIVIL ENGINEER 11-2-11 DATE

2-21-12
PLANS APPROVAL DATE

REGISTERED PROFESSIONAL ENGINEER Wen-Shiou Horng No. 61135 Exp. 12-31-12 CIVIL STATE OF CALIFORNIA

THE STATE OF CALIFORNIA OR ITS OFFICERS OR AGENTS SHALL NOT BE RESPONSIBLE FOR THE ACCURACY OR COMPLETENESS OF ELECTRONIC COPIES OF THIS PLAN SHEET.

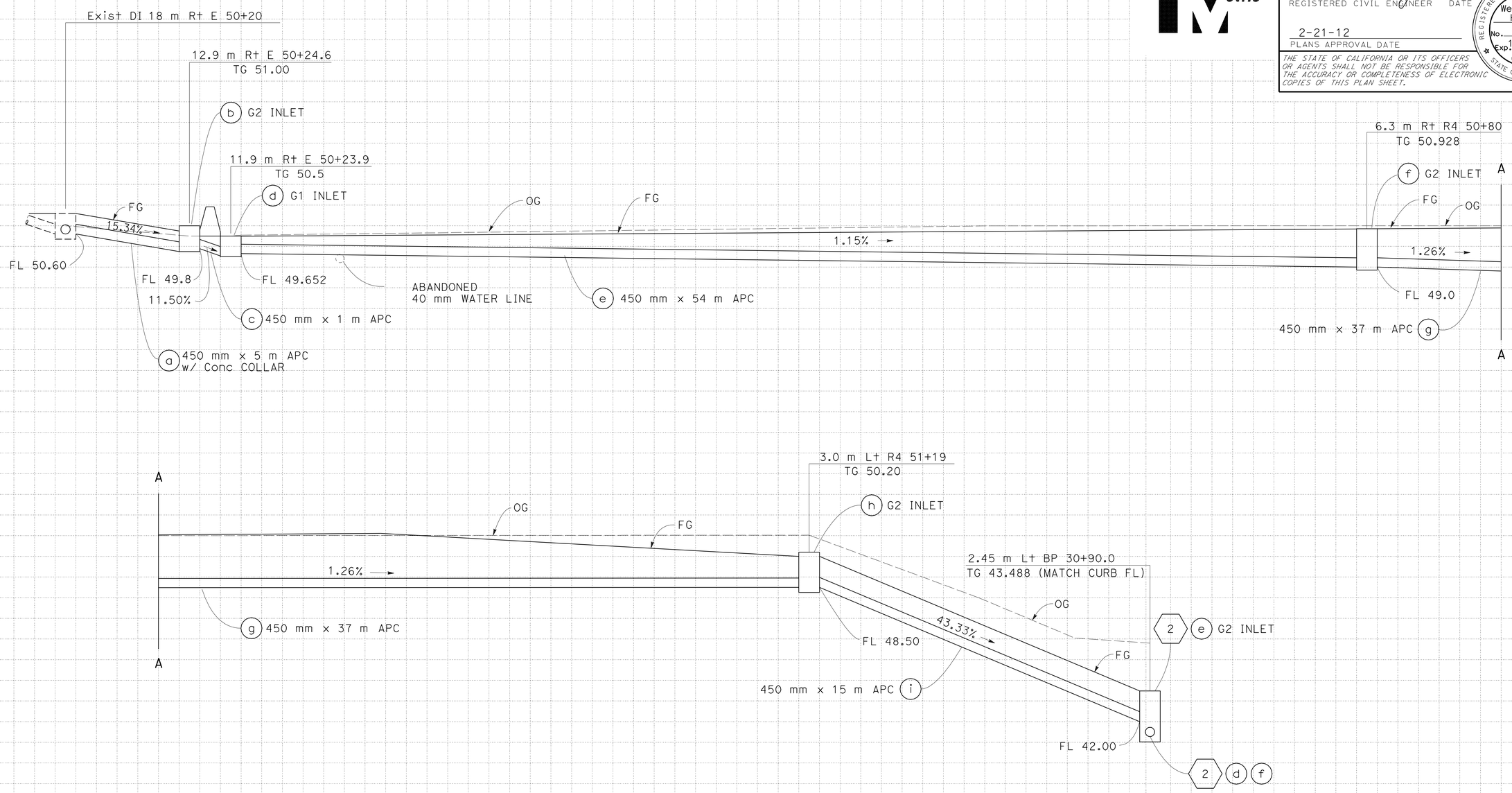

DRAINAGE SYSTEM No. 1

ALL DIMENSIONS ARE IN
METERS UNLESS OTHERWISE SHOWN

DRAINAGE PROFILES

SCALE Horiz 1:100
Vert 1:100

DP-1

REVISED BY	DATE REVISED
WSH	11-1-11

WEN-SHIOU HORNG — ISAAC PEREZ
CALCULATED-DESIGNED BY — CHECKED BY
FUNCTIONAL SUPERVISOR — BOB ZANDIPOUR

STATE OF CALIFORNIA - DEPARTMENT OF TRANSPORTATION
Caltrans **DESIGN**

Station
m^3 Exc Emb

LAST REVISION 11-03-11 DATE PLOTTED => 25-FEB-2012 TIME PLOTTED => 07:29

Dist	COUNTY	ROUTE	KILOMETER POST TOTAL PROJECT	SHEET No.	TOTAL SHEETS
04	SF	80	12.6/13.9	111	821

Caltrans Metric

REGISTERED CIVIL ENGINEER 11-2-11 DATE

2-21-12
PLANS APPROVAL DATE

REGISTERED PROFESSIONAL ENGINEER Wen-Shiou Horng No. 61135 Exp. 12-31-12 CIVIL STATE OF CALIFORNIA

THE STATE OF CALIFORNIA OR ITS OFFICERS OR AGENTS SHALL NOT BE RESPONSIBLE FOR THE ACCURACY OR COMPLETENESS OF ELECTRONIC COPIES OF THIS PLAN SHEET.

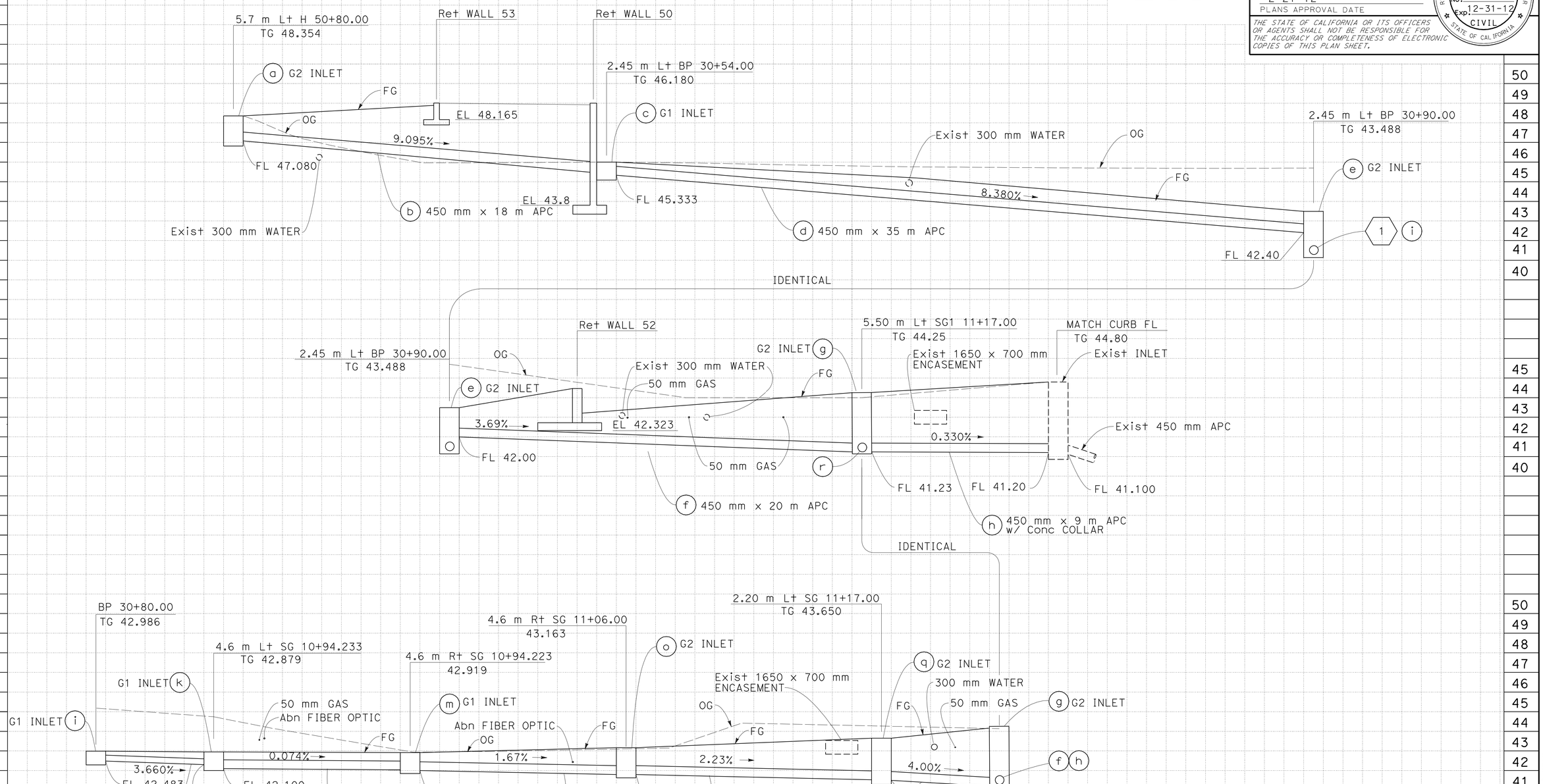

ALL DIMENSIONS ARE IN METERS UNLESS OTHERWISE SHOWN

DRAINAGE PROFILES

SCALE Horiz 1:100
Vert 1:100

DRAINAGE SYSTEM No. 2

DP-2

Station	
m^3	Exc
	Emb

WSH 11-1-11 — REVISED BY / DATE REVISED

WEN-SHIOU HORNG — ISAAC PEREZ — CALCULATED-DESIGNED BY / CHECKED BY

FUNCTIONAL SUPERVISOR — BOB ZANDIPOUR

STATE OF CALIFORNIA - DEPARTMENT OF TRANSPORTATION — DESIGN — Caltrans

LAST REVISION 11-03-11 — DATE PLOTTED => 14-MAR-2012 — TIME PLOTTED => 13:59

Dist	COUNTY	ROUTE	KILOMETER POST TOTAL PROJECT	SHEET No.	TOTAL SHEETS
04	SF	80	12.6/13.9	112	821

Caltrans Metric

REGISTERED CIVIL ENGINEER 11-2-11 DATE

2-21-12
PLANS APPROVAL DATE

REGISTERED PROFESSIONAL ENGINEER Wen-Shiou Horng No. 61135 Exp. 12-31-12 CIVIL STATE OF CALIFORNIA

THE STATE OF CALIFORNIA OR ITS OFFICERS OR AGENTS SHALL NOT BE RESPONSIBLE FOR THE ACCURACY OR COMPLETENESS OF ELECTRONIC COPIES OF THIS PLAN SHEET.

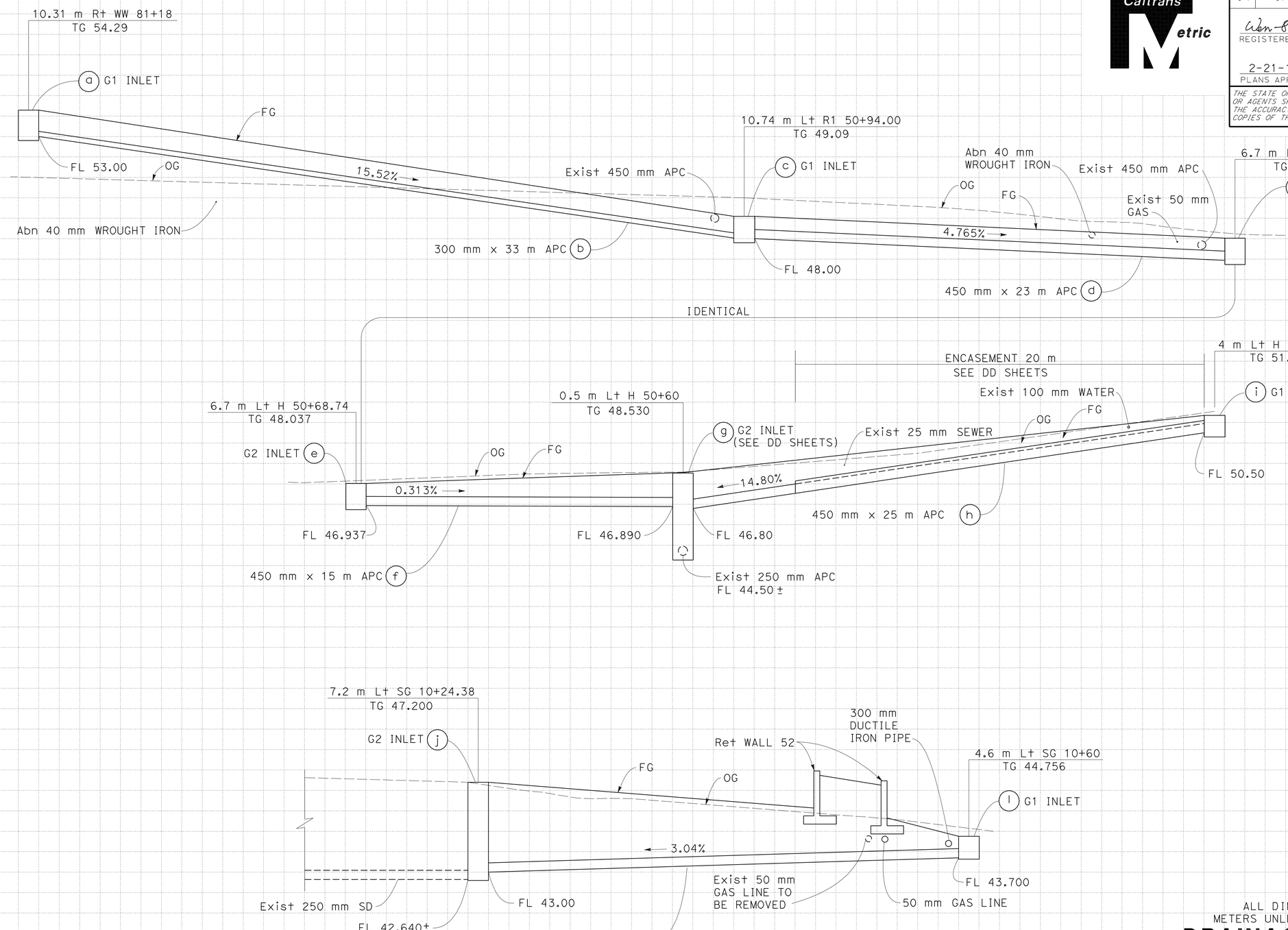

DRAINAGE SYSTEM No. 3

ALL DIMENSIONS ARE IN METERS UNLESS OTHERWISE SHOWN

DRAINAGE PROFILES

SCALE Horiz 1:100
Vert 1:100

DP-3

REVISED BY	DATE REVISED
WSH	11-1-11

WEN-SHIOU HORNG — ISAAC PEREZ

CALCULATED-DESIGNED BY — CHECKED BY

FUNCTIONAL SUPERVISOR — BOB ZANDIPOUR

STATE OF CALIFORNIA - DEPARTMENT OF TRANSPORTATION

DESIGN

Caltrans

Station	
m^3	Exc
	Emb

LAST REVISION 11-03-11 DATE PLOTTED => 25-FEB-2012 TIME PLOTTED => 07:30

Dist	COUNTY	ROUTE	KILOMETER POST TOTAL PROJECT	SHEET No.	TOTAL SHEETS
04	SF	80	12.6/13.9	113	821

Caltrans Metric

REGISTERED CIVIL ENGINEER 11-2-11 DATE

2-21-12
PLANS APPROVAL DATE

REGISTERED PROFESSIONAL ENGINEER Wen-Shiou Horng No. 61135 Exp. 12-31-12 CIVIL STATE OF CALIFORNIA

THE STATE OF CALIFORNIA OR ITS OFFICERS OR AGENTS SHALL NOT BE RESPONSIBLE FOR THE ACCURACY OR COMPLETENESS OF ELECTRONIC COPIES OF THIS PLAN SHEET.

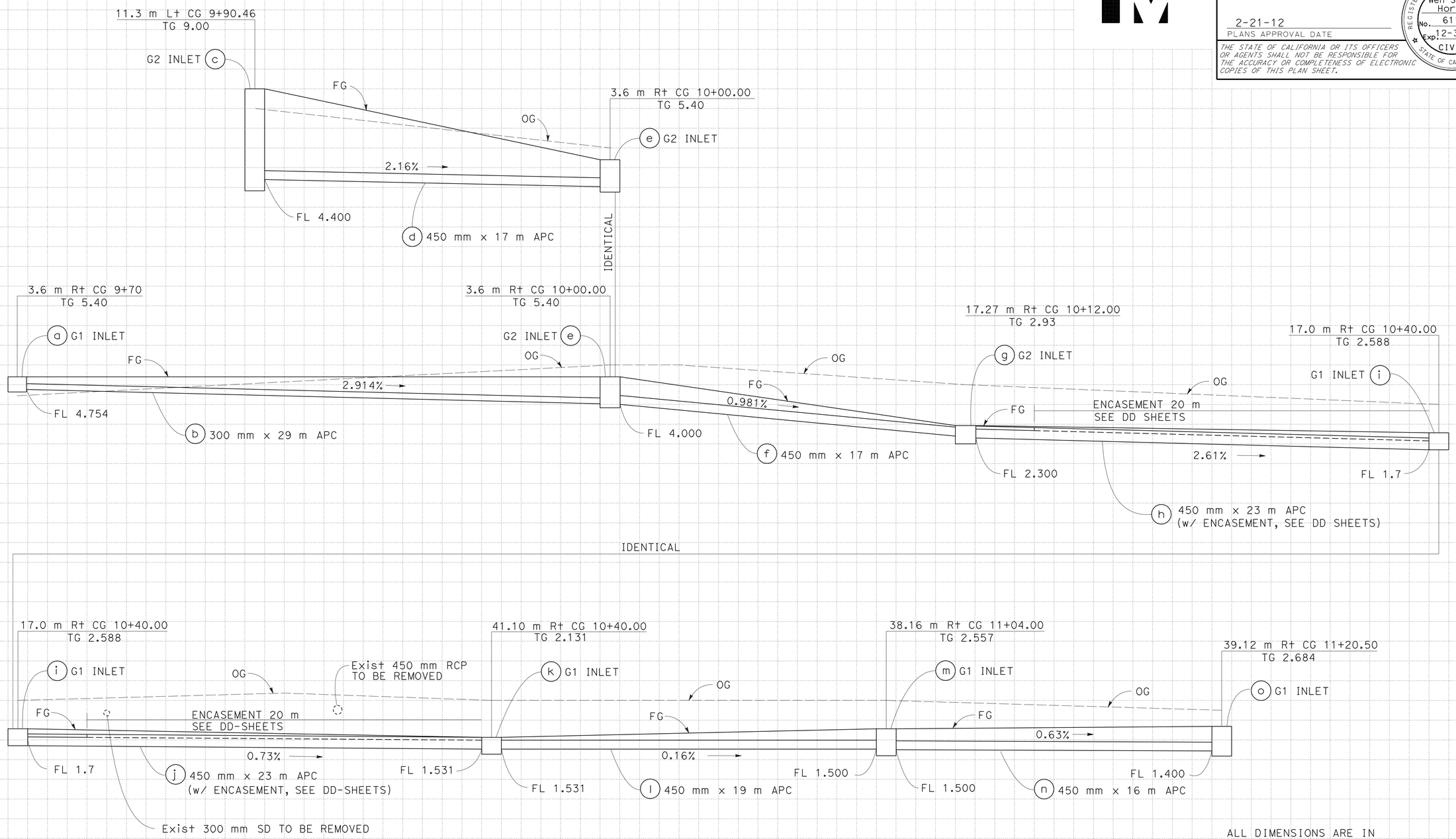

ALL DIMENSIONS ARE IN METERS UNLESS OTHERWISE SHOWN

DRAINAGE PROFILES

SCALE Horiz 1:100
Vert 1:100

DRAINAGE SYSTEM No. 4

DP-4

Station	
m^3	Exc
	Emb

STATE OF CALIFORNIA - DEPARTMENT OF TRANSPORTATION
Caltrans
DESIGN
FUNCTIONAL SUPERVISOR BOB ZANDIPOUR
CALCULATED-DESIGNED BY WEN-SHIOU HORNG
CHECKED BY ISAAC PEREZ
REVISED BY WSH
DATE REVISED 11-1-11

LAST REVISION 11-03-11 DATE PLOTTED => 14-MAR-2012 TIME PLOTTED => 13:59

Dist	COUNTY	ROUTE	KILOMETER POST TOTAL PROJECT	SHEET No.	TOTAL SHEETS
04	SF	80	12.6/13.9	114	821

Caltrans Metric

REGISTERED CIVIL ENGINEER 11-2-11 DATE

2-21-12
PLANS APPROVAL DATE

REGISTERED PROFESSIONAL ENGINEER Wen-Shiou Horng No. 61135 Exp. 12-31-12 CIVIL STATE OF CALIFORNIA

THE STATE OF CALIFORNIA OR ITS OFFICERS OR AGENTS SHALL NOT BE RESPONSIBLE FOR THE ACCURACY OR COMPLETENESS OF ELECTRONIC COPIES OF THIS PLAN SHEET.

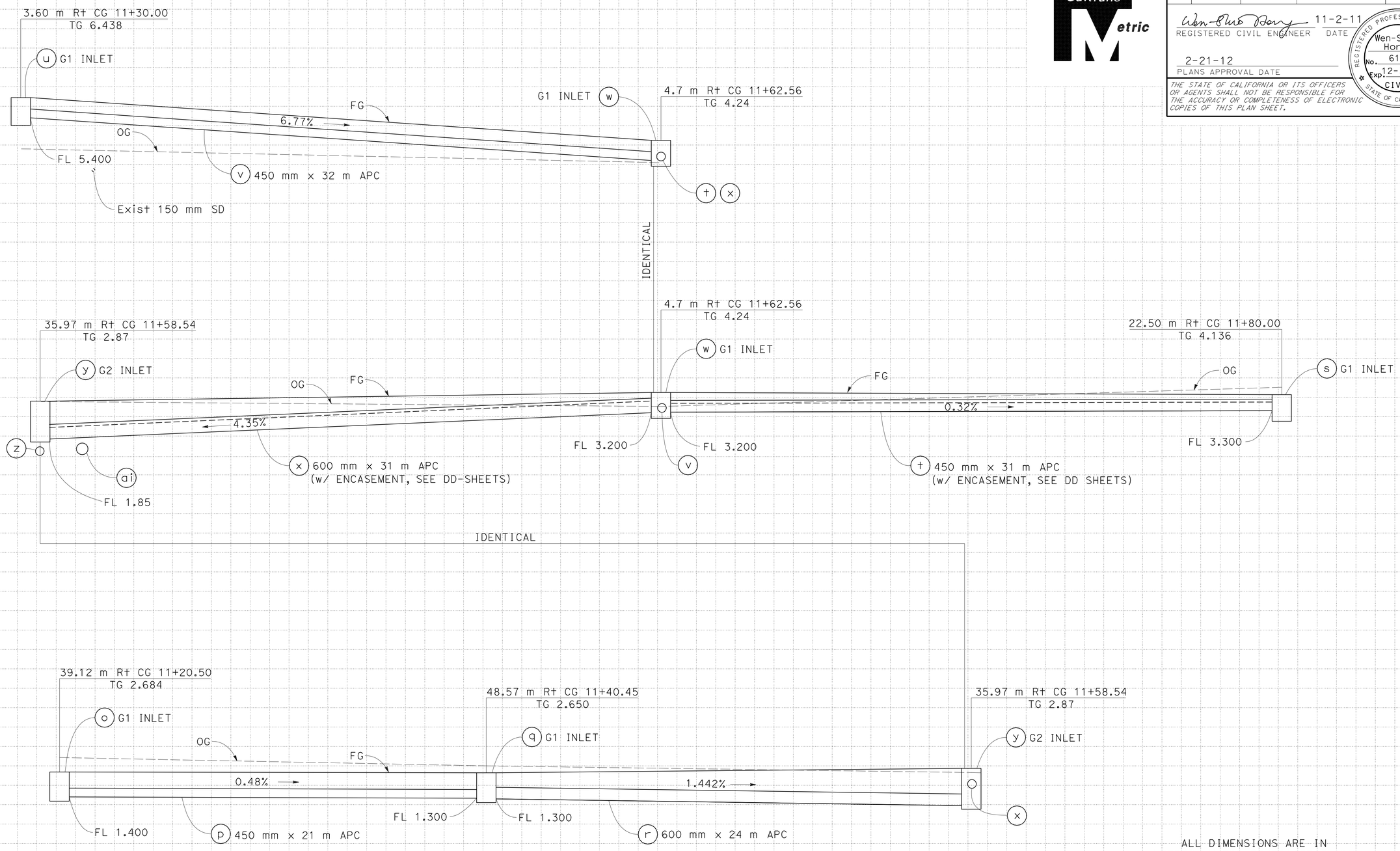

DRAINAGE SYSTEM No. 4

ALL DIMENSIONS ARE IN METERS UNLESS OTHERWISE SHOWN

DRAINAGE PROFILES

SCALE Horiz 1:100
Vert 1:100

DP-5

REVISED BY	DATE REVISED
WSH	11-1-11

WEN-SHIOU HORNG
ISAAC PEREZ

CALCULATED-DESIGNED BY
CHECKED BY

FUNCTIONAL SUPERVISOR
BOB ZANDIPOUR

STATE OF CALIFORNIA - DEPARTMENT OF TRANSPORTATION
Caltrans
DESIGN

Station	
m^3	Exc
	Emb

LAST REVISION 11-03-11
DATE PLOTTED => 25-FEB-2012
TIME PLOTTED => 08:30

Dist	COUNTY	ROUTE	KILOMETER POST TOTAL PROJECT	SHEET No.	TOTAL SHEETS
04	SF	80	12.6/13.9	115	821

Caltrans Metric

REGISTERED CIVIL ENGINEER 11-2-11 DATE

2-21-12
PLANS APPROVAL DATE

REGISTERED PROFESSIONAL ENGINEER Wen-Shiou Horng No. 61135 Exp. 12-31-12 CIVIL STATE OF CALIFORNIA

THE STATE OF CALIFORNIA OR ITS OFFICERS OR AGENTS SHALL NOT BE RESPONSIBLE FOR THE ACCURACY OR COMPLETENESS OF ELECTRONIC COPIES OF THIS PLAN SHEET.

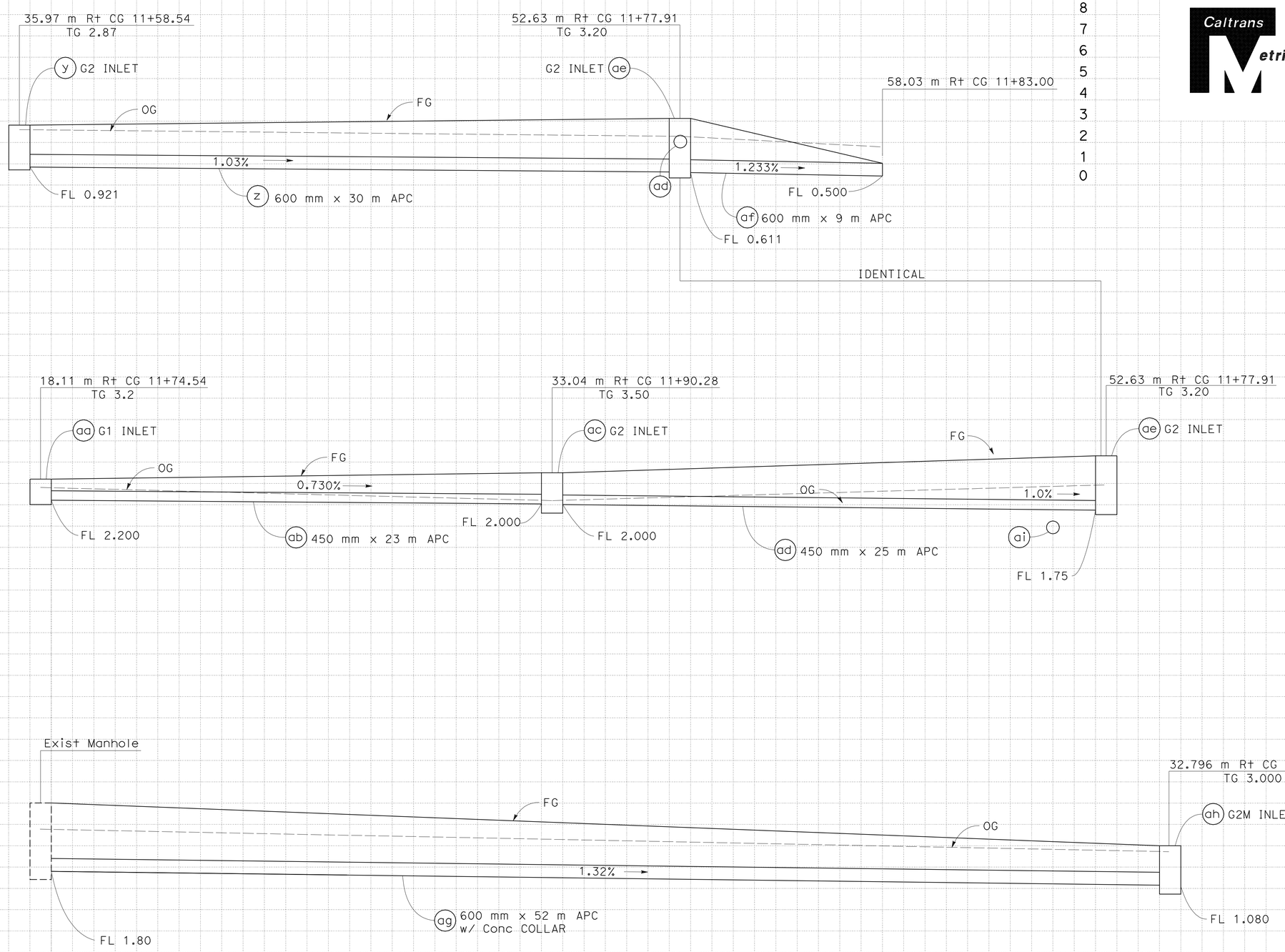

DRAINAGE SYSTEM No. 4

ALL DIMENSIONS ARE IN
METERS UNLESS OTHERWISE SHOWN

DRAINAGE PROFILES

SCALE Horiz 1:100
Vert 1:100

DP-6

Station	
m^3	Exc
	Emb

WSH 11-1-11 REVISED BY DATE REVISED

WEN-SHIOU HORNG ISAAC PEREZ CALCULATED-DESIGNED BY CHECKED BY

FUNCTIONAL SUPERVISOR BOB ZANDIPOUR

STATE OF CALIFORNIA - DEPARTMENT OF TRANSPORTATION **DESIGN** Caltrans

LAST REVISION 11-03-11 DATE PLOTTED => 25-FEB-2012 TIME PLOTTED => 08:30

Dist	COUNTY	ROUTE	KILOMETER POST TOTAL PROJECT	SHEET No.	TOTAL SHEETS
04	SF	80	12.6/13.9	116	821

Caltrans Metric

Wen-Shiou Horng 11-2-11
REGISTERED CIVIL ENGINEER DATE

2-21-12
PLANS APPROVAL DATE

REGISTERED PROFESSIONAL ENGINEER Wen-Shiou Horng No. 61135 Exp. 12-31-12 CIVIL STATE OF CALIFORNIA

THE STATE OF CALIFORNIA OR ITS OFFICERS OR AGENTS SHALL NOT BE RESPONSIBLE FOR THE ACCURACY OR COMPLETENESS OF ELECTRONIC COPIES OF THIS PLAN SHEET.

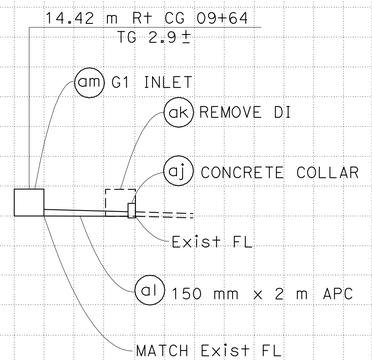

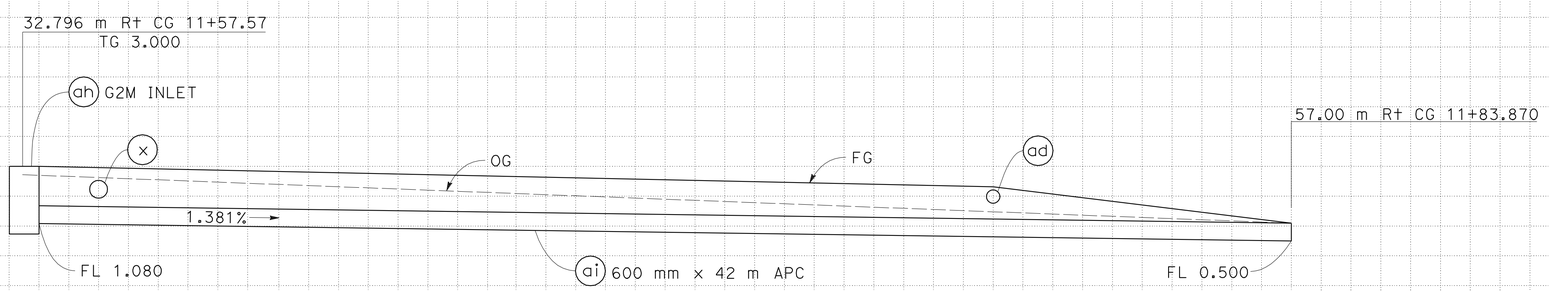

DRAINAGE SYSTEM No. 4

ALL DIMENSIONS ARE IN METERS UNLESS OTHERWISE SHOWN

DRAINAGE PROFILES

SCALE Horiz 1:100
Vert 1:100

DP-7

REVISED BY	WSH
DATE REVISED	11-1-11
WEN-SHIOU HORNG	ISAAC PEREZ
CALCULATED-DESIGNED BY	
CHECKED BY	
FUNCTIONAL SUPERVISOR	BOB ZANDIPOUR

STATE OF CALIFORNIA - DEPARTMENT OF TRANSPORTATION
Caltrans
DESIGN

Station	
m^3	Exc
	Emb

LAST REVISION 11-03-11 DATE PLOTTED => 25-FEB-2012 TIME PLOTTED => 08:30

Dist	COUNTY	ROUTE	KILOMETER POST TOTAL PROJECT	SHEET No.	TOTAL SHEETS
04	SF	80	12.6/13.9	117	821

Caltrans Metric

Wen-Shiou Horng 11-2-11
REGISTERED CIVIL ENGINEER DATE

2-21-12
PLANS APPROVAL DATE

REGISTERED PROFESSIONAL ENGINEER Wen-Shiou Horng No. 61135 Exp. 12-31-12 CIVIL STATE OF CALIFORNIA

THE STATE OF CALIFORNIA OR ITS OFFICERS OR AGENTS SHALL NOT BE RESPONSIBLE FOR THE ACCURACY OR COMPLETENESS OF ELECTRONIC COPIES OF THIS PLAN SHEET.

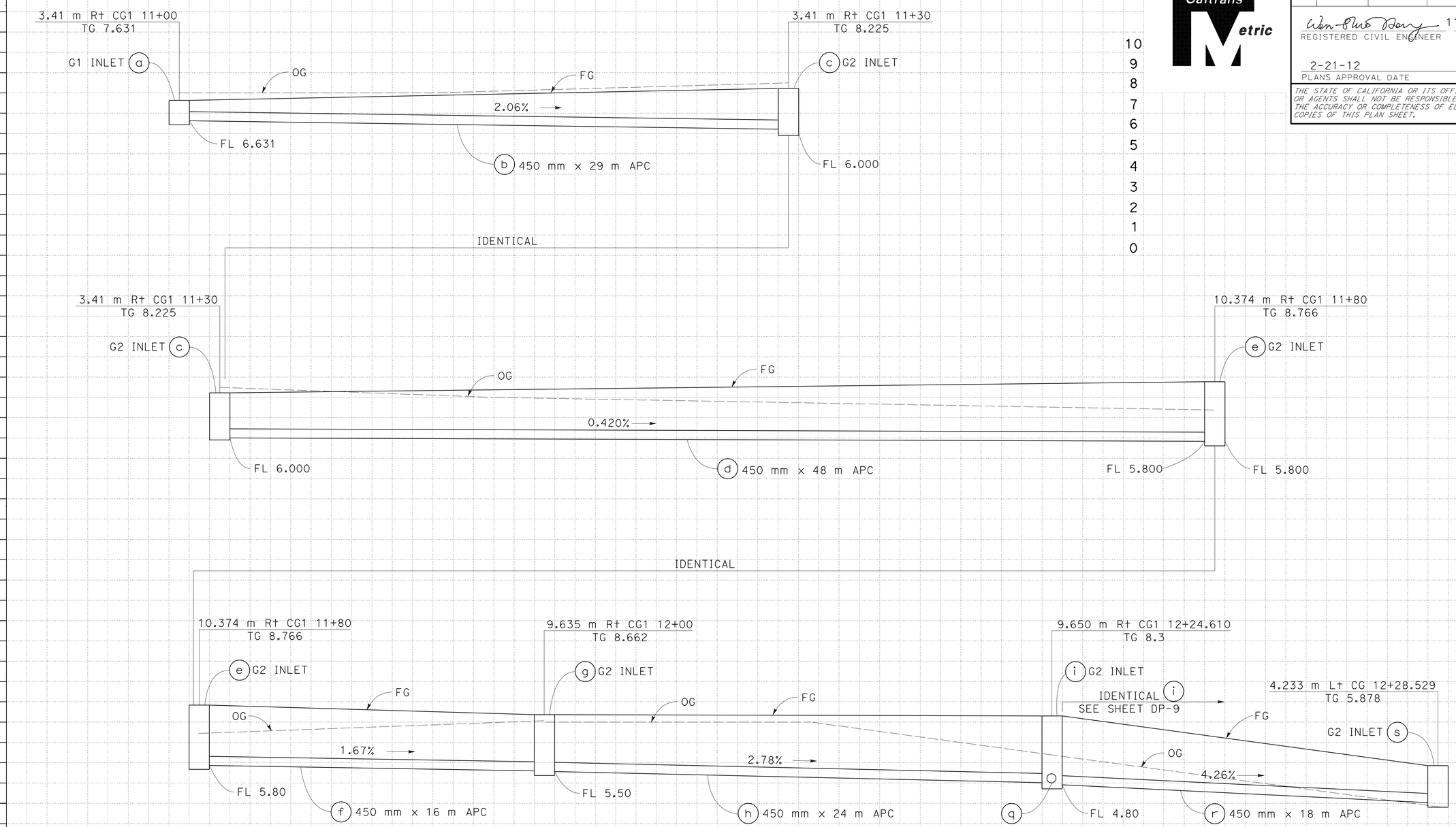

ALL DIMENSIONS ARE IN METERS UNLESS OTHERWISE SHOWN

DRAINAGE PROFILES

SCALE Horiz 1:100
Vert 1:100

DRAINAGE SYSTEM No. 5

DP-8

WSH	11-1-11
REVISED BY	DATE REVISED
WEN-SHIOU HORNG	ISAAC PEREZ
CALCULATED-DESIGNED BY	CHECKED BY
FUNCTIONAL SUPERVISOR	BOB ZANDIPOUR

STATE OF CALIFORNIA - DEPARTMENT OF TRANSPORTATION
Caltrans
DESIGN

Station	
m^3	Exc
	Emb

LAST REVISION 11-03-11 DATE PLOTTED => 25-FEB-2012 TIME PLOTTED => 08:30

Dist	COUNTY	ROUTE	KILOMETER POST TOTAL PROJECT	SHEET No.	TOTAL SHEETS
04	SF	80	12.6/13.9	118	821

Caltrans Metric

REGISTERED CIVIL ENGINEER 11-2-11 DATE

2-21-12
PLANS APPROVAL DATE

REGISTERED PROFESSIONAL ENGINEER Wen-Shiou Horng No. 61135 Exp. 12-31-12 CIVIL STATE OF CALIFORNIA

THE STATE OF CALIFORNIA OR ITS OFFICERS OR AGENTS SHALL NOT BE RESPONSIBLE FOR THE ACCURACY OR COMPLETENESS OF ELECTRONIC COPIES OF THIS PLAN SHEET.

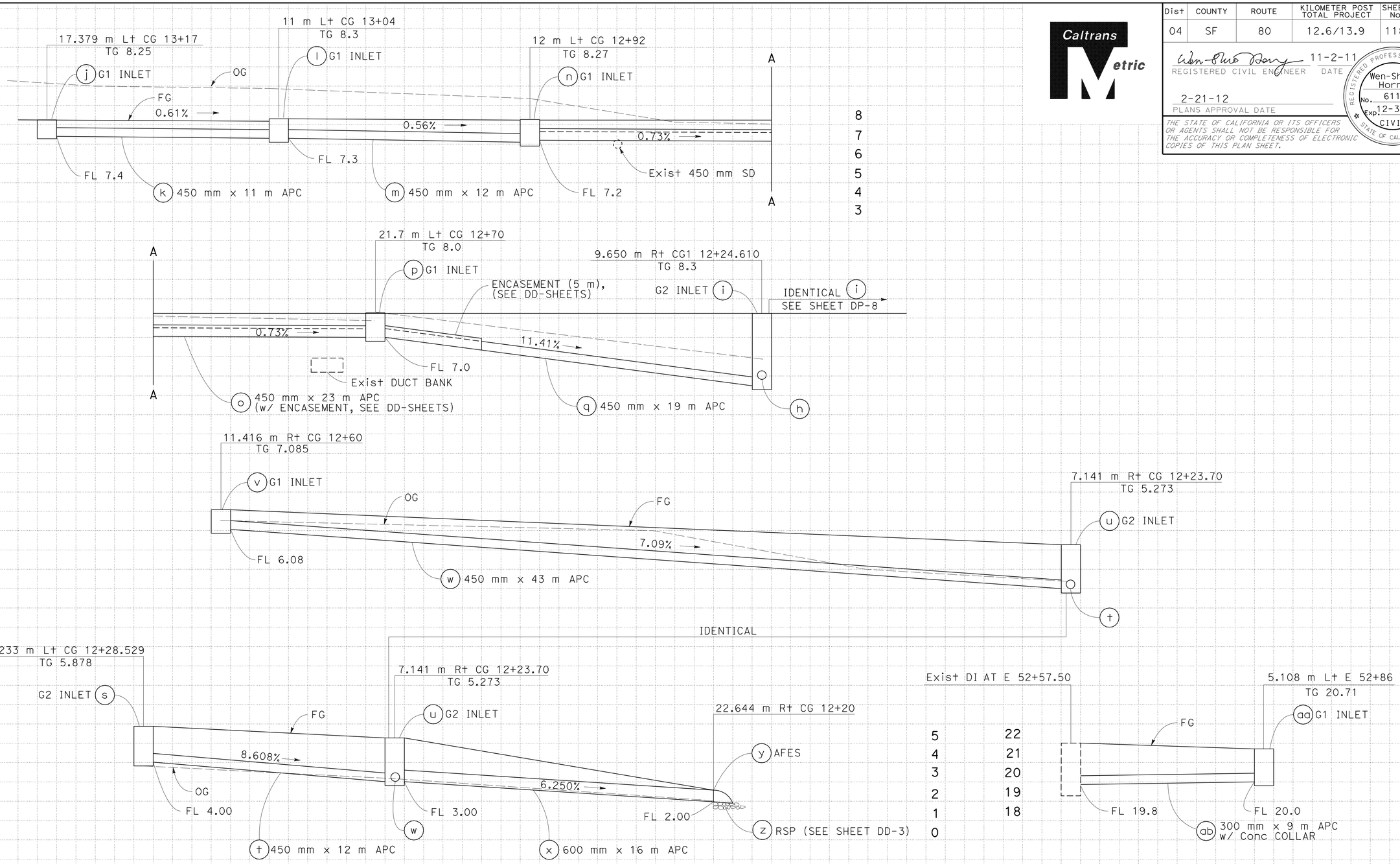

ALL DIMENSIONS ARE IN METERS UNLESS OTHERWISE SHOWN

DRAINAGE SYSTEM No. 5

DRAINAGE PROFILES

SCALE Horiz 1:100
Vert 1:100

DP-9

REVISED BY	DATE REVISED
WSH	11-1-11

WEN-SHIOU HORNG
ISAAC PEREZ
CALCULATED-DESIGNED BY
CHECKED BY
FUNCTIONAL SUPERVISOR
BOB ZANDIPOUR

STATE OF CALIFORNIA - DEPARTMENT OF TRANSPORTATION
Caltrans
DESIGN

Station	
m^3 Exc	
m^3 Emb	

LAST REVISION 11-03-11
DATE PLOTTED => 25-FEB-2012
TIME PLOTTED => 08:30

Dist	COUNTY	ROUTE	KILOMETER POST TOTAL PROJECT	SHEET No.	TOTAL SHEETS
04	SF	80	12.6/13.9	119	821

Caltrans Metric

REGISTERED CIVIL ENGINEER 11-2-11 DATE

2-21-12
PLANS APPROVAL DATE

REGISTERED PROFESSIONAL ENGINEER Wen-Shiou Horng No. 61135 Exp. 12-31-12 CIVIL STATE OF CALIFORNIA

THE STATE OF CALIFORNIA OR ITS OFFICERS OR AGENTS SHALL NOT BE RESPONSIBLE FOR THE ACCURACY OR COMPLETENESS OF ELECTRONIC COPIES OF THIS PLAN SHEET.

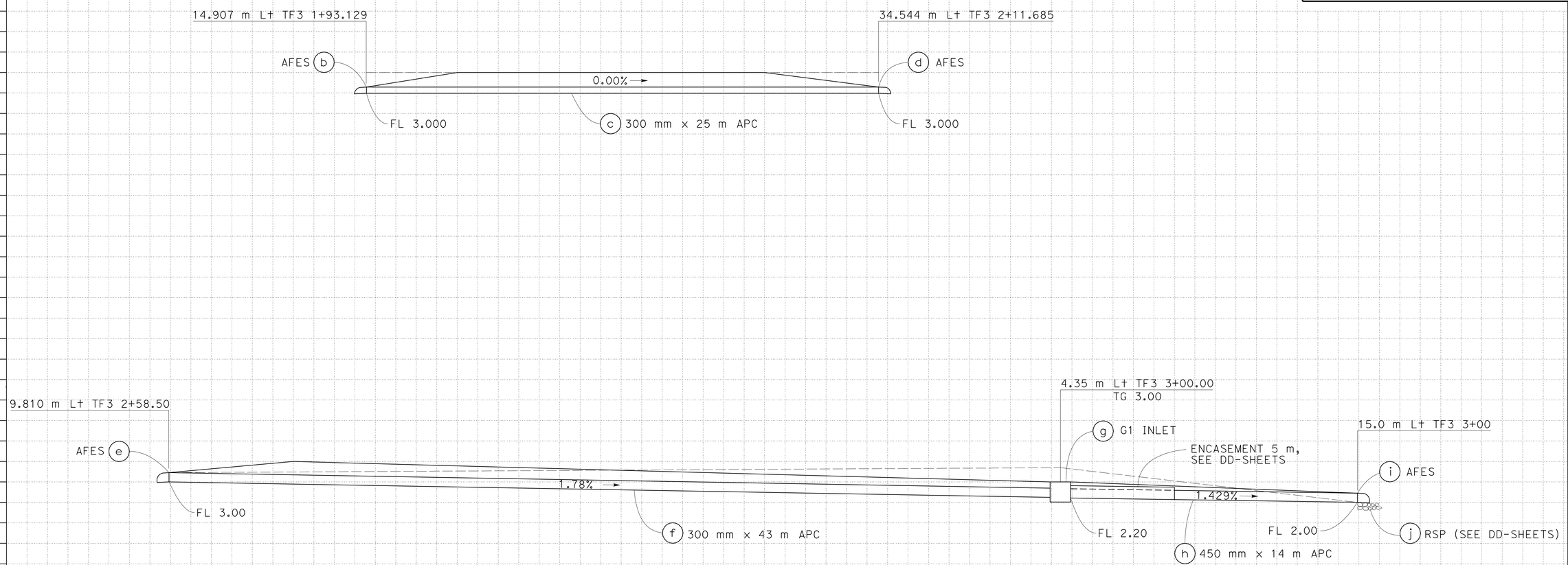

DRAINAGE SYSTEM No. 6

ALL DIMENSIONS ARE IN METERS UNLESS OTHERWISE SHOWN

DRAINAGE PROFILES

SCALE Horiz 1:100
Vert 1:100

DP-10

Station	
m^3	Exc
	Emb

STATE OF CALIFORNIA - DEPARTMENT OF TRANSPORTATION
Caltrans
DESIGN

FUNCTIONAL SUPERVISOR: BOB ZANDIPOUR
CALCULATED-DESIGNED BY: WEN-SHIOU HORNG
CHECKED BY: ISAAC PEREZ
REVISED BY: WSH
DATE REVISED: 11-1-11

LAST REVISION 11-03-11
DATE PLOTTED => 25-FEB-2012
TIME PLOTTED => 08:30

Dist	COUNTY	ROUTE	KILOMETER POST TOTAL PROJECT	SHEET No.	TOTAL SHEETS
04	SF	80	12.6/13.9	120	821

Wen-Shiou Horng 11-2-11
REGISTERED CIVIL ENGINEER DATE

2-21-12
PLANS APPROVAL DATE

REGISTERED PROFESSIONAL ENGINEER
Wen-Shiou Horng
No. 61135
Exp. 12-31-12
CIVIL
STATE OF CALIFORNIA

THE STATE OF CALIFORNIA OR ITS OFFICERS OR AGENTS SHALL NOT BE RESPONSIBLE FOR THE ACCURACY OR COMPLETENESS OF ELECTRONIC COPIES OF THIS PLAN SHEET.

Caltrans Metric

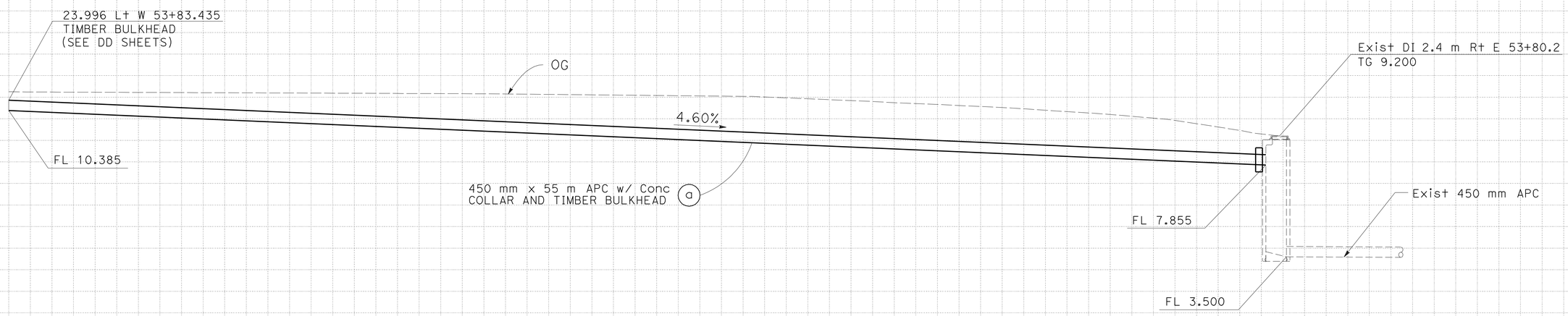

DRAINAGE SYSTEM No. 10

ALL DIMENSIONS ARE IN
METERS UNLESS OTHERWISE SHOWN

DRAINAGE PROFILES

SCALE Horiz 1:100
Vert 1:100

DP-11

WSH	11-1-11	REVISED BY / DATE REVISED
WEN-SHIOU HORNG	ISAAC PEREZ	CALCULATED-DESIGNED BY / CHECKED BY
BOB ZANDIPOUR		FUNCTIONAL SUPERVISOR

STATE OF CALIFORNIA - DEPARTMENT OF TRANSPORTATION
Caltrans **DESIGN**

Station	
m^3 Exc	
m^3 Emb	

LAST REVISION 11-03-11 DATE PLOTTED => 25-FEB-2012 TIME PLOTTED => 08:31

Dist	COUNTY	ROUTE	KILOMETER POST TOTAL PROJECT	SHEET No.	TOTAL SHEETS
04	SF	80	12.6/13.9	121	821

REGISTERED CIVIL ENGINEER 11-2-11 DATE

2-21-12
PLANS APPROVAL DATE

REGISTERED PROFESSIONAL ENGINEER Isaac Perez No. 53542 Exp. 6-30-13 CIVIL STATE OF CALIFORNIA

THE STATE OF CALIFORNIA OR ITS OFFICERS OR AGENTS SHALL NOT BE RESPONSIBLE FOR THE ACCURACY OR COMPLETENESS OF ELECTRONIC COPIES OF THIS PLAN SHEET.

Caltrans Metric

NOTE:
1. FOR INFORMATION NOT SHOWN, SEE STD PLAN D73 THRU D74B SHEETS.

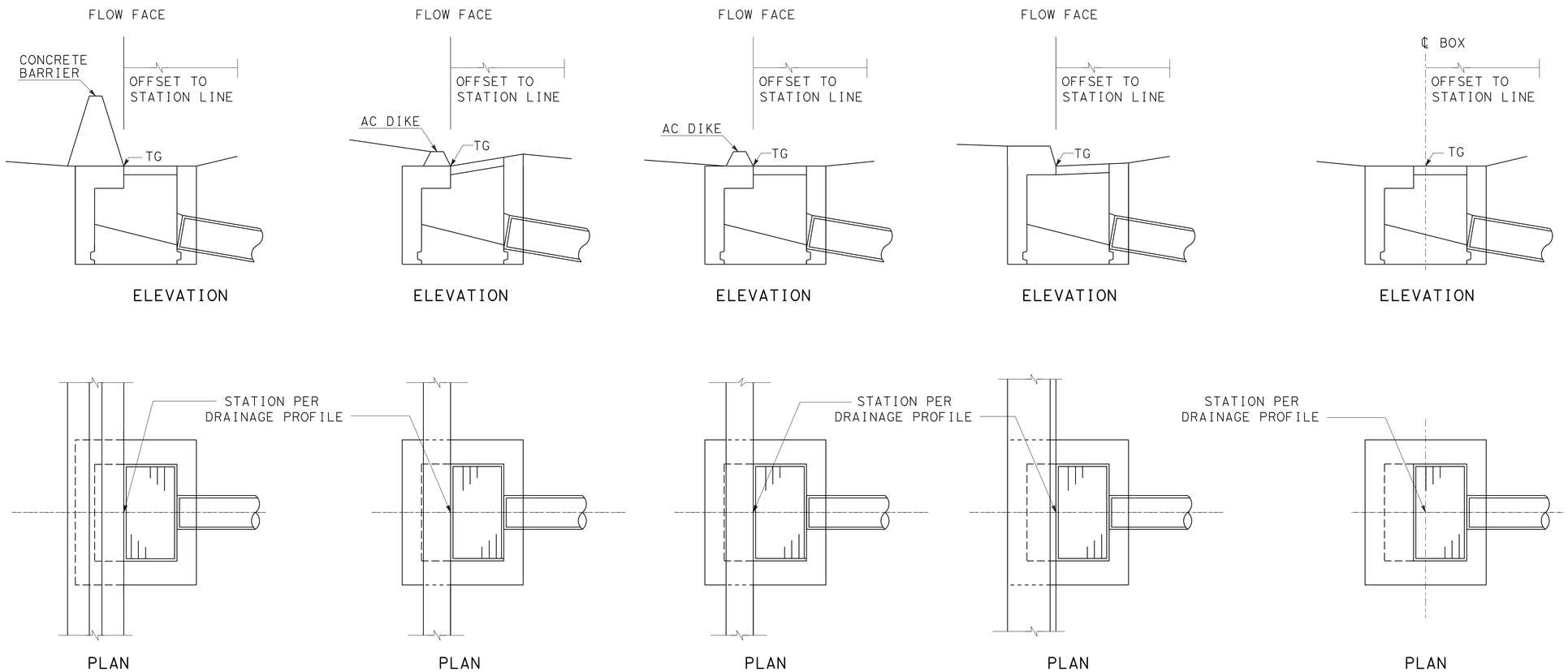

INLET ADJACENT TO CONCRETE BARRIER

INLET WITHIN AC SIDE GUTTER

INLET ADJACENT TO AC DIKE

INLET ADJACENT TO CURB

FIELD INLET

ALL DIMENSIONS ARE IN MILLIMETERS UNLESS OTHERWISE SHOWN

DRAINAGE DETAILS

NO SCALE

DD-1

REVISED BY	DATE REVISED
IP	11-1-11

CALCULATED-DESIGNED BY: ISAAC PEREZ
CHECKED BY: WEN-SHIOU HORNG

FUNCTIONAL SUPERVISOR: JOSEPH PETERSON

STATE OF CALIFORNIA - DEPARTMENT OF TRANSPORTATION
Caltrans HYDRAULICS

LAST REVISION 10-13-10
DATE PLOTTED => 25-FEB-2012
TIME PLOTTED => 08:31

Dist	COUNTY	ROUTE	KILOMETER POST TOTAL PROJECT	SHEET No.	TOTAL SHEETS
04	SF	80	12.6/13.9	122	821

REGISTERED CIVIL ENGINEER 11-2-11 DATE

2-21-12
PLANS APPROVAL DATE

REGISTERED PROFESSIONAL ENGINEER Isaac Perez No. 53542 Exp. 6-30-13 CIVIL STATE OF CALIFORNIA

THE STATE OF CALIFORNIA OR ITS OFFICERS OR AGENTS SHALL NOT BE RESPONSIBLE FOR THE ACCURACY OR COMPLETENESS OF ELECTRONIC COPIES OF THIS PLAN SHEET.

Caltrans Metric

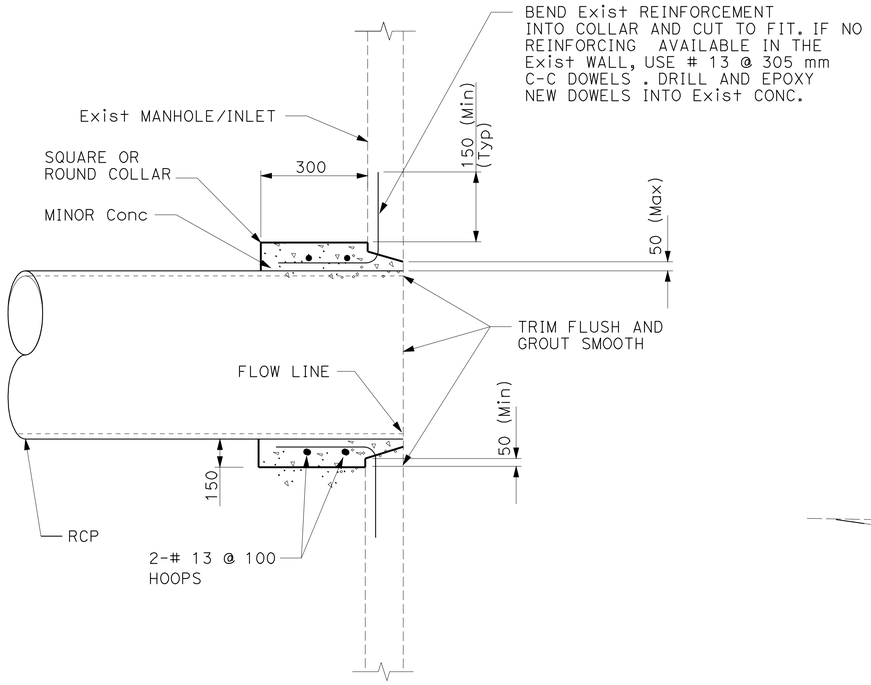

CONCRETE COLLAR PIPE CONNECTION TO EXISTING INLET

1 a 2 h 4 ag 5 ab 10 a

PCC LINED DITCH 2 t Xs=1:2

STATION	OFFSET	FL	
BP 30+53.89	2.3 Lt	45.99	BEGINNING
BP 31+39.241	2.3 Lt	46.21	END

PCC LINED DITCH 3 m Xs=1:3

STATION	OFFSET	FL	
WW 80+06	37.0 Lt	59.0	BEGINNING
WW 80+10	22.0 Lt	58.5	
WW 80+20	13.5 Lt	57.5	
WW 80+30	10.5 Lt	57.0	
WW 80+40	8.5 Lt	56.5	
WW 80+60	6.5 Lt	56.2	
WW 80+72	10.0 Lt	56.0	END @ Exist DI

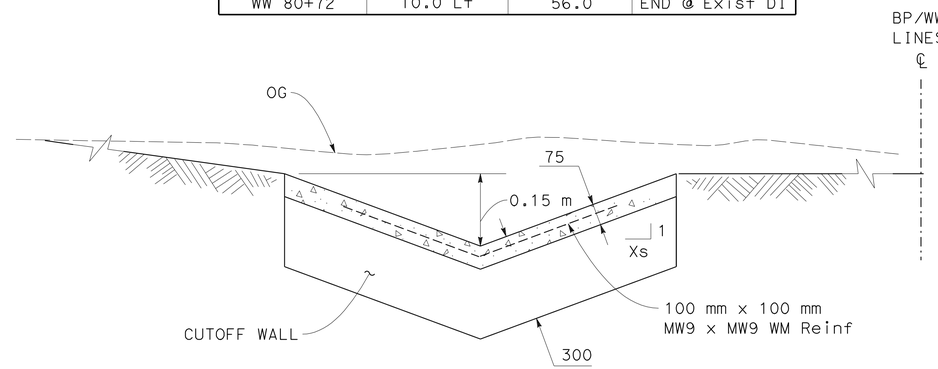

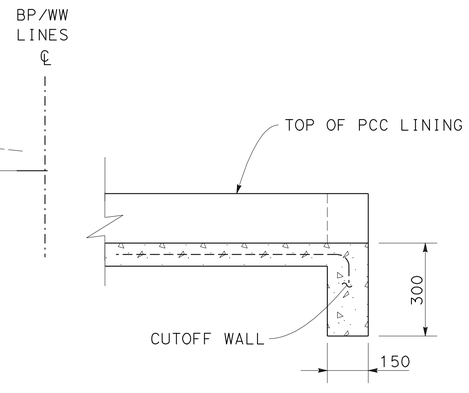

LONGITUDINAL SECTION

NOTE:
CUTOFF WALL REQUIRED AT THE BEGINNING AND END OF ALL LINED DITCHES.

2 t 3 m

PCC LINED DITCH

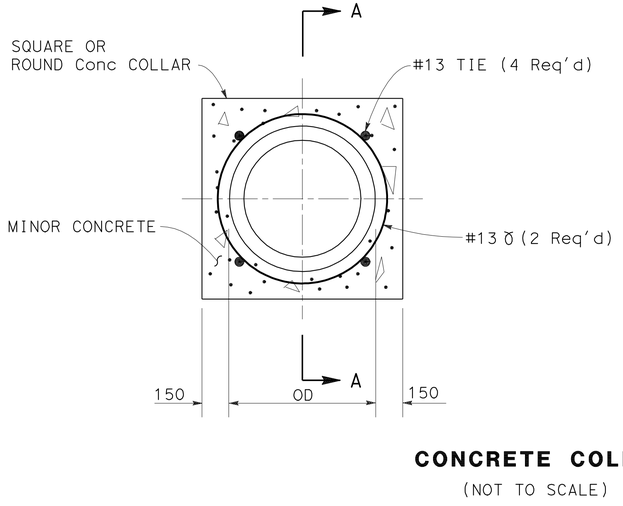

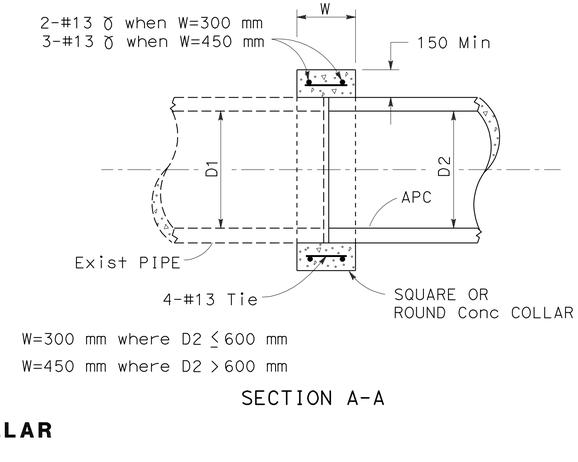

SECTION A-A

CONCRETE COLLAR

(NOT TO SCALE)

4 aj

NOTE: THIS COLLAR TO BE USED FOR JOINING PIPES OF DIFFERENT TYPES OR SIZES.

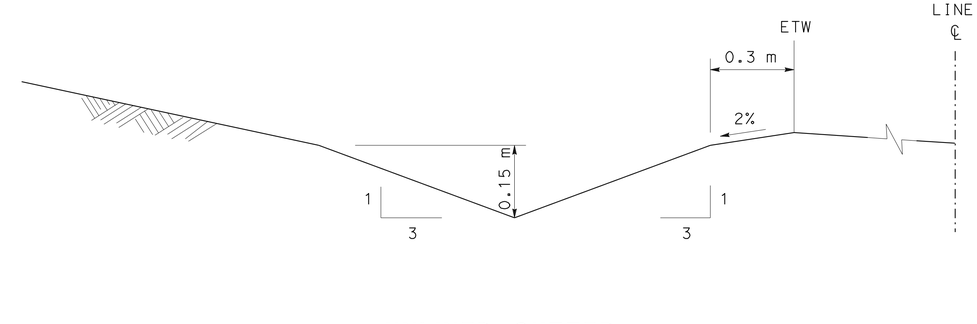

UNLINED GUTTER

6 a

ALL DIMENSIONS ARE IN MILLIMETERS UNLESS OTHERWISE SHOWN

DRAINAGE DETAILS

NO SCALE

DD-2

STATE OF CALIFORNIA - DEPARTMENT OF TRANSPORTATION
Caltrans HYDRAULICS

FUNCTIONAL SUPERVISOR JOSEPH PETERSON
CALCULATED-DESIGNED BY ISAAC PEREZ
CHECKED BY WEN-SHIOU HORNG
REVISED BY IP
DATE REVISED 11-1-11

LAST REVISION 11-03-11
DATE PLOTTED => 25-FEB-2012
TIME PLOTTED => 08:31

Dist	COUNTY	ROUTE	KILOMETER POST TOTAL PROJECT	SHEET No.	TOTAL SHEETS
04	SF	80	12.6/13.9	123	821

REGISTERED CIVIL ENGINEER 11-2-11 DATE

2-21-12
PLANS APPROVAL DATE

REGISTERED PROFESSIONAL ENGINEER Isaac Perez No. 53542 Exp. 6-30-13 CIVIL STATE OF CALIFORNIA

THE STATE OF CALIFORNIA OR ITS OFFICERS OR AGENTS SHALL NOT BE RESPONSIBLE FOR THE ACCURACY OR COMPLETENESS OF ELECTRONIC COPIES OF THIS PLAN SHEET.

Caltrans Metric

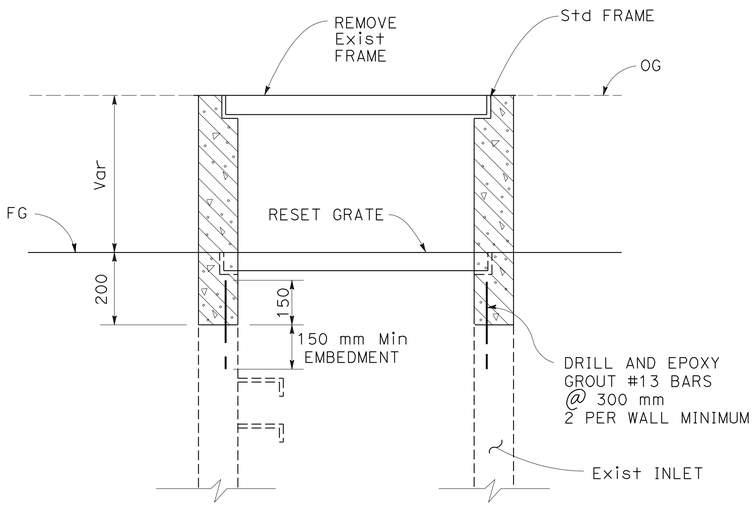

SECTIONAL VIEW

ADJUST INLET

8 g x y z

NOTE:

1. G2M INLET IS A G2 INLET MODIFIED TO BE A MANHOLE. FOR DETAILS AND DIMENSIONS NOT SHOWN, SEE Std PLAN D73 - G2 INLET

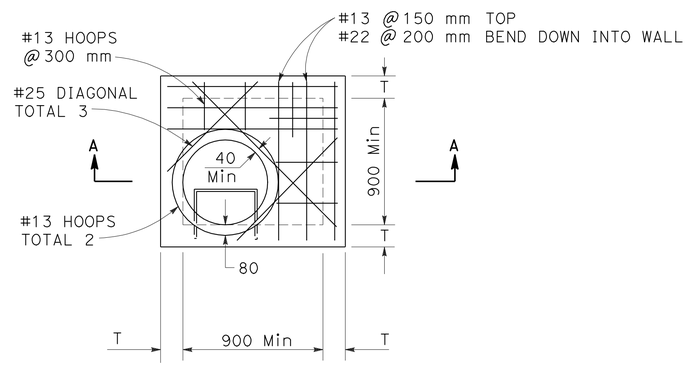

PLAN

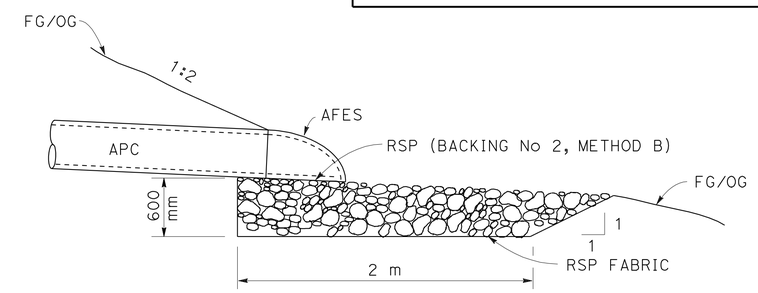

PROFILE

5 z 6 j

ROCK SLOPE PROTECTION

NOTE: RSP WIDTH IS = PIPE OD+600 mm (EACH SIDE)

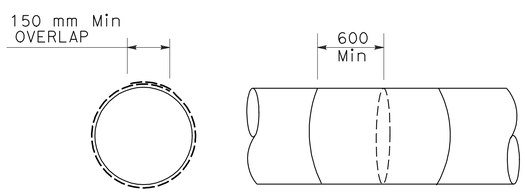

FILTER FABRIC WRAPPING FOR WATERTIGHT JOINTS

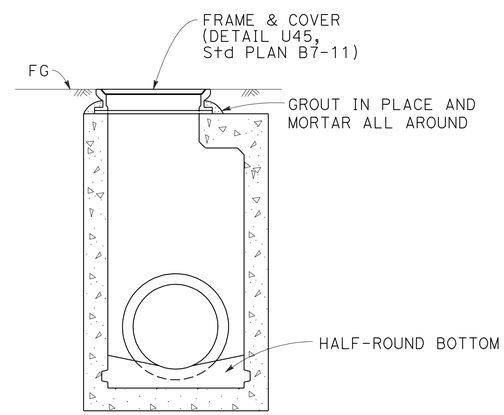

SECTION A-A
G2M INLET

4 ah

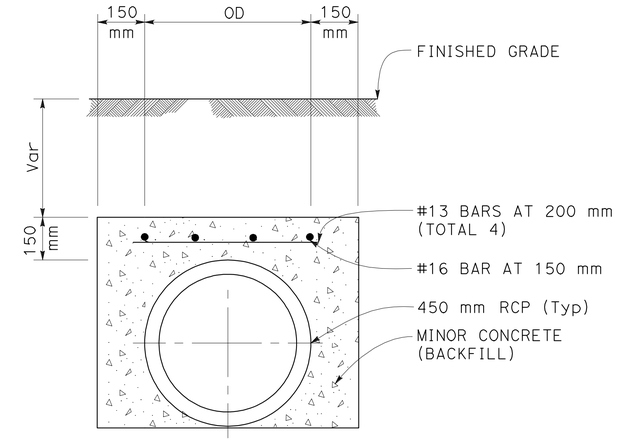

PIPE ENCASEMENT
PIPE WITH LESS THAN 600 mm COVER

3 h
4 h j t x
5 o
6 h

ALL DIMENSIONS ARE IN MILLIMETERS UNLESS OTHERWISE SHOWN

DRAINAGE DETAILS

NO SCALE

DD-3

REVISED BY	IP	DATE REVISED	11-1-11
CALCULATED-DESIGNED BY	ISAAC PEREZ	CHECKED BY	WEN-SHIOU HORNG
FUNCTIONAL SUPERVISOR	JOSEPH PETERSON		

STATE OF CALIFORNIA - DEPARTMENT OF TRANSPORTATION
Caltrans
HYDRAULICS

LAST REVISION 11-03-11 | DATE PLOTTED => 25-FEB-2012 | TIME PLOTTED => 08:31

Dist	COUNTY	ROUTE	KILOMETER POST TOTAL PROJECT	SHEET No.	TOTAL SHEETS
04	SF	80	12.6/13.9	124	821

REGISTERED CIVIL ENGINEER 11-2-11 DATE

2-21-12
PLANS APPROVAL DATE

REGISTERED PROFESSIONAL ENGINEER Isaac Perez No. 53542 Exp. 6-30-13 CIVIL STATE OF CALIFORNIA

THE STATE OF CALIFORNIA OR ITS OFFICERS OR AGENTS SHALL NOT BE RESPONSIBLE FOR THE ACCURACY OR COMPLETENESS OF ELECTRONIC COPIES OF THIS PLAN SHEET.

Caltrans Metric

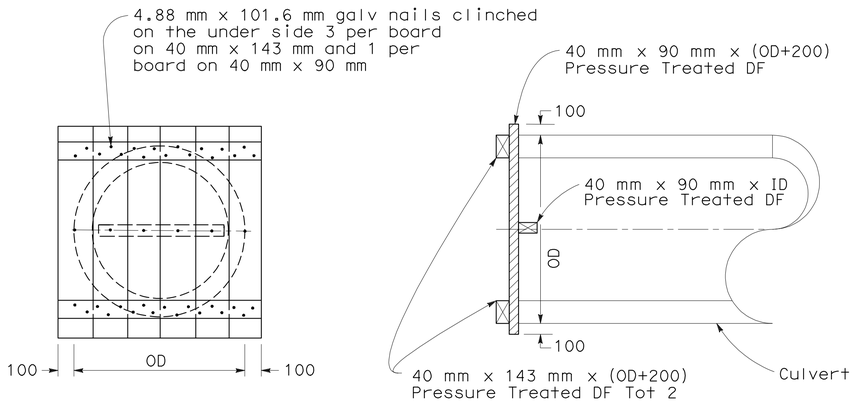

TIMBER BULKHEAD DETAIL

Pressure Treated DF 40 mm x 90 mm x (OD+200)

10 a

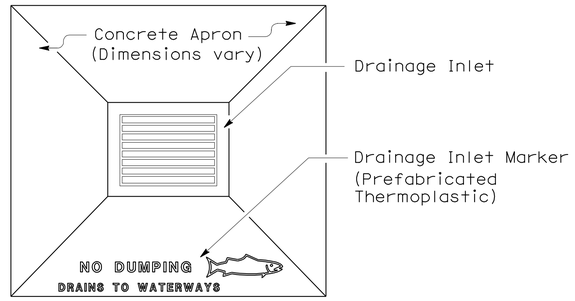

PLAN

DRAINAGE INLET MARKER ON DRAINAGE INLET APRON

NOTES

1. The dimensions of the drainage inlet marker (Stamped Concrete Imprint or Prefabricated Thermoplastic) shall vary no more than 25 mm in width and length.
2. The drainage inlet marker shall be centered opposite the drainage facility.
3. The text, graphic and background shall be of contrasting colors for the prefabricated thermoplastic and plastic drainage inlet markers. Colors for text and graphic shall be blue or green.

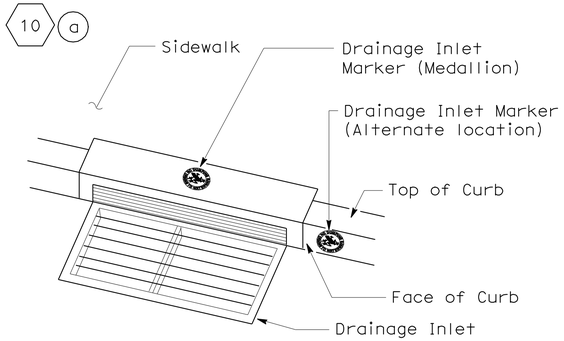

PERSPECTIVE

DRAINAGE INLET MARKER (MEDALLION) ON DRAINAGE INLET

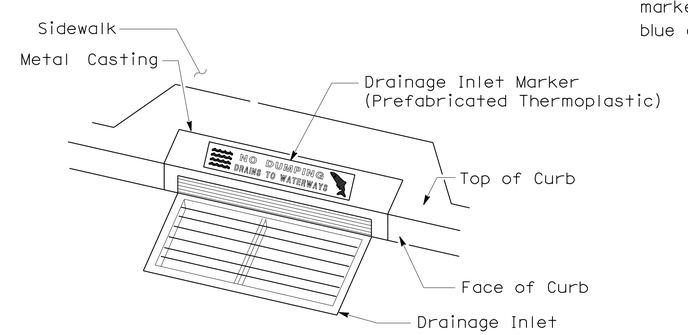

PERSPECTIVE

DRAINAGE INLET MARKER ON DRAINAGE INLET

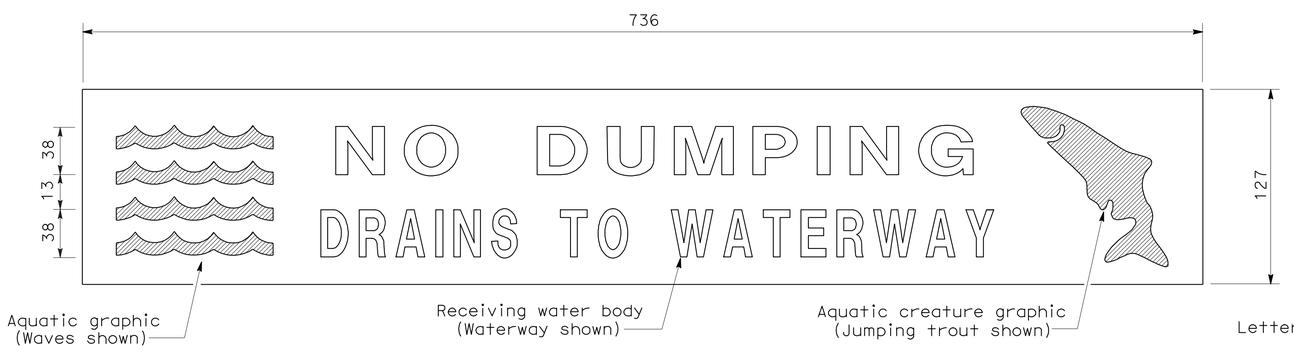

PLAN

DRAINAGE INLET MARKER (PREFABRICATED THERMOPLASTIC)

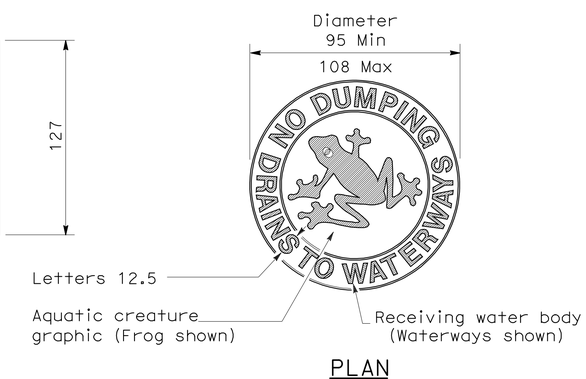

PLAN

DRAINAGE INLET MARKER (MEDALLION)

ALL DIMENSIONS ARE IN MILLIMETERS UNLESS OTHERWISE SHOWN

DRAINAGE DETAILS

NO SCALE

DD-4

STATE OF CALIFORNIA - DEPARTMENT OF TRANSPORTATION
Caltrans **HYDRAULICS**

FUNCTIONAL SUPERVISOR JOSEPH PETERSON
CALCULATED-DESIGNED BY ISAAC PEREZ
CHECKED BY NICK HORNG
REVISED BY IP
DATE REVISED 8-15-11

LAST REVISION 11-09-11
DATE PLOTTED => 25-FEB-2012
TIME PLOTTED => 08:31

ALTERNATIVE PIPE CULVERT ALLOWABLE PIPE MATERIAL

DESIGNATION	RCP (1) Dia (mm)	CORRUGATED METAL PIPE Dia (mm)	CORRUGATED METAL PIPE Bit Ctd (mm)	CMP POLYMERIC COATED (mm)	PLASTIC PIPE Dia (mm)
150 mm APC	150	150	2.01	1.3	150
300 mm APC	300	300	2.01	1.3	300
450 mm APC	450	450	2.01	1.3	450
600 mm APC	600	600	2.01	1.3	600

[N] NOT A SEPARATE PAY ITEM, FOR INFORMATION ONLY

ABBREVIATIONS:

P - POSITIVE JOINT TYPE
w/ - WITH
PW - POSITIVE WATERTIGHT JOINT WITH FILTER FABRIC WRAPPING (SEE DD-3)

Caltrans Metric

Dist	COUNTY	ROUTE	KILOMETER POST TOTAL PROJECT	SHEET No.	TOTAL SHEETS
04	SF	80	12.6/13.9	125	821

REGISTERED CIVIL ENGINEER 11-2-11 DATE
2-21-12
PLANS APPROVAL DATE

REGISTERED PROFESSIONAL ENGINEER Wen-Shiou Horng No. 61135 Exp. 12-31-12 CIVIL STATE OF CALIFORNIA

THE STATE OF CALIFORNIA OR ITS OFFICERS OR AGENTS SHALL NOT BE RESPONSIBLE FOR THE ACCURACY OR COMPLETENESS OF ELECTRONIC COPIES OF THIS PLAN SHEET.

DRAINAGE QUANTITIES

DRAINAGE SYSTEM No.	DRAINAGE UNIT	REMOVE CULVERT (m)	REMOVE INLET (EA)	REMOVE FES (EA)	ADJUST INLET (EA)	APC 150 mm (m)	APC 300 mm (m)	APC 450 mm (m)	APC 600 mm (m)	AFES 300 mm (EA)	AFES 450 mm (EA)	AFES 600 mm (EA)	FRAME & COVER [N] DETAIL U-45, Std PLAN B7-11 (EA)	FRAME & GRATE [N] 600-12 (EA)	FRAME & GRATE [N] 600-13 (EA)	Misc IRON & STEEL (kg)	MINOR CONCRETE (MINOR STRUCTURE) (m^3)	MINOR CONCRETE (BACKFILL) (m^3)	CONCRETE (DITCH LINING) (m^3)	CONCRETE COLLAR [N] (EA)	PIPE JOINT CLASSIFICATION [N]	HEIGHT OF INLET [N] (m)	MAXIMUM COVER [N] (m)	RSP (BACKING No. 2, METHOD B) (m^3)	RSP FABRIC (m^2)	MINOR CONCRETE (MISCELLANEOUS CONSTRUCTION) (m^3)	DRAINAGE INLET MARKER (EA)	DESCRIPTION	STATION	DRAINAGE PLAN SHEET No.	DRAINAGE SYSTEM No.	DRAINAGE UNIT
1	a							5												1	PW		0.95					450 mm APC w/ Conc COLLAR		D-1	1	a
	b													1		148	1.2					1.2				1.67	1	G2 INLET w/ SGD	12.9 m Rt E 50+24.6			b
	c							1													PW		0.75					450 mm APC				c
	d													1		148	0.69					0.85				1.74	1	G1 INLET w/ SGD	11.9 m Rt E 50+23.9			d
	e							54													PW		1.44					450 mm APC				e
	f													1		148	1.26					1.93				1.67	1	G2 INLET w/ SGD	6.3 m Rt R4 50+80			f
	g							37													PW		1.48					450 mm APC				g
	h													1		148	1.51					1.70				1.67		G2 INLET w/ SGD	3.0 m Lt R4 51+19			h
	i							15													PW		1.25					450 mm APC				i
2	a													1		148	1.25					1.27				1.67	1	G2 INLET w/ SGD	5.7 m Rt H 50+80	D-1	2	a
	b							18													PW		2.98					450 mm APC				b
	c													1		148	0.69					0.85					1	G1 INLET	2.45 m Lt BP 30+54.00			c
	d							35													PW		0.64					450 mm APC				d
	e													1		148	1.38					1.49					1	G2 INLET	2.45 m Lt BP 30+90.00			e
	f							20													PW		2.54					450 mm APC				f
	g													1		148	2.35					3.02					1	G2 INLET	5.5 m Lt SG1 11+17.00			g
	h							9												1	PW		3.15					450 mm APC w/ Conc COLLAR				h
	i														1	85	0.69					0.5					1	G1 INLET	BP 30+80			i
	j							5													PW		0.13					450 mm APC				j
	k													1		148	0.69					0.78				1.74	1	G1 INLET w/ SGD	4.6 m Lt SG 10+94.223			k
	l							9													PW		0.44					450 mm APC				l
	m													1		148	0.7					0.92				1.74	1	G1 INLET w/ SGD	4.6 m Rt SG 10+94.223			m
	n							10													PW		0.88					450 mm APC				n
	o													1		148	1.3					1.36				1.67	1	G2 INLET w/ SGD	4.6 m Rt SG 11+06			o
	p							12													PW		1.67					450 mm APC				p
	q													1		148	1.8					2.15				1.67	1	G2 INLET w/ SGD	2.0 m Rt SG 11+17			q
	r							5													PW		2.50					450 mm APC				r
	s													1		148	1.39					1.5				1.74	1	G1 INLET w/ SGD	6.5 m Rt SG 10+51 (SEE C-SHEETS)			s
	t																		5									LINE DITCH				t
3	a													1		148	0.9					1.29				1.74	1	G1 INLET w/ SGD	10.31 m Rt WW 81+18.00	D-1	3	a
	b						33														PW		0.99					300 mm APC				b
	c													1		148	0.79					1.09				1.74	1	G1 INLET w/ SGD	10.5 m Rt R1 50+94			c
	d							23													PW		0.64					450 mm APC				d
	e													1		148	1.14					1.1				1.67	1	G2 INLET w/ SGD	6.7 m Lt H 50+68.74			e
	f							15													PW		1.19					450 mm APC				f
	g													1		148	2.98					4.03				1.67	1	G2 INLET w/ SGD	0.5 m Lt H 50+60			g
	h							25										5.8			PW		1.28					450 mm APC w/ 20 m ENCASEMENT				h
	i													1		148	0.69					0.85				1.74	1	G1 INLET w/ SGD	4.0 m Lt H 50+28			i
	j													1		148	3.34					4.60				1.67	1	G2 INLET w/ SGD	7.2 m Lt SG 10+24.38			j
SHEET TOTAL							33	298						19	1	2897	26.74	5.8	5	2		32.48	24.90			27	19					

DRAINAGE QUANTITIES DQ-1

STATE OF CALIFORNIA - DEPARTMENT OF TRANSPORTATION
Caltrans DESIGN

FUNCTIONAL SUPERVISOR: BOB ZANDIPOUR
CALCULATED-DESIGNED BY: WEN-SHIOU HORNG
CHECKED BY: ISAAC PEREZ
REVISED BY: IP
DATE REVISED: 10/18/11

LAST REVISION 11-09-11
DATE PLOTTED => 25-FEB-2012
TIME PLOTTED => 08:31

Dist	COUNTY	ROUTE	KILOMETER POST TOTAL PROJECT	SHEET No.	TOTAL SHEETS
04	SF	80	12.6/13.9	126	821

Caltrans Metric

Wen-Shiou Horng 11-2-11
REGISTERED CIVIL ENGINEER DATE

2-21-12
PLANS APPROVAL DATE

REGISTERED PROFESSIONAL ENGINEER Wen-Shiou Horng No. 61135 Exp. 12-31-12 CIVIL STATE OF CALIFORNIA

THE STATE OF CALIFORNIA OR ITS OFFICERS OR AGENTS SHALL NOT BE RESPONSIBLE FOR THE ACCURACY OR COMPLETENESS OF ELECTRONIC COPIES OF THIS PLAN SHEET.

DRAINAGE QUANTITIES

DRAINAGE SYSTEM No.	DRAINAGE UNIT	REMOVE CULVERT (m)	REMOVE INLET (EA)	REMOVE FES (EA)	ADJUST INLET (EA)	APC 150 mm (m)	APC 300 mm (m)	APC 450 mm (m)	APC 600 mm (m)	AFES 300 mm (EA)	AFES 450 mm (EA)	AFES 600 mm (EA)	FRAME & COVER [N] DETAIL U-45, Std PLAN B7-11 (EA)	FRAME & GRATE [N] 600-12 (EA)	FRAME & GRATE [N] 600-13 (EA)	Misc IRON & STEEL (kg)	MINOR CONCRETE (MINOR STRUCTURE) (m^3)	MINOR CONCRETE (BACKFILL) (m^3)	CONCRETE (DITCH LINING) (m^3)	CONCRETE COLLAR [N] (EA)	PIPE JOINT CLASSIFICATION [N]	HEIGHT OF INLET [N] (m)	MAXIMUM COVER [N] (m)	RSP (BACKING No. 2, METHOD B) (m^3)	RSP FABRIC (m^2)	MINOR CONCRETE (MISCELLANEOUS CONSTRUCTION) (m^3)	DRAINAGE INLET MARKER (EA)	DESCRIPTION	STATION	DRAINAGE PLAN SHEET No.	DRAINAGE SYSTEM No.	DRAINAGE UNIT
3	k							23													PW		3.75					450 mm APC		D-1	3	k
	l													1		148	0.78					1.06				1.74	1	G1 INLET w/ SGD	4.6 m L+ SG 10+60.00			l
	m																		7									LINE DITCH				m
4	a													1		148	0.69					0.65				1.74	1	G1 INLET w/ SGD	3.6 m R+ CG 9+70.00	D-2	4	a
	b						29														PW		1.07					300 mm APC				b
	c													1		148	3.34					4.6					1	G2 INLET	11.3 m L+ CG 9+90.46			c
	d							17													PW		4.15					450 mm APC				d
	e													1		148	1.33					1.4					1	G2 INLET w/ SGD	3.6 m R+ CG 10+00			e
	f							17													PW		0.95					450 mm APC				f
	g													1		148	1.01					0.63				1.67	1	G2 INLET	17.27 m R+ CG 10+12.00			g
	h							23										6.67			PW		0.44					450 mm APC w/ ENCASEMENT				h
	i													1		148	0.69					0.89					1	G1 INLET	17.0 m R+ CG 10+40.00			i
	j							23										6.67			PW		0.44					450 mm APC w/ ENCASEMENT				j
	k													1		148	0.69					0.60					1	G1 INLET	41.10 m R+ CG 10+40.00			k
	l							19													PW		0.61					450 mm APC				l
	m													1		148	0.78					1.06					1	G1 INLET	38.16 m R+ CG 11+04.00			m
	n							16													PW		0.83					450 mm APC				n
	o													1		148	0.90					1.28					1	G1 INLET	39.12 m R+ CG 11+20.5			o
	p							21													PW		0.90					450 mm APC				p
	q													1		148	0.94					1.35					1	G1 INLET	48.57 m R+ CG 11+40.45			q
	r								24												PW		1.32					600 mm APC				r
	s													1		148	0.69					0.84					1	G1 INLET	22.5 m L+ CG 11+80			s
	t							31										8.99			PW		0.59					450 mm APC w/ ENCASEMENT				t
	u													1		148	0.77					1.04				1.74	1	G1 INLET w/ SGD	3.6 m R+ CG 11+30			u
	v							32													PW		0.59					450 mm APC				v
	w													1		148	0.77					1.04				1.74	1	G1 INLET w/ SGD	4.7 m R+ CG 11+62.56			w
	x								31									12.09			PW		1.35					600 mm APC w/ 15 m ENCASEMENT				x
	y													1		148	1.67					1.95				1.67	1	G2 INLET w/ SGD	35.97 m R+ CG 11+58.54			y
	z								30												PW		1.99					600 mm APC				z
	aa													1		148	0.75					1.00				1.74	1	G1 INLET w/ SGD	18.11 m R+ CG 11+74.54			aa
	ab							23													PW		1.05					450 mm APC				ab
	ac													1		148	1.39					1.50				1.67	1	G2 INLET w/ SGD	33.04 m R+ CG 11+90.28			ac
	ad							25													PW		2.14					450 mm APC				ad
	ae													1		148	2.07					2.59				1.67	1	G2 INLET w/ SGD	52.63 m R+ CG 11+77.91			ae
	af								9												PW		1.99					600 mm APC				af
	ag								52											1	PW		1.32					600 mm APC w/ Conc COLLAR				ag
	ah												1			200	1.65					1.92					1	G2M INLET	32.796 m R+ CG 11+57.57			ah
	ai								42												PW		1.32					600 mm APC				ai
SHEET TOTAL							29	270	188				1	17		2716	20.91	34.42	7	1		25.40	26.80			15	18					

WEN-SHIOU HORNG — DATE REVISED 10/18/11 — REVISED BY IP

ISAAC PEREZ — CALCULATED-DESIGNED BY

BOB ZANDIPOUR — CHECKED BY — FUNCTIONAL SUPERVISOR

STATE OF CALIFORNIA - DEPARTMENT OF TRANSPORTATION

Caltrans DESIGN

LAST REVISION 11-09-11 — DATE PLOTTED => 25-FEB-2012 — TIME PLOTTED => 08:31

Dist	COUNTY	ROUTE	KILOMETER POST TOTAL PROJECT	SHEET No.	TOTAL SHEETS
04	SF	80	12.6/13.9	127	821

Caltrans Metric

Wen-Shiou Horng 11-2-11
REGISTERED CIVIL ENGINEER DATE

2-21-12
PLANS APPROVAL DATE

REGISTERED PROFESSIONAL ENGINEER Wen-Shiou Horng No. 61135 Exp. 12-31-12 CIVIL STATE OF CALIFORNIA

THE STATE OF CALIFORNIA OR ITS OFFICERS OR AGENTS SHALL NOT BE RESPONSIBLE FOR THE ACCURACY OR COMPLETENESS OF ELECTRONIC COPIES OF THIS PLAN SHEET.

DRAINAGE QUANTITIES

DRAINAGE SYSTEM No.	DRAINAGE UNIT	REMOVE CULVERT (m)	REMOVE INLET (EA)	REMOVE FES (EA)	ADJUST INLET (EA)	APC 150 mm (m)	APC 300 mm (m)	APC 450 mm (m)	APC 600 mm (m)	AFES 300 mm (EA)	AFES 450 mm (EA)	AFES 600 mm (EA)	FRAME & COVER [N] DETAIL U-45, Std PLAN B7-11 (EA)	FRAME & GRATE [N] 600-12 (EA)	FRAME & GRATE [N] 600-13 (EA)	Misc IRON & STEEL (kg)	MINOR CONCRETE (MINOR STRUCTURE) (m^3)	MINOR CONCRETE (BACKFILL) (m^3)	CONCRETE (DITCH LINING) (m^3)	CONCRETE COLLAR [N] (EA)	PIPE JOINT CLASSIFICATION [N]	HEIGHT OF INLET [N] (m)	MAXIMUM COVER [N] (m)	RSP (BACKING No. 2, METHOD B) (m^3)	RSP FABRIC (m^2)	MINOR CONCRETE (MISCELLANEOUS CONSTRUCTION) (m^3)	DRAINAGE INLET MARKER (EA)	DESCRIPTION	STATION	DRAINAGE PLAN SHEET No.	DRAINAGE SYSTEM No.	DRAINAGE UNIT
4	aj																			1								CONCRETE COLLAR		D-2	4	aj
	ak		1																									REMOVE DI				ak
	al					2															PW							150 mm APC				al
	am													1		148	1.01					0.9					1	G1 INLET	14.42 m Rt CG 09+64			am
5	a													1		148	0.75					1				1.74	1	G1 INLET w/ SGD	3.41 m Rt CG1 11+00	D-2	5	a
	b							29													PW		1.74					450 mm APC				b
	c													1		148	1.84					2.23				1.67	1	G2 INLET w/ SGD	3.41 m Rt CG1 11+30			c
	d							48													PW		2.52					450 mm APC				d
	e													1		148	2.31					2.96				1.67	1	G2 INLET w/ SGD	10.374 m Rt CG1 11+80			e
	f							16													PW		2.68					450 mm APC				f
	g													1		148	2.44					3.16				1.67	1	G2 INLET w/ SGD	9.635 m Rt CG1 12+00			g
	h							24													PW		3.02					450 mm APC				h
	i													1		148	2.65					3.5				1.67	1	G2 INLET w/ SGD	9.65 m Rt CG 12+24.610			i
	j													1		148	0.69					0.85				1.74	1	G1 INLET w/ SGD	17.379 m Lt CG 13+17			j
	k							11													PW		0.57					450 mm APC				k
	l													1		148	0.75					1				1.74	1	G1 INLET w/ SGD	11 m Lt CG 13+04			l
	m							12													PW		0.59					450 mm APC				m
	n													1		148	0.78					1.07				1.74	1	G1 INLET w/ SGD	12 m Lt CG 12+92			n
	o							23										6.67			PW		0.62					450 mm APC w/ ENCASEMENT				o
	p													1		148	0.75					1				1.74	1	G1 INLET w/ SGD	21.70 m Lt CG 12+70			p
	q							19										1.45			PW		3.02					450 mm APC w/ 5 m ENCASEMENT				q
	r							18													PW		3.05					450 mm APC				r
	s													1		148	1.63					1.88				1.67	1	G2 INLET w/ SGD	4.233 m Lt CG 12+28.529			s
	t							12													PW		1.79					450 mm APC				t
	u													1		148	1.87					2.27				1.67	1	G2 INLET w/ SGD	7.141 m Rt CG 12+23.70			u
	v													1		148	0.75					1.01				1.74	1	G1 INLET w/ SGD	11.416 m Rt CG 12+60			v
	w							43													PW		1.79					450 mm APC				w
	x								16												PW		1.67					600 mm APC				x
	y											1																AFES	22.644 m Rt CG 12+20			y
	z																							2.48	9.98			RSP				z
	aa													1		148	0.69					0.71				1.74	1	G1 INLET w/ SGD	5.108 m Lt E 52.86			aa
	ab						9													1	PW		0.41					300 mm APC w/ Conc COLLAR				ab
6	a																											UNLINED GUTTER		D-3	6	a
	b									1																		AFES	14.907 m Lt TF3 1+93.129			b
	c						25														PW		0.7					300 mm APC				c
	d									1																		AFES	34.544 m Lt TF3 2+11.685			d
	e									1																		AFES	9.81 m Lt TF3 2+58.50			e
	f						43														PW		0.47					300 mm APC				f
	g													1		148	0.69					0.8				1.74	1	G1 INLET w/ SGD	4.35 m Lt TF3 3+00			g
SHEET TOTAL			1			2	77	255	16	3		1		15		2220	19.60	8.12		2		24.34	24.64	2.48	9.98	24	15					

WEN-SHIOU HORNG — REVISED BY — IP
ISAAC PEREZ — DATE REVISED — 10/18/11
CALCULATED-DESIGNED BY
CHECKED BY
FUNCTIONAL SUPERVISOR — BOB ZANDIPOUR

STATE OF CALIFORNIA - DEPARTMENT OF TRANSPORTATION
Caltrans
DESIGN

LAST REVISION 11-09-11 DATE PLOTTED => 25-FEB-2012 TIME PLOTTED => 08:31

Dist	COUNTY	ROUTE	KILOMETER POST TOTAL PROJECT	SHEET No.	TOTAL SHEETS
04	SF	80	12.6/13.9	128	821

Caltrans Metric

Wen-Shiou Horng 11-2-11
REGISTERED CIVIL ENGINEER DATE

2-21-12
PLANS APPROVAL DATE

REGISTERED PROFESSIONAL ENGINEER Wen-Shiou Horng No. 61135 Exp. 12-31-12 CIVIL STATE OF CALIFORNIA

THE STATE OF CALIFORNIA OR ITS OFFICERS OR AGENTS SHALL NOT BE RESPONSIBLE FOR THE ACCURACY OR COMPLETENESS OF ELECTRONIC COPIES OF THIS PLAN SHEET.

DRAINAGE QUANTITIES

DRAINAGE SYSTEM No.	DRAINAGE UNIT	REMOVE CULVERT (m)	REMOVE INLET (EA)	REMOVE FES (EA)	ADJUST INLET (EA)	APC 150 mm (m)	APC 300 mm (m)	APC 450 mm (m)	APC 600 mm (m)	AFES 300 mm (EA)	AFES 450 mm (EA)	AFES 600 mm (EA)	FRAME & COVER [N] DETAIL U-45, Std PLAN B7-11 (EA)	FRAME & GRATE [N] 600-12 (EA)	FRAME & GRATE [N] 600-13 (EA)	Misc IRON & STEEL (kg)	MINOR CONCRETE (MINOR STRUCTURE) (m^3)	MINOR CONCRETE (BACKFILL) (m^3)	CONCRETE (DITCH LINING) (m^3)	CONCRETE COLLAR [N] (EA)	PIPE JOINT CLASSIFICATION [N]	HEIGHT OF INLET [N] (m)	MAXIMUM COVER [N] (m)	RSP (BACKING No. 2, METHOD B) (m^3)	RSP FABRIC (m^2)	MINOR CONCRETE (MISCELLANEOUS CONSTRUCTION) (m^3)	DRAINAGE INLET MARKER (EA)	DESCRIPTION	STATION	DRAINAGE PLAN SHEET No.	DRAINAGE SYSTEM No.	DRAINAGE UNIT
6	h							14										1.50			PW		0.35					450 mm APC w/ 5 m ENCASEMENT		D-3	6	h
	i										1																	AFES	15.0 m Lt TF3 3+00			i
	j																							2.28	9.38			RSP				j
	k		1																				0.4					REMOVE DI	6.0 m Lt TF3 3+16			k
	l	26																										REMOVE 300 mm CULVERT				l
7	a	7																										REMOVE 450 mm PP		D-4	7	a
	b		1																				0.8					REMOVE DI	24.0 m Rt E 50+20			b
	c	40																										REMOVE 450 mm PP				c
	d		1																				0.6					REMOVE DI	12.0 m Rt R4 50+62			d
	e	35																										REMOVE 450 mm PP				e
	f		1																				1					REMOVE DI	16.0 m Rt R4 51+26			f
	g	13																										REMOVE 450 mm PP				g
	h		1																				1					REMOVE DI	3.5 m Lt R4 51+29			h
	i	22																										REMOVE 450 mm PP				i
	j		1																				1.2					REMOVE DI	13.0 m Lt R4 51+15			j
	k	7																										REMOVE 450 mm PP				k
	l		1																				0.6					REMOVE DI	6.0 m Lt R4 51+11			l
	m	25																										REMOVE 450 mm PP				m
	n		1																				1.8					REMOVE DI	14.0 m Rt H 50+88			n
	o	18																										REMOVE 300 mm PP				o
	p		1																				0.6					REMOVE DI	6.0 m Rt H 50+69			p
	q	10																										REMOVE 300 mm RCP				q
	r		1																				1					REMOVE DI	11.0 m Lt SG 10+47			r
	s	6																										REMOVE 300 mm CULVERT				s
	t		1																				1.5					REMOVE DI	16.0 m Lt SG 10+13			t
	u	8																										REMOVE 300 mm CULVERT				u
	v		1																				2.0					REMOVE DI	9.0 m Lt SG 10+25			v
8	a		1																				1					REMOVE DI	6.5 m Rt CG 9+96	D-5	8	a
	b	20																										REMOVE 450 mm RCP				b
	c		1																				1.2					REMOVE DI	22.0 m Rt CG 10+16			c
	d	24																										REMOVE 450 mm CULVERT				d
	e		1																				1.2					REMOVE DI	35.0 m Rt CG 10+43			e
	f	15																										REMOVE 450 mm CULVERT				f
	g			1																						1		ADJUST TO GRADE	25.0 m Rt CG 10+39			g
	h		1																				1.1					REMOVE DI	35.0 m Rt CG 10+43			h
	i	33																										REMOVE 450 mm RCP				i
	j		1																				1.8					REMOVE DI	32.0 m Rt CG 11+16			j
	k	10																										REMOVE 450 mm PP				k
	l		1																				0.7					REMOVE DI	20.0 m Rt CG 11+16			l
SHEET TOTAL		319	18		1			14			1							1.50					19.85	2.28	9.38		1					

DRAINAGE QUANTITIES DQ-4

STATE OF CALIFORNIA - DEPARTMENT OF TRANSPORTATION
Caltrans DESIGN

FUNCTIONAL SUPERVISOR: BOB ZANDIPOUR
CALCULATED-DESIGNED BY: WEN-SHIOU HORNG
CHECKED BY: ISAAC PEREZ
REVISED BY: IP
DATE REVISED: 10/18/11

LAST REVISION 11-09-11
DATE PLOTTED => 25-FEB-2012
TIME PLOTTED => 08:32

Dist	COUNTY	ROUTE	KILOMETER POST TOTAL PROJECT	SHEET No.	TOTAL SHEETS
04	SF	80	12.6/13.9	129	821

Caltrans Metric

Wen-Shiou Horng 11-2-11
REGISTERED CIVIL ENGINEER DATE

2-21-12
PLANS APPROVAL DATE

REGISTERED PROFESSIONAL ENGINEER Wen-Shiou Horng No. 61135 Exp. 12-31-12 CIVIL STATE OF CALIFORNIA

THE STATE OF CALIFORNIA OR ITS OFFICERS OR AGENTS SHALL NOT BE RESPONSIBLE FOR THE ACCURACY OR COMPLETENESS OF ELECTRONIC COPIES OF THIS PLAN SHEET.

DRAINAGE QUANTITIES

DRAINAGE SYSTEM No.	DRAINAGE UNIT	REMOVE CULVERT	REMOVE INLET	REMOVE FES	ADJUST INLET	APC 150 mm	APC 300 mm	APC 450 mm	APC 600 mm	AFES 300 mm	AFES 450 mm	AFES 600 mm	FRAME & COVER [N] DETAIL U-45, Std PLAN B7-11	FRAME & GRATE [N] 600-12	FRAME & GRATE [N] 600-13	Misc IRON & STEEL	MINOR CONCRETE (MINOR STRUCTURE)	MINOR CONCRETE (BACKFILL)	CONCRETE (DITCH LINING)	CONCRETE COLLAR [N]	PIPE JOINT CLASSIFICATION [N]	HEIGHT OF INLET [N]	MAXIMUM COVER [N]	RSP (BACKING No. 2, METHOD B)	RSP FABRIC	MINOR CONCRETE (MISCELLANEOUS CONSTRUCTION)	DRAINAGE INLET MARKER	DESCRIPTION	STATION	DRAINAGE PLAN SHEET No.	DRAINAGE SYSTEM No.	DRAINAGE UNIT
		m	EA			m				EA						kg	m^3			EA		m		m^3	m^2	m^3	EA					
8	m	11																										REMOVE 450 mm RCP		D-5	8	m
	n	18																										REMOVE 450 mm RCP				n
	o		1																			1.8						REMOVE DI	24.0 m R+ CG 11+35			o
	p	28																										REMOVE 525 mm RCP				p
	q		1																			1.5						REMOVE DI	36.0 m R+ CG 11+58			q
	r	38																										REMOVE 525 mm RCP				r
	s			1																								REMOVE FES	58.0 m R+ CG 11+83			s
	t		1																			1.3						REMOVE DI	20.0 m R+ CG 11+36			t
	u	12																										REMOVE 150 mm CULVERT				u
	v		1																			1.4						REMOVE DI	26.0 m R+ CG 11+45			v
	w	57																										REMOVE 300 mm CULVERT				w
	x				1																						1	ADJUST TO GRADE	22.8 m R+ CG 09+81.5			x
	y				1																						1	ADJUST TO GRADE	30 m R+ CG 10+02			y
	z				1																						1	ADJUST TO GRADE	37.48 m R+ CG 10+38			z
9	a	56																										REMOVE 200 mm CULVERT		D-5	9	a
	b	24																										REMOVE 375 mm RCP				b
	c		1																			1						REMOVE DI	2.0 m R+ CG 12+30			c
	d			1																								REMOVE FES	29.0 m R+ CG 12+32			d
	e	19																										REMOVE 300 mm CULVERT				e
	f		1																			0.7						REMOVE DI	12.0 m R+ CG 12+39			f
	g	15																										REMOVE 300 mm CULVERT				g
	h		1																			0.5						REMOVE DI	16.0 m R+ CG 12+50			h
	i	25																										REMOVE 300 mm CULVERT				i
	j		1																			0.5						REMOVE DI	15.0 m R+ CG 12+74			j
10	a							55												1								450 mm APC w/ Conc COLLAR & TIMBER BULKHEAD		D-2	10	a
SHEET TOTAL		303	8	2	3			55												1			8.70				3					
TOTAL FROM SHEET DQ-1							33	298						19	1	2897	26.74	5.80	5	2		32.48	24.90			27	19	SHEET TOTAL FROM DQ-1				
TOTAL FROM SHEET DQ-2							29	270	188				1	17		2716	20.91	34.42	7	1		25.40	26.80			15	18	SHEET TOTAL FROM DQ-2				
TOTAL FROM SHEET DQ-3			1			2	77	255	16	3		1		15		2220	19.60	8.12		2		24.34	24.64	2.48	9.98	24	15	SHEET TOTAL FROM DQ-3				
TOTAL FROM SHEET DQ-4		319	18		1			14			1							1.50					19.85	2.28	9.38		1	SHEET TOTAL FROM DQ-4				
GRAND TOTAL		622	27	2	4	2	139	892	204	3	1	1	1	51	1	7833	67.25	49.84	12	6		82.22	104.89	4.76	19.36	66	56	GRAND TOTAL				

STATE OF CALIFORNIA - DEPARTMENT OF TRANSPORTATION
Caltrans DESIGN

FUNCTIONAL SUPERVISOR: BOB ZANDIPOUR
CALCULATED-DESIGNED BY: WEN-SHIOU HORNG
CHECKED BY: ISAAC PEREZ
REVISED BY | DATE REVISED | A | A

LAST REVISION 11-09-11
DATE PLOTTED => 25-FEB-2012
TIME PLOTTED => 08:32

Dist	COUNTY	ROUTE	KILOMETER POST TOTAL PROJECT	SHEET No.	TOTAL SHEETS
04	SF	80	12.6/13.9	130	821

REGISTERED CIVIL ENGINEER 11-07-11 DATE

2-21-12
PLANS APPROVAL DATE

REGISTERED PROFESSIONAL ENGINEER Ahmad Sayadi No. 74962 Exp. 12-31-11 CIVIL STATE OF CALIFORNIA

THE STATE OF CALIFORNIA OR ITS OFFICERS OR AGENTS SHALL NOT BE RESPONSIBLE FOR THE ACCURACY OR COMPLETENESS OF ELECTRONIC COPIES OF THIS PLAN SHEET.

Caltrans Metric

ABBREVIATIONS

abd	ABANDONED
CA	COMPRESSED AIR
CCSF	CITY AND COUNTY OF SAN FRANCISCO
DIP	DUCTILE IRON PIPE
DUCT	DUCT BANK LOCATION CALL OUT
FA	FIRE ALARM
FM	FORCE MAIN
G.I.	GALVANIZED PIPE
kV	KILO VOLT
MCI	MCI TELECOMMUNICATIONS
PACBELL	PACIFIC BELL
PE	POLYETHYLENE
PH	POTHOLE
SFWD	SAN FRANCISCO WATER DEPARTMENT
TCE	TEMPORARY CONSTRUCTION EASEMENT
UC	UNIVERSITY OF CALIFORNIA
UNK	UNKNOWN
USCG	UNITED STATES COAST GUARD
V	VOLTS
W.I.	WROUGHT PIPE

SYMBOLS

C	CABLE VAULT
CO	CLEANOUT
E	ELECTRIC HANDHOLE
E	ELECTRIC MANHOLE
	ELECTRIC PULL BOX
	FIRE HYDRANT
G	GAS VALVE
	LIGHT POLE
SW	SALTWATER VALVE
	MANHOLE
	STORM DRAIN INLET
T	TELEPHONE MANHOLE
T	TELEPHONE VAULT
	UTILITY POLE
U	UTILITY VAULT
W	WATER VAULT
	ENVIRONMENTAL SENSITIVE AREA (ESA)
D	MANUAL LOW POINT DRAIN
	AUTOMATIC AIR RELEASE VALVE
	GATE VALVE (WATER)
	WATER METER
	BACK FLOW PREVENTER ASSEMBLY (BPA)

LEGEND

EXISTING	NEW	UTILITY	OWNERSHIP
SP	SP	SALTWATER PIPE	US NAVY
SD	SD	STORM DRAINAGE	US NAVY
TV	TV	CABLE TELEVISION	COMCAST
CA	CA	COMPRESSED AIR	CALTRANS
G	G	GAS LINE	US NAVY
W	W	WATER LINE	US NAVY/USCG/CALTRANS
S	S	SEWER LINE	US NAVY
T	T	TELEPHONE LINE	AT&T
FO	FO	FIBER OPTIC	AT&T
E	E	ELECTRICAL	US NAVY
	X W X	REMOVE WATER PIPE	
	X G X	REMOVE GAS PIPE	
	X S X	REMOVE SEWER PIPE	
	X FO X	REMOVE FIBER OPTIC	
	◯	POTHOLE	

NOTES

1. LOCATIONS OF EXISTING UTILITY FACILITIES ON THESE PLANS ARE APPROXIMATE AND SHALL BE VERIFIED BY THE CONTRACTOR PRIOR TO CONSTRUCTION.
2. ELEVATION IS BASED ON 1929 NATIONAL GEODETIC VERTICAL DATUM (NGVD29).
3. CONTRACTOR TO PROTECT UC SEISMOGRAPH STATION.
4. ALL US NAVY OWNED UTILITY LINES ARE UNDER CARE OF CCSF. CONTACT CCSF REPRESENTATIVE FOR RELOCATION OF ALL NAVY UTILITY LINES
5. USE LONG ELBOWS WHEREVER SPACE PERMITS.
6. SEE ELECTRICAL PLAN SHEETS FOR REMOVAL OF EXISTING ELECTRICAL AND TV FACILITIES AND PROPOSED ELECTRICAL FACILITIES.
7. REMOVE SECTION OF ABANDONED PIPES THAT CONFLICT WITH CONTRACT WORK AND PLUG ENDS OF REMAINING PIPE AS APPROVED BY THE ENGINEER.

UTILITY PLAN

U-1

REVISED BY	DATE REVISED
AMANDO VITO	11-1-11

CALCULATED-DESIGNED BY
CHECKED BY

FUNCTIONAL SUPERVISOR
BOB ZANDIPOUR

STATE OF CALIFORNIA - DEPARTMENT OF TRANSPORTATION
Caltrans DESIGN

LAST REVISION 10-27-11
DATE PLOTTED => 25-FEB-2012
TIME PLOTTED => 08:32

Dist	COUNTY	ROUTE	KILOMETER POST TOTAL PROJECT	SHEET No.	TOTAL SHEETS
04	SF	80	12.6/13.9	131	821

REGISTERED CIVIL ENGINEER 11-07-11 DATE

2-21-12
PLANS APPROVAL DATE

REGISTERED PROFESSIONAL ENGINEER Ahmad Sayadi No. 74962 Exp. 12-31-11 CIVIL STATE OF CALIFORNIA

THE STATE OF CALIFORNIA OR ITS OFFICERS OR AGENTS SHALL NOT BE RESPONSIBLE FOR THE ACCURACY OR COMPLETENESS OF ELECTRONIC COPIES OF THIS PLAN SHEET.

Caltrans Metric

FOR COMPLETE RIGHT OF WAY AND ACCURATE ACCESS DATA, SEE RIGHT OF WAY RECORD MAPS AT DISTRICT OFFICE.

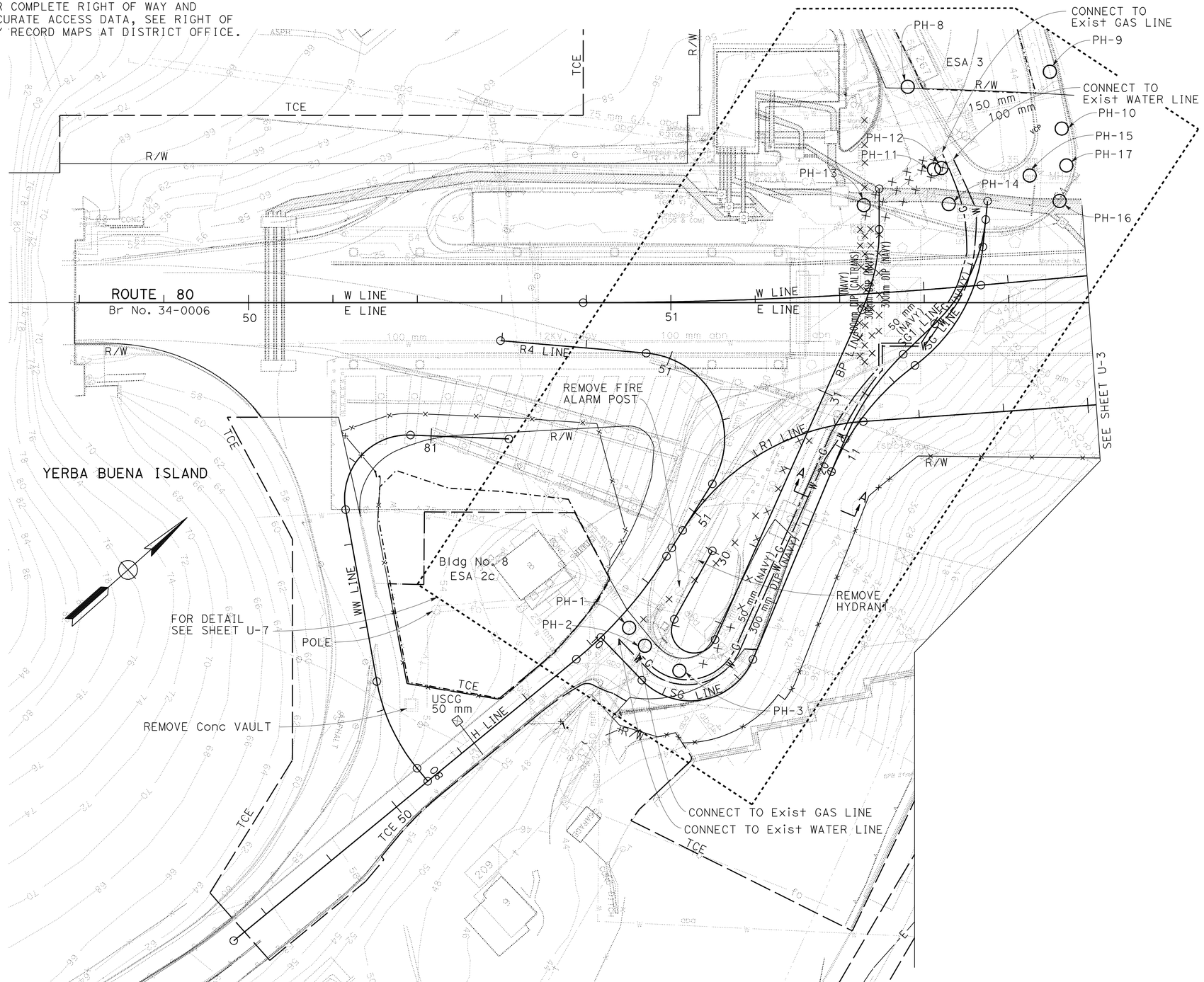

NOTE:

FOR SECTION A-A AND PROFILE, SEE SHEET UD-3.

FOR NOTES, ABBREVIATIONS &/OR LEGEND, SEE SHEET U-1

THIS PLAN ACCURATE FOR UTILITY WORK ONLY

ALL DIMENSIONS ARE IN METERS UNLESS OTHERWISE SHOWN

UTILITY PLAN

SCALE 1:500

U-2

STATE OF CALIFORNIA - DEPARTMENT OF TRANSPORTATION	Caltrans DESIGN
FUNCTIONAL SUPERVISOR	BOB ZANDIPOUR
CALCULATED-DESIGNED BY	ADAM SAYADI
CHECKED BY	AMANDO VITO
REVISED BY	AS
DATE REVISED	11-1-11

LAST REVISION 02-06-12 | DATE PLOTTED => 25-FEB-2012 | TIME PLOTTED => 08:32

Dist	COUNTY	ROUTE	KILOMETER POST TOTAL PROJECT	SHEET No.	TOTAL SHEETS
04	SF	80	12.6/13.9	132	821

REGISTERED CIVIL ENGINEER 11-07-11 DATE

2-21-12
PLANS APPROVAL DATE

REGISTERED PROFESSIONAL ENGINEER Ahmad Sayadi No. 74962 Exp. 12-31-11 CIVIL STATE OF CALIFORNIA

THE STATE OF CALIFORNIA OR ITS OFFICERS OR AGENTS SHALL NOT BE RESPONSIBLE FOR THE ACCURACY OR COMPLETENESS OF ELECTRONIC COPIES OF THIS PLAN SHEET.

Caltrans Metric

FOR COMPLETE RIGHT OF WAY AND ACCURATE ACCESS DATA, SEE RIGHT OF WAY RECORD MAPS AT DISTRICT OFFICE.

NOTES

1. FOR SECTION B-B, SEE SHEET UD-3.
2. FOR SECTION C-C, SEE SHEET UD-4.

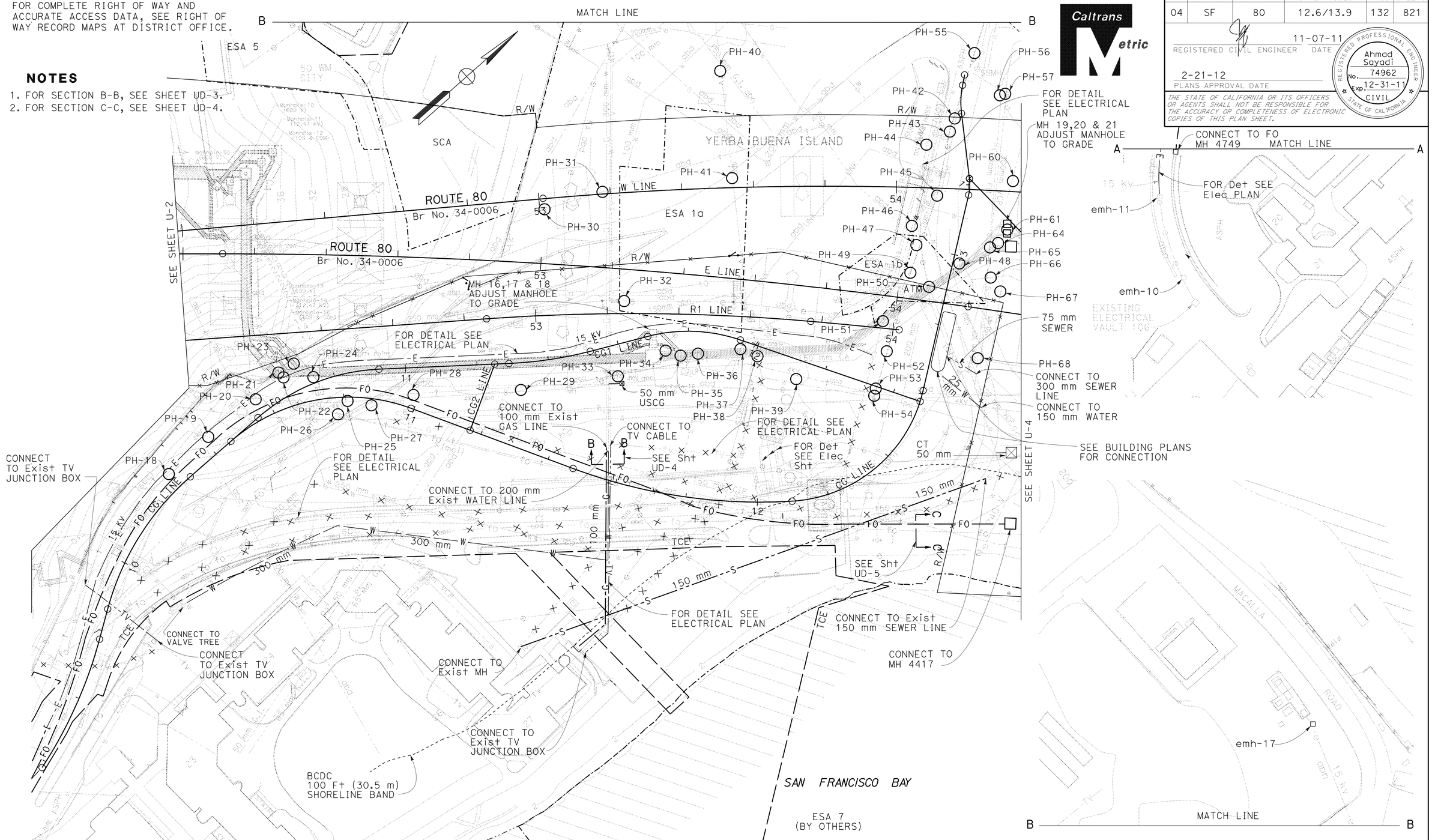

FOR NOTES, ABBREVIATIONS &/OR LEGEND, SEE SHEET U-1

THIS PLAN ACCURATE FOR UTILITY WORK ONLY

ALL DIMENSIONS ARE IN METERS UNLESS OTHERWISE SHOWN

UTILITY PLAN

SCALE 1:500

U-3

AS	11-1-11		
REVISED BY	DATE REVISED		
ADAM SAYADI	AMANDO VITO		
CALCULATED-DESIGNED BY	CHECKED BY		
FUNCTIONAL SUPERVISOR	BOB ZANDIPOUR		

STATE OF CALIFORNIA - DEPARTMENT OF TRANSPORTATION

Caltrans **DESIGN**

LAST REVISION 02-06-12 | DATE PLOTTED => 25-FEB-2012 | TIME PLOTTED => 08:32

Dist	COUNTY	ROUTE	KILOMETER POST TOTAL PROJECT	SHEET No.	TOTAL SHEETS
04	SF	80	12.6/13.9	133	821

REGISTERED CIVIL ENGINEER 11-07-11 DATE

2-21-12
PLANS APPROVAL DATE

REGISTERED PROFESSIONAL ENGINEER Ahmad Sayadi No. 74962 Exp. 12-31-11 CIVIL STATE OF CALIFORNIA

THE STATE OF CALIFORNIA OR ITS OFFICERS OR AGENTS SHALL NOT BE RESPONSIBLE FOR THE ACCURACY OR COMPLETENESS OF ELECTRONIC COPIES OF THIS PLAN SHEET.

Caltrans Metric

FOR COMPLETE RIGHT OF WAY AND ACCURATE ACCESS DATA, SEE RIGHT OF WAY RECORD MAPS AT DISTRICT OFFICE.

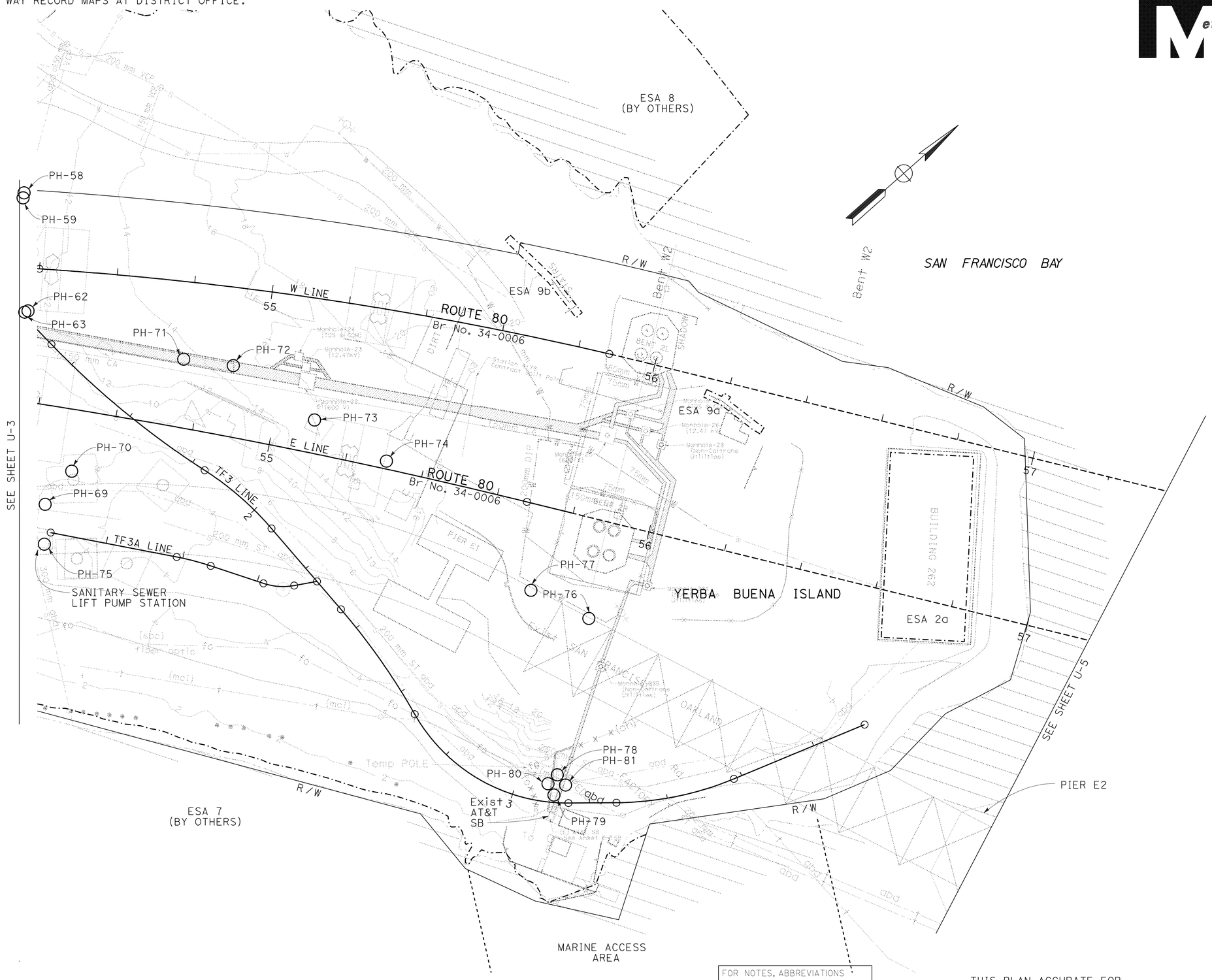

FOR NOTES, ABBREVIATIONS &/OR LEGEND, SEE SHEET U-1

THIS PLAN ACCURATE FOR UTILITY WORK ONLY

ALL DIMENSIONS ARE IN METERS UNLESS OTHERWISE SHOWN

UTILITY PLAN

SCALE 1:500

U-4

STATE OF CALIFORNIA - DEPARTMENT OF TRANSPORTATION	Caltrans DESIGN	FUNCTIONAL SUPERVISOR BOB ZANDIPOUR	CALCULATED-DESIGNED BY ADAM SAYADI
		CHECKED BY AMANDO VITO	REVISED BY AS
			DATE REVISED 11-1-11

LAST REVISION 01-18-12 DATE PLOTTED => 25-FEB-2012 TIME PLOTTED => 08:32

Dist	COUNTY	ROUTE	KILOMETER POST TOTAL PROJECT	SHEET No.	TOTAL SHEETS
04	SF	80	12.6/13.9	134	821

REGISTERED CIVIL ENGINEER 11-07-11 DATE

2-21-12
PLANS APPROVAL DATE

REGISTERED PROFESSIONAL ENGINEER Ahmad Sayadi No. 74962 Exp. 12-31-11 CIVIL STATE OF CALIFORNIA

THE STATE OF CALIFORNIA OR ITS OFFICERS OR AGENTS SHALL NOT BE RESPONSIBLE FOR THE ACCURACY OR COMPLETENESS OF ELECTRONIC COPIES OF THIS PLAN SHEET.

Caltrans Metric

FOR COMPLETE RIGHT OF WAY AND ACCURATE ACCESS DATA, SEE RIGHT OF WAY RECORD MAPS AT DISTRICT OFFICE.

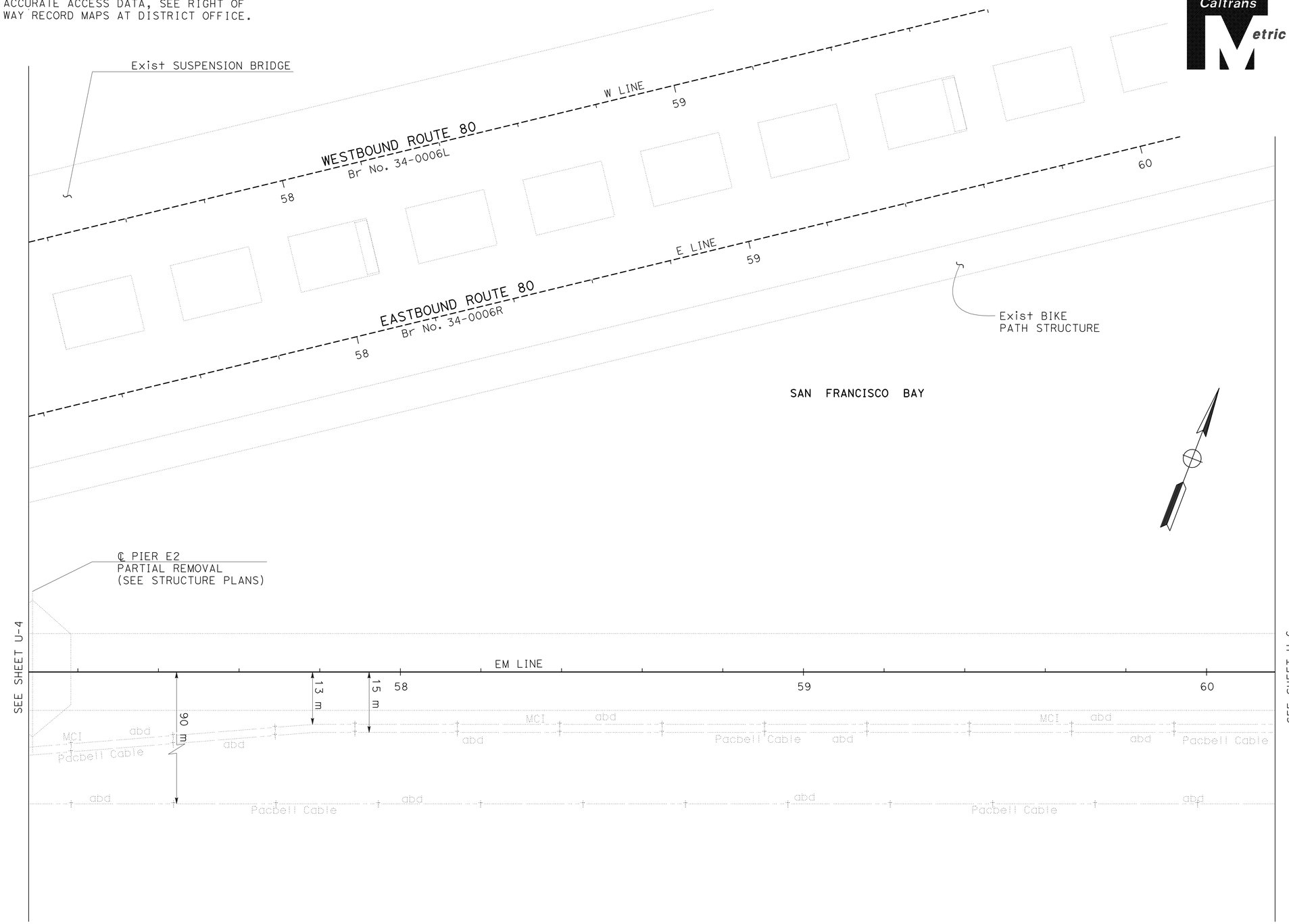

FOR NOTES, ABBREVIATIONS &/OR LEGEND, SEE SHEET U-1

THIS PLAN ACCURATE FOR UTILITY WORK ONLY

ALL DIMENSIONS ARE IN METERS UNLESS OTHERWISE SHOWN

UTILITY PLAN

SCALE 1:500

U-5

REVISED BY	DATE REVISED
AMANDO VITO	11-1-11

CALCULATED-DESIGNED BY
CHECKED BY

FUNCTIONAL SUPERVISOR
BOB ZANDIPOUR

STATE OF CALIFORNIA - DEPARTMENT OF TRANSPORTATION
Caltrans
DESIGN

LAST REVISION 10-24-11
DATE PLOTTED => 25-FEB-2012
TIME PLOTTED => 08:32

Dist	COUNTY	ROUTE	KILOMETER POST TOTAL PROJECT	SHEET No.	TOTAL SHEETS
04	SF	80	12.6/13.9	135	821

REGISTERED CIVIL ENGINEER 11-07-11 DATE

2-21-12
PLANS APPROVAL DATE

REGISTERED PROFESSIONAL ENGINEER Ahmad Sayadi No. 74962 Exp. 12-31-11 CIVIL STATE OF CALIFORNIA

THE STATE OF CALIFORNIA OR ITS OFFICERS OR AGENTS SHALL NOT BE RESPONSIBLE FOR THE ACCURACY OR COMPLETENESS OF ELECTRONIC COPIES OF THIS PLAN SHEET.

Caltrans Metric

FOR COMPLETE RIGHT OF WAY AND ACCURATE ACCESS DATA, SEE RIGHT OF WAY RECORD MAPS AT DISTRICT OFFICE.

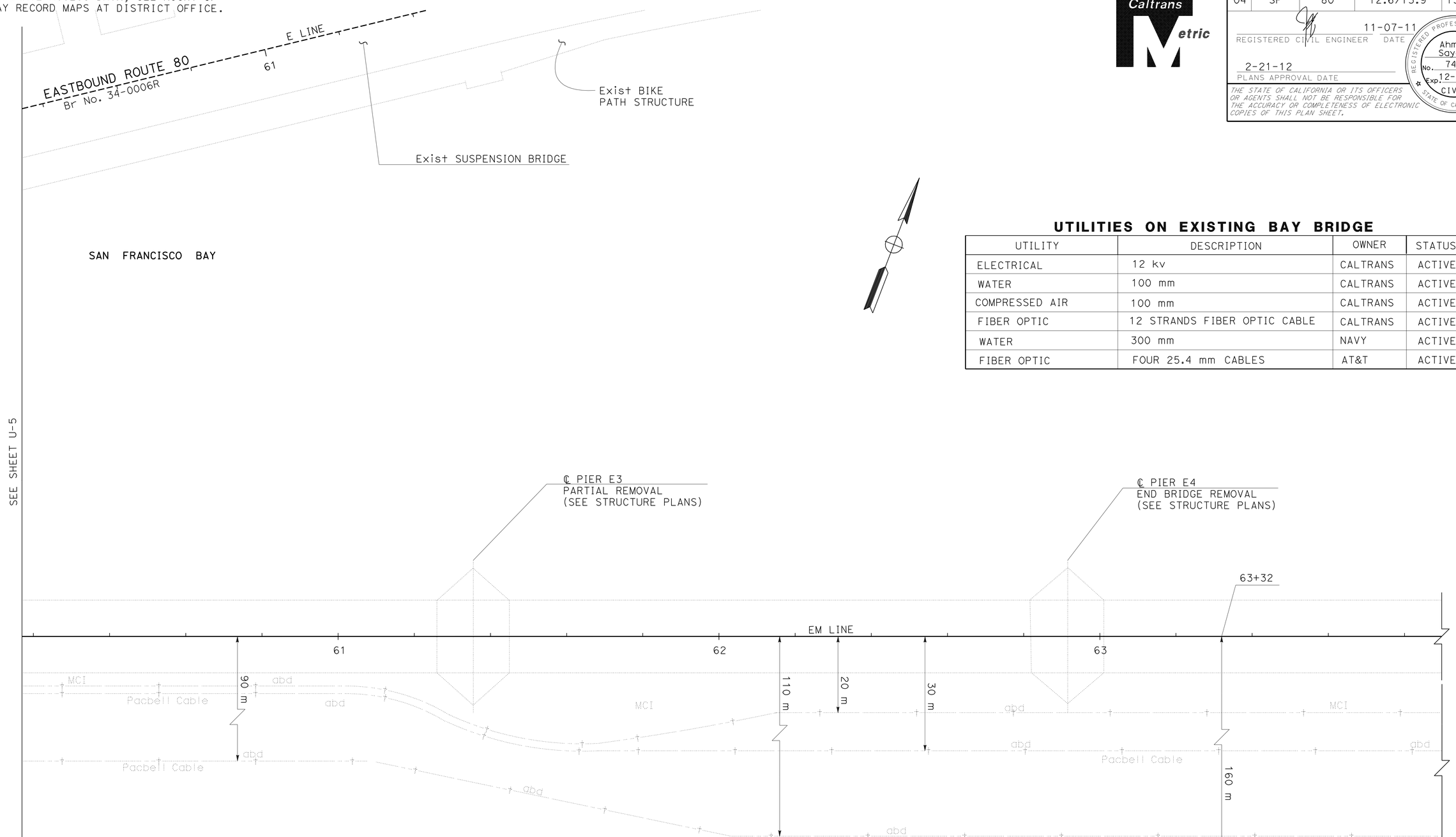

UTILITIES ON EXISTING BAY BRIDGE

UTILITY	DESCRIPTION	OWNER	STATUS
ELECTRICAL	12 kv	CALTRANS	ACTIVE
WATER	100 mm	CALTRANS	ACTIVE
COMPRESSED AIR	100 mm	CALTRANS	ACTIVE
FIBER OPTIC	12 STRANDS FIBER OPTIC CABLE	CALTRANS	ACTIVE
WATER	300 mm	NAVY	ACTIVE
FIBER OPTIC	FOUR 25.4 mm CABLES	AT&T	ACTIVE

FOR NOTES, ABBREVIATIONS &/OR LEGEND, SEE SHEET U-1

THIS PLAN ACCURATE FOR UTILITY WORK ONLY

ALL DIMENSIONS ARE IN METERS UNLESS OTHERWISE SHOWN

UTILITY PLAN

SCALE 1:500

U-6

REVISED BY	DATE REVISED
AMANDO VITO	11-1-11

CALCULATED-DESIGNED BY
CHECKED BY

FUNCTIONAL SUPERVISOR
BOB ZANDIPOUR

STATE OF CALIFORNIA - DEPARTMENT OF TRANSPORTATION
Caltrans
DESIGN

LAST REVISION 10-24-11
DATE PLOTTED => 25-FEB-2012
TIME PLOTTED => 08:32

Dist	COUNTY	ROUTE	KILOMETER POST TOTAL PROJECT	SHEET No.	TOTAL SHEETS
04	SF	80	12.6/13.9	136	821

REGISTERED CIVIL ENGINEER 11-07-11 DATE

2-21-12
PLANS APPROVAL DATE

REGISTERED PROFESSIONAL ENGINEER Ahmad Sayadi No. 74962 Exp. 12-31-11 CIVIL STATE OF CALIFORNIA

THE STATE OF CALIFORNIA OR ITS OFFICERS OR AGENTS SHALL NOT BE RESPONSIBLE FOR THE ACCURACY OR COMPLETENESS OF ELECTRONIC COPIES OF THIS PLAN SHEET.

Caltrans Metric

FOR COMPLETE RIGHT OF WAY AND ACCURATE ACCESS DATA, SEE RIGHT OF WAY RECORD MAPS AT DISTRICT OFFICE.

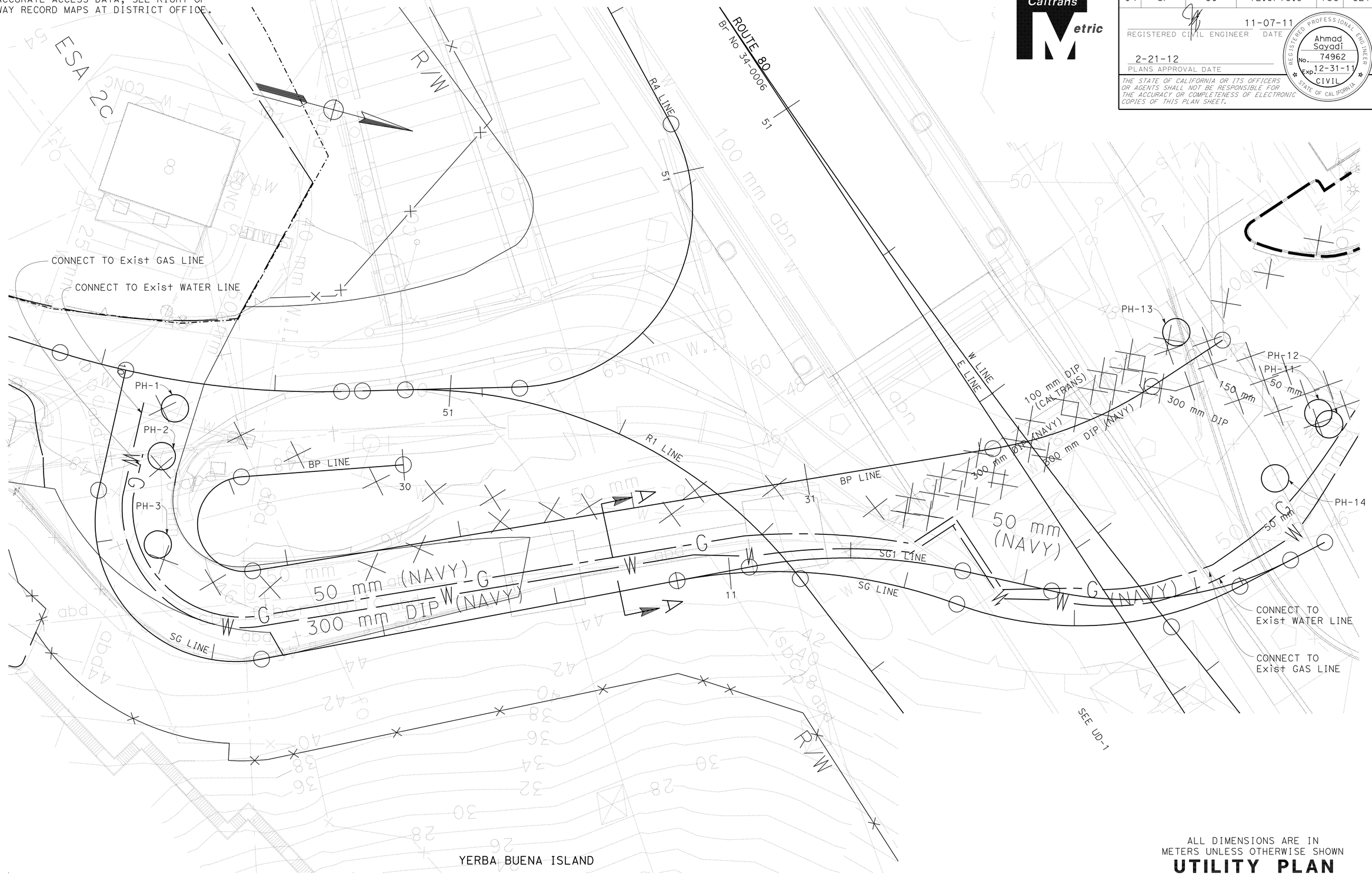

ALL DIMENSIONS ARE IN METERS UNLESS OTHERWISE SHOWN

UTILITY PLAN

NO SCALE

THIS PLAN ACCURATE FOR UTILITY WORK ONLY

U-7

STATE OF CALIFORNIA - DEPARTMENT OF TRANSPORTATION
Caltrans
DESIGN

FUNCTIONAL SUPERVISOR: BOB ZANDIPOUR
CALCULATED-DESIGNED BY: AMANDO VITO
CHECKED BY
REVISED BY
DATE REVISED 11-1-11

LAST REVISION 06-22-11
DATE PLOTTED => 25-FEB-2012
TIME PLOTTED => 08:33

Dist	COUNTY	ROUTE	KILOMETER POST TOTAL PROJECT	SHEET No.	TOTAL SHEETS
04	SF	80	12.6/13.9	137	821

Mark Grodzki 02/03/12
REGISTERED CIVIL ENGINEER DATE

2-21-12
PLANS APPROVAL DATE

REGISTERED PROFESSIONAL ENGINEER
Mark Grodzki
No. 65594
Exp. 09/30/13
CIVIL
STATE OF CALIFORNIA

THE STATE OF CALIFORNIA OR ITS OFFICERS OR AGENTS SHALL NOT BE RESPONSIBLE FOR THE ACCURACY OR COMPLETENESS OF ELECTRONIC COPIES OF THIS PLAN SHEET.

PB AMERICAS, Inc.
303 Second St., Suite 700N
San Francisco, CA 94107-1317

Caltrans Metric

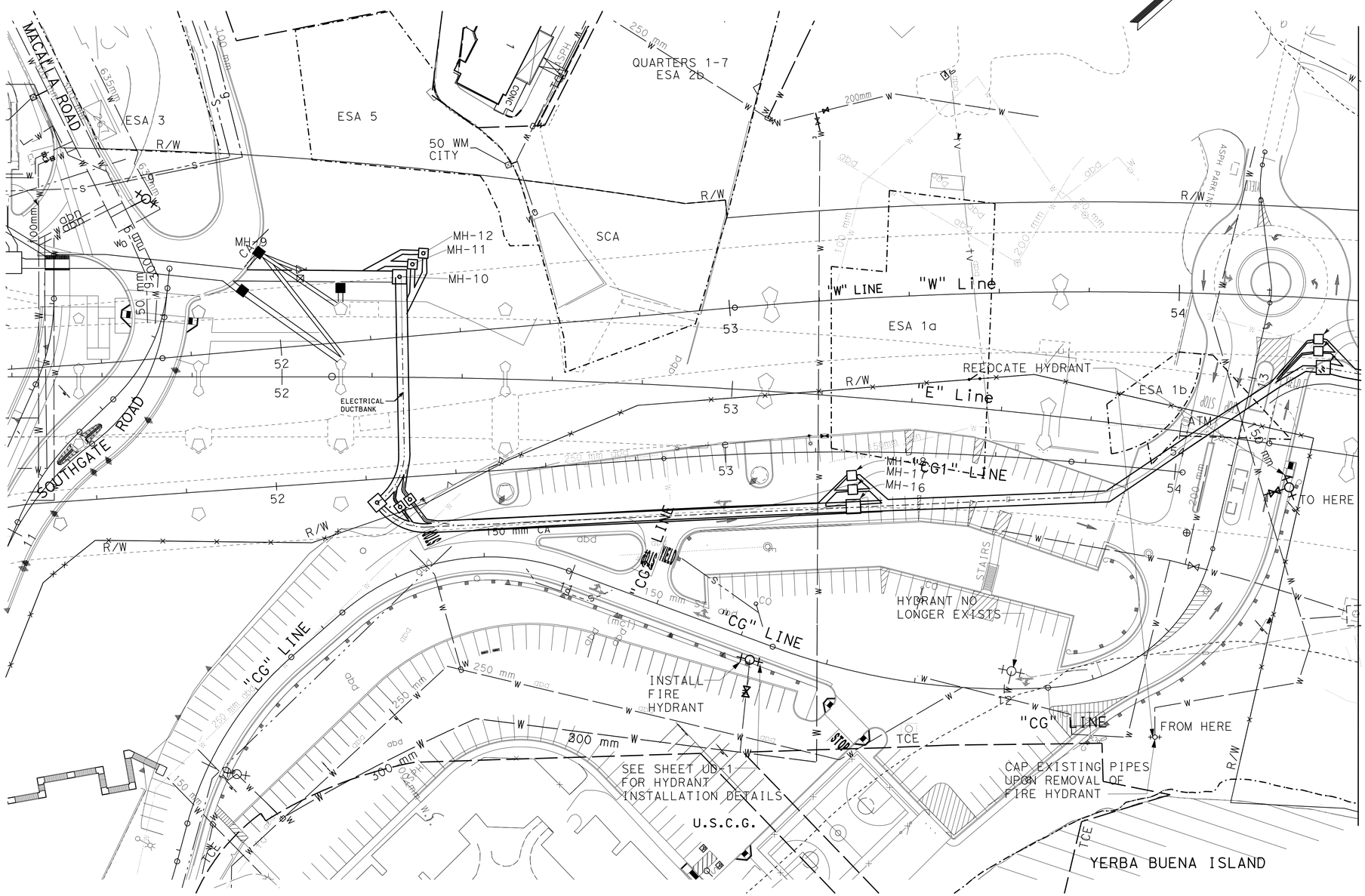

ALL DIMENSIONS ARE IN
METERS UNLESS OTHERWISE SHOWN

UTILITY PLAN
FIRE HYDRANT LAYOUT
SCALE 1:500

THIS PLAN ACCURATE FOR PAVEMENT DELINEATION WORK ONLY.

U-8

STATE OF CALIFORNIA - DEPARTMENT OF TRANSPORTATION
Caltrans

CONSULTANT FUNCTIONAL SUPERVISOR: BOB ZANDIPOUR
CALCULATED-DESIGNED BY: M. GRODZKI
CHECKED BY: B. NADELL
REVISED BY
DATE REVISED

LAST REVISION 00-00-00
DATE PLOTTED => 25-FEB-2012
TIME PLOTTED => 08:33

Dist	COUNTY	ROUTE	KILOMETER POST TOTAL PROJECT	SHEET No.	TOTAL SHEETS
04	SF	80	12.6/13.9	138	821

REGISTERED CIVIL ENGINEER 11-07-11 DATE

2-21-12
PLANS APPROVAL DATE

REGISTERED PROFESSIONAL ENGINEER Ahmad Sayadi No. 74962 Exp. 12-31-11 CIVIL STATE OF CALIFORNIA

THE STATE OF CALIFORNIA OR ITS OFFICERS OR AGENTS SHALL NOT BE RESPONSIBLE FOR THE ACCURACY OR COMPLETENESS OF ELECTRONIC COPIES OF THIS PLAN SHEET.

Caltrans Metric

POTHOLE LOCATION TABLE

SHEET	PH No.	N	E	GROUND Elev	DEPTH TOP	DEPTH BOTTOM	DESCRIPTION
U-2	1	647 084.171	1 835 935.967	48.152	0.910		200 mm PVC WATER PIPE
	2	647 084.019	1 835 941.477	47.874	0.640		50 mm GAS PIPE
	3	647 086.544	1 835 951.446	46.691	0.610		50 mm GAS PIPE
	4	647 228.376	1 835 850.118	52.390	0.635		100 mm GAS LINE
	5	647 259.172	1 835 862.414	38.680	1.168		150 mm STORM
	6	647 257.527	1 835 866.428	38.975	1.397		ELECTRICAL DUCT
	7	647 259.847	1 835 873.518	39.247	0.533		100 mm GAS LINE
	8	647 218.427	1 835 883.635	49.704	0.610		100 mm GAS LINE
	9	647 246.035	1 835 903.128	41.656	0.584		100 mm GAS LINE
	10	647 239.347	1 835 915.214	42.944	0.660		100 mm GAS PIPE
	11	647 209.977	1 835 902.540	47.955	1.240		300 mm PVC WATER PIPE
	12	647 211.541	1 835 903.414	47.918	0.690		100 mm GAS PIPE
	13	647 192.078	1 835 897.783	48.180	0.685		100 mm WATER
	14	647 207.362	1 835 910.928	47.188	0.635		100 mm GAS LINE
	15	647 226.121	1 835 918.288	44.720	1.016		300 mm WATER (STEEL PIPE)
	16	647 227.409	1 835 927.749	44.482	0.635		100 mm GAS LINE
	17	647 234.353	1 835 922.420	43.684	0.558		100 mm GAS PIPE
U-3	18	647 173.680	1 835 994.489	6.473	0.203		4.1 kV Elect DUCT (ABANDONED)
	19	647 188.837	1 835 994.002	6.718	0.127	0.483	4.1 kV Elect DUCT (ABANDONED)
	20	647 205.754	1 835 994.915	6.933	0.533	0.787	4.1 kV Elect DUCT (ABANDONED)
	21	647 215.151	1 835 992.913	7.050	0.259		Elect 25ø mm IP
	22	647 215.676	1 835 992.642	7.160	0.503		TELEPHONE CONDUITS
	23	647 227.948	1 835 994.359	7.436	0.320		ELECTRICAL 25ø mm IP
	24	647 221.290	1 835 998.634	7.315	0.792		150 mm SEWER (STEEL PIPE)
	25	647 224.602	1 836 012.282	6.944	0.305	0.762	4.1 kV Elect DUCT (ABANDONED)
	26	647 222.613	1 836 011.162	7.015	0.670		TELEPHONE CONCRETE DUCT
	27	647 228.672	1 836 015.551	6.678	0.838		150 mm SEWER
	28	647 239.488	1 836 023.237	5.324	0.508		4.1 kV Elect DUCT (ABANDONED)
	29	647 262.886	1 836 042.078	2.712	0.178	0.610	4.1 kV Elect DUCT (ABANDONED)
	30	647 301.281	1 836 008.688	11.070	0.180	0.600	TELEPHONE CONCRETE DUCT
	31	647 316.625	1 836 015.750	11.026	0.150	0.500	TELEPHONE CONCRETE DUCT
	32	647 294.057	1 836 036.632	8.057	0.244	0.472	Elect 25ø mm IPE/100 mm WATER
	33	647 285.691	1 836 057.200	2.934	0.051	0.406	ELECTRICAL (ABANDONED)
	34	647 304.249	1 836 064.321	7.767	1.890		WATER 50ø mm IP
	35	647 302.613	1 836 064.468	7.753	1.676		50 mm WATER/Elec (STEEL PIPE)
	36	647 306.601	1 836 067.257	7.633	2.286		UNKNOWN Dia WATER
	37	647 316.402	1 836 054.816	8.204	0.823	0.244	Elect 25ø mm IP/Elect 305ø mm IP UNKNOWN
	38	647 320.612	1 836 079.733	7.658	0.549		CATV -13 mm TV CABLE (ABANDONED)
	39	647 322.430	1 836 090.791	7.272	0.356	0.813	4.1 kV Elect DUCT (ABANDONED)
	40	647 351.742	1 836 029.671	11.015	0.244		CATV -13 mm TV CABLE (ABANDONED)

POTHOLE LOCATION TABLE

SHEET	PH No.	N	E	GROUND Elev	DEPTH TOP	DEPTH BOTTOM	DESCRIPTION
U-3	41	647 340.910	1 836 045.027	10.765	0.414		CATV -13 mm TV CABLE (ABANDONED)
	42	647 418.834	1 836 056.212	9.336	0.338		4.1 kV Elect DUCT (ABANDONED)
	43	647 400.405	1 836 067.454	9.008	0,229	0.584	4.1 kV Elect DUCT (ABANDONED)
	44	647 402.846	1 836 059.075	9.116	0.869		12 kV Elect DUCT
	45	647 385.889	1 836 078.450	8.723	0.686	1.143	4.1 kV Elect DUCT (ABANDONED)
	46	647 360.469	1 836 090.804	7.863	0.518	0.366	CATV -13 mm TV CABLE (ABANDONED)
	47	647 372.391	1 836 084.993	8.352	1.625		200 mm SEWER STEEL (ABANDONED)
	48	647 386.909	1 836 102.001	8.218	1.341		200 mm SEWER STEEL (ABANDONED)
	49	647 366.048	1 836 089.639	8.214 8.214	0.330 0.914		TELEPHONE DUCT 4.1 kV Elect DUCT (ABANDONED)
	50	647 367.281	1 836 096.078	8.222	1.194		400 mm WATER AC (ABANDONED)
	51	647 360.715	1 836 091.284	8.035	1.128		12 kV Elect DUCT
	52	647 346.523	1 836 101.699	7.348 7.348	0.432 0.737		TELEPHONE DUCT 4.1 kV Elect DUCT (ABANDONED)
	53	647 337.315	1 836 107.508	6.929	0.406	0.889	4.1 kV Elect DUCT (ABANDONED)
	54	647 335.685	1 836 108.716	6.959	0.254	0.991	4.1 kV Elect DUCT (ABANDONED)
	55	647 420.083	1 836 055.575	9.342	0.203	0.559	4.1 kV Elect DUCT (ABANDONED)
	56	647 417.606	1 836 069.129	9.527	1.371		150 mm SEWER FORCE MAIN DIP
	57	647 418.939	1 836 069.769	9.538	4.267		SEWER MH
U-4	58	647 417.724	1 836 079.731	9.922	1.090		150 mm SEWER DIP (ABANDONED)
U-4	59	647 418.530	1 836 080.885	10.228	1.371		150 mm SEWER DIP (ABANDONED)
U-3	60	647 404.423	1 836 089.462	9.301	1.190		150 mm SEWER DIP (ABANDONED)
U-3	61	647 394.219	1 836 098.563	8.643	0.890		150 mm SEWER DIP (ABANDONED)
U-4	62	647 398.406	1 836 103.125	9.078	0.940		150 mm WATER @ 3.30 m N OF CURB
U-4	63	647 397.558	1 836 102.807	9.005	0.940		150 mm WATER @ 2.92 m N OF CURB
U-3	64	647 389.866	1 836 099.677	8.426	1.270		150 mm SEWER FORCE MAIN DIP
	65	647 387.881	1 836 102.972	8.172	2.072		300 mm SEWER
	66	647 381.917	1 836 105.521	7.956	1.140		150 mm SEWER FORCE MAIN DIP
	67	647 381.384	1 836 110.250	7.573	1.120		150 mm SEWER DIP (ABANDONED)
	68	647 364.268	1 836 119.987	7.213	2.946		300 mm SEWER VCP
U-4	69	647 368.754	1 836 143.190	2.726	0.762		150 mm SEWER FORCE MAIN DIP
	70	647 379.468	1 836 141.375	3.990	0.910		150 mm SEWER DIP (ABANDONED)
	71	647 420.070	1 836 138.884	13.726	1.676		200 mm WATER AC
	72	647 428.499	1 836 148.546	15.225	0.737		200 mm WATER (STEEL PIPE)
	73	647 434.909	1 836 172.817	17.690	0.810		200 mm WATER @ 0.48 m N OF CURB
	74	647 441.684	1 836 192.934	19.303	0.790		200 mm WATER @ 2.41 m N OF CURB
	75	647 361.848	1 836 150.717	3.655	2.057		200 mm SEWER
	76	647 453.812	1 836 257.592	20.792	0.864		200 mm WATER (ABANDONED)
	77	647 447.467	1 836 242.344	20.486	0.787		200 mm WATER (ABANDONED)
	78	647 421.149	1 836 282.284	3.415	0.635		TELEPHONE CONDUITS
	79	647 416.944	1 836 285.638	3.373	0.864		TELEPHONE CONDUITS
	80	647 417.863	1 836 282.494	3.361	0.660		TELEPHONE Conc DUCT (ABANDONED)
	81	647 420.903	1 836 285 638	3.373	0.864		TELEPHONE Conc DUCT (ABANDONED)

FOR NOTES, ABBREVIATIONS &/OR LEGEND, SEE SHEET U-1

THIS PLAN ACCURATE FOR UTILITY WORK ONLY

ALL DIMENSIONS ARE IN METERS UNLESS OTHERWISE SHOWN

UTILITY PLAN

SCALE 1:500

U-9

LAST REVISION 08-15-11 DATE PLOTTED => 25-FEB-2012 TIME PLOTTED => 08:33

STATE OF CALIFORNIA - DEPARTMENT OF TRANSPORTATION
Caltrans DESIGN
FUNCTIONAL SUPERVISOR BOB ZANDIPOUR
CALCULATED-DESIGNED BY AMANDO VITO
CHECKED BY
REVISED BY
DATE REVISED 11-1-11

Dist	COUNTY	ROUTE	KILOMETER POST TOTAL PROJECT	SHEET No.	TOTAL SHEETS
04	SF	80	12.6/13.9	139	821

REGISTERED CIVIL ENGINEER 11-07-11 DATE

2-21-12
PLANS APPROVAL DATE

REGISTERED PROFESSIONAL ENGINEER Ahmad Sayadi No. 74962 Exp. 12-31-11 CIVIL STATE OF CALIFORNIA

THE STATE OF CALIFORNIA OR ITS OFFICERS OR AGENTS SHALL NOT BE RESPONSIBLE FOR THE ACCURACY OR COMPLETENESS OF ELECTRONIC COPIES OF THIS PLAN SHEET.

Caltrans Metric

ABANDONED GUY WIRE ANCHOR AND TIE-BACK ANCHOR

Ref No.	STATION	OFFSET	ELEVATION	DESCRIPTION
1	E 55+74.606	34.379 L†	19.620	GUY WIRE ANCHOR
2	E 55+82.741	33.894 L†	19.744	GUY WIRE ANCHOR
3	E 55+92.631	32.741 L†	19.881	GUY WIRE ANCHOR
4	E 55+95.582	32.510 L†	19.914	GUY WIRE ANCHOR
5	E 55+74.951	12.560 L†	20.417	GUY WIRE ANCHOR
6	E 55+77.404	12.011 L†	20.394	GUY WIRE ANCHOR
7	E 56+01.638	7.525 L†	20.704	GUY WIRE ANCHOR
8	E 56+06.946	9.497 L†	20.595	GUY WIRE ANCHOR
9	E 56+03.665	7.181 L†	20.712	SOUTH TIE-BACK ANCHOR
10	E 56+02.966	7.161 L†	20.695	SOUTH TIE-BACK ANCHOR
11	E 55+89.163	7.646 L†	20.420	SOUTH TOWER DEADMAN
12	E 55+83.101	8.683 L†	20.481	SOUTH TIE-BACK ANCHOR
13	E 55+81.420	8.631 L†	20.302	SOUTH TIE-BACK ANCHOR
14	E 55+77.338	8.877 L†	20.341	SOUTH TIE-BACK ANCHOR
15	E 55+77.156	8.300 L†	20.335	SOUTH TIE-BACK ANCHOR
16	E 55+76.685	9.622 L†	20.286	SOUTH TIE-BACK ANCHOR
17	E 55+77.027	10.606 L†	20.361	SOUTH TIE-BACK ANCHOR
18	E 55+99.702	31.990 L†	20.073	NORTH TIE-BACK ANCHOR
19	E 56+01.415	32.569 L†	19.869	NORTH TIE-BACK ANCHOR
20	E 55+96.130	31.842 L†	20.044	NORTH TIE-BACK ANCHOR
21	E 55+96.843	21.157 R†	21.247	GUY WIRE ANCHOR
22	E 55+81.770	18.677 R†	20.689	GUY WIRE ANCHOR
23	E 55+93.617	15.117 R†	20.882	GUY WIRE ANCHOR
24	E 55+77.764	12.157 R†	20.319	GUY WIRE ANCHOR
25	E 56+00.651	2.143 L†	20.601	GUY WIRE ANCHOR
26	E 55+84.798	5.103 L†	20.32	GUY WIRE ANCHOR
27	E 55+99.407	25.467 R†	21.495	GUY WIRE ANCHOR
28	E 55+95.401	18.967 R†	21.084	GUY WIRE ANCHOR
29	E 55+77.944	21.947 R†	20.71	GUY WIRE ANCHOR
30	E 55+73.947	15.437 R†	20.341	GUY WIRE ANCHOR
31	E 56+03.978	5.423 L†	20.552	GUY WIRE ANCHOR
32	E 56+00.472	11.933 L†	20.491	GUY WIRE ANCHOR
33	E 55+79.008	15.413 L†	20.338	GUY WIRE ANCHOR
34	E 55+93.822	20.677 R†	21.107	GUY WIRE ANCHOR
35	E 55+98.497	15.117 R†	21.019	GUY WIRE ANCHOR
36	E 55+76.029	16.767 R†	20.452	GUY WIRE ANCHOR
37	E 55+79.104	11.287 R†	20.322	GUY WIRE ANCHOR
38	E 55+99.312	0.773 L†	20.62	GUY WIRE ANCHOR
39	E 55+79.918	5.103 L†	20.265	GUY WIRE ANCHOR
40	E 55+84.593	10.663 L†	20.356	GUY WIRE ANCHOR
41	E 55+96.726	24.787 R†	21.41	GUY WIRE ANCHOR
42	E 56+00.720	18.277 R†	21.225	GUY WIRE ANCHOR
43	E 55+71.681	19.297 R†	20.42	GUY WIRE ANCHOR
44	E 55+75.675	12.777 R†	20.284	GUY WIRE ANCHOR
45	E 56+02.740	2.763 L†	20.594	GUY WIRE ANCHOR
46	E 56+06.734	9.283 L†	20.532	GUY WIRE ANCHOR
47	E 55+81.689	14.773 L†	20.351	GUY WIRE ANCHOR
48	E 55+79.222	31.188 L†	20.066	GUY WIRE ANCHOR
49	E 55+93.407	36.398 L†	18.081	GUY WIRE ANCHOR
50	E 55+99.532	53.198 L†	4.743	GUY WIRE ANCHOR
51	E 55+96.185	60.298 L†	1.299	GUY WIRE ANCHOR
52	E 55+85.007	57.638 L†	2.953	GUY WIRE ANCHOR
53	E 55+80.521	64.858 L†	2.644	GUY WIRE ANCHOR
54	E 55+78.155	40.558 L†	15.18	GUY WIRE ANCHOR
55	E 55+99.483	53.198 L†	4.749	GUY WIRE ANCHOR
56	E 55+99.439	57.098 L†	2.418	GUY WIRE ANCHOR
57	E 55+84.003	63.028 L†	1.771	GUY WIRE ANCHOR

FOR NOTES, ABBREVIATIONS &/OR LEGEND, SEE SHEET U-1

THIS PLAN ACCURATE FOR UTILITY WORK ONLY

UTILITY PLAN
U-10

REVISED BY	BW
DATE REVISED	5-25-11
ADAM SAYADI	
AMANDO VITO	
CALCULATED-DESIGNED BY	
CHECKED BY	
FUNCTIONAL SUPERVISOR	
BOB ZANDIPOUR	

STATE OF CALIFORNIA - DEPARTMENT OF TRANSPORTATION
Caltrans DESIGN

LAST REVISION 08-15-11 | DATE PLOTTED => 25-FEB-2012 | TIME PLOTTED => 08:33

Dist	COUNTY	ROUTE	KILOMETER POST TOTAL PROJECT	SHEET No.	TOTAL SHEETS
04	SF	80	12.6/13.9	140	821

Caltrans Metric

REGISTERED CIVIL ENGINEER 10/31/11 DATE

2-21-12
PLANS APPROVAL DATE

REGISTERED PROFESSIONAL ENGINEER Mark Grodzki No. 65594 Exp. 09/30/13 CIVIL STATE OF CALIFORNIA

THE STATE OF CALIFORNIA OR ITS OFFICERS OR AGENTS SHALL NOT BE RESPONSIBLE FOR THE ACCURACY OR COMPLETENESS OF ELECTRONIC COPIES OF THIS PLAN SHEET.

PB AMERICAS, Inc.
303 Second St., Suite 700N
San Francisco, CA 94107-1317

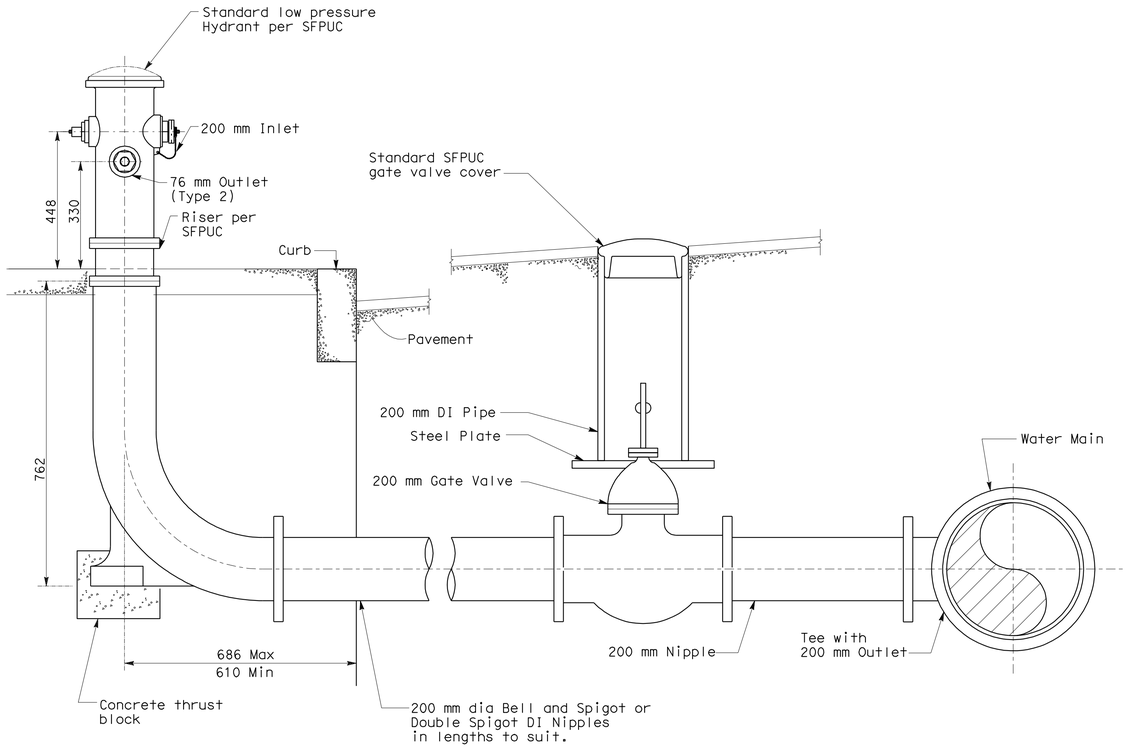

TYPICAL LAYOUT FOR HYDRANT CONNECTION

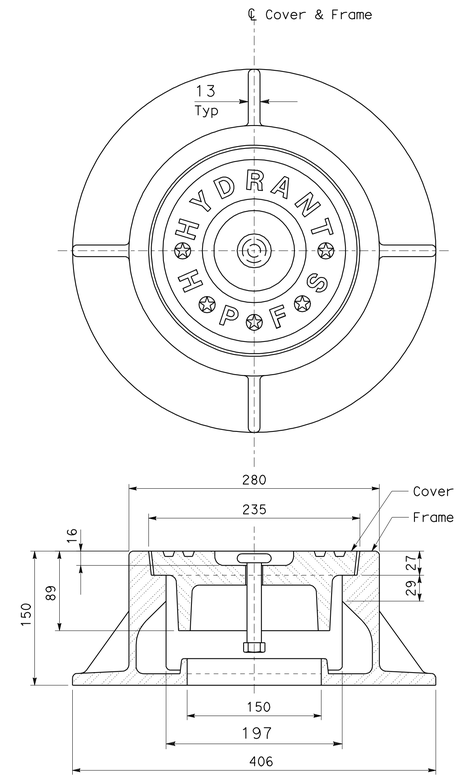

Approximate Weights:

Frame.....43 kgs
Cover.....12 kgs
Dust pan..... 4 kgs

Total...59 kgs

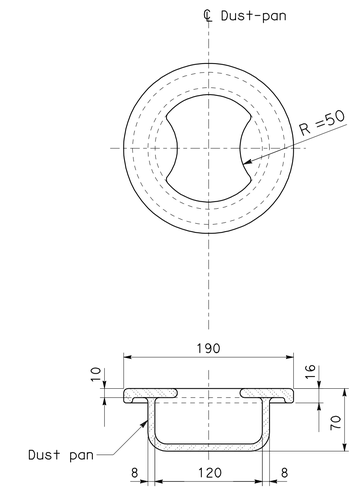

GATE VALVE COVER, FRAME AND DUST PAN DETAILS

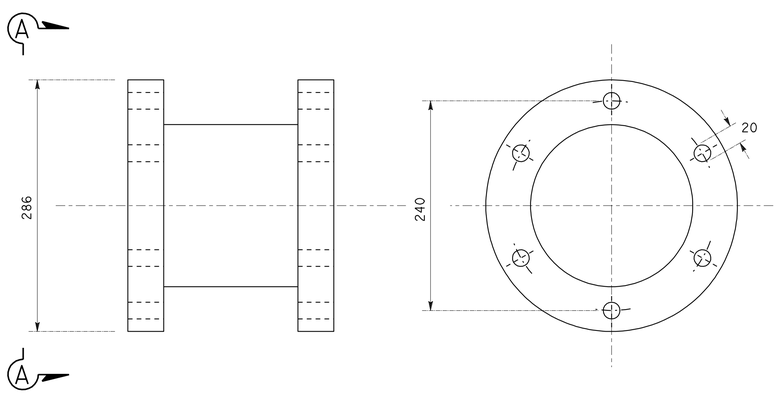

SECTION A-A

HYDRANT RISER

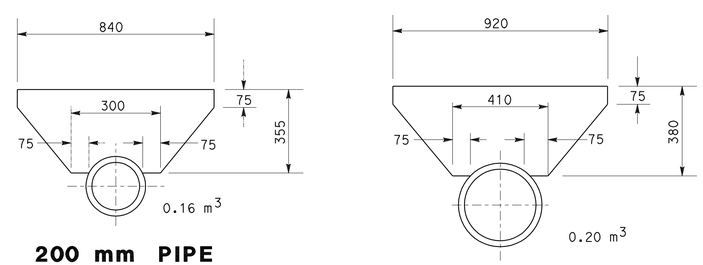

200 mm PIPE

300 mm PIPE

THRUST BLOCK DETAILS

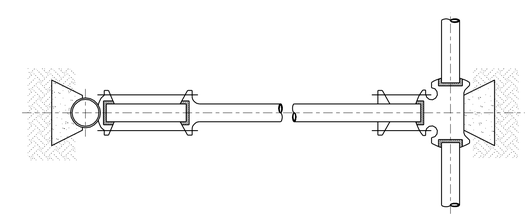

HYDRANT THRUST BLOCK LAYOUT

ALL DIMENSIONS ARE IN MILLIMETERS UNLESS OTHERWISE SHOWN

UTILITY DETAILS
CITY AND COUNTY OF SAN FRANCISCO

NO SCALE

UD-1

STATE OF CALIFORNIA - DEPARTMENT OF TRANSPORTATION
Caltrans

CONSULTANT FUNCTIONAL SUPERVISOR: BOB ZANDIPOUR
CALCULATED-DESIGNED BY: M. GRODZKI
CHECKED BY: B. NADELL
REVISED BY / DATE REVISED

LAST REVISION 00-00-00 | DATE PLOTTED => 25-FEB-2012 | TIME PLOTTED => 08:33

Dist	COUNTY	ROUTE	KILOMETER POST TOTAL PROJECT	SHEET No.	TOTAL SHEETS
04	SF	80	12.6/13.9	141	821

REGISTERED CIVIL ENGINEER 02/03/12 DATE

2-21-12
PLANS APPROVAL DATE

REGISTERED PROFESSIONAL ENGINEER Mark Grodzki No. 65594 Exp. 09/30/13 CIVIL STATE OF CALIFORNIA

THE STATE OF CALIFORNIA OR ITS OFFICERS OR AGENTS SHALL NOT BE RESPONSIBLE FOR THE ACCURACY OR COMPLETENESS OF ELECTRONIC COPIES OF THIS PLAN SHEET.

PB AMERICAS, Inc.
303 Second St., Suite 700N
San Francisco, CA 94107-1317

Caltrans Metric

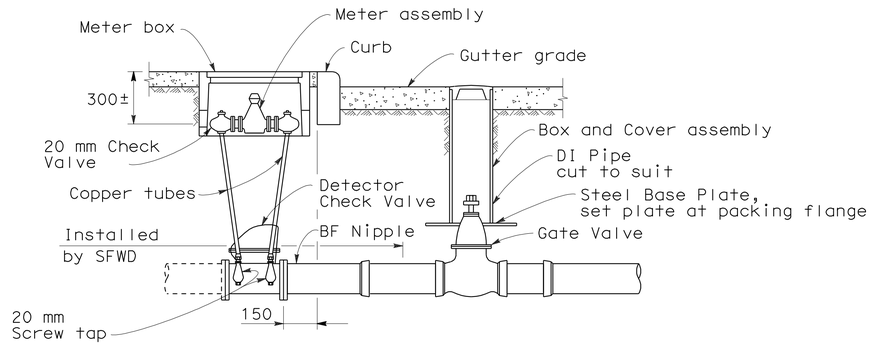

GATE VALVE	BOX
Stop Cock	150 mm
100 mm	150 mm
150 mm	150 mm
200 mm	200 mm
305 mm	200 mm
405 mm	200 mm

GATE VALVE AND METER ASSEMBLY

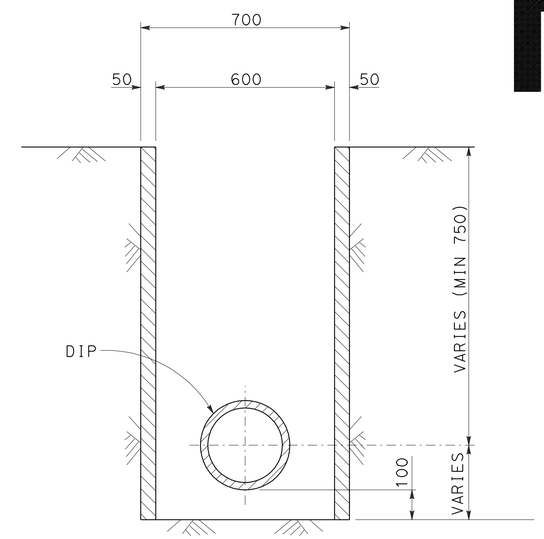

TRENCH EXCAVATION WITH LAGGING DETAIL

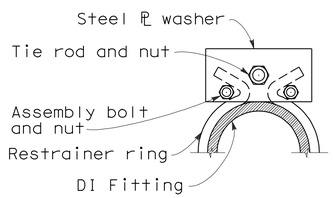

SECTION A-A

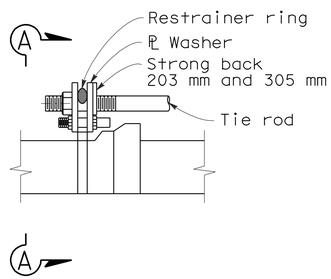

TIE RODS	
PIPE SIZE	ROD SIZE
100 mm	15 mm
150 mm	15 mm
200 mm	20 mm
305 mm	25 mm
405 mm	30 mm

RESTRAINER RING

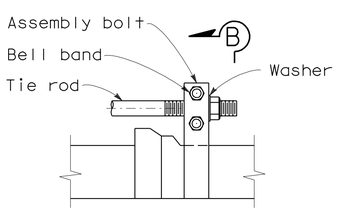

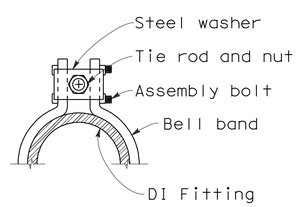

SECTION B-B

BELL BAND

NOTES:

1. All materials shown on the plans shall be assembled and installed by the contractor except where noted otherwise.
2. All fittings 25 mm or less shall be brass unless otherwise shown on the plans.
3. All water meters to be furnished and installed by SFWD.
4. Tie new angle cock just to the right of and approximately 25 mm below existing angle cock.

ALL DIMENSIONS ARE IN MILLIMETERS UNLESS OTHERWISE SHOWN

UTILITY DETAILS
CITY AND COUNTY OF SAN FRANCISCO
NO SCALE

UD-2

LAST REVISION 00-00-00 | DATE PLOTTED => 25-FEB-2012 | TIME PLOTTED => 08:33

STATE OF CALIFORNIA - DEPARTMENT OF TRANSPORTATION
Caltrans

CONSULTANT FUNCTIONAL SUPERVISOR: BOB ZANDIPOUR
CALCULATED-DESIGNED BY: M. GRODZKI
CHECKED BY: B. NADELL
REVISED BY | DATE REVISED

Dist	COUNTY	ROUTE	KILOMETER POST TOTAL PROJECT	SHEET No.	TOTAL SHEETS
04	SF	80	12.6/13.9	142	821

REGISTERED CIVIL ENGINEER 11-07-11 DATE

2-21-12
PLANS APPROVAL DATE

REGISTERED PROFESSIONAL ENGINEER Ahmad Sayadi No. 74962 Exp. 12-31-11 CIVIL STATE OF CALIFORNIA

THE STATE OF CALIFORNIA OR ITS OFFICERS OR AGENTS SHALL NOT BE RESPONSIBLE FOR THE ACCURACY OR COMPLETENESS OF ELECTRONIC COPIES OF THIS PLAN SHEET.

Caltrans Metric

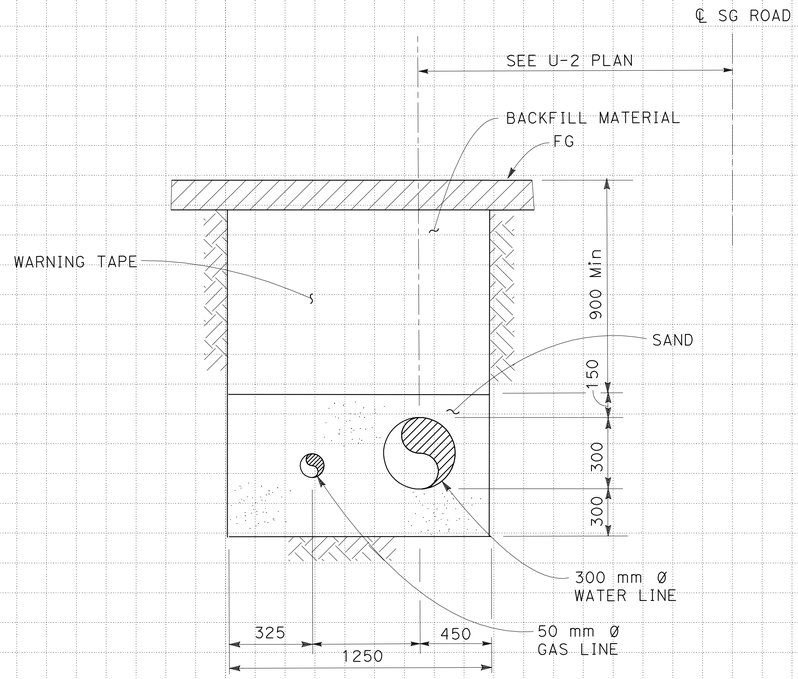

SECTION A-A
Sta 10+11 TO 11+70.498

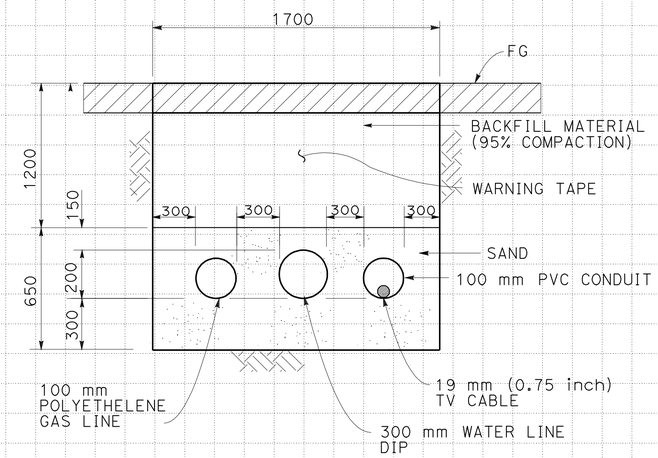

SECTION B-B
NO SCALE

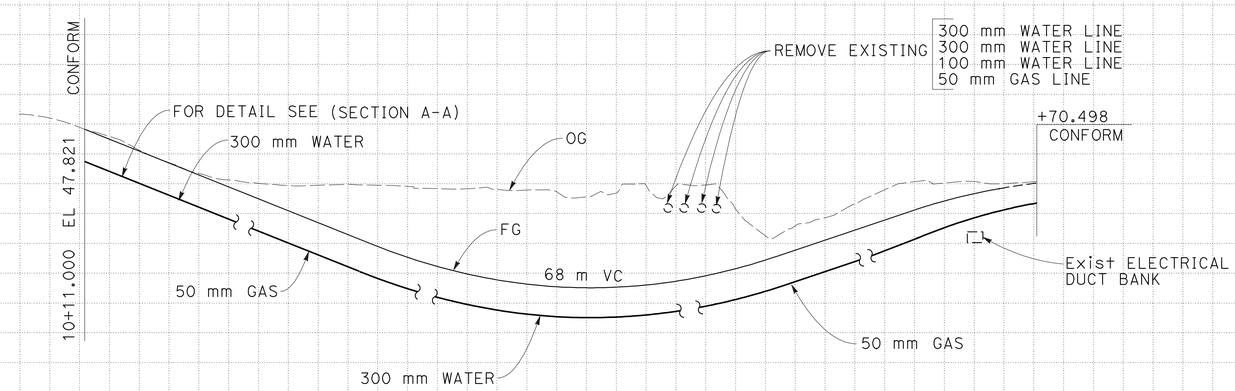

SG UTILITY PROFILE

ALL DIMENSIONS ARE IN
METERS UNLESS OTHERWISE SHOWN

UTILITY DETAILS

NO SCALE

UD-3

Station: 10 +20 +40 +60 +80 11 +20 +40 +60 +80

m Emb

STATE OF CALIFORNIA - DEPARTMENT OF TRANSPORTATION
Caltrans **DESIGN**

FUNCTIONAL SUPERVISOR: BOB ZANDIPOUR
CALCULATED-DESIGNED BY: AMANDO VITO
CHECKED BY: ADAM SAYADI
REVISED BY: AS
DATE REVISED: 10/10

LAST REVISION 02-06-12
DATE PLOTTED => 25-FEB-2012
TIME PLOTTED => 08:33

Dist	COUNTY	ROUTE	KILOMETER POST TOTAL PROJECT	SHEET No.	TOTAL SHEETS
04	SF	80	12.6/13.9	143	821

REGISTERED CIVIL ENGINEER 11-07-11 DATE

2-21-12
PLANS APPROVAL DATE

REGISTERED PROFESSIONAL ENGINEER Ahmad Sayadi No. 74962 Exp. 12-31-11 CIVIL STATE OF CALIFORNIA

THE STATE OF CALIFORNIA OR ITS OFFICERS OR AGENTS SHALL NOT BE RESPONSIBLE FOR THE ACCURACY OR COMPLETENESS OF ELECTRONIC COPIES OF THIS PLAN SHEET.

Caltrans Metric

NOTE: FIBER OPTIC CABLE TO BE INSTALLED BY OTHERS.

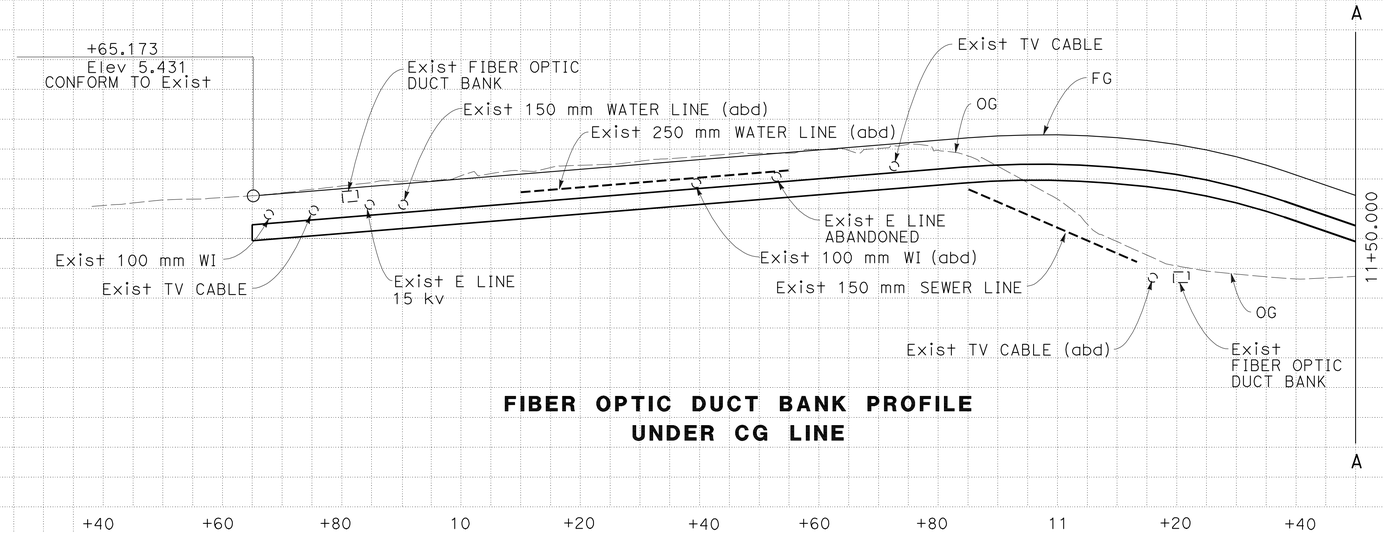

FIBER OPTIC DUCT BANK PROFILE
UNDER CG LINE

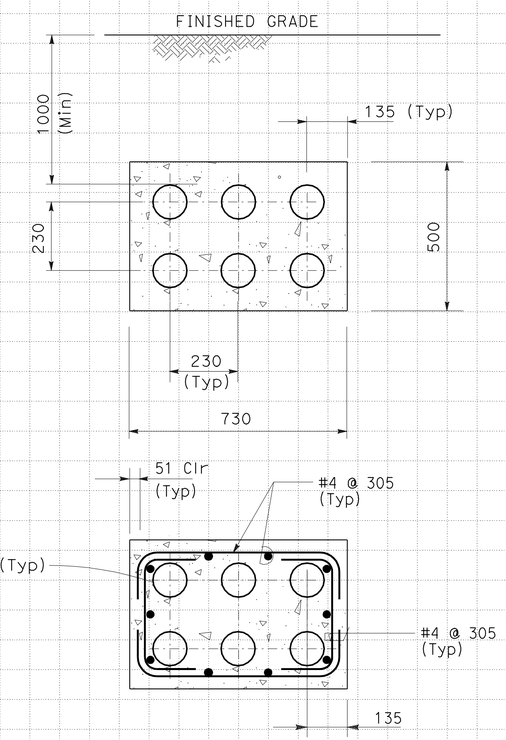

SECTION C-C

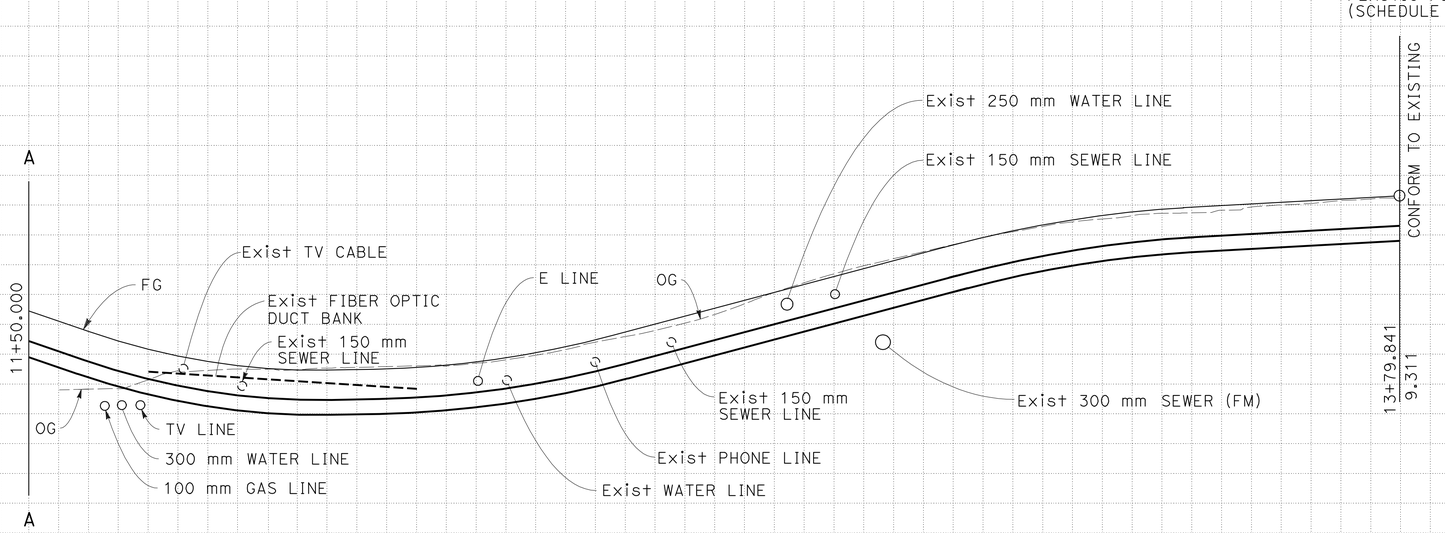

FIBER OPTIC DUCT BANK PROFILE
UNDER CG LINE

ALL DIMENSIONS ARE IN METERS UNLESS OTHERWISE SHOWN

UTILITY DETAILS

NO SCALE

UD-4

Station	+40	+60	+80	12	+20	+40	+60	+80	13	+20	+40	+60	+80
m^3 Exc													
m^3 Emb													

REVISED BY	DATE REVISED
AS	11-1-11

ADAM SAYADI — AMANDO VITO — CALCULATED-DESIGNED BY — CHECKED BY

FUNCTIONAL SUPERVISOR: BOB ZANDIPOUR

STATE OF CALIFORNIA - DEPARTMENT OF TRANSPORTATION — DESIGN — Caltrans

LAST REVISION 02-06-12 — DATE PLOTTED => 25-FEB-2012 — TIME PLOTTED => 08:34

Dist	COUNTY	ROUTE	KILOMETER POST TOTAL PROJECT	SHEET No.	TOTAL SHEETS
04	SF	80	12.6/13.9	144	821

REGISTERED CIVIL ENGINEER 11-07-11 DATE

2-21-12
PLANS APPROVAL DATE

REGISTERED PROFESSIONAL ENGINEER Ahmad Sayadi No. 74962 Exp. 12-31-11 CIVIL STATE OF CALIFORNIA

THE STATE OF CALIFORNIA OR ITS OFFICERS OR AGENTS SHALL NOT BE RESPONSIBLE FOR THE ACCURACY OR COMPLETENESS OF ELECTRONIC COPIES OF THIS PLAN SHEET.

Caltrans Metric

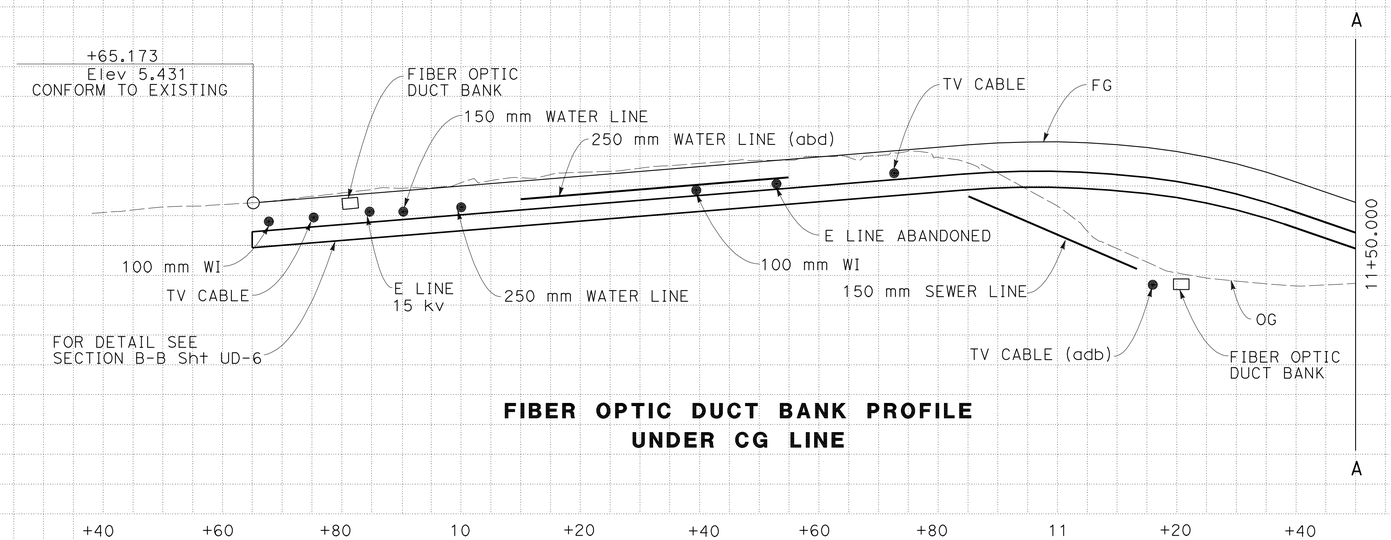

FIBER OPTIC DUCT BANK PROFILE UNDER CG LINE

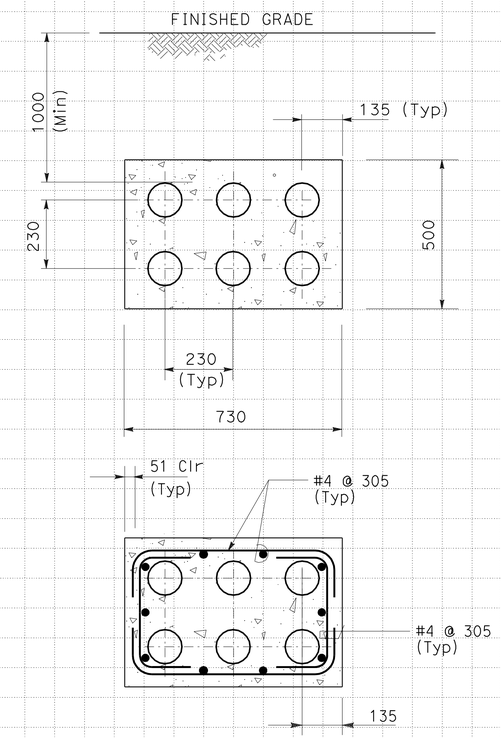

SECTION C-C

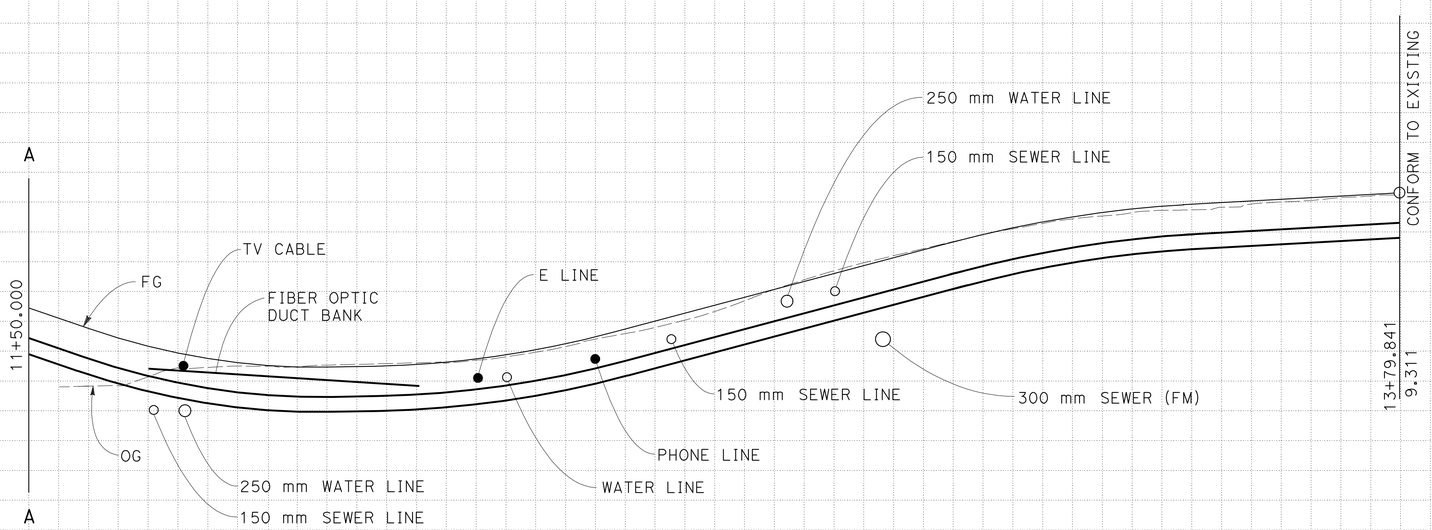

FIBER OPTIC DUCT BANK PROFILE UNDER CG LINE

ALL DIMENSIONS ARE IN METERS UNLESS OTHERWISE SHOWN

UTILITY DETAILS

NO SCALE

UD-5

Station	+40	+60	+80	12	+20	+40	+60	+80	13	+20	+40	+60	+80
m^3 Exc													
m^3 Emb													

STATE OF CALIFORNIA - DEPARTMENT OF TRANSPORTATION
Caltrans DESIGN

FUNCTIONAL SUPERVISOR: BOB ZANDIPOUR
CALCULATED-DESIGNED BY: ADAM SAYADI
CHECKED BY: AMANDO VITO
REVISED BY: AS
DATE REVISED: 11-1-11

LAST REVISION 08-12-11
DATE PLOTTED => 25-FEB-2012
TIME PLOTTED => 08:34

Dist	COUNTY	ROUTE	KILOMETER POST TOTAL PROJECT	SHEET No.	TOTAL SHEETS
04	SF	80	12.6/13.9	145	821

REGISTERED CIVIL ENGINEER 11-07-11 DATE

2-21-12
PLANS APPROVAL DATE

REGISTERED PROFESSIONAL ENGINEER Ahmad Sayadi No. 74962 Exp. 12-31-11 CIVIL STATE OF CALIFORNIA

THE STATE OF CALIFORNIA OR ITS OFFICERS OR AGENTS SHALL NOT BE RESPONSIBLE FOR THE ACCURACY OR COMPLETENESS OF ELECTRONIC COPIES OF THIS PLAN SHEET.

Caltrans Metric

FIRE HYDRANT

SHEET No.	LOCATION		RELOCATE HYDRANT	REMOVE HYDRANT	INSTALL FIRE HYDRANT	OWNER
			EA			
U-2	SG 10+60	L+		1		NAVY
U-8	CG 11+47	R+			1	NAVY
U-8	CG 13+05	R+	1			NAVY
TOTAL			1	1	1	

WATER METERS

SHEET No.	LOCATION	METER SIZE (EA)		WATER METER BOX [N]	50 mm GATE VALVE [N]	OWNER	REMARK
		50 mm	75 mm				
U-2	95.0 m R+ E 50+50	1		1	1	COAST GUARD	LANDSCAPE
U-3	33.0 m R+ E 53+25	1		1	1	COAST GUARD	LANDSCAPE
U-3	37.0 m R+ E 54+40	1		1	1	CALTRANS	LANDSCAPE
TOTAL		3		3	3		

[N] NOT A SEPARATE PAY ITEM, FOR INFORMATION ONLY

REMOVE CONCRETE

SHEET No.	LOCATION	REMOVE CONCRETE	REMARK
		m^3	
U-2	L+ & R+ E 51+46	40	WATER AND GAS PIPES Conc CASING

NOTE: SEE Q SHEETS FOR TOTAL QUANTITY

UTILITY QUANTITIES

SHEET No.	LOCATION	GAS PIPE		WATER PIPE		SEWER PIPE 150 mm PVC	PLASTIC PIPE 100 mm (SCHEDULE 80)	ADJUST MANHOLE TO GRADE	OWNER
		50 mm PE	100 mm PE	25 mm Galv Stl	300 mm DIP				
		m						EA	
U-2	83 m R+ E 50+92 TO 35 m L+ E 51+65	183							NAVY
U-2	80 m R+ E 50+86 TO 33 m L+ E 51+67				184				NAVY
U-3	E 51+60 TO 54+30						2160		AT&T
U-3	E 53+00 TO 53+20								COMCAST
U-3	E 51+70 TO 52+00								COMCAST
U-3	E 52+10 TO 53+20				160				NAVY
U-3	E 54+15 TO 54+25			7					NAVY
U-3	E 53+00 TO 53+65					138			NAVY
U-3	E 54+00 TO 54+25		62			12			NAVY
U-3	17 m R+ E 53+30							3	
U-3	18 m R+ E 54+25							3	
TOTAL		183	62	7	344	150	2160	6	

MINOR CONCRETE (MINOR STRUCTURE)

SHEET No.	LOCATION	MINOR CONCRETE (MINOR STRUCTURE)	REMARK
		m^3	
U-3	E 51+60 TO 54+30	131	FIBER OPTIC DUCT BANK Conc CASING

NOTE: SEE Q SHEETS FOR TOTAL QUANTITY

REMOVAL QUANTITIES

SHEET No.	LOCATION	GAS PIPE 50 mm PE	WATER PIPE		FIBER OPTIC CABLE	SEWER PIPE 150 mm	CONCRETE VAULT 1.5 m x 1.5 m x 1.4 m	FIRE ALARM POST	OWNER
			250 mm DIP	300 mm DIP					
		m					EA		
U-2	SG 10+09 TO 11+20	84							NAVY
U-2	SG 10+05 TO 11+20			77					NAVY
U-2	15.00 m L+ SG 10+50							1	NAVY
U-2	4.00 m R+ WW 80+20						1		USCG
U-3	E 51+85 TO 53+20		190						NAVY
U-3	CG 10+00 TO 12+32				360				AT&T
U-3	E 52+60 TO 54+25					252			NAVY
U-3	E 51+70 TO 52+00								COMCAST
SUBTOTAL		84	190	77	360	252	1	1	
TOTAL		84	267		360	252	1	1	

UTILITY QUANTITIES

UQ-1

LAST REVISION 02-08-12 DATE PLOTTED => 25-FEB-2012 TIME PLOTTED => 08:34

STATE OF CALIFORNIA - DEPARTMENT OF TRANSPORTATION
Caltrans DESIGN

FUNCTIONAL SUPERVISOR BOB ZANDIPOUR

CALCULATED-DESIGNED BY ADAM SAYADI
CHECKED BY AMANDO VITO

REVISED BY AS
DATE REVISED 11-1-11

Dist	COUNTY	ROUTE	KILOMETER POST TOTAL PROJECT	SHEET No.	TOTAL SHEETS
04	SF	80	12.6/13.9	146	821

REGISTERED CIVIL ENGINEER 10/31/11 DATE

2-21-12
PLANS APPROVAL DATE

REGISTERED PROFESSIONAL ENGINEER Mark Grodzki No. 65594 Exp. 09/30/13 CIVIL STATE OF CALIFORNIA

THE STATE OF CALIFORNIA OR ITS OFFICERS OR AGENTS SHALL NOT BE RESPONSIBLE FOR THE ACCURACY OR COMPLETENESS OF ELECTRONIC COPIES OF THIS PLAN SHEET.

PB AMERICAS, Inc.
303 Second St., Suite 700N
San Francisco, CA 94107-1317

Caltrans Metric

GENERAL NOTES:

1. LOCATIONS OF CONSTRUCTION AREA SIGNS SHOWN ARE APPROXIMATE. EXACT LOCATIONS TO BE DETERMINED BY THE ENGINEER.
2. SEE STAGE CONSTRUCTION AND TRAFFIC HANDLING PLANS.

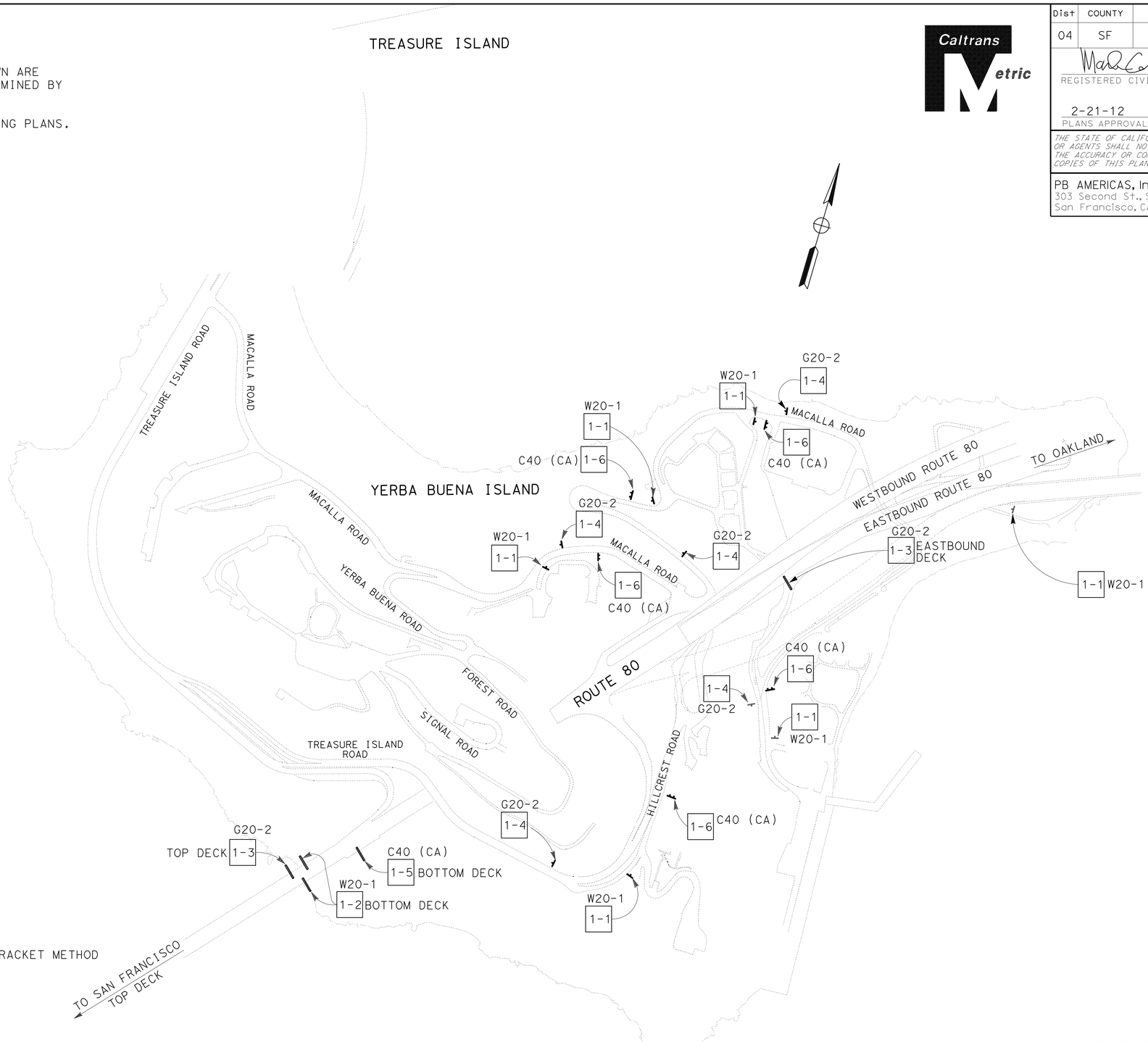

LEGEND:

- DETOUR
- # CONSTRUCTION AREA SIGN NUMBER
- (#) DETOUR NOTES
- ▲ EXISTING SIGN TO REMAIN
- ■ RELOCATE ROADSIDE SIGN
- ROADSIDE SIGN - SINGLE POST
- ROADSIDE SIGN - TWO POSTS
- ROADSIDE SIGN - STRAP AND SADDLE BRACKET METHOD
- XXXX CLOSED ROAD OR RAMP

ALL DIMENSIONS ARE IN METERS UNLESS OTHERWISE SHOWN

CONSTRUCTION AREA SIGNS

NO SCALE

THIS PLAN ACCURATE FOR CONSTRUCTION AREA SIGNS ONLY.

CS-1

REVISED BY	M. GRODZKI
DATE REVISED	B. NADELL
CALCULATED-DESIGNED BY	
CHECKED BY	
CONSULTANT FUNCTIONAL SUPERVISOR	BOB ZANDIPOUR

STATE OF CALIFORNIA - DEPARTMENT OF TRANSPORTATION
Caltrans

LAST REVISION 00-00-00 | DATE PLOTTED => 25-FEB-2012 | TIME PLOTTED => 08:34

Dist	COUNTY	ROUTE	KILOMETER POST TOTAL PROJECT	SHEET No.	TOTAL SHEETS
04	SF	80	12.6/13.9	147	821

REGISTERED CIVIL ENGINEER 10/31/11 DATE

2-21-12
PLANS APPROVAL DATE

REGISTERED PROFESSIONAL ENGINEER Mark Grodzki No. 65594 Exp. 09/30/13 CIVIL STATE OF CALIFORNIA

THE STATE OF CALIFORNIA OR ITS OFFICERS OR AGENTS SHALL NOT BE RESPONSIBLE FOR THE ACCURACY OR COMPLETENESS OF ELECTRONIC COPIES OF THIS PLAN SHEET.

PB AMERICAS, Inc.
303 Second St., Suite 700N
San Francisco, CA 94107-1317

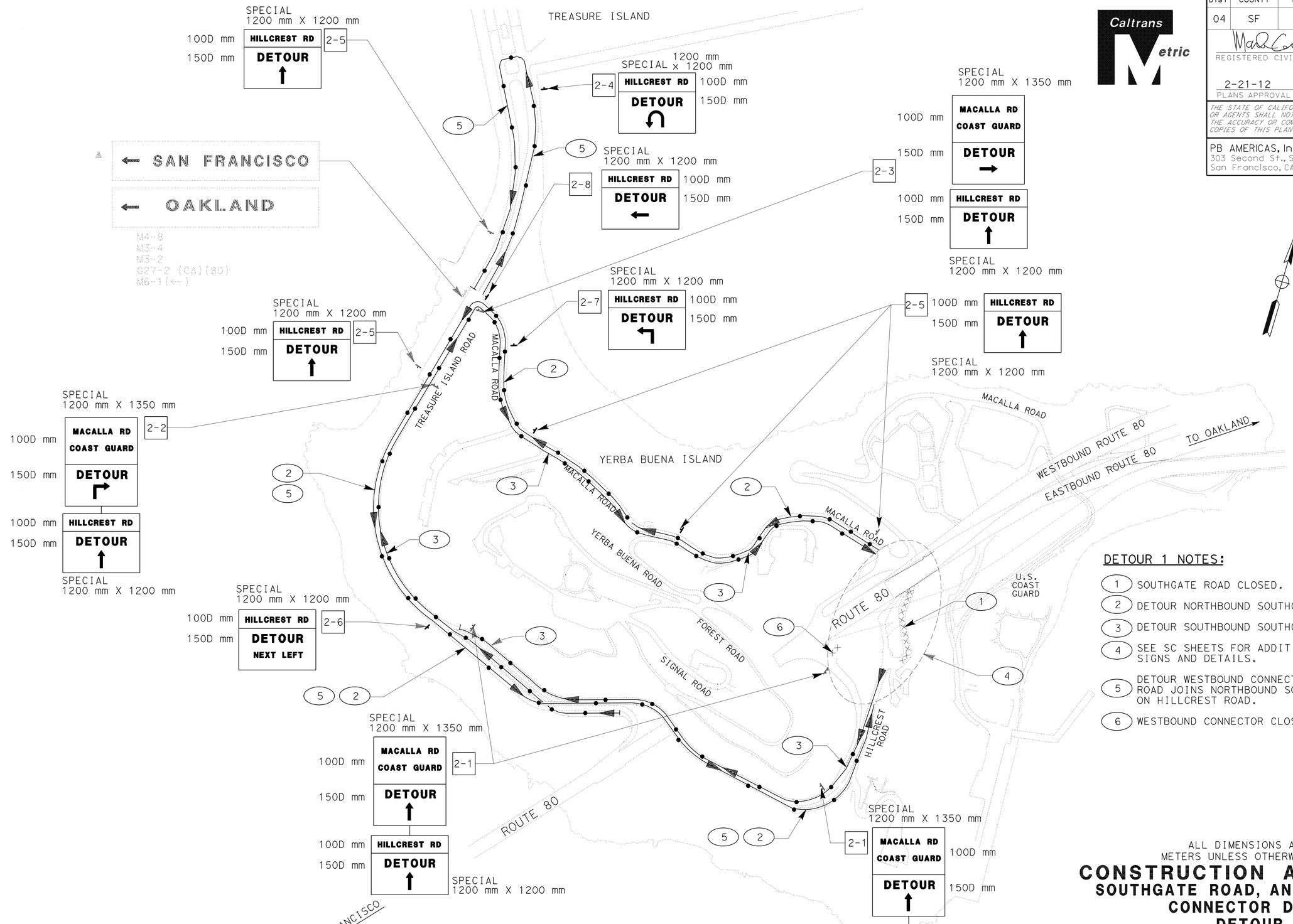

DETOUR 1 NOTES:

1. SOUTHGATE ROAD CLOSED.
2. DETOUR NORTHBOUND SOUTHGATE ROAD.
3. DETOUR SOUTHBOUND SOUTHGATE ROAD.
4. SEE SC SHEETS FOR ADDITIONAL CONSTRUCTION AREA SIGNS AND DETAILS.
5. DETOUR WESTBOUND CONNECTOR TO HILLCREST ROAD JOINS NORTHBOUND SOUTHGATE ROAD DETOUR ON HILLCREST ROAD.
6. WESTBOUND CONNECTOR CLOSED.

FOR GENERAL NOTES AND/OR LEGEND SEE SHEET CS-1

THIS PLAN ACCURATE FOR CONSTRUCTION AREA SIGNS ONLY.

ALL DIMENSIONS ARE IN METERS UNLESS OTHERWISE SHOWN

CONSTRUCTION AREA SIGNS
SOUTHGATE ROAD, AND WESTBOUND CONNECTOR DETOUR
DETOUR 1
NO SCALE

CS-2

STATE OF CALIFORNIA - DEPARTMENT OF TRANSPORTATION
Caltrans

CONSULTANT FUNCTIONAL SUPERVISOR: BOB ZANDIPOUR
CALCULATED-DESIGNED BY: M. GRODZKI
CHECKED BY: B. NADELL
REVISED BY / DATE REVISED

LAST REVISION 00-00-00 | DATE PLOTTED => 25-FEB-2012 | TIME PLOTTED => 08:34

Dist	COUNTY	ROUTE	KILOMETER POST TOTAL PROJECT	SHEET No.	TOTAL SHEETS
04	SF	80	12.6/13.9	148	821

REGISTERED CIVIL ENGINEER 10/31/11 DATE

2-21-12
PLANS APPROVAL DATE

REGISTERED PROFESSIONAL ENGINEER Mark Grodzki No. 65594 Exp. 09/30/13 CIVIL STATE OF CALIFORNIA

THE STATE OF CALIFORNIA OR ITS OFFICERS OR AGENTS SHALL NOT BE RESPONSIBLE FOR THE ACCURACY OR COMPLETENESS OF ELECTRONIC COPIES OF THIS PLAN SHEET.

PB AMERICAS, Inc.
303 Second St., Suite 700N
San Francisco, CA 94107-1317

Caltrans Metric

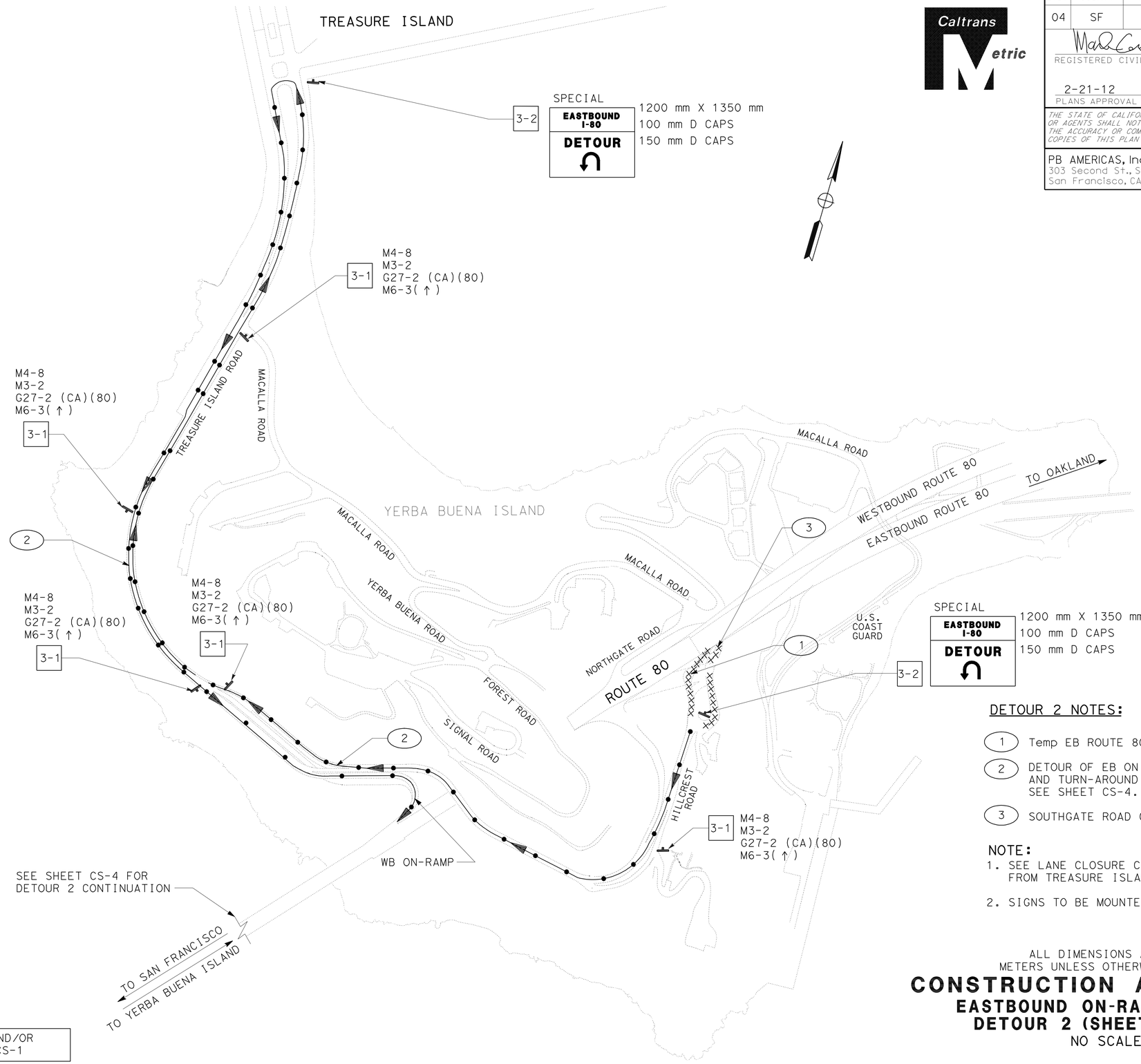

DETOUR 2 NOTES:

1. Temp EB ROUTE 80 ON-RAMP CLOSED.
2. DETOUR OF EB ON RAMP VIA WB ON-RAMP AND TURN-AROUND IN SAN FRANCISCO, SEE SHEET CS-4.
3. SOUTHGATE ROAD CLOSED SEE DETOUR 1.

NOTE:

1. SEE LANE CLOSURE CHART FOR EB ROUTE 80 ON-RAMP FROM TREASURE ISLAND ROAD.
2. SIGNS TO BE MOUNTED ON BARRICADES.

ALL DIMENSIONS ARE IN METERS UNLESS OTHERWISE SHOWN

CONSTRUCTION AREA SIGNS
EASTBOUND ON-RAMP DETOUR
DETOUR 2 (SHEET 1 OF 2)

NO SCALE

CS-3

FOR GENERAL NOTES AND/OR LEGEND SEE SHEET CS-1

THIS PLAN ACCURATE FOR CONSTRUCTION AREA SIGNS ONLY.

RM	3/03		
REVISED BY	DATE REVISED		
M. GRODZKI	B. NADELL		
CALCULATED-DESIGNED BY	CHECKED BY		
CONSULTANT FUNCTIONAL SUPERVISOR	BOB ZANDIPOUR		
STATE OF CALIFORNIA - DEPARTMENT OF TRANSPORTATION	Caltrans		

LAST REVISION 00-00-00 DATE PLOTTED => 25-FEB-2012 TIME PLOTTED => 08:34

Dist	COUNTY	ROUTE	KILOMETER POST TOTAL PROJECT	SHEET No.	TOTAL SHEETS
04	SF	80	12.6/13.9	149	821

REGISTERED CIVIL ENGINEER 10/31/11 DATE

2-21-12
PLANS APPROVAL DATE

REGISTERED PROFESSIONAL ENGINEER
Mark Grodzki
No. 65594
Exp. 09/30/13
CIVIL
STATE OF CALIFORNIA

THE STATE OF CALIFORNIA OR ITS OFFICERS OR AGENTS SHALL NOT BE RESPONSIBLE FOR THE ACCURACY OR COMPLETENESS OF ELECTRONIC COPIES OF THIS PLAN SHEET.

PB AMERICAS, Inc.
303 Second St., Suite 700N
San Francisco, CA 94107-1317

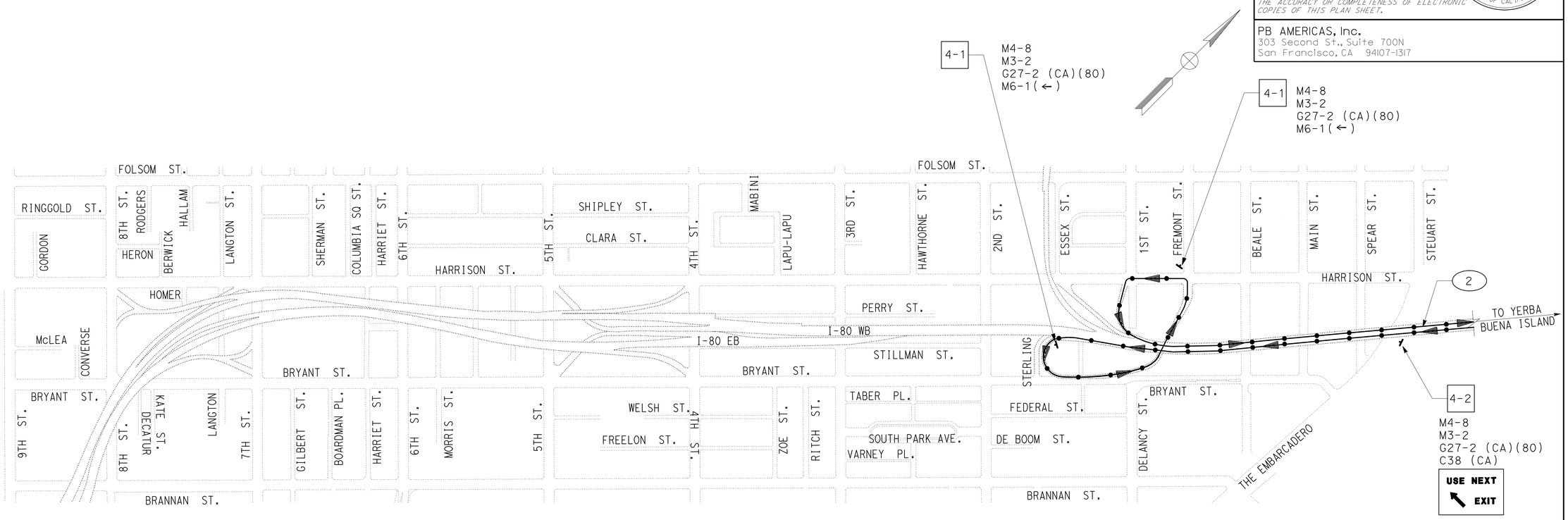

S A N F R A N C I S C O

ALL DIMENSIONS ARE IN
METERS UNLESS OTHERWISE SHOWN

CONSTRUCTION AREA SIGNS

EASTBOUND ROUTE 80 DETOUR
DETOUR 2 (SHEET 2 OF 2)

NO SCALE

THIS PLAN ACCURATE FOR CONSTRUCTION AREA SIGNS ONLY.

FOR GENERAL NOTES AND/OR LEGEND SEE SHEET CS-1

CS-4

M. GRODZKI			RM
B. NADELL		REVISED BY	3/03
CALCULATED-DESIGNED BY		DATE REVISED	
CHECKED BY			
CONSULTANT FUNCTIONAL SUPERVISOR			
BOB ZANDIPOUR			

STATE OF CALIFORNIA - DEPARTMENT OF TRANSPORTATION
Caltrans

LAST REVISION 00-00-00
DATE PLOTTED => 25-FEB-2012
TIME PLOTTED => 08:35

Dist	COUNTY	ROUTE	KILOMETER POST TOTAL PROJECT	SHEET No.	TOTAL SHEETS
04	SF	80	12.6/13.9	150	821

REGISTERED CIVIL ENGINEER 10/31/11 DATE

2-21-12
PLANS APPROVAL DATE

REGISTERED PROFESSIONAL ENGINEER Mark Grodzki No. 65594 Exp. 09/30/13 CIVIL STATE OF CALIFORNIA

THE STATE OF CALIFORNIA OR ITS OFFICERS OR AGENTS SHALL NOT BE RESPONSIBLE FOR THE ACCURACY OR COMPLETENESS OF ELECTRONIC COPIES OF THIS PLAN SHEET.

PB AMERICAS, Inc.
303 Second St., Suite 700N
San Francisco, CA 94107-1317

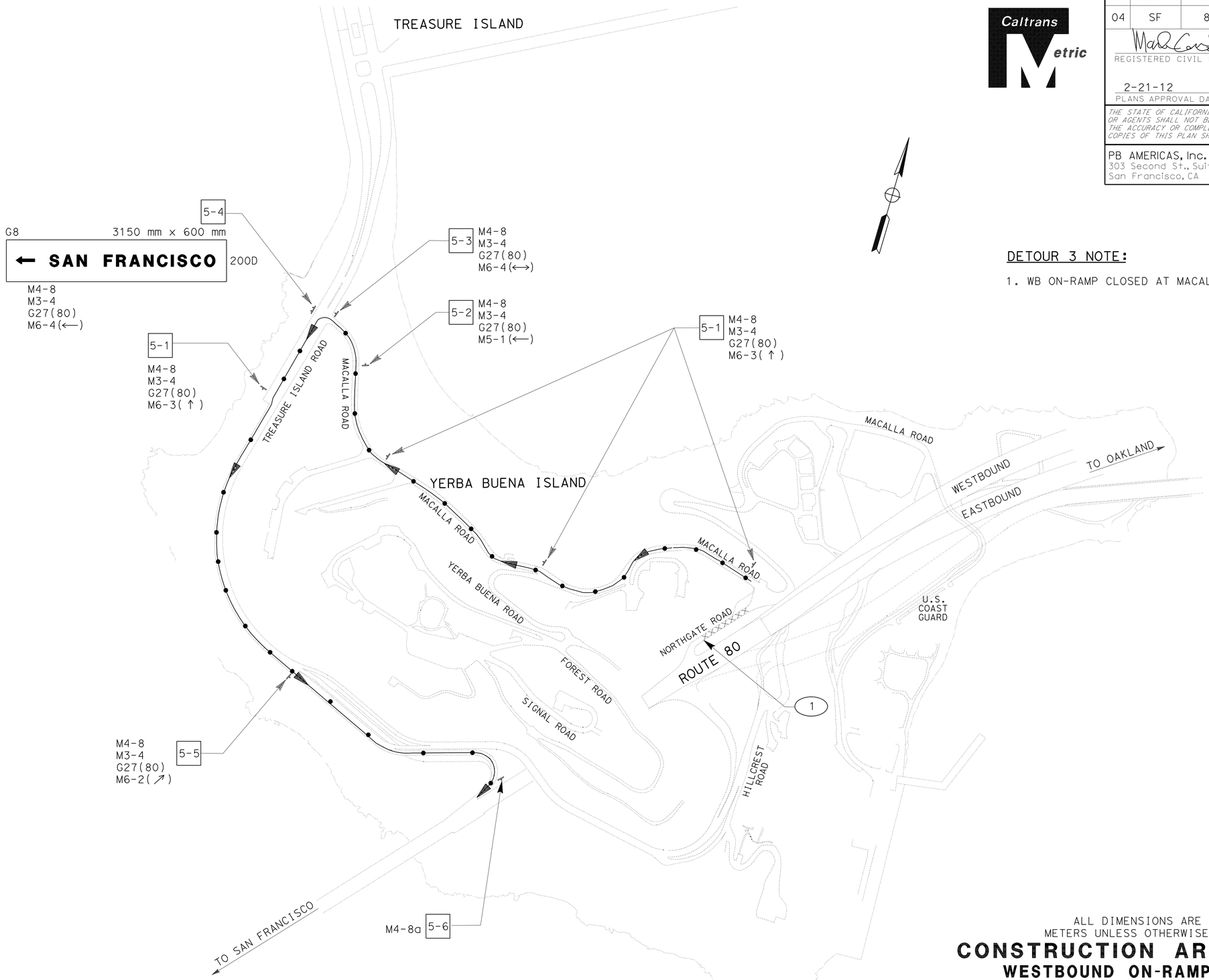

DETOUR 3 NOTE:

1. WB ON-RAMP CLOSED AT MACALLA ROAD.

FOR GENERAL NOTES AND/OR LEGEND SEE SHEET CS-1

ALL DIMENSIONS ARE IN METERS UNLESS OTHERWISE SHOWN

CONSTRUCTION AREA SIGNS
WESTBOUND ON-RAMP DETOUR
DETOUR 3
NO SCALE

THIS PLAN ACCURATE FOR CONSTRUCTION AREA SIGNS ONLY.

CS-5

STATE OF CALIFORNIA - DEPARTMENT OF TRANSPORTATION
Caltrans

CONSULTANT FUNCTIONAL SUPERVISOR: BOB ZANDIPOUR
CALCULATED-DESIGNED BY: M. GRODZKI
CHECKED BY: B. NADELL
REVISED BY: RM
DATE REVISED: 3/03

LAST REVISION 00-00-00
DATE PLOTTED => 25-FEB-2012
TIME PLOTTED => 08:35

Dist	COUNTY	ROUTE	KILOMETER POST TOTAL PROJECT	SHEET No.	TOTAL SHEETS
04	SF	80	12.6/13.9	151	821

REGISTERED CIVIL ENGINEER 10/31/11 DATE

2-21-12
PLANS APPROVAL DATE

REGISTERED PROFESSIONAL ENGINEER
Mark Grodzki
No. 65594
Exp. 09/30/13
CIVIL
STATE OF CALIFORNIA

THE STATE OF CALIFORNIA OR ITS OFFICERS OR AGENTS SHALL NOT BE RESPONSIBLE FOR THE ACCURACY OR COMPLETENESS OF ELECTRONIC COPIES OF THIS PLAN SHEET.

PB AMERICAS, Inc.
303 Second St., Suite 700N
San Francisco, CA 94107-1317

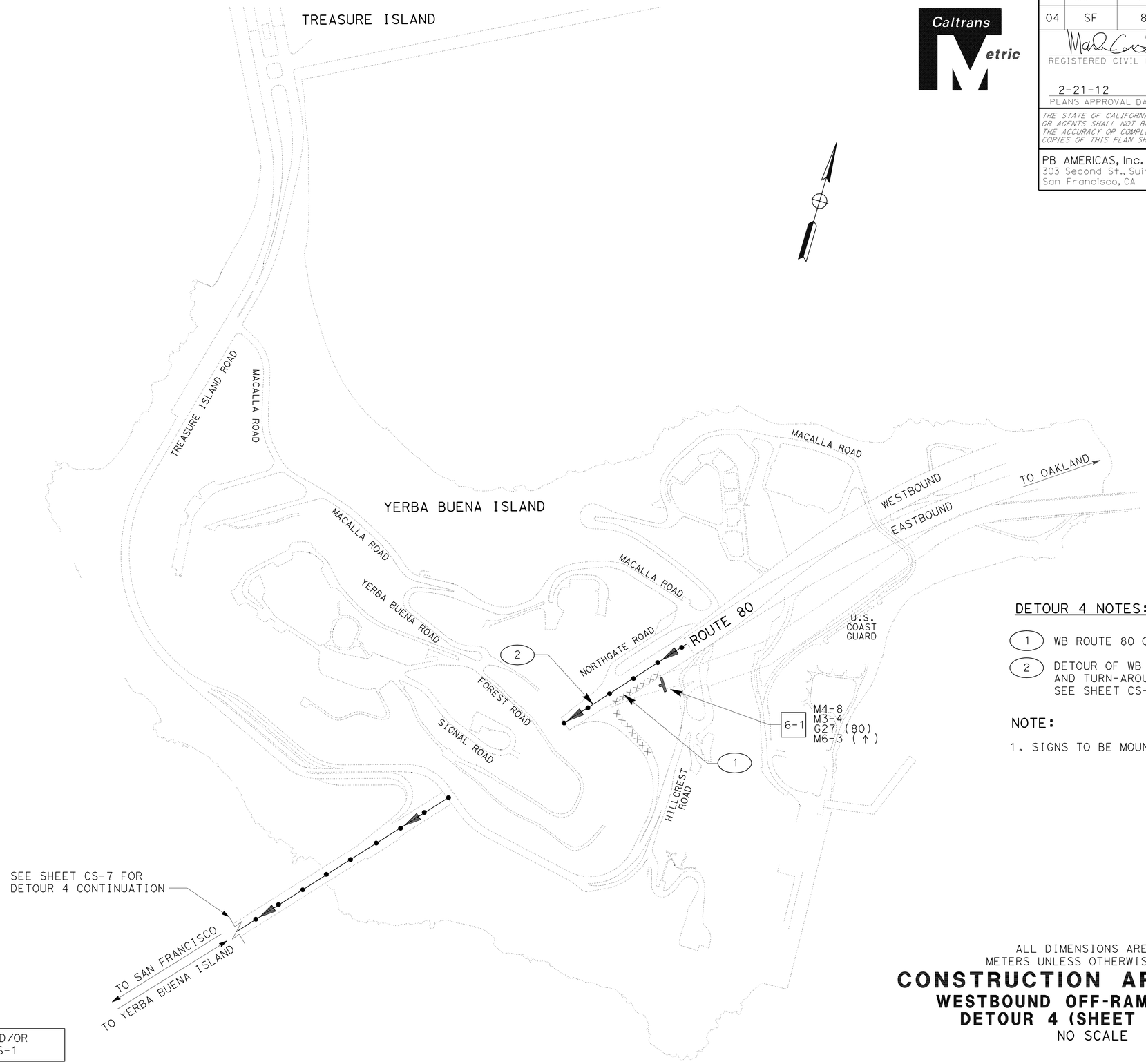

DETOUR 4 NOTES:

(1) WB ROUTE 80 OFF-RAMP CLOSED.

(2) DETOUR OF WB OFF-RAMP VIA WB I-80, AND TURN-AROUND IN SAN FRANCISCO, SEE SHEET CS-7.

NOTE:

1. SIGNS TO BE MOUNTED ON BARRICADES.

FOR GENERAL NOTES AND/OR LEGEND SEE SHEET CS-1

ALL DIMENSIONS ARE IN METERS UNLESS OTHERWISE SHOWN

CONSTRUCTION AREA SIGNS
WESTBOUND OFF-RAMP DETOUR
DETOUR 4 (SHEET 1 OF 2)

NO SCALE

THIS PLAN ACCURATE FOR CONSTRUCTION AREA SIGNS ONLY.

CS-6

STATE OF CALIFORNIA - DEPARTMENT OF TRANSPORTATION
Caltrans

CONSULTANT FUNCTIONAL SUPERVISOR: BOB ZANDIPOUR
CALCULATED-DESIGNED BY: M. GRODZKI
CHECKED BY: B. NADELL
REVISED BY: RM
DATE REVISED: 3/03

LAST REVISION 00-00-00 DATE PLOTTED => 25-FEB-2012 TIME PLOTTED => 08:35

Dist	COUNTY	ROUTE	KILOMETER POST TOTAL PROJECT	SHEET No.	TOTAL SHEETS
04	SF	80	12.6/13.9	152	821

REGISTERED CIVIL ENGINEER 10/31/11 DATE

2-21-12
PLANS APPROVAL DATE

REGISTERED PROFESSIONAL ENGINEER
Mark Grodzki
No. 65594
Exp. 09/30/13
CIVIL
STATE OF CALIFORNIA

THE STATE OF CALIFORNIA OR ITS OFFICERS OR AGENTS SHALL NOT BE RESPONSIBLE FOR THE ACCURACY OR COMPLETENESS OF ELECTRONIC COPIES OF THIS PLAN SHEET.

PB AMERICAS, Inc.
303 Second St., Suite 700N
San Francisco, CA 94107-1317

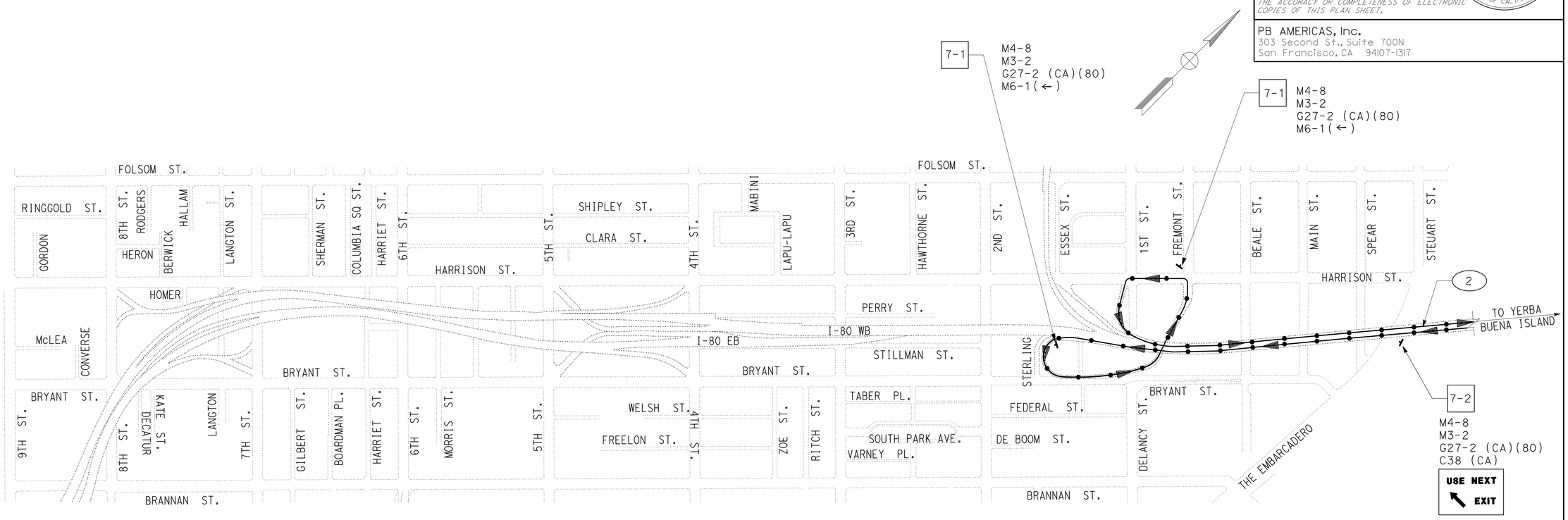

S A N F R A N C I S C O

ALL DIMENSIONS ARE IN METERS UNLESS OTHERWISE SHOWN

CONSTRUCTION AREA SIGNS

WESTBOUND OFF-RAMP DETOUR
DETOUR 4 (SHEET 2 OF 2)

NO SCALE

FOR GENERAL NOTES AND/OR LEGEND SEE SHEET CS-1

THIS PLAN ACCURATE FOR CONSTRUCTION AREA SIGNS ONLY.

CS-7

STATE OF CALIFORNIA - DEPARTMENT OF TRANSPORTATION
Caltrans

CONSULTANT FUNCTIONAL SUPERVISOR: BOB ZANDIPOUR
CALCULATED-DESIGNED BY: M. GRODZKI
CHECKED BY: B. NADELL
REVISED BY: RM
DATE REVISED: 3/03

LAST REVISION 00-00-00
DATE PLOTTED => 25-FEB-2012
TIME PLOTTED => 08:35

Dist	COUNTY	ROUTE	KILOMETER POST TOTAL PROJECT	SHEET No.	TOTAL SHEETS
04	SF	80	12.6/13.9	153	821

Caltrans Metric

Mark Grodzki 10/31/11
REGISTERED CIVIL ENGINEER DATE

2-21-12
PLANS APPROVAL DATE

REGISTERED PROFESSIONAL ENGINEER Mark Grodzki No. 65594 Exp. 09/30/13 CIVIL STATE OF CALIFORNIA

THE STATE OF CALIFORNIA OR ITS OFFICERS OR AGENTS SHALL NOT BE RESPONSIBLE FOR THE ACCURACY OR COMPLETENESS OF ELECTRONIC COPIES OF THIS PLAN SHEET.

PB AMERICAS, Inc.
303 Second St., Suite 700N
San Francisco, CA 94107-1317

CONSTRUCTION AREA SIGNS QUANTITIES

SHEET NO.	SIGN NO.	SIGN CODE	SIGN MESSAGE	PANEL SIZE mm x mm	NUMBER OF POST AND SIZE	QUANTITY EA	REMARKS
CS-1	1-1	W20-1	ROAD WORK AHEAD	900 x 900	1 - 89 mm x 140 mm	6	
CS-1	1-2	W20-1	ROAD WORK AHEAD	1200 x 1200		2	SSBM
CS-1	1-3	G20-2	END ROAD WORK	1200 x 600		2	SSBM
CS-1	1-4	G20-2	END ROAD WORK	900 x 450	1 - 89 mm x 89 mm	5	
CS-1	1-5	C40	TRAFFIC FINES DOUBLE IN CONSTRUCTION ZONE	3658 x 1524		1	SSBM
CS-1	1-6	C40	TRAFFIC FINES DOUBLE IN CONSTRUCTION ZONE	2743 x 1067	2 -140 mm x 140 mm	5	TWO-POST
CS-2	2-1	SPECIAL	MACALLA RD COAST GUARD DETOUR (UP ARROW) HILLCREST RD DETOUR (UP ARROW)	1200 x 1350 1200 x 1200	2 - 140 mm x 140 mm	3	TWO-POST
CS-2	2-2	SPECIAL	MACALLA RD COAST GUARD DETOUR (ADVANCE RIGHT TURN ARROW) HILLCREST RD DETOUR (UP ARROW)	1200 x 1350 1200 x 1200	2 - 140 mm x 140 mm	1	TWO-POST
CS-2	2-3	SPECIAL	MACALLA RD COAST GUARD DETOUR (RIGHT ARROW) HILLCREST RD DETOUR (UP ARROW)	1200 x 1350 1200 x 1200	2 - 140 mm x 140 mm	1	TWO-POST
CS-2	2-4	SPECIAL	HILLCREST RD DETOUR ("U" TURN ARROW)	1200 x 1200	1 - 140 mm x 140 mm	1	
CS-2	2-5	SPECIAL	HILLCREST RD DETOUR (UP ARROW)	1200 x 1200	1 - 140 mm x 140 mm	5	
CS-2	2-6	SPECIAL	HILLCREST RD DETOUR NEXT LEFT	1200 x 1200	1 - 140 mm x 140 mm	1	
CS-2	2-7	SPECIAL	HILLCREST RD. DETOUR (ADVANCE LEFT TURN ARROW)	1200 X 1200	1 - 140 mm x 140 mm	1	
CS-2	2-8	SPECIAL	HILLCREST RD. DETOUR (LEFT ARROW)	1200 X 1200	1 - 140 mm x 140 mm	1	

REVISED BY | DATE REVISED

M. GRODZKI | B. NADELL

CALCULATED-DESIGNED BY | CHECKED BY

CONSULTANT FUNCTIONAL SUPERVISOR: BOB ZANDIPOUR

STATE OF CALIFORNIA - DEPARTMENT OF TRANSPORTATION
Caltrans

CONSTRUCTION AREA SIGNS

CS-8

LAST REVISION 00-00-00 | DATE PLOTTED => 25-FEB-2012 | TIME PLOTTED => 08:35

Dist	COUNTY	ROUTE	KILOMETER POST TOTAL PROJECT	SHEET No.	TOTAL SHEETS
04	SF	80	12.6/13.9	154	821

REGISTERED CIVIL ENGINEER 10/31/11 DATE

2-21-12
PLANS APPROVAL DATE

REGISTERED PROFESSIONAL ENGINEER Mark Grodzki No. 65594 Exp. 09/30/13 CIVIL STATE OF CALIFORNIA

THE STATE OF CALIFORNIA OR ITS OFFICERS OR AGENTS SHALL NOT BE RESPONSIBLE FOR THE ACCURACY OR COMPLETENESS OF ELECTRONIC COPIES OF THIS PLAN SHEET.

PB AMERICAS, Inc.
303 Second St., Suite 700N
San Francisco, CA 94107-1317

Caltrans Metric

CONSTRUCTION AREA SIGNS QUANTITIES

SHEET NO.	SIGN NO.	SIGN CODE	SIGN MESSAGE	PANEL SIZE mm x mm	NUMBER OF POST AND SIZE	QUANTITY EA	REMARKS
CS-3	3-1	M4-8 M3-2 G27-2(CA)(80) M6-3	DETOUR EAST I-80 (UP ARROW)	600 x 300 600 x 300 600 x 600 525 x 375	1 - 89 mm x 140 mm	5	
CS-3	3-2	SPECIAL	EASTBOUND I-80 DETOUR ("U" TURN ARROW)	1200 x 1350	1 - 140 mm x 140 mm	2	
CS-4	4-1	M4-8 M3-2 G27-2(CA)(80) M6-1	DETOUR EAST I-80 (LEFT ARROW)	600 x 300 600 x 300 600 x 600 525 x 375	1 - 89 mm x 140 mm	2	
CS-4	4-2	M4-8 M3-4 G27(80) C38(CA)	DETOUR EAST I-80 (USE NEXT LEFT)	533 x 229 533 x 229 356 x 305 1219 x 914	1 - 89 mm x 140 mm	1	
CS-5	5-1	M4-8 M3-4 G27-2(CA)(80) M6-3	DETOUR WEST I-80 (UP ARROW)	600 x 300 600 x 300 600 x 600 525 x 375	1 - 89 mm x 140 mm	4	
CS-5	5-2	M4-8 M3-4 G27-2(CA)(80) M5-1	DETOUR WEST I-80 (ADVANCED TURN ARROW-LEFT)	600 x 300 600 x 300 600 x 600 533 x 381	1 - 89 mm x 140 mm	1	
CS-5	5-3	M4-8 M3-4 G27-2(CA)(80) M6-4	DETOUR WEST I-80 (LEFT OR RIGHT TURN ARROW)	600 x 300 600 x 300 600 x 600 533 x 381	1 - 89 mm x 140 mm	1	
CS-5	5-4	G8 M4-8 M3-4 G27-2(CA)(80) M6-4	SAN FRANCISCO DETOUR WEST I-80 (LEFT TURN ARROW)	3150 x 600 600 x 300 600 x 300 600 x 600 533 x 381	2 - 140 mm x 140 mm	1	TWO-POST
CS-5	5-5	M4-8 M3-4 G27-2(CA)(80) M6-4	DETOUR WEST I-80 (KEEP RIGHT TURN ARROW)	600 x 300 600 x 300 600 x 600 533 x 381	1 - 89 mm x 140 mm	1	
CS-5	5-6	M4-8a	END DETOUR	600 x 450	1 - 89 mm x 140 mm	1	
CS-6	6-1	M4-8 M3-4 G27-2(CA)(80) M6-3	DETOUR WEST I-80 (UP ARROW)	600 x 300 600 x 300 600 x 600 525 x 375	1 - 89 mm x 140 mm	1	
CS-7	7-1	M4-8 M3-2 G27-2(CA)(80) M6-1	DETOUR EAST I-80 (LEFT ARROW)	600 x 300 600 x 300 600 x 600 525 x 375	1 - 89 mm x 140 mm	2	
CS-7	7-2	M4-8 M3-2 G27-2(CA)(80) C38(CA)	DETOUR EAST I-80 (USE NEXT LEFT)	600 x 300 600 x 300 600 x 600 1219 x 914	1 - 89 mm x 140 mm	1	

CONSTRUCTION AREA SIGNS

CS-9

STATE OF CALIFORNIA - DEPARTMENT OF TRANSPORTATION
Caltrans

CONSULTANT FUNCTIONAL SUPERVISOR: BOB ZANDIPOUR
CALCULATED-DESIGNED BY: M. GRODZKI
CHECKED BY: B. NADELL
REVISED BY
DATE REVISED

LAST REVISION 00-00-00
DATE PLOTTED => 25-FEB-2012
TIME PLOTTED => 08:35

Dist	COUNTY	ROUTE	KILOMETER POST TOTAL PROJECT	SHEET No.	TOTAL SHEETS
04	SF	80	12.6/13.9	155	821

Mark Grodzki 02/03/12
REGISTERED CIVIL ENGINEER DATE

2-21-12
PLANS APPROVAL DATE

REGISTERED PROFESSIONAL ENGINEER Mark Grodzki No. 65594 Exp. 09/30/13 CIVIL STATE OF CALIFORNIA

THE STATE OF CALIFORNIA OR ITS OFFICERS OR AGENTS SHALL NOT BE RESPONSIBLE FOR THE ACCURACY OR COMPLETENESS OF ELECTRONIC COPIES OF THIS PLAN SHEET.

PB AMERICAS, Inc.
303 Second St., Suite 700N
San Francisco, CA 94107-1317

Caltrans Metric

NOTES:

1. ALL TEMPORARY RAILING (TYPE K) SHALL HAVE A 10:1 APPROACH FLARE OR FLATTER.
2. UNLESS OTHERWISE SHOWN, TEMPORARY PAVEMENT DELINEATION DETAILS 25, 25A, OR 27B ARE TO BE PLACED 0.3 m FROM THE FACE OF TEMPORARY RAILING (TYPE K).
3. SEE SC SHEETS FOR DETAILS OF STAGE CONSTRUCTION AND TRAFFIC HANDLING. SEE CS SHEETS FOR CONSTRUCTION AREA SIGNS AND QUANTITIES.
4. LOCATION FOR CONSTRUCTION AREA SIGNS ARE APPROXIMATE. EXACT SIGN LOCATION WILL BE DETERMINED BY THE ENGINEER EXCEPT AS NOTED.
5. SEE STRUCTURES PLANS FOR STRUCTURE DETAILS.
6. PARKING STALLS FOR TEMPORARY USCG PARKING LOT INSTALLED BY OTHERS.
7. THE CONTRACTOR MAY USE THE EXISTING SAN FRANCISCO-OAKLAND BAY BRIDGE (EAST BAY, BR. NO. 33-0035) MAY BE USED AS THE CONTRACTOR'S ROAD TO AND FROM THE PROJECT SITE AND OAKLAND.
8. CONTRACTOR SHALL PROVIDE ACCESS FOR COAST GUARD VEHICLES AT ALL TIMES.

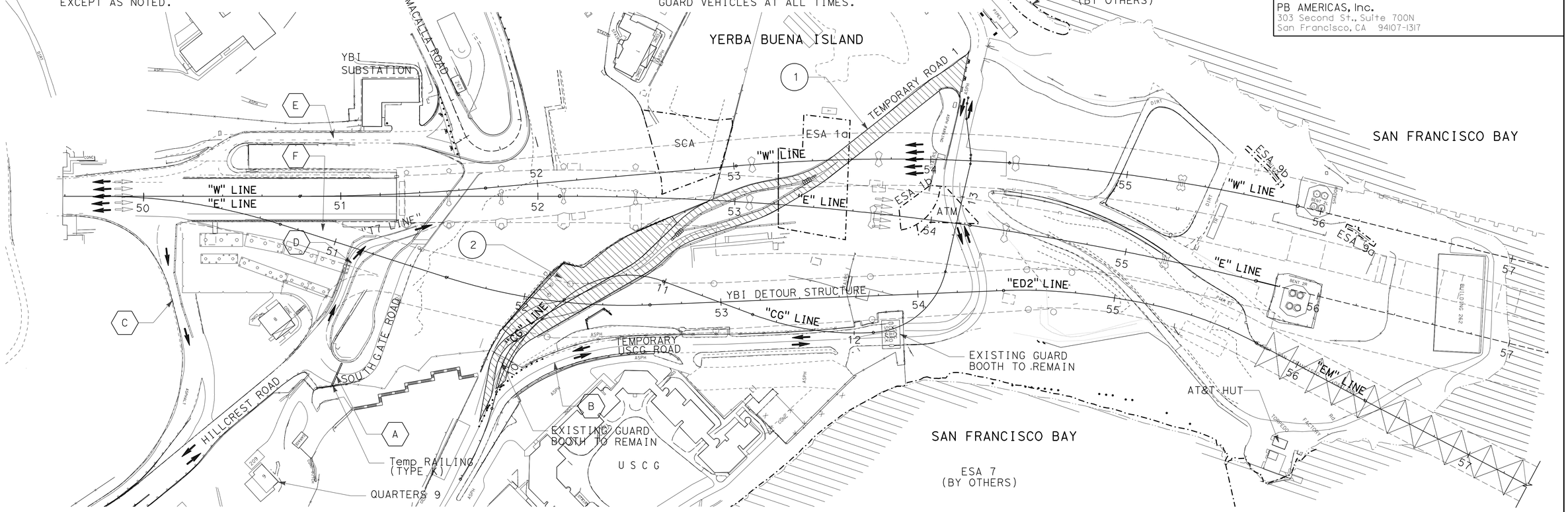

ABBREVIATIONS:

SFOBB	SAN FRANCISCO OAKLAND BAY BRIDGE
USCG	UNITED STATES COAST GUARD

LEGEND:

- CONSTRUCT THIS STAGE (PERMANENT)
- CONSTRUCT THIS STAGE (TEMPORARY)
- REMOVE THIS STAGE
- TEMPORARY USCG PARKING LOT
- DIRECTION OF TRAFFIC
- DIRECTION OF TRAFFIC (LOWER DECK)
- TEMPORARY RAILING (TYPE K)
- CHANNELIZER (SURFACE MOUNTED)
- TYPE III BARRICADE
- SHUTTLE STOP

TRAFFIC HANDLING	
(A)	SOUTHGATE ROAD CLOSED TO TRAFFIC. PROVIDE TRAFFIC DETOUR 1 THROUGH LOCAL STREETS (SEE CS SHEETS). PROVIDE AND MAINTAIN ACCESS TO USCG QUARTERS 9.
(B)	BOTH LANES OF TEMPORARY USCG ROAD OPEN TO TRAFFIC.
(C)	WB-80 OFF-RAMP OPEN TO TRAFFIC.
(D)	TEMPORARY EB-80 ON-RAMP (T7 LINE) OPEN TO TRAFFIC.
(E)	WB-80 ON-RAMP CLOSED, BECAUSE OF THE CITY AND COUNTY OF SAN FRANCISCO CONTRACT. PROVIDE DETOUR 3 (SEE CS SHEETS) FOR WESTBOUND ON-RAMP DETOUR (SEE CS SHEETS).
(F)	EB-80 OFF-RAMP CLOSED TO TRAFFIC.

CONSTRUCTION	
(1)	PLACE HMA SURFACING AND INSTALL PAVEMENT DELINEATION FOR TEMPORARY ROAD 1.
(2)	CONSTRUCT TEMPORARY USCG PARKING LOT.

(1) CONSTRUCTION THIS STAGE AND PHASE

(A) TRAFFIC HANDLING THIS STAGE AND PHASE

THIS PLAN ACCURATE FOR STAGE CONSTRUCTION ONLY.

ALL DIMENSIONS ARE IN METERS UNLESS OTHERWISE SHOWN

STAGE CONSTRUCTION
STAGE 1
SCALE 1:1000

SC-1

STATE OF CALIFORNIA - DEPARTMENT OF TRANSPORTATION
Caltrans

CONSULTANT FUNCTIONAL SUPERVISOR: BOB ZANDIPOUR
CALCULATED-DESIGNED BY: M. GRODZKI
CHECKED BY: B. NADELL
REVISED BY / DATE REVISED

LAST REVISION 00-00-00 DATE PLOTTED => 25-FEB-2012 TIME PLOTTED => 09:11

Dist	COUNTY	ROUTE	KILOMETER POST TOTAL PROJECT	SHEET No.	TOTAL SHEETS
04	SF	80	12.6/13.9	156	821

REGISTERED CIVIL ENGINEER 02/03/12 DATE

2-21-12
PLANS APPROVAL DATE

REGISTERED PROFESSIONAL ENGINEER Mark Grodzki No. 65594 Exp. 09/30/13 CIVIL STATE OF CALIFORNIA

THE STATE OF CALIFORNIA OR ITS OFFICERS OR AGENTS SHALL NOT BE RESPONSIBLE FOR THE ACCURACY OR COMPLETENESS OF ELECTRONIC COPIES OF THIS PLAN SHEET.

PB AMERICAS, Inc.
303 Second St., Suite 700N
San Francisco, CA 94107-1317

Caltrans Metric

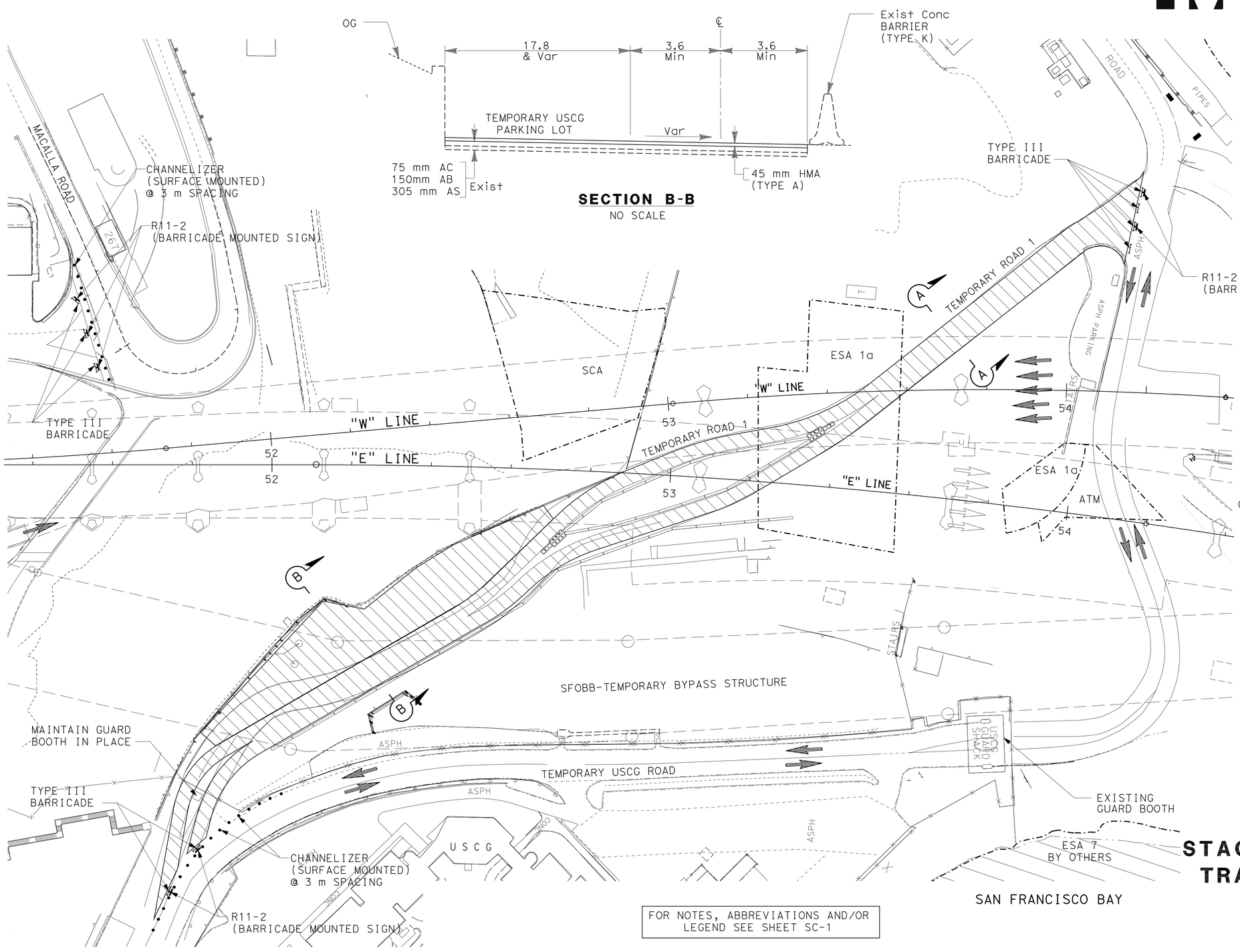

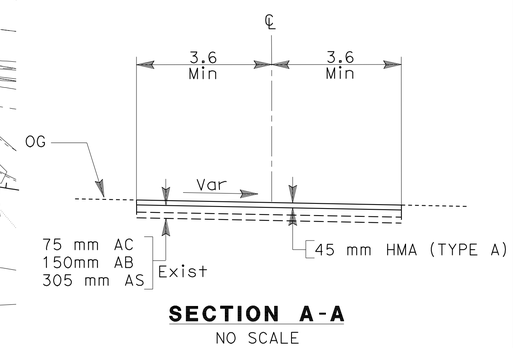

ALL DIMENSIONS ARE IN METERS UNLESS OTHERWISE SHOWN

STAGE CONSTRUCTION AND TRAFFIC HANDLING PLAN

STAGE 1

SCALE 1:500

FOR NOTES, ABBREVIATIONS AND/OR LEGEND SEE SHEET SC-1

THIS PLAN ACCURATE FOR STAGE CONSTRUCTION ONLY.

SC-2

STATE OF CALIFORNIA - DEPARTMENT OF TRANSPORTATION

Caltrans

CONSULTANT FUNCTIONAL SUPERVISOR: BOB ZANDIPOUR

CALCULATED-DESIGNED BY: M. GRODZKI

CHECKED BY: B. NADELL

REVISED BY / DATE REVISED

LAST REVISION 00-00-00 DATE PLOTTED => 25-FEB-2012 TIME PLOTTED => 09:11

Dist	COUNTY	ROUTE	KILOMETER POST TOTAL PROJECT	SHEET No.	TOTAL SHEETS
04	SF	80	12.6/13.9	157	821

REGISTERED CIVIL ENGINEER 02/03/12 DATE

2-21-12
PLANS APPROVAL DATE

REGISTERED PROFESSIONAL ENGINEER Mark Grodzki No. 65594 Exp. 09/30/13 CIVIL STATE OF CALIFORNIA

THE STATE OF CALIFORNIA OR ITS OFFICERS OR AGENTS SHALL NOT BE RESPONSIBLE FOR THE ACCURACY OR COMPLETENESS OF ELECTRONIC COPIES OF THIS PLAN SHEET.

PB AMERICAS, Inc.
303 Second St., Suite 700N
San Francisco, CA 94107-1317

Caltrans Metric

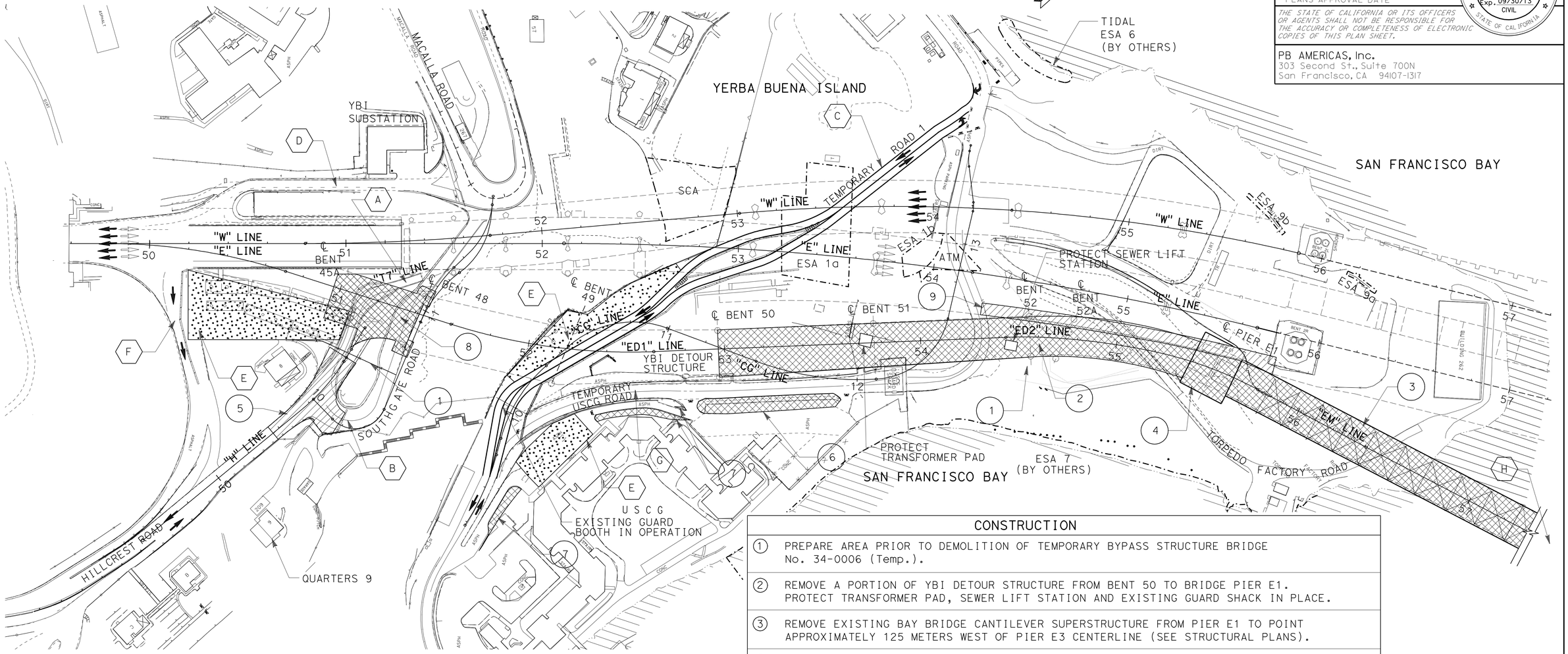

TRAFFIC HANDLING

(A)	TEMPORARY EB-80 ON-RAMP (T7 LINE) WILL BE CLOSED TO TRAFFIC FOR UP TO 24 HOURS DURING REMOVAL OF PORTION OF YBI DETOUR STRUCTURE (BRIDGE No. 34-0006 Temp). PROVIDE EASTBOUND ON-RAMP DETOUR 2 (SEE CS SHEETS).
(B)	SOUTHGATE ROAD CLOSED TO TRAFFIC. PROVIDE TRAFFIC DETOUR 1 THROUGH LOCAL STREETS (SEE CS SHEETS). PROVIDE AND MAINTAIN ACCESS TO USCG QUARTERS 9.
(C)	TEMPORARY ROAD 1 WILL BE OPEN TO TRAFFIC DURING DEMOLITION.
(D)	WB-80 ON-RAMP CLOSED, BECAUSE OF THE CITY AND COUNTY OF SAN FRANCISCO CONTRACT. PROVIDE DETOUR 3 (SEE CS SHEETS) FOR WESTBOUND ON-RAMP DETOUR (SEE CS SHEETS).
(E)	TEMPORARY USCG PARKING LOT.
(F)	WESTBOUND OFF-RAMP REMAINS OPEN TO TRAFFIC DURING DEMOLITION.
(G)	TEMPORARY USCG ROAD CLOSED TO TRAFFIC.
(H)	CONTRACTOR MAY USE EXISTING 509/288 BRIDGE STRUCTURE TO ACCESS OAKLAND.

CONSTRUCTION

(1)	PREPARE AREA PRIOR TO DEMOLITION OF TEMPORARY BYPASS STRUCTURE BRIDGE No. 34-0006 (Temp.).
(2)	REMOVE A PORTION OF YBI DETOUR STRUCTURE FROM BENT 50 TO BRIDGE PIER E1. PROTECT TRANSFORMER PAD, SEWER LIFT STATION AND EXISTING GUARD SHACK IN PLACE.
(3)	REMOVE EXISTING BAY BRIDGE CANTILEVER SUPERSTRUCTURE FROM PIER E1 TO POINT APPROXIMATELY 125 METERS WEST OF PIER E3 CENTERLINE (SEE STRUCTURAL PLANS).
(4)	REMOVE PORTION OF PIER E1 TO APPROXIMATE ELEVATION 45.0.
(5)	PROVIDE HMA SURFACING ON HILLCREST ROAD (H LINE) FROM STA 50+36 TO 50+86 AND ON "SG" LINE FROM STA 10+00 TO STA 10+16.94.
(6)	DISSASSEMBLE PARKING CANOPY, TO BE RELOCATED ON BASE (AREA TO BE DETERMINED BY USCG).
(7)	REMOVE CONCRETE CURB TO WIDEN TO A TWO-LANE ROAD.
(8)	REMOVE A PORTION OF YBI DETOUR STRUCTURE, BRIDGE No. 34-0006 (Temp) FROM BENT 45A TO BENT 48.
(9)	CONSTRUCT A PORTION OF EB BIKE PATH STRUCTURE AND GIRDER EXTENSION OF EB TRANSITION STRUCTURE FROM STA "E" 54+27.150 TO STA "E" 55+80.821 (SEE STRUCTURE PLANS).

FOR NOTES, ABBREVIATIONS AND/OR LEGEND SEE SHEET SC-1

THIS PLAN ACCURATE FOR STAGE CONSTRUCTION ONLY

STAGE CONSTRUCTION
STAGE 2 PHASE 1

ALL DIMENSIONS ARE IN METERS UNLESS OTHERWISE SHOWN

SCALE 1:1000

SC-3

REVISED BY | DATE REVISED

M. GRODZKI | B. NADELL

CALCULATED-DESIGNED BY | CHECKED BY

CONSULTANT FUNCTIONAL SUPERVISOR: BOB ZANDIPOUR

STATE OF CALIFORNIA - DEPARTMENT OF TRANSPORTATION

Caltrans

LAST REVISION 00-00-00 | DATE PLOTTED => 25-FEB-2012 | TIME PLOTTED => 09:11

Dist	COUNTY	ROUTE	KILOMETER POST TOTAL PROJECT	SHEET No.	TOTAL SHEETS
04	SF	80	12.6/13.9	158	821

REGISTERED CIVIL ENGINEER 02/03/12 DATE

2-21-12
PLANS APPROVAL DATE

REGISTERED PROFESSIONAL ENGINEER Mark Grodzki No. 65594 Exp. 09/30/13 CIVIL STATE OF CALIFORNIA

THE STATE OF CALIFORNIA OR ITS OFFICERS OR AGENTS SHALL NOT BE RESPONSIBLE FOR THE ACCURACY OR COMPLETENESS OF ELECTRONIC COPIES OF THIS PLAN SHEET.

PB AMERICAS, Inc.
303 Second St., Suite 700N
San Francisco, CA 94107-1317

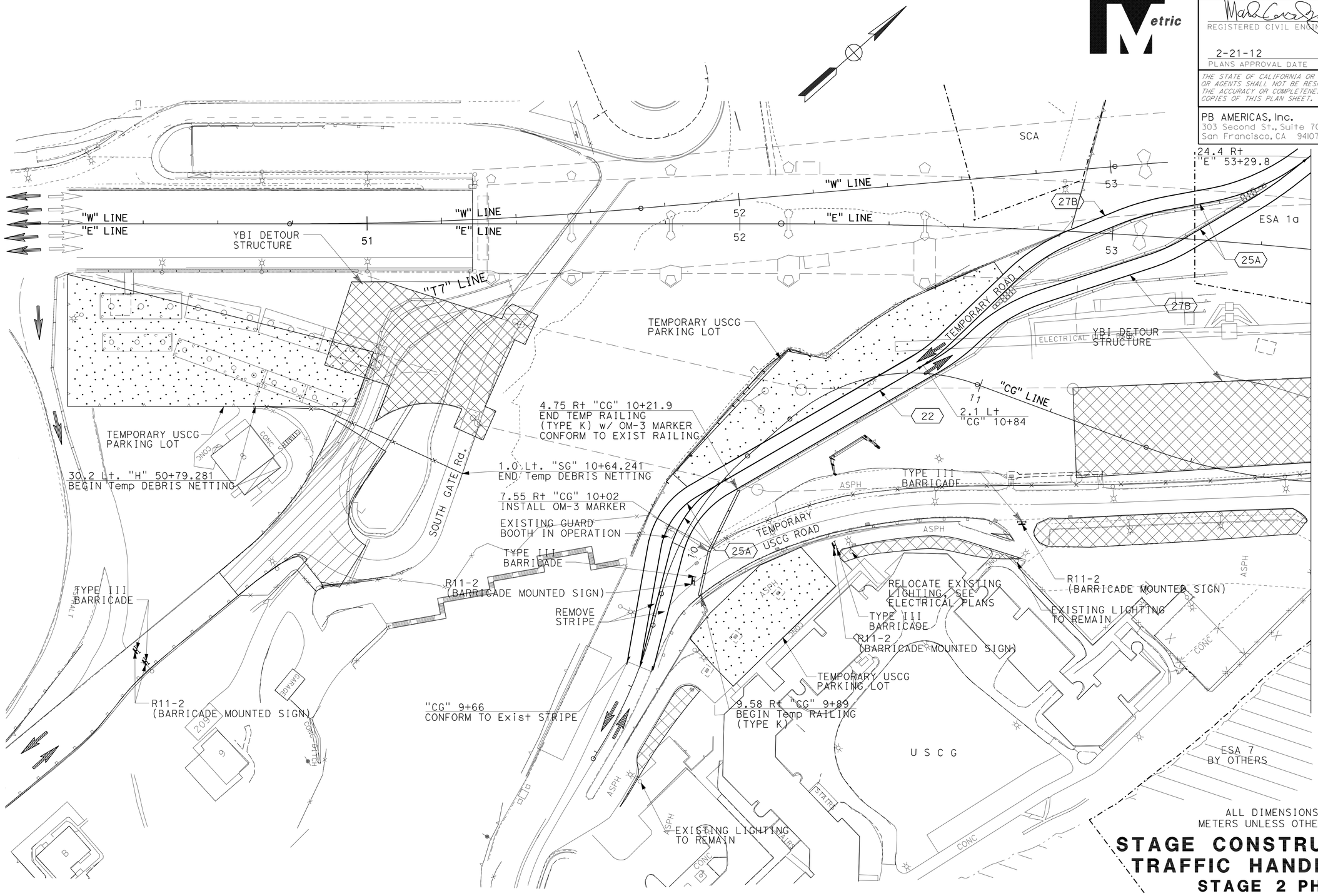

ALL DIMENSIONS ARE IN METERS UNLESS OTHERWISE SHOWN

STAGE CONSTRUCTION AND TRAFFIC HANDLING PLAN

STAGE 2 PHASE 1

SCALE 1:500

SC-4

FOR NOTES, ABBREVIATIONS AND/OR LEGEND SEE SHEET SC-1

SAN FRANCISCO BAY

THIS PLAN ACCURATE FOR STAGE CONSTRUCTION ONLY.

STATE OF CALIFORNIA - DEPARTMENT OF TRANSPORTATION

Caltrans

CONSULTANT FUNCTIONAL SUPERVISOR: BOB ZANDIPOUR

CALCULATED-DESIGNED BY: M. GRODZKI

CHECKED BY: B. NADELL

REVISED BY | DATE REVISED

LAST REVISION 00-00-00 | DATE PLOTTED => 25-FEB-2012 | TIME PLOTTED => 09:12

Dist	COUNTY	ROUTE	KILOMETER POST TOTAL PROJECT	SHEET No.	TOTAL SHEETS
04	SF	80	12.6/13.9	159	821

REGISTERED CIVIL ENGINEER 02/03/12 DATE

2-21-12
PLANS APPROVAL DATE

REGISTERED PROFESSIONAL ENGINEER Mark Grodzki No. 65594 Exp. 09/30/13 CIVIL STATE OF CALIFORNIA

THE STATE OF CALIFORNIA OR ITS OFFICERS OR AGENTS SHALL NOT BE RESPONSIBLE FOR THE ACCURACY OR COMPLETENESS OF ELECTRONIC COPIES OF THIS PLAN SHEET.

PB AMERICAS, Inc.
303 Second St., Suite 700N
San Francisco, CA 94107-1317

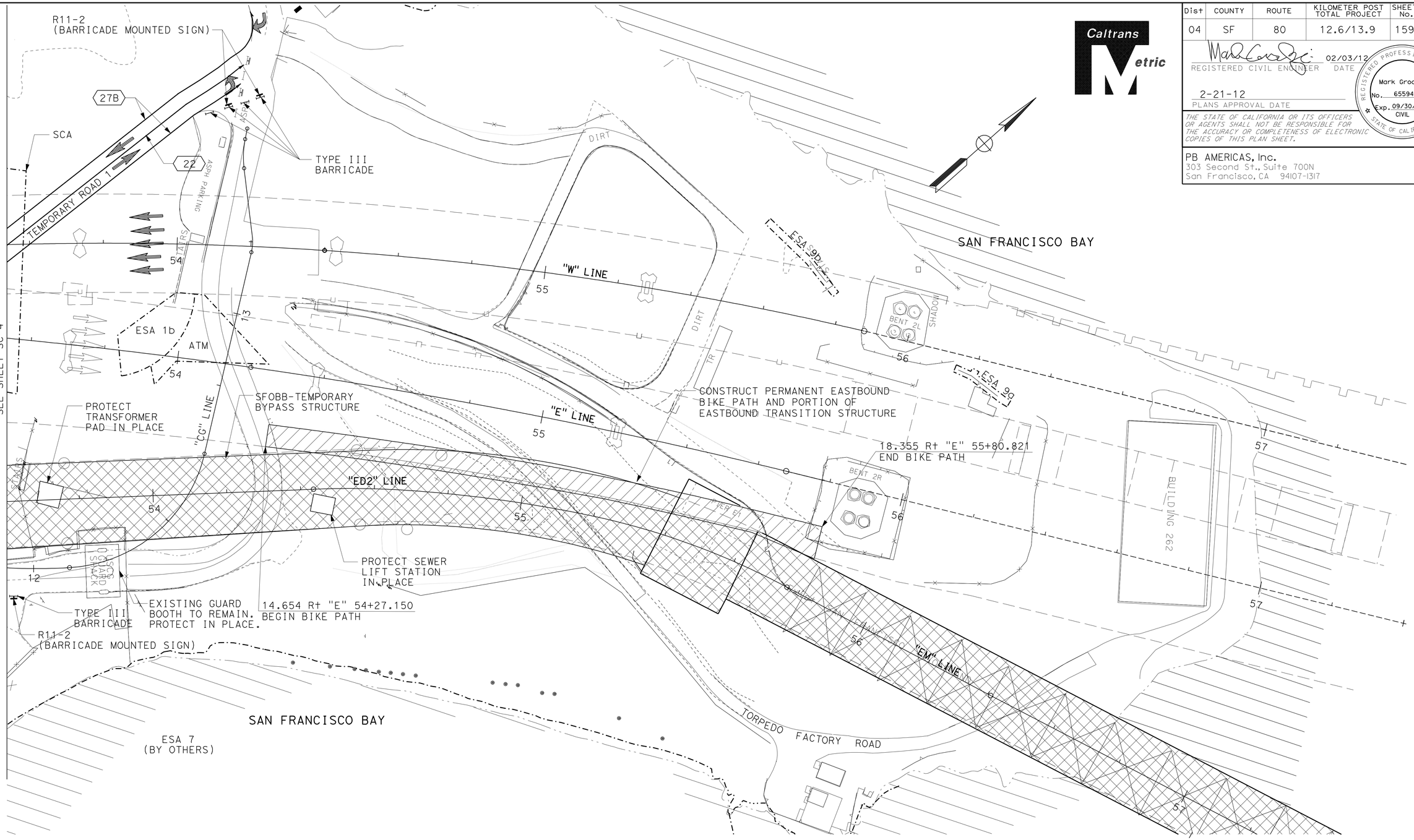

ALL DIMENSIONS ARE IN METERS UNLESS OTHERWISE SHOWN

STAGE CONSTRUCTION AND TRAFFIC HANDLING PLAN

STAGE 2 PHASE 1

SCALE 1:500

SC-5

FOR NOTES, ABBREVIATIONS AND/OR LEGEND SEE SHEET SC-1

THIS PLAN ACCURATE FOR STAGE CONSTRUCTION ONLY.

STATE OF CALIFORNIA - DEPARTMENT OF TRANSPORTATION

Caltrans

CONSULTANT FUNCTIONAL SUPERVISOR: BOB ZANDIPOUR

CALCULATED-DESIGNED BY: M. GRODZKI

CHECKED BY: B. NADELL

REVISED BY | DATE REVISED

LAST REVISION 00-00-00 | DATE PLOTTED => 25-FEB-2012 | TIME PLOTTED => 09:12

Dist	COUNTY	ROUTE	KILOMETER POST TOTAL PROJECT	SHEET No.	TOTAL SHEETS
04	SF	80	12.6/13.9	160	821

REGISTERED CIVIL ENGINEER 02/03/12 DATE

2-21-12
PLANS APPROVAL DATE

REGISTERED PROFESSIONAL ENGINEER Mark Grodzki No. 65594 Exp. 09/30/13 CIVIL STATE OF CALIFORNIA

THE STATE OF CALIFORNIA OR ITS OFFICERS OR AGENTS SHALL NOT BE RESPONSIBLE FOR THE ACCURACY OR COMPLETENESS OF ELECTRONIC COPIES OF THIS PLAN SHEET.

PB AMERICAS, Inc.
303 Second St., Suite 700N
San Francisco, CA 94107-1317

Caltrans Metric

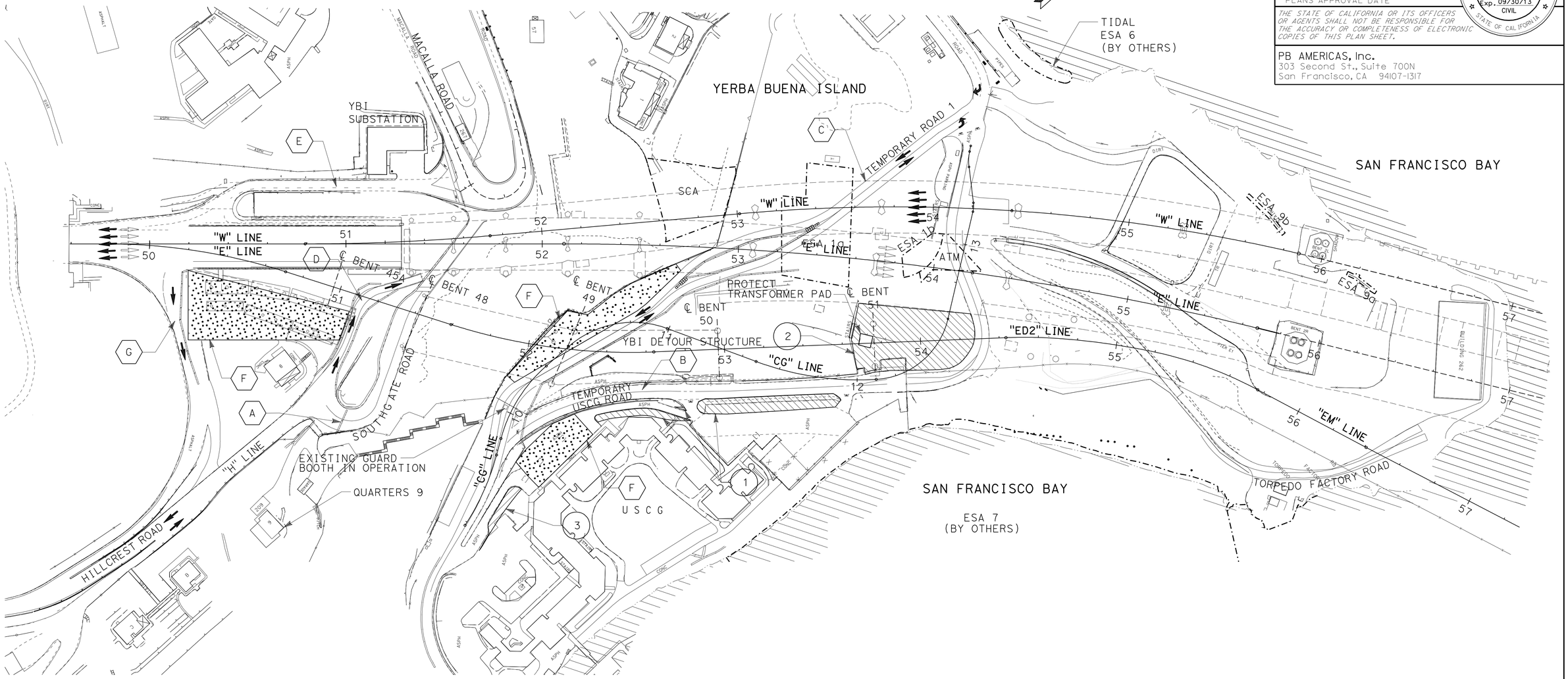

TRAFFIC HANDLING

(A)	SOUTHGATE ROAD CLOSED TO TRAFFIC. PROVIDE TRAFFIC DETOUR 1 THROUGH LOCAL STREETS (SEE CS SHEETS). PROVIDE AND MAINTAIN ACCESS TO USCG QUARTERS 9.
(B)	TEMPORARY USCG ROAD CLOSED TO TRAFFIC.
(C)	TEMPORARY ROAD 1 OPEN TO TRAFFIC.
(D)	TEMPORARY EB-80 ON-RAMP (T7 LINE) IS OPEN TO TRAFFIC.
(E)	WB-80 ON-RAMP CLOSED, BECAUSE OF THE CITY AND COUNTY OF SAN FRANCISCO CONTRACT. PROVIDE DETOUR 3 (SEE CS SHEETS) FOR WESTBOUND ON-RAMP DETOUR (SEE CS SHEETS).
(F)	TEMPORARY USCG PARKING LOT.
(G)	WB-80 OFF-RAMP REMAINS OPEN TO TRAFFIC.

CONSTRUCTION

(1)	WIDEN PORTIONS OF THE TEMPORARY USCG ROAD AND SHIFT SOUTH TO A TWO-LANE ROADWAY.
(2)	CONSTRUCT TEMPORARY USCG PARKING LOT. PROTECT TRANSFORMER PAD IN PLACE.
(3)	CONSTRUCT ROAD WIDENING OF USCG ACCESS ROAD (SEE ROADWAY PLANS).

FOR NOTES, ABBREVIATIONS AND/OR LEGEND SEE SHEET SC-1

THIS PLAN ACCURATE FOR STAGE CONSTRUCTION ONLY

ALL DIMENSIONS ARE IN METERS UNLESS OTHERWISE SHOWN

STAGE CONSTRUCTION
STAGE 2 PHASE 2
SCALE 1:1000

SC-6

STATE OF CALIFORNIA - DEPARTMENT OF TRANSPORTATION
Caltrans

CONSULTANT FUNCTIONAL SUPERVISOR: BOB ZANDIPOUR
CALCULATED-DESIGNED BY: M. GRODZKI
CHECKED BY: B. NADELL
REVISED BY / DATE REVISED

LAST REVISION 00-00-00 | DATE PLOTTED => 25-FEB-2012 | TIME PLOTTED => 09:12

Dist	COUNTY	ROUTE	KILOMETER POST TOTAL PROJECT	SHEET No.	TOTAL SHEETS
04	SF	80	12.6/13.9	161	821

REGISTERED CIVIL ENGINEER 02/03/12 DATE

2-21-12
PLANS APPROVAL DATE

REGISTERED PROFESSIONAL ENGINEER Mark Grodzki No. 65594 Exp. 09/30/13 CIVIL STATE OF CALIFORNIA

THE STATE OF CALIFORNIA OR ITS OFFICERS OR AGENTS SHALL NOT BE RESPONSIBLE FOR THE ACCURACY OR COMPLETENESS OF ELECTRONIC COPIES OF THIS PLAN SHEET.

PB AMERICAS, Inc.
303 Second St., Suite 700N
San Francisco, CA 94107-1317

Caltrans Metric

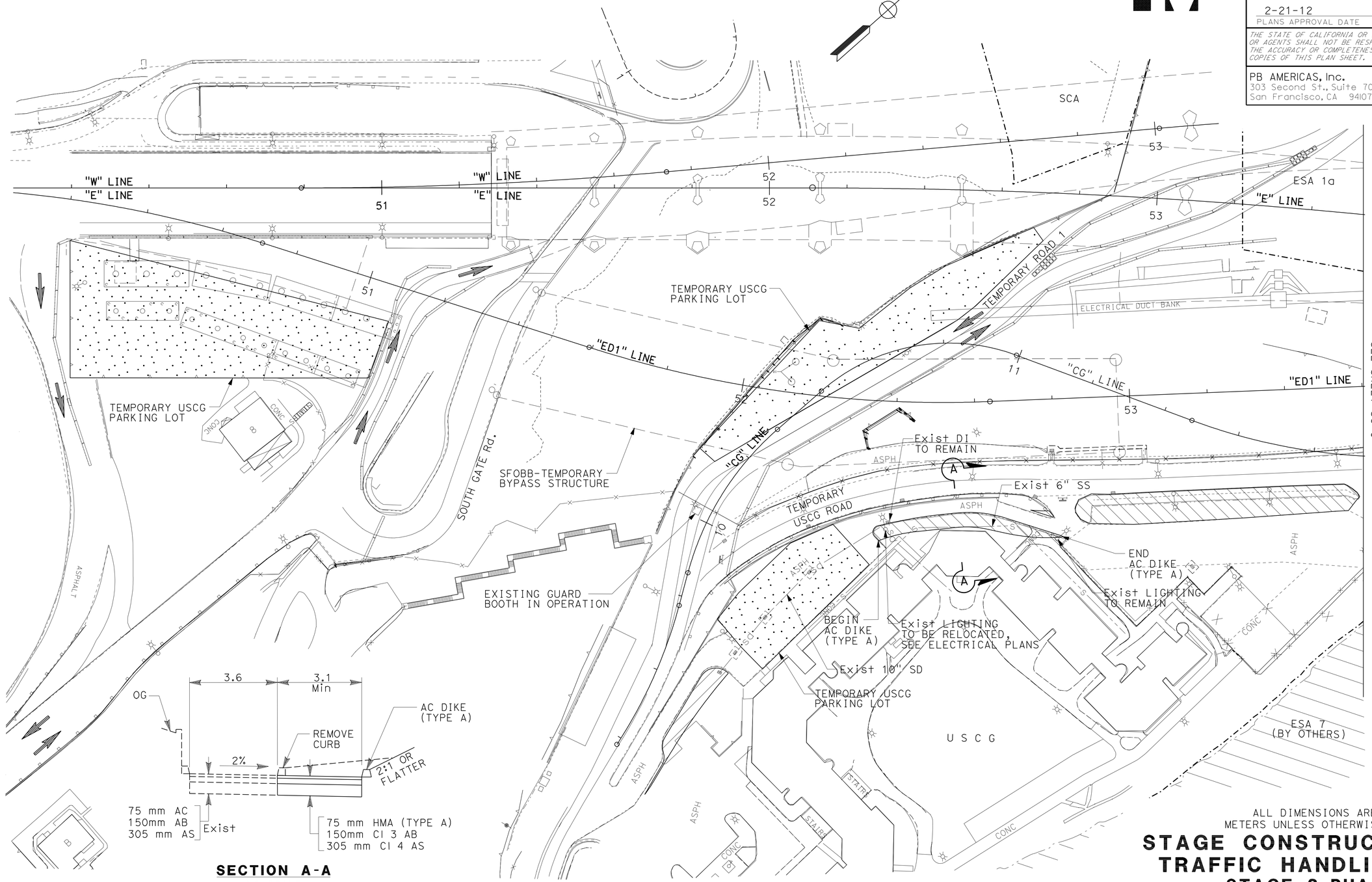

SECTION A-A
NO SCALE

FOR NOTES, ABBREVIATIONS AND/OR LEGEND SEE SHEET SC-1

THIS PLAN ACCURATE FOR STAGE CONSTRUCTION ONLY.

ALL DIMENSIONS ARE IN METERS UNLESS OTHERWISE SHOWN

STAGE CONSTRUCTION AND TRAFFIC HANDLING PLAN
STAGE 2 PHASE 2

SCALE 1:500

SC-7

REVISED BY	DATE REVISED

CALCULATED-DESIGNED BY: M. GRODZKI
CHECKED BY: B. NADELL
CONSULTANT FUNCTIONAL SUPERVISOR: BOB ZANDIPOUR

STATE OF CALIFORNIA - DEPARTMENT OF TRANSPORTATION
Caltrans

LAST REVISION 00-00-00
DATE PLOTTED => 25-FEB-2012
TIME PLOTTED => 09:13

Dist	COUNTY	ROUTE	KILOMETER POST TOTAL PROJECT	SHEET No.	TOTAL SHEETS
04	SF	80	12.6/13.9	162	821

REGISTERED CIVIL ENGINEER 02/03/12 DATE

2-21-12
PLANS APPROVAL DATE

REGISTERED PROFESSIONAL ENGINEER Mark Grodzki No. 65594 Exp. 09/30/13 CIVIL STATE OF CALIFORNIA

THE STATE OF CALIFORNIA OR ITS OFFICERS OR AGENTS SHALL NOT BE RESPONSIBLE FOR THE ACCURACY OR COMPLETENESS OF ELECTRONIC COPIES OF THIS PLAN SHEET.

PB AMERICAS, Inc.
303 Second St., Suite 700N
San Francisco, CA 94107-1317

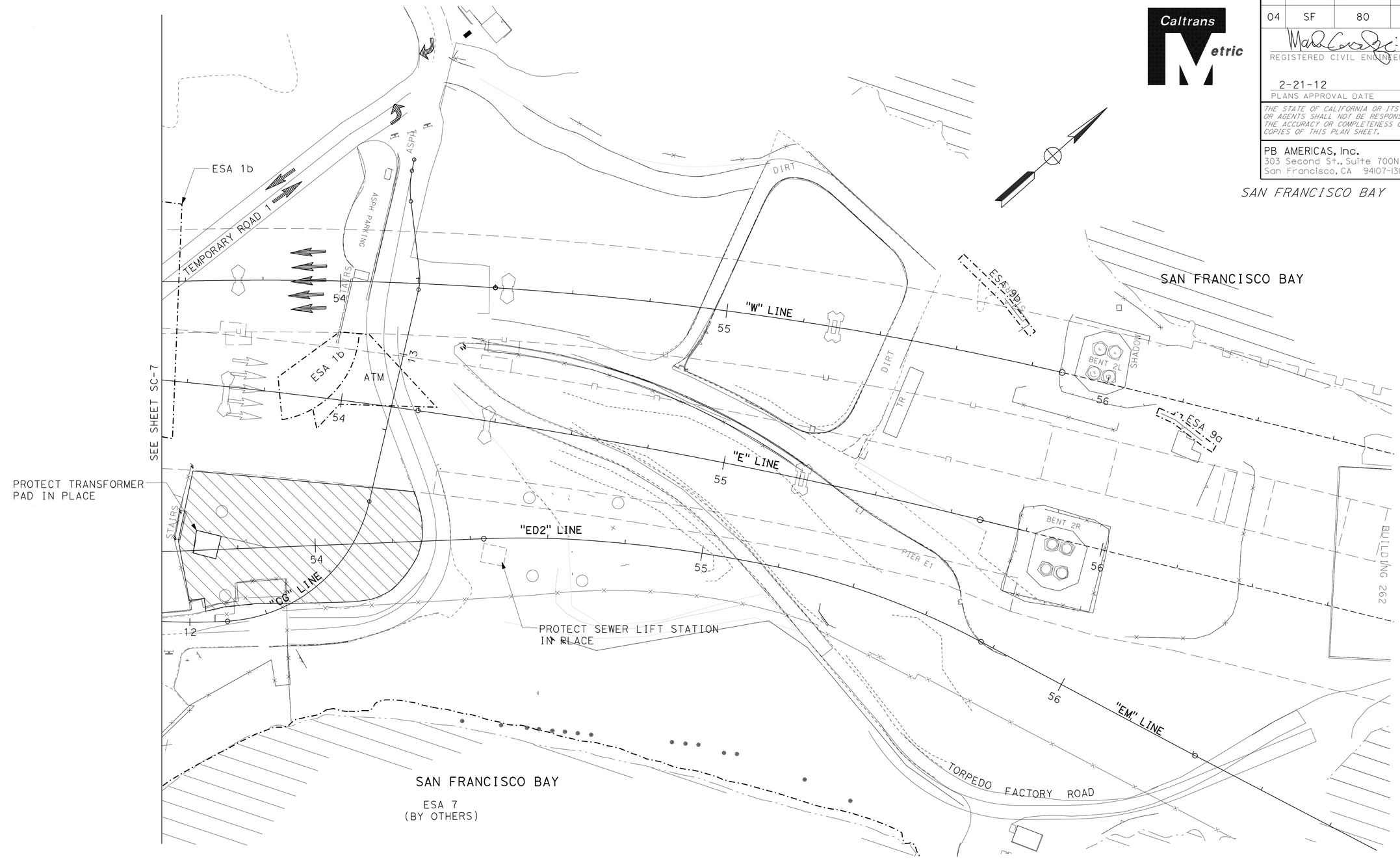

ALL DIMENSIONS ARE IN METERS UNLESS OTHERWISE SHOWN

STAGE CONSTRUCTION AND TRAFFIC HANDLING PLAN

STAGE 2 PHASE 2

SCALE 1:500

SC-8

FOR NOTES, ABBREVIATIONS AND/OR LEGEND SEE SHEET SC-1

THIS PLAN ACCURATE FOR STAGE CONSTRUCTION ONLY.

STATE OF CALIFORNIA - DEPARTMENT OF TRANSPORTATION

CONSULTANT FUNCTIONAL SUPERVISOR: BOB ZANDIPOUR

CALCULATED-DESIGNED BY: M. GRODZKI

CHECKED BY: B. NADELL

REVISED BY / DATE REVISED

LAST REVISION 00-00-00 DATE PLOTTED => 25-FEB-2012 TIME PLOTTED => 09:13

Dist	COUNTY	ROUTE	KILOMETER POST TOTAL PROJECT	SHEET No.	TOTAL SHEETS
04	SF	80	12.6/13.9	163	821

Mark Grodzki 02/03/12
REGISTERED CIVIL ENGINEER DATE

2-21-12
PLANS APPROVAL DATE

REGISTERED PROFESSIONAL ENGINEER Mark Grodzki No. 65594 Exp. 09/30/13 CIVIL STATE OF CALIFORNIA

THE STATE OF CALIFORNIA OR ITS OFFICERS OR AGENTS SHALL NOT BE RESPONSIBLE FOR THE ACCURACY OR COMPLETENESS OF ELECTRONIC COPIES OF THIS PLAN SHEET.

PB AMERICAS, Inc.
303 Second St., Suite 700N
San Francisco, CA 94107-1317

Caltrans Metric

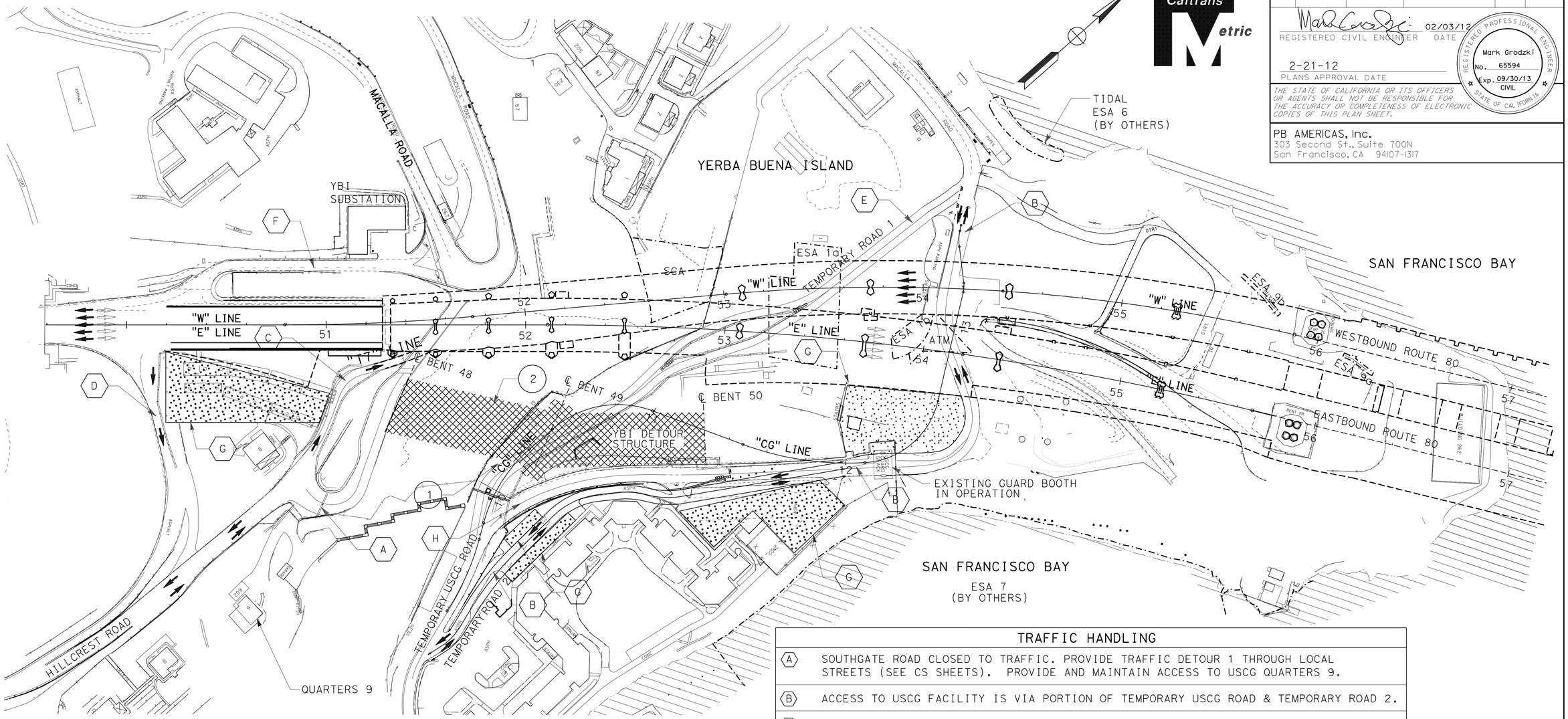

TRAFFIC HANDLING

A	SOUTHGATE ROAD CLOSED TO TRAFFIC. PROVIDE TRAFFIC DETOUR 1 THROUGH LOCAL STREETS (SEE CS SHEETS). PROVIDE AND MAINTAIN ACCESS TO USCG QUARTERS 9.
B	ACCESS TO USCG FACILITY IS VIA PORTION OF TEMPORARY USCG ROAD & TEMPORARY ROAD 2.
C	TEMPORARY EB-80 ON-RAMP (T7 LINE) REMAINS OPEN TO TRAFFIC.
D	WB-80 OFF-RAMP REMAINS OPEN TO TRAFFIC.
E	TEMPORARY ROAD 1 CLOSED TO TRAFFIC.
F	WB-80 ON-RAMP CLOSED, BECAUSE OF THE CITY AND COUNTY OF SAN FRANCISCO CONTRACT. PROVIDE DETOUR 3 (SEE CS SHEETS) FOR WESTBOUND ON-RAMP DETOUR (SEE CS SHEETS).
G	TEMPORARY USCG PARKING LOT.
H	PORTION OF TEMPORARY USCG ROAD CLOSED TO TRAFFIC.

CONSTRUCTION

1	PREPARE AREA PRIOR TO DEMOLITION.
2	REMOVE A PORTION OF YBI DETOUR STRUCTURE, BRIDGE No. 34-0006 (TEMPORARY) FROM BENT 48 TO BENT 50.

FOR NOTES, ABBREVIATIONS AND/OR LEGEND SEE SHEET SC-1

THIS PLAN ACCURATE FOR STAGE CONSTRUCTION ONLY.

ALL DIMENSIONS ARE IN METERS UNLESS OTHERWISE SHOWN

STAGE CONSTRUCTION

STAGE 3 PHASE 1

SCALE 1:1000

SC-9

STATE OF CALIFORNIA - DEPARTMENT OF TRANSPORTATION
Caltrans

CONSULTANT FUNCTIONAL SUPERVISOR: BOB ZANDIPOUR
CALCULATED-DESIGNED BY: M. GRODZKI
CHECKED BY: B. NADELL
REVISED BY
DATE REVISED

LAST REVISION 00-00-00
DATE PLOTTED => 25-FEB-2012
TIME PLOTTED => 09:13

Dist	COUNTY	ROUTE	KILOMETER POST TOTAL PROJECT	SHEET No.	TOTAL SHEETS
04	SF	80	12.6/13.9	164	821

REGISTERED CIVIL ENGINEER 02/03/12 DATE

2-21-12
PLANS APPROVAL DATE

REGISTERED PROFESSIONAL ENGINEER Mark Grodzki No. 65594 Exp. 09/30/13 CIVIL STATE OF CALIFORNIA

THE STATE OF CALIFORNIA OR ITS OFFICERS OR AGENTS SHALL NOT BE RESPONSIBLE FOR THE ACCURACY OR COMPLETENESS OF ELECTRONIC COPIES OF THIS PLAN SHEET.

PB AMERICAS, Inc.
303 Second St., Suite 700N
San Francisco, CA 94107-1317

Caltrans Metric

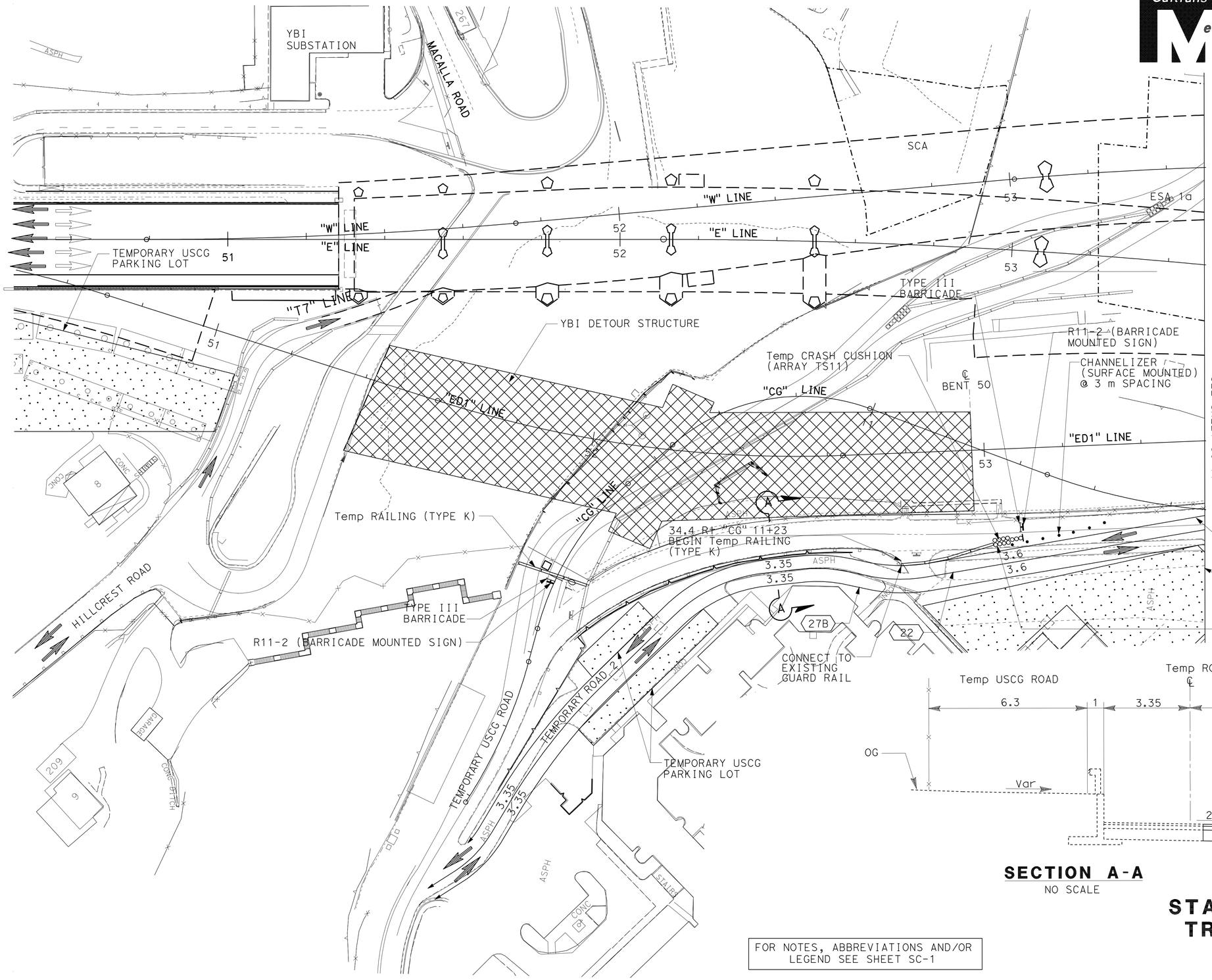

SECTION A-A
NO SCALE

ALL DIMENSIONS ARE IN METERS UNLESS OTHERWISE SHOWN

STAGE CONSTRUCTION AND TRAFFIC HANDLING PLAN

STAGE 3 PHASE 1

SCALE 1:500

SC-10

FOR NOTES, ABBREVIATIONS AND/OR LEGEND SEE SHEET SC-1

THIS PLAN ACCURATE FOR STAGE CONSTRUCTION ONLY.

REVISED BY	M. GRODZKI
DATE REVISED	B. NADELL
CALCULATED-DESIGNED BY	
CHECKED BY	
CONSULTANT FUNCTIONAL SUPERVISOR	BOB ZANDIPOUR

STATE OF CALIFORNIA - DEPARTMENT OF TRANSPORTATION
Caltrans

LAST REVISION 00-00-00
DATE PLOTTED => 25-FEB-2012
TIME PLOTTED => 09:14

Dist	COUNTY	ROUTE	KILOMETER POST TOTAL PROJECT	SHEET No.	TOTAL SHEETS
04	SF	80	12.6/13.9	165	821

Mark Grodzki 02/03/12
REGISTERED CIVIL ENGINEER DATE

2-21-12
PLANS APPROVAL DATE

REGISTERED PROFESSIONAL ENGINEER Mark Grodzki No. 65594 Exp. 09/30/13 CIVIL STATE OF CALIFORNIA

THE STATE OF CALIFORNIA OR ITS OFFICERS OR AGENTS SHALL NOT BE RESPONSIBLE FOR THE ACCURACY OR COMPLETENESS OF ELECTRONIC COPIES OF THIS PLAN SHEET.

PB AMERICAS, Inc.
303 Second St., Suite 700N
San Francisco, CA 94107-1317

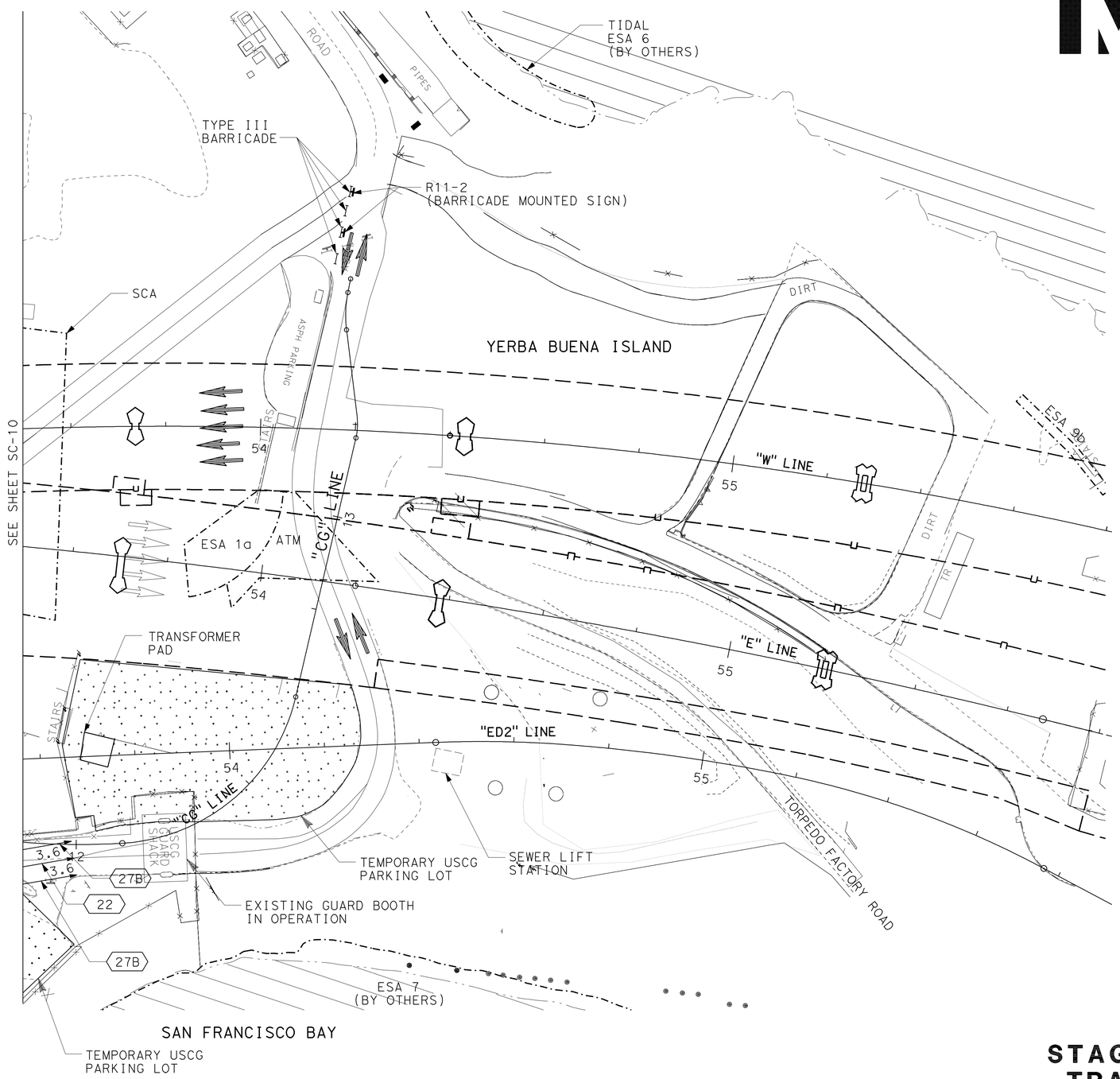

SAN FRANCISCO BAY

FOR NOTES, ABBREVIATIONS AND/OR LEGEND SEE SHEET SC-1

ALL DIMENSIONS ARE IN METERS UNLESS OTHERWISE SHOWN

STAGE CONSTRUCTION AND TRAFFIC HANDLING PLAN

STAGE 3 PHASE 1

SCALE 1:500

SC-11

THIS PLAN ACCURATE FOR STAGE CONSTRUCTION ONLY.

CALCULATED-DESIGNED BY	M. GRODZKI
CHECKED BY	B. NADELL
CONSULTANT FUNCTIONAL SUPERVISOR	BOB ZANDIPOUR
REVISED BY	
DATE REVISED	

STATE OF CALIFORNIA - DEPARTMENT OF TRANSPORTATION

Caltrans

LAST REVISION 00-00-00 DATE PLOTTED => 25-FEB-2012 TIME PLOTTED => 09:14

Dist	COUNTY	ROUTE	KILOMETER POST TOTAL PROJECT	SHEET No.	TOTAL SHEETS
04	SF	80	12.6/13.9	166	821

Mark Grodzki 02/03/12
REGISTERED CIVIL ENGINEER DATE

2-21-12
PLANS APPROVAL DATE

REGISTERED PROFESSIONAL ENGINEER Mark Grodzki No. 65594 Exp. 09/30/13 CIVIL STATE OF CALIFORNIA

THE STATE OF CALIFORNIA OR ITS OFFICERS OR AGENTS SHALL NOT BE RESPONSIBLE FOR THE ACCURACY OR COMPLETENESS OF ELECTRONIC COPIES OF THIS PLAN SHEET.

PB AMERICAS, Inc.
303 Second St., Suite 700N
San Francisco, CA 94107-1317

Caltrans Metric

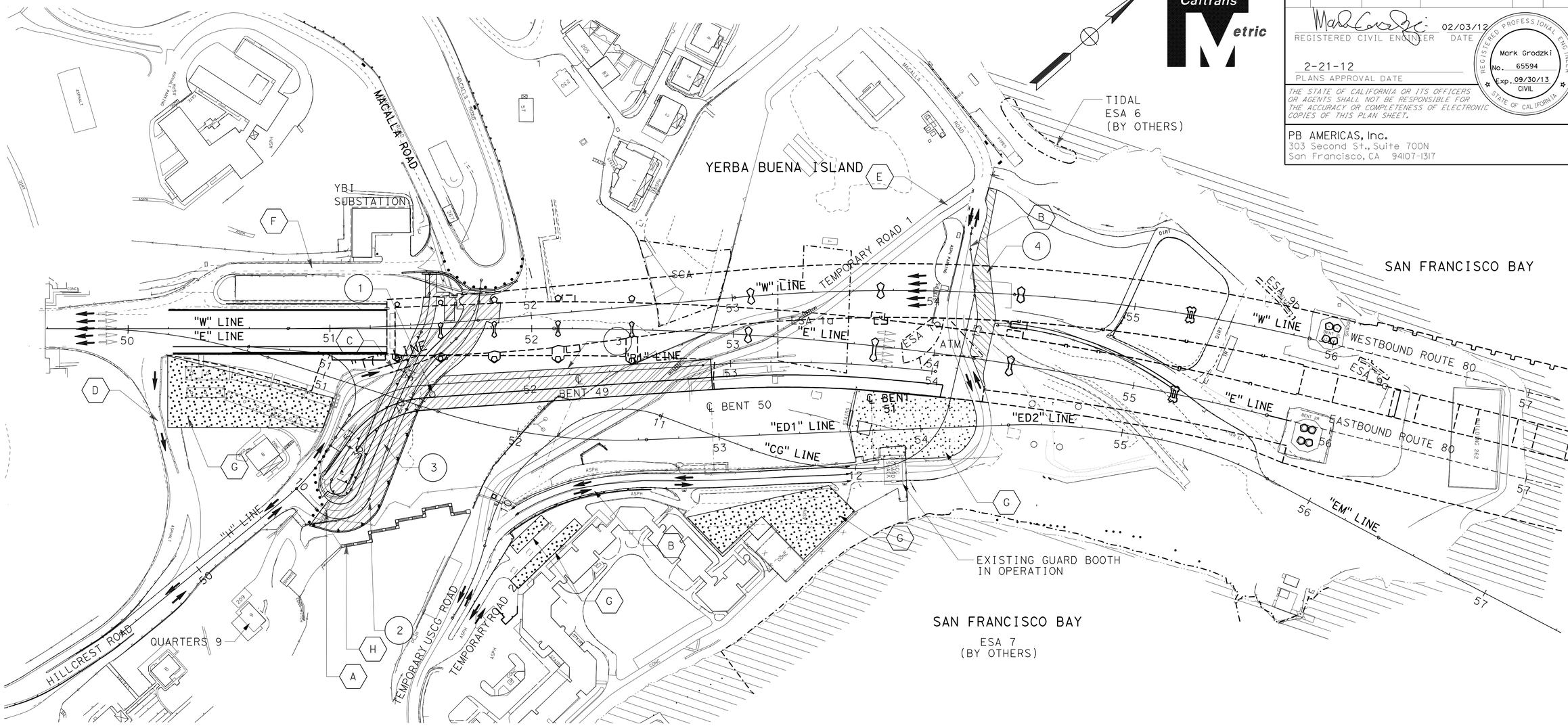

TRAFFIC HANDLING

(A)	SOUTHGATE ROAD CLOSED TO TRAFFIC. PROVIDE TRAFFIC DETOUR 1 THROUGH LOCAL STREETS (SEE CS SHEETS). PROVIDE AND MAINTAIN ACCESS TO USCG QUARTERS 9.
(B)	ACCESS TO USCG FACILITY IS VIA TEMPORARY USCG ROAD.
(C)	TEMPORARY EB-80 ON-RAMP (T7 LINE) REMAINS OPEN TO TRAFFIC.
(D)	WB-80 OFF-RAMP REMAINS OPEN TO TRAFFIC.
(E)	TEMPORARY ROAD 1 CLOSED TO TRAFFIC.
(F)	WB-80 ON-RAMP CLOSED, BECAUSE OF THE CITY AND COUNTY OF SAN FRANCISCO CONTRACT. PROVIDE DETOUR 3 (SEE CS SHEETS) FOR WESTBOUND ON-RAMP DETOUR (SEE CS SHEETS).
(G)	TEMPORARY USCG PARKING LOT.
(H)	TIMBER STAIRS FOR PEDSTRIAN ACCESS CLOSED.

CONSTRUCTION

1	CONSTRUCT EB-80 ON-RAMP FOUNDATION W-10 AND ABUTMENT 11 (SEE STRUCTURE PLANS).
2	CONSTRUCT RETAINING WALL NO. 51 FROM "SG" LINE TO CONFORM WITH EXISTING RETAINING WALL 50A. CONSTRUCT RETAINING WALL 50, RETAINING WALL 52, AND RETAINING WALL 53. CONSTRUCT SOUTH GATE ROAD (SG LINE), PEDESTRIAN PATH, AND BIKE PATH (BP) LINE.
3	CONSTRUCT EB-80 ON-RAMP (R1 LINE TO Sta 52+90.287), BIKE PATH, BIKE PATH STRUCTURE, RETAINING WALL NO. 54, AND BIKE PATH LANDING AREA.
4	CONSTRUCT TEMPORARY PAVEMENT FOR USCG ACCESS DURING PARTIAL ROUNDABOUT CONSTRUCTION IN STAGE 4 PHASE 1.

FOR NOTES, ABBREVIATIONS AND/OR LEGEND SEE SHEET SC-1

ALL DIMENSIONS ARE IN METERS UNLESS OTHERWISE SHOWN

STAGE CONSTRUCTION

STAGE 3 PHASE 2

SCALE 1:1000

THIS PLAN ACCURATE FOR STAGE CONSTRUCTION ONLY.

SC-12

REVISED BY	DATE REVISED

CALCULATED-DESIGNED BY: M. GRODZKI
CHECKED BY: B. NADELL
CONSULTANT FUNCTIONAL SUPERVISOR: BOB ZANDIPOUR

STATE OF CALIFORNIA - DEPARTMENT OF TRANSPORTATION
Caltrans

LAST REVISION 00-00-00 | DATE PLOTTED => 25-FEB-2012 | TIME PLOTTED => 09:14

Dist	COUNTY	ROUTE	KILOMETER POST TOTAL PROJECT	SHEET No.	TOTAL SHEETS
04	SF	80	12.6/13.9	167	821

REGISTERED CIVIL ENGINEER 02/03/12 DATE

2-21-12
PLANS APPROVAL DATE

REGISTERED PROFESSIONAL ENGINEER Mark Grodzki No. 65594 Exp. 09/30/13 CIVIL STATE OF CALIFORNIA

THE STATE OF CALIFORNIA OR ITS OFFICERS OR AGENTS SHALL NOT BE RESPONSIBLE FOR THE ACCURACY OR COMPLETENESS OF ELECTRONIC COPIES OF THIS PLAN SHEET.

PB AMERICAS, Inc.
303 Second St., Suite 700N
San Francisco, CA 94107-1317

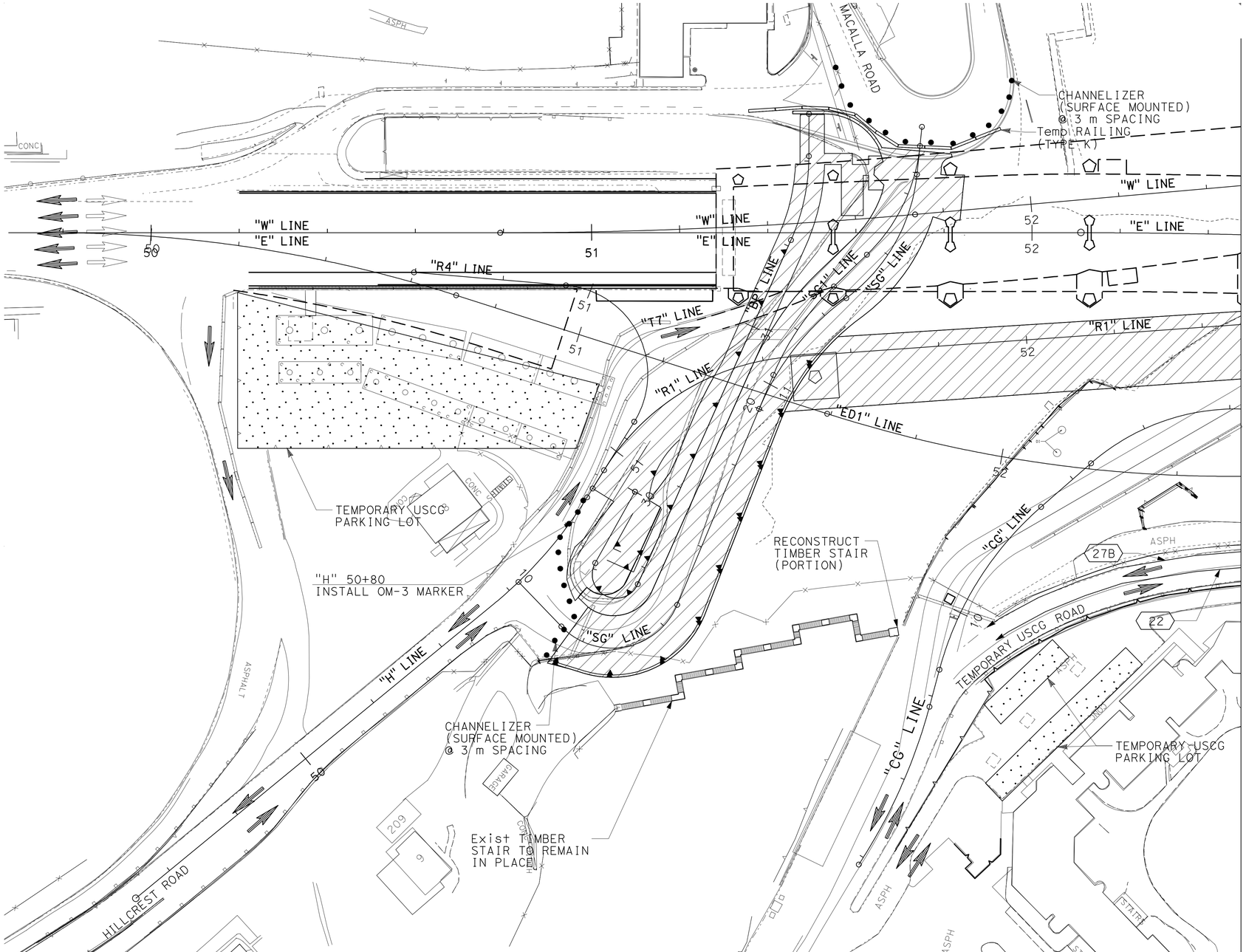

FOR NOTES, ABBREVIATIONS AND/OR LEGEND SEE SHEET SC-1

THIS PLAN ACCURATE FOR STAGE CONSTRUCTION ONLY.

ALL DIMENSIONS ARE IN METERS UNLESS OTHERWISE SHOWN

STAGE CONSTRUCTION AND TRAFFIC HANDLING PLAN

STAGE 3 PHASE 2

SCALE 1:500

SC-13

STATE OF CALIFORNIA - DEPARTMENT OF TRANSPORTATION

CONSULTANT FUNCTIONAL SUPERVISOR: BOB ZANDIPOUR

CALCULATED-DESIGNED BY: M. GRODZKI

CHECKED BY: B. NADELL

REVISED BY / DATE REVISED

LAST REVISION 00-00-00 DATE PLOTTED => 25-FEB-2012 TIME PLOTTED => 09:15

Dist	COUNTY	ROUTE	KILOMETER POST TOTAL PROJECT	SHEET No.	TOTAL SHEETS
04	SF	80	12.6/13.9	168	821

REGISTERED CIVIL ENGINEER 02/03/12 DATE

2-21-12
PLANS APPROVAL DATE

REGISTERED PROFESSIONAL ENGINEER Mark Grodzki No. 65594 Exp. 09/30/13 CIVIL STATE OF CALIFORNIA

THE STATE OF CALIFORNIA OR ITS OFFICERS OR AGENTS SHALL NOT BE RESPONSIBLE FOR THE ACCURACY OR COMPLETENESS OF ELECTRONIC COPIES OF THIS PLAN SHEET.

PB AMERICAS, Inc.
303 Second St., Suite 700N
San Francisco, CA 94107-1317

Caltrans Metric

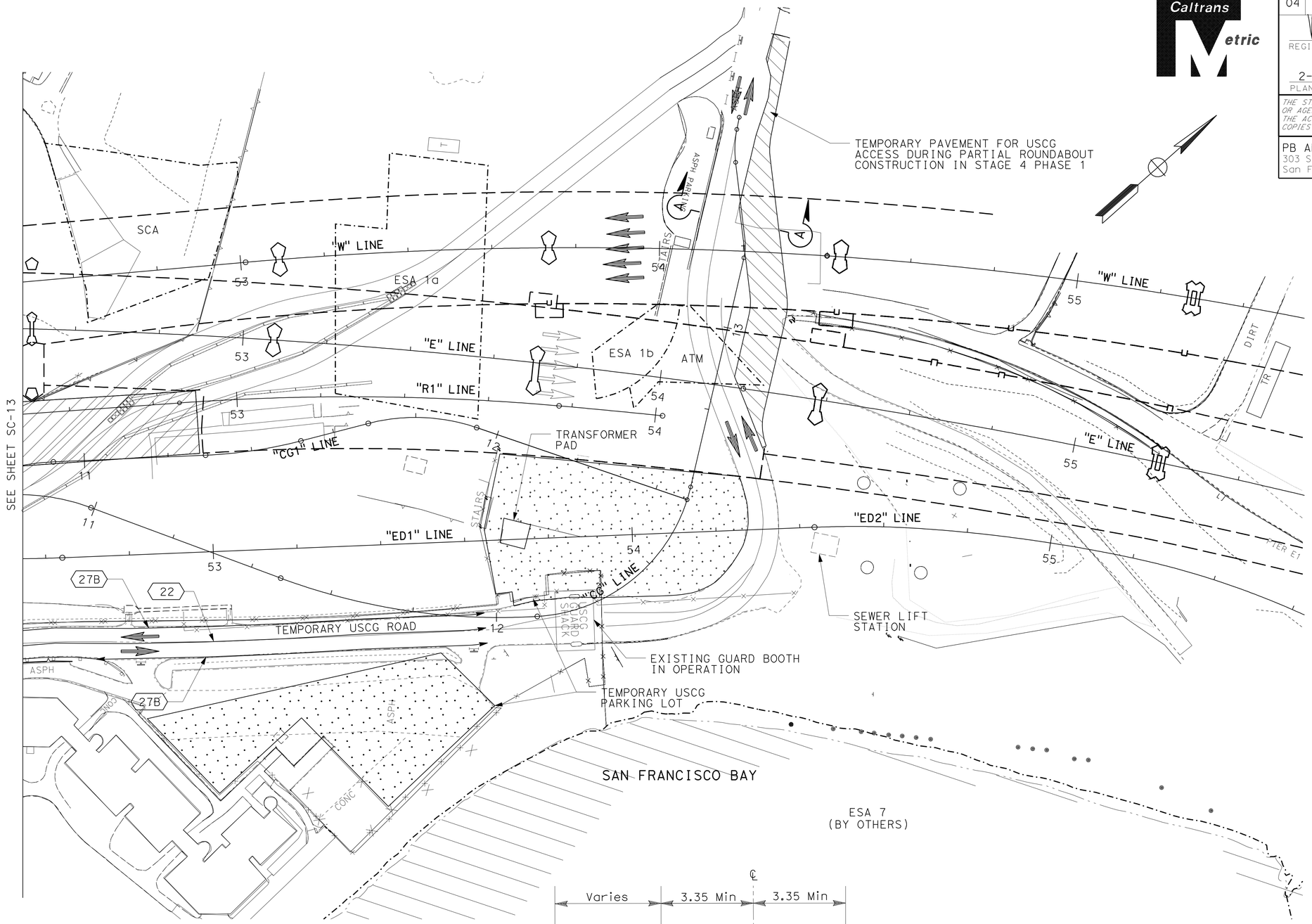

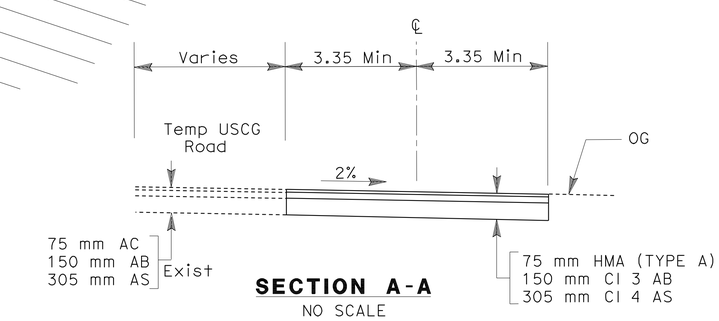

SECTION A-A
NO SCALE

FOR NOTES, ABBREVIATIONS AND/OR LEGEND SEE SHEET SC-1

THIS PLAN ACCURATE FOR STAGE CONSTRUCTION ONLY.

ALL DIMENSIONS ARE IN METERS UNLESS OTHERWISE SHOWN

STAGE CONSTRUCTION AND TRAFFIC HANDLING PLAN

STAGE 3 PHASE 2

SCALE 1:500

SC-14

STATE OF CALIFORNIA - DEPARTMENT OF TRANSPORTATION
Caltrans

CONSULTANT FUNCTIONAL SUPERVISOR: BOB ZANDIPOUR
CALCULATED-DESIGNED BY: M. GRODZKI
CHECKED BY: B. NADELL
REVISED BY
DATE REVISED

LAST REVISION 00-00-00
DATE PLOTTED => 25-FEB-2012
TIME PLOTTED => 09:15

Dist	COUNTY	ROUTE	KILOMETER POST TOTAL PROJECT	SHEET No.	TOTAL SHEETS
04	SF	80	12.6/13.9	169	821

Mark Grodzki 02/03/12
REGISTERED CIVIL ENGINEER DATE

2-21-12
PLANS APPROVAL DATE

REGISTERED PROFESSIONAL ENGINEER Mark Grodzki No. 65594 Exp. 09/30/13 CIVIL STATE OF CALIFORNIA

THE STATE OF CALIFORNIA OR ITS OFFICERS OR AGENTS SHALL NOT BE RESPONSIBLE FOR THE ACCURACY OR COMPLETENESS OF ELECTRONIC COPIES OF THIS PLAN SHEET.

PB AMERICAS, Inc.
303 Second St., Suite 700N
San Francisco, CA 94107-1317

Caltrans Metric

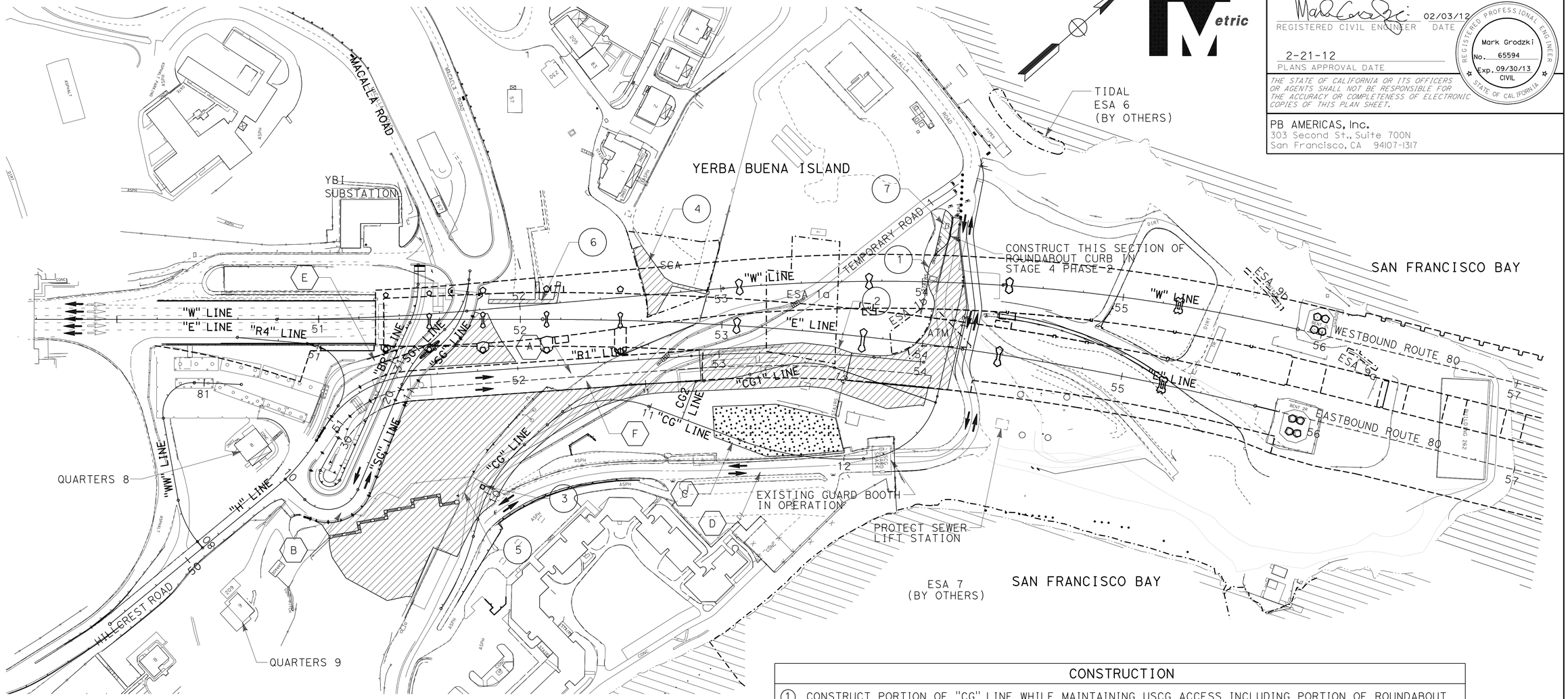

TRAFFIC HANDLING

A	EB-80 ON-RAMP OPEN TO TRAFFIC.
B	SOUTHGATE ROAD (SG LINE) OPEN TO TRAFFIC.
C	TEMPORARY USCG PARKING LOT.
D	ACCESS TO USCG FACILITY IS VIA TEMPORARY USCG ROAD. USCG ACCESS MUST BE MAINTAINED DURING ROUNDABOUT CONSTRUCTION.
E	TEMPORARY EB-80 ON RAMP (T7 LINE) CLOSED TO TRAFFIC.
F	BIKE PATH OPEN.

CONSTRUCTION

1	CONSTRUCT PORTION OF "CG" LINE WHILE MAINTAINING USCG ACCESS INCLUDING PORTION OF ROUNDABOUT AND GUARD BOOTH (SEE ARCH. PLANS). CONSTRUCT FULLY-FUNCTIONING USCG ENTRANCE WITHOUT CANOPY.
2	CONSTRUCT USCG ROAD (CG1 LINE), AND PARKING LOTS ALONG USCG ROAD (CG1 LINE), AND ALONG USCG ROAD (CG LINE) FROM Sta 9+65 TO Sta 10+85. REMOVE BASE AND SURFACING PORTION OF TEMPORARY ROAD 1.
3	REMOVE AND SALVAGE GUARD BOOTH AT LOCATION AS SHOWN ON THE PLANS.
4	CONSTRUCT HISTORICAL STAIRS, AND NIMITZ PLATEAU (SEE ARCHITECTURAL PLANS).
5	CONSTRUCT GABION WALL, REGRADE AND STABILIZE SLOPE (SEE ROADWAY & STRUCTURAL PLANS).
6	CONSTRUCT UTILITY STAIRS AND CONCRETE PATHS (SEE ARCHITECTURAL PLANS).
7	CONSTRUCT TEMPORARY PAVEMENT FOR STAGE 4 PHASE 2 USCG ACCESS.

ALL DIMENSIONS ARE IN METERS UNLESS OTHERWISE SHOWN

STAGE CONSTRUCTION
STAGE 4 PHASE 1
SCALE 1:1000

FOR NOTES, ABBREVIATIONS AND/OR LEGEND SEE SHEET SC-1

THIS PLAN ACCURATE FOR STAGE CONSTRUCTION ONLY.

SC-15

STATE OF CALIFORNIA - DEPARTMENT OF TRANSPORTATION
Caltrans

CONSULTANT FUNCTIONAL SUPERVISOR: BOB ZANDIPOUR
CALCULATED-DESIGNED BY: M. GRODZKI
CHECKED BY: B. NADELL
REVISED BY
DATE REVISED

LAST REVISION 00-00-00
DATE PLOTTED => 25-FEB-2012
TIME PLOTTED => 09:15

Dist	COUNTY	ROUTE	KILOMETER POST TOTAL PROJECT	SHEET No.	TOTAL SHEETS
04	SF	80	12.6/13.9	170	821

REGISTERED CIVIL ENGINEER 02/03/12 DATE

2-21-12
PLANS APPROVAL DATE

REGISTERED PROFESSIONAL ENGINEER Mark Grodzki No. 65594 Exp. 09/30/13 CIVIL STATE OF CALIFORNIA

THE STATE OF CALIFORNIA OR ITS OFFICERS OR AGENTS SHALL NOT BE RESPONSIBLE FOR THE ACCURACY OR COMPLETENESS OF ELECTRONIC COPIES OF THIS PLAN SHEET.

PB AMERICAS, Inc.
303 Second St., Suite 700N
San Francisco, CA 94107-1317

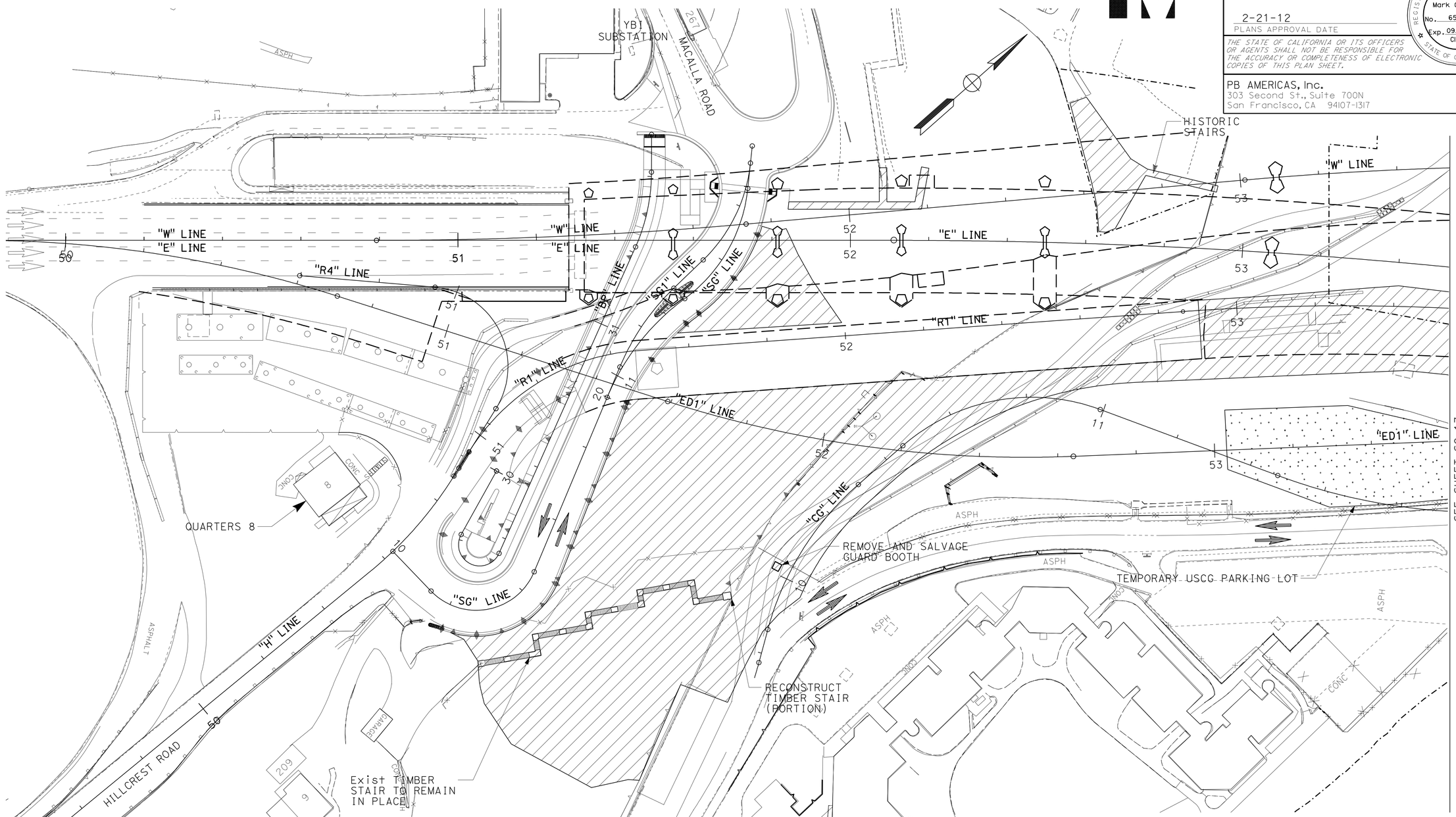

WESTBOUND

FOR NOTES, ABBREVIATIONS AND/OR LEGEND SEE SHEET SC-1

ALL DIMENSIONS ARE IN METERS UNLESS OTHERWISE SHOWN

STAGE CONSTRUCTION AND TRAFFIC HANDLING PLAN

STAGE 4 PHASE 1

SCALE 1:500

SC-16

THIS PLAN ACCURATE FOR STAGE CONSTRUCTION ONLY.

STATE OF CALIFORNIA - DEPARTMENT OF TRANSPORTATION
Caltrans

CONSULTANT FUNCTIONAL SUPERVISOR: BOB ZANDIPOUR
CALCULATED-DESIGNED BY: M. GRODZKI
CHECKED BY: B. NADELL
REVISED BY
DATE REVISED

LAST REVISION 00-00-00
DATE PLOTTED => 25-FEB-2012
TIME PLOTTED => 09:16

Dist	COUNTY	ROUTE	KILOMETER POST TOTAL PROJECT	SHEET No.	TOTAL SHEETS
04	SF	80	12.6/13.9	171	821

Mark Grodzki 02/03/12
REGISTERED CIVIL ENGINEER DATE

2-21-12
PLANS APPROVAL DATE

REGISTERED PROFESSIONAL ENGINEER Mark Grodzki No. 65594 Exp. 09/30/13 CIVIL STATE OF CALIFORNIA

THE STATE OF CALIFORNIA OR ITS OFFICERS OR AGENTS SHALL NOT BE RESPONSIBLE FOR THE ACCURACY OR COMPLETENESS OF ELECTRONIC COPIES OF THIS PLAN SHEET.

PB AMERICAS, Inc.
303 Second St., Suite 700N
San Francisco, CA 94107-1317

Caltrans Metric

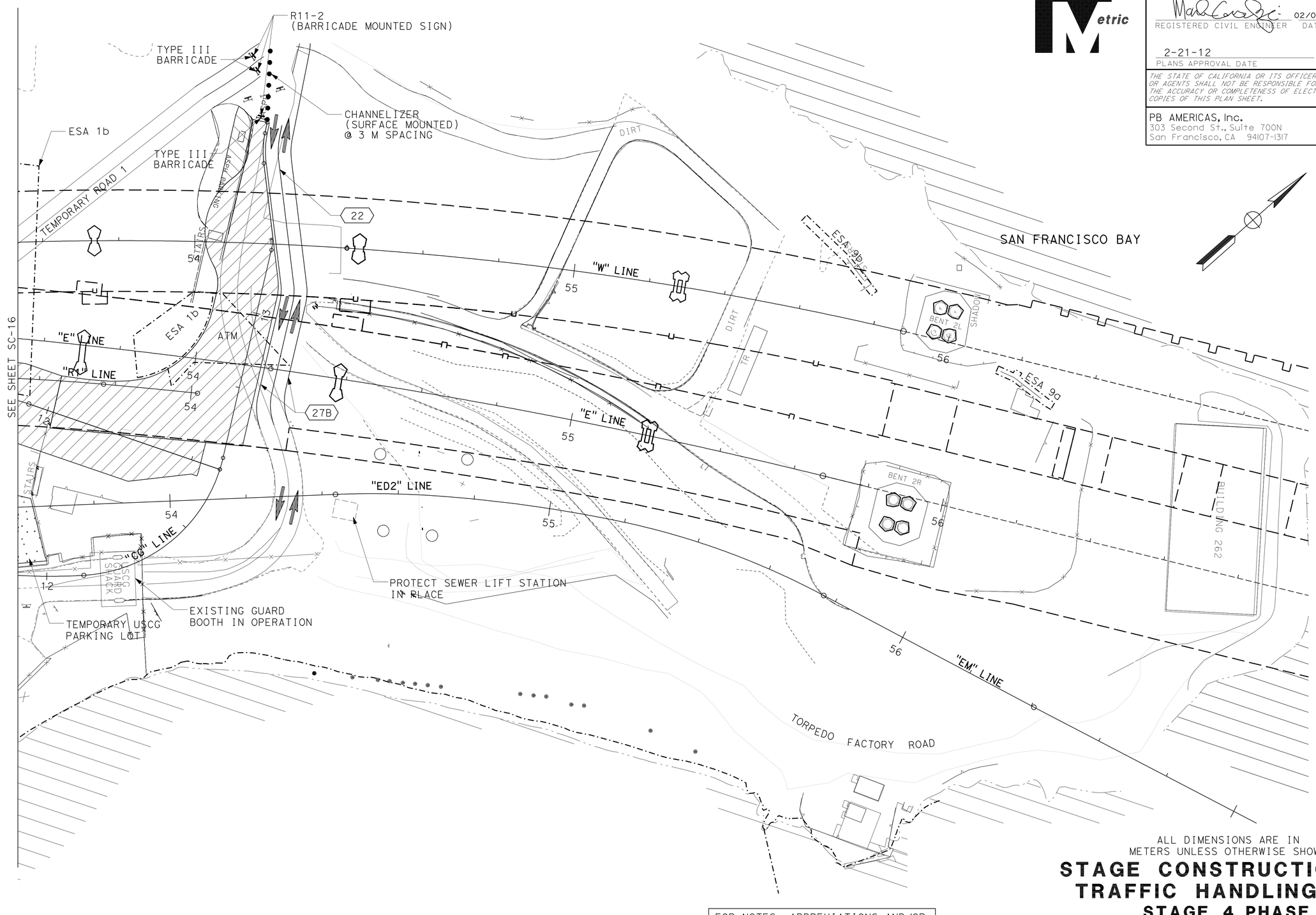

ALL DIMENSIONS ARE IN
METERS UNLESS OTHERWISE SHOWN

STAGE CONSTRUCTION AND TRAFFIC HANDLING PLAN

STAGE 4 PHASE 1

SCALE 1:500

FOR NOTES, ABBREVIATIONS AND/OR
LEGEND SEE SHEET SC-1

THIS PLAN ACCURATE FOR STAGE CONSTRUCTION ONLY.

SC-17

STATE OF CALIFORNIA - DEPARTMENT OF TRANSPORTATION
Caltrans

CONSULTANT FUNCTIONAL SUPERVISOR: BOB ZANDIPOUR
CALCULATED-DESIGNED BY: M. GRODZKI
CHECKED BY: B. NADELL
REVISED BY
DATE REVISED

LAST REVISION 00-00-00
DATE PLOTTED => 25-FEB-2012
TIME PLOTTED => 09:17

Dist	COUNTY	ROUTE	KILOMETER POST TOTAL PROJECT	SHEET No.	TOTAL SHEETS
04	SF	80	12.6/13.9	172	821

Mark Grodzki 02/03/12
REGISTERED CIVIL ENGINEER DATE

2-21-12
PLANS APPROVAL DATE

REGISTERED PROFESSIONAL ENGINEER Mark Grodzki No. 65594 Exp. 09/30/13 CIVIL STATE OF CALIFORNIA

THE STATE OF CALIFORNIA OR ITS OFFICERS OR AGENTS SHALL NOT BE RESPONSIBLE FOR THE ACCURACY OR COMPLETENESS OF ELECTRONIC COPIES OF THIS PLAN SHEET.

PB AMERICAS, Inc.
303 Second St., Suite 700N
San Francisco, CA 94107-1317

Caltrans Metric

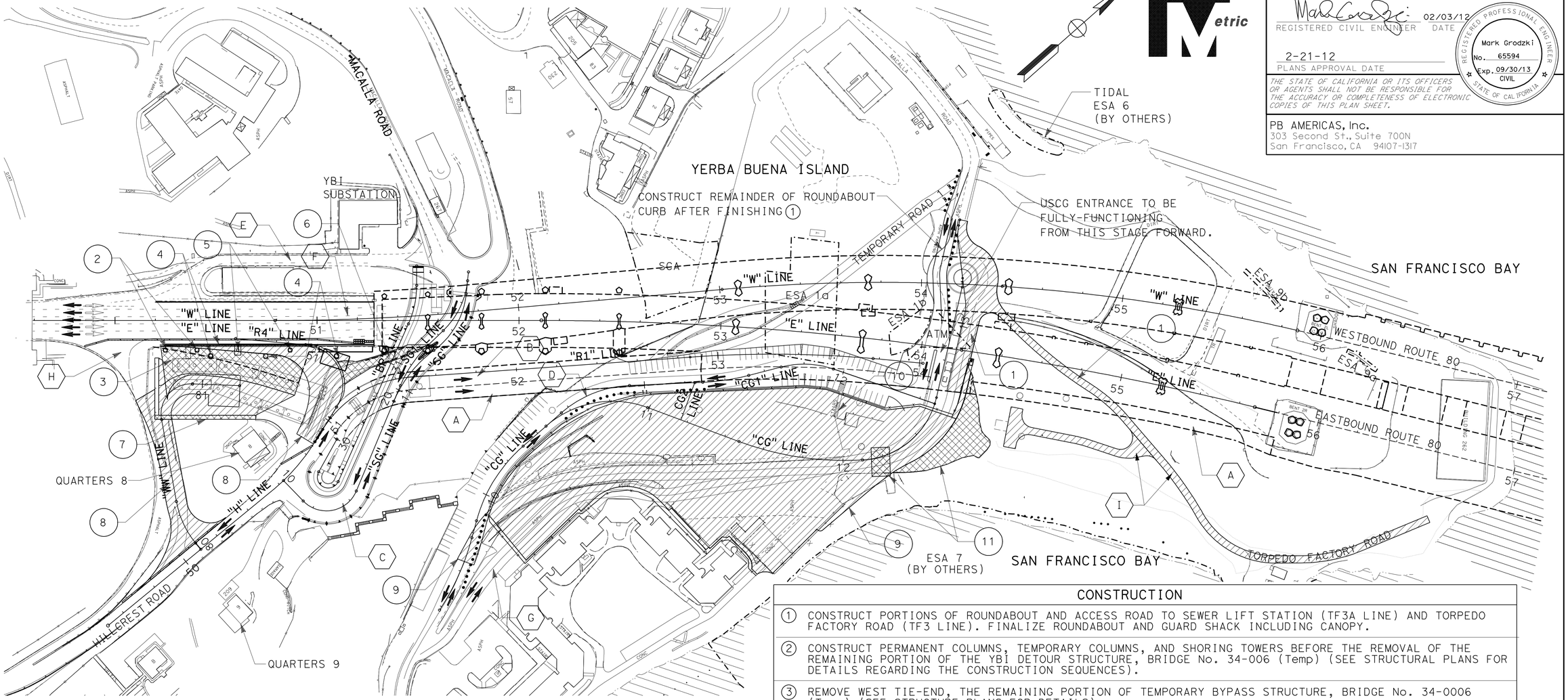

TRAFFIC HANDLING

(A)	BIKEPATH REMAINS OPEN.
(B)	EB-80 ON-RAMP OPEN TO TRAFFIC.
(C)	SOUTHGATE ROAD (SG LINE) OPEN TO TRAFFIC.
(D)	OPEN USCG ROAD (CG1 LINE) TO TRAFFIC, AND CLOSE TEMPORARY USCG ROAD.
(E)	WB-80 ON-RAMP CLOSED, BECAUSE OF THE CITY AND COUNTY OF SAN FRANCISCO CONTRACT. PROVIDE DETOUR 3 (SEE CS SHEETS) FOR WESTBOUND ON-RAMP DETOUR (SEE CS SHEETS).
(F)	SHIFT WB TRAFFIC TO TWO NORTHERNMOST LANES FOR UP TO 8 HOURS FOR EDGE BEAM SUPPORT STRUCTURE CONSTRUCTION
(G)	FULL ACCESS TO GALLEY (DELIVERIES).
(H)	WB OFF-RAMP CLOSED TO TRAFFIC FOR UP TO 25 DAYS. PROVIDE DETOUR 4 (SEE CS SHEETS) FOR WESTBOUND OFF-RAMP DETOUR.
(I)	TORPEDO FACTORY ROADS (TF3 AND TF3A LINES) OPEN TO TRAFFIC.

CONSTRUCTION

(1)	CONSTRUCT PORTIONS OF ROUNDABOUT AND ACCESS ROAD TO SEWER LIFT STATION (TF3A LINE) AND TORPEDO FACTORY ROAD (TF3 LINE). FINALIZE ROUNDABOUT AND GUARD SHACK INCLUDING CANOPY.
(2)	CONSTRUCT PERMANENT COLUMNS, TEMPORARY COLUMNS, AND SHORING TOWERS BEFORE THE REMOVAL OF THE REMAINING PORTION OF THE YBI DETOUR STRUCTURE, BRIDGE No. 34-006 (Temp) (SEE STRUCTURAL PLANS FOR DETAILS REGARDING THE CONSTRUCTION SEQUENCES).
(3)	REMOVE WEST TIE-END, THE REMAINING PORTION OF TEMPORARY BYPASS STRUCTURE, BRIDGE No. 34-0006 (Temp) (SEE STRUCTURE PLANS FOR DETAILS).
(4)	CONSTRUCT EDGE BEAM SUPPORT STRUCTURE, SUPERSTRUCTURE, AND CONCRETE BARRIER (TYPE 732 Mod). (SEE STRUCTURE PLANS FOR DETAILS); AND REMOVE CONCRETE BARRIER (TYPE K) WHEN NO LONGER REQUIRED.
(5)	REMOVE TEMPORARY SUPPORTS AFTER THE COMPLETION OF THE EDGE BEAM SUPPORT STRUCTURE, WHEN NO LONGER REQUIRED (SEE STRUCTURE PLANS FOR DETAILS).
(6)	REMOVE TEMPORARY EB-80 ON-RAMP (T7 LINE). REMOVE SOLDIER PILE WALL 1.0m BELOW GRADE (SEE STRUCTURE PLANS).
(7)	REMOVE EXISTING RETAINING WALL.
(8)	CONSTRUCT EB-80 OFF-RAMP (R4 LINE), AND LOCAL STREET (WW LINE).
(9)	CONSTRUCT USCG ROAD (CG LINE) INCLUDING HOT MIX ASPHALT CONCRETE SURFACING AND PARKING LOTS, RETAINING WALL No. 8, AND RETAINING WALL No. 9 (SEE ROADWAY PLANS).
(10)	REMOVE EXISTING USCG STAIRS, AND CONSTRUCT USCG ACCESS STAIRS (SEE ARCHITECTURAL PLANS).
(11)	REMOVE TEMPORARY USCG PARKING LOT. DEMOLISH AND REMOVE EXISTING GUARD BOOTH, CANOPY, AND ALL RELATED FOOTINGS.

FOR NOTES, ABBREVIATIONS AND/OR LEGEND SEE SHEET SC-1

THIS PLAN ACCURATE FOR STAGE CONSTRUCTION ONLY.

ALL DIMENSIONS ARE IN METERS UNLESS OTHERWISE SHOWN

STAGE CONSTRUCTION
STAGE 4 PHASE 2
SCALE 1:1000

SC-18

STATE OF CALIFORNIA - DEPARTMENT OF TRANSPORTATION
Caltrans

CONSULTANT FUNCTIONAL SUPERVISOR: BOB ZANDIPOUR
CALCULATED-DESIGNED BY: M. GRODZKI
CHECKED BY: B. NADELL
REVISED BY / DATE REVISED

LAST REVISION 00-00-00
DATE PLOTTED => 25-FEB-2012
TIME PLOTTED => 09:17

Dist	COUNTY	ROUTE	KILOMETER POST TOTAL PROJECT	SHEET No.	TOTAL SHEETS
04	SF	80	12.6/13.9	173	821

Mark Grodzki 02/03/12
REGISTERED CIVIL ENGINEER DATE

2-21-12
PLANS APPROVAL DATE

REGISTERED PROFESSIONAL ENGINEER Mark Grodzki No. 65594 Exp. 09/30/13 CIVIL STATE OF CALIFORNIA

THE STATE OF CALIFORNIA OR ITS OFFICERS OR AGENTS SHALL NOT BE RESPONSIBLE FOR THE ACCURACY OR COMPLETENESS OF ELECTRONIC COPIES OF THIS PLAN SHEET.

PB AMERICAS, Inc.
303 Second St., Suite 700N
San Francisco, CA 94107-1317

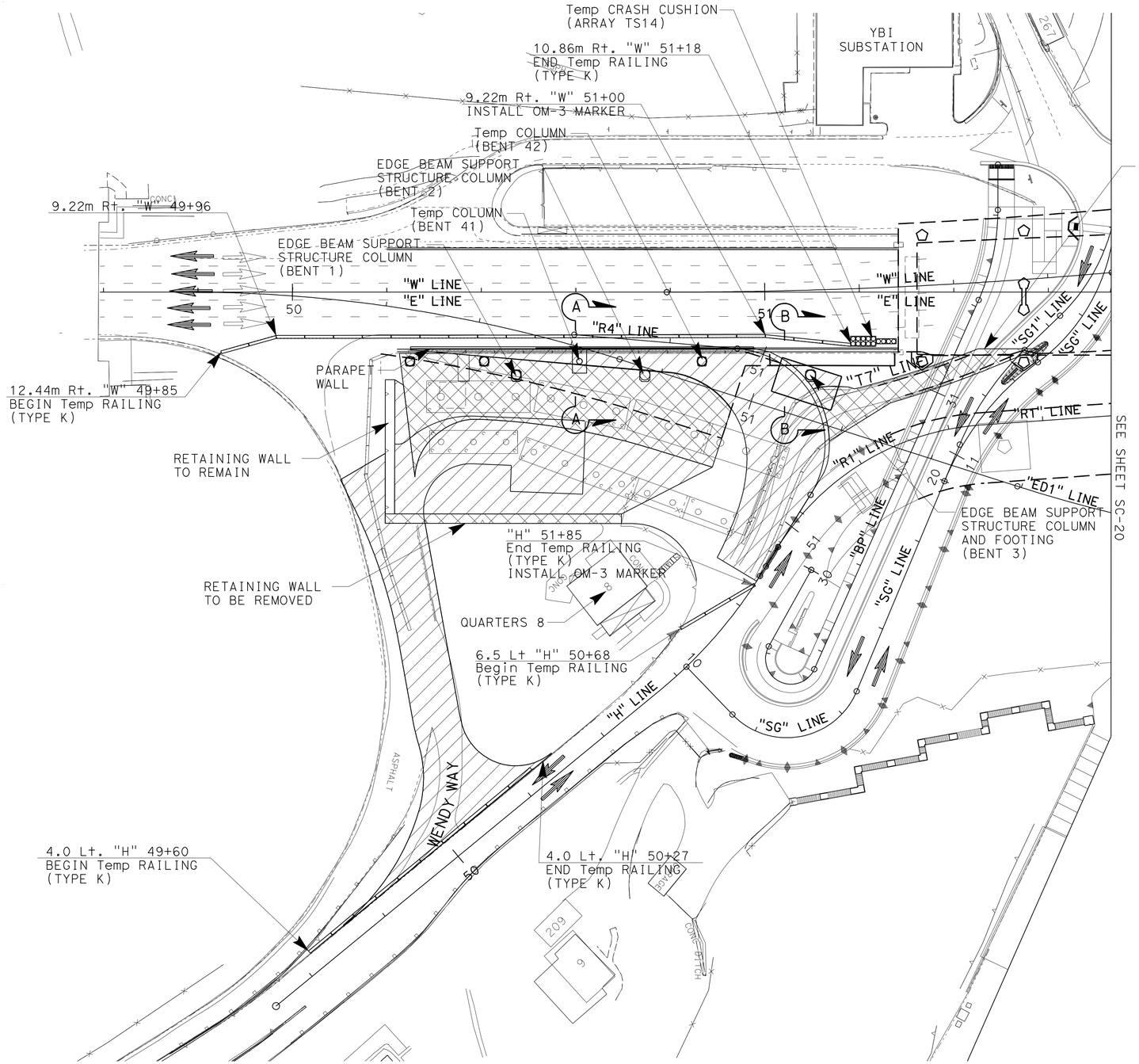

WESTBOUND

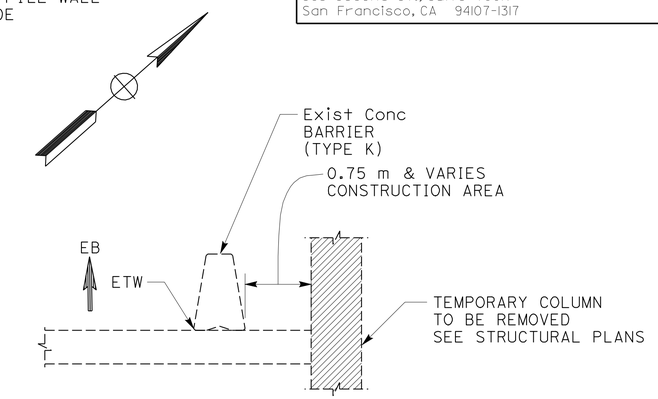

SECTION A-A
NO SCALE

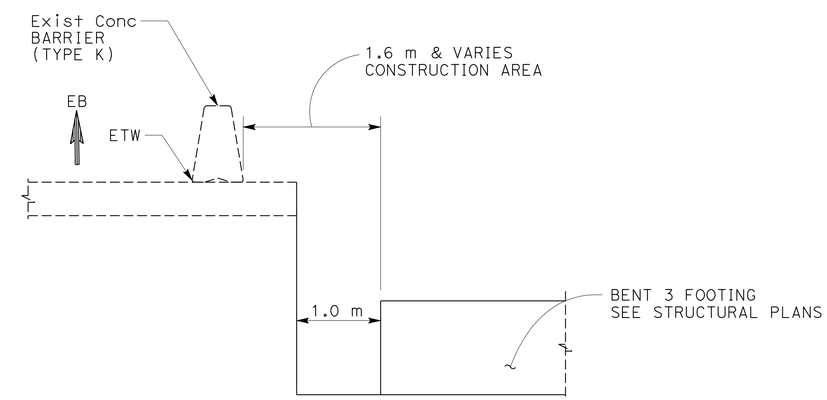

SECTION B-B
NO SCALE

FOR NOTES, ABBREVIATIONS AND/OR LEGEND SEE SHEET SC-1

THIS PLAN ACCURATE FOR STAGE CONSTRUCTION ONLY.

ALL DIMENSIONS ARE IN METERS UNLESS OTHERWISE SHOWN

STAGE CONSTRUCTION AND TRAFFIC HANDLING PLAN

STAGE 4 PHASE 2

SCALE 1:500

SC-19

REVISED BY	DATE REVISED

CALCULATED-DESIGNED BY: M. GRODZKI
CHECKED BY: B. NADELL
CONSULTANT FUNCTIONAL SUPERVISOR: BOB ZANDIPOUR

STATE OF CALIFORNIA - DEPARTMENT OF TRANSPORTATION
Caltrans

LAST REVISION 00-00-00
DATE PLOTTED => 25-FEB-2012
TIME PLOTTED => 09:18

Dist	COUNTY	ROUTE	KILOMETER POST TOTAL PROJECT	SHEET No.	TOTAL SHEETS
04	SF	80	12.6/13.9	174	821

Mark Grodzki 02/03/12
REGISTERED CIVIL ENGINEER DATE

2-21-12
PLANS APPROVAL DATE

REGISTERED PROFESSIONAL ENGINEER Mark Grodzki No. 65594 Exp. 09/30/13 CIVIL STATE OF CALIFORNIA

THE STATE OF CALIFORNIA OR ITS OFFICERS OR AGENTS SHALL NOT BE RESPONSIBLE FOR THE ACCURACY OR COMPLETENESS OF ELECTRONIC COPIES OF THIS PLAN SHEET.

PB AMERICAS, Inc.
303 Second St., Suite 700N
San Francisco, CA 94107-1317

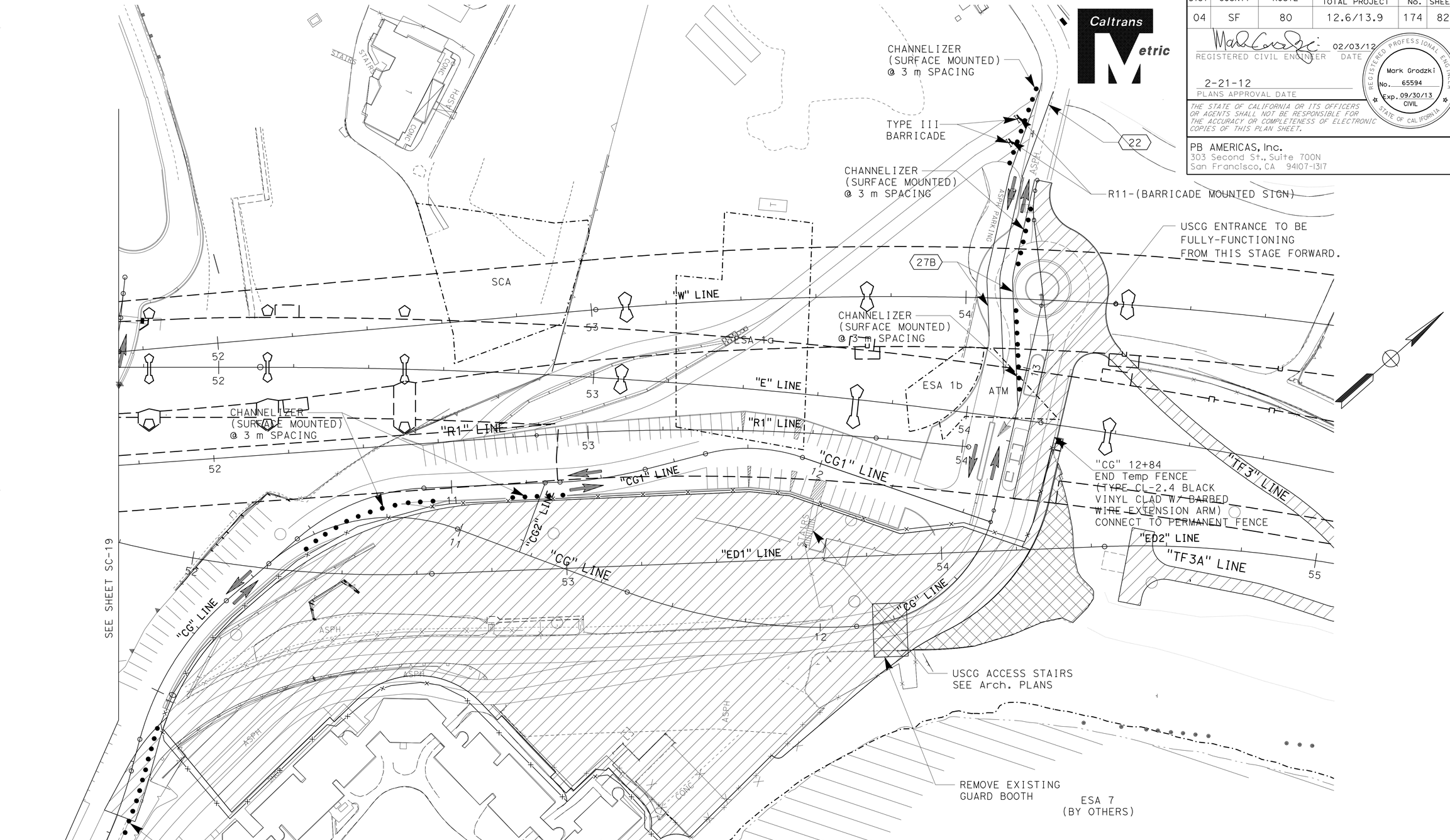

FOR NOTES, ABBREVIATIONS AND/OR LEGEND SEE SHEET SC-1

ALL DIMENSIONS ARE IN METERS UNLESS OTHERWISE SHOWN

STAGE CONSTRUCTION AND TRAFFIC HANDLING PLAN

STAGE 4 PHASE 2

SCALE 1:500

SC-20

THIS PLAN ACCURATE FOR STAGE CONSTRUCTION ONLY.

STATE OF CALIFORNIA - DEPARTMENT OF TRANSPORTATION
Caltrans

CONSULTANT FUNCTIONAL SUPERVISOR: BOB ZANDIPOUR
CALCULATED-DESIGNED BY: M. GRODZKI
CHECKED BY: B. NADELL
REVISED BY
DATE REVISED

LAST REVISION 00-00-00 | DATE PLOTTED => 25-FEB-2012 | TIME PLOTTED => 09:18

Dist	COUNTY	ROUTE	KILOMETER POST TOTAL PROJECT	SHEET No.	TOTAL SHEETS
04	SF	80	12.6/13.9	175	821

REGISTERED CIVIL ENGINEER 02/03/12 DATE

2-21-12
PLANS APPROVAL DATE

REGISTERED PROFESSIONAL ENGINEER Mark Grodzki No. 65594 Exp. 09/30/13 CIVIL STATE OF CALIFORNIA

THE STATE OF CALIFORNIA OR ITS OFFICERS OR AGENTS SHALL NOT BE RESPONSIBLE FOR THE ACCURACY OR COMPLETENESS OF ELECTRONIC COPIES OF THIS PLAN SHEET.

PB AMERICAS, Inc.
303 Second St., Suite 700N
San Francisco, CA 94107-1317

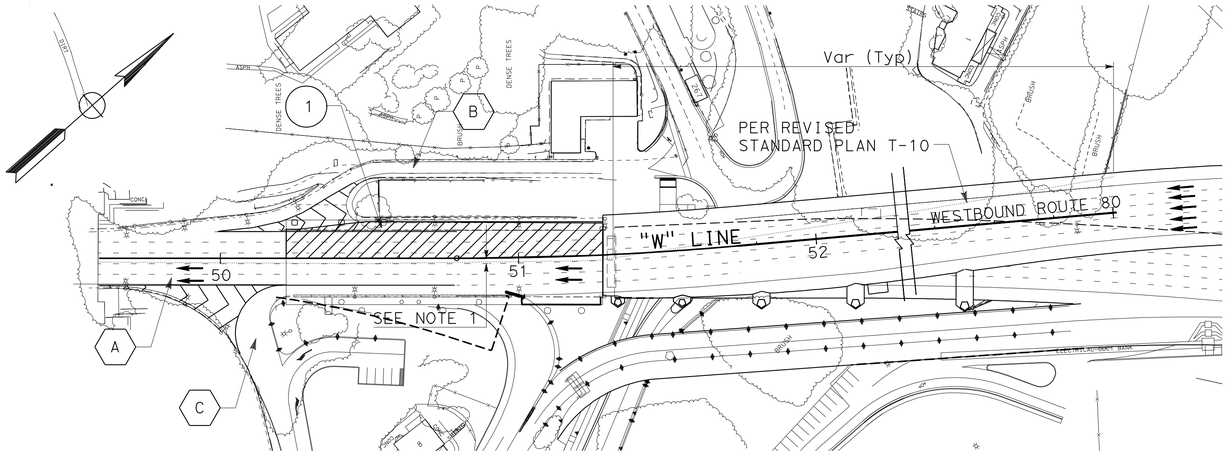

STAGE 5 - PHASE 1:
PROVIDE OVERLAY ON THE OUTSIDE LANES (SEE STRUCTURE PLANS FOR DETAILS).
WESTBOUND

CONSTRUCTION	
1	PROVIDE POLYESTER CONCRETE OVERLAY ON WB-80, UPPER DECK, FROM Sta (Lt) "W" 50+22.10 TO (Lt) "W" 51+28.340 (SEE STRUCTURE PLANS FOR DETAILS).

TRAFFIC HANDLING	
A	PROVIDE TRAFFIC CONTROL SYSTEM ON WB-80, PER REVISED STANDARD PLAN T-10 TO CLOSE THREE RIGHT LANES AND MAINTAIN THE NUMBER OF LANES OPEN TO TRAFFIC PER LANE CLOSURE CHARTS OF THE SPECIAL PROVISIONS.
B	WB-80 ON-RAMP OPEN TO TRAFFIC.
C	WB-80 OFF-RAMP OPEN TO TRAFFIC.

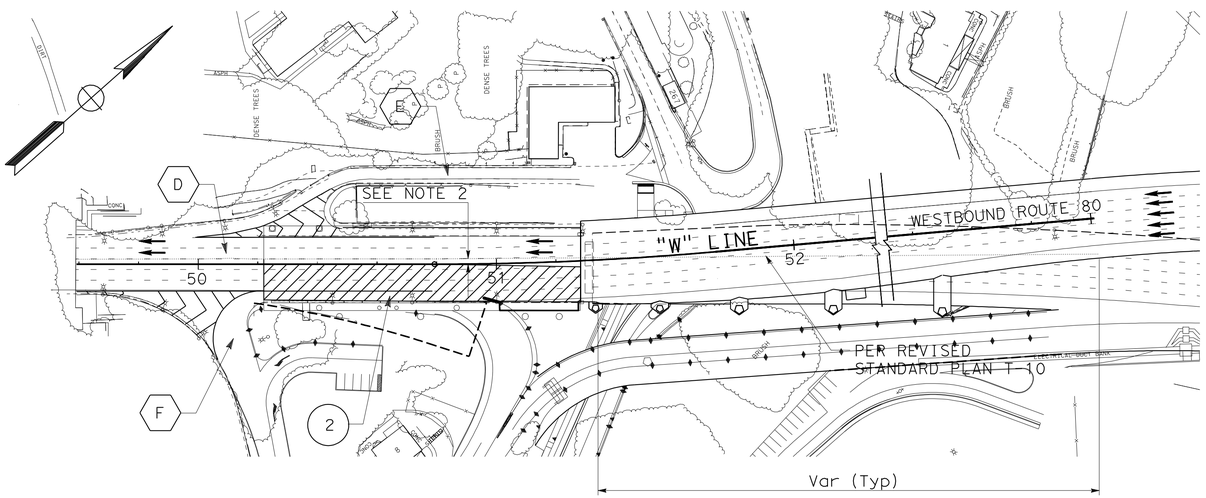

STAGE 5 - PHASE 2:
PROVIDE OVERLAY ON THE INSIDE LANES (SEE STRUCTURE PLANS FOR DETAILS).
WESTBOUND

CONSTRUCTION	
2	PROVIDE POLYESTER CONCRETE OVERLAY ON WB-80, UPPER DECK, FROM Sta (Rt) "W" 50+22.10 TO (Rt) "W" 51+28.340 (SEE STRUCTURE PLANS FOR DETAILS).

TRAFFIC HANDLING	
D	PROVIDE TRAFFIC CONTROL SYSTEM ON WB-80, PER REVISED STANDARD PLAN T-10 TO CLOSE THREE LEFT LANES AND MAINTAIN THE NUMBER OF LANES OPEN TO TRAFFIC PER LANE CLOSURE CHARTS OF THE SPECIAL PROVISIONS.
E	WB-80 ON-RAMP OPEN TO TRAFFIC.
F	WB-80 OFF-RAMP CLOSED TO TRAFFIC. PROVIDE DETOUR 4 (SEE CS SHEETS).

NOTE:

1. PROVIDE A DISTANCE NOT LESS THAN 1.80 m FROM THE NEAREST CONSTRUCTION LIMIT TO THE TRAFFIC LANE.

FOR NOTES, ABBREVIATIONS AND/OR LEGEND SEE SHEET SC-1

THIS PLAN ACCURATE FOR PAVEMENT DELINEATION WORK ONLY.

ALL DIMENSIONS ARE IN METERS UNLESS OTHERWISE SHOWN

STAGE CONSTRUCTION AND TRAFFIC HANDLING PLAN STAGE 5

SCALE 1:1000

SC-21

STATE OF CALIFORNIA - DEPARTMENT OF TRANSPORTATION
Caltrans

CONSULTANT FUNCTIONAL SUPERVISOR: BOB ZANDIPOUR
CALCULATED-DESIGNED BY: M. GRODZKI
CHECKED BY: B. NADELL
REVISED BY / DATE REVISED

LAST REVISION 00-00-00 DATE PLOTTED => 25-FEB-2012 TIME PLOTTED => 09:00

Dist	COUNTY	ROUTE	KILOMETER POST TOTAL PROJECT	SHEET No.	TOTAL SHEETS
04	SF	80	12.6/13.9	176	821

REGISTERED CIVIL ENGINEER 02/03/12 DATE

2-21-12
PLANS APPROVAL DATE

REGISTERED PROFESSIONAL ENGINEER Mark Grodzki No. 65594 Exp. 09/30/13 CIVIL STATE OF CALIFORNIA

THE STATE OF CALIFORNIA OR ITS OFFICERS OR AGENTS SHALL NOT BE RESPONSIBLE FOR THE ACCURACY OR COMPLETENESS OF ELECTRONIC COPIES OF THIS PLAN SHEET.

PB AMERICAS, Inc.
303 Second St., Suite 700N
San Francisco, CA 94107-1317

Caltrans Metric

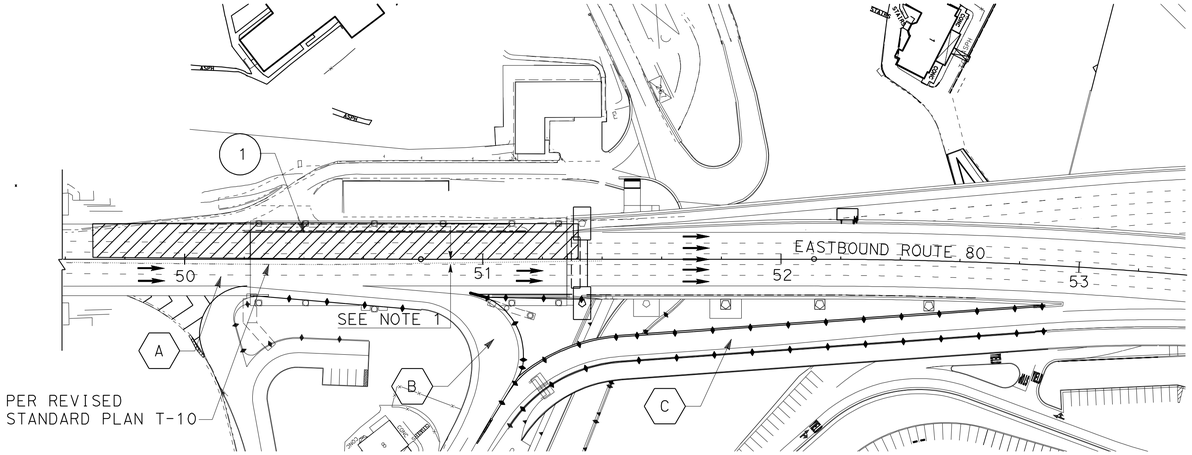

STAGE 6 - PHASE 1:
PROVIDE OVERLAY ON THE INSIDE LANES (SEE STRUCTURE PLANS FOR DETAILS).
EASTBOUND

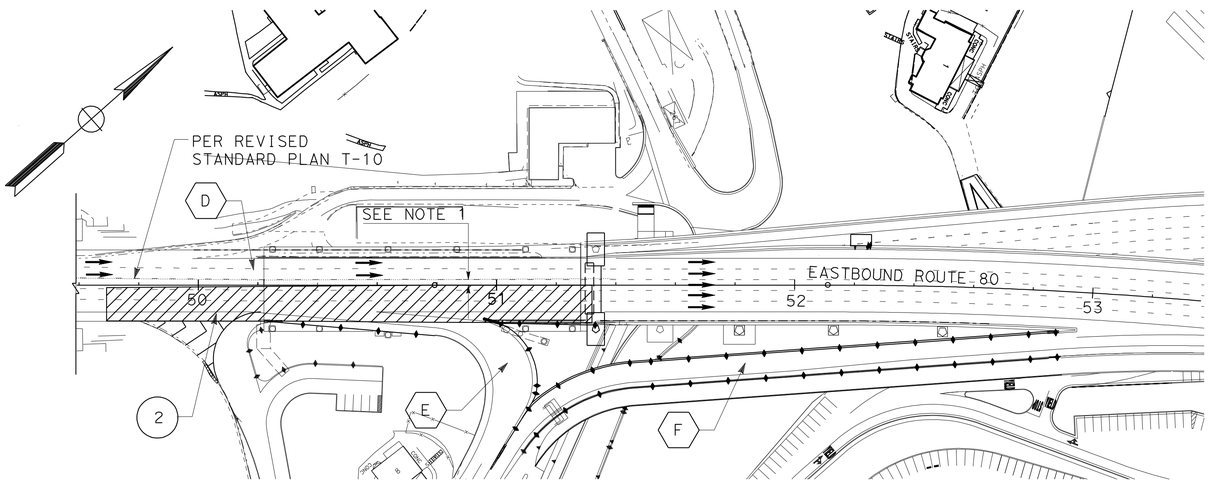

STAGE 6 - PHASE 2:
PROVIDE OVERLAY ON THE OUTSIDE LANES (SEE STRUCTURE PLANS FOR DETAILS).
EASTBOUND

CONSTRUCTION	
1	PROVIDE POLYESTER CONCRETE OVERLAY ON EB-80, LOWER DECK, FROM Sta (L+) "E" 49+59.250 TO (L+) "E" 51+17.497 (SEE STRUCTURE PLANS FOR DETAILS).

TRAFFIC HANDLING	
A	PROVIDE TRAFFIC CONTROL SYSTEM ON EB-80, PER REVISED STANDARD PLAN T-10 TO CLOSE THREE LEFT LANES AND MAINTAIN THE NUMBER OF LANES OPEN TO TRAFFIC PER LANE CLOSURE CHARTS OF THE SPECIAL PROVISIONS.
B	EB-80 OFF-RAMP OPEN TO TRAFFIC.
C	EB-80 ON-RAMP OPEN TO TRAFFIC.

CONSTRUCTION	
2	PROVIDE POLYESTER CONCRETE OVERLAY ON EB-80, LOWER DECK, FROM Sta (R+) "E" 49+59.250 TO (R+) "E" 51+17.497 (SEE STRUCTURE PLANS FOR DETAILS).

TRAFFIC HANDLING	
D	PROVIDE TRAFFIC CONTROL SYSTEM ON EB-80, PER REVISED STANDARD PLAN T-10 TO CLOSE THREE RIGHT LANES AND MAINTAIN THE NUMBER OF LANES OPEN TO TRAFFIC PER LANE CLOSURE CHARTS OF THE SPECIAL PROVISIONS.
E	EB-80 OFF-RAMP CLOSED TO TRAFFIC. TRAFFIC TO TREASURE ISLAND MUST EXIST PRIOR TO YBI TUNNEL
F	EB-80 ON-RAMP OPEN TO TRAFFIC.

NOTE:

1. PROVIDE A DISTANCE NOT LESS THAN 1.80 m FROM THE NEAREST CONSTRUCTION LIMIT TO THE TRAFFIC LANE.

FOR NOTES, ABBREVIATIONS AND/OR LEGEND SEE SHEET SC-1

THIS PLAN ACCURATE FOR PAVEMENT DELINEATION WORK ONLY.

ALL DIMENSIONS ARE IN METERS UNLESS OTHERWISE SHOWN

STAGE CONSTRUCTION AND TRAFFIC HANDLING PLAN STAGE 6

SCALE 1:1000

SC-22

REVISED BY	DATE REVISED

M. GRODZKI — CALCULATED-DESIGNED BY
B. NADELL — CHECKED BY
BOB ZANDIPOUR — CONSULTANT FUNCTIONAL SUPERVISOR

STATE OF CALIFORNIA - DEPARTMENT OF TRANSPORTATION
Caltrans

LAST REVISION 00-00-00 DATE PLOTTED => 25-FEB-2012 TIME PLOTTED => 09:00

Dist	COUNTY	ROUTE	KILOMETER POST TOTAL PROJECT	SHEET No.	TOTAL SHEETS
04	SF	80	12.6/13.9	177	821

Mark Grodzki 02/03/12
REGISTERED CIVIL ENGINEER DATE

2-21-12
PLANS APPROVAL DATE

REGISTERED PROFESSIONAL ENGINEER
Mark Grodzki
No. 65594
Exp. 09/30/13
CIVIL
STATE OF CALIFORNIA

THE STATE OF CALIFORNIA OR ITS OFFICERS OR AGENTS SHALL NOT BE RESPONSIBLE FOR THE ACCURACY OR COMPLETENESS OF ELECTRONIC COPIES OF THIS PLAN SHEET.

PB AMERICAS, Inc.
303 Second St., Suite 700N
San Francisco, CA 94107-1317

Caltrans Metric

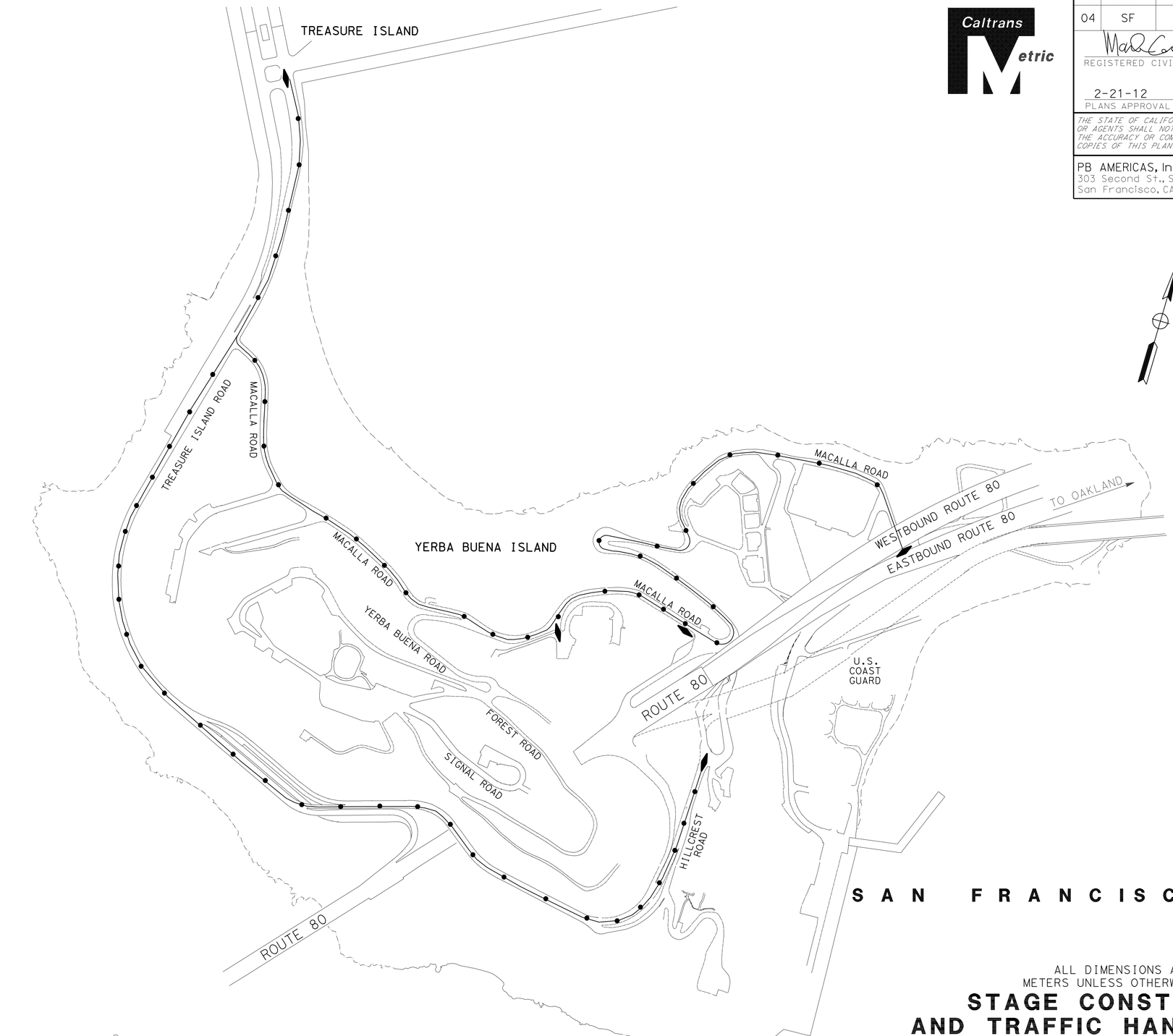

FOR GENERAL NOTES AND/OR LEGEND SEE SHEET CS-1

THIS PLAN ACCURATE FOR CONSTRUCTION AREA SIGNS ONLY.

ALL DIMENSIONS ARE IN METERS UNLESS OTHERWISE SHOWN

STAGE CONSTRUCTION AND TRAFFIC HANDLING PLAN

SHUTTLE ROUTE
STAGE 1 TO STAGE 6

NO SCALE

SC-23

STATE OF CALIFORNIA - DEPARTMENT OF TRANSPORTATION
Caltrans

CONSULTANT FUNCTIONAL SUPERVISOR: BOB ZANDIPOUR
CALCULATED-DESIGNED BY: M. GRODZKI
CHECKED BY: B. NADELL
REVISED BY
DATE REVISED

LAST REVISION 00-00-00
DATE PLOTTED => 25-FEB-2012
TIME PLOTTED => 09:00

Dist	COUNTY	ROUTE	KILOMETER POST TOTAL PROJECT	SHEET No.	TOTAL SHEETS
04	SF	80	12.6/13.9	178	821

Caltrans Metric

REGISTERED CIVIL ENGINEER 02/03/12 DATE

2-21-12
PLANS APPROVAL DATE

REGISTERED PROFESSIONAL ENGINEER Mark Grodzki No. 65594 Exp. 09/30/13 CIVIL STATE OF CALIFORNIA

THE STATE OF CALIFORNIA OR ITS OFFICERS OR AGENTS SHALL NOT BE RESPONSIBLE FOR THE ACCURACY OR COMPLETENESS OF ELECTRONIC COPIES OF THIS PLAN SHEET.

PB AMERICAS, Inc.
303 Second St., Suite 700N
San Francisco, CA 94107-1317

STAGE CONSTRUCTION PAVEMENT DELINEATION

SHEET No.	STATION LIMITS/LOCATION	DETAIL No. OR PAVEMENT MARKING	PAVEMENT MARKERS RETROREFLECTIVE		TEMPORARY TRAFFIC STRIPE		REMOVE PAVEMENT MARKER	REMOVE THERMO-PLASTIC TRAFFIC STRIPE	
			TYPE D	TYPE H	100 mm YELLOW SOLID	100 mm WHITE SOLID		100 mm WHITE	100 mm YELLOW
			EA	EA	M	M	EA	M	
SC-3, 4, 5	VARIES (TEMPORARY ROAD 1)	27B				650		32	
SC-3, 4, 5	VARIES (TEMPORARY ROAD 1)	25A		49	351				
SC-3, 4, 5	VARIES (TEMPORARY ROAD 1)	22	48		337		7		38
SC-9, 10, 11	VARIES (TEMPORARY ROAD 2)	27B				476			
SC-9, 10, 11	VARIES (TEMPORARY ROAD 2)	22	69		490				
SC-12, 13, 14	VARIES (TEMPORARY USCG ROAD)	27B				264			57
SC-12, 13, 14	VARIES (TEMPORARY USCG ROAD)	22	48		339		9	56	
SC-15,16,17	VARIES (TEMPORARY USCG ROAD)	27B				192			
SC-15,16,17	VARIES (TEMPORARY USCG ROAD)	22	24		160				
SUB TOTAL			189	49	1677	1582	16	88	95
TOTAL			238		3259		16	183	

STAGE CONSTRUCTION QUANTITIES

SHEET No.	STATION LIMITS/LOCATION	CHANNELIZERS (SURFACE MOUNTED)	MARKER (TYPE OM-3) [N]	TEMPORARY CRASH CUSHION MODULE		TEMPORARY RAILING (TYPE K)	TEMPORARY FENCE (TYPE CL-2.4 BLACK VINYL CLAD W/ BARBED WIRE EXTENSION ARM	TYPE III BARRICADE	BARRICADE MOUNTED SIGN (R11-2) [N]	ROADWAY EXCAVATION	ROADWAY QUANTITIES CLASS 3 AB	CLASS 4 AS	HMA DIKE (TYPE A)	HMA (TYPE A)
		EA	EA	EA	ARRAY	M	M	EA	EA	M3	M3	M3	M	TONNE
SC-1, 2	VARIES	28						9	7					74
SC-3, 4, 5	VARIES		1			30		8	6					
SC-6, 7, 8	VARIES									214	59	121	48	12
SC-9, 10, 11	VARIES	7		11	TS11	40		6	4					
SC-12, 13, 14	VARIES		1											11
SC-15, 16, 17	VARIES	7						3	3					
SC-18, 19, 20	VARIES	53	2	14	TS14	212	472	2	2					
SC-21	VARIES													
SC-22	VARIES													
TOTAL		95	4	25	0	282	472	28	22	214	59	121	48	97

[N] NOT A SEPARATE PAY ITEM, FOR INFORMATION ONLY.
SEE SHEET Q-1 FOR TOTALS.

NOTES

1. SEE Q SHEETS FOR OVERALL ROADWAY EXCAVATION QUANTITIES AND ROADWAY QUANTITIES.
2. SEE PDQ SHEET FOR OVERALL REMOVE PAVEMENT DELINEATION QUANTITIES.
3. SEE CONSTRUCTION AREA SIGNS FOR ADDITIONAL SIGNING.

STAGE CONSTRUCTION QUANTITIES

SCQ-1

REVISED BY | DATE REVISED
M. GRODZKI | B. NADELL
CALCULATED-DESIGNED BY | CHECKED BY
CONSULTANT FUNCTIONAL SUPERVISOR: BOB ZANDIPOUR
STATE OF CALIFORNIA - DEPARTMENT OF TRANSPORTATION
Caltrans

LAST REVISION 00-00-00 | DATE PLOTTED => 25-FEB-2012 | TIME PLOTTED => 09:01

Dist	COUNTY	ROUTE	KILOMETER POST TOTAL PROJECT	SHEET No.	TOTAL SHEETS
04	SF	80	12.6/13.9	179	821

REGISTERED CIVIL ENGINEER 02/03/12 DATE

2-21-12
PLANS APPROVAL DATE

REGISTERED PROFESSIONAL ENGINEER Mark Grodzki No. 65594 Exp. 09/30/13 CIVIL STATE OF CALIFORNIA

THE STATE OF CALIFORNIA OR ITS OFFICERS OR AGENTS SHALL NOT BE RESPONSIBLE FOR THE ACCURACY OR COMPLETENESS OF ELECTRONIC COPIES OF THIS PLAN SHEET.

PB AMERICAS, Inc.
303 Second St., Suite 700N
San Francisco, CA 94107-1317

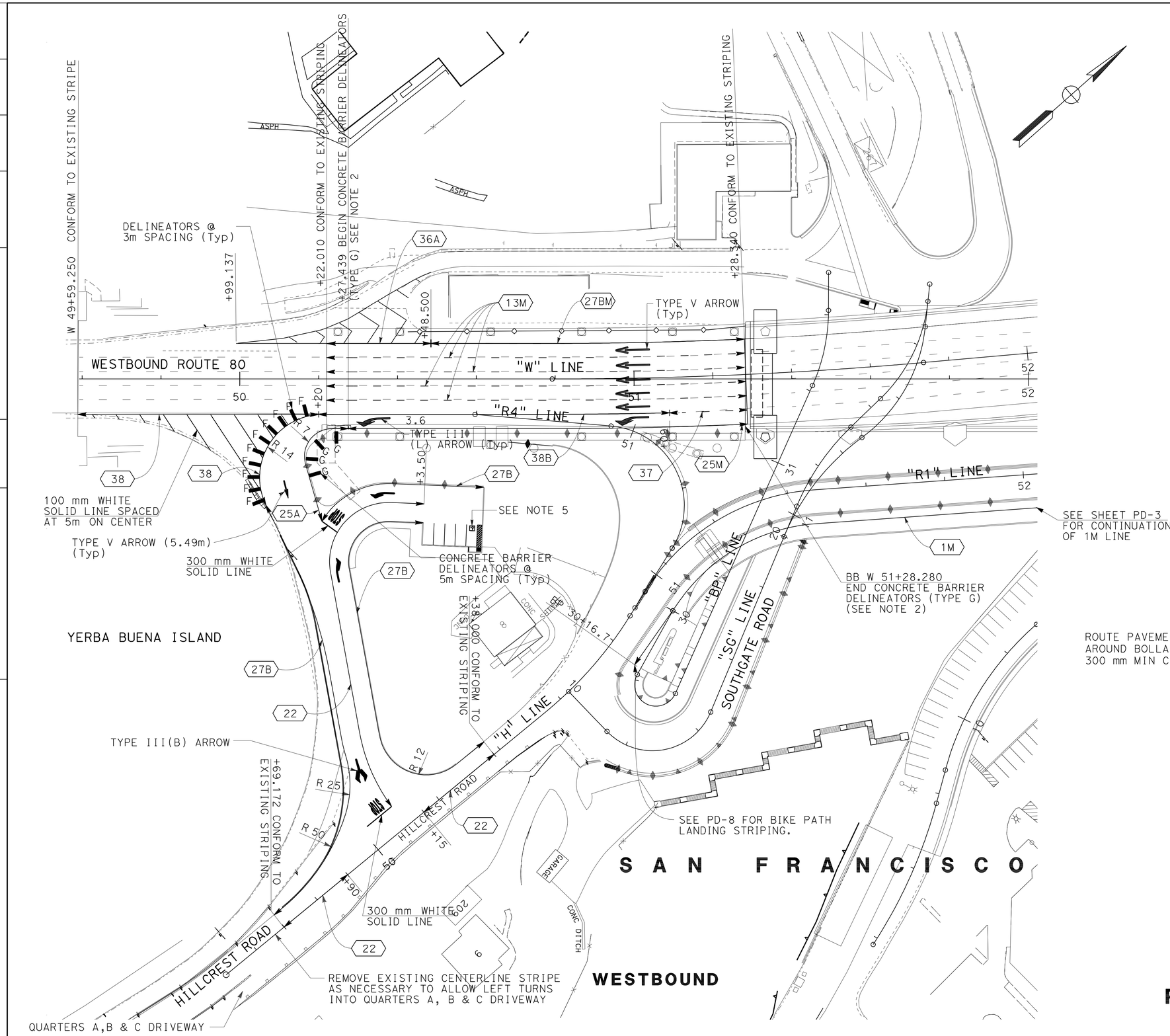

NOTES:

1. ALL LANES 3.6 m WIDE UNLESS NOTED OTHERWISE.
2. CONCRETE BARRIER DELINEATOR SPACING SHALL CORRESPOND WITH THE RAISED PAVEMENT MARKER SPACING USED ON THE ADJACENT EDGELINE. BARRIER MOUNTED DELINEATOR SHALL BE SAME COLOR AS ADJACENT EDGELINE.
3. ALL CONCRETE BARRIER DELINEATORS SHALL BE CLASS 1 FLEXIBLE POST DELINEATORS, PER 2006 MUTCD.
4. FOR MODIFIED PAVEMENT DELINEATION DETAILS, SEE PAVEMENT DELINEATION DETAIL SHEETS.
5. ACCESSIBLE PARKING OFF-STREET PER CALTRANS STANDARD PLAN RSP A90A.

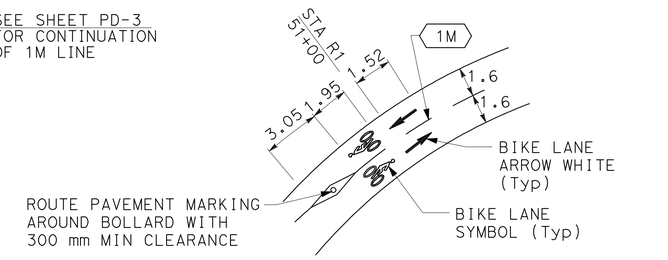

BIKE PATH LANDING DETAIL
SCALE : NTS

LEGEND:

- XXX — DETAIL NUMBER
- CHANGE IN PAVEMENT DELINEATION DETAIL
- A / PD-9 — SPECIAL DETAIL
- DELINEATOR (CLASS I)

ALL DIMENSIONS ARE IN METERS UNLESS OTHERWISE SHOWN

PAVEMENT DELINEATION PLAN

SCALE 1:500

PD-1

THIS PLAN ACCURATE FOR PAVEMENT DELINEATION WORK ONLY.

STATE OF CALIFORNIA - DEPARTMENT OF TRANSPORTATION
Caltrans

CONSULTANT FUNCTIONAL SUPERVISOR: BOB ZANDIPOUR
CALCULATED-DESIGNED BY: M. GRODZKI
CHECKED BY: B. NADELL
REVISED BY / DATE REVISED

LAST REVISION 00-00-00 | DATE PLOTTED => 25-FEB-2012 | TIME PLOTTED => 09:01

Dist	COUNTY	ROUTE	KILOMETER POST TOTAL PROJECT	SHEET No.	TOTAL SHEETS
04	SF	80	12.6/13.9	180	821

Mark Grodzki 02/03/12
REGISTERED CIVIL ENGINEER DATE

2-21-12
PLANS APPROVAL DATE

REGISTERED PROFESSIONAL ENGINEER Mark Grodzki No. 65594 Exp. 09/30/13 CIVIL STATE OF CALIFORNIA

THE STATE OF CALIFORNIA OR ITS OFFICERS OR AGENTS SHALL NOT BE RESPONSIBLE FOR THE ACCURACY OR COMPLETENESS OF ELECTRONIC COPIES OF THIS PLAN SHEET.

PB AMERICAS, Inc.
303 Second St., Suite 700N
San Francisco, CA 94107-1317

Caltrans Metric

EASTBOUND

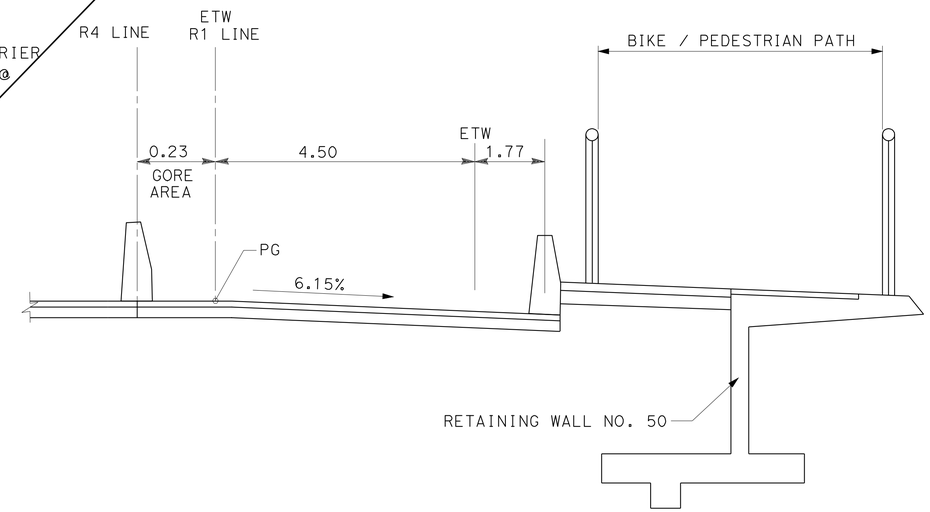

SECTION A-A

NO SCALE

FOR NOTES, ABBREVIATIONS AND/OR LEGEND SEE SHEET PD-1

THIS PLAN ACCURATE FOR PAVEMENT DELINEATION WORK ONLY.

ALL DIMENSIONS ARE IN METERS UNLESS OTHERWISE SHOWN

PAVEMENT DELINEATION PLAN

SCALE 1:500

PD-2

M. GRODZKI	B. NADELL	REVISED BY / DATE REVISED
CALCULATED-DESIGNED BY	CHECKED BY	
CONSULTANT FUNCTIONAL SUPERVISOR	BOB ZANDIPOUR	

STATE OF CALIFORNIA - DEPARTMENT OF TRANSPORTATION
Caltrans

LAST REVISION 00-00-00 | DATE PLOTTED => 25-FEB-2012 | TIME PLOTTED => 09:01

Dist	COUNTY	ROUTE	KILOMETER POST TOTAL PROJECT	SHEET No.	TOTAL SHEETS
04	SF	80	12.6/13.9	181	821

REGISTERED CIVIL ENGINEER 10/31/11 DATE

2-21-12
PLANS APPROVAL DATE

REGISTERED PROFESSIONAL ENGINEER Mark Grodzki No. 65594 Exp. 09/30/13 CIVIL STATE OF CALIFORNIA

THE STATE OF CALIFORNIA OR ITS OFFICERS OR AGENTS SHALL NOT BE RESPONSIBLE FOR THE ACCURACY OR COMPLETENESS OF ELECTRONIC COPIES OF THIS PLAN SHEET.

PB AMERICAS, Inc.
303 Second St., Suite 700N
San Francisco, CA 94107-1317

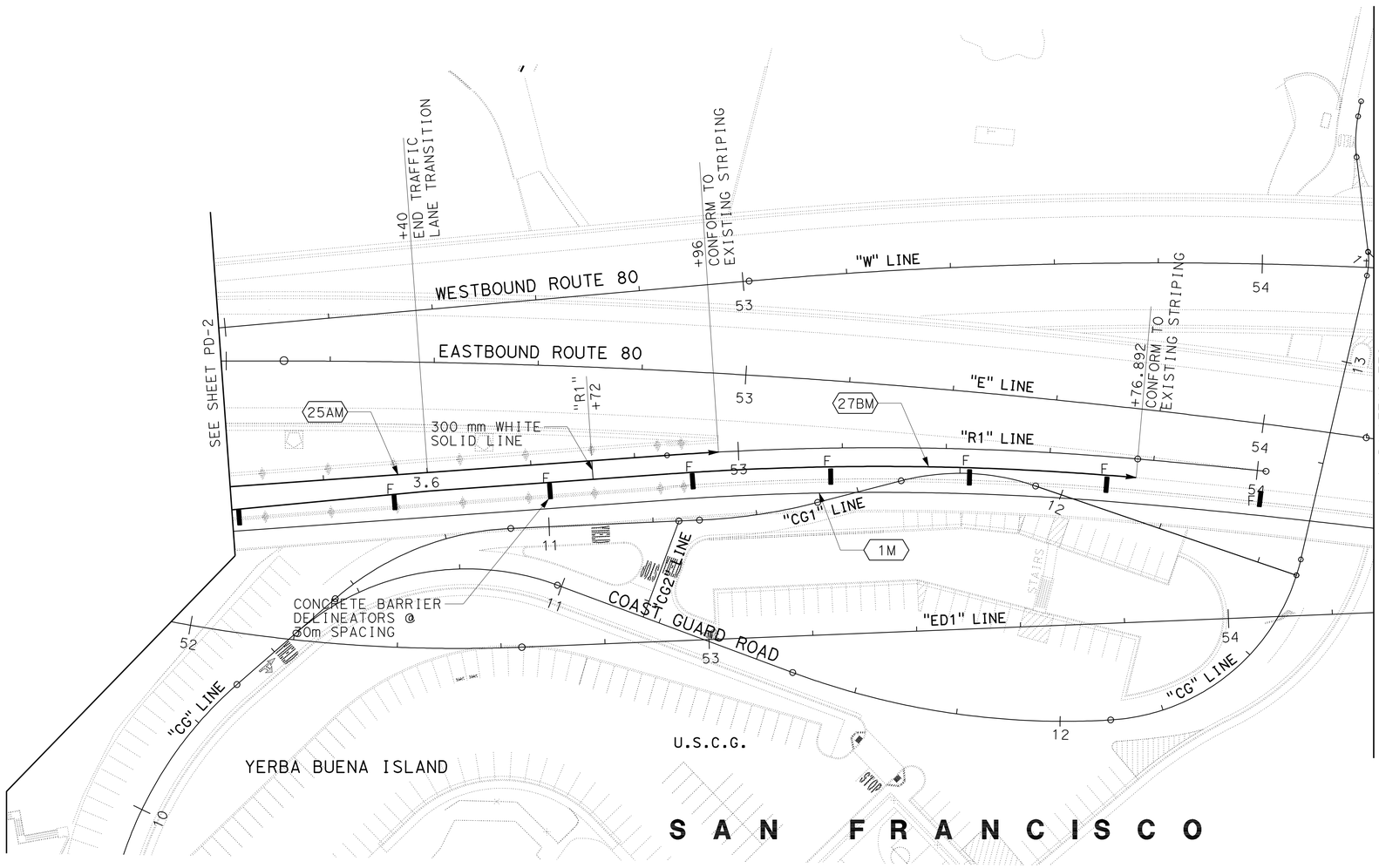

ALL DIMENSIONS ARE IN
METERS UNLESS OTHERWISE SHOWN

PAVEMENT DELINEATION PLAN

SCALE 1:500

FOR NOTES, ABBREVIATIONS AND/OR LEGEND SEE SHEET PD-1

THIS PLAN ACCURATE FOR PAVEMENT DELINEATION WORK ONLY.

PD-3

STATE OF CALIFORNIA - DEPARTMENT OF TRANSPORTATION

Caltrans

CONSULTANT FUNCTIONAL SUPERVISOR: BOB ZANDIPOUR

CALCULATED-DESIGNED BY: M. GRODZKI

CHECKED BY: B. NADELL

REVISED BY / DATE REVISED

LAST REVISION 00-00-00 | DATE PLOTTED => 25-FEB-2012 | TIME PLOTTED => 09:01

Dist	COUNTY	ROUTE	KILOMETER POST TOTAL PROJECT	SHEET No.	TOTAL SHEETS
04	SF	80	12.6/13.9	182	821

Caltrans Metric

REGISTERED CIVIL ENGINEER 10/31/11 DATE

2-21-12
PLANS APPROVAL DATE

REGISTERED PROFESSIONAL ENGINEER
Mark Grodzki
No. 65594
Exp. 09/30/13
CIVIL
STATE OF CALIFORNIA

THE STATE OF CALIFORNIA OR ITS OFFICERS OR AGENTS SHALL NOT BE RESPONSIBLE FOR THE ACCURACY OR COMPLETENESS OF ELECTRONIC COPIES OF THIS PLAN SHEET.

PB AMERICAS, Inc.
303 Second St., Suite 700N
San Francisco, CA 94107-1317

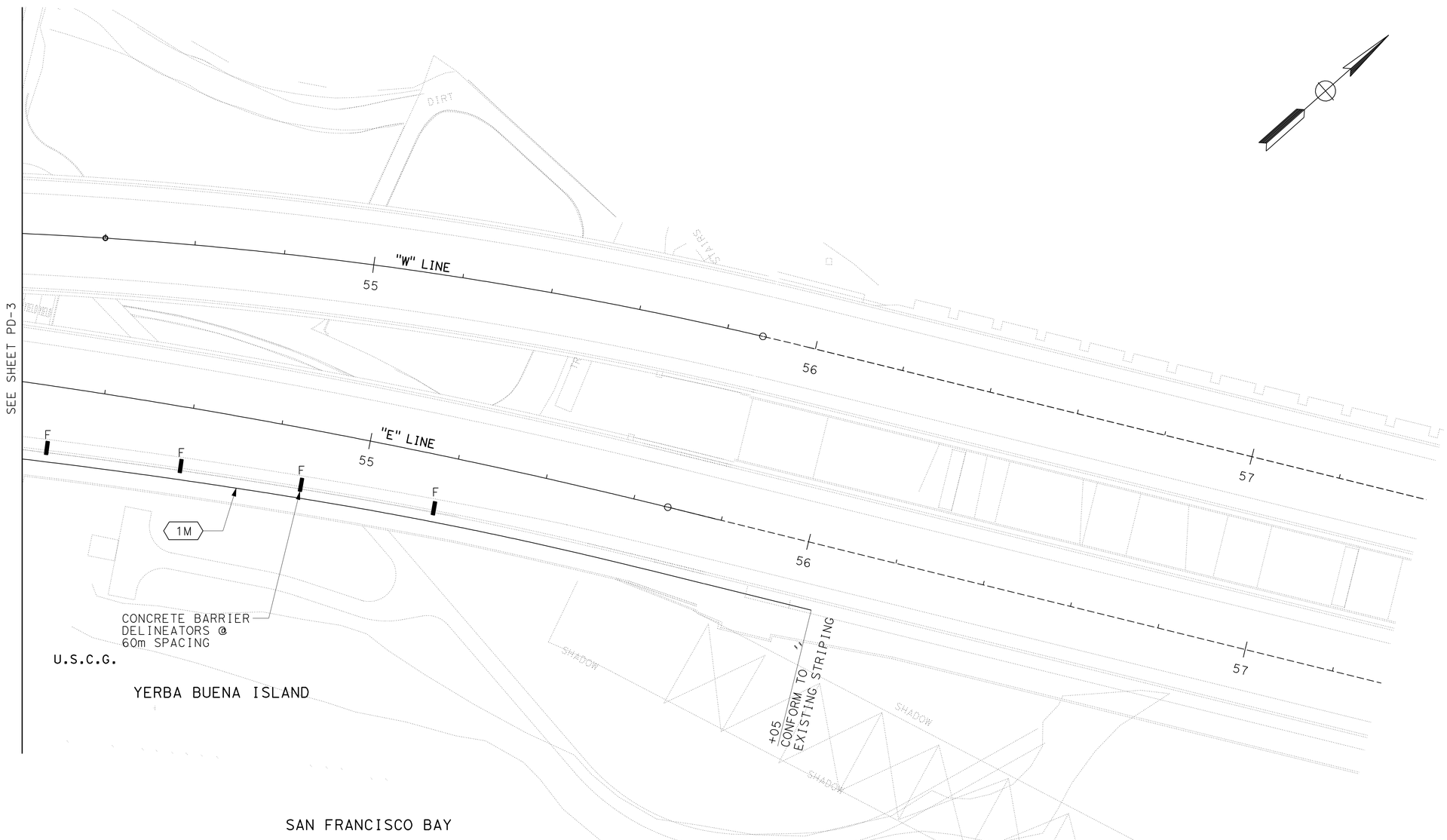

ALL DIMENSIONS ARE IN
METERS UNLESS OTHERWISE SHOWN

PAVEMENT DELINEATION PLAN

SCALE 1:500

FOR NOTES, ABBREVIATIONS AND/OR LEGEND SEE SHEET PD-1

THIS PLAN ACCURATE FOR PAVEMENT DELINEATION WORK ONLY.

PD-4

REVISED BY	DATE REVISED

CALCULATED-DESIGNED BY: M. GRODZKI
CHECKED BY: B. NADELL
CONSULTANT FUNCTIONAL SUPERVISOR: BOB ZANDIPOUR

STATE OF CALIFORNIA - DEPARTMENT OF TRANSPORTATION
Caltrans

LAST REVISION 00-00-00 | DATE PLOTTED => 25-FEB-2012 | TIME PLOTTED => 09:01

Dist	COUNTY	ROUTE	KILOMETER POST TOTAL PROJECT	SHEET No.	TOTAL SHEETS
04	SF	80	12.6/13.9	183	821

REGISTERED CIVIL ENGINEER 10/31/11 DATE

2-21-12
PLANS APPROVAL DATE

REGISTERED PROFESSIONAL ENGINEER Mark Grodzki No. 65594 Exp. 09/30/13 CIVIL STATE OF CALIFORNIA

THE STATE OF CALIFORNIA OR ITS OFFICERS OR AGENTS SHALL NOT BE RESPONSIBLE FOR THE ACCURACY OR COMPLETENESS OF ELECTRONIC COPIES OF THIS PLAN SHEET.

PB AMERICAS, Inc.
303 Second St., Suite 700N
San Francisco, CA 94107-1317

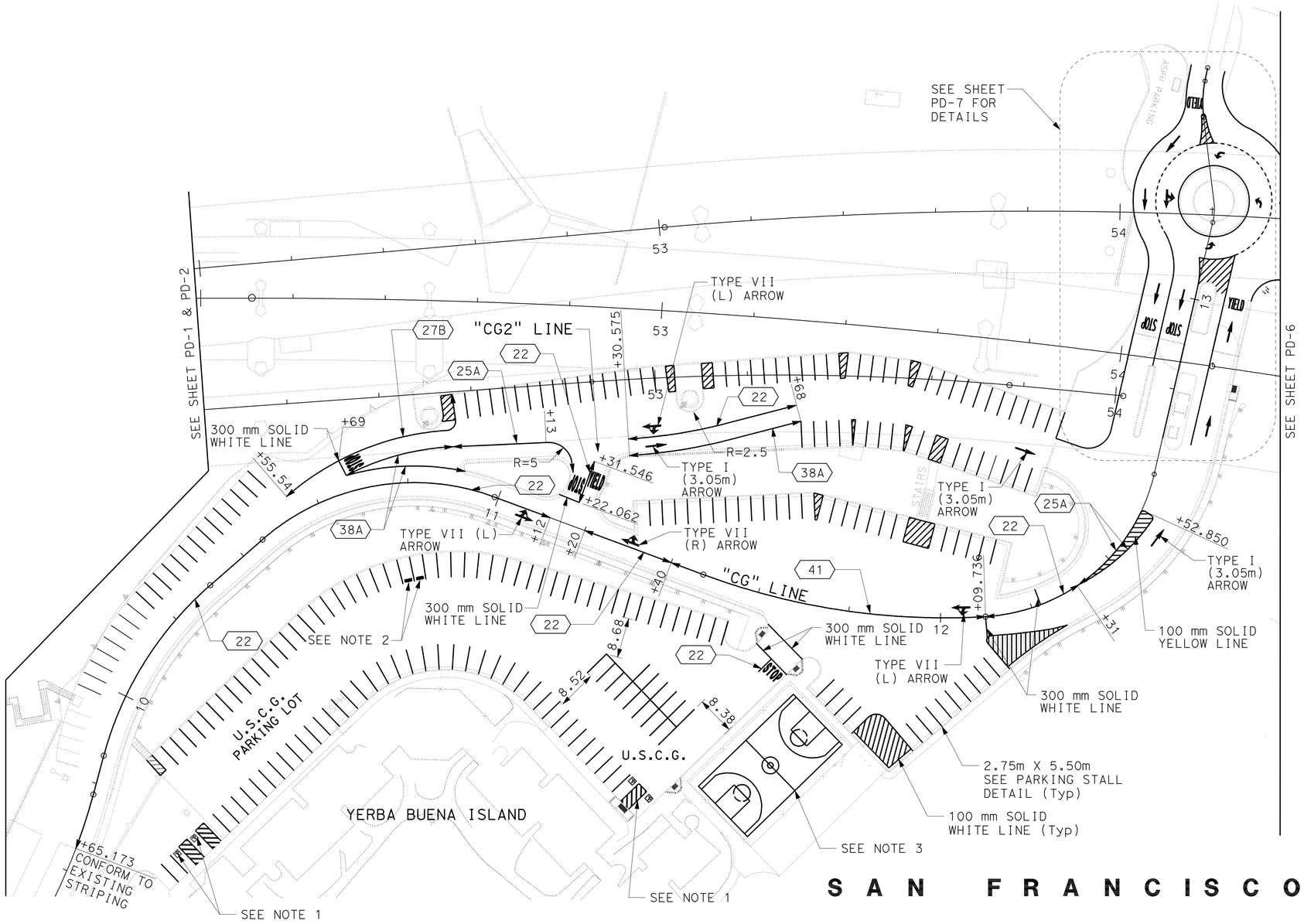

S A N F R A N C I S C O

NOTES:

1. ACCESSIBLE PARKING OFF-STREET PER CALTRANS STANDARD PLAN RSP A90A.
2. COMPACT CAR STALLS ARE 2.53m x 5.50m.
3. FOR BASKETBALL COURT DELINEATION, SEE CONSTRUCTION DETAIL SHEETS.

LEGEND:

100 mm WHITE LINE DIAGONALS @ 900 mm CENTERS UNLESS OTHERWISE NOTED

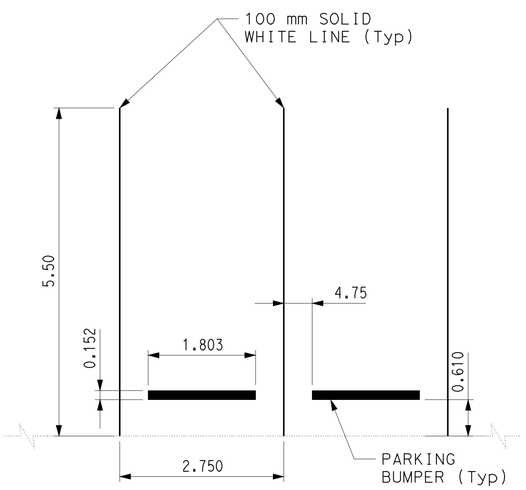

PARKING STALL DETAIL
NO SCALE

ALL DIMENSIONS ARE IN METERS UNLESS OTHERWISE SHOWN

PAVEMENT DELINEATION PLAN

SCALE 1:500

PD-5

FOR NOTES, ABBREVIATIONS AND/OR LEGEND SEE SHEET PD-1

THIS PLAN ACCURATE FOR PAVEMENT DELINEATION WORK ONLY.

STATE OF CALIFORNIA - DEPARTMENT OF TRANSPORTATION
Caltrans

CONSULTANT FUNCTIONAL SUPERVISOR: BOB ZANDIPOUR
CALCULATED-DESIGNED BY: M. GRODZKI
CHECKED BY: B. NADELL
REVISED BY / DATE REVISED

LAST REVISION 00-00-00
DATE PLOTTED => 25-FEB-2012
TIME PLOTTED => 09:01

Dist	COUNTY	ROUTE	KILOMETER POST TOTAL PROJECT	SHEET No.	TOTAL SHEETS
04	SF	80	12.6/13.9	184	821

REGISTERED CIVIL ENGINEER 10/31/11 DATE

2-21-12
PLANS APPROVAL DATE

REGISTERED PROFESSIONAL ENGINEER
Mark Grodzki
No. 65594
Exp. 09/30/13
CIVIL
STATE OF CALIFORNIA

THE STATE OF CALIFORNIA OR ITS OFFICERS OR AGENTS SHALL NOT BE RESPONSIBLE FOR THE ACCURACY OR COMPLETENESS OF ELECTRONIC COPIES OF THIS PLAN SHEET.

PB AMERICAS, Inc.
303 Second St., Suite 700N
San Francisco, CA 94107-1317

Caltrans Metric

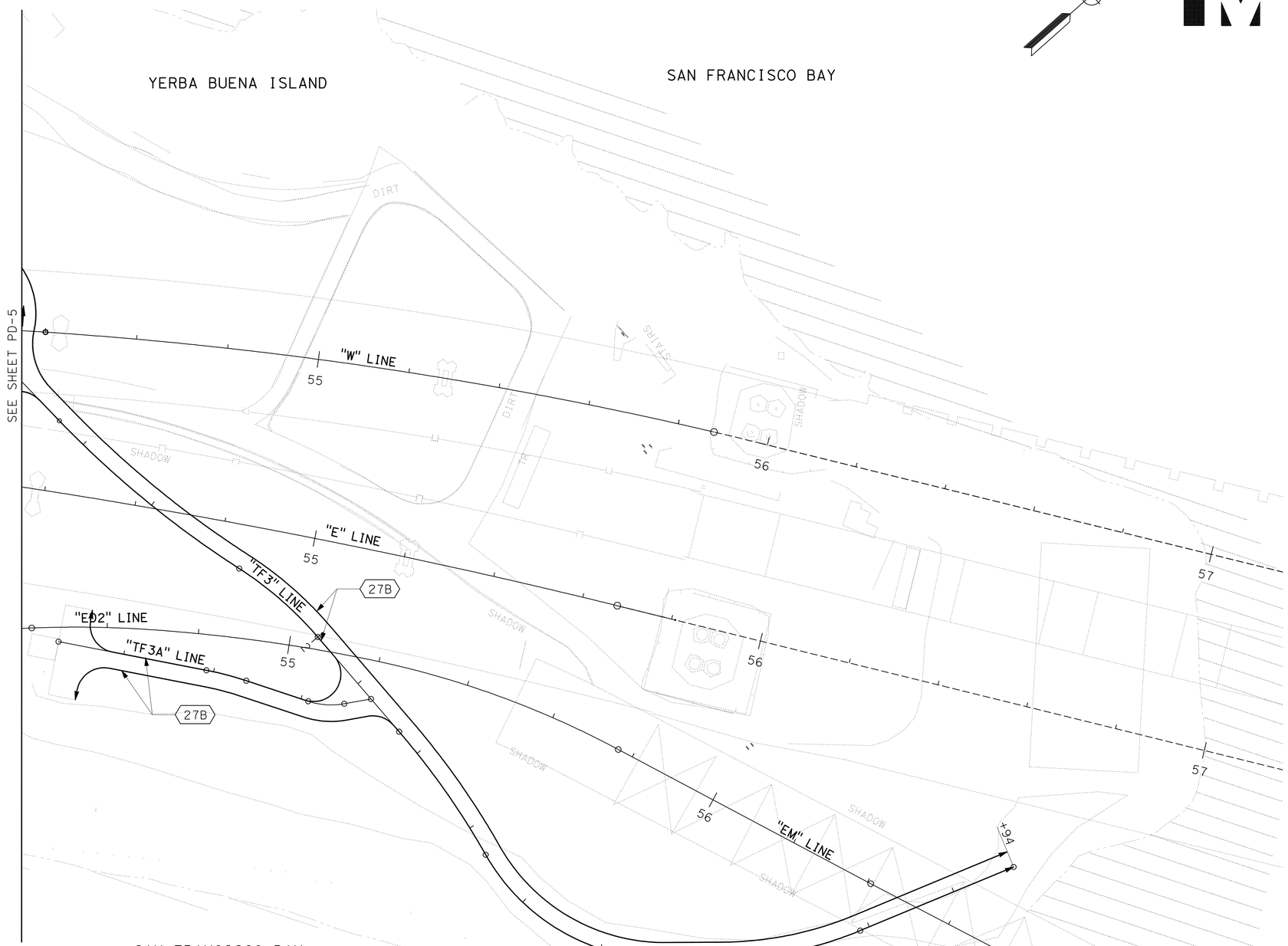

ALL DIMENSIONS ARE IN METERS UNLESS OTHERWISE SHOWN

PAVEMENT DELINEATION PLAN

SCALE 1:500

PD-6

FOR NOTES, ABBREVIATIONS AND/OR LEGEND SEE SHEET PD-1

THIS PLAN ACCURATE FOR PAVEMENT DELINEATION WORK ONLY.

STATE OF CALIFORNIA - DEPARTMENT OF TRANSPORTATION
Caltrans

CONSULTANT FUNCTIONAL SUPERVISOR: BOB ZANDIPOUR
CALCULATED-DESIGNED BY: M. GRODZKI
CHECKED BY: B. NADELL
REVISED BY
DATE REVISED

LAST REVISION 00-00-00
DATE PLOTTED => 25-FEB-2012
TIME PLOTTED => 09:01

Dist	COUNTY	ROUTE	KILOMETER POST TOTAL PROJECT	SHEET No.	TOTAL SHEETS
04	SF	80	12.6/13.9	185	821

REGISTERED CIVIL ENGINEER 10/31/11 DATE

2-21-12
PLANS APPROVAL DATE

REGISTERED PROFESSIONAL ENGINEER Mark Grodzki No. 65594 Exp. 09/30/13 CIVIL STATE OF CALIFORNIA

THE STATE OF CALIFORNIA OR ITS OFFICERS OR AGENTS SHALL NOT BE RESPONSIBLE FOR THE ACCURACY OR COMPLETENESS OF ELECTRONIC COPIES OF THIS PLAN SHEET.

PB AMERICAS, Inc.
303 Second St., Suite 700N
San Francisco, CA 94107-1317

Caltrans Metric

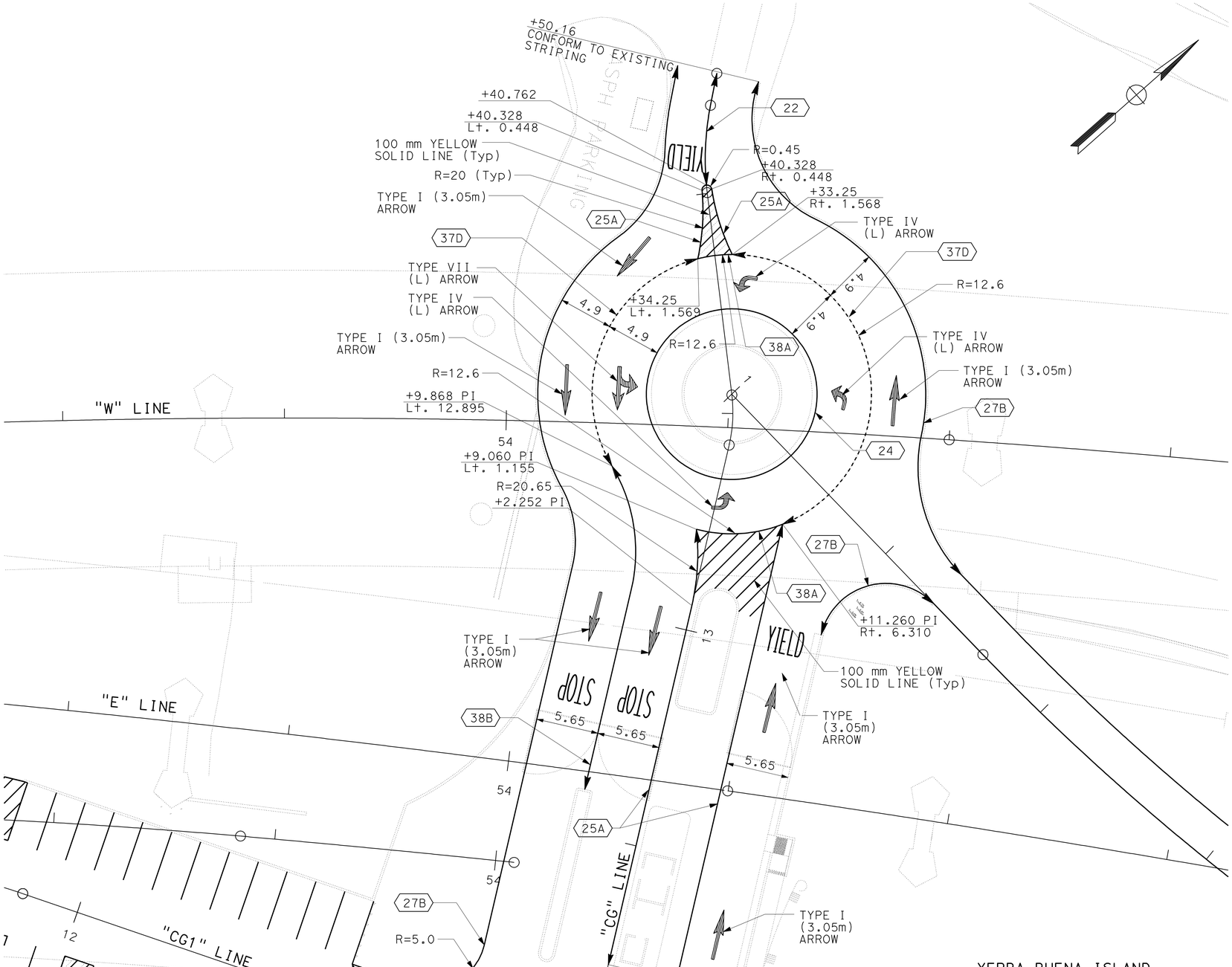

ALL DIMENSIONS ARE IN METERS UNLESS OTHERWISE SHOWN

PAVEMENT DELINEATION PLAN

SCALE 1:500

FOR NOTES, ABBREVIATIONS AND/OR LEGEND SEE SHEET PD-1

THIS PLAN ACCURATE FOR PAVEMENT DELINEATION WORK ONLY.

PD-7

STATE OF CALIFORNIA - DEPARTMENT OF TRANSPORTATION
Caltrans

CONSULTANT FUNCTIONAL SUPERVISOR: BOB ZANDIPOUR
CALCULATED-DESIGNED BY: M. GRODZKI
CHECKED BY: B. NADELL
REVISED BY / DATE REVISED

LAST REVISION 00-00-00
DATE PLOTTED => 25-FEB-2012
TIME PLOTTED => 09:01

Dist	COUNTY	ROUTE	KILOMETER POST TOTAL PROJECT	SHEET No.	TOTAL SHEETS
04	SF	80	12.6/13.9	186	821

REGISTERED CIVIL ENGINEER 10/31/11 DATE

2-21-12
PLANS APPROVAL DATE

REGISTERED PROFESSIONAL ENGINEER Mark Grodzki No. 65594 Exp. 09/30/13 CIVIL STATE OF CALIFORNIA

THE STATE OF CALIFORNIA OR ITS OFFICERS OR AGENTS SHALL NOT BE RESPONSIBLE FOR THE ACCURACY OR COMPLETENESS OF ELECTRONIC COPIES OF THIS PLAN SHEET.

PB AMERICAS, Inc.
303 Second St., Suite 700N
San Francisco, CA 94107-1317

Caltrans Metric

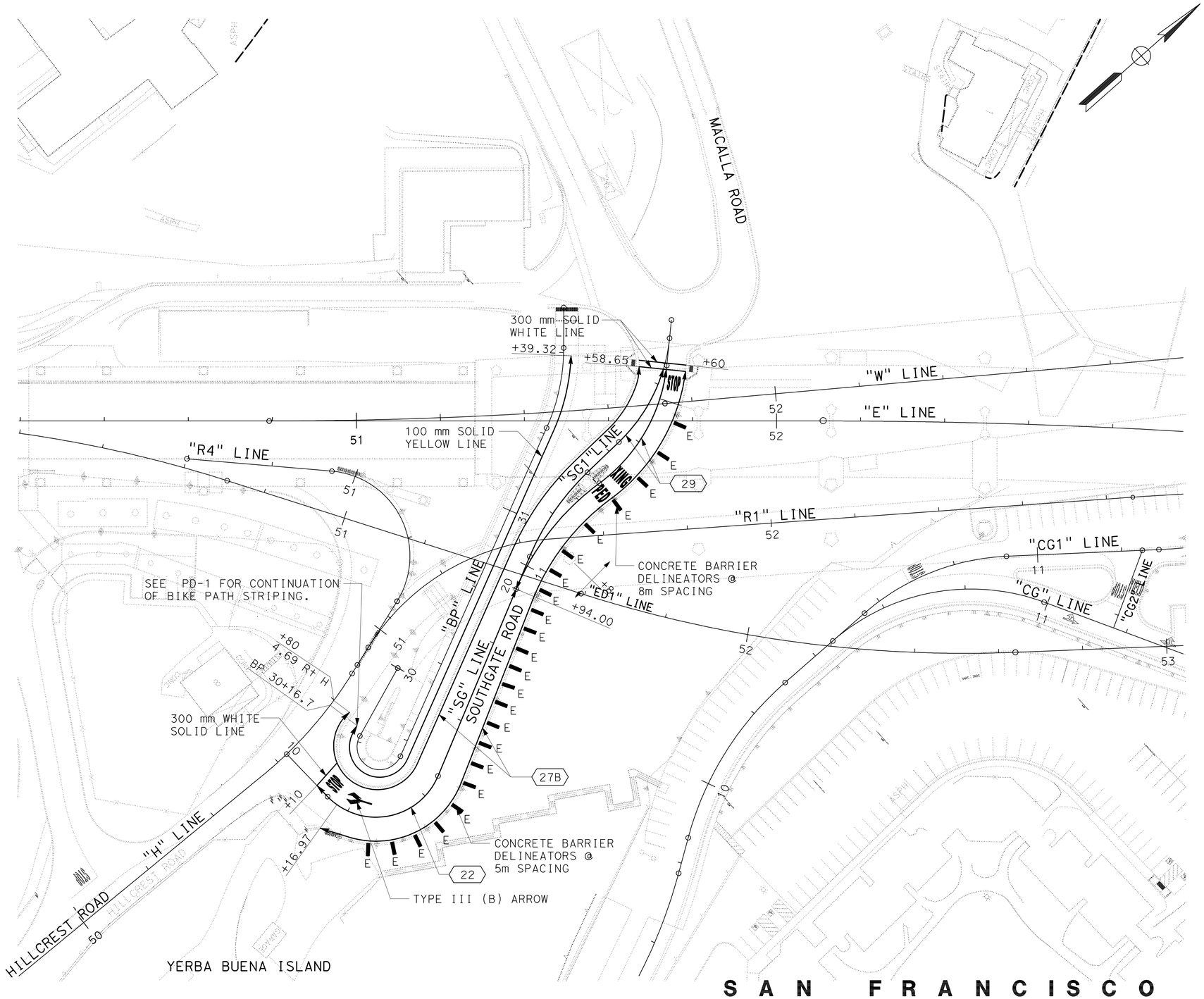

ALL DIMENSIONS ARE IN METERS UNLESS OTHERWISE SHOWN

PAVEMENT DELINEATION PLAN

SCALE 1:500

FOR NOTES, ABBREVIATIONS AND/OR LEGEND SEE SHEET PD-1

THIS PLAN ACCURATE FOR PAVEMENT DELINEATION WORK ONLY.

PD-8

STATE OF CALIFORNIA - DEPARTMENT OF TRANSPORTATION
Caltrans

CONSULTANT FUNCTIONAL SUPERVISOR: BOB ZANDIPOUR
CALCULATED-DESIGNED BY: M. GRODZKI
CHECKED BY: B. NADELL
REVISED BY
DATE REVISED

LAST REVISION 00-00-00
DATE PLOTTED => 25-FEB-2012
TIME PLOTTED => 09:02

Dist	COUNTY	ROUTE	KILOMETER POST TOTAL PROJECT	SHEET No.	TOTAL SHEETS
04	SF	80	12.6/13.9	187	821

REGISTERED CIVIL ENGINEER 10/31/11 DATE

2-21-12
PLANS APPROVAL DATE

REGISTERED PROFESSIONAL ENGINEER Mark Grodzki No. 65594 Exp. 09/30/13 CIVIL STATE OF CALIFORNIA

THE STATE OF CALIFORNIA OR ITS OFFICERS OR AGENTS SHALL NOT BE RESPONSIBLE FOR THE ACCURACY OR COMPLETENESS OF ELECTRONIC COPIES OF THIS PLAN SHEET.

PB AMERICAS, Inc.
303 Second St., Suite 700N
San Francisco, CA 94107-1317

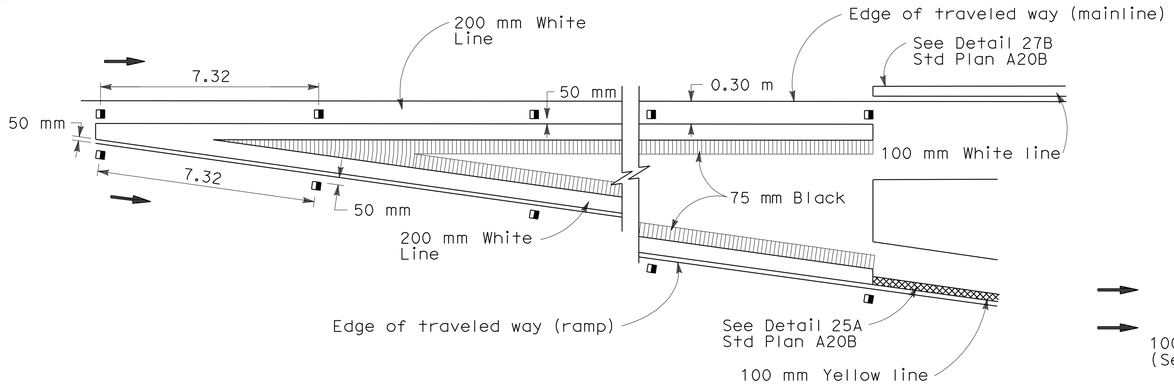

DETAIL 36M
NO SCALE

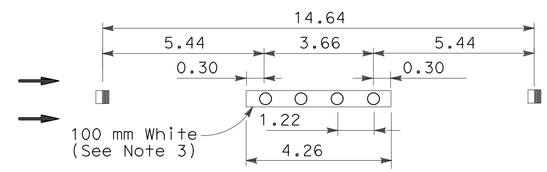

DETAIL 13M
NO SCALE

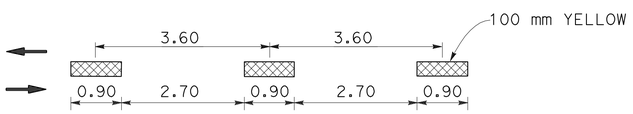

DETAIL 1M
NO SCALE

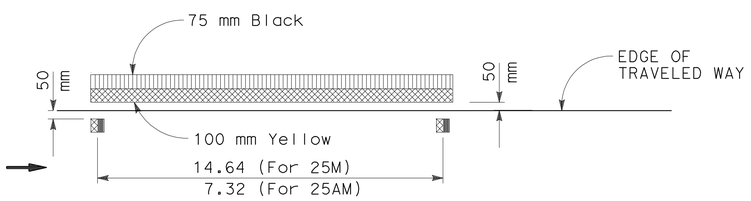

DETAIL 25M 25AM
NO SCALE

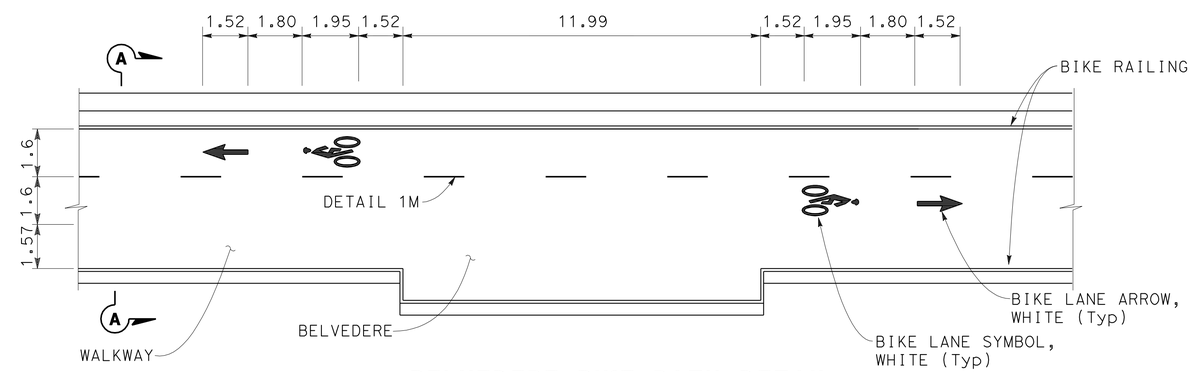

BELVEDERE BIKE PATH DETAIL
approx. Sta "E1" 55+90

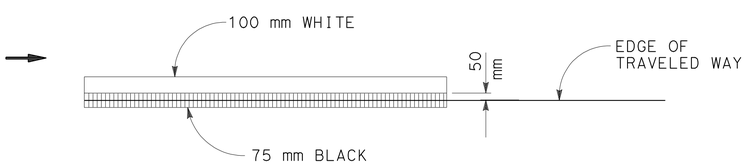

DETAIL 27BM
NO SCALE

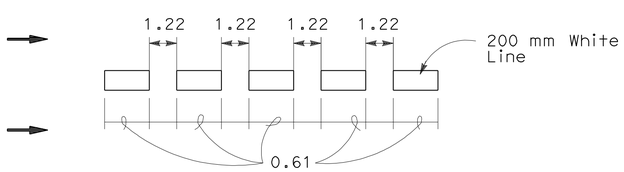

DETAIL 37D
NO SCALE

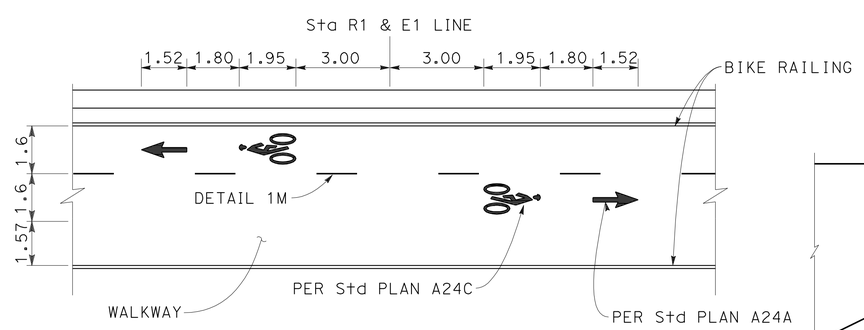

TYPICAL BIKE PATH DETAIL
SEE TABLE A FOR DETAIL LOCATIONS

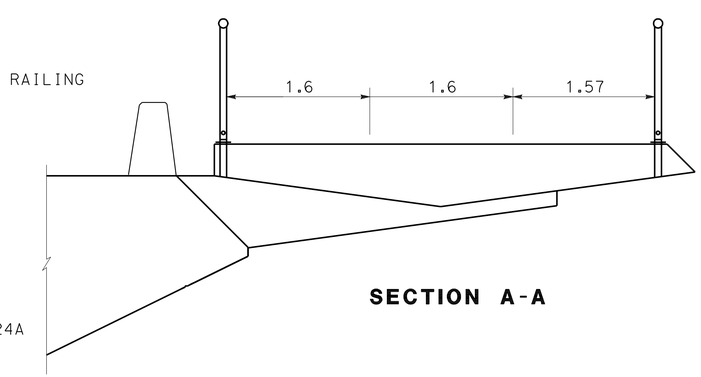

SECTION A-A

TABLE A

LOCATION
R1 51+00
R1 52+70
E 54+40

NOTES:

1. DETAILS 13M, 25AM, 27BM, 36M, 37D ARE MODIFIED PAVEMENT DELINEATION DETAILS 13, 25A, 27B, 36 ,AND 37.
2. FOR DETAILS NOT SHOWN SEE STD. PL. A20A, A20B, A20C ,AND A20D.
3. INSTALL 100 MM WHITE AFTER INSTALLING PAVEMENT MARKERS.

ALL DIMENSIONS ARE IN METERS UNLESS OTHERWISE SHOWN

PAVEMENT DELINEATION DETAILS

NO SCALE

PDD-1

REVISED BY | DATE REVISED
M. GRODZKI | B. NADELL
CALCULATED-DESIGNED BY | CHECKED BY
CONSULTANT FUNCTIONAL SUPERVISOR: BOB ZANDIPOUR
STATE OF CALIFORNIA - DEPARTMENT OF TRANSPORTATION

LAST REVISION 00-00-00 | DATE PLOTTED => 25-FEB-2012 | TIME PLOTTED => 09:02

PAVEMENT DELINEATION QUANTITIES

SHEET No.	STATION LIMITS	DETAIL No. OR PAVEMENT MARKING	PAVEMENT MARKERS					THERMOPLASTIC TRAFFIC STRIPES									PAINT TRAFFIC STRIPES		THERMOPLASTIC PAVEMENT MARKING	
			NON - REFLECTIVE	RETROREFLECTIVE				100 mm YELLOW			100 mm WHITE		200 mm WHITE			75 mm BLACK	100 mm YELLOW	100 mm WHITE		
			TYPE A	TYPE C	TYPE D	TYPE G	TYPE H	SOLID	BROKEN (0.3-1.83)	BROKEN (3.66-0.92)	SOLID	BROKEN (5.18-2.14)	SOLID	BROKEN (1.22-0.61)	BROKEN (3.66-0.92)	SOLID	SOLID	SOLID	WHITE	BLUE
			EA	EA	EA	EA	EA	m	m	m	m	m	m	m	m	m	m	m	m2	m2
PD-1	BP 30+16.70 to R1 52+00	1M								117										
PD-1	W 49+59 to W 50+20	38				9							61							
PD-1	W 50+7.192 to W 50+20	38				5							31							
PD-1	W 50+20 to W 51+09	38B				26							89							
PD-1	W 50+22.010 to W 51+28.340	13M	32			8						107								
PD-1	W 50+22.010 to W 51+28.340	13M	32			8						107								
PD-1	W 50+22.010 to W 51+28.340	13M	32			8						107								
PD-1	W 50+22.010 to W 51+28.340	13M	32			8						107								
PD-1	W 50+48 to W 51+28.340	27BM									80					80				
PD-1	W 50+26 to W 50+27	25A					5	32												
PD-1	W 50+27.439 to W 51+28.340	25M					8	101								101				
PD-1	W 51+09 to W 51+28.340	37		4		2									20					
PD-1	WW 80+06.30 to WW 81+03.50	22			28			194												
PD-1	H 49+69.172 to H 49+90	22			3			21												
PD-1	H 50+15 to 50+38	22			3			23												
PD-1	WW to WW 81+18.40	27B									45									
PD-1	QUARTERS 8 LOT	ACCESSIBILITY MARKING																	1	2
PD-1	H 50+38 to WW 81+03.50	27B									104									
PD-1	H 49+69.172 to WW 50+06.64	27B									114									
PD-1	W 51+00	TYPE V ARROW																	3	
PD-1	W 51+00	TYPE V ARROW																	3	
PD-1	W 51+00	TYPE V ARROW																	3	
PD-1	W 51+00	TYPE V ARROW																	3	
PD-1	W 51+00	TYPE V ARROW																	3	
PD-1	W 51+00	TYPE III (L) ARROW																	4	
PD-1	W 50+35	TYPE III (L) ARROW																	4	
PD-1	H 50+50	TYPE III (L) ARROW																	4	
PD-1	WW 80+90	TYPE III (L) ARROW																	4	
PD-1	WW 80+65	TYPE III (R) ARROW																	4	
PD-1	WW 80+20	TYPE III (B) ARROW																	7	
PD-1	WW 80+06.30	STOP BAR																	2	
PD-1	WW 80+79	STOP BAR																	2	
PD-1	WW 80+07	STOP																	2	
PD-1	WW 80+80	STOP																	2	
PD-1	W 50+22.010 to W 50+48	36A									27									
PD-1	W 49+59 to W 50+20	GORE AREA											68							
PD-2	E 50+94.346 to E 51+60.000	27BM									66					66				
PD-2	E 49+59.250 to E 51+17.497	13M	44			11						158								
PD-2	E 49+59.250 to E 51+17.497	13M	44			11						158								
PD-2	E 49+59.250 to E 51+17.497	13M	44			11						158								
PD-2	E 49+59.250 to E 51+17.497	13M	44			11						158								
PD-2	E 49+59.250 to E 51+17.497	25M					12	158								158				
PD-2	E 49+59.250 to H 50+36	27B									224									
PD-2	H 50+46	STOP BAR																	1	
PD-2	H 50+46	STOP																	2	
PD-2	H 50+38 to H 50+46	22			4			15												
PD-2	H 50+72	TYPE I (5.49 m) ARROW																	2	
PD-2	H 50+72	TYPE I (5.49 m) ARROW																	2	
PD-2	R4 50+75	TYPE V ARROW																	3	
PD-2	R4 50+94.31 to R4 51+30.6	25A					6	36												
PD-2	R4 51+30.60 to R4 50+86	29			5			56												
PD-2	H 50+71 to H 50+86	22			6			29												
PD-2	50+70 to 50+86	38A											15							
SUBTOTAL (THIS SHEET)			304	4	49	120	31	665	0	117	660	1060	264	0	20	405	0	0	61	2

Dist	COUNTY	ROUTE	KILOMETER POST TOTAL PROJECT	SHEET No.	TOTAL SHEETS
04	SF	80	12.6/13.9	188	821

REGISTERED CIVIL ENGINEER 02/03/12 DATE

2-21-12
PLANS APPROVAL DATE

REGISTERED PROFESSIONAL ENGINEER Mark Grodzki No. 65594 Exp. 09/30/13 CIVIL STATE OF CALIFORNIA

THE STATE OF CALIFORNIA OR ITS OFFICERS OR AGENTS SHALL NOT BE RESPONSIBLE FOR THE ACCURACY OR COMPLETENESS OF ELECTRONIC COPIES OF THIS PLAN SHEET.

PB AMERICAS, Inc.
303 Second St., Suite 700N
San Francisco, CA 94107-1317

Caltrans Metric

REVISED BY | DATE REVISED

M. GRODZKI | B. NADELL

CALCULATED-DESIGNED BY | CHECKED BY

CONSULTANT FUNCTIONAL SUPERVISOR: BOB ZANDIPOUR

STATE OF CALIFORNIA - DEPARTMENT OF TRANSPORTATION

Caltrans

PAVEMENT DELINEATION QUANTITIES

PDQ-1

LAST REVISION 00-00-00 | DATE PLOTTED => 25-FEB-2012 | TIME PLOTTED => 09:02

PAVEMENT DELINEATION QUANTITIES

SHEET No.	STATION LIMITS	DETAIL No. OR PAVEMENT MARKING	PAVEMENT MARKERS					THERMOPLASTIC TRAFFIC STRIPES									PAINT TRAFFIC STRIPES		THERMOPLASTIC PAVEMENT MARKING	
			NON - REFLECTIVE	RETROREFLECTIVE				100 mm YELLOW			100 mm WHITE		200 mm WHITE			75 mm BLACK	100 mm YELLOW	100 mm WHITE		
			TYPE A	TYPE C	TYPE D	TYPE G	TYPE H	SOLID	BROKEN (0.3-1.83)	BROKEN (3.66-0.92)	SOLID	BROKEN (5.18-2.14)	SOLID	BROKEN (1.22-0.61)	BROKEN (3.66-0.92)	SOLID	SOLID	SOLID	WHITE	BLUE
			EA	EA	EA	EA	EA	m	m	m	m	m	m	m	m	m	m	m	m2	m2
PD-2	H 50+75	TYPE III (L) ARROW																	4	
PD-2	R1 50+86 to R1 51+12	29			3			24												
PD-2	R1 51+12 to R1 50+02	25AM					14	90								90				
PD-2	E 50+60 to E 50+94.346	36M			10								69			69				
PD-2	H 50+80 to R1 51+12	27B									31									
PD-2	R1 51+12 to R1 52+02	27BM									90					90				
PD-3	E 52+00 to E 54+20	1M								220										
PD-3	R1 52+02 to R1 53+76.892	27BM									175					175				
PD-3	R1 52+02 to R1 52+90	25AM					14	94								94				
PD-3	R1 52+72	STOP BAR																	1	
PD-4	E 54+20 to E 56+05	1M								185										
PD-5	CG 9+65.173 to CG 11+12	22			42			294												
PD-5	CG 11+20 to CG 11+40	22			6			40												
PD-5	CG 11+40 to CG 12+09.736	41							70											
PD-5	CG 12+09.736 to CG 12+31	22			6			43												
PD-5	CG 12+31 to CG 12+52.85	25A			14		7	46												
PD-5	CG 12+31 to CG 12+52.85	GORE AREA						33												
PD-5	CG1 10+69 to CG 10+91.78	38A											26							
PD-5	CG1 10+69 to CG1 10+92.605	38A											24							
PD-5	CG1 10+92.61 to CG2 11+27.63	25A			10		5	30												
PD-5	CG1 10+55.54 to CG1 10+93	27B			14						47									
PD-5	CG2 11+22.1 to CG2 11+31.55	22			4			19												
PD-5	CG1 11+30.575 to CG1 11+68	22			12			74												
PD-5	CG1 11+30.575 to CG1 11+68	38A											38							
PD-5	USCG LOT	ACCESSIBILITY MARKING																	4	6
PD-5	NEAR BASKETBALL COURT AREA	22			2			8												
PD-5	NEAR BASKETBALL COURT AREA	STOP																	2	
PD-5	NEAR BASKETBALL COURT AREA	STOP BAR																	3	
PD-5	NEAR BASKETBALL COURT AREA	STOP BAR																	3	
PD-5	CG 12+09.736	STOP BAR																	1	
PD-5	CG 12+22	STOP BAR																	1	
PD-5	CG 12+50	TYPE I (3.05 m) ARROW																	1	
PD-5	CG 12+05	TYPE VII (L) ARROW																	3	
PD-5	CG 12+30	TYPE VII (R) ARROW																	3	
PD-5	CG 11+06	TYPE VII (L) ARROW																	3	
PD-5	CG2 11+22.062	STOP BAR																	1	
PD-5	CG2 11+22.062	STOP																	2	
PD-5	CG2 11+27	YIELD																	2	
PD-5	CG1 11+40	TYPE I (3.05 m) ARROW																	1	
PD-5	CG1 11+40	TYPE VII (L) ARROW																	3	
PD-5	CG1 12+20	TYPE I (3.05 m) ARROW																	1	
PD-5	CG1 10+69	STOP																	2	
PD-5	CG1 10+69	STOP BAR																	1	
PD-6	TF3 1+20 to TF3+94	27B									508									
PD-6	TF3A 2+24 to TF3A 2+94.567	27B									167									
PD-7	CG1 12+25 to CG 13+50.16	27B									99									
PD-7	CG 12+69 to CG 13+09.06	25A					6	40												
PD-7	CG 12+69 to CG 13+11.26	25A					6	43												
PD-7	CG 12+84 to CG 13+9.868	38B				10							30							
PD-7	CG 13+09	GORE AREA						43												
PD-7	CG 13+09.868 to CG 13+34.25	37D												24						
PD-7	CG 13+40	GORE AREA						11												
SUBTOTAL (THIS SHEET)			0	0	123	10	52	932	70	405	1117	0	187	24	0	518	0	0	42	6

Dist	COUNTY	ROUTE	KILOMETER POST TOTAL PROJECT	SHEET No.	TOTAL SHEETS
04	SF	80	12.6/13.9	189	821

REGISTERED CIVIL ENGINEER 02/03/12 DATE

2-21-12
PLANS APPROVAL DATE

REGISTERED PROFESSIONAL ENGINEER Mark Grodzki No. 65594 Exp. 09/30/13 CIVIL STATE OF CALIFORNIA

THE STATE OF CALIFORNIA OR ITS OFFICERS OR AGENTS SHALL NOT BE RESPONSIBLE FOR THE ACCURACY OR COMPLETENESS OF ELECTRONIC COPIES OF THIS PLAN SHEET.

PB AMERICAS, Inc.
303 Second St., Suite 700N
San Francisco, CA 94107-1317

Caltrans Metric

REVISED BY | DATE REVISED

M. GRODZKI | B. NADELL

CALCULATED-DESIGNED BY | CHECKED BY

CONSULTANT FUNCTIONAL SUPERVISOR

BOB ZANDIPOUR

STATE OF CALIFORNIA - DEPARTMENT OF TRANSPORTATION

Caltrans

PAVEMENT DELINEATION QUANTITIES

PDQ-2

LAST REVISION 00-00-00 | DATE PLOTTED => 25-FEB-2012 | TIME PLOTTED => 09:02

Dist	COUNTY	ROUTE	KILOMETER POST TOTAL PROJECT	SHEET No.	TOTAL SHEETS
04	SF	80	12.6/13.9	190	821

REGISTERED CIVIL ENGINEER 02/03/12 DATE

2-21-12
PLANS APPROVAL DATE

REGISTERED PROFESSIONAL ENGINEER Mark Grodzki No. 65594 Exp. 09/30/13 CIVIL STATE OF CALIFORNIA

THE STATE OF CALIFORNIA OR ITS OFFICERS OR AGENTS SHALL NOT BE RESPONSIBLE FOR THE ACCURACY OR COMPLETENESS OF ELECTRONIC COPIES OF THIS PLAN SHEET.

PB AMERICAS, Inc.
303 Second St., Suite 700N
San Francisco, CA 94107-1317

Caltrans Metric

PAVEMENT DELINEATION QUANTITIES

SHEET No.	STATION LIMITS	DETAIL No. OR PAVEMENT MARKING	PAVEMENT MARKERS					THERMOPLASTIC TRAFFIC STRIPES									TEMPORARY TRAFFIC STRIPE		THERMOPLASTIC PAVEMENT MARKING	
			NON - REFLECTIVE	RETROREFLECTIVE				100 mm YELLOW			100 mm WHITE		200 mm WHITE			75 mm BLACK	100 mm YELLOW	100 mm WHITE		
			TYPE A	TYPE C	TYPE D	TYPE G	TYPE H	SOLID	BROKEN (0.3-1.83)	BROKEN (3.66-0.92)	SOLID	BROKEN (5.18-2.14)	SOLID	BROKEN (1.22-0.61)	BROKEN (3.66-0.92)	SOLID	SOLID	SOLID	WHITE	BLUE
			EA	EA	EA	EA	EA	m	m	m	m	m	m	m	m	m	m	m	m2	m2
PD-7	CG 13+40.762 to CG 13+50.16	22			4			20												
PD-7	CG 13+34.25 to CG 13+40.762	25A					3	14												
PD-7	CG 13+33.25 to CG 13+34.25	38A											8							
PD-7	CG 13+11.26 to CG 13+33.25	37D												35						
PD-7	CG 13+50.16 to TF3 1+20	27B									52									
PD-7	CG 13+08 to TF3 1+20	27B									13									
PD-7	CG 13+9.06 to 13+11.26	38A											3							
PD-7	INNER ROUNDABOUT (L ETW)	24						48												
PD-7	CG 13+00	TYPE 1 (3.05 m) ARROW																	1	
PD-7	CG 13+00	TYPE 1 (3.05 m) ARROW																	1	
PD-7	CG 13+20	TYPE 1 (3.05 m) ARROW																	1	
PD-7	CG 13+20	TYPE IV (L) ARROW																	1	
PD-7	CG 13+35	TYPE 1 (3.05 m) ARROW																	1	
PD-7	CG 13+30	TYPE IV (L) ARROW																	1	
PD-7	CG 13+20	TYPE IV (L) ARROW																	1	
PD-7	CG 13+20	TYPE 1 (3.05 m) ARROW																	1	
PD-7	CG 13+12	TYPE VII (L) ARROW																	3	
PD-7	CG 13+00	TYPE 1 (3.05 m) ARROW																	1	
PD-7	CG 12+71	TYPE 1 (3.05 m) ARROW																	1	
PD-7	CG 13+00	STOP																	2	
PD-7	CG 13+00	STOP																	2	
PD-7	CG 13+05	YIELD																	2	
PD-7	CG 13+42	YIELD																	2	
PD-8	H 16+80.00 to SG 11+58.65	27B									148									
PD-8	SG 10+16.97 to SG 11+58.65	27B									154									
PD-8	SG 10+10 to SG 10+94.00	22			24			168												
PD-8	SG 10+94.00 TO SG 11+58.65	29			18			260												
PD-8	SG 10+10	STOP BAR																	2	
PD-8	SG 11+58.65	CROSSWALK LINE																	3	
PD-8	SG 11+60.00	CROSSWALK LINE																	3	
PD-8	SG 10+12.00	STOP																	2	
PD-8	SG 11+54.00	STOP																	2	
PD-8	SG 11+30.00	PED																	2	
PD-8	SG 11+30.00	XING																	2	
PD-8	BP 30+16.7 to BP 31+39.32	100 mm YELLOW SOLID						130												
PD-8	SG 10+20	TYPE III (B) ARROW																	7	
PDD-1	R1 51+00.00	BIKE PATH MARKING																	3	
PDD-1	R1 52+70.00	BIKE PATH MARKING																	3	
PDD-1	R1 54+40.00	BIKE PATH MARKING																	3	
PDD-1	R1 55+90.00	BIKE PATH MARKING																	3	
SUBTOTAL (THIS SHEET)			0	0	46	0	3	640	0	0	367	0	11	35	0	0	0	0	57	0
PARKING DELINEATION (SEE SHEET PDQ-4)											1858								5	5
FROM STAGE CONSTRUCTION (SEE SHEET SCQ-1)					189		49										1677	1582		
SUB TOTAL			304	4	407	130	135	2237	70	522	4001	1060	462	59	20	923	1677	1582	166	13
TOTAL			304	676				*2237	70	522	*4001	1060	462	59	20	923	3259		179	

* 100 mm THERMOPLASTIC TRAFFIC STRIPE TOTAL = 6238 m

REVISED BY | DATE REVISED

M. GRODZKI | B. NADELL

CALCULATED-DESIGNED BY | CHECKED BY

CONSULTANT FUNCTIONAL SUPERVISOR

BOB ZANDIPOUR

STATE OF CALIFORNIA - DEPARTMENT OF TRANSPORTATION

Caltrans

PAVEMENT DELINEATION QUANTITIES

PDQ-3

LAST REVISION 00-00-00 | DATE PLOTTED => 25-FEB-2012 | TIME PLOTTED => 09:02

Dist	COUNTY	ROUTE	KILOMETER POST TOTAL PROJECT	SHEET No.	TOTAL SHEETS
04	SF	80	12.6/13.9	191	821

Caltrans Metric

REGISTERED CIVIL ENGINEER 02/03/12 DATE

2-21-12
PLANS APPROVAL DATE

REGISTERED PROFESSIONAL ENGINEER Mark Grodzki No. 65594 Exp. 09/30/13 CIVIL STATE OF CALIFORNIA

THE STATE OF CALIFORNIA OR ITS OFFICERS OR AGENTS SHALL NOT BE RESPONSIBLE FOR THE ACCURACY OR COMPLETENESS OF ELECTRONIC COPIES OF THIS PLAN SHEET.

PB AMERICAS, Inc.
303 Second St., Suite 700N
San Francisco, CA 94107-1317

REMOVE PAVEMENT DELINEATION QUANTITIES

SHEET No.	STATION LIMITS	DETAIL No. OR PAVEMENT MARKING	PAVEMENT MARKERS					THERMOPLASTIC TRAFFIC STRIPES					
			NON-REFLECTIVE	RETROFLECTIVE				YELLOW	WHITE				BLACK
								100 mm	100 mm		200 mm		75 mm BLACK
			TYPE A	TYPE C	TYPE D	TYPE G	TYPE H	SOLID	SOLID	BROKEN (5.18 - 2.14)	SOLID	BROKEN (3.66 - 0.91)	SOLID
			EA	EA	EA	EA	EA	m	m	m	m	m	
PD-1	W 50+22.010 to W 51+28.340	13M	128			32				125			
PD-1	W 50+22.010 to W 51+28.340	27BM							80				60
PD-1	W 50+20 to W 51+09	38B				51					178		
PD-1	W 49+60 to W 50+20 (Gore Area)	38				14					184		
PD-1	W 50+22.010 to W 50+48	36A							27				
PD-1	W 50+27.439 to W 51+28.340	25M					8	101					76
PD-1	W 51+09 to W 51+28.340	37		4		2						4	
PD-2	E 49+59.250 to E 51+17.497	13M	176			44				185			
PD-2	E 49+59.250 to E 51+60.000	27BM							201				151
PD-2	E 49+59.250 to E 51+17.497	25M					12	158					119
SUBTOTAL			304	4		143	20	259	308	310	362	4	405
FROM STAGE CONSTRUCTION (SEE SHEET SCQ-1)					16			95	88				
SUB TOTAL			487					354	396	310	362	4	405
TOTAL			487					354	1477				

DELINEATOR QUANTITIES

SHEET NUMBER	STATION LIMIT	DELINEATOR (CLASS 1)		
		TYPE F	TYPE G	TYPE E
		EA	EA	EA
PD-1	W 50+23.39 to W 50+27.40		4	
PD-1	W 50+20 to W 50+06	10		
PD-2	E 50+22 to E 50+80	2		
PD-2	R4 51+02.861 to R4 51+49		7	
PD-2	R1 51+12 to R1 52+00	7	4	
PD-3	R1 52+00 to 54+01.68	8		
PD-4	E 54+20 to 55+20	4		
PD-8	SG 10+21.80 to 111+40.48			23
SUBTOTAL		31	15	23
GRAND TOTAL		69		

PARKING AND BASKETBALL COURT DELINEATION QUANTITIES

SHEET No.	STATION LIMITS	DESCRIPTION	50 MM NON-REFLECTIVE PAINT (2-COAT WHITE)	100 MM THERMOPLASTIC TRAFFIC STRIPE	THERMOPLASTIC PAVEMENT MARKING (2-COAT)		PARKING BUMPER
			50 MM WHITE		WHITE	BLUE	
			M	M	m2	m2	EA
PD-5	CG 11+74	BASKETBALL COURT LAYOUT	275				
PD-5	CG 9+65.173 to CG 12+60	PARKING STALL LINES		1858			226
PD-5	CG 9+65.173 to CG 12+60	COMPACT MARKING			2		
PD-5	CG 9+65.173 to CG 12+60	ACCESSIBLE MARKING			3	5	
TOTAL			275	1858	5	5	226

PAVEMENT DELINEATION QUANTITIES

PDQ-4

REVISED BY | DATE REVISED
M. GRODZKI | B. NADELL
CALCULATED-DESIGNED BY | CHECKED BY
CONSULTANT FUNCTIONAL SUPERVISOR
BOB ZANDIPOUR
STATE OF CALIFORNIA - DEPARTMENT OF TRANSPORTATION
Caltrans

LAST REVISION 00-00-00 | DATE PLOTTED => 25-FEB-2012 | TIME PLOTTED => 09:02

FOR COMPLETE RIGHT OF WAY AND ACCURATE ACCESS DATA, SEE RIGHT OF WAY RECORD MAPS AT DISTRICT OFFICE.

Dist	COUNTY	ROUTE	KILOMETER POST TOTAL PROJECT	SHEET No.	TOTAL SHEETS
04	SF	80	12.6/13.9	192	821

REGISTERED CIVIL ENGINEER 10/31/11 DATE

2-21-12
PLANS APPROVAL DATE

REGISTERED PROFESSIONAL ENGINEER Mark Grodzki No. 65594 Exp. 09/30/13 CIVIL STATE OF CALIFORNIA

THE STATE OF CALIFORNIA OR ITS OFFICERS OR AGENTS SHALL NOT BE RESPONSIBLE FOR THE ACCURACY OR COMPLETENESS OF ELECTRONIC COPIES OF THIS PLAN SHEET.

PB AMERICAS, Inc.
303 Second St., Suite 700N
San Francisco, CA 94107-1317

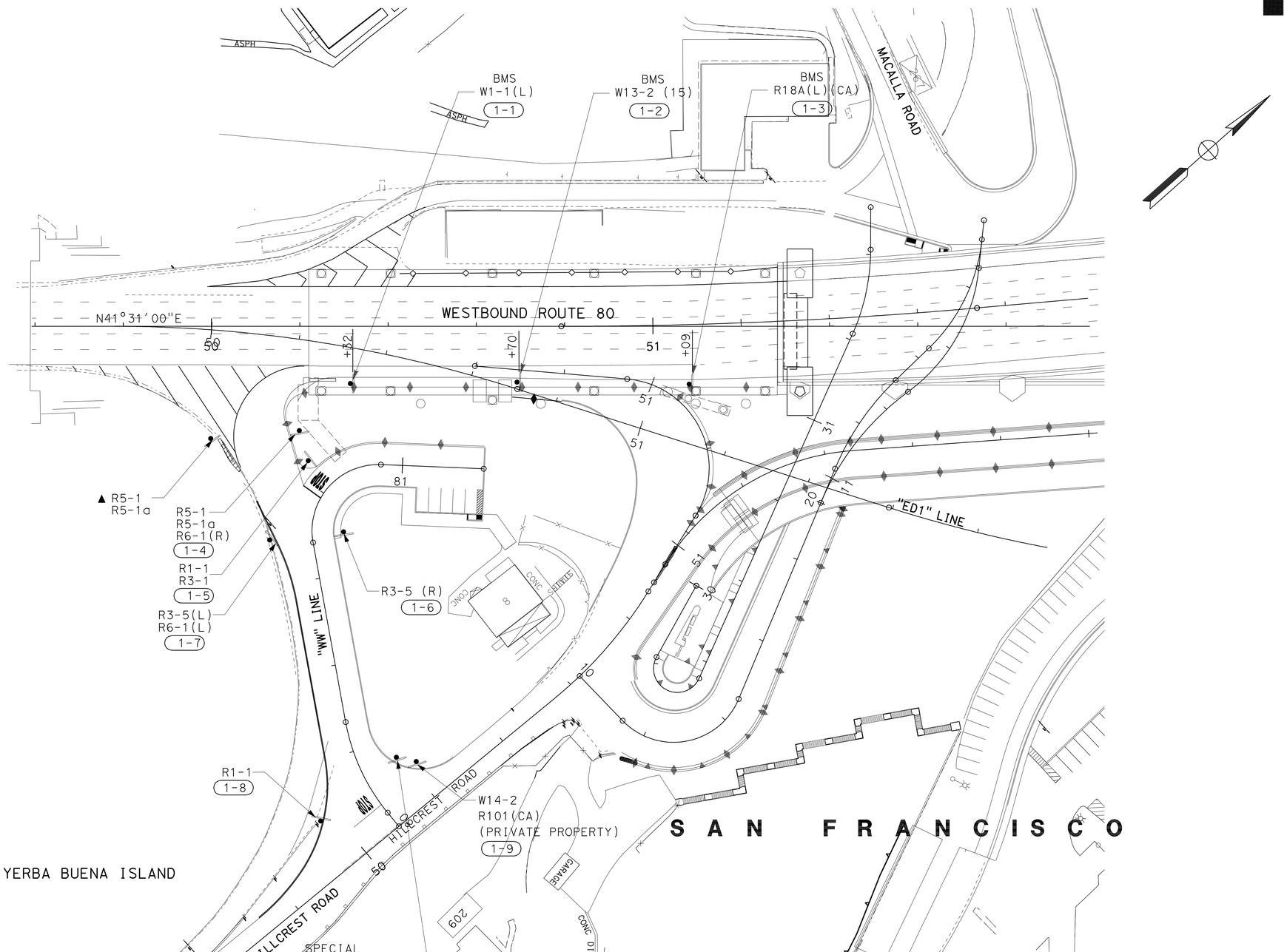

NOTES:

1. SEE SD SHEETS FOR BARRIER MOUNTED SIGN DETAILS AND SPECIAL SIGN PANEL DETAILS.

LEGEND:

- ■ RELOCATE ROADSIDE SIGN
- ▲ EXISTING SIGN TO REMAIN
- ● REMOVE ROADSIDE SIGN
- RESET ROADSIDE SIGN
- ROADSIDE SIGN SINGLE POST
- ROADSIDE SIGN TWO POST
- ROADSIDE SIGN (STRAP AND SADDLE)
- (X-XX) ROADSIDE SIGN (WITH NUMBER)

ABBREVIATIONS:

L.C.	LOWERCASE LETTERING
U.C.	UPPERCASE LETTERING
CAPS	CAPITAL LETTERING
BMS	BARRIER MOUNTED SIGN
SSBM	STRAP AND SADDLE BRACKET METHOD

ALL DIMENSIONS ARE IN METERS UNLESS OTHERWISE SHOWN

SIGN PLAN

SCALE 1:500

S-1

THIS PLAN ACCURATE FOR SIGNING ONLY.

STATE OF CALIFORNIA - DEPARTMENT OF TRANSPORTATION

Caltrans

CONSULTANT FUNCTIONAL SUPERVISOR: BOB ZANDIPOUR

CALCULATED-DESIGNED BY: M. GRODZKI

CHECKED BY: B. NADELL

REVISED BY | DATE REVISED

LAST REVISION 00-00-00 | DATE PLOTTED => 25-FEB-2012 | TIME PLOTTED => 09:03

Dist	COUNTY	ROUTE	KILOMETER POST TOTAL PROJECT	SHEET No.	TOTAL SHEETS
04	SF	80	12.6/13.9	193	821

REGISTERED CIVIL ENGINEER 10/31/11 DATE

2-21-12
PLANS APPROVAL DATE

REGISTERED PROFESSIONAL ENGINEER Mark Grodzki No. 65594 Exp. 09/30/13 CIVIL STATE OF CALIFORNIA

THE STATE OF CALIFORNIA OR ITS OFFICERS OR AGENTS SHALL NOT BE RESPONSIBLE FOR THE ACCURACY OR COMPLETENESS OF ELECTRONIC COPIES OF THIS PLAN SHEET.

PB AMERICAS, Inc.
303 Second St., Suite 700N
San Francisco, CA 94107-1317

Caltrans Metric

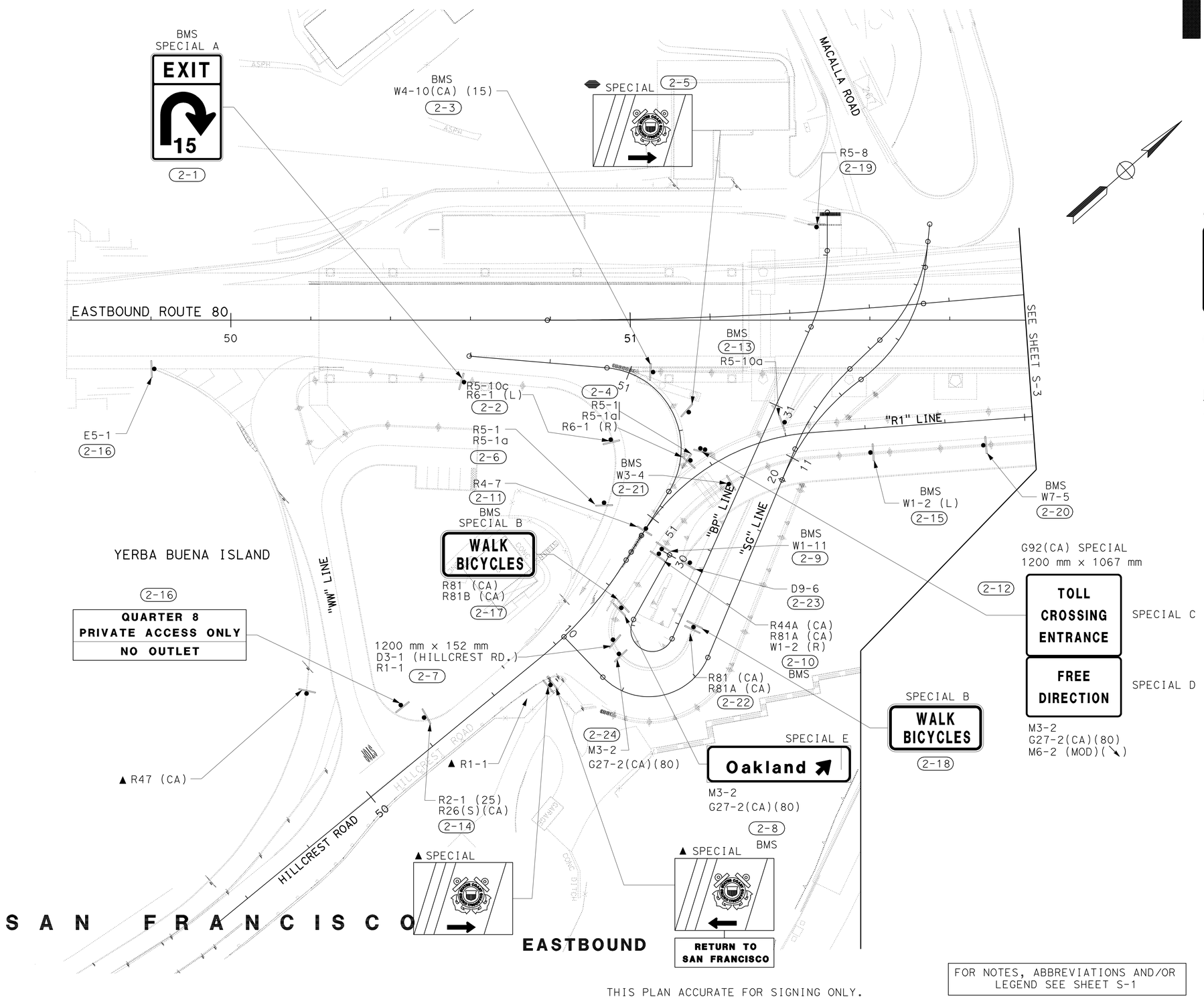

Overhead Sign

7315 x 1524
G85

NOTE:

1. Install overhead advance guide sign at Sta. E 46+40 (approx. 400 meters prior to eastbound off-ramp at Sta. E 50+40). Install on existing sign structure (truss) over right-hand eastbound lane. Exact overhead sign location to be determined in field by Engineer.

ALL DIMENSIONS ARE IN METERS UNLESS OTHERWISE SHOWN

SIGN PLAN

SCALE 1:500

FOR NOTES, ABBREVIATIONS AND/OR LEGEND SEE SHEET S-1

THIS PLAN ACCURATE FOR SIGNING ONLY.

S-2

STATE OF CALIFORNIA - DEPARTMENT OF TRANSPORTATION
Caltrans

CONSULTANT FUNCTIONAL SUPERVISOR: BOB ZANDIPOUR
CALCULATED-DESIGNED BY: M. GRODZKI
CHECKED BY: B. NADELL
REVISED BY / DATE REVISED

LAST REVISION 00-00-00 | DATE PLOTTED => 25-FEB-2012 | TIME PLOTTED => 09:03

Dist	COUNTY	ROUTE	KILOMETER POST TOTAL PROJECT	SHEET No.	TOTAL SHEETS
04	SF	80	12.6/13.9	194	821

Mark Grodzki 10/31/11
REGISTERED CIVIL ENGINEER DATE

2-21-12
PLANS APPROVAL DATE

REGISTERED PROFESSIONAL ENGINEER
Mark Grodzki
No. 65594
Exp. 09/30/13
CIVIL
STATE OF CALIFORNIA

THE STATE OF CALIFORNIA OR ITS OFFICERS OR AGENTS SHALL NOT BE RESPONSIBLE FOR THE ACCURACY OR COMPLETENESS OF ELECTRONIC COPIES OF THIS PLAN SHEET.

PB AMERICAS, Inc.
303 Second St., Suite 700N
San Francisco, CA 94107-1317

Caltrans Metric

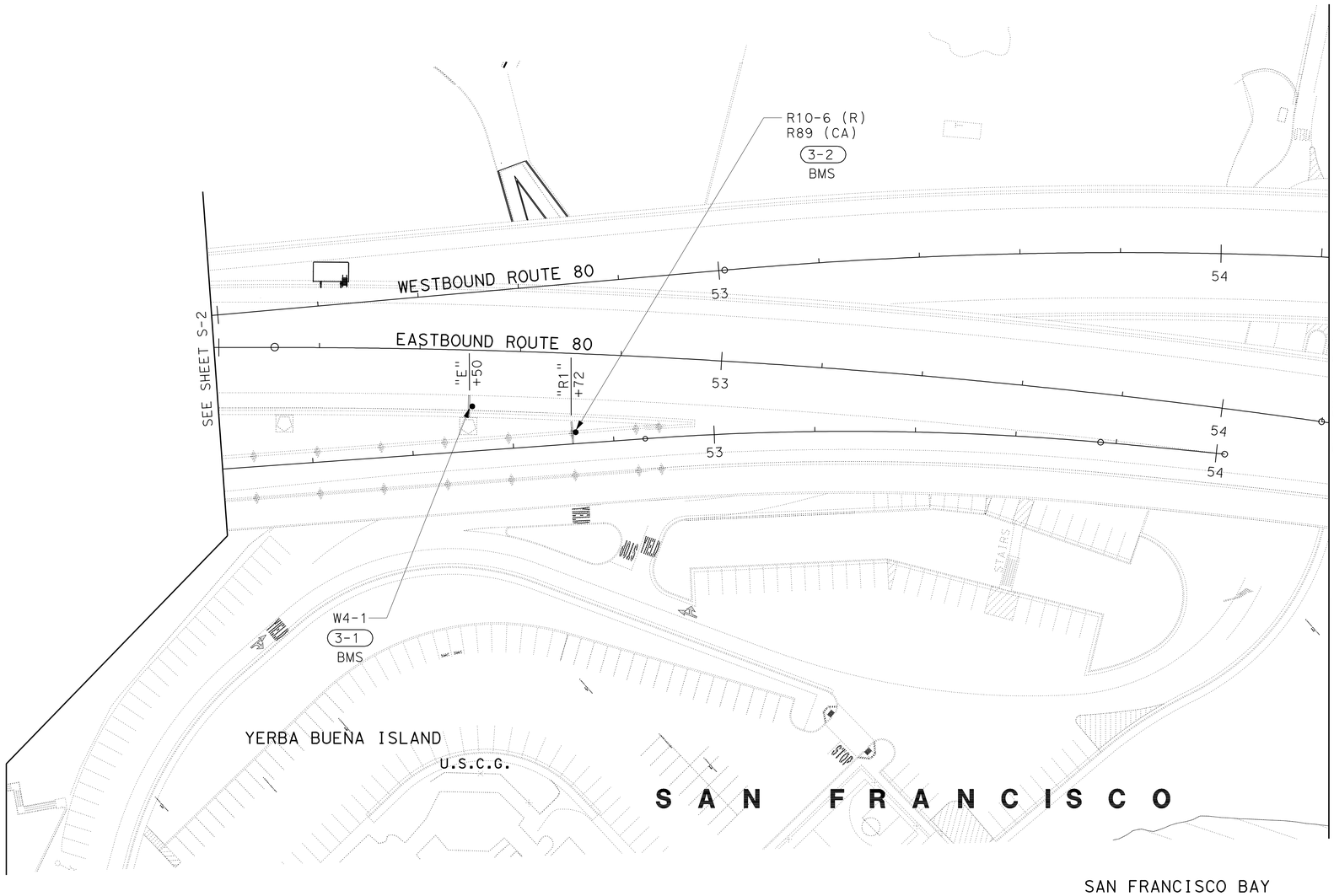

EASTBOUND

THIS PLAN ACCURATE FOR SIGNING ONLY.

FOR NOTES, ABBREVIATIONS AND/OR LEGEND SEE SHEET S-1

ALL DIMENSIONS ARE IN METERS UNLESS OTHERWISE SHOWN

SIGN PLAN

SCALE 1:500

S-3

STATE OF CALIFORNIA - DEPARTMENT OF TRANSPORTATION
Caltrans

CONSULTANT FUNCTIONAL SUPERVISOR: BOB ZANDIPOUR
CALCULATED-DESIGNED BY: M. GRODZKI
CHECKED BY: B. NADELL
REVISED BY
DATE REVISED

LAST REVISION 00-00-00
DATE PLOTTED => 25-FEB-2012
TIME PLOTTED => 09:03

Dist	COUNTY	ROUTE	KILOMETER POST TOTAL PROJECT	SHEET No.	TOTAL SHEETS
04	SF	80	12.6/13.9	195	821

Caltrans Metric

REGISTERED CIVIL ENGINEER — DATE 10/31/11

2-21-12
PLANS APPROVAL DATE

REGISTERED PROFESSIONAL ENGINEER
Mark Grodzki
No. 65594
Exp. 09/30/13
CIVIL
STATE OF CALIFORNIA

THE STATE OF CALIFORNIA OR ITS OFFICERS OR AGENTS SHALL NOT BE RESPONSIBLE FOR THE ACCURACY OR COMPLETENESS OF ELECTRONIC COPIES OF THIS PLAN SHEET.

PB AMERICAS, Inc.
303 Second St., Suite 700N
San Francisco, CA 94107-1317

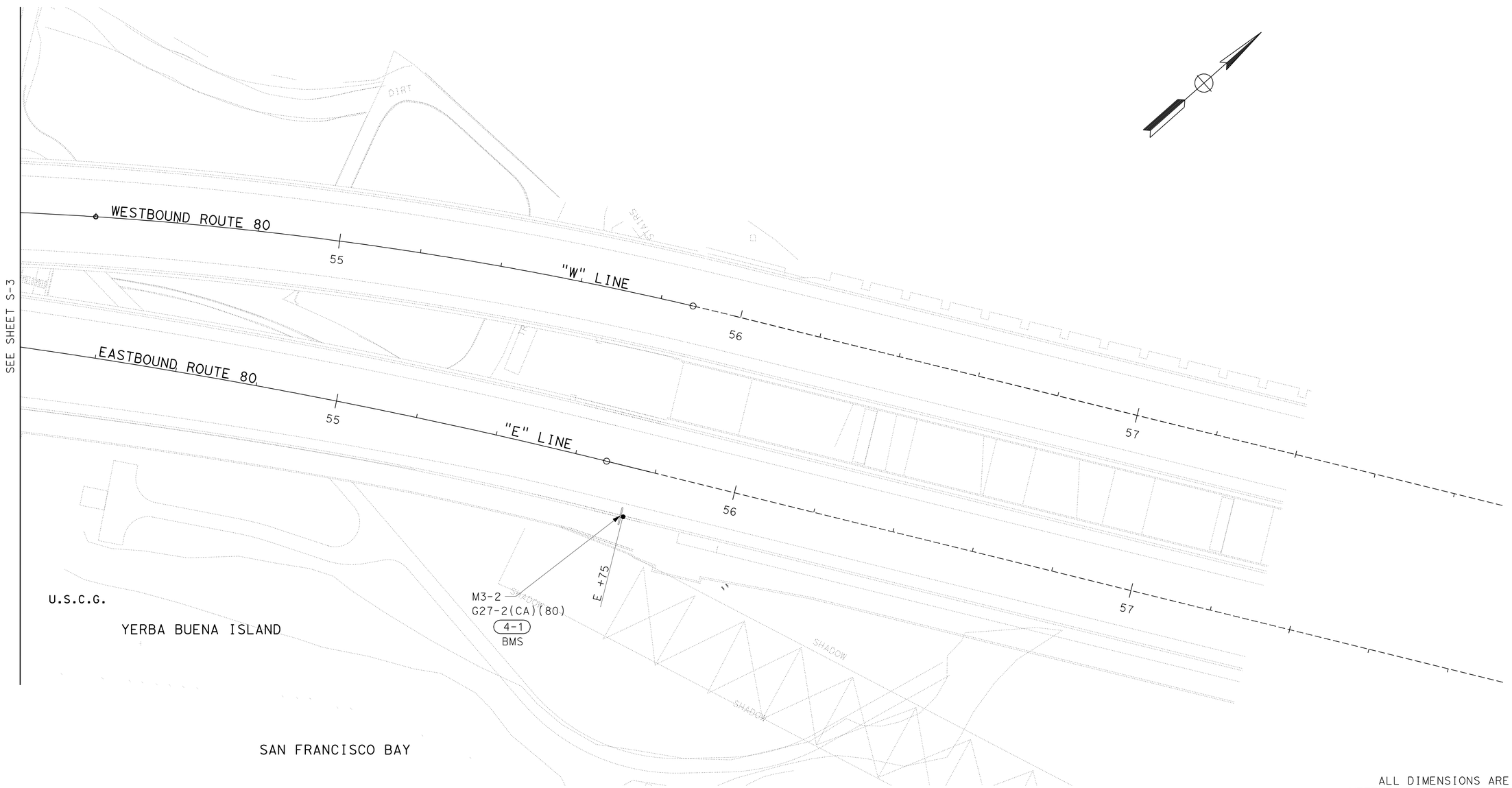

EASTBOUND

THIS PLAN ACCURATE FOR SIGNING ONLY.

FOR NOTES, ABBREVIATIONS AND/OR LEGEND SEE SHEET S-1

ALL DIMENSIONS ARE IN METERS UNLESS OTHERWISE SHOWN

SIGN PLAN

SCALE 1:500

S-4

REVISED BY	DATE REVISED

CONSULTANT FUNCTIONAL SUPERVISOR: BOB ZANDIPOUR

CALCULATED-DESIGNED BY: M. GRODZKI

CHECKED BY: B. NADELL

STATE OF CALIFORNIA - DEPARTMENT OF TRANSPORTATION

Caltrans

LAST REVISION 00-00-00 | DATE PLOTTED => 25-FEB-2012 | TIME PLOTTED => 09:03

Dist	COUNTY	ROUTE	KILOMETER POST TOTAL PROJECT	SHEET No.	TOTAL SHEETS
04	SF	80	12.6/13.9	196	821

REGISTERED CIVIL ENGINEER 10/31/11 DATE

2-21-12
PLANS APPROVAL DATE

REGISTERED PROFESSIONAL ENGINEER Mark Grodzki No. 65594 Exp. 09/30/13 CIVIL STATE OF CALIFORNIA

THE STATE OF CALIFORNIA OR ITS OFFICERS OR AGENTS SHALL NOT BE RESPONSIBLE FOR THE ACCURACY OR COMPLETENESS OF ELECTRONIC COPIES OF THIS PLAN SHEET.

PB AMERICAS, Inc.
303 Second St., Suite 700N
San Francisco, CA 94107-1317

Caltrans Metric

SPECIAL F (ABOVE)

CHECK POINT AHEAD

R2-1 (5) (BELOW)

(5-9)

SPECIAL G (ABOVE)

ACTIVE BARRIER

SPECIAL H (BELOW)

100 FEET

(5-26)

SPECIAL I (ABOVE)

WARNING
SEVERE TIRE DAMAGE
DO NOT BACK UP

(5-24)

SPECIAL J

BARRIER ACTIVATED WHEN FLASHING

(5-27)

R5-1A (ABOVE)
SPECIAL K (BELOW)

SEVERE TIRE DAMAGE

(5-25)

■ SPECIAL (5-18)

STATE PROPERTY
NO DUMPING
NO PARKING
NO TRESPASSING
VIOLATORS WILL BE PROSECUTED

■ SPECIAL (5-19)

STATE PROPERTY
NO DUMPING
NO PARKING
NO TRESPASSING
VIOLATORS WILL BE PROSECUTED

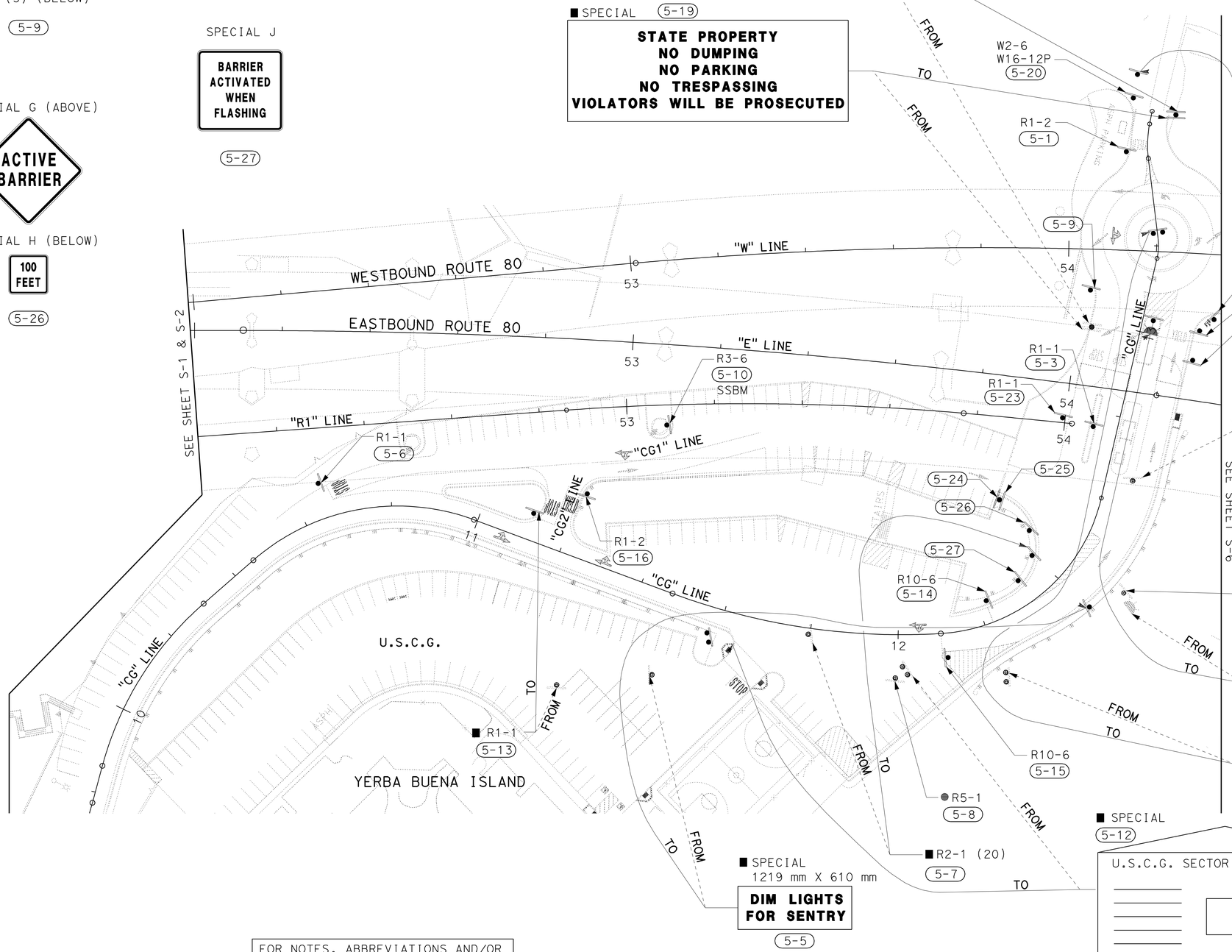

W5-3 (MOD)(ROAD)
W14-2
(5-17)

R1-2
(5-21)

W2-6
W16-12P
(5-22)

■ SPECIAL 1219 mm X 610 mm

APPROACHING MILITARY CHECK POINT

DIM LIGHTS FOR SENTRY

SPECIAL 1219 mm X 610 mm

(5-11)

▲ SPECIAL 1219 mm X 914 mm

(5-4)

RELOCATE FLASHING BEACON

■ (5-2) SPECIAL 5000 mm X 1200 mm

U.S. Dept. of Homeland Security
UNITED STATES COAST GUARD
SECTOR SAN FRANCISCO

■ SPECIAL
1219 mm X 610 mm

DIM LIGHTS FOR SENTRY

(5-5)

■ SPECIAL
(5-12)

U.S.C.G. SECTOR SAN FRANCISCO

FOR NOTES, ABBREVIATIONS AND/OR LEGEND SEE SHEET S-1

THIS PLAN ACCURATE FOR SIGNING ONLY.

ALL DIMENSIONS ARE IN METERS UNLESS OTHERWISE SHOWN

SIGN PLAN

SCALE 1:500

S-5

STATE OF CALIFORNIA - DEPARTMENT OF TRANSPORTATION

Caltrans

CONSULTANT FUNCTIONAL SUPERVISOR: BOB ZANDIPOUR

CALCULATED-DESIGNED BY: M. GRODZKI

CHECKED BY: B. NADELL

REVISED BY

DATE REVISED

LAST REVISION 00-00-00

DATE PLOTTED => 25-FEB-2012
TIME PLOTTED => 09:03

Dist	COUNTY	ROUTE	KILOMETER POST TOTAL PROJECT	SHEET No.	TOTAL SHEETS
04	SF	80	12.6/13.9	197	821

REGISTERED CIVIL ENGINEER 10/31/11 DATE

2-21-12
PLANS APPROVAL DATE

REGISTERED PROFESSIONAL ENGINEER
Mark Grodzki
No. 65594
Exp. 09/30/13
CIVIL
STATE OF CALIFORNIA

THE STATE OF CALIFORNIA OR ITS OFFICERS OR AGENTS SHALL NOT BE RESPONSIBLE FOR THE ACCURACY OR COMPLETENESS OF ELECTRONIC COPIES OF THIS PLAN SHEET.

PB AMERICAS, Inc.
303 Second St., Suite 700N
San Francisco, CA 94107-1317

Caltrans Metric

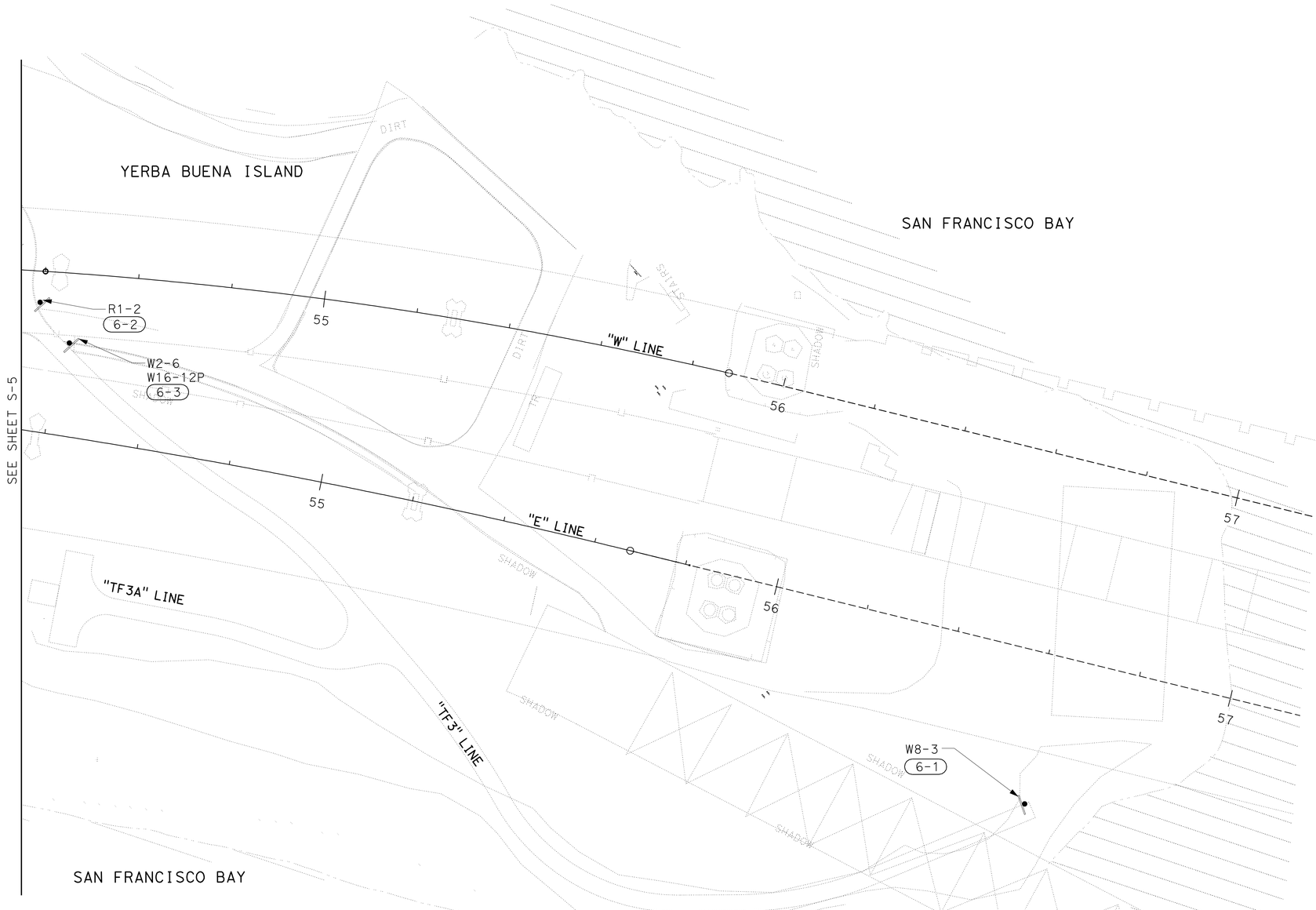

ALL DIMENSIONS ARE IN METERS UNLESS OTHERWISE SHOWN

SIGN PLAN

SCALE 1:500

S-6

FOR NOTES, ABBREVIATIONS AND/OR LEGEND SEE SHEET S-1

THIS PLAN ACCURATE FOR SIGNING ONLY.

STATE OF CALIFORNIA - DEPARTMENT OF TRANSPORTATION
Caltrans

CONSULTANT FUNCTIONAL SUPERVISOR: BOB ZANDIPOUR
CALCULATED-DESIGNED BY: M. GRODZKI
CHECKED BY: B. NADELL
REVISED BY
DATE REVISED

LAST REVISION 00-00-00
DATE PLOTTED => 25-FEB-2012
TIME PLOTTED => 09:03

Dist	COUNTY	ROUTE	KILOMETER POST TOTAL PROJECT	SHEET No.	TOTAL SHEETS
04	SF	80	12.6/13.9	198	821

Mark Grodzki 02/03/12
REGISTERED CIVIL ENGINEER DATE

2-21-12
PLANS APPROVAL DATE

REGISTERED PROFESSIONAL ENGINEER
Mark Grodzki
No. 65594
Exp. 09/30/13
CIVIL
STATE OF CALIFORNIA

THE STATE OF CALIFORNIA OR ITS OFFICERS OR AGENTS SHALL NOT BE RESPONSIBLE FOR THE ACCURACY OR COMPLETENESS OF ELECTRONIC COPIES OF THIS PLAN SHEET.

PB AMERICAS, Inc.
303 Second St., Suite 700N
San Francisco, CA 94107-1317

Caltrans Metric

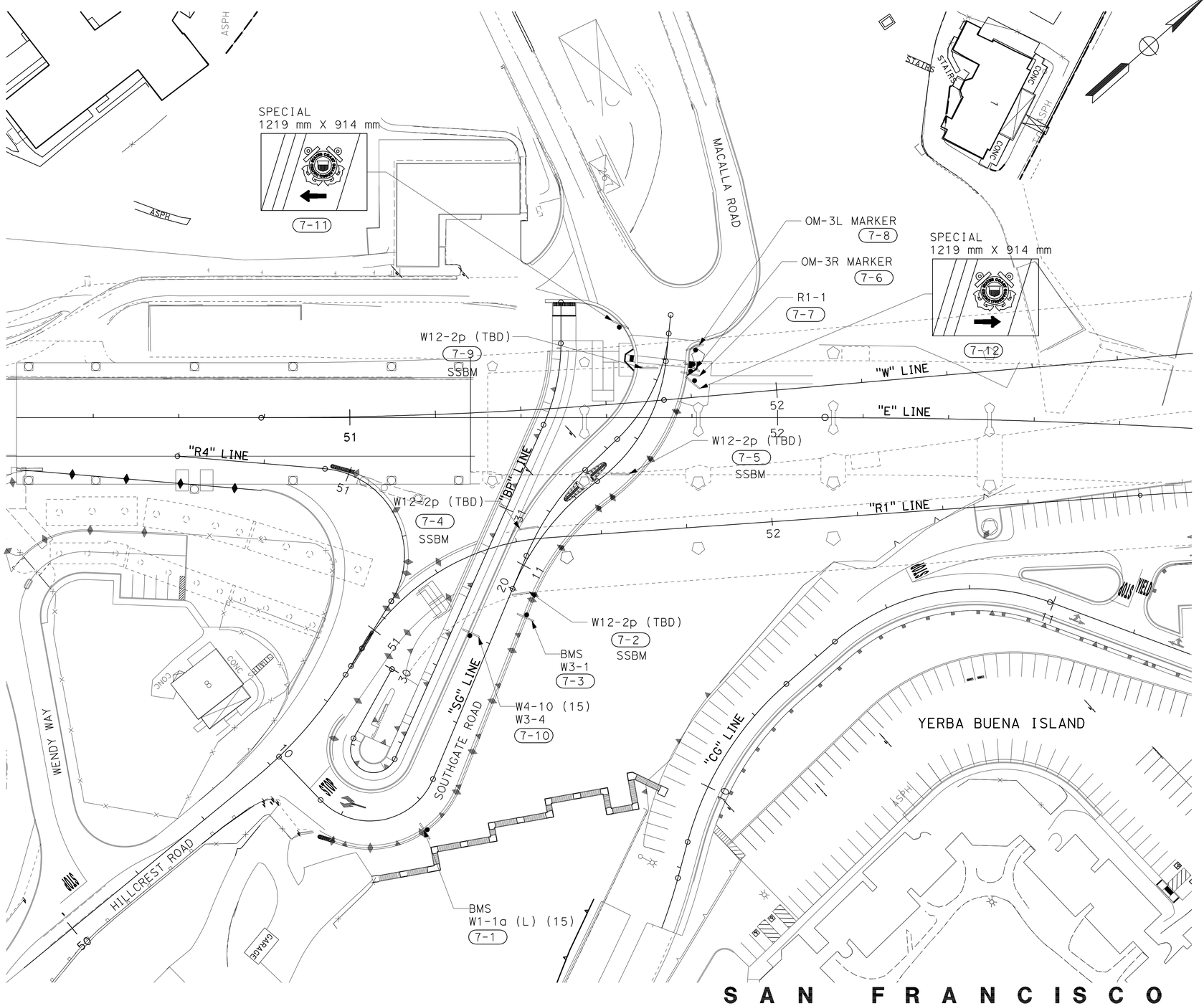

ALL DIMENSIONS ARE IN METERS UNLESS OTHERWISE SHOWN

SIGN PLAN

SCALE 1:500

THIS PLAN ACCURATE FOR SIGNING ONLY.

FOR NOTES, ABBREVIATIONS AND/OR LEGEND SEE SHEET S-1

S-7

STATE OF CALIFORNIA - DEPARTMENT OF TRANSPORTATION
Caltrans

CONSULTANT FUNCTIONAL SUPERVISOR: BOB ZANDIPOUR
CALCULATED-DESIGNED BY: M. GRODZKI
CHECKED BY: B. NADELL
REVISED BY / DATE REVISED

LAST REVISION 00-00-00 | DATE PLOTTED => 25-FEB-2012 | TIME PLOTTED => 09:03

Dist	COUNTY	ROUTE	KILOMETER POST TOTAL PROJECT	SHEET No.	TOTAL SHEETS
04	SF	80	12.6/13.9	199	821

REGISTERED CIVIL ENGINEER 10/31/11 DATE

2-21-12
PLANS APPROVAL DATE

REGISTERED PROFESSIONAL ENGINEER Mark Grodzki No. 65594 Exp. 09/30/13 CIVIL STATE OF CALIFORNIA

THE STATE OF CALIFORNIA OR ITS OFFICERS OR AGENTS SHALL NOT BE RESPONSIBLE FOR THE ACCURACY OR COMPLETENESS OF ELECTRONIC COPIES OF THIS PLAN SHEET.

PB AMERICAS, Inc.
303 Second St., Suite 700N
San Francisco, CA 94107-1317

Caltrans Metric

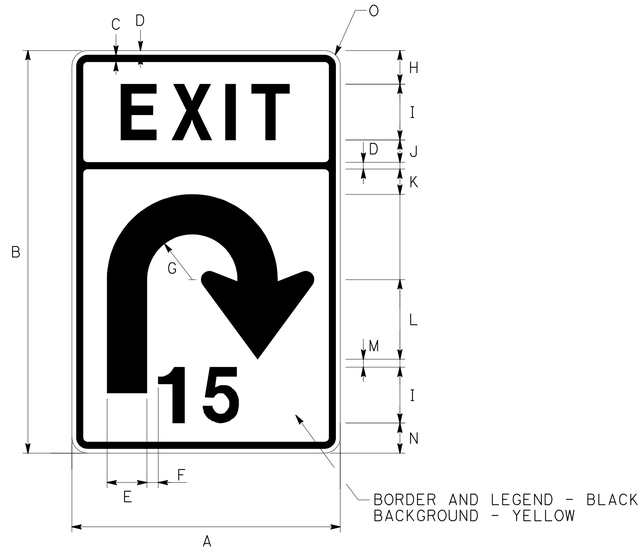

SPECIAL A (mm)															
DIM (A x B)	A	B	C	D	E	F	G	H	I	J	K	L	M	N	O
1200 x 800	1200	800	20	30	178	51	203	150	250E	100	113	381	55	143	70

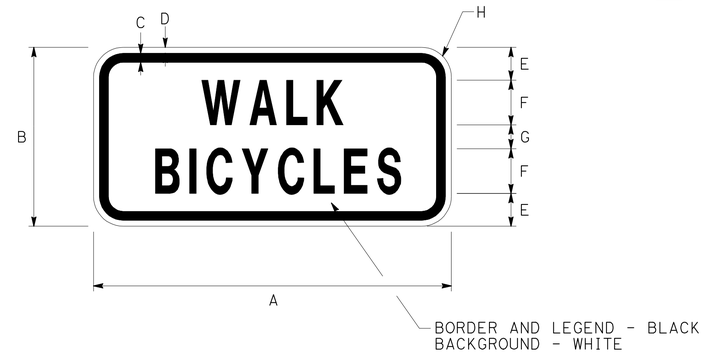

SPECIAL B (mm)								
DIM (A x B)	A	B	C	D	E	F	G	H
600 X 300	600	300	15	10	55	75C	40	50

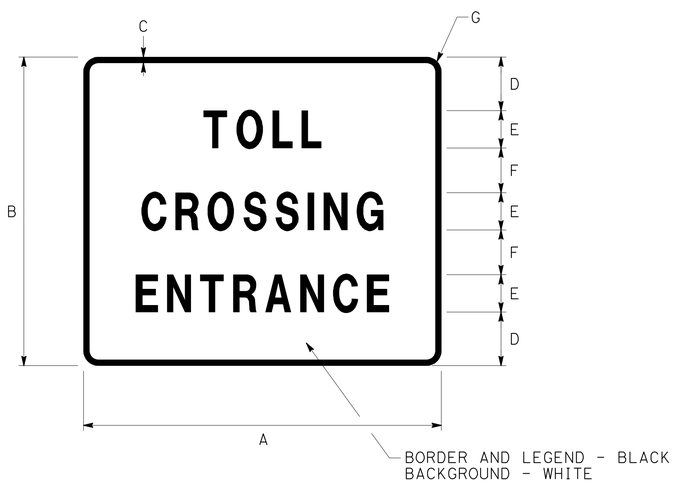

SPECIAL C (mm)							
DIM (A x B)	A	B	C	D	E	F	G
1200 x 1035	1200	1035	20	180	125D	150	50

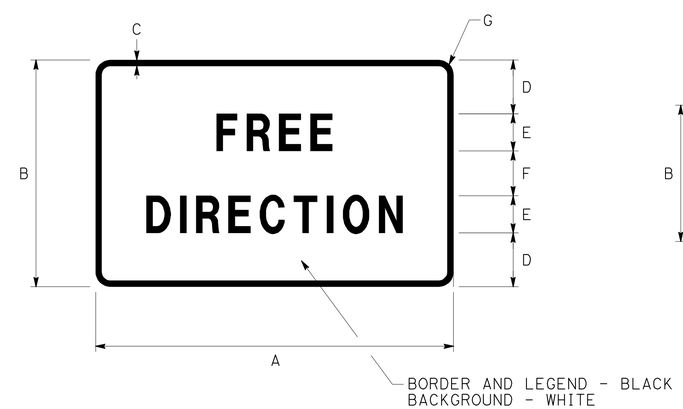

SPECIAL D (mm)							
DIM (A x B)	A	B	C	D	E	F	G
1200 x 760	1200	760	20	180	125D	150	50

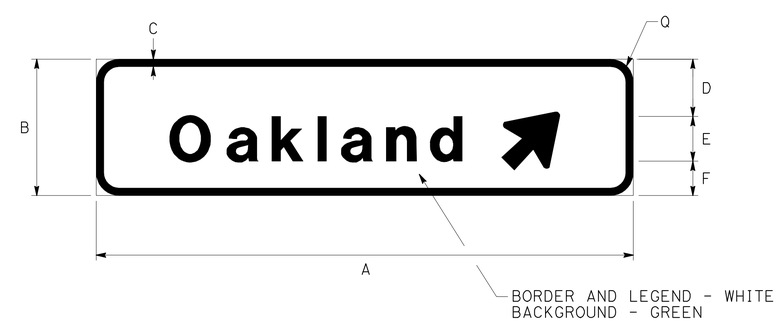

SPECIAL E (mm)							
DIM (A x B)	A	B	C	D	E	F	G
1800 x 457	1800	457	25	192	150E(M)	152	76

ALL DIMENSIONS ARE IN
MILLIMETERS UNLESS OTHERWISE SHOWN

SIGN DETAILS

NO SCALE

SD-1

STATE OF CALIFORNIA - DEPARTMENT OF TRANSPORTATION
Caltrans

CONSULTANT FUNCTIONAL SUPERVISOR: BOB ZANDIPOUR
CALCULATED-DESIGNED BY: M. GRODZKI
CHECKED BY: B. NADELL
REVISED BY
DATE REVISED

LAST REVISION 00-00-00
DATE PLOTTED => 25-FEB-2012
TIME PLOTTED => 09:03

Dist	COUNTY	ROUTE	KILOMETER POST TOTAL PROJECT	SHEET No.	TOTAL SHEETS
04	SF	80	12.6/13.9	200	821

REGISTERED CIVIL ENGINEER 10/31/11 DATE

2-21-12
PLANS APPROVAL DATE

REGISTERED PROFESSIONAL ENGINEER Mark Grodzki No. 65594 Exp. 09/30/13 CIVIL STATE OF CALIFORNIA

THE STATE OF CALIFORNIA OR ITS OFFICERS OR AGENTS SHALL NOT BE RESPONSIBLE FOR THE ACCURACY OR COMPLETENESS OF ELECTRONIC COPIES OF THIS PLAN SHEET.

PB AMERICAS, Inc.
303 Second St., Suite 700N
San Francisco, CA 94107-1317

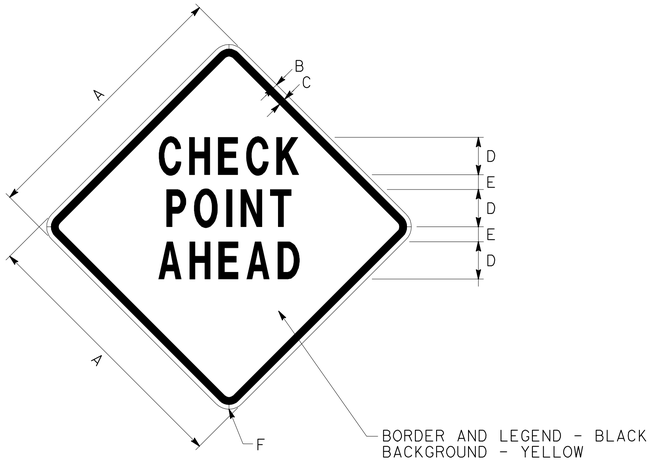

SPECIAL F (mm)						
DIM (A x B)	A	B	C	D	E	F
900 x 900	900	15	25	125C	50	60

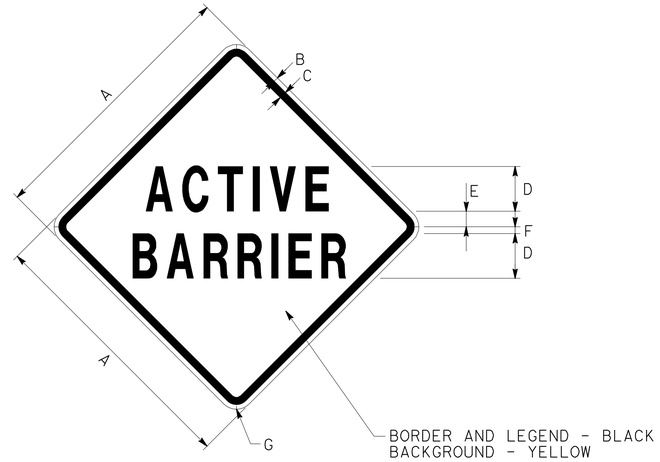

SPECIAL G (mm)								
DIM (A x B)	A	B	C	D	E	F	G
900 x 900	900	15	25	125C	52	23	60

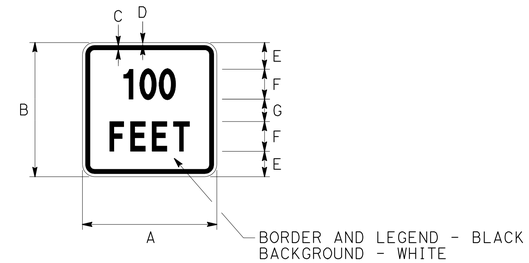

SPECIAL H (mm)								
DIM (A x B)	A	B	C	D	E	F	G	H
500 x 450	500	450	20	15	90	100C	75	40

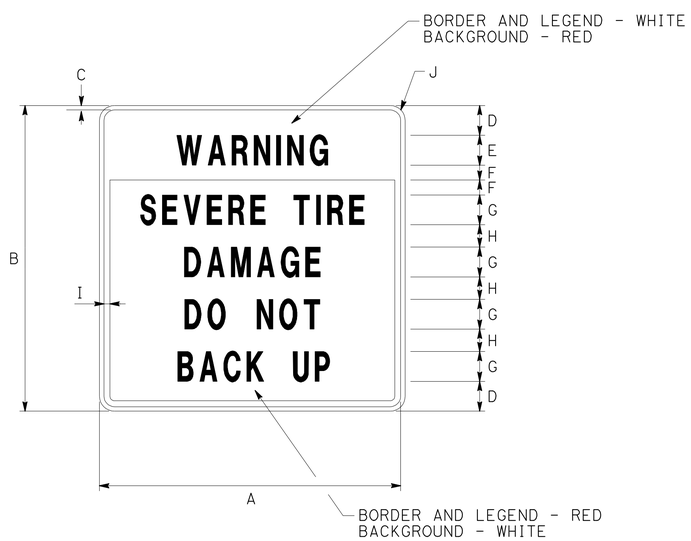

SPECIAL I (mm)										
DIM (A x B)	A	B	C	D	E	F	G	H	I	J
1025 x 1025	1025	1025	15	100	100B	50	100C	75	20	50

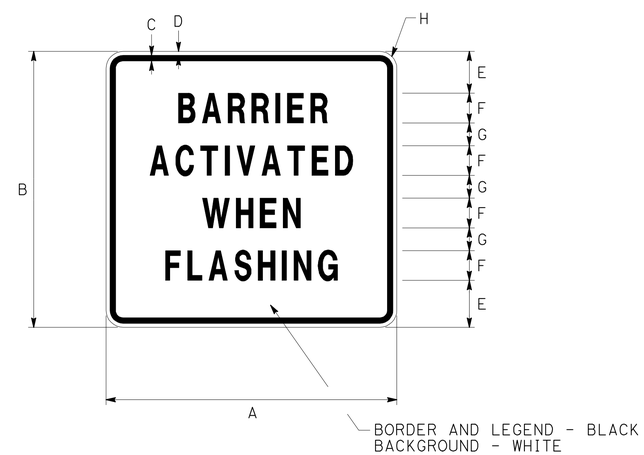

SPECIAL J (mm)								
DIM (A x B)	A	B	C	D	E	F	G	H
975 x 908	975	908	32	19	140	100D	76	50

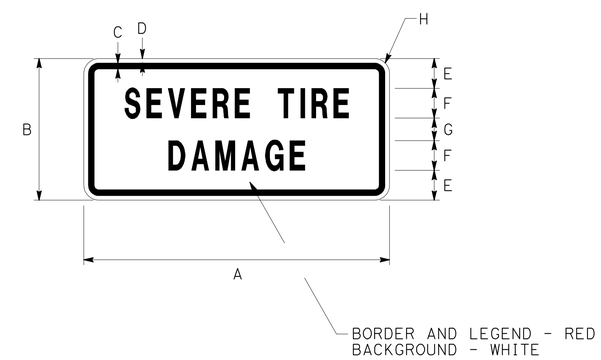

SPECIAL K (mm)								
DIM (A x B)	A	B	C	D	E	F	G	H
900 x 475	900	475	20	15	100	100C	75	50

ALL DIMENSIONS ARE IN
MILLIMETERS UNLESS OTHERWISE SHOWN

SIGN DETAILS

NO SCALE

SD-2

STATE OF CALIFORNIA - DEPARTMENT OF TRANSPORTATION
Caltrans

CONSULTANT FUNCTIONAL SUPERVISOR: BOB ZANDIPOUR
CALCULATED-DESIGNED BY: M. GRODZKI
CHECKED BY: B. NADELL
REVISED BY
DATE REVISED

LAST REVISION 00-00-00
DATE PLOTTED => 25-FEB-2012
TIME PLOTTED => 09:04