Dist	COUNTY	ROUTE	KILOMETER POST TOTAL PROJECT	SHEET No.	TOTAL SHEETS
04	SF	80	12.6/13.9	24	821

Brian M Wood 2-9-12
REGISTERED CIVIL ENGINEER DATE

2-21-12
PLANS APPROVAL DATE

REGISTERED PROFESSIONAL ENGINEER Brian M. Wood No. 76969 Exp. 12-31-12 CIVIL STATE OF CALIFORNIA

THE STATE OF CALIFORNIA OR ITS OFFICERS OR AGENTS SHALL NOT BE RESPONSIBLE FOR THE ACCURACY OR COMPLETENESS OF ELECTRONIC COPIES OF THIS PLAN SHEET.

Caltrans Metric

FOR COMPLETE RIGHT OF WAY AND ACCURATE ACCESS DATA, SEE RIGHT OF WAY RECORD MAPS AT DISTRICT OFFICE.

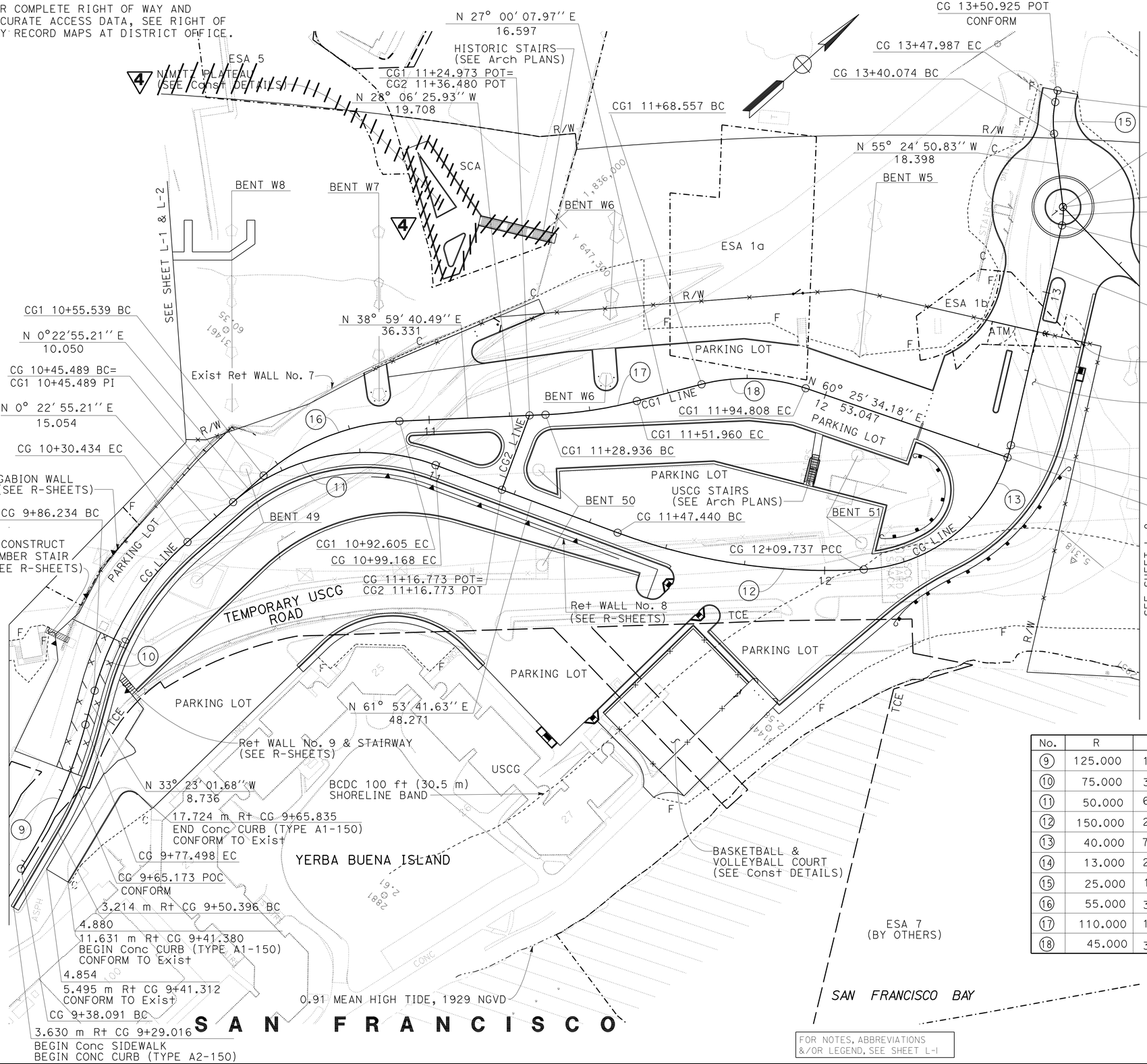

FOR NOTES, ABBREVIATIONS &/OR LEGEND, SEE SHEET L-1

REVISED PER ADDENDUM No. 4 DATED JULY 16, 2012

CURVE DATA

No.	R	Δ	T	L	N-COORDINATE	E-COORDINATE
9	125.000	18° 03' 46.61''	19.868	39.407	647059.837	1835911.831
10	75.000	33° 45' 56.90''	22.762	44.199	647177.180	1836074.025
11	50.000	61° 30' 46.42''	29.755	53.680	647192.401	1836049.126
12	150.000	23° 47' 44.21''	31.604	62.297	647391.558	1835997.487
13	40.000	73° 29' 37.97''	29.866	51.308	647323.685	1836084.050
14	13.000	20° 01' 10.28''	2.295	4.542	647385.046	1836073.574
15	25.000	18° 08' 05.38''	3.990	7.913	647426.774	1836079.997
16	55.000	38° 36' 45.27''	19.268	37.065	647202.418	1836054.194
17	110.000	11° 59' 32.52''	11.554	23.024	647334.480	1835948.816
18	45.000	33° 25' 26.21''	13.511	26.251	647278.894	1836094.455

ALL DIMENSIONS ARE IN METERS UNLESS OTHERWISE SHOWN

LAYOUT
SCALE 1:500

L-7

BRIAN WOOD	BW	11-1-11	
AMANDO VITO	REVISED BY	DATE REVISED	
CALCULATED-DESIGNED BY			
CHECKED BY			
FUNCTIONAL SUPERVISOR			
BOB ZANDIPOUR			

STATE OF CALIFORNIA - DEPARTMENT OF TRANSPORTATION
Caltrans DESIGN

LAST REVISION 11-04-11 | DATE PLOTTED => 13-JUL-2012 | TIME PLOTTED => 15:47

Dist	COUNTY	ROUTE	KILOMETER POST TOTAL PROJECT	SHEET No.	TOTAL SHEETS
04	SF	80	12.6/13.9	39	821

Brian M Wood 11-1-11
REGISTERED CIVIL ENGINEER DATE

2-21-12
PLANS APPROVAL DATE

REGISTERED PROFESSIONAL ENGINEER Brian M. Wood No. 76969 Exp. 12-31-12 CIVIL STATE OF CALIFORNIA

THE STATE OF CALIFORNIA OR ITS OFFICERS OR AGENTS SHALL NOT BE RESPONSIBLE FOR THE ACCURACY OR COMPLETENESS OF ELECTRONIC COPIES OF THIS PLAN SHEET.

Caltrans Metric

FOR COMPLETE RIGHT OF WAY AND ACCURATE ACCESS DATA, SEE RIGHT OF WAY RECORD MAPS AT DISTRICT OFFICE.

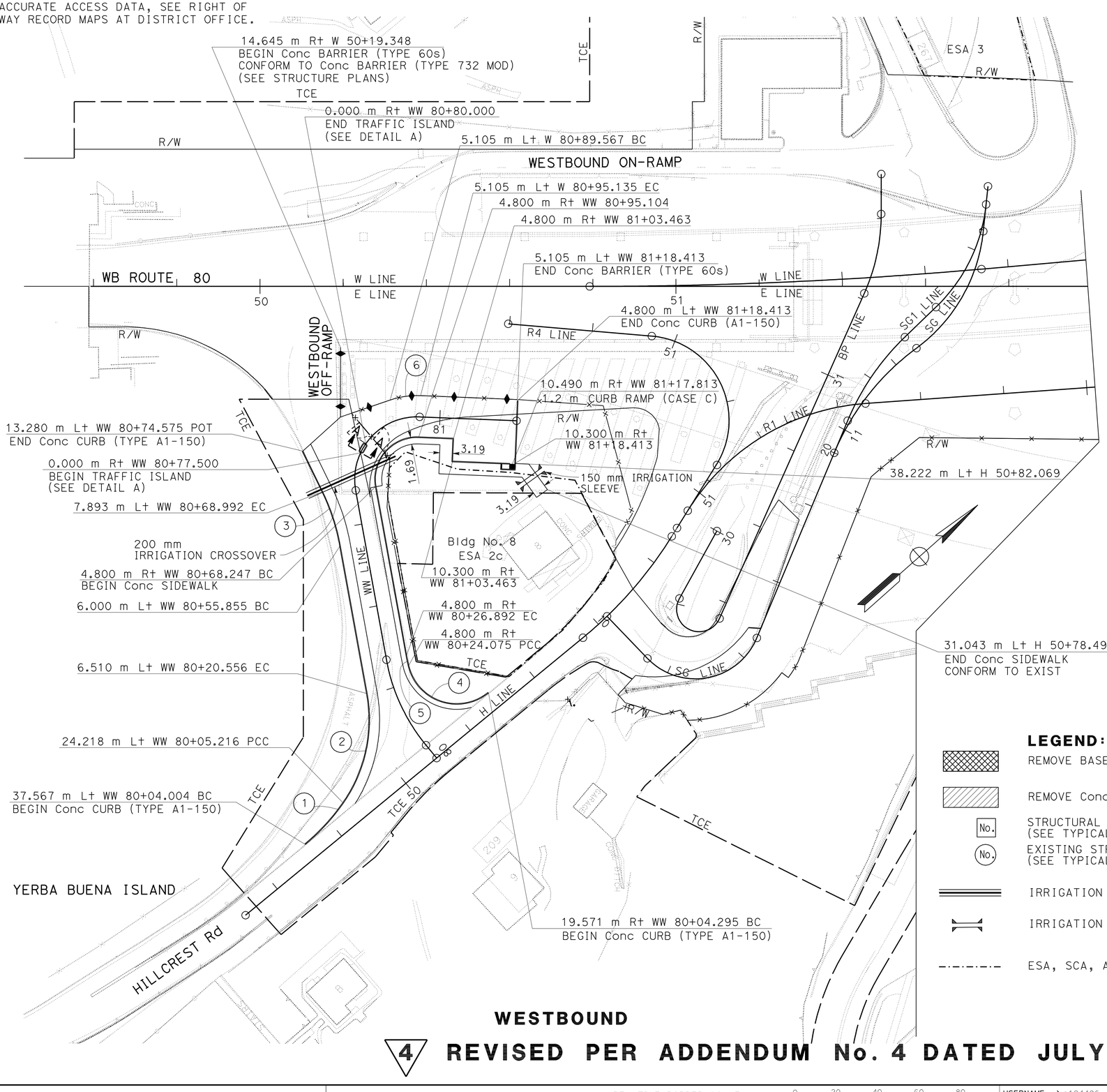

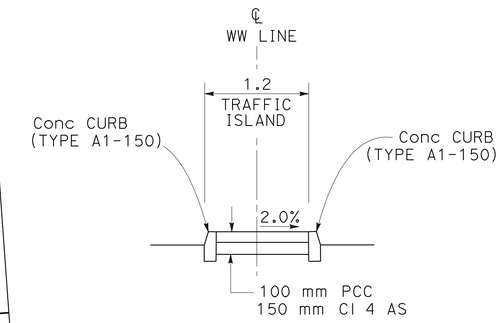

SECTION A-A

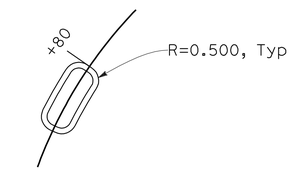

DETAIL A
SCALE 1:100

CURVE DATA

No.	R	Δ	T	L
1	50.00	15°31′10.40″	6.81	13.54
2	35.00	45°12′29.62″	14.57	27.62
3	50.00	15°41′55.82″	6.89	13.70
4	12.00	115°37′05.23″	19.06	24.22
5	40.20	3°35′15.18″	1.26	2.52
6	20.00	21°09′33.29″	3.76	7.42

LEGEND:

- REMOVE BASE AND SURFACING
- REMOVE Conc
- No. — STRUCTURAL SECTION NUMBER (SEE TYPICAL SECTIONS)
- No. — EXISTING STRUCTURAL SECTION NUMBER (SEE TYPICAL SECTIONS)
- IRRIGATION CROSSOVER
- IRRIGATION SLEVE
- ESA, SCA, ATM BOUNDARY

ABBREVIATION:

ECS	EMBANKMENT CONFINEMENT SYSTEM
CSG (M)	CANTILEVER SWING GATE (METAL)
~~CSG (CL)~~	~~CANTILEVER SWING GATE (TYPE CL 2.4)~~
BFSG	BI-FOLD SPEED GATE

4

NOTE:

HMA STRUCTURAL SECTIONS SHALL CONFORM 6 mm HIGHER THAN EXISTING

ALL DIMENSIONS ARE IN METERS UNLESS OTHERWISE SHOWN

CONSTRUCTION DETAILS

SCALE 1:500

WESTBOUND

4 **REVISED PER ADDENDUM No. 4 DATED JULY 16, 2012**

C-1

REVISED BY	DATE REVISED
BW	11-1-11

BRIAN WOOD — AMANDO VITO — CALCULATED-DESIGNED BY — CHECKED BY

FUNCTIONAL SUPERVISOR: BOB ZANDIPOUR

STATE OF CALIFORNIA - DEPARTMENT OF TRANSPORTATION — Caltrans — DESIGN

LAST REVISION 11-07-11 | DATE PLOTTED => 13-JUL-2012 | TIME PLOTTED => 15:47

Dist	COUNTY	ROUTE	KILOMETER POST TOTAL PROJECT	SHEET No.	TOTAL SHEETS
04	SF	80	12.6/13.9	41	821

REGISTERED CIVIL ENGINEER 11-1-11 DATE

2-21-12
PLANS APPROVAL DATE

REGISTERED PROFESSIONAL ENGINEER Brian M. Wood No. 76969 Exp. 12-31-12 CIVIL STATE OF CALIFORNIA

THE STATE OF CALIFORNIA OR ITS OFFICERS OR AGENTS SHALL NOT BE RESPONSIBLE FOR THE ACCURACY OR COMPLETENESS OF ELECTRONIC COPIES OF THIS PLAN SHEET.

Caltrans Metric

FOR COMPLETE RIGHT OF WAY AND ACCURATE ACCESS DATA, SEE RIGHT OF WAY RECORD MAPS AT DISTRICT OFFICE.

NOTE:

1. PEDESTRIAN PATH FINISHED GRADE IS TO CONFORM TO THE TOP GRADE OF RETAINING WALL No. 52

CURVE DATA

No.	R	Δ	T	L	N-COORDINATE	E-COORDINATE
1	16.000	113°26′15.10″	24.375	31.678	647094.123	1835946.515
2	60.000	30°56′01.67″	16.602	32.394	647170.595	1835993.971
3	40.000	47°41′38.27″	17.681	33.297	647179.562	1835894.370
4	60.000	23°23′25.17″	14.420	24.494	647178.141	1835990.325
5	40.000	40°09′01.77″	14.618	28.030	647184.352	1835889.977
6	5.400	185°06′17.55″	121.136	17.446	647095.247	1835946.560
7	47.000	23°55′44.78″	9.960	19.629	647155.845	1835873.257
8	9.800	132°09′13.98″	22.091	22.604	-	-
9	67.178	22°06′50.54″	13.127	25.928	-	-

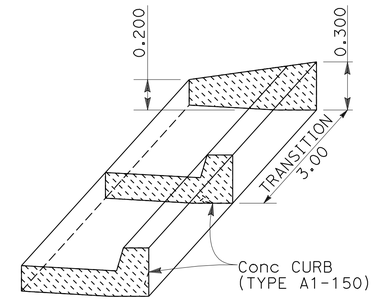

DETAIL B
CONCRETE CURB TRANSITION

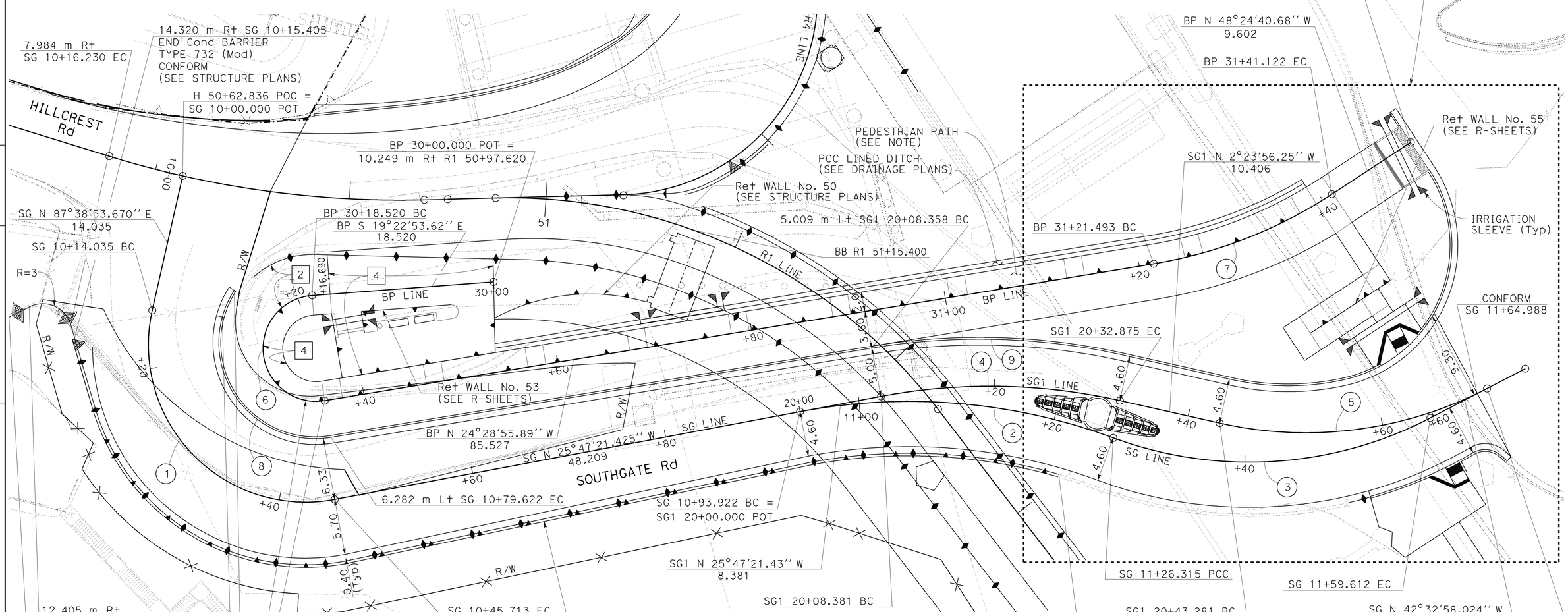

4 REVISED PER ADDENDUM No. 4 DATED JULY 16, 2012

CONSTRUCTION DETAILS
SOUTHGATE ROAD
SCALE: 1:200

FOR NOTES, ABBREVIATIONS &/OR LEGEND, SEE SHEET C-1

ALL DIMENSIONS ARE IN METERS UNLESS OTHERWISE SHOWN

C-3

REVISED BY	DATE REVISED
BW	11-1-11

CALCULATED-DESIGNED BY: BRIAN WOOD
CHECKED BY: AMANDO VITO
FUNCTIONAL SUPERVISOR: BOB ZANDIPOUR

STATE OF CALIFORNIA - DEPARTMENT OF TRANSPORTATION
Caltrans DESIGN

LAST REVISION 06-15-12 DATE PLOTTED => 13-JUL-2012 TIME PLOTTED => 15:47

4 REVISED PER ADDENDUM No. 4 DATED JULY 16, 2012

Dist	COUNTY	ROUTE	KILOMETER POST TOTAL PROJECT	SHEET No.	TOTAL SHEETS
04	SF	80	12.6/13.9	45	821

Brian M Wood 11-1-11
REGISTERED CIVIL ENGINEER DATE

2-21-12
PLANS APPROVAL DATE

REGISTERED PROFESSIONAL ENGINEER Brian M. Wood No. 76969 Exp. 12-31-12 CIVIL STATE OF CALIFORNIA

THE STATE OF CALIFORNIA OR ITS OFFICERS OR AGENTS SHALL NOT BE RESPONSIBLE FOR THE ACCURACY OR COMPLETENESS OF ELECTRONIC COPIES OF THIS PLAN SHEET.

Caltrans Metric

4

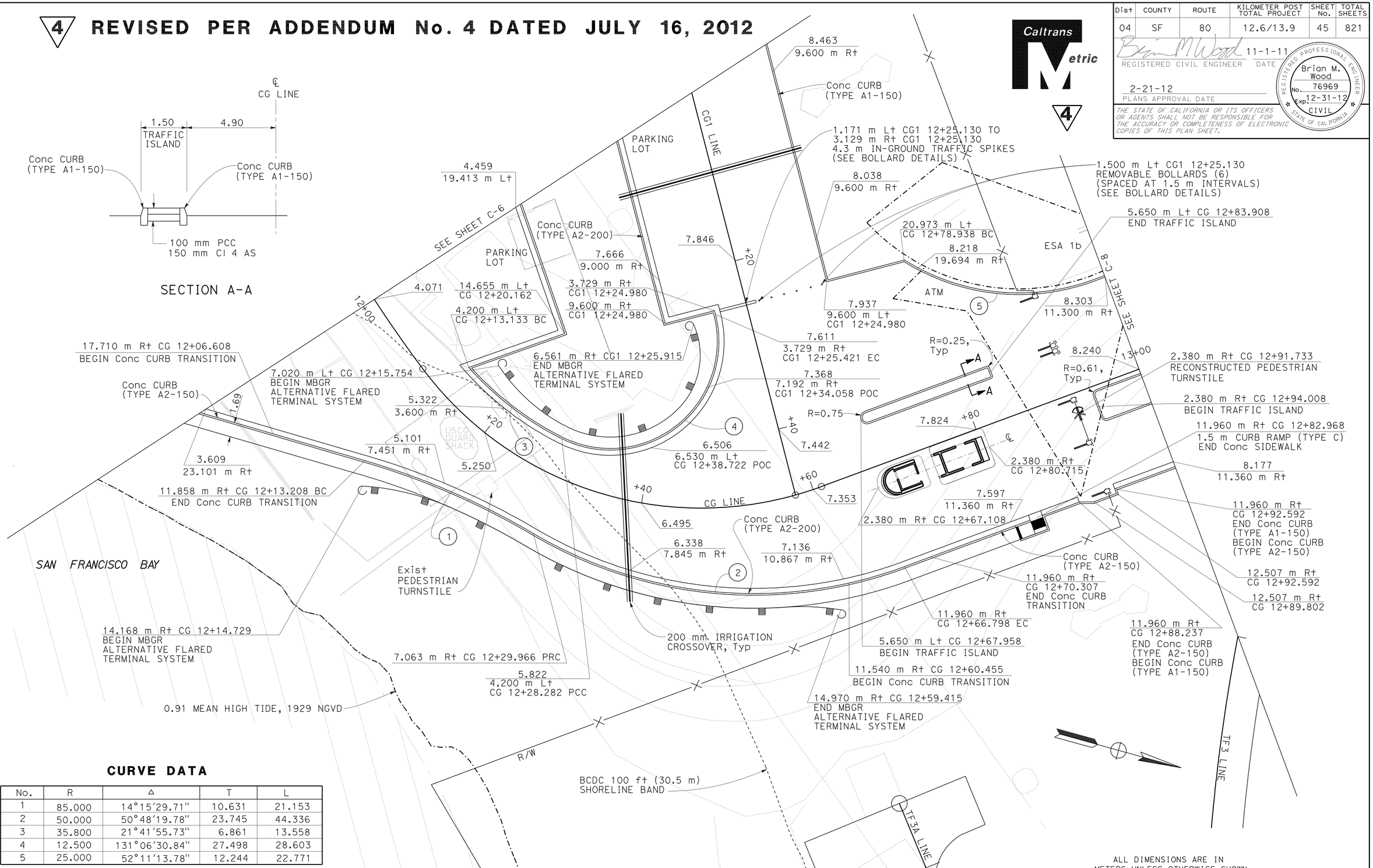

CURVE DATA

No.	R	Δ	T	L
1	85.000	14°15'29.71"	10.631	21.153
2	50.000	50°48'19.78"	23.745	44.336
3	35.800	21°41'55.73"	6.861	13.558
4	12.500	131°06'30.84"	27.498	28.603
5	25.000	52°11'13.78"	12.244	22.771

FOR NOTES, ABBREVIATIONS &/OR LEGEND, SEE SHEET C-1

ALL DIMENSIONS ARE IN METERS UNLESS OTHERWISE SHOWN

CONSTRUCTION DETAILS
PAVEMENT ELEVATION

SCALE 1:200

C-7

BW	11-1-11	BRIAN WOOD	AMANDO VITO
REVISED BY	DATE REVISED	CALCULATED-DESIGNED BY	CHECKED BY
FUNCTIONAL SUPERVISOR	BOB ZANDIPOUR		

STATE OF CALIFORNIA - DEPARTMENT OF TRANSPORTATION
Caltrans DESIGN

LAST REVISION 06-18-12
DATE PLOTTED => 13-JUL-2012
TIME PLOTTED => 15:48

Dist	COUNTY	ROUTE	KILOMETER POST TOTAL PROJECT	SHEET No.	TOTAL SHEETS
04	SF	80	12.6/13.9	56	821

Brian M Wood 11-1-11
REGISTERED CIVIL ENGINEER DATE

2-21-12
PLANS APPROVAL DATE

REGISTERED PROFESSIONAL ENGINEER Brian M. Wood No. 76969 Exp. 12-31-12 CIVIL STATE OF CALIFORNIA

THE STATE OF CALIFORNIA OR ITS OFFICERS OR AGENTS SHALL NOT BE RESPONSIBLE FOR THE ACCURACY OR COMPLETENESS OF ELECTRONIC COPIES OF THIS PLAN SHEET.

Caltrans Metric

4

FOR COMPLETE RIGHT OF WAY AND ACCURATE ACCESS DATA, SEE RIGHT OF WAY RECORD MAPS AT DISTRICT OFFICE.

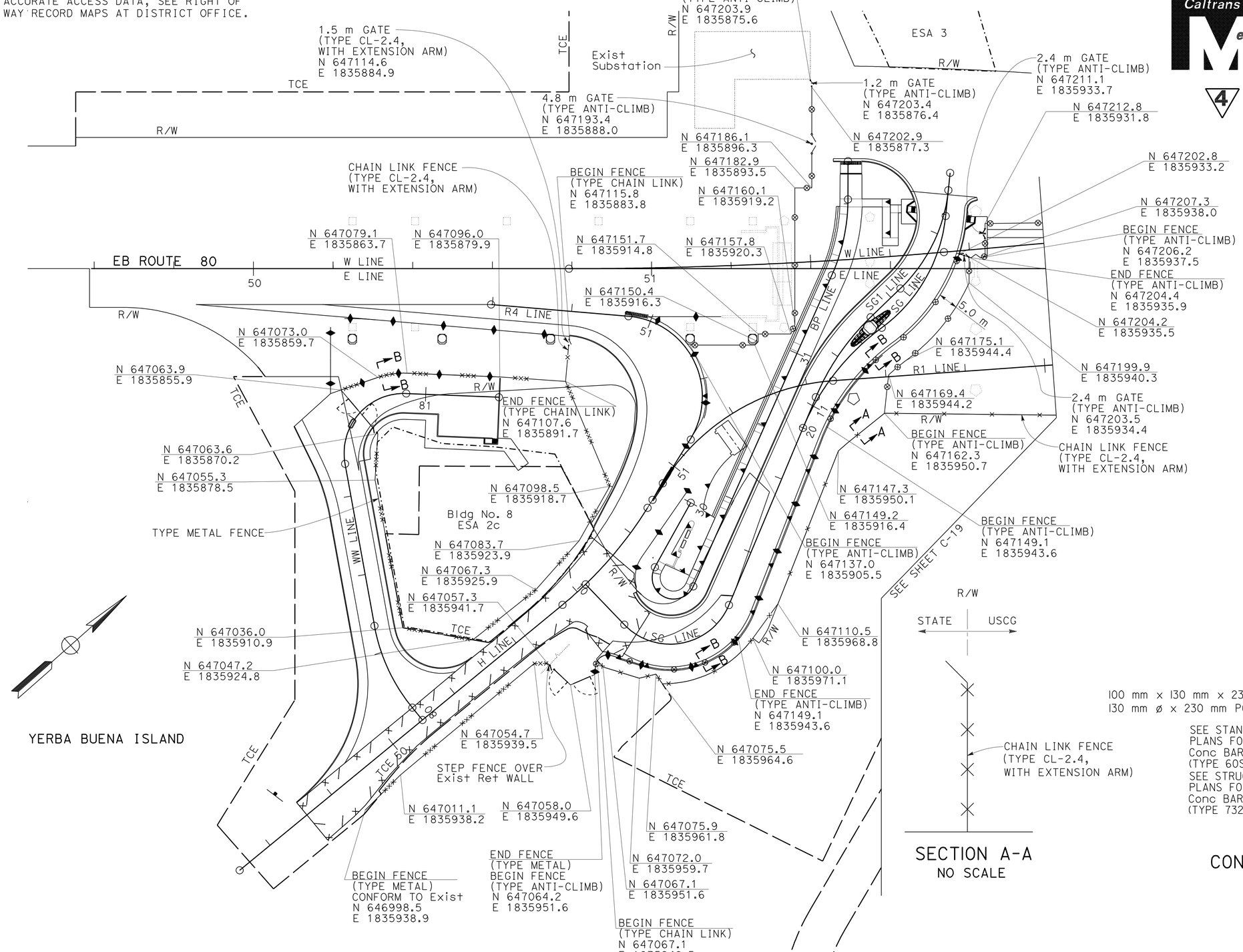

LEGEND:

(FOR SHEETS C-18 TO C-23 ONLY)

- —×— CHAIN LINK FENCE
- —×××— TYPE METAL FENCE
- —⊗— ANTI-CLIMB FENCE

SECTION A-A
NO SCALE

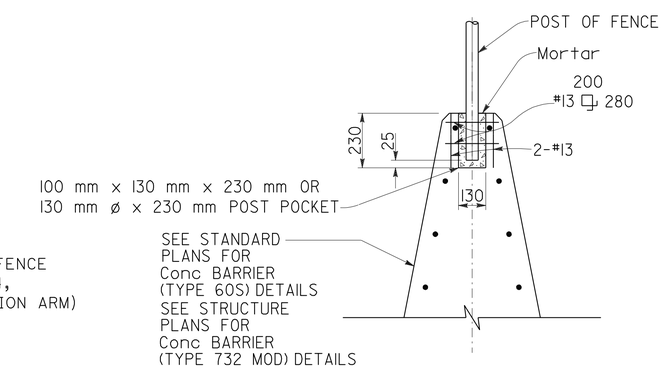

SECTION B-B
CONC BARRIER TYPE 60S & 732 (MOD) WITH TYPE METAL FENCE
NO SCALE

ALL DIMENSIONS ARE IN METERS UNLESS OTHERWISE SHOWN

CONSTRUCTION DETAILS
FENCE LAYOUT
SCALE 1:500

C-18

4 **REVISED PER ADDENDUM No. 4 DATED JULY 16, 2012**

FOR NOTES, ABBREVIATIONS &/OR LEGEND, SEE SHEET C-1

FUNCTIONAL SUPERVISOR	CALCULATED-DESIGNED BY	REVISED BY	DATE REVISED
BOB ZANDIPOUR	BRIAN WOOD	BW	11-1-11
	AMANDO VITO		

STATE OF CALIFORNIA - DEPARTMENT OF TRANSPORTATION
Caltrans DESIGN

LAST REVISION 07-03-12 | DATE PLOTTED => 13-JUL-2012 | TIME PLOTTED => 15:48

Dist	COUNTY	ROUTE	KILOMETER POST TOTAL PROJECT	SHEET No.	TOTAL SHEETS
04	SF	80	12.6/13.9	57	821

Brian M Wood 11-1-11
REGISTERED CIVIL ENGINEER DATE

2-21-12
PLANS APPROVAL DATE

REGISTERED PROFESSIONAL ENGINEER Brian M. Wood No. 76969 Exp. 12-31-12 CIVIL STATE OF CALIFORNIA

THE STATE OF CALIFORNIA OR ITS OFFICERS OR AGENTS SHALL NOT BE RESPONSIBLE FOR THE ACCURACY OR COMPLETENESS OF ELECTRONIC COPIES OF THIS PLAN SHEET.

Caltrans Metric

4

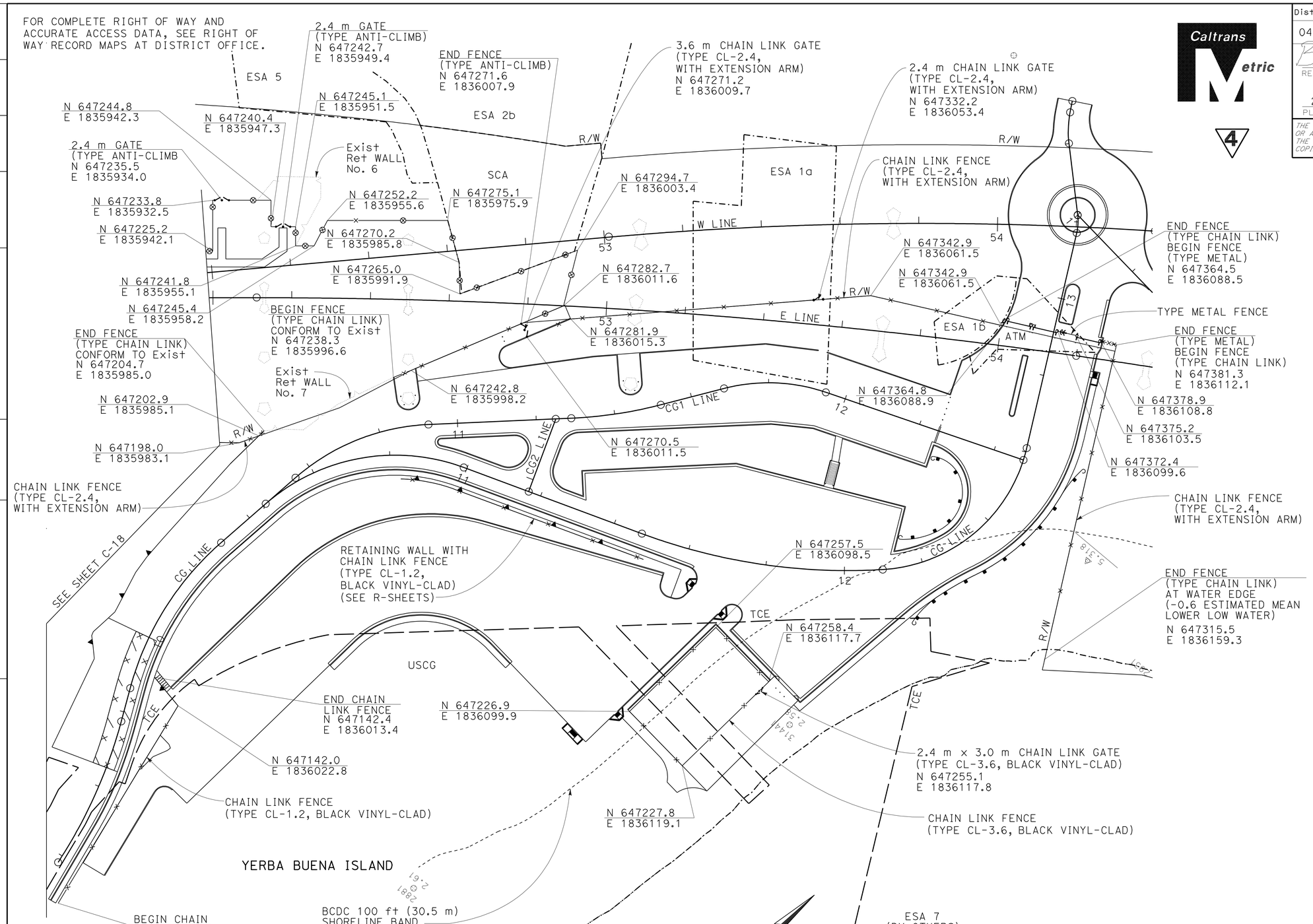

4 **REVISED PER ADDENDUM No. 4 DATED JULY 16, 2012**

FOR NOTES, ABBREVIATIONS &/OR LEGEND, SEE SHEET C-1

ALL DIMENSIONS ARE IN METERS UNLESS OTHERWISE SHOWN

CONSTRUCTION DETAILS
FENCE LAYOUT
SCALE 1:500

C-19

STATE OF CALIFORNIA - DEPARTMENT OF TRANSPORTATION
Caltrans DESIGN

FUNCTIONAL SUPERVISOR: BOB ZANDIPOUR
CALCULATED-DESIGNED BY: BRIAN WOOD
CHECKED BY: AMANDO VITO
REVISED BY: BW
DATE REVISED: 11-1-11

LAST REVISION 07-03-12
DATE PLOTTED => 13-JUL-2012
TIME PLOTTED => 15:48

Dist	COUNTY	ROUTE	KILOMETER POST TOTAL PROJECT	SHEET No.	TOTAL SHEETS
04	SF	80	12.6/13.9	58	821

Brian M Wood 11-1-11
REGISTERED CIVIL ENGINEER DATE

2-21-12
PLANS APPROVAL DATE

REGISTERED PROFESSIONAL ENGINEER Brian M. Wood No. 76969 Exp. 12-31-12 CIVIL STATE OF CALIFORNIA

THE STATE OF CALIFORNIA OR ITS OFFICERS OR AGENTS SHALL NOT BE RESPONSIBLE FOR THE ACCURACY OR COMPLETENESS OF ELECTRONIC COPIES OF THIS PLAN SHEET.

Caltrans Metric

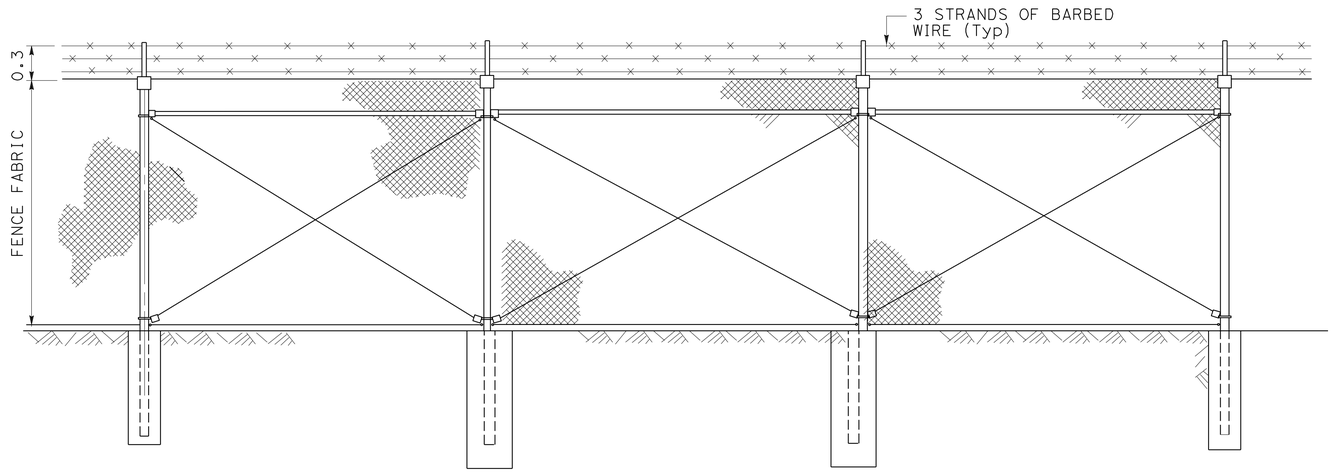

ELEVATION

4 CL FENCE (TYPE CL-2.4, ~~BLACK VINYL CLAD)~~ w/ EXTENSION ARMS) (SEE NOTE)

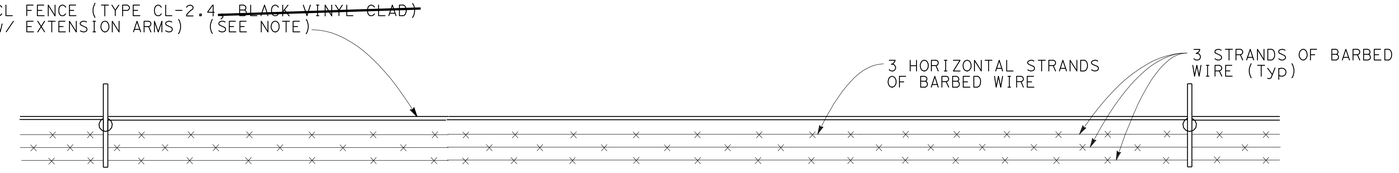

PLAN

CHAIN-LINK FENCE (TYPE- 2.4/ ~~BLACK VINYL CLAD)~~ 4
WITH BARBED WIRE EXTENSION ARMS)

NOTE:

1. FOR DIMENSIONS AND DETAILS NOT SHOWN SEE Std PLAN A85.

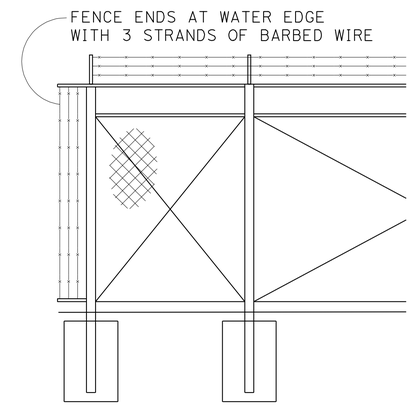

WATER EDGE DETAIL

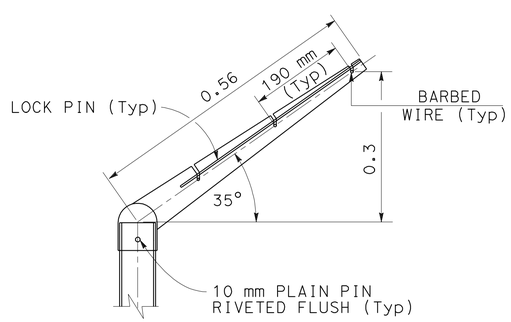

CORNER POST

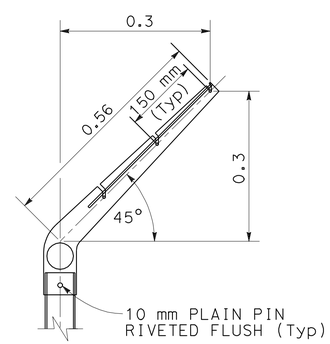

LINE POST

4 REVISED PER ADDENDUM No. 4 DATED JULY 16, 2012

EXTENSION ARM DETAILS

ALL DIMENSIONS ARE IN METERS UNLESS OTHERWISE SHOWN

CONSTRUCTION DETAILS
FENCE DETAILS

NO SCALE

C-20

BRIAN WOOD	BW	REVISED BY	
AMANDO VITO	11-1-11	DATE REVISED	
CALCULATED-DESIGNED BY			
CHECKED BY			
FUNCTIONAL SUPERVISOR			
BOB ZANDIPOUR			

STATE OF CALIFORNIA - DEPARTMENT OF TRANSPORTATION
Caltrans **DESIGN**

LAST REVISION 11-02-11 DATE PLOTTED => 13-JUL-2012 TIME PLOTTED => 15:48

Dist	COUNTY	ROUTE	KILOMETER POST TOTAL PROJECT	SHEET No.	TOTAL SHEETS
04	SF	80	12.6/13.9	59	821

Brian M Wood 11-1-11
REGISTERED CIVIL ENGINEER DATE

2-21-12
PLANS APPROVAL DATE

REGISTERED PROFESSIONAL ENGINEER Brian M. Wood No. 76969 Exp. 12-31-12 CIVIL STATE OF CALIFORNIA

THE STATE OF CALIFORNIA OR ITS OFFICERS OR AGENTS SHALL NOT BE RESPONSIBLE FOR THE ACCURACY OR COMPLETENESS OF ELECTRONIC COPIES OF THIS PLAN SHEET.

4 Caltrans Metric

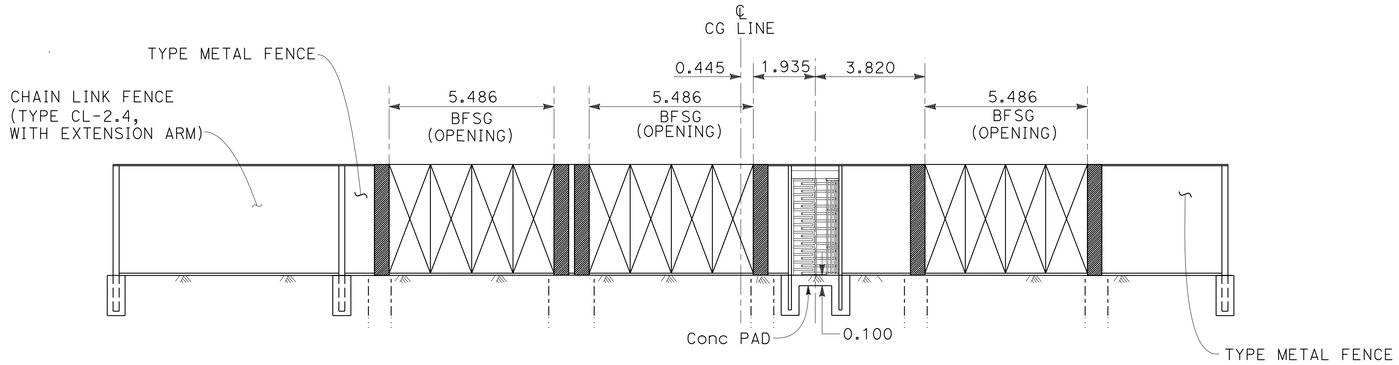

ELEVATION
NO SCALE

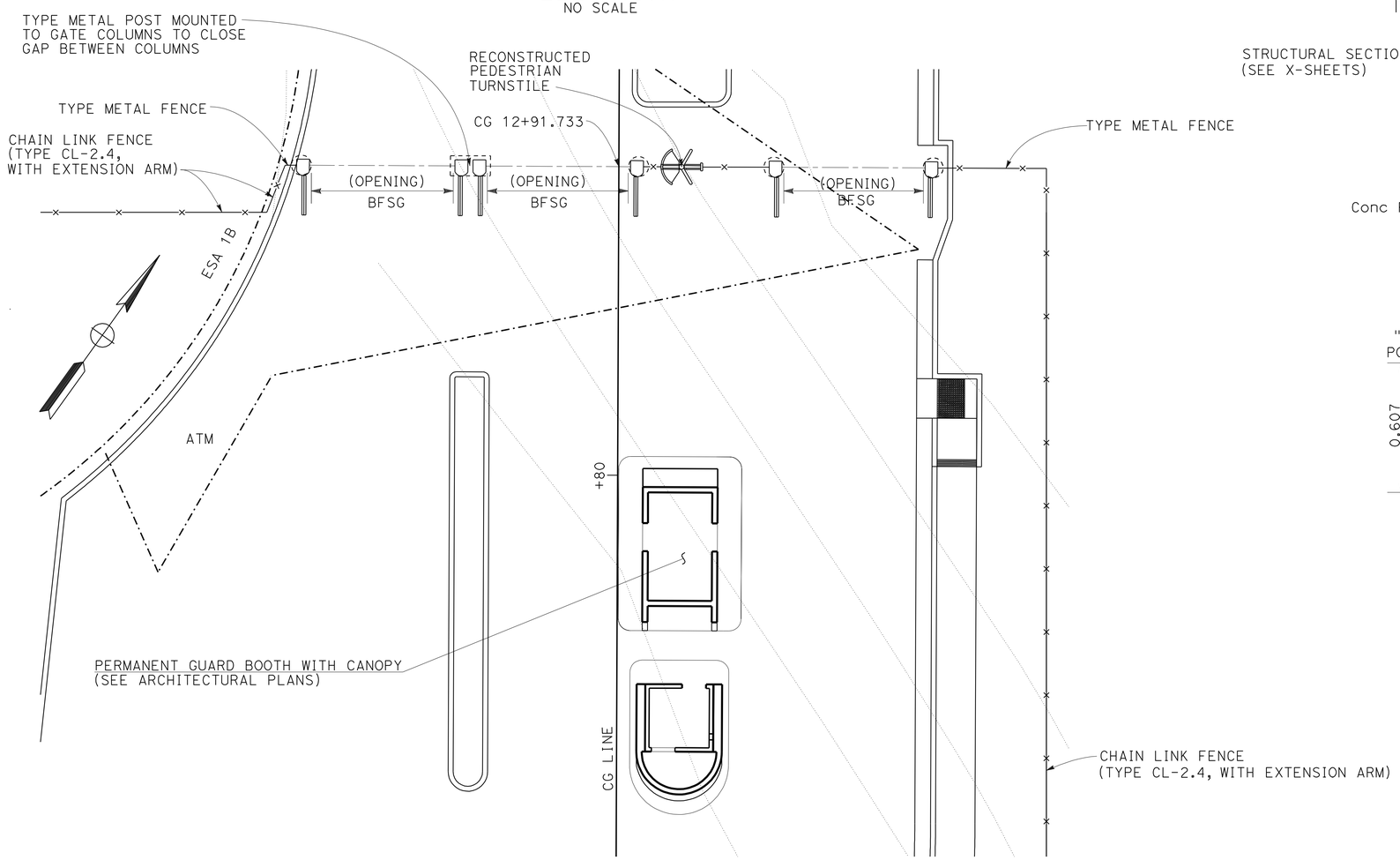

PARTIAL PLAN
GUARD BOOTH & GATE LOCATIONS
SCALE 1:100

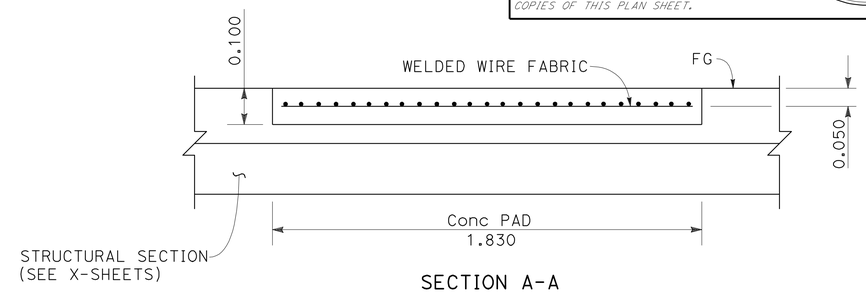

SECTION A-A
NO SCALE

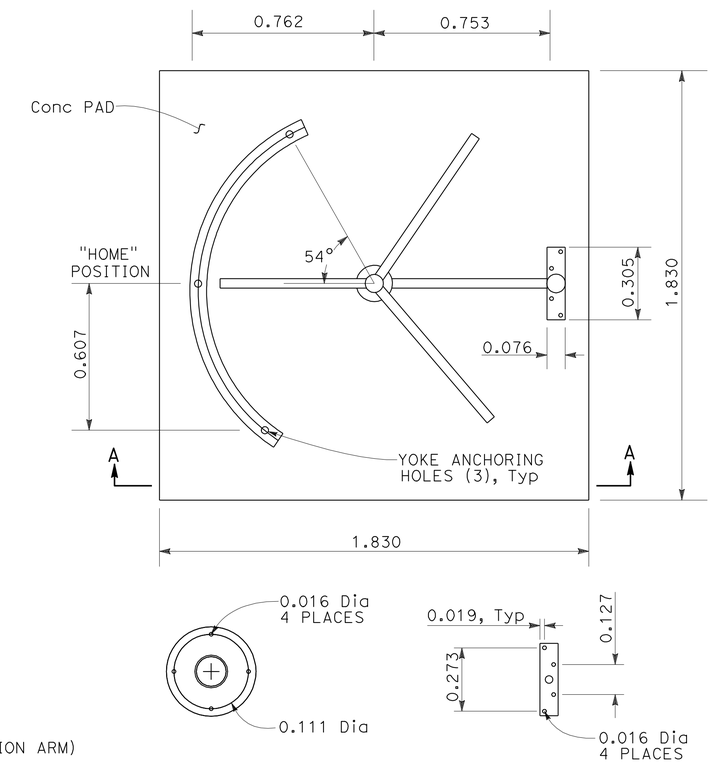

PEDESTRIAN TURNSTILE DETAILS
NO SCALE

ALL DIMENSIONS ARE IN METERS UNLESS OTHERWISE SHOWN

CONSTRUCTION DETAILS
PEDESTRIAN TURNSTILE & CANTILEVER SWING GATE
SCALE AS SHOWN

4 **REVISED PER ADDENDUM No. 4 DATED JULY 16, 2012**

C-21

REVISED BY	DATE REVISED
BW	11-1-11

BRIAN WOOD — AMANDO VITO — CALCULATED-DESIGNED BY — CHECKED BY
FUNCTIONAL SUPERVISOR — BOB ZANDIPOUR
STATE OF CALIFORNIA - DEPARTMENT OF TRANSPORTATION — Caltrans — DESIGN

LAST REVISION 06-18-12 | DATE PLOTTED => 13-JUL-2012 | TIME PLOTTED => 15:48

Dist	COUNTY	ROUTE	KILOMETER POST TOTAL PROJECT	SHEET No.	TOTAL SHEETS
04	SF	80	12.6/13.9	61	821

Caltrans Metric

REGISTERED CIVIL ENGINEER 11-1-11 DATE

2-21-12
PLANS APPROVAL DATE

REGISTERED PROFESSIONAL ENGINEER Brian M. Wood No. 76969 Exp. 12-31-12 CIVIL STATE OF CALIFORNIA

THE STATE OF CALIFORNIA OR ITS OFFICERS OR AGENTS SHALL NOT BE RESPONSIBLE FOR THE ACCURACY OR COMPLETENESS OF ELECTRONIC COPIES OF THIS PLAN SHEET.

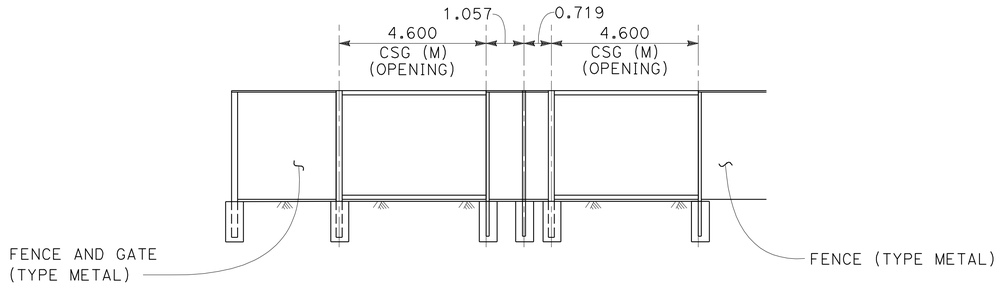

ELEVATION
NO SCALE

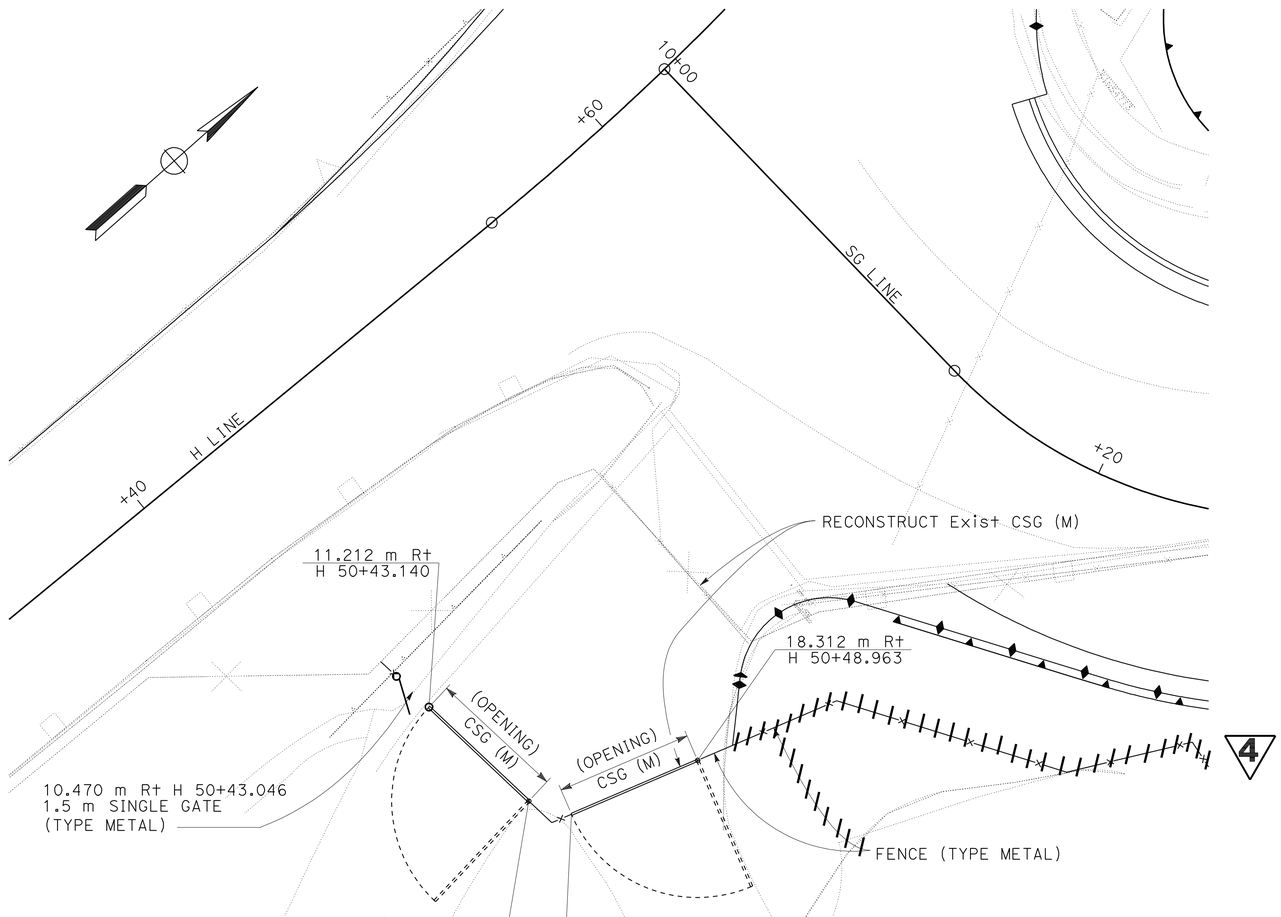

PARTIAL PLAN
GATE LOCATIONS
SCALE 1:100

ALL DIMENSIONS ARE IN
METERS UNLESS OTHERWISE SHOWN

CONSTRUCTION DETAILS
CANTILEVER SWING GATE
SCALE AS SHOWN

4 **REVISED PER ADDENDUM No. 4 DATED JULY 16, 2012**

C-23

STATE OF CALIFORNIA - DEPARTMENT OF TRANSPORTATION
Caltrans
DESIGN

FUNCTIONAL SUPERVISOR: BOB ZANDIPOUR
CALCULATED-DESIGNED BY: BRIAN WOOD
CHECKED BY: AMANDO VITO
REVISED BY: BW
DATE REVISED: 11-1-11

LAST REVISION 11-07-11
DATE PLOTTED => 13-JUL-2012
TIME PLOTTED => 15:49

Dist	COUNTY	ROUTE	KILOMETER POST TOTAL PROJECT	SHEET No.	TOTAL SHEETS
04	SF	80	12.6/13.9	64	821

Caltrans Metric

REGISTERED CIVIL ENGINEER 10-24-11 DATE

2-21-12
PLANS APPROVAL DATE

REGISTERED PROFESSIONAL ENGINEER MIKE KAPUSKAR No. GE 2564 Exp. 12-31-12 GEOTECHNICAL STATE OF CALIFORNIA

THE STATE OF CALIFORNIA OR ITS OFFICERS OR AGENTS SHALL NOT BE RESPONSIBLE FOR THE ACCURACY OR COMPLETENESS OF ELECTRONIC COPIES OF THIS PLAN SHEET.

EARTH MECHANICS, Inc.
7750 Pardee Lane, Suite 120
Oakland, CA 94621

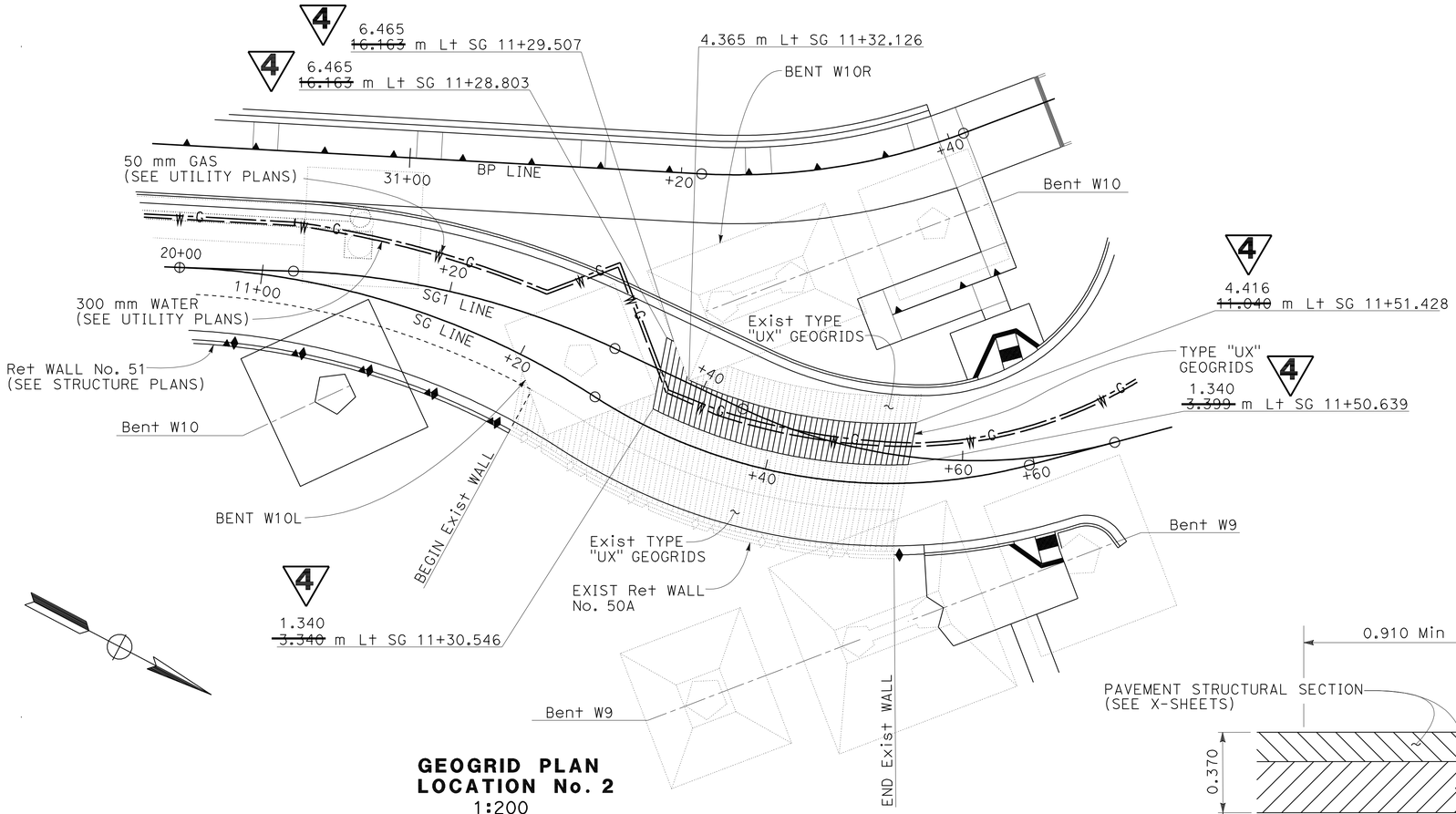

GEOGRID PLAN LOCATION No. 2
1:200

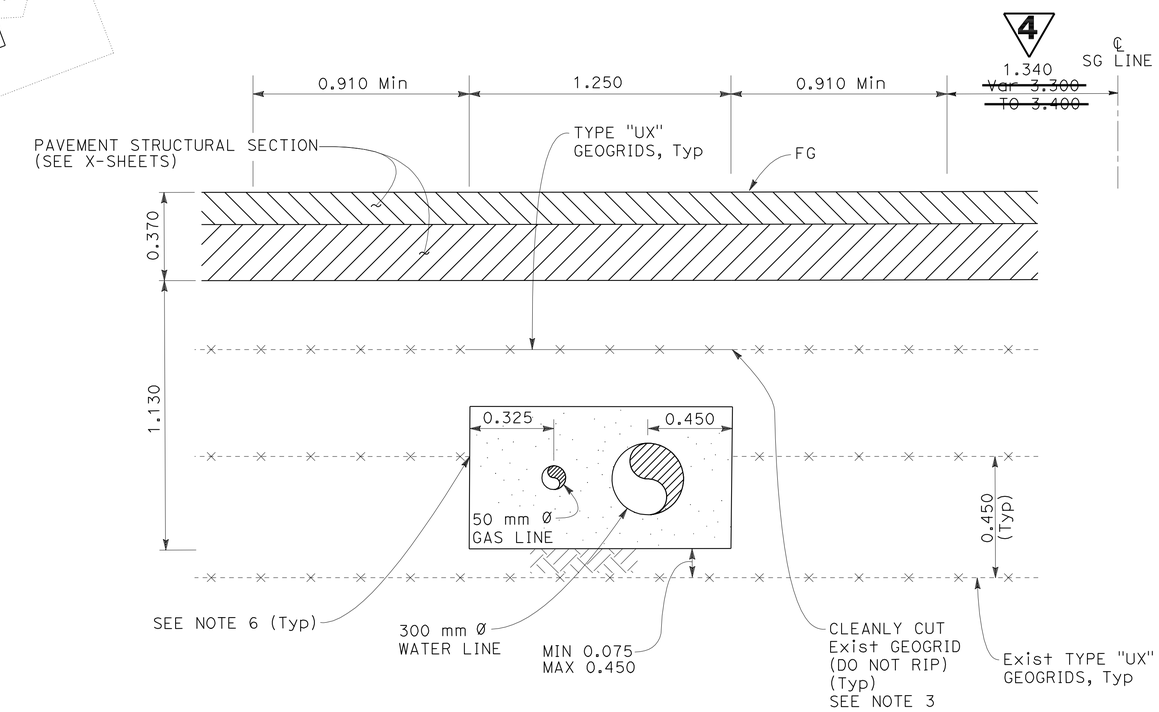

GEOSYNTHETIC REINFORCED EMBANKMENT LIMITS

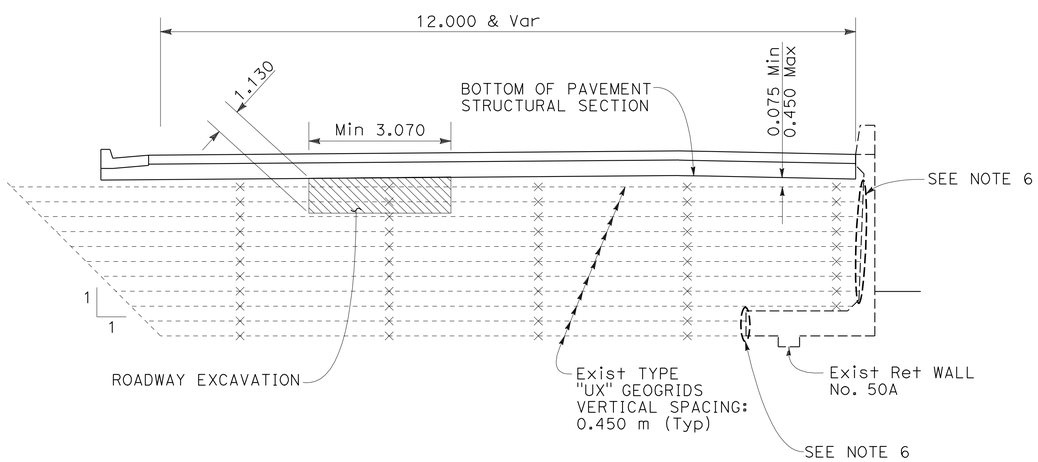

EXCAVATION LIMITS

TYPICAL SECTIONS
Sta SG 11+28.803 to SG 11+51.428
NO SCALE

ALL DIMENSIONS ARE IN METERS UNLESS OTHERWISE SHOWN

CONSTRUCTION DETAILS
GEOSYNTHETIC REINFORCED EMBANKMENT
SCALE 1:200

C-26

4 **REVISED PER ADDENDUM No. 4 DATED JULY 16, 2012**

REVISED BY	DATE REVISED
AK	5-20-11

CALCULATED-DESIGNED BY: A. KORKOS
CHECKED BY: P. ESPINOSA
CONSULTANT FUNCTIONAL SUPERVISOR: BOB ZANDIPOUR

STATE OF CALIFORNIA - DEPARTMENT OF TRANSPORTATION
Caltrans

LAST REVISION 10-30-11
DATE PLOTTED => 13-JUL-2012
TIME PLOTTED => 15:49

Dist	COUNTY	ROUTE	KILOMETER POST TOTAL PROJECT	SHEET No.	TOTAL SHEETS
04	SF	80	12.6/13.9	67	821

S. Mohan 10-24-11
REGISTERED CIVIL ENGINEER DATE

2-21-12
PLANS APPROVAL DATE

REGISTERED PROFESSIONAL ENGINEER Sabanayagam Mohan No. 63519 Exp. 9-30-12 CIVIL STATE OF CALIFORNIA

THE STATE OF CALIFORNIA OR ITS OFFICERS OR AGENTS SHALL NOT BE RESPONSIBLE FOR THE ACCURACY OR COMPLETENESS OF ELECTRONIC COPIES OF THIS PLAN SHEET.

Caltrans Metric

NOTES:

1. FACE ANGLE TO CONFORM TO FINISH GRADE CONTOURS AS SHOWN ON "EMBANKMENT CONFINEMENT SYSTEM CONSTRUCTION DETAILS NO. 1"
2. PROVIDE STRUCTURAL CONNECTION WITH GEOGRID DESIGN STRENGTH SHOWN
3. GEOGRID REINFORCEMENT ~~MIN. 5 m LENGTH OR TO BACK OF CUT, WHICHEVER IS GREATER,~~ SHALL EXTEND TO BACK OF CUT, AND HAVE A MIN. 8.5 kN/m LONG-TERM DESIGN STRENGTH OR MIN 27 kN/m ULTIMATE TENSILE STRENGTH

4

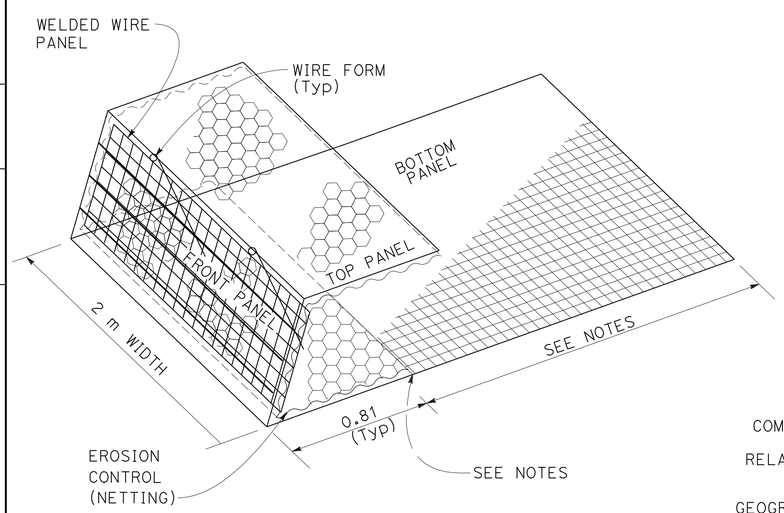

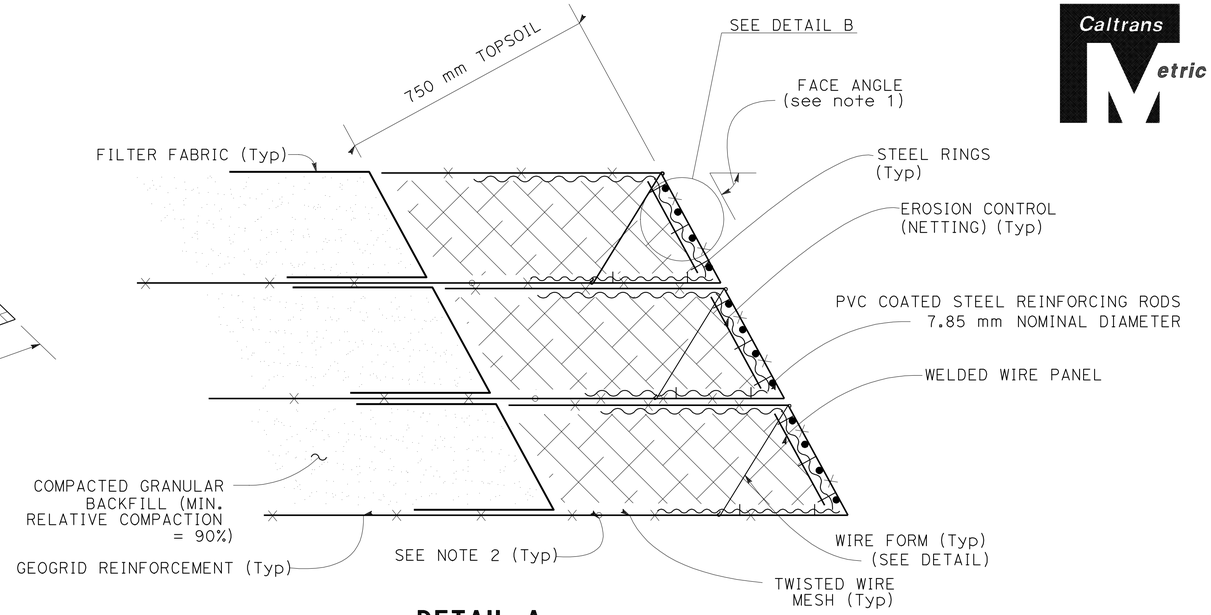

DETAIL A

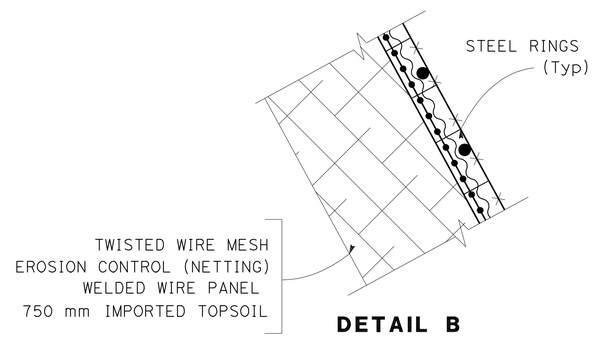

DETAIL B

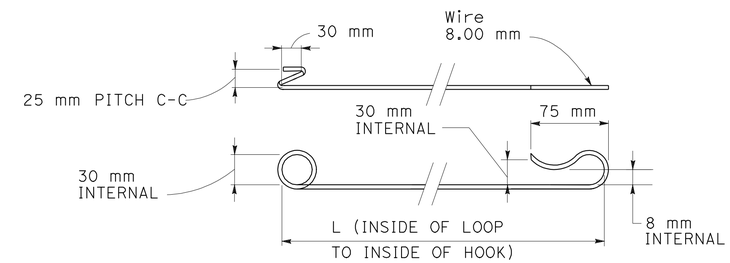

WIRE FORM DETAIL

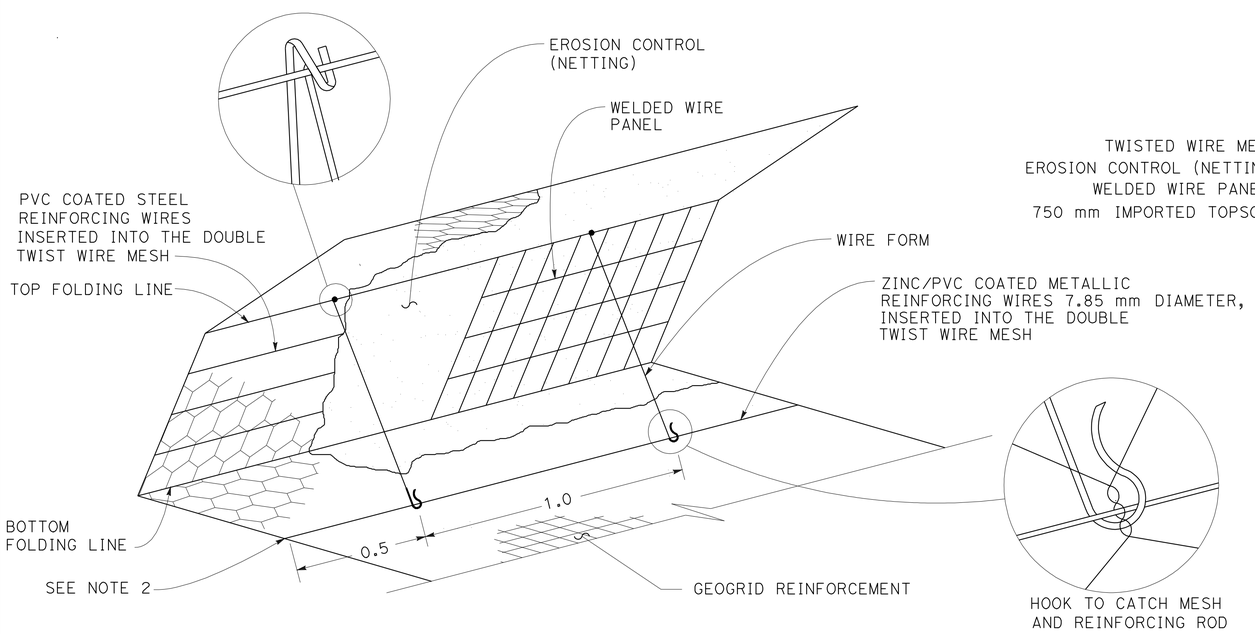

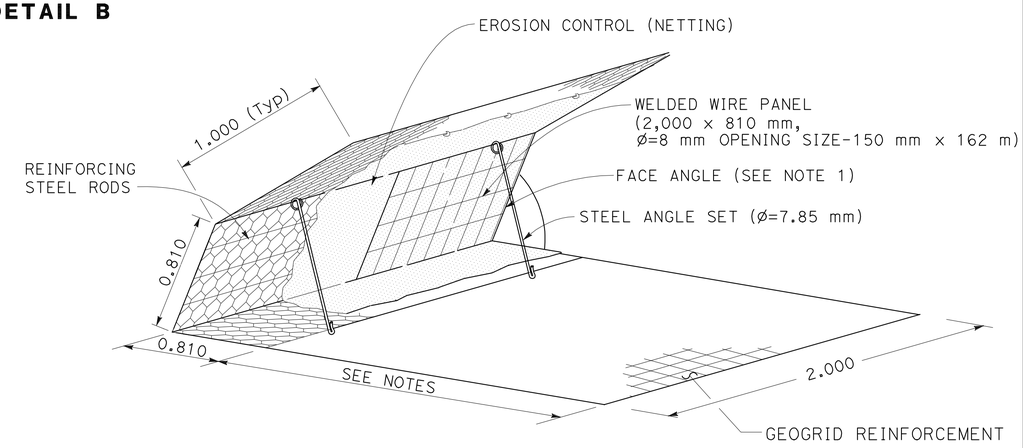

EMBANKMENT CONFINEMENT SYSTEM DETAILS

4 **REVISED PER ADDENDUM No. 4 DATED JULY 16, 2012**

ALL DIMENSIONS ARE IN METERS UNLESS OTHERWISE SHOWN

CONSTRUCTION DETAILS
EMBANKMENT CONFINEMENT SYSTEM

SCALE 1:200

C-29

REVISED BY	DATE REVISED
BW	11-1-11

BRIAN WOOD — AMANDO VITO — CALCULATED-DESIGNED BY — CHECKED BY

FUNCTIONAL SUPERVISOR: BOB ZANDIPOUR

STATE OF CALIFORNIA - DEPARTMENT OF TRANSPORTATION — DESIGN — Caltrans

LAST REVISION 11-07-11 — DATE PLOTTED => 13-JUL-2012 — TIME PLOTTED => 15:49

Dist	COUNTY	ROUTE	KILOMETER POST TOTAL PROJECT	SHEET No.	TOTAL SHEETS
04	SF	80	12.6/13.9	70	821

Brian M Wood 11-1-11
REGISTERED CIVIL ENGINEER DATE

2-21-12
PLANS APPROVAL DATE

REGISTERED PROFESSIONAL ENGINEER Brian M. Wood No. 76969 Exp. 12-31-12 CIVIL STATE OF CALIFORNIA

THE STATE OF CALIFORNIA OR ITS OFFICERS OR AGENTS SHALL NOT BE RESPONSIBLE FOR THE ACCURACY OR COMPLETENESS OF ELECTRONIC COPIES OF THIS PLAN SHEET.

Caltrans Metric

FOR COMPLETE RIGHT OF WAY AND ACCURATE ACCESS DATA, SEE RIGHT OF WAY RECORD MAPS AT DISTRICT OFFICE.

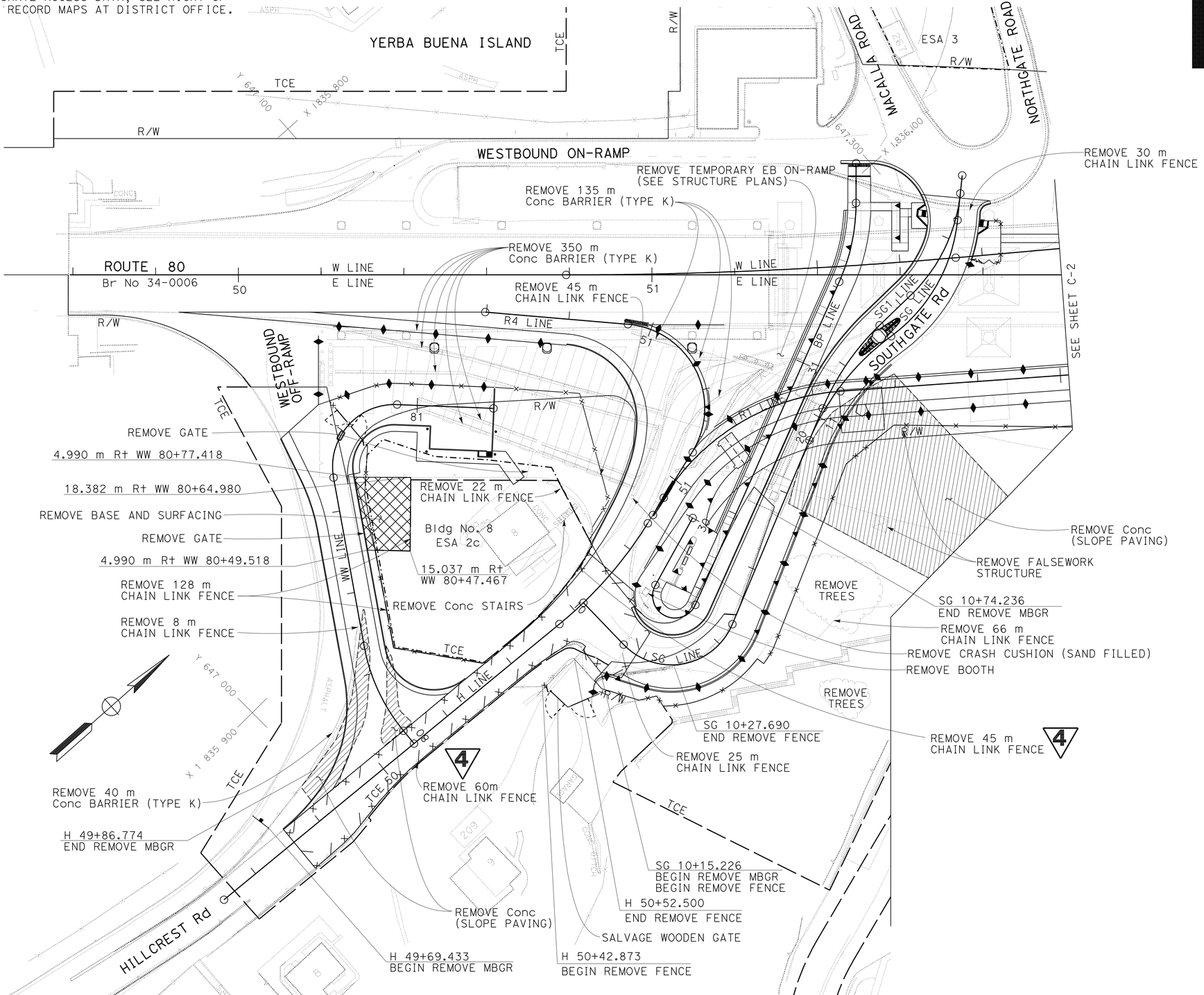

4 REVISED PER ADDENDUM No. 4 DATED JULY 16, 2012

ALL DIMENSIONS ARE IN METERS UNLESS OTHERWISE SHOWN

CONSTRUCTION DETAILS
REMOVAL DETAILS
SCALE 1:500

C-32

STATE OF CALIFORNIA - DEPARTMENT OF TRANSPORTATION
Caltrans
DESIGN

FUNCTIONAL SUPERVISOR: BOB ZANDIPOUR
CALCULATED-DESIGNED BY: BRIAN WOOD
CHECKED BY: AMANDO VITO
REVISED BY: BW
DATE REVISED: 11-1-11

LAST REVISION 02-06-12 | DATE PLOTTED => 13-JUL-2012 | TIME PLOTTED => 15:49

Dist	COUNTY	ROUTE	KILOMETER POST TOTAL PROJECT	SHEET No.	TOTAL SHEETS
04	SF	80	12.6/13.9	81	821

Prashant Jalvi 11-2-11
REGISTERED CIVIL ENGINEER DATE

2-21-12
PLANS APPROVAL DATE

REGISTERED PROFESSIONAL ENGINEER Prashant Jalvi No. 77542 Exp. 06-30-13 CIVIL STATE OF CALIFORNIA

THE STATE OF CALIFORNIA OR ITS OFFICERS OR AGENTS SHALL NOT BE RESPONSIBLE FOR THE ACCURACY OR COMPLETENESS OF ELECTRONIC COPIES OF THIS PLAN SHEET.

Caltrans Metric

FOR COMPLETE RIGHT OF WAY AND ACCURATE ACCESS DATA, SEE RIGHT OF WAY RECORD MAPS AT DISTRICT OFFICE.

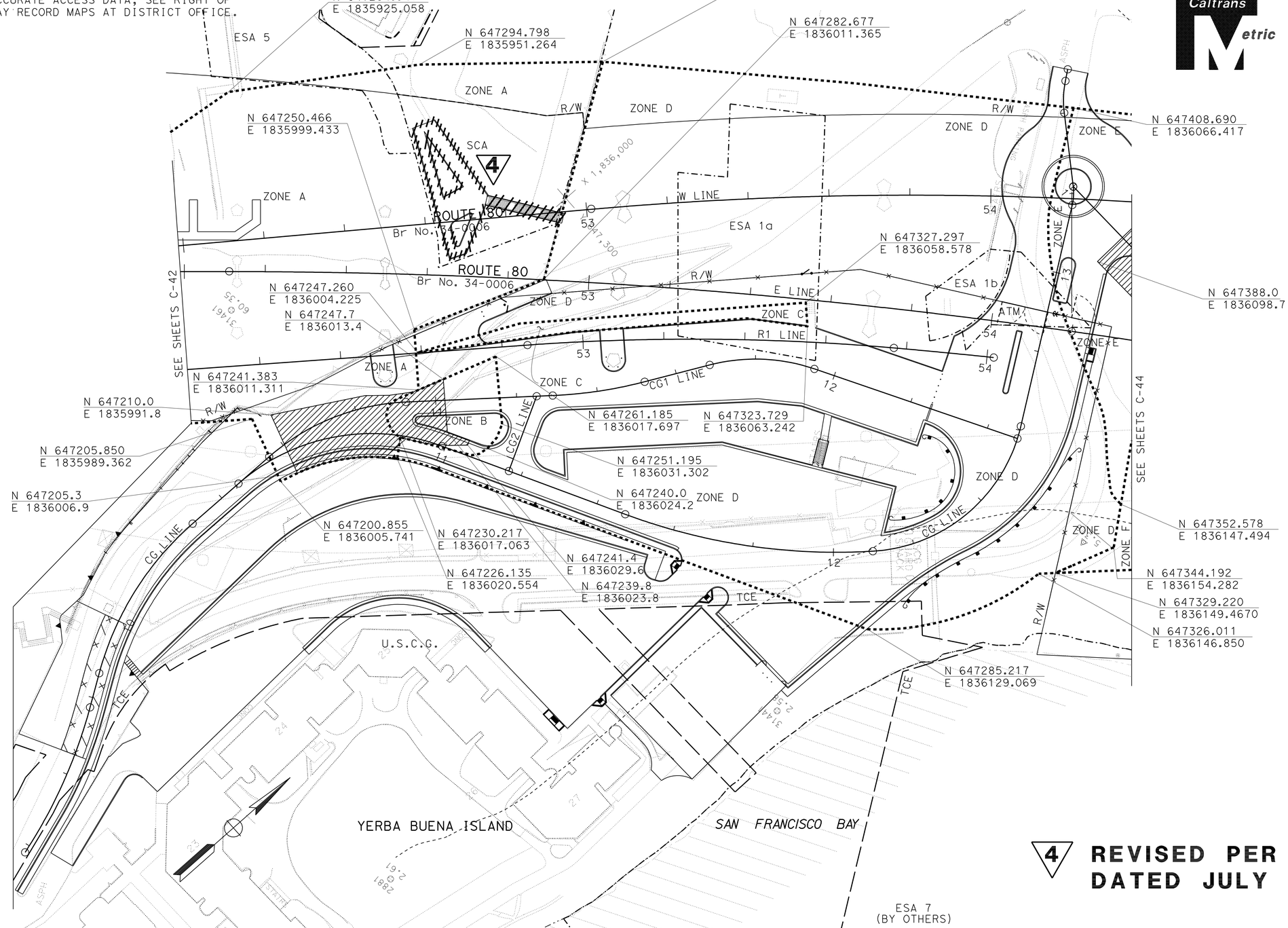

4 REVISED PER ADDENDUM No. 4 DATED JULY 16, 2012

ALL DIMENSIONS ARE IN METERS UNLESS OTHERWISE SHOWN

CONSTRUCTION DETAILS
CONTAMINATED MATERIAL
SCALE 1:500

THIS PLAN ACCURATE FOR CONTAMINATED MATERIAL WORK ONLY

C-43

JALVI PRASHANT	JP	CALCULATED-DESIGNED BY	FUNCTIONAL SUPERVISOR
AMANDO VITO	11-1-11	CHECKED BY	BOB ZANDIPOUR
REVISED BY	DATE REVISED		

STATE OF CALIFORNIA - DEPARTMENT OF TRANSPORTATION
Caltrans
DESIGN

LAST REVISION 02-06-12 | DATE PLOTTED => 13-JUL-2012 | TIME PLOTTED => 15:50

Dist	COUNTY	ROUTE	KILOMETER POST TOTAL PROJECT	SHEET No.	TOTAL SHEETS
04	SF	80	12.6/13.9	85	821

Brian M Wood 4-16-12
REGISTERED CIVIL ENGINEER DATE

2-21-12
PLANS APPROVAL DATE

REGISTERED PROFESSIONAL ENGINEER Brian M. Wood No. 76969 Exp. 12-31-12 CIVIL STATE OF CALIFORNIA

THE STATE OF CALIFORNIA OR ITS OFFICERS OR AGENTS SHALL NOT BE RESPONSIBLE FOR THE ACCURACY OR COMPLETENESS OF ELECTRONIC COPIES OF THIS PLAN SHEET.

Caltrans Metric

FOR COMPLETE RIGHT OF WAY AND ACCURATE ACCESS DATA, SEE RIGHT OF WAY RECORD MAPS AT DISTRICT OFFICE.

LEGEND: (THIS SHEET ONLY)

- CONTRACT No. 04-0120T4 (AREA T)
- CONTRACT No. 04-3A6404 (AREA A)
- CONTRACT OVERLAP TA1 & TA3 ▽4
- CONTRACT AREA CG

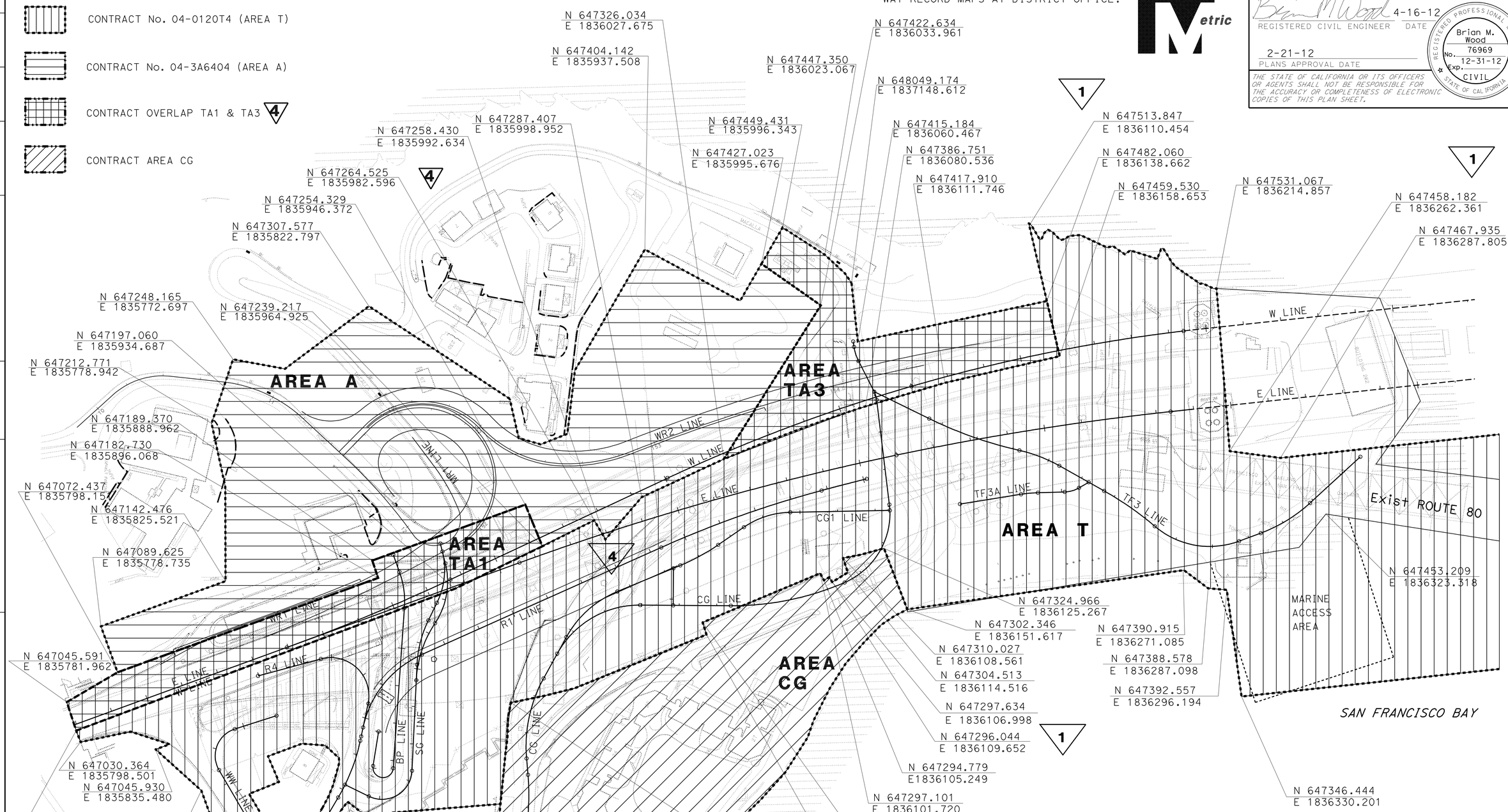

▽1 REVISED PER ADDENDUM No. 1 DATED APRIL 25, 2012

▽4 REVISED PER ADDENDUM No. 4 DATED JULY 16, 2012

CONSTRUCTION DETAILS
AREAS FOR CONTRACTOR USE

SCALE 1:1000

C-47

REVISED BY	DATE REVISED
BW	11-1-11

BRIAN WOOD
AMANDO VITO
CALCULATED-DESIGNED BY
CHECKED BY
FUNCTIONAL SUPERVISOR
BOB ZANDIPOUR

STATE OF CALIFORNIA - DEPARTMENT OF TRANSPORTATION
Caltrans
DESIGN

LAST REVISION 07-13-12 DATE PLOTTED => 13-JUL-2012 TIME PLOTTED => 15:50

Dist	COUNTY	ROUTE	KILOMETER POST TOTAL PROJECT	SHEET No.	TOTAL SHEETS
04	SF	80	12.6/13.9	87	821

Brian M Wood 2-16-12
REGISTERED CIVIL ENGINEER DATE

2-21-12
PLANS APPROVAL DATE

REGISTERED PROFESSIONAL ENGINEER Brian M. Wood No. 76969 Exp. 12-31-12 CIVIL STATE OF CALIFORNIA

THE STATE OF CALIFORNIA OR ITS OFFICERS OR AGENTS SHALL NOT BE RESPONSIBLE FOR THE ACCURACY OR COMPLETENESS OF ELECTRONIC COPIES OF THIS PLAN SHEET.

Caltrans Metric

4

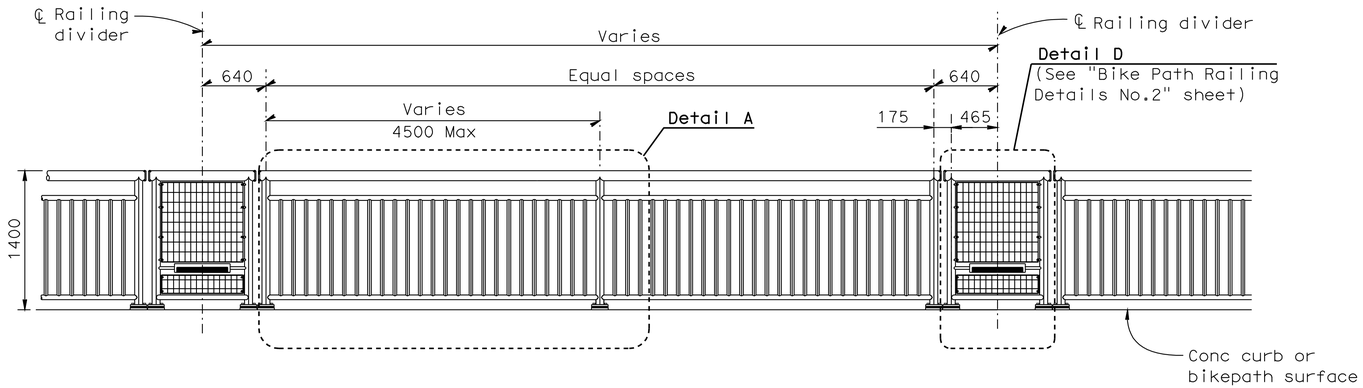

BIKE PATH RAILING-TYPICAL ELEVATION

1:30

NOTES:

1. All metal (except stainless steel) parts of railing assembly including grill shall be coated
2. Railing posts shall comform to ASTM A500 Grade C (Fy=345MPa).
3. Railing shall conform to vertical and horizontal alignment of bike path.
4. Posts and pickets shall be Vertical. Rails shall be parallel to top of bikepath. Railing grill vertical bars shall be parallel to railing posts and grill horizontal bars shall be parallel to rails.
5. Rails shall be shop bent or fabricated to fit horizontal curve when radius is less than 300 m.
6. All exposed welds shall be ground smooth.
7. Welding to stainless steel shall be in accordance with AWS D1.6-1999.
8. Shim stack beneath post base plate to be adjusted during installation as required to maintain railing alignment. Full width stainless steel shims shall be utilized, tapered as necessary to maintain post verticality.

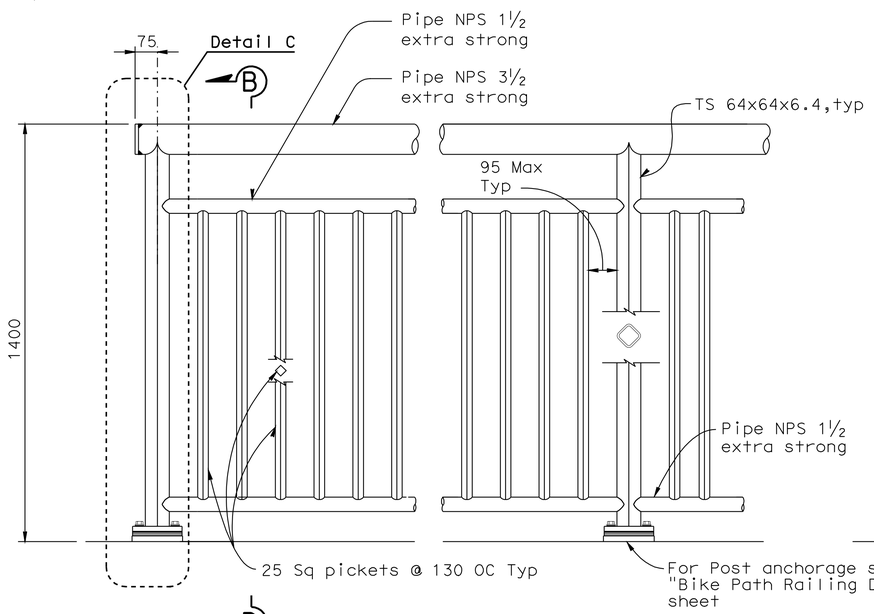

DETAIL A

1:10

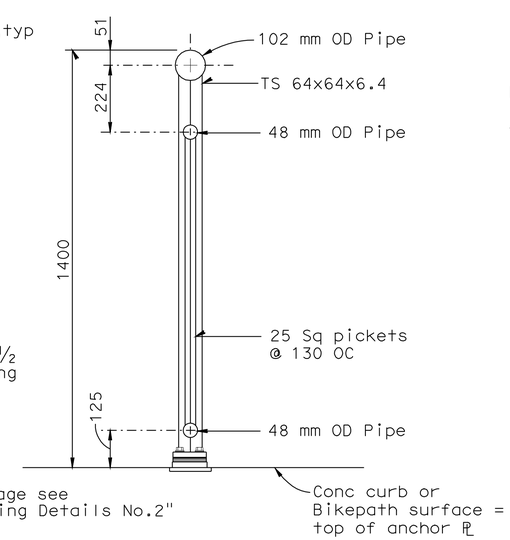

SECTION B-B

1:10

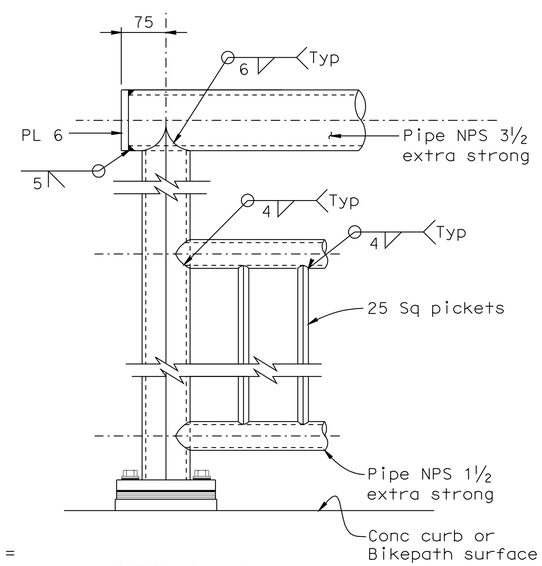

DETAIL C

1:5

4 **REVISED PER ADDENDUM No. 4 DATED JULY 16, 2012**

CONSTRUCTION DETAILS
BIKE PATH RAILING DETAILS No. 1

NO SCALE

ALL DIMENSIONS ARE IN MILLIMETERS UNLESS OTHERWISE SHOWN

C-49

BRIAN WOOD	BW	11-1-11	
AMANDO VITO			
CALCULATED-DESIGNED BY	REVISED BY	DATE REVISED	
CHECKED BY			
FUNCTIONAL SUPERVISOR			
BOB ZANDIPOUR			

STATE OF CALIFORNIA - DEPARTMENT OF TRANSPORTATION
Caltrans DESIGN

LAST REVISION 02-07-12 DATE PLOTTED => 16-JUL-2012 TIME PLOTTED => 08:00

Dist	COUNTY	ROUTE	KILOMETER POST TOTAL PROJECT	SHEET No.	TOTAL SHEETS
04	SF	80	12.6/13.9	88	821

Brian M Wood 2-16-12
REGISTERED CIVIL ENGINEER DATE

2-21-12
PLANS APPROVAL DATE

REGISTERED PROFESSIONAL ENGINEER Brian M. Wood No. 76969 Exp. 12-31-12 CIVIL STATE OF CALIFORNIA

THE STATE OF CALIFORNIA OR ITS OFFICERS OR AGENTS SHALL NOT BE RESPONSIBLE FOR THE ACCURACY OR COMPLETENESS OF ELECTRONIC COPIES OF THIS PLAN SHEET.

Caltrans Metric

4

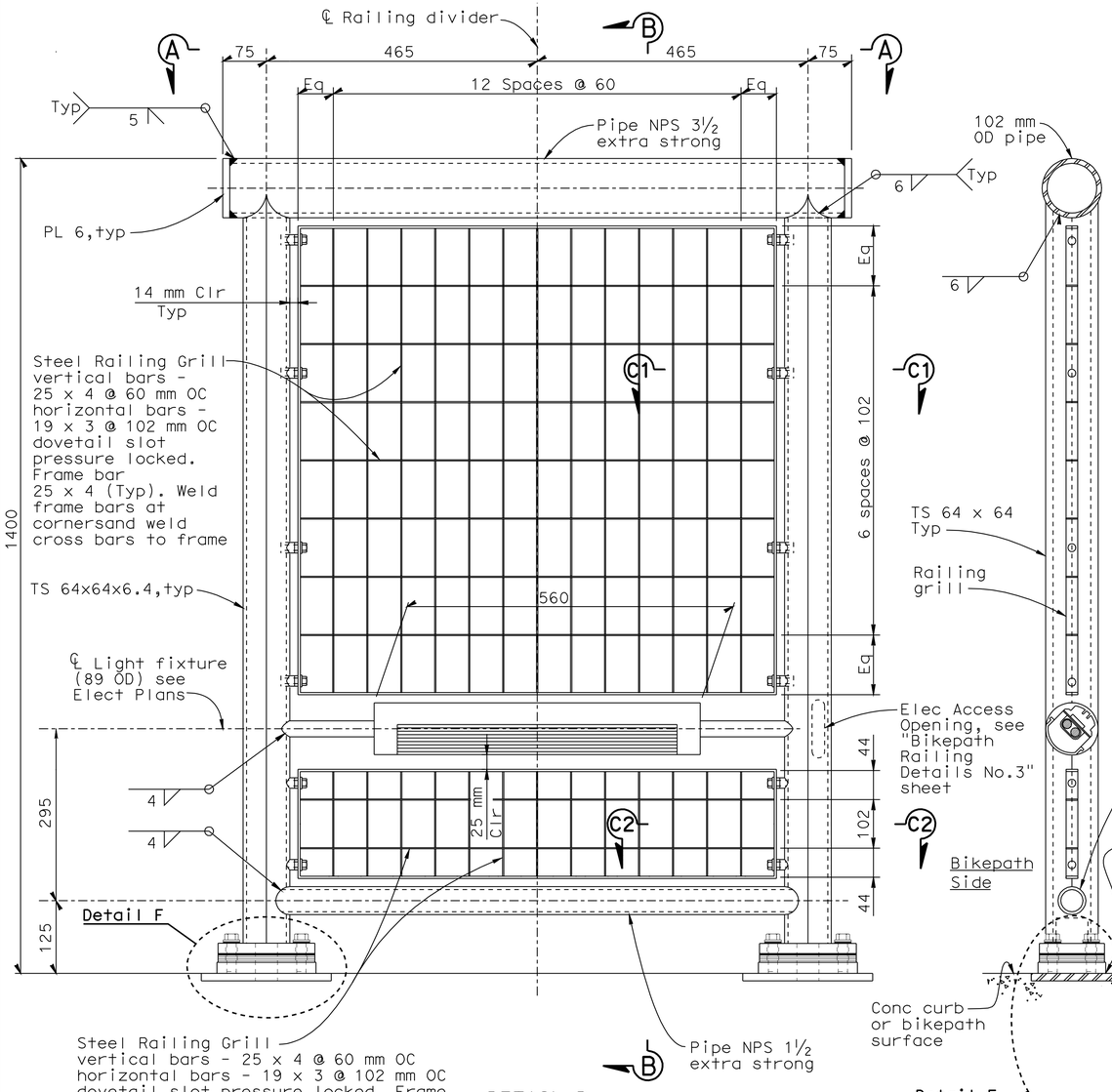

DETAIL D

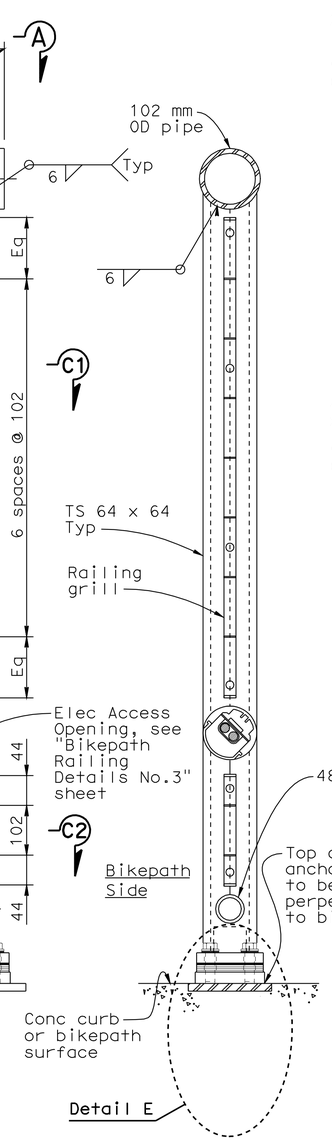

SECTION B-B

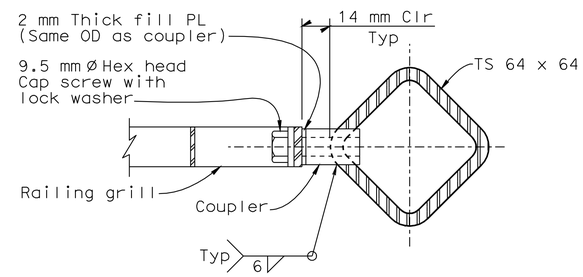

SECTION C1-C1
(Typ above light fixture)
1:1.5

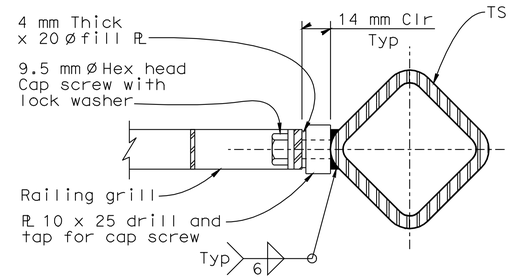

SECTION C2-C2
(Typ below light fixture)
1:1.5

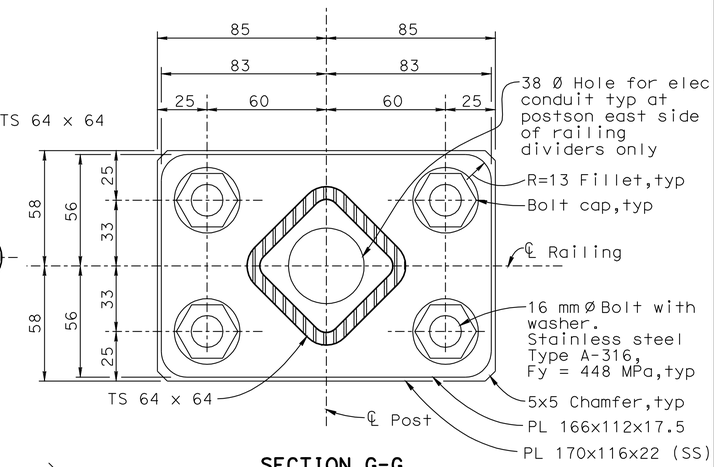

SECTION G-G

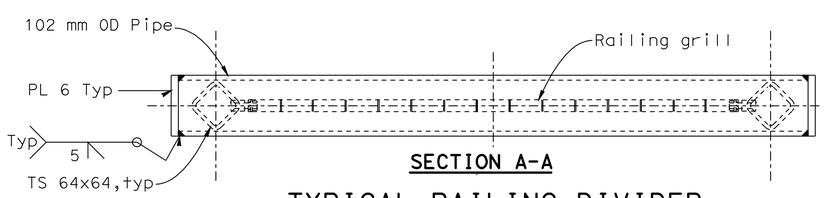

SECTION A-A

TYPICAL RAILING DIVIDER
1:5

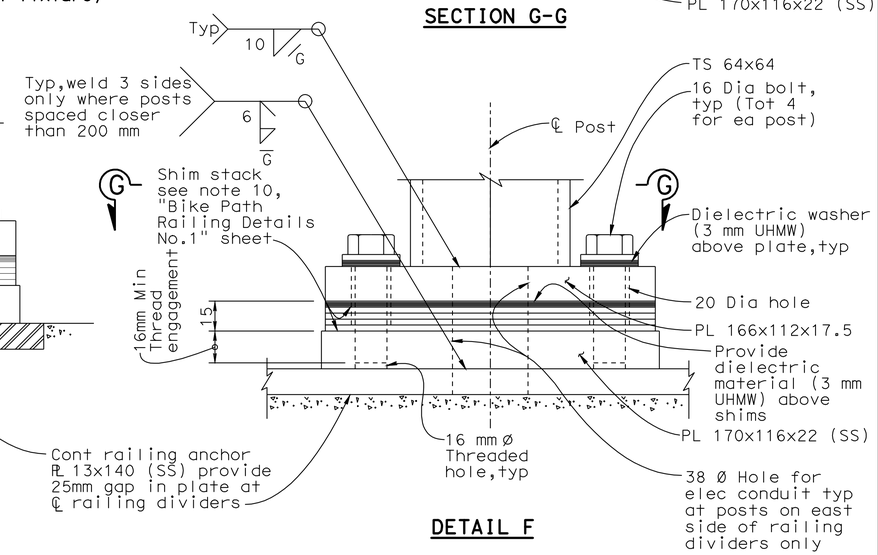

DETAIL E

DETAIL F

TYPICAL POST ANCHORAGE
1:1.5

4 **REVISED PER ADDENDUM No. 4 DATED JULY 16, 2012**

CONSTRUCTION DETAILS
BIKE PATH RAILING DETAILS No. 2

NO SCALE

ALL DIMENSIONS ARE IN MILLIMETERS UNLESS OTHERWISE SHOWN

C-50

REVISED BY	DATE REVISED
BW	11-1-11

CALCULATED-DESIGNED BY: BRIAN WOOD
CHECKED BY: AMANDO VITO
FUNCTIONAL SUPERVISOR: BOB ZANDIPOUR

STATE OF CALIFORNIA - DEPARTMENT OF TRANSPORTATION
Caltrans DESIGN

LAST REVISION 01-30-12 | DATE PLOTTED => 16-JUL-2012 | TIME PLOTTED => 08:00

Dist	COUNTY	ROUTE	KILOMETER POST TOTAL PROJECT	SHEET No.	TOTAL SHEETS
04	SF	80	12.6/13.9	89	821

Brian M Wood 2-16-12
REGISTERED CIVIL ENGINEER DATE

2-21-12
PLANS APPROVAL DATE

REGISTERED PROFESSIONAL ENGINEER Brian M. Wood No. 76969 Exp. 12-31-12 CIVIL STATE OF CALIFORNIA

THE STATE OF CALIFORNIA OR ITS OFFICERS OR AGENTS SHALL NOT BE RESPONSIBLE FOR THE ACCURACY OR COMPLETENESS OF ELECTRONIC COPIES OF THIS PLAN SHEET.

Caltrans Metric

4

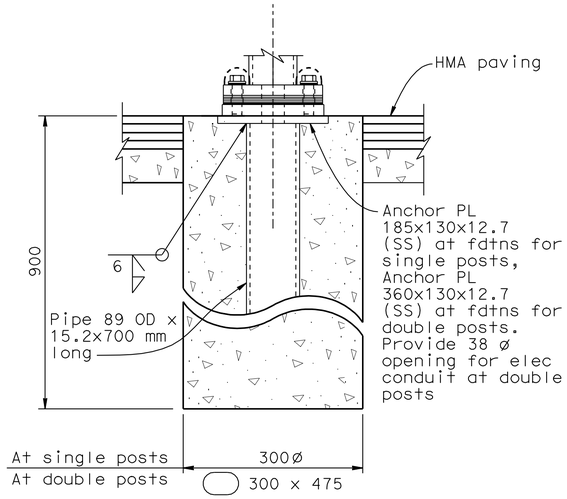

BIKE PATH RAILING POST FOUNDATION

(For use when railing posts are located in HMA paved areas, for details not shown see "Bike Path Railing Details" sheets)

1:5

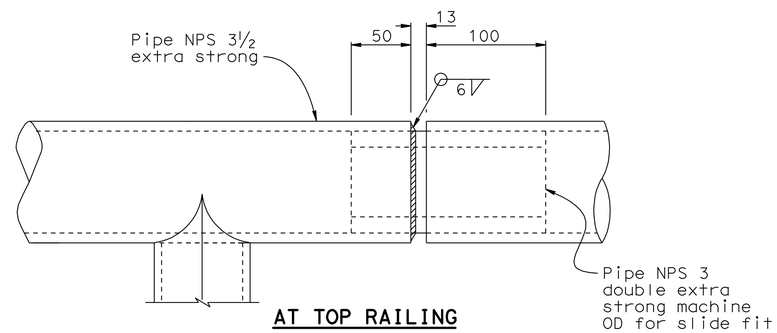

AT TOP RAILING

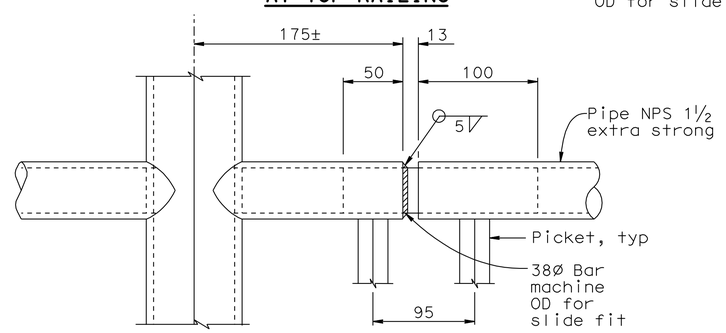

AT INTERMEDIATE AND BOTTOM RAILING

RAILING EXPANSION JOINT DETAILS

1:2.5

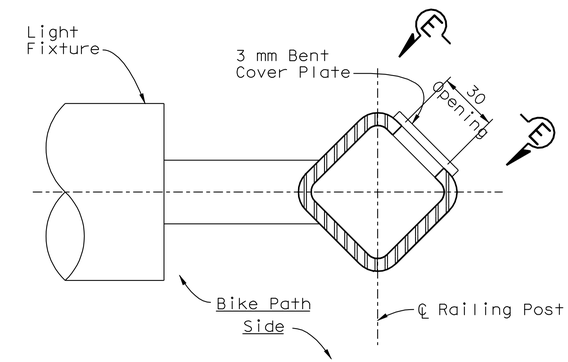

PLAN

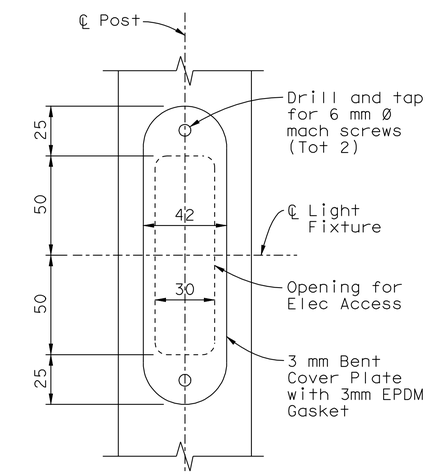

SECTION E-E

ELECTRICAL ACCESS OPENING AT BIKEPATH LIGHT FIXTURE

(Required at Posts on east side of Railing Dividers only)

1:1.5

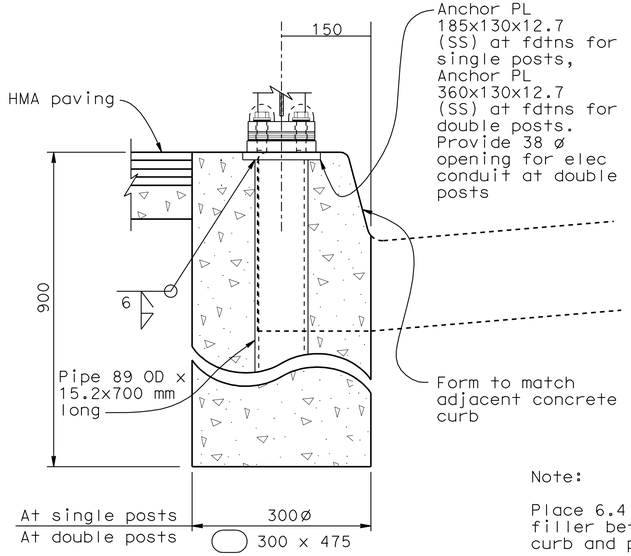

Note:

Place 6.4 mm expansion joint filler between adjacent concrete curb and post foundation.

BIKE PATH RAILING POST FOUNDATION

(For use when railing posts are located adjacent to concrete curb, for details not shown see "Bike Path Railing Details" sheets)

1:5

4 **REVISED PER ADDENDUM No. 4 DATED JULY 16, 2012**

ALL DIMENSIONS ARE IN MILLIMETERS UNLESS OTHERWISE SHOWN

CONSTRUCTION DETAILS
BIKE PATH RAILING DETAILS NO. 3

NO SCALE

C-51

STATE OF CALIFORNIA - DEPARTMENT OF TRANSPORTATION
Caltrans DESIGN

FUNCTIONAL SUPERVISOR: BOB ZANDIPOUR
CALCULATED-DESIGNED BY: BRIAN WOOD
CHECKED BY: AMANDO VITO
REVISED BY: BW
DATE REVISED: 11-1-11

LAST REVISION 06-20-12
DATE PLOTTED => 13-JUL-2012
TIME PLOTTED => 15:51

Dist	COUNTY	ROUTE	KILOMETER POST TOTAL PROJECT	SHEET No.	TOTAL SHEETS
04	SF	80	12.6/13.9	97	821

Alex McDonald
LICENSED LANDSCAPE ARCHITECT

2-21-12
PLANS APPROVAL DATE

LICENSED LANDSCAPE ARCHITECT ALEXANDER K. MCDONALD No. 4397 Alex McDonald Signature 08-31-12 Renewal Date 11-01-11 Date STATE OF CALIFORNIA

THE STATE OF CALIFORNIA OR ITS OFFICERS OR AGENTS SHALL NOT BE RESPONSIBLE FOR THE ACCURACY OR COMPLETENESS OF ELECTRONIC COPIES OF THIS PLAN SHEET.

Caltrans Metric

FOR COMPLETE RIGHT OF WAY AND ACCURATE ACCESS DATA, SEE RIGHT OF WAY RECORD MAPS AT DISTRICT OFFICE.

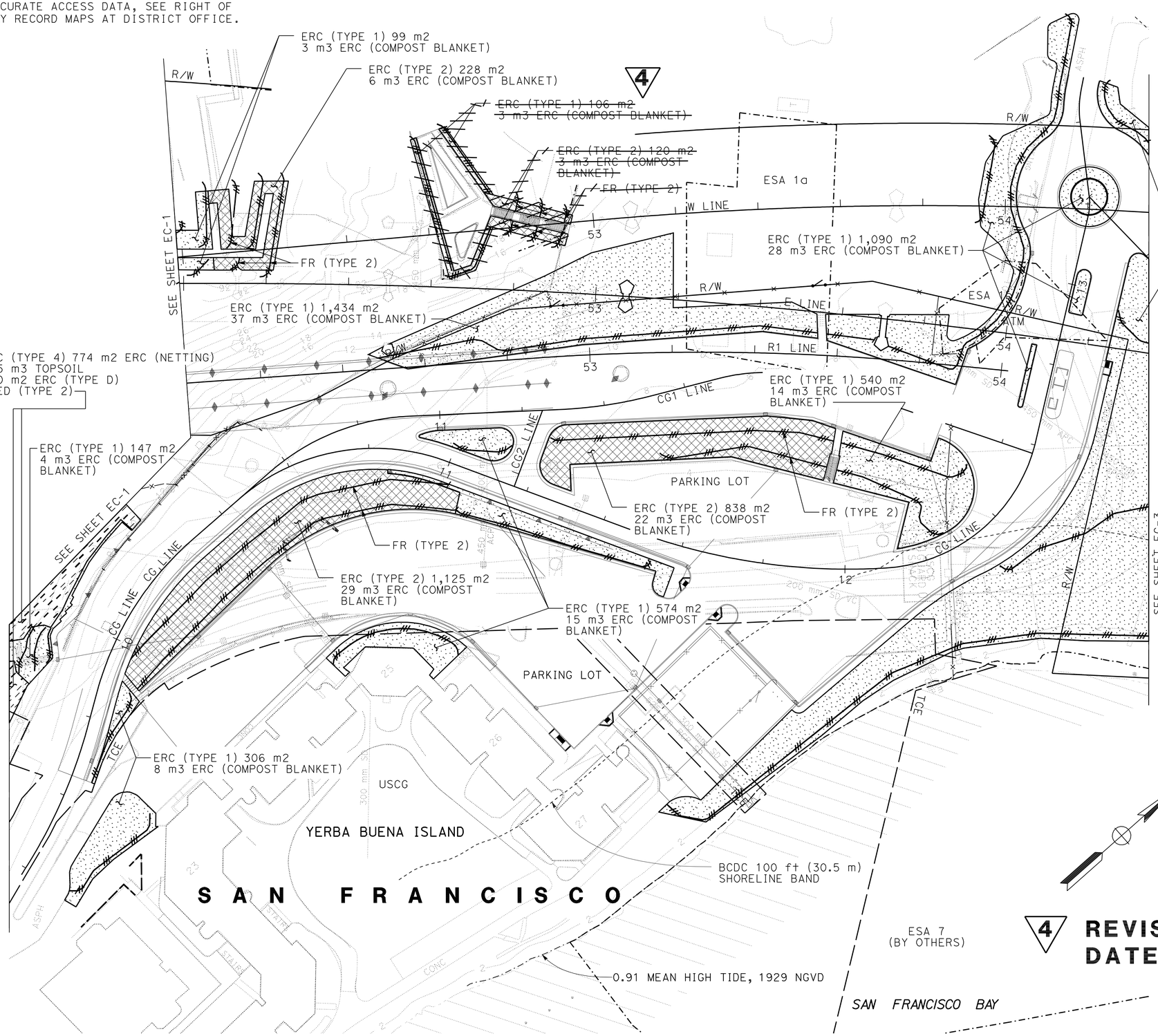

4 REVISED PER ADDENDUM No. 4 DATED JULY 16, 2012

ALL DIMENSIONS ARE IN METERS UNLESS OTHERWISE SHOWN

EROSION CONTROL PLAN

SCALE 1:500

EC-2

THIS PLAN ACCURATE FOR EROSION CONTROL WORK ONLY

STATE OF CALIFORNIA - DEPARTMENT OF TRANSPORTATION
Caltrans **WATER QUALITY**

SENIOR LANDSCAPE ARCHITECT: DAVE W. YAM
CALCULATED-DESIGNED BY: Alex McDonald
CHECKED BY: Jennifer Egawa
REVISED BY: AKM
DATE REVISED: 10/31/11

LAST REVISION 05-24-11
DATE PLOTTED => 13-JUL-2012
TIME PLOTTED => 15:51

Dist	COUNTY	ROUTE	KILOMETER POST TOTAL PROJECT	SHEET No.	TOTAL SHEETS
04	SF	80	12.6/13.9	101	821

Caltrans Metric

Alex McDonald
LICENSED LANDSCAPE ARCHITECT

2-21-12
PLANS APPROVAL DATE

LICENSED LANDSCAPE ARCHITECT
ALEXANDER K. MCDONALD No. 4397
Alex McDonald
Signature
8-31-12
Renewal Date
2-14-12
Date
STATE OF CALIFORNIA

THE STATE OF CALIFORNIA OR ITS OFFICERS OR AGENTS SHALL NOT BE RESPONSIBLE FOR THE ACCURACY OR COMPLETENESS OF ELECTRONIC COPIES OF THIS PLAN SHEET.

EROSION CONTROL QUANTITIES

SHEET No.	STATION / LOCATION	LOCATION	EROSION CONTROL (NETTING)	EROSION CONTROL (TYPE D)	EROSION CONTROL (COMPOST BLANKET)	TOPSOIL [N]	EROSION CONTROL (WIRE MESH BLANKET)	FIBER ROLLS m	
			m^2	m^2	m^3	m^3	m^2	(TYPE 1)	(TYPE 2)
EC-1	WW LINE	R† & L†	325	3,700	92	86	-	508	-
EC-1	SG LINE	R†	8,079	3,951	29	2,217	188	248	38
EC-1	BP LINE	R† & L†	492	1,693	44	-	-	85	83
EC-2	UTILITY STAIRS	R† & L†	228	327	9	-	-	38	58
~~EC-2~~	~~HISTORIC STAIRS~~	~~R† & L†~~	~~120~~	~~226~~	~~6~~	~~-~~	~~-~~	~~75~~	~~32~~
EC-2	CG LINE	R† & L†	2,737	7,644	190	205	-	597	299
EC-2	CG1 LINE	L†	-	1,434	37	-	-	122	-
EC-3	TF3 LINE	R† & L†	2,265	10,441	240	-	1,194	906	233
	TOTAL		~~14,246~~ 14,126	~~29,416~~ 29,190	~~647~~ 641	2,508	1,382	~~2,579~~ 2,504	~~743~~ 711

[N] NOT A SEPARATE PAY ITEM, FOR INFORMATION ONLY

4 4 4 4 4 4

4 **REVISED PER ADDENDUM No. 4 DATED JULY 16, 2012**

STATE OF CALIFORNIA - DEPARTMENT OF TRANSPORTATION
Caltrans **WATER QUALITY**

SENIOR LANDSCAPE ARCHITECT: DAVE W. YAM
CALCULATED-DESIGNED BY: Alex McDonald
CHECKED BY: Jennifer Egawa
REVISED BY: AKM
DATE REVISED: 2/10/12

EROSION CONTROL QUANTITIES
NO SCALE

ECQ-1

LAST REVISION 05-24-11
DATE PLOTTED => 13-JUL-2012
TIME PLOTTED => 15:51

Dist	COUNTY	ROUTE	KILOMETER POST TOTAL PROJECT	SHEET No.	TOTAL SHEETS
04	SF	80	12.6/13.9	103	821

Brian M Wood 11-1-11
REGISTERED CIVIL ENGINEER DATE

2-21-12
PLANS APPROVAL DATE

REGISTERED PROFESSIONAL ENGINEER Brian M. Wood No. 76969 Exp. 12-31-12 CIVIL STATE OF CALIFORNIA

THE STATE OF CALIFORNIA OR ITS OFFICERS OR AGENTS SHALL NOT BE RESPONSIBLE FOR THE ACCURACY OR COMPLETENESS OF ELECTRONIC COPIES OF THIS PLAN SHEET.

Caltrans Metric

FOR COMPLETE RIGHT OF WAY AND ACCURATE ACCESS DATA, SEE RIGHT OF WAY RECORD MAPS AT DISTRICT OFFICE.

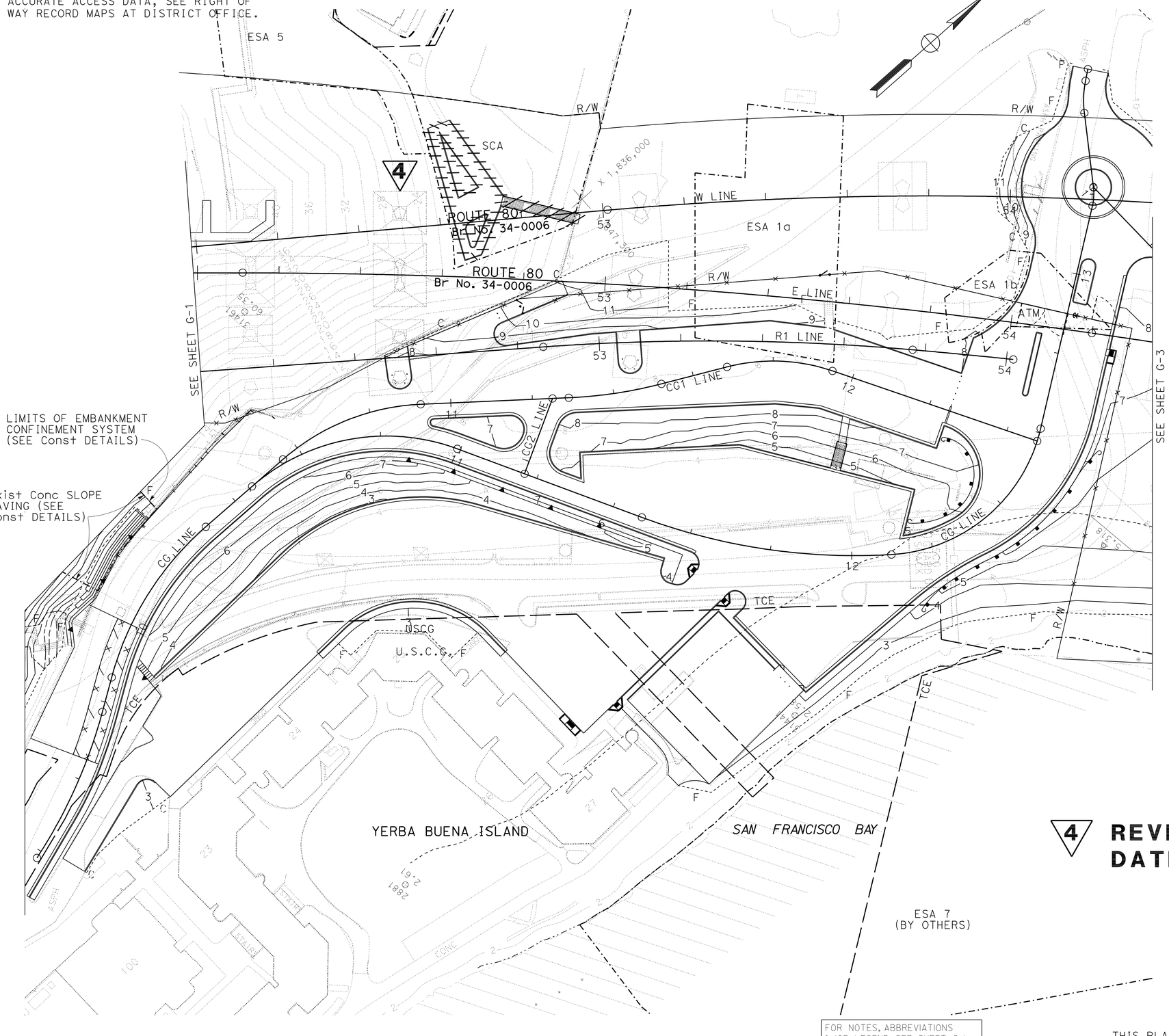

4 **REVISED PER ADDENDUM No. 4 DATED JULY 16, 2012**

FOR NOTES, ABBREVIATIONS &/OR LEGEND, SEE SHEET G-1

THIS PLAN ACCURATE FOR CONTOUR GRADING WORK ONLY

ALL DIMENSIONS ARE IN METERS UNLESS OTHERWISE SHOWN

CONTOUR GRADING

SCALE 1:500

G-2

STATE OF CALIFORNIA - DEPARTMENT OF TRANSPORTATION
Caltrans **DESIGN**

FUNCTIONAL SUPERVISOR: BOB ZANDIPOUR
CALCULATED-DESIGNED BY: BRIAN WOOD
CHECKED BY: AMANDO VITO
REVISED BY: BW
DATE REVISED: 11-1-11

LAST REVISION 02-06-12 | DATE PLOTTED => 13-JUL-2012 | TIME PLOTTED => 15:51

Dist	COUNTY	ROUTE	KILOMETER POST TOTAL PROJECT	SHEET No.	TOTAL SHEETS
04	SF	80	12.6/13.9	106	821

REGISTERED CIVIL ENGINEER 11-2-11 DATE

2-21-12
PLANS APPROVAL DATE

REGISTERED PROFESSIONAL ENGINEER Isaac Perez No. 53542 Exp. 6-30-13 CIVIL STATE OF CALIFORNIA

THE STATE OF CALIFORNIA OR ITS OFFICERS OR AGENTS SHALL NOT BE RESPONSIBLE FOR THE ACCURACY OR COMPLETENESS OF ELECTRONIC COPIES OF THIS PLAN SHEET.

Caltrans Metric

FOR COMPLETE RIGHT OF WAY AND ACCURATE ACCESS DATA, SEE RIGHT OF WAY RECORD MAPS AT DISTRICT OFFICE.

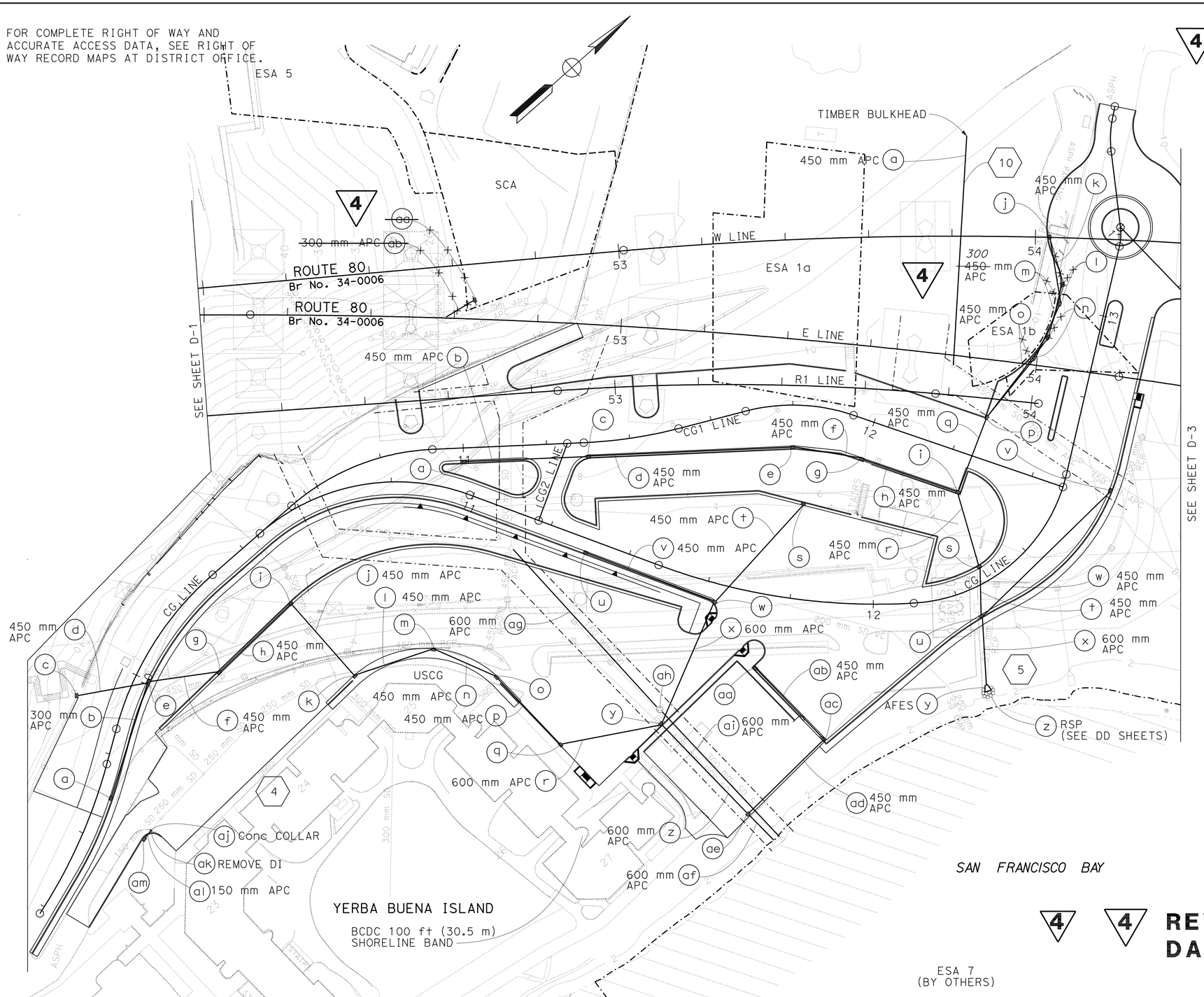

REVISED PER ADDENDUM No. 4 DATED JULY 16, 2012

ALL DIMENSIONS ARE IN METERS UNLESS OTHERWISE SHOWN

FOR NOTES, ABBREVIATIONS &/OR LEGEND, SEE SHEET D-1

THIS PLAN ACCURATE FOR DRAINAGE WORK ONLY

DRAINAGE PLAN

SCALE 1:500

D-2

LAST REVISION 02-16-12 | DATE PLOTTED => 13-JUL-2012 | TIME PLOTTED => 15:51

STATE OF CALIFORNIA - DEPARTMENT OF TRANSPORTATION
Caltrans
HYDRAULICS

FUNCTIONAL SUPERVISOR: JOSEPH PETERSON
CALCULATED-DESIGNED BY: ISAAC PEREZ
CHECKED BY: WEN-SHIOU HORNG
REVISED BY: IP
DATE REVISED: 11-1-11

BORDER LAST REVISED 3/1/2007 | RELATIVE BORDER SCALE IS IN MILLIMETERS 0 20 40 60 80 | USERNAME => s124496 | DGN FILE => 40120tia002.add | CU 04251 | EA 0120T1

Dist	COUNTY	ROUTE	KILOMETER POST TOTAL PROJECT	SHEET No.	TOTAL SHEETS
04	SF	80	12.6/13.9	109	821

REGISTERED CIVIL ENGINEER 11-2-11 DATE

2-21-12
PLANS APPROVAL DATE

REGISTERED PROFESSIONAL ENGINEER Isaac Perez No. 53542 Exp. 6-30-13 CIVIL STATE OF CALIFORNIA

THE STATE OF CALIFORNIA OR ITS OFFICERS OR AGENTS SHALL NOT BE RESPONSIBLE FOR THE ACCURACY OR COMPLETENESS OF ELECTRONIC COPIES OF THIS PLAN SHEET.

Caltrans Metric

FOR COMPLETE RIGHT OF WAY AND ACCURATE ACCESS DATA, SEE RIGHT OF WAY RECORD MAPS AT DISTRICT OFFICE.

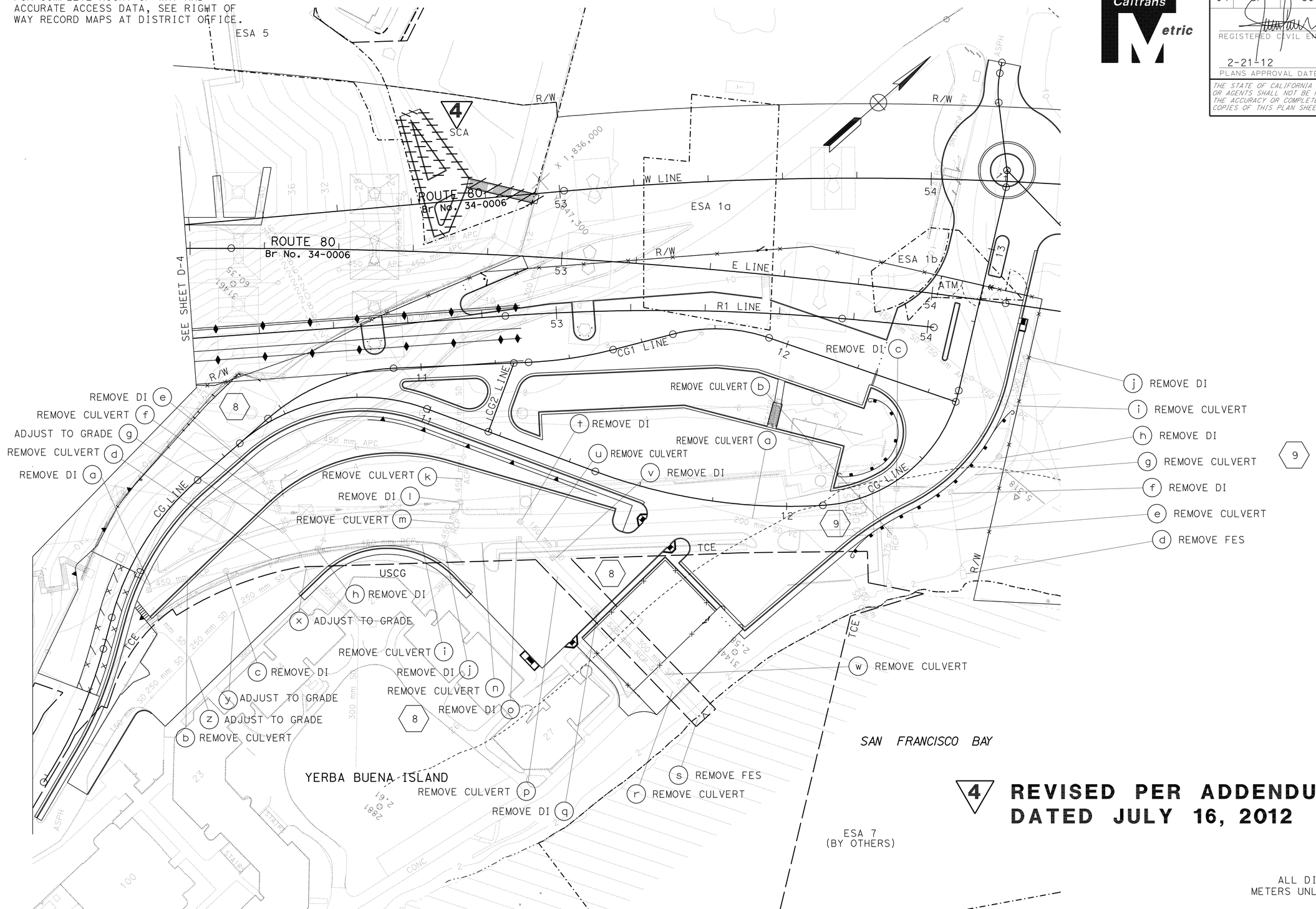

4 **REVISED PER ADDENDUM No. 4 DATED JULY 16, 2012**

ALL DIMENSIONS ARE IN METERS UNLESS OTHERWISE SHOWN

FOR NOTES, ABBREVIATIONS &/OR LEGEND, SEE SHEET D-1

THIS PLAN ACCURATE FOR DRAINAGE WORK ONLY

DRAINAGE PLAN

SCALE 1:500

D-5

STATE OF CALIFORNIA - DEPARTMENT OF TRANSPORTATION
Caltrans
HYDRAULICS

FUNCTIONAL SUPERVISOR: JOSEPH PETERSON
CALCULATED-DESIGNED BY: ISAAC PEREZ
CHECKED BY: WEN-SHIOU HORNG
REVISED BY: IP
DATE REVISED: 11-1-11

LAST REVISION 02-16-12
DATE PLOTTED => 13-JUL-2012
TIME PLOTTED => 15:51

Dist	COUNTY	ROUTE	KILOMETER POST TOTAL PROJECT	SHEET No.	TOTAL SHEETS
04	SF	80	12.6/13.9	118	821

Caltrans Metric

REGISTERED CIVIL ENGINEER 11-2-11 DATE

2-21-12
PLANS APPROVAL DATE

REGISTERED PROFESSIONAL ENGINEER Wen-Shiou Horng No. 61135 Exp. 12-31-12 CIVIL STATE OF CALIFORNIA

THE STATE OF CALIFORNIA OR ITS OFFICERS OR AGENTS SHALL NOT BE RESPONSIBLE FOR THE ACCURACY OR COMPLETENESS OF ELECTRONIC COPIES OF THIS PLAN SHEET.

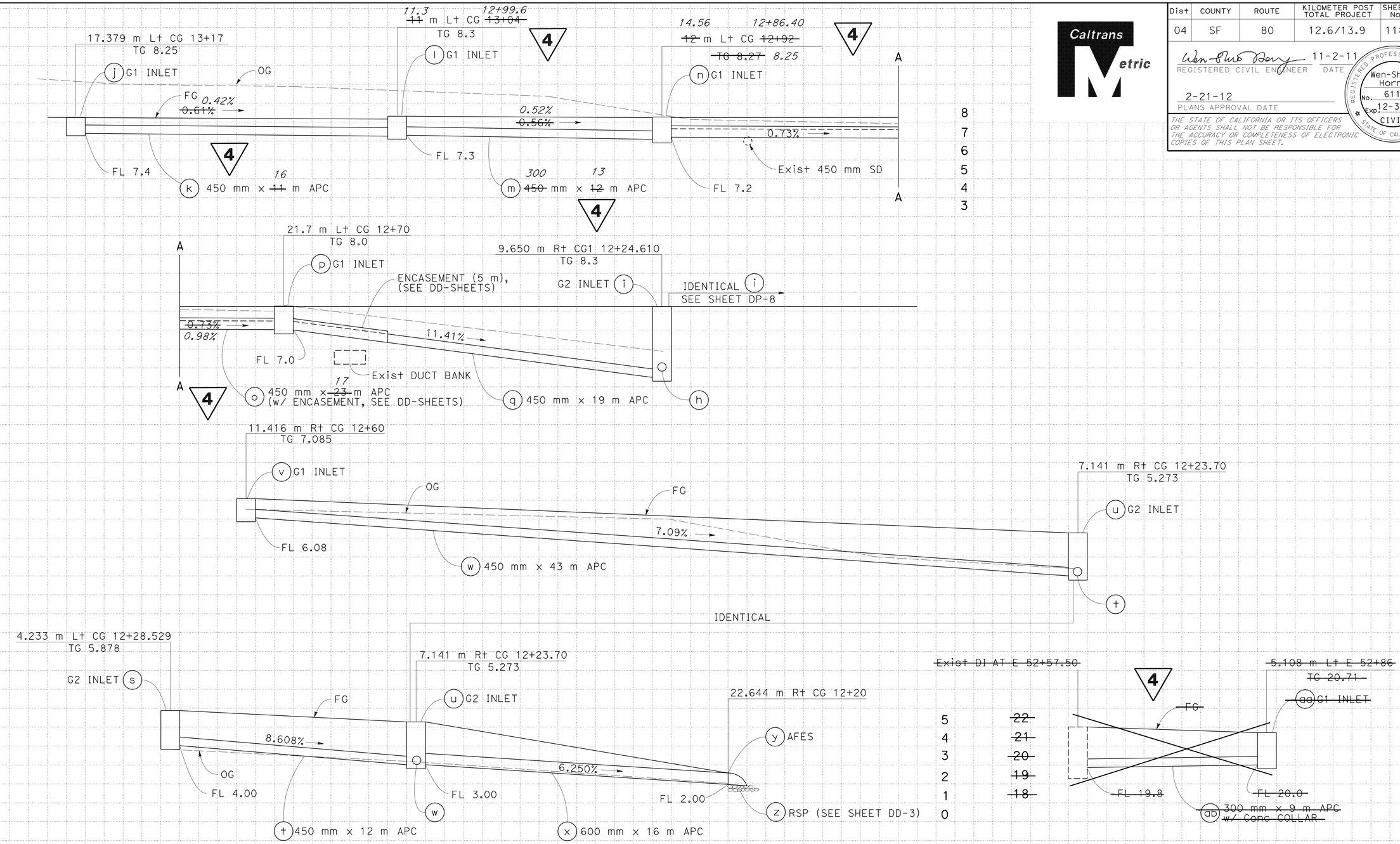

ALL DIMENSIONS ARE IN METERS UNLESS OTHERWISE SHOWN

DRAINAGE SYSTEM No. 5

DRAINAGE PROFILES

SCALE Horiz 1:100
Vert 1:100

4 REVISED PER ADDENDUM No. 4 DATED JULY 16, 2012

DP-9

Station	
m^3	Exc
	Emb

STATE OF CALIFORNIA - DEPARTMENT OF TRANSPORTATION
Caltrans
DESIGN

FUNCTIONAL SUPERVISOR: BOB ZANDIPOUR
CALCULATED-DESIGNED BY: WEN-SHIOU HORNG
CHECKED BY: ISAAC PEREZ
REVISED BY: WSH
DATE REVISED: 11-1-11

LAST REVISION 11-03-11
DATE PLOTTED => 13-JUL-2012
TIME PLOTTED => 15:51

Dist	COUNTY	ROUTE	KILOMETER POST TOTAL PROJECT	SHEET No.	TOTAL SHEETS
04	SF	80	12.6/13.9	122	821

REGISTERED CIVIL ENGINEER 11-2-11 DATE

2-21-12
PLANS APPROVAL DATE

REGISTERED PROFESSIONAL ENGINEER Isaac Perez No. 53542 Exp. 6-30-13 CIVIL STATE OF CALIFORNIA

THE STATE OF CALIFORNIA OR ITS OFFICERS OR AGENTS SHALL NOT BE RESPONSIBLE FOR THE ACCURACY OR COMPLETENESS OF ELECTRONIC COPIES OF THIS PLAN SHEET.

Caltrans Metric

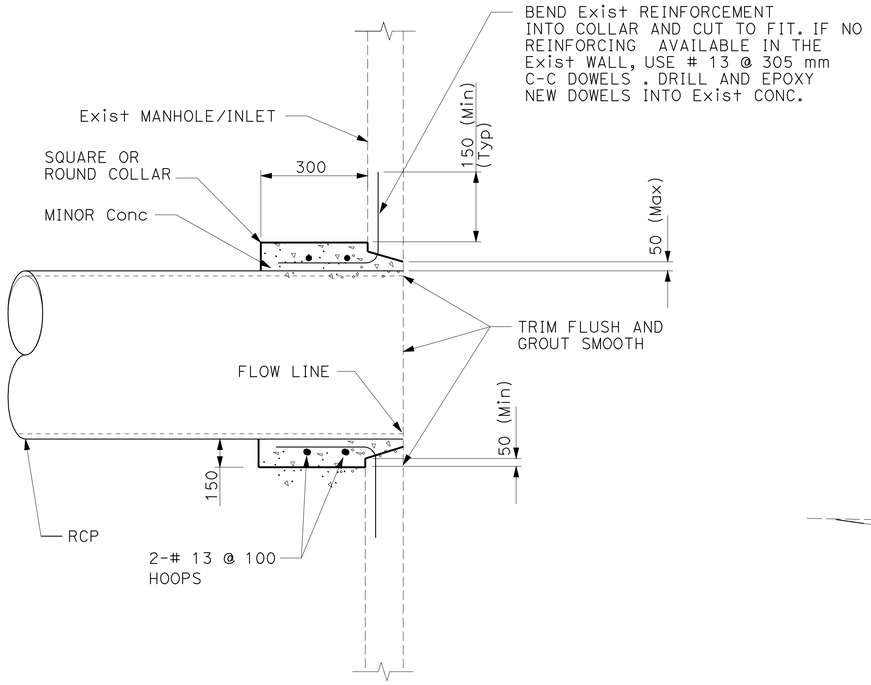

CONCRETE COLLAR PIPE CONNECTION TO EXISTING INLET

1 a 2 h 4 ag ~~5 ab~~ 10 a

4

PCC LINED DITCH 2 t Xs=1:2

STATION	OFFSET	FL	
BP 30+53.89	2.3 Lt	45.99	BEGINNING
BP 31+39.241	2.3 Lt	46.21	END

PCC LINED DITCH 3 m Xs=1:3

STATION	OFFSET	FL	
WW 80+06	37.0 Lt	59.0	BEGINNING
WW 80+10	22.0 Lt	58.5	
WW 80+20	13.5 Lt	57.5	
WW 80+30	10.5 Lt	57.0	
WW 80+40	8.5 Lt	56.5	
WW 80+60	6.5 Lt	56.2	
WW 80+72	10.0 Lt	56.0	END @ Exist DI

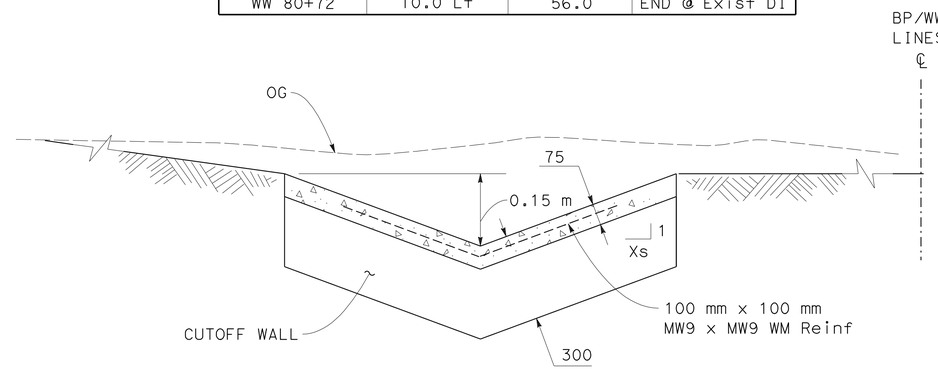

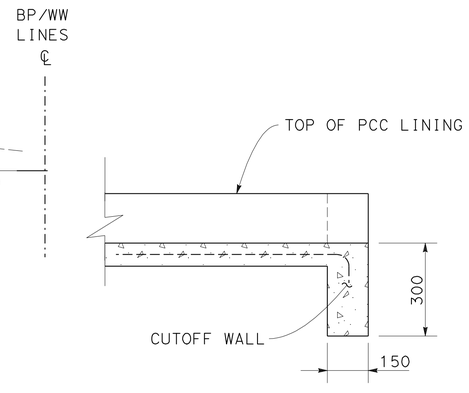

LONGITUDINAL SECTION

NOTE:
CUTOFF WALL REQUIRED AT THE BEGINNING AND END OF ALL LINED DITCHES.

2 t

3 m

PCC LINED DITCH

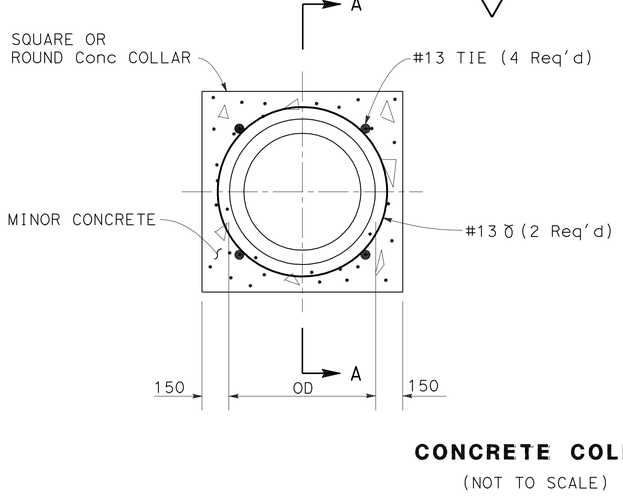

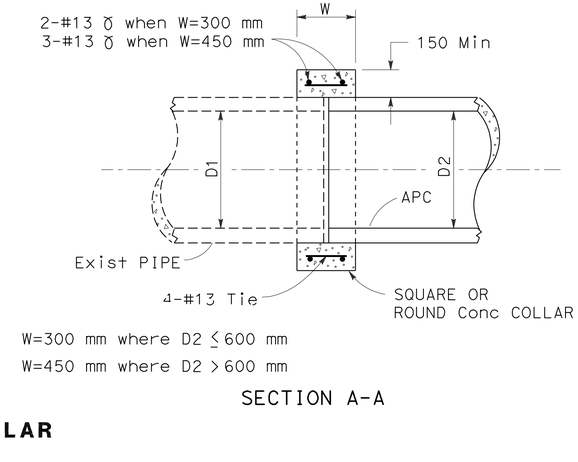

SECTION A-A

CONCRETE COLLAR

(NOT TO SCALE)

4 aj

NOTE: THIS COLLAR TO BE USED FOR JOINING PIPES OF DIFFERENT TYPES OR SIZES.

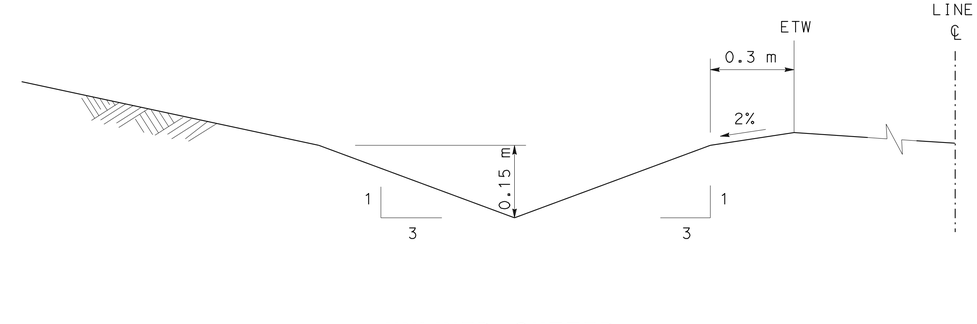

UNLINED GUTTER

6 a

4 **REVISED PER ADDENDUM No. 4 DATED JULY 16, 2012**

ALL DIMENSIONS ARE IN MILLIMETERS UNLESS OTHERWISE SHOWN

DRAINAGE DETAILS

NO SCALE

DD-2

STATE OF CALIFORNIA - DEPARTMENT OF TRANSPORTATION	HYDRAULICS	FUNCTIONAL SUPERVISOR	JOSEPH PETERSON
CALCULATED-DESIGNED BY	ISAAC PEREZ	REVISED BY	IP
CHECKED BY	WEN-SHIOU HORNG	DATE REVISED	11-1-11

LAST REVISION 11-03-11 | DATE PLOTTED => 13-JUL-2012 | TIME PLOTTED => 15:51

4 REVISED PER ADDENDUM No. 4 DATED JULY 16, 2012

Caltrans Metric

Dist	COUNTY	ROUTE	KILOMETER POST TOTAL PROJECT	SHEET No.	TOTAL SHEETS
04	SF	80	12.6/13.9	127	821

REGISTERED CIVIL ENGINEER 11-2-11 DATE

2-21-12
PLANS APPROVAL DATE

REGISTERED PROFESSIONAL ENGINEER Wen-Shiou Horng No. 61135 Exp. 12-31-12 CIVIL STATE OF CALIFORNIA

THE STATE OF CALIFORNIA OR ITS OFFICERS OR AGENTS SHALL NOT BE RESPONSIBLE FOR THE ACCURACY OR COMPLETENESS OF ELECTRONIC COPIES OF THIS PLAN SHEET.

4

DRAINAGE QUANTITIES

DRAINAGE SYSTEM No.	DRAINAGE UNIT	REMOVE CULVERT (m)	REMOVE INLET (EA)	REMOVE FES (EA)	ADJUST INLET (EA)	APC 150 mm (m)	APC 300 mm (m)	APC 450 mm (m)	APC 600 mm (m)	AFES 300 mm (EA)	AFES 450 mm (EA)	AFES 600 mm (EA)	FRAME & COVER [N] DETAIL U-45, Std PLAN B7-11 (EA)	FRAME & GRATE [N] 600-12 (EA)	FRAME & GRATE [N] 600-13 (EA)	Misc IRON & STEEL (kg)	MINOR CONCRETE (MINOR STRUCTURE) (m^3)	MINOR CONCRETE (BACKFILL) (m^3)	CONCRETE (DITCH LINING) (m^3)	CONCRETE COLLAR [N] (EA)	PIPE JOINT CLASSIFICATION [N]	HEIGHT OF INLET [N] (m)	MAXIMUM COVER [N] (m)	RSP (BACKING No. 2, METHOD B) (m^3)	RSP FABRIC (m^2)	MINOR CONCRETE (MISCELLANEOUS CONSTRUCTION) (m^3)	DRAINAGE INLET MARKER (EA)	DESCRIPTION	STATION	DRAINAGE PLAN SHEET No.	DRAINAGE SYSTEM No.	DRAINAGE UNIT
4	aj																			1								CONCRETE COLLAR		D-2	4	aj
	ak		1																									REMOVE DI				ak
	al					2															PW							150 mm APC				al
	am													1		148	1.01					0.9					1	G1 INLET	14.42 m Rt CG 09+64			am
5	a													1		148	0.75					1				1.74	1	G1 INLET w/ SGD	3.41 m Rt CG1 11+00	D-2	5	a
	b							29													PW		1.74					450 mm APC				b
	c													1		148	1.84					2.23				1.67	1	G2 INLET w/ SGD	3.41 m Rt CG1 11+30			c
	d							48													PW		2.52					450 mm APC				d
	e													1		148	2.31					2.96				1.67	1	G2 INLET w/ SGD	10.374 m Rt CG1 11+80			e
	f							16													PW		2.68					450 mm APC				f
	g													1		148	2.44					3.16				1.67	1	G2 INLET w/ SGD	9.635 m Rt CG1 12+00			g
	h							24													PW		3.02					450 mm APC				h
	i													1		148	2.65					3.5				1.67	1	G2 INLET w/ SGD	9.65 m Rt CG 12+24.610			i
	j													1		148	0.69					0.85				1.74	1	G1 INLET w/ SGD	17.379 m Lt CG 13+17			j
	k							16													PW		0.57					450 mm APC				k
	l													1		148	0.75					1				1.74	1	G1 INLET w/ SGD	11.3 m Lt CG 12+99.6			l
	m						13														PW		0.59					300 mm APC				m
	n													1		148	0.78					1.07				1.74	1	G1 INLET w/ SGD	14.56 m Lt CG 12+86.40			n
	o							17										4.93			PW		0.62					450 mm APC w/ ENCASEMENT				o
	p													1		148	0.75					1				1.74	1	G1 INLET w/ SGD	21.70 m Lt CG 12+70			p
	q							19										1.45			PW		3.02					450 mm APC w/ 5 m ENCASEMENT				q
	r							18													PW		3.05					450 mm APC				r
	s													1		148	1.63					1.88				1.67	1	G2 INLET w/ SGD	4.233 m Lt CG 12+28.529			s
	t							12													PW		1.79					450 mm APC				t
	u													1		148	1.87					2.27				1.67	1	G2 INLET w/ SGD	7.141 m Rt CG 12+23.70			u
	v													1		148	0.75					1.01				1.74	1	G1 INLET w/ SGD	11.416 m Rt CG 12+60			v
	w							43													PW		1.79					450 mm APC				w
	x								16												PW		1.67					600 mm APC				x
	y											1																AFES	22.644 m Rt CG 12+20			y
	z																							2.48	9.98			RSP				z
6	a																											UNLINED GUTTER		D-3	6	a
	b									1																		AFES	14.907 m Lt TF3 1+93.129			b
	c						25														PW		0.7					300 mm APC				c
	d									1																		AFES	34.544 m Lt TF3 2+11.685			d
	e									1																		AFES	9.81 m Lt TF3 2+58.50			e
	f						43														PW		0.47					300 mm APC				f
	g													1		148	0.69					0.8				1.74	1	G1 INLET w/ SGD	4.35 m Lt TF3 3+00			g
SHEET TOTAL			1			2	81	242	16	3		1		14		2072	18.91	6.38		1		23.63	24.23	2.48	9.98	22.26	14					

WEN-SHIOU HORNG — REVISED BY — IP
ISAAC PEREZ — DATE REVISED — 10/18/11
CALCULATED-DESIGNED BY
CHECKED BY
FUNCTIONAL SUPERVISOR — BOB ZANDIPOUR

STATE OF CALIFORNIA - DEPARTMENT OF TRANSPORTATION
Caltrans DESIGN

LAST REVISION 11-09-11 DATE PLOTTED => 13-JUL-2012 TIME PLOTTED => 15:51

4 REVISED PER ADDENDUM No. 4 DATED JULY 16, 2012

Caltrans Metric

Dist	COUNTY	ROUTE	KILOMETER POST TOTAL PROJECT	SHEET No.	TOTAL SHEETS
04	SF	80	12.6/13.9	129	821

REGISTERED CIVIL ENGINEER 11-2-11 DATE

2-21-12
PLANS APPROVAL DATE

REGISTERED PROFESSIONAL ENGINEER Wen-Shiou Horng No. 61135 Exp. 12-31-12 CIVIL STATE OF CALIFORNIA

THE STATE OF CALIFORNIA OR ITS OFFICERS OR AGENTS SHALL NOT BE RESPONSIBLE FOR THE ACCURACY OR COMPLETENESS OF ELECTRONIC COPIES OF THIS PLAN SHEET.

DRAINAGE QUANTITIES

DRAINAGE SYSTEM No.	DRAINAGE UNIT	REMOVE CULVERT (m)	REMOVE INLET (EA)	REMOVE FES (EA)	ADJUST INLET (EA)	APC 150 mm (m)	APC 300 mm (m)	APC 450 mm (m)	APC 600 mm (m)	AFES 300 mm (EA)	AFES 450 mm (EA)	AFES 600 mm (EA)	FRAME & COVER [N] DETAIL U-45, Std PLAN B7-11 (EA)	FRAME & GRATE [N] 600-12 (EA)	FRAME & GRATE [N] 600-13 (EA)	Misc IRON & STEEL (kg)	MINOR CONCRETE (MINOR STRUCTURE) (m^3)	MINOR CONCRETE (BACKFILL) (m^3)	CONCRETE (DITCH LINING) (m^3)	CONCRETE COLLAR [N] (EA)	PIPE JOINT CLASSIFICATION [N]	HEIGHT OF INLET [N] (m)	MAXIMUM COVER [N] (m)	RSP (BACKING No. 2, METHOD B) (m^3)	RSP FABRIC (m^2)	MINOR CONCRETE (MISCELLANEOUS CONSTRUCTION) (m^3)	DRAINAGE INLET MARKER (EA)	DESCRIPTION	STATION	DRAINAGE PLAN SHEET No.	DRAINAGE SYSTEM No.	DRAINAGE UNIT
8	m	11																										REMOVE 450 mm RCP		D-5	8	m
	n	18																										REMOVE 450 mm RCP				n
	o		1																			1.8						REMOVE DI	24.0 m R+ CG 11+35			o
	p	28																										REMOVE 525 mm RCP				p
	q		1																			1.5						REMOVE DI	36.0 m R+ CG 11+58			q
	r	38																										REMOVE 525 mm RCP				r
	s			1																								REMOVE FES	58.0 m R+ CG 11+83			s
	t		1																			1.3						REMOVE DI	20.0 m R+ CG 11+36			t
	u	12																										REMOVE 150 mm CULVERT				u
	v		1																			1.4						REMOVE DI	26.0 m R+ CG 11+45			v
	w	57																										REMOVE 300 mm CULVERT				w
	x				1																						1	ADJUST TO GRADE	22.8 m R+ CG 09+81.5			x
	y				1																						1	ADJUST TO GRADE	30 m R+ CG 10+02			y
	z				1																						1	ADJUST TO GRADE	37.48 m R+ CG 10+38			z
9	a	56																										REMOVE 200 mm CULVERT		D-5	9	a
	b	24																										REMOVE 375 mm RCP				b
	c		1																			1						REMOVE DI	2.0 m R+ CG 12+30			c
	d			1																								REMOVE FES	29.0 m R+ CG 12+32			d
	e	19																										REMOVE 300 mm CULVERT				e
	f		1																			0.7						REMOVE DI	12.0 m R+ CG 12+39			f
	g	15																										REMOVE 300 mm CULVERT				g
	h		1																			0.5						REMOVE DI	16.0 m R+ CG 12+50			h
	i	25																										REMOVE 300 mm CULVERT				i
	j		1																			0.5						REMOVE DI	15.0 m R+ CG 12+74			j
10	a							55												1								450 mm APC w/ Conc COLLAR & TIMBER BULKHEAD		D-2	10	a
SHEET TOTAL		303	8	2	3			55												1			8.70				3					
TOTAL FROM SHEET DQ-1							33	298					19	1	2897	26.74	5.80	5	2		32.48	24.90			27	19		SHEET TOTAL FROM DQ-1				
TOTAL FROM SHEET DQ-2							29	270	188			1	17		2716	20.91	34.42	7	1		25.40	26.80			15	18		SHEET TOTAL FROM DQ-2				
TOTAL FROM SHEET DQ-3			1			2	81 ~~77~~	242 ~~255~~	16	3		1	14 ~~15~~		2072 ~~2220~~	18.91 ~~19.60~~	6.38 ~~8.12~~		1 ~~2~~		23.63 ~~24.34~~	24.23 ~~24.64~~	2.48	9.98	22.26 ~~24~~	14 ~~15~~	4	SHEET TOTAL FROM DQ-3				
TOTAL FROM SHEET DQ-4		319	18		1			14			1						1.50					19.85	2.28	9.38		1		SHEET TOTAL FROM DQ-4				
GRAND TOTAL		622	27	2	4	2	143 ~~139~~	879 ~~892~~	204	3	1	1	1 50 ~~51~~	1	7685 ~~7833~~	66.56 ~~67.25~~	48.10 ~~49.84~~	12	5 ~~6~~		81.51 ~~82.22~~	104.48 ~~104.89~~	4.76	19.36	64.26 ~~66~~	55 ~~56~~	4	GRAND TOTAL				

WEN-SHIOU HORNG — REVISED BY — A
ISAAC PEREZ — DATE REVISED — A
CALCULATED-DESIGNED BY
CHECKED BY
FUNCTIONAL SUPERVISOR
BOB ZANDIPOUR

STATE OF CALIFORNIA - DEPARTMENT OF TRANSPORTATION
Caltrans
DESIGN

LAST REVISION 11-09-11
DATE PLOTTED => 13-JUL-2012
TIME PLOTTED => 1552

FOR COMPLETE RIGHT OF WAY AND ACCURATE ACCESS DATA, SEE RIGHT OF WAY RECORD MAPS AT DISTRICT OFFICE.

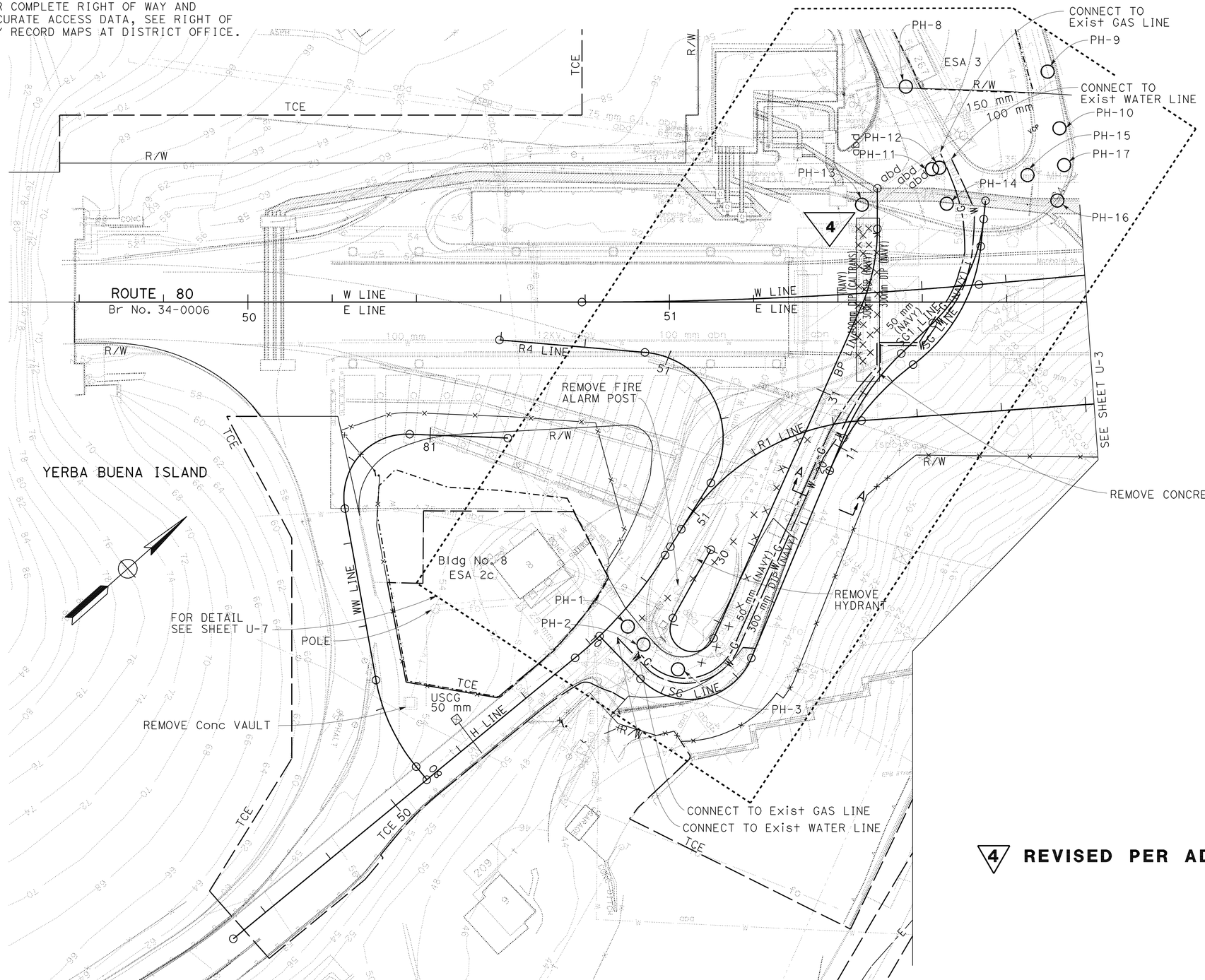

Dist	COUNTY	ROUTE	KILOMETER POST TOTAL PROJECT	SHEET No.	TOTAL SHEETS
04	SF	80	12.6/13.9	131	821

REGISTERED CIVIL ENGINEER 11-07-11 DATE

2-21-12
PLANS APPROVAL DATE

REGISTERED PROFESSIONAL ENGINEER Ahmad Sayadi No. 74962 Exp. 12-31-11 CIVIL STATE OF CALIFORNIA

THE STATE OF CALIFORNIA OR ITS OFFICERS OR AGENTS SHALL NOT BE RESPONSIBLE FOR THE ACCURACY OR COMPLETENESS OF ELECTRONIC COPIES OF THIS PLAN SHEET.

Caltrans Metric

NOTE:

FOR SECTION A-A AND PROFILE, SEE SHEET UD-3.

4 **REVISED PER ADDENDUM No.4 DATED JULY 16, 2012**

FOR NOTES, ABBREVIATIONS &/OR LEGEND, SEE SHEET U-1

THIS PLAN ACCURATE FOR UTILITY WORK ONLY

ALL DIMENSIONS ARE IN METERS UNLESS OTHERWISE SHOWN

UTILITY PLAN

SCALE 1:500

U-2

REVISED BY	AS
DATE REVISED	11-1-11
ADAM SAYADI	
AMANDO VITO	
CALCULATED-DESIGNED BY	
CHECKED BY	
FUNCTIONAL SUPERVISOR	
BOB ZANDIPOUR	

STATE OF CALIFORNIA - DEPARTMENT OF TRANSPORTATION

Caltrans **DESIGN**

LAST REVISION 07-13-12 | DATE PLOTTED => 13-JUL-2012 | TIME PLOTTED => 1552

Dist	COUNTY	ROUTE	KILOMETER POST TOTAL PROJECT	SHEET No.	TOTAL SHEETS
04	SF	80	12.6/13.9	140	821

Caltrans Metric

REGISTERED CIVIL ENGINEER 10/31/11 DATE

2-21-12
PLANS APPROVAL DATE

REGISTERED PROFESSIONAL ENGINEER Mark Grodzki No. 65594 Exp. 09/30/13 CIVIL STATE OF CALIFORNIA

THE STATE OF CALIFORNIA OR ITS OFFICERS OR AGENTS SHALL NOT BE RESPONSIBLE FOR THE ACCURACY OR COMPLETENESS OF ELECTRONIC COPIES OF THIS PLAN SHEET.

PB AMERICAS, Inc.
303 Second St., Suite 700N
San Francisco, CA 94107-1317

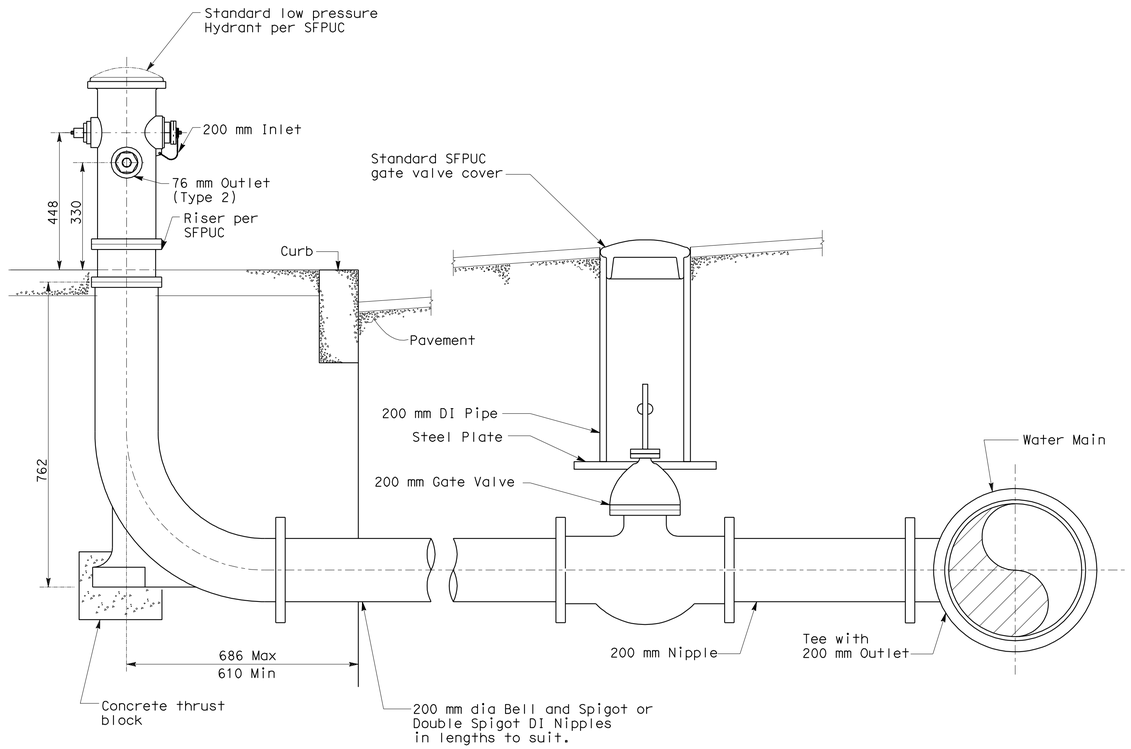

TYPICAL LAYOUT FOR HYDRANT CONNECTION

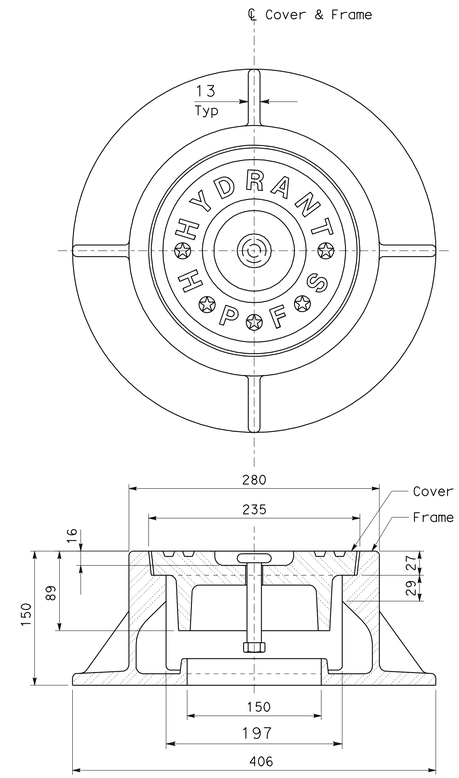

Approximate Weights:

Frame.....43 kgs
Cover.....12 kgs
Dust pan..... 4 kgs

Total...59 kgs

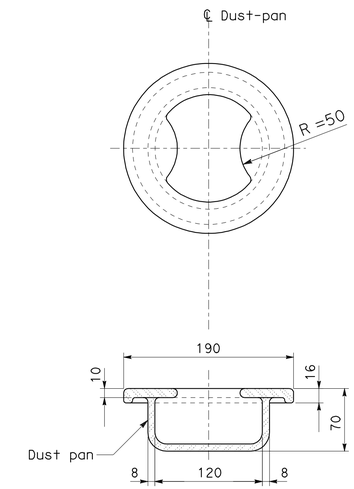

GATE VALVE COVER, FRAME AND DUST PAN DETAILS

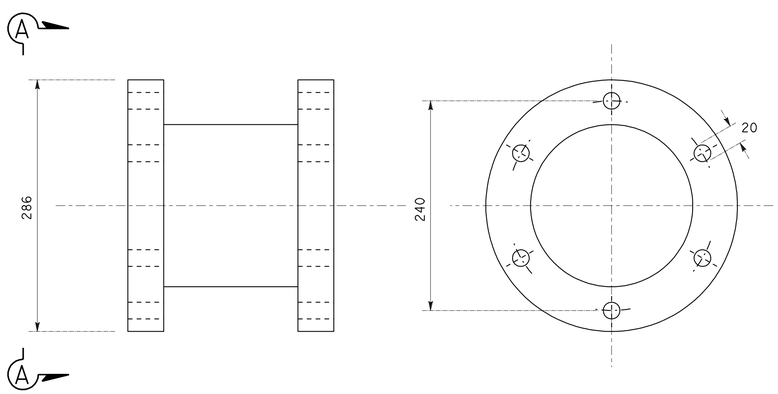

SECTION A-A

HYDRANT RISER

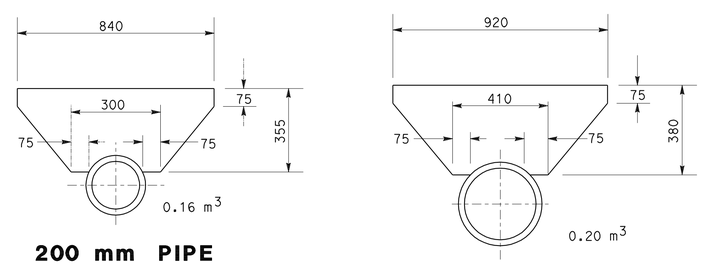

200 mm PIPE

300 mm PIPE

THRUST BLOCK DETAILS

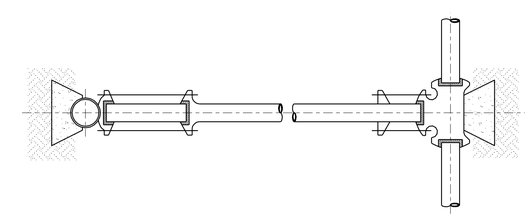

HYDRANT THRUST BLOCK LAYOUT

4 4 **REVISED PER ADDENDUM No. 4 DATED JULY 16, 2012**

ALL DIMENSIONS ARE IN MILLIMETERS UNLESS OTHERWISE SHOWN

UTILITY DETAILS
CITY AND COUNTY OF SAN FRANCISCO

NO SCALE

UD-1

STATE OF CALIFORNIA - DEPARTMENT OF TRANSPORTATION
Caltrans

CONSULTANT FUNCTIONAL SUPERVISOR: BOB ZANDIPOUR
CALCULATED-DESIGNED BY: M. GRODZKI
CHECKED BY: B. NADELL
REVISED BY / DATE REVISED

LAST REVISION 00-00-00
DATE PLOTTED => 13-JUL-2012
TIME PLOTTED => 15:52

4 REVISED PER ADDENDUM No. 4 DATED JULY 16, 2012

Dist	COUNTY	ROUTE	KILOMETER POST TOTAL PROJECT	SHEET No.	TOTAL SHEETS
04	SF	80	12.6/13.9	145	821

REGISTERED CIVIL ENGINEER 11-07-11 DATE

2-21-12
PLANS APPROVAL DATE

REGISTERED PROFESSIONAL ENGINEER Ahmad Sayadi No. 74962 Exp. 12-31-11 CIVIL STATE OF CALIFORNIA

THE STATE OF CALIFORNIA OR ITS OFFICERS OR AGENTS SHALL NOT BE RESPONSIBLE FOR THE ACCURACY OR COMPLETENESS OF ELECTRONIC COPIES OF THIS PLAN SHEET.

Caltrans Metric

FIRE HYDRANT

SHEET No.	LOCATION		RELOCATE HYDRANT	REMOVE HYDRANT	INSTALL FIRE HYDRANT	OWNER
			EA			
U-2	SG 10+60	L+		1		NAVY
U-8	CG 11+47	R+			1	NAVY
U-8	CG 13+05	R+	1			NAVY
TOTAL			1	1	1	

WATER METERS

SHEET No.	LOCATION	METER SIZE (EA)		WATER METER BOX [N]	50 mm GATE VALVE [N]	OWNER	REMARK
		50 mm	75 mm				
U-2	95.0 m R+ E 50+50	1		1	1	COAST GUARD	LANDSCAPE
U-3	33.0 m R+ E 53+25	1		1	1	COAST GUARD	LANDSCAPE
U-3	37.0 m R+ E 54+40	1		1	1	CALTRANS	LANDSCAPE
TOTAL		3		3	3		

[N] NOT A SEPARATE PAY ITEM, FOR INFORMATION ONLY

REMOVE CONCRETE

SHEET No.	LOCATION	REMOVE CONCRETE	REMARK
		m^3	
U-2	L+ & R+ E 51+46	40	WATER AND GAS PIPES Conc CASING

NOTE: SEE Q SHEETS FOR TOTAL QUANTITY

4 UTILITY QUANTITIES

SHEET No.	LOCATION	GAS PIPE		WATER PIPE		SEWER PIPE		PLASTIC PIPE 100 mm (SCHEDULE 80)	ADJUST MANHOLE TO GRADE	OWNER
		50 mm PE	100 mm PE	25 mm Galv Stl	300 mm DIP	75 mm PVC	150 mm PVC			
		m							EA	
U-2	83 m R+ E 50+92 TO 35 m L+ E 51+65	183								NAVY
U-2	80 m R+ E 50+86 TO 33 m L+ E 51+67				184					NAVY
U-3	E 51+60 TO 54+30							2160		AT&T
U-3	E 53+00 TO 53+20									COMCAST
U-3	E 51+70 TO 52+00									COMCAST
U-3	E 52+10 TO 53+20				160					NAVY
U-3	E 54+15 TO 54+25			~~7~~ 14		10				NAVY
U-3	E 53+00 TO 53+65						138			NAVY
U-3	E 54+00 TO 54+25		62				~~12~~			NAVY
U-3	17 m R+ E 53+30								3	
U-3	18 m R+ E 54+25								3	
TOTAL		183	62	~~7~~ 14	344	10	~~150~~ 138	2160	6	

MINOR CONCRETE (MINOR STRUCTURE)

SHEET No.	LOCATION	MINOR CONCRETE (MINOR STRUCTURE)	REMARK
		m^3	
U-3	E 51+60 TO 54+30	131	FIBER OPTIC DUCT BANK Conc CASING

NOTE: SEE Q SHEETS FOR TOTAL QUANTITY

REMOVAL QUANTITIES

SHEET No.	LOCATION	GAS PIPE 50 mm PE	WATER PIPE		FIBER OPTIC CABLE	SEWER PIPE 150 mm	CONCRETE VAULT 1.5 m x 1.5 m x 1.4 m	FIRE ALARM POST	OWNER
			250 mm DIP	300 mm DIP					
		m					EA		
U-2	SG 10+09 TO 11+20	84							NAVY
U-2	SG 10+05 TO 11+20			77					NAVY
U-2	15.00 m L+ SG 10+50							1	NAVY
U-2	4.00 m R+ WW 80+20						1		USCG
U-3	E 51+85 TO 53+20		190						NAVY
U-3	CG 10+00 TO 12+32				360				AT&T
U-3	E 52+60 TO 54+25					252			NAVY
U-3	E 51+70 TO 52+00								COMCAST
SUBTOTAL		84	190	77	360	252	1	1	
TOTAL		84	267		360	252	1	1	

UTILITY QUANTITIES

UQ-1

REVISED BY	DATE REVISED
AS	11-1-11

CALCULATED-DESIGNED BY: ADAM SAYADI
CHECKED BY: AMANDO VITO
FUNCTIONAL SUPERVISOR: BOB ZANDIPOUR

STATE OF CALIFORNIA - DEPARTMENT OF TRANSPORTATION
Caltrans DESIGN

LAST REVISION 02-08-12 DATE PLOTTED => 13-JUL-2012 TIME PLOTTED => 15:52

Dist	COUNTY	ROUTE	KILOMETER POST TOTAL PROJECT	SHEET No.	TOTAL SHEETS
04	SF	80	12.6/13.9	175	821

REGISTERED CIVIL ENGINEER 02/03/12 DATE

2-21-12
PLANS APPROVAL DATE

REGISTERED PROFESSIONAL ENGINEER Mark Grodzki No. 65594 Exp. 09/30/13 CIVIL STATE OF CALIFORNIA

THE STATE OF CALIFORNIA OR ITS OFFICERS OR AGENTS SHALL NOT BE RESPONSIBLE FOR THE ACCURACY OR COMPLETENESS OF ELECTRONIC COPIES OF THIS PLAN SHEET.

PB AMERICAS, Inc.
303 Second St., Suite 700N
San Francisco, CA 94107-1317

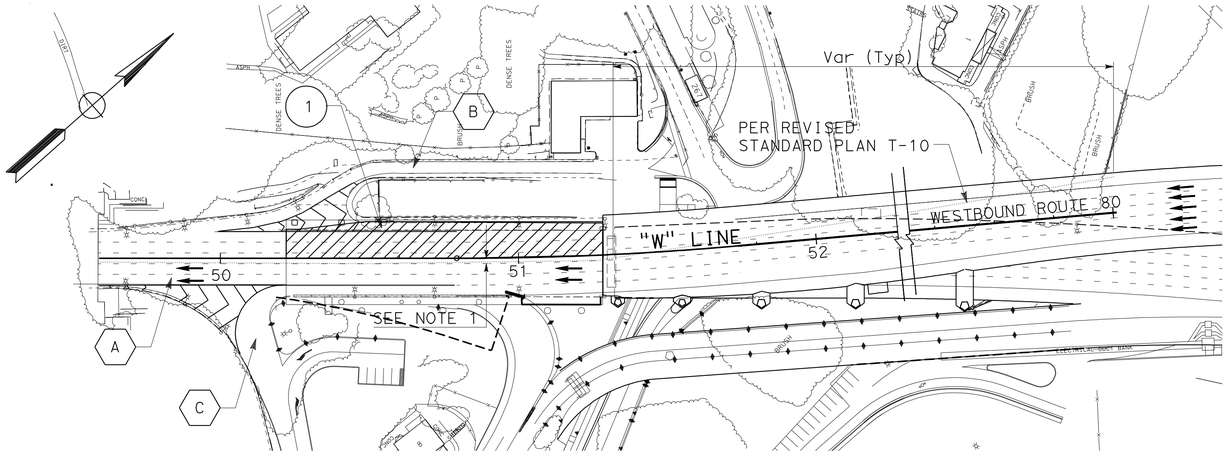

STAGE 5 - PHASE 1:
PROVIDE OVERLAY ON THE OUTSIDE LANES (SEE STRUCTURE PLANS FOR DETAILS).
WESTBOUND

CONSTRUCTION	
1	PROVIDE POLYESTER CONCRETE OVERLAY ON WB-80, UPPER DECK, FROM Sta (Lt) "W" 50+22.10 TO (Lt) "W" 51+28.340 (SEE STRUCTURE PLANS FOR DETAILS).

TRAFFIC HANDLING	
A	PROVIDE TRAFFIC CONTROL SYSTEM ON WB-80, PER REVISED STANDARD PLAN T-10 TO CLOSE THREE RIGHT LANES AND MAINTAIN THE NUMBER OF LANES OPEN TO TRAFFIC PER LANE CLOSURE CHARTS OF THE SPECIAL PROVISIONS.
B	WB-80 ON-RAMP OPEN TO TRAFFIC.
C	WB-80 OFF-RAMP OPEN TO TRAFFIC.

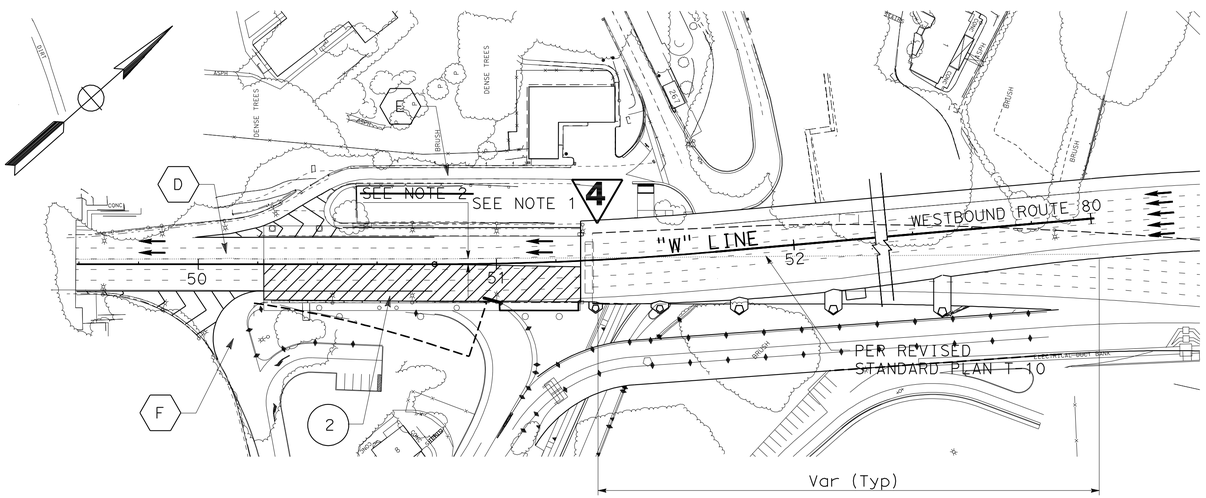

STAGE 5 - PHASE 2:
PROVIDE OVERLAY ON THE INSIDE LANES (SEE STRUCTURE PLANS FOR DETAILS).
WESTBOUND

CONSTRUCTION	
2	PROVIDE POLYESTER CONCRETE OVERLAY ON WB-80, UPPER DECK, FROM Sta (Rt) "W" 50+22.10 TO (Rt) "W" 51+28.340 (SEE STRUCTURE PLANS FOR DETAILS).

TRAFFIC HANDLING	
D	PROVIDE TRAFFIC CONTROL SYSTEM ON WB-80, PER REVISED STANDARD PLAN T-10 TO CLOSE THREE LEFT LANES AND MAINTAIN THE NUMBER OF LANES OPEN TO TRAFFIC PER LANE CLOSURE CHARTS OF THE SPECIAL PROVISIONS.
E	WB-80 ON-RAMP OPEN TO TRAFFIC.
F	WB-80 OFF-RAMP CLOSED TO TRAFFIC. PROVIDE DETOUR 4 (SEE CS SHEETS).

NOTE:

1. PROVIDE A DISTANCE NOT LESS THAN 1.80 m FROM THE NEAREST CONSTRUCTION LIMIT TO THE TRAFFIC LANE.

4 REVISED PER ADDENDUM No. 4 DATED JULY 16, 2012

FOR NOTES, ABBREVIATIONS AND/OR LEGEND SEE SHEET SC-1

THIS PLAN ACCURATE FOR PAVEMENT DELINEATION WORK ONLY.

ALL DIMENSIONS ARE IN METERS UNLESS OTHERWISE SHOWN

STAGE CONSTRUCTION AND TRAFFIC HANDLING PLAN STAGE 5

SCALE 1:1000

SC-21

STATE OF CALIFORNIA - DEPARTMENT OF TRANSPORTATION
Caltrans

CONSULTANT FUNCTIONAL SUPERVISOR: BOB ZANDIPOUR
CALCULATED-DESIGNED BY: M. GRODZKI
CHECKED BY: B. NADELL
REVISED BY / DATE REVISED

LAST REVISION 00-00-00 DATE PLOTTED => 13-JUL-2012 TIME PLOTTED => 15:52

Dist	COUNTY	ROUTE	KILOMETER POST TOTAL PROJECT	SHEET No.	TOTAL SHEETS
04	SF	80	12.6/13.9	213	821

Prashant Jalvi 11-2-11
REGISTERED CIVIL ENGINEER DATE

2-21-12
PLANS APPROVAL DATE

REGISTERED PROFESSIONAL ENGINEER Prashant Jalvi No. 77542 Exp. 06-30-13 CIVIL STATE OF CALIFORNIA

THE STATE OF CALIFORNIA OR ITS OFFICERS OR AGENTS SHALL NOT BE RESPONSIBLE FOR THE ACCURACY OR COMPLETENESS OF ELECTRONIC COPIES OF THIS PLAN SHEET.

Caltrans Metric

ROADWAY QUANTITIES

SHEET No.	STATION LIMITS	HMA (TYPE A)	CL 3 AB	CL 4 AS	CONCRETE PAVEMENT	MINOR CONCRETE (MISCELLANEOUS CONSTRUCTION) **	FURNISH POLYESTER CONCRETE OVERLAY	PLACE POLYESTER CONCRETE OVERLAY	HMA DIKE (TYPE A)	SEAL PAVEMENT JOINT
		TONN	m3					m2	m	
L-2	E 49.59.25 TO 51+17.50						67	3362		47
L-7	CG 9+43.13 TO 13+50.93	3679	3361	1298	24	163				
L-7	CG1 10+94.08 TO 12.47.86	1017	925	246		11				
C-5	SG 10+00.00 TO 11+70.50	510	234	4 189 ~~199~~		4 66 ~~73~~				
L-2	H 49.71.99 TO 50+90.00	165								
L-2	R4 50+59.68 TO 51+53.63	538	347	45		9				
L-2	WW 80+04.00 TO 81+18.14	496	366	20		13				
L-8	TF3 1+17.50 TO 3+94.17	312	283	224						
C-15	TF3A 2+24.40 TO 2+88.57	23	121	96						
	SUBTOTAL FROM SHEET SCQ-1	97	59	121					48	
	FROM STRUCTURE PLANS						65	2980		
	TOTAL	6837	5696	4 2239 ~~2249~~	24	*	132	6342	48	47

* SEE SHEET Q-3 FOR TOTAL QUANTITY
** MINOR CONCRETE (MISCELLANEOUS CONSTRUCTION) QUANTITY SHOWN ON Q-1 INCLUDES SIDEWALK AND CURB RAMP

4 REVISED PER ADDENDUM No. 4 DATED JULY 16, 2012

COLD PLANE AC PAVEMENT (60 mm Max)

SHEET No.	STATION LIMITS	LOCATIONS	45 mm	60 mm
			m2	
L-7	CG 9+41.31 TO 13+50.93	Lt, Rt	199	
L-2	H 49+71.99 TO 51+17.50	Lt, Rt		1168
SUBTOTAL			199	1168
TOTAL			1367	

EARTHWORK QUANTITIES

SHEET No.	STATION LIMITS	LOCATIONS	ROADWAY EXCAVATION	EMBANKMENT: EMBANKMENT [N]	EMBANKMENT: TOPSOIL [N]	EMBANKMENT: GEOSYNTHETIC REINFORCED EMBANKMENT (GRE): EMBANKMENT (N)	EMBANKMENT: GEOSYNTHETIC REINFORCED EMBANKMENT (GRE): GEOSYNTHETIC REINFORCEMENT	EMBANKMENT: EMBANKMENT CONFINEMENT SYSTEM: EMBANKMENT CONFINEMENT SYSTEM	EMBANKMENT: EMBANKMENT CONFINEMENT SYSTEM: GEOSYNTHETIC REINFORCEMENT [N]
			m3	m3	m3	m3	m2	m3	m2
L-2	E 49.59.25 TO 51+17.50	Rt, Lt	75	2849					
L-7	CG 9+43.131 TO 13+50.93	Rt, Lt	9373	3645	205				
C-28 & R-7	CG 9+43.131 TO 13+50.93	Lt				1083	2603		
L-7	CG1 10+94.08 TO 12.47.86	Rt, Lt	1465	339					
C-3	SG 10+00.00 TO 11+70.50	Rt, Lt	6662	2791					
C-25	SG 10+95.700 TO 11+22.000	Rt, Lt				2169	4675		
C-26	SG 11+28.803 TO 11+51.428	Rt	76			76	183		
C-27 & 28	SG 10+37.152 TO 11+26.494	Rt, Lt	14471		2217			9145	20759
L-2	H 49.71.99 TO 50+90.00	Rt, Lt	63	23					
C-27 & 28	H 49.71.99 TO 50+90.00	Lt	128		86			128	183
L-2	R1 50+90.00 TO 51+15.40	Rt, Lt	102	147					
L-2	R4 50+59.68 TO 51+53.63	Rt, Lt	1326	1032					
L-2	WW 80+04.00 TO 81+18.14	Rt, Lt	2008	4619					
C-3	BP 30+00.00 TO 31+50.72	Rt, Lt	74	24					
L-8	TF3 1+17.50 TO 3+94.17	Rt, Lt	1673	100					
C-9	TF3A 2+24.40 TO 2+88.57	Rt, Lt	0	170					
	SUBTOTAL FROM SHEET SCQ-1		214						
TOTAL			37710	15739	2508	3328	7461	9273	20942

[N] NOT A SEPARATE PAY ITEM, FOR INFORMATION ONLY

REMOVE EPOXY AC SURFACING (20 mm Max)

SHEET No.	STATION LIMITS	LOCATIONS	m2
L-2	E 49.250 TO 51+17.497	Lt, Rt	3362
	TOTAL		3362

HAZARDOUS MATERIAL EXCAVATION QUANTITIES

SHEET No.	LOCATIONS	ROADWAY EXCAVATION (TYPE H)
		m3
C-42	SG 10+00.00 TO 11+70.50	572
C-43	CG 9+41.31 TO 13+50.93	581
C-44	TF3 1+17.50 TO 3+80.00	535
	TOTAL	1688

SUMMARY OF QUANTITIES

Q-1

PJ 11-1-11 REVISED BY DATE REVISED
PRASHANT JALVI AMANDO VITO CALCULATED-DESIGNED BY CHECKED BY
FUNCTIONAL SUPERVISOR BOB ZANDIPOUR
STATE OF CALIFORNIA - DEPARTMENT OF TRANSPORTATION
Caltrans DESIGN

LAST REVISION 02-07-12 DATE PLOTTED => 13-JUL-2012 TIME PLOTTED => 15:52

Dist	COUNTY	ROUTE	KILOMETER POST TOTAL PROJECT	SHEET No.	TOTAL SHEETS
04	SF	80	12.6/13.9	214	821

Brian M Wood 11-1-11
REGISTERED CIVIL ENGINEER DATE

2-21-12
PLANS APPROVAL DATE

REGISTERED PROFESSIONAL ENGINEER Brian M. Wood No. 76969 Exp. 12-31-12 CIVIL STATE OF CALIFORNIA

THE STATE OF CALIFORNIA OR ITS OFFICERS OR AGENTS SHALL NOT BE RESPONSIBLE FOR THE ACCURACY OR COMPLETENESS OF ELECTRONIC COPIES OF THIS PLAN SHEET.

Caltrans Metric

METAL BEAM GUARD RAILING

SHEET No.	LOCATIONS		REMOVE MBGR	MBGR	ALTERNATIVE FLARED TERMINAL SYSTEM
			m	m	EA
C-32	H 49+69.433 TO 49+86.774	L†	18		
C-32	SG 10+15.226 TO 10+75.236	R†,L†	65		
C-33	CG 9+37.039 TO 11+20.623	L†	110		
C-2	H 49+68.303 TO 49+69.433	R†		5	
C-7	CG 12+15.754 TO 12+25.915	R†,L†		35.0	2
C-7	CG 12+14.729 TO 12+59.415	R†		58.0	2
TOTAL			193	98.0	4

CONCRETE BARRIERS

SHEET No.	LOCATION		CONCRETE BARRIER (TYPE 60)	CONCRETE BARRIER TYPE 732 (Mod)	CONCRETE BARRIER (TYPE 60s)	CONCRETE BARRIER (TYPE 60sc)	CONCRETE BARRIER TYPE 60 (Mod)	REMOVE CONCRETE BARRIER (TYPE K)
			m					
L-1	W 50+18.241 TO 51+27.262	R†						140
C-32	WW 80+08.555 TO 80+26.893	L†						40
C-32	E 50+23.409 TO 51+17.447	R†						350
C-32	R4 50+95.357 TO H 50+71.352	R†,L†						135
C-33	CG 10+22.135 TO 11+23.811	R†,LT						111
C-33	CG1 11+02.474 TO 11+76.262	L†						134
C-1	W 50+19.348 TO WW 81+18.413	R†,L†			60.0			
C-2	R4 51+29.687 TO 51+44.095	L†			14.5			
C-2	R4 50+99.105 TO 51+20.250	L†			22.0			
C-2	E 50+22.863 TO R4 50+79.985	R†	56.7					
C-2	R1 50+97.615 TO SG 10+09.493	R†,L†				29.1		
C-2	R4 50+99.105 TO E 51+17.497	R†,L†		19				
C-3	SG 10+17.116 TO 10+15.405	R†		9				
C-3	SG 11+49.500 TO 11+51.483	R†		3				
SUBTOTAL			56.7	31	96.5	29.1		910
FROM R-SHEETS				10				
FROM STRUCTURE PLANS				730			45	
TOTAL			56.7	771	96.5	29.1	45	910

IRRIGATION CROSSOVERS

LOCATION		SIDE		CONDUIT TYPE (3)	(N) WATER LINE CROSSOVER	(N) SPRINKLER CONTROL CROSSOVER
LINE	STATION	R†	L†	SIZE (mm) DN 200		
				LENGTH (m)	SIZE (mm) DN	SIZE (mm) DN
WW	80+72	X	X	23	75	50
TF3	2+10	X	X	5	75	50
TF3A	2+37	X	X	5	75	50
R4, BP	51+12, 30+10	X	X	72	75	50
SG	11+52	X	X	21	75	50
CG	9+93	X		28	75	50
CG	10+85	X		28	75	50
CG2	11+28	X	X	10	75	50
CG1	11+10	X	X	19	75	50
CG	11+53	X	X	27	75	50
CG	11+86	X		10	75	50
CG1	12+12	X	X	22	75	50
CG	12+39	X	X	18	75	50
CG	13+25	X		20	75	50
CG	13+31		X	20	75	50
TOTAL				328		

(N) - NOT A SEPARATE PAY ITEM FOR INFORMATION ONLY
DN - DIAMETER NOMINAL
X - DENOTES REQUIREMENT

CONDUIT TYPE
(APPLICABLE WHEN CIRCLED BELOW AND SHOWN UNDER THE 'CONDUIT TYPE' COLUMN HEADING

1 BITUMINOUS COATED CORRUGATED STEEL PIPE (1.626 mm THICK)
2 CORRUGATED STEEL PIPE (1.626 mm THICK)
(3) CORRUGATED HIGH DENSITY POLYTHENE PIPE
4 ALTERNATIVE CONDUIT

IRRIGATION SLEEVE

LOCATION		SIDE		SCH. 40 SIZE (150mm) DN LENGTH (m)
LINE	STATION	R†	L†	
WW	81+18	X		5
BP	31+49	X	X	8
SG1	20+63		X	8
BP	30+73		X	10
BP	30+15		X	5
CG	11+98		X	3
~~W~~	~~52+69~~		~~X~~	~~5~~
~~W~~	~~52+69~~	~~X~~		~~4~~
~~W~~	~~52+90~~	~~X~~	~~X~~	~~4~~
	TOTAL			39 ~~52~~

4

4 REVISED PER ADDENDUM No. 4 DATED JULY 16, 2012

SUMMARY OF QUANTITIES

Q-2

BW 11-1-11 REVISED BY DATE REVISED
BRIAN WOOD AMANDO VITO CALCULATED-DESIGNED BY CHECKED BY
BOB ZANDIPOUR FUNCTIONAL SUPERVISOR
STATE OF CALIFORNIA - DEPARTMENT OF TRANSPORTATION
DESIGN
Caltrans

LAST REVISION 02-08-12 DATE PLOTTED => 13-JUL-2012 TIME PLOTTED => 15:52

Dist	COUNTY	ROUTE	KILOMETER POST TOTAL PROJECT	SHEET No.	TOTAL SHEETS
04	SF	80	12.6/13.9	215	821

Brian M Wood 11-1-11
REGISTERED CIVIL ENGINEER DATE

2-21-12
PLANS APPROVAL DATE

REGISTERED PROFESSIONAL ENGINEER Brian M. Wood No. 76969 Exp. 12-31-12 CIVIL STATE OF CALIFORNIA

THE STATE OF CALIFORNIA OR ITS OFFICERS OR AGENTS SHALL NOT BE RESPONSIBLE FOR THE ACCURACY OR COMPLETENESS OF ELECTRONIC COPIES OF THIS PLAN SHEET.

Caltrans Metric

MINOR CONCRETE (MISCELLANEOUS CONSTRUCTION)

SHEET No.	LOCATIONS		CONCRETE CURB A1-150	A2-150	A1-200	A2-200	TRANSITION	D-150	DRIVEWAY
			m3						
C-1	WW 80+04.004 TO 80+74.553	L+	6.6						
C-1	WW 80+04.295 TO 81+18.413	R+,L+	7.4						
L-7	CG 9+41.380 TO 9+65.835	R+	1.9						
C-2	R4 50+79.985 TO H 50+75.646	R+,L+	3.8						
C-3	SG 10+10.206 TO 10+13.137	L+					0.4		
C-3,4	~~SG 10+09.207~~ SG 10+13.137 TO BP 31+49.350	L+		~~23.4~~ 22.8					
C-3	SG 11+51.483 TO 11+64.528	R+		2.2					
C-3	SG1 20+29.701 TO 20+32.221	R+			0.2				
C-3	SG 11+22.963 TO 11+25.268	L+			0.2				
C-6,7,12	CG 11+74.161 TO 12+06.608	R+		5.9					
C-7	SG 12+06.608 TO 12+13.208	R+					1.6		
C-7	SG 12+13.208 TO 12+60.455	R+				9.2			
C-7	SG 12+60.455 TO 12+70.307	R+					1.6		
C-7,8	SG 12+70.307 TO 13+02.328	R+		5.0					
L-7 & C-5,6,12	CG 9+29.016 TO 11+62.194	R+		32.9					
C-12	CG 11+55.575 TO 11+62.194	R+	1.3						
C-5,6,12	CG 9+89.499 TO 11+55.575	R+		20.6					
C-5,6	CG 10+30.786 TO 11+27.568	R+		7.8					
C-5	CG1 10+88.273 TO 10+90.600	L+	1.4						
C-6,7,8,10	CG1 11+30.098 TO CG 13+50.925	L+	15.5						
C-6,12	CG 11+53.976 TO 11+74.161	R+	3.3						
C-6,7,11	CG2 11+30.777 TO CG 12+51.951	R+,L+				40.9			
C-10	CG 10+92.185 TO CG2 11+25.774	R+,L+		7.6					
C-8	CG 13+02.328 TO TF3 1+26.266	R+	0.8						
C-8	TF3 1+26.125 TO CG 13+50.925	R+,L+	3.3						
C-8	CG 13+17.229 TO 13+26.251	R+,L+	1.8						
C-8	CG 13+13.998 TO 13+29.451	R+,L+						7.8	
C-1	WW 80+77.500 TO 80+80.000	R+,L+	0.4						
C-7	CG 12+67.958 TO 13+83.908	L+	2.2						
C-6	CG 11+58.990 TO 11+84.271	R+			9.5				
C-7,8	CG 12+93.009 TO 13+04.377	R+	1.8						
~~C-13~~	~~W 52+59.096 TO 52+75.158~~	~~R+,L+~~	~~3.2~~						
~~C-13~~	~~W 52+64.408 TO 52+75.929~~	~~L+~~	~~1.5~~						
~~C-13~~	~~W 52+61.740 TO 52+70.227~~	~~L+~~	~~2.5~~						
~~C-13~~	~~W 52+66.075 TO 52+71.738~~	~~R+,L+~~	~~1.4~~						
C-6	CG 11+87.822	R+							1.2
			~~60.1~~ 51.5	~~105.4~~ 104.8	9.9	50.1	~~3.2~~ 3.6	7.8	1.2
SUBTOTAL			228.9 ~~237.7~~						
SUBTOTAL FROM SHEET Q-1			262 ~~269.0~~						
SUBTOTAL FROM DQ SHEETS			64 ~~66~~						
TOTAL			554.9 ~~572.7~~						

4

CURB RAMP DETECTABLE WARNING SURFACE

SHEET No.	LOCATIONS		CURB RAMP CASE	WIDTH [N]	DETECTABLE WARNING SURFACE [N]
				m	m2
C-1	WW 81+17.813	R+	C	1.20	1.2
C-4	SG1 20+64.355	L+	A	1.50	1.3
C-4	SG 11+59.428	R+	G	1.50	1.3
C-4	BP 31+49.350	R+,L+	F	5.22	4.4
C-6	CG 11+54.835	R+	C	2.00	1.1
C-6	CG 11+48.674	R+	A	1.22	2.0
C-7	CG 12+82.968	R+	C	1.50	1.5
C-12	CG 11+63.607	R+	A	1.22	1.1
C-12	CG 11+70.775	R+	A	1.22	1.1
				TOTAL	15.0

[N] NOT A SEPARATE PAY ITEM, FOR INFORMATION ONLY

BOLLARDS AND REMOVABLE BOLLARDS

SHEET No.	LOCATIONS		BOLLARDS	REMOVABLE BOLLARDS
			EA	
C-2	BP 30+16.690	R+		1
C-10	CG1 11+12.365	L+		2
C-6	CG 11+86.619	R+		3
C-7	CG1 12+25.130	L+		6
C-10	CG1 10+87.212	L+	4	
C-11	CG1 11+23.833	L+	4	
		TOTAL	8	12

MINOR CONCRETE (MINOR STRUCTURE)

LOCATIONS	m^3
C-48,51	3.00
SUBTOTAL FROM DQ - SHEETS	67.00 ~~67.25~~
SUBTOTAL FROM UQ - SHEETS	131.00
TOTAL	~~198.25~~ 201.00

4

4 **REVISED PER ADDENDUM No. 4 DATED JULY 16, 2012**

SUMMARY OF QUANTITIES

Q-3

REVISED BY	DATE REVISED
BW	11-1-11

BRIAN WOOD — AMANDO VITO — CALCULATED-DESIGNED BY — CHECKED BY

FUNCTIONAL SUPERVISOR: BOB ZANDIPOUR

STATE OF CALIFORNIA - DEPARTMENT OF TRANSPORTATION — Caltrans — DESIGN

LAST REVISION 02-07-12 — DATE PLOTTED => 16-JUL-2012 — TIME PLOTTED => 08:03

Dist	COUNTY	ROUTE	KILOMETER POST TOTAL PROJECT	SHEET No.	TOTAL SHEETS
04	SF	80	12.6/13.9	216	821

Brian M Wood 11-1-11
REGISTERED CIVIL ENGINEER DATE

2-21-12
PLANS APPROVAL DATE

REGISTERED PROFESSIONAL ENGINEER Brian M. Wood No. 76969 Exp. 12-31-12 CIVIL STATE OF CALIFORNIA

THE STATE OF CALIFORNIA OR ITS OFFICERS OR AGENTS SHALL NOT BE RESPONSIBLE FOR THE ACCURACY OR COMPLETENESS OF ELECTRONIC COPIES OF THIS PLAN SHEET.

Caltrans Metric

4

CANTILEVER SWING GATES

SHEET No.	LOCATION		WIDTH [N]	TYPE	CANTILEVER SWING GATES	RECONSTRUCT CANTILEVER SWING GATE
			m		EA	EA
C-21	CG 12+91.733	R†,L†	5.486	BI-FOLD SPEED GATE	3	
C-22	WW 80+82.156	R†,L†	3.8	METAL	2	
C-23	H 50+43.723	R†	4.6	METAL	1	1
	TOTAL				6	1

[N] NOT A SEPARATE PAY ITEM, FOR INFORMATION ONLY

STAINING GALVANIZED CHAIN LINK FENCE AND GATE SURFACES

SHEET No.	LOCATION		TYPE CL-2.4 w/EXT ARM
			m
C-18,19	SG 10+25.704 TO CG1 10+56.993	R†,L†	167.6
C-19	CG1 10+85.808 TO CG 12+32.631	R†,L†	163.4
C-18	R4 50+80.000	R†	12.9
C-19	CG 12+32.000 TO 12+91.733	R†	80.9
	TOTAL		424.8

FENCES AND GATES

SHEET No.	LOCATION		REMOVE CHAIN LINK FENCE	FENCE					GATES							
				TYPE METAL	TYPE ANTI-CLIMB	TYPE CL-1.2, BLACK VINYL CLAD	TYPE CL-3.6, BLACK VINYL CLAD	TYPE CL-2.4, w/ EXT ARM	1.5 m, TYPE METAL	2.4 m, TYPE ANTI-CLIMB	2.4 m x 3.0 m TYPE CL-3.6, BLACK VINYL CLAD	3.6 m, TYPE CL-2.4, w/ EXT ARM	2.4 m, TYPE CL-2.4, w/ EXT ARM	1.5 m, TYPE CL-2.4 w/EXT ARM	1.2 m, TYPE ANTI-CLIMB	4.8 m, TYPE ANTI-CLIMB
			m						EA							
C-32	WW 80+28.613 TO 80+35.708	R†,L†	8													
C-32	WW 80+20.000 TO 80+68.200	R†	128													
C-32	SG 10+04.902 TO 10+16.084	R†,L†	25													
C-32	SG 10+27.690 TO 10+66.100	R†	66													
C-32	SG 11+62.901 TO 11+65.112	R†,L†	30													
C-32	H 50+87.612 TO R4 51+33.319	R†,L†	45													
C-32	H 50+78.036 TO 50+78.442	L†	22													
C-33	CG 9+96.866 TO 10+03.233	L†	15													
C-33	CG 10+03.373 TO 12+29.171	R†,L†	215													
C-33	CG 12+19.162 TO 12+22.258	R†	19													
C-32	H 50+34.795 TO 50+78.819	L†	45													
C-32	H 49+84.049 TO 50+42.857	R†	60													
C-18,22	E 50+20.000 TO 50+95.000	R†, L†		212.7					1							
C-18,23	H 49+84.050 TO 50+42.857	R†		64.8					1							
C-18,19	SG 10+25.704 TO CG1 10+56.993	R†,L†						167.6								
C-19	CG1 10+85.808 TO CG 12+32.631	R†,L†						157.4				1	1			
C-18,19	SG 10+16.100 TO 10+40.815	R†			42.3											
C-19	CG 11+57.328 TO 11+84.003	R†					97.3				1					
C-19	CG 9+29.090 TO 9+90.822	R†				68.1										
C-19	CG 10+83.000 TO 11+50.103	R†				65.1										
C-18	R4 50+80.000	R†						11.4						1		
C-19	CG 12+91.733	R†,L†		8.0												
C-19	CG 12+32.000 TO 12+91.733	R†						80.9								
C-18	E 51+09.622 TO 51+20.252	R†,L†			89.6										1	1
C-18,19	SG 10+96.750 TO CG1 11+17.269	R†,L†			286.8					4						
	TOTAL		678	285.5	418.7	133.2	97.3	417.3	2	4	1	1	1	1	1	1

4 REVISED PER ADDENDUM No. 4 DATED JULY 16, 2012

SUMMARY OF QUANTITIES

Q-4

BRIAN WOOD — REVISED BY BW — DATE REVISED 11-1-11
AMANDO VITO — CALCULATED-DESIGNED BY — CHECKED BY
BOB ZANDIPOUR — FUNCTIONAL SUPERVISOR
STATE OF CALIFORNIA - DEPARTMENT OF TRANSPORTATION — Caltrans — DESIGN

LAST REVISION 02-07-12 — DATE PLOTTED => 16-JUL-2012 — TIME PLOTTED => 08:00

Dist	COUNTY	ROUTE	KILOMETER POST TOTAL PROJECT	SHEET No.	TOTAL SHEETS
04	SF	80	12.6/13.9	229	821

Syn Yee Chin 02/16/12
REGISTERED ELECTRICAL ENGINEER

2-21-12
PLANS APPROVAL DATE

REGISTERED PROFESSIONAL ENGINEER SYN YEE CHIN No. 18186 Exp. 09/30/2013 ELECTRICAL STATE OF CALIFORNIA

THE STATE OF CALIFORNIA OR ITS OFFICERS OR AGENTS SHALL NOT BE RESPONSIBLE FOR THE ACCURACY OR COMPLETENESS OF ELECTRONIC COPIES OF THIS PLAN SHEET.

PB AMERICAS, Inc.
303 Second St., Suite 700N
San Francisco, CA 94107-1317

Caltrans Metric

4

DRAWING TITLE	DRAWING NO.
ELECTRICAL SHEET INDEX	E-1
ELECTRICAL SYMBOLS	E-2
ELECTRICAL SYMBOLS AND ABBREVIATIONS	E-3
ELECTRICAL NOTES AND ABBREVIATIONS	E-4
ELECTRICAL KEY MAP	E-5
UNDERGROUND (GROUND INTERFACE)	E-6
DETAILS UNDERGROUND (FOUNDATION GROUNDING)	E-7
YBI TRANSITION STRUCTURES ROADWAY WESTBOUND (LIGHTING AND ELECTRICAL SYSTEMS)	E-8
YBI TRANSITION STRUCTURES ROADWAY WESTBOUND (LIGHTING AND ELECTRICAL SYSTEMS)	E-9
DETAILS YBI TRANSITION STRUCTURES ROADWAY WESTBOUND (LIGHT POLE CONDUIT LOCATIONS)	E-10
DETAILS YBI TRANSITION STRUCTURES ROADWAY WESTBOUND (BARRIER CONDUIT STUB-OUT DETAILS)	E-11
DETAILS YBI TRANSITION STRUCTURES ROADWAY WESTBOUND (480 V ROADWAY LIGHTING WIRING DIAGRAM)	E-12
DETAILS YBI TRANSITION STRUCTURES ROADWAY WESTBOUND (PULL BOX, LIGHT POLE AND FIXTURE SCHEDULES)	E-13
YBI TRANSITION STRUCTURES ROADWAY AND GIRDER EASTBOUND (LIGHTING AND ELECTRICAL SYSTEMS)	E-14 THRU E-21A
DETAILS YBI TRANSITION STRUCTURES ROADWAY AND GIRDER EASTBOUND (TOS CONTROLLER CABINET PAD LAYOUT WITH CONDUIT LOCATIONS)	E-22
DETAILS YBI TRANSITION STRUCTURES ROADWAY AND GIRDER EASTBOUND (CONDUIT DETAILS)	E-23
DETAILS YBI TRANSITION STRUCTURES ROADWAY AND GIRDER EASTBOUND (TYPICAL BIKE PATH SECTIONS AND DETAILS)	E-24 THRU E-26
DETAILS YBI TRANSITION STRUCTURES ROADWAY AND GIRDER EASTBOUND (BIKE PATH RAILING LIGHTING)	E-27
DETAILS YBI TRANSITION STRUCTURES ROADWAY AND GIRDER EASTBOUND (BIKE PATH LANDING LIGHTING ASSEMBLY)	E-28
DETAILS YBI TRANSITION STRUCTURES ROADWAY AND GIRDER EASTBOUND (ROADWAY LIGHTING POLE AND ANCHORAGE)	E-29
DETAILS YBI TRANSITION STRUCTURES ROADWAY AND GIRDER EASTBOUND (TYPICAL LIGHT PIPE CONDUIT SECTIONS AND DETAILS)	E-30
DETAILS YBI TRANSITION STRUCTURES ROADWAY AND GIRDER EASTBOUND (TYPICAL LIGHT PIPE INSTALLATION 1)	E-31
DETAILS YBI TRANSITION STRUCTURES ROADWAY AND GIRDER EASTBOUND (TYPICAL LIGHT PIPE INSTALLATION 2)	E-32
DETAILS YBI TRANSITION STRUCTURES ROADWAY AND GIRDER EASTBOUND (TYPICAL LIGHT PIPE INSTALLATION 3)	E-33
DETAILS YBI TRANSITION STRUCTURES ROADWAY AND GIRDER EASTBOUND (CALL BOX AT ROADWAY, SECTIONS AND DETAILS)	E-34
DETAILS YBI TRANSITION STRUCTURES ROADWAY AND GIRDER EASTBOUND (CALL BOX AT BIKE PATH AND BELVEDERE: SECTIONS AND DETAILS)	E-35
DETAILS YBI TRANSITION STRUCTURES ROADWAY AND GIRDER EASTBOUND (TYPICAL CALL BOX SECTIONS AND DETAILS)	E-36
DETAILS YBI TRANSITION STRUCTURES ROADWAY AND GIRDER EASTBOUND (BELVEDERE LIGHT POST)	E-37
DETAILS YBI TRANSITION STRUCTURES ROADWAY AND GIRDER EASTBOUND (BENT W8R)	E-38
DETAILS YBI TRANSITION STRUCTURES ROADWAY AND GIRDER EASTBOUND (PLATFORM #1E ARRANGEMENT PLAN)	E-39
DETAILS YBI TRANSITION STRUCTURES ROADWAY AND GIRDER EASTBOUND (PLATFORM 3E ARRANGEMENT AND PLAN)	E-39A
DETAILS YBI TRANSITION STRUCTURES ROADWAY AND GIRDER EASTBOUND (HINGE 6RB)	E-39B
DETAILS YBI TRANSITION STRUCTURES ROADWAY AND GIRDER EASTBOUND (BENT W5R)	E-40
DETAILS YBI TRANSITION STRUCTURES ROADWAY AND GIRDER EASTBOUND (BENT W4R)	E-40A
DETAILS YBI TRANSITION STRUCTURES ROADWAY AND GIRDER EASTBOUND (480 V RAMP POLE LIGHTING WIRING DIAGRAM)	E-41
DETAILS YBI TRANSITION STRUCTURES ROADWAY AND GIRDER EASTBOUND (480 V LIGHT PIPE WIRING DIAGRAM)	E-41A
DETAILS YBI TRANSITION STRUCTURES ROADWAY AND GIRDER EASTBOUND (480 V LIGHT PIPE WIRING DIAGRAM)	E-42
DETAILS YBI TRANSITION STRUCTURES ROADWAY AND GIRDER EASTBOUND (120 V BIKE PATH LIGHTING WIRING DIAGRAM)	E-43 THRU E-45
DETAILS YBI TRANSITION STRUCTURES ROADWAY AND GIRDER EASTBOUND (PULL BOX, LIGHT PIPE, LIGHT POLE AND FIXTURE SCHEDULES)	E-46
DETAILS YBI TRANSITION STRUCTURES ROADWAY AND GIRDER EASTBOUND (PANEL LP-217 AND LP-218 SCHEDULES)	E-47
DETAILS YBI TRANSITION STRUCTURES ROADWAY EASTBOUND (PANEL UP-203 SCHEDULE)	E-47A
CALL BOX SYSTEM YBI TRANSITION STRUCTURES ROADWAY WESTBOUND (CALL BOX LOCATIONS)	E-48
CALL BOX SYSTEM YBI TRANSITION STRUCTURES ROADWAY AND GIRDER EASTBOUND (CALL BOX LOCATIONS)	E-49
DETAILS CALL BOX SYSTEM (CALL BOX WIRING DIAGRAM)	E-50
DETAILS CALL BOX SYSTEM (CALL BOX WIRING DIAGRAM)	E-51
DETAILS CALL BOX SYSTEM (CALL BOX SCHEDULES)	E-52
TRAFFIC OPERATIONS SYSTEM (FIELD ELEMENT LOCATIONS)	E-53
DETAILS TRAFFIC OPERATIONS SYSTEM (RAMP METER SYSTEM INSTALLATION)	E-54
DETAILS TRAFFIC OPERATIONS SYSTEM (RAMP METER CONTROLLER CONFIGURATION AND SYSTEM BLOCK DIAGRAM)	E-55
DETAILS TRAFFIC OPERATIONS SYSTEM (TYPICAL FIBER OPTIC SPLICE)	E-56
DETAILS TRAFFIC OPERATIONS SYSTEM (FIBER OPTIC TERMINATIONS FOR EASTBOUND)	E-57
REMOVING AND SALVAGING ELECTRICAL DEVICES WEST TIE-IN DEMOLITION (BENT 38 TO BENT 48)	E-58
REMOVING AND SALVAGING ELECTRICAL DEVICES SOUTH-SOUTH DETOUR VIADUCT DEMOLITION (BENT 48 TO BENT 52)	E-59
REMOVING AND SALVAGING ELECTRICAL DEVICES EAST TIE-IN DEMOLITION (BENT 52 TO PIER E1)	E-60
REMOVING AND SALVAGING ELECTRICAL DEVICES CANTILEVER DEMOLITION PIER E1 TO PIER E4	E-61
CABLE AND CIRCUIT SCHEDULE	E-62 THRU E-68
CONDUIT AND TRAY SCHEDULE TBI TRANSITION STRUCTURES ROADWAY WB	E-69 THRU E-71
CONDUIT AND TRAY SCHEDULE YBI TRANSITION STRUCTURES ROADWAY AND GIRDER EB	E-72 THRU E-92A

ELECTRICAL SHEET INDEX

4 **REVISED PER ADDENDUM No. 4 DATED JULY 16, 2012**

E-1

STATE OF CALIFORNIA - DEPARTMENT OF TRANSPORTATION
Caltrans

CONSULTANT FUNCTIONAL SUPERVISOR: BOB ZANDIPOUR
CALCULATED-DESIGNED BY: REUBEN BUENVIAJE
CHECKED BY: J. HALIM, T. WU, W. BECK
REVISED BY: NN
DATE REVISED: 6/14/12

LAST REVISION 06-14-12
DATE PLOTTED => 13-JUL-2012
TIME PLOTTED => 15:52

Dist	COUNTY	ROUTE	KILOMETER POST TOTAL PROJECT	SHEET No.	TOTAL SHEETS
04	SF	80	12.6/13.9	244	821

Syn Yee Chin 02/16/12
REGISTERED ELECTRICAL ENGINEER

2-21-12
PLANS APPROVAL DATE

REGISTERED PROFESSIONAL ENGINEER SYN YEE CHIN No. 18186 Exp. 09/30/2013 ELECTRICAL STATE OF CALIFORNIA

THE STATE OF CALIFORNIA OR ITS OFFICERS OR AGENTS SHALL NOT BE RESPONSIBLE FOR THE ACCURACY OR COMPLETENESS OF ELECTRONIC COPIES OF THIS PLAN SHEET.

PB AMERICAS, Inc.
303 Second St., Suite 700N
San Francisco, CA 94107-1317

Caltrans Metric

NOTES:

1. References:
   - For pull box and light fixture schedules, see sheet E-46.
   - For 120 V bike path lighting wiring diagrams, see sheets E-43, E-44 and E-45.
2. Refer to conduit and tray schedules, cable and circuit schedules starting at drawing E-62.
3. Unless shown in bold, everything else is not part of this Contract.

SHEET NOTES:

4 (1) Stub-out conduits from pull box for connections to 41C flex metal PVC coated conduit.

4 (2) All bike path conduits shown are existing unless otherwise noted. The Contractor to pull cable to all PB-1C and terminate circuits to bike path lighting fixtures, refer to sheet E-26.

(3) The Contractor to route cables/circuits in existing conduit.

(4) Splice circuits A-2009-2, A-2010-2, UP202-12 and UP202-8 in PB-LTG.

(5) Pull new circuit 2169 from CB-240B to CB-239C and terminate cable inside installed call box.

(6) Splice circuits LP217-1,3,5 and LP 217-2,4,6 inside PB-LTG.

(7) Splice circuit LP218-1,3,5 inside PB-LTG.

(8) Splice circuit S-2042-1 to S-2042-2 inside PB-LTG.

(9) Splice circuit A-2009-1 to A-2009-2 and A-2010-1 to A-2010-2 in PB-LTG.

4 (10) Pull circuit LP218-1, 3, 5 inside conduit and splice inside PB-LTG.

(11) Existing stubbed-out conduits, see sheet E-17.

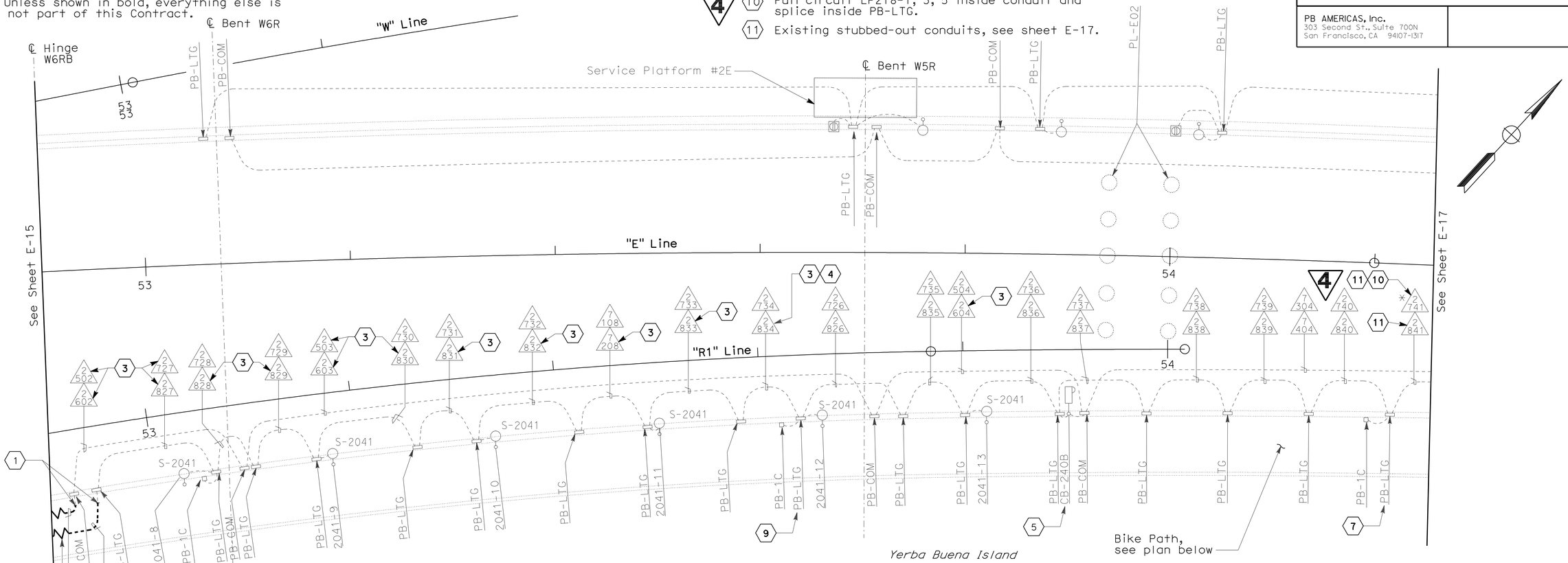

CONDUIT PLAN-ROADWAY

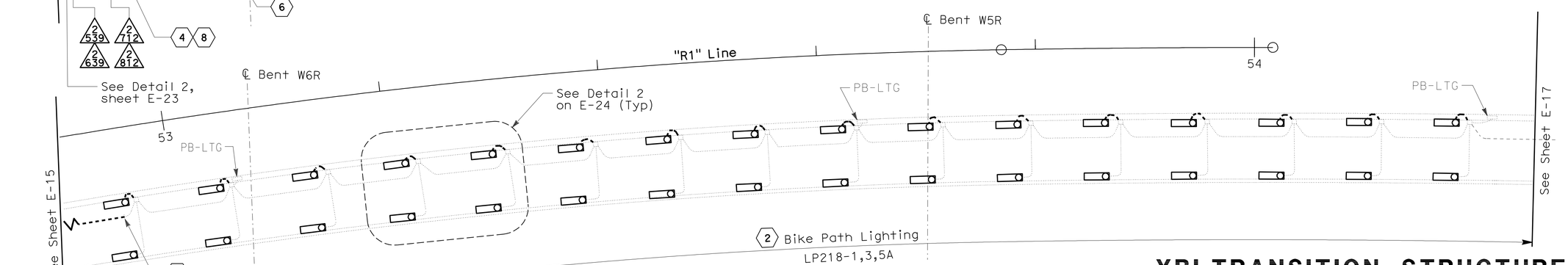

CONDUIT PLAN-BIKE PATH

YBI TRANSITION STRUCTURES
ROADWAY AND GIRDER EASTBOUND
(LIGHTING AND ELECTRICAL SYSTEMS)

SCALE: 1:200

4 REVISED PER ADDENDUM No. 4 DATED JULY 16, 2012

THIS PLAN ACCURATE FOR ELECTRICAL WORK ONLY.

ALL DIMENSIONS ARE IN METERS UNLESS OTHERWISE SHOWN

E-16

NN	6/14/12	REUBEN BUENVIAJE	J. HALIM, T. WU, W. BECK
REVISED BY	DATE REVISED	CALCULATED-DESIGNED BY	CHECKED BY

CONSULTANT FUNCTIONAL SUPERVISOR: BOB ZANDIPOUR

STATE OF CALIFORNIA - DEPARTMENT OF TRANSPORTATION

Caltrans

LAST REVISION 06-14-12 | DATE PLOTTED => 13-JUL-2012 | TIME PLOTTED => 15:52

Dist	COUNTY	ROUTE	KILOMETER POST TOTAL PROJECT	SHEET No.	TOTAL SHEETS
04	SF	80	12.6/13.9	245	821

Syn Yee Chin 10/31/11
REGISTERED ELECTRICAL ENGINEER

2-21-12
PLANS APPROVAL DATE

REGISTERED PROFESSIONAL ENGINEER SYN YEE CHIN No. 18186 Exp. 09/30/2013 ELECTRICAL STATE OF CALIFORNIA

THE STATE OF CALIFORNIA OR ITS OFFICERS OR AGENTS SHALL NOT BE RESPONSIBLE FOR THE ACCURACY OR COMPLETENESS OF ELECTRONIC COPIES OF THIS PLAN SHEET.

PB AMERICAS, Inc.
303 Second St., Suite 700N
San Francisco, CA 94107-1317

Caltrans Metric

NOTES:

1. References:
   - For pull box and light fixture schedules, see sheet E-46.
   - For 120 V bike path lighting wiring diagram, see sheet E-44.
2. Refer to conduit and tray schedules, cable and circuit schedules starting at drawing E-62.
3. Unless shown in bold, everything else is not part of this Contract.
4. The Contractor to ensure that breaker feeding UP203-2 circuit is off, locked out, and tagged before splicing to existing conductors inside PB-LTG, refer to sheet E-47A.
5. The Contractor to ensure that circuit breaker feeding CKT# LP218-2, 4, 6 is off, locked out, and tagged before splicing to existing conductors inside PB-LTG, refer to sheet E-47.

SHEET NOTES:

1. 41C, 4#8 + #10G to PB-1C.
2. For railing post location, refer to YBI EB on-ramp Structural sheets.
3. For bike path lighting location, refer to YBI EB on-ramp Structural sheets.
4. The Contractor to connect conduit to existing stub-out.
5. Splice circuit LP218-2,4,6 and UP203-2 inside PB-LTG.
6. Splice circuits LP218-1,3,5 inside PB-LTG.
7. Run new cable CKT# 2172 inside existing conduit.
8. For conduit down, refer to sheet E-21A.

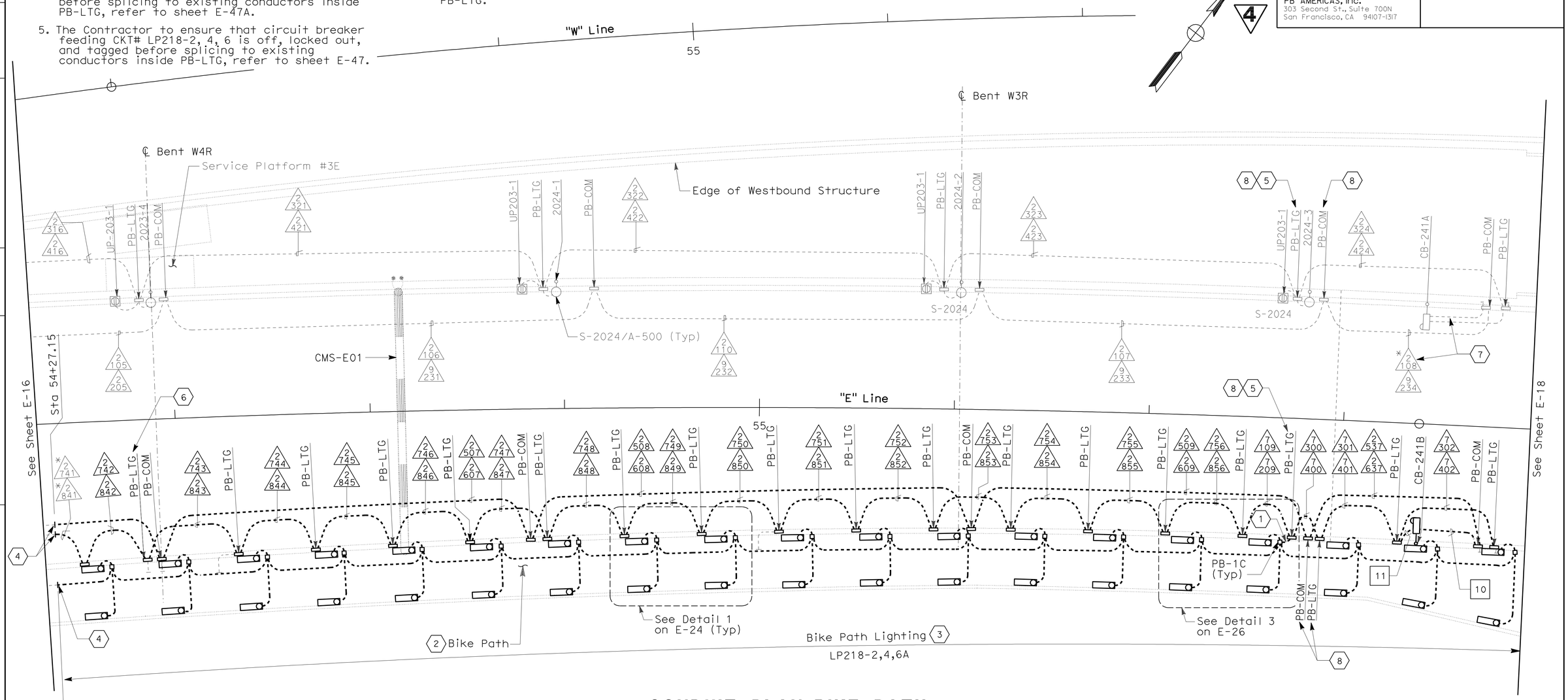

CONDUIT PLAN-BIKE PATH

4 REVISED PER ADDENDUM No. 4 DATED JULY 16, 2012

ALL DIMENSIONS ARE IN METERS UNLESS OTHERWISE SHOWN

YBI TRANSITION STRUCTURES ROADWAY AND GIRDER EASTBOUND (LIGHTING AND ELECTRICAL SYSTEMS)

SCALE 1:200

E-17

THIS PLAN ACCURATE FOR ELECTRICAL WORK ONLY.

REVISED BY	DATE REVISED
NN	6/14/12

CALCULATED-DESIGNED BY: REUBEN BUENVIAJE
CHECKED BY: J. HALIM, T. WU, W. BECK
CONSULTANT FUNCTIONAL SUPERVISOR: BOB ZANDIPOUR

STATE OF CALIFORNIA - DEPARTMENT OF TRANSPORTATION
Caltrans

LAST REVISION 06-14-12 | DATE PLOTTED => 13-JUL-2012 | TIME PLOTTED => 15:53

Dist	COUNTY	ROUTE	KILOMETER POST TOTAL PROJECT	SHEET No.	TOTAL SHEETS
04	SF	80	12.6/13.9	249	821

Syn Yee Chin 10/31/11
REGISTERED ELECTRICAL ENGINEER

2-21-12
PLANS APPROVAL DATE

REGISTERED PROFESSIONAL ENGINEER SYN YEE CHIN No. 18186 Exp. 09/30/2013 ELECTRICAL STATE OF CALIFORNIA

THE STATE OF CALIFORNIA OR ITS OFFICERS OR AGENTS SHALL NOT BE RESPONSIBLE FOR THE ACCURACY OR COMPLETENESS OF ELECTRONIC COPIES OF THIS PLAN SHEET.

PB AMERICAS, Inc.
303 Second St., Suite 700N
San Francisco, CA 94107-1317

Caltrans Metric

NOTES:

1. For conduits located in the barrier, see sheet E-16.
2. Everything shown on this plan is existing.

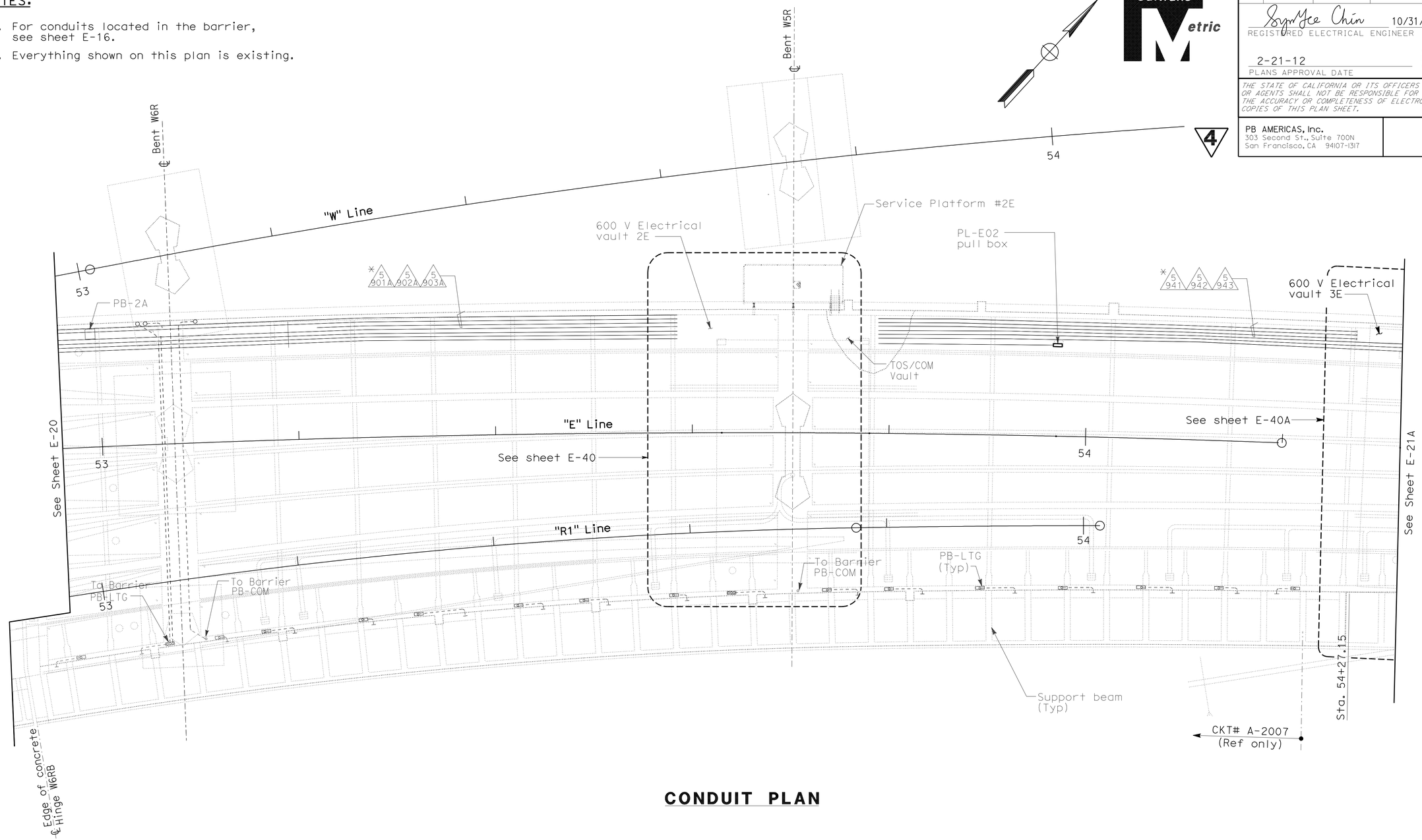

CONDUIT PLAN

ALL DIMENSIONS ARE IN METERS UNLESS OTHERWISE SHOWN

YBI TRANSITION STRUCTURES ROADWAY AND GIRDER EASTBOUND (LIGHTING AND ELECTRICAL SYSTEMS)

SCALE 1:200

E-21

4 REVISED PER ADDENDUM No. 4 DATED JULY 16, 2012

THIS PLAN ACCURATE FOR ELECTRICAL WORK ONLY.

STATE OF CALIFORNIA - DEPARTMENT OF TRANSPORTATION
Caltrans

CONSULTANT FUNCTIONAL SUPERVISOR: BOB ZANDIPOUR
CALCULATED-DESIGNED BY: REUBEN BUENVIAJE
CHECKED BY: J. HALIM, T. WU, W. BECK
REVISED BY: NN
DATE REVISED: 6/14/12

LAST REVISION 06-14-12
DATE PLOTTED => 13-JUL-2012
TIME PLOTTED => 15:53

BORDER LAST REVISED 3/1/2007
RELATIVE BORDER SCALE IS IN MILLIMETERS 0 20 40 60 80
DGN FILE => 40120tua021.add
USERNAME => s124496
CU 04251
EA 0120T1

Dist	COUNTY	ROUTE	KILOMETER POST TOTAL PROJECT	SHEET No.	TOTAL SHEETS
04	SF	80	12.6/13.9	249A	821

Syn Yee Chin 6/14/12
REGISTERED ELECTRICAL ENGINEER

2-21-12
PLANS APPROVAL DATE

REGISTERED PROFESSIONAL ENGINEER
SYN YEE CHIN
No. 18186
Exp. 09/30/2013
ELECTRICAL
STATE OF CALIFORNIA

THE STATE OF CALIFORNIA OR ITS OFFICERS OR AGENTS SHALL NOT BE RESPONSIBLE FOR THE ACCURACY OR COMPLETENESS OF ELECTRONIC COPIES OF THIS PLAN SHEET.

PB AMERICAS, Inc.
303 Second St., Suite 700N
San Francisco, CA 94107-1317

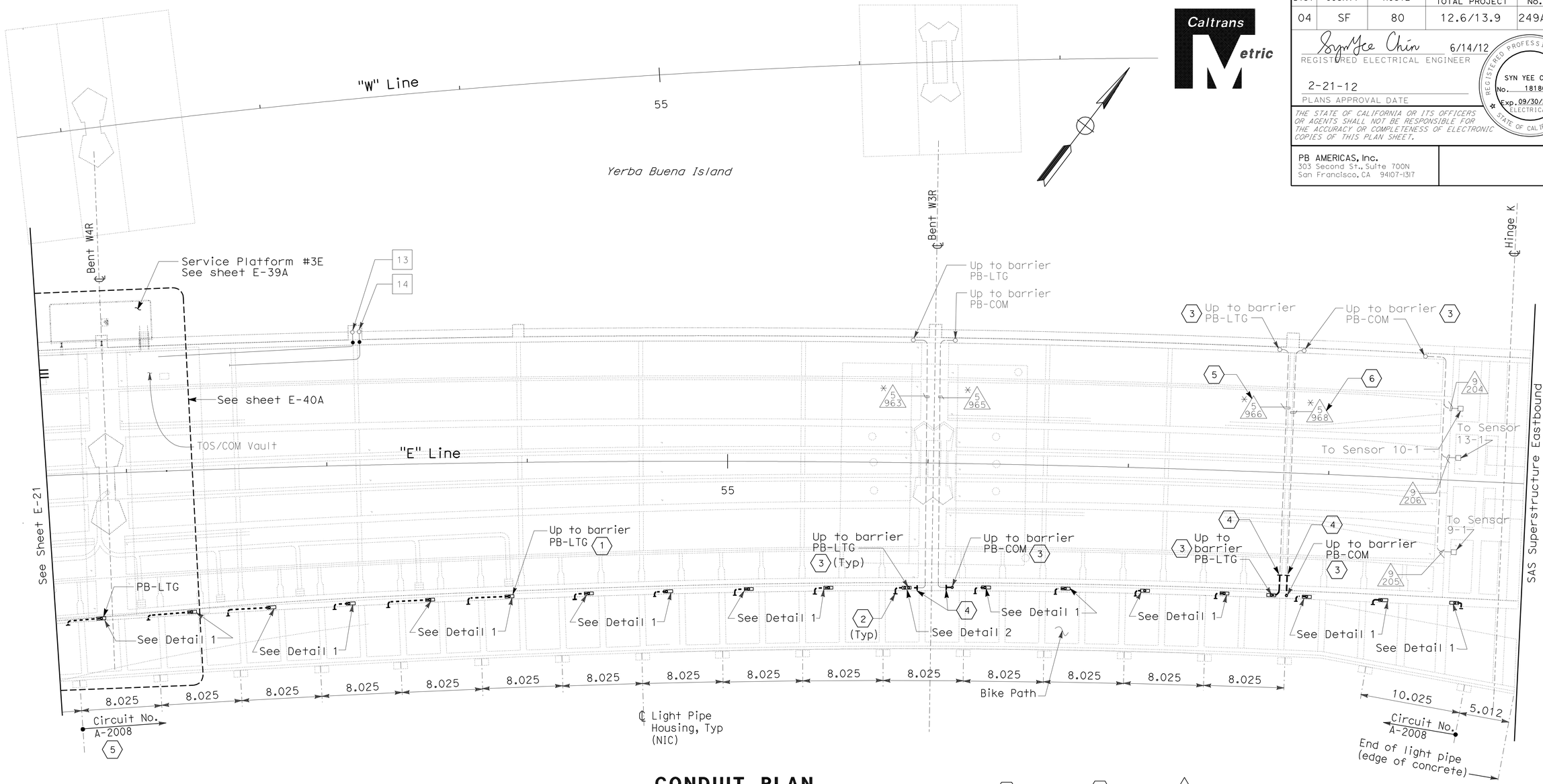

CONDUIT PLAN

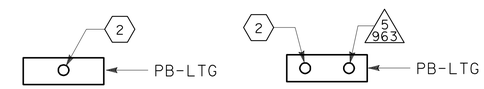

DETAIL 1 **DETAIL 2**

SHEET NOTES:

1. For conduit up to barrier PB-LTG for light pipe.
2. Provide cap at end of conduit, see Section A-A sheet E-30.
3. For conduit up to PB-LTG and PB-COM located in barrier, see sheet E-17.
4. Remove cap from existing conduit, extend conduit.
5. Pull new conductors, CKT# UP203-2 from roadway barrier PB-LTG inside conduit for CB-241B power. Pull conductors, CKT# LP218-2, 4, 6 roadway barrier PB-LTG inside conduit for bike path lighting, refer to sheets E-44 and E-64A.
6. Run new cable conductors, CKT# 2172 inside conduit for CB-241B signal, refer to sheet E-62A.

YBI TRANSITION STRUCTURES ROADWAY AND GIRDER EASTBOUND (LIGHTING AND ELECTRICAL SYSTEMS)

SCALE: 1:200

4 ADDED PER ADDENDUM No. 4 DATED JULY 16, 2012

THIS PLAN ACCURATE FOR ELECTRICAL WORK ONLY.

ALL DIMENSIONS ARE IN METERS UNLESS OTHERWISE SHOWN

E-21A

REVISED BY	DATE REVISED

NIKKI NAJDI — ELLERY LUCAS — CALCULATED-DESIGNED BY — CHECKED BY

BRADY NADELL — CONSULTANT FUNCTIONAL SUPERVISOR

STATE OF CALIFORNIA - DEPARTMENT OF TRANSPORTATION — Caltrans

LAST REVISION 00-00-00 — DATE PLOTTED => 13-JUL-2012 — TIME PLOTTED => 15:53

Dist	COUNTY	ROUTE	KILOMETER POST TOTAL PROJECT	SHEET No.	TOTAL SHEETS
04	SF	80	12.6/13.9	252	821

Caltrans Metric

Syn Yee Chin 10/31/11
REGISTERED ELECTRICAL ENGINEER

2-21-12
PLANS APPROVAL DATE

REGISTERED PROFESSIONAL ENGINEER
SYN YEE CHIN
No. 18186
Exp. 09/30/2013
ELECTRICAL
STATE OF CALIFORNIA

THE STATE OF CALIFORNIA OR ITS OFFICERS OR AGENTS SHALL NOT BE RESPONSIBLE FOR THE ACCURACY OR COMPLETENESS OF ELECTRONIC COPIES OF THIS PLAN SHEET.

PB AMERICAS, Inc.
303 Second St., Suite 700N
San Francisco, CA 94107-1317

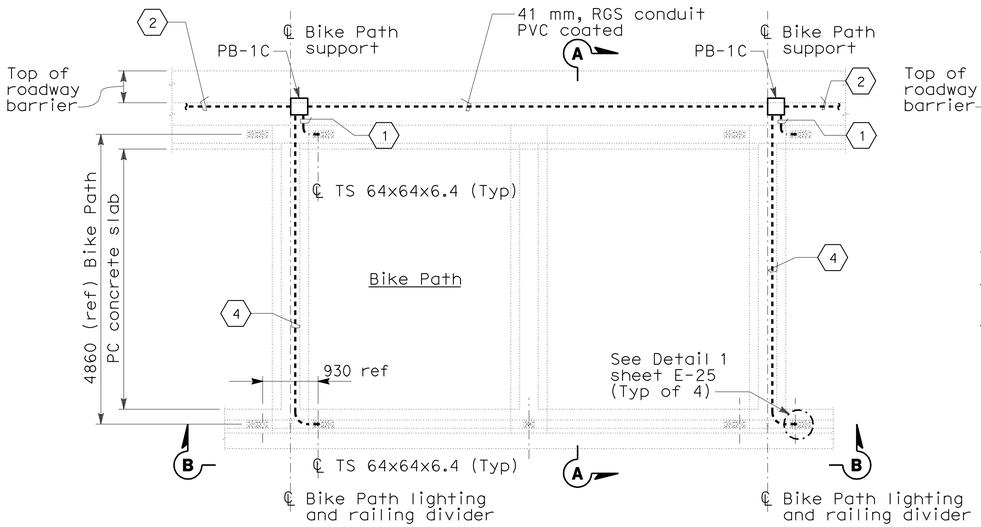

TYPICAL BIKE PATH LIGHTING - DETAIL 1

TYPICAL CONDUIT ARRANGEMENT (SEE SHEETS E-14, E-15, & E-17)
NO SCALE

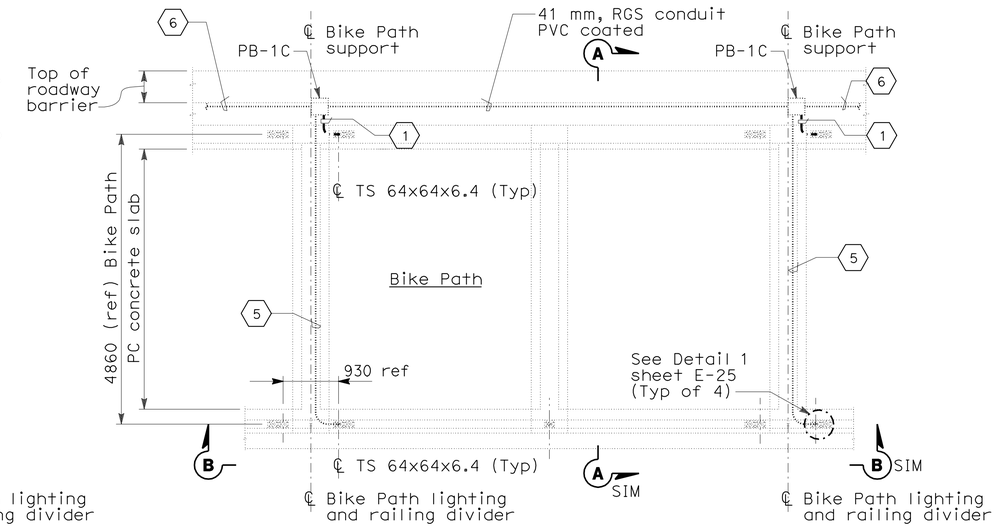

TYPICAL BIKE PATH LIGHTING - DETAIL 2

TYPICAL CONDUIT ARRANGEMENT (SEE SHEET E-16)
NO SCALE

NOTES:

1. All exposed conduits and fittings installed between the Roadway and the Bike Path shall be PVC coated galvanized steel.
2. For locations of PB-LTG and PB-COM at the Roadway concrete/steel barrier, see sheets E-14 and E-15.
3. References:
   - For pull box schedule, see sheet E-46.
   - For railing details refer to Structural sheets, Bike Path railing Details.
4. (*) Dimension to be provided by Structural.
5. Unless shown in bold, everything else is not part of this Contract.

SHEET NOTES:

1. 21C, Flexible metallic conduit with 2#12 + #12G.
2. 41C, RGS PVC coated, continued to the next PB-1C. See sheets E-14 and E-15.
3. For connection and mounting details, see sheet E-25.
4. 21C, RGS Conduit with 2#12 + #12G.
5. Route new cable 2#12 + #12G in existing conduit.
6. Route new cable 4#8 + #10G in existing conduit.

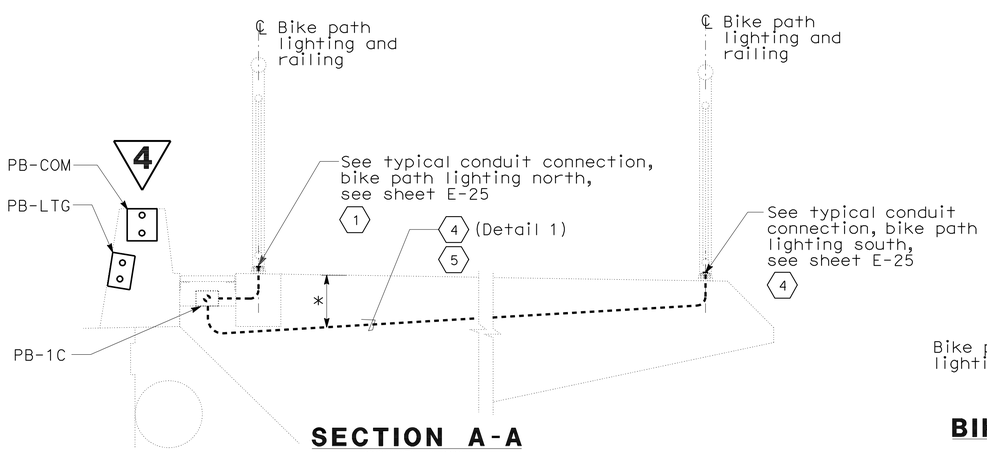

SECTION A-A

SCALE: 1:20

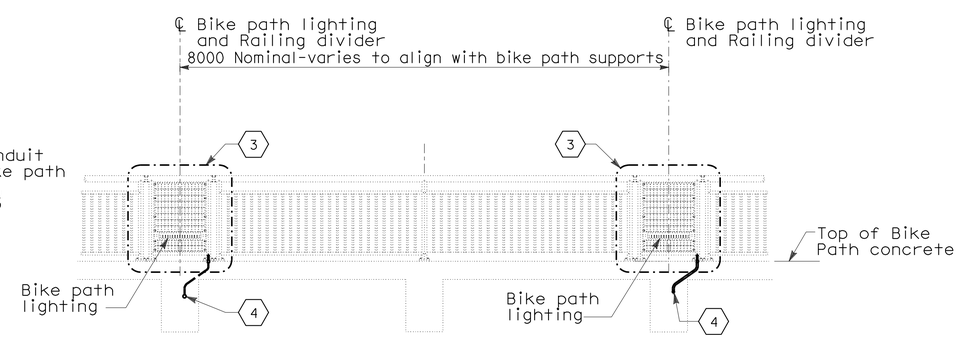

BIKE PATH RAILING - TYPICAL ELEVATION B-B

SCALE: 1:40

ALL DIMENSIONS ARE IN MILLIMETERS UNLESS OTHERWISE SHOWN

DETAILS

YBI TRANSITION STRUCTURES ROADWAY AND GIRDER EASTBOUND (TYPICAL BIKE PATH SECTIONS AND DETAILS)

SCALE AS SHOWN

E-24

4 REVISED PER ADDENDUM No. 4 DATED JULY 16, 2012

THIS PLAN ACCURATE FOR ELECTRICAL WORK ONLY.

STATE OF CALIFORNIA - DEPARTMENT OF TRANSPORTATION
Caltrans

CONSULTANT FUNCTIONAL SUPERVISOR: BOB ZANDIPOUR
CALCULATED-DESIGNED BY: J. HALIM, T. WU, W. BECK
CHECKED BY: REUBEN BUENVIAJE
REVISED BY: NN
DATE REVISED: 6/14/12

LAST REVISION 06-14-12
DATE PLOTTED => 13-JUL-2012
TIME PLOTTED => 15:53

Dist	COUNTY	ROUTE	KILOMETER POST TOTAL PROJECT	SHEET No.	TOTAL SHEETS
04	SF	80	12.6/13.9	253	821

Caltrans Metric

Syn Yee Chin 10/31/11
REGISTERED ELECTRICAL ENGINEER

2-21-12
PLANS APPROVAL DATE

REGISTERED PROFESSIONAL ENGINEER
SYN YEE CHIN
No. 18186
Exp. 09/30/2013
ELECTRICAL
STATE OF CALIFORNIA

THE STATE OF CALIFORNIA OR ITS OFFICERS OR AGENTS SHALL NOT BE RESPONSIBLE FOR THE ACCURACY OR COMPLETENESS OF ELECTRONIC COPIES OF THIS PLAN SHEET.

PB AMERICAS, Inc.
303 Second St., Suite 700N
San Francisco, CA 94107-1317

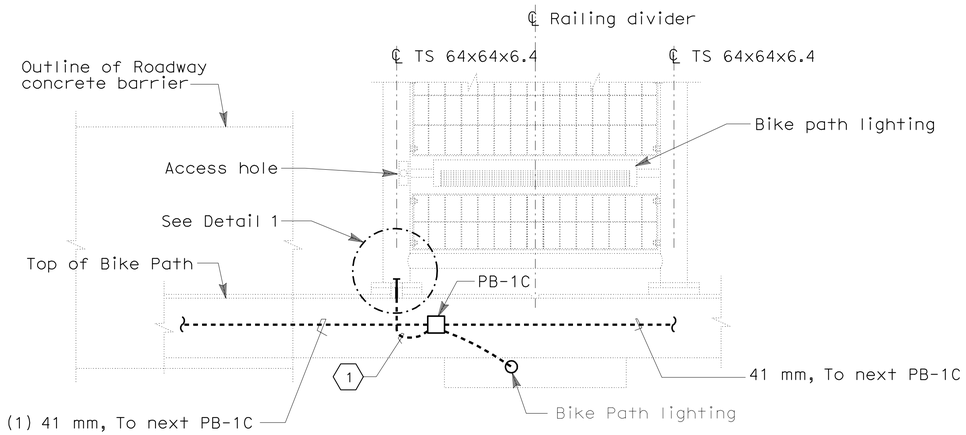

TYPICAL BIKE PATH LIGHTING - NORTH
(TYPICAL CONDUIT CONNECTIONS)

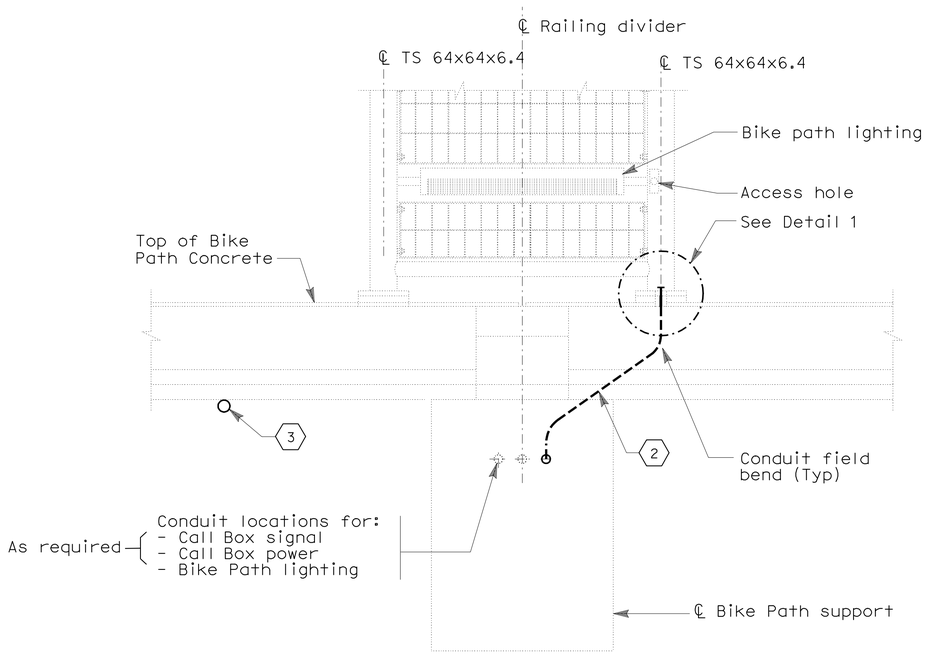

TYPICAL BIKE PATH LIGHTING - SOUTH
(TYPICAL CONDUIT CONNECTIONS)

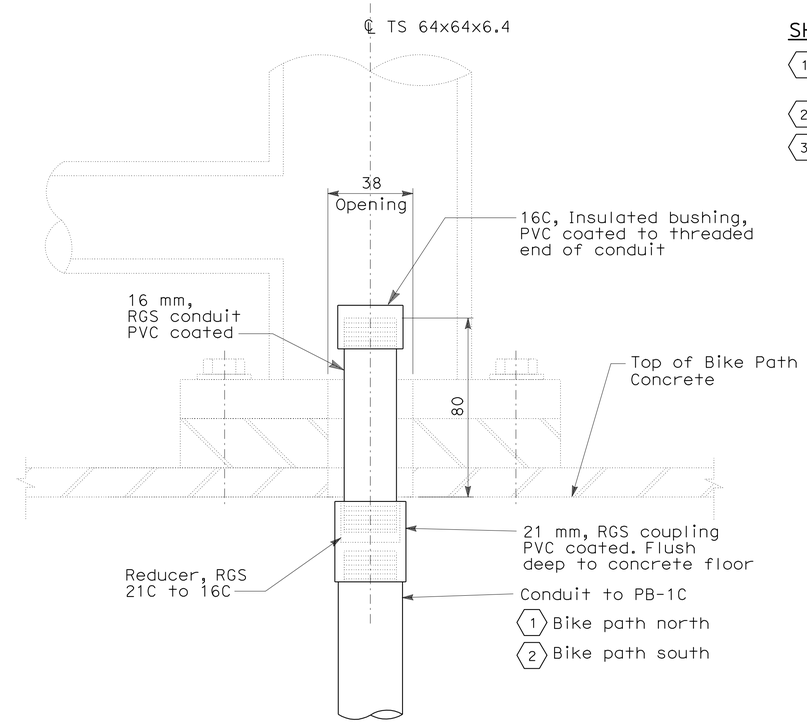

TYPICAL - DETAIL 1

NOTES:

1. All exposed conduits and fittings installed between the Roadway and the Bike Path shall be PVC coated galvanized steel.
2. For locations of PB-LTG and PB-COM at the Roadway concrete/steel barrier, see sheets E-14 thru E-18.

SHEET NOTES:

1. 21C, Flexible metallic conduit with 2#12 + 12G.
2. 21C, RGS conduit with 2#12 + 12G.
3. 21C RGS PVC coated conduit stub-out from PB-LTG for future light pipes. Refer to drawings E-19, E-20 and E-21A for approximate locations.

4

4 REVISED PER ADDENDUM No. 4 DATED. JULY 16, 2012

ALL DIMENSIONS ARE IN MILLIMETERS UNLESS OTHERWISE SHOWN

DETAILS
YBI TRANSITION STRUCTURES ROADWAY AND GIRDER EASTBOUND (TYPICAL BIKE PATH SECTIONS AND DETAILS)

NO SCALE

E-25

THIS PLAN ACCURATE FOR ELECTRICAL WORK ONLY.

REVISED BY	NN
DATE REVISED	6/14/12
REUBEN BUENVIAJE	
J. HALIM, T. WU, W. BECK	
CALCULATED-DESIGNED BY	
CHECKED BY	
CONSULTANT FUNCTIONAL SUPERVISOR	BOB ZANDIPOUR

STATE OF CALIFORNIA - DEPARTMENT OF TRANSPORTATION
Caltrans

LAST REVISION 06-14-12 | DATE PLOTTED => 13-JUL-2012 | TIME PLOTTED => 15:53

Dist	COUNTY	ROUTE	KILOMETER POST TOTAL PROJECT	SHEET No.	TOTAL SHEETS
04	SF	80	12.6/13.9	254	821

Caltrans Metric

Syn Yee Chin 10/31/11
REGISTERED ELECTRICAL ENGINEER

2-21-12
PLANS APPROVAL DATE

REGISTERED PROFESSIONAL ENGINEER SYN YEE CHIN No. 18186 Exp. 09/30/2013 ELECTRICAL STATE OF CALIFORNIA

THE STATE OF CALIFORNIA OR ITS OFFICERS OR AGENTS SHALL NOT BE RESPONSIBLE FOR THE ACCURACY OR COMPLETENESS OF ELECTRONIC COPIES OF THIS PLAN SHEET.

PB AMERICAS, Inc.
303 Second St., Suite 700N
San Francisco, CA 94107-1317

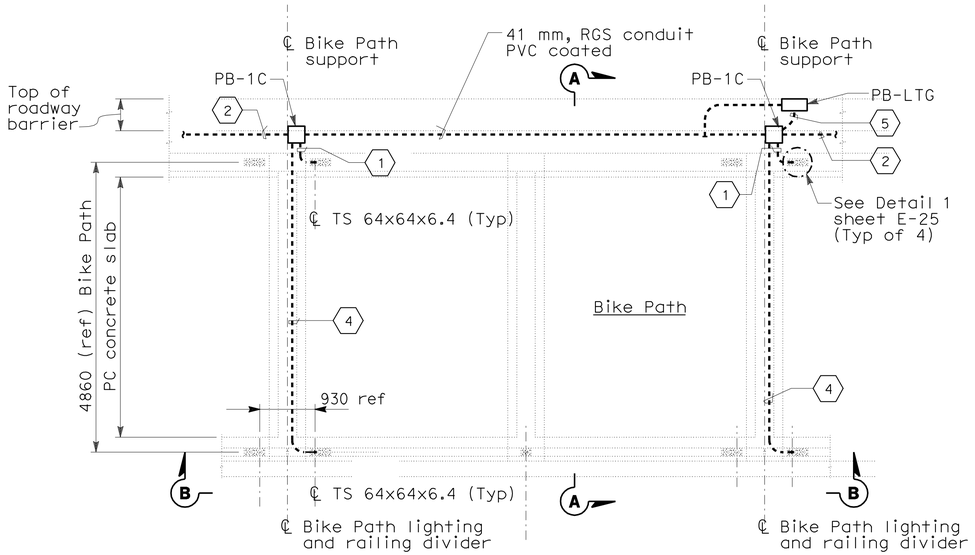

BIKE PATH LIGHTING - DETAIL 3 (4)

TYPICAL CONDUIT ARRANGEMENT (SEE SHEET E-17)
NO SCALE

NOTES:

1. All exposed conduits and fittings installed between the Roadway and the Bike Path shall be PVC coated galvanized steel.
2. For locations of PB-LTG and PB-COM at the Roadway concrete/steel barrier, see sheet E-17.
3. References:
   - For pull box schedule, see sheet E-46.
   - For railing details refer to Structural sheets, Bike Path railing Details.
4. (*) Dimension to be provided by Structural.
5. Unless shown in bold, everything else is not part of this Contract.

SHEET NOTES:

(1) 21C, Flexible metallic conduit with 2#12 + #12G.

(2) 41C, RGS PVC coated, continued to the next PB-1C. See sheet E-17.

(3) For connection and mounting details, see sheet E-25.

(4) 21C, RGS Conduit with 2#12 + #12G.

(5) Extend and terminate 41C to PB-1C, For location, see sheets E-17.

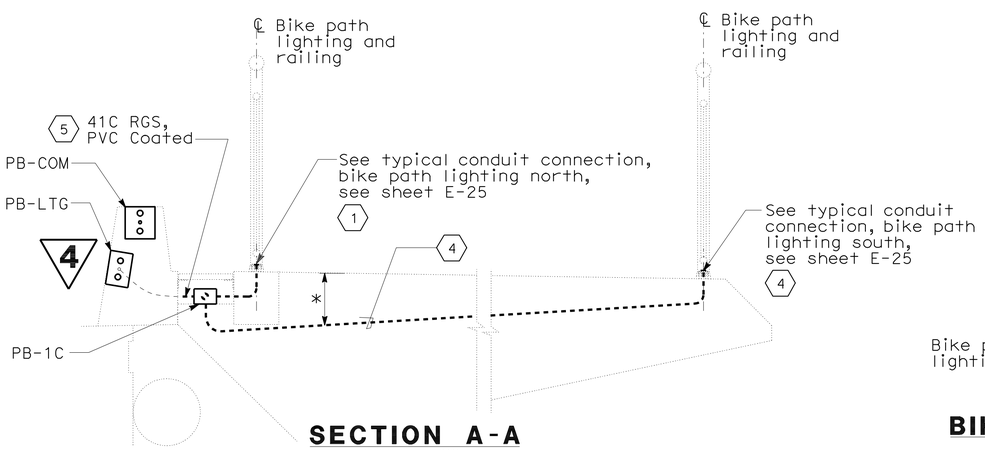

SECTION A-A

SCALE: 1:20

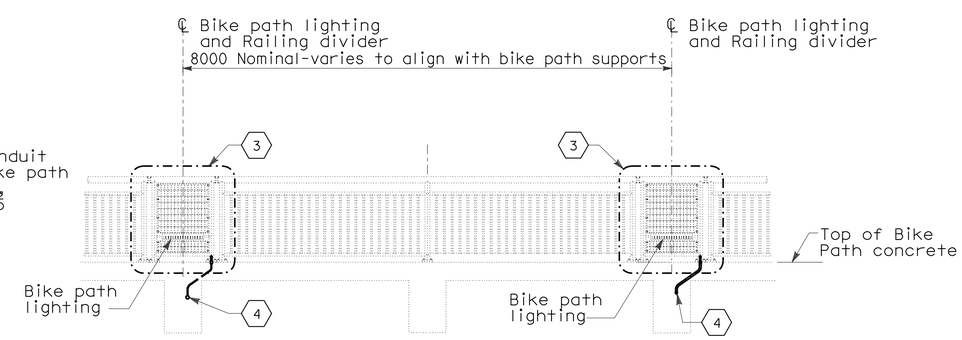

BIKE PATH RAILING - TYPICAL ELEVATION B-B

SCALE: 1:40

(4) **REVISED PER ADDENDUM No. 4 DATED JULY 16, 2012**

ALL DIMENSIONS ARE IN MILLIMETERS UNLESS OTHERWISE SHOWN

DETAILS

YBI TRANSITION STRUCTURES ROADWAY AND GIRDER EASTBOUND (TYPICAL BIKE PATH SECTIONS AND DETAILS)

SCALE AS SHOWN

E-26

THIS PLAN ACCURATE FOR ELECTRICAL WORK ONLY.

NN	6/14/12
REVISED BY	DATE REVISED
REUBEN BUENVIAJE	
J. HALIM, T. WU, W. BECK	
CALCULATED-DESIGNED BY	
CHECKED BY	
CONSULTANT FUNCTIONAL SUPERVISOR	
BOB ZANDIPOUR	

STATE OF CALIFORNIA - DEPARTMENT OF TRANSPORTATION
Caltrans

LAST REVISION 06-14-12
DATE PLOTTED => 13-JUL-2012
TIME PLOTTED => 15:53

Dist	COUNTY	ROUTE	KILOMETER POST TOTAL PROJECT	SHEET No.	TOTAL SHEETS
04	SF	80	12.6/13.9	258	821

Caltrans Metric

Syn Yee Chin 10/31/11
REGISTERED ELECTRICAL ENGINEER

2-21-12
PLANS APPROVAL DATE

REGISTERED PROFESSIONAL ENGINEER SYN YEE CHIN No. 18186 Exp. 09/30/2013 ELECTRICAL STATE OF CALIFORNIA

THE STATE OF CALIFORNIA OR ITS OFFICERS OR AGENTS SHALL NOT BE RESPONSIBLE FOR THE ACCURACY OR COMPLETENESS OF ELECTRONIC COPIES OF THIS PLAN SHEET.

PB AMERICAS, Inc.
303 Second St., Suite 700N
San Francisco, CA 94107-1317

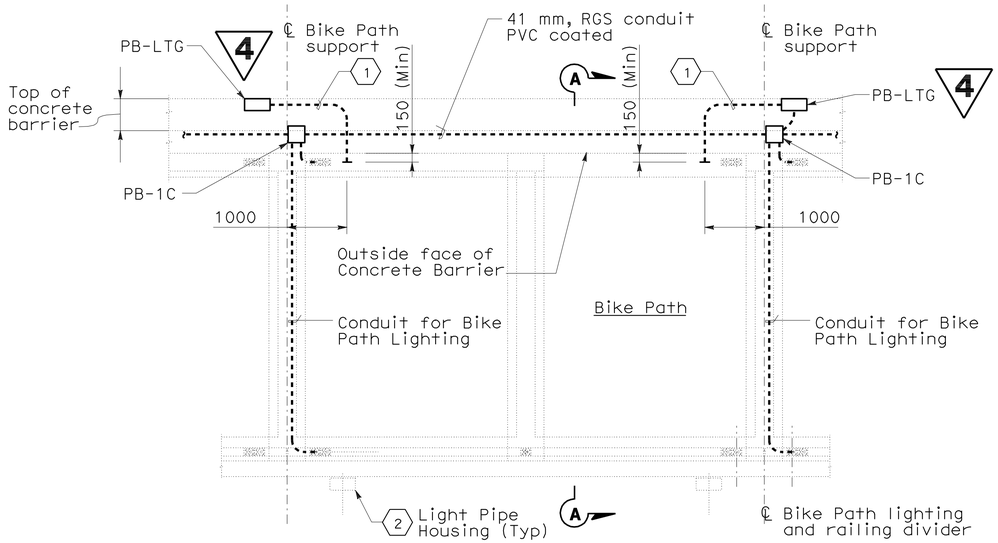

TYPICAL LIGHT PIPE CONDUIT PLAN

NO SCALE

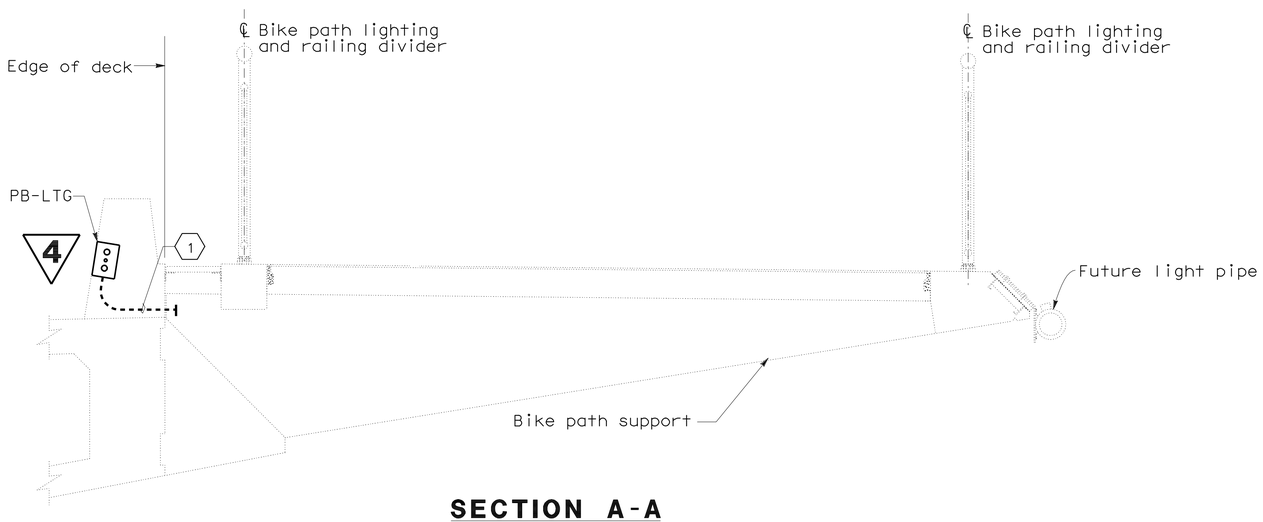

SECTION A-A

SCALE 1:20

NOTES:

1. All exposed conduits and fittings installed between the Roadway and the Bike Path shall be PVC coated galvanized steel.
2. For locations of PB-LTG and PB-COM at the Roadway concrete barrier, see sheets E-14 thru E-18.
3. References:
   - For pull box schedule, see sheet E-46.
   - For light pipe wiring diagram, see sheet E-42.
4. Unless shown in bold, everything else is not part of this Contract.

SHEET NOTES:

(1) Install 21C, RGS conduit from PB-LTG box to outside face of concrete barrier. Cap end of conduit for future use.

(2) For approximate location of the future light pipe housing, see sheet E-19, E-20 and E-21A.

4

4 **REVISED PER ADDENDUM No. 4 DATED. JULY 16, 2012**

ALL DIMENSIONS ARE IN MILLIMETERS UNLESS OTHERWISE SHOWN

DETAILS

YBI TRANSITION STRUCTURES ROADWAY AND GIRDER EASTBOUND (TYPICAL LIGHT PIPE CONDUIT SECTIONS AND DETAILS)

SCALE AS SHOWN

E-30

THIS PLAN ACCURATE FOR ELECTRICAL WORK ONLY.

STATE OF CALIFORNIA - DEPARTMENT OF TRANSPORTATION
Caltrans

CONSULTANT FUNCTIONAL SUPERVISOR: BOB ZANDIPOUR
CALCULATED-DESIGNED BY: REUBEN BUENVIAJE
CHECKED BY: J. HALIM, T. WU, W. BECK
REVISED BY: NN
DATE REVISED: 6/14/12

LAST REVISION 06-14-12
DATE PLOTTED => 13-JUL-2012
TIME PLOTTED => 15:53

Dist	COUNTY	ROUTE	KILOMETER POST TOTAL PROJECT	SHEET No.	TOTAL SHEETS
04	SF	80	12.6/13.9	262	821

Caltrans Metric

Syn Yee Chin 10/31/11
REGISTERED ELECTRICAL ENGINEER

2-21-12
PLANS APPROVAL DATE

REGISTERED PROFESSIONAL ENGINEER SYN YEE CHIN No. 18186 Exp. 09/30/2013 ELECTRICAL STATE OF CALIFORNIA

THE STATE OF CALIFORNIA OR ITS OFFICERS OR AGENTS SHALL NOT BE RESPONSIBLE FOR THE ACCURACY OR COMPLETENESS OF ELECTRONIC COPIES OF THIS PLAN SHEET.

PB AMERICAS, Inc.
303 Second St., Suite 700N
San Francisco, CA 94107-1317

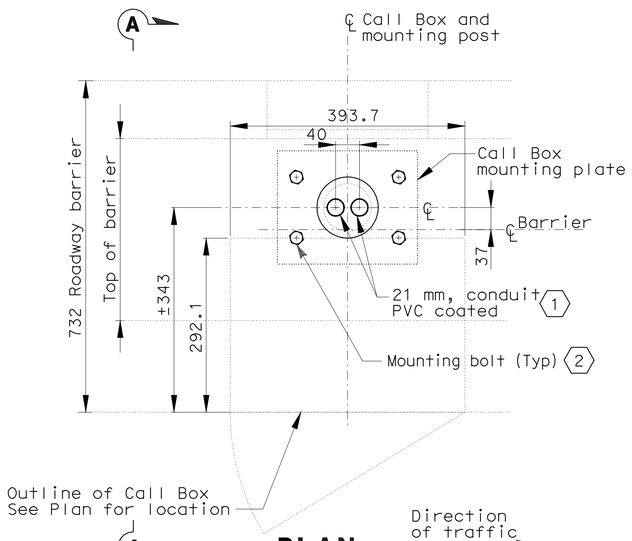

PLAN
(CONDUIT STUB-UP AND MOUNTING OF CALL BOX AT BARRIER)
SCALE 1:4

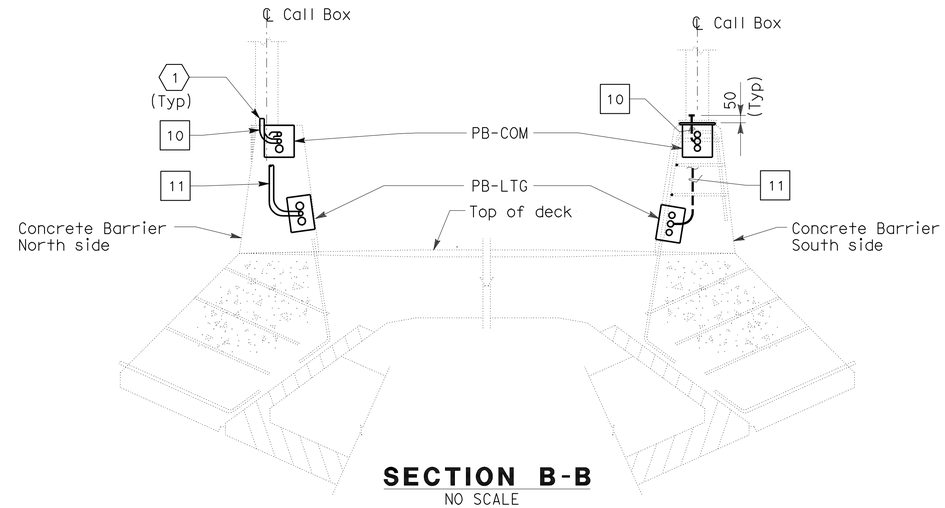

SECTION B-B
NO SCALE

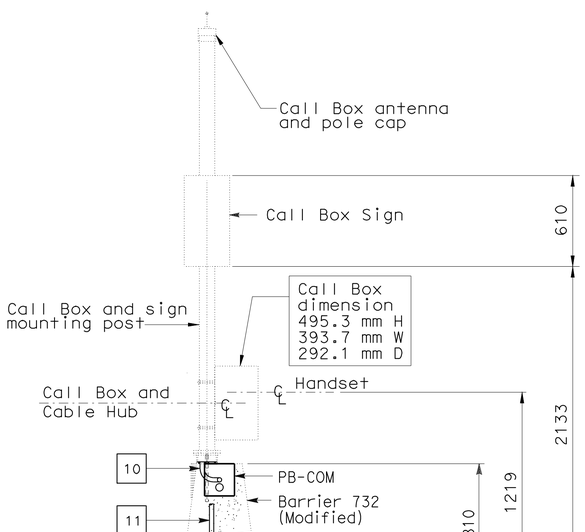

SECTION A-A
SCALE 1:20

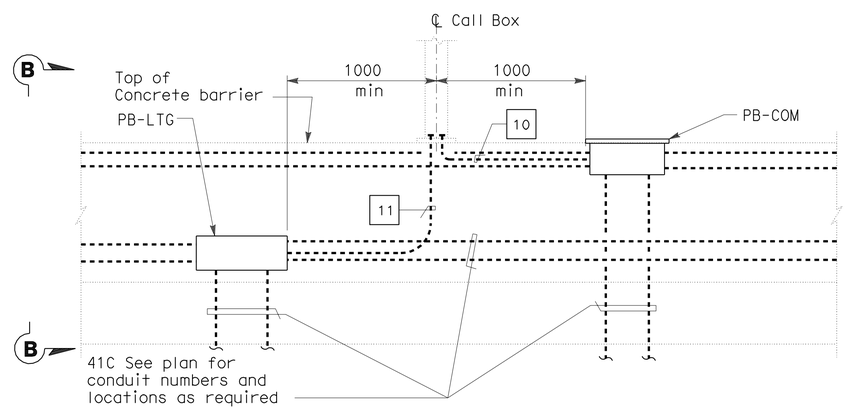

LONGITUDINAL SECTION
(TYPICAL CONDUIT ROUTING INSIDE CONCRETE BARRIER)
NO SCALE

NOTES:

4

1. REFERENCES:
   - For pull box schedule, see sheet E-46.
   - For call box location, see sheets E-14, E-17 & E-49.
   - For call box schedule, see sheet E-52.
   - For call box wiring diaagram, see sheet E-51.
2. Call box installation by others. The Contractor shall pull and terminate cable inside installed call boxes.
3. All conduit connections shall be watertight.
4. Provide approximately 5 m of pigtails for power and TOS conductors for termination to the call box. Seal each conductor end to prevent water from entering the insulation. Pigtails shall be coiled and protected from damage. Provide weatherproof covers for the pigtails and call box supports. Terminate power and signal cable after call box installation by others.

SHEET NOTES:

(1) Bond grounding to call box ground lug with #6 bare copper wire.

(2) (4) 19.05 Dia. HSB (ASTM A325) 180 mm concrete embedment and 130 mm bolt projection from top of concrete.

ALL DIMENSIONS ARE IN MILLIMETERS UNLESS OTHERWISE SHOWN

DETAILS
YBI TRANSITION STRUCTURES
ROADWAY AND GIRDER EASTBOUND
(CALL BOX AT ROADWAY, SECTIONS AND DETAILS)

SCALE AS SHOWN

4 **REVISED PER ADDENDUM No. 4 DATED JULY 16, 2012**

THIS PLAN ACCURATE FOR ELECTRICAL WORK ONLY.

E-34

STATE OF CALIFORNIA - DEPARTMENT OF TRANSPORTATION	CONSULTANT FUNCTIONAL SUPERVISOR	BOB ZANDIPOUR
	CALCULATED-DESIGNED BY	REUBEN BUENVIAJE
	CHECKED BY	J. HALIM, T. WU, W. BECK
	REVISED BY	NN
	DATE REVISED	6/14/12

LAST REVISION 06-14-12 | DATE PLOTTED => 13-JUL-2012 | TIME PLOTTED => 16:04

Dist	COUNTY	ROUTE	KILOMETER POST TOTAL PROJECT	SHEET No.	TOTAL SHEETS
04	SF	80	12.6/13.9	264	821

Caltrans Metric

6/14/12
REGISTERED ELECTRICAL ENGINEER

2-21-12
PLANS APPROVAL DATE

REGISTERED PROFESSIONAL ENGINEER
MARK GRODZKI
No. C 65594
Exp. 9/30/2013
CIVIL
STATE OF CALIFORNIA

THE STATE OF CALIFORNIA OR ITS OFFICERS OR AGENTS SHALL NOT BE RESPONSIBLE FOR THE ACCURACY OR COMPLETENESS OF ELECTRONIC COPIES OF THIS PLAN SHEET.

PB AMERICAS, Inc.
303 Second St., Suite 700N
San Francisco, CA 94107-1317

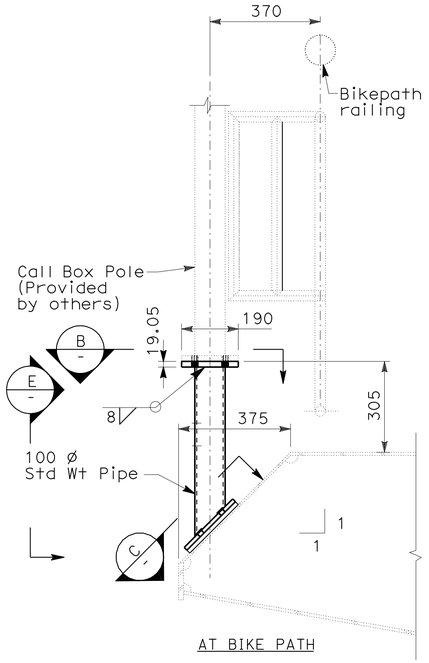

AT BIKE PATH

DETAIL 1
SCALE: 1:10
NOTE 5

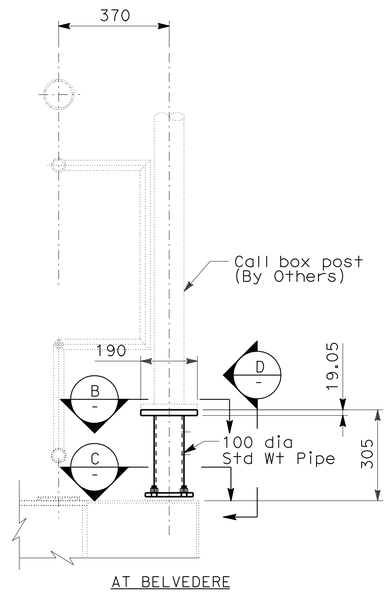

AT BELVEDERE

DETAIL 2
SCALE: 1:10
NOTE 5

NOTE:

1. For call box locations refer to drawings E-14, E-15, E-17, E-18 and E-49. 4

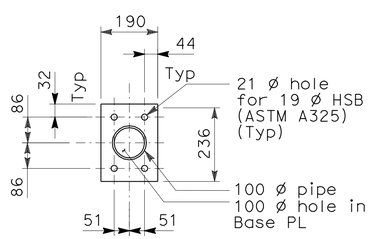

SECTION B
SCALE: 1:10

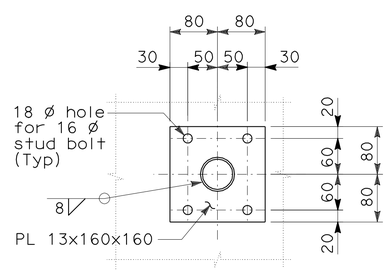

SECTION C
SCALE: 1:5

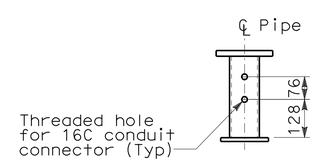

SECTION D
SCALE: 1:10

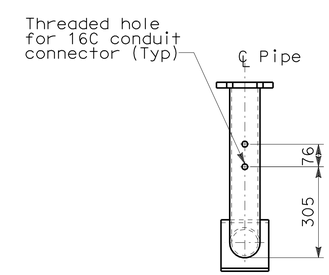

SECTION E
SCALE: 1:10

ALL DIMENSIONS ARE IN MILLIMETERS UNLESS OTHERWISE SHOWN

DETAILS
YBI TRANSITION STRUCTURES
ROADWAY AND GIRDER EASTBOUND
(TYPICAL CALL BOX SECTIONS AND DETAILS)

SCALE AS SHOWN

E-36

4 **REVISED PER ADDENDUM No. 4 DATED. JULY 16, 2012**

THIS PLAN ACCURATE FOR ELECTRICAL WORK ONLY.

REUBEN BUENVIAJE	J. HALIM, T. WU, W. BECK	NN 6/14/12
CALCULATED-DESIGNED BY	CHECKED BY	REVISED BY / DATE REVISED
CONSULTANT FUNCTIONAL SUPERVISOR	BOB ZANDIPOUR	

STATE OF CALIFORNIA - DEPARTMENT OF TRANSPORTATION
Caltrans

LAST REVISION 06-14-12 | DATE PLOTTED => 13-JUL-2012 | TIME PLOTTED => 15:53

Dist	COUNTY	ROUTE	KILOMETER POST TOTAL PROJECT	SHEET No.	TOTAL SHEETS
04	SF	80	12.6/13.9	267A	821

Syn Yee Chin 6/14/12
REGISTERED ELECTRICAL ENGINEER

2-21-12
PLANS APPROVAL DATE

REGISTERED PROFESSIONAL ENGINEER SYN YEE CHIN No. 18186 Exp. 09/30/2013 ELECTRICAL STATE OF CALIFORNIA

THE STATE OF CALIFORNIA OR ITS OFFICERS OR AGENTS SHALL NOT BE RESPONSIBLE FOR THE ACCURACY OR COMPLETENESS OF ELECTRONIC COPIES OF THIS PLAN SHEET.

PB AMERICAS, Inc.
303 Second St., Suite 700N
San Francisco, CA 94107-1317

Caltrans Metric

4

SHEET NOTES:

(1) Pull CKT #LP218-1, 3, 5 cable, 1-4C #8 + GND, in existing conduit wireway.

NOTES:

1. Refer to E-44 for circuit wiring diagram.
2. Refer to conduit and tray schedules, cable and circuit schedules starting at drawing E-62.
3. All equipment, conduits and wireways shown on this drawing are existing. The Contractor shall verify the As-built conditions in the field.

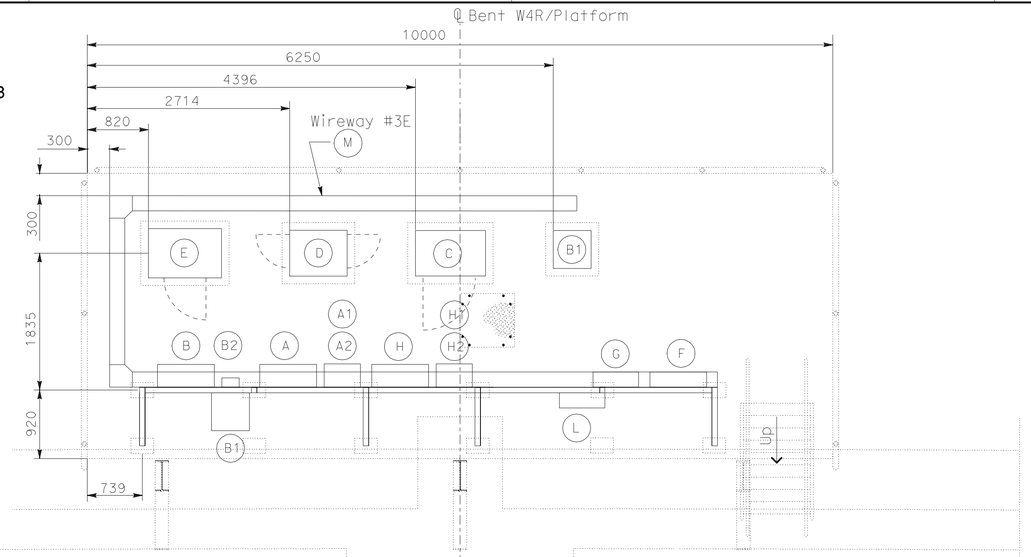

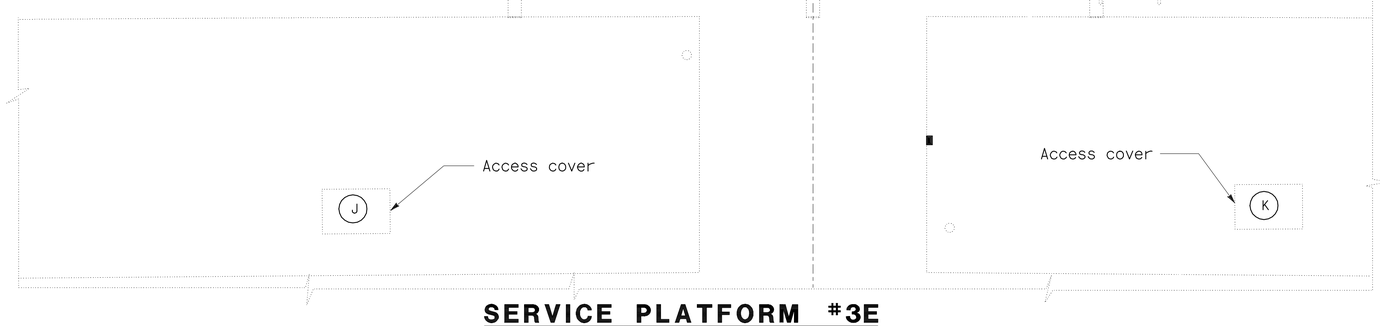

SERVICE PLATFORM #3E EQUIPMENT ARRANGEMENT PLAN

SCALE: 1:40

EQUIPMENT SCHEDULE:

- (A) Utility Panel UP-203, 100 A 208/120 V, 3 Phase, (PB-8A).
- (A1) 15 kVA Transformer, 3 Phase, 4 Wires 480 V-208/120 V, 60 Hz. (Nema 4X) Size: 375 H x 485 W x 311 D.
- (A2) Enclosed molded case circuit breaker Size: 495 H x 232 W x 124 D.
- (B) Utility Panel UP-209, 100 A 208/120 V, 3 Phase, 3 Wires (PB-8A).
- (B1) 25 kVA Transformer, 1 Phase, 480 V-120/240 V, 60 Hz. (Nema 4X) Size: 702 H x 508 W x 508 D.
- (B2) Enclosed molded case circuit breaker Size: 495 H x 232 W x 124 D.
- (C) Remote Terminal Unit RTU #09E Size: 1830 H x 940 W x 610 D.
- (D) Controller Cabinet #TOS-03EA Size: 1625 H x 615 W x 768 D.
- (E) TOS Splice Cabinet TOS-03ES Size: 1400 H x 980 W x 660 D.
- (F) Scada Communication Terminal Box #COM-03E (PB-7B).
- (G) Telephone Terminal Box #TEL=03E (PB-7C).
- (H) Lighting Panel LP-218, 100 A 208/120 V, 3 Phase, 4 Wires (PB-8A).
- (H1) 15 kVA Transformer, 3 Phase, 4 Wires 480 V-208/120 V, 60 Hz. (Nema 4X) Size: 375 H x 485 W x 311 D.
- (H2) Enclosed molded case circuit breaker Size: 495 H x 232 W x 124 D.
- (L) PB-2B, mounted on panel rack.
- (M) 600 V, Wireway #3E, (Nema 4X) 203 H X 203 W.

MISCELLANEOUS:

- (J) Deck utility access opening and cover. Engraving "ELECTRICAL VAULT 3E". Refer to Structures plan sheet, miscellaneous superstucture details No. 2.
- (K) Deck utility access opening and cover. Engraving "TOS/COM VAULT 3E". Refer to Structures plan sheet, miscellaneous superstucture details No. 2.

4 **ADDED PER ADDENDUM No. 4 DATED JULY 16, 2012**

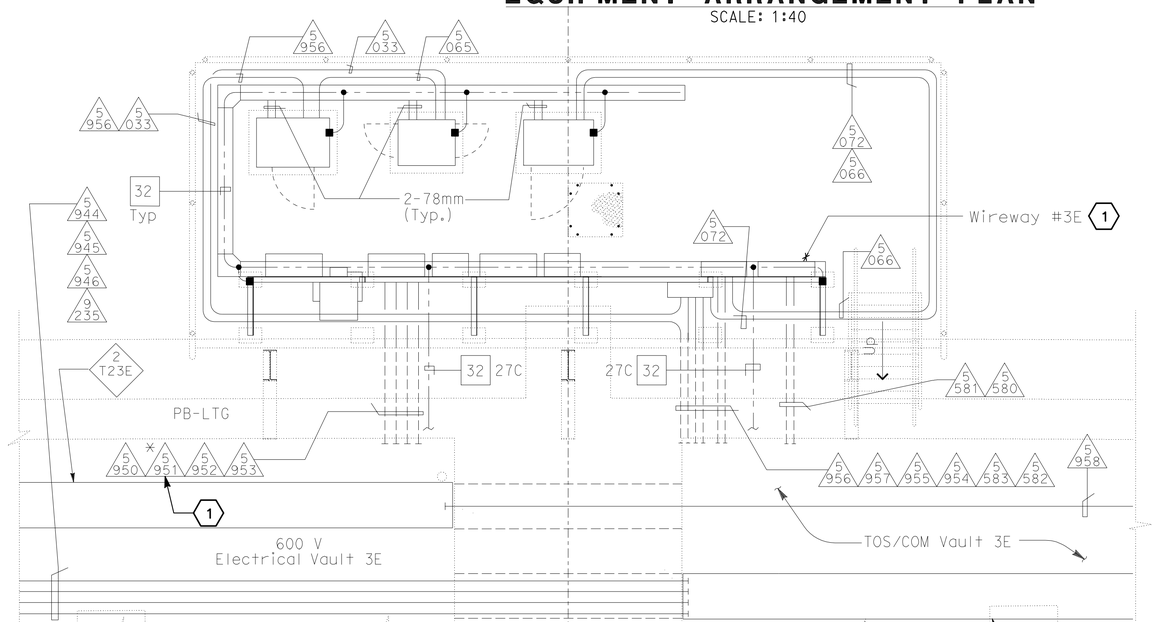

CONDUIT AND GROUNDING PLAN - EB

SCALE: 1:40

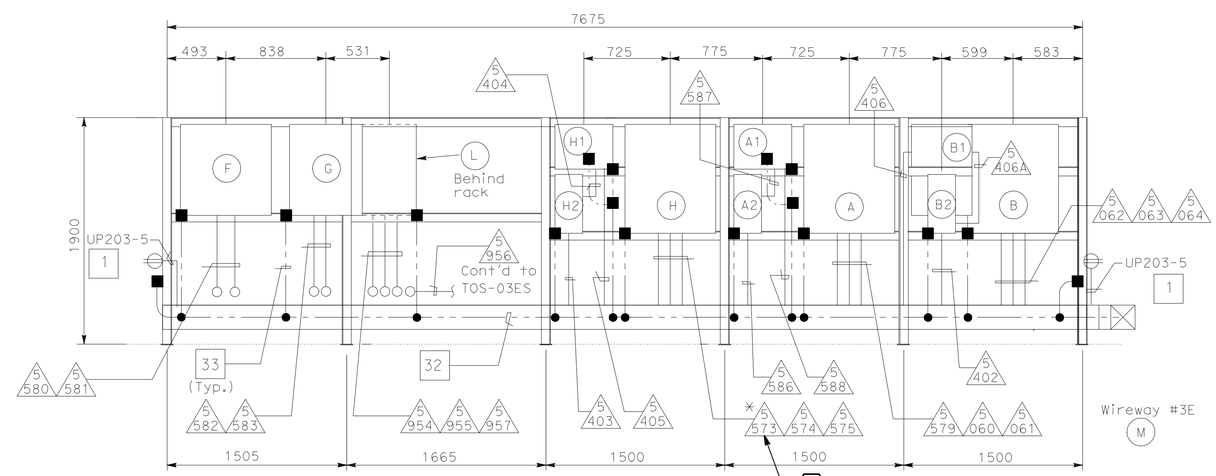

PANEL RACK-ELEVATION

SCALE: 1:25

DETAILS
YBI TRANSITION STRUCTURES ROADWAY AND GIRDER EASTBOUND (PLATFORM 3E ARRANGEMENT AND PLAN)

SCALE AS NOTED

E-39A

THIS PLAN ACCURATE FOR ELECTRICAL WORK ONLY.

ALL DIMENSIONS ARE IN METERS UNLESS OTHERWISE SHOWN

REVISED BY	DATE REVISED

NIKKI NAJDI — CALCULATED-DESIGNED BY
ELLERY LUCAS — CHECKED BY
BRADY NADELL — CONSULTANT FUNCTIONAL SUPERVISOR

STATE OF CALIFORNIA - DEPARTMENT OF TRANSPORTATION
Caltrans

LAST REVISION 00-00-00
DATE PLOTTED => 13-JUL-2012
TIME PLOTTED => 15:53

Dist	COUNTY	ROUTE	KILOMETER POST TOTAL PROJECT	SHEET No.	TOTAL SHEETS
04	SF	80	12.6/13.9	267B	821

Syn Yee Chin 6/14/12
REGISTERED ELECTRICAL ENGINEER

2-21-12
PLANS APPROVAL DATE

REGISTERED PROFESSIONAL ENGINEER
SYN YEE CHIN
No. 18186
Exp. 09/30/2013
ELECTRICAL
STATE OF CALIFORNIA

THE STATE OF CALIFORNIA OR ITS OFFICERS OR AGENTS SHALL NOT BE RESPONSIBLE FOR THE ACCURACY OR COMPLETENESS OF ELECTRONIC COPIES OF THIS PLAN SHEET.

PB AMERICAS, Inc.
303 Second St., Suite 700N
San Francisco, CA 94107-1317

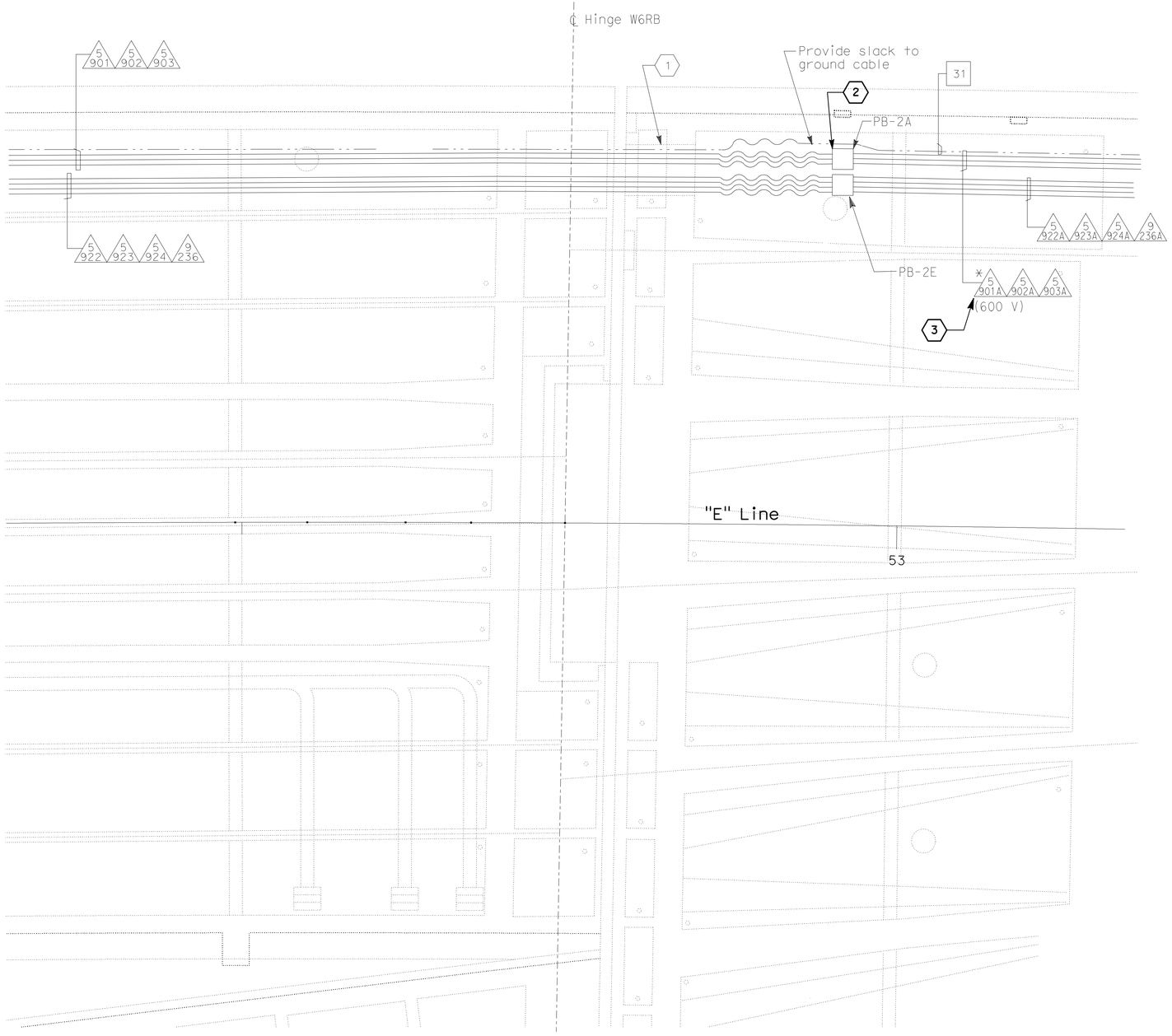

SHEET NOTES:

1. Opening for conduits, refer to YBI Transition Structure Drawings. Girder Diaphragm Detail 1.
2. Splice CKT #A-2008-1, 1-3C#4 + GND for light pipe to existing conductors inside PB-2A.
3. Pull CKT #A-2008-1 in existing conduit.

NOTES:

1. Refer to conduit and tray schedules, cable and circuit schedules starting at drawing E-62.
2. Turn off, lock out, and tag 30 A circuit breaker feeding CKT #A-2008-1 before splicing to PB-2A, refer to conductors E-41A.

4 **ADDED PER ADDENDUM No. 4 DATED JULY 16, 2012**

DETAILS
YBI TRANSITION STRUCTURES ROADWAY AND GIRDER EASTBOUND (HINGE 6RB)

SCALE: 1:75

E-39B

THIS PLAN ACCURATE FOR ELECTRICAL WORK ONLY.

ALL DIMENSIONS ARE IN METERS UNLESS OTHERWISE SHOWN

STATE OF CALIFORNIA - DEPARTMENT OF TRANSPORTATION
Caltrans

CONSULTANT FUNCTIONAL SUPERVISOR: BRADY NADELL
CALCULATED-DESIGNED BY: NIKKI NAJDI
CHECKED BY: ELLERY LUCAS
REVISED BY
DATE REVISED

LAST REVISION 00-00-00
DATE PLOTTED => 13-JUL-2012
TIME PLOTTED => 15:54

Dist	COUNTY	ROUTE	KILOMETER POST TOTAL PROJECT	SHEET No.	TOTAL SHEETS
04	SF	80	12.6/13.9	268	821

Syn Yee Chin 10/31/11
REGISTERED ELECTRICAL ENGINEER

2-21-12
PLANS APPROVAL DATE

REGISTERED PROFESSIONAL ENGINEER
SYN YEE CHIN
No. 18186
Exp. 09/30/2013
ELECTRICAL
STATE OF CALIFORNIA

THE STATE OF CALIFORNIA OR ITS OFFICERS OR AGENTS SHALL NOT BE RESPONSIBLE FOR THE ACCURACY OR COMPLETENESS OF ELECTRONIC COPIES OF THIS PLAN SHEET.

PB AMERICAS, Inc.
303 Second St., Suite 700N
San Francisco, CA 94107-1317

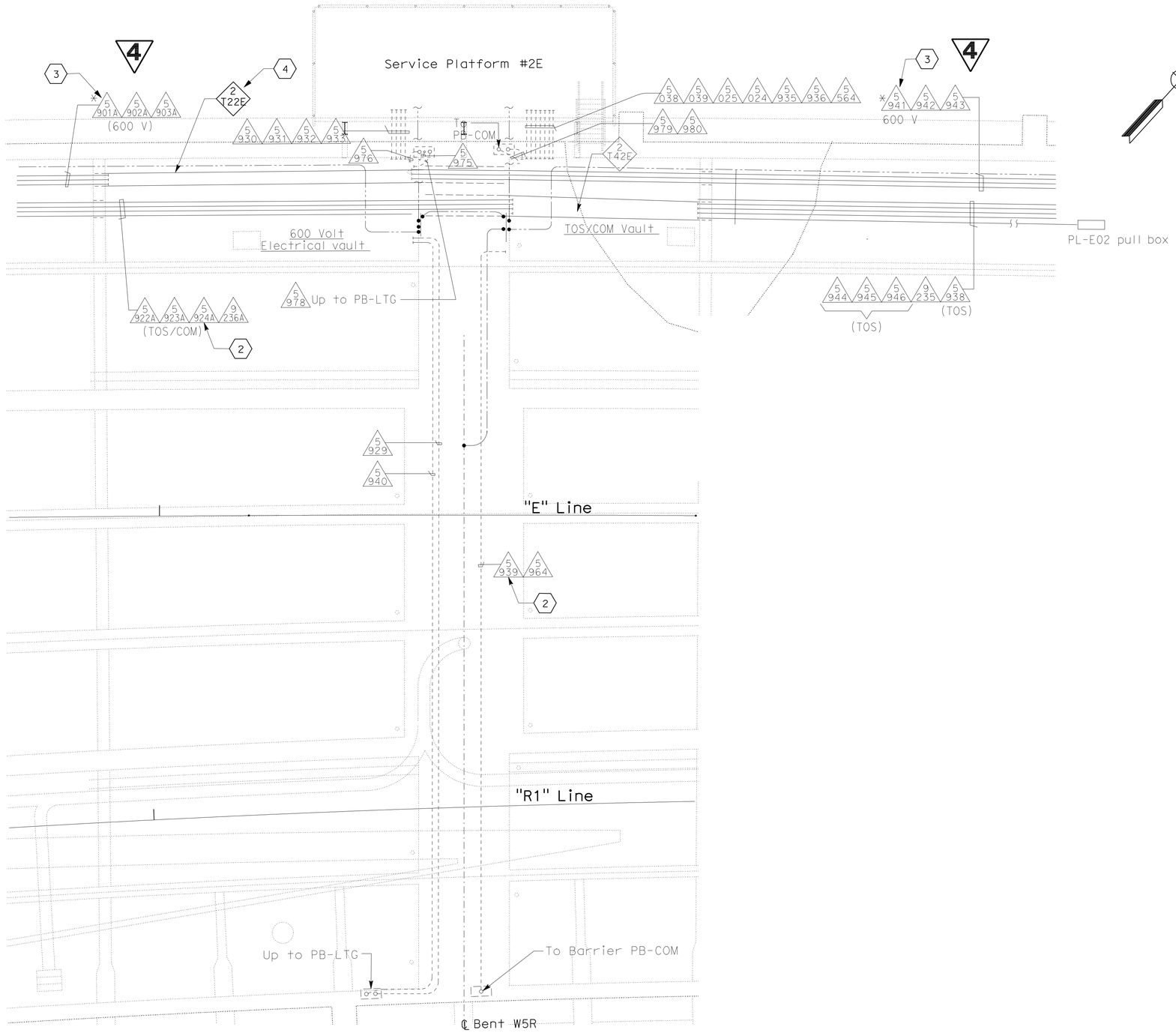

PLAN (1)

NOTE:

1. Refer to conduit and tray schedules, cable and circuit schedules starting at drawing E-62.

SHEET NOTES:

(1) All equipment and conduits shown are existing.

(2) The Contractor to route cable/circuits in existing conduit and pull box.

(3) The Contractor to route Ckt #A-2008-1 cable in existing conduit.

(4) The Contractor to route Ckt #A-2008-1 cable on cable tray inside existing vault #2E.

4 **REVISED PER ADDENDUM No. 4 DATED JULY 16, 2012**

THIS PLAN ACCURATE FOR ELECTRICAL WORK ONLY.

ALL DIMENSIONS ARE IN METERS UNLESS OTHERWISE SHOWN

DETAILS
YBI TRANSITION STRUCTURES ROADWAY AND GIRDER EASTBOUND (BENT W5R)
SCALE 1:75

E-40

STATE OF CALIFORNIA - DEPARTMENT OF TRANSPORTATION
Caltrans

CONSULTANT FUNCTIONAL SUPERVISOR: BOB ZANDIPOUR
CALCULATED-DESIGNED BY: REUBEN BUENVIAJE
CHECKED BY: J. HALIM, T. WU, W. BECK
REVISED BY: NN
DATE REVISED: 6/14/12

LAST REVISION 06-14-12
DATE PLOTTED => 13-JUL-2012
TIME PLOTTED => 15:54

Dist	COUNTY	ROUTE	KILOMETER POST TOTAL PROJECT	SHEET No.	TOTAL SHEETS
04	SF	80	12.6/13.9	268A	821

Syn Yee Chin 6/14/12
REGISTERED ELECTRICAL ENGINEER

2-21-12
PLANS APPROVAL DATE

REGISTERED PROFESSIONAL ENGINEER
SYN YEE CHIN
No. 18186
Exp. 09/30/2013
ELECTRICAL
STATE OF CALIFORNIA

THE STATE OF CALIFORNIA OR ITS OFFICERS OR AGENTS SHALL NOT BE RESPONSIBLE FOR THE ACCURACY OR COMPLETENESS OF ELECTRONIC COPIES OF THIS PLAN SHEET.

PB AMERICAS, Inc.
303 Second St., Suite 700N
San Francisco, CA 94107-1317

Caltrans Metric

4

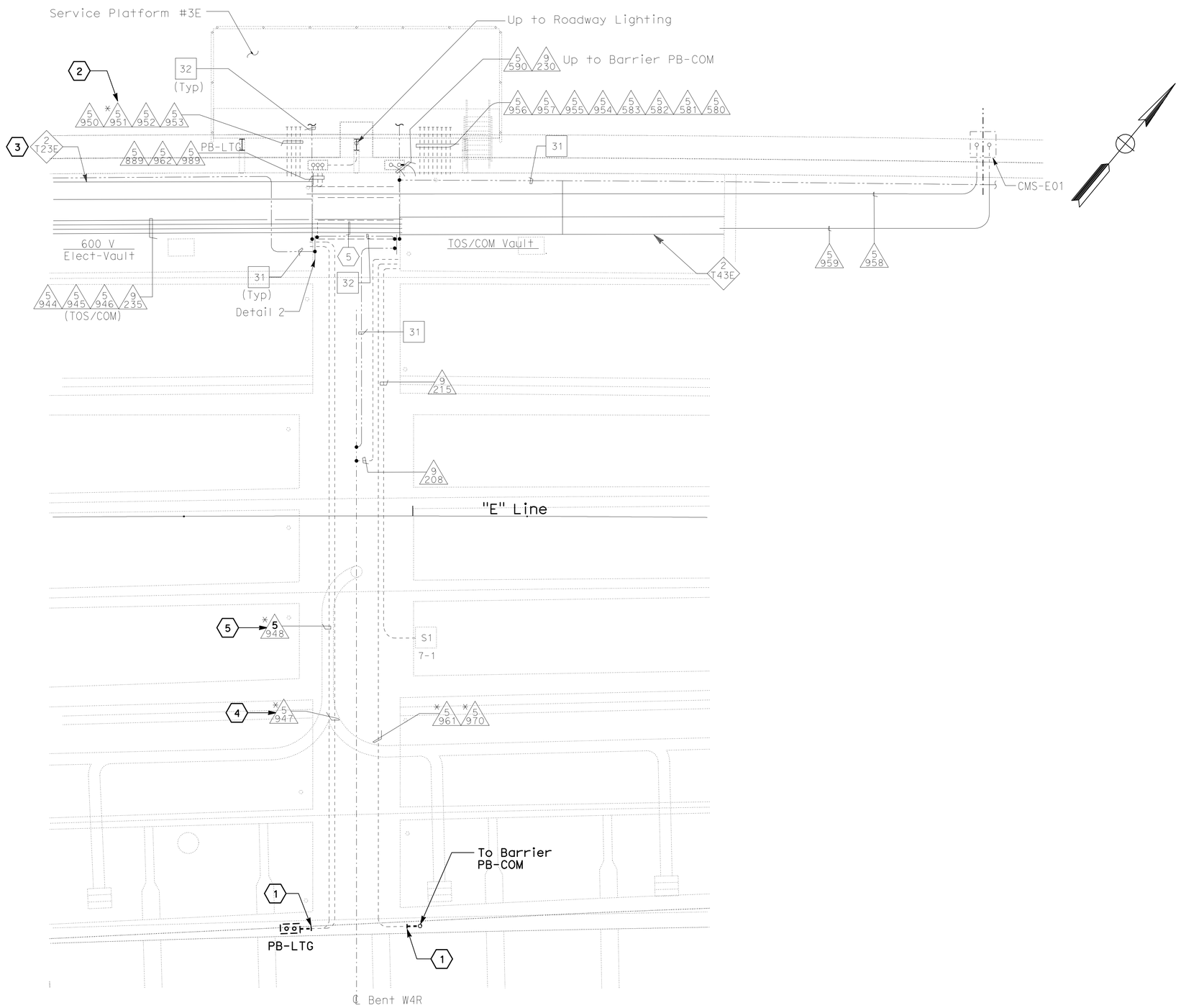

NOTES:

1. Refer to conduit and tray schedules, cable and circuit schedules starting at drawing E-62.
2. Except shown in bold, all equipment and conduits shown are existing.

SHEET NOTES:

(1) Remove cap from the existing conduit, extend conduit and connect conduit into PB-LTG and PB-COM.

(2) Route CKT #LP218-1, 3, 5 cable, 1-4C #8 + GND, in existing conduit.

(3) Route CKT #A-2008-1 and CKT #LP218-1, 3, 5 cables on cable tray inside E Vault #3E.

(4) Route CKT #LP218-1, 3, 5 cable in existing conduit.

(5) Route CKT #A-2008-1 cable in existing conduit.

4 **ADDED PER ADDENDUM No. 4 DATED JULY 16, 2012**

DETAILS
YBI TRANSITION STRUCTURES ROADWAY AND GIRDER EASTBOUND (BENT W4R)
SCALE: 1:75

E-40A

THIS PLAN ACCURATE FOR ELECTRICAL WORK ONLY.

ALL DIMENSIONS ARE IN METERS UNLESS OTHERWISE SHOWN

STATE OF CALIFORNIA - DEPARTMENT OF TRANSPORTATION
Caltrans

CONSULTANT FUNCTIONAL SUPERVISOR: BRADY NADELL
CALCULATED-DESIGNED BY: ELLERY LUCAS
CHECKED BY: NIKKI NAJDI
REVISED BY / DATE REVISED

LAST REVISION 00-00-00
DATE PLOTTED => 13-JUL-2012
TIME PLOTTED => 15:54

Dist	COUNTY	ROUTE	KILOMETER POST TOTAL PROJECT	SHEET No.	TOTAL SHEETS
04	SF	80	12.6/13.9	269A	821

Syn Yee Chin 6/14/12
REGISTERED ELECTRICAL ENGINEER

2-21-12
PLANS APPROVAL DATE

REGISTERED PROFESSIONAL ENGINEER SYN YEE CHIN No. 18186 Exp. 09/30/2013 ELECTRICAL STATE OF CALIFORNIA

THE STATE OF CALIFORNIA OR ITS OFFICERS OR AGENTS SHALL NOT BE RESPONSIBLE FOR THE ACCURACY OR COMPLETENESS OF ELECTRONIC COPIES OF THIS PLAN SHEET.

PB AMERICAS, Inc.
303 Second St., Suite 700N
San Francisco, CA 94107-1317

Caltrans Metric

4

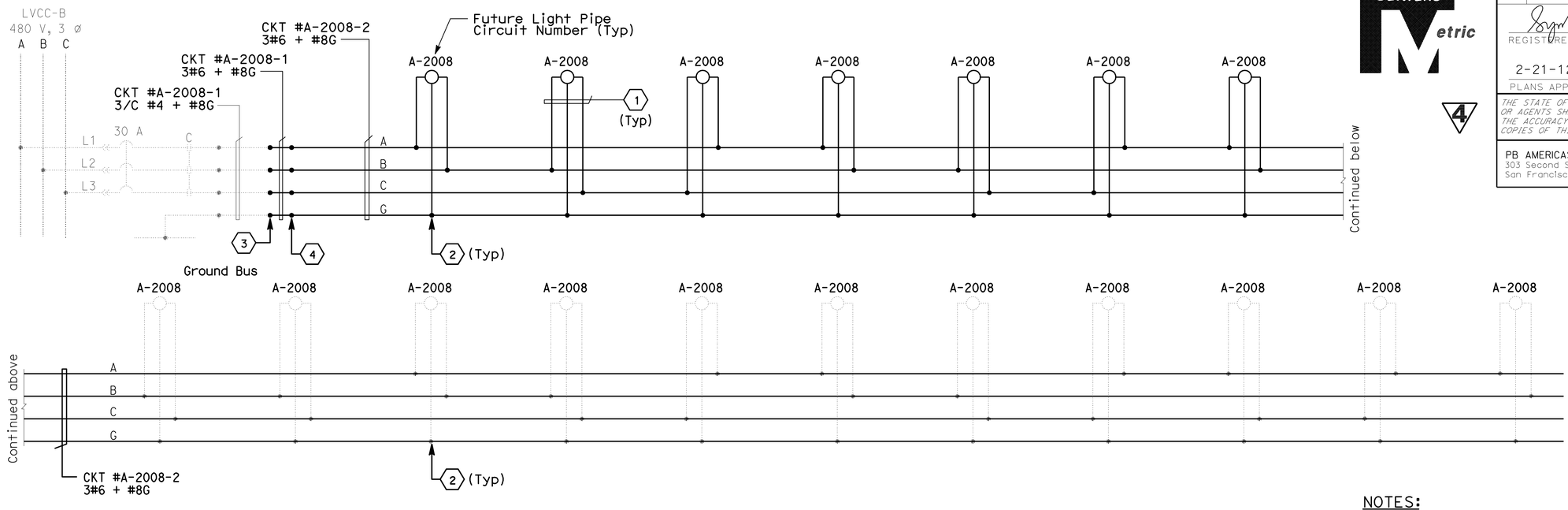

NOTES:

1. References:
   - For pull box schedule, see sheet E-13.
   - For future light pipe plan, see sheet E-21A.
   - For light pipe schedules, see sheet E-46.
   - For cable routing, refer to E-40A, E-44, E-62A.
2. Verify the circuit breaker feeding CKT #A-2008-1, turn off, lock out and tag this breaker before splicing to existing conductors in PB-2A.

SHEET NOTES:

1. 3#10 AWG single conductors
2. Splice conductors inside PB-LTG for future light pipe.
3. Splice to existing conductors inside PB-2A.
4. Splice to existing conductors inside PB-LTG.

4 **ADDED PER ADDENDUM No. 4 DATED JULY 16, 2012**

DETAILS
YBI TRANSITION STRUCTURES
ROADWAY AND GIRDER EASTBOUND
(480 V LIGHT PIPE WIRING DIAGRAM)

NO SCALE

E-41A

THIS PLAN ACCURATE FOR ELECTRICAL WORK ONLY.

ALL DIMENSIONS ARE IN METERS UNLESS OTHERWISE SHOWN

STATE OF CALIFORNIA - DEPARTMENT OF TRANSPORTATION
Caltrans

CONSULTANT FUNCTIONAL SUPERVISOR: BRADY NADELL
CALCULATED-DESIGNED BY: ELLERY LUCAS
CHECKED BY: NIKKI NAJDI
REVISED BY
DATE REVISED

LAST REVISION 00-00-00
DATE PLOTTED => 13-JUL-2012
TIME PLOTTED => 15:54

Dist	COUNTY	ROUTE	KILOMETER POST TOTAL PROJECT	SHEET No.	TOTAL SHEETS
04	SF	80	12.6/13.9	272	821

Syn Yee Chin 10/31/11
REGISTERED ELECTRICAL ENGINEER

2-21-12
PLANS APPROVAL DATE

REGISTERED PROFESSIONAL ENGINEER SYN YEE CHIN No. 18186 Exp. 09/30/2013 ELECTRICAL STATE OF CALIFORNIA

THE STATE OF CALIFORNIA OR ITS OFFICERS OR AGENTS SHALL NOT BE RESPONSIBLE FOR THE ACCURACY OR COMPLETENESS OF ELECTRONIC COPIES OF THIS PLAN SHEET.

PB AMERICAS, Inc.
303 Second St., Suite 700N
San Francisco, CA 94107-1317

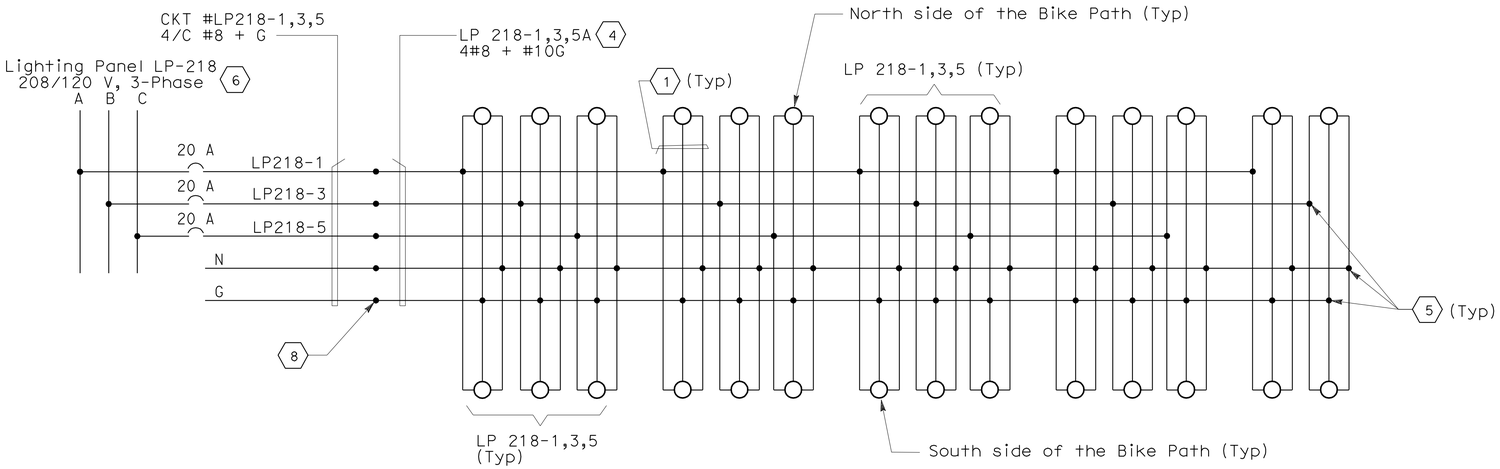

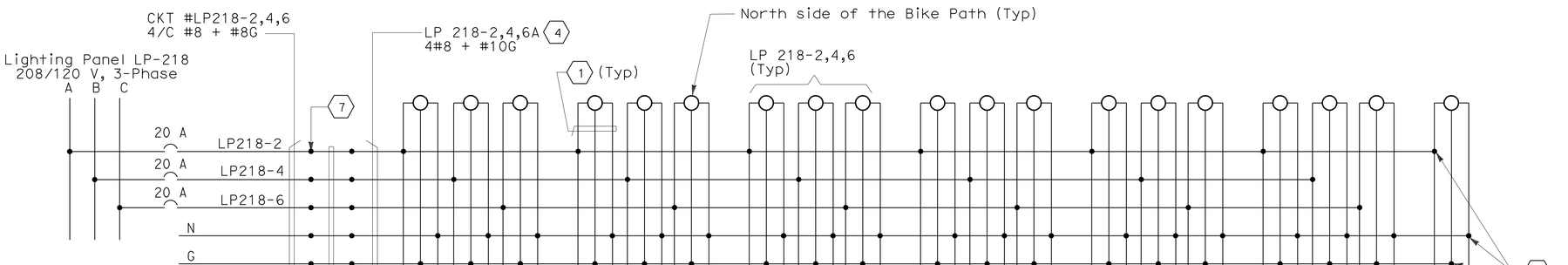

NOTES:

1. References:
   - Refer to conduit and tray schedules, cable and circuit schedules starting at drawing E-62.
   - For lighting fixtures locations, see sheets E-16 and E-17.
   - Refer to drawing E-46 for pull box and light fixture schedules.
2. The Contractor shall verify that the feeding breakers for Ckt#218-1, 3, 5 and LP218-2, 4, 6 are off, locked out, and tagged before performing any work.
3. The Contractor to ensure that the feeding breakers for Ckt#218-1, 3, 5 and LP218-2, 4, 6 are off, locked out, and tagged before performing any work.

SHEET NOTES:

1. 3#12 AWG single conductors.
2. Splice to existing conductors inside PB-1C located next to bike path.
3. For type and size of in line fusing, see Caltrans Standard plans. Locate fusing inside bike path lighting housing.
4. 4#8 + 1#10 GND, single conductors.
5. Splice conductors inside PB-1C located next to bike path.
6. For LP-218 schedule, see E-47.
7. Splice to existing conductors inside PB-LTG located in roadway barrier.
8. Splice conductors inside PB-LTG located next to bikepath.

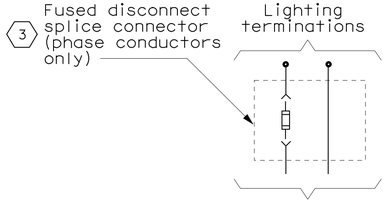

DETAIL 1
(TYP. FOR EACH BIKE PATH LIGHTING)

DETAILS
YBI TRANSITION STRUCTURES
ROADWAY AND GIRDER EASTBOUND
(120 V BIKE PATH LIGHTING WIRING DIAGRAM)
NO SCALE

4 **REVISED PER ADDENDUM No. 4 DATED JULY 16, 2012**

THIS PLAN ACCURATE FOR ELECTRICAL WORK ONLY.

E-44

STATE OF CALIFORNIA - DEPARTMENT OF TRANSPORTATION
Caltrans

CONSULTANT FUNCTIONAL SUPERVISOR: BOB ZANDIPOUR
CALCULATED-DESIGNED BY: J. HALIM, T. WU, W. BECK
CHECKED BY: REUBEN BUENVIAJE
REVISED BY: NN
DATE REVISED: 6/14/12

LAST REVISION: 06-14-12
DATE PLOTTED => 13-JUL-2012
TIME PLOTTED => 15:54

Dist	COUNTY	ROUTE	KILOMETER POST TOTAL PROJECT	SHEET No.	TOTAL SHEETS
04	SF	80	12.6/13.9	274	821

Syn Yee Chin 10/31/11
REGISTERED ELECTRICAL ENGINEER

2-21-12
PLANS APPROVAL DATE

REGISTERED PROFESSIONAL ENGINEER SYN YEE CHIN No. 18186 Exp. 09/30/2013 ELECTRICAL STATE OF CALIFORNIA

THE STATE OF CALIFORNIA OR ITS OFFICERS OR AGENTS SHALL NOT BE RESPONSIBLE FOR THE ACCURACY OR COMPLETENESS OF ELECTRONIC COPIES OF THIS PLAN SHEET.

PB AMERICAS, Inc.
303 Second St., Suite 700N
San Francisco, CA 94107-1317

LIGHT PIPE SCHEDULE

Circuit Number	Location Reference	Location Bikepath side	Mounting	Ltg. Fixture Type	Number/ Wattage	Remarks
A-2008	E-21A	South	Bracket Mtd.	YAL	1-400 W	with Remote Ballast
A-2008	E-21A	South	Bracket Mtd.	YAL	1-400 W	with Remote Ballast
A-2008	E-21A	South	Bracket Mtd.	YAL	1-400 W	with Remote Ballast
A-2008	E-21A	South	Bracket Mtd.	YAL	1-400 W	with Remote Ballast
A-2008	E-21A	South	Bracket Mtd.	YAL	1-400 W	with Remote Ballast
A-2008	E-21A	South	Bracket Mtd.	YAL	1-400 W	with Remote Ballast
A-2008	E-21A	South	Bracket Mtd.	YAL	1-400 W	with Remote Ballast
A-2008	E-21A	South	Bracket Mtd.	YAL	1-400 W	with Remote Ballast
A-2008	E-21A	South	Bracket Mtd.	YAL	1-400 W	with Remote Ballast
A-2008	E-21A	South	Bracket Mtd.	YAL	1-400 W	with Remote Ballast
A-2008	E-21A	South	Bracket Mtd.	YAL	1-400 W	with Remote Ballast
A-2008	E-21A	South	Bracket Mtd.	YAL	1-400 W	with Remote Ballast
A-2008	E-21A	South	Bracket Mtd.	YAL	1-400 W	with Remote Ballast
A-2008	E-21A	South	Bracket Mtd.	YAL	1-400 W	with Remote Ballast
A-2008	E-21A	South	Bracket Mtd.	YAL	1-400 W	with Remote Ballast
A-2008	E-21A	South	Bracket Mtd.	YAL	1-400 W	with Remote Ballast
A-2009	E-20	South	Bracket Mtd.	YAL	1-400 W	with Remote Ballast
A-2009	E-20	South	Bracket Mtd.	YAL	1-400 W	with Remote Ballast
A-2009	E-20	South	Bracket Mtd.	YAL	1-400 W	with Remote Ballast
A-2009	E-20	South	Bracket Mtd.	YAL	1-400 W	with Remote Ballast
A-2009	E-20	South	Bracket Mtd.	YAL	1-400 W	with Remote Ballast
A-2009	E-20	South	Bracket Mtd.	YAL	1-400 W	with Remote Ballast
A-2009	E-20	South	Bracket Mtd.	YAL	1-400 W	with Remote Ballast
A-2009	E-20	South	Bracket Mtd.	YAL	1-400 W	with Remote Ballast
A-2009	E-20	South	Bracket Mtd.	YAL	1-400 W	with Remote Ballast
A-2009	E-20	South	Bracket Mtd.	YAL	1-400 W	with Remote Ballast
A-2009	E-20	South	Bracket Mtd.	YAL	1-400 W	with Remote Ballast
A-2010	E-20	South	Bracket Mtd.	YAL	1-400 W	with Remote Ballast
A-2010	E-20	South	Bracket Mtd.	YAL	1-400 W	with Remote Ballast
A-2010	E-20	South	Bracket Mtd.	YAL	1-400 W	with Remote Ballast
A-2010	E-20	South	Bracket Mtd.	YAL	1-400 W	with Remote Ballast
A-2010	E-20	South	Bracket Mtd.	YAL	1-400 W	with Remote Ballast
A-2010	E-19	South	Bracket Mtd.	YAL	1-400 W	with Remote Ballast
A-2010	E-19	South	Bracket Mtd.	YAL	1-400 W	with Remote Ballast
A-2010	E-19	South	Bracket Mtd.	YAL	1-400 W	with Remote Ballast
A-2010	E-19	South	Bracket Mtd.	YAL	1-400 W	with Remote Ballast
A-2010	E-19	South	Bracket Mtd.	YAL	1-400 W	with Remote Ballast
A-2010	E-19	South	Bracket Mtd.	YAL	1-400 W	with Remote Ballast
A-2010	E-19	South	Bracket Mtd.	YAL	1-400 W	with Remote Ballast

1

4

BIKE PATH FIXTURE SCHEDULE

Location	Mounting	Lighting Fixture Type	Number/ Wattage	Remarks
Bike Path Structure	Bike Path Railing	YSB	1-40 W	Compact Fluorescent

BIKE PATH LANDING POLE AND FIXTURE SCHEDULE

Circuit Number	Pole Number	Location	Ltg. Fixture Type (State Furnished)	Remarks (Mounting Provisions)
LP217-6	08E-1	Landing	Furnished by Caltrans	Pole Mounted
LP217-6	08E-2	Landing	Furnished by Caltrans	Pole Mounted
LP217-2	08E-3	Landing	Furnished by Caltrans	Pole Mounted
LP217-2	08E-4	Landing	Furnished by Caltrans	Pole Mounted

PULL BOX SCHEDULE

Location	Type	Pull Box size	Enclosure Type	Nameplate Pull Box Cover	Remarks
Roadway Barrier	PB-COM	——	——	Communication	Caltrans standard RSP ES-9C (PB-9A)
Roadway Barrier	PB-LTG	——	——	600 V - Electrical	Caltrans standard RSP ES-9C (PB-9)
Bike Path	PB-1C	152 L x 203 W x 102 D	NEMA 4X	600 V - Electrical	
Eastbound off Ramp	PB-TOS	——	——	Ramp Meter	Caltrans standard RSP ES-8 (6)
Eastbound off Ramp	PB-600V	——	——	600 V - Electrical	Caltrans standard RSP ES-8 (6)

RAMP LIGHT POLE AND FIXTURE SCHEDULE

Circuit Number	Pole Number	Location Station	Location Roadway side	Mounting Height (M)	Ltg. Fixture Type (State Furnished)	Remarks (Mounting Provisions)
S-2042	2042-1	51+26.2	Ramp	7	Furnished by Caltrans	Pole mounted
S-2042	2042-2	51+40.5	Ramp	7	Furnished by Caltrans	Pole mounted
S-2042	2042-3	51+57.3	Ramp	7	Furnished by Caltrans	Pole mounted
S-2042	2042-4	51+73.3	Ramp	7	Furnished by Caltrans	Pole mounted
S-2042	2042-5	51+89.3	Ramp	7	Furnished by Caltrans	Pole mounted
S-2042	2042-6	52+05.3	Ramp	7	Furnished by Caltrans	Pole mounted
S-2042	2042-7	52+22.0	Ramp	7	Furnished by Caltrans	Pole mounted
S-2042	2042-8	52+38.0	Ramp	7	Furnished by Caltrans	Pole mounted
S-2042	2042-9	52+54.0	Ramp	7	Furnished by Caltrans	Pole mounted
S-2042	2042-10	52+70.0	Ramp	7	Furnished by Caltrans	Pole mounted
S-2042	2042-11	52+86.0	Ramp	7	Furnished by Caltrans	Pole mounted

NOTES:

1. References:
   - For roadway lighting and electrical systems, see sheets E-14 thru E-18.
   - For 480 V ramp pole lighting wiring diagram, see sheet E-41.
   - For 480 V light pipe wiring diagram, see sheet E-42.
   - For 120 V bike path lighting wiring diagram, see sheets E-43, E-44 & E-45.
2. Light pipe lighting fixture type YAL are not supplied under this contract.

SHEET NOTES:

1 Light pipe shown for reference only. Circuit provision for future use, refer to wiring diagram sheets E-41A & E-42.

4

4 REVISED PER ADDENDUM No. 4 DATED JULY 16, 2012

DETAILS
YBI TRANSITION STRUCTURES ROADWAY AND GIRDER EASTBOUND (PULL BOX, LIGHT PIPE, LIGHT POLE AND FIXTURE SCHEDULES)

NO SCALE

E-46

REVISED BY	DATE REVISED
NN	6/14/12

REUBEN BUENVIAJE
J. HALIM, T. WU, W. BECK

CALCULATED-DESIGNED BY
CHECKED BY

CONSULTANT FUNCTIONAL SUPERVISOR
BOB ZANDIPOUR

STATE OF CALIFORNIA - DEPARTMENT OF TRANSPORTATION
Caltrans

THIS PLAN ACCURATE FOR ELECTRICAL WORK ONLY.

LAST REVISION 06-14-12 | DATE PLOTTED => 13-JUL-2012 | TIME PLOTTED => 15:54

Dist	COUNTY	ROUTE	KILOMETER POST TOTAL PROJECT	SHEET No.	TOTAL SHEETS
04	SF	80	12.6/13.9	275	821

Syn Yee Chin 10/31/11
REGISTERED ELECTRICAL ENGINEER

2-21-12
PLANS APPROVAL DATE

REGISTERED PROFESSIONAL ENGINEER SYN YEE CHIN No. 18186 Exp. 09/30/2013 ELECTRICAL STATE OF CALIFORNIA

THE STATE OF CALIFORNIA OR ITS OFFICERS OR AGENTS SHALL NOT BE RESPONSIBLE FOR THE ACCURACY OR COMPLETENESS OF ELECTRONIC COPIES OF THIS PLAN SHEET.

PB AMERICAS, Inc.
303 Second St., Suite 700N
San Francisco, CA 94107-1317

Caltrans Metric

4

LIGHTING PANEL LP-217 (CKT.#2101) (1)(2)

Location: TRANSITION STRUCTURE SERVICE PLATFORM #2E

LOAD DESCRIPTION	LTG	CB		CB	LTG	LOAD DESCRIPTION
Bike Lane LTG on Ramp (10)	590	20/1	1 A 2	20/1	**618**	Bike Lane LTG (8) **Bike Path Landing (2)**
Bike Lane LTG on Ramp (10)	590	20/1	3 B 4	20/1	**472**	Bike Lane LTG **(8)**
Bike Lane LTG on Ramp (10)	590	20/1	5 C 6	20/1	**500**	Bike Lane LTG (6) **Bike Path Landing (2)**
Spare		20/1	7 A 8	20/1		Spare
		20/1	9 B 10	20/1		
		20/1	11 C 12	20/1		
TOTAL VA	1770				**1590**	TOTAL VA

LOAD SUMMARY (INCLUDES .90PF) (VA)
Lighting (At 125%): **4200**
Gen Use (1st 10 kVA AT 100% Plus 50% of remainder):

TOTAL kVA: **4.200**

BALANCE (kVA)
Phase A - **1.208**
Phase B - **1.062**
Phase C - **1.090**

VOLTAGE: 208/120 V
PHASE/WIRES: 3-Phase, 4-WIRE
BUS RATING: 100 A
MAIN: 60 A
MOUNTING: Surface in Fiberglass Encl.
K.A.I.C.: 10

LIGHTING PANEL LP-218 (CKT.#2102) (2)

LOCATION: TRANSITION STRUCTURE SERVICE PLATFORM #3E

LOAD DESCRIPTION	LTG	CB		CB	LTG	LOAD DESCRIPTION
Bike Path Lighting (10)	590	20/1	1 A 2	20/1	708	Bike Path Lighting (12)
Bike Path Lighting (10)	590	20/1	3 B 4	20/1	708	Bike Path Lighting (12)
Bike Path Lighting (8)	472	20/1	5 C 6	20/1	708	Bike Path Lighting (12)
Spare		20/1	7 A 8	20/1		Spare
		20/1	9 B 10	20/1		
		20/1	11 C 12	20/1		
TOTAL VA	1652				2124	TOTAL VA

LOAD SUMMARY (INCLUDES .90PF) (VA)
Lighting (At 125%): 4720

TOTAL kVA: 4.720

BALANCE (kVA)
Phase A - 1.298
Phase B - 1.298
Phase C - 1.180

VOLTAGE: 208/120 V
PHASE/WIRES: 3-Phase, 4-Wire
BUS RATING: 100 A
MAIN: 60 A
MOUNTING: SURFACE
K.A.I.C.: 10

THIS PLAN ACCURATE FOR ELECTRICAL WORK ONLY.

NOTES:

1. Refer to E-39A, Platform 3E Arrangement, for location of LP-218.
2. Refer to E-43 and E-44 for 120V Bike path Lighting Wiring Diagram.
3. Turn off, Lockout, and Tag 60A main breaker in LP-218 before connecting new loads.
3. The Contractor to update panel board schedule and provide a new revised type written panelboard schedule. Attach removable circuit directory on the inside of panel.

SHEET NOTES:

(1) Circuits shown bold are partially pulled in this Contract. Terminations of conductors on breakers by others. The Contractor shall verify that an up-to-date and accurate panel schedule is attached on panelboard.

(2) Panelboard is existing.

4 REVISED PER ADDENDUM No. 4 DATED JULY 16, 2012

DETAILS
YBI TRANSITION STRUCTURES ROADWAY AND GIRDER EASTBOUND (PANEL LP-217 AND LP-218 SCHEDULES)
NO SCALE

E-47

NN	6/14/12
REVISED BY	DATE REVISED
REUBEN BUENVIAJE	J. HALIM, T. WU, W. BECK
CALCULATED-DESIGNED BY	CHECKED BY
CONSULTANT FUNCTIONAL SUPERVISOR	BOB ZANDIPOUR

STATE OF CALIFORNIA - DEPARTMENT OF TRANSPORTATION
Caltrans

LAST REVISION 06-14-12 | DATE PLOTTED => 13-JUL-2012 | TIME PLOTTED => 15:54

Dist	COUNTY	ROUTE	KILOMETER POST TOTAL PROJECT	SHEET No.	TOTAL SHEETS
04	SF	80	12.6/13.9	275A	821

Caltrans Metric

4

Syn Yee Chin 6/14/12
REGISTERED ELECTRICAL ENGINEER

2-21-12
PLANS APPROVAL DATE

REGISTERED PROFESSIONAL ENGINEER
SYN YEE CHIN
No. 18186
Exp. 09/30/2013
ELECTRICAL
STATE OF CALIFORNIA

THE STATE OF CALIFORNIA OR ITS OFFICERS OR AGENTS SHALL NOT BE RESPONSIBLE FOR THE ACCURACY OR COMPLETENESS OF ELECTRONIC COPIES OF THIS PLAN SHEET.

PB AMERICAS, Inc.
303 Second St., Suite 700N
San Francisco, CA 94107-1317

UTILITY PANEL UP-203 (CKT.#2093) (1)(2)

Location: TRANSITION STRUCTURE SERVICE PLATFORM #3E

LOAD DESCRIPTION	LTG	REC	OTH.	CB		CB	LTG	REC	OTH.	LOAD DESCRIPTION
Recept (4) Eastbound North Barrier		720		20/1	1 A 2	20/1			540	CB-241A, **CB-241B**
Spare				20/1	3 B 4	20/1				Spare
Recept (2) Service Platform #3E		360		20/1	5 C 6	20/1				
Spare				20/1	7 A 8	20/1				
RTU #09E (PLC Power Supply)			100	20/1	9 B 10	20/1				
RTU #09E (Ltg., Receptacle)	105	180	150	20/1	11 C 12	20/1				
TOTAL VA	105	1260	250						540	TOTAL VA

LOAD SUMMARY IN VA (INCLUDES .90 PF)

Lighting (At 100%): 105
Gen Use (1st 10 kVA at 100% Plus 50% of remainder): **2050**

TOTAL kVA: **2.155 kVA**

BALANCE (kVA)
Phase A - **1.260**
Phase B - 0.100
Phase C - 0.795

VOLTAGE: 208/120 V
PHASE/WIRES: 3-Phase, 4-Wire
BUS RATING: 100 A
MAIN: 60 A
MOUNTING: Surface
K.A.I.C.: 10

NOTES:

1. Refer to E-39A, platform #3E arrangement, for location of this par.
2. Refer to E-50 for call box system wiring diagram.
3. The contractor to verify, turn off, lock-out, and tag existing breaker inside UP-203 feeding circuit UP203-2 before connecting new load CB-241B.

SHEET NOTES:

(1) Panelboard is existing.

(2) The contractor to update the panel schedule and provide a new revised type-written panelboard schedule. Attach removeable circuit directory on the inside of panel.

(4) **ADDED PER ADDENDUM No. 4 DATED JULY 16, 2012**

DETAILS
YBI TRANSITION STRUCTURES ROADWAY AND GIRDER EASTBOUND (PANEL UP-203 SCHEDULE)
NO SCALE

E-47A

THIS PLAN ACCURATE FOR ELECTRICAL WORK ONLY.

ALL DIMENSIONS ARE IN METERS UNLESS OTHERWISE SHOWN

STATE OF CALIFORNIA - DEPARTMENT OF TRANSPORTATION
Caltrans

CONSULTANT FUNCTIONAL SUPERVISOR: BRADY NADELL
CALCULATED-DESIGNED BY: NIKKI NAJDI
CHECKED BY: ELLERY LUCAS
REVISED BY
DATE REVISED

LAST REVISION 00-00-00
DATE PLOTTED => 13-JUL-2012
TIME PLOTTED => 15:54

Dist	COUNTY	ROUTE	KILOMETER POST TOTAL PROJECT	SHEET No.	TOTAL SHEETS
04	SF	80	12.6/13.9	277	821

Syn Yee Chin 02/16/12
REGISTERED ELECTRICAL ENGINEER

2-21-12
PLANS APPROVAL DATE

REGISTERED PROFESSIONAL ENGINEER
SYN YEE CHIN
No. 18186
Exp. 09/30/2013
ELECTRICAL
STATE OF CALIFORNIA

THE STATE OF CALIFORNIA OR ITS OFFICERS OR AGENTS SHALL NOT BE RESPONSIBLE FOR THE ACCURACY OR COMPLETENESS OF ELECTRONIC COPIES OF THIS PLAN SHEET.

PB AMERICAS, Inc.
303 Second St., Suite 700N
San Francisco, CA 94107-1317

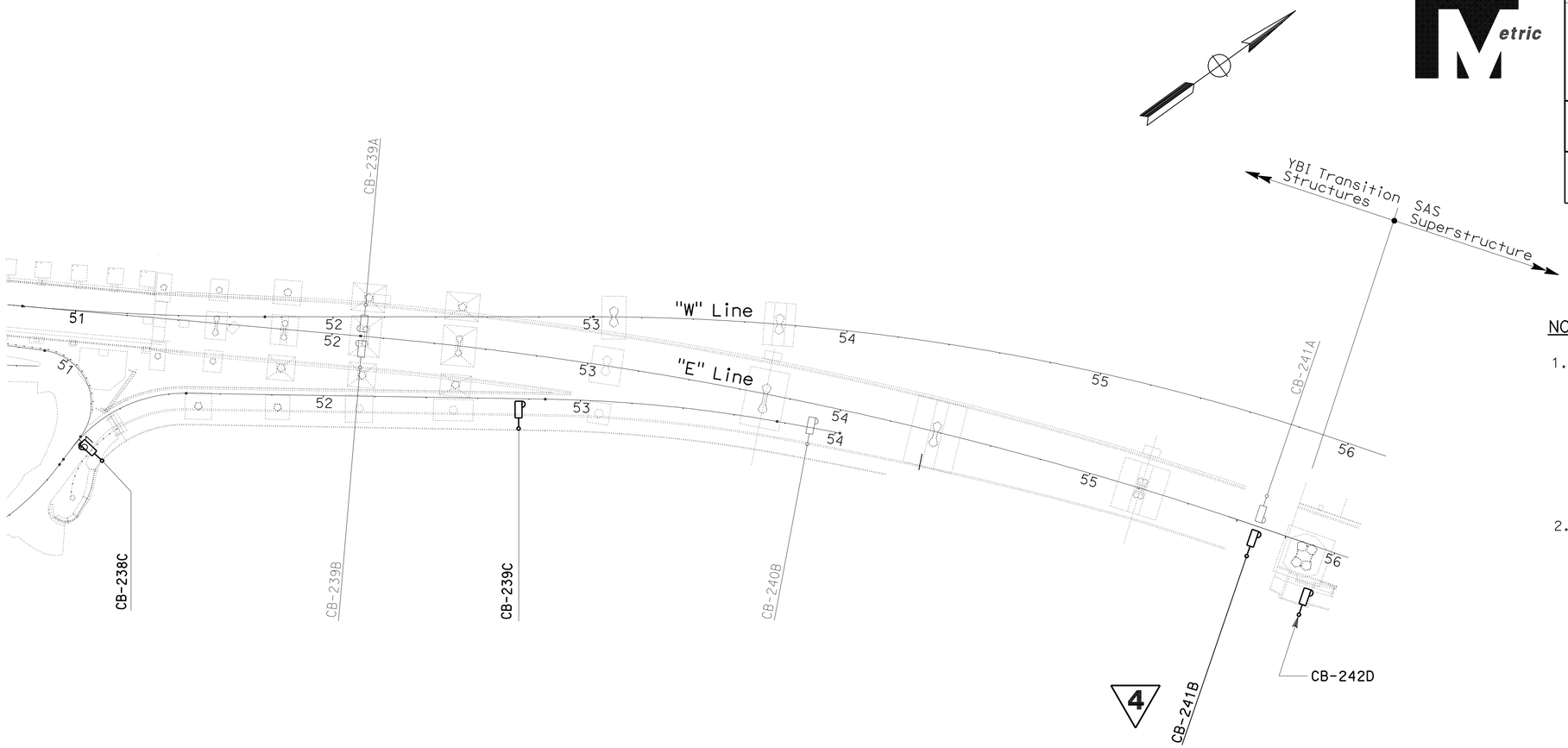

PLAN

NOTES:

1. References:
   - For Call Box Schedule-Eastbound, see sheet E-52.
   - For YBI Transition Structures Roadway and Girder Eastbound, Lighting and Electrical Systems, see sheets E-14 thru E-18.
   - Call box installation by others. The Contractor shall pull and terminate cables inside installed call boxes.
2. Unless shown in bold, everything else is not part of this Contract.

4 REVISED PER ADDENDUM No. 4 DATED JULY 16, 2012

CALL BOX SYSTEM
YBI TRANSITION STRUCTURES ROADWAY AND GIRDER EASTBOUND (CALL BOX LOCATIONS)

SCALE: 1:1000

E-49

THIS PLAN ACCURATE FOR ELECTRICAL WORK ONLY.

ALL DIMENSIONS ARE IN METERS UNLESS OTHERWISE SHOWN

CONSULTANT FUNCTIONAL SUPERVISOR	BOB ZANDIPOUR	
CALCULATED-DESIGNED BY	J. HALIM, T. WU, W. BECK	REUBEN BUENVIAJE
CHECKED BY		
REVISED BY	NN	
DATE REVISED	6/14/12	

STATE OF CALIFORNIA - DEPARTMENT OF TRANSPORTATION
Caltrans

LAST REVISION 06-14-12 | DATE PLOTTED => 13-JUL-2012 | TIME PLOTTED => 15:54

Dist	COUNTY	ROUTE	KILOMETER POST TOTAL PROJECT	SHEET No.	TOTAL SHEETS
04	SF	80	12.6/13.9	278	821

Caltrans Metric

Syn Yee Chin 02/16/12
REGISTERED ELECTRICAL ENGINEER

2-21-12
PLANS APPROVAL DATE

REGISTERED PROFESSIONAL ENGINEER SYN YEE CHIN No. 18186 Exp. 09/30/2013 ELECTRICAL STATE OF CALIFORNIA

THE STATE OF CALIFORNIA OR ITS OFFICERS OR AGENTS SHALL NOT BE RESPONSIBLE FOR THE ACCURACY OR COMPLETENESS OF ELECTRONIC COPIES OF THIS PLAN SHEET.

PB AMERICAS, Inc.
303 Second St., Suite 700N
San Francisco, CA 94107-1317

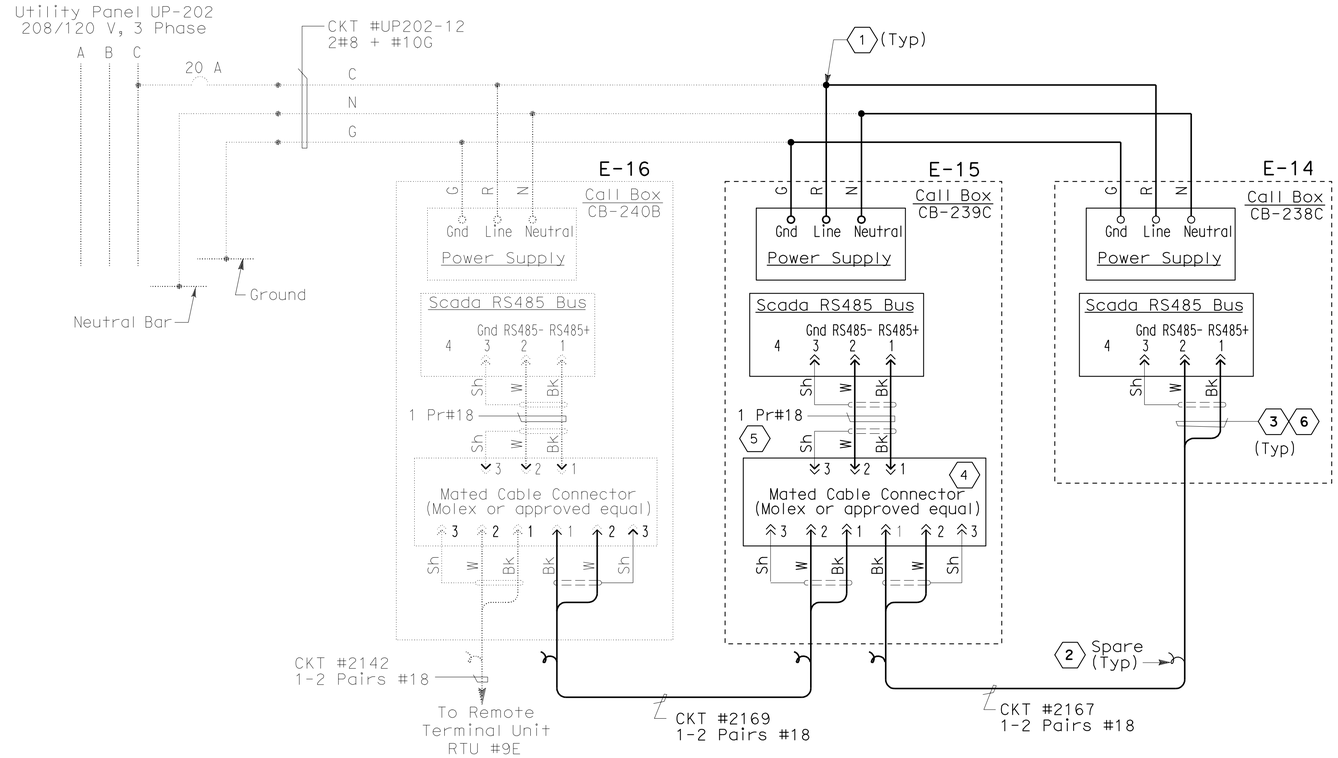

YBI TRANSITION STRUCTURES EASTBOUND

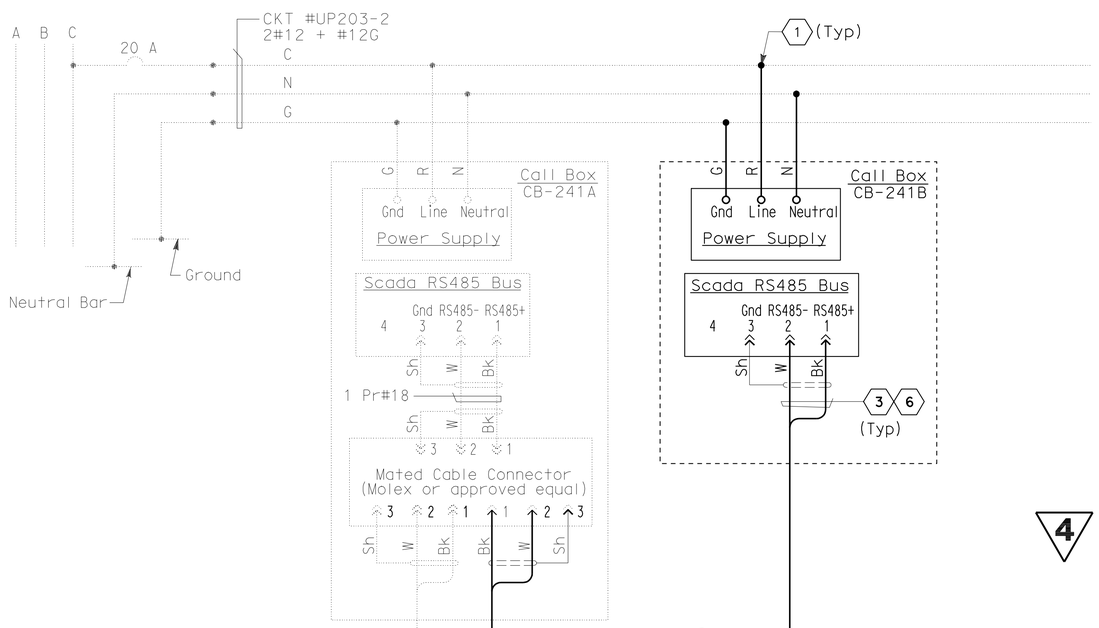

YBI TRANSITION STRUCTURES EASTBOUND 4

THIS PLAN ACCURATE FOR ELECTRICAL WORK ONLY.

NOTES:

1. References:
   - For Call box schedule - Eastbound, see sheet E-52.
   - Refer to conduit and tray schedules, cable and circuit schedules starting at drawing E-62.
2. Unless shown in bold, everything else is not part of this Contract.
3. 4 The Contractor shall verify that the breaker feeding UP203-2 cuircul is off, locked out, and tagged before Splicing to existing conductors, sheet note 1.

SHEET NOTES:

1. Conductors spliced inside PB-LTG.
2. Coil and tape end of spare cable inside PB-COM.
3. Terminate conductor with mated male connector.
4. Provide cable and conductor connectors. Locate connectors inside Call Box enclosure.
5. Field cable, 1 pr #18, shielded. Terminate cables with mated male connectors.
6. The Contractor shall install resistor approximately equal to the impedance (Zo) of the twisted pair #1 at the extreme ends of each multidrop network.

4 REVISED PER ADDENDUM No. 4 DATED JULY 16, 2012

DETAILS
CALL BOX SYSTEM
(CALL BOX WIRING DIAGRAM)
NO SCALE

E-50

NN	6/14/12	REUBEN BUENVIAJE
REVISED BY	DATE REVISED	ELLERY LUCAS
CALCULATED-DESIGNED BY	CHECKED BY	BOB ZANDIPOUR
CONSULTANT FUNCTIONAL SUPERVISOR		

STATE OF CALIFORNIA - DEPARTMENT OF TRANSPORTATION
Caltrans

LAST REVISION 06-14-12 | DATE PLOTTED => 13-JUL-2012 | TIME PLOTTED => 15:54

Dist	COUNTY	ROUTE	KILOMETER POST TOTAL PROJECT	SHEET No.	TOTAL SHEETS
04	SF	80	12.6/13.9	280	821

Caltrans Metric

Syn Yee Chin 02/16/12
REGISTERED ELECTRICAL ENGINEER

2-21-12
PLANS APPROVAL DATE

REGISTERED PROFESSIONAL ENGINEER
SYN YEE CHIN
No. 18186
Exp. 09/30/2013
ELECTRICAL
STATE OF CALIFORNIA

THE STATE OF CALIFORNIA OR ITS OFFICERS OR AGENTS SHALL NOT BE RESPONSIBLE FOR THE ACCURACY OR COMPLETENESS OF ELECTRONIC COPIES OF THIS PLAN SHEET.

PB AMERICAS, Inc.
303 Second St., Suite 700N
San Francisco, CA 94107-1317

CALL BOX SCHEDULE - WESTBOUND

Call Box Number	Station Number	Mounting Type	Location: Roadway Location	RTU Connection	Remarks
TRANSITION STRUCTURE					
CB-139A	52 + 12	Concrete Barrier	Westbound North	RTU #9W	
CB-139B	52 + 12	Concrete Barrier	Westbound South	RTU #9W	

CALL BOX SCHEDULE - EASTBOUND

Call Box Number	Station Number	Mounting Type	Location: Roadway Side	RTU Connection	Remarks
TRANSITION AND ON-RAMP STRUCTURES					
CB-238C	**51 + 00**	**Bike Path Railing**	**On-Ramp Bike Path**	**RTU #9E**	**E-14, E-49**
CB-239A	52 + 12	Concrete Barrier	Eastbound North	RTU #9E	
CB-239B	52 + 12	Concrete Barrier	Eastbound South	RTU #9E	
CB-239C	**52 + 76**	**Bike Path Railing**	**On-Ramp Bike Path**	**RTU #9E**	**E-15, E-49**
CB-240B	53 + 90	Concrete Barrier	Eastbound South	RTU #9E	
CB-241B	**55 + 68**	**Concrete Barrier**	**Eastbound South**	**RTU #9E**	**E-17, E-50**

CALL BOX SCHEDULE - EASTBOUND

Call Box Number	Station Number	Mounting Type	Location: Roadway Side	RTU Connection	Remarks
SAS SUPERSTRUCTURE					
CB-242D	**55 + 96**	**Bike Path Railing**	**Bike Path**	**RTU #10E**	**E-18, E-49**

NOTES:

1. Call boxes are State-furnished.
2. Call box installation by others. The Contractor shall pull and terminate cable inside installed call boxes.
3. Unless shown in bold, everything else is not part of this Contract.

4

4 **REVISED PER ADDENDUM No. 4 DATED JULY 16, 2012**

DETAILS
CALL BOX SYSTEM
(CALL BOX SCHEDULES)
NO SCALE

THIS PLAN ACCURATE FOR ELECTRICAL WORK ONLY.

E-52

STATE OF CALIFORNIA - DEPARTMENT OF TRANSPORTATION
Caltrans

CONSULTANT FUNCTIONAL SUPERVISOR: BOB ZANDIPOUR
CALCULATED-DESIGNED BY: REUBEN BUENVIAJE
CHECKED BY: J. HALIM, T. WU, W. BECK
REVISED BY: NN
DATE REVISED: 6/14/12

LAST REVISION 06-14-12 | DATE PLOTTED => 13-JUL-2012 | TIME PLOTTED => 15:54

Dist	COUNTY	ROUTE	KILOMETER POST TOTAL PROJECT	SHEET No.	TOTAL SHEETS
04	SF	80	12.6/13.9	290A	821

Caltrans Metric

Syn Yee Chin 6/14/12
REGISTERED ELECTRICAL ENGINEER

2-21-12
PLANS APPROVAL DATE

REGISTERED PROFESSIONAL ENGINEER SYN YEE CHIN No. 18186 Exp. 09/30/2013 ELECTRICAL STATE OF CALIFORNIA

THE STATE OF CALIFORNIA OR ITS OFFICERS OR AGENTS SHALL NOT BE RESPONSIBLE FOR THE ACCURACY OR COMPLETENESS OF ELECTRONIC COPIES OF THIS PLAN SHEET.

PB AMERICAS, Inc.
303 Second St., Suite 700N
San Francisco, CA 94107-1317

4

Cable/Ckt #: 2172 | Reference: E-50, E-21A
Function: Low Level Signal | Conductor Type: 1 - 2 pair, shielded #18 with IS/OA, 600 V, PVC jacket
From: Call Box CB-241B | To: Call Box CB-241A
Remarks:
Description Of Changes:

Route	Conduit No.	Route	Conduit No.	Route	Conduit No.	Route	Conduit No.
1	CB-241A	2	FIELD	3	*2108	4	*5968
5	2537	6	CB-241B	7	FIELD		

Cable/Ckt #: A-2008-1 | Reference: E-39B, E-40, E-40A, E-41A
Function: 480 V Lighting | Conductor Type: 1-3/C + Gnd, #4, 600 V, EPR insulation
From: (E) 480 V LVCC-B Cubicle #23 | To: PB-LTG (Bent W4R)
Remarks: Splice to existing circuit conductors inside existing pull box PB-2A.
Description Of Changes:

Route	Conduit No.	Route	Conduit No.	Route	Conduit No.	Route	Conduit No.
1	PB-2A	2	*5901A	3	E. Vault #2E	4	2T22E
5	*5941	6	E. Vault #3E	7	2T23E	8	*5948
9	PB-LTG						

Cable/Ckt #: A-2008-2 | Reference: E-17, E-41A
Function: 480 V Lighting | Conductor Type: 3 + 1 Gnd, #6, #8, 600 V, RHH/RHW insulation
From: PB-2A | To: PB-LTG
Remarks: Splice to existing circuit conductors inside existing pull box PB-2A.
Description Of Changes:

Route	Conduit No.	Route	Conduit No.	Route	Conduit No.	Route	Conduit No.
1	PB-LTG	2	2742	3	2743	4	2744
5	2745	6	2746	7	2747	8	2748
9	2749	10	2750	11	2751	12	2752
13	2753	14	2754	15	2755	16	2756
17	7109	18	7300	19	7301	20	7302

4 **ADDED PER ADDENDUM No. 4 DATED JULY 16, 2012**

CABLE AND CIRCUIT SCHEDULE

E-62A

THIS PLAN ACCURATE FOR ELECTRICAL WORK ONLY.

REVISED BY | DATE REVISED
NIKKI NAJDI | ELLERY LUCAS
CALCULATED-DESIGNED BY | CHECKED BY
CONSULTANT FUNCTIONAL SUPERVISOR
BRADY NADELL
STATE OF CALIFORNIA - DEPARTMENT OF TRANSPORTATION
Caltrans

LAST REVISION 00-00-00 | DATE PLOTTED => 13-JUL-2012 | TIME PLOTTED => 15:54

Dist	COUNTY	ROUTE	KILOMETER POST TOTAL PROJECT	SHEET No.	TOTAL SHEETS
04	SF	80	12.6/13.9	292	821

Caltrans Metric

Syn Yee Chin 10/31/11
REGISTERED ELECTRICAL ENGINEER

2-21-12
PLANS APPROVAL DATE

REGISTERED PROFESSIONAL ENGINEER SYN YEE CHIN No. 18186 Exp. 09/30/2013 ELECTRICAL STATE OF CALIFORNIA

THE STATE OF CALIFORNIA OR ITS OFFICERS OR AGENTS SHALL NOT BE RESPONSIBLE FOR THE ACCURACY OR COMPLETENESS OF ELECTRONIC COPIES OF THIS PLAN SHEET.

PB AMERICAS, Inc.
303 Second St., Suite 700N
San Francisco, CA 94107-1317

Cable/Ckt #:	Reference:	Function:	Conductor Type:	From:	To:	Remarks:	Description Of Changes:	Route	Conduit No.
LP217-4	E-43	120 V Bike Path Lighting	2 + 1 Gnd, #12, #12, 600 V, RHH/RHW insulation	PB-1C	Bike Path Light			1	FIELD
LP217-5	E-43	120 V Bike Path Lighting	2 + 1 Gnd, #12, #12, 600 V, RHH/RHW insulation	PB-1C	Bike Path Light			1	FIELD
LP217-6	E-43	120 V Bike Path Lighting	2 + 1 Gnd, #12, #12, 600 V, RHH/RHW insulation	PB-1C	Bike Path Light			1	FIELD
LP218-1	E-44	120 V Bike Path Lighting	2 + 1 Gnd, #12, #12, 600 V, RHH/RHW insulation	PB-1C	Bike Path Light			1	FIELD
LP218-1,3,5A	E-16, E-44	120 V Bike Path Lighting	4 + 1 Gnd, #8, #10, 600 V, RHH/RHW insulation	PB-LTG	PB-1C	Splice to existing circuit, LP218-1,3,5 , ~~in PB-LTG at contract split point.~~ 4		1	FIELD
LP218-2	E-44	120 V Bike Path Lighting	2 + 1 Gnd, #12, #12, 600 V, RHH/RHW insulation	PB-1C	Bike Path Light			1	FIELD
LP218-2,4,6A	E-17, E-44	120 V Bike Path Lighting	4 + 1 Gnd, #8, #10, 600 V, RHH/RHW insulation	PB-1C	PB-1C	Splice to existing circuit, LP218-2,4,6 , ~~in PB-LTG at contract split point.~~ 4		1	FIELD
LP218-3	E-44	120 V Bike Path Lighting	2 + 1 Gnd, #12, #12, 600 V, RHH/RHW insulation	PB-1C	Bike Path Light			1	FIELD

4 REVISED PER ADDENDUM No. 4 DATED JULY 16, 2012

THIS PLAN ACCURATE FOR ELECTRICAL WORK ONLY.

CABLE AND CIRCUIT SCHEDULE

E-64

REVISED BY	DATE REVISED
NN	6/14/12

CALCULATED-DESIGNED BY: R. BUENVIAJE/J. HALIM
CHECKED BY: DAVID OTO/THOMAS WU

CONSULTANT FUNCTIONAL SUPERVISOR: BOB ZANDIPOUR

STATE OF CALIFORNIA - DEPARTMENT OF TRANSPORTATION
Caltrans

LAST REVISION 06-14-12
DATE PLOTTED => 13-JUL-2012
TIME PLOTTED => 15:55

Dist	COUNTY	ROUTE	KILOMETER POST TOTAL PROJECT	SHEET No.	TOTAL SHEETS
04	SF	80	12.6/13.9	292A	821

Caltrans Metric

Syn Yee Chin 6/14/12
REGISTERED ELECTRICAL ENGINEER

2-21-12
PLANS APPROVAL DATE

REGISTERED PROFESSIONAL ENGINEER
SYN YEE CHIN
No. 18186
Exp. 09/30/2013
ELECTRICAL
STATE OF CALIFORNIA

THE STATE OF CALIFORNIA OR ITS OFFICERS OR AGENTS SHALL NOT BE RESPONSIBLE FOR THE ACCURACY OR COMPLETENESS OF ELECTRONIC COPIES OF THIS PLAN SHEET.

PB AMERICAS, Inc.
303 Second St., Suite 700N
San Francisco, CA 94107-1317

4

Cable/Ckt #: LP218-1,3,5
Reference: E-44, E-40A, E-39A, E-16
Function: 120 V Lighting
Conductor Type: 1-4/C + Gnd, #8, 600 V, EPR insulation
From: Panel LP-218
To: PB-LTG at 120 V Bike Path Ltg.
Remarks:
Description Of Changes:

Route	Conduit No.	Route	Conduit No.	Route	Conduit No.	Route	Conduit No.
1	LP-218	2	*5573	3	Wireway #3E	4	5951
5	E. Vault #3E	6	2T23E	7	*5947	8	PB-LTG
9	2742	10	*2741	11	PB-LTG		

Cable/Ckt #: LP218-2,4,6
Reference: E-44, E-17
Function: 120 V Lighting
Conductor Type: 1-4/C + Gnd, #8, 600 V, EPR insulation
From: PB-LTG
To: PB-LTG at 120 V Bike Path Ltg.
Remarks: Splice to existing circuit conductors inside existing roadway barrier pull box PB-LTG Route 11.
Description Of Changes:

Route	Conduit No.	Route	Conduit No.	Route	Conduit No.	Route	Conduit No.
1	PB-LTG	2	*5966	3	PB-LTG	4	FIELD
5	PB-1C						

4 ADDED PER ADDENDUM No. 4 DATED JULY 16, 2012

CABLE AND CIRCUIT SCHEDULE

E-64A

THIS PLAN ACCURATE FOR ELECTRICAL WORK ONLY.

REVISED BY | DATE REVISED
NIKKI NAJDI | ELLERY LUCAS
CALCULATED-DESIGNED BY | CHECKED BY
CONSULTANT FUNCTIONAL SUPERVISOR
BRADY NADELL
STATE OF CALIFORNIA - DEPARTMENT OF TRANSPORTATION
Caltrans

LAST REVISION 00-00-00
DATE PLOTTED => 13-JUL-2012
TIME PLOTTED => 15:55

Dist	COUNTY	ROUTE	KILOMETER POST TOTAL PROJECT	SHEET No.	TOTAL SHEETS
04	SF	80	12.6/13.9	295A	821

Caltrans Metric

Syn Yee Chin 6/14/12
REGISTERED ELECTRICAL ENGINEER

2-21-12
PLANS APPROVAL DATE

REGISTERED PROFESSIONAL ENGINEER
SYN YEE CHIN
No. 18186
Exp. 09/30/2013
ELECTRICAL
STATE OF CALIFORNIA

THE STATE OF CALIFORNIA OR ITS OFFICERS OR AGENTS SHALL NOT BE RESPONSIBLE FOR THE ACCURACY OR COMPLETENESS OF ELECTRONIC COPIES OF THIS PLAN SHEET.

PB AMERICAS, Inc.
303 Second St., Suite 700N
San Francisco, CA 94107-1317

4

Cable/Ckt #:	UP203-2
Reference:	E-50, E-17
Function:	120 V Power
Conductor Type:	2 + 1 Gnd, #12, #12, 600 V, RHH/RHW insulation
From:	(E) UP203-2 Inside PB-LTG
To:	CB-241B
Remarks:	Splice to existing circuit conductors inside PB-LTG route 14 located in roadway barrier near CB-241A.
Description Of Changes:	

Route	Conduit No.	Route	Conduit No.	Route	Conduit No.	Route	Conduit No.
1	PB-LTG	2	*5966	3	PB-LTG	4	7300
5	7301	6	FIELD				

4 ADDED PER ADDENDUM No. 4 DATED JULY 16, 2012

THIS PLAN ACCURATE FOR ELECTRICAL WORK ONLY.

CABLE AND CIRCUIT SCHEDULE

E-67A

REVISED BY | DATE REVISED
NIKKI NAUDI | ELLERY LUCAS
CALCULATED-DESIGNED BY | CHECKED BY
CONSULTANT FUNCTIONAL SUPERVISOR
BRADY NADELL
STATE OF CALIFORNIA - DEPARTMENT OF TRANSPORTATION
Caltrans

LAST REVISION 00-00-00 | DATE PLOTTED => 13-JUL-2012 | TIME PLOTTED => 15:55

Dist	COUNTY	ROUTE	KILOMETER POST TOTAL PROJECT	SHEET No.	TOTAL SHEETS
04	SF	80	12.6/13.9	300A	821

Caltrans Metric

Syn Yee Chin 6/14/12
REGISTERED ELECTRICAL ENGINEER

2-21-12
PLANS APPROVAL DATE

REGISTERED PROFESSIONAL ENGINEER SYN YEE CHIN No. 18186 Exp. 09/30/2013 ELECTRICAL STATE OF CALIFORNIA

THE STATE OF CALIFORNIA OR ITS OFFICERS OR AGENTS SHALL NOT BE RESPONSIBLE FOR THE ACCURACY OR COMPLETENESS OF ELECTRONIC COPIES OF THIS PLAN SHEET.

PB AMERICAS, Inc.
303 Second St., Suite 700N
San Francisco, CA 94107-1317

4

Conduit/Tray No:	2507	Reference:	E-17
Size:	41	Type:	RGS conduit
From:	PB-COM	To:	PB-COM
Total Fill (mm2):	0.00	Remarks:	
Allowable Fill (mm2):	708.28		
Description of Changes:			

Included Cable No.	Conductor Type	Area (mm2)
Pull Rope	Soft-Fiber Polyester	0.00

Conduit/Tray No:	2508	Reference:	E-17
Size:	41	Type:	RGS conduit
From:	PB-COM	To:	PB-COM
Total Fill (mm2):	0.00	Remarks:	
Allowable Fill (mm2):	708.28		
Description of Changes:			

Included Cable No.	Conductor Type	Area (mm2)
Pull Rope	Soft-Fiber Polyester	0.00

Conduit/Tray No:	2509	Reference:	E-17
Size:	41	Type:	RGS conduit
From:	PB-COM	To:	PB-COM
Total Fill (mm2):	0.00	Remarks:	
Allowable Fill (mm2):	708.28		
Description of Changes:			

Included Cable No.	Conductor Type	Area (mm2)
Pull Rope	Soft-Fiber Polyester	0.00

Conduit/Tray No:	2537	Reference:	E-17
Size:	41	Type:	RGS conduit
From:	PB-COM	To:	PB-COM
Total Fill (mm2):	98.10	Remarks:	
Allowable Fill (mm2):	414.28		
Description of Changes:			

Included Cable No.	Conductor Type	Area (mm2)
2172	1 - 2 pair, shielded #18 with IS/OA, 600 V, PVC jacket	98.10
Pull Rope	Soft-Fiber Polyester	0.00

Conduit/Tray No:	*2108	Reference:	E-17
Size:	41	Type:	RGS conduit
From:	PB-COM	To:	PB-COM
Total Fill (mm2):	98.10	Remarks:	Conduit is existing. Run new ckt# 2172 inside this conduit
Allowable Fill (mm2):	708.28		
Description of Changes:			

Included Cable No.	Conductor Type	Area (mm2)
2172	1 - 2 pair, shielded #18 with IS/OA, 600 V, PVC jacket	98.10
Pull Rope	Soft-Fiber Polyester	0.00

4 **ADDED PER ADDENDUM No. 4 DATED JULY 16, 2012**

CONDUIT AND TRAY SCHEDULE
YBI TRANSITION STRUCTURES ROADWAY AND GIRDER EB

THIS PLAN ACCURATE FOR ELECTRICAL WORK ONLY.

E-72A

REVISED BY | DATE REVISED
NIKKI NAJDI | ELLERY LUCAS
CALCULATED-DESIGNED BY | CHECKED BY
CONSULTANT FUNCTIONAL SUPERVISOR
BRADY NADELL
STATE OF CALIFORNIA - DEPARTMENT OF TRANSPORTATION
Caltrans

LAST REVISION 00-00-00 | DATE PLOTTED => 13-JUL-2012 | TIME PLOTTED => 15:55

Dist	COUNTY	ROUTE	KILOMETER POST TOTAL PROJECT	SHEET No.	TOTAL SHEETS
04	SF	80	12.6/13.9	304A	821

Caltrans Metric

Syn Yee Chin 6/14/12
REGISTERED ELECTRICAL ENGINEER

2-21-12
PLANS APPROVAL DATE

REGISTERED PROFESSIONAL ENGINEER SYN YEE CHIN No. 18186 Exp. 09/30/2013 ELECTRICAL STATE OF CALIFORNIA

THE STATE OF CALIFORNIA OR ITS OFFICERS OR AGENTS SHALL NOT BE RESPONSIBLE FOR THE ACCURACY OR COMPLETENESS OF ELECTRONIC COPIES OF THIS PLAN SHEET.

PB AMERICAS, Inc.
303 Second St., Suite 700N
San Francisco, CA 94107-1317

4

Conduit/Tray No:	2607	Reference:	E-17
Size:	41	Type:	RGS conduit
From:	PB-COM	To:	PB-COM
Total Fill (mm2):	0.00	Remarks:	
Allowable Fill (mm2):	534.55		
Description of Changes:			

Included Cable No.	Conductor Type	Area (mm2)
Pull Rope	Soft-Fiber Polyester	0.00

Conduit/Tray No:	2608	Reference:	E-17
Size:	41	Type:	RGS conduit
From:	PB-COM	To:	PB-COM
Total Fill (mm2):	0.00	Remarks:	
Allowable Fill (mm2):	534.55		
Description of Changes:			

Included Cable No.	Conductor Type	Area (mm2)
Pull Rope	Soft-Fiber Polyester	0.00

Conduit/Tray No:	2609	Reference:	E-17
Size:	41	Type:	RGS conduit
From:	PB-COM	To:	PB-COM
Total Fill (mm2):	0.00	Remarks:	
Allowable Fill (mm2):	534.55		
Description of Changes:			

Included Cable No.	Conductor Type	Area (mm2)
Pull Rope	Soft-Fiber Polyester	0.00

Conduit/Tray No:	2637	Reference:	E-17
Size:	41	Type:	RGS conduit
From:	PB-COM	To:	PB-COM
Total Fill (mm2):	0.00	Remarks:	
Allowable Fill (mm2):	534.55		
Description of Changes:			

Included Cable No.	Conductor Type	Area (mm2)
Pull Rope	Soft-Fiber Polyester	0.00

4 **ADDED PER ADDENDUM No. 4 DATED JULY 16, 2012**

CONDUIT AND TRAY SCHEDULE
YBI TRANSITION STRUCTURES ROADWAY AND GIRDER EB

THIS PLAN ACCURATE FOR ELECTRICAL WORK ONLY.

E-76A

REVISED BY | DATE REVISED
NIKKI NAJDI | ELLERY LUCAS
CALCULATED-DESIGNED BY | CHECKED BY
CONSULTANT FUNCTIONAL SUPERVISOR
BRADY NADELL

STATE OF CALIFORNIA - DEPARTMENT OF TRANSPORTATION
Caltrans

LAST REVISION 00-00-00 | DATE PLOTTED => 13-JUL-2012 | TIME PLOTTED => 15:55

Dist	COUNTY	ROUTE	KILOMETER POST TOTAL PROJECT	SHEET No.	TOTAL SHEETS
04	SF	80	12.6/13.9	309A	821

Caltrans Metric

Syn Yee Chin 6/14/12
REGISTERED ELECTRICAL ENGINEER

2-21-12
PLANS APPROVAL DATE

REGISTERED PROFESSIONAL ENGINEER SYN YEE CHIN No. 18186 Exp. 09/30/2013 ELECTRICAL STATE OF CALIFORNIA

THE STATE OF CALIFORNIA OR ITS OFFICERS OR AGENTS SHALL NOT BE RESPONSIBLE FOR THE ACCURACY OR COMPLETENESS OF ELECTRONIC COPIES OF THIS PLAN SHEET.

PB AMERICAS, Inc.
303 Second St., Suite 700N
San Francisco, CA 94107-1317

4

Conduit/Tray No: *2741 | Reference: E-16, E-17
Size: 41 | Type: RGS conduit
From: PB-LTG | To: PB-LTG
Total Fill (mm2): 399.67 | Remarks: Connect new conduit to existing stub-out and run new cable LP218-1, 3, 5 and splice inside PB-LTG
Allowable Fill (mm2): 534.55
Description of Changes:

Included Cable No.	Conductor Type	Area (mm2)
A-2007-2	3 + 1 Gnd, #8, #10, 600 V, RHH/RHW insulation	133.19
LP218-1,3,5	1-4/C + Gnd, #8, 600 V, EPR insulation	266.48
Pull Rope	Soft-Fiber Polyester	0.00

Conduit/Tray No: 2742 | Reference: E-17
Size: 41 | Type: RGS conduit
From: PB-LTG | To: PB-LTG
Total Fill (mm2): 612.52 | Remarks:
Allowable Fill (mm2): 534.55
Description of Changes:

Included Cable No.	Conductor Type	Area (mm2)
A-2007-2	3 + 1 Gnd, #8, #10, 600 V, RHH/RHW insulation	133.19
A-2008-2	3 + 1 Gnd, #6, #8, 600 V, RHH/RHW insulation	212.85
LP218-1,3,5	1-4/C + Gnd, #8, 600 V, EPR insulation	266.48
Pull Rope	Soft-Fiber Polyester	0.00

Conduit/Tray No: 2743 | Reference: E-17
Size: 41 | Type: RGS conduit
From: PB-LTG | To: PB-LTG
Total Fill (mm2): 212.85 | Remarks:
Allowable Fill (mm2): 534.55
Description of Changes:

Included Cable No.	Conductor Type	Area (mm2)
A-2008-2	3 + 1 Gnd, #6, #8, 600 V, RHH/RHW insulation	212.85
Pull Rope	Soft-Fiber Polyester	0.00

Conduit/Tray No: 2744 | Reference: E-17
Size: 41 | Type: RGS conduit
From: PB-LTG | To: PB-LTG
Total Fill (mm2): 212.85 | Remarks:
Allowable Fill (mm2): 534.55
Description of Changes:

Included Cable No.	Conductor Type	Area (mm2)
A-2008-2	3 + 1 Gnd, #6, #8, 600 V, RHH/RHW insulation	212.85
Pull Rope	Soft-Fiber Polyester	0.00

Conduit/Tray No: 2745 | Reference: E-17
Size: 41 | Type: RGS conduit
From: PB-LTG | To: PB-LTG
Total Fill (mm2): 212.85 | Remarks:
Allowable Fill (mm2): 534.55
Description of Changes:

Included Cable No.	Conductor Type	Area (mm2)
A-2008-2	3 + 1 Gnd, #6, #8, 600 V, RHH/RHW insulation	212.85
Pull Rope	Soft-Fiber Polyester	0.00

Conduit/Tray No: 2746 | Reference: E-17
Size: 41 | Type: RGS conduit
From: PB-LTG | To: PB-LTG
Total Fill (mm2): 212.85 | Remarks:
Allowable Fill (mm2): 534.55
Description of Changes:

Included Cable No.	Conductor Type	Area (mm2)
A-2008-2	3 + 1 Gnd, #6, #8, 600 V, RHH/RHW insulation	212.85
Pull Rope	Soft-Fiber Polyester	0.00

Conduit/Tray No: 2747 | Reference: E-17
Size: 41 | Type: RGS conduit
From: PB-LTG | To: PB-LTG
Total Fill (mm2): 212.85 | Remarks:
Allowable Fill (mm2): 534.55
Description of Changes:

Included Cable No.	Conductor Type	Area (mm2)
A-2008-2	3 + 1 Gnd, #6, #8, 600 V, RHH/RHW insulation	212.85
Pull Rope	Soft-Fiber Polyester	0.00

CONDUIT AND TRAY SCHEDULE
YBI TRANSITION STRUCTURES ROADWAY AND GIRDER EB

4 **ADDED PER ADDENDUM No. 4 DATED JULY 16, 2012**

THIS PLAN ACCURATE FOR ELECTRICAL WORK ONLY.

E-81A

STATE OF CALIFORNIA - DEPARTMENT OF TRANSPORTATION
Caltrans

CONSULTANT FUNCTIONAL SUPERVISOR: BRADY NADELL
CALCULATED-DESIGNED BY: NIKKI NAJDI
CHECKED BY: ELLERY LUCAS
REVISED BY | DATE REVISED

LAST REVISION 00-00-00
DATE PLOTTED => 13-JUL-2012
TIME PLOTTED => 15:55

Dist	COUNTY	ROUTE	KILOMETER POST TOTAL PROJECT	SHEET No.	TOTAL SHEETS
04	SF	80	12.6/13.9	309B	821

Caltrans Metric

4

Syn Yee Chin 6/14/12
REGISTERED ELECTRICAL ENGINEER

PLANS APPROVAL DATE

REGISTERED PROFESSIONAL ENGINEER
SYN YEE CHIN
No. 18186
Exp. 09/30/2013
ELECTRICAL
STATE OF CALIFORNIA

THE STATE OF CALIFORNIA OR ITS OFFICERS OR AGENTS SHALL NOT BE RESPONSIBLE FOR THE ACCURACY OR COMPLETENESS OF ELECTRONIC COPIES OF THIS PLAN SHEET.

PB AMERICAS, Inc.
303 Second St., Suite 700N
San Francisco, CA 94107-1317

Conduit/Tray No: 2748 | Reference: E-17
Size: 41 | Type: RGS conduit
From: PB-LTG | To: PB-LTG
Total Fill (mm2): 212.85 | Remarks:
Allowable Fill (mm2): 534.55
Description of Changes:

Included Cable No.	Conductor Type	Area (mm2)
A-2008-2	3 + 1 Gnd, #6, #8, 600 V, RHH/RHW insulation	212.85
Pull Rope	Soft-Fiber Polyester	0.00

Conduit/Tray No: 2749 | Reference: E-17
Size: 41 | Type: RGS conduit
From: PB-LTG | To: PB-LTG
Total Fill (mm2): 212.85 | Remarks:
Allowable Fill (mm2): 534.55
Description of Changes:

Included Cable No.	Conductor Type	Area (mm2)
A-2008-2	3 + 1 Gnd, #6, #8, 600 V, RHH/RHW insulation	212.85
Pull Rope	Soft-Fiber Polyester	0.00

Conduit/Tray No: 2750 | Reference: E-17
Size: 41 | Type: RGS conduit
From: PB-LTG | To: PB-LTG
Total Fill (mm2): 212.85 | Remarks:
Allowable Fill (mm2): 534.55
Description of Changes:

Included Cable No.	Conductor Type	Area (mm2)
A-2008-2	3 + 1 Gnd, #6, #8, 600 V, RHH/RHW insulation	212.85
Pull Rope	Soft-Fiber Polyester	0.00

Conduit/Tray No: 2751 | Reference: E-17
Size: 41 | Type: RGS conduit
From: PB-LTG | To: PB-LTG
Total Fill (mm2): 212.85 | Remarks:
Allowable Fill (mm2): 534.55
Description of Changes:

Included Cable No.	Conductor Type	Area (mm2)
A-2008-2	3 + 1 Gnd, #6, #8, 600 V, RHH/RHW insulation	212.85
Pull Rope	Soft-Fiber Polyester	0.00

Conduit/Tray No: 2752 | Reference: E-17
Size: 41 | Type: RGS conduit
From: PB-LTG | To: PB-LTG
Total Fill (mm2): 212.85 | Remarks:
Allowable Fill (mm2): 534.55
Description of Changes:

Included Cable No.	Conductor Type	Area (mm2)
A-2008-2	3 + 1 Gnd, #6, #8, 600 V, RHH/RHW insulation	212.85
Pull Rope	Soft-Fiber Polyester	0.00

Conduit/Tray No: 2753 | Reference: E-17
Size: 41 | Type: RGS conduit
From: PB-LTG | To: PB-LTG
Total Fill (mm2): 212.85 | Remarks:
Allowable Fill (mm2): 534.55
Description of Changes:

Included Cable No.	Conductor Type	Area (mm2)
A-2008-2	3 + 1 Gnd, #6, #8, 600 V, RHH/RHW insulation	212.85
Pull Rope	Soft-Fiber Polyester	0.00

Conduit/Tray No: 2754 | Reference: E-17
Size: 41 | Type: RGS conduit
From: PB-LTG | To: PB-LTG
Total Fill (mm2): 212.85 | Remarks:
Allowable Fill (mm2): 534.55
Description of Changes:

Included Cable No.	Conductor Type	Area (mm2)
A-2008-2	3 + 1 Gnd, #6, #8, 600 V, RHH/RHW insulation	212.85
Pull Rope	Soft-Fiber Polyester	0.00

CONDUIT AND TRAY SCHEDULE
YBI TRANSITION STRUCTURES ROADWAY AND GIRDER EB

4 ADDED PER ADDENDUM No. 4 DATED JULY 16, 2012

THIS PLAN ACCURATE FOR ELECTRICAL WORK ONLY.

E-81B

STATE OF CALIFORNIA - DEPARTMENT OF TRANSPORTATION
Caltrans

CONSULTANT FUNCTIONAL SUPERVISOR: BRADY NADELL
CALCULATED-DESIGNED BY: NIKKI NAJDI
CHECKED BY: ELLERY LUCAS
REVISED BY | DATE REVISED

LAST REVISION 00-00-00 | DATE PLOTTED => 13-JUL-2012 | TIME PLOTTED => 15:55

Dist	COUNTY	ROUTE	KILOMETER POST TOTAL PROJECT	SHEET No.	TOTAL SHEETS
04	SF	80	12.6/13.9	309C	821

Caltrans Metric

4

Syn Yee Chin 6/14/12
REGISTERED ELECTRICAL ENGINEER

PLANS APPROVAL DATE

REGISTERED PROFESSIONAL ENGINEER
SYN YEE CHIN
No. 18186
Exp. 09/30/2013
ELECTRICAL
STATE OF CALIFORNIA

THE STATE OF CALIFORNIA OR ITS OFFICERS OR AGENTS SHALL NOT BE RESPONSIBLE FOR THE ACCURACY OR COMPLETENESS OF ELECTRONIC COPIES OF THIS PLAN SHEET.

PB AMERICAS, Inc.
303 Second St., Suite 700N
San Francisco, CA 94107-1317

Conduit/Tray No:	2755
Reference:	E-17
Size:	41
Type:	RGS conduit
From:	PB-LTG
To:	PB-LTG
Total Fill (mm2):	212.85
Remarks:	
Allowable Fill (mm2):	534.55
Description of Changes:	

Included Cable No.	Conductor Type	Area (mm2)
A-2008-2	3 + 1 Gnd, #6, #8, 600 V, RHH/RHW insulation	212.85
Pull Rope	Soft-Fiber Polyester	0.00

Conduit/Tray No:	2756
Reference:	E-17
Size:	41
Type:	RGS conduit
From:	PB-LTG
To:	PB-LTG
Total Fill (mm2):	212.85
Remarks:	
Allowable Fill (mm2):	534.55
Description of Changes:	

Included Cable No.	Conductor Type	Area (mm2)
A-2008-2	3 + 1 Gnd, #6, #8, 600 V, RHH/RHW insulation	212.85
Pull Rope	Soft-Fiber Polyester	0.00

4 ADDED PER ADDENDUM No. 4 DATED JULY 16, 2012

THIS PLAN ACCURATE FOR ELECTRICAL WORK ONLY.

CONDUIT AND TRAY SCHEDULE
YBI TRANSITION STRUCTURES ROADWAY AND GIRDER EB

E-81C

REVISED BY | DATE REVISED
NIKKI NAJDI | ELLERY LUCAS
CALCULATED-DESIGNED BY | CHECKED BY
CONSULTANT FUNCTIONAL SUPERVISOR
BRADY NADELL
STATE OF CALIFORNIA - DEPARTMENT OF TRANSPORTATION
Caltrans

LAST REVISION 00-00-00 | DATE PLOTTED => 13-JUL-2012 | TIME PLOTTED => 15:55

Dist	COUNTY	ROUTE	KILOMETER POST TOTAL PROJECT	SHEET No.	TOTAL SHEETS
04	SF	80	12.6/13.9	315A	821

Caltrans Metric

4

Syn Yee Chin 6/14/12
REGISTERED ELECTRICAL ENGINEER

PLANS APPROVAL DATE

REGISTERED PROFESSIONAL ENGINEER
SYN YEE CHIN
No. 18186
Exp. 09/30/2013
ELECTRICAL
STATE OF CALIFORNIA

THE STATE OF CALIFORNIA OR ITS OFFICERS OR AGENTS SHALL NOT BE RESPONSIBLE FOR THE ACCURACY OR COMPLETENESS OF ELECTRONIC COPIES OF THIS PLAN SHEET.

PB AMERICAS, Inc.
303 Second St., Suite 700N
San Francisco, CA 94107-1317

Conduit/Tray No:	2842
Reference:	E-17
Size:	41
Type:	RGS conduit
From:	PB-LTG
To:	PB-LTG
Total Fill (mm2):	0.00
Allowable Fill (mm2):	534.55
Remarks:	
Description of Changes:	

Included Cable No.	Conductor Type	Area (mm2)
Pull Rope	Soft-Fiber Polyester	0.00

Conduit/Tray No:	2843
Reference:	E-17
Size:	41
Type:	RGS conduit
From:	PB-LTG
To:	PB-LTG
Total Fill (mm2):	0.00
Allowable Fill (mm2):	534.55
Remarks:	
Description of Changes:	

Included Cable No.	Conductor Type	Area (mm2)
Pull Rope	Soft-Fiber Polyester	0.00

Conduit/Tray No:	2844
Reference:	E-17
Size:	41
Type:	RGS conduit
From:	PB-LTG
To:	PB-LTG
Total Fill (mm2):	0.00
Allowable Fill (mm2):	534.55
Remarks:	
Description of Changes:	

Included Cable No.	Conductor Type	Area (mm2)
Pull Rope	Soft-Fiber Polyester	0.00

Conduit/Tray No:	2845
Reference:	E-17
Size:	41
Type:	RGS conduit
From:	PB-LTG
To:	PB-LTG
Total Fill (mm2):	0.00
Allowable Fill (mm2):	534.55
Remarks:	
Description of Changes:	

Included Cable No.	Conductor Type	Area (mm2)
Pull Rope	Soft-Fiber Polyester	0.00

Conduit/Tray No:	2846
Reference:	E-17
Size:	41
Type:	RGS conduit
From:	PB-LTG
To:	PB-LTG
Total Fill (mm2):	0.00
Allowable Fill (mm2):	534.55
Remarks:	
Description of Changes:	

Included Cable No.	Conductor Type	Area (mm2)
Pull Rope	Soft-Fiber Polyester	0.00

Conduit/Tray No:	2847
Reference:	E-17
Size:	41
Type:	RGS conduit
From:	PB-LTG
To:	PB-LTG
Total Fill (mm2):	0.00
Allowable Fill (mm2):	534.55
Remarks:	
Description of Changes:	

Included Cable No.	Conductor Type	Area (mm2)
Pull Rope	Soft-Fiber Polyester	0.00

Conduit/Tray No:	2848
Reference:	E-17
Size:	41
Type:	RGS conduit
From:	PB-LTG
To:	PB-LTG
Total Fill (mm2):	0.00
Allowable Fill (mm2):	534.55
Remarks:	
Description of Changes:	

Included Cable No.	Conductor Type	Area (mm2)
Pull Rope	Soft-Fiber Polyester	0.00

CONDUIT AND TRAY SCHEDULE
YBI TRANSITION STRUCTURES ROADWAY AND GIRDER EB

4 ADDED PER ADDENDUM No. 4 DATED JULY 16, 2012

THIS PLAN ACCURATE FOR ELECTRICAL WORK ONLY.

E-87A

REVISED BY | DATE REVISED
NIKKI NAJDI | ELLERY LUCAS
CALCULATED-DESIGNED BY | CHECKED BY
CONSULTANT FUNCTIONAL SUPERVISOR
BRADY NADELL
STATE OF CALIFORNIA - DEPARTMENT OF TRANSPORTATION
Caltrans

LAST REVISION 00-00-00 | DATE PLOTTED => 13-JUL-2012 | TIME PLOTTED => 15:56

Dist	COUNTY	ROUTE	KILOMETER POST TOTAL PROJECT	SHEET No.	TOTAL SHEETS
04	SF	80	12.6/13.9	315B	821

Caltrans Metric

4

Syn Yee Chin 6/14/12
REGISTERED ELECTRICAL ENGINEER

PLANS APPROVAL DATE

REGISTERED PROFESSIONAL ENGINEER
SYN YEE CHIN
No. 18186
Exp. 09/30/2013
ELECTRICAL
STATE OF CALIFORNIA

THE STATE OF CALIFORNIA OR ITS OFFICERS OR AGENTS SHALL NOT BE RESPONSIBLE FOR THE ACCURACY OR COMPLETENESS OF ELECTRONIC COPIES OF THIS PLAN SHEET.

PB AMERICAS, Inc.
303 Second St., Suite 700N
San Francisco, CA 94107-1317

Conduit/Tray No:	2849
Reference:	E-17
Size:	41
Type:	RGS conduit
From:	PB-LTG
To:	PB-LTG
Total Fill (mm2):	0.00
Allowable Fill (mm2):	534.55
Remarks:	
Description of Changes:	

Included Cable No.	Conductor Type	Area (mm2)
Pull Rope	Soft-Fiber Polyester	0.00

Conduit/Tray No:	2850
Reference:	E-17
Size:	41
Type:	RGS conduit
From:	PB-LTG
To:	PB-LTG
Total Fill (mm2):	0.00
Allowable Fill (mm2):	534.55
Remarks:	
Description of Changes:	

Included Cable No.	Conductor Type	Area (mm2)
Pull Rope	Soft-Fiber Polyester	0.00

Conduit/Tray No:	2851
Reference:	E-17
Size:	41
Type:	RGS conduit
From:	PB-LTG
To:	PB-LTG
Total Fill (mm2):	0.00
Allowable Fill (mm2):	534.55
Remarks:	
Description of Changes:	

Included Cable No.	Conductor Type	Area (mm2)
Pull Rope	Soft-Fiber Polyester	0.00

Conduit/Tray No:	2852
Reference:	E-17
Size:	41
Type:	RGS conduit
From:	PB-LTG
To:	PB-LTG
Total Fill (mm2):	0.00
Allowable Fill (mm2):	534.55
Remarks:	
Description of Changes:	

Included Cable No.	Conductor Type	Area (mm2)
Pull Rope	Soft-Fiber Polyester	0.00

Conduit/Tray No:	2853
Reference:	E-17
Size:	41
Type:	RGS conduit
From:	PB-LTG
To:	PB-LTG
Total Fill (mm2):	0.00
Allowable Fill (mm2):	534.55
Remarks:	
Description of Changes:	

Included Cable No.	Conductor Type	Area (mm2)
Pull Rope	Soft-Fiber Polyester	0.00

Conduit/Tray No:	2854
Reference:	E-17
Size:	41
Type:	RGS conduit
From:	PB-LTG
To:	PB-LTG
Total Fill (mm2):	0.00
Allowable Fill (mm2):	534.55
Remarks:	
Description of Changes:	

Included Cable No.	Conductor Type	Area (mm2)
Pull Rope	Soft-Fiber Polyester	0.00

Conduit/Tray No:	2855
Reference:	E-17
Size:	41
Type:	RGS conduit
From:	PB-LTG
To:	PB-LTG
Total Fill (mm2):	0.00
Allowable Fill (mm2):	534.55
Remarks:	
Description of Changes:	

Included Cable No.	Conductor Type	Area (mm2)
Pull Rope	Soft-Fiber Polyester	0.00

CONDUIT AND TRAY SCHEDULE
YBI TRANSITION STRUCTURES ROADWAY AND GIRDER EB

4 ADDED PER ADDENDUM No. 4 DATED JULY 16, 2012

THIS PLAN ACCURATE FOR ELECTRICAL WORK ONLY.

E-87B

STATE OF CALIFORNIA - DEPARTMENT OF TRANSPORTATION
Caltrans

CONSULTANT FUNCTIONAL SUPERVISOR: BRADY NADELL
CALCULATED-DESIGNED BY: NIKKI NAJDI
CHECKED BY: ELLERY LUCAS
REVISED BY
DATE REVISED

LAST REVISION 00-00-00
DATE PLOTTED => 13-JUL-2012
TIME PLOTTED => 15:56

Dist	COUNTY	ROUTE	KILOMETER POST TOTAL PROJECT	SHEET No.	TOTAL SHEETS
04	SF	80	12.6/13.9	315C	821

Caltrans Metric

4

Syn Yee Chin 6/14/12
REGISTERED ELECTRICAL ENGINEER

PLANS APPROVAL DATE

REGISTERED PROFESSIONAL ENGINEER
SYN YEE CHIN
No. 18186
Exp. 09/30/2013
ELECTRICAL
STATE OF CALIFORNIA

THE STATE OF CALIFORNIA OR ITS OFFICERS OR AGENTS SHALL NOT BE RESPONSIBLE FOR THE ACCURACY OR COMPLETENESS OF ELECTRONIC COPIES OF THIS PLAN SHEET.

PB AMERICAS, Inc.
303 Second St., Suite 700N
San Francisco, CA 94107-1317

Conduit/Tray No:	2856
Reference:	E-17
Size:	41
Type:	RGS conduit
From:	PB-LTG
To:	PB-LTG
Total Fill (mm2):	0.00
Remarks:	
Allowable Fill (mm2):	534.55
Description of Changes:	

Included Cable No.	Conductor Type	Area (mm2)
Pull Rope	Soft-Fiber Polyester	0.00

Conduit/Tray No:	*5573
Reference:	E-39A
Size:	78
Type:	RGS-PVC coated conduit
From:	Panel LP-218
To:	Wireway #3E
Total Fill (mm2):	532.96
Remarks:	Existing conduit, run new ckt# LP218-1,3,5 inside the conduit.
Allowable Fill (mm2):	1935.24
Description of Changes:	

Included Cable No.	Conductor Type	Area (mm2)
LP218-1,3,5	1-4/C + Gnd, #8, 600 V, EPR insulation	266.48
LP218-2,4,6	1-4/C + Gnd, #8, 600 V, EPR insulation	266.48

4 ADDED PER ADDENDUM No. 4 DATED JULY 16, 2012

THIS PLAN ACCURATE FOR ELECTRICAL WORK ONLY.

CONDUIT AND TRAY SCHEDULE
YBI TRANSITION STRUCTURES ROADWAY AND GIRDER EB

E-87C

REVISED BY	DATE REVISED
NIKKI NAJDI	ELLERY LUCAS
CALCULATED-DESIGNED BY	CHECKED BY
CONSULTANT FUNCTIONAL SUPERVISOR	
BRADY NADELL	

STATE OF CALIFORNIA - DEPARTMENT OF TRANSPORTATION
Caltrans

LAST REVISION 00-00-00
DATE PLOTTED => 13-JUL-2012
TIME PLOTTED => 15:56

Dist	COUNTY	ROUTE	KILOMETER POST TOTAL PROJECT	SHEET No.	TOTAL SHEETS
04	SF	80	12.6/13.9	318A	821

Caltrans Metric

4

Syn Yee Chin 6/14/12
REGISTERED ELECTRICAL ENGINEER

2-21-12
PLANS APPROVAL DATE

REGISTERED PROFESSIONAL ENGINEER SYN YEE CHIN No. 18186 Exp. 09/30/2013 ELECTRICAL STATE OF CALIFORNIA

THE STATE OF CALIFORNIA OR ITS OFFICERS OR AGENTS SHALL NOT BE RESPONSIBLE FOR THE ACCURACY OR COMPLETENESS OF ELECTRONIC COPIES OF THIS PLAN SHEET.

PB AMERICAS, Inc.
303 Second St., Suite 700N
San Francisco, CA 94107-1317

Conduit/Tray No: *5947 | Reference: E-40A
Size: 41 | Type: RGS conduit
From: Electrical Vault #3E | To: PB-LTG
Total Fill (mm2): 266.48 | Remarks: Enter existing extended conduit into PB-LTG, add new cable (LP218-1, 3, 5)
Allowable Fill (mm2): 708.28
Description of Changes:

Included Cable No.	Conductor Type	Area (mm2)
LP218-1,3,5	1-4/C + Gnd, #8, 600 V, EPR insulation	266.48
Pull Rope	Soft-Fiber Polyester	0.00

Conduit/Tray No: *5948 | Reference: E-40A
Size: 41 | Type: RGS conduit
From: Electrical Vault #3E | To: PB-LTG
Total Fill (mm2): 366.10 | Remarks: Enter existing extended conduit into PB-LTG, add new cable (A-2008-1)
Allowable Fill (mm2): 708.28
Description of Changes:

Included Cable No.	Conductor Type	Area (mm2)
A-2008-1	1-3/C + Gnd, #4, 600 V, EPR insulation	366.10
Pull Rope	Soft-Fiber Polyester	0.00

Conduit/Tray No: *5961 | Reference: E-40A
Size: 78 | Type: RGS conduit
From: TOS/COM Vault #3E | To: PB-COM
Total Fill (mm2): 0.00 | Remarks: Connect new conduit to existing stub-out and pull upto PB-COM
Allowable Fill (mm2): 1935.24
Description of Changes:

Included Cable No.	Conductor Type	Area (mm2)
Pull Rope	Soft-Fiber Polyester	0.00

Conduit/Tray No: *5963 | Reference: E-21A
Size: 41 | Type: RGS conduit
From: PB-LTG | To: PB-LTG
Total Fill (mm2): 0.00 | Remarks: Enter existing extended conduit into PB-LTG
Allowable Fill (mm2): 534.55
Description of Changes:

Included Cable No.	Conductor Type	Area (mm2)
Pull Rope	Soft-Fiber Polyester	0.00

Conduit/Tray No: *5965 | Reference: E-21A
Size: 41 | Type: RGS conduit
From: PB-COM | To: PB-COM
Total Fill (mm2): 0.00 | Remarks: Connect new conduit to existing stub-out and Pull upto PB-COM
Allowable Fill (mm2): 534.55
Description of Changes:

Included Cable No.	Conductor Type	Area (mm2)
Pull Rope	Soft-Fiber Polyester	0.00

Conduit/Tray No: *5966 | Reference: E-21A
Size: 41 | Type: RGS conduit
From: PB-LTG | To: PB-LTG
Total Fill (mm2): 197.05 | Remarks: Enter existing extended conduit into PB-LTG, run existing coiled cable inside barrier PB-LTG into the conduit
Allowable Fill (mm2): 534.55
Description of Changes:

Included Cable No.	Conductor Type	Area (mm2)
LP218-2,4,6	4-1/C #8, 600 V, RHH/RHW insulation	147.84
Pull Rope	Soft-Fiber Polyester	0.00
UP203-2	2 + 1 Gnd, #12, #12, 600 V, RHH/RHW insulation	49.21

Conduit/Tray No: *5970 | Reference: E-40A
Size: 41 | Type: RGS conduit
From: Electrical Vault #3E | To: PB-COM
Total Fill (mm2): 0.00 | Remarks: Connect new conduit to existing stub-out and pull upto PB-COM
Allowable Fill (mm2): 708.28
Description of Changes:

Included Cable No.	Conductor Type	Area (mm2)
Pull Rope	Soft-Fiber Polyester	0.00

4 ADDED PER ADDENDUM No. 4 DATED JULY 16, 2012

THIS PLAN ACCURATE FOR ELECTRICAL WORK ONLY.

CONDUIT AND TRAY SCHEDULE
YBI TRANSITION STRUCTURES ROADWAY AND GIRDER EB

E-90A

STATE OF CALIFORNIA - DEPARTMENT OF TRANSPORTATION
Caltrans

CONSULTANT FUNCTIONAL SUPERVISOR: BRADY NADELL
CALCULATED-DESIGNED BY: NIKKI NAJDI
CHECKED BY: ELLERY LUCAS
REVISED BY | DATE REVISED

LAST REVISION 00-00-00
DATE PLOTTED => 13-JUL-2012
TIME PLOTTED => 15:56

Dist	COUNTY	ROUTE	KILOMETER POST TOTAL PROJECT	SHEET No.	TOTAL SHEETS
04	SF	80	12.6/13.9	319A	821

Caltrans Metric

4

Syn Yee Chin 6/14/12
REGISTERED ELECTRICAL ENGINEER

PLANS APPROVAL DATE

REGISTERED PROFESSIONAL ENGINEER
SYN YEE CHIN
No. 18186
Exp. 09/30/2013
ELECTRICAL
STATE OF CALIFORNIA

THE STATE OF CALIFORNIA OR ITS OFFICERS OR AGENTS SHALL NOT BE RESPONSIBLE FOR THE ACCURACY OR COMPLETENESS OF ELECTRONIC COPIES OF THIS PLAN SHEET.

PB AMERICAS, Inc.
303 Second St., Suite 700N
San Francisco, CA 94107-1317

Conduit/Tray No:	7109	Reference:	E-17
Size:	41	Type:	RGS conduit
From:	PB-LTG	To:	PB-LTG
Total Fill (mm2):	212.85	Remarks:	
Allowable Fill (mm2):	534.55		
Description of Changes:			

Included Cable No.	Conductor Type	Area (mm2)
A-2008-2	3 + 1 Gnd, #6, #8, 600 V, RHH/RHW insulation	212.85
Pull Rope	Soft-Fiber Polyester	0.00

Conduit/Tray No:	*5901A	Reference:	E-39B
Size:	103	Type:	RGS conduit
From:	PB-2A	To:	Electrical Vault #2E
Total Fill (mm2):	953.07	Remarks:	Add new circuit A-2008-1 inside the conduit
Allowable Fill (mm2):	3324.51		
Description of Changes:			

Included Cable No.	Conductor Type	Area (mm2)
A-2008-1	1-3/C + Gnd, #4, 600 V, EPR insulation	366.10
A-2009-1	1-3/C + Gnd, #6, 600 V, EPR insulation	324.29
A-2010-1	1-3/C + Gnd, #8, 600 V, EPR insulation	262.68

Conduit/Tray No:	*5968	Reference:	E-21A
Size:	41	Type:	RGS conduit
From:	*5968	To:	PB-COM
Total Fill (mm2):	98.10	Remarks:	Connect new conduit to existing stub-out and Pull upto PB-COM
Allowable Fill (mm2):	708.28		
Description of Changes:			

Included Cable No.	Conductor Type	Area (mm2)
2172	1 - 2 pair, shielded #18 with IS/OA, 600 V, PVC jacket	98.10
Pull Rope	Soft-Fiber Polyester	0.00

Conduit/Tray No:	*5941	Reference:	
Size:	103	Type:	RGS conduit
From:	Electrical Vault #2E	To:	Electrical Vault #3E
Total Fill (mm2):	366.10	Remarks:	Existing conduit, add new circuit A-2008-1 inside the conduit
Allowable Fill (mm2):	3324.51		
Description of Changes:			

Included Cable No.	Conductor Type	Area (mm2)
A-2008-1	1-3/C + Gnd, #4, 600 V, EPR insulation	366.10

Conduit/Tray No:	*5951	Reference:	E-40A
Size:	78	Type:	RGS-PVC coated conduit
From:	Electrical Vault #3E	To:	Wireway #3E
Total Fill (mm2):	266.48	Remarks:	Existing conduit, add new circuit A-2008-1 inside conduit.
Allowable Fill (mm2):	1935.24		
Description of Changes:			

Included Cable No.	Conductor Type	Area (mm2)
LP218-1,3,5	1-4/C + Gnd, #8, 600 V, EPR insulation	266.48

4 ADDED PER ADDENDUM No. 4 DATED JULY 16, 2012

THIS PLAN ACCURATE FOR ELECTRICAL WORK ONLY.

CONDUIT AND TRAY SCHEDULE
YBI TRANSITION STRUCTURES ROADWAY AND GIRDER EB

E-91A

REVISED BY | DATE REVISED
NIKKI NAJDI | ELLERY LUCAS
CALCULATED-DESIGNED BY | CHECKED BY
CONSULTANT FUNCTIONAL SUPERVISOR
BRADY NADELL

STATE OF CALIFORNIA - DEPARTMENT OF TRANSPORTATION
Caltrans

LAST REVISION 00-00-00 | DATE PLOTTED => 13-JUL-2012 | TIME PLOTTED => 15:56

Dist	COUNTY	ROUTE	KILOMETER POST TOTAL PROJECT	SHEET No.	TOTAL SHEETS
04	SF	80	12.6/13.9	320A	821

Caltrans Metric

4

Syn Yee Chin 6/14/12
REGISTERED ELECTRICAL ENGINEER

PLANS APPROVAL DATE

REGISTERED PROFESSIONAL ENGINEER
SYN YEE CHIN
No. 18186
Exp. 09/30/2013
ELECTRICAL
STATE OF CALIFORNIA

THE STATE OF CALIFORNIA OR ITS OFFICERS OR AGENTS SHALL NOT BE RESPONSIBLE FOR THE ACCURACY OR COMPLETENESS OF ELECTRONIC COPIES OF THIS PLAN SHEET.

PB AMERICAS, Inc.
303 Second St., Suite 700N
San Francisco, CA 94107-1317

Conduit/Tray No:	7209
Reference:	E-17
Size:	41
Type:	RGS conduit
From:	PB-LTG
To:	PB-LTG
Total Fill (mm2):	0.00
Remarks:	
Allowable Fill (mm2):	534.55
Description of Changes:	

Included Cable No.	Conductor Type	Area (mm2)
Pull Rope	Soft-Fiber Polyester	0.00

Conduit/Tray No:	7300
Reference:	E-17
Size:	41
Type:	RGS conduit
From:	PB-LTG
To:	PB-LTG
Total Fill (mm2):	212.85
Remarks:	
Allowable Fill (mm2):	534.55
Description of Changes:	

Included Cable No.	Conductor Type	Area (mm2)
A-2008-2	3 + 1 Gnd, #6, #8, 600 V, RHH/RHW insulation	212.85
Pull Rope	Soft-Fiber Polyester	0.00

Conduit/Tray No:	7301
Reference:	E-17
Size:	41
Type:	RGS conduit
From:	PB-LTG
To:	PB-LTG
Total Fill (mm2):	212.85
Remarks:	
Allowable Fill (mm2):	534.55
Description of Changes:	

Included Cable No.	Conductor Type	Area (mm2)
A-2008-2	3 + 1 Gnd, #6, #8, 600 V, RHH/RHW insulation	212.85
Pull Rope	Soft-Fiber Polyester	0.00

Conduit/Tray No:	7302
Reference:	E-17
Size:	41
Type:	RGS conduit
From:	PB-LTG
To:	PB-LTG
Total Fill (mm2):	212.85
Remarks:	
Allowable Fill (mm2):	534.55
Description of Changes:	

Included Cable No.	Conductor Type	Area (mm2)
A-2008-2	3 + 1 Gnd, #6, #8, 600 V, RHH/RHW insulation	212.85
Pull Rope	Soft-Fiber Polyester	0.00

Conduit/Tray No:	7400
Reference:	E-17
Size:	41
Type:	RGS conduit
From:	PB-LTG
To:	PB-LTG
Total Fill (mm2):	0.00
Remarks:	
Allowable Fill (mm2):	534.55
Description of Changes:	

Included Cable No.	Conductor Type	Area (mm2)
Pull Rope	Soft-Fiber Polyester	0.00

Conduit/Tray No:	7401
Reference:	E-17
Size:	41
Type:	RGS conduit
From:	PB-LTG
To:	PB-LTG
Total Fill (mm2):	0.00
Remarks:	
Allowable Fill (mm2):	534.55
Description of Changes:	

Included Cable No.	Conductor Type	Area (mm2)
Pull Rope	Soft-Fiber Polyester	0.00

Conduit/Tray No:	7402
Reference:	E-17
Size:	41
Type:	RGS conduit
From:	PB-LTG
To:	PB-LTG
Total Fill (mm2):	0.00
Remarks:	
Allowable Fill (mm2):	534.55
Description of Changes:	

Included Cable No.	Conductor Type	Area (mm2)
Pull Rope	Soft-Fiber Polyester	0.00

CONDUIT AND TRAY SCHEDULE
YBI TRANSITION STRUCTURES ROADWAY AND GIRDER EB

4 ADDED PER ADDENDUM No. 4 DATED JULY 16, 2012

THIS PLAN ACCURATE FOR ELECTRICAL WORK ONLY.

E-92A

REVISED BY | DATE REVISED
NIKKI NAJDI | ELLERY LUCAS
CALCULATED-DESIGNED BY | CHECKED BY
CONSULTANT FUNCTIONAL SUPERVISOR
BRADY NADELL

STATE OF CALIFORNIA - DEPARTMENT OF TRANSPORTATION
Caltrans

LAST REVISION 00-00-00 | DATE PLOTTED => 13-JUL-2012 | TIME PLOTTED => 15:56

Dist	COUNTY	ROUTE	KILOMETER POST TOTAL PROJECT	SHEET No.	TOTAL SHEETS
04	SF	80	12.6/13.9	322	821

REGISTERED ELECTRICAL ENGINEER 05/17/12

2-21-12
PLANS APPROVAL DATE

REGISTERED PROFESSIONAL ENGINEER CAROL LIGHT No. 10145 Exp. 09/30/13 ELECTRICAL STATE OF CALIFORNIA

THE STATE OF CALIFORNIA OR ITS OFFICERS OR AGENTS SHALL NOT BE RESPONSIBLE FOR THE ACCURACY OR COMPLETENESS OF ELECTRONIC COPIES OF THIS PLAN SHEET.

PB AMERICAS, INC.
303 SECOND ST., SUITE 700N
SAN FRANCISCO, CA 94107-1317

SILVERMAN & LIGHT
1201 PARK AVE., SUITE 100
EMERYVILLE, CA 94608-3632

PROJECT NOTES

1. Existing 1-103c with 3#2/0 (4.16 kV system); 1-103c with 3#1 (2.4 kV system), 1-103c with 3#1/0 (12.47 kV system), and three 103c spares.
2. Install 27C with 2/C+G #10, 600 V insulation (208 V, basketball court).
3. Install electrical precast concrete enclosure, 0.9 m x 1.5 m x 1.4 m with full traffic cover and extension as required. See typical section details on EE-43 for more information.
4. Install 3-Pole, 3-Way, 200 A, 15 kV oil-insulated sub-surface vacuum switch, in new underground equipment enclosure. See details on EE-42. Provide adequate cable length for termination. Coordinate with the Engineer prior to installation. The Contractor to verify dimensions and adequacy of opening prior to ordering. HHW&P shall make final MV cables termination.
5. Install 75kVA pad mount three-phase oil-filled transformer, with radial feed primary switch and internal fusing. Configured for 12.47 kV delta connected primary and 120/208 V wye connected secondary. See Details on EE-44 for more information.
6. Existing 78c (Spare).
7. Install 1-103C with 3#2/0 (for 4.16 kV system) 15 kV shielded cables type MV-105, 1-103C with 3#1 (for 2.4 kV system) 15 kV shielded cables type MV-105 and 1-103C with 3#3/0 (for 12 kV system) 15 kV shielded cables type MV-105 and 3-103C Spare Conduits in 76 mm minimum concrete encasement. Provide 1#2 insulated ground conductor in each system. See sheet EE-46 for more information.
8. Install 3-phase 225 A, 4-wire, 120/208 V, Type III-CF Double metering Service Equipment Enclosure "B". See EE-11 and EE-32 for more wiring diagram and see Caltrans Standard Plans RSP ES-2C and RSP ES-2F. Install 16 mm Dia. x 2.4 M long ground rod.
9. Existing 41c, 3#6 (240 V, City Street Lighting)
10. Install 103C with 3#3/0 (12.47 kV system) 15 kV shielded cables type MV-105. Provide 1#2 ground conductor, and 1-103C spare.
11. Pull MV cables to (E) electrical manhole and coil enough length to extend to each (E) MV load break juction in (E) walk-in vault 106 for HHW&P termination. Coordinate with HHW&P for cable length required.
12. Adjust existing pull box/enclosure to new finished grade. Provide new extension ring as needed.
13. Install 41C, 3/C+G #6, 600 V (208 V, USCG Street lighting)
14. Install 41C, 3/C+G #6, 600 V (208 V, USCG Parking Lot Lighting)
15. Install 53C with new coax (TV) cable. Coordinate with COMCAST for requirements.
16. Install permanent City of San Francisco standard cobra style street light steel bracket arm (2.4 m) assemblies with 200 watts clear HPS lamp and with 208 V integral HPF ballast. See sheet EE-40 for details. Install new fused splice connector in adjacent pull box, see details on Caltrans Standard RSP ES-11, RSP ES-13A and RSP ES-13B for more information.
17. New card reader (Keypad) station on gooseneck pedestal. Similar to project Note 49, except no telephone or intercom station.
18. The Contractor to field verify existing conduit routing.
19. Install 41C, 2/C+G #6, 600 V (208 V, USCG Street Lighting).
20. Install 41C, 2/C+G #10, 600 V (120 V, Irrigation Controller).
21. Install 41C, 2/C+G #6, 600 V (208 V, USCG Parking Lot Lighting).
22. Existing 78c, (3) RG59U coax cable (Video)
    (2) #22/2 twisted pair cable (Data)
    (1) #22/2 twisted pair cable (Call signal)
    (1) #18/4 twisted pair shielded cable (Audio)
    (2) #18/2 cable (Telemetry)
    (1) Cable TV cable
23. Existing single head 305 mm light emitting diode (LED) warning flasher signal assembly, 120 V.
24. Install type 4 conduit (41C) with 2/C+G #6, 600 V (120 V, LED stairs light) between LED power supply and conduit riser.
25. Install 63C, (1) 12 fiber multimode 62.5/125 indoor/outdoor fiber optic cable,
    (1) 25 pair #22 AWG Cat 3 (telephone cable)
    (1) 6 pair #22 AWG shielded speaker cable
26. Existing intercom/telephone unit in weatherproof enclosure mounted on heavy duty steel column to match existing.
27. The Contractor to provide 6 meters of FO cable length and coil and tie-wrap above existing communication rack. Extend telephone cable to telephone terminal board. USCG will do final terminations.
28. Install one new photo-electric unit (PEU) on top of standard. See Caltrans Standard ES-7N for more information.
29. For site security fiber optic block diagram, see sheets EE-38 and EE-39 for more information.
30. Install and wired barrier Master Control Panel. Panel comes with the vehicle restraint system. Coordinate with USCG for exact location.
31. Existing multi functional face/badge reader with two small solid state cameras; one to view the face of the individual seeking access, and the other to view their photo identification badge in weatherproof hood and mounted on heavy duty steel column.
32. Install 41C, 2/C+G #6, 600 V (208 V, City Street Lighting). 3
33. Install 483 mm square extruded LED pole mounted luminaire with 9,641 lumens, with Type IV distribution, 110 watts LED, on 120 mm square steel pole, square base cover, similar or equal to "Gardco # EH19L-1-4-110LA-NW-UNIV" with clear flat glass lens, "Lithonia CSX1 LED-2-30B530/40K-SR4-208-SPA-DF" or "Acculite SS2-B12-4K-208-FT-f2"UL listed for wet location. Light pole mounted on 1.2 m elevated concrete foundation. See Detail 2 and Detail 4 on sheet EE-41.
34. Install 21C, 2#12 + 1#12G (120 V, Carport Lighting)
35. Pull MV cables to (E) electrical manhole and coil enough length to extend to existing vacuum switches for HHW&P termination. Coordinate with HHW&P for overall cable length required.
36. Install fused splice connector in pull box. See Caltrans Standard Plans RSP ES-13A and RSP ES-13B for splicing, and fuse rating details.
37. Coordinate with U.S. Coast Guard and the Engineer for exact location.
38. Install 27C, 4/C+G #10, 600 V (208 V, Basketball Court Lighting).
39. See Partial One Line Diagram on EE-30 for more information.
40. Existing electrical equipment shall be maintained in effective operation until replacement equipment is installed and functional.
41. Install Type 1B Standard with one PEU. See Caltrans Standard Plans RSP ES-7B and ES-7N for details. Coordinate with the Engineer for exact location prior to installation.
42. Install 41C, 3#14 (120 V, PEU).
43. Existing 75 kVA Pad Mount Transformer and 200 A, 120/208 V, 3-Phase Service Pedestal.
44. Install 41C, 4/C+G, #4, 600 V (120/208 V, Ground Retractable (Active) Vehicle Barrier System control panel)
45. Install two heads pole mounted area flood light fixture. Tilt fixture 30 degrees, see Detail 5 on EE-41 for more information.
46. Existing 41c, telephone cable (10#24 AWG).
47. Existing 41c, 3#1/0 (208 V, 3-Phase, Lift Pump-41).
48. Install 41C, 4/C #2 +1#6 G, 600 V (120/208 V New permanent USCG guard booth electrical Panel-G).
49. Install intercom/video station with proximity card reader in weatherproof hood and mounted on heavy duty steel gooseneck pedestal. Note: Card reader and its power (120 V) will be installed by USCG. See sheet EE-38 for more information.
50. Install 35C, 2#10+G (120 V, gate operator).
51. Install 41C, 4/C+G #10, 600 V (208 V, Basketball Court Lighting)
    3/C+G #14, 600 V (120 V, Lighting PEU)
52. Install 41C, 2/C+G #6, 600 V (208 V, Basketball Court Lighting)
53. Install 41C, 3/C+G #6, 600 V (208 V, USCG Parking Lot Lighting)
    2/C+G #6, 600 V (208 V, Basketball Court Lighting)
54. Provide protection to existing conduit/electrical equipment and wire during construction.
55. Existing 200 Ampere, 120/208 V, 3-phase, 4-wire service pedestal.
56. Install 41C with 3/C+G #1/0, 600 V (to existing 208 V, 3-Phase, Pump Station #41)
57. Irrigation Controller. For exact location, coordinate with the Engineer prior to installation.
58. Install electrical precast concrete enclosure similar to Project Note #3 except 1.4 m x 2.6 m x 1.8 m (Inside Dimensions) with full traffic cover and extension as required. (PG&E #04-0324)
59. Existing 41c, (telemetry) with two communication cables, each with 12#18 AWG.
60. Existing 41c, 3#2.
61. Not used. 4
62. Install 41C, 2#10+G, 600 V (120 V, Entry Gate Operator)
    2#10+G, 600 V (120 V, Exit Gate Operator)
    2#10+G, 600 V (120 V, Carport & Light pole Lighting)
    2#10+G, 600 V (120 V, Irrigation Controller)
63. Install 41C, two #18/2 (Telemetry) cable.
64. New Ground Retractable (Active) Vehicle Barrier System installed by others. See sheet EE-39 for more information.
65. Remove existing communication cables except two telemetry cable (12/C #18 AWG) and Cable TV to remain in place and functional when new security system is installed and funtional.
66. Conduit run in concrete barrier. See Caltrans Standard Plan RSP ES-9C.
67. The Contractor to install new State furnished pentagonal shape light pole with fixture on concrete barrier. See EE-52 for light pole anchorage detail.

3 REVISED PER ADDENDUM NO. 3 DATED JUNE 18, 2012

4 REVISED PER ADDENDUM No. 4 DATED JULY 16, 2012

YBI ELECTRICAL UTILITY RELOCATIONS
PROJECT NOTES SHEET 1 OF 2
NO SCALE

EE-2

STATE OF CALIFORNIA - DEPARTMENT OF TRANSPORTATION
Caltrans
CONSULTANT FUNCTIONAL SUPERVISOR: BOB ZANDIPOUR
CALCULATED-DESIGNED BY: BEN JUDILLA
CHECKED BY: CAROL LIGHT
REVISED BY / DATE REVISED

LAST REVISION 00-00-00 | DATE PLOTTED => 13-JUL-2012 | TIME PLOTTED => 15:56

Dist	COUNTY	ROUTE	KILOMETER POST TOTAL PROJECT	SHEET No.	TOTAL SHEETS
04	SF	80	12.6/13.9	323	821

REGISTERED ELECTRICAL ENGINEER 05/17/12

2-21-12
PLANS APPROVAL DATE

REGISTERED PROFESSIONAL ENGINEER CAROL LIGHT No. 10145 Exp. 09/30/13 ELECTRICAL STATE OF CALIFORNIA

THE STATE OF CALIFORNIA OR ITS OFFICERS OR AGENTS SHALL NOT BE RESPONSIBLE FOR THE ACCURACY OR COMPLETENESS OF ELECTRONIC COPIES OF THIS PLAN SHEET.

PB AMERICAS, INC.
303 SECOND ST., SUITE 700N
SAN FRANCISCO, CA 94107-1317

SILVERMAN & LIGHT
1201 PARK AVE., SUITE 100
EMERYVILLE, CA 94608-3632

PROJECT NOTES

68 Install 110 watt, LED surface mounted soffit luminaire with rugged die cast aluminum housing with LED light driver. Fixture shall be similar to or equal to "EMCO ELG-5-110LA-NW-480- NP" by Philips Gardco or "LSI XPG series". Mount fixture to a flush mounted standard 102 mm J-box on the lower deck structure. Install new type 7 pull box adjacent to new luminaire. See Detail F on Caltrans standard ES-9E for junction box installation.

69 Install 1/2 hp, 120 V swing gate operator. Operator shall be with intelligent circuit board, with integral over current load protection. Electronic inputs, magnetic lock, reversing sensors, alarm contacts and non-scissors action arm. Install all necessary hardware for complete installation.

70 Install 41C, 3/C+G #6, 600 V (480 V, Lighting)

71 Existing 41c, with 3#2/0 (120/240 V, HHW&P Power to Building #8).

72 Install 63C with 12 fiber multi-mode (62.5/125) indoor/outdoor fiber optic cable and one 25 pair #22 AWG Cat 3 (telephone), and one 6 pair stranded #22 AWG speaker cable and two #18/2 telemetry cable.

73 Carefully chip-off existing slurry and encase existing duct bank with 76 mm min. reinforced concrete (28 MPa min.). See sheet EE-46 for more information.

74 Install 3#2/0 (for 4.16 kV system) 15 kV shielded cables type MV-105, 3#1 (for 2.4 kV system) 15 kV shielded cables type MV-105 and 3#3/0 (for 12 kV system) 15 kV shielded cables type MV-105 in existing three 103 spare conduits. Provide 1#2 insulated ground conductor in each system. See one-line diagram on EE-30 for more information.

75 Install 53C, 3/C+G #2, 600 V (120/208 V, HHW&P power to service equipment cabinet)

76 Install Type III-AF service equipment enclosure A on new foundation. Door shall face north. For enclosure details, see Caltran Standard Plans RSP ES-2C, RSP ES-2D and sheet EE-34. Install 16 mm Dia. x 2.4 m long ground rod.

77 Install precast concrete electrical pull box, 622 W x 914 L x depth as required, similar or equal to "Christy N40" box.

78 Install and route conduit below deck. Provide conduit support every 1.5 meter max.

79 Install Single Head 300 mm Yellow Light Emitting Diode (LED) advance flashing signal assembly, 120 V. See Caltrans drawings EE3-1, EE3-2 and Detail 4 on Caltrans EE3-7 drawing for more information.

80 Install 41C, 2/C+G #6, 600 V (120 V, LED quarters 9 LED Stair Lighting).

81 Remove and salvage existing service equipment enclosure. Demolish existing concrete foundation. Restore grade to match existing.

82 Install 41C, 2/C+G #6, 600 V (208 V, City Street Lighting)
2/C+G #10, 600 V (120 V, Irrigation)

83 Install 3/C+G #6, 600 V (480 V, soffit lighting). Conduit installed under YBI1 contract.

84 Conduit installed in eastbound structure under YBI1 contract.

85 Intercept conduit and extend to new pull box.

86 Install 53C, 3/C+G #6, 600 V (208 V, USCG Street Lighting).
3/C+G #6, 600 V (208 V, USCG Parking Lot Lighting)
53C, 2/C+G #6, 600 V (120 V, USCG LED Stairs Lighting)
2/C+G #6, 600 V (208 V, USCG Basketball Court Lighting)
2/C+G #10, 600 V (120 V, Irrigation)

87 Install 41C, 2/C+G #6, 600 V (240 V, City Street Lighting).

88 Install 53C, 3/C+G #6, 600 V (208 V, USCG Street Lighting).
3/C+G #6, 600 V (208 V, USCG Parking Lot Lighting)
41C, 2/C+G #6, 600 V (208 V, USCG Basketball Court Lighting)
2/C+G #10, 600 V (120 V, Irrigation)

89 Install 41C, 3/C+G #6, 600 V (208 V, USCG Street Lighting).
2/C+G #6, 600 V (120 V, USCG LED Stairs Lighting)

90 Install 483 mm square extruded LED pole mounted luminaire, with 13,698 lumens, with type IV distribution, 160 watt LED, universal voltage on 120 mm square steel pole, square base cover, "Gardco EH19L-1-4-160LA-UNIV-NW" with clear flat glass lens, "Lithonia "CSX2 LED-3-30B530/40K-SR4-208-SPA-DF" or Acculite "LS2-B24-4K-208-FT-F2". UL listed for wet location. Mount luminaire 7.6 m from finished grade. See Details 3 and 4 on sheet EE-41.

3

91 Install 41C, 2#10+G, 600 V (120 V, Entry Gate Operator)
2#10+G, 600 V (120 V, Exit Gate Operator).

92 Install 12 fiber multimode (62.5/125) indoor/outdoor fiber optic cable and one 25 pair #22 AWG Cat 3 (telephone), and one 6 pair stranded 22 AWG speaker cable in existing conduit (78c).

93 Disconnect and remove (E) LED light fixtures including related power cord, power supply and conduit to accommodate the removal of one flight of existing stairs. Store fixtures and power supply in safe place. Reinstall said light fixtures back to its original state when new replacement of stairs is constructed.

94 Install new heavy duty surface mounted radial lens luminaire under canopy. Aluminum body, instant-start electronic ballast, two T8 lamps, 120 V and with high impact white acrylic diffuser. Fixture shall be similar or equal to "Prudential P5160-2T8-04-HWA-TMW-120-AL" or "Metalux VRVT2 series". Light fixture shall be controlled by photo electric unit mounted on the front face of the roof.

95 Install new 12 circuit, 100 Amp bus, single phase, 3-wire, 120/240 V, panel board. Provide 60 Amp-2 pole main breaker and six 20 Amp-1 pole branch circuit breakers. Mount adjacent to existing main disconnect.

96 Install Single Head 300 mm Red Light Emitting Diode (LED) advance flashing signal assembly, 120 V. See Caltrans drawings EE3-1 and Detail 3 on Caltrans drawing EE3-7 for more information.

97 Install 41C, 2/C+G #6, 600 V (208 V, USCG Street Lighting).

98 Install 41C, 3#10+G, 600 V (120 V, Entry & Exit Gate Operators).
2#10+G, 600 V (120 V, Carport Lighting & Light Pole)

99 Install 53C, 3/C+G #8, 600 V (120 V, Existing Switchgear Space Heaters).
3/C+G #6, 600 V (208 V, Utility Yard Lighting)
2/C+G #6, 600 V (208 V, City Street Lighting)
2/C+G #10, 600 V (120 V, Irrigation)

100 At existing Panel-UP001, connect 2/C, #10 +G (120 V, Irrigation) to existing 20 A-1P spare circuit breaker #22. Provide new revised (TYPE) panel schedule.

101 Similar to Project Note #33 except 120 Volt.

102 Install 53C, 3/C+G #8, 600 V (120 V, Existing switchgear space heater).
3/C+G #6, 600 V (208 V, Utility yard lighting)

103 Disconnect existing luminaire from (E) 120 V system and replace 120 V integral ballast to match new 208 V lighting system voltage.

104 Install one 53C spare conduit into existing manhole (MH-3) for future FO cable.

105 Install one 53C spare conduit into existing manhole (MH-2) for future 120 V power.

106 3/4 HP, 208 V, 3-phase trackless bi-fold fast acting integrated gate operator. Operator capable of fully opening or closing within 7 seconds. Operator shall have programmable logic controller for controlling electromechanical drive system. All drive electrical components to be enclosed in weather-resistant housing. Install all necessary hardware for complete installation. Coordinate with the manufacturer exact conduit stub-up location prior to installation.

4

3 REVISED PER ADDENDUM NO. 3 DATED JUNE 18, 2012

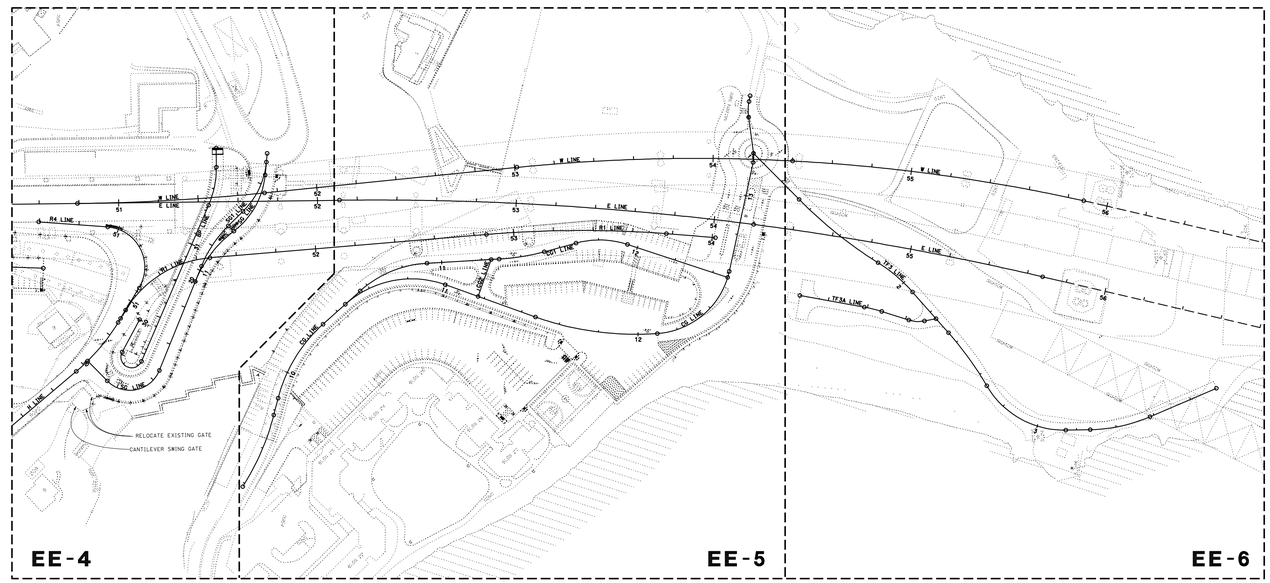

KEY PLAN

SCALE: 1:1500

4 REVISED PER ADDENDUM No. 4 DATED JULY 16, 2012

YBI ELECTRICAL UTILTY RELOCATION
PROJECT NOTES SHEET 2 OF 2 AND KEY PLAN

SCALE AS NOTED

THIS PLAN ACCURATE FOR ELECTRICAL WORK ONLY.
ALL DIMENSIONS ARE IN METERS UNLESS OTHERWISE SHOWN

EE-3

STATE OF CALIFORNIA - DEPARTMENT OF TRANSPORTATION
Caltrans

CONSULTANT FUNCTIONAL SUPERVISOR: BOB ZANDIPOUR
CALCULATED-DESIGNED BY: BEN JUDILLA
CHECKED BY: CAROL LIGHT
REVISED BY / DATE REVISED

LAST REVISION 00-00-00 DATE PLOTTED => 13-JUL-2012 TIME PLOTTED => 15:57

FOR COMPLETE RIGHT OF WAY AND ACCURATE ACCESS DATA, SEE RIGHT OF WAY RECORD MAPS AT DISTRICT OFFICE.

Dist	COUNTY	ROUTE	KILOMETER POST TOTAL PROJECT	SHEET No.	TOTAL SHEETS
04	SF	80	12.6/13.9	325	821

REGISTERED ELECTRICAL ENGINEER 05/17/12

2-21-12
PLANS APPROVAL DATE

REGISTERED PROFESSIONAL ENGINEER CAROL LIGHT No. 10145 Exp. 09/30/13 ELECTRICAL STATE OF CALIFORNIA

THE STATE OF CALIFORNIA OR ITS OFFICERS OR AGENTS SHALL NOT BE RESPONSIBLE FOR THE ACCURACY OR COMPLETENESS OF ELECTRONIC COPIES OF THIS PLAN SHEET.

PB AMERICAS, INC.
303 SECOND ST., SUITE 700N
SAN FRANCISCO, CA 94107-1317

SILVERMAN & LIGHT
1201 PARK AVE., SUITE 100
EMERYVILLE, CA 94608-3632

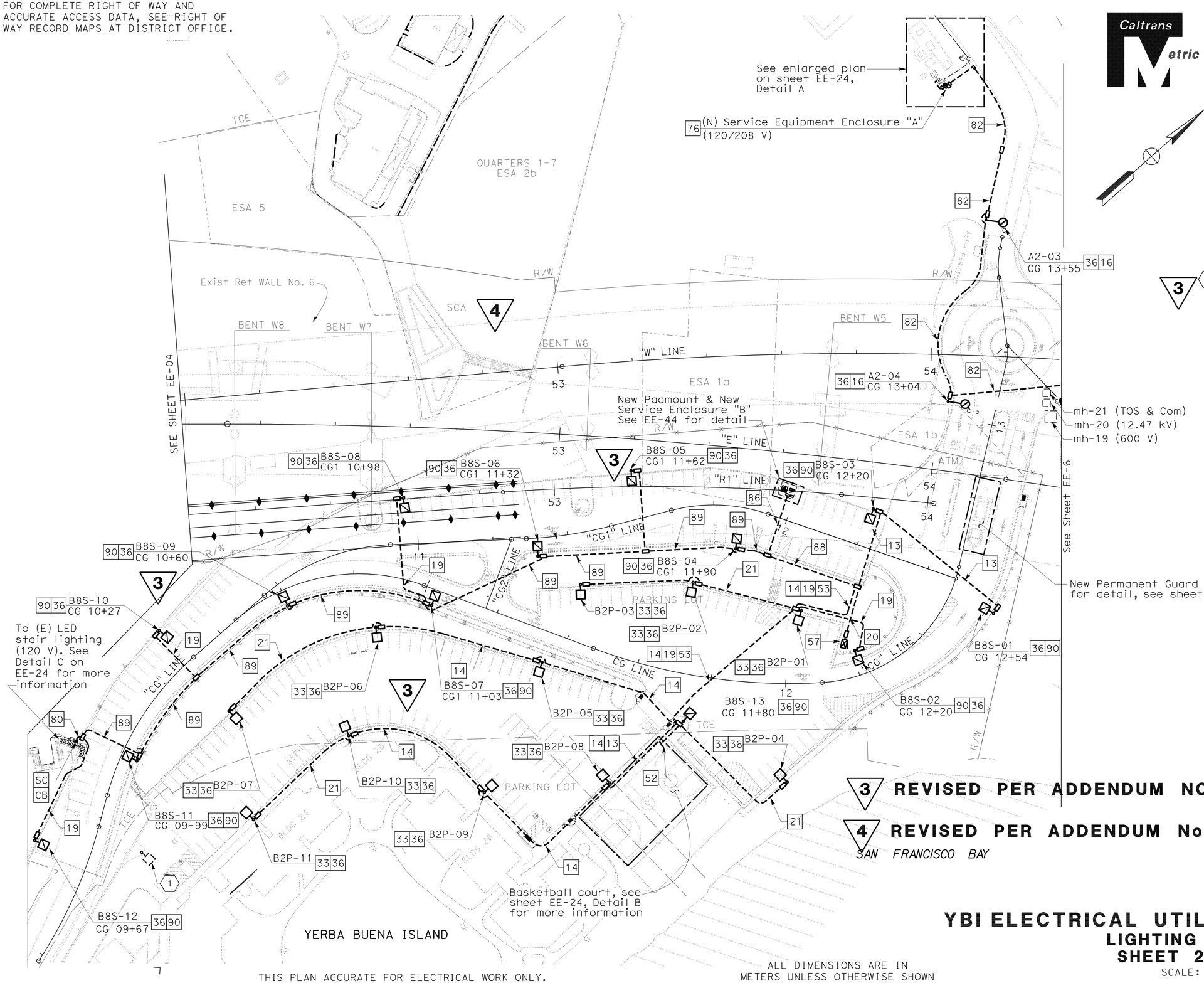

SHEET NOTES:

3 (1) Existing light pole to remain in place and operational. Provide protection during construction.

3 **REVISED PER ADDENDUM NO. 3 DATED JUNE 18, 2012**

4 **REVISED PER ADDENDUM No. 4 DATED JULY 16, 2012**

SAN FRANCISCO BAY

THIS PLAN ACCURATE FOR ELECTRICAL WORK ONLY.

ALL DIMENSIONS ARE IN METERS UNLESS OTHERWISE SHOWN

YBI ELECTRICAL UTILITY RELOCATIONS
LIGHTING PLAN
SHEET 2 OF 3

SCALE: 1:500

EE-5

STATE OF CALIFORNIA - DEPARTMENT OF TRANSPORTATION
Caltrans

CONSULTANT FUNCTIONAL SUPERVISOR: BOB ZANDIPOUR
CALCULATED-DESIGNED BY: BEN JUDILLA
CHECKED BY: CAROL LIGHT
REVISED BY / DATE REVISED

LAST REVISION 00-00-00 DATE PLOTTED => 13-JUL-2012 TIME PLOTTED => 15:57

Dist	COUNTY	ROUTE	KILOMETER POST TOTAL PROJECT	SHEET No.	TOTAL SHEETS
04	SF	80	12.6/13.9	332	821

02/03/12
REGISTERED ELECTRICAL ENGINEER

2-21-12
PLANS APPROVAL DATE

REGISTERED PROFESSIONAL ENGINEER
CAROL LIGHT
No. 10145
Exp. 09/30/13
ELECTRICAL
STATE OF CALIFORNIA

THE STATE OF CALIFORNIA OR ITS OFFICERS OR AGENTS SHALL NOT BE RESPONSIBLE FOR THE ACCURACY OR COMPLETENESS OF ELECTRONIC COPIES OF THIS PLAN SHEET.

PB AMERICAS, INC.
303 SECOND ST., SUITE 700N
SAN FRANCISCO, CA 94107-1317

SILVERMAN & LIGHT
1201 PARK AVE., SUITE 100
EMERYVILLE, CA 94608-3632

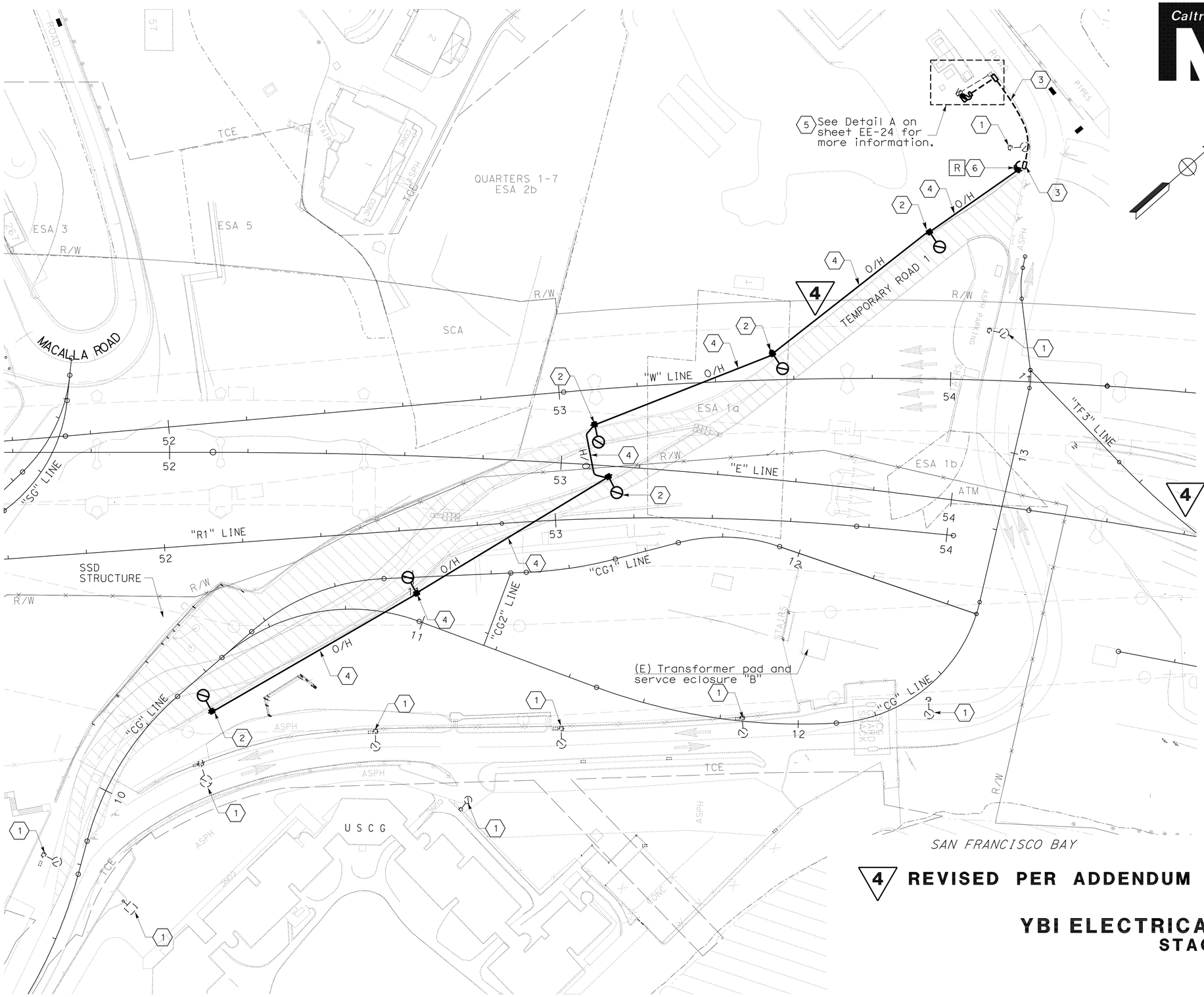

SHEET NOTES:

1. Existing street light to be used during stage construction. Remove when directed by the Engineer.
2. Install Temporary 12 m wood pole with 3.1 m mast arm and 150 W HPS luminaire to be used during this stage. See details on EE-51 for more information.
3. Install permanent lighting equipment as shown on contract plans to be used during the stage construction. See respective plan EE-5 for location, project notes and other permanent equipment.
4. Install 10 mm messenger wire aerially with 2#6 triplex cable (120 V, stage construction lighting). Remove when directed by the Engineer.
5. Work in this area to be performed during this stage 1 construction.
6. Install temporary riser and conduit on temporary wood pole. See detail EE-51 for more information.

4 REVISED PER ADDENDUM No. 4 DATED JULY 16, 2012

YBI ELECTRICAL UTILITY RELOCATIONS
STAGE CONSTRUCTION
STAGE 1

SCALE: 1:500

THIS PLAN ACCURATE FOR STAGE CONSTRUCTION ONLY.

ALL DIMENSIONS ARE IN METERS UNLESS OTHERWISE SHOWN

EE-12

STATE OF CALIFORNIA - DEPARTMENT OF TRANSPORTATION
Caltrans

CONSULTANT FUNCTIONAL SUPERVISOR: BOB ZANDIPOUR
CALCULATED-DESIGNED BY: BEN JUDILLA
CHECKED BY: CAROL LIGHT
REVISED BY / DATE REVISED

LAST REVISION 00-00-00
DATE PLOTTED => 13-JUL-2012
TIME PLOTTED => 15:57

BORDER LAST REVISED 10/07/2009
RELATIVE BORDER SCALE IS IN MILLIMETERS 0 20 40 60 80
USERNAME => s124496
DGN FILE => 40120tua104.add
CU 04251
EA 0120T1

Dist	COUNTY	ROUTE	KILOMETER POST TOTAL PROJECT	SHEET No.	TOTAL SHEETS
04	SF	80	12.6/13.9	333	821

02/03/12
REGISTERED ELECTRICAL ENGINEER

2-21-12
PLANS APPROVAL DATE

REGISTERED PROFESSIONAL ENGINEER
CAROL LIGHT
No. 10145
Exp. 09/30/13
ELECTRICAL
STATE OF CALIFORNIA

THE STATE OF CALIFORNIA OR ITS OFFICERS OR AGENTS SHALL NOT BE RESPONSIBLE FOR THE ACCURACY OR COMPLETENESS OF ELECTRONIC COPIES OF THIS PLAN SHEET.

PB AMERICAS, INC.
303 SECOND ST., SUITE 700N
SAN FRANCISCO, CA 94107-1317

SILVERMAN & LIGHT
1201 PARK AVE., SUITE 100
EMERYVILLE, CA 94608-3632

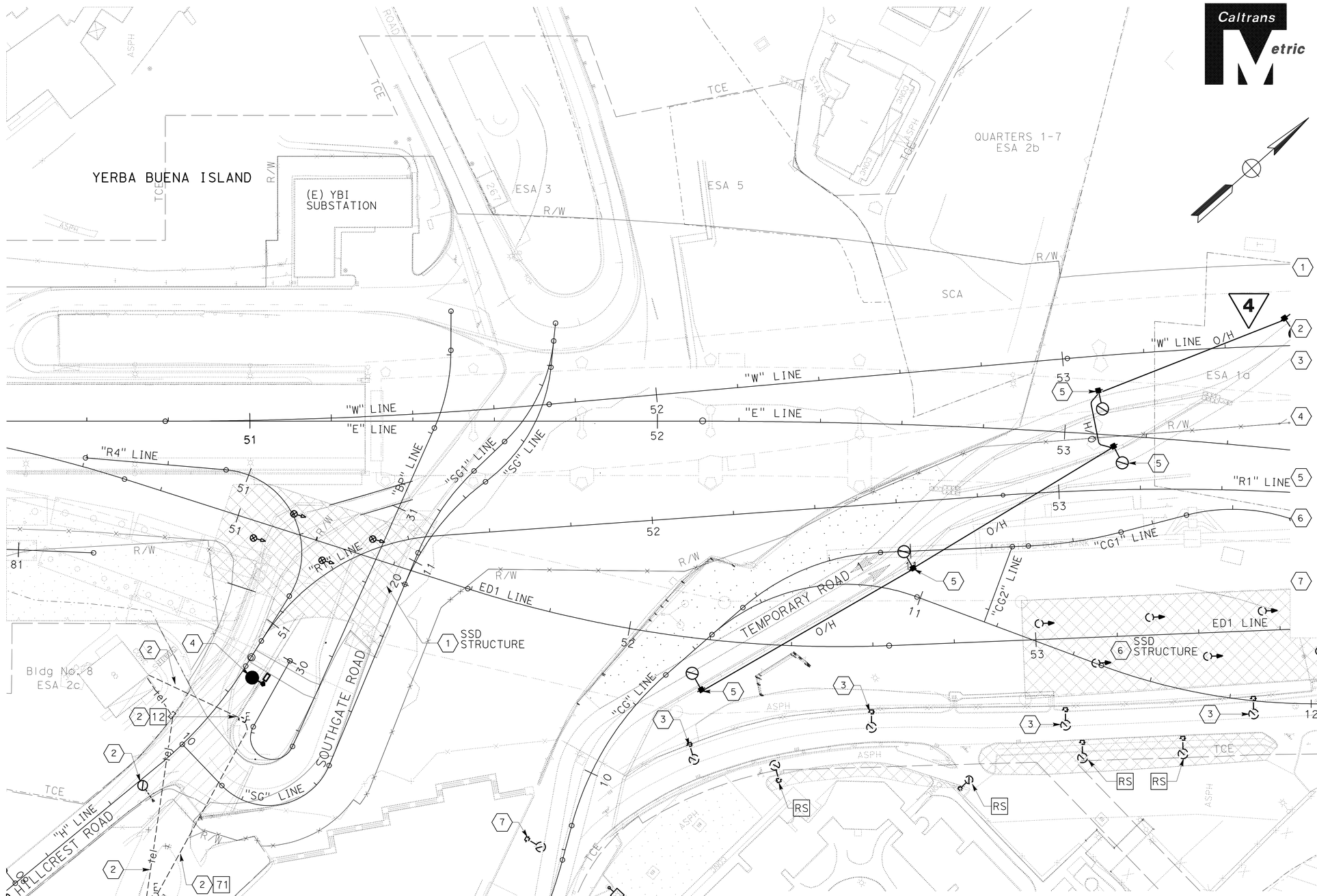

SHEET NOTES:

1. On YBI Detour Structure bent 45A to bent 48, disconnect, remove existing light fixtures, call boxes and CCTV and turn over to Caltrans Electrical maintenance supervisor. Remove and scrap related conduit and wires.
2. Provide protection to existing conduit, conductors and light pole during construction.
3. Existing lighting system to be temporarily de-energized during this stage and energized on stage 3 phase 2 or when directed by the Engineer.
4. Install State-furnished light pole and pull box as shown on contract plans, and energize when directed by the Engineer. See respective plans EE-4, EE-5 and EE-5 for location, Project Notes and other permanent equipment.
5. Energized temporary lighting installed during stage 1 construction or when directed by the Engineer.
6. On YBI Detour Structure bent 50 to Bridge pier E1, disconnect, remove existing light fixtures, call boxes and CCTV and turn over to Caltrans Electrical maintenance supervisor. Remove and scrap related conduit and wires.
7. Existing light pole to be used during stage construction,

4 REVISED PER ADDENDUM No. 4 DATED JULY 16, 2012

YBI ELECTRICAL UTILITY RELOCATIONS
STAGE CONSTRUCTION
STAGE 2 PHASE 1

SCALE: 1:500

THIS PLAN ACCURATE FOR STAGE CONSTRUCTION ONLY.

EE-13

STATE OF CALIFORNIA - DEPARTMENT OF TRANSPORTATION
Caltrans

CONSULTANT FUNCTIONAL SUPERVISOR: BOB ZANDIPOUR
CALCULATED-DESIGNED BY: BEN JUDILLA
CHECKED BY: CAROL LIGHT
REVISED BY / DATE REVISED

LAST REVISION 00-00-00
DATE PLOTTED => 13-JUL-2012
TIME PLOTTED => 15:57

Dist	COUNTY	ROUTE	KILOMETER POST TOTAL PROJECT	SHEET No.	TOTAL SHEETS
04	SF	80	12.6/13.9	334	821

02/03/12
REGISTERED ELECTRICAL ENGINEER

2-21-12
PLANS APPROVAL DATE

REGISTERED PROFESSIONAL ENGINEER
CAROL LIGHT
No. 10145
Exp. 09/30/13
ELECTRICAL
STATE OF CALIFORNIA

THE STATE OF CALIFORNIA OR ITS OFFICERS OR AGENTS SHALL NOT BE RESPONSIBLE FOR THE ACCURACY OR COMPLETENESS OF ELECTRONIC COPIES OF THIS PLAN SHEET.

PB AMERICAS, INC.
303 SECOND ST., SUITE 700N
SAN FRANCISCO, CA 94107-1317

SILVERMAN & LIGHT
1201 PARK AVE., SUITE 100
EMERYVILLE, CA 94608-3632

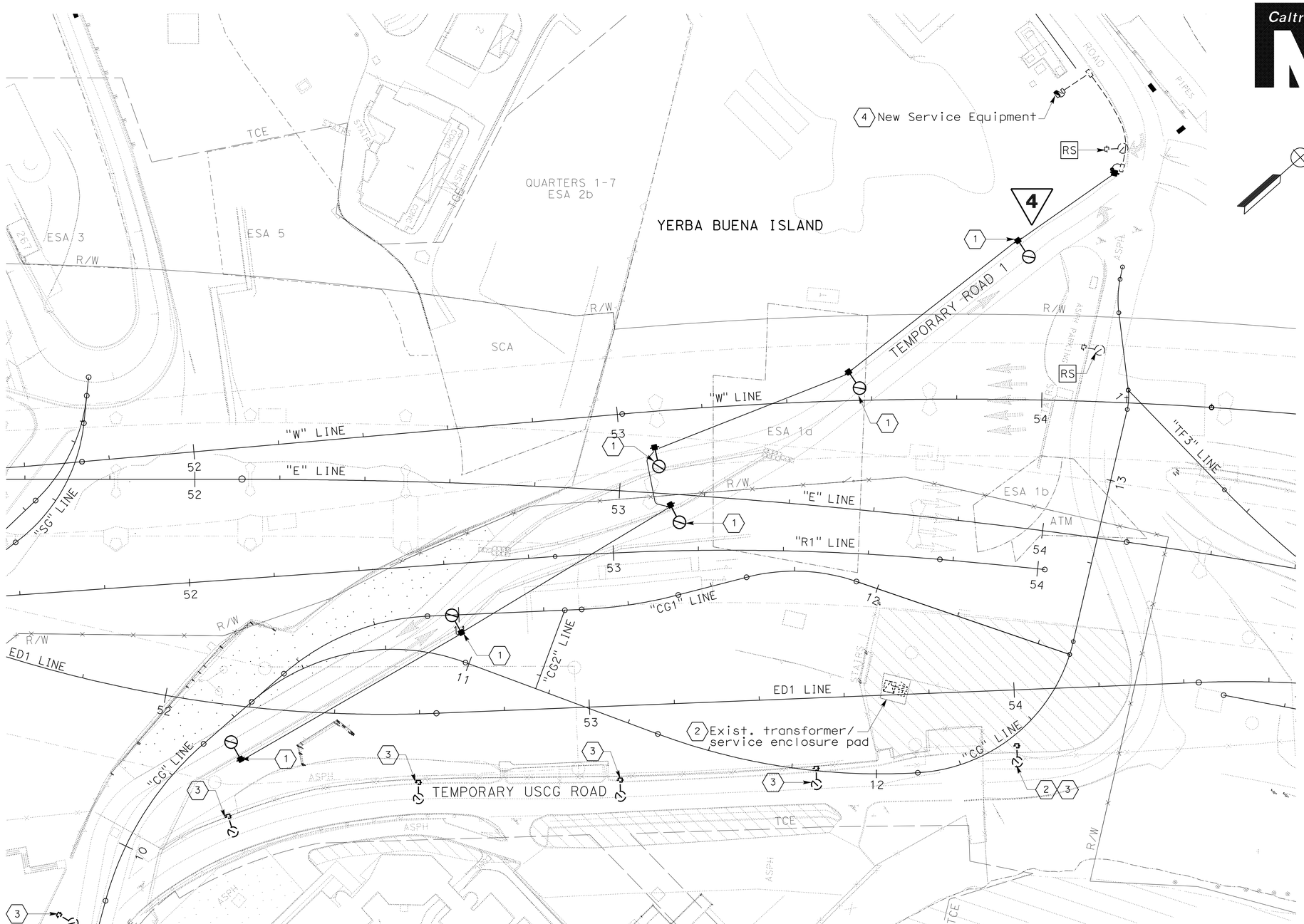

SHEET NOTES:

1. Temporary lighting installed during stage 1 construction to remain in place and operational.
2. Provide protection to existing conduit, conductors and light pole during construction.
3. Existing USCG light pole in existing lighting system to be used during stage construction.
4. New Type III-AF Service Equipment installed during stage 1 construction.

4 REVISED PER ADDENDUM No. 4 DATED JULY 16, 2012

YBI ELECTRICAL UTILITY RELOCATIONS
STAGE CONSTRUCTION
STAGE 2 PHASE 2

SCALE: 1:500

EE-14

THIS PLAN ACCURATE FOR STAGE CONSTRUCTION ONLY.

ALL DIMENSIONS ARE IN METERS UNLESS OTHERWISE SHOWN

STATE OF CALIFORNIA - DEPARTMENT OF TRANSPORTATION
Caltrans

CONSULTANT FUNCTIONAL SUPERVISOR: BOB ZANDIPOUR
CALCULATED-DESIGNED BY: BEN JUDILLA
CHECKED BY: CAROL LIGHT
REVISED BY / DATE REVISED

LAST REVISION 00-00-00
DATE PLOTTED => 13-JUL-2012
TIME PLOTTED => 15:57

Dist	COUNTY	ROUTE	KILOMETER POST TOTAL PROJECT	SHEET No.	TOTAL SHEETS
04	SF	80	12.6/13.9	335	821

02/03/12
REGISTERED ELECTRICAL ENGINEER

2-21-12
PLANS APPROVAL DATE

REGISTERED PROFESSIONAL ENGINEER
CAROL LIGHT
No. 10145
Exp. 09/30/13
ELECTRICAL
STATE OF CALIFORNIA

THE STATE OF CALIFORNIA OR ITS OFFICERS OR AGENTS SHALL NOT BE RESPONSIBLE FOR THE ACCURACY OR COMPLETENESS OF ELECTRONIC COPIES OF THIS PLAN SHEET.

PB AMERICAS, INC.
303 SECOND ST., SUITE 700N
SAN FRANCISCO, CA 94107-1317

SILVERMAN & LIGHT
1201 PARK AVE., SUITE 100
EMERYVILLE, CA 94608-3632

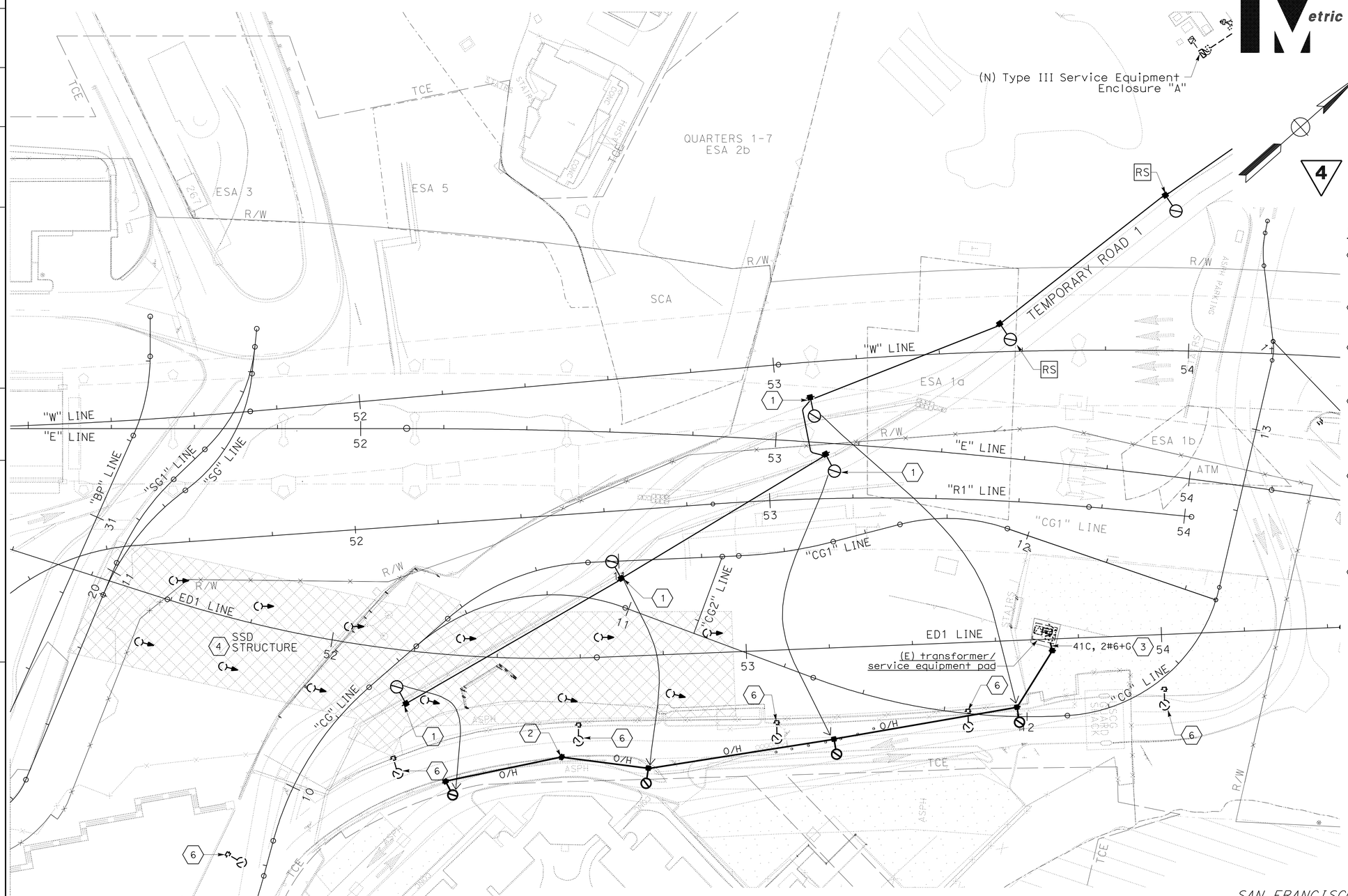

SHEET NOTES:

1. Disconect, remove and relocate temporary light pole, overhead cable (installed in stage 1 construction) as shown. Energized when directed by the Engineer.
2. Install 12.2 m wood pole, see Detail on sheet EE-51 for more information. Remove when directed by the Engineer.
3. Install 10 mm messenger wire aerially with 2#6 triplex cable (120 V, stage construction Lighting). Remove when when directed by the Engineer.
4. On YBI Detour Structure bent 48 to bent 50, disconnect, remove existing light fixtures, call boxes and CCTV and turn over to Caltrans Electrical maintenance supervisor. Remove and scrap related conduit and wires.
5. Install temporary riser and conduit on temporary wood pole. Install riser conduit into existing ighting pull box (verify in field existing location) and splice temporary conductors in existing pull box. See Detail on sheet EE-51 for more information. Remove when directed by the Engineer.
6. Existing USCG light pole in existing lighting system to remain and to be used during stage construction. Energized when directed by the Engineer.

4 REVISED PER ADDENDUM No. 4 DATED JULY 16, 2012

YBI ELECTRICAL UTILITY RELOCATIONS
STAGE CONSTRUCTION
STAGE 3 PHASE 1

SCALE: 1:500

THIS PLAN ACCURATE FOR STAGE CONSTRUCTION ONLY.

ALL DIMENSIONS ARE IN METERS UNLESS OTHERWISE SHOWN

EE-15

STATE OF CALIFORNIA - DEPARTMENT OF TRANSPORTATION
Caltrans

CONSULTANT FUNCTIONAL SUPERVISOR: BOB ZANDIPOUR
CALCULATED-DESIGNED BY: BEN JUDILLA
CHECKED BY: CAROL LIGHT
REVISED BY / DATE REVISED

LAST REVISION 00-00-00
DATE PLOTTED => 13-JUL-2012
TIME PLOTTED => 15:51

Dist	COUNTY	ROUTE	KILOMETER POST TOTAL PROJECT	SHEET No.	TOTAL SHEETS
04	SF	80	12.6/13.9	337	821

02/03/12
REGISTERED ELECTRICAL ENGINEER

2-21-12
PLANS APPROVAL DATE

REGISTERED PROFESSIONAL ENGINEER CAROL LIGHT No. 10145 Exp. 09/30/13 ELECTRICAL STATE OF CALIFORNIA

THE STATE OF CALIFORNIA OR ITS OFFICERS OR AGENTS SHALL NOT BE RESPONSIBLE FOR THE ACCURACY OR COMPLETENESS OF ELECTRONIC COPIES OF THIS PLAN SHEET.

PB AMERICAS, INC.
303 SECOND ST., SUITE 700N
SAN FRANCISCO, CA 94107-1317

SILVERMAN & LIGHT
1201 PARK AVE., SUITE 100
EMERYVILLE, CA 94608-3632

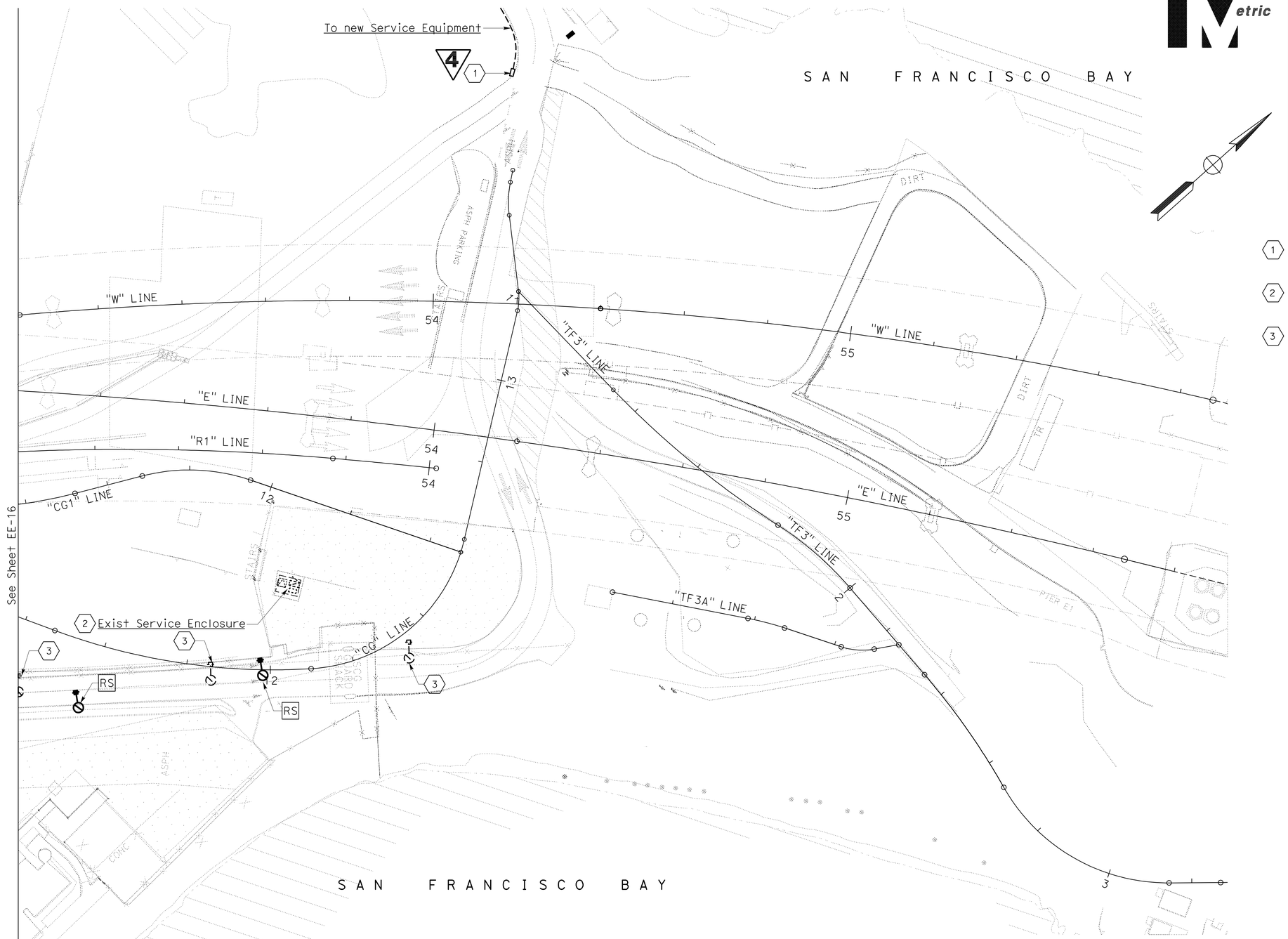

SHEET NOTES:

1. Permanent pull box, conduit and conductor installed on stage 1 construcxtion to remain in place.
2. Existing transformer and service equipment pad to remain in place to used during stage construction.
3. Energize existing USCG light pole during this stage. Remove at the beginning of stage 4 phase 2 construction or when directed by the Engineer.

4 REVISED PER ADDENDUM No. 4 DATED JULY 16, 2012

THIS PLAN ACCURATE FOR STAGE CONSTRUCTION ONLY.

ALL DIMENSIONS ARE IN METERS UNLESS OTHERWISE SHOWN

YBI ELECTRICAL UTILITY RELOCATIONS
STAGE CONSTRUCTION
STAGE 3 PHASE 2
SHEET 2 OF 2

SCALE: 1:500

EE-17

REVISED BY	DATE REVISED

CALCULATED-DESIGNED BY: BEN JUDILLA
CHECKED BY: CAROL LIGHT
CONSULTANT FUNCTIONAL SUPERVISOR: BOB ZANDIPOUR

STATE OF CALIFORNIA - DEPARTMENT OF TRANSPORTATION
Caltrans

LAST REVISION 00-00-00
DATE PLOTTED => 13-JUL-2012
TIME PLOTTED => 15:57

Dist	COUNTY	ROUTE	KILOMETER POST TOTAL PROJECT	SHEET No.	TOTAL SHEETS
04	SF	80	12.6/13.9	339	821

05/17/12
REGISTERED ELECTRICAL ENGINEER

2-21-12
PLANS APPROVAL DATE

REGISTERED PROFESSIONAL ENGINEER
CAROL LIGHT
No. 10145
Exp. 09/30/13
ELECTRICAL
STATE OF CALIFORNIA

THE STATE OF CALIFORNIA OR ITS OFFICERS OR AGENTS SHALL NOT BE RESPONSIBLE FOR THE ACCURACY OR COMPLETENESS OF ELECTRONIC COPIES OF THIS PLAN SHEET.

PB AMERICAS, INC.
303 SECOND ST., SUITE 700N
SAN FRANCISCO, CA 94107-1317

SILVERMAN & LIGHT
1201 PARK AVE., SUITE 100
EMERYVILLE, CA 94608-3632

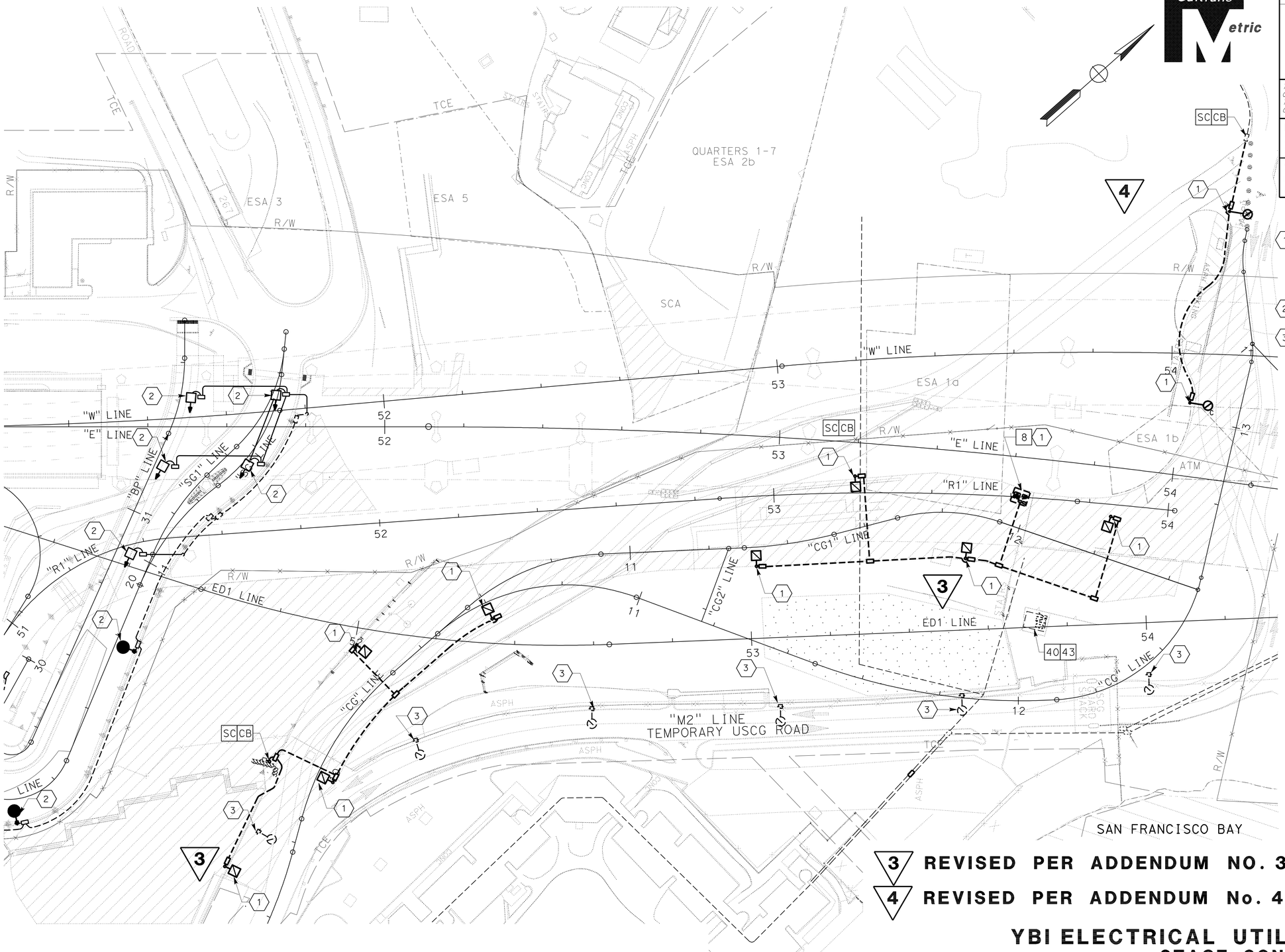

SHEET NOTES:

1. Install permanent luminaire, equipment, conduit and pull box as shown on contract plans, and energize when directed by the Engineer. See respective plans EE-4, EE-5 and EE-6 for location, project notes and other permanent equipment.
2. Permanent electrolier installed during stage 3 phase 2 construction.
3. Existing USCG light pole in existing lighting system to be used during stage construction. Remove when directed by the Engineer.

3 REVISED PER ADDENDUM NO. 3 DATED JUNE 18, 2012

4 REVISED PER ADDENDUM No. 4 DATED JULY 16, 2012

YBI ELECTRICAL UTILITY RELOCATIONS
STAGE CONSTRUCTION
STAGE 4 PHASE 1

SCALE: 1:500

THIS PLAN ACCURATE FOR STAGE CONSTRUCTION ONLY.

ALL DIMENSIONS ARE IN METERS UNLESS OTHERWISE SHOWN

EE-19

STATE OF CALIFORNIA - DEPARTMENT OF TRANSPORTATION
Caltrans

CONSULTANT FUNCTIONAL SUPERVISOR: BOB ZANDIPOUR
CALCULATED-DESIGNED BY: BEN JUDILLA
CHECKED BY: CAROL LIGHT
REVISED BY
DATE REVISED

LAST REVISION 00-00-00
DATE PLOTTED => 13-JUL-2012
TIME PLOTTED => 15:57

Dist	COUNTY	ROUTE	KILOMETER POST TOTAL PROJECT	SHEET No.	TOTAL SHEETS
04	SF	80	12.6/13.9	341	821

07/19/12
REGISTERED ELECTRICAL ENGINEER

2-21-12
PLANS APPROVAL DATE

REGISTERED PROFESSIONAL ENGINEER
CAROL LIGHT
No. 10145
Exp. 09/30/13
ELECTRICAL
STATE OF CALIFORNIA

THE STATE OF CALIFORNIA OR ITS OFFICERS OR AGENTS SHALL NOT BE RESPONSIBLE FOR THE ACCURACY OR COMPLETENESS OF ELECTRONIC COPIES OF THIS PLAN SHEET.

PB AMERICAS, INC.
303 SECOND ST., SUITE 700N
SAN FRANCISCO, CA 94107-1317

SILVERMAN & LIGHT
1201 PARK AVE., SUITE 100
EMERYVILLE, CA 94608-3632

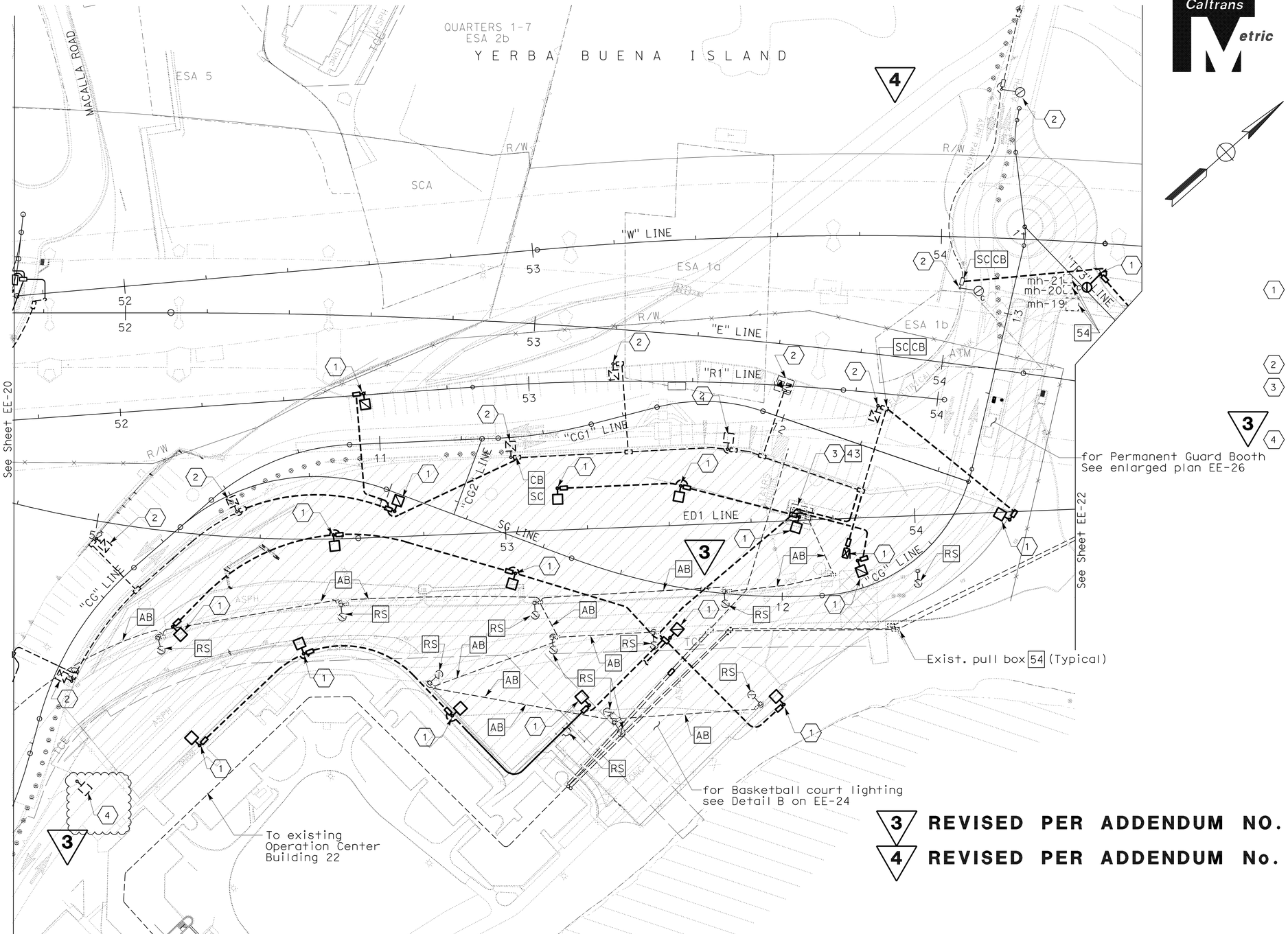

SHEET NOTES:

1. Install permanent luminaire, equipment, conduit and pull box as shown on contract plans, and energize when directed by the Engineer. See respective plans EE-4, EE-5 and EE-6 for location, notes and other permanent equipment.
2. Installed during Stage 4 phase 1 construction.
3. Remove and turn-over existing equipment to HHW&P. Remove existing foundation and remove existing pull boxes at the end of Stage 2-phase 1 construction.
4. Existing light pole to remain in place and operational. Provide protection during construction.

3 REVISED PER ADDENDUM NO. 3 DATED JUNE 18, 2012

4 REVISED PER ADDENDUM No. 4 DATED JULY 16, 2012

YBI ELECTRICAL UTILITY RELOCATIONS
STAGE CONSTRUCTION
STAGE 4 PHASE 2
SHEET 2 OF 3

SCALE: 1:500

THIS PLAN ACCURATE FOR STAGE CONSTRUCTION ONLY.

ALL DIMENSIONS ARE IN METERS UNLESS OTHERWISE SHOWN

EE-21

STATE OF CALIFORNIA - DEPARTMENT OF TRANSPORTATION
Caltrans

CONSULTANT FUNCTIONAL SUPERVISOR: BOB ZANDIPOUR
CALCULATED-DESIGNED BY: CAROL LIGHT
CHECKED BY: BEN JUDILLA
REVISED BY | DATE REVISED

LAST REVISION 00-00-00 | DATE PLOTTED => 13-JUL-2012 | TIME PLOTTED => 15:57

BORDER LAST REVISED 10/07/2009
RELATIVE BORDER SCALE IS IN MILLIMETERS 0 20 40 60 80
USERNAME => s124496
DGN FILE => 40120tua113.add
CU 04251
EA 0120T1

Dist	COUNTY	ROUTE	KILOMETER POST TOTAL PROJECT	SHEET No.	TOTAL SHEETS
04	SF	80	12.6/13.9	346	821

05/17/12
REGISTERED ELECTRICAL ENGINEER

2-21-12
PLANS APPROVAL DATE

REGISTERED PROFESSIONAL ENGINEER
CAROL LIGHT
No. 10145
Exp. 09/30/13
ELECTRICAL
STATE OF CALIFORNIA

THE STATE OF CALIFORNIA OR ITS OFFICERS OR AGENTS SHALL NOT BE RESPONSIBLE FOR THE ACCURACY OR COMPLETENESS OF ELECTRONIC COPIES OF THIS PLAN SHEET.

PB AMERICAS, INC.
303 SECOND ST., SUITE 700N
SAN FRANCISCO, CA 94107-1317

SILVERMAN & LIGHT
1201 PARK AVE., SUITE 100
EMERYVILLE, CA 94608-3632

Caltrans Metric

4

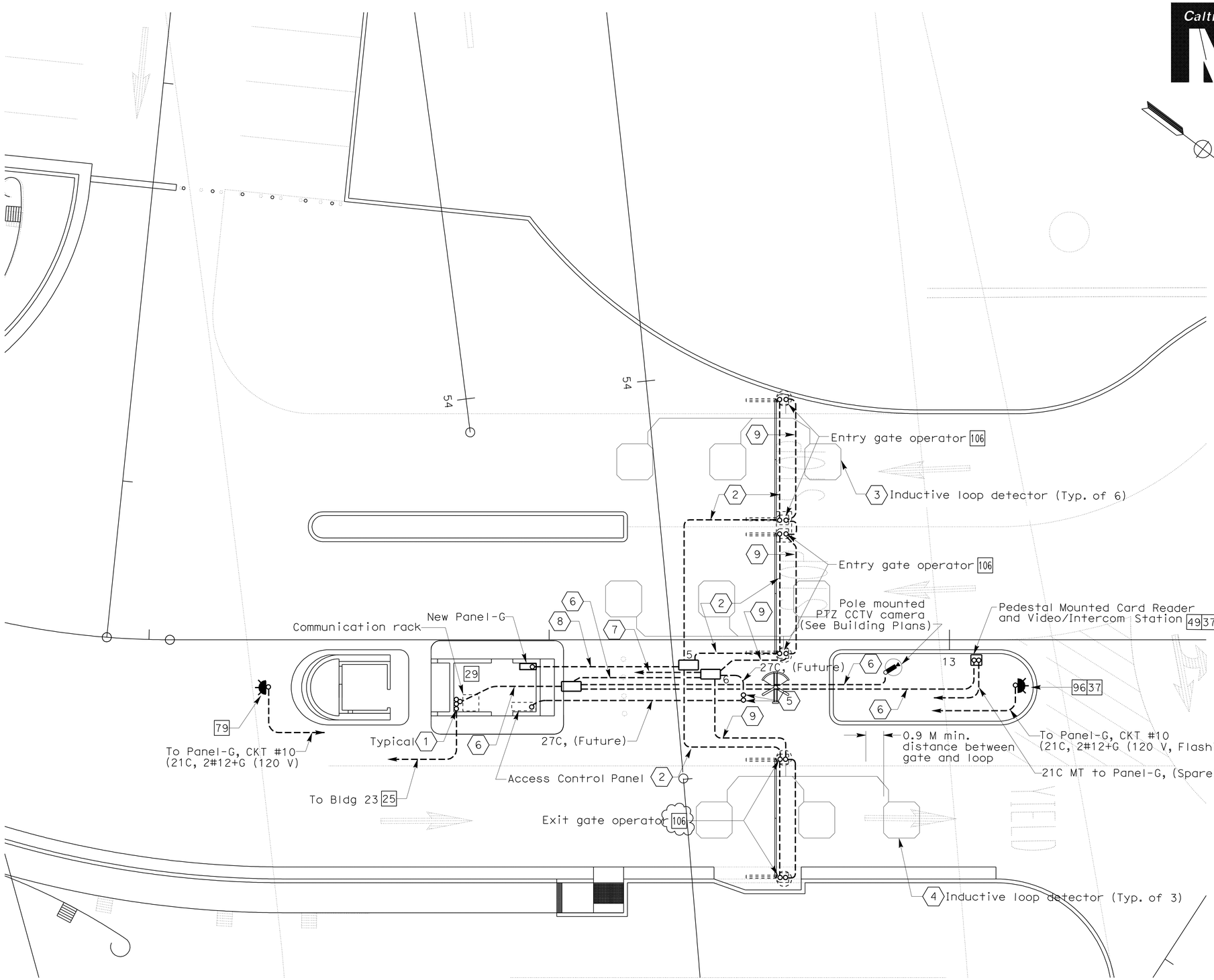

NOTES:

1. Refer to Caltrans electrical drawings EE3-1 through EE3-7 for conduit stub up locations, panel location, panel schedule and additional electrical requirements.
2. See access control system plan and FO block diagram on EE-38 and EE-39 for more information.

SHEET NOTES:

1. Stub conduit 150 mm above finished floor. Provide insulated conduit bushing.
2. 27C, 3#10 & 1#12G (208 V, 3-phase, Gate power)
3. Install new open and Type A safety loops in each entry lane per gate manufacturer recommendation.
4. Install new Type A safety loops in each exit lane per gate manufacturer recommendation.
5. Coordinate with USCG for exact stub-up location for future turnstile card reader connection. Route conduits from turnstile location to Access control system panel location. See EE3-3 for more information.
6. Low voltage conduit. See Caltrans electrical drawings EE3-1 for conduit size , wire size and quanties not shown.
7. To gates control panel. See Caltrans EE3-7 for more information.
8. 27C, 6#10 & 1#12G (208 V, 3-phase, Entry Gate power) 3#10 & 1#12G (208 V, 3-phase, Exit Gate power)
9. 21C, (Low Voltage Control and Comm.).

4 REVISED PER ADDENDUM No. 4 DATED JULY 16, 2012

THIS PLAN ACCURATE FOR ELECTRICAL WORK ONLY.

ALL DIMENSIONS ARE IN METERS UNLESS OTHERWISE SHOWN

DETAILS
NEW PERMANENT USCG GUARD BOOTH
SCALE: 1:100

EE-26

REVISED BY	DATE REVISED
BEN JUDILLA	CAROL LIGHT
CALCULATED-DESIGNED BY	CHECKED BY
CONSULTANT FUNCTIONAL SUPERVISOR	BOB ZANDIPOUR

STATE OF CALIFORNIA - DEPARTMENT OF TRANSPORTATION
Caltrans

LAST REVISION 00-00-00 | DATE PLOTTED => 13-JUL-2012 | TIME PLOTTED => 15:57

Dist	COUNTY	ROUTE	KILOMETER POST TOTAL PROJECT	SHEET No.	TOTAL SHEETS
04	SF	80	12.6/13.9	354	821

02/03/12
REGISTERED ELECTRICAL ENGINEER

2-21-12
PLANS APPROVAL DATE

REGISTERED PROFESSIONAL ENGINEER CAROL LIGHT No. 10145 Exp. 09/30/13 ELECTRICAL STATE OF CALIFORNIA

THE STATE OF CALIFORNIA OR ITS OFFICERS OR AGENTS SHALL NOT BE RESPONSIBLE FOR THE ACCURACY OR COMPLETENESS OF ELECTRONIC COPIES OF THIS PLAN SHEET.

PB AMERICAS, INC.
303 SECOND ST., SUITE 700N
SAN FRANCISCO, CA 94107-1317

SILVERMAN & LIGHT
1201 PARK AVE., SUITE 100
EMERYVILLE, CA 94608-3632

4

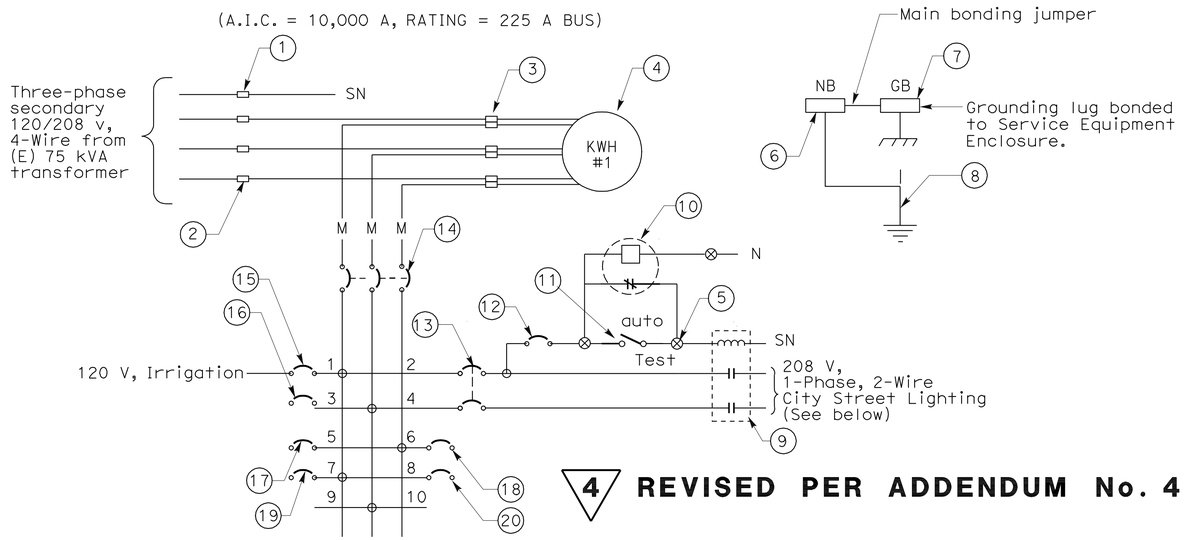

4 **REVISED PER ADDENDUM No. 4 DATED JULY 19, 2012**

NEW 120/208 V TYPE III-AF SERVICE ENCLOSURE NO. A WIRING DIAGRAM AT (E) UTILITY YARD

New Type III-AF Single Metering Service
Enclosure No. A
100 A, 120 /208 V, 3-Phase, 4-Wire

1	Neutral lug	
2	Landing lug (Note 5)	
3	Test bypass facility	
4	Meter socket and support	
5	Terminal blocks	
6	Neutral bus	
7	Grounding bus	
8	Grounding electrode	
9	60 A 2PNO Contactor	Lighting
10	Photoelectric unit (Note 6)	
11	15 A, 1P Test switch	Lighting test switch
12	15 A, 120 V, 1P, CB	120 V, Lighting control
13	60 A, 208 V, 2P, CB	208 V, Lighting
14	100 A, 208 V, 3P, CB	Main Breaker
15	20 A, 120 V, 1P, CB	120 V, Irrigation
16	20 A, 120 V, 1P, CB	Spare
17	20 A, 120 V, 1P, CB	120 V, Exist. switchgear space heater
18	20 A, 120 V, 1P, CB	120 V, Exist. switchgear space heater
19	20 A, 120 V, 1P, CB	120 V, Exist. switchgear space heater
20	20 A, 120 V, 1P, CB	Spare

NOTES: (FOR SERVICE EQUIPMENT ENCLOSURE)

1. Voltage rating at service equipment shall conform to the service voltages indicated on the plans.
2. Unless otherwise indicated on the plans, service equipment items shall be provided for each service equipment enclosure as shown.
3. Items no 1 and 6 shall be isolated from the service equipment enclosure.
4. Meter socket shall be 5 clip type.
5. The landing lug shall be suitable for multiple conductors.
6. Type V photoelectric control shall be used unless otherwise indicated on the plans.

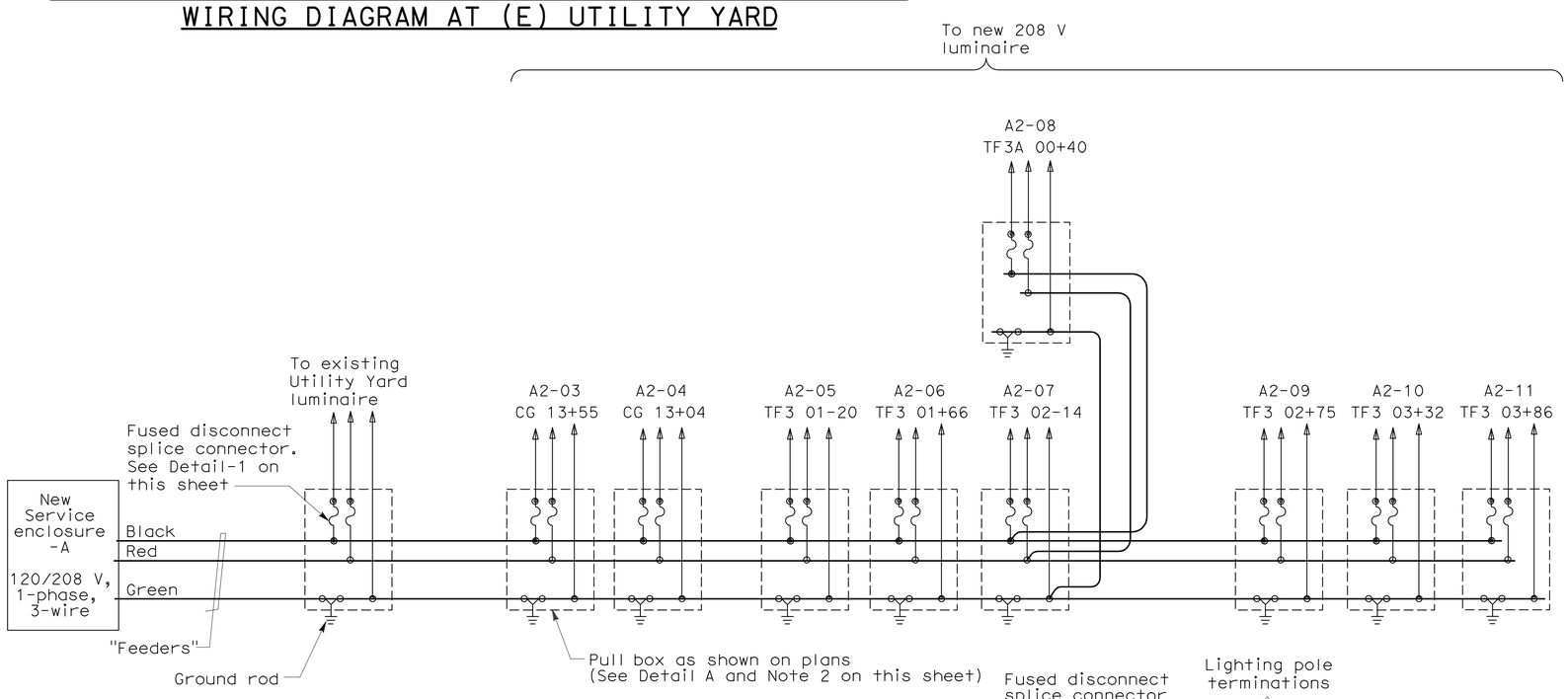

NOTES:

1. Loads shall be symmetrically connected between ungrounded conductors.
2. For type and size of in line fusing, see Caltrans Standard plan ES-13B. Locate inside type 5 pull box.

SERVICE "MAIN", "FEEDER" AND BRANCH CIRCUITS

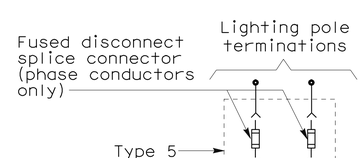

DETAIL-1

(TYP. FOR EACH LIGHT FIXTURE)

ALL DIMENSIONS ARE IN METERS UNLESS OTHERWISE SHOWN

DETAILS
NEW SERVICE EQUIPMENT ENCLOSURES "A" WIRING DIAGRAMS (EXISTING UTILITY YARD)

SCALE AS SHOWN

EE-34

STATE OF CALIFORNIA - DEPARTMENT OF TRANSPORTATION
Caltrans

CONSULTANT FUNCTIONAL SUPERVISOR: BOB ZANDIPOUR
CALCULATED-DESIGNED BY: BEN JUDILLA
CHECKED BY: CAROL LIGHT
REVISED BY / DATE REVISED

LAST REVISION 00-00-00
DATE PLOTTED => 13-JUL-2012
TIME PLOTTED => 15:58

Dist	COUNTY	ROUTE	KILOMETER POST TOTAL PROJECT	SHEET No.	TOTAL SHEETS
04	SF	80	12.6/13.9	361	821

REGISTERED ELECTRICAL ENGINEER 05/17/12

2-21-12
PLANS APPROVAL DATE

REGISTERED PROFESSIONAL ENGINEER CAROL LIGHT No. 10145 Exp. 09/30/13 ELECTRICAL STATE OF CALIFORNIA

THE STATE OF CALIFORNIA OR ITS OFFICERS OR AGENTS SHALL NOT BE RESPONSIBLE FOR THE ACCURACY OR COMPLETENESS OF ELECTRONIC COPIES OF THIS PLAN SHEET.

PB AMERICAS, INC.
303 SECOND ST., SUITE 700N
SAN FRANCISCO, CA 94107-1317

SILVERMAN & LIGHT
1201 PARK AVE., SUITE 100
EMERYVILLE, CA 94608-3632

3

4

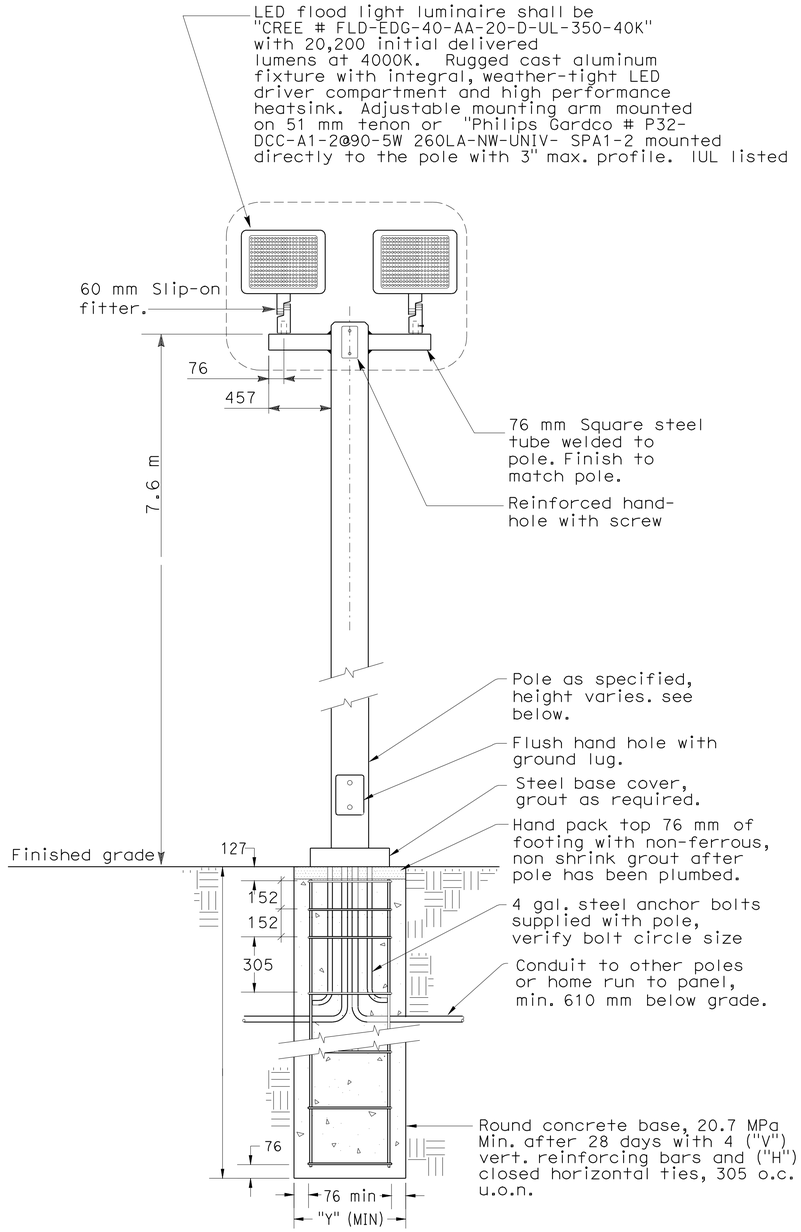

POLE HEIGHT	BOLT CIRCLE	"H"	"V"	"X"	"Y"
7.6 m	292-330	#4	#6	1.83	762

DETAIL 5
BASKETBALL COURT LIGHT LUMINAIRE

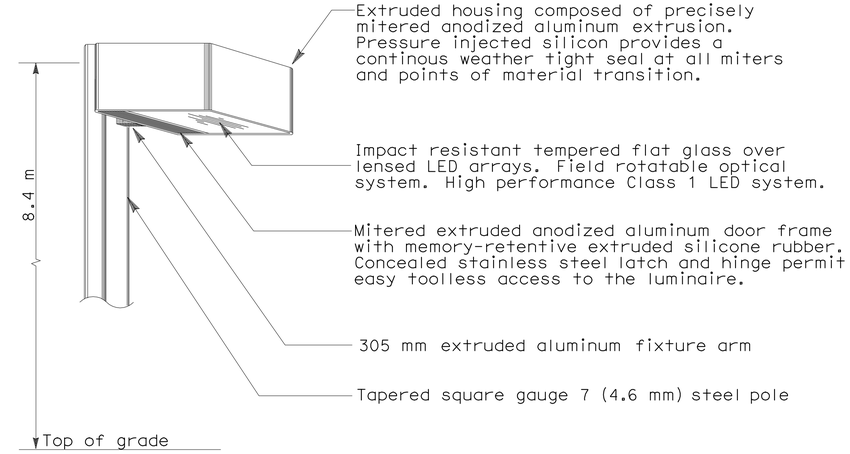

DETAIL 3
USCG STREET LIGHT LUMINAIRE
(For pole base, see detail on this sheet)

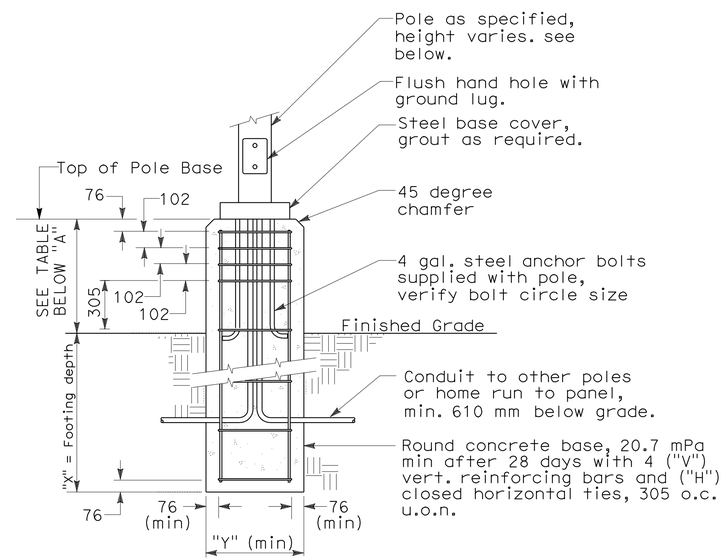

		POLE HEIGHT	POLE BASE "A"	BOLT CIRCLE	"H"	"V"	"X"	"Y"
PARKING LT		6.1 m	1.2 m	273	#3	#4	1.52	610
STREET LT		7.6 m	.762 m	305	#3	#4	1.52	610

DETAIL 4
LIGHTING POLE BASE DETAIL

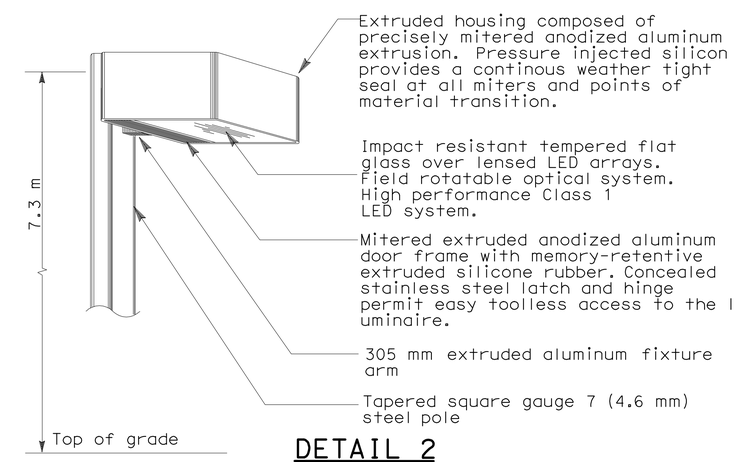

DETAIL 2
USCG PARKING LIGHT LUMINAIRE
(For pole base, see detail on this sheet)

3 **REVISED PER ADDENDUM NO. 3 DATED JUNE 16,, 2012**

4 **REVISED PER ADDENDUM No. 4 DATED JULY 19, 2012**

ALL DIMENSIONS ARE IN MILLIMETERS UNLESS OTHERWISE SHOWN

DETAILS
LIGHTING LUMINAIRES
NO SCALE

EE-41

STATE OF CALIFORNIA - DEPARTMENT OF TRANSPORTATION
Caltrans

CONSULTANT FUNCTIONAL SUPERVISOR: BOB ZANDIPOUR
CALCULATED-DESIGNED BY: BEN JUDILLA
CHECKED BY: CAROL LIGHT
REVISED BY / DATE REVISED

LAST REVISION 00-00-00 | DATE PLOTTED => 13-JUL-2012 | TIME PLOTTED => 15:58

DIST	COUNTY	ROUTE	KILOMETER POST TOTAL PROJECT	SHEET No	TOTAL SHEETS
04	SF	80	12.6/13.9	444	821

Manode Kodsuntie 11-09-11
REGISTERED CIVIL ENGINEER DATE

2-21-12
PLANS APPROVAL DATE

REGISTERED PROFESSIONAL ENGINEER M. KODSUNTIE No. C56671 Exp. 6-30-11 CIVIL STATE OF CALIFORNIA

The State of California or its officers or agents shall not be responsible for the accuracy or completeness of electronic copies of this plan sheet.

4 REVISED PER ADDENDUM No. 4 DATED JULY 16, 2012

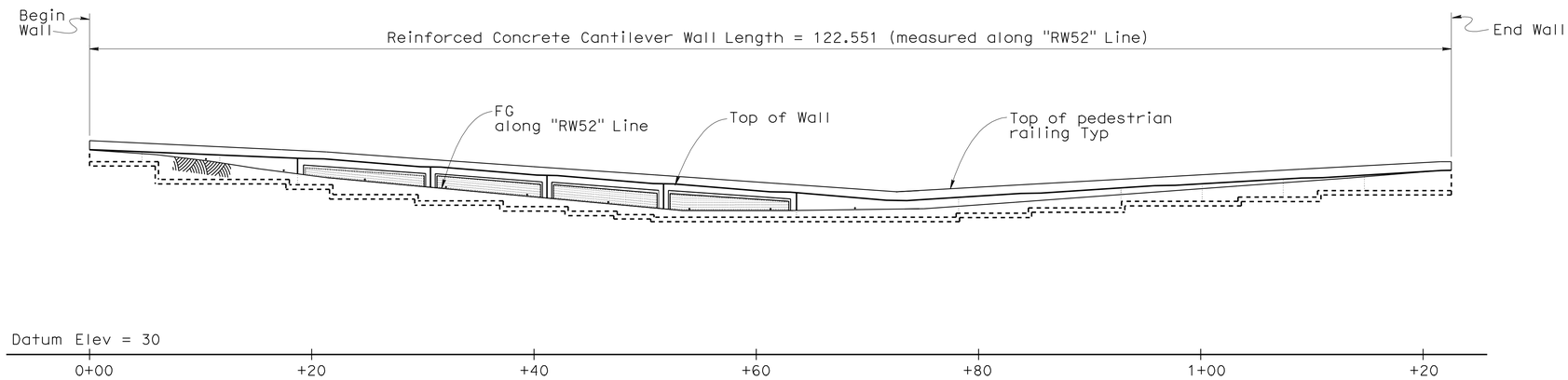

DEVELOPED ELEVATION
1:250

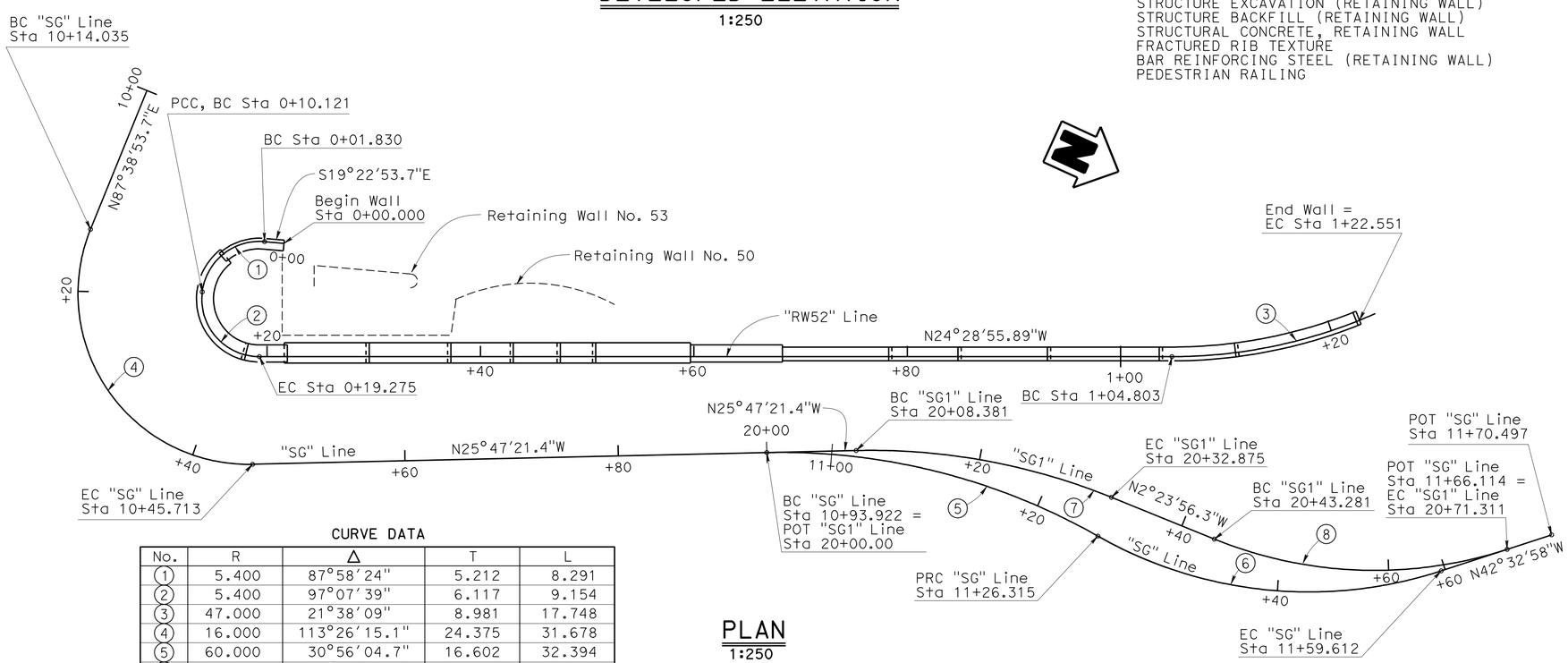

CURVE DATA

No.	R	Δ	T	L
1	5.400	87°58'24"	5.212	8.291
2	5.400	97°07'39"	6.117	9.154
3	47.000	21°38'09"	8.981	17.748
4	16.000	113°26'15.1"	24.375	31.678
5	60.000	30°56'04.7"	16.602	32.394
6	40.000	47°41'38.3"	17.681	33.297
7	60.000	23°23'25.2"	12.420	24.494
8	40.000	43°39'33.8"	14.618	28.030

PLAN
1:250

QUANTITIES

STRUCTURE EXCAVATION (RETAINING WALL)	640	m^3
STRUCTURE BACKFILL (RETAINING WALL)	370	m^3
STRUCTURAL CONCRETE, RETAINING WALL	190	m^3
FRACTURED RIB TEXTURE	49	m^2
BAR REINFORCING STEEL (RETAINING WALL)	10 800	kg
PEDESTRIAN RAILING	123	m

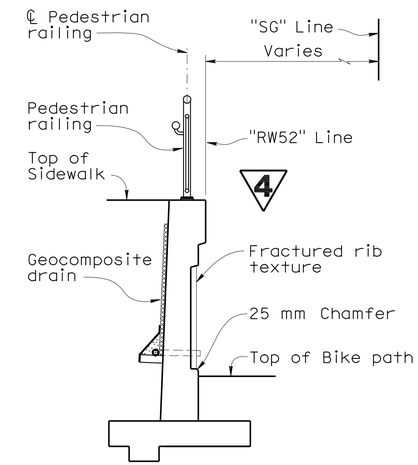

TYPICAL SECTION
1:40

INDEX TO PLANS

1. GENERAL PLAN
2. FOUNDATION PLAN
3. STRUCTURE PLAN NO. 1
4. STRUCTURE PLAN NO. 2
5. WALL DETAILS
6. PEDESTRIAN RAILING LAYOUT
7. PEDESTRIAN RAILING DETAILS NO. 1
8. PEDESTRIAN RAILING DETAILS NO. 2
9. PEDESTRIAN RAILING DETAILS NO. 3
10. PEDESTRIAN RAILING DETAILS NO. 4

STANDARD PLANS DATED JULY 2004

A10A	ACRONYMS AND ABBREVIATIONS (A-L)
A10B	ACRONYMS AND ABBREVIATIONS (M-Z)
A10C	SYMBOLS (SHEET 1 OF 2)
A10D	SYMBOLS (SHEET 2 OF 2)
B0-3	BRIDGE DETAILS
B3-1	RETAINING WALL Type 1 H=1200 Through 9100 mm
B3-8	RETAINING WALL DETAILS NO. 1

Standard Plan sheet number

Detail number

Caltrans Metric

DESIGN ENGINEER

	BY	CHECKED
DESIGN	H. Fang	M. Kodsuntie
DETAILS	S. Jiang/TC/GMS	M. Kodsuntie
QUANTITIES	P. Hong	G. Schuster

LOAD FACTOR DESIGN

	BY	CHECKED
LAYOUT	H. Fang	M. Kodsuntie
SPECIFICATIONS	V. Renganathan	V. Renganathan

PLANS AND SPECS COMPARED

STATE OF CALIFORNIA DEPARTMENT OF TRANSPORTATION

DIVISION OF ENGINEERING SERVICES STRUCTURE DESIGN DESIGN BRANCH 5

BRIDGE NO. RW 52
KILOMETER POST 12.72

RETAINING WALL NO. 52
GENERAL PLAN

ALL DIMENSIONS ARE IN METERS UNLESS OTHERWISE SHOWN

ORIGINAL SCALE IN MILLIMETERS FOR REDUCED PLANS 0 10 20 30 40 50 60 70 80 90 100

CU 04
EA 0120T1

DISREGARD PRINTS BEARING EARLIER REVISION DATES

REVISION DATES 10-03-11 8-19-10 9-23-10 10-18-10 11-02-10 11-15-10 12-06-10 03-24-11 07-22-11

SHEET 1 OF 10

FILE => 04-00000027-01-rw-52-a -gp01.add

USERNAME => s124496 DATE PLOTTED => 13-JUL-2012 TIME PLOTTED => 16:00

DIST	COUNTY	ROUTE	KILOMETER POST TOTAL PROJECT	SHEET No	TOTAL SHEETS
04	SF	80	12.6/13.9	447	821

Manode Kodsuntie 11-09-11
REGISTERED CIVIL ENGINEER DATE

2-21-12
PLANS APPROVAL DATE

REGISTERED PROFESSIONAL ENGINEER M. KODSUNTIE No. C56671 Exp. 6-30-11 CIVIL STATE OF CALIFORNIA

The State of California or its officers or agents shall not be responsible for the accuracy or completeness of electronic copies of this plan sheet.

4 REVISED PER ADDENDUM No. 4 DATED JULY 16, 2012

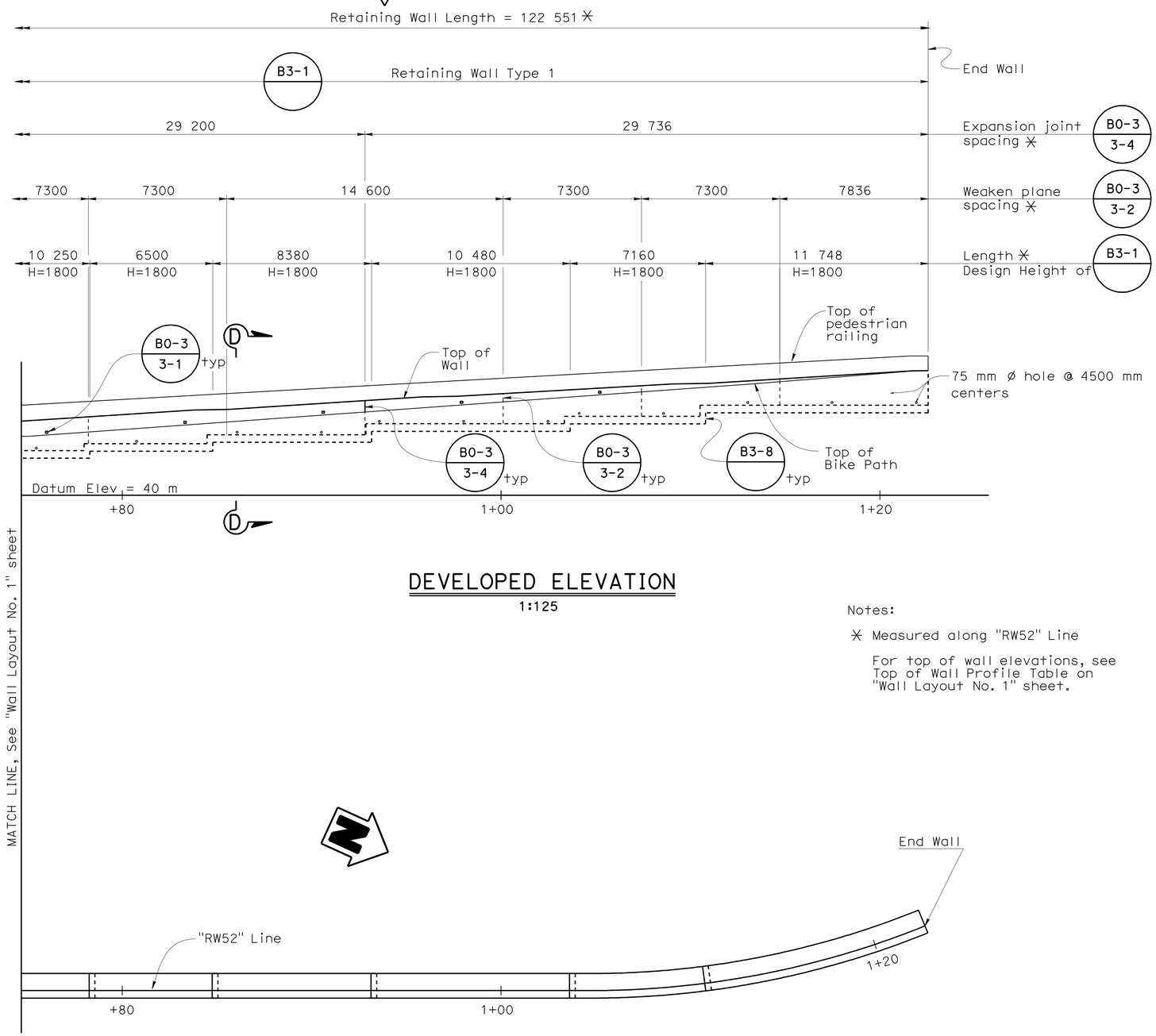

DEVELOPED ELEVATION
1:125

PLAN
1:125

Notes:

✳ Measured along "RW52" Line

For top of wall elevations, see Top of Wall Profile Table on "Wall Layout No. 1" sheet.

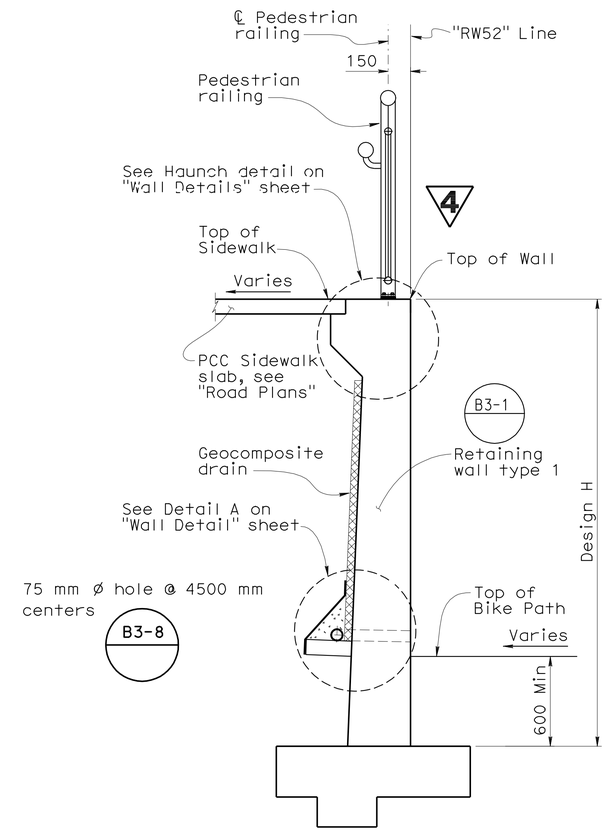

SECTION D-D
1:20

DESIGN	BY H. Fang	CHECKED M. Kodsuntie	
DETAILS	BY S. Jiang/T. Cotton	CHECKED M. Kodsuntie	
QUANTITIES	BY P. Hong	CHECKED G. Schuster	

STATE OF CALIFORNIA
DEPARTMENT OF TRANSPORTATION

DIVISION OF ENGINEERING SERVICES
STRUCTURE DESIGN
DESIGN BRANCH 5

BRIDGE NO. RW 52
KILOMETER POST 12.72

RETAINING WALL NO. 52
RETAINING WALL LAYOUT NO. 2

ALL DIMENSIONS ARE IN MILLIMETERS UNLESS OTHERWISE SHOWN

ORIGINAL SCALE IN MILLIMETERS FOR REDUCED PLANS 0 10 20 30 40 50 60 70 80 90 100

CU 04
EA 0120T1

DISREGARD PRINTS BEARING EARLIER REVISION DATES

REVISION DATES 08-18-10 10-14-10 11-02-10 11-15-10 12-03-10 03-24-11 07-25-11

SHEET 4 OF 10

FILE => 04-00000027-04-rw-52-g -lot02.dgn

STRUCTURES DESIGN DETAIL SHEET (METRIC) (REV.03-17-04)

USERNAME => s124496 DATE PLOTTED => 13-JUL-2012 TIME PLOTTED => 16:00

4 REVISED PER ADDENDUM No. 4 DATED JULY 16, 2012

DIST	COUNTY	ROUTE	KILOMETER POST TOTAL PROJECT	SHEET No	TOTAL SHEETS
04	SF	80	12.6/13.9	448	821

Manode Kodsuntie 1-30-12
REGISTERED CIVIL ENGINEER DATE

2-21-12
PLANS APPROVAL DATE

REGISTERED PROFESSIONAL ENGINEER M. KODSUNTIE No. C56671 Exp. 6-30-13 CIVIL STATE OF CALIFORNIA

The State of California or its officers or agents shall not be responsible for the accuracy or completeness of electronic copies of this plan sheet.

NOTES:
1. For location of Sections A-A, B-B, C-C and D-D, see "Wall Layout No. 1" sheet.
2. Top of recess line shall be straight between pilasters. See "Wall Layout No. 1" sheet for controlling dimension and location.

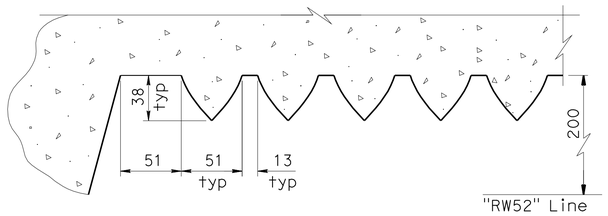

FRACTURED RIB TEXTURE
1:2.5

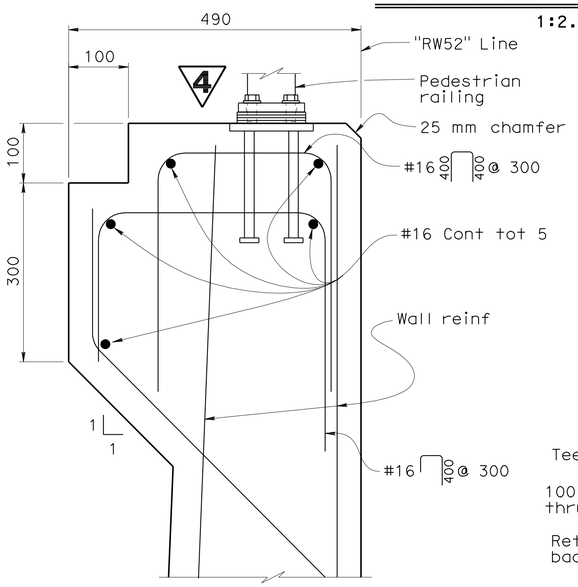

HAUNCH DETAIL
1:5

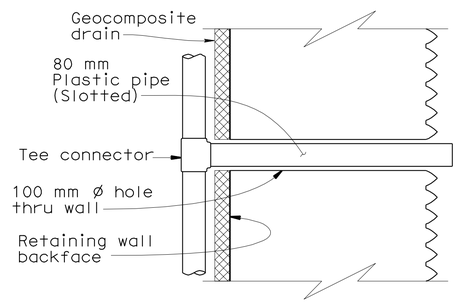

SECTION G-G
NO SCALE

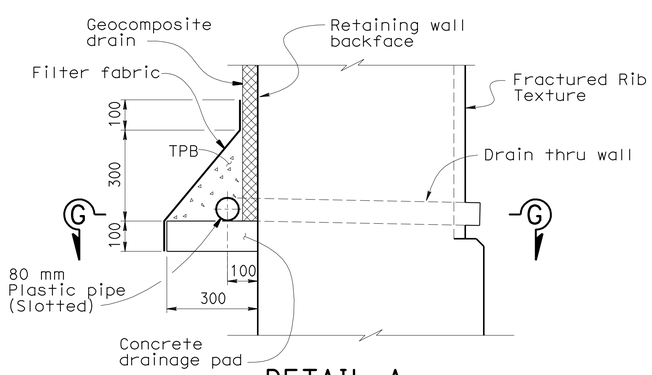

DETAIL A
NO SCALE

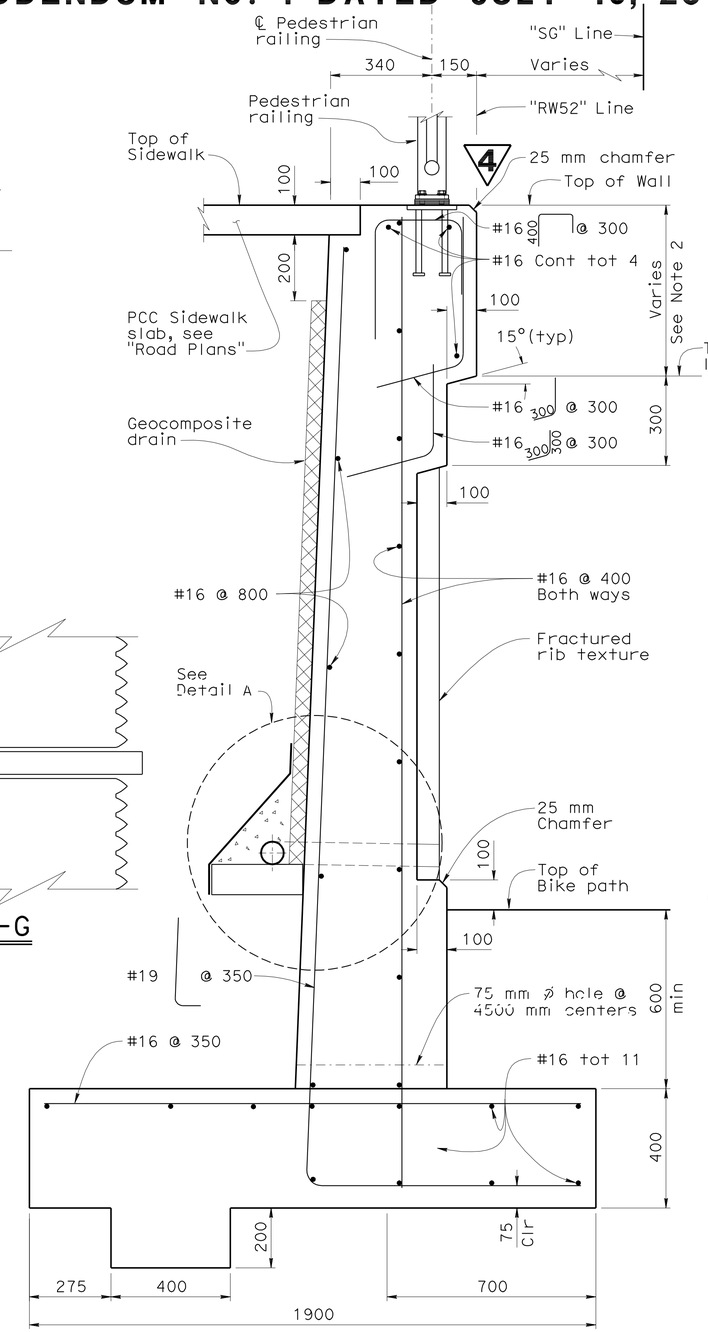

SECTION A-A
1:10

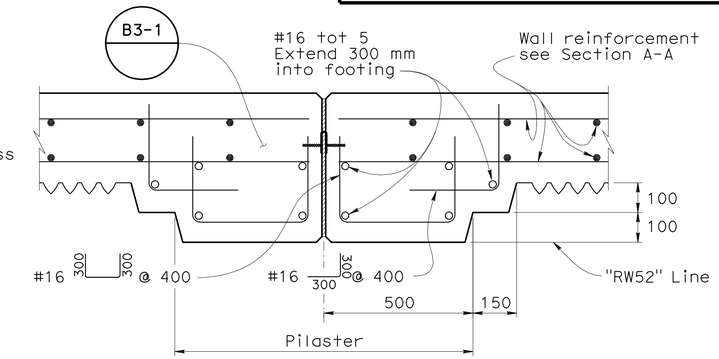

SECTION B-B
1:10

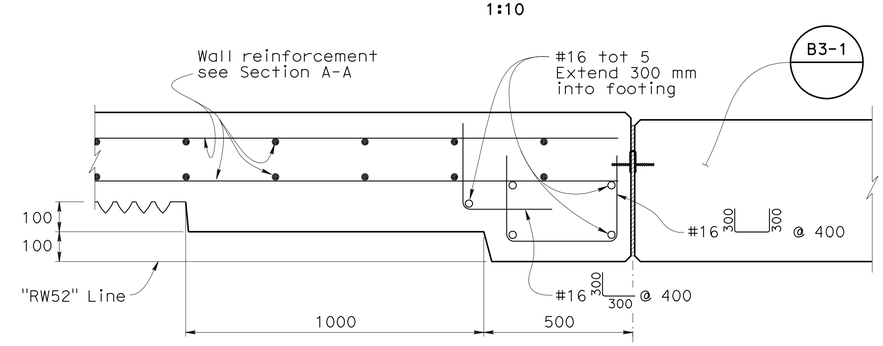

SECTION C-C
1:10

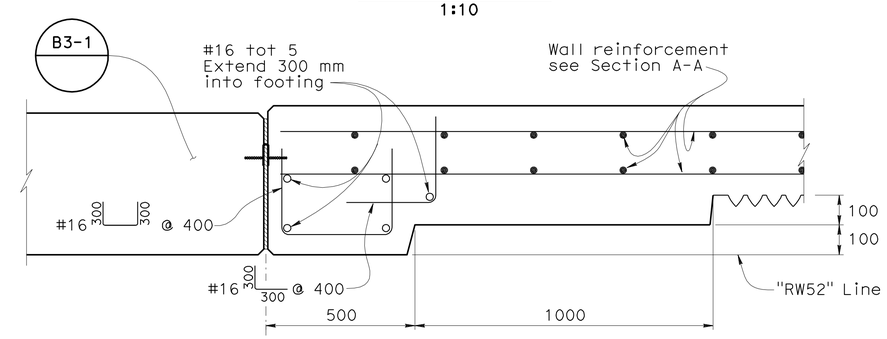

SECTION D-D
1:10

DESIGN	BY H. Fang	CHECKED M. Kodsuntie	
DETAILS	BY G. M. Souza/T.C.	CHECKED M. Kodsuntie	
QUANTITIES	BY P. Hong	CHECKED G. Schuster	

STATE OF CALIFORNIA
DEPARTMENT OF TRANSPORTATION

DIVISION OF ENGINEERING SERVICES
STRUCTURE DESIGN
DESIGN BRANCH 5

BRIDGE NO. RW 52
KILOMETER POST 12.72

RETAINING WALL NO. 52
WALL DETAILS

ALL DIMENSIONS ARE IN MILLIMETERS UNLESS OTHERWISE SHOWN

ORIGINAL SCALE IN MILLIMETERS FOR REDUCED PLANS 0 10 20 30 40 50 60 70 80 90 100

CU 04
EA 0120T1

DISREGARD PRINTS BEARING EARLIER REVISION DATES

REVISION DATES: 11-02-10 11-15-10 12-06-10 03-24-11 07-26-11 1-30-12

SHEET 5 OF 10

FILE => 04-00000027-05-rw-52-g-dt.dwg

STRUCTURES DESIGN DETAIL SHEET (METRIC) (REV.03-17-04)

USERNAME => s124196 TIME PLOTTED => 16:00 DATE PLOTTED => 13-JUL-2012

DIST	COUNTY	ROUTE	KILOMETER POST TOTAL PROJECT	SHEET No	TOTAL SHEETS
04	SF	80	12.6/13.9	449	821

Manode Kodsuntie 11-09-11
REGISTERED CIVIL ENGINEER DATE

2-21-12
PLANS APPROVAL DATE

REGISTERED PROFESSIONAL ENGINEER
M. KODSUNTIE
No. C56671
Exp. 6-30-11
CIVIL
STATE OF CALIFORNIA

The State of California or its officers or agents shall not be responsible for the accuracy or completeness of electronic copies of this plan sheet.

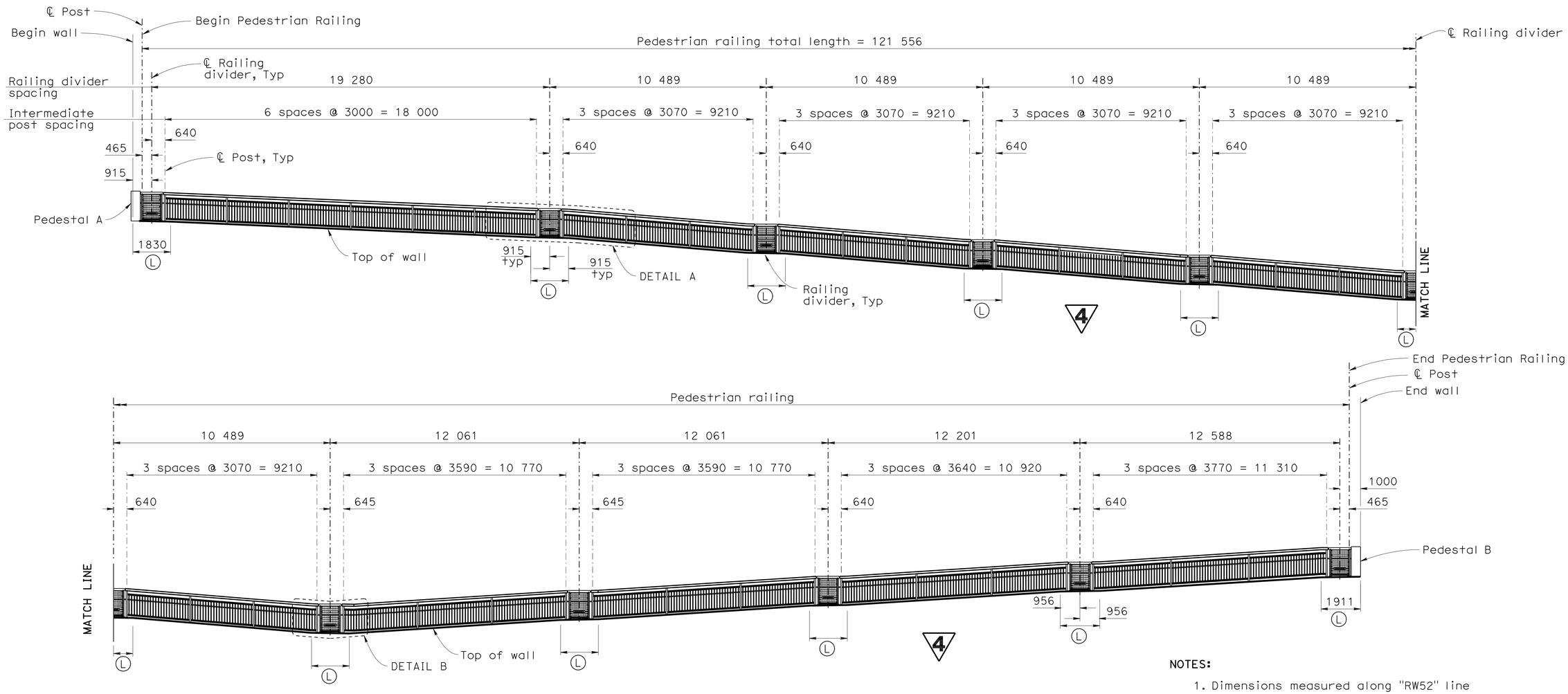

PEDESTRIAN RAILING DEVELOPED ELEVATION

1:100

4 REVISED PER ADDENDUM No. 4 DATED JULY 16, 2012

NOTES:

1. Dimensions measured along "RW52" line
2. For Detail A and Detail B, see "PEDESTRIAN RAILING DETAILS NO. 1" sheet
3. For Details of Pedestals A and B see "PEDESTRIAN RAILING DETAILS NO. 4" sheet

(L) Landing region

	BY	CHECKED
DESIGN	M. Kodsuntie	H. Fang
DETAILS	S. Jiang/T. Cotton	H. Fang
QUANTITIES	P. Hong	G. Schuster

STATE OF CALIFORNIA
DEPARTMENT OF TRANSPORTATION

DIVISION OF ENGINEERING SERVICES
STRUCTURE DESIGN
DESIGN BRANCH 5

BRIDGE NO. RW 52
KILOMETER POST 12.72

RETAINING WALL NO. 52
PEDESTRIAN RAILING LAYOUT

ALL DIMENSIONS ARE IN MILLIMETERS UNLESS OTHERWISE SHOWN

ORIGINAL SCALE IN MILLIMETERS FOR REDUCED PLANS 0 10 20 30 40 50 60 70 80 90 100

CU 04
EA 0120T1

DISREGARD PRINTS BEARING EARLIER REVISION DATES

REVISION DATES: 10-13-10 | 11-01-10 | 11-18-10 | 04-07-11 | 04-21-11 | 05-13-11 | 07-27-11

SHEET 6 OF 10

FILE => 04-00000027-06-rw-52-pr-u-lot01.dwg

STRUCTURES DESIGN DETAIL SHEET (METRIC) (REV.03-17-04)

USERNAME => s124496 DATE PLOTTED => 13-JUL-2012 TIME PLOTTED => 16:00

DIST	COUNTY	ROUTE	KILOMETER POST TOTAL PROJECT	SHEET No	TOTAL SHEETS
04	SF	80	12.6/13.9	450	821

Manoele Kodsuntie 11-09-11
REGISTERED CIVIL ENGINEER DATE

2-21-12
PLANS APPROVAL DATE

REGISTERED PROFESSIONAL ENGINEER M. KODSUNTIE No. C56671 Exp. 6-30-11 CIVIL STATE OF CALIFORNIA

The State of California or its officers or agents shall not be responsible for the accuracy or completeness of electronic copies of this plan sheet.

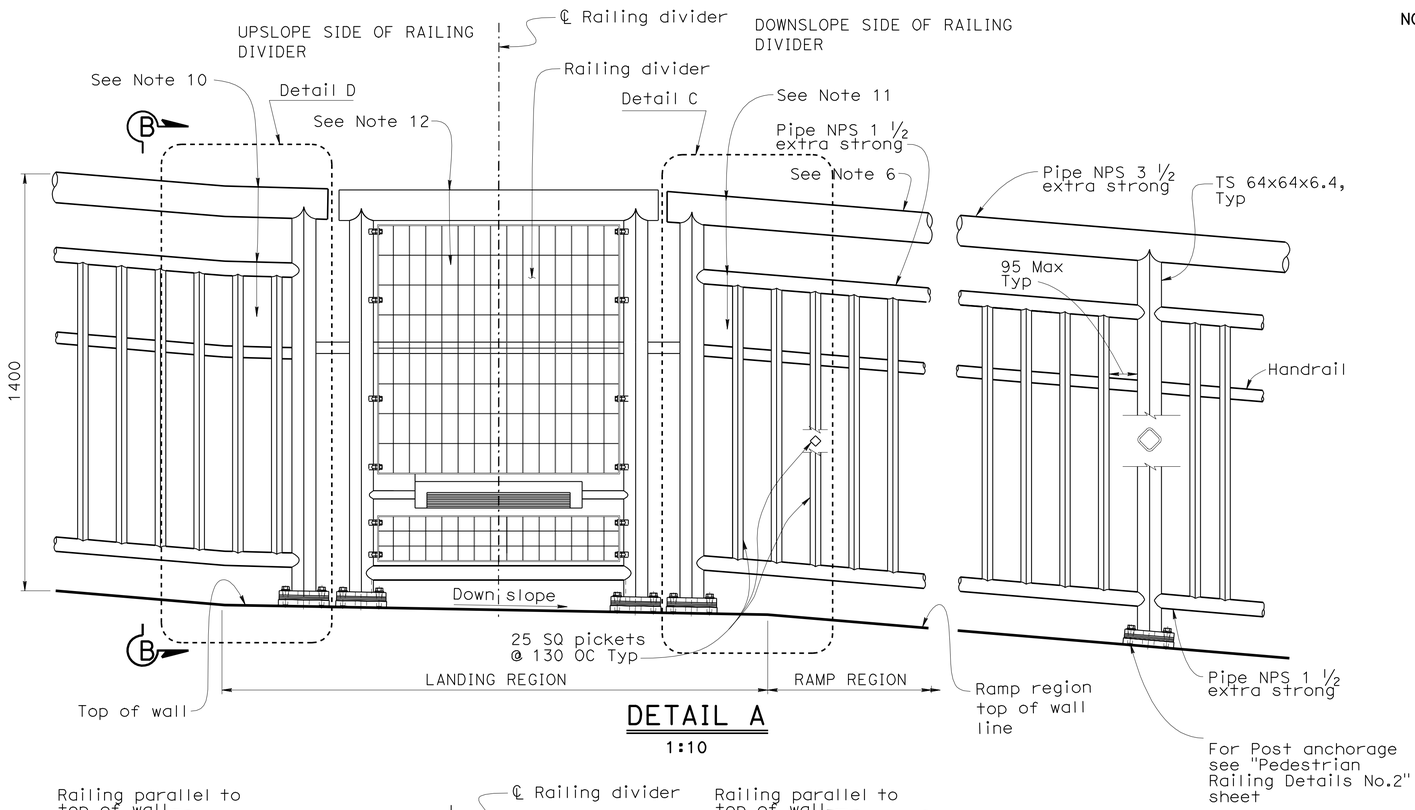

DETAIL A
1:10

NOTES:

1. All metal (except stainless steel) parts of railing assembly, including grill, shall be coated.
2. Railing posts shall conform to ASTM A500 Grade C (Fy=345MPa).
3. Railing shall conform to vertical and horizontal alignment of wall, unless otherwise noted.
4. Posts and pickets shall be vertical.
5. Rails shall be shop bent or fabricated to fit horizontal curve when radius is less than 300 m.
6. All exposed welds shall be ground smooth.
7. Welding to stainless steel shall be in accordance with AWS D1.6-1999.
8. For location of Detail A and Detail B see "PEDESTRIAN RAILING LAYOUT" sheet.
9. For handrail details see "PEDESTRIAN RAILING DETAILS No. 3" sheet.
10. Rails on upslope side of railing divider shall be parallel to top of wall.
11. Rails on downslope side of railing divider shall be parallel to ramp region top of wall line.
12. Rails of railing divider shall be level.
13. All cap rails shall be flush along top.
14. Shim stack beneath post base plate to be adjusted during installation as required to maintain railing alignment. Full width stainless steel shims shall be utilized, tapered as necessary to maintain post verticality. 4

⊗ Top and bottom rails level in this section

4 REVISED PER ADDENDUM No. 4 DATED JULY 16, 2012

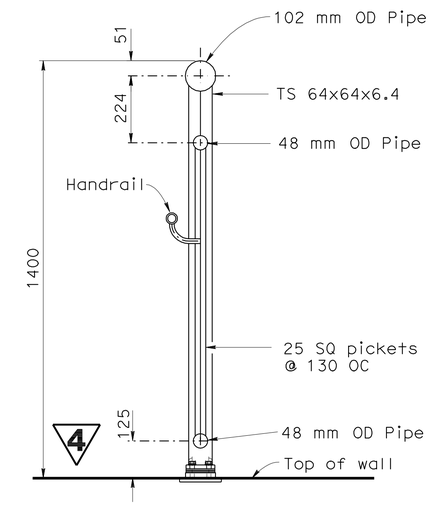

SECTION B-B
1:10

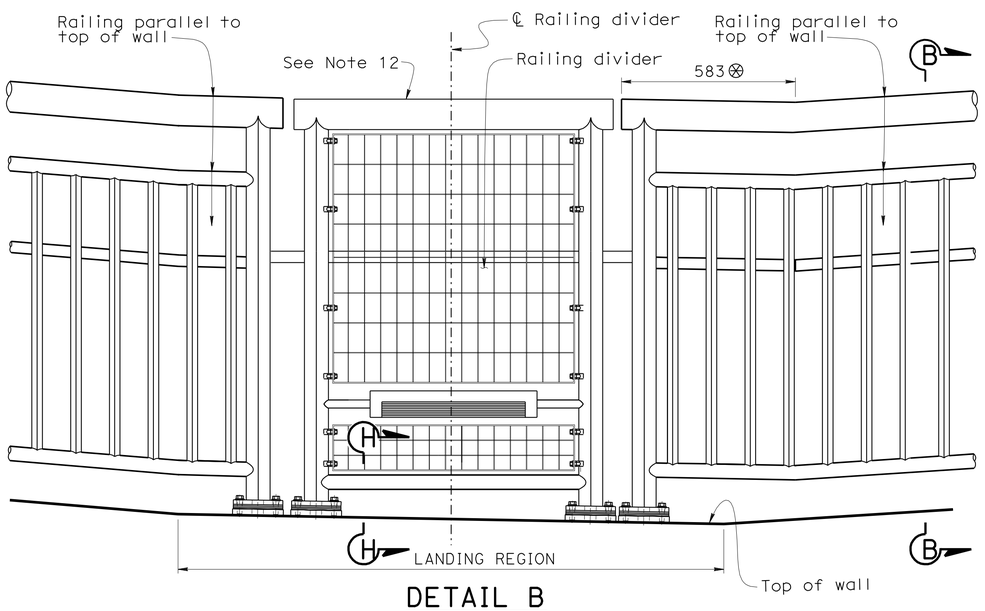

DETAIL B
1:10

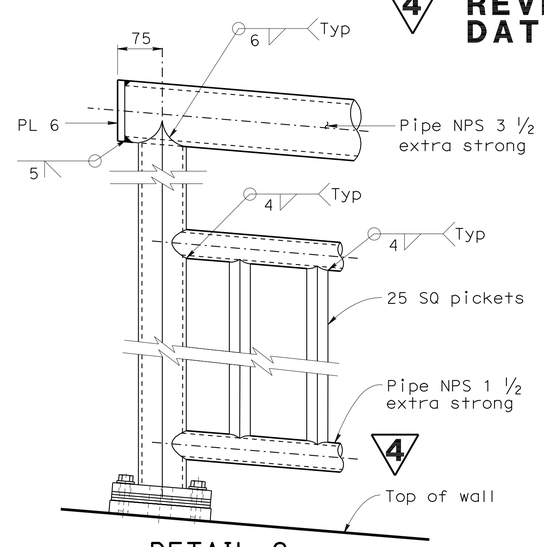

DETAIL C
1:5

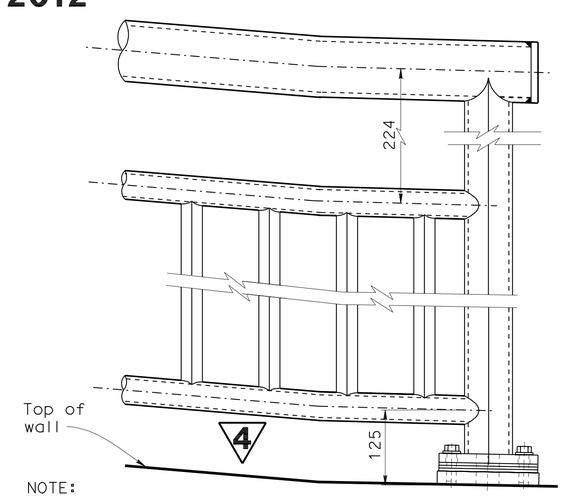

NOTE:
For details not shown, see Detail C.

DETAIL D
1:5

DESIGN	BY M. Kodsuntie	CHECKED H. Fang	STATE OF CALIFORNIA DEPARTMENT OF TRANSPORTATION	DIVISION OF ENGINEERING SERVICES STRUCTURE DESIGN DESIGN BRANCH 5	BRIDGE NO. RW 52
DETAILS	BY T. Cotton	CHECKED H. Fang			KILOMETER POST 12.72
QUANTITIES	BY P. Hong	CHECKED G. Schuster			

RETAINING WALL NO. 52
PEDESTRIAN RAILING DETAILS NO.1

ALL DIMENSIONS ARE IN MILLIMETERS UNLESS OTHERWISE SHOWN

ORIGINAL SCALE IN MILLIMETERS FOR REDUCED PLANS 0 10 20 30 40 50 60 70 80 90 100

CU 04
EA 0120T1

DISREGARD PRINTS BEARING EARLIER REVISION DATES

REVISION DATES: 10-14-10 11-01-10 03-24-11 04-01-11 04-12-11 04-18-11 05-12-11 07-27-11

SHEET 7 OF 10

FILE => 04-00000027-07-rw-52-pr-u-dtl01.add

STRUCTURES DESIGN DETAIL SHEET (METRIC) (REV.03-17-04)

USERNAME => s124436 DATE PLOTTED => 13-JUL-2012 TIME PLOTTED => 16:00

DIST	COUNTY	ROUTE	KILOMETER POST TOTAL PROJECT	SHEET No	TOTAL SHEETS
04	SF	80	12.6/13.9	451	821

Manode Kodsuntie 11-09-11
REGISTERED CIVIL ENGINEER DATE

2-21-12
PLANS APPROVAL DATE

REGISTERED PROFESSIONAL ENGINEER M. KODSUNTIE No. C56671 Exp. 6-30-11 CIVIL STATE OF CALIFORNIA

The State of California or its officers or agents shall not be responsible for the accuracy or completeness of electronic copies of this plan sheet.

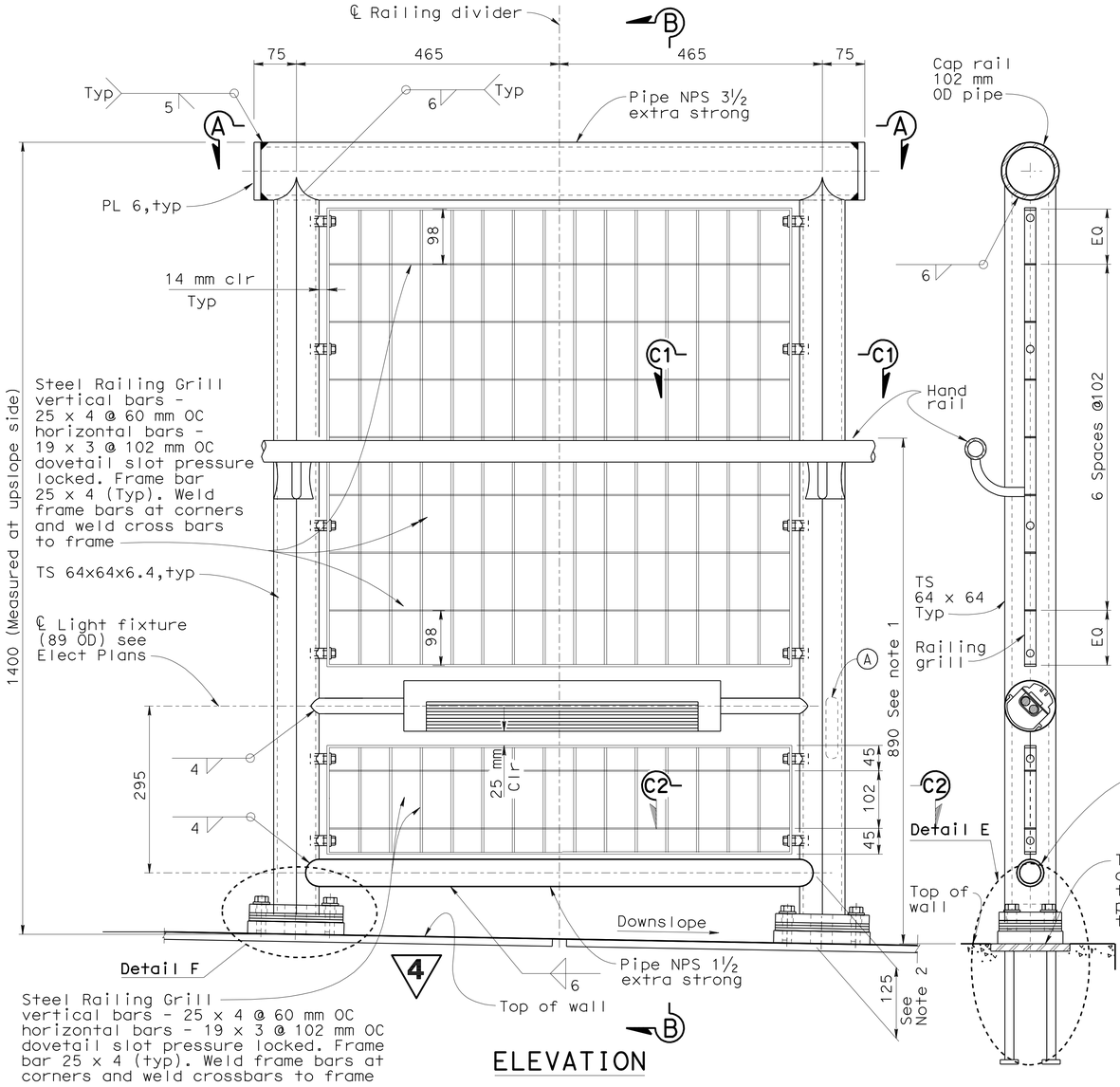

ELEVATION

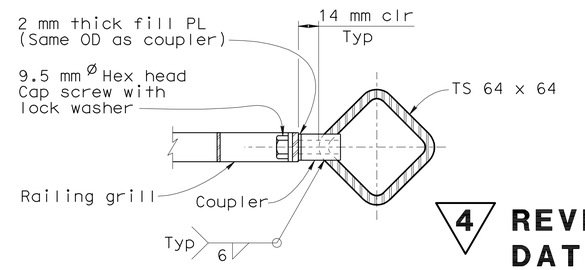

SECTION C1-C1
(Typ above light fixture)
1:1.5

4 REVISED PER ADDENDUM No. 4 DATED JULY 16, 2012.

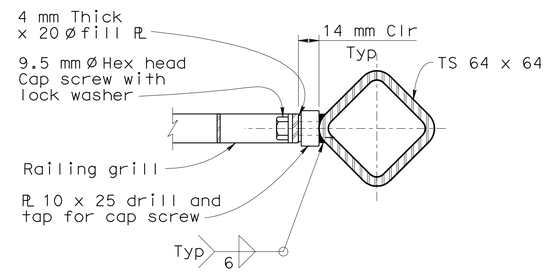

SECTION C2-C2
(Typ below light fixture)
1:2

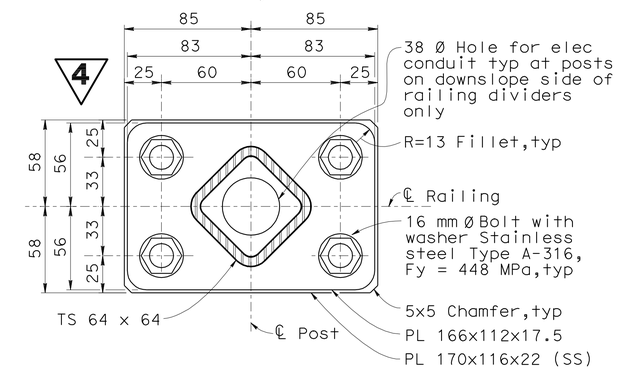

SECTION G-G

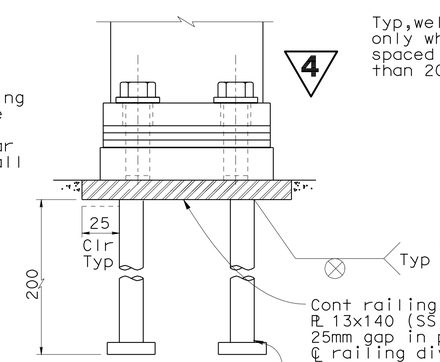

DETAIL E

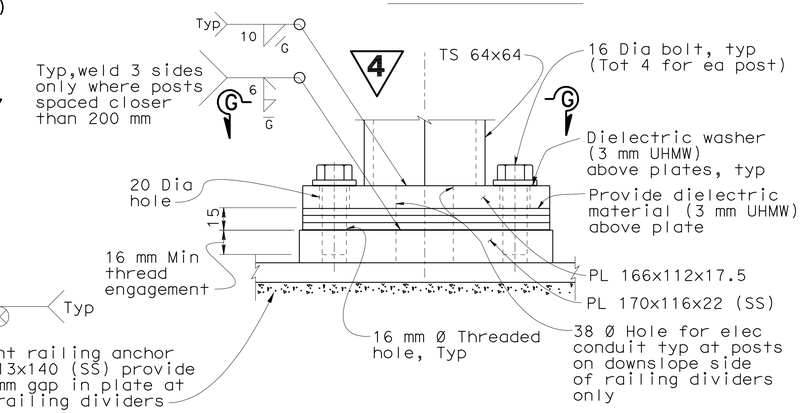

DETAIL F

TYPICAL POST ANCHORAGE
1:2

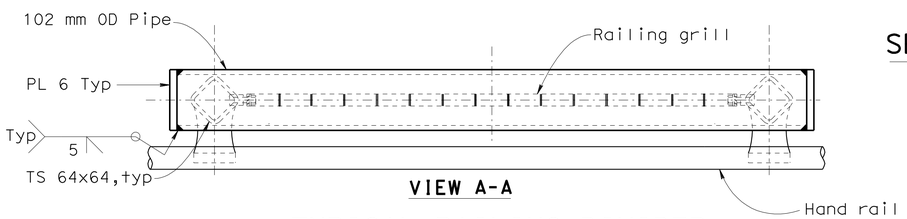

VIEW A-A

TYPICAL RAILING DIVIDER
1:5

SECTION B-B

Notes:

1. Distance from top of sidewalk to top of handrail may very between 860 mm Min and 965 mm Max.
2. Measured at downslope side of railing divider.

Legend:

(A) = Electrical access opening, see "Pedestrian Railing Details No. 3" sheet.

DESIGN	BY M. Kodsuntie	CHECKED H. Fang	
DETAILS	BY S. Jiang/T. Cotton	CHECKED H. Fang	
QUANTITIES	BY P. Hong	CHECKED G. Schuster	

STATE OF CALIFORNIA
DEPARTMENT OF TRANSPORTATION

DIVISION OF ENGINEERING SERVICES
STRUCTURE DESIGN
DESIGN BRANCH 5

BRIDGE NO. RW 52
KILOMETER POST 12.72

RETAINING WALL NO. 52
PEDESTRIAN RAILING DETAILS NO.2

ALL DIMENSIONS ARE IN MILLIMETERS UNLESS OTHERWISE SHOWN

ORIGINAL SCALE IN MILLIMETERS FOR REDUCED PLANS 0 10 20 30 40 50 60 70 80 90 100

CU 04
EA 0120T1

DISREGARD PRINTS BEARING EARLIER REVISION DATES

REVISION DATES 10-14-10 11-01-10 03-30-11 04-06-11 04-12-11 04-19-11 05-11-11 07-22-11 07-27-11

SHEET 8 OF 10

FILE => 04-00000027-08-rw-52-pr-u-dtl02.dgn

STRUCTURES DESIGN DETAIL SHEET (METRIC) (REV.03-17-04)

DATE: 04-Feb-03 15:20

USERNAME => s124436 DATE PLOTTED => 13-JUL-2012 TIME PLOTTED => 16:01

DIST	COUNTY	ROUTE	KILOMETER POST TOTAL PROJECT	SHEET No.	TOTAL SHEETS
04	SF	80	12.6/13.9	535	821

Caltrans Metric

Wenyi Long 11-07-11
REGISTERED CIVIL ENGINEER DATE

2-21-12
PLANS APPROVAL DATE

REGISTERED PROFESSIONAL ENGINEER
WENYI LONG
No. C57430
Exp. 12-31-13
CIVIL
STATE OF CALIFORNIA

The State of California or its officers or agents shall not be responsible for the accuracy or completeness of electronic copies of this plan sheet.

QUANTITIES

ESTABLISH MARINE ACCESS	LUMP SUM
BRIDGE REMOVAL (PORTION), LOCATION G	LUMP SUM
WORK AREA MONITORING	LUMP SUM

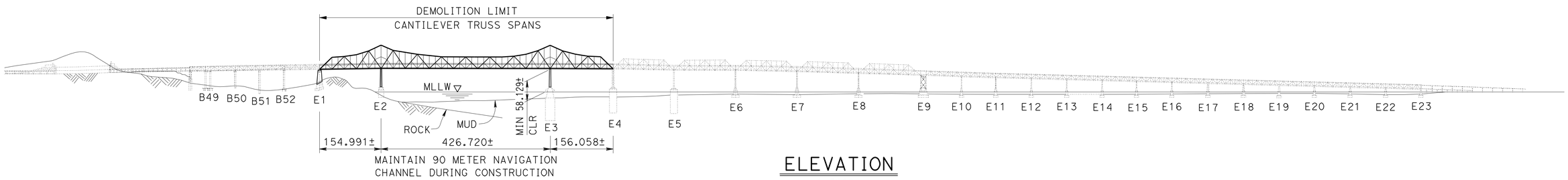

ELEVATION
1:5000

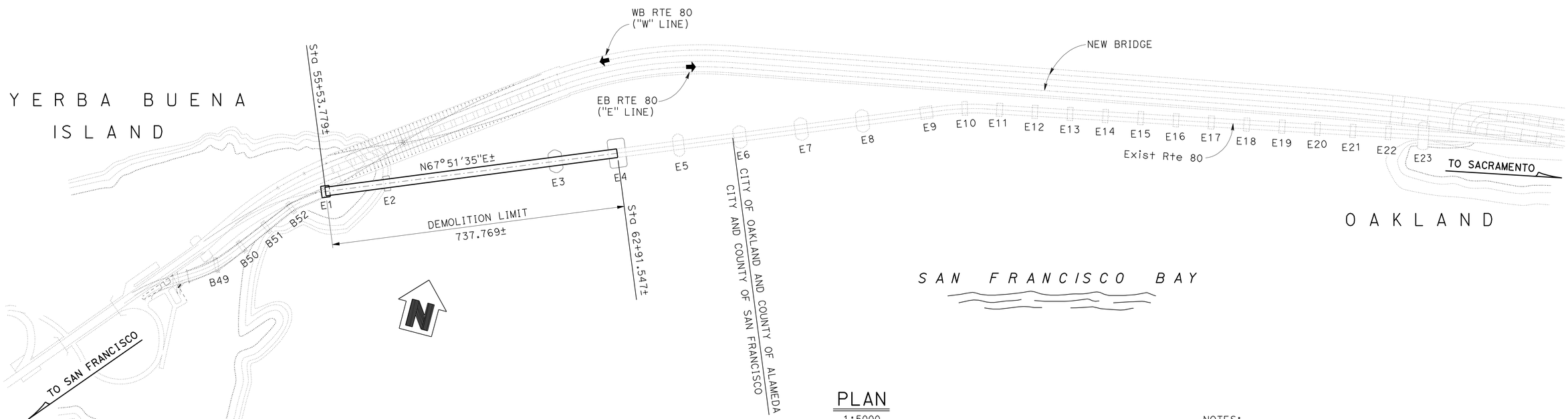

PLAN
1:5000

NOTES:
1. For "GENERAL DEMOLITION NOTES", see "INDEX TO PLANS".
2. For "UTILITIES", see "ROADWAY PLANS".

4 **REVISED PER ADDENDUM No. 4 DATED JULY 16, 2012**

NOTE:
THE CONTRACTOR SHALL VERIFY ALL CONTROLLING FIELD DIMENSIONS BEFORE ORDERING OR FABRICATING ANY MATERIAL. 4

SAN FRANCISCO-OAKLAND BAY BRIDGE
EAST SPAN SEISMIC SAFETY PROJECT

EXISTING CANTILEVER TRUSS DEMOLITION
GENERAL PLAN

WENYI LONG DESIGN ENGINEER	DESIGN	BY W. Long	CHECKED J. Shen	ALLOWABLE STRESS DESIGN	LIVE LOADING: HS20-44 WITH MODIFIED LANE LOAD FOR LONG SPAN BRIDGES
	DETAILS	BY C. Cancino	CHECKED J. Shen	LAYOUT: BY W. Long	CHECKED J. Shen
	QUANTITIES	BY L. Wang	CHECKED J. Shen	SPECIFICATIONS: BY S. Margaris	PLANS AND SPECS COMPARED W. Long

STATE OF CALIFORNIA
DEPARTMENT OF TRANSPORTATION

TOLL BRIDGE DESIGN

BRIDGE NO. 33-0025
KILOMETER POST 13.2/13.9

ALL DIMENSIONS ARE IN METERS UNLESS OTHERWISE SHOWN

ORIGINAL SCALE IN MILLIMETERS FOR REDUCED PLANS 0 10 20 30 40 50 60 70 80 90 100

CU 04
EA 0120T1
CONTRACT NO.: 04-0120T1

DISREGARD PRINTS BEARING EARLIER REVISION DATES

REVISION DATES: 10-28-11

SHEET 1 OF 87

STRUCTURES DESIGN GENERAL PLAN SHEET (X) (REV.09-01-10)

FILE => 33-0025-a-gp.add

USERNAME => s124496 DATE PLOTTED => 13-JUL-2012 TIME PLOTTED => 16:01

DIST	COUNTY	ROUTE	KILOMETER POST TOTAL PROJECT	SHEET No.	TOTAL SHEETS
04	SF	80	12.6/13.9	536	821

Caltrans Metric

Wenyi Long 11-07-11
REGISTERED CIVIL ENGINEER DATE

2-21-12
PLANS APPROVAL DATE

REGISTERED PROFESSIONAL ENGINEER WENYI LONG No. C57430 Exp. 12-31-13 CIVIL STATE OF CALIFORNIA

The State of California or its officers or agents shall not be responsible for the accuracy or completeness of electronic copies of this plan sheet.

GENERAL DEMOLITION NOTES

1. Design Specifications:

   AASHTO "The Manual for Bridge Evaluation", 2011 and these General Demolition Notes. When a conflict occurs, these notes shall govern.

   The analysis and demolition sequence of the existing Cantilever Truss and all attachments and modifications shall be based on Allowable Stress Design (ASD) and operating level only. 3

2. Wind Load:

   Windward pressure = 1.86 KN/m^2
   Leeward pressure = 0.93 KN/m^2
   Caltrans "Bridge Design Specifications (BDS), 2004" shall be followed to determine the wind effect, except the wind pressure shall be used as specified above. The wind pressure acting at skew angles as listed in Section 3.15.2.1.1 of BDS may be scaled down accordingly.

3. Existing Structural Steel (MPa):

Steel Type	Nickel	Carbon		Silicon	Heat Treated
		Medium	Mild		
Min. Fu	620	427	379	551	551
Min. Fy	379	255	207	310	345

   For eye bars, allowable tension shall not exceed $0.6F_y$ on gross section nor $0.5F_u$ on net section. 3

   Where the material is not otherwise specifically designated on as-built plans, Medium Carbon Steel was used.

4. Existing Connections:

   3 a. Existing Rivets (Mpa):

   Shear: 3

   Carbon Steel Rivet Allowable = 103
   Manganese Steel Rivet Allowable = 138

   Bearing:

   Carbon Steel Rivet Allowable = 207
   Manganese Steel Rivet Allowable:
   For Carbon Steel = 207
   For Silicon Steel = 262
   For Nickel Steel = 310

   b. Existing Bolts: ASTM A325

5. Existing Reinforced Concrete (MPa):

   Concrete: f'_c = 21
   Reinforcing Steel:
   f_y = 227 (Original light weight upper deck)
   f_y = 414 (Reconstructed lower deck)

6. For material not listed, refer to original document "SAN FRANCISCO-OAKLAND BAY BRIDGE, Notice to Contractors, Contract and Specifications, Proposal and Contractors Bonds, Contract No. 7 SUPERSTRUCTURE - EAST BAY CROSSING" and previous reconstruction as-built plans.

7. Adequate strength and stability of the structure or partially demolished structure shall be maintained throughout the demolition process. Depending on demolition sequence and equipment used, existing structure members and connections may require strengthening and/or supplemental bracing.

8. Locked-in forces in members due to previous erection sequence shall be considered in dismantling procedures. Members under stress shall be unloaded to a level that will not result in a sudden redistribution of member forces or excessive displacement.

9. Live Load Impact Factors:

   Normal construction equipment shall have a 30% impact factor applied, while equipment such as ram hoes that are subject to vibration shall have 50% impact factor. Cranes shall have a 100% impact factor applied to the pick weight at the location resulting in the most severe demand on the structural members of the bridge. A 100% impact factor shall be applied to the weight of the Suspended Span following disconnection from the Cantilever Arms during lowering operations of Alternative B of Cantilever Truss Removal Sequence. For Alternative B, see "REMOVAL SEQUENCE" sheet.

10. For thermal forces, a temperature difference of plus or minus 17 degrees celsius from ambient temperature of 17 degress celsius shall be considered.

11. Load Combinations:

    The following load combinations shall be used.

FACTORS FOR SERVICE LOAD DESIGN

GROUP	GAMMA FACTOR	BETA FACTORS												
		D	L+I	CF	E	B	SF	W	WL	LF	P_s	R+S+T	ICE	EL
I	1.0	1	1	0	0	0	0	0	0	0	1	0	0	1
II	1.0	1	0	0	0	0	0	1	0	0	1	0	0	1
III	1.0	1	1	0	0	0	0	0.3	1	1	1	0	0	1
IV	1.0	1	1	0	0	0	0	0	0	0	1	1	0	1
V	1.0	1	0	0	0	0	0	1	0	0	1	1	0	1
VI	1.0	1	1	0	0	0	0	0.3	1	1	1	1	0	1

L: live load, including construction live load, plus a minimum uniform load of 1 KN/m^2.
EL: locked-in forces due to erection sequence used to construct bridge.

12. Datum:

    Elevation based on 1929 NGVD Datum.
    Mean Lower Low Water (MLLW) is at Elevation 0.00.
    All Elevations shown in Meters.

APPROXIMATE TIDAL SUMMARY

TIDE LEVEL	ELEVATION (m) (NGVD)
Highest Observed Water Level (EHW)	2.61
Mean Higher High Water (MHHW)	1.87
Mean Sea Level (MSL)	0.87
Mean Lower Low Water (MLLW)	0
Lowest Observed Water Level (ELW)	-0.61

Contractor shall verify tidal elevations prior to beginning work

13. Coordinates, distances, and bearings are based on 1933 as-built plans.

3 REVISED PER ADDENDUM No. 3 DATED JUNE 6, 2012

1 REVISED PER ADDENDUM No. 1 DATED APRIL 25, 2012

1 4

INDEX TO PLANS

SHEET NO.	TITLE
1	GENERAL PLAN
2	INDEX TO PLANS
2A	REMOVAL SEQUENCE
3	DEMOLITION LIMITS PLAN
4	TRUSS MEMBER MATERIALS
5	FOUNDATION PLAN
6	TYPICAL SECTION
7	PIER E1
8	PIER E2
9	PIER E3
10	LOG OF TEST BORINGS 1
11	LOG OF TEST BORINGS 2
12	LOG OF TEST BORINGS 3
13	LOG OF TEST BORINGS 4
14	LOG OF TEST BORINGS 5
15	LOG OF TEST BORINGS 6
16	LOG OF TEST BORINGS 7
17	LOG OF TEST BORINGS 8
18	LOG OF TEST BORINGS 9
19	LOG OF TEST BORINGS 10
20	LOG OF TEST BORINGS 11
21	LOG OF TEST BORINGS 12
22	LOG OF TEST BORINGS 13
23	LOG OF TEST BORINGS 14
24	LOG OF TEST BORINGS 15
25	LOG OF TEST BORINGS 16
26	LOG OF TEST BORINGS 17
27	LOG OF TEST BORINGS 18
28	LOG OF TEST BORINGS 19
29	LOG OF TEST BORINGS 20
30	LOG OF TEST BORINGS 21
31	LOG OF TEST BORINGS 22
32	LOG OF TEST BORINGS 23
33	LOG OF TEST BORINGS 24
34	LOG OF TEST BORINGS 25
35	LOG OF TEST BORINGS 26
36	LOG OF TEST BORINGS 27
37	LOG OF TEST BORINGS 28
38	LOG OF TEST BORINGS 29
39	LOG OF TEST BORINGS 30
40	LOG OF TEST BORINGS 31
41	LOG OF TEST BORINGS 32
42	LOG OF TEST BORINGS 33
43	LOG OF TEST BORINGS 34
44	LOG OF TEST BORINGS 35
45	LOG OF TEST BORINGS 36
46	LOG OF TEST BORINGS 37
47	LOG OF TEST BORINGS 38
48	LOG OF TEST BORINGS 1 OF 47
49	LOG OF TEST BORINGS 2 OF 47
50	LOG OF TEST BORINGS 3 OF 47
51	LOG OF TEST BORINGS 4 OF 47
52	LOG OF TEST BORINGS 5 OF 47
53	LOG OF TEST BORINGS 6 OF 47
54	LOG OF TEST BORINGS 7 OF 47
55	LOG OF TEST BORINGS 8 OF 47
56	LOG OF TEST BORINGS 9 OF 47
57	LOG OF TEST BORINGS 10 OF 47
58	LOG OF TEST BORINGS 11 OF 47
59	LOG OF TEST BORINGS 12 OF 47
60	LOG OF TEST BORINGS 13 OF 47
61	LOG OF TEST BORINGS 14 OF 47
62	LOG OF TEST BORINGS 15 OF 47
63	LOG OF TEST BORINGS 1 OF 25
64	LOG OF TEST BORINGS 2 OF 25
65	LOG OF TEST BORINGS 3 OF 25
66	LOG OF TEST BORINGS 4 OF 25
67	LOG OF TEST BORINGS 5 OF 25
68	LOG OF TEST BORINGS 6 OF 25
69	LOG OF TEST BORINGS 7 OF 25
70	LOG OF TEST BORINGS 8 OF 25
71	LOG OF TEST BORINGS 9 OF 25
72	LOG OF TEST BORINGS 10 OF 25
73	LOG OF TEST BORINGS 11 OF 25
74	LOG OF TEST BORINGS 12 OF 25
75	LOG OF TEST BORINGS 13 OF 25
76	LOG OF TEST BORINGS 14 OF 25
77	LOG OF TEST BORINGS 15 OF 25
78	LOG OF TEST BORINGS 16 OF 25
79	LOG OF TEST BORINGS 17 OF 25
80	LOG OF TEST BORINGS 18 OF 25
81	LOG OF TEST BORINGS 19 OF 25
82	LOG OF TEST BORINGS 20 OF 25
83	LOG OF TEST BORINGS 21 OF 25
84	LOG OF TEST BORINGS 22 OF 25
85	LOG OF TEST BORINGS 23 OF 25
86	LOG OF TEST BORINGS 24 OF 25
87	LOG OF TEST BORINGS 25 OF 25

STANDARD PLANS DATED JULY 2004

A10A	ACRONYMS AND ABBREVIATIONS (A-L)
A10B	ACRONYMS AND ABBREVIATIONS (M-Z)

4 REVISED PER ADDENDUM No. 4 DATED JULY 16, 2012

NOTE:
THE CONTRACTOR SHALL VERIFY ALL CONTROLLING FIELD DIMENSIONS BEFORE ORDERING OR FABRICATING ANY MATERIAL.

SAN FRANCISCO-OAKLAND BAY BRIDGE
EAST SPAN SEISMIC SAFETY PROJECT

EXISTING CANTILEVER TRUSS DEMOLITION

INDEX TO PLANS

	BY	CHECKED
DESIGN	W. Long	J. Shen
DETAILS	C. Cancino	J. Shen
QUANTITIES	L. Wang	J. Shen

STATE OF CALIFORNIA
DEPARTMENT OF TRANSPORTATION

TOLL BRIDGE DESIGN

BRIDGE NO. 33-0025
KILOMETER POST 13.2/13.9

ALL DIMENSIONS ARE IN METERS UNLESS OTHERWISE SHOWN

ORIGINAL SCALE IN MILLIMETERS FOR REDUCED PLANS 0 10 20 30 40 50 60 70 80 90 100

CU 04
EA 0120T1

DISREGARD PRINTS BEARING EARLIER REVISION DATES

REVISION DATES: 10-28-11 02/13/12

SHEET 2 OF 87

STRUCTURES DESIGN DETAIL SHEET (X) (REV. 09-01-10)

FILE => 33-0025-b-index.add

USERNAME => s124496 DATE PLOTTED => 13-JUL-2012 TIME PLOTTED => 16:01

DIST	COUNTY	ROUTE	KILOMETER POST TOTAL PROJECT	SHEET No.	TOTAL SHEETS
04	SF	80	12.6/13.9	536A	821

Caltrans Metric

Wenyi Long 11-07-11
REGISTERED CIVIL ENGINEER DATE

2-21-12
PLANS APPROVAL DATE

REGISTERED PROFESSIONAL ENGINEER WENYI LONG No. C57430 Exp. 12-31-13 CIVIL STATE OF CALIFORNIA

The State of California or its officers or agents shall not be responsible for the accuracy or completeness of electronic copies of this plan sheet.

4

CANTILEVER TRUSS REMOVAL SEQUENCE

The Contractor shall use Alternative A or Alternative B to remove the bridge.

Alternative A: (Dismantle Suspended Span in Cantilever)

1. If necessary, strengthen the existing connection of the superstructure to Pier E9 to transfer the additional longitudinal loads from the cantilever truss. This must be done prior to disconnecting the Suspended Span, see step 6.

2. Install pretensioning systems across the sliding joints in the top chords UC7-US0 at four locations, on the north and south trusses at both ends of the Suspended Span. Apply necessary pretension to the top chords UC7-US0 to reduce truss forces at mid-span of the Suspended Span. Lock the connection at the sliding joints. The capacity of the locked connection shall exceed the capacity of the adjoining chord members. Install top lateral bracing in the top chord UC7-US0 panels with a capacity that equals or exceeds the capacity of the existing lateral bracing in the adjacent panels.

3. Remove upper deck concrete slab and overlay, deck joists, and curbs and barriers between Pier E2 and Pier E3. At the Contractor's option, the lower deck concrete slab and overlay, deck joists, and curbs and barriers between Pier E2 and Pier E3 may be 1) removed partially or entirely prior to truss removal but after upper deck removal has been completed or 2) removed concurrently with the truss. Upper and lower deck removal shall begin at the center of span E2-E3 and proceed toward Pier E2 and Pier E3.

4. Install strongbacks and pretensioning systems to transfer shear and pretension across the middle of the Suspended Span to control any residual forces in the truss members during disconnection of the Suspended Span, see step 6.

5. If necessary, apply longitudinal jacking loads at Pier E4 to relieve tension in the bottom chord at mid-span of the Suspended Span. Lock the connection between the adjacent steel truss superstructures across Pier E4 to transfer longitudinal and transverse loads. The locking operation and the subsequent operation to disconnect the bridge shall be done during the same shift under near-constant ambient temperatures (±3 degrees Celsius).

6. Apply pretension across middle panels of the Suspended Span to relieve remaining tension in the truss members to be disconnected. Disconnect truss and deck members at middle of Suspended Span, separating the structure at mid-span, and release pretension gradually.

7. Remove remaining cantilevering portions of the Suspended Span member by member within a single panel at a time proceeding from the free end of each cantilever. Remove the floor beams and stringers, and the lateral bracing at the top and bottom chords, sway frames, and portal frames only within the panel being removed.

8. Install temporary supports under the Anchor Arms at any time prior to beginning truss removal in the respective Cantilever Arm. Anchor Arm truss members are susceptible to stress reversals during the removal of the Cantilever Arms. Jack vertically if necessary to ensure no compression occurs in tension members in Anchor Arms during subsequent Cantilever Arm removal operations.

9. Remove Cantilever Arms member by member within a single panel at a time proceeding from the free end of each cantilever. Remove the floor beams and stringers, and the lateral bracing at the top and bottom chords, sway frames, and portal frames only within the panel being removed.

10. Remove Anchor Arms.

Alternative B: (Lower Suspended Span to Barges)

1. If necessary, strengthen the existing connection of the superstructure to Pier E9 to transfer the additional longitudinal loads from the cantilever truss. This must be done prior to disconnecting the Suspended Span, see step 5.

2. Remove upper deck concrete slab and overlay, deck joists, and curbs and barriers between Pier E2 and Pier E3. Remove lower deck concrete slab and overlay, deck joists, and curbs and barriers on the Suspended Span. Upper and lower deck removal shall begin at the center of span E2-E3 and proceed toward Pier E2 and Pier E3.

3. If necessary, strengthen existing members or install new members on existing structure to support lowering of Suspended Span.

4. If necessary, apply longitudinal jacking loads at Pier E4 to relieve forces across the Suspended Span connections at LS0. Lock the connection between the adjacent steel truss superstructures across Pier E4 to transfer longitudinal and transverse loads. The locking operation and the subsequent operation to transfer load and disengage the Suspended Span shall be done during the same shift under near-constant ambient temperatures (±3 degrees Celsius).

5. Transfer the load of the Suspended Span onto the jacking system. Disengage Suspended Span from Cantilever Arms and lower it onto barges.

6. Install temporary supports under the Anchor Arms at any time prior to beginning truss removal in the respective Cantilever Arm. Anchor Arm truss members are susceptible to stress reversals during the removal of the Cantilever Arms. Jack vertically if necessary to ensure no compression occurs in tension members in Anchor Arms during subsequent Cantilever Arm removal operations.

7. Remove Cantilever Arms member by member within a single panel at a time proceeding from the free end of each cantilever. Remove the floor beams and stringers, and the lateral bracing at the top and bottom chords, sway frames, and portal frames only within the panel being removed.

8. Remove Anchor Arms.

NOTE:
THE CONTRACTOR SHALL VERIFY ALL CONTROLLING FIELD DIMENSIONS BEFORE ORDERING OR FABRICATING ANY MATERIAL.

4 **ADDED PER ADDENDUM No. 4 DATED JULY 16, 2012**

	BY	CHECKED
DESIGN	S. Margaris	M. Whiteside
DETAILS	C. Cancino	W. Long
QUANTITIES	L. Wang	J. Shen

STATE OF CALIFORNIA
DEPARTMENT OF TRANSPORTATION

TOLL BRIDGE DESIGN

BRIDGE NO. 33-0025
KILOMETER POST 13.2/13.9

SAN FRANCISCO-OAKLAND BAY BRIDGE
EAST SPAN SEISMIC SAFETY PROJECT

EXISTING CANTILEVER TRUSS DEMOLITION

REMOVAL SEQUENCE

ALL DIMENSIONS ARE IN METERS UNLESS OTHERWISE SHOWN

ORIGINAL SCALE IN MILLIMETERS FOR REDUCED PLANS 0 10 20 30 40 50 60 70 80 90 100

CU 04
EA 0120T1

DISREGARD PRINTS BEARING EARLIER REVISION DATES

REVISION DATES

SHEET 2A OF 87

STRUCTURES DESIGN DETAIL SHEET (X) (REV. 09-01-10)

FILE => 33-0025-b-removal-seq.dgn

USERNAME => s124496 DATE PLOTTED => 13-JUL-2012 TIME PLOTTED => 16:01

DIST.	COUNTY	ROUTE	KILOMETER POST TOTAL PROJECT	SHEET NO.	TOTAL SHEETS
04	SF	80	12.6/13.9	657	821

Caltrans Metric

REGISTERED ENGINEER - CIVIL 11-08-11

2-21-12
PLANS APPROVAL DATE

REGISTERED PROFESSIONAL ENGINEER A.L. ELY No. 18880 Exp. 6-30-13 CIVIL STATE OF CALIFORNIA

The State of California or its officers or agents shall not be responsible for the accuracy or completeness of electronic copies of this plan sheet.

T.Y. LIN / MOFFATT & NICHOL
TWO HARRISON STREET
SAN FRANCISCO, CA 94105

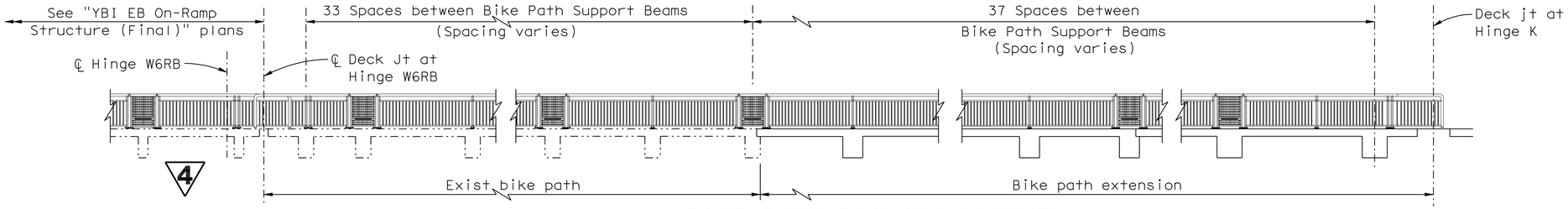

BIKE PATH RAILING LAYOUT

No Scale

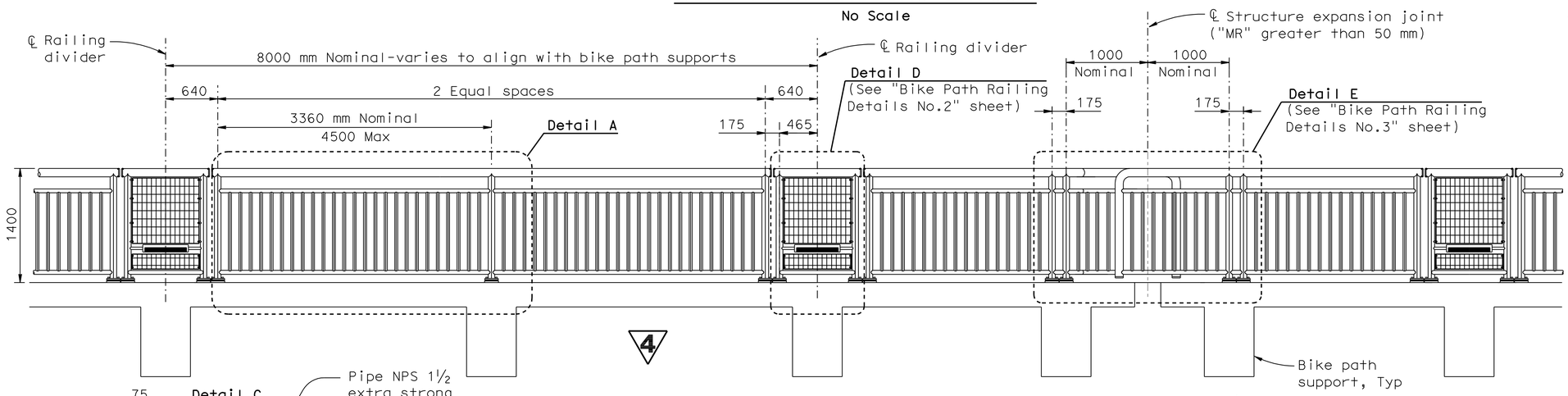

BIKE PATH RAILING-TYPICAL ELEVATION

1:30

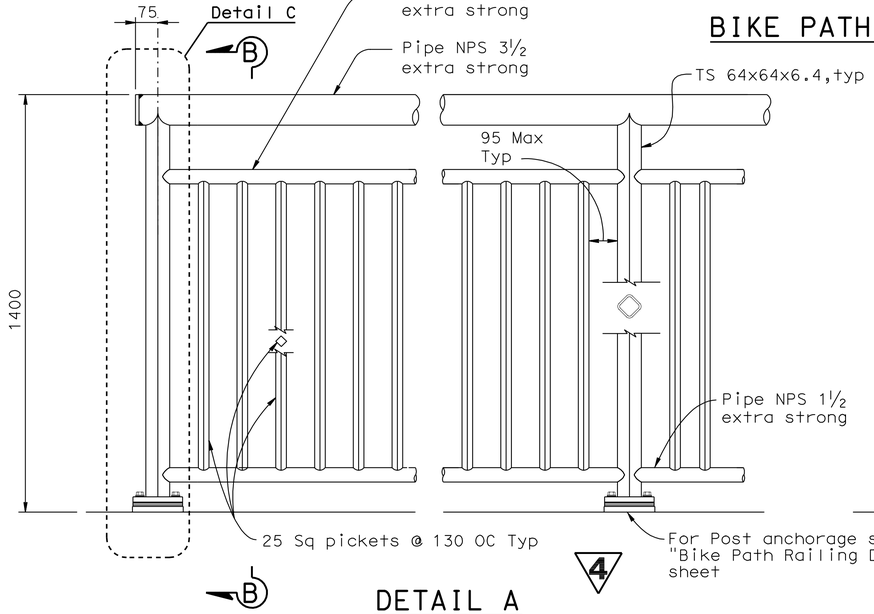

DETAIL A

1:10

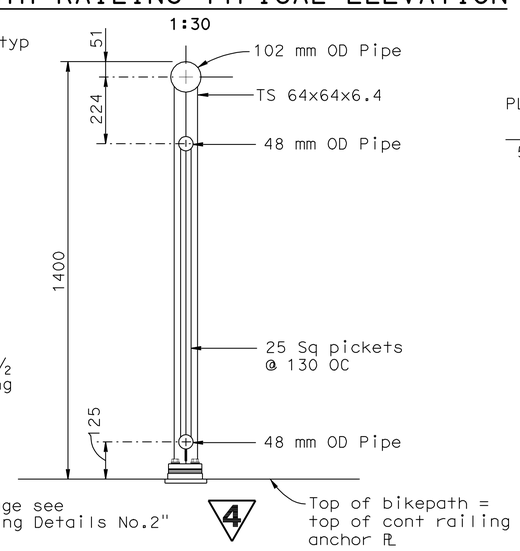

SECTION B-B

1:10

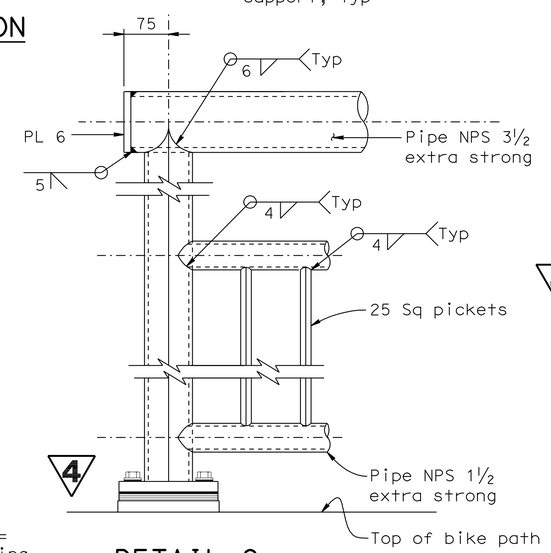

DETAIL C

1:5

NOTES:

1. All metal (except stainless steel) parts of railing assembly including grill shall be coated
2. Railing posts shall comform to ASTM A500 Grade C (Fy=345MPa).
3. Railing shall conform to vertical and horizontal alignment of bike path.
4. Posts and pickets shall be perpendicular to the profile grade of the bikepath and vertical to the cross-slope of the bikepath. Rails shall be parallel to top of bikepath. Railing grill vertical bars shall be parallel to railing posts and grill horizontal bars shall be parallel to rails.
5. Rails shall be shop bent or fabricated to fit horizontal curve when radius is less than 300 m.
6. All exposed welds shall be ground smooth.
7. Expansion joints shall be located in the railing panel spanning deck or wall joints, see "Bike Path Railing Details No.3" sheet.
8. Emergency gate access shall be provided thru the inside bike path railing (railing located nearest roadway) at intervals not exceeding 80 m.
9. Welding to stainless steel shall be in accordance with AWS D1.6-1999.
10. Shim stack beneath post base plate to be adjusted during installation as required to maintain railing alignment. Full width stainless steel shims shall be utilized, tapered as necessary to maintain post verticality.
11. At exist bike path, railing anchor plates have previously been installed; verify compatible post locations prior to fabrication.

4 **REVISED PER ADDENDUM No. 4 DATED JULY 16, 2012**

ALL DIMENSIONS ARE IN MILLIMETERS UNLESS OTHERWISE SHOWN

SAN FRANCISCO OAKLAND BAY BRIDGE
EAST SPAN SEISMIC SAFETY PROJECT

YBI EB TRANSITION STRUCTURE (MOD)

BIKE PATH RAILING DETAILS NO.1

DESIGN OVERSIGHT
JUAN F. CARPIO, JASON FAN
SIGN OFF DATE

	BY	CHECKED
DESIGN	Shangkuan	Atiqullah
DETAILS	Samson	Jain
QUANTITIES	Fellows	Birdy

PREPARED FOR THE STATE OF CALIFORNIA DEPARTMENT OF TRANSPORTATION

Jal Birdy
PROJECT ENGINEER

BRIDGE NO. 34-0006 R
KILOMETER POST 12.8

Rev. Date: 5-18-98

ORIGINAL SCALE IN MILLIMETERS FOR REDUCED PLANS 0 10 20 30 40 50 60 70 80 90 100

CU 04251
EA 0120T1

DISREGARD PRINTS BEARING EARLIER REVISION DATES

REVISION DATES (PRELIMINARY STAGE ONLY) 11/05/10 12/05/10 4/6/11 7/14/11 10/24/11 6/1/12

SHEET 12 OF 20

FILE => 04-0120t1-34-006r-u-bikprldt01.add

USERNAME => s124496 DATE PLOTTED => 13-JUL-2012 TIME PLOTTED => 16:01

DIST.	COUNTY	ROUTE	KILOMETER POST TOTAL PROJECT	SHEET NO.	TOTAL SHEETS
04	SF	80	12.6/13.9	658	821

Caltrans Metric

11-08-11
REGISTERED ENGINEER - CIVIL

2-21-12
PLANS APPROVAL DATE

REGISTERED PROFESSIONAL ENGINEER A.L. ELY No. 18880 Exp. 6-30-13 CIVIL STATE OF CALIFORNIA

The State of California or its officers or agents shall not be responsible for the accuracy or completeness of electronic copies of this plan sheet.

T.Y. LIN / MOFFATT & NICHOL
TWO HARRISON STREET
SAN FRANCISCO, CA 94105

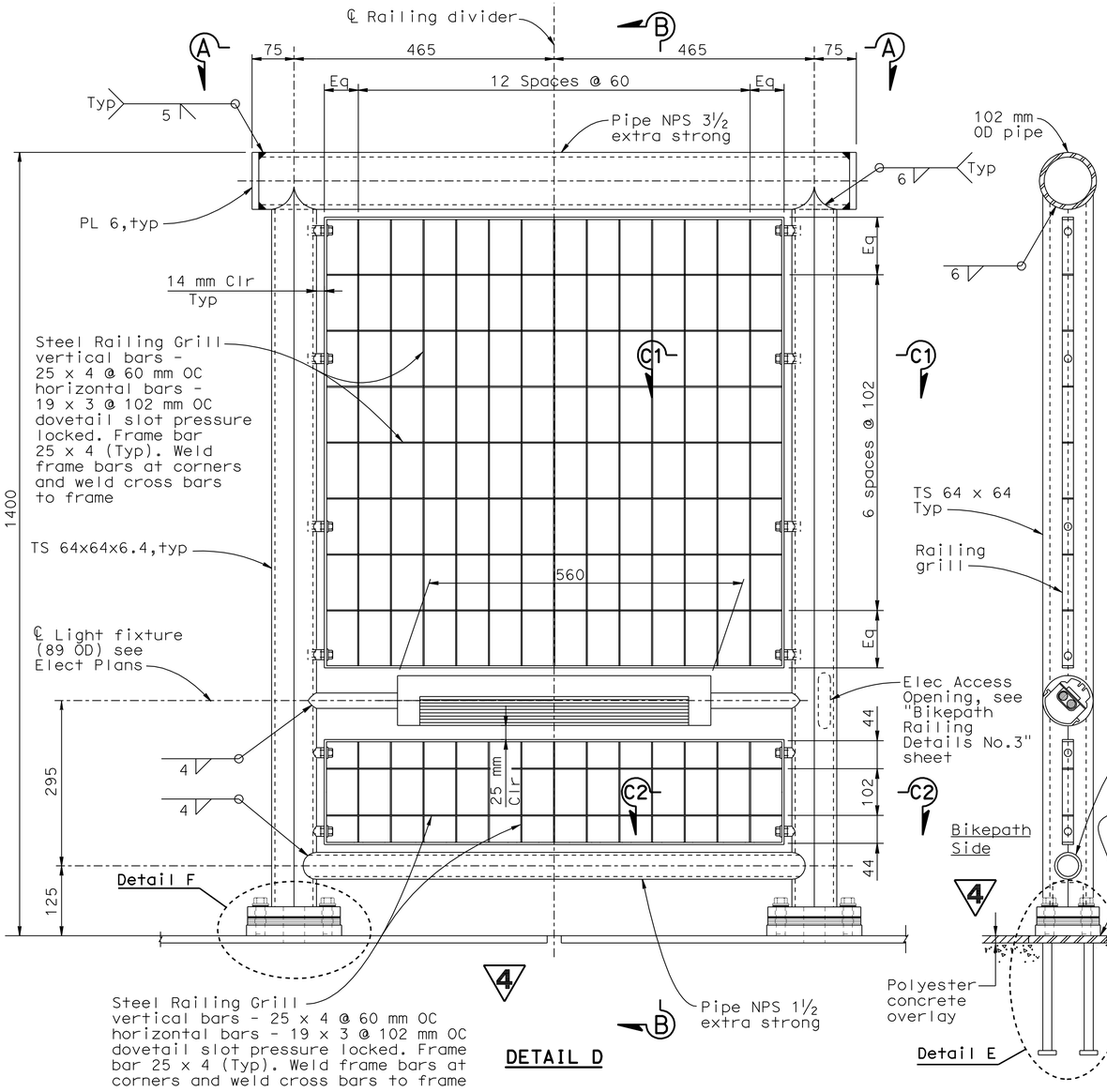

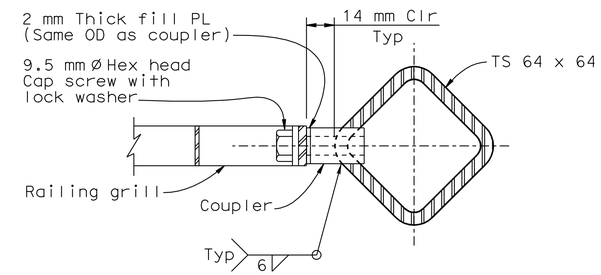

SECTION C1-C1
(Typ above light fixture)
1:1.5

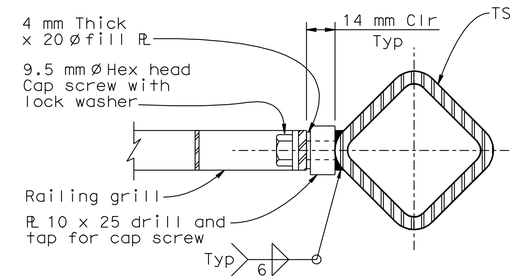

SECTION C2-C2
(Typ below light fixture)
1:1.5

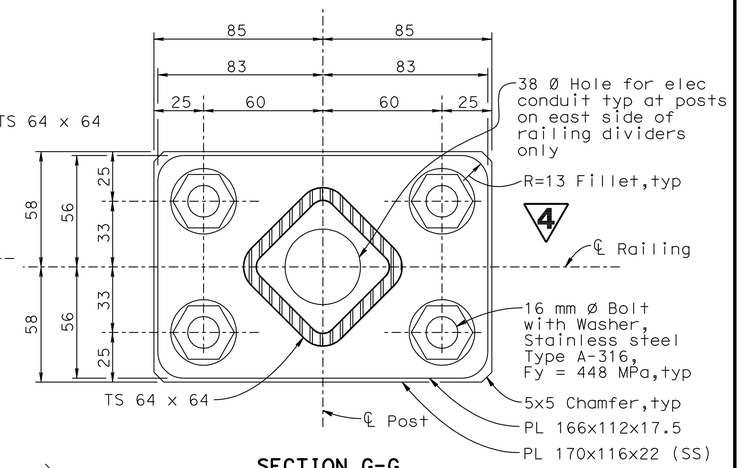

SECTION G-G

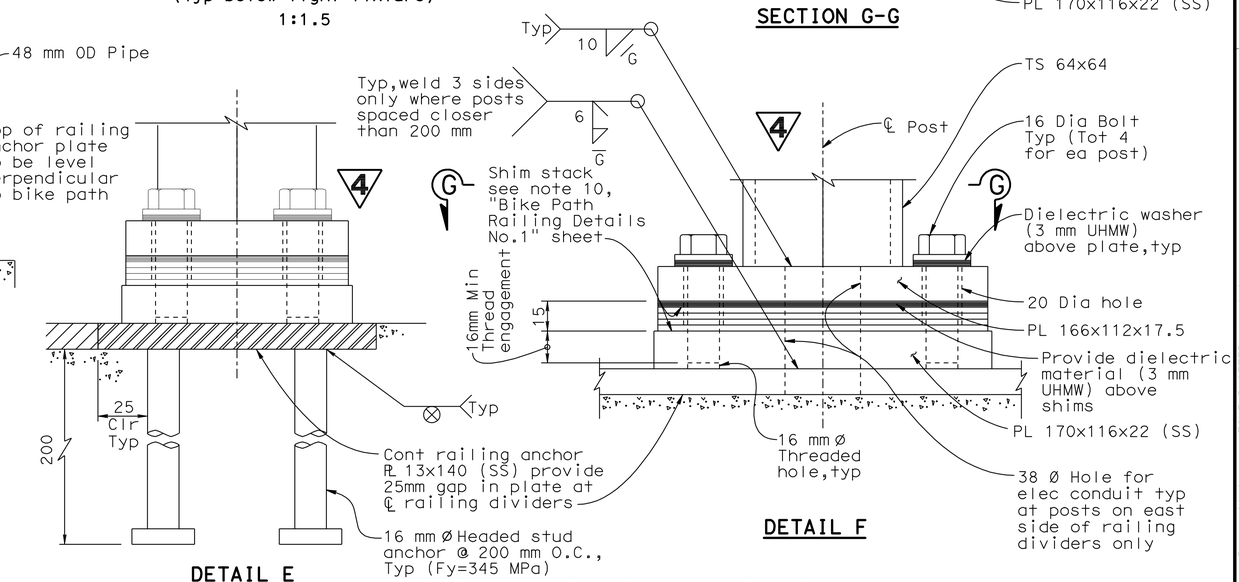

TYPICAL POST ANCHORAGE
1:1.5

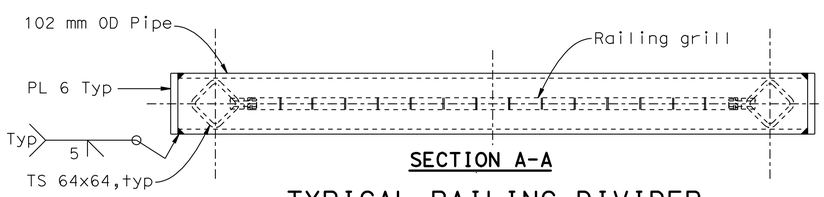

SECTION A-A

TYPICAL RAILING DIVIDER
1:5

4 REVISED PER ADDENDUM No. 4 DATED JULY 16, 2012

ALL DIMENSIONS ARE IN MILLIMETERS UNLESS OTHERWISE SHOWN

SAN FRANCISCO OAKLAND BAY BRIDGE
EAST SPAN SEISMIC SAFETY PROJECT

YBI EB TRANSITION STRUCTURE (MOD)

BIKE PATH RAILING DETAILS NO.2

DESIGN OVERSIGHT
JUAN F. CARPIO, JASON FAN
SIGN OFF DATE

	BY	CHECKED
DESIGN	Shangkuan	Atiqullah
DETAILS	Samson	Jain
QUANTITIES	Fellows	Birdy

PREPARED FOR THE STATE OF CALIFORNIA DEPARTMENT OF TRANSPORTATION

Jal Birdy
PROJECT ENGINEER

BRIDGE NO. 34-0006 R
KILOMETER POST 12.8

CU 04251
EA 0120T1

DISREGARD PRINTS BEARING EARLIER REVISION DATES

REVISION DATES (PRELIMINARY STAGE ONLY): 11/25/10 12/15/10 4/8/11 7/14/11 10/24/11 6/7/12

SHEET 13 OF 20

Rev. Date: 5-18-98

ORIGINAL SCALE IN MILLIMETERS FOR REDUCED PLANS 0 10 20 30 40 50 60 70 80 90 100

FILE => 04-0120t1-34-006r-u-bikpridt02.add

USERNAME => s124436 DATE PLOTTED => 13-JUL-2012 TIME PLOTTED => 16:01

DIST.	COUNTY	ROUTE	KILOMETER POST TOTAL PROJECT	SHEET NO.	TOTAL SHEETS
04	SF	80	12.6/13.9	659	821

Caltrans Metric

A. L. Ely 11-08-11
REGISTERED ENGINEER - CIVIL

2-21-12
PLANS APPROVAL DATE

REGISTERED PROFESSIONAL ENGINEER A.L. ELY No. 18880 Exp. 6-30-13 CIVIL STATE OF CALIFORNIA

The State of California or its officers or agents shall not be responsible for the accuracy or completeness of electronic copies of this plan sheet.

T.Y. LIN / MOFFATT & NICHOL
TWO HARRISON STREET
SAN FRANCISCO, CA 94105

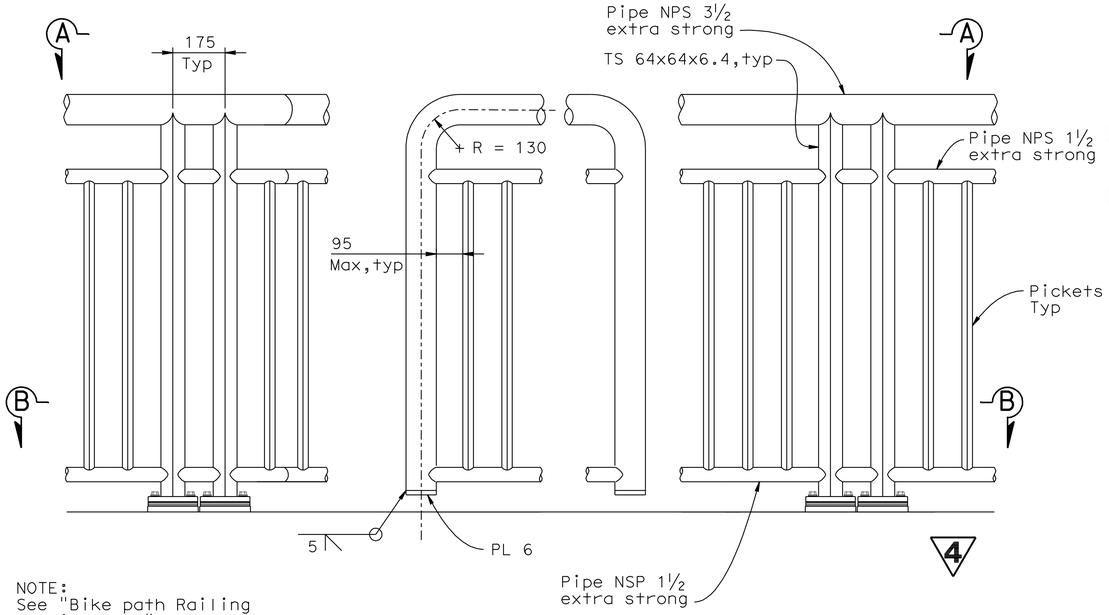

NOTE:
See "Bike path Railing Details No.1" sheet for additional details.

DETAIL E

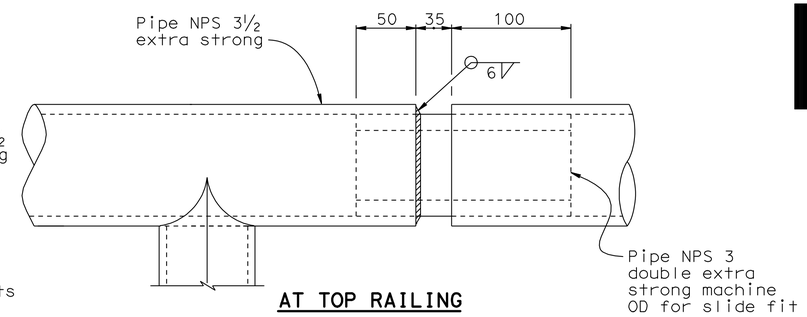

AT TOP RAILING

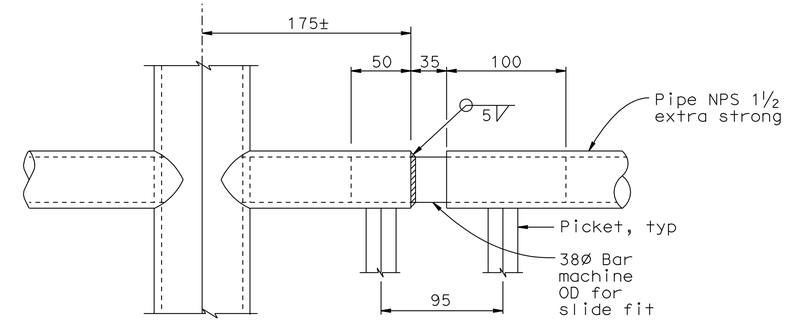

AT INTERMEDIATE AND BOTTOM RAILING

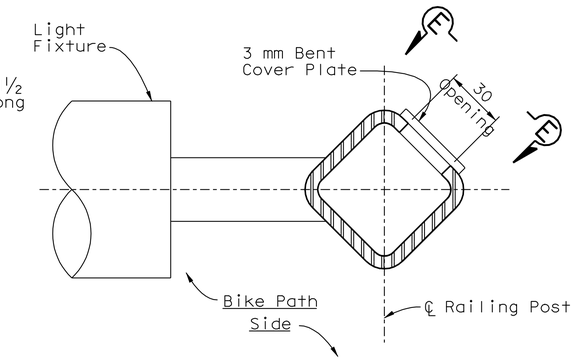

PLAN

RAILING EXPANSION JOINT DETAILS MR ≤ 50

"For use at structure expansion joints with "MR" equal to or less than 50 mm)
1:2.5

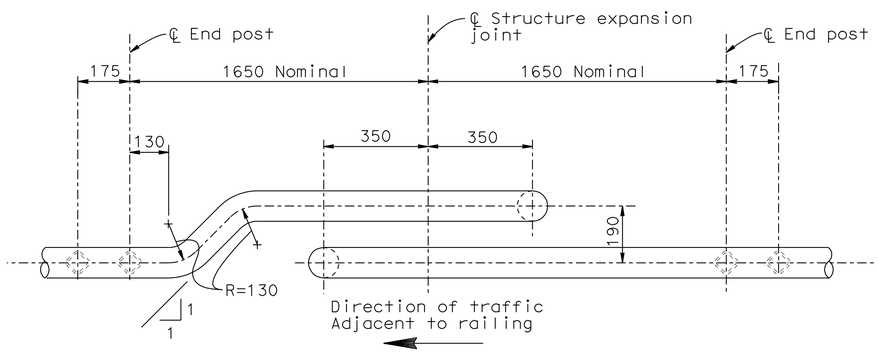

SECTION A-A

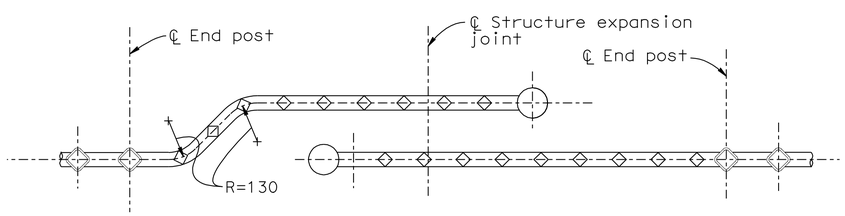

SECTION B-B

RAILING EXPANSION JOINT DETAILS MR > 50

(For use at structure expansion joints with "MR" greater than 50 mm)
(Shown at Hinge K, for HInge W6RB see "YBI EB On-Ramp Structure (Final)" plans
1:10

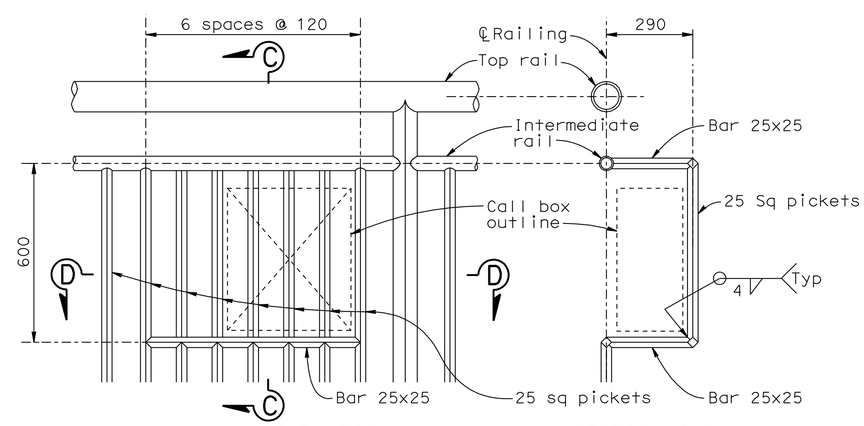

ELEVATION

SECTION C-C

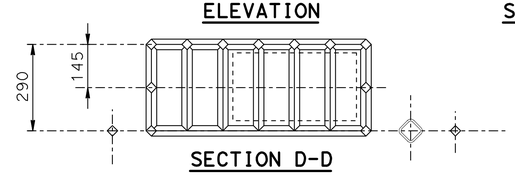

SECTION D-D

CALL BOX MOUNTING DETAIL

1:10

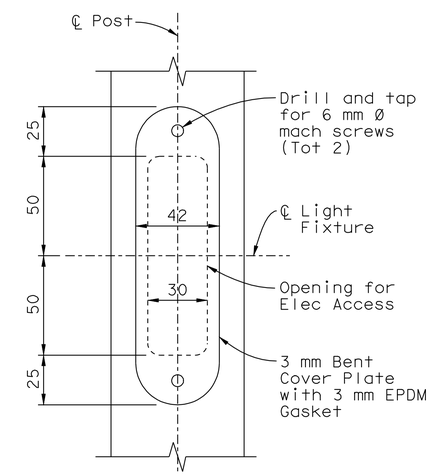

SECTION E-E

ELECTRICAL ACCESS OPENING AT BIKEPATH LIGHT FIXTURE

(Required at Posts on east side of Railing Dividers only)
1:1.5

ALL DIMENSIONS ARE IN MILLIMETERS UNLESS OTHERWISE SHOWN

4 REVISED PER ADDENDUM No. 4 DATED JULY 16, 2012

SAN FRANCISCO OAKLAND BAY BRIDGE
EAST SPAN SEISMIC SAFETY PROJECT

YBI EB TRANSITION STRUCTURE (MOD)

BIKE PATH RAILING DETAILS NO.3

DESIGN OVERSIGHT
JUAN F. CARPIO, JASON FAN
SIGN OFF DATE

	BY	CHECKED
DESIGN	Shangkuan	Atiqullah
DETAILS	Samson	Jain
QUANTITIES	Fellows	Birdy

PREPARED FOR THE STATE OF CALIFORNIA DEPARTMENT OF TRANSPORTATION

Jal Birdy
PROJECT ENGINEER

BRIDGE NO. 34-0006 R
KILOMETER POST 12.8

CU 04251
EA 0120T1

DISREGARD PRINTS BEARING EARLIER REVISION DATES
REVISION DATES (PRELIMINARY STAGE ONLY) 11/05/10 12/15/10 4/8/11 7/14/11 10/24/11 6/1/12

SHEET 14 OF 20

Rev. Date: 5-18-98

ORIGINAL SCALE IN MILLIMETERS FOR REDUCED PLANS 0 10 20 30 40 50 60 70 80 90 100

FILE => 04-0120t1-34-006r-u-bikprldt03.add

USERNAME => s124496 DATE PLOTTED => 13-JUL-2012 TIME PLOTTED => 16:01

DIST.	COUNTY	ROUTE	KILOMETER POST TOTAL PROJECT	SHEET NO.	TOTAL SHEETS
04	SF	80	12.6/13.9	660	821

Caltrans Metric

A. L. Ely 11-08-11
REGISTERED ENGINEER - CIVIL

2-21-12
PLANS APPROVAL DATE

REGISTERED PROFESSIONAL ENGINEER A.L. ELY No. 18880 Exp. 6-30-13 CIVIL STATE OF CALIFORNIA

The State of California or its officers or agents shall not be responsible for the accuracy or completeness of electronic copies of this plan sheet.

T.Y. LIN / MOFFATT & NICHOL
TWO HARRISON STREET
SAN FRANCISCO, CA 94105

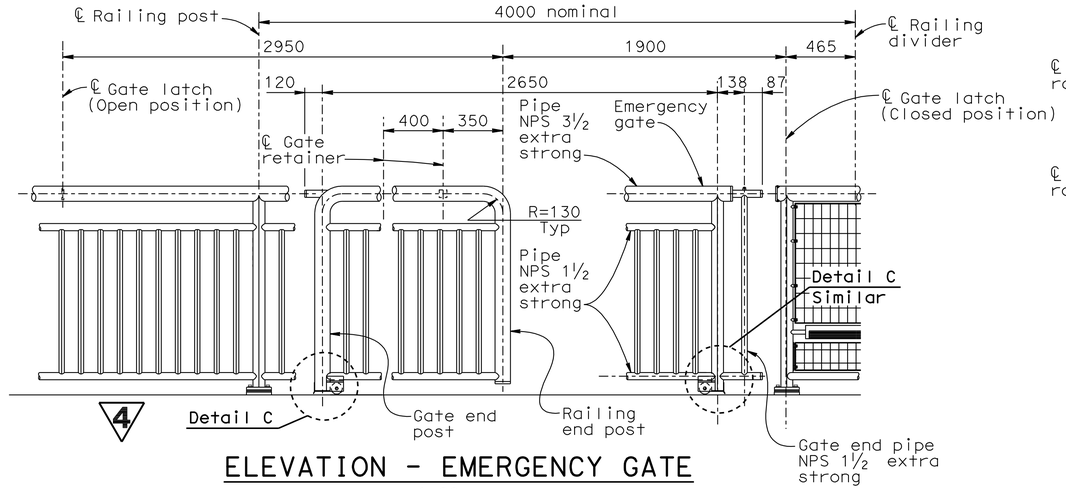

ELEVATION - EMERGENCY GATE
1:20

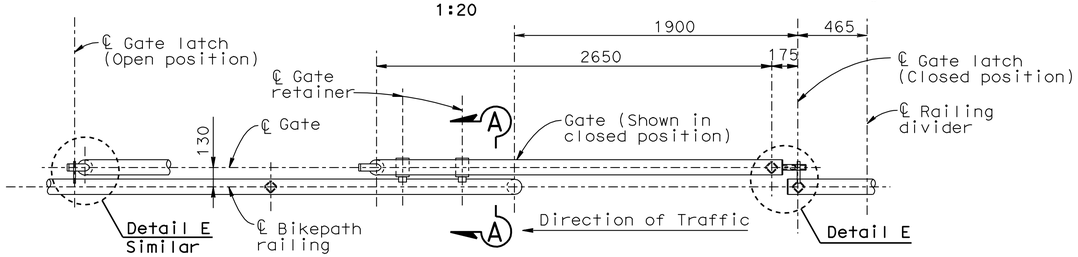

PLAN AT TOP RAIL
1:20

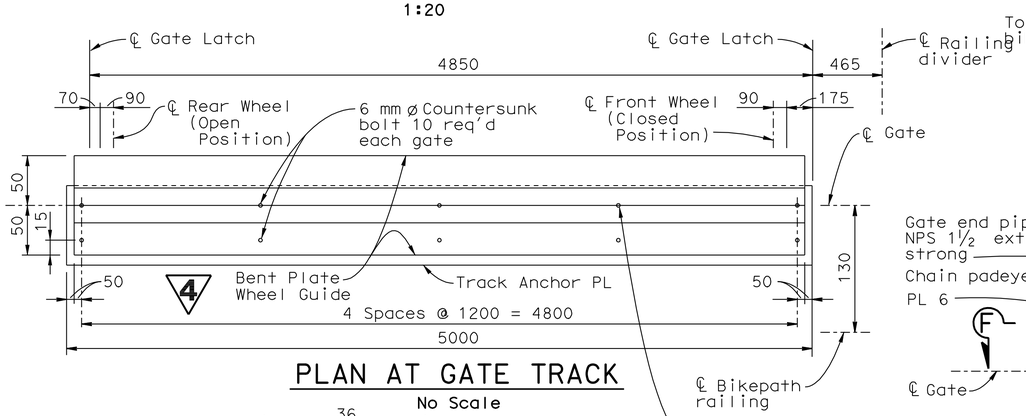

PLAN AT GATE TRACK
No Scale

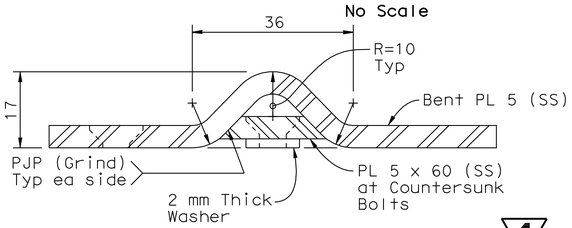

BENT PLATE WHEEL GUIDE
No Scale

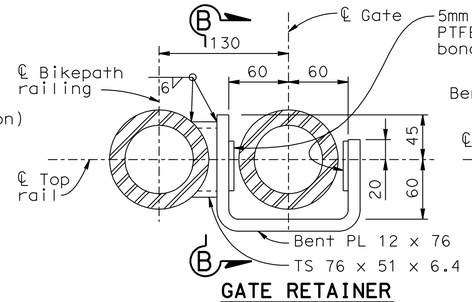

GATE RETAINER
SECTION A-A
1:3

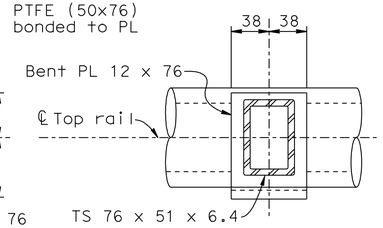

SECTION B-B
1:3

4 REVISED PER ADDENDUM No. 4 DATED JULY 16, 2012

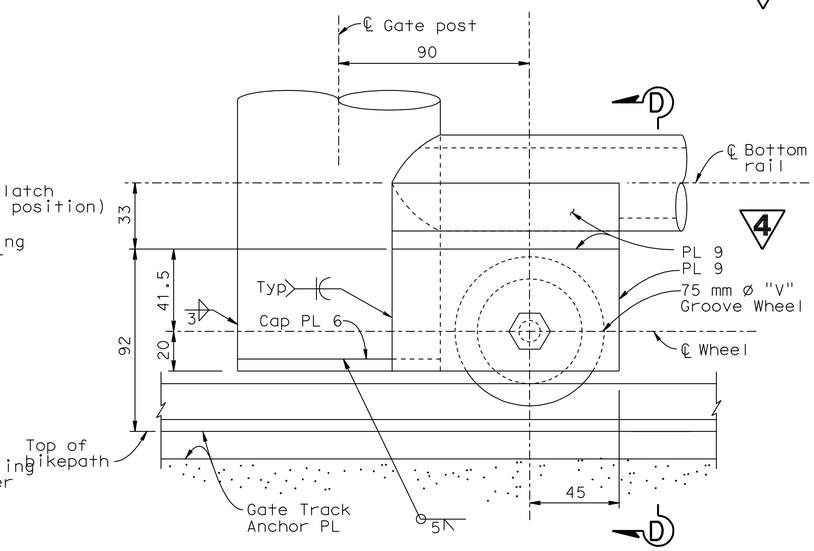

DETAIL C
1:1.5

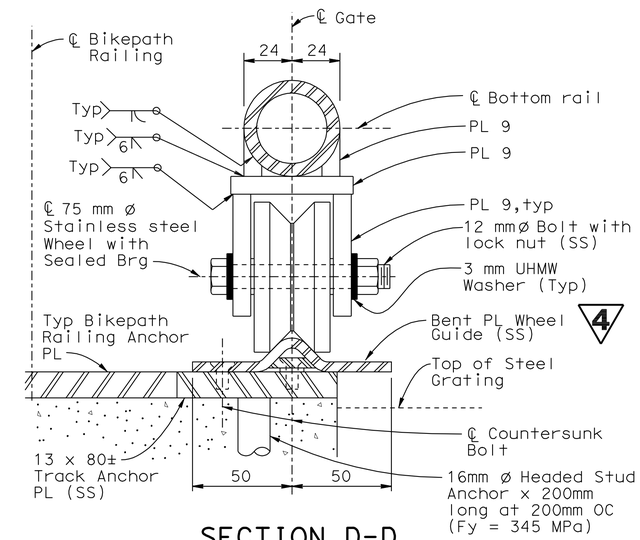

SECTION D-D
1:1.5

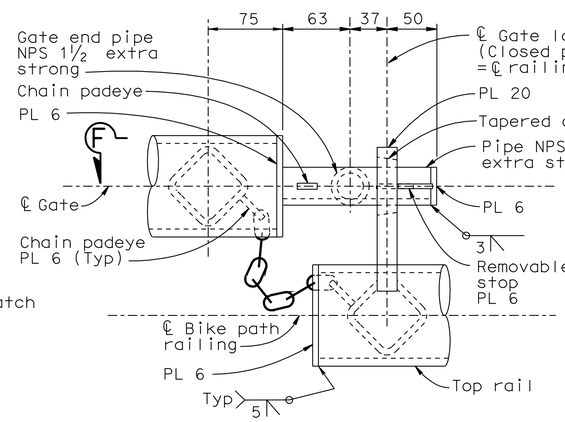

DETAIL E
1:3

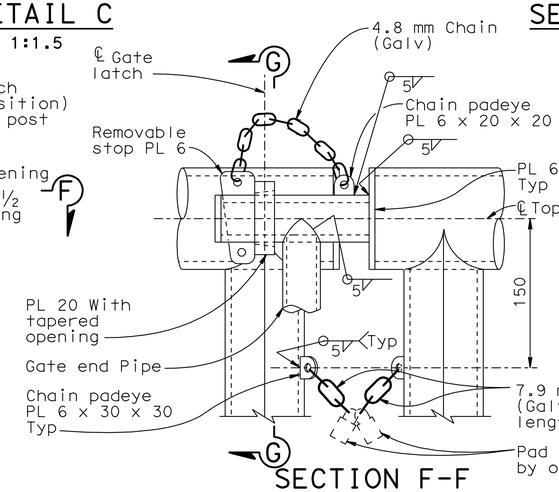

SECTION F-F
1:3

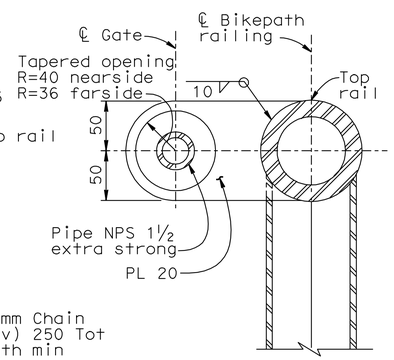

SECTION G-G
1:3

ALL DIMENSIONS ARE IN MILLIMETERS UNLESS OTHERWISE SHOWN

SAN FRANCISCO OAKLAND BAY BRIDGE
EAST SPAN SEISMIC SAFETY PROJECT

YBI EB TRANSITION STRUCTURE (MOD)

BIKE PATH RAILING DETAILS NO.4

DESIGN OVERSIGHT
Juan F. Carpio Jason Fan
JUAN F. CARPIO, JASON FAN
SIGN OFF DATE

	BY	CHECKED
DESIGN	Shangkuan	Atiqullah
DETAILS	Samson	Jain
QUANTITIES	Fellows	Birdy

PREPARED FOR THE STATE OF CALIFORNIA DEPARTMENT OF TRANSPORTATION

Jal Birdy
PROJECT ENGINEER

BRIDGE NO. 34-0006 R
KILOMETER POST 12.8

CU 04251
EA 0120T1

Rev. Date: 5-18-98

ORIGINAL SCALE IN MILLIMETERS FOR REDUCED PLANS 0 10 20 30 40 50 60 70 80 90 100

DISREGARD PRINTS BEARING EARLIER REVISION DATES

REVISION DATES (PRELIMINARY STAGE ONLY) 11/15/10 12/15/10 4/8/11 7/14/11 10/24/11 6/1/12

SHEET 15 OF 20

FILE => 04-0120t1-34-006r-u-bikprldt04.add

USERNAME => s124496 DATE PLOTTED => 13-JUL-2012 TIME PLOTTED => 16:01

DIST.	COUNTY	ROUTE	KILOMETER POST TOTAL PROJECT	SHEET NO.	TOTAL SHEETS
04	SF	80	12.6/13.9	661	821

Caltrans Metric

A. L. Ely 11-08-11
REGISTERED ENGINEER - CIVIL

2-21-12
PLANS APPROVAL DATE

REGISTERED PROFESSIONAL ENGINEER A.L. ELY No. 18880 Exp. 6-30-13 CIVIL STATE OF CALIFORNIA

The State of California or its officers or agents shall not be responsible for the accuracy or completeness of electronic copies of this plan sheet.

T.Y. LIN / MOFFATT & NICHOL
TWO HARRISON STREET
SAN FRANCISCO, CA 94105

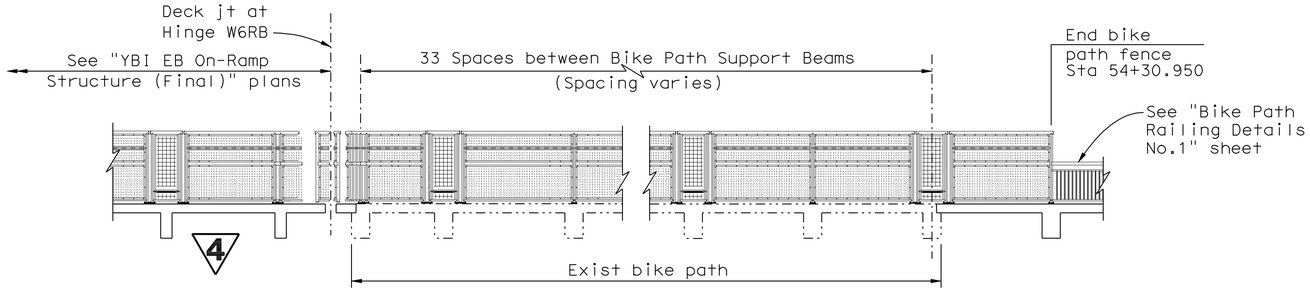

BIKE PATH FENCE LAYOUT (REFLECTED)

No Scale

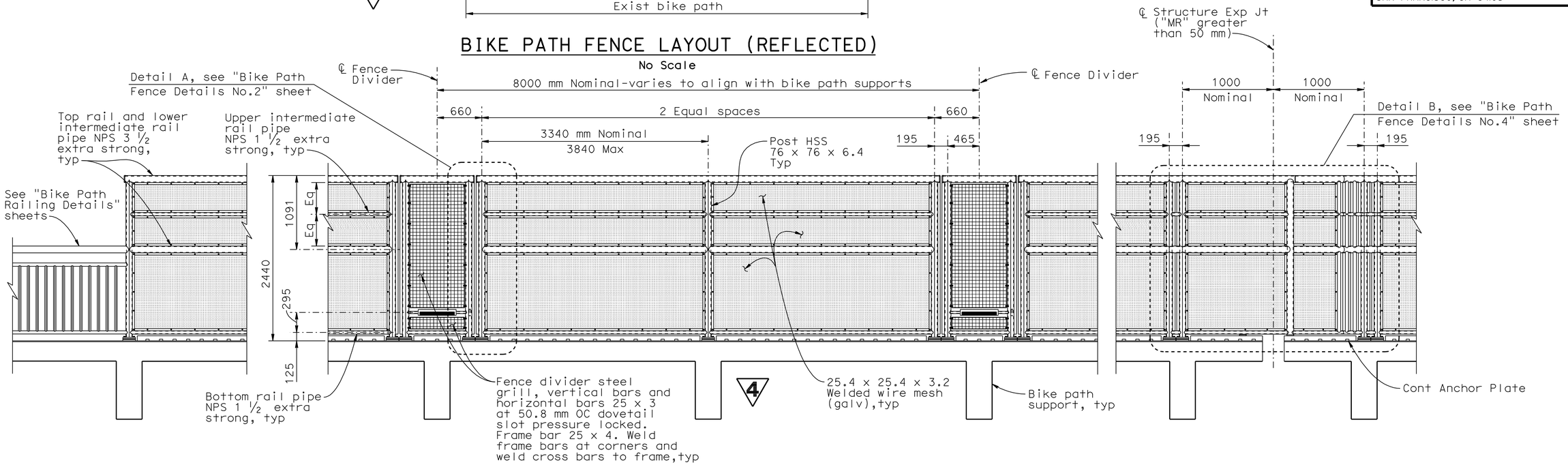

BIKE PATH FENCE - TYPICAL ELEVATION (REFLECTED)

1:30

NOTES:

1. All metal (except stainless steel) parts of fence assembly shall be painted. Stainless steel not to be painted unless otherwise noted.
2. Fence posts shall comform to ASTM A500 Grade C (Fy=345MPa).
3. Fence shall conform to vertical and horizontal alignment of bike path.
4. Posts shall be perpendicular to the profile grade of the bikepath and vertical to the cross-slope of the bikepath. Rails shall be parallel to top of bikepath.
5. Rails shall be shop bent or fabricated to fit horizontal curve when radius is less than 300 m.
6. All exposed welds shall be ground smooth.
7. Expansion joints shall be located in the fence panel spanning deck or wall joints, see "Bike Path Fence Details No.4" sheet.
8. Welding to stainless steel shall be in accordance with AWS D1.6-1999.
9. Shim stack beneath post base plate to be adjusted during installation as required to maintain fence alignment. Full width stainless steel shims shall be utilized, tapered as necessary to maintain post verticality. 4
10. At exist bike path, fence anchor plates and toe plates have previously been installed, verify compatible post locations prior to fabrication.

ALL DIMENSIONS ARE IN MILLIMETERS UNLESS OTHERWISE SHOWN

4 **REVISED PER ADDENDUM No. 4 DATED JULY 16, 2012**

SAN FRANCISCO OAKLAND BAY BRIDGE
EAST SPAN SEISMIC SAFETY PROJECT

YBI EB TRANSITION STRUCTURE (MOD)

BIKE PATH FENCE DETAILS NO.1

DESIGN OVERSIGHT
Francisco Carpio Jason Fan
JUAN F. CARPIO, JASON FAN
SIGN OFF DATE

Rev. Date: 5-18-98

	BY	CHECKED
DESIGN	Lee	Birdy
DETAILS	Samson	Birdy
QUANTITIES	Fellows	Birdy

PREPARED FOR THE STATE OF CALIFORNIA DEPARTMENT OF TRANSPORTATION

Jal Birdy
PROJECT ENGINEER

BRIDGE NO. 34-0006 R
KILOMETER POST 12.8

ORIGINAL SCALE IN MILLIMETERS FOR REDUCED PLANS 0 10 20 30 40 50 60 70 80 90 100

CU 04251
EA 0120T1

DISREGARD PRINTS BEARING EARLIER REVISION DATES

REVISION DATES (PRELIMINARY STAGE ONLY): 11/19/10 12/15/10 4/6/11 7/18/11 10/24/11 6/1/12

SHEET 16 OF 20

FILE => 04-0120t1-34-006r-u-bikpfdt01.add

USERNAME => s124496 DATE PLOTTED => 13-JUL-2012 TIME PLOTTED => 16:01

DIST.	COUNTY	ROUTE	KILOMETER POST TOTAL PROJECT	SHEET NO.	TOTAL SHEETS
04	SF	80	12.6/13.9	662	821

Caltrans Metric

A. Ely 11-08-11
REGISTERED ENGINEER - CIVIL

2-21-12
PLANS APPROVAL DATE

REGISTERED PROFESSIONAL ENGINEER A.L. ELY No. 18880 Exp. 6-30-13 CIVIL STATE OF CALIFORNIA

The State of California or its officers or agents shall not be responsible for the accuracy or completeness of electronic copies of this plan sheet.

T.Y. LIN / MOFFATT & NICHOL
TWO HARRISON STREET
SAN FRANCISCO, CA 94105

REVISED PER ADDENDUM No. 4 DATED JULY 16, 2012

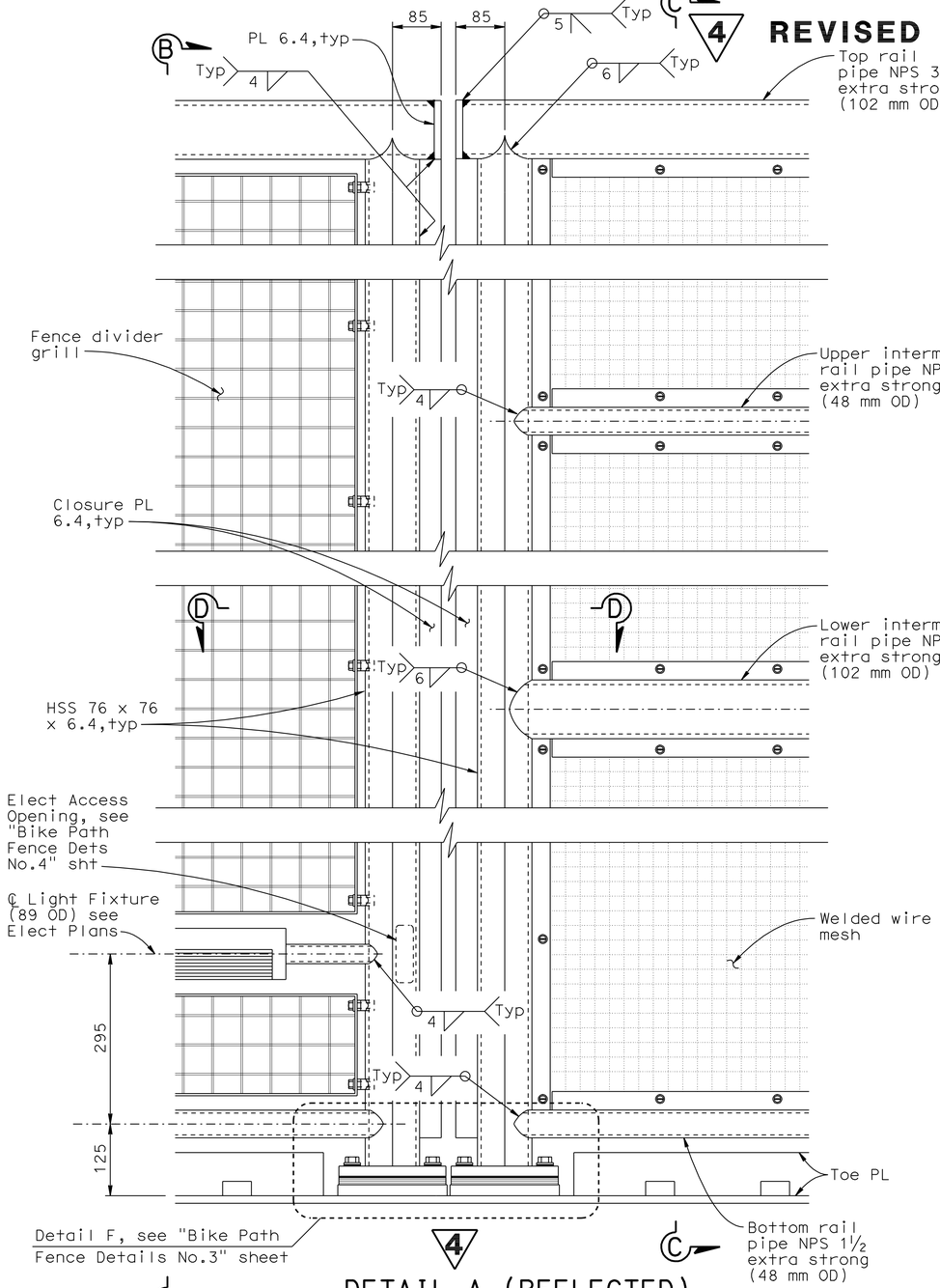

DETAIL A (REFLECTED)

(For location see "Bike Path Fence Details No.1" sheet)
1:5

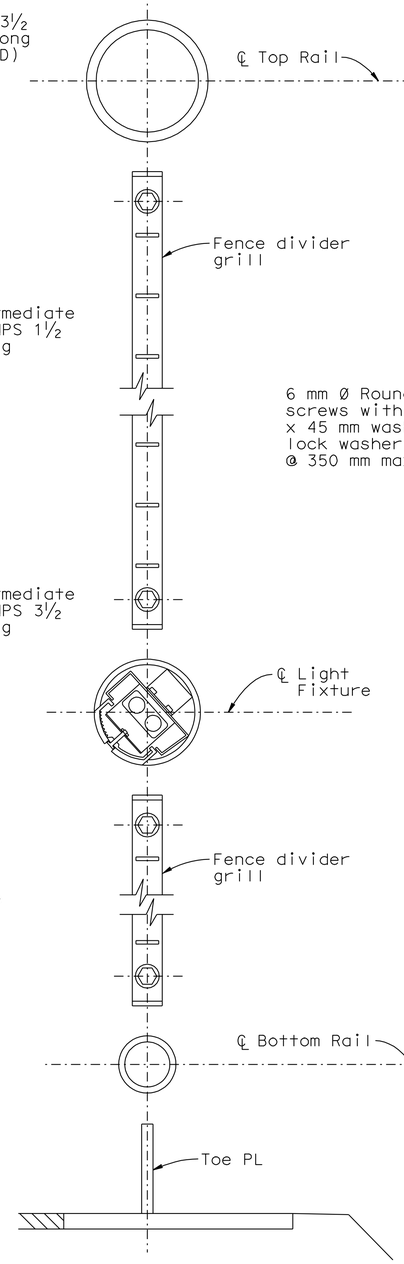

SECTION B-B

1:2.5

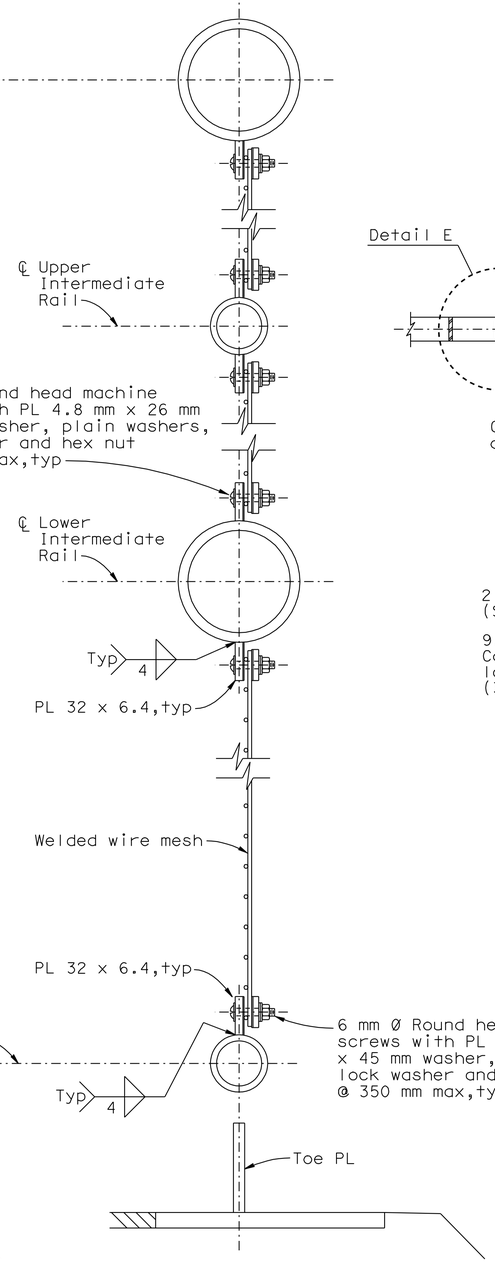

SECTION C-C

1:2.5

ALL DIMENSIONS ARE IN MILLIMETERS UNLESS OTHERWISE SHOWN

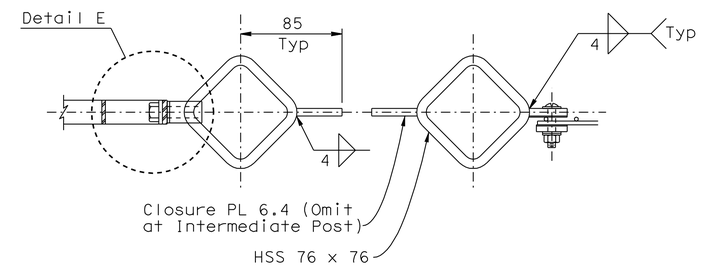

SECTION D-D

1:2.5

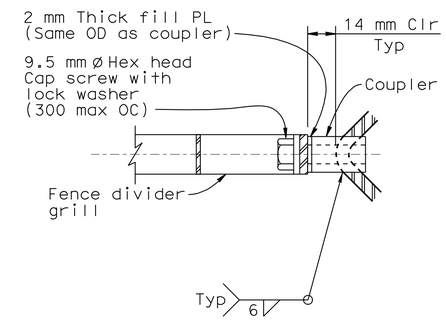

DETAIL E

1:1.5

DESIGN OVERSIGHT Juan F. Carpio, Jason Fan — JUAN F. CARPIO, JASON FAN — SIGN OFF DATE	DESIGN	BY Lee	CHECKED Birdy
	DETAILS	BY Samson	CHECKED Birdy
	QUANTITIES	BY Fellows	CHECKED Birdy

PREPARED FOR THE STATE OF CALIFORNIA DEPARTMENT OF TRANSPORTATION

Jal Birdy
PROJECT ENGINEER

BRIDGE NO. 34-0006 R
KILOMETER POST 12.8

SAN FRANCISCO OAKLAND BAY BRIDGE
EAST SPAN SEISMIC SAFETY PROJECT

YBI EB TRANSITION STRUCTURE (MOD)

BIKE PATH FENCE DETAILS NO.2

Rev. Date: 5-18-98

ORIGINAL SCALE IN MILLIMETERS FOR REDUCED PLANS 0 10 20 30 40 50 60 70 80 90 100

CU 04251
EA 0120T1

DISREGARD PRINTS BEARING EARLIER REVISION DATES

REVISION DATES (PRELIMINARY STAGE ONLY): ~~11/18/10~~ ~~12/18/10~~ ~~4/8/11~~ ~~7/14/11~~ ~~10/24/11~~ 6/1/12

SHEET 17 OF 20

FILE => 04-0120t1-34-006r-u-bikpfdt02.add

USERNAME => s1224496 DATE PLOTTED => 13-JUL-2012 TIME PLOTTED => 16:02

DIST.	COUNTY	ROUTE	KILOMETER POST TOTAL PROJECT	SHEET NO.	TOTAL SHEETS
04	SF	80	12.6/13.9	663	821

Caltrans Metric

4

A. L. Ely 11-08-11
REGISTERED ENGINEER - CIVIL

2-21-12
PLANS APPROVAL DATE

REGISTERED PROFESSIONAL ENGINEER A.L. ELY No. 18880 Exp. 6-30-13 CIVIL STATE OF CALIFORNIA

The State of California or its officers or agents shall not be responsible for the accuracy or completeness of electronic copies of this plan sheet.

T.Y. LIN / MOFFATT & NICHOL
TWO HARRISON STREET
SAN FRANCISCO, CA 94105

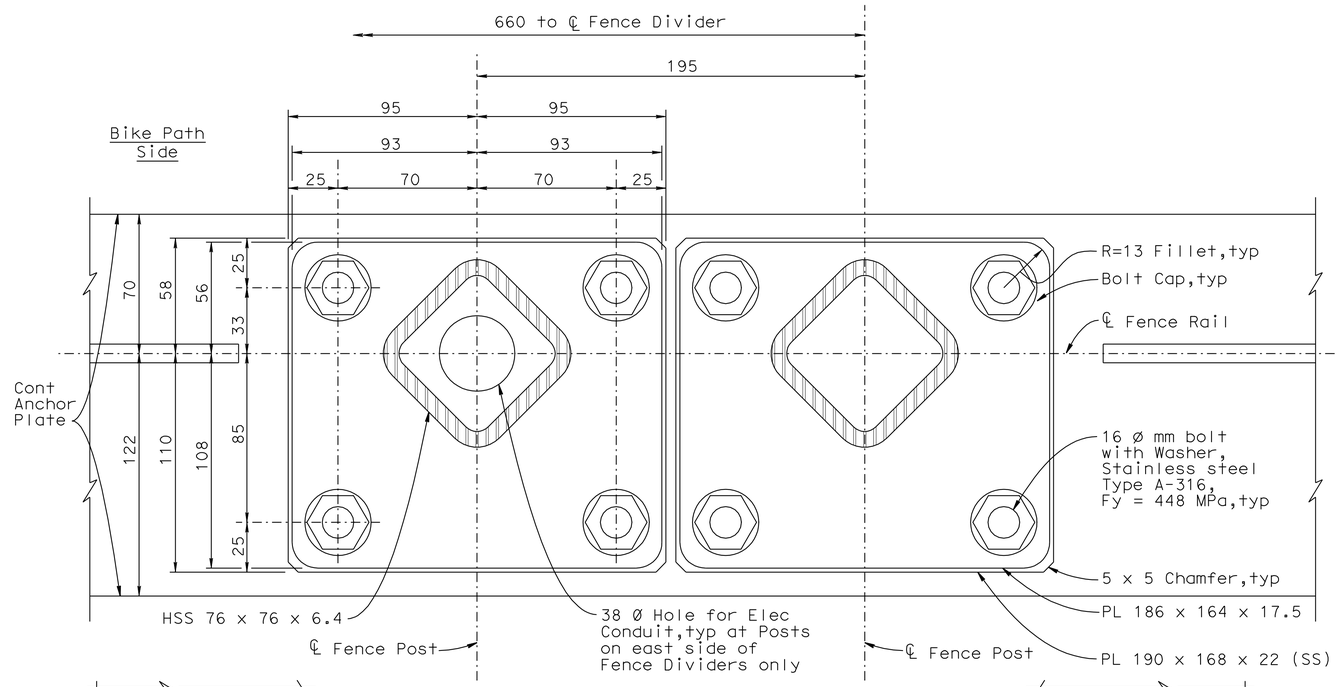

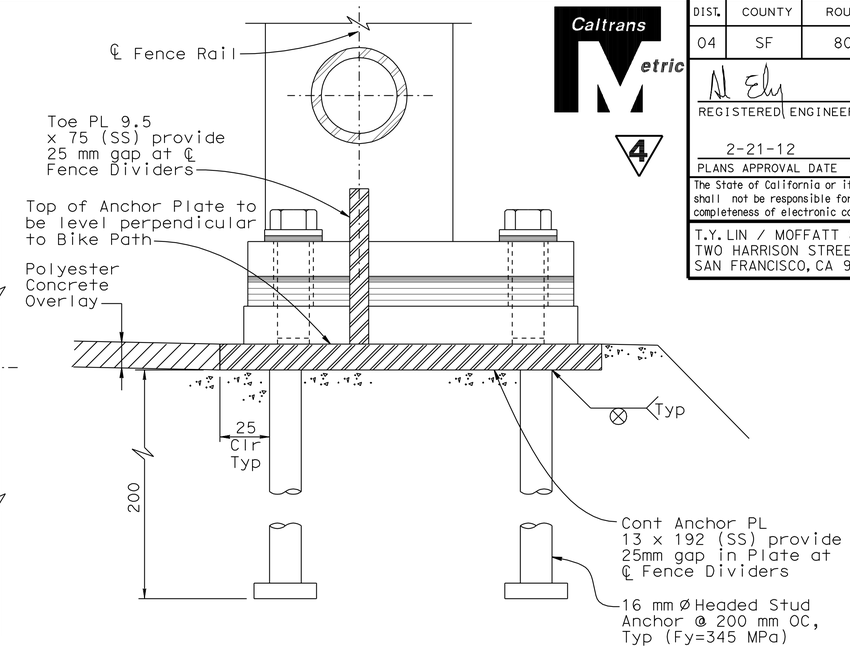

SECTION B-B
1:1.5

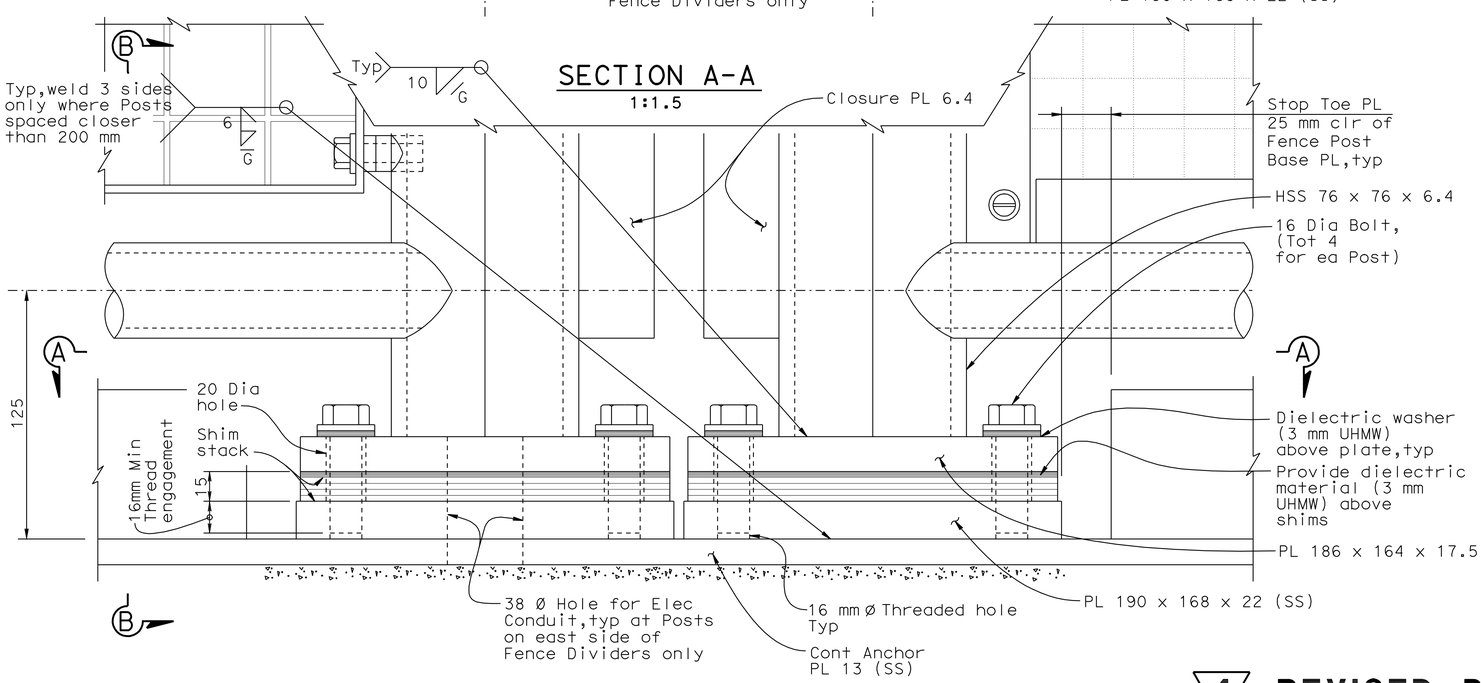

SECTION A-A
1:1.5

DETAIL F - TYPICAL FENCE POST ANCHORAGE
(Anchorage at Fence Divider shown, similar at Intermediate Post and Fence Exp Jt)
1:1.5

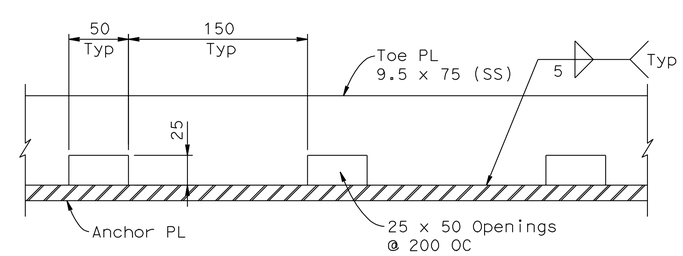

Note: Toe plates shall be painted to match typical railing.

TOE PLATE PARTIAL ELEVATION
No Scale

Note: For location of Detail F, see "Bike Path Fence Details No.2" sheet.

4 **REVISED PER ADDENDUM No. 4 DATED JULY 16, 2012**

ALL DIMENSIONS ARE IN MILLIMETERS UNLESS OTHERWISE SHOWN

SAN FRANCISCO OAKLAND BAY BRIDGE
EAST SPAN SEISMIC SAFETY PROJECT

YBI EB TRANSITION STRUCTURE (MOD)

BIKE PATH FENCE DETAILS NO.3

DESIGN OVERSIGHT
JUAN F. CARPIO, JASON FAN
SIGN OFF DATE

	BY	CHECKED
DESIGN	Lee	Birdy
DETAILS	Samson	Birdy
QUANTITIES	Fellows	Birdy

PREPARED FOR THE STATE OF CALIFORNIA DEPARTMENT OF TRANSPORTATION

Jal Birdy
PROJECT ENGINEER

BRIDGE NO. 34-0006 R
KILOMETER POST 12.8

CU 04251
EA 0120T1

DISREGARD PRINTS BEARING EARLIER REVISION DATES

REVISION DATES (PRELIMINARY STAGE ONLY): 11/15/10 12/13/10 4/8/11 1/14/11 10/24/11 6/7/12

SHEET 18 OF 20

Rev. Date: 5-18-98

ORIGINAL SCALE IN MILLIMETERS FOR REDUCED PLANS 0 10 20 30 40 50 60 70 80 90 100

FILE => 04-0120t1-34-006r-u-bikpfdt03.dwg

USERNAME => s124496 DATE PLOTTED => 13-JUL-2012 TIME PLOTTED => 16:02

DIST.	COUNTY	ROUTE	KILOMETER POST TOTAL PROJECT	SHEET NO.	TOTAL SHEETS
04	SF	80	12.6/13.9	664	821

Caltrans Metric

A. Ely 11-08-11
REGISTERED ENGINEER - CIVIL

2-21-12
PLANS APPROVAL DATE

REGISTERED PROFESSIONAL ENGINEER A.L. ELY No. 18880 Exp. 6-30-13 CIVIL STATE OF CALIFORNIA

The State of California or its officers or agents shall not be responsible for the accuracy or completeness of electronic copies of this plan sheet.

T.Y. LIN / MOFFATT & NICHOL
TWO HARRISON STREET
SAN FRANCISCO, CA 94105

Note: For details not shown see "Bike Path Fence Details No.2 & 3" sheets.

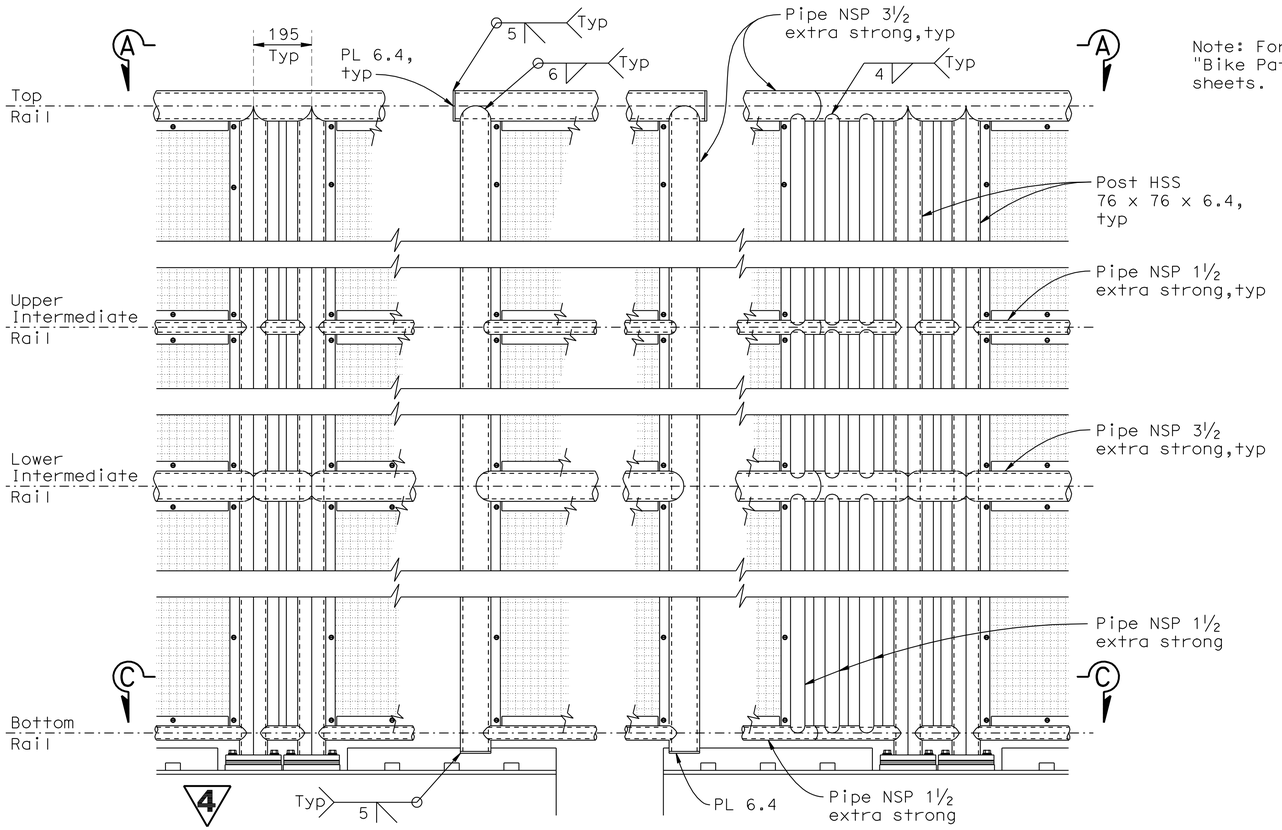

DETAIL B - ELEVATION TYPICAL FENCE EXPANSION JOINT

(For location see "Bike Path Fence Details No.1" sheet)

1:10

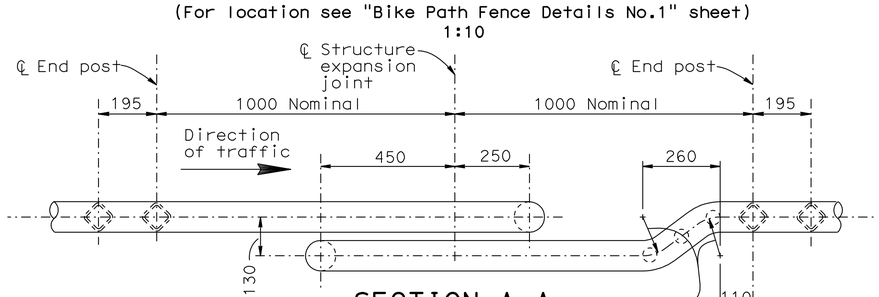

SECTION A-A

1:10

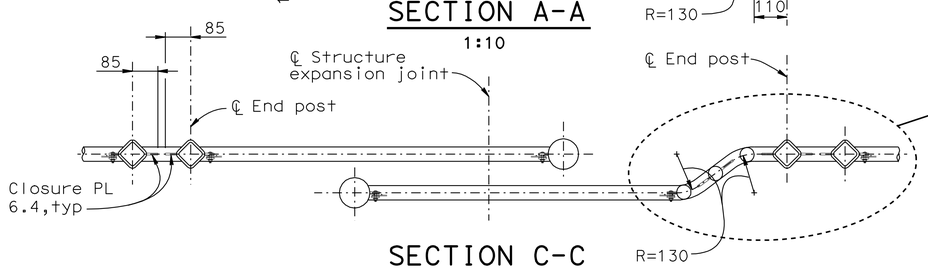

SECTION C-C

1:10

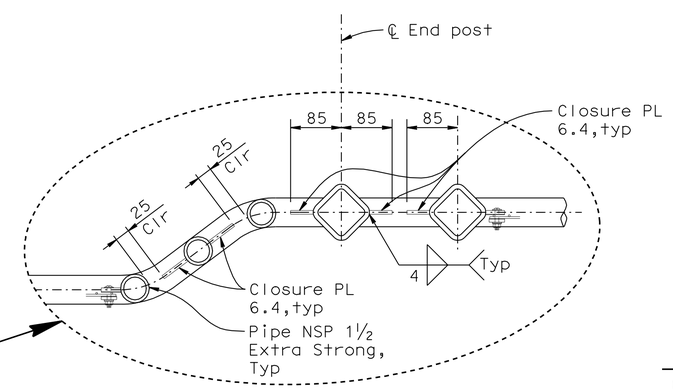

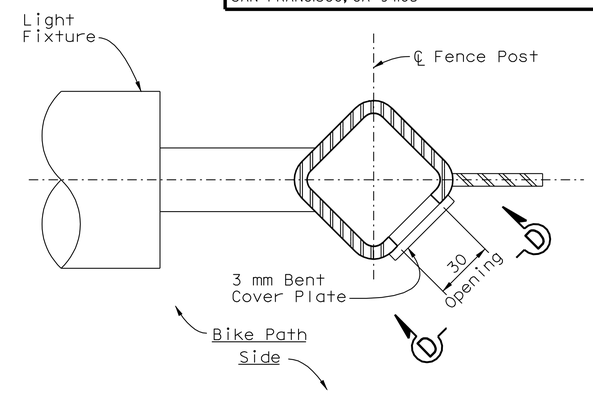

PLAN

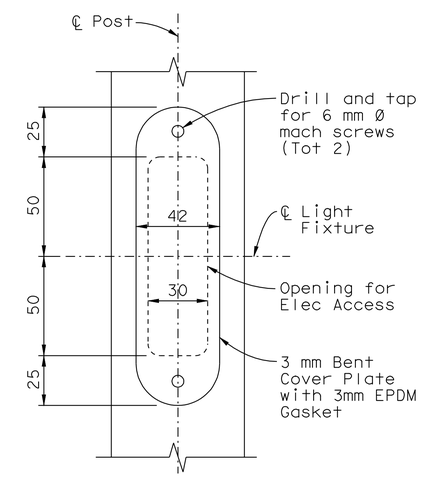

SECTION D-D

ELECTRICAL ACCESS OPENING AT BIKEPATH LIGHT FIXTURE

(Required at Posts on east side of Fence Dividers only)

1:1.5

4 REVISED PER ADDENDUM No. 4 DATED JULY 16, 2012

ALL DIMENSIONS ARE IN MILLIMETERS UNLESS OTHERWISE SHOWN

DESIGN OVERSIGHT
Francisco Carpio Jason Fan
JUAN F. CARPIO, JASON FAN
SIGN OFF DATE

Rev. Date: 5-18-98

	BY	CHECKED
DESIGN	Lee	Birdy
DETAILS	Samson	Birdy
QUANTITIES	Fellows	Birdy

ORIGINAL SCALE IN MILLIMETERS FOR REDUCED PLANS 0 10 20 30 40 50 60 70 80 90 100

PREPARED FOR THE STATE OF CALIFORNIA DEPARTMENT OF TRANSPORTATION

Jal Birdy
PROJECT ENGINEER

CU 04251
EA 0120T1

BRIDGE NO. 34-0006 R
KILOMETER POST 12.8

DISREGARD PRINTS BEARING EARLIER REVISION DATES

REVISION DATES (PRELIMINARY STAGE ONLY): 11/05/10 12/13/10 4/6/11 7/14/11 10/24/11 6/1/12

SHEET 19 OF 20

SAN FRANCISCO OAKLAND BAY BRIDGE
EAST SPAN SEISMIC SAFETY PROJECT

YBI EB TRANSITION STRUCTURE (MOD)

BIKE PATH FENCE DETAILS NO.4

FILE => 04-0120t1-34-006r-u-bikpfdt04.add

USERNAME => s124496 DATE PLOTTED => 13-JUL-2012 TIME PLOTTED => 16:02

DIST.	COUNTY	ROUTE	KILOMETER POST TOTAL PROJECT	SHEET NO.	TOTAL SHEETS
04	SF	80	12.6/13.9	701	821

Caltrans Metric

A.L. Ely 11-08-11
REGISTERED ENGINEER - CIVIL

2-21-12
PLANS APPROVAL DATE

REGISTERED PROFESSIONAL ENGINEER A.L. ELY No. 18880 Exp. 6-30-13 CIVIL STATE OF CALIFORNIA

The State of California or its officers or agents shall not be responsible for the accuracy or completeness of electronic copies of this plan sheet.

T.Y. LIN / MOFFATT & NICHOL
TWO HARRISON STREET
SAN FRANCISCO, CA 94105

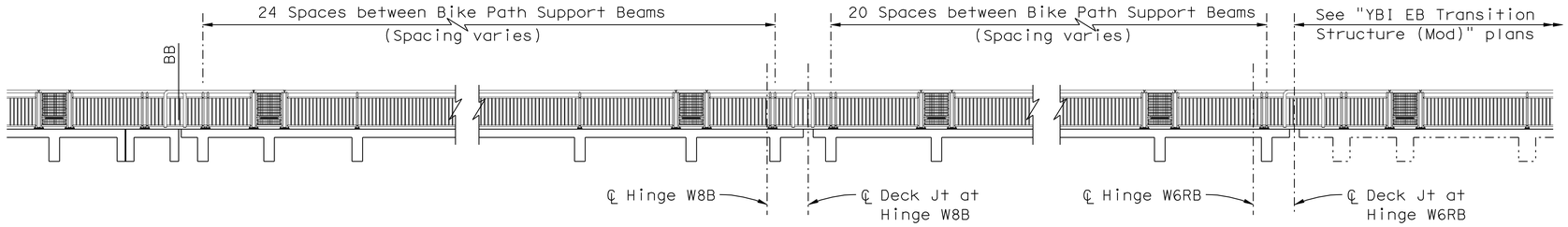

BIKE PATH RAILING LAYOUT

No Scale

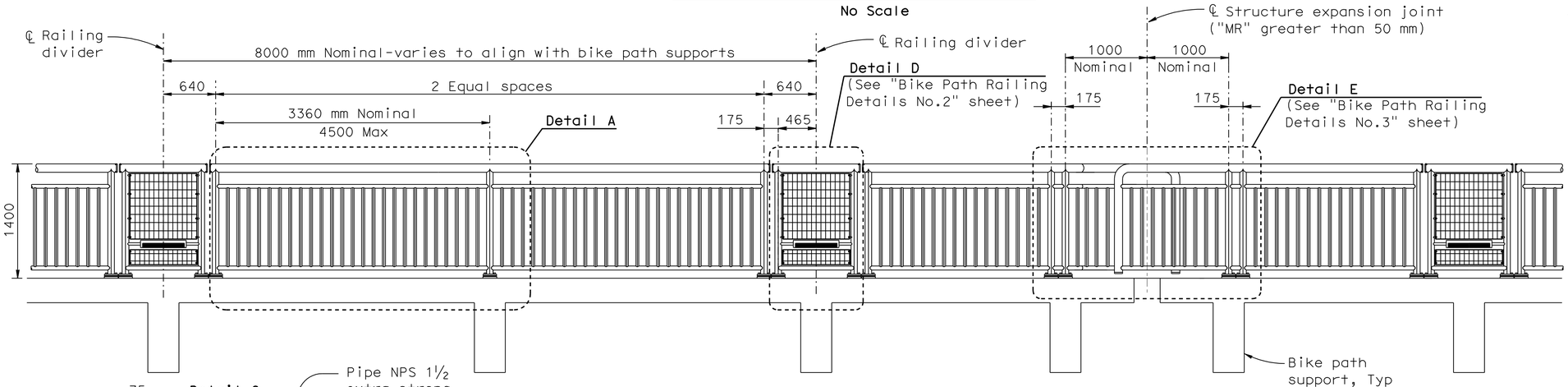

BIKE PATH RAILING-TYPICAL ELEVATION

1:30

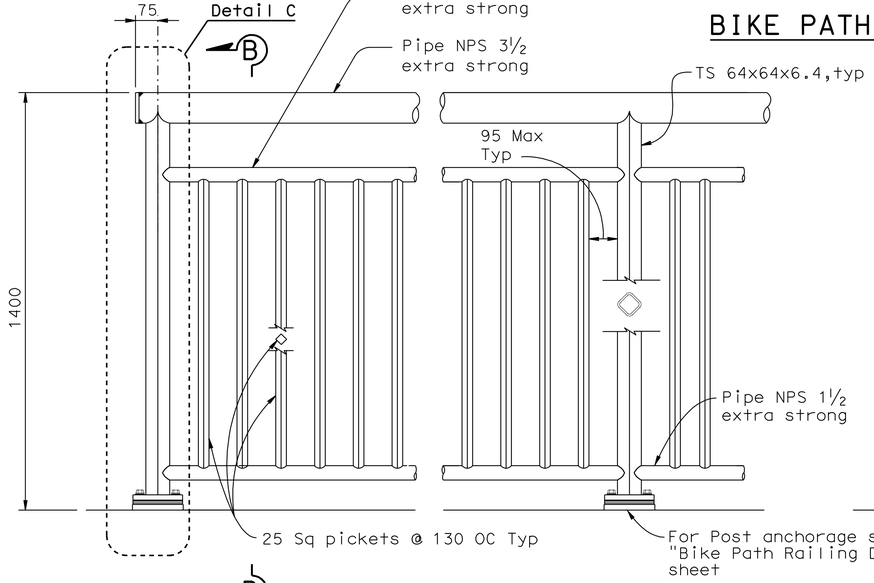

DETAIL A

1:10

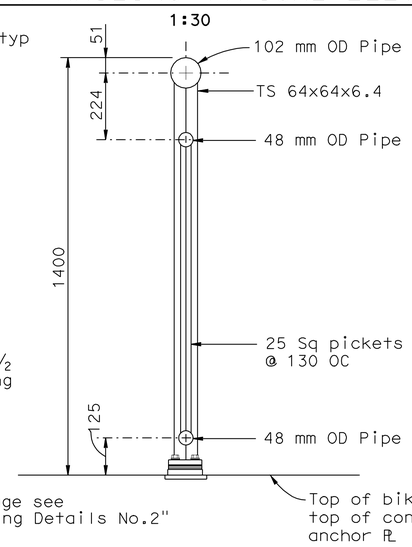

SECTION B-B

1:10

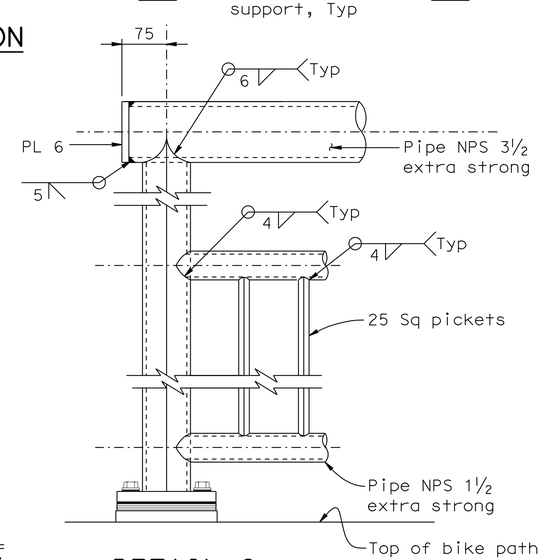

DETAIL C

1:5

NOTES:

1. All metal (except stainless steel) parts of railing assembly including grill shall be coated
2. Railing posts shall comform to ASTM A500 Grade C (Fy=345MPa).
3. Railing shall conform to vertical and horizontal alignment of bike path.
4. Posts and pickets shall be perpendicular to the profile grade of the bikepath and vertical to the cross-slope of the bikepath. Rails shall be parallel to top of bikepath. Railing grill vertical bars shall be parallel to railing posts and grill horizontal bars shall be parallel to rails.
5. Rails shall be shop bent or fabricated to fit horizontal curve when radius is less than 300 m.
6. All exposed welds shall be ground smooth.
7. Expansion joints shall be located in the railing panel spanning deck or wall joints, see "Bike Path Railing Details No.3" sheet.
8. Emergency gate access shall be provided thru the inside bike path railing (railing located nearest roadway) at intervals not exceeding 80 m.
9. Welding to stainless steel shall be in accordance with AWS D1.6-1999.
10. Shim stack beneath post base plate to be adjusted during installation as required to maintain railing alignment. Full width stainless steel shims shall be utilized, tapered as necessary to maintain post verticality.

4 **REVISED PER ADDENDUM No. 4 DATED JULY 16, 2012**

ALL DIMENSIONS ARE IN MILLIMETERS UNLESS OTHERWISE SHOWN

SAN FRANCISCO OAKLAND BAY BRIDGE
EAST SPAN SEISMIC SAFETY PROJECT

YBI EB ON-RAMP STRUCTURE (FINAL)

BIKE PATH RAILING DETAILS NO.1

DESIGN OVERSIGHT
Juan F. Carpio Jason Fan
JUAN F. CARPIO, JASON FAN
SIGN OFF DATE

	BY	CHECKED
DESIGN	Chou	Atiqullah
DETAILS	van Ryn/Zucchi/Mai	Chou
QUANTITIES	Chou	Liao

PREPARED FOR THE STATE OF CALIFORNIA DEPARTMENT OF TRANSPORTATION

Jal Birdy
PROJECT ENGINEER

BRIDGE NO. 34-0006 S
KILOMETER POST 12.8

CU 04251
EA 0120T1

Rev. Date: 5-18-98

ORIGINAL SCALE IN MILLIMETERS FOR REDUCED PLANS 0 10 20 30 40 50 60 70 80 90 100

DISREGARD PRINTS BEARING EARLIER REVISION DATES

REVISION DATES (PRELIMINARY STAGE ONLY): 8/8/11 1/24/11 10/24/11 6/1/12 3/28/02 5/28/02 2/14/03 7/3/06 11/13/10 12/13/10

SHEET 36 OF 61

FILE => 04-0120t1-34-0006s-u-bikpridt01.add

USERNAME => s124496 DATE PLOTTED => 13-JUL-2012 TIME PLOTTED => 16:02

DIST.	COUNTY	ROUTE	KILOMETER POST TOTAL PROJECT	SHEET NO.	TOTAL SHEETS
04	SF	80	12.6/13.9	702	821

Caltrans Metric

A.L. Ely 11-08-11
REGISTERED ENGINEER - CIVIL

2-21-12
PLANS APPROVAL DATE

REGISTERED PROFESSIONAL ENGINEER A.L. ELY No. 18880 Exp. 6-30-13 CIVIL STATE OF CALIFORNIA

The State of California or its officers or agents shall not be responsible for the accuracy or completeness of electronic copies of this plan sheet.

T.Y. LIN / MOFFATT & NICHOL
TWO HARRISON STREET
SAN FRANCISCO, CA 94105

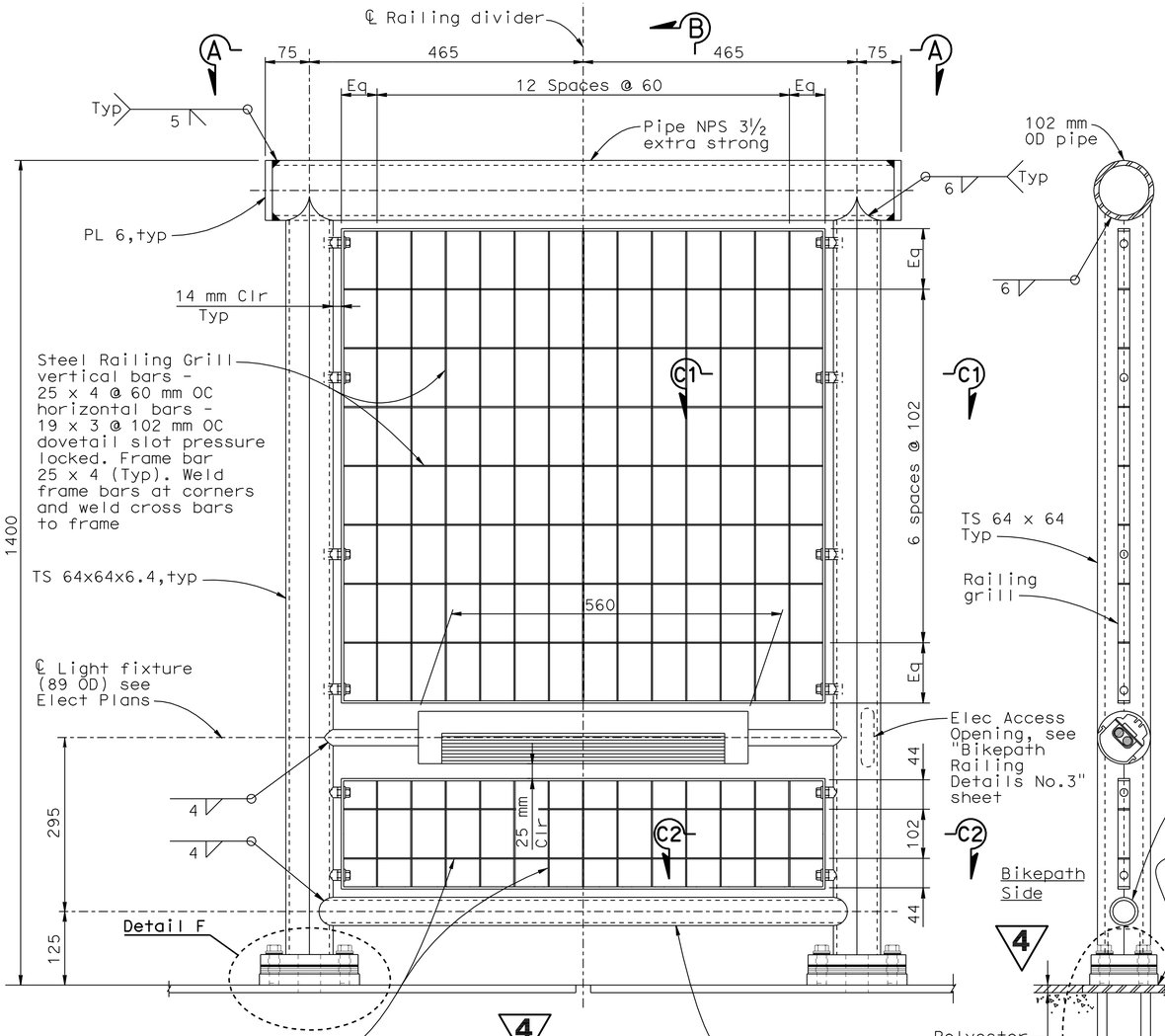

DETAIL D

Steel Railing Grill vertical bars - 25 x 4 @ 60 mm OC horizontal bars - 19 x 3 @ 102 mm OC dovetail slot pressure locked. Frame bar 25 x 4 (Typ). Weld frame bars at corners and weld cross bars to frame

SECTION B-B

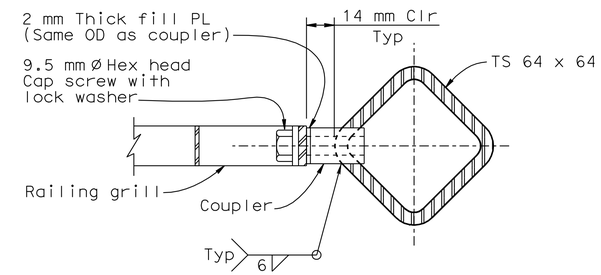

SECTION C1-C1
(Typ above light fixture)
1:1.5

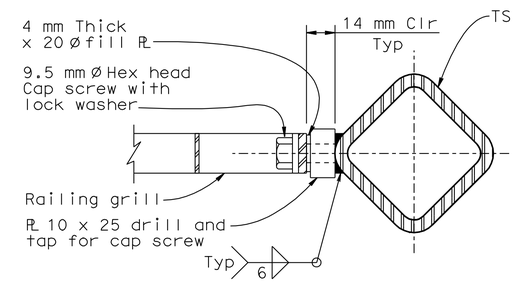

SECTION C2-C2
(Typ below light fixture)
1:1.5

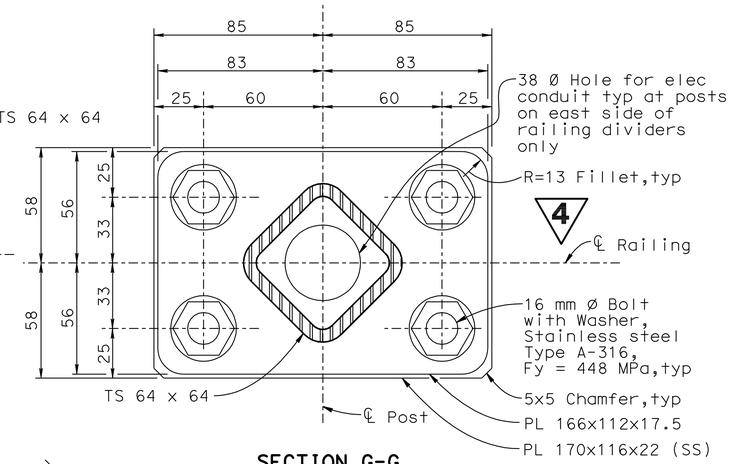

SECTION G-G

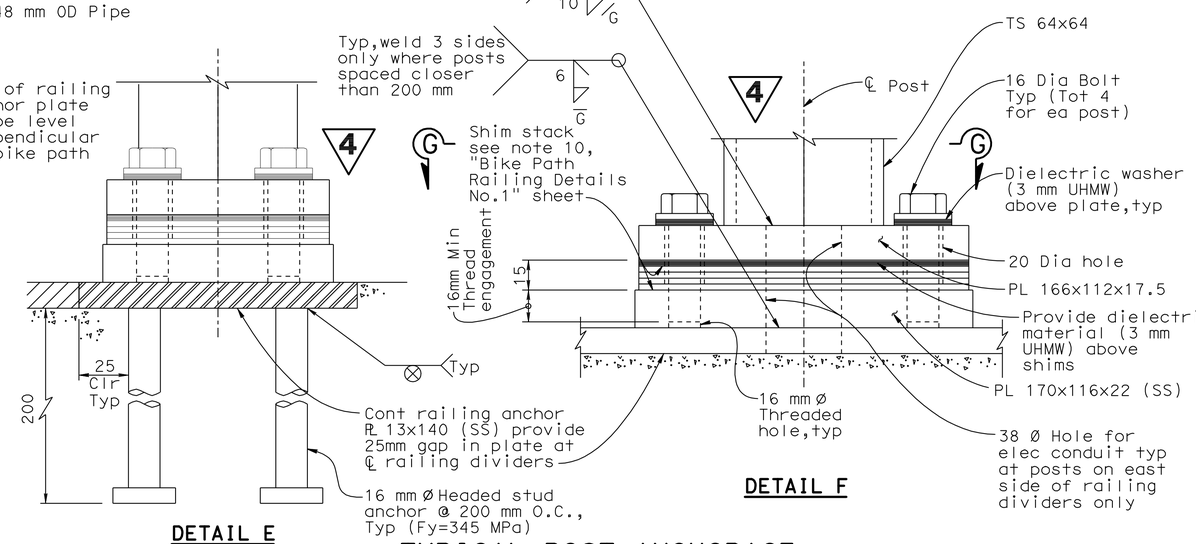

DETAIL E

DETAIL F

TYPICAL POST ANCHORAGE
1:1.5

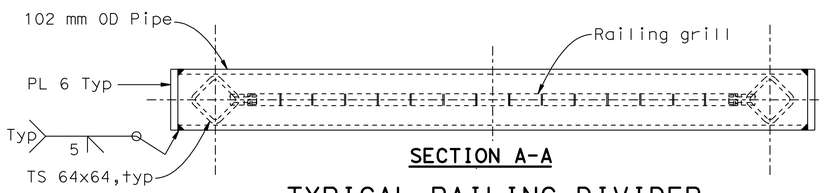

SECTION A-A

TYPICAL RAILING DIVIDER
1:5

4 REVISED PER ADDENDUM No. 4 DATED JULY 16, 2012

ALL DIMENSIONS ARE IN MILLIMETERS UNLESS OTHERWISE SHOWN

SAN FRANCISCO OAKLAND BAY BRIDGE
EAST SPAN SEISMIC SAFETY PROJECT

YBI EB ON-RAMP STRUCTURE (FINAL)

BIKE PATH RAILING DETAILS NO.2

DESIGN OVERSIGHT
Francisco Carpio Jason Fan
JUAN F. CARPIO, JASON FAN
SIGN OFF DATE

Rev. Date: 5-18-98

	BY	CHECKED
DESIGN	Chou	Atiqullah
DETAILS	van Ryn/Zucchi/Mai	Chou
QUANTITIES	Chou	Ligo

PREPARED FOR THE STATE OF CALIFORNIA DEPARTMENT OF TRANSPORTATION

Jal Birdy
PROJECT ENGINEER

BRIDGE NO. 34-0006 S
KILOMETER POST 12.8

CU 04251
EA 0120T1

ORIGINAL SCALE IN MILLIMETERS FOR REDUCED PLANS 0 10 20 30 40 50 60 70 80 90 100

DISREGARD PRINTS BEARING EARLIER REVISION DATES

REVISION DATES (PRELIMINARY STAGE ONLY) 3/8/11 7/14/11 10/24/11 6/1/12 3/28/02 5/30/02 2/14/03 7/3/06 11/28/10 12/28/10

SHEET 37 OF 61

FILE => 04-0120t1-34-0006s-u-bikpridt02.add

USERNAME => s124496 DATE PLOTTED => 13-JUL-2012 TIME PLOTTED => 16:02

DIST.	COUNTY	ROUTE	KILOMETER POST TOTAL PROJECT	SHEET NO.	TOTAL SHEETS
04	SF	80	12.6/13.9	703	821

Caltrans Metric

A. L. Ely 11-08-11
REGISTERED ENGINEER - CIVIL

2-21-12
PLANS APPROVAL DATE

REGISTERED PROFESSIONAL ENGINEER A.L. ELY No. 18880 Exp. 6-30-13 CIVIL STATE OF CALIFORNIA

The State of California or its officers or agents shall not be responsible for the accuracy or completeness of electronic copies of this plan sheet.

T.Y. LIN / MOFFATT & NICHOL
TWO HARRISON STREET
SAN FRANCISCO, CA 94105

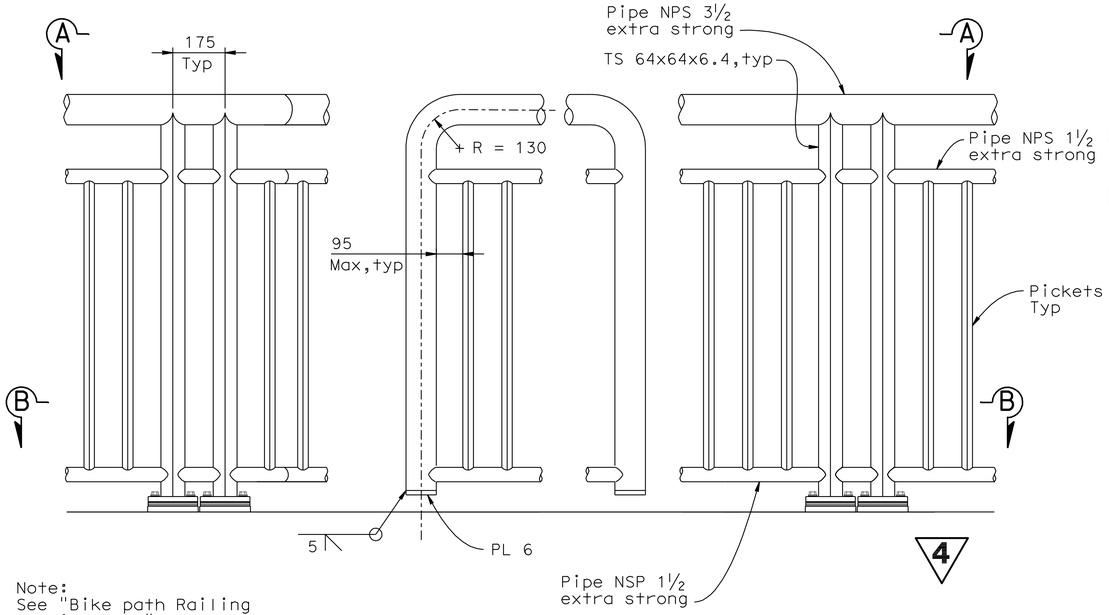

Note:
See "Bike path Railing Details No.1" sheet for additional details.

DETAIL E

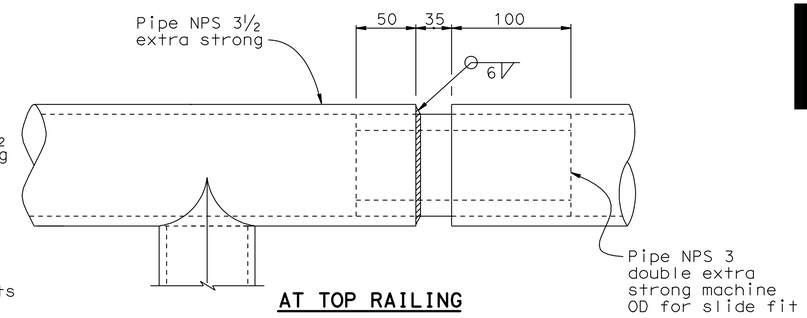

AT TOP RAILING

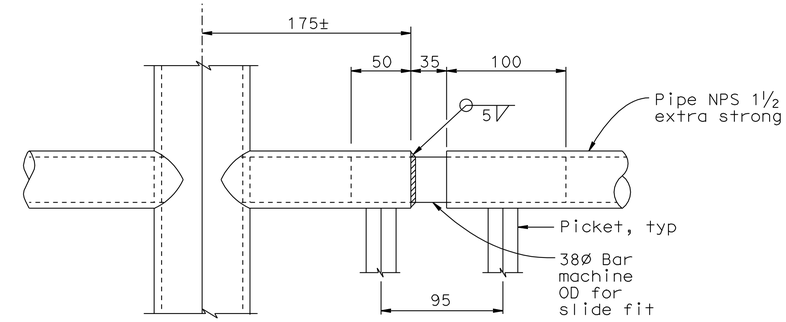

AT INTERMEDIATE AND BOTTOM RAILING

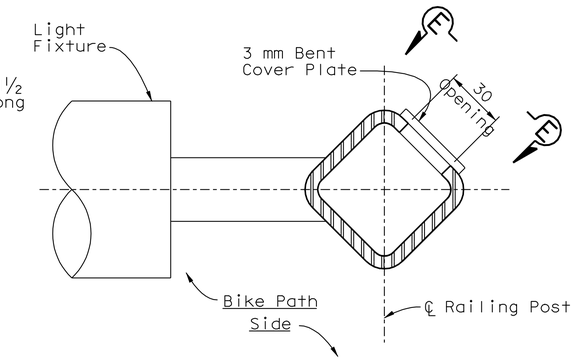

PLAN

RAILING EXPANSION JOINT DETAILS MR ≤ 50

"For use at structure expansion joints with "MR" equal to or less than 50 mm)
1:2.5

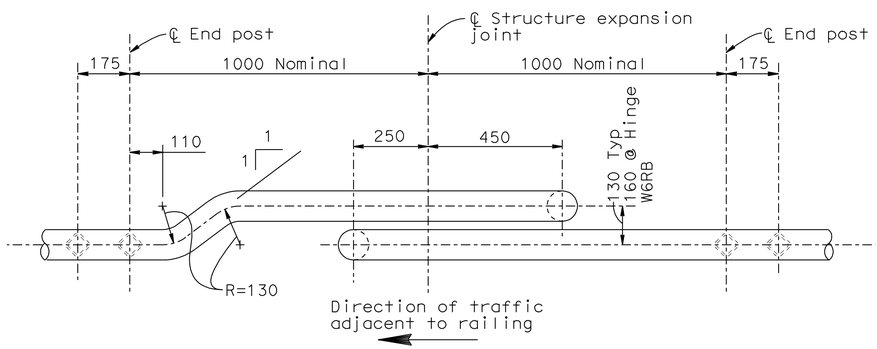

SECTION A-A

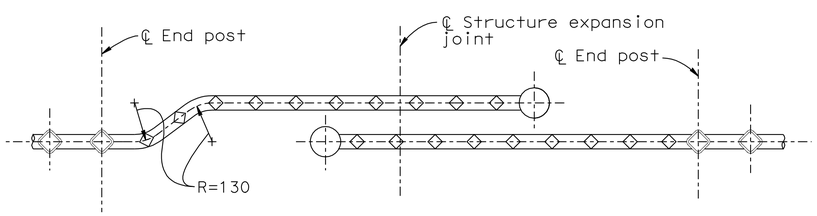

SECTION B-B

RAILING EXPANSION JOINT DETAILS MR > 50

(For use at structure expansion joints with "MR" greater than 50 mm)
1:10

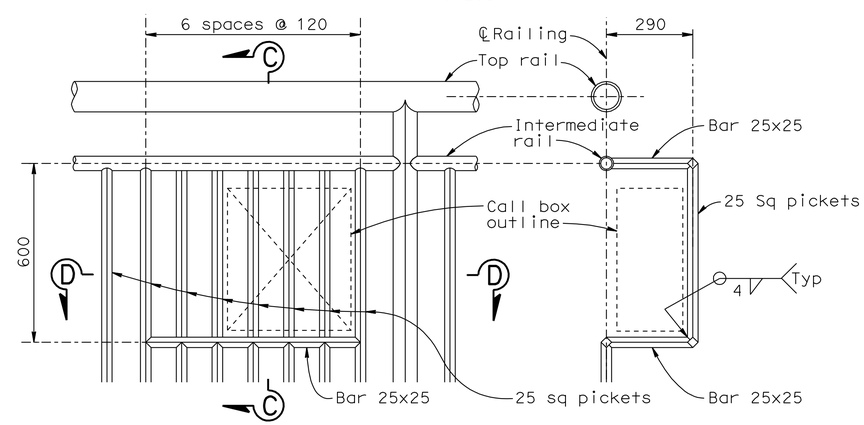

ELEVATION

SECTION C-C

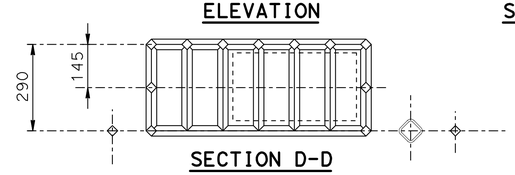

SECTION D-D

CALL BOX MOUNTING DETAIL

1:10

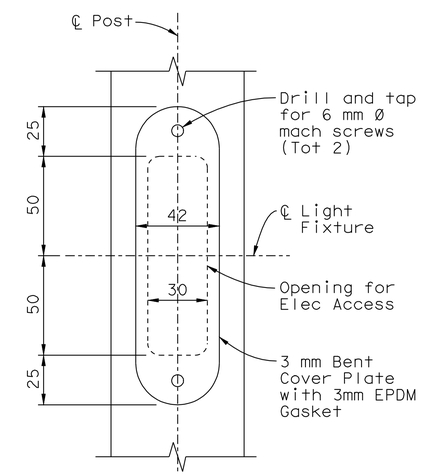

SECTION E-E

ELECTRICAL ACCESS OPENING AT BIKEPATH LIGHT FIXTURE

(Required at Posts on east side of Railing Dividers only)
1:1.5

ALL DIMENSIONS ARE IN MILLIMETERS UNLESS OTHERWISE SHOWN

4 REVISED PER ADDENDUM No. 4 DATED JULY 16, 2012

DESIGN OVERSIGHT
Juan F. Carpio Jason Fan
JUAN F. CARPIO, JASON FAN
SIGN OFF DATE

Rev. Date: 5-18-98

	BY	CHECKED
DESIGN	Chou	Atiqullah
DETAILS	van Ryn/Zucchi/Mai	Chou
QUANTITIES	Chou	Liao

PREPARED FOR THE STATE OF CALIFORNIA DEPARTMENT OF TRANSPORTATION

Jal Birdy
PROJECT ENGINEER

CU 04251
EA 0120T1

BRIDGE NO. 34-0006 S
KILOMETER POST 12.8

SAN FRANCISCO OAKLAND BAY BRIDGE
EAST SPAN SEISMIC SAFETY PROJECT

YBI EB ON-RAMP STRUCTURE (FINAL)

BIKE PATH RAILING DETAILS NO.3

ORIGINAL SCALE IN MILLIMETERS FOR REDUCED PLANS 0 10 20 30 40 50 60 70 80 90 100

DISREGARD PRINTS BEARING EARLIER REVISION DATES

REVISION DATES (PRELIMINARY STAGE ONLY): 5/8/11 7/14/11 10/24/11 6/1/12 3/28/02 5/30/02 2/14/03 7/3/06 11/19/10 12/13/10

SHEET 38 OF 61

FILE => 04-0120t1-34-0006s-u-bikpridt03.add

USERNAME => s124496 DATE PLOTTED => 13-JUL-2012 TIME PLOTTED => 16:02

DIST.	COUNTY	ROUTE	KILOMETER POST TOTAL PROJECT	SHEET NO.	TOTAL SHEETS
04	SF	80	12.6/13.9	704	821

Caltrans Metric

A. L. Ely 11-08-11
REGISTERED ENGINEER - CIVIL

2-21-12
PLANS APPROVAL DATE

REGISTERED PROFESSIONAL ENGINEER A.L. ELY No. 18880 Exp. 6-30-13 CIVIL STATE OF CALIFORNIA

The State of California or its officers or agents shall not be responsible for the accuracy or completeness of electronic copies of this plan sheet.

T.Y. LIN / MOFFATT & NICHOL
TWO HARRISON STREET
SAN FRANCISCO, CA 94105

4 REVISED PER ADDENDUM No. 4 DATED JULY 16, 2012

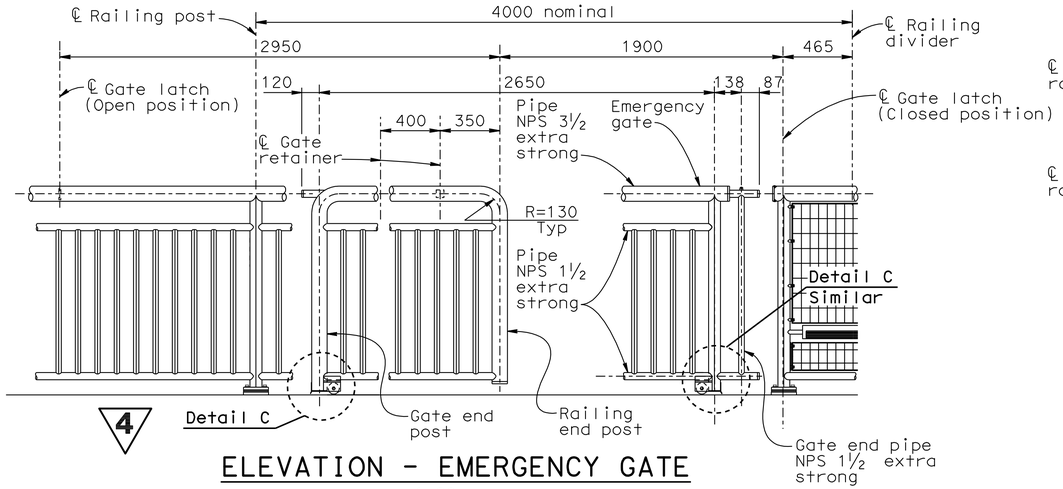

4

ELEVATION - EMERGENCY GATE
1:20

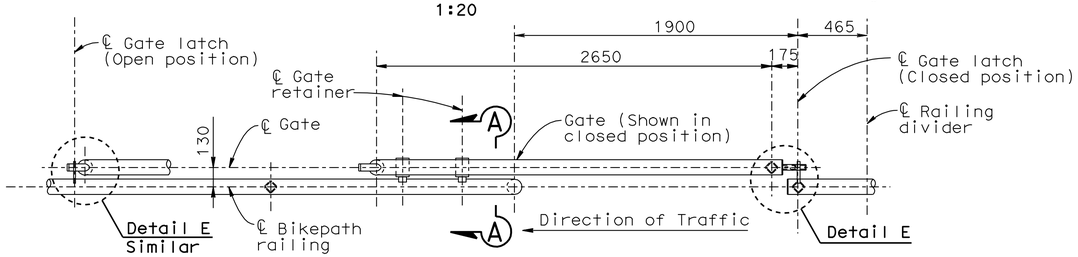

PLAN AT TOP RAIL
1:20

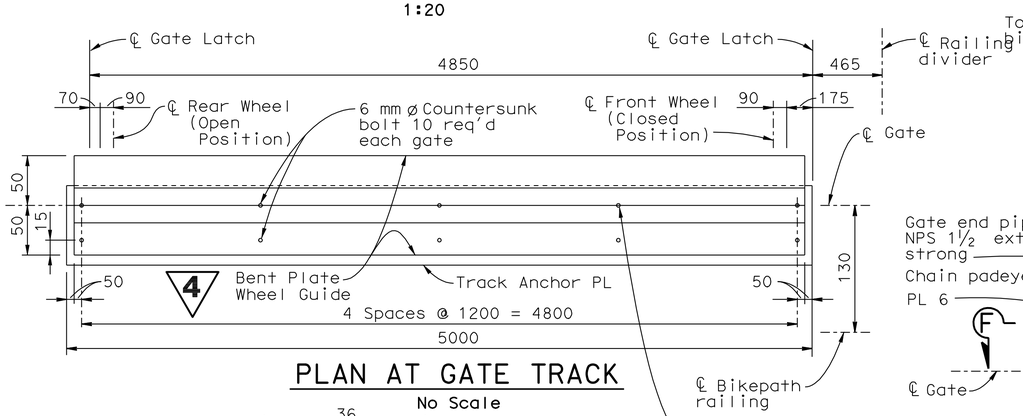

4

PLAN AT GATE TRACK
No Scale

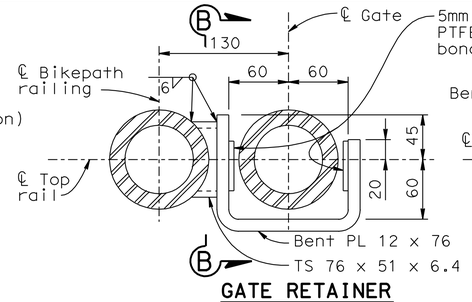

GATE RETAINER
SECTION A-A
1:3

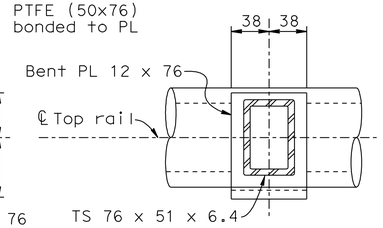

SECTION B-B
1:3

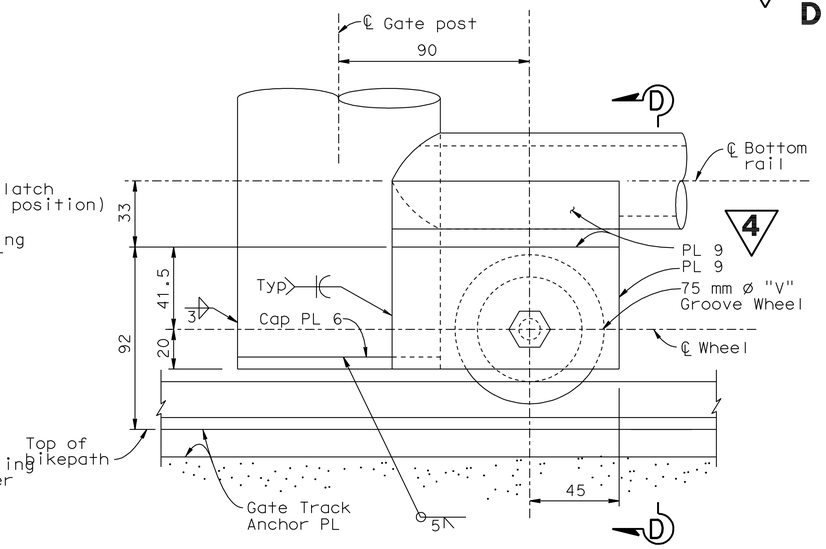

DETAIL C
1:1.5

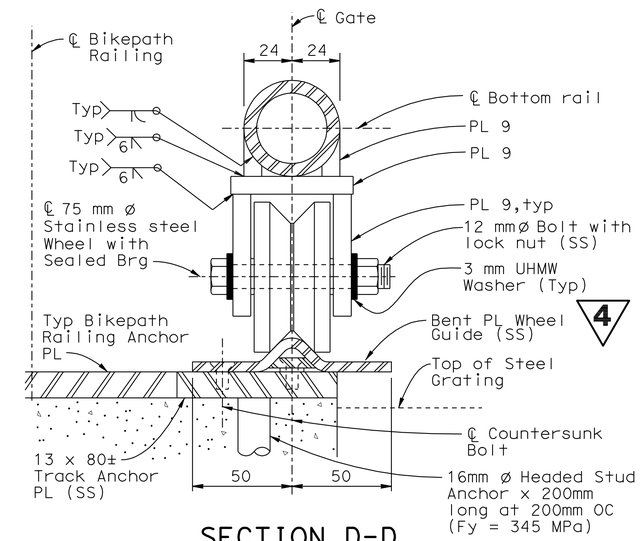

4

SECTION D-D
1:1.5

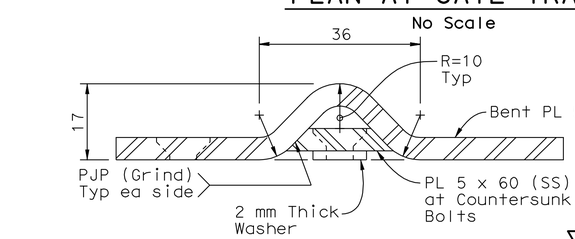

BENT PLATE WHEEL GUIDE
No Scale

4

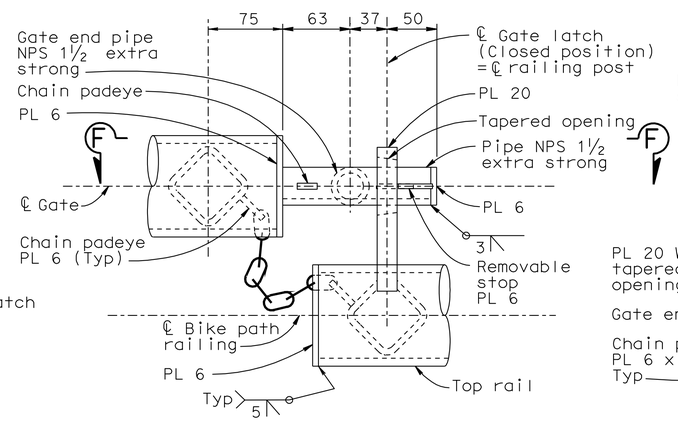

DETAIL E
1:3

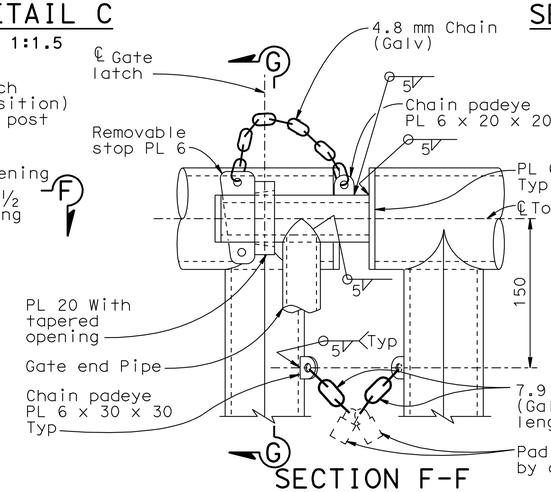

SECTION F-F
1:3

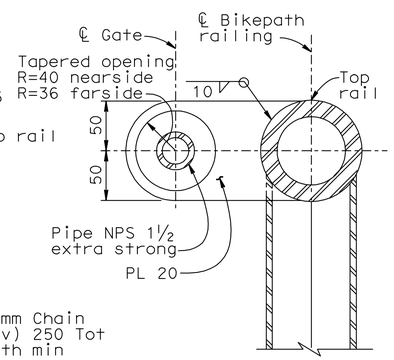

SECTION G-G
1:3

ALL DIMENSIONS ARE IN MILLIMETERS UNLESS OTHERWISE SHOWN

SAN FRANCISCO OAKLAND BAY BRIDGE
EAST SPAN SEISMIC SAFETY PROJECT

YBI EB ON-RAMP STRUCTURE (FINAL)

BIKE PATH RAILING DETAILS NO.4

DESIGN OVERSIGHT
Juan F. Carpio Jason Fan
JUAN F. CARPIO, JASON FAN
SIGN OFF DATE

	BY	CHECKED
DESIGN	Chou	Atiqullah
DETAILS	van Ryn/Zucchi/Mai	Chou
QUANTITIES	Chou	Liao

PREPARED FOR THE STATE OF CALIFORNIA DEPARTMENT OF TRANSPORTATION

Jal Birdy
PROJECT ENGINEER

BRIDGE NO. 34-0006 S
KILOMETER POST 12.8

CU 04251
EA 0120T1

Rev. Date: 5-18-98

ORIGINAL SCALE IN MILLIMETERS FOR REDUCED PLANS 0 10 20 30 40 50 60 70 80 90 100

DISREGARD PRINTS BEARING EARLIER REVISION DATES

REVISION DATES (PRELIMINARY STAGE ONLY): 8/8/11 7/14/11 10/24/11 6/1/12 3/28/02 5/30/02 2/14/03 7/3/06 11/25/10 12/28/10

SHEET 39 OF 61

FILE => 04-0120t1-34-0006s-u-bikprldt04.dds

USERNAME => s124496 DATE PLOTTED => 13-JUL-2012 TIME PLOTTED => 16:02

DIST.	COUNTY	ROUTE	KILOMETER POST TOTAL PROJECT	SHEET NO.	TOTAL SHEETS
04	SF	80	12.6/13.9	705	821

Caltrans Metric

A. L. Ely 11-08-11
REGISTERED ENGINEER - CIVIL

2-21-12
PLANS APPROVAL DATE

REGISTERED PROFESSIONAL ENGINEER A.L. ELY No. 18880 Exp. 6-30-13 CIVIL STATE OF CALIFORNIA

The State of California or its officers or agents shall not be responsible for the accuracy or completeness of electronic copies of this plan sheet.

T.Y. LIN / MOFFATT & NICHOL
TWO HARRISON STREET
SAN FRANCISCO, CA 94105

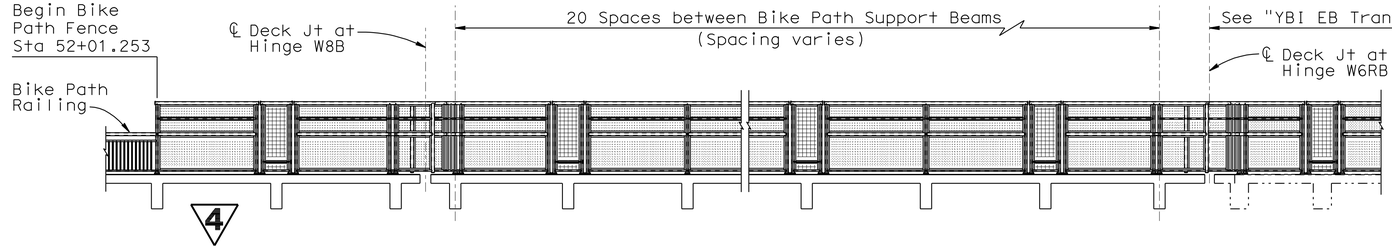

BIKE PATH FENCE LAYOUT (REFLECTED)

No Scale

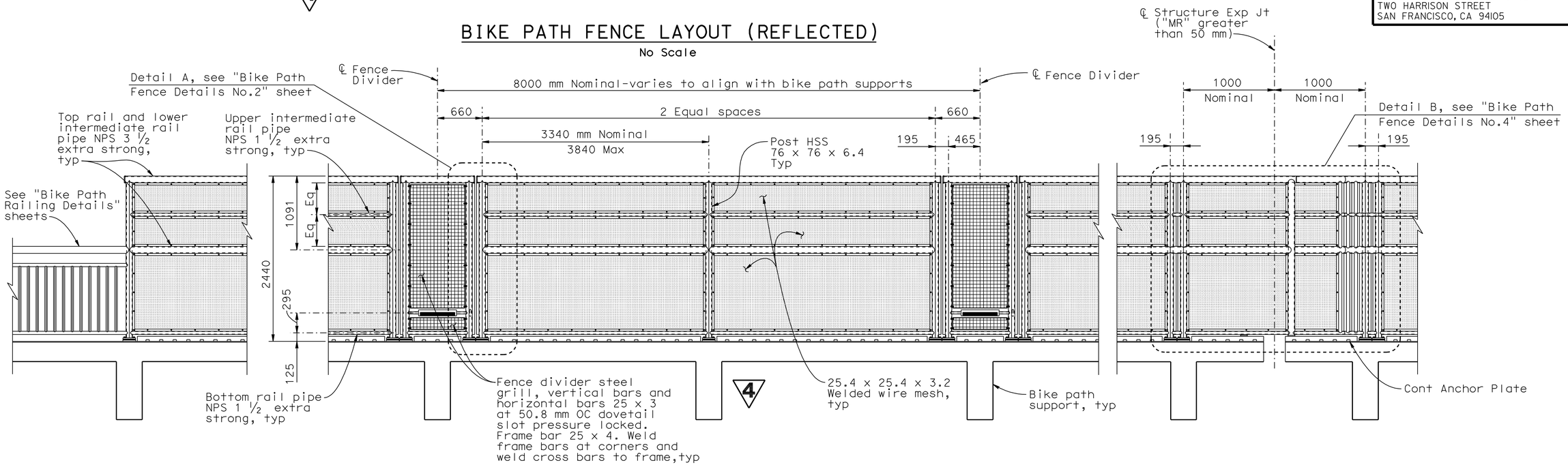

BIKE PATH FENCE - TYPICAL ELEVATION (REFLECTED)

1:30

NOTES:

1. All metal (except stainless steel) parts of fence assembly shall be painted. Stainless steel not to be painted unless otherwise noted.
2. Fence posts shall comform to ASTM A500 Grade C (Fy=345MPa).
3. Fence shall conform to vertical and horizontal alignment of bike path.
4. Posts shall be perpendicular to the profile grade of the bikepath and vertical to the cross-slope of the bikepath. Rails shall be parallel to top of bikepath.
5. Rails shall be shop bent or fabricated to fit horizontal curve when radius is less than 300 m.
6. All exposed welds shall be ground smooth.
7. Expansion joints shall be located in the fence panel spanning deck or wall joints, see "Bike Path Fence Details No.4" sheet.
8. Welding to stainless steel shall be in accordance with AWS D1.6-1999.
9. Shim stack beneath post base plate to be adjusted during installation as required to maintain fence alignment. Full width stainless steel shims shall be utilized, tapered as necessary to maintain post verticality. 4

4 **REVISED PER ADDENDUM No. 4 DATED JULY 16, 2012**

ALL DIMENSIONS ARE IN MILLIMETERS UNLESS OTHERWISE SHOWN

SAN FRANCISCO OAKLAND BAY BRIDGE
EAST SPAN SEISMIC SAFETY PROJECT

YBI EB ON-RAMP STRUCTURE (FINAL)

BIKE PATH FENCE DETAILS NO.1

DESIGN OVERSIGHT
Juan F. Carpio, Jason Fan
JUAN F. CARPIO, JASON FAN
SIGN OFF DATE

	BY	CHECKED
DESIGN	Lee	Birdy
DETAILS	Samson	Birdy
QUANTITIES	Lee	Birdy

PREPARED FOR THE STATE OF CALIFORNIA DEPARTMENT OF TRANSPORTATION

Jal Birdy
PROJECT ENGINEER

BRIDGE NO. 34-0006 S
KILOMETER POST 12.8

Rev. Date: 5-18-98

ORIGINAL SCALE IN MILLIMETERS FOR REDUCED PLANS 0 10 20 30 40 50 60 70 80 90 100

CU 04251
EA 0120T1

DISREGARD PRINTS BEARING EARLIER REVISION DATES

REVISION DATES (PRELIMINARY STAGE ONLY) 11/05/10 12/05/10 4/04/11 7/14/11 10/24/11 6/1/12

SHEET 40 OF 61

FILE => 04-0120t1-34-0006s-u-bikpfdt01.add

USERNAME => s124496 DATE PLOTTED => 13-JUL-2012 TIME PLOTTED => 16:02

DIST.	COUNTY	ROUTE	KILOMETER POST TOTAL PROJECT	SHEET NO.	TOTAL SHEETS
04	SF	80	12.6/13.9	706	821

Caltrans Metric

A. L. Ely 11-08-11
REGISTERED ENGINEER - CIVIL

2-21-12
PLANS APPROVAL DATE

REGISTERED PROFESSIONAL ENGINEER A.L. ELY No. 18880 Exp. 6-30-13 CIVIL STATE OF CALIFORNIA

The State of California or its officers or agents shall not be responsible for the accuracy or completeness of electronic copies of this plan sheet.

T.Y. LIN / MOFFATT & NICHOL
TWO HARRISON STREET
SAN FRANCISCO, CA 94105

REVISED PER ADDENDUM No. 4 DATED JULY 16, 2012

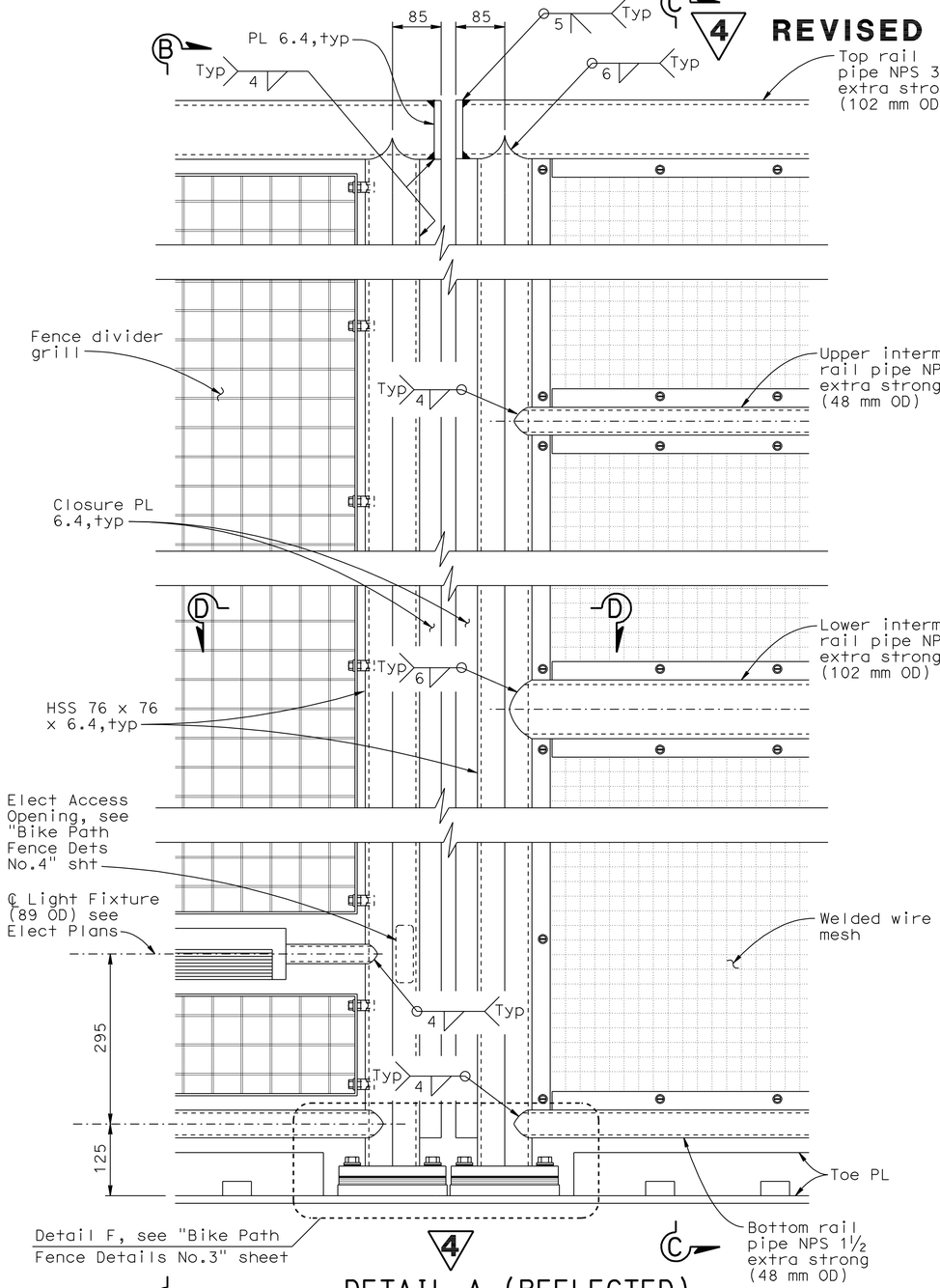

DETAIL A (REFLECTED)

(For location see "Bike Path Fence Details No.1" sheet)
1:5

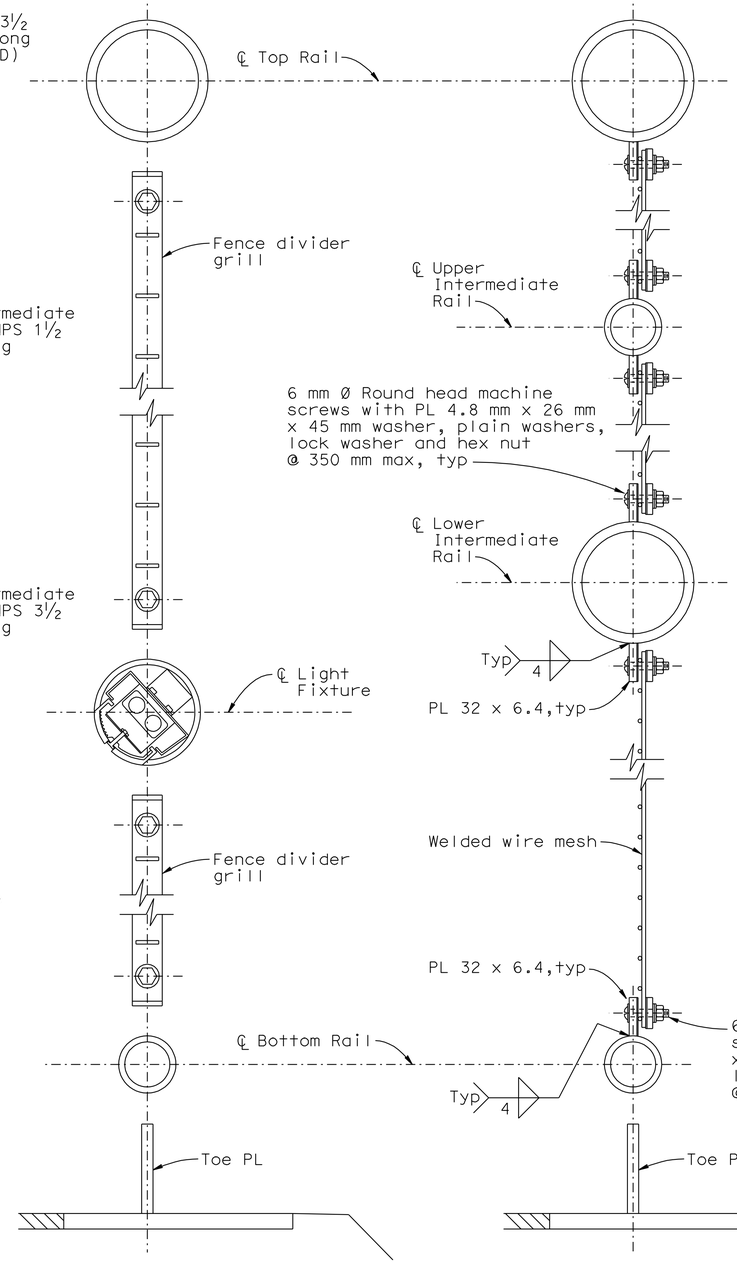

SECTION B-B

1:2.5

SECTION C-C

1:2.5

ALL DIMENSIONS ARE IN MILLIMETERS UNLESS OTHERWISE SHOWN

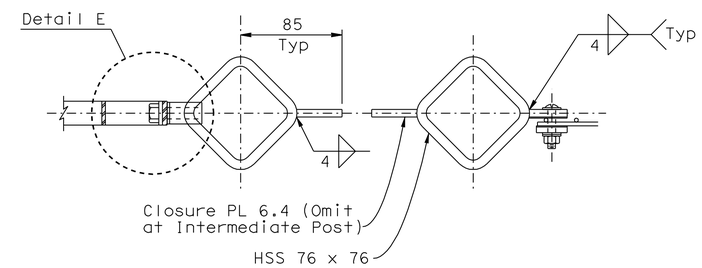

SECTION D-D

1:2.5

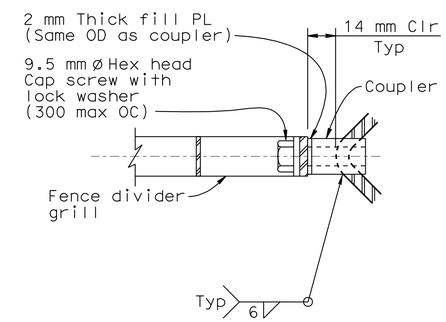

DETAIL E

1:1.5

DESIGN OVERSIGHT			
Juan F. Carpio Jason Fan	DESIGN	BY Lee	CHECKED Birdy
JUAN F. CARPIO, JASON FAN	DETAILS	BY Samson	CHECKED Birdy
SIGN OFF DATE	QUANTITIES	BY Lee	CHECKED Birdy

Rev. Date: 5-18-98

ORIGINAL SCALE IN MILLIMETERS FOR REDUCED PLANS 0 10 20 30 40 50 60 70 80 90 100

PREPARED FOR THE STATE OF CALIFORNIA DEPARTMENT OF TRANSPORTATION

Jal Birdy
PROJECT ENGINEER

CU 04251
EA 0120T1

BRIDGE NO. 34-0006 S
KILOMETER POST 12.8

DISREGARD PRINTS BEARING EARLIER REVISION DATES

REVISION DATES (PRELIMINARY STAGE ONLY): 11/05/10 12/05/10 4/04/11 7/14/11 10/24/11 6/1/12

SHEET 41 OF 61

SAN FRANCISCO OAKLAND BAY BRIDGE
EAST SPAN SEISMIC SAFETY PROJECT

YBI EB ON-RAMP STRUCTURE (FINAL)

BIKE PATH FENCE DETAILS NO.2

FILE => 04-0120t1-34-0006s-u-bikpfdt02.add

USERNAME => s124496 DATE PLOTTED => 13-JUL-2012 TIME PLOTTED => 16:02

DIST.	COUNTY	ROUTE	KILOMETER POST TOTAL PROJECT	SHEET NO.	TOTAL SHEETS
04	SF	80	12.6/13.9	707	821

Caltrans Metric

A. Ely 11-08-11
REGISTERED ENGINEER - CIVIL

2-21-12
PLANS APPROVAL DATE

REGISTERED PROFESSIONAL ENGINEER A.L. ELY No. 18880 Exp. 6-30-13 CIVIL STATE OF CALIFORNIA

The State of California or its officers or agents shall not be responsible for the accuracy or completeness of electronic copies of this plan sheet.

T.Y. LIN / MOFFATT & NICHOL
TWO HARRISON STREET
SAN FRANCISCO, CA 94105

4

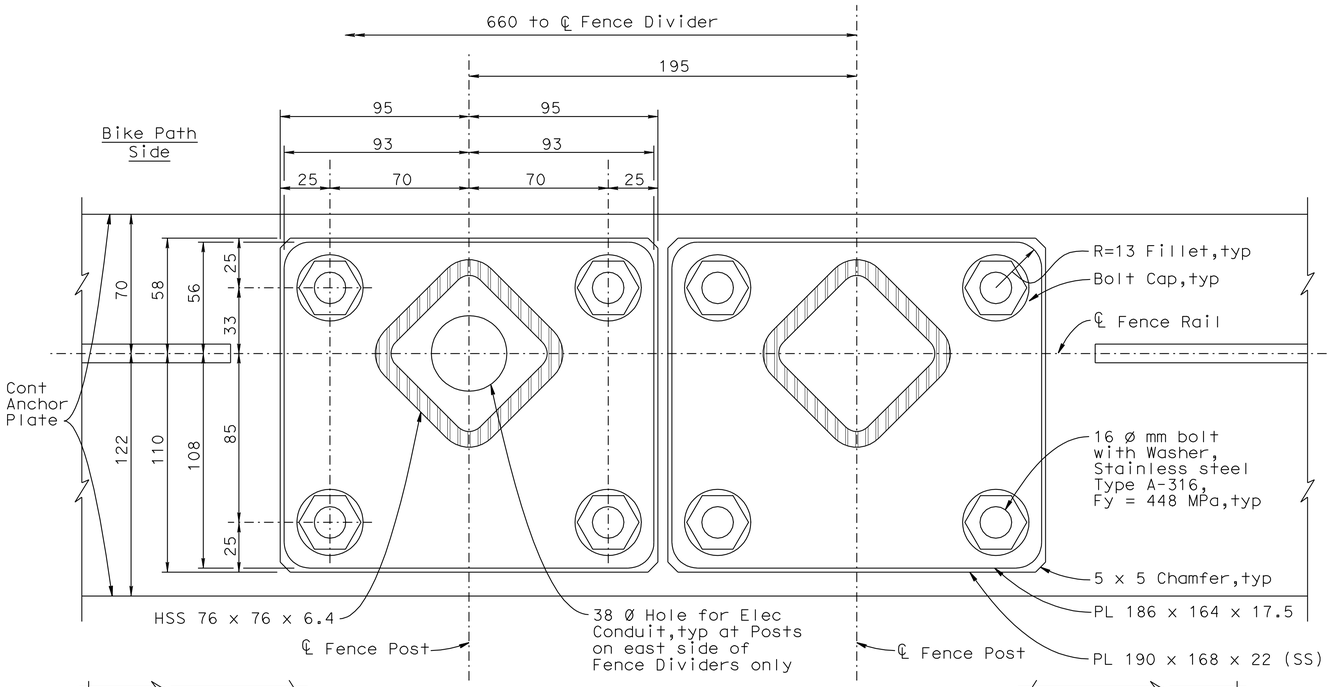

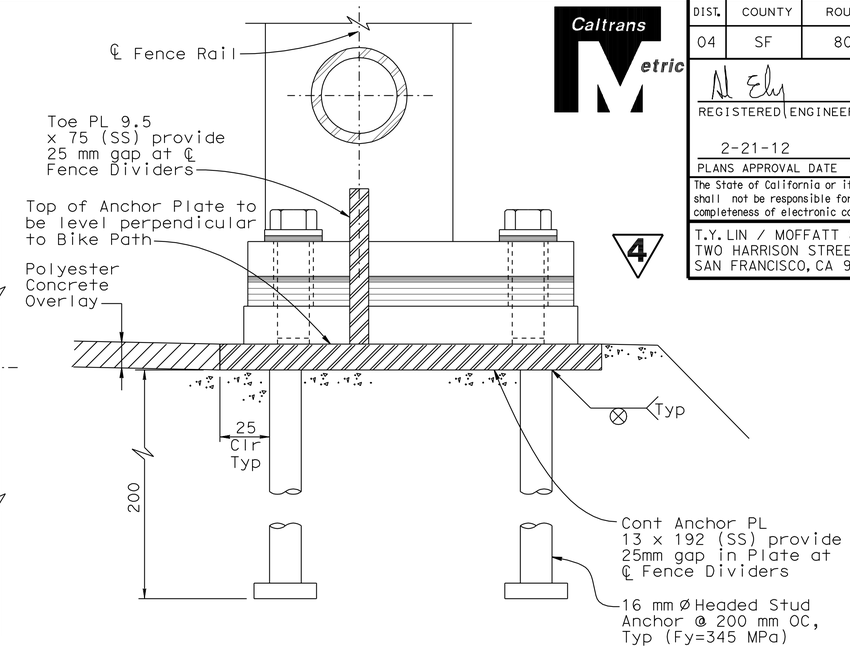

SECTION B-B
1:1.5

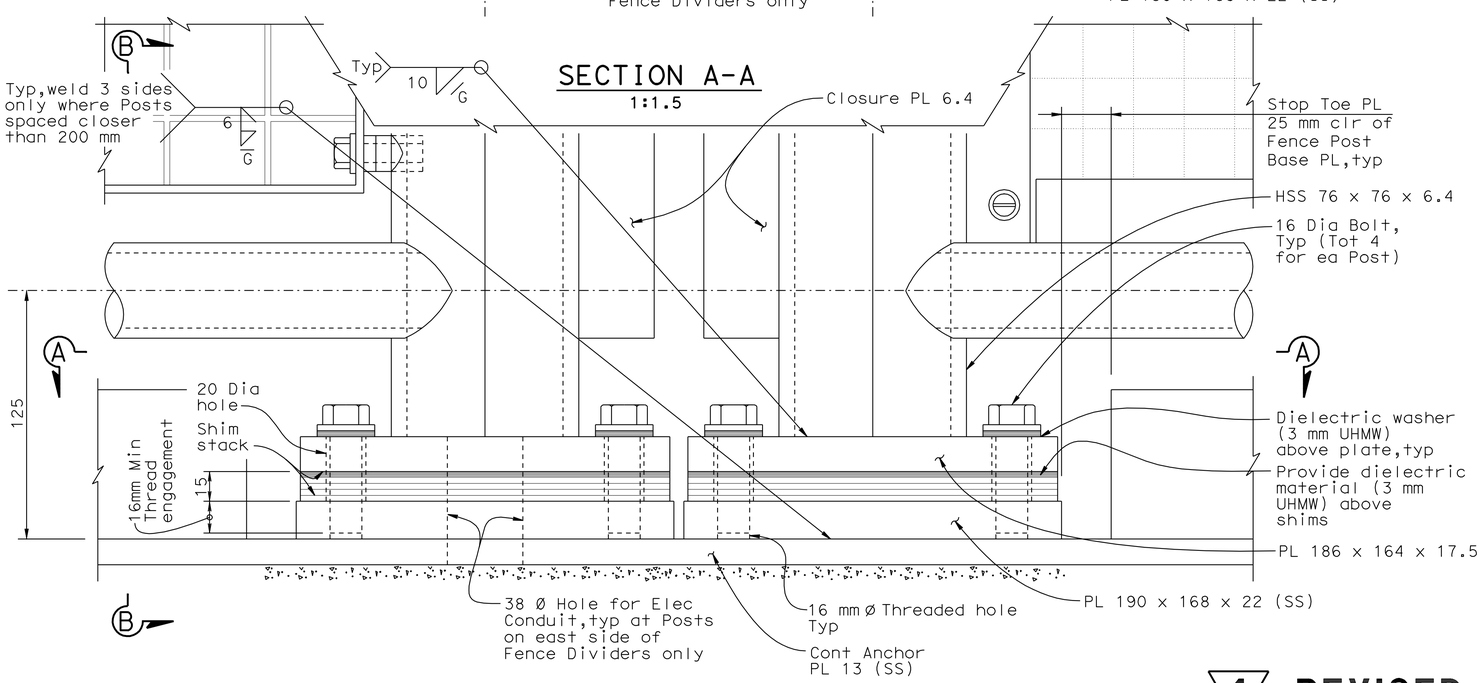

SECTION A-A
1:1.5

DETAIL F - TYPICAL FENCE POST ANCHORAGE
(Anchorage at Fence Divider shown, similar at Intermediate Post and Fence Exp Jt)
1:1.5

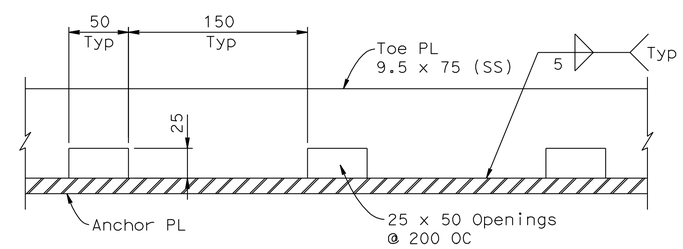

Note: Toe plates shall be painted to match typical railing.

TOE PLATE PARTIAL ELEVATION
No Scale

Note: For location of Detail F, see "Bike Path Fence Details No.2" sheet.

4 **REVISED PER ADDENDUM No. 4 DATED JULY 16, 2012**

ALL DIMENSIONS ARE IN MILLIMETERS UNLESS OTHERWISE SHOWN

SAN FRANCISCO OAKLAND BAY BRIDGE
EAST SPAN SEISMIC SAFETY PROJECT

YBI EB ON-RAMP STRUCTURE (FINAL)

BIKE PATH FENCE DETAILS NO.3

DESIGN OVERSIGHT
JUAN F. CARPIO, JASON FAN
SIGN OFF DATE

Rev. Date: 5-18-98

	BY	CHECKED
DESIGN	Lee	Birdy
DETAILS	Samson	Birdy
QUANTITIES	Lee	Birdy

PREPARED FOR THE STATE OF CALIFORNIA DEPARTMENT OF TRANSPORTATION

Jal Birdy
PROJECT ENGINEER

BRIDGE NO. 34-0006 S
KILOMETER POST 12.8

ORIGINAL SCALE IN MILLIMETERS FOR REDUCED PLANS 0 10 20 30 40 50 60 70 80 90 100

CU 04251
EA 0120T1

DISREGARD PRINTS BEARING EARLIER REVISION DATES
REVISION DATES (PRELIMINARY STAGE ONLY) 11/15/10 12/15/10 4/8/11 7/14/11 10/24/11 6/7/12

SHEET 42 OF 61

FILE => 04-0120t1-34-0006s-u-bikpfdt03.add

USERNAME => s124196 DATE PLOTTED => 13-JUL-2012 TIME PLOTTED => 16:02

DIST.	COUNTY	ROUTE	KILOMETER POST TOTAL PROJECT	SHEET NO.	TOTAL SHEETS
04	SF	80	12.6/13.9	708	821

Caltrans Metric

A. L. Ely 11-08-11
REGISTERED ENGINEER - CIVIL

2-21-12
PLANS APPROVAL DATE

REGISTERED PROFESSIONAL ENGINEER A.L. ELY No. 18880 Exp. 6-30-13 CIVIL STATE OF CALIFORNIA

The State of California or its officers or agents shall not be responsible for the accuracy or completeness of electronic copies of this plan sheet.

T.Y. LIN / MOFFATT & NICHOL
TWO HARRISON STREET
SAN FRANCISCO, CA 94105

Note: For details not shown see "Bike Path Fence Details No.2 & 3" sheets.

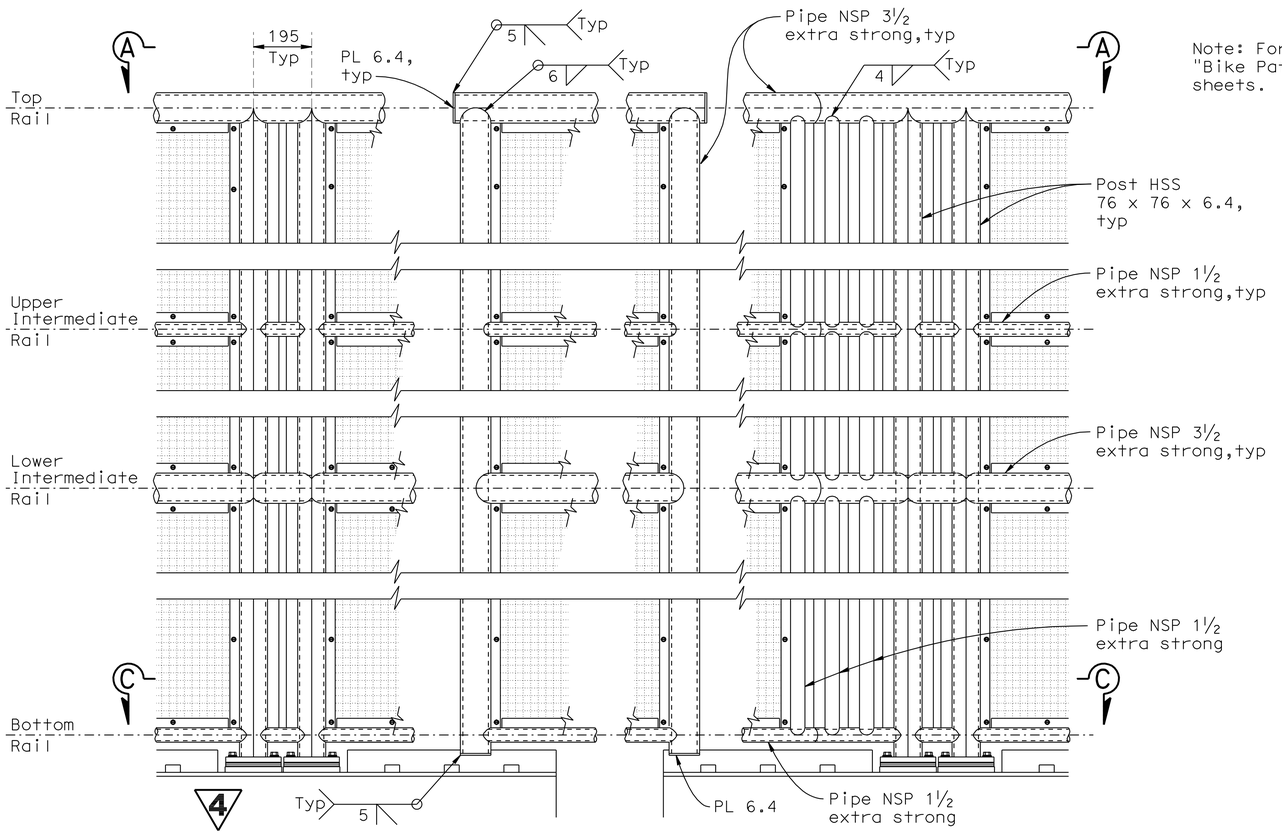

DETAIL B - ELEVATION TYPICAL FENCE EXPANSION JOINT

(For location see "Bike Path Fence Details No.1" sheet)

1:10

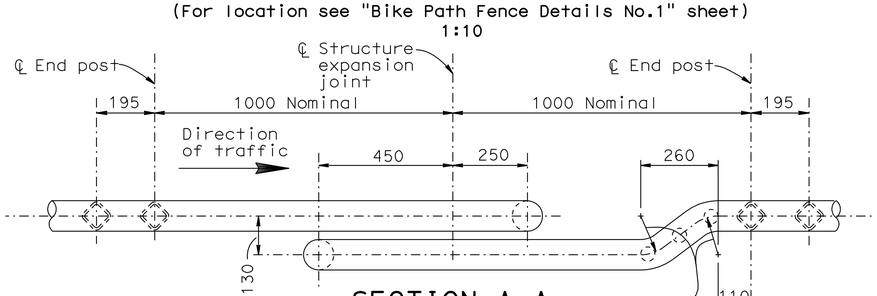

SECTION A-A

1:10

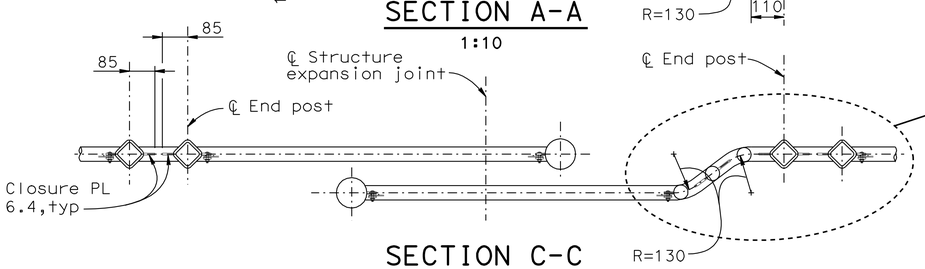

SECTION C-C

1:10

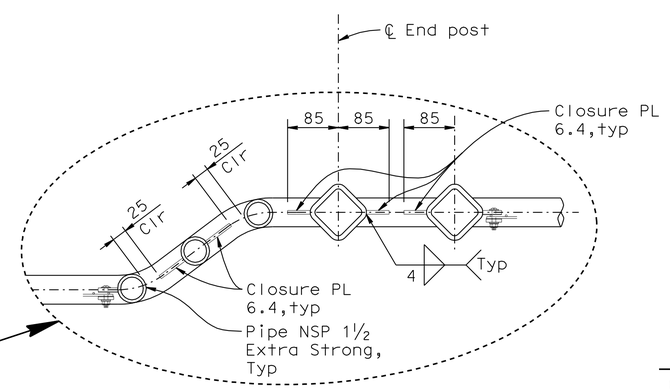

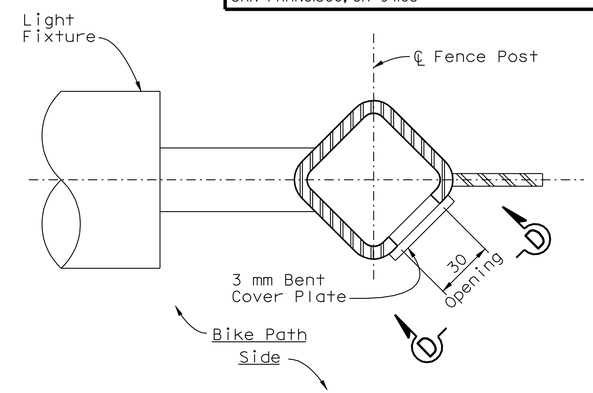

PLAN

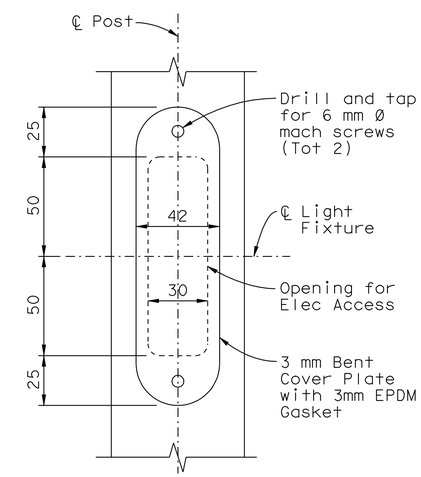

SECTION D-D

ELECTRICAL ACCESS OPENING AT BIKEPATH LIGHT FIXTURE

(Required at Posts on east side of Fence Dividers only)

1:1.5

4 REVISED PER ADDENDUM No. 4 DATED JULY 16, 2012

ALL DIMENSIONS ARE IN MILLIMETERS UNLESS OTHERWISE SHOWN

SAN FRANCISCO OAKLAND BAY BRIDGE
EAST SPAN SEISMIC SAFETY PROJECT

YBI EB ON-RAMP STRUCTURE (FINAL)

BIKE PATH FENCE DETAILS NO.4

DESIGN OVERSIGHT
JUAN F. CARPIO, JASON FAN
SIGN OFF DATE

	BY	CHECKED
DESIGN	Lee	Birdy
DETAILS	Samson	Birdy
QUANTITIES	Lee	Birdy

PREPARED FOR THE STATE OF CALIFORNIA DEPARTMENT OF TRANSPORTATION

Jal Birdy
PROJECT ENGINEER

BRIDGE NO. 34-0006 S
KILOMETER POST 12.8

CU 04251
EA 0120T1

Rev. Date: 5-18-98

ORIGINAL SCALE IN MILLIMETERS FOR REDUCED PLANS 0 10 20 30 40 50 60 70 80 90 100

DISREGARD PRINTS BEARING EARLIER REVISION DATES

REVISION DATES (PRELIMINARY STAGE ONLY) 11/05/10 12/05/10 4/6/11 7/14/11 10/24/11 6/1/12

SHEET 43 OF 61

FILE => 04-0120t1-34-0006s-u-bikpfdt04.add

USERNAME => s124496 DATE PLOTTED => 13-JUL-2012 TIME PLOTTED => 16:03

DIST.	COUNTY	ROUTE	KILOMETER POST TOTAL PROJECT	SHEET NO.	TOTAL SHEETS
04	SF	80	12.6/13.9	727	821

LICENSED ARCHITECT — DATE 5-6-11

LICENSED ARCHITECT QUINCY J. WONG No. C-18849 Exp. 5-31-13 STATE OF CALIFORNIA

2-21-12
PLANS APPROVAL DATE

The State of California or its officers or agents shall not be responsible for the accuracy or completeness of electronic copies of this plan sheet.

ACCESSIBILITY DESIGN APPROVAL STAMP DOT / DES / OTA
0400000027
PROJECT ID
* EXEMPT
Reviewed by:
Date: 11-21-11

CALIFORNIA STATE FIRE MARSHAL APPROVED
Approval of this plan does not authorize or approve any omission or deviation from applicable regulations. Final approval is subject to field inspection. One set of approved plans shall be available on the project site at all times.
Reviewed by: FRANCIS SOLICH
Approval date: 11-09-11

* EXEMPTION DOCUMENT ON FILE

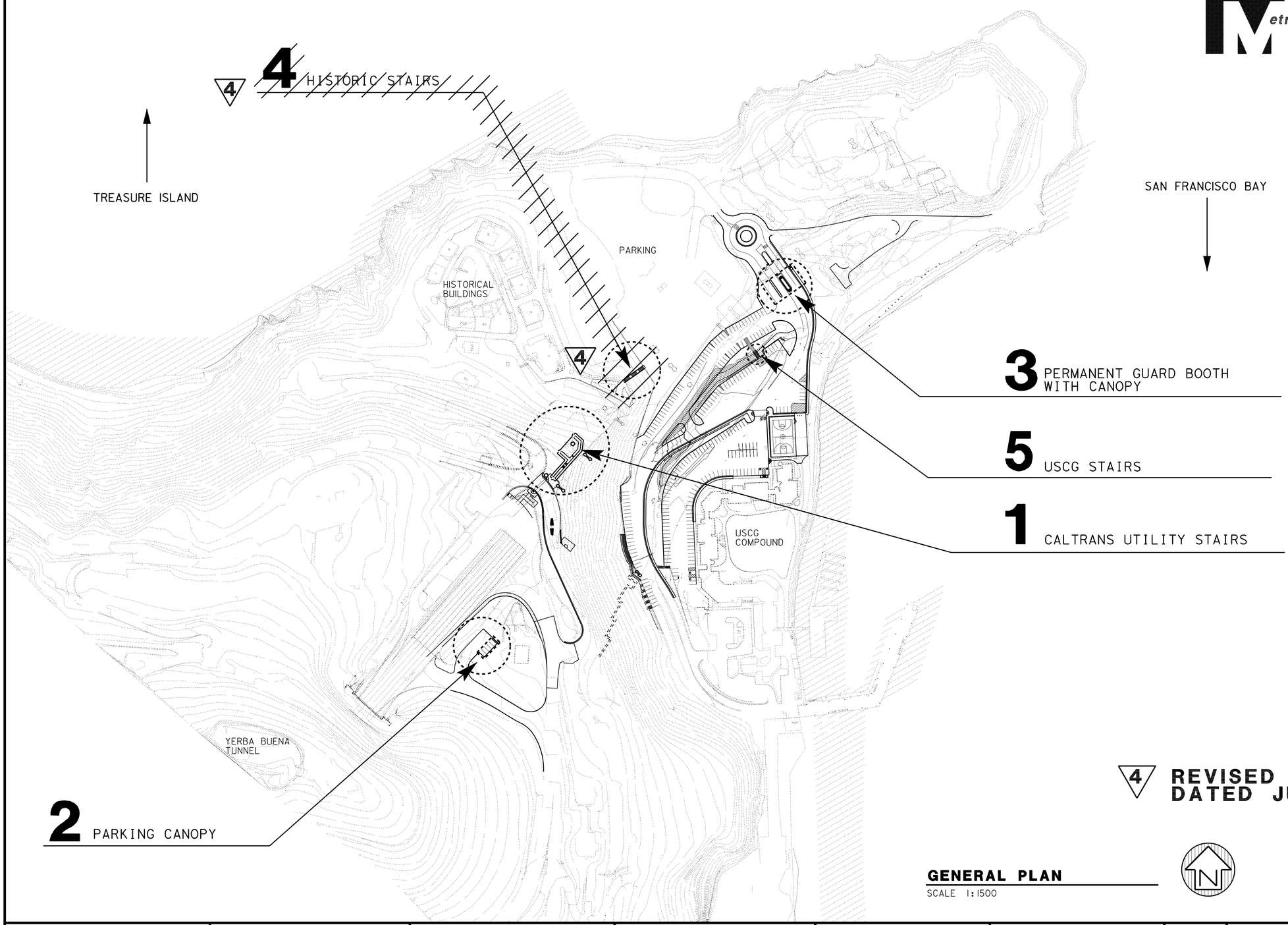

GENERAL NOTES

1. CONTRACTOR SHALL VERIFY ALL CONTROLLING DIMENSIONS AND FIELD CONDITIONS BEFORE ORDERING OR FABRICATING ANY MATERIALS OR ASSEMBLIES.
2. LOCATIONS OF THE EXISTING UTILITIES SHALL BE VERIFIED BY THE CONTRACTOR PRIOR TO CONSTRUCTION.

4 REVISED PER ADDENDUM No. 4 DATED JULY 16, 2012

GENERAL PLAN

SCALE 1:1500

R E Trovão DESIGN SUPERVISOR	DESIGNER Q. WONG	CHECKED BY: Q. WONG	SHEET LEGEND A-1 ARCHITECTURAL ST-1 STRUCTURAL M-1 MECHANICAL EE-1 ELECTRICAL W-1 WATER SUPPLY SS-1 SANITARY	STATE OF CALIFORNIA DEPARTMENT OF TRANSPORTATION	DIVISION OF ENGINEERING SERVICES ARCHITECTURAL AND STRUCTURAL DESIGN	BRIDGE NO. 34-004 KM POST 12.8
DESIGN ARCHITECT	DRAWN BY S. YEH	STRUCTURAL REVIEW Q. WONG				

YERBA BUENA ISLAND
TRANSITION STRUCTURES
GENERAL PLAN

SHEET **GP**

00_gp.add
DS OSD metric Rev. 11/98 13-JUL-2012 16:03

SCALE: ALL DIMENSIONS ARE IN MILLIMETERS UNLESS OTHERWISE NOTED.

ORIGINAL SCALE IN MILLIMETERS FOR REDUCED PLANS 0 10 20 30 40 50 60 70 80 90 100

UNIT 3598
PROJECT NUMBER & PHASE 04000000271

DISREGARD PRINTS BEARING EARLIER REVISION DATES →

REVISION DATES (PRELIMINARY STAGE ONLY): 01-12-05 02-15-05 07-06-06 12-01-06 9-27-07 12-14-07 9-21-09 1-5-11 3-30-11

SHEET OF XX

13-JUL-2012 16:03
00_gp.add

INDEX TO SHEETS

Sheet No. Sheet Title

ARCHITECTURAL

GP	GENERAL PLAN
A0-1	GENERAL INDEX
A0-2	GENERAL NOTES & PROJECT DATA
A0-2.1	ARCHITECTURAL ABBREVIATIONS AND SYMBOLS
A0-3.3	ACCESSIBILITY STANDARD DETAILS
A0-3.4	ACCESSIBILITY STANDARD DETAILS
A0-3.5	ACCESSIBILITY STANDARD DETAILS

CALTRANS UTILITY STAIRS

A1-0.1	FINISH & COLOR SCHEDULES
A1-1	PARTIAL SITE PLAN
A1-2	FLOOR PLAN
A1-3	SECTIONS

PARKING CANOPY

A2-0.1	COLOR SCHEDULE
A2-1	PARTIAL SITE PLAN
A2-2	PLAN & SECTIONS
A2-3	ROOF PLAN, REFLECTIVE CEILING PLAN, & DETAILS

GUARD BOOTH WITH CANOPY

A3-0.1	INDEX, NOTES, & PROJECT DATA
A3-0.2	ARCHITECTURAL ABBREVIATIONS AND SYMBOLS
A3-0.3	PARTIAL SITE PLAN
A3-0.4	GRADING PLAN
A3-0.5	BUILDING GRADING

GUARD BOOTH CANOPY

A3-1.1	PLAN AND ELEVATIONS
A3-1.2	SECTIONS
A3-1.3	ROOF & CEILING PLANS
A3-1.4	SECTIONS
A3-1.5	DETAILS
A3-1.6	DETAILS

GUARD BOOTH

A3-2.1	PLAN & ELEVATIONS
A3-2.2	ROOF & CEILING PLANS
A3-2.3	SECTIONS
A3-2.4	ENLARGED FLOOR PLAN AND SECTIONS
A3-2.5	SCHEDULES
A3-2.6	SLIDING HOLLOW METAL DOOR DETAILS
A3-2.7	DOOR AND CEILING DETAILS
A3-2.8	WINDOW PLANS, ELEVATIONS, SECTIONS, & DETAILS
A3-2.9	DETAILS

~~HISTORIC STAIRS~~

A4-0.1	FINISH SCHEDULES
A4-1	PARTIAL SITE PLAN
A4-2	FLOOR PLAN
A4-3	SECTIONS
A4-4	SECTION & DETAIL
A4-5	DETAILS

4

USCG STAIRS

A5-0.1	FINISH & COLOR SCHEDULES
A5-1	PARTIAL SITE PLAN
A5-2	FLOOR PLAN & SECTIONS
A5-3	DETAILS

Sheet No. Sheet Title (Cont.)

STRUCTURAL

ST- 1	LEGEND
ST- 2	CONCRETE STANDARD
ST1- 1	UTILITY STAIR PLAN
ST1- 2	PROFILE ELEVATIONS
ST1- 3	UTILITY STAIR PLAN
ST1- 4	CONCRETE DETAILS
ST1- 5	SECTION AND DETAILS
ST1- 6	HAND RAIL DETAILS
ST1- 7	CONCRETE DETAILS

PARKING CANOPY

ST2- 1	CANOPY FOUNDATION PLAN
ST2- 2	CANOPY ROOF FRAME
ST2- 3	CANOPY SECTIONS
ST2- 4	COLUMN FOOTING DETAILS
ST2- 5	ROOF FRAME DETAILS

GUARD BOOTH WITH CANOPY

GUARD BOOTH CANOPY

ST3- 1	CANOPY PLAN
ST3- 2	CANOPY ROOF FRAME
ST3- 3	CANOPY SECTIONS
ST3- 4	COLUMN FOOTING DETAILS
ST3- 4.1	COLUMN FOOTING DETAILS
ST3- 5	ROOF FRAME DETAILS

PERMANENT GUARD BOOTH

ST3- 6	FOUNDATION PLAN
ST3- 7	ROOF FRAMING PLAN
ST3- 8	BUILDING SECTION
ST3- 9	CROSS SECTIONS
ST3- 10	FOUNDATION DETAILS
ST3- 11	ROOF FRAME DETAILS 1 OF 2
ST3- 12	ROOF FRAME DETAILS 2 OF 2
ST3- 13	MISCELLANEOUS DETAILS

~~HISTORIC STAIRS~~

ST4- 1	FLOOR PLAN
ST4- 2	SECTIONS
ST4- 3	SECTION
ST4- 4	CONCRETE SECTION DETAILS

4

USCG STAIRS

ST5- 1	FLOOR PLAN DETAIL
ST5- 2	SECTIONS DETAILS
ST5- 3	SECTIONS DETAILS

PERMANENT GUARD BOOTH

M3- 0	ABBREVIATIONS AND LEGEND
M3- 1	SITE PLAN
M3- 1.1	TITLE 24
M3- 2	MECHANICAL PLAN
M3- 3	MECHANICAL DETAILS

Sheet No. Sheet Title (Cont.)

PERMANENT GUARD BOOTH

EE3- 0	LEGEND
EE3- 0.1	OUTDOOR LIGHTING COMPLIANCE FORMS 1
EE3- 0.2	OUTDOOR LIGHTING COMPLIANCE FORMS 2
EE3- 0.3	INDOOR LIGHTING COMPLIANCE FORMS 1
EE3- 0.4	INDOOR LIGHTING COMPLIANCE FORMS 2
EE3- 1	GUARD BOOTH PARTIAL SITE PLAN
EE3- 2	GUARD BOOTH POWER AND LIGHTING PLAN
EE3- 3	GUARD BOOTH COMMUNICATION PLAN
EE3- 4	GUARD BOOTH ELEVATIONS
EE3- 5	GUARD BOOTH DETAILS
EE3- 6	GATE CONTROL PANEL DETAILS
EE3- 7	SIGNAL LIGHTS DETAILS

Caltrans Metric

DIST.	COUNTY	ROUTE	KILOMETER POST TOTAL PROJECT	SHEET NO.	TOTAL SHEETS
04	SF	80	12.6/13.9	728	821

LICENSED ARCHITECT 5-6-11 DATE

LICENSED ARCHITECT QUINCY J. WONG No. C-18849 Exp. 5-31-13 STATE OF CALIFORNIA

2-21-12
PLANS APPROVAL DATE

The State of California or its officers or agents shall not be responsible for the accuracy or completeness of electronic copies of this plan sheet.

CALIFORNIA STATE FIRE MARSHAL APPROVED
Approval of this plan does not authorize or approve any omission or deviation from applicable regulations. Final approval is subject to field inspection. One set of approved plans shall be available on the project site at all times.
Reviewed by: FRANCIS SOLICH
Approval date: 11-09-11

4 REVISED PER ADDENDUM No. 4 DATED JULY 16, 2012

DESIGN	BY Q. WONG	CHECKED Q. WONG	
DETAILS	BY S. YEH	CHECKED Q. WONG	
QUANTITIES	BY	CHECKED	

STATE OF CALIFORNIA DEPARTMENT OF TRANSPORTATION

DIVISION OF ENGINEERING SERVICES ARCHITECTURAL AND STRUCTURAL DESIGN

BRIDGE NO. 34-004
KM POST 12.8

YERBA BUENA ISLAND
TRANSITION STRUCTURES
GENERAL INDEX

SHEET **A0-1**

a0_1_0_index.add
DS OSD metric Rev. 11/98 13-JUL-2012 16:03

SCALE: ALL DIMENSIONS ARE IN MILLIMETERS UNLESS OTHERWISE NOTED.

ORIGINAL SCALE IN MILLIMETERS FOR REDUCED PLANS 0 10 20 30 40 50 60 70 80 90 100

UNIT 3598
PROJECT NUMBER & PHASE 04000000271

DISREGARD PRINTS BEARING EARLIER REVISION DATES →

REVISION DATES (PRELIMINARY STAGE ONLY) 01-17-05 08-15-05 07-06-06 12-01-06 9-24-07 12-14-07 9-24-09 1-5-11 3-30-11

SHEET OF XX

13-JUL-2012 16:03
a0_1_0_index.add

DIST.	COUNTY	ROUTE	KILOMETER POST TOTAL PROJECT	SHEET NO.	TOTAL SHEETS
04	SF	80	12.6/13.9	729	821

LICENSED ARCHITECT — DATE 5-6-11

LICENSED ARCHITECT QUINCY J. WONG No. C-18849 Exp. 5-31-13 STATE OF CALIFORNIA

2-21-12
PLANS APPROVAL DATE

The State of California or its officers or agents shall not be responsible for the accuracy or completeness of electronic copies of this plan sheet.

PROJECT DATA

APPLICABLE CODES INCLUDE:

1984 UNIFORM FEDERAL ACCESSIBILITY STANDARDS
2010 CALIFORNIA BUILDING CODE
2010 CALIFORNIA MECHANICAL CODE
2010 CALIFORNIA PLUMBING CODE
2010 CALIFORNIA ELECTRICAL CODE
2010 CALIFORNIA FIRE CODE
2010 CALIFORNIA ENERGY CODE
AS DEFINED IN THE 2010 CALIFORNIA BUILDING CODE THE CONSTRUCTION TYPE, OCCUPANCY GROUP, AND ALLOWABLE FLOOR AREA FOR THE BUILDING IN THIS PROJECT ARE :

(1) UTILITY STAIRS

CONSTRUCTION TYPE	V - B
OCCUPANCY GROUP	NOT APPLICABLE
BASIC ALLOWABLE AREA TABLE 503 OF CBC	NOT APPLICABLE
DESIGN FLOOR AREA	NOT APPLICABLE
ROOF COVERING	NOT APPLICABLE

(2) PARKING CANOPY

CONSTRUCTION TYPE	V- B	BUILDING HEIGHT	ONE SOTRY
OCCUPANCY GROUP	S-1	ALLOWABLE BUILDING HEIGHT	12.2 M
BASIC ALLOWABLE AREA TABLE 503 OF CBC	836 SM	ACTUAL BUILDING HEIGHT	3 M
ACTUAL FLOOR AREA	129 SM	FIRE SPRINKLER	NOT REQUIRED
ROOF COVERING	CLASS C - NR	FIRE ALARM	NOT REQUIRED
		OCCUPANCY LOAD	5

(3) GUARD BOOTH WITH CANOPY

GUARD BOOTH

CONSTRUCTION TYPE	V - B	BUILDING HEIGHT	ONE SOTRY
OCCUPANCY GROUP	U	ALLOWABLE BUILDING HEIGHT	12.2 M
BASIC ALLOWABLE AREA TABLE 503 OF CBC	836 SM	ACTUAL BUILDING HEIGHT	3 M
DESIGN FLOOR AREA	24.8 SM	FIRE SPRINKLER	NOT REQUIRED
ROOF COVERING	CLASS C - NR	FIRE ALARM	NOT REQUIRED
		OCCUPANCY LOAD	3

CANOPY

CONSTRUCTION TYPE	V - B	BUILDING HEIGHT	ONE SOTRY
OCCUPANCY GROUP	S-1	ALLOWABLE BUILDING HEIGHT	12.2 M
BASIC ALLOWABLE AREA TABLE 503 OF CBC	836 SM	ACTUAL BUILDING HEIGHT	7 M
DESIGN FLOOR AREA	248 SM	FIRE SPRINKLER	NOT REQUIRED
ROOF COVERING	CLASS C - NR	FIRE ALARM	NOT REQUIRED
		OCCUPANCY LOAD	9

4

~~(4) HISTORIC STAIRS~~

~~CONSTRUCTION TYPE~~	~~V - B~~
~~OCCUPANCY GROUP~~	~~NOT APPLICABLE~~
~~BASIC ALLOWABLE AREA TABLE 503 OF CBC~~	~~NOT APPLICABLE~~
~~DESIGN FLOOR AREA~~	~~NOT APPLICABLE~~
~~ROOF COVERING~~	~~NOT APPLICABLE~~

(5) USCG STAIRS

CONSTRUCTION TYPE	V - B
OCCUPANCY GROUP	NOT APPLICABLE
BASIC ALLOWABLE AREA TABLE 503 OF CBC	NOT APPLICABLE
DESIGN FLOOR AREA	NOT APPLICABLE
ROOF COVERING	NOT APPLICABLE

4 **REVISED PER ADDENDUM No. 4 DATED JULY 16, 2012**

Caltrans Metric

BUILDING DATA

(1) UTILITY STAIRS

A. ROOF SYSTEM
NONE

B. FLOOR SYSTEM
REINFORCED CONCRETE SLAB

(2) PARKING CANOPY

A. ROOF SYSTEM
METAL ROOFING OVER METAL DECK OVER PRE-ENGINEERED STEEL FRAME

B. FLOOR SYSTEM
REINFORCED CONCRETE SLAB

(3) GUARD BOOTH WITH CANOPY

A. ROOF SYSTEM
METAL ROOFING OVER METAL DECK OVER PRE-ENGINEERED STEEL FRAME

B. FLOOR SYSTEM
REINFORCED CONCRETE SLAB

~~(4) HISTORIC STAIRS~~

~~A. ROOF SYSTEM~~
~~NONE~~

~~B. FLOOR SYSTEM~~
~~REINFORCED CONCRETE SLAB~~

4

(5) USCG STAIRS

A. ROOF SYSTEM
NONE

B. FLOOR SYSTEM
REINFORCED CONCRETE SLAB

CALIFORNIA STATE FIRE MARSHAL APPROVED
Approval of this plan does not authorize or approve any omission or deviation from applicable regulations. Final approval is subject to field inspection. One set of approved plans shall be available on the project site at all times.
Reviewed by: FRANCIS SOLICH
Approval date: 11-09-11

GENERAL NOTES

THE CONTRACTOR SHALL VERIFY ALL CONTROLLING FIELD DIMENSIONS AND CONDITIONS BEFORE ORDERING OR FABRICATING ANY MATERIALS.

THE CONTRACTOR SHALL NOTIFY THE ENGINEER IN WRITING OF ANY DISCREPANCIES BETWEEN THESE PLANS AND ACTUAL MEASUREMENTS OR CONDITION.

DIST.	COUNTY	ROUTE	KILOMETER POST TOTAL PROJECT	SHEET NO.	TOTAL SHEETS
04	SF	80	12.6/13.9	815	821

REGISTERED ENGINEER-ELECTRICAL — 11-08-11 DATE

2-21-12
PLANS APPROVAL DATE

REGISTERED PROFESSIONAL ENGINEER James R. Lacy No. 13770 Exp. 9-30-13 ELEC STATE OF CALIFORNIA

The State of California or its officers or agents shall not be responsible for the accuracy or completeness of electronic copies of this plan sheet.

Caltrans now has a web site! To get to the web site, go to: http://www.dot.ca.gov

CALIFORNIA STATE FIRE MARSHAL APPROVED
Approval of this plan does not authorize or approve any omission or deviation from applicable regulations. Final approval is subject to field inspection. One set of approved plans shall be available on the project site at all times.
Reviewed by: FRANCIS SOLICH
Approval date: 11-09-11

Caltrans Metric

General Notes:

A. *For additional conduits for Gate Operators and other Items see Sheet EE-26 and other EE sheets.*

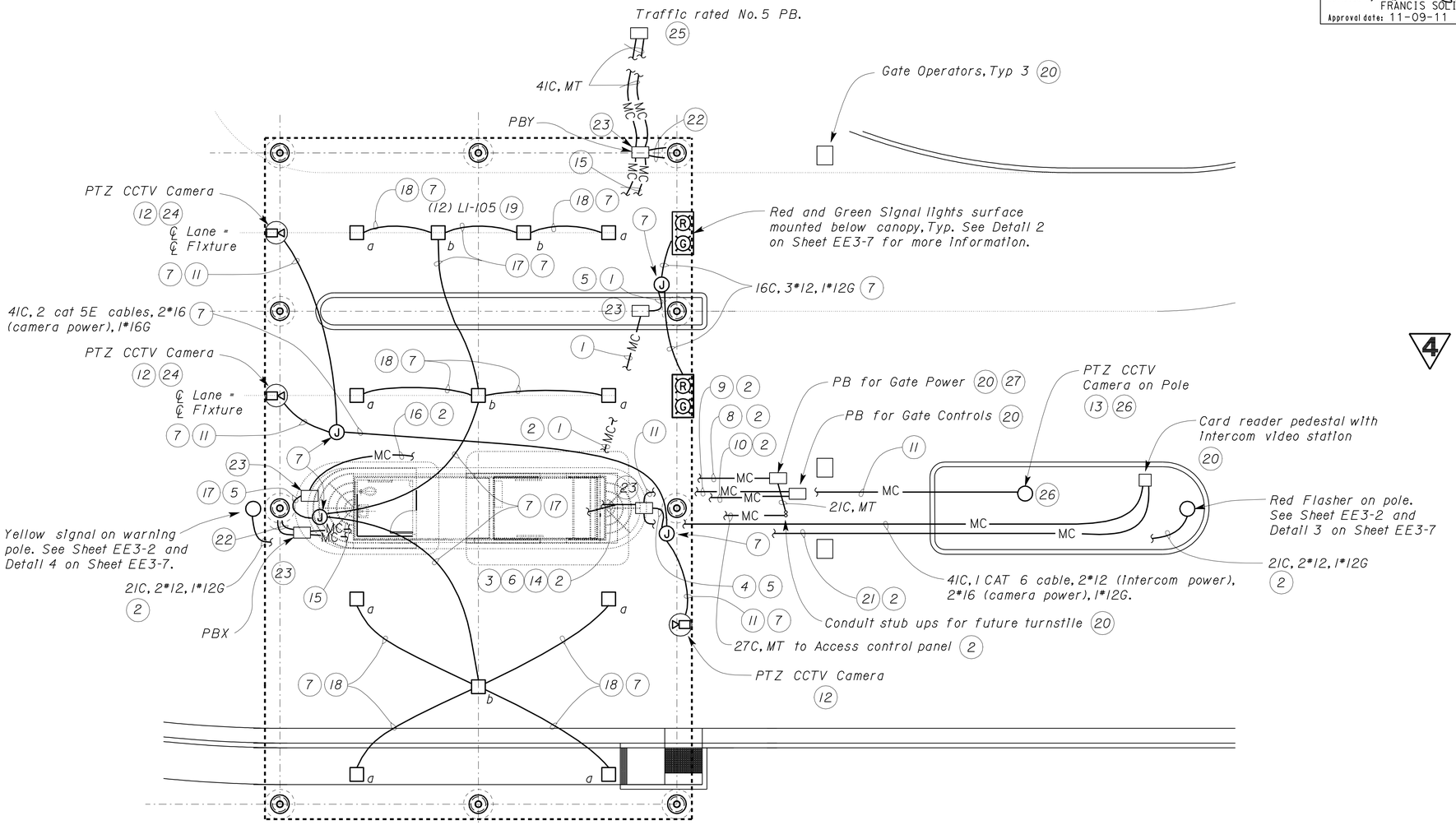

PARTIAL SITE PLAN

SCALE 1:50

Notes:

1. *27C, 5*12, 1*12G for traffic signals.*
2. *For continuation inside Guard Booth see Sheets EE3-2 and EE3-4.*
3. *4IC, 4 CAT 5E cables and 1 CAT 6 cable for cameras and intercom.*
4. *4IC, 3 CAT 5E cables, 6*16, 1*16G for cameras.*
5. *Conduit goes up the column (inside cladding) to JB in the canopy.*
6. *27C, 10*16, 1*12G for camera power.*
7. *Inside canopy.*
8. *27C, 9*12, G19-21, ~~18~~-20, 22-24, 1*12G for gate power, 2*12 spares (via pull boxes).*
9. *27C, 3 @ Cat 5E to Access Control Panel.*
10. *4IC, 18*12, 1*12G for gate controls.*
11. *4IC, 1 CAT 5E cable, 2*16, 1*16G.*
12. *Camera shall be surface mounted in an enclosure below the canopy soffit.*
13. *Camera shall be inside environmental dome.*
14. *2IC, 2*12, 1*12G to Intercom video station Transformer (IVST).*
15. *4IC, MT to electrical chase for future use.*
16. *27C, 3*10, 1*10G to Outside Lighting Control Panel.*
17. *2IC, 3*10, 1*10G.*
18. *16C, 2*10, 1*10G.*
19. *Light fixtures surface mounted below the canopy.*
20. *See Sheet EE-26 for additional information.*
21. *27C, TSP*18, 3 @ TSP*22, 1*12G to Access Control Panel.*
22. *4IC, MT, typ. Conduits go up the column (inside cladding) and get capped inside the canopy.*
23. *Number 5 pull box.*
24. *Camera positioned in center of lane.*
25. *Exact location within 15 meters of the column will be determined by the Engineer. The Contractor will do all trenching, conduit install and patching as required.*
26. *Pole and foundation shall be similar to Detail 3 on Sheet EE3-7 except with hardware and cabling as needed for camera installation. Exact pole location will be as directed by the Engineer (and within 5 meters of where shown here).*
27. *Coil 5 meters extra of each spare conductor in PB.*

THIS DRAWING ACCURATE FOR ELECTRICAL WORK ONLY
ALL DIMENSIONS SHOWN IN MILLIMETERS, EXCEPT AS NOTED

4 **REVISED PER ADDENDUM No. 4 DATED JULY 16, 2012**

DESIGN SUPERVISOR

	BY	CHECKED
DESIGN	James R. Lacy	David Amirazodi
DETAILS	James R. Lacy	Ed Tapalla
QUANTITIES	James R. Lacy	David Amirazodi

STATE OF CALIFORNIA DEPARTMENT OF TRANSPORTATION

DIVISION OF STRUCTURES ELECTRICAL-MECHANICAL-WATER AND WASTEWATER DESIGN

BRIDGE NO. 34-004 KM POST 12.8

YERBA BUENA ISLAND TRANSITION STRUCTURES
PERMANENT GUARD BOOTH — GUARD BOOTH PARTIAL SITE PLAN

SHEET EE3-1

DOS ELEC (10/98) FILE => ee3_01.add DATE PLOTTED => 13-JUL-2012 TIME PLOTTED => 16:03

ORIGINAL SCALE IN MILLIMETERS FOR REDUCED PLANS 0 10 20 30 40 50 60 70 80 90 100

CU 04-251
EA 04-0120T1

DISREGARD PRINTS BEARING EARLIER REVISION DATES

REVISION DATES (PRELIMINARY STAGE ONLY) 3/4/11 4/18/11 4/29/11 5/25/11 6/6/11 10/5/11 11/08/11

SHEET OF

FILE => ee3_01.add

USERNAME => s124496 DATE PLOTTED => 13-JUL-2012 TIME PLOTTED => 16:03

VI=1

DIST.	COUNTY	ROUTE	KILOMETER POST TOTAL PROJECT	SHEET NO.	TOTAL SHEETS
04	SF	80	12.6/13.9	818	821

REGISTERED ENGINEER-ELECTRICAL — 11-08-11 DATE

2-21-12
PLANS APPROVAL DATE

REGISTERED PROFESSIONAL ENGINEER James R. Lacy No. 13770 Exp. 9-30-13 ELEC STATE OF CALIFORNIA

The State of California or its officers or agents shall not be responsible for the accuracy or completeness of electronic copies of this plan sheet.

Caltrans now has a web site! To get to the web site, go to: http://www.dot.ca.gov

CALIFORNIA STATE FIRE MARSHAL APPROVED
Approval of this plan does not authorize or approve any omission or deviation from applicable regulations. Final approval is subject to field inspection. One set of approved plans shall be available on the project site at all times.
Reviewed by: FRANCIS SOLICH
Approval date: 11-09-11

Caltrans Metric

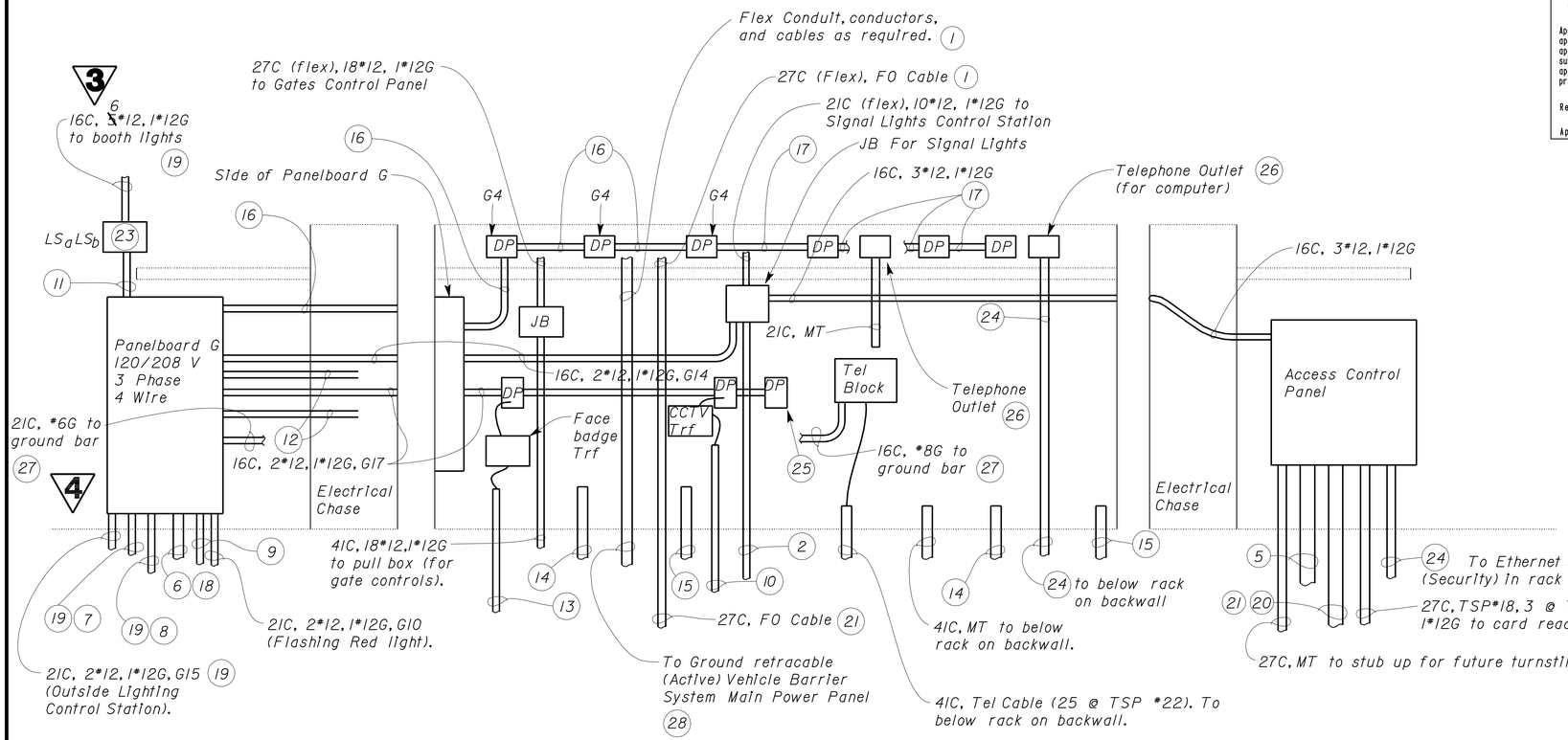

1 COUNTER ELEVATIONS

NO SCALE

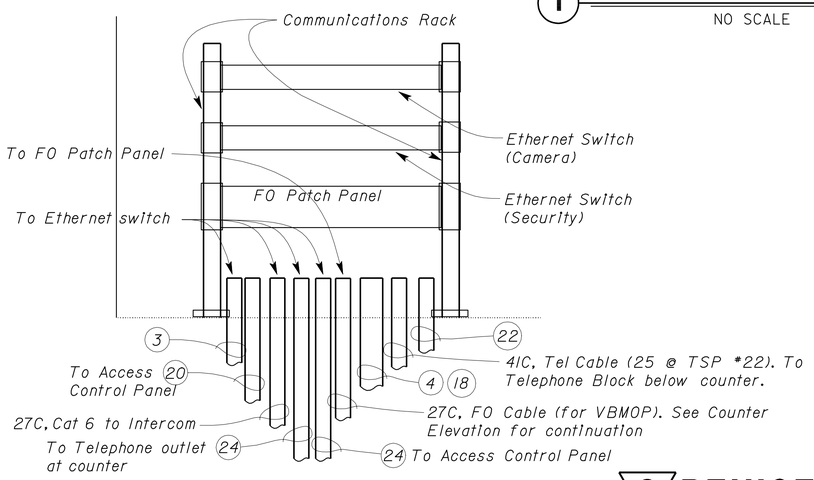

2 COMMUNICATION RACK ELEVATION

NO SCALE

General Notes:

A. *Conduit continuation can be found on Sheet EE3-1 unless otherwise noted.*

B. *Conductors and cables shall be terminated on devices as required for operation per plan and block diagram sheets.*

C. *Conduit system and devices under counter are inside the electrical chase unless otherwise noted.*

D. *Timer switch for rest-room shut off shall be tested for compliance with Title 24 Shut off controls. Dimming light switches shall be tested for dual zone lighting requirements for Title 24. The guard booth 24 hour operation triggers the exception to Title 24 light shut off requirement.*

Notes:

1. *To Vehicle Barrier Master Operator Panel (VBMOP) located on the counter.*
2. *27C, 5*12, 1*12G to Traffic Signal Lights in Canopy (via pull box).*
3. *4IC, 4 CAT 5E cables (cameras) and 1 CAT 6 cable (intercom) to pull box.*
4. *63C, FO cable, 6 TSP, Tel Cable (25 @ TSP *22).*
5. *27C, 3 @ Cat 5E to gates (Via No. 6 Pull Box)*
6. *4IC, 4*2, 1*6G (Panel feeder).*
7. *21C, 2*10, G11-13, 6*12, 1*12G, G1,5, 10 (for restroom lights, water heater, DP's and exterior flashing yellow light).*
8. *21C, 6*12, 1*12G, G2, 6-8, 23 to DPs, heat pump and Comm rack DPs.*
9. *21C, 4*12, 1*12G, G9, 19 to gates (via pull box), 2*12 spares.*
10. *27C, 10*16, 1*12G, to CCTV cameras (via pull box).*
11. *16C, 2*12, 1*12G, G1 (for booth lights).*
12. *27C, MT cap conduits inside the chase for future loads.*
13. *21C, 2*12, 1*12G to face badge reader (via pull box).*
14. *4IC, to Pull box X for future loads.*
15. *4IC, to Pull Box Y for future loads.*
16. *16C, 4*12, 1*12G, G4, 7.*
17. *16C, 2*12, 1*12G, G7.*
18. *For continuation see Sheet EE-26.*
19. *For continuation see Sheet EE3-2.*
20. *4IC, empty.*
21. *To communication rack on backwall.*
22. *4IC, MT to Electrical Chase at Counter*
23. *Dimming light switches for LED fixtures a and b.*
24. *21C, Cat 6 cable.*
25. *Outlet installed flush (in front of Electrical chase).*
26. *Includes Cat 6 termination jack, Cat 6 face plate and Cat 6 termination box.*
27. *Bond conductor to ground bar.*
28. *For continuation see Sheet EE-9.*

3 REVISED PER ADDENDUM No. 3 DATED JUNE 6, 2012

4 REVISED PER ADDENDUM No. 4 DATED JULY 16, 2012

THIS DRAWING ACCURATE FOR ELECTRICAL WORK ONLY
ALL DIMENSIONS SHOWN IN MILLIMETERS, EXCEPT AS NOTED

	BY	CHECKED
DESIGN	James R. Lacy	Javid Amirazodi
DETAILS	James R. Lacy	Ed Tapalla
QUANTITIES	James R. Lacy	Javid Amirazodi

STATE OF CALIFORNIA DEPARTMENT OF TRANSPORTATION

DIVISION OF STRUCTURES
ELECTRICAL-MECHANICAL-WATER AND WASTEWATER DESIGN

BRIDGE NO. 34-004
KM POST 12.8

YERBA BUENA ISLAND TRANSITION STRUCTURES
PERMANENT GUARD BOOTH
GUARD BOOTH ELEVATIONS

SHEET **EE3-4**

DOS ELEC (10/98) FILE => ee3_04.add
DATE PLOTTED => 13-JUL-2012 TIME PLOTTED => 16:03
ORIGINAL SCALE IN MILLIMETERS FOR REDUCED PLANS 0 10 20 30 40 50 60 70 80 90 100
CU 04-251
EA 04-0120T1
FILE => ee3_04.add
DISREGARD PRINTS BEARING EARLIER REVISION DATES
REVISION DATES (PRELIMINARY STAGE ONLY) 4/19/11 4/29/11 5/26/11 6/5/11 10/18/11 11/08/11
SHEET OF

USERNAME => s124496 DATE PLOTTED => 13-JUL-2012 TIME PLOTTED => 16:03

VI=1

DIST.	COUNTY	ROUTE	KILOMETER POST TOTAL PROJECT	SHEET NO.	TOTAL SHEETS
04	SF	80	12.6/13.9	819	821

REGISTERED ENGINEER-ELECTRICAL — 11-08-11 DATE

2-21-12
PLANS APPROVAL DATE

REGISTERED PROFESSIONAL ENGINEER James R. Lacy No. 13770 Exp. 9-30-13 ELEC STATE OF CALIFORNIA

The State of California or its officers or agents shall not be responsible for the accuracy or completeness of electronic copies of this plan sheet.

CALIFORNIA STATE FIRE MARSHAL APPROVED
Approval of this plan does not authorize or approve any omission or deviation from applicable regulations. Final approval is subject to field inspection. One set of approved plans shall be available on the project site at all times.
Reviewed by: FRANCIS SOLICH
Approval date: 11-09-11

Caltrans Metric

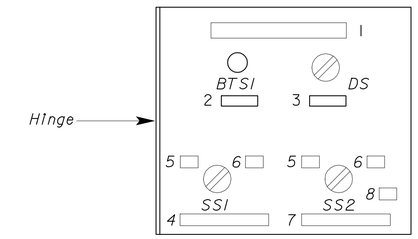

EXTERIOR DOOR

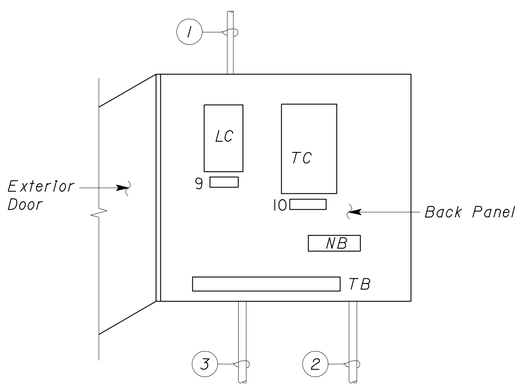

EQUIPMENT LAYOUT

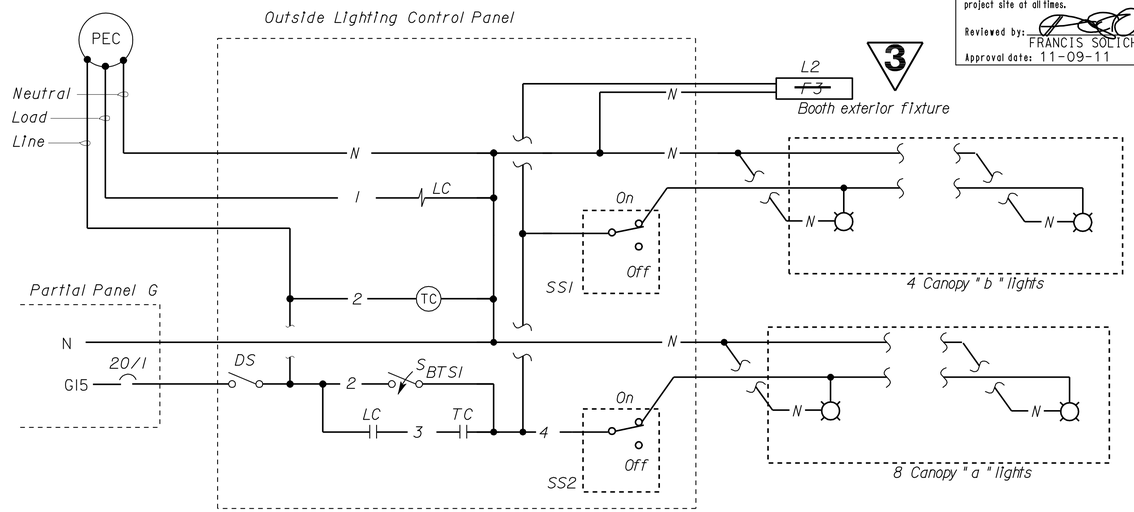

OUTSIDE LIGHTING CONTROL STATION (OLCS) SCHEMATIC DIAGRAM

Notes:

1. 16C, 5*12, 1*12G to junction box on roof. For continuation, see sheet EE3-2.
2. 21C, 2*12, 1*12G, G15 to Panel G.
3. 27C, 3*10, 1*10G to Canopy Lights via No. 5 pull box. For continuation see sheet EE3-1.

General Notes:

A PEC, TC and associated controls shall be tested for compliance with Title 24 Lighting shut off requirements.

NAMEPLATE SCHEDULE		
ITEM NO.	INSCRIPTION	LETTER HEIGHT (mm)
1	OUTSIDE LIGHTING CONTROLS	9
2	BYPASS (TEST SWITCH)	6
3	DISCONNECT SWITCH	6
4	CORE LIGHTS	6
5	ON	6
6	OFF	6
7	PERIMETER LIGHTS	6
8	LIGHTS OFF	6
9	LIGHTING CONTACTOR	6
10	TIME CLOCK	6

MAIN: 60 AMPERE, 3 POLE CB
VOLTS: 120/208 V, 3 PHASE, 4 WIRE

PANEL: G 4

FEEDER SIZE: 41C, 3#2, 1#6G
LOCATION: UNDER COUNTER

DESCRIPTION	AMPERES A	AMPERES B	AMPERES C	BRK	CKT	A B C	CKT	BRK	AMPERES A	AMPERES B	AMPERES C	DESCRIPTION
INTERIOR LTS & RESTROOM EF	5			20/1**	1		2	20/1	4.5			DP'S - WEST & HP EXTERIOR
RESTROOM WALL HEATER		12.5		*	3		4	20/1		4.5		DP'S - COUNTER NORTH
DP - RESTROOM AND EXTERIOR			3	20/1	5		6	*			9	HEAT PUMP
DPs - COUNTER SOUTH	4.5				7		8		9			
ENTRANCE GATE OPERATORS		8			9		10	20/1		2		GUARD HOUSE FLASHING LTG & BEACON
INSTANT WATER HEATER - RESTROOM			14.4	*	11		12				3	CCTV CAMERAS
	14.4				13		14		2			SIGNAL LIGHTS
OUTSIDE LIGHTING CONTROL STATION		14		20/1	15		16			0		SPARE
DP's UNDER COUNTER			3		17		18				0	SPARE
EXIT GATE OPERATORS	8				19		20		0			SPACE
SPACE					21		22			0		SPACE
DP's WALL @ COMMUNICATION RACK			3		23		24				0	SPACE

* Circuit breaker shall be sized as recommended by the equipment manufacturer.
** Lockable type Circuit breaker.

A	B	C	
47.4	41	35.4	TOTAL AMPERES PER PHASE

OUTSIDE LIGHTING CONTROL STATION

3 REVISED PER ADDENDUM No. 3 DATED JUNE 6, 2012

4 REVISED PER ADDENDUM No. 4 DATED JULY 16, 2012

THIS DRAWING ACCURATE FOR ELECTRICAL WORK ONLY
ALL DIMENSIONS SHOWN IN MILLIMETERS, EXCEPT AS NOTED

	BY	CHECKED
DESIGN	James R. Lacy	Javid Amirazodi
DETAILS	James R. Lacy	Ed Tapalla
QUANTITIES	James R. Lacy	Javid Amirazodi

STATE OF CALIFORNIA DEPARTMENT OF TRANSPORTATION

DIVISION OF STRUCTURES
ELECTRICAL-MECHANICAL-WATER AND WASTEWATER DESIGN

BRIDGE NO. 34-004
KM POST 12.8

YERBA BUENA ISLAND TRANSITION STRUCTURES
PERMANENT GUARD BOOTH
GUARD BOOTH DETAILS

SHEET EE3-5

DOS ELEC (10/98)
FILE => ee3_05.add
DATE PLOTTED => 13-JUL-2012 TIME PLOTTED => 16:03

ORIGINAL SCALE IN MILLIMETERS FOR REDUCED PLANS 0 10 20 30 40 50 60 70 80 90 100

UNIT 3598
PROJECT NUMBER & PHASE 04000000271
EA 04-0120T

DISREGARD PRINTS BEARING EARLIER REVISION DATES

REVISION DATES (PRELIMINARY STAGE ONLY) 10/3/05 10/31/05 6/20/06 7/3/06 12/14/07 11/9/10 2/7/11 5/26/11 6/3/11 11/08/11 SHEET OF

USERNAME => s124496 DATE PLOTTED => 13-JUL-2012 TIME PLOTTED => 16:03

VI=1